REV E	UPDT COG, CONT. #	EHB	BWH	12/89	Rev. B	Add page 2, add bottom rivets page 1.	EHB	JPY	6/79
REV F	UPDT MCC/REMOVE SMIC	LFM	RKS	5/90	C	Revised para. 1.5 adding contract number.	WFG	JPY	3/84
REV G	CHANGED NAVY TO GOVT.	E.P.	WFG	10/91	D	Added Ink Rep and Surface Prep to Paragraph 2.0	WFG	EHB	4/84
REV H	PARA 2 chg NAVY TO GOVT	WFG		9/92					

1.0 CONTAINER BASE

1.1 The container base shall be identified by one self-adhesive nameplate conforming to MIL-P-15024 Type H, and figure 1.

1.2 The nameplate thickness shall be .012 minimum.

1.3 All characters shall be colored black onto a neutral background.

1.4 Characters underlined in figure 1 are examples only. Actual characters shall be taken from the contract. All other typography must be as shown.

1.5 The contract number shall be located under the handle - spacing of lines is at contractor's option. However, the handle in a down position shall only cover the contract number (figures 1 and 2 apply).

1.6 The nameplate shall be attached to the base as shown in figure 1. The nameplate adhesive shall be Scotch No 467 or equivalent. Additionally, the container surface shall be prepared with Scotch Tape Primer No 81 or equivalent before attaching the nameplate.

2.0 CONTAINER LID

2.1 The container lid shall be marked on the outside with the NSN of the container and "Property of U.S. GOVT." using a permanent epoxy base ink conforming to MIL-I-43553. The marking shall be located on the end opposite to that of the nameplate and also on the top surface. Character size shall be .20" (min) and ink color shall contrast with the container. Polyethylene container shell surface shall be flame treated prior to marking.

2.2 The inside of the container lid shall also be marked with the date of manufacture (month/year). This date shall be located on the inside of any male stacking rib using the same shell surface preparation and ink as described in paragraph 2.1.

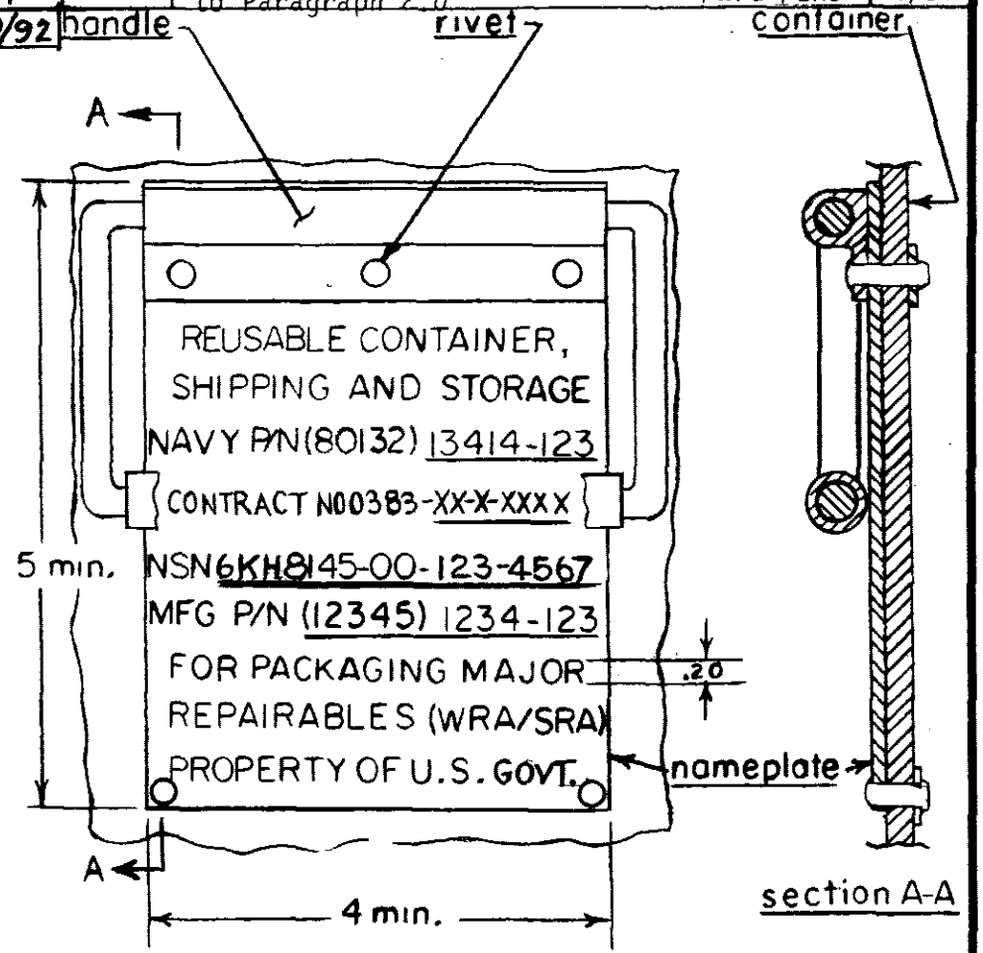

figure 1

	DATE	AVIATION SUPPLY OFFICE		
DRAWN EHB	11/76	CONTAINER IDENTIFICATION		
APP JPY	11/76			
DIMENSIONS IN INCHES		CODE IDENT. 80132	DWG NO. 15064	REV. H
TOL ± .020		SCALE None	SHEET 1 OF 2	

Distribution Statement A; Approved for public release; distribution is unlimited

3.0 ALTERNATE METHOD OF ATTACHING NAMEPLATE

When the container construction incorporates the attachment of handles to an aluminum extrusion, and it is not considered feasible to utilize the handle rivets for attachment of the nameplate, the nameplate shall be attached as shown in Figure 2. The nameplate adhesive shall be Scotch No. 467 or equivalent and the container surface shall be prepared with Scotch Tape Primer No. 81 or equivalent before attaching nameplate.

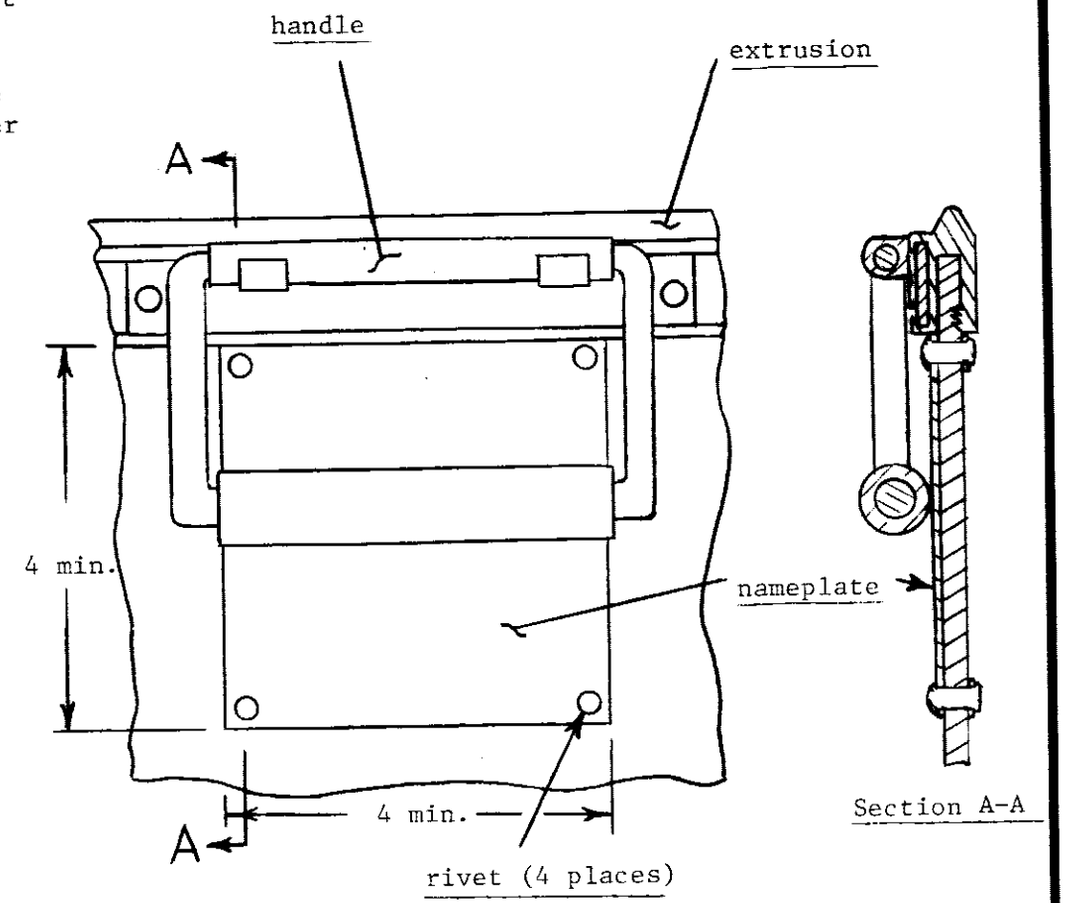

Figure 2

	DATE	AVIATION SUPPLY OFFICE		
DRAWN EHB	11/76	CONTAINER IDENTIFICATION		
APP JPY	11/76			
DIMENSIONS IN INCHES		CODE IDENT. 80132	DWG. NO. 15064	REV. A
TOL ±.125		SCALE none	SHEET 2 OF 2	

DISTRIBUTION STATEMENT D. Distribution authorized to the Department of Defense and U.S. DOD contractors only in order to protect Critical Technology, February 05, 2014. Other requests shall be referred to Commanding Officer, Naval Air Technical Data and Engineering Services Command, San Diego, CA. 92135-7031

WARNING - This document contains export-controlled technical data whose export is restricted by the arms Export Control Act (Title 22, U.S.C., Sec. 2751, et seq. or the Export Administration Act of 1979, as amended, Title 50, U.S.C., App. 2401 et seq. Violations of these export laws are subject to severe criminal penalties. Disseminate in accordance with provisions of DoD Directive 5230.25

DESTRUCTION NOTICE - For classified documents, follow the procedures in Dod 5220.22M, Industrial Security Manual, Section II-19 or DoD 5200.1-R, Information Security Program Regulation, Chapter IX. For unclassified, limited Documents, destroy by any method that will prevent disclosure of contents or reconstruction of the document.

REV L	Change Test Requirements	EHB	JPY	10/78
REV M	Add'l Mat'l & Test	EMS	RA	4/88
REV N	UPDT COG, CODES	EHB	BWH	12/89
REV Q	UPDATE MCC, GEN'L REV.	BT	RSA	10/91

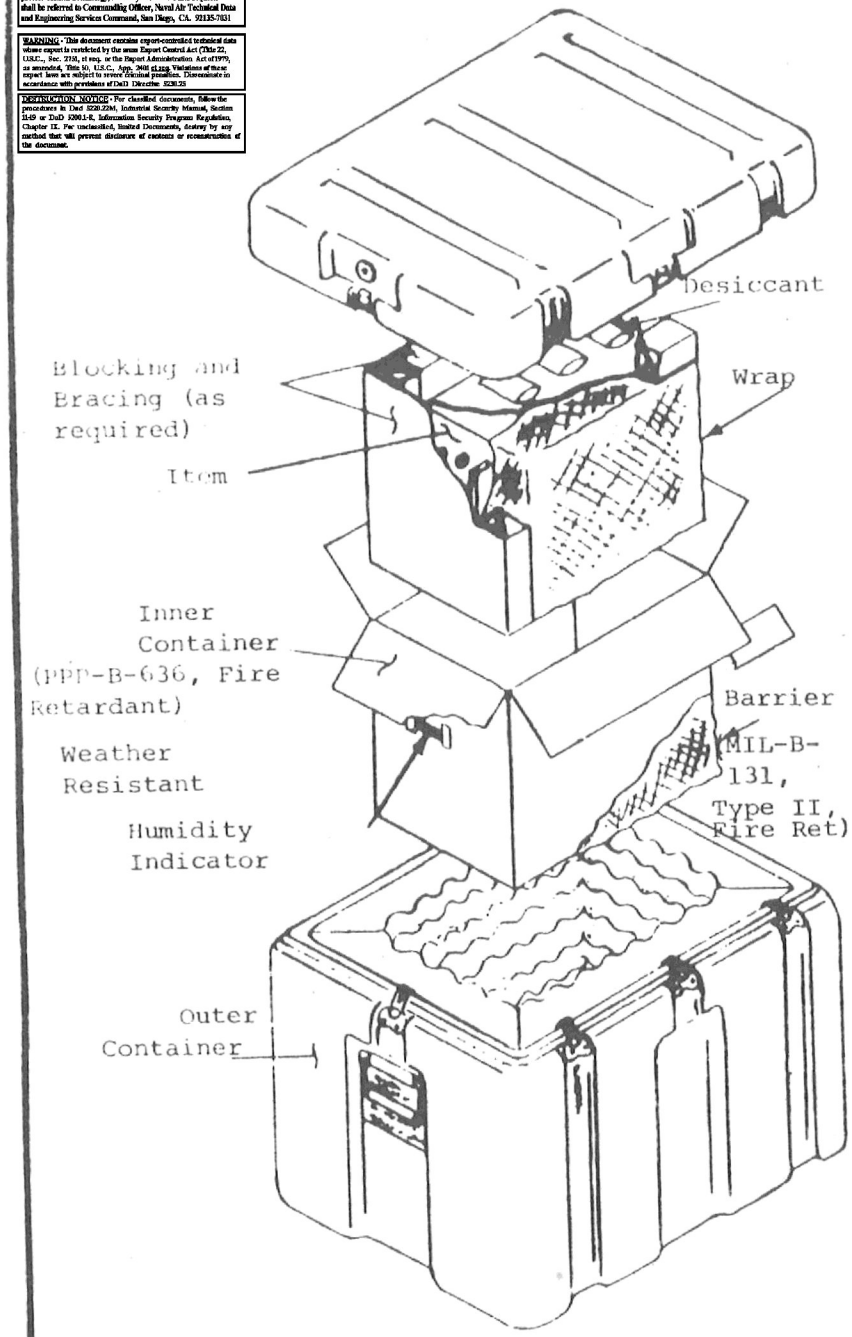

Packaging Code per MIL-STD-726: DW1100K3ZZZZZ000AYYYY

1. The item shall be packaged in accordance with the above packaging code.

2. The inner package shall be centrally located within the cavity of the reusable container. When voids exist between the inner package and the reusable container cavity, the voids shall be filled with additional sheets of cellulosic cushioning material in accordance with PPP-C-843 in such a manner that the additional cushioning makes contact with, but does not compress the convolutions of the existing container foam.

3. Both the inner package (barrier bag) and outer container shall be marked/re-marked with the use of labels and/or tags in accordance with MIL-STD-129 including bar code labels. A tag shall be used for bar code labeling of the outer container.

4. For retrograde shipments of non-RFI items, Navy field activities may substitute the following in lieu of the inner package: Wrap item with sufficient material conforming to PPP-C-795, PPP-C-1752, PPP-C-1797 or PPP-C-1842 to smooth out all protrusions, edges, and faces. The wrapped item with desiccant shall then be inserted into the reusable container cavity as described in para. 2.

NOTE:

Container sketch shows typical design and use of the container. Variations of the container's physical appearance, etc. are acceptable provided performance requirements are met.

ABOVE INSTRUCTIONS FOR USE OF THE CONTAINER

	DATE	AVIATION SUPPLY OFFICE		
DRAWN LWB	5/72	FAMILY OF REUSABLE CONTAINERS FOR PACKAGING MAJOR REPAIRABLES (WRA/SRA)		
APP MB	5/72			
DIMENSIONS IN INCHES		CODE IDENT. 80132	DWG. NO. 13414	REV.
TOL ± .125		SCALE None	SHEET 1 OF 6	Q

REQUIREMENTS FOR CONTAINER PROCUREMENT

The containers shall meet all applicable manufacturing, quality control standards, and test requirements of Air Transport Association Specification 300, Category I, as well as the following additions and/or exceptions:

1. CONTAINER SHELL. The containers shall be molded of fiberglass, virgin polyethylene, other virgin synthetic/plastic materials or a combination of these materials. Any manufacturer using the thermoforming (vacuum forming) process to produce this container shall use Phillips Chemical Company's high density polyethylene Marlex resin number HXM50100. Corrosion resistant metal reinforcements are permissible.

2. CLOSURE. A water-tight seal shall be accomplished by using an integrally molded plastic or an extruded aluminum, tongue-in-groove, gasketed closure (tongue in base; groove in lid). The gasket must be joined in one continuous length, round or extruded. When an aluminum extrusion is used for the closure, both male and female extrusions shall be formed to the shape of the container's parting line, welded to form two continuous pieces, and then treated to form a visible chromate coating conforming to MIL-C-5541, Class 3. The extrusions must be joined to the container shell by a stake and roll method or mechanical crimping. Staking/crimping must be on 1/2" centers on all straight surfaces; staking of radii may be omitted at the contractor's discretion.

3. FASTENERS. Fasteners shall be quarter-turn type, Simmons' part number (82240) B1900-1144 or equivalent. Fasteners must have provisions for lead wire seals. Fasteners must be affixed to the four sides (except for sizes 017 and 018) of the case by welding or riveting. Rivets when used shall be sealed with a permanent, waterproof type sealant. Container base and lid shall not be attached by hinges, limit chains, etc.

4. HANDLES. Handles (see Table II for quantity) shall be a chest type designed for surface mounting with stops to hold the bail at a right angle to the mounting plate when in a carrying position and spring loaded to fold the bail into a down position when released. The bail of the handles shall give an inside length not less than 4.25 inches with a minimum clearance of 1.8 inches between the bail grip and the mounting plate. Handles must be attached by rivets sealed per paragraph 3.

5. PRESSURE RELIEF VALVE. An automatic two-way pressure relief valve with a manual release conforming to MIL-V-27166 shall be used. The relief valve shall have a cracking pressure of 0.5 psig (±0.1), and a minimum sealing pressure of 0.25 psig. Each container shall have a mounting hole with a maximum 1.1 inch diameter to accept the relief valve.

6. STACKING AND PROTECTIVE RIBS. Male stacking ribs max. 1" wide, min. 3/8" high, on top of the container, and mating female stacking ribs in the container bottom shall be provided. All hardware must be either recessed (indented) or protected by ribs in the container shell.

7. CUSHIONING. Cushioning shall conform to MIL-P-26514, Type I, Class 2, Grade C. Cushioning material shall be polyurethane - polyether type, and shall be flame retardant. The cushion pads shall extend the entire width and height of the walls of the container. Corners shall be rounded to accommodate the container. All cushion pads shall be secured to the container either by entrapment or by using minimal adhesives. Cushion pads (top, bottom, sides, ends) shall not be bonded to each other. A 1.25 inch diameter air passage shall be provided in the cushioning between the pressure relief valve and the cavity.

	DATE	AVIATION SUPPLY OFFICE		
DRAWN LWB	5/72	FAMILY OF REUSABLE CONTAINERS FOR PACKAGING MAJOR REPAIRABLES (WRA/SRA)		
APP MB	5/72			
DIMENSIONS IN INCHES		CODE IDENT. 80132	DWG. NO. 13414	REV. Q
TOL ±.125		SCALE	SHEET 2 OF 6	

7.1 Top and Bottom Cushioning. Top and bottom pads shall be solid, three inches thick and shall extend the entire width and length of the container top and bottom.

7.2 Side/End Cushioning. Side/end pad thickness shall be three inches, including one inch deep convolutions. Adhesion of solid layers to convoluted layers is permissible in order to obtain the specified cushion thickness. Cushions shall be mitered to meet at a 45 degree joint, as shown in sketch on sheet 1.

8. DIMENSIONS (Container). The inside dimensions (I.D.) of the containers are shown in Table I. Inside dimensions are defined as the distance between the innermost surfaces of the container, excluding container radii, rivets and valve stems. Only plus (+) dimensional variations are permissible provided they do not exceed one inch in any dimension. Additional cushioning will be required to compensate for the variation from nominal.

9. MARKING.

9.1 Cushioning sections shall be identified by water-resistant tags, labels or stenciling (water-resistant ink) secured to the applicable part with the following information:

Part Number, e.g., 80132-13414-XXX-T (for Top Pad) 80132-13414-XXX-S (for Side Pad)
80132-13414-XXX-B (for Bottom Pad) 80132-13414-XXX-E (for End Pad)

9.2 The container shall be identified in accordance with ASO Drawing 80132-15064.

9.3 Supplemental Markings - The following special markings (a minimum of 1/2" in height) shall be permanently affixed to the container. When container size does not permit 1/2 inch size, proportionately sized lettering is permissible. Prior to marking, shell surface shall be flame treated and markings shall be affixed using epoxy base ink in accordance with MIL-I-43553.

"DO NOT REMOVE ITEM UNTIL READY FOR USE"
"REUSABLE - DO NOT DESTROY CONTAINER/CUSHIONING"
"THIS CONTAINER MUST BE RETURNED TO SUPPLY AT TIME OF EQUIPMENT EXCHANGE OR WHEN NOT IN USE"

10. KEYING. The container shall be permanently marked or mechanically keyed for proper orientation of the top section to the bottom section. When keying is accomplished by marking, the word "FRONT" (min. 1/2" in height) shall be marked near each keying line on the front of both the top and bottom sections of the container.

11. QUALITY ASSURANCE PROVISIONS.

11.1 Quality Assurance Inspections shall be classified as follows:

a. First Article Inspection
b. Production Inspection

11.2 The government shall be responsible for the performance of the first article inspections. The contractor shall be responsible for the performance of the production inspections. The government reserves the right to perform any reinspection or testing deemed necessary.

	DATE	AVIATION SUPPLY OFFICE		
DRAWN LWB	5/72	FAMILY OF REUSABLE CONTAINERS FOR PACKAGING MAJOR REPAIRABLES (WRA/SRA)		
APR MB	5/72			
DIMENSIONS IN INCHES		CODE IDENT. 80132	DWG. NO. 13414	REV. Q
TOL ±.125		SCALE None	SHEET 3 OF 6	

11.3 FIRST ARTICLE INSPECTION. First article inspection shall be performed when one of the following applies:

a. The container is being made by a manufacturer who has not previously submitted a first article sample that has been approved.

b. The container material, construction or cushioning has been changed since the previous first article inspection.

c. The testing requirements have changed since the previous first article inspection.

11.3.1 Testing Facility. If first article inspection is required, the contractor shall send the first article to: Naval Weapons Station Earle, Colts Neck, NJ 07722-5000, ATTN: Code 403. Mark for: "Test and Evaluation".

11.3.2 First Article Tests. The first article sample shall be subjected to the following tests:

11.3.2.1 Drop Tests. A total of eighty drops shall be performed with a dummy load, which conforms to Table I. Drop tests shall conform to ASTM D-775, Objectives A and B. Drop height shall be in accordance with Table II. Drop sequence shall be in accordance with Note 4 of ASTM D-775. The first cycle of drops (ten drops) shall be completed with the dummy load electronically instrumented. The instrumentation shall include a tri-axial accelerometer mounted near the dummy load's center of gravity and shall have a minimum system response of 90% between 4-250 hz. The magnitude of the acceleration shall be determined by the vector addition of the three (3) components as measured by accelerometers whose sensitive axes are mounted perpendicular to each other. Peak acceleration does not necessarily occur along all axes at the same instant of time; therefore, the data must be analyzed point by point along the common time base to determine the maximum resultant peak acceleration. Bellying of the container , cracking of the shell surfaces, "G" readings in excess of 45 G's, or any damage which would impair the functional performance of the container shall be cause for rejection.

11.3.2.2 In addition to the instrumented drop testing at ambient temperature, a non-instrumented low temperature, -20°F (-29°C), drop test with dummy load is required to prove the integrity of the container shell material. The test shall consist of 26 drops in accordance with Method 5007.1, Procedure A (Ref. Para. 6.3) of Fed. Test Method Std. No. 101C. Drop test height shall be in accordance with Table II. Any cracking of the shell or damage which would impair the functional performance of the container shall be cause for rejection.

11.3.2.3 Vibration Tests. Vibration tests are not required.

11.3.2.4 Leak Tests. Upon completion of the drop tests, a leak test conforming to Fed. Test Method Std. 101, Method 5009, pneumatic pressure technique shall be performed. After stabilization at an initial pressure of 0.5 psig (+.01), the container pressure shall be monitored. Any loss in pressure over a 30 minute period, which exceeds twenty-five percent (25%) of the original stabilized pressure shall be cause for rejection.

11.3.3 Examination. The sample shall be examined for conformance to this specification.

11.3.4 In the event the first article sample fails the tests or examination specified in paragraph 11.3.2 or 11.3.3, the container shall be redesigned to correct the area(s) of deficiency. ASO, Code 05121, shall be notified in writing of complete details as to how the design of the container has been changed to correct the area(s) of deficiency before the first article sample is submitted for reinspection.

11.3.5 Submittal of the data requirements specified on Form DD1423 of the contract shall be accomplished 10 days after approval of first article sample.

11.4 PRODUCTION INSPECTION. One percent or a minimum of one sample, whichever is greater, from each lot shall undergo the quality inspections of paragraphs 11.4.1, 11.4.2 and 11.4.3. A lot shall consist of the total quantity of any single size container ordered on one contract. Representative sampling shall be used, i.e., the samples are to be selected at random throughout the lot. If any sample fails a test, the number of original samples shall be doubled and subjected to all production inspections. If any of the reinspected samples fail, the lot shall be rejected. A rejected lot may be reworked only once by the contractor, correcting the area of deficiency. After lot correction, representative samples, as defined above for quantity and method of selection, shall be submitted to production inspection. All production inspections must be witnessed by a government representative.

11.4.1 Examination. The sample(s) shall be examined for conformance to the approved first article sample.

11.4.2 Drop Tests. The sample(s) shall be loaded with a dummy load, which conforms to Table I, supplied by the manufacturer. The loaded container shall be dropped once onto each of the eight corners, twelve edges and six surfaces. Drop height shall be in accordance with Table II. Bellying of the container, cracking of the shell surfaces, or any damage which would impair the functional performance of the container shall be cause for rejection.

11.4.3 Leak Tests. After being tested per paragraph 11.4.2, a leak test with the same pressure settings and rejection criteria of paragraph 11.3.2.4 shall be performed.

TABLE I

NSN 6KD-8145-	Navy P/N 13414-	* Cavity/Dummy Load Size (LxWxD)	Container I.D. (LxWxD)	Est. Container O.D. (LxWxD)	Est. Gross Cube (cu.ft.)	Cube Code Per MIL-STD-726	Est. Container Net Weight (lbs.)	Dummy Load Weight (lbs.)
00-301-2987	017	4x4x8	10x10x14	13x13x16	1.6	BG	12.1	6.0
00-288-1396	018	4x4x12	10x10x18	13x13x20	2.0	BL	11.8	7.0
00-553-1539	025	8.5x7x4	14.5x13x10	18x16x12	2.0	BL	14.1	9.0
00-519-6384	029	8x8x6	14x14x12	17x17x14	2.4	BN	17.8	11.0
00-288-1397	024	6x6x12	12x12x18	15x15x20	2.6	BP	16.1	11.0
00-485-8256	038	14x7x6	20x13x12	23x16x14	3.0	BR	20.5	17.0
00-522-6907	033	10x10x9	16x16x15	19x19x17	3.6	BT	23.3	20.0
00-449-8424	090	12x8.5x13	18x14.5x19	21x18x21	4.6	BW	29.6	25.0
01-044-3289	095	16.5x15x5.5	22.5x21x11.5	26x24x14	5.1	C2	30.0	33.0
00-540-1762	046	16x10x11	22x16x17	25x19x19	5.3	C4	31.3	30.0
00-501-9138	110	23x8.5x8	29x14.5x14	32x18x16	5.4	C5	32.3	28.0
00-549-6647	078	22x12x7	28x18x13	31x21x15	5.7	C7	34.7	35.0
00-536-4925	101	28x12x9	34x18x15	37x21x17	7.7	E5	44.6	44.0
00-449-8427	083	24x12x13	30x18x19	33x21x21	8.5	F3	47.7	50.0
00-499-9808	125	16.5x15x16.5	22.5x21x22.5	26x24x25	9.1	F8	48.4	55.0
00-485-8250	077	21x21x11	27x27x17	30x30x19	9.9	G6	57.0	70.0
00-514-2798	102	28x18x11	34x24x17	37x27x19	11.0	H2	62.4	78.0
01-026-2369	170	22x18.5x14.5	28x24.5x20.5	31x28x23	11.6	H4	60.0	80.0
00-529-8585	124	34x18x12	40x24x18	43x27x20	13.5	J2	64.6	85.0
01-008-3683	502	30x14x21	36x20x27	39x23x29	15.3	J7	69.0	120.0
01-010-3776	501	21x21x26	27x27x32	30x30x34	17.8	K2	62.0	110.0

* Cavity size is defined as the distance between the convoluted tips of the side cushions, and the distance between the top and bottom cushions.

TABLE II

Gross Wt. (lbs.)	Drop Height (inches)	No. Handles
0 - 50	30	2
51 - 100	21	2
101 - above	18	4

	DATE	AVIATION SUPPLY OFFICE
DRAWN LWB	5/72	FAMILY OF REUSABLE CONTAINERS FOR PACKAGING MAJOR REPAIRABLES (WRA/SRA)
APP MB	5/72	
DIMENSIONS IN INCHES	CODE IDENT. 80132	DWG NO. 13414
TOL ± .125	SCALE None	SHEET 6 OF 6
		REV. Ω

REV L	Change Test Requirements	EHB	JPY	10/78
REV M	Add'l Mat'l & Test	EMS	RA	4/88
REV N	UPDT COG, CODES	EHB	BWH	12/89
REV Q	UPDATE MCC, GEN'L REV.	BT	RSA	10/91

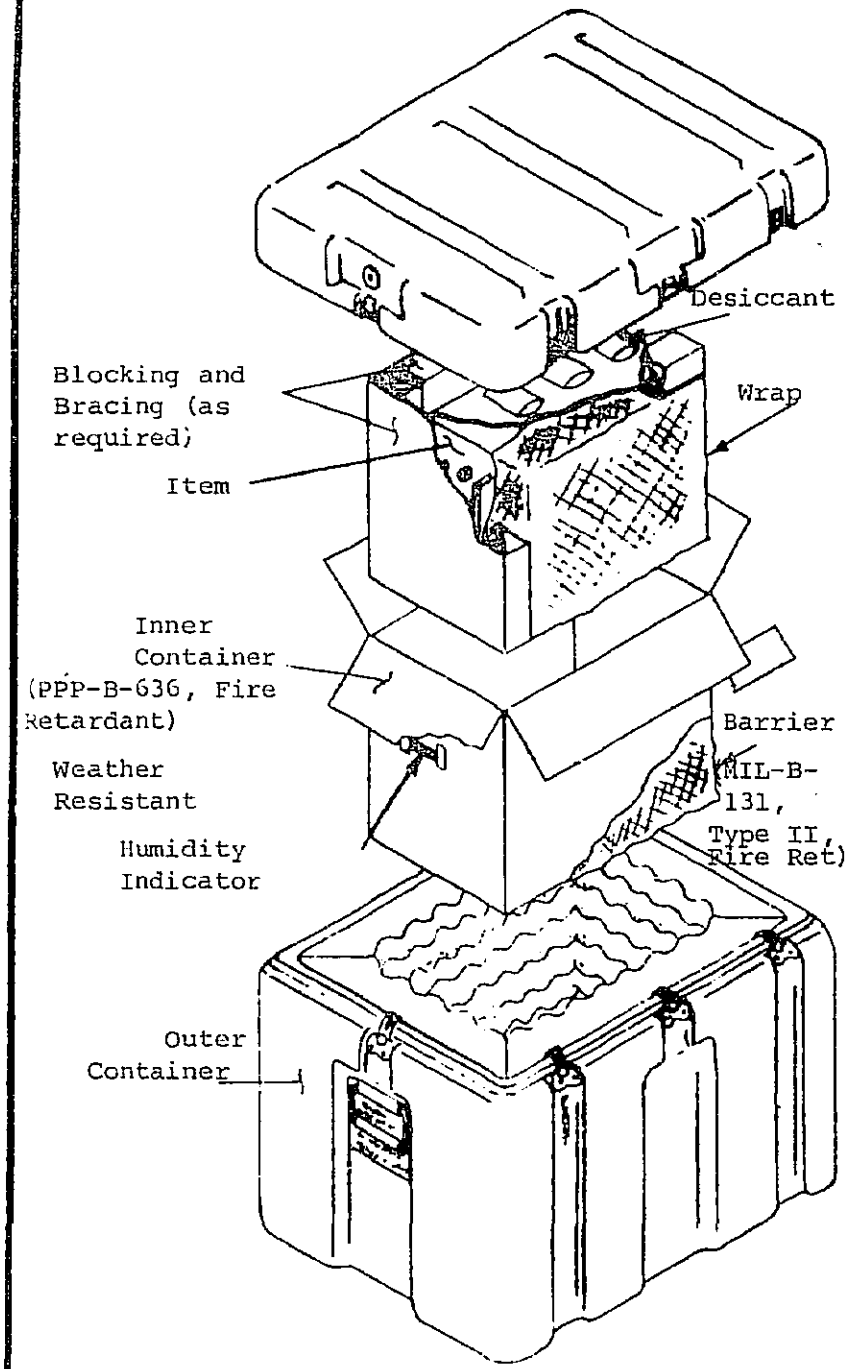

Packaging Code per MIL-STD-726: DW1100K3ZZZZZ000AYYYY

1. The item shall be packaged in accordance with the above packaging code.

2. The inner package shall be centrally located within the cavity of the reusable container. When voids exist between the inner package and the reusable container cavity, the voids shall be filled with additional sheets of cellulosic cushioning material in accordance with PPP-C-843 in such a manner that the additional cushioning makes contact with, but does not compress the convolutions of the existing container foam.

3. Both the inner package (barrier bag) and outer container shall be marked/re-marked with the use of labels and/or tags in accordance with MIL-STD-129 including bar code labels. A tag shall be used for bar code labeling of the outer container.

4. For retrograde shipments of non-RFI items, Navy field activities may substitute the following in lieu of the inner package: Wrap item with sufficient material conforming to PPP-C-795, PPP-C-1752, PPP-C-1797 or PPP-C-1842 to smooth out all protrusions, edges, and faces. The wrapped item with desiccant shall then be inserted into the reusable container cavity as described in para. 2.

NOTE:

Container sketch shows typical design and use of the container. Variations of the container's physical appearance, etc. are acceptable provided performance requirements are met.

ABOVE INSTRUCTIONS FOR USE OF THE CONTAINER

	DATE	AVIATION SUPPLY OFFICE		
DRAWN LWB	5/72	FAMILY OF REUSABLE CONTAINERS FOR PACKAGING MAJOR REPAIRABLES (WRA/SRA)		
APP MB	5/72			
DIMENSIONS IN INCHES		CODE IDENT. 80132	DWG. NO. 13414	REV.
TOL ± .125		SCALE None	SHEET 1 OF 6	Q

REQUIREMENTS FOR CONTAINER PROCUREMENT

The containers shall meet all applicable manufacturing, quality control standards, and test requirements of Air Transport Association Specification 300, Category I, as well as the following additions and/or exceptions:

1. CONTAINER SHELL. The containers shall be molded of fiberglass, virgin polyethylene, other virgin synthetic/plastic materials or a combination of these materials. Any manufacturer using the thermoforming (vacuum forming) process to produce this container shall use Phillips Chemical Company's high density polyethylene Marlex resin number HXM50100. Corrosion resistant metal reinforcements are permissible.

2. CLOSURE. A water-tight seal shall be accomplished by using an integrally molded plastic or an extruded aluminum, tongue-in-groove, gasketed closure (tongue in base; groove in lid). The gasket must be joined in one continuous length, round or extruded. When an aluminum extrusion is used for the closure, both male and female extrusions shall be formed to the shape of the container's parting line, welded to form two continuous pieces, and then treated to form a visible chromate coating conforming to MIL-C-5541, Class 3. The extrusions must be joined to the container shell by a stake and roll method or mechanical crimping. Staking/crimping must be on 1/2" centers on all straight surfaces; staking of radii may be omitted at the contractor's discretion.

3. FASTENERS. Fasteners shall be quarter-turn type, Simmons' part number (82240) B1900-1144 or equivalent. Fasteners must have provisions for lead wire seals. Fasteners must be affixed to the four sides (except for sizes 017 and 018) of the case by welding or riveting. Rivets when used shall be sealed with a permanent, waterproof type sealant. Container base and lid shall not be attached by hinges, limit chains, etc.

4. HANDLES. Handles (see Table II for quantity) shall be a chest type designed for surface mounting with stops to hold the bail at a right angle to the mounting plate when in a carrying position and spring loaded to fold the bail into a down position when released. The bail of the handles shall give an inside length not less than 4.25 inches with a minimum clearance of 1.8 inches between the bail grip and the mounting plate. Handles must be attached by rivets sealed per paragraph 3.

5. PRESSURE RELIEF VALVE. An automatic two-way pressure relief valve with a manual release conforming to MIL-V-27166 shall be used. The relief valve shall have a cracking pressure of 0.5 psig (±0.1), and a minimum sealing pressure of 0.25 psig. Each container shall have a mounting hole with a maximum 1.1 inch diameter to accept the relief valve.

6. STACKING AND PROTECTIVE RIBS. Male stacking ribs max. 1" wide, min. 3/8" high, on top of the container, and mating female stacking ribs in the container bottom shall be provided. All hardware must be either recessed (indented) or protected by ribs in the container shell.

7. CUSHIONING. Cushioning shall conform to MIL-P-26514, Type I, Class 2, Grade C. Cushioning material shall be polyurethane - polyether type, and shall be flame retardant. The cushion pads shall extend the entire width and height of the walls of the container. Corners shall be rounded to accommodate the container. All cushion pads shall be secured to the container either by entrapment or by using minimal adhesives. Cushion pads (top, bottom, sides, ends) shall not be bonded to each other. A 1.25 inch diameter air passage shall be provided in the cushioning between the pressure relief valve and the cavity.

	DATE	AVIATION SUPPLY OFFICE		
DRAWN LWB	5/72	FAMILY OF REUSABLE CONTAINERS FOR PACKAGING MAJOR REPAIRABLES (WRA/SRA)		
APP MB	5/72			
DIMENSIONS IN INCHES		CODE IDENT. 80132	DWG. NO. 13414	REV. Q
TOL ± .125		SCALE	SHEET 2 OF 6	

7.1 Top and Bottom Cushioning. Top and bottom pads shall be solid, three inches thick and shall extend the entire width and length of the container top and bottom.

7.2 Side/End Cushioning. Side/end pad thickness shall be three inches, including one inch deep convolutions. Adhesion of solid layers to convoluted layers is permissible in order to obtain the specified cushion thickness. Cushions shall be mitered to meet at a 45 degree joint, as shown in sketch on sheet 1.

8. DIMENSIONS (Container). The inside dimensions (I.D.) of the containers are shown in Table I. Inside dimensions are defined as the distance between the innermost surfaces of the container, excluding container radii, rivets and valve stems. Only plus (+) dimensional variations are permissible provided they do not exceed one inch in any dimension. Additional cushioning will be required to compensate for the variation from nominal.

9. MARKING.

9.1 Cushioning sections shall be identified by water-resistant tags, labels or stenciling (water-resistant ink) secured to the applicable part with the following information:

Part Number, e.g., 80132-13414-XXX-T (for Top Pad) 80132-13414-XXX-S (for Side Pad)
80132-13414-XXX-B (for Bottom Pad) 80132-13414-XXX-E (for End Pad)

9.2 The container shall be identified in accordance with ASO Drawing 80132-15064.

9.3 Supplemental Markings - The following special markings (a minimum of 1/2" in height) shall be permanently affixed to the container. When container size does not permit 1/2 inch size, proportionately sized lettering is permissible. Prior to marking, shell surface shall be flame treated and markings shall be affixed using epoxy base ink in accordance with MIL-I-43553.

"DO NOT REMOVE ITEM UNTIL READY FOR USE"
"REUSABLE - DO NOT DESTROY CONTAINER/CUSHIONING"
"THIS CONTAINER MUST BE RETURNED TO SUPPLY AT TIME OF EQUIPMENT EXCHANGE OR WHEN NOT IN USE"

10. KEYING. The container shall be permanently marked or mechanically keyed for proper orientation of the top section to the bottom section. When keying is accomplished by marking, the word "FRONT" (min. 1/2" in height) shall be marked near each keying line on the front of both the top and bottom sections of the container.

11. QUALITY ASSURANCE PROVISIONS.

11.1 Quality Assurance Inspections shall be classified as follows:

a. First Article Inspection
b. Production Inspection

11.2 The government shall be responsible for the performance of the first article inspections. The contractor shall be responsible for the performance of the production inspections. The government reserves the right to perform any reinspection or testing deemed necessary.

	DATE	AVIATION SUPPLY OFFICE		
DRAWN LWB	5/72	FAMILY OF REUSABLE CONTAINERS FOR PACKAGING MAJOR REPAIRABLES (WRA/SRA)		
APR MB	5/72			
DIMENSIONS IN INCHES		CODE IDENT. 80132	DWG. NO. 13414	REV. Q
TOL ±.125		SCALE None	SHEET 3 OF 6	

11.3 FIRST ARTICLE INSPECTION. First article inspection shall be performed when one of the following applies:

a. The container is being made by a manufacturer who has not previously submitted a first article sample that has been approved.

b. The container material, construction or cushioning has been changed since the previous first article inspection.

c. The testing requirements have changed since the previous first article inspection.

11.3.1 Testing Facility. If first article inspection is required, the contractor shall send the first article to: Naval Weapons Station Earle, Colts Neck, NJ 07722-5000, ATTN: Code 403. Mark for: "Test and Evaluation".

11.3.2 First Article Tests. The first article sample shall be subjected to the following tests:

11.3.2.1 Drop Tests. A total of eighty drops shall be performed with a dummy load, which conforms to Table I. Drop tests shall conform to ASTM D-775, Objectives A and B. Drop height shall be in accordance with Table II. Drop sequence shall be in accordance with Note 4 of ASTM D-775. The first cycle of drops (ten drops) shall be completed with the dummy load electronically instrumented. The instrumentation shall include a tri-axial accelerometer mounted near the dummy load's center of gravity and shall have a minimum system response of 90% between 4-250 hz. The magnitude of the acceleration shall be determined by the vector addition of the three (3) components as measured by accelerometers whose sensitive axes are mounted perpendicular to each other. Peak acceleration does not necessarily occur along all axes at the same instant of time; therefore, the data must be analyzed point by point along the common time base to determine the maximum resultant peak acceleration. Bellying of the container , cracking of the shell surfaces, "G" readings in excess of 45 G's, or any damage which would impair the functional performance of the container shall be cause for rejection.

11.3.2.2 In addition to the instrumented drop testing at ambient temperature, a non-instrumented low temperature, -20°F (-29°C), drop test with dummy load is required to prove the integrity of the container shell material. The test shall consist of 26 drops in accordance with Method 5007.1, Procedure A (Ref. Para. 6.3) of Fed. Test Method Std. No. 101C. Drop test height shall be in accordance with Table II. Any cracking of the shell or damage which would impair the functional performance of the container shall be cause for rejection.

11.3.2.3 Vibration Tests. Vibration tests are not required.

11.3.2.4 Leak Tests. Upon completion of the drop tests, a leak test conforming to Fed. Test Method Std. 101, Method 5009, pneumatic pressure technique shall be performed. After stabilization at an initial pressure of 0.5 psig (+.01), the container pressure shall be monitored. Any loss in pressure over a 30 minute period, which exceeds twenty-five percent (25) of the original stabilized pressure shall be cause for rejection.

11.3.3 Examination. The sample shall be examined for conformance to this specification.

11.3.4 In the event the first article sample fails the tests or examination specified in paragraph 11.3.2 or 11.3.3, the container shall be redesigned to correct the area(s) of deficiency. ASO, Code 05121, shall be notified in writing of complete details as to how the design of the container has been changed to correct the area(s) of deficiency before the first article sample is submitted for reinspection.

11.3.5 Submittal of the data requirements specified on Form DD1423 of the contract shall be accomplished 10 days after approval of first article sample.

11.4 PRODUCTION INSPECTION. One percent or a minimum of one sample, whichever is greater, from each lot shall undergo the quality inspections of paragraphs 11.4.1, 11.4.2 and 11.4.3. A lot shall consist of the total quantity of any single size container ordered on one contract. Representative sampling shall be used, i.e., the samples are to be selected at random throughout the lot. If any sample fails a test, the number of original samples shall be doubled and subjected to all production inspections. If any of the reinspected samples fail, the lot shall be rejected. A rejected lot may be reworked only once by the contractor, correcting the area of deficiency. After lot correction, representative samples, as defined above for quantity and method of selection, shall be submitted to production inspection. All production inspections must be witnessed by a government representative.

11.4.1 Examination. The sample(s) shall be examined for conformance to the approved first article sample.

11.4.2 Drop Tests. The sample(s) shall be loaded with a dummy load, which conforms to Table I, supplied by the manufacturer. The loaded container shall be dropped once onto each of the eight corners, twelve edges and six surfaces. Drop height shall be in accordance with Table II. Bellying of the container, cracking of the shell surfaces, or any damage which would impair the functional performance of the container shall be cause for rejection.

11.4.3 Leak Tests. After being tested per paragraph 11.4.2, a leak test with the same pressure settings and rejection criteria of paragraph 11.3.2.4 shall be performed.

TABLE I

NSN 6KD-8145-	Navy P/N 13414-	* Cavity/Dummy Load Size (LxWxD)	Container I.D. (LxWxD)	Est. Container O.D. (LxWxD)	Est. Gross Cube (cu.ft.)	Cube Code Per MIL-STD-726	Est. Container Net Weight (lbs.)	Dummy Load Weight (lbs.)
00-301-2987	017	4x4x8	10x10x14	13x13x16	1.6	BG	12.1	6.0
00-288-1396	018	4x4x12	10x10x18	13x13x20	2.0	BL	11.8	7.0
00-553-1539	025	8.5x7x4	14.5x13x10	18x16x12	2.0	BL	14.1	9.0
00-519-6384	029	8x8x6	14x14x12	17x17x14	2.4	BN	17.8	11.0
00-288-1397	024	6x6x12	12x12x18	15x15x20	2.6	BP	16.1	11.0
00-485-8256	038	14x7x6	20x13x12	23x16x14	3.0	BR	20.5	17.0
00-522-6907	033	10x10x9	16x16x15	19x19x17	3.6	BT	23.3	20.0
00-449-8424	090	12x8.5x13	18x14.5x19	21x18x21	4.6	BW	29.6	25.0
01-044-3289	095	16.5x15x5.5	22.5x21x11.5	26x24x14	5.1	C2	30.0	33.0
00-540-1762	046	16x10x11	22x16x17	25x19x19	5.3	C4	31.3	30.0
00-501-9138	110	23x8.5x8	29x14.5x14	32x18x16	5.4	C5	32.3	28.0
00-549-6647	078	22x12x7	28x18x13	31x21x15	5.7	C7	34.7	35.0
00-536-4925	101	28x12x9	34x18x15	37x21x17	7.7	E5	44.6	44.0
00-449-8427	083	24x12x13	30x18x19	33x21x21	8.5	F3	47.7	50.0
00-499-9808	125	16.5x15x16.5	22.5x21x22.5	26x24x25	9.1	F8	48.4	55.0
00-485-8250	077	21x21x11	27x27x17	30x30x19	9.9	G6	57.0	70.0
00-514-2798	102	28x18x11	34x24x17	37x27x19	11.0	H2	62.4	78.0
01-026-2369	170	22x18.5x14.5	28x24.5x20.5	31x28x23	11.6	H4	60.0	80.0
00-529-8585	124	34x18x12	40x24x18	43x27x20	13.5	J2	64.6	85.0
01-008-3683	502	30x14x21	36x20x27	39x23x29	15.3	J7	69.0	120.0
01-010-3776	501	21x21x26	27x27x32	30x30x34	17.8	K2	62.0	110.0

* Cavity size is defined as the distance between the convoluted tips of the side cushions, and the distance between the top and bottom cushions.

TABLE II

Gross Wt. (lbs.)	Drop Height (inches)	No. Handles
0 - 50	30	2
51 - 100	21	2
101 - above	18	4

	DATE	AVIATION SUPPLY OFFICE
DRAWN LWB	5/72	FAMILY OF REUSABLE CONTAINERS FOR PACKAGING MAJOR REPAIRABLES (WRA/SRA)
APP MB	5/72	
DIMENSIONS IN INCHES	CODE IDENT. 80132	DWG NO. 13414
TOL ± .125	SCALE None	SHEET 6 OF 6
		REV. Q