WWYK250063
INSTALL REACT VII FACILITY
B9001, V19

KEY PLAN:

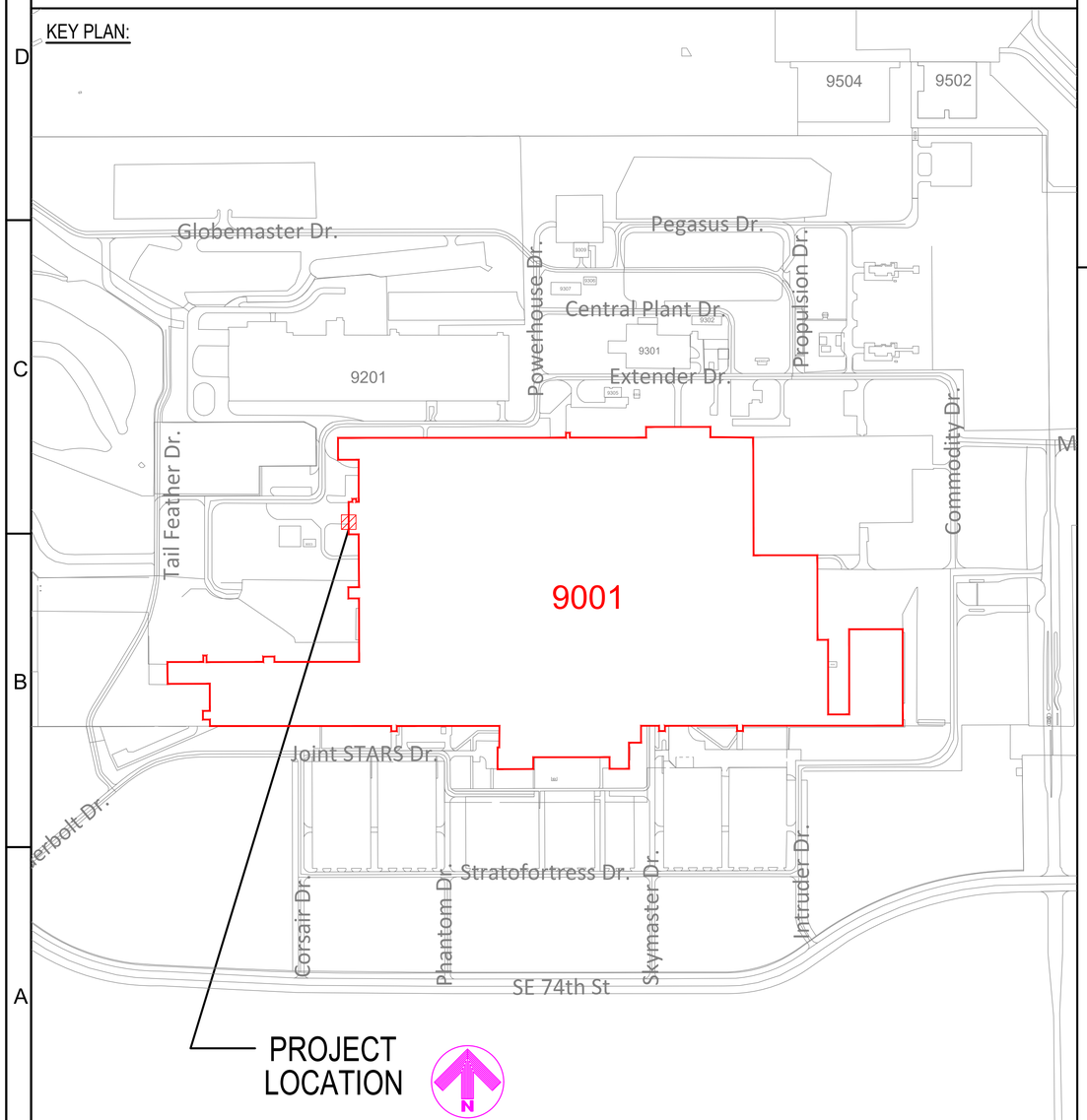

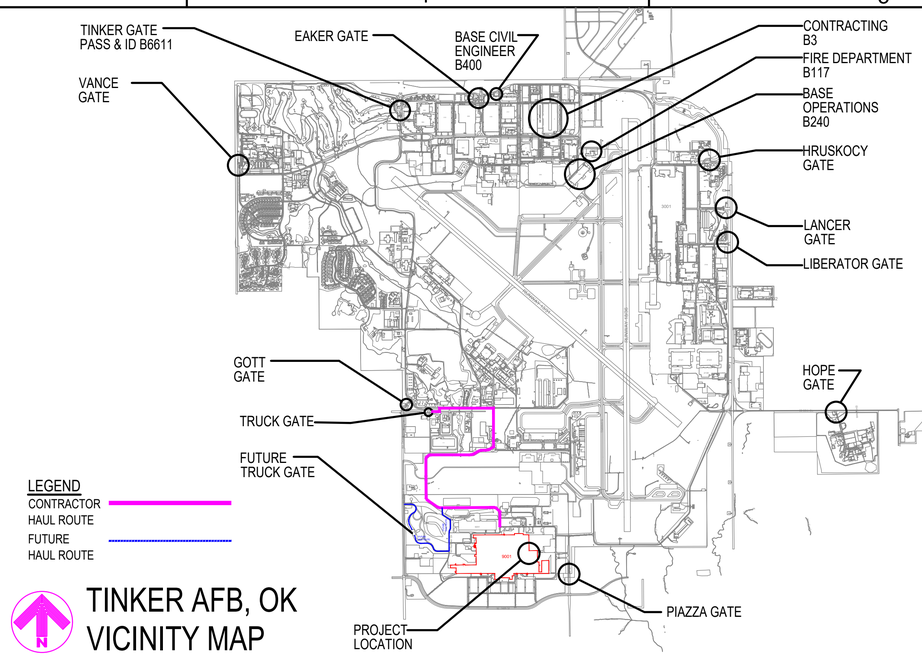

TINKER AFB, OK
VICINITY MAP

GENERAL NOTES:

1. BRAND NAMES: REFERENCE TO SPECIFIC BRAND NAMES OR COMPANIES IS FOR THE PURPOSE OF ESTABLISHING MINIMUM QUALITY STANDARDS, IDENTIFICATION AND GUIDANCE AND IS NOT INTENDED TO LIMIT SELECTION OF OTHER MANUFACTURERS THAT ARE EQUAL OR EXCEED THE SPECIFIED ITEMS IN TERMS OF PHYSICAL PROPERTIES, INCLUDING, COLOR RANGE, FINISH, DURABILITY, APPEARANCE, PERFORMANCE CHARACTERISTICS, AND OTHER FACTORS. OTHER PRODUCTS, MATERIALS, COLORS AND SYSTEMS, MAY BE SUBMITTED FOR EVALUATION AND APPROVAL/DISAPPROVAL BY THE CONTRACTING OFFICER.

2. THIS SET OF CONSTRUCTION DOCUMENTS SHALL BE CONSIDERED AS A WHOLE IN THAT THE GENERAL CONTRACTOR AND ALL THE SUB-CONTRACTORS ARE RESPONSIBLE FOR THE INFORMATION PRESENTED ON ALL SHEETS ON THE SET OF DRAWINGS AND ALL SECTIONS OF THE SPECIFICATIONS.

3. THE CONTRACTOR IS RESPONSIBLE FOR ERECTING ALL CONSTRUCTION FENCING AND BARRICADES AS REQUIRED TO PROTECT CONSTRUCTION MATERIAL AND TO PREVENT ANY UNAUTHORIZED PERSONNEL FROM ENTERING THE CONSTRUCTION SITE.

4. ANY DAMAGE TO THE EXISTING GROUNDS OR FACILITIES CAUSED BY CONSTRUCTION TRAFFIC OR ANY CONSTRUCTION OPERATION SHALL BE REPAIRED OR REPLACED BY THE CONTRACTOR TO MATCH OR EXCEED EXISTING CONDITIONS AT NO ADDITIONAL COST TO THE GOVERNMENT.

5. ALL WORK NOTED & LOCATED IN THESE DOCS SHALL BE UNDERSTOOD BY THE CONTRACTOR TO REQUIRE ALL NEW LABOR & MATERIALS UNLESS SPECIFICALLY NOTED TO BE "EXISTING" OR "BY OTHERS".

PROJECT DRAWING INDEX

SEQ.	SHT.	SHEET TITLE
1	G-001	GENERAL NOTES & VICINITY MAP
2	G-002	FIRE PROTECTION GENERAL NOTES
3	G-003	GENERAL CODE ANALYSIS
4	G-004	GENERAL CODE ANALYSIS
5	G-005	GENERAL LIFE SAFETY PLAN
6	S-001	STRUCTURAL GENERAL NOTES
7	S-002	STRUCTURAL GENERAL NOTES AND SPECIAL INSPECTIONS
8	S-003	STRUCTURAL SPECIAL INSPECTIONS
9	SD-101	STRUCTURAL DEMOLITION PLAN
10	S-101	STRUCTURAL BASE PLAN
11	S-102	STRUCTURAL ROOF FRAMING PLAN
12	S-201	STRUCTURAL ELEVATIONS
13	S-501	DETAILS
14	S-502	DETAILS
15	S-503	DETAILS
16	S-504	DETAILS
17	AD-101	ARCHITECTURAL DEMOLITION PLAN
18	A-101	REACT VII AND LOADING DOCK FLOOR PLAN
19	A-102	FLOOR PLAN AND ENLARGED LOADING DOCK FLOOR PLAN
20	A-103	MEZZANINE PLAN
21	A-104	REFLECTED CEILING PLAN
22	A-105	WALL TYPE PLAN
23	A-106	ARCHITECTURAL ROOF PLAN
24	A-301	SECTIONS
25	A-401	ENLARGED PLAN, ELEVATIONS AND SCHEDULE
26	A-501	DETAILS
27	A-502	DETAILS
28	A-601	WINDOW AND DOOR SCHEDULES
29	A-602	WINDOW AND DOOR SCHEDULES
30	M-001	MECHANICAL SYMBOLS AND ABBREVIATIONS
31	MD-101	MECHANICAL DEMOLITION PLAN
32	M-101	MECHANICAL MEZZANINE PLAN
33	M-102	MECHANICAL FLOOR PLAN
34	M-103	HVAC PIPING FLOOR PLAN
35	M-501	DETAILS
36	M-601	SCHEDULES
37	M-602	HVAC SCHEMATIC
38	P-101	UNDERFLOOR PLUMBING PLAN
39	P-102	PLUMBING FLOOR PLAN
40	P-501	DETAILS
41	E-001	ELECTRICAL SYMBOLS AND ABBREVIATIONS
42	ED-101	ELECTRICAL DEMOLITION PLAN
43	E-101	ELECTRICAL POWER PLAN
44	E-102	LIGHTING CONCEPTUAL PLAN
45	E-103	ELECTRICAL MECHANICAL MEZZANINE PLAN
46	E-104	OVERHEAD DOOR ELECTRICAL SPECIFICATIONS
47	E-601	ELECTRICAL PANEL SCHEDULES
48	E-602	EASY POWER MODELS
49	FP-101	FIRE PROTECTION PLAN
50	FA-101	FIRE ALARM AND MASS NOTIFICATION PLAN

SIGNATURES

CORROSION ENGINEER: (CECE)	DATE:
CE OPERATIONS: (CECO)	DATE:
ZONE MANAGER:	DATE:
CONSTRUCTION MANAGEMENT: (CECE)	DATE:
FIRE DEPARTMENT	DATE:
SAFETY:	DATE:
INDUSTRIAL HYGIENE:	DATE:
ENVIRONMENTAL:	DATE:
ASBESTOS EVALUATION:	DATE:
COMMUNICATIONS: (COMM)	DATE:
USING AGENCY:	DATE:
REVIEWED BY:	DATE:
REVIEWED BY:	DATE:
DESIGN MANAGER: (CECE)	DATE:
CHIEF DESIGN BRANCH: (CECE)	DATE:
CHIEF ENGINEER DIR: (CECE)	DATE:
BASE CIVIL ENGINEER: (CE)	DATE:

AIR FORCE MATERIEL COMMAND
72 ABW CIVIL ENGINEER DIRECTORATE
TINKER AFB, OK

35% DESIGN

PROJECT INFORMATION
WWYK250063
INSTALL REACT VII FACILITY
B9001, V19
TINKER AIR FORCE BASE, OKLAHOMA

REVISIONS

MARK	DATE	DESCRIPTION

MANAGEMENT INFORMATION
ISSUE DATE:7 OCT 25
DESIGN GROUP:TEPA-CSAG
DESIGNED BY:J LESTER
DRAWN BY:T KISER
CHECKED BY:C HIXON
DESIGN FILE LOCATION: Eng=\Design\2020s\2025\202500630_Support0_3_Drawings\Model

SHEET TITLE
GENERAL NOTES AND VICINITY MAP

SHEET NUMBER
G-001
SHEET 01 OF

SPRINKLER SYSTEM GENERAL NOTES:

1. INSTALL A NEW WET SPRINKLER SYSTEM, INCLUDING, DROP PIPING AND SPRINKLER HEADS AS INDICATED ON THE CONTRACT DOCUMENTS, AS EVIDENTLY INTENDED AND IN ACCORDANCE WITH NFPA 13, APPLICABLE ETL'S AND UFC 3-600-01. THE CONTRACTOR SHALL PROVIDE SPRINKLER HEADS, ESCUTCHEONS, PIPE, FITTINGS, AND HANGERS AS REQUIRED TO ACCOMPLISH THE FUNCTIONS INTENDED AND REQUIRED BY CODE.
2. COORDINATE WORK WITH THAT OF OTHER TRADES SO AS TO AVOID CONFLICTS. RESOLVE CONFLICTS THROUGH THE A/E PRIOR TO ROUGH-IN. FAILURE TO PROVIDE SUCH COORDINATION PRIOR TO WORK BEING INSTALLED SHALL NOT BE CAUSE FOR ADDITIONAL COMPENSATION TO THE CONTRACTOR, AND MAY RESULT IN REJECTION OF THE WORK.
3. THE BUILDING SPRINKLER SYSTEM SHALL REMAIN OPERATIONAL AT ALL TIMES. CONTRACTOR SHALL SUPERVISE FIRE PROTECTION IMPAIRMENTS IN ACCORDANCE WITH UFC 3-601-02.
4. PROVIDE NEW MATERIALS, BEARING LABELS OR MARKING INDICATING THIRD PARTY TESTING AND APPROVAL, SUITABLE FOR THE APPLICATION INTENDED.
5. SUPPORT SPRINKLER PIPING BY MEANS OF ANCHORS, RODS, AND HANGERS, ETC., TO MAINTAIN ALIGNMENT AND PREVENT MOVEMENT.
6. THE BUILDING WILL BE OCCUPIED DURING CONSTRUCTION. THE CONTRACTOR SHALL COORDINATE WORK SCHEDULE WITH GOVERNMENT PRIOR TO COMMENCING WORK. CONTRACTOR SHALL BE RESPONSIBLE FOR WORKING AROUND OCCUPANT SCHEDULE AS DETERMINED BY THE GOVERNMENT AND MAINTAIN MINIMUM IMPACT DUE TO CONSTRUCTION.
7. SHOP DRAWINGS AND CALCULATIONS SHALL BE PREPARED BY A NICET LEVEL III IN WATER-BASED SYSTEMS LAYOUT.
8. SHOP DRAWINGS, CALCULATIONS, AND MATERIALS SUBMITTAL SHALL BE REVIEWED AND BEAR THE REVIEW STAMP OF A QUALIFIED FIRE PROTECTION ENGINEER AS PER UFC 3-600-01.

FIRE ALARM AND MASS NOTIFICATION GENERAL NOTES:

1. PROVIDE COMPLETE OPERATING FIRE ALARM AND MASS NOTIFICATION SYSTEMS AS INDICATED ON THE CONTRACT DOCUMENTS,AS EVIDENTLY INTENDED AND IN ACCORDANCE WITH NFPA 70, NFPA 72, NFPA 90A, APPLICABLE ETL'S, TINKER FIRE PROTECTION STANDARD, UFC 4-010-05, UFC 3-600-01 AND UFC 4-021-01. THE DRAWINGS ARE DIAGRAMMATIC IN NATURE AND INDICATE GENERAL ARRANGEMENTS OF SYSTEMS AND WORK, BUT DO NOT INCLUDE INTERCONNECTIONS BETWEEN OTHER SYSTEMS. THE CONTRACTOR SHALL PROVIDE CONDUIT, BACK BOXES, RACEWAY AND WIRING AS REQUIRED TO ACCOMPLISH THE FUNCTIONS INTENDED AND REQUIRED BY CODE.
2. COORDINATE WORK WITH THAT OF OTHER TRADES SO AS TO AVOID CONFLICTS. RESOLVE CONFLICTS THROUGH THE A/E PRIOR TO ROUGH-IN. FAILURE TO PROVIDE SUCH COORDINATION PRIOR TO WORK BEING INSTALLED SHALL NOT BE CAUSE FOR ADDITIONAL COMPENSATION TO THE CONTRACTOR, AND MAY RESULT IN REJECTION OF THE WORK.
3. THE BUILDING FIRE ALARM SYSTEM SHALL REMAIN OPERATIONAL AT ALL TIMES. CONTRACTOR SHALL SUPERVISE FIRE PROTECTION IMPAIRMENTS IN ACCORDANCE WITH UFC 3-601-02. NO PORTION OF THE BUILDING SHALL BE OCCUPIED UNTIL THE FIRE ALARM DEVICES HAVE BEEN INSTALLED AND PLACED IN SERVICE
4. PROVIDE NEW MATERIALS, BEARING LABELS OR MARKING INDICATING THIRD PARTY TESTING AND APPROVAL, SUITABLE FOR THE APPLICATION INTENDED.
5. INSTALL FIRE ALARM AND MASS NOTIFICATION CABLE IN ¾ INCH RED EMT METAL CONDUIT. FREE-RUN CABLE IS NOT PERMITTED. CONDUIT SHALL BE CONCEALED IN FINISHED SPACES, AND MAY BE INSTALLED EXPOSED IN UNFINISHED SPACES SUCH AS MECHANICAL AND ELECTRICAL ROOMS. INSTALL CONDUIT PERPENDICULAR OR PARALLEL TO THE BUILDING'S STRUCTURAL COMPONENTS.
6. INSTALL PULL AND JUNCTION BOXES AS REQUIRED TO MEET CODE AND INSTALLATION REQUIREMENTS. PULL AND JUNCTION BOXES SHALL BE CONCEALED IN FINISHED SPACES. COORDINATE WITH OTHER TRADES SO AS TO AVOID CONFLICTS.
7. SUPPORT CEILING MOUNTED BACK BOXES WITH "T" HANGERS OR EQUAL METHOD OF SUPPORT. BACK BOXES SHALL NOT BE SUPPORTED SOLELY BY CONDUIT.
8. IDENTIFY CONDUCTORS AT EACH JUNCTION BOX, OUTLET BOX, CABINET, PULL BOX, ETC., WITH VINYL HEAT SHRINK TAGS INDICATING PANEL AND CIRCUIT NUMBER, CONTROL WIRE IDENTIFICATION NUMBER, OR OTHER APPROPRIATE INFORMATION.
9. FASTEN AND SUPPORT CONDUIT AND BACK BOXES BY MEANS OF ANCHORS, RODS, HANGERS, ETC., TO MAINTAIN ALIGNMENT AND PREVENT MOVEMENT.
10. PERFORM WORK ON DE-ENERGIZED SYSTEMS ONLY TO PREVENT PERSONNEL INJURY AND POTENTIAL SYSTEM FAILURE. WHERE WORK ON EXISTING SYSTEMS SHALL REQUIRE INTERRUPTION OF ELECTRICAL SERVICE, TEMPORARY PROVISIONS ACCEPTABLE TO THE OWNER SHALL BE REQUIRED.
11. THE BUILDING WILL BE OCCUPIED DURING CONSTRUCTION. THE CONTRACTOR SHALL COORDINATE WORK SCHEDULE WITH GOVERNMENT PRIOR TO COMMENCING WORK. CONTRACTOR SHALL BE RESPONSIBLE FOR WORKING AROUND OCCUPANT SCHEDULE AS DETERMINED BY THE GOVERNMENT AND MAINTAIN MINIMUM IMPACT DUE.
12. SHOP DRAWINGS AND CALCULATIONS SHALL BE PREPARED BY A NICET LEVEL IV IN FIRE ALARM SYSTEMS.
13. SHOP DRAWINGS, CALCULATIONS, AND MATERIAL SUBMITTAL SHALL BE REVIEWED AND BEAR THE REVIEW STAMP OF A QUALIFIED FIRE PROTECTION ENGINEER AS PER UFC 3-600-01.

AIR FORCE MATERIEL COMMAND
72 ABW CIVIL ENGINEER DIRECTORATE
TINKER AFB, OK

35% DESIGN

PROJECT INFORMATION
WWYK250063
INSTALL REACT VII FACILITY
B9001, V19
TINKER AIR FORCE BASE, OKLAHOMA

REVISIONS

MARK	DATE	DESCRIPTION

MANAGEMENT INFORMATION
ISSUE DATE:7 OCT 25
DESIGN GROUP:TEPA-CSAG
DESIGNED BY:T ERB
DRAWN BY:J. MARTINEZ
CHECKED BY:C HIXON
DESIGN FILE LOCATION:
Engr\Design\2020s\2025\202500630_Support\0_3_Drawings\Model

SHEET TITLE
FIRE PROTECTION GENERAL NOTES

SHEET NUMBER
G-002

SHEET 02 OF

FIRE PROTECTION / LIFE SAFETY CODE ANALYSIS

REFERENCED CODES AND STANDARDS:

UNIFIED FACILITIES CRITERIA (UFC)

UFC 1-200-01	DOD BUILDING CODE, CHANGE 4, 17 DEC 2024.
UFC 1-200-02	HIGH PERFORMANCE AND SUSTAINABLE BUILDING REQUIREMENTS, CHANGE 2, 01 JUNE 2022.
UFC 1-300-02	UNIFIED FACILITIES GUIDE SPECIFICATIONS (UFGS) FORMAT STANDARD, CHANGE 3, 18 MAY 2021.
UFC 3-101-01	ARCHITECTURE, CHANGE 4, 08 JAN 2024.
UFC 3-120-01	DESIGN: SIGN STANDARD, CHANGE 4, 01 FEB 2023.
UFC 3-120-10	INTERIOR DESIGN, CHANGE 2, 15 JUNE 2021.
UFC 3-201-01	CIVIL ENGINEERING, 20 DEC 2022.
UFC 3-301-01	STRUCTURAL ENGINEERING, CHANGE 3, 3 FEB 2025.
UFC 3-520-01	INTERIOR ELECTRICAL SYSTEMS, CHANGE 2, 12 APRIL 2021.
UFC 3-550-01	OPERATION AND MAINTENANCE: ELECTRICAL SAFETY, CHANGE 3, 15 MAY 2023.
UFC 3-600-01	FIRE PROTECTION ENGINEERING FOR FACILITIES, CHANGE 6, 6 MAY 2021.
UFC 3-601-02	FIRE PROTECTION SYSTEMS INSPECTION, TESTING, AND MAINTENANCE, CHANGE 2. 18 APRIL 2025.
UFC 3-701-01	DOD FACILITIES PRICING GUIDE, CHANGE 5, 10 SEPT 2024.
UFC 3-730-01	PROGRAMMING COST ESTIMATES FOR MILITARY CONSTRUCTION, 01 MARCH 2024.
UFC 3-740-05	CONSTRUCTION COST ESTIMATING, 09 DEC 2022.
UFC 4-010-01	DOD MINIMUM ANTITERRORISM STANDARDS FOR BUILDINGS, CHANGE 3, 24 MAY 2024.
UFC 4-021-01	DESIGN AND O&M: MASS NOTIFICATION SYSTEMS, CHANGE 1, JAN 2010.
UFC 4-021-02	ELECTRONIC SECURITY SYSTEMS, CHANGE 1, 11 SEPT 2019.
UFC 4-211-01	AIRCRAFT MAINTENANCE HANGARS, CHANGE 3, 20 APRIL 2021.

NATIONAL FIRE PROTECTION ASSOCIATION (NFPA)

NFPA 10	STANDARD FOR PORTABLE FIRE EXTINGUISHERS, 2022 EDITION
NFPA 13	STANDARD FOR THE INSTALLATION OF AUTOMATIC SPRINKLERS, 2025 EDITION
NFPA 70	NATIONAL ELECTRIC CODE, 2023 EDITION
NFPA 72	NATIONAL FIRE ALARM AND SIGNALING CODE, 2025 EDITION
NFPA 80	STANDARD FOR FIRE DOORS AND OTHER OPENING PROTECTIVES, 2025 EDITION
NFPA 90A	STANDARD FOR THE INSTALLATION OF AIR-CONDITIONING AND VENTILATION SYSTEMS, 2024 EDITION
NFPA 101	LIFE SAFETY CODE, 2024 EDITION.
NFPA 170	STANDARD FOR FIRE SAFETY AND EMERGENCY SYMBOLS, 2024 EDITION
NFPA 241	STANDARD FOR SAFEGUARDING DURING CONSTRUCTION, ALTERATION AND DEMOLITION OPERATIONS, 2022 EDITION
NFPA 400	HAZARDOUS MATERIALS CODE, 2025 EDITION
NFPA 704	STANDARD SYSTEM FOR THE IDENTIFICATION OF THE HAZARDS OF MATERIALS FOR EMERGENCY RESPONSE, 2022 EDITION

OTHER REFERENCES

INTERNATIONAL CODE COUNCIL, INTERNATIONAL BUILDING CODE (IBC), 2024 EDITION (AS AMENDED BY UFC 1-200-01)
ARCHITECTURAL BARRIERS ACT (ABA) STANDARDS, 2015 EDITION

APPLICATION HIERARCHY

WHERE DISCREPANCIES BETWEEN REGULATIONS AND TECHNICAL LETTERS OCCUR, THE FOLLOWING HIERARCHY WILL BE USED:
UFC'S OVER-RULE ALL CRITERIA; AIR FORCE ENGINEERING TECHNICAL LETTERS OVER-RULE NFPA STANDARDS.
ONLY THE PORTIONS OF INTERNATIONAL BUILDING CODE CORRESPONDING TO REFERENCED SECTIONS OF IBC, PER UFC 1-200-01 APPLY.
NFPA 409 ONLY APPLICABLE WHEN REFERENCED BY UFC 4-211-01. CHAPTER 3-3.1.

PROJECT DESCRIPTION:

THIS PROJECT CONSISTS OF CONSTRUCTING A 1,696 SF REACT VII WHITE HOUSE STRUCTURE WITHIN THE EXISTING BUILDING 9001 AT TINKER AIR FORCE BASE, OKLAHOMA.

IEBC - ALTERATION LEVEL 2:

AN ALTERATION - LEVEL 2 INCLUDES THE RECONFIGURATION OF SPACE, THE ADDITION OR ELIMINATION OF ANY DOOR OR WINDOW, THE RECONFIGURATION OF ANY SYSTEM, OR THE INSTALLATION OF ANY ADDITIONAL EQUIPMENT.

NFPA 101 - RECONSTRUCTION:

THE RECONFIGURATION OF A SPACE THAT AFFECTS AN EXIT OR A CORRIDOR SHARED BY MORE THAN ONE OCCUPANT SPACE; OR THE RECONFIGURATION OF A SPACE SUCH THAT THE REHABILITATION WORK AREA IS NOT PERMITTED TO BE OCCUPIED BECAUSE EXISTING MEANS OF EGRESS AND FIRE PROTECTION SYSTEMS, OR THEIR EQUIVALENT, ARE NOT IN PLACE OR CONTINUOUSLY MAINTAINED.

GENERAL REQUIREMENTS:

RECONSTRUCTION: REQUIRES NEWLY CONSTRUCTED ELEMENTS, COMPONENTS AND SYSTEMS TO COMPLY WITH NEW CONSTRUCTION REQUIREMENTS IN THIS UFC 3-600-01 AND NFPA 101 FOR NEW CONSTRUCTION. ADDITIONALLY, THE WORK MUST NOT MAKE THE BUILDING AREAS LOCATED OUTSIDE OF THE WORK AREA LESS CONFORMING WITH UFC 3-600-01 AND NFPA 101 THAN BEFORE THE MODIFICATION PROJECT WAS UNDERTAKEN.

BUILDING DESCRIPTION (BUILDING GENERAL INFORMATION)

• BUILDING IS CONSTRUCTED USING TYPE IIB CONSTRUCTION	IBC § 602 & TABLE 601
• BUILDING IS FULLY PROTECTED WITH AN AUTOMATIC SPRINKLER SYSTEM	IBC § 903.3.1.1

USE AND OCCUPANCY CLASSIFICATION:

IBC CHAPTER 3 AND UFC 3-600-01 APPLY.	UFC 1-200-01 § 2-3
IBC APPLIES TO OCCUPANCY CLASSIFICATION AS IT RELATES TO BUILDING HEIGHT, BUILDING AREA, BUILDING SEPARATION AND OCCUPANCY SEPARATION.	UFC 3-600-01 § 3-2
• IBC OCCUPANCY CLASSIFICATIONS - MIXED USE AND OCCUPANCY - NON-SEPARATED OCCUPANCY:	IBC § 508.3
GROUP B — BUSINESS	IBC § 304 (BUSINESS)
GROUP F-1 — MODERATE HAZARD FACTORY INDUSTRIAL (MECHANICAL SHOPS)	IBC § 306 (FACTORY INDUSTRIAL)
GROUP S-1 — MODERATE-HAZARD STORAGE (STORAGE ROOMS)	IBC § 311 (STORAGE)
NFPA 101 APPLIES TO OCCUPANCY CLASSIFICATION AS IT RELATES TO FIRE/SMOKE RESISTANCE RATING OF INTERIOR LOAD-BEARING PARTITIONS (OTHER THAN OCCUPANCY SEPARATION), INTERIOR FINISH, FIRE PROTECTION FEATURES AND MEANS OF EGRESS.	UFC 3-600-01 § 3-3
• NFPA OCCUPANCY CLASSIFICATIONS - MIXED OCCUPANCIES:	NFPA 101 § 6.1.14.3
BUSINESS	NFPA 101 CHAPTER 38
INDUSTRIAL USE — GENERAL PURPOSE (MECHANICAL SHOPS)	NFPA 101 CHAPTER 40
STORAGE USE — ORDINARY-HAZARD (AIRCRAFT HANGAR)	NFPA 101 CHAPTER 42

SPECIAL DETAILED REQUIREMENTS BASED ON USE:

USE UFC 3-600-01 CHAPTER 4 IN LIEU OF IBC CHAPTER 4. — UFC 1-200-01 § 2-4

- **HAZARDOUS MATERIALS AND HAZARDOUS WASTE**
  - APPLIES TO MATERIAL STORAGE (RM S103C), AERO SHOP (RM S103)
  - HAZARDOUS MATERIALS: COMPLY WITH THE REQUIREMENTS OF NFPA 400. — UFC 3-600-01 § 4-16.1.1.1
  - FLAMMABLE/COMBUSTIBLE LIQUIDS: COMPLY WITH THE REQUIREMENTS OF NFPA 30. — UFC 3-600-01 § 4-16.1.1.2
    - THE MAXIMUM ALLOWABLE QUANTITY (MAQ) PER CONTROL AREA WITH AUTOMATIC SPRINKLER PROTECTION IS AS FOLLOWS: — NFPA 30, TABLE 9.6.1

FLAMMABLE/COMBUSTIBLE LIQUID CLASSIFICATION	STORED ON PALLET OR OPEN SHELVES (GAL)	STORED WITHIN FLAMMABLE LIQUID STORAGE CABINET (GAL)
CLASS IA	60	120
CLASS IB AND IC	240	480
CLASS IA, IB & IC COMBINED	240	480
CLASS II	240	480
CLASS IIIA	660	13,200
CLASS IIIB	26,400	52,800

NOTES:
- THE VOLUME OF CLASS I, CLASS II AND IIIA LIQUIDS IN AN INDIVIDUAL STORAGE CABINET WILL NOT EXCEED 120 GAL. NFPA 30 § 9.5.1
- THE MAXIMUM ALLOWABLE CONTAINER SIZE WILL COMPLY WITH NFPA 30, TABLE 9.4.3.

- DETAILED CONSTRUCTION REQUIREMENTS APPLY (SEE FIRE AND SMOKE PROTECTION FEATURES).
- WHERE INDIVIDUAL CONTAINERS EXCEED 10 GAL PROVIDE CURBS, SCUPPERS, DRAINS OR SUITABLE MEANS TO PREVENT FLOW FROM ADJACENT AREAS OF THE BUILDING. — NFPA 30 § 9.13.2
- DETAILED PROTECTION REQUIREMENTS APPLY (SEE FIRE PROTECTION SYSTEMS).
- ELECTRICAL HAZARD CLASSIFICATION WILL BE CLASS I, DIVISION 2. — NFPA 30, TABLE 7.3.3
- VENTILATION FOR DISPENSING AREAS WILL BE AT LEAST 1 CFM PER EACH 1 SF OF FLOOR AREA. — NFPA 30 § 18.6.5
- HAZARDOUS MATERIAL STORAGE ROOM IDENTIFICATION TO COMPLY WITH NFPA 704. — UFC 3-600-01 § 4-16.2.3

GENERAL BUILDING HEIGHTS AND AREAS:

IBC CHAPTER 5 AND UFC 3-600-01 APPLY.		UFC 1-200-01 § 2-5
• TYPE IIB CONSTRUCTION (IBC) - (000) PER NFPA 220		IBC § 602 & TABLE 601
• BUILDING IS FULLY PROTECTED WITH AUTOMATIC SPRINKLERS.		
• ALLOWABLE GROSS SQUARE FEET OF BUILDING: UNLIMITED FOR SPRINKLERED, ONE-STORY BUILDING		IBC § 507.4
• ACTUAL TOTAL BUILDING AREA:	2.6 MILLION SF	IBC § 502 BUILDING AREA DEFINITION
• ALLOWABLE HEIGHT: UNLIMITED FOR FULLY SPRINKLED B, S-1 AND F-1 BUILDINGS		IBC § 504.1 TABLE 504.3/504.4
• ACTUAL BUILDING HEIGHT AND STORIES:	32 FT 5 IN AND 2 STORIES	IBC § 502 BUILDING HEIGHT

TYPES OF CONSTRUCTION:

IBC CHAPTER 6 AND UFC 3-600-01 APPLY.		UFC 1-200-01 § 2-6
• TYPE IIB CONSTRUCTION (IBC) - (000) PER NFPA 220		IBC § 602 & TABLE 601
REQUIRED STRUCTURAL ELEMENTS:		
• STRUCTURAL FRAME (INCLUDING COLUMNS, GIRDERS, AND TRUSSES):	0 HOUR	
• BEARING WALLS - EXTERIOR SEPARATION DISTANCE >30 FT:	0 HOUR	
• BEARING WALLS - INTERIOR:	0 HOUR	IBC 601 & TABLE 602 ALL ALLOWABLE COMBUSTIBLE MATERIALS AS DEFINED IN SECTION 603
• NON-BEARING WALLS - EXTERIOR SEPARATION DISTANCE >30 FT:	0 HOUR	
• NON-BEARING WALLS & PARTITIONS - INTERIOR:	0 HOUR	
• FLOOR CONSTRUCTION (INCLUDING SUPPORTING BEAMS AND JOISTS):	0 HOUR	
• ROOF CONSTRUCTION (INCLUDING SUPPORTING BEAMS AND JOISTS):	0 HOUR	

FIRE AND SMOKE PROTECTION FEATURES:

IBC CHAPTER 7 AND UFC 3-600-01 APPLY.	UFC 1-200-01 § 2-7
CONFORM TO THE REQUIREMENTS OF NFPA 101 CHAPTER 8, EXCEPT WHERE IBC CHAPTERS 5 AND 6 SPECIFICALLY REFERENCE IBC CHAPTER 7.	UFC 3-600-01 § 7-1
CONTROL AREA RATED SEPARATIONS (SEE LIFE SAFETY PLAN)	
• 1 HOUR FIRE BARRIER SEPARATING FOR CONTROL AREA.	UFC 1-200-01 §4-5.4, IBC 414
FIRE AND SMOKE DAMPERS	
• WHERE SMOKE BARRIERS ARE PENETRATED BY DUCT OR AIR TRANSFER OPENING, A SMOKE DAMPER DESIGNED AND TESTED IN ACCORDANCE WITH ANSI/UL555S WILL BE INSTALLED.	NFPA 101 § 8.5.5.2.1
• WHERE A SMOKE BARRIER IS ALSO CONSTRUCTED AS A FIRE BARRIER, A COMBINATION FIRE/SMOKE DAMPER DESIGNED AND TESTED IN ACCORDANCE WITH ANSI/UL 555 AND ANSI/UL555S.	NFPA 101 § 8.5.5.2.2

PROTECTION FROM HAZARDS (SEE LIFE SAFETY PLAN)

• A SMOKE PARTITION WILL BE PROVIDED TO SEPARATED AN AREA HAVING A DEGREE OF HAZARD GREATER THAN THAT NORMAL TO THE GENERAL OCCUPANCY WHERE AUTOMATIC SPRINKLER PROTECTION IS PROVIDED.	NFPA 101 § 8.7.1.2, 38.3.2.1, 12.3.2.1.2 (1)
• APPLICABLE AREAS: ELECTRICAL ROOMS, TOOL ROOMS, STORAGE ROOMS AND MECHANICAL ROOMS WITH NATURAL GAS FIRE EQUIPMENT.	

INTERIOR FINISHES:

USE UFC 3-600-01 AND UFC 3-120-10 IN LIEU OF IBC CHAPTER 8.	UFC 1-200-01 § 2-8
CONFORM TO THE REQUIREMENTS OF NFPA 101 CHAPTER 10.	UFC 3-600-01 § 8-1

INTERIOR WALL, CEILING, AND FLOOR FINISHES: NFPA 101 CHAPTER 10 TABLE A.10.2.2

GROUP	WITH SPRINKLER SYSTEM			
	EXITS	EXIT ACCESS CORRIDORS	ROOMS AND ENCLOSED SPACES	INTERIOR FINISH FLOOR
ASSEMBLY	A OR B	A, B, OR C	A, B, OR C	CLASS I OR II
BUSINESS	A, B OR C	A, B, OR C	A, B, OR C	CLASS I OR II
STORAGE	A, B OR C	A, B, OR C	A, B, OR C	CLASS I OR II
INDUSTRIAL	A, B OR C	A, B, OR C	A, B, OR C	CLASS I OR II

FIRE PROTECTION SYSTEMS:

USE UFC 3-600-01 IN LIEU OF IBC CHAPTER 9.	UFC 1-200-01 § 2-9

SPECIAL REQUIREMENTS FOR FLAMMABLE LIQUID STORAGE AREAS:

- PROVIDE AUTOMATIC SPRINKLER PROTECTION IN ACCORDANCE WITH NFPA 30, CHAPTER 16.
- FOR ON-FLOOR AND SHELF STORAGE HEIGHT OF 6 FT, PROVIDE K5.6 FACTOR, STANDARD OR QUICK RESPONSE SPRINKLERS, HYDRAULICALLY DESIGNED FOR A MINIMUM DENSITY OF 0.19 GPM/SF OVER THE ROOM AREA OR 1,500 SF AREA, WHICH EVER IS LARGER. INCLUDE A 250 GPM HOSE STREAM ALLOWANCE FOR A DURATION OF 2 HOURS. — NFPA 30, TABLE 16.5.2.6

PORTABLE FIRE EXTINGUISHERS

• GENERAL PURPOSE FIRE EXTINGUISHERS ARE NOT REQUIRED FOR FULLY SPRINKLERED BUILDINGS, EXCEPT FOR SPECIAL USES.	UFC 3-600-01 § 9-17.1
• PORTABLE FIRE EXTINGUISHERS WILL BE LOCATED IN ACCORDANCE WITH NFPA 10.	UFC 3-600-01 § 9-17.2.1
• EXTINGUISHERS FOR ELECTRONIC EQUIPMENT AREAS SPACES WILL BE SUITABLE FOR ELECTRONICS (EG: CLEAN AGENT).	UFC 3-600-01 § 9-17.2.2
• RECESSED OR SEMI-RECESSED CABINETS TO BE PROVIDED IN FINISHED SPACES.	UFC 3-600-01 § 9-17.3.1
• MECHANICAL ROOMS WILL HAVE BRACKET MOUNTED FIRE EXTINGUISHERS.	UFC 3-600-01 § 9-17.3.2

AIR FORCE MATERIEL COMMAND
72 ABW CIVIL ENGINEER DIRECTORATE
TINKER AFB, OK

35% DESIGN

PROJECT INFORMATION:
WWYK250063
INSTALL REACT VII FACILITY
B9001, V19
TINKER AIR FORCE BASE, OKLAHOMA

REVISIONS: MARK | DATE | DESCRIPTION

MANAGEMENT INFORMATION:
ISSUE DATE:7 OCT 25
DESIGN GROUP:TEPA-CSAG
DESIGNED BY:T ERB
DRAWN BY:J. MARTINEZ
CHECKED BY:C HIXON
DESIGN FILE LOCATION:
Eng\Design\2020s\2025\20250630_Support\0_3_Drawings\Model

SHEET TITLE: GENERAL CODE ANALYSIS

SHEET NUMBER: G-003
SHEET 03 OF

SPECIAL REQUIREMENTS FOR FLAMMABLE LIQUID STORAGE AREAS:

- PROVIDE AUTOMATIC SPRINKLER PROTECTION IN ACCORDANCE WITH NFPA 30, CHAPTER 16.
- FOR ON-FLOOR AND SHELF STORAGE HEIGHT OF 6 FT, PROVIDE K5.6 FACTOR, STANDARD OR QUICK RESPONSE SPRINKLERS, HYDRAULICALLY DESIGNED FOR A MINIMUM DENSITY OF 0.19 GPM/SF OVER THE ROOM AREA OR 1,500 SF AREA, WHICH EVER IS LARGER. INCLUDE A 250 GPM HOSE STREAM ALLOWANCE FOR A DURATION OF 2 HOURS. — NFPA 30, TABLE 16.5.2.6

PORTABLE FIRE EXTINGUISHERS

- GENERAL PURPOSE FIRE EXTINGUISHERS ARE NOT REQUIRED FOR FULLY SPRINKLERED BUILDINGS, EXCEPT FOR SPECIAL USES. — UFC 3-600-01 § 9-17.1
- PORTABLE FIRE EXTINGUISHERS WILL BE LOCATED IN ACCORDANCE WITH NFPA 10. — UFC 3-600-01 § 9-17.2.1
- EXTINGUISHERS FOR ELECTRONIC EQUIPMENT AREAS SPACES WILL BE SUITABLE FOR ELECTRONICS (EG: CLEAN AGENT). — UFC 3-600-01 § 9-17.2.2
- RECESSED OR SEMI-RECESSED CABINETS TO BE PROVIDED IN FINISHED SPACES. — UFC 3-600-01 § 9-17.3.1
- MECHANICAL ROOMS WILL HAVE BRACKET MOUNTED FIRE EXTINGUISHERS. — UFC 3-600-01 § 9-17.3.2

DOOR LEAF SWING DIRECTION

- DOORS WILL SWING IN THE DIRECTION OF TRAVEL WHERE SERVING MORE THAN 50 PERSONS. — NFPA 101 § 7.2.1.4.2 (1)
- DOORS FROM HANGAR BAYS SHALL SWING IN THE DIRECTION OF EGRESS TRAVEL. — UFC 4-211-01 § 3-3.1.9

DOOR LEAF ENCROACHMENT

- DOOR LEAVES SWINGING INTO THE MEANS OF EGRESS WILL LEAVE NOT LESS THAN ON HALF OF THE REQUIRED EGRESS WIDTH. — NFPA 101 § 7.2.1.4.3.1

MINIMUM WIDTH:

- NOT LESS THAN 32" FOR ANY MEANS OF EGRESS IN NEW BUILDINGS
- NOT LESS THAN 32" FOR DOOR CLEAR WIDTH IN NEW BUILDINGS
- NOT LESS THAN 32" FOR DOOR CLEAR WIDTH IN NEW BUILDINGS

OCCUPANCY LOAD FACTORS

• BUSINESS USE:	150 SQ FT/PERSON GROSS FLOOR AREA	
• CONCENTRATED BUSINESS USE:	50 SQ FT/PERSON GROSS FLOOR AREA	NFPA 101 TABLE 7.3.1.2
• STORAGE USE:	500 SQ FT/PERSON GROSS FLOOR AREA	
• SPECIAL PURPOSE INDUSTRIAL USE:	500 SQ FT/PERSON GROSS FLOOR AREA (GROUP S-1)	
• MECHANICAL/ELECTRICAL ROOMS:	500 SQ FT/PERSON GROSS FLOOR AREA	UFC 3-600-01, TABLE 10-1

REMOTENESS OF EXITS

- MINIMUM DISTANCE SEPARATION BETWEEN EXITS AND EXIT ACCESS DOORS WILL BE NOT LESS THAN 1/3RD THE MAXIMUM OVERALL DIAGONAL DIMENSION OF THE BUILDING OR AREA TO BE SERVED. — NFPA 101 § 7.5.1.3.3

TRAVEL DISTANCE TO AN EXIT

• ASSEMBLY, (SPRINKLERED):	250 FT	NFPA 101 § 12.2.6.2 (1)
• BUSINESS, (SPRINKLERED):	300 FT	NFPA 101 § 38.2.6.3
• STORAGE, (SPRINKLERED):	400 FT (ORDINARY HAZARD)	NFPA 101 § 42.2.6
• INDUSTRIAL, (SPRINKLERED):	250 FT (GENERAL INDUSTRIAL)	NFPA 101 § 40.2.5.1
• SPECIAL PURPOSE INDUSTRIAL (SPRINKLERED)	400 FT	NFPA 101 § 40.2.5.1

COMMON PATH OF TRAVEL

• ASSEMBLY, SPRINKLERED:	> 50 PERSONS, 20 FT; FOR ≤ 50 PERSONS, 75 FT	NFPA 101 § 12.2.5.2
• BUSINESS, SPRINKLERED:	100 FT	NFPA 101 § 38.2.5.2.1
• STORAGE, SPRINKLERED:	100 FT, 75 FT SINGLE MEANS OF EGRESS (ORD-HAZ)	NFPA 101 § 42.2.5
• INDUSTRIAL, (SPRINKLERED):	100 FT (GENERAL INDUSTRIAL)	NFPA 101 § 40.2.5.1
• SPECIAL PURPOSE INDUSTRIAL (SPRINKLERED)	100 FT	NFPA 101 § 40.2.5.1

DEAD-END LIMITS

• ASSEMBLY, SPRINKLERED:	20 FT	NFPA 101 § 12.2.5.3
• BUSINESS, SPRINKLERED:	50 FT	NFPA 101 § 38.2.5.3.1
• STORAGE, SPRINKLERED:	100 FT (ORDINARY HAZARD)	NFPA 101 § 42.2.5
• INDUSTRIAL, (SPRINKLERED):	50 FT (GENERAL INDUSTRIAL)	NFPA 101 § 40.2.5.1
• SPECIAL PURPOSE INDUSTRIAL (SPRINKLERED)	50 FT	NFPA 101 § 40.2.5.1

ILLUMINATION OF MEANS OF EGRESS

- MINIMUM ILLUMINATION FOR MEANS OF EGRESS WILL BE AT LEAST 10 FC (MEASURED FROM WALKING SURFACE). — NFPA 101 § 7.8.1.3 (1)
- MINIMUM ILLUMINATION FOR FLOORS AND OTHER WALKING SURFACES WILL BE AT LEAST 1 FC. — NFPA 101 § 7.8.1.3 (2)

MARKING MEANS OF EGRESS

- EXITS OTHER THAN MAIN EXTERIOR EXIT DOORS THAT ARE OBVIOUSLY AND CLEARLY IDENTIFIED AS EXITS, WILL BE MARKED BY APPROVED SIGNS. — NFPA 101 § 7.10.1.2.1
- ACCESS TO EXITS WILL BE MARKED BY APPROVED, READILY VISIBLE SIGNS IN ALL CASES WHERE THE EXIT OR WAY TO REACH EXITS NOT READILY APPARENT TO OCCUPANTS. — NFPA 101 § 7.10.1.5.1
- A SIGN WITH DIRECTIONAL INDICATOR SHOWING DIRECTION OF TRAVEL WILL BE PLACED IN LOCATIONS WHERE DIRECTION OF TRAVEL TO REACH THE NEAREST EXIT IS NOT APPARENT. — NFPA 101 § 7.10.2.1
- EVERY EXIT OR DIRECTIONAL SIGN WILL BE ILLUMINATED BY A RELIABLE LIGHT SOURCE. — NFPA 101 § 7.10.5.1

AIR FORCE MATERIEL COMMAND
72 ABW CIVIL ENGINEER DIRECTORATE
TINKER AFB, OK

35% DESIGN

PROJECT INFORMATION
WWYK250063
INSTALL REACT VII FACILITY
B9001, V19
TINKER AIR FORCE BASE, OKLAHOMA

REVISIONS

MARK	DATE	DESCRIPTION

MANAGEMENT INFORMATION
ISSUE DATE: 7 OCT 25
DESIGN GROUP: TEPA-CSAG
DESIGNED BY: T. ERB
DRAWN BY: J. MARTINEZ
CHECKED BY: C. HIXON
DESIGN FILE LOCATION: Engr\Design\2020s\2025\202500630_Support\0_3_Drawings\Model

SHEET TITLE
GENERAL CODE ANALYSIS

SHEET NUMBER
G-004
SHEET 04 OF

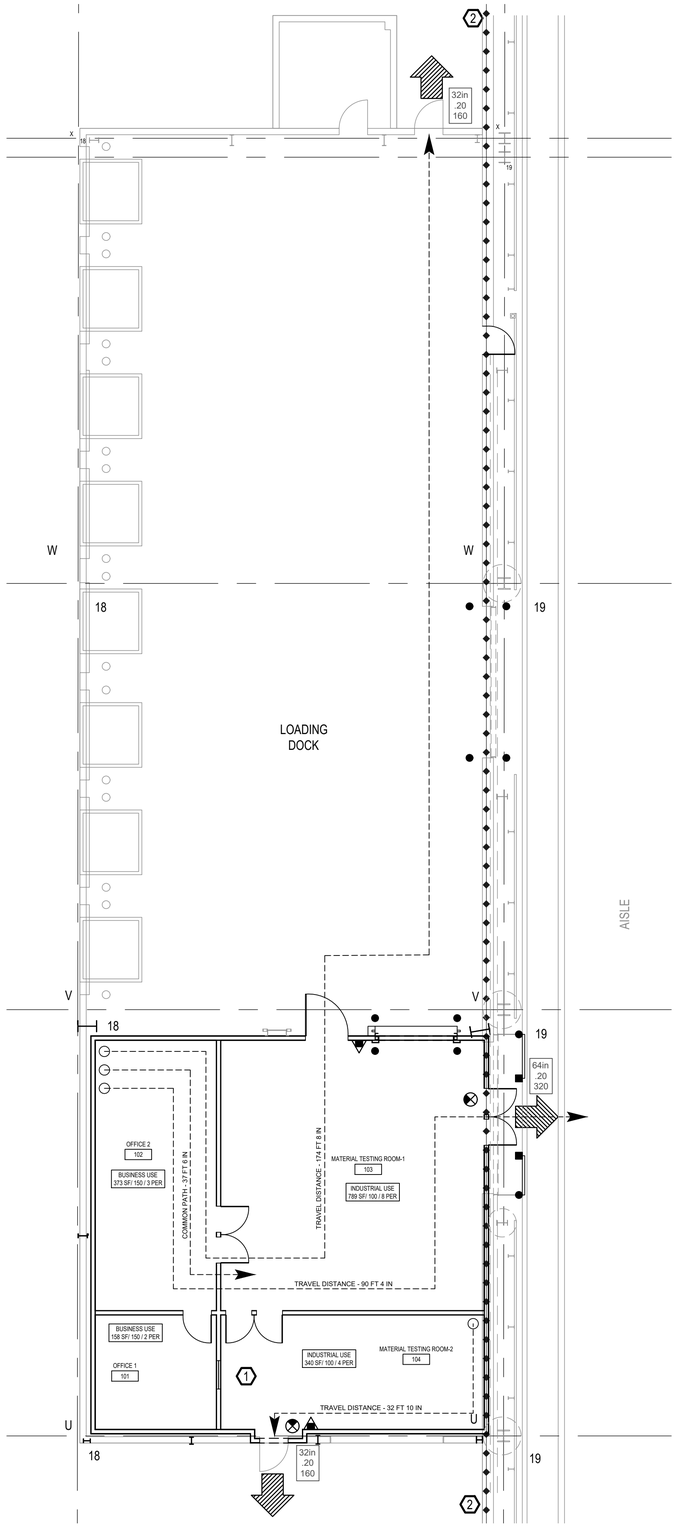

1
G-005
LIFE SAFETY PLAN
SCALE: 1/8" = 1'-0"

EGRESS TRAVEL DISTANCE

	ALLOWED	ACTUAL	NFPA 101 REF.
BUSINESS USE (PROJECT AREA)			
COMMON PATH	100 FEET (WITH SPRINKLERS)	37 FT 6 IN	38.2.5.3.1
TRAVEL DISTANCE	300 FEET (WITH SPRINKLERS)	90 FT 4 IN	38.2.6.3
DEAD-END CORRIDOR	50 FEET (WITH SPRINKLERS)	N/A	38.2.5.3.1
INDUSTRIAL USE (PROJECT AREA)			
COMMON PATH	100 FEET (WITH SPRINKLERS)	N/A	40.2.5.1
TRAVEL DISTANCE	400 FEET (WITH SPRINKLERS)	32 FT 10 IN	40.2.6.1
DEAD-END CORRIDOR	50 FEET (WITH SPRINKLERS)	N/A	40.2.5.1

PROJECT OCCUPANT LOAD SCHEDULE

ROOM NUMBER	ROOM DESCRIPTION	ROOM AREA SQFT.	ROOM USE	LOAD FACTOR (SQFT./PERSON)*	OCCUPANCY LOAD
101	OFFICE 1	158	BUSINESS	150	2
102	OFFICE 2	373	BUSINESS	150	3
103	MATERIAL TESTING ROOM 2	789	INDUSTRIAL	100	8
104	MATERIAL TESTING ROOM 2	340	INDUSTRIAL	100	4
	TOTAL FACILITY AREA	1660	TOTAL OCCUPANCY		17

*SOURCE: NFPA 101 § 7.3.1.2 AND UFC 3-600-01 - 10-3.1 & TABLE 10-1

PROJECT AREA

FLOOR	AREA (SF)
1ST LEVEL - ADDITION	1,696
TOTAL	1,696

KEYED NOTES

1. EXTERIOR WALL AND CEILING WILL BE 1 HOUR RATING.
2. 1 HOUR FIRE BARRIER EXTENDS 20 FEET OUT.

LIFE SAFETY SYMBOLS:

- PORTABLE FIRE EXTINGUISHERS
- XX' — EGRESS TRAVEL DISTANCE
- EXIT DISCHARGE
- XXin / XXX / XXX — -EXIT WIDTH -CAPACITY FACTOR -EXIT CAPACITY
- NFPA 101 OCCUPANCY / ROOM AREA / LOAD FACTOR / OCCUPANT LOAD — OCCUPANCY LOAD PER SPACE
- EXIT SIGN
- 1 HOUR FIRE RATED BARRIER

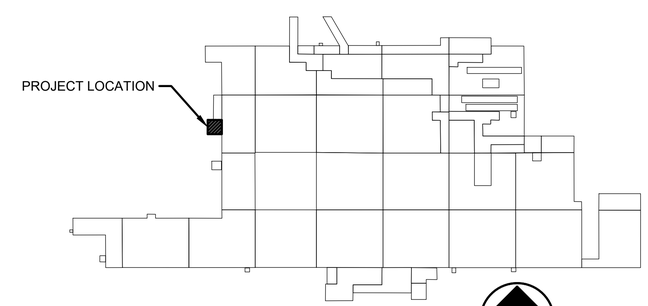

B9001 KEY PLAN

AIR FORCE MATERIEL COMMAND
72 ABW CIVIL ENGINEER DIRECTORATE
TINKER AFB, OK

35% DESIGN

PROJECT INFORMATION
WWYK250063
INSTALL REACT VII FACILITY
B9001, V19
TINKER AIR FORCE BASE, OKLAHOMA

REVISIONS

MARK	DATE	DESCRIPTION

MANAGEMENT INFORMATION
ISSUE DATE:7 OCT 25
DESIGN GROUP:TEPA-CSAG
DESIGNED BY:T ERB
DRAWN BY:J. MARTINEZ
CHECKED BY:C HIXON
DESIGN FILE LOCATION:
Engr\Design\2020s\2025\202500630_Support\0_3_Drawings\Model

SHEET TITLE
GENERAL
LIFE SAFETY PLAN

SHEET NUMBER
G-005
SHEET 05 OF

GENERAL NOTES

1. CODES: ALL MATERIALS AND WORKMANSHIP SHALL BE IN ACCORDANCE WITH LOCAL STANDARDS AND APPLICABLE PROVISIONS OF UFC 1-200-01 (CHANGE 4, 2024), UFC 3-301-01 (CHANGE 4, 2025), AND 2020 TAFB FACILITY STANDARD. THE 2024 INTERNATIONAL BUILDING CODE (IBC) IS APPLICABLE AS AMENDED BY THE AFORMENTIONED STANDARDS AND CODES.
2. ANY DEVIATION FROM THE APPROVED CONTRACT STRUCTURAL DRAWINGS SHALL ONLY BE MADE AFTER WRITTEN APPROVAL BY THE ENGINEER OF RECORD.
3. ALL OMISSIONS OR CONFLICTS BETWEEN THE VARIOUS ELEMENTS OF THE WORKING DRAWINGS SHALL BE IMMEDIATELY BROUGHT TO THE ATTENTION OF THE ENGINEER OF RECORD AND WORK SHALL NOT PROCEED UNTIL WRITTEN DIRECTION IS PROVIDED BY THE ENGINEER OF RECORD.
4. PROJECT SPECIFICATIONS ARE PART OF THE CONSTRUCTION DOCUMENTS AND ARE TO BE USED IN CONJUNCTION WITH THE PROJECT DRAWINGS.
5. NOTES AND DETAILS ON THE DRAWINGS SHALL TAKE PRECEDENCE OVER THESE GENERAL NOTES AND TYPICAL DETAILS IN CASE OF CONFLICT.
6. DETAILS LABELED "TYPICAL" APPLY TO SITUATIONS OCCURRING THAT ARE THE SAME OR SIMILAR TO THOSE SPECIFICALLY SHOWN. SUCH DETAILS APPLY WHEREVER THEY OCCUR, EVEN WHEN NOT SPECIFICALLY REFERENCED ON THE DRAWINGS.
7. WHERE NO CONSTRUCTION DETAILS ARE SHOWN, NOTED, AND DON'T APPEAR TO ALIGN WITH TYPICAL DETAILS, CONTACT THE STRUCTURAL ENGINEER OF RECORD.
8. IN NO CASE SHALL WORKING DIMENSIONS BE SCALED FROM PLANS, SECTIONS OR DETAILS ON THESE STRUCTURAL DRAWINGS.
9. ELEVATIONS GIVEN ON THE STRUCTURAL DRAWINGS ARE REFERENCED FROM FINISHED FLOOR, UNLESS OTHERWISE NOTED.
10. THE CONTRACT STRUCTURAL DRAWINGS AND SPECIFICATIONS REPRESENT THE FINISHED STRUCTURE, UNLESS OTHERWISE NOTED. THEY DO NOT INDICATE THE MEANS OR METHODS OF CONSTRUCTION. THE CONTRACTOR SHALL PERFORM ALL MEASURES NECESSARY TO PROTECT THE STRUCTURE, WORKMEN, AND OTHER PERSONS DURING CONSTRUCTION. SUCH MEASURES SHALL INCLUDE, BUT ARE NOT LIMITED TO THE DESIGN, ERECTION, AND REMOVAL OF TEMPORARY BRACING, SHORING, FALSEWORK, ETC. THE CONTRACTOR SHALL SUPERVISE AND DIRECT THE WORK AND BE SOLELY RESPONSIBLE FOR ALL CONSTRUCTION MEANS, METHODS, TECHNIQUES, SEQUENCES, AND PROCEDURES. OBSERVATION VISITS BY THE ENGINEER OF RECORD OR THEIR DELEGATE DO NOT CONSTITUTE INSPECTION OR APPROVAL OF THE ABOVE ITEMS.
11. THE CONTRACTOR IS RESPONSIBLE FOR COORDINATION OF DETAILS TO AVOID THE INTERFERENCE OF MATERIALS EMBEDDED IN CONCRETE OR MASONRY INCLUDING BUT NOT LIMITED TO REINFORCING STEEL, PRESTRESSING STEEL AND HARDWARE, MISCELLANEOUS STEEL AND CONDUITS.
12. PRIOR TO BEGINNING EXCAVATION, THE CONTRACTOR SHALL LOCATE AND PROTECT UNDERGROUND OR CONCEALED UTILITIES WHERE NEW WORK IS BEING PERFORMED. THE CONTRACTOR IS RESPONSIBLE FOR PROTECTING EXISTING UTILITIES IN THE WORK AREA AND SHALL REPAIR ANY DAMAGE CAUSED BY THEIR OPERATIONS AT THEIR COST.
13. CONSTRUCTION MATERIALS SHALL BE EVENLY DISTRIBUTED IF PLACED ON FLOORS OR ROOFS DURING CONSTRUCTION. LOADS SHALL NOT EXCEED THE DESIGN LIVE LOAD PER SQUARE FOOT. PROVIDE ADEQUATE SHORING AND/OR BRACING WHERE STRUCTURE HAS NOT ATTAINED DESIGN STRENGTH. CONCRETE SLAB ON GRADE IS TO HAVE REACHED IT'S FULL 28-DAY COMPRESSIVE STRENGTH BEFORE LOADING.
14. PROVIDE A LIST OF ALL PROPOSED SUBSTITUTIONS AND MANUFACTURER'S ICC ES REPORTS TO THE ENGINEER OF RECORD FOR REVIEW AND APPROVAL BEFORE FABRICATION OR INSTALLATION.
15. OPENINGS, POCKETS, SLEEVES, BLOCK-OUTS, ETC. SHALL NOT BE PLACED IN SLABS, FOUNDATIONS, ETC. UNLESS SPECIFICALLY DETAILED ON THESE STRUCTURAL DRAWINGS. THE ENGINEER OF RECORD SHALL BE NOTIFIED WHEN OTHER DRAWINGS SHOW OPENINGS, POCKETS, SLEEVES, BLOCK-OUTS, ETC. THAT ARE NOT SHOWN ON THESE STRUCTURAL DRAWINGS.
16. NO STRUCTURAL MEMBER SHALL BE CUT OR MODIFIED FOR PIPES, DUCTS, ETC., UNLESS SPECIFICALLY SHOWN ON THESE STRUCTURAL DRAWINGS.
17. THESE STRUCTURAL DRAWINGS ILLUSTRATE THE NEW STRUCTURAL MEMBERS. REFER TO ARCHITECTURAL, MECHANICAL AND ELECTRICAL DRAWINGS FOR NON-STRUCTURAL ITEMS WHICH REQUIRE SPECIAL PROVISIONS DURING CONSTRUCTION OF THE STRUCTURAL MEMBERS.
18. REFER TO ARCHITECTURAL DRAWINGS FOR FLOOR DEPRESSIONS, SLOPES, DRAINS, CURBS, PADS, EMBEDDED ITEMS, NON-BEARING PARTITIONS, AND LOCATION AND DETAILS FOR ALL MISCELLANEOUS HANDRAILS, LADDERS, HANGERS AND STEEL GRATINGS. REFER TO MECHANICAL AND ELECTRICAL DRAWINGS FOR SLEEVES AND HANGARS FOR PIPES, DUCTS, AND EQUIPMENT.
19. SEE PLUMBING, FIRE PROTECTION, MECHANICAL, ELECTRICAL AND MANUFACTURER'S DRAWINGS FOR TYPE, SIZE, LOCATION, ANCHORAGE REQUIREMENTS AND PADS FOR ALL EQUIPMENT. MANUFACTURER'S TEMPLATES SHOWING ANCHOR BOLT LOCATIONS SHALL BE OBTAINED FOR ALL EQUIPMENT. COORDINATE WITH THE EQUIPMENT SUPPLIER PRIOR TO PLACING SLABS, WALLS AND FOUNDATIONS.
20. THESE STRUCTURAL DRAWINGS INDICATE ONLY THE APPROXIMATE LOCATION OF MECHANICAL, ELECTRICAL AND OTHER EQUIPMENT AS WELL AS THEIR RELATED AUXILIARY FRAMING NECESSARY TO SUPPORT THE EQUIPMENT. THE FINAL POSITIONING OF THESE ITEMS IS DEPENDENT UPON THE EQUIPMENT PROVIDED. THE CONTRACTOR IS RESPONSIBLE FOR COORDINATING WORK BETWEEN SUBCONTRACTORS IN THIS REGARD AND PROVIDING NECESSARY INFORMATION AND DIMENSIONS IN A TIMELY MANNER TO ALL PARTIES INVOLVED.
21. OBSERVATION VISITS TO THE SITE BY THE ENGINEER OF RECORD OR THEIR DELEGATE SHALL NOT CONSTITUTE REQUIRED SPECIAL INSPECTIONS NOTED HEREIN.
22. THE CONCRETE SLABS ON GRADE HAVE NOT BEEN DESIGNED TO SUPPORT CONSTRUCTION EQUIPMENT. THE CONTRACTOR IS RESPONSIBLE FOR THE DESIGN OF THE SLAB WHERE CONSTRUCTION EQUIPMENT. ANY DAMAGE TO THE CONCRETE SLAB AS A RESULT OF CONSTRUCTION EQUIPMENT IS THE RESPONSIBILITY OF THE CONTRACTOR AND SHALL BE REPAIRED AT THEIR COST. CONCRETE SLAB ON GRADE IS TO HAVE REACHED IT'S FULL 28-DAY COMPRESSIVE STRENGTH BEFORE LOADING.

DESIGN CRITERIA

1. THE DESIGN SHALL CONFORM TO THE PROVISIONS OF THE 2024 INTERNATIONAL BUILDING CODE (IBC), AS AMENDED BY UFC 1-200-01 (CHANGE 4, 2024), UFC 3-301-01 (CHANGE 4, 2025), 2020 TAFB FACILITY STANDARD, AND ALL STANDARDS REFERENCED HEREIN.

2. DEAD LOADS :

FLAT ROOF	30 PSF
PARTITIONS (IN OFFICE AREAS)	15 PSF

3. LIVE LOADS:

ROOF (CATWALK)	40 PSF/300LB
MECHANICAL (HVAC)	125 PSF
FLOORS (ON GRADE)	250 PSF
GUARDRAIL	50PLF/200LB
VEHICLE BARRIER	6000LB
LADDER	300LB
WALL HORIZONTAL	5 PSF

4. SEISMIC DESIGN CRITERIA:
   - A. RISK CATEGORY — II
   - B. IMPORTANCE FACTOR — 1.00
   - C. SITE CLASS — D
   - D. SEISMIC DESIGN CATEGORY — B
   - E. STRUCTURAL SYSTEM: (STEEL SYSTEMS NOT SPECIFICALLY DETAILED FOR SEISMIC RESISTANCE
   - F. RESPONSE MODIFICATION COEFFIENT (R): 3.0
   - G. OVERSTRENGTH FACTOR (Ω_0): 3.0
   - H. ANALYSIS AND DESIGN CRITERIA
     - a. ANALYSIS PROCEDURE: EQUIVALENT LATERAL FORCE PROCEDURE
     - ii. VERTICAL IRREGULARITIES: NONE
     - iii. HORIZONTAL IRREGULARITIES: NONE
     - iv. SPECTRAL RESPONSE COEFFICIENTS:
       - Ss= 0.32
       - S1= 0.081
       - SMS= 0.36
       - SDS= 0.24
   - I. CS=0.08
   - J. V=9.5K

SOILS AND FOUNDATIONS

1. GEOTECHNICAL INVESTIGATION : IBC 2024 PRESUMPTIVE VALUES
2. ALL NEW WORK DESIGNED CONSIDERING SOIL CLASS 5, PER 2024 IBC TABLE 1806.2.
   - F. ALLOWABLE VERTICAL BEARING = 1,500 PSF
   - G. ALLOWABLE PASSIVE PRESSURE = 100 PSF/FT
   - H. ALLOWABLE COHESION = 130 PSF
3. FOOTING ELEVATIONS SHOWN ARE FOR BIDDING PURPOSES ONLY AND ARE ASSUMED TO BE IN SUITABLE BEARING MATERIALS.
4. IF THE BUILDING INSPECTOR SUSPECTS EXPANSIVE SOILS OR ANY GEOLOGIC INSTABILITY BASED ON OBSERVATIONS OF THE FOUNDATION EXCAVATION, A SOILS OR GEOLOGIC REPORT AND RESUBMITTAL OF PLANS TO PLAN CHECK TO VERIFY THAT REPORT RECOMMENDATIONS HAVE BEEN INCORPORATED, MAY BE REQUIRED.
5. CRUSHED STONE BELOW SLAB ON GRADE SHALL BE CLEAN OPEN GRADED GRAVEL, ASTM NO. 57 GRADATION.
6. MINIMUM FOUNDED DEPTH & WIDTH OF FOOTINGS:

BELOW ROUGH PAD GRADE	24 INCHES
BELOW LOWEST ADJACENT FINISHED GRADE	24 INCHES
WIDTH	24 INCHES

7. FOUNDING OF FOOTINGS & SLABS: ON APPROVED STRUCTURAL/COMPACTED FILL.
8. SOIL REMOVAL AND RECOMPACTION: PER GEOTECHNICAL ENGINEER RECOMMENDATIONS AND CONTRACT DOCUMENTS. SOILS WORK SHALL BE OBSERVED AND TESTED BY THE GEOTECHNICAL ENGINEER.
9. GEOTECHNICAL ENGINEER: SHALL OBSERVE FOOTINGS BEFORE PLACEMENT OF REINFORCING OR CONCRETE. FOOTING OBSERVATION AND COMPACTION REPORTS SHALL BE SENT TO THE ARCHITECT/ENGINEER AND BUILDING OFFICIAL.
10. ROOF AND AREA DRAINAGE: SHALL BE DIRECTED AWAY FROM FOUNDATIONS
11. BACKFILL: EXCAVATIONS SHALL BE PROPERLY BACKFILLED. BACKFILL FOR WALLS SHALL BE PERVIOUS MATERIAL ACCEPTABLE TO THE GEOTECHNICAL ENGINEER. DO NOT PLACE BACKFILL BEHIND WALLS BEFORE THEY HAVE ATTAINED THEIR DESIGN STRENGTH. SHORE AND PROTECT WALLS FROM LATERAL LOADS UNTIL THE SUPPORTING MEMBERS ARE IN PLACE AND HAVE DEVELOPED SPECIFIED STRENGTHS.

GEOTECHNICAL CONTRACTOR'S RESPONSIBILITIES

1. THE CONTRACTOR SHALL IMPLEMENT THE GEOTECHNICAL ENGINEER'S RECOMMENDATIONS.
2. THE CONTRACTOR IS RESPONSIBLE FOR ANY SHORING REQUIRED TO PROTECT ADJACENT STRUCTURES FROM EXCAVATIONS. THE CONTRACTOR SHALL PROVIDE AN ENGINEERED METHOD TO FOLLOW FOR THE PROTECTION OF EXISTING STRUCTURES. EXCAVATIONS AND FILLS SHALL COMPLY WITH THE REQUIREMENTS CONTAINED HEREIN AND THE GEOTECHNICAL REPORT.
3. EXCAVATION DEPTH AND SIDEWALL INCLINATION SHALL NOT EXCEED THOSE SPECIFIED IN LOCAL, STATE OR FEDERAL REGULATIONS INCLUDING THOSE DEFINED IN SUBPART P OF CHAPTER 27, 29 CFR PART 1926 (OF FEDERAL REGISTER). EXCAVATIONS MAY NEED TO BE WIDENED AND SLOPED, OR TEMPORARILY BRACED TO MAINTAIN OR DEVELOP A SAFE WORK ENVIRONMENT. CONTRACTOR IS SOLELY RESPONSIBLE FOR ASSESSING STABILITY UNDER "MEANS AND METHODS."
4. THE CONTRACTOR SHALL USE EQUIPMENT AND TECHNIQUES TO MINIMIZE SOIL DISTURBANCE. IF SOILS BECOME DISTURBED OR WET, THEY SHOULD BE REPLACED PER THE RECOMMENDATIONS OF THE GEOTECHNICAL ENGINEER.

GEOTECHNICAL INSPECTIONS

1. A REPRESENTATIVE OF THE GEOTECHNICAL ENGINEER OF RECORD SHALL INSPECT THE SUBGRADE AND ANY OVEREXCAVATION TO VERIFY THAT THE SUBSURFACE CONDITIONS ENCOUNTERED ARE CONSISTENT WITH THE SUBSURFACE CONDITIONS PRESENTED BY THE GEOTECHNICAL ENGINEER, AND TO VERIFY THAT THE GEOTECHNICAL RECOMMENDATIONS ARE FOLLOWED TO ACHIEVE THE ALLOWABLE DESIGN CAPACITY PRIOR TO POURING OF CONCRETE. THE GEOTECHNICAL ENGINEER SHALL SUBMIT A WRITTEN LETTER OF ACCEPTANCE TO THE AHJ.
2. REFER TO THE STATEMENT OF SPECIAL INSPECTIONS FOR SPECIFIC REQUIREMENTS REGARDING GEOTECHNICAL OBSERVATIONS AND INSPECTIONS.

REINFORCING

1. REINFORCING AND ACCESSORIES SHALL BE DETAILED, FABRICATED AND INSTALLED PER ACI 315 AND ACI 318.
2. REINFORCING BARS SHALL BE MADE USING NEW BILLET STEEL IN ACCORDANCE WITH ASTM A615 GRADE 60.
3. WELDING OF REINFORCING IS NOT PERMITTED UNLESS SPECIFICALLY DETAILED.
4. ALL REINFORCING SHALL BE COLD BENT.
5. PROVIDE CLASS B SPLICES IN REINFORCING FOR CONTINUOUS REINFORCING. PROVIDE STANDARD 90 DEGREE HOOKS IN ACCORDANCE WITH ACI 318 UNLESS SPECIFICALLY DETAILED. REFER TO TYPICAL DETAIL FOR REQUIRED LAP LENGTHS.
6. MAINTAIN THE FOLLOWING REINFORCEMENT COVERAGE FOR REINFORCING STEEL UNLESS NOTED OTHERWISE. CAST AGAINST SOIL: 3 INCHES EXPOSED TO SOIL OR WEATHER: NO. 6 AND LARGER: 2 INCHES NO. 5 AND SMALLER: 1-1/2 INCHES NOT EXPOSED TO SOIL OR WEATHER NO. 11 AND SMALLER 1" WALL, 1-1/2" SLAB
7. PROVIDE CONTINUOUS HORIZONTAL WALL AND CONTINUOUS FOOTING REINFORCEMENT WITH 90 DEGREE BENDS AT CORNERS AND INTERSECTIONS AS SHOWN ON TYPICAL DETAILS.
8. ALL CONCRETE SLAB ON GRADE, RAISED CONCRETE SLAB, AND MAT REINFORCING IS TO BE SUPPORTED ON BOLSTERS AND CHAIRS SPACED NO FURTHER THAN 4 FEET ON CENTER. REINFORCING SHALL BE LOCATED 1 1/2" INCHES MINIMUM CLEAR FROM TOP OF SLAB. CAST IN PLACE

CONCRETE

1. ALL CONCRETE SHALL HAVE A MINIMUM 28 DAY COMPRESSIVE STRENGTH OF 4,500 PSI.
2. ANY ADMIXTURES USED SHALL NOT CONTAIN CALCIUM CHLORIDE. ADMIXTURES MAY BE USED FOR ALL CONCRETE.
3. PROVIDE CONCRETE MIX DESIGNS THAT MEET THE REQUIREMENTS OF ACI 318 PRIOR TO PLACEMENT OF CONCRETE. FOR CONCRETE SLAB ON GRADES USE THE LARGEST VIABLE AGGREGATE.
4. PORTLAND CEMENT SHALL CONFORM TO ASTM C150 TYPE II LOW ALKALI UNLESS NOTED OTHERWISE. AGGREGATE FOR REGULAR WEIGHT CONCRETE SHALL CONFORM TO ASTM C33 AND BE WELL GRADED.
5. CONCRETE PERMANENTLY EXPOSED TO WEATHER OR SOIL SHALL HAVE 4 TO 6 PERCENT AIR ENTRAINMENT.
6. CONCRETE NOT PERMANENTLY EXPOSED TO WEATHER SHALL HAVE NO MORE THAN 3 PERCENT AIR ENTRAINMENT.
7. FOR PLACEMENT OF CONCRETE IN EITHER HOT OR COLD WEATHER CONDITIONS FOLLOW THE ACI STANDARD PROCEDURES.
8. REINFORCING BARS, ANCHOR BOLTS, REBAR DOWELS, AND OTHER CONCRETE INSERTS SHALL BE WELL SECURED IN POSITION PRIOR TO PLACEMENT OF CONCRETE AND STABBING INTO WET CONCRETE IS NOT ALLOWED.

STRUCTURAL STEEL

1. STRUCTURAL STEEL SHALL BE DETAILED, DESIGNED, FABRICATED AND ERECTED IN ACCORDANCE WITH THE REQUIREMENTS OF AISC SPECIFICATION FOR THE DESIGN, FABRICATION, AND ERECTION OF STRUCTURAL STEEL BUILDINGS, AISC MANUAL OF STEEL CONSTRUCTION, AISC CODE OF STANDARD PRACTICE FOR STEEL BUILDINGS AND BRIDGES, AND THE AWS STRUCTURAL WELDING CODE. ALL CODES AND MANUALS SHALL BE THE LATEST ADOPTED EDITIONS.
2. STRUCTURAL STEEL SHALL CONFORM TO THE FOLLOWING ASTM DESIGNATIONS:
   - A. WIDE FLANGE SHAPES: A992 (FY = 50 KSI)
   - B. CHANNELS AND ANGLES: A36 (FY = 36 KSI)
   - C. PLATES: A572 GR 60 (FY = 60 KSI)
   - D. HOLLOW STRUCTURAL SECTIONS: A500 GRADE C (FY = 50 KSI)
   - E. ANCHOR RODS: F1554 (GRADE PER DETAILS)
   - F. BOLTS: F3125 GRADE A325-TC OR GRADE F1852-TC
   - G. WELDING ELECTRODES: E70XX
3. CONNECTION MATERIALS FOR STRUCTURAL STEEL SHALL CONFORM TO THE FOLLOWING DESIGNATIONS:
   - A. BEAM OR COLUMN STIFFENER PLATES SHALL BE OF THE SAME YIELD STRESS, FY OF STEEL AS THE STRUCTURAL ELEMENT.
   - B. ALL BOLTED CONNECTIONS ARE TO BE ERECTED WITH HIGH STRENGTH TENSION CONTROL BOLTS.
   - C. HARDENED STEEL WASHERS ASTM F436 OR F959 AT TENSION CONTROL CONNECTIONS.
5. ALL STRUCTURAL STEEL EXPOSED TO THE WEATHER IS TO BE HOT DIPPED GALVANIZED. PROVIDE BOLTS, NUTS AND WASHERS THAT ARE HOT DIP GALVANIZED ACCORDING TO ASTM A 153, CLASS C.
6. SPLICING OF STRUCTURAL STEEL MEMBERS IS NOT ALLOWED UNO.
7. STRUCTURAL STEEL SHALL BE CLEANED OF RUST, LOOSE MILL SCALE, AND OTHER FOREIGN MATERIALS WHERE REQUIRED FOR FABRICATION, FITTING UP OR WELDING. PROVIDE PAINT AS REQUIRED IN THE SPECIFICATIONS.
8. PROVIDE WASHERS FOR CONNECTIONS WITH STANDARD OVERSIZE AND SHORT-SLOTTED HOLES. FOR LONG-SLOTTED HOLES PROVIDE WASHERS OR A CONTINUOUS BAR OF SUFFICIENT SIZE TO COMPLETELY COVER THE SLOT. FOR LONG-SLOTTED HOLES PROVIDE PLATE WASHERS OR BARS WITH A MINIMUM 5/16 INCH THICKNESS.
9. DO NOT FIELD CUT ANY STRUCTURAL STEEL MEMBERS IN CONFLICT WITH THE WORK WITHOUT APPROVAL BY THE ENGINEER OR UNLESS SPECIFICALLY SHOWN ON THE CONSTRUCTION DOCUMENTS.
10. PROVIDE STRUCTURAL STEEL SHOP DRAWINGS FOR ARCHITECTS AND ENGINEERS REVIEW PRIOR TO FABRICATION.
11. WELDING SHALL BE PERFORMED BY CERTIFIED WELDERS OR AT A SHOP CERTIFIED TO DO SUCH WORK USING THE ELECTRIC ARC WELDING PROCESS AND SHALL CONFORM TO AISC AND AWS STANDARDS.
12. ALL HOLES IN STEEL MEMBERS SHALL BE DRILLED OR PUNCHED. TORCH CUT HOLES ARE NOT ALLOWED.
13. TEMPORARY BRACING DESIGNED BY OTHERS SHALL BE REQUIRED TO INSURE THE ALIGNMENT AND STABILITY OF THE STRUCTURAL STEEL DURING ERECTION AND SHALL REMAIN IN PLACE UNTIL PERMANENT CONDITIONS AS SHOWN ON THE CONSTRUCTION DOCUMENTS ARE IN PLACE.
14. PROVIDE GROUT FOR BASE PLATES THAT IS NON-SHRINK, NON-METALIC GROUT WITH A MINIMUM 28 DAY COMPRESSIVE STRENGTH OF 5000 PSI.

STEEL DECKING

1. STEEL DECK FABRICATION AND ERECTION SHALL CONFORM TO THE LATEST STEEL DECK INSTITUTE DESIGN MANUAL
2. DECK SHALL INCLUDE ANY MISCELLANEOUS CLOSURE PIECES, METAL SCREEDS, ROOF CURBS, SUMPPANS, REINFORCING AROUND OPENINGS, ETC. REQUIRED TO MAKE A COMPLETE JOB. MISCELLANEOUS SHALL BE GALVANIZED (G90) AND SHALL MATCH THE THICKNESS OF THE DECK THEY ARE ATTACHING TO.
3. METAL ROOF DECK SHALL BE ATTACHED AS FOLLOWS:
   - A. TO STRUCTURAL SUPPORTS PERPENDICULAR TO DECK SPAN WITH #12 SDI RECOGNIZED SELF-DRILLING SCREWS AT EVERY OTHER RIB (36/4 FASTENER PATTERN) OR 5/8" PUDDLE WELDS AT EVERY OTHER RIB (36/4 FASTENER PATTERN) WITH WELD WASHERS.
   - B. TO STRUCTURAL SUPPORTS PARALLEL TO DECK SPAN AT ROOF EDGES WITH #12 SDI RECOGNIZED SELF-DRILLING SCREWS AT 12" OC OR 5/8" PUDDLE WELDS AT 12" OC WITH WELD WASHERS.
   - C. AT SIDELAPS WITH #10 SDI RECOGNIZED SELF-DRILLING SCREWS AT 12" OC.
4. DECK SHALL BE GALVANIZED (G90), UNLESS OTHERWISE NOTED.
5. THE DECK SHALL HAVE THE FOLLOWING MINIMUM PROPERTIES:
   - A. Fy = 50 KSI
   - B. THICKNESS = 22 GA
   - C. Id = 0.155 IN^4/FT (MIN)
   - D. +Seff = 0.186 IN^3/FT (MIN)
   - E. -Seff = 0.192 IN^3/FT (MIN)
6. ALL DECK SHALL BE INSTALLED IN A TRIPLE SPAN CONDITION TO THE GREATEST EXTENT POSSIBLE. DOUBLE OR SINGLE SPAN CONDITIONS SHALL ONLY BE USED WHERE THE ROOF LAYOUT DOES NOT PERMIT A LARGER SPAN CONDITION.
7. DECK SHALL HAVE A CURRENT ICC ES REPORT DEMONSTRATING COMPLIANCE WITH THE BUILDING CODE AND CONTRACT DOCUMENTS.
8. NO LOADS ARE PERMITTED TO BE SUSPENDED FROM ANY ROOF DECKING. ATTACHMENTS FOR CEILINGS, DUCTWORK, PIPING, CONDUIT, UTILITIES, FIRE PROTECTION, LIGHTS, ETC. SHALL BE SUSPENDED DIRECTLY FROM STEEL ROOF FRAMING. DESIGN AND PROVIDE ADDITIONAL STEEL SUPPORTS TO SPAN BETWEEN ROOF FRAMING WHERE NECESSARY TO ACCOMMODATE ATTACHMENTS.
9. PROVIDE A MINIMUM END BEARING OF 1-1/2" AT ALL DECK SUPPORTS.
10. STEEL DECK CROSS SECTIONS ARE ONLY REPRESENTED DIAGRAMMATICALLY ON THE DRAWINGS.

COLD FORMED STEEL METAL STUDS

1. ALL COLD FORMED STEEL SHALL BE FABRICATED AND ERECTED IN ACCORDANCE WITH MANUFACTURER'S RECOMMENDATIONS AND IN ACCORDANCE WITH THE LATEST EDITION OF "NORTH AMERICAN SPECIFICATIONS FOR THE DESIGN OF COLD-FORMED STEEL STRUCTURAL MEMBERS) BY AISI.
2. STRUCTURAL DRAWINGS SHOW ONLY THE PRIMARY STRUCTURAL FRAMING ELEMENTS OF THE SYSTEM. CONTRACTOR SHALL PROVIDE ALL ACCESSORIES INCLUDING TRACKS, WEB STIFFENERS, BLOCKING, LINTELS, CLIP ANGLES, REINFORCEMENTS, FASTENING DEVICES, BRACING, AND OTHER ACCESSORIES AS RECOMMENDED BY THE MANUFACTURER TO PROVIDE A COMPLETE FRAMING SYSTEM.

AIR FORCE MATERIEL COMMAND
72 ABW CIVIL ENGINEER DIRECTORATE
TINKER AFB, OK

35% DESIGN

PROJECT INFORMATION
WWYK250063
INSTALL REACT VII FACILITY
B9001, V19
TINKER AIR FORCE BASE, OKLAHOMA

REVISIONS

MARK	DATE	DESCRIPTION

MANAGEMENT INFORMATION
ISSUE DATE:7 OCT 25
DESIGN GROUP:TEPA-CSAG
DESIGNED BY:L LUKE
DRAWN BY:T KISER
CHECKED BY:C HIXON
DESIGN FILE LOCATION: Engr\Design\2020s\2025\202500630_Support\0_3_Drawings\Model

SHEET TITLE
STRUCTURAL GENERAL NOTES

SHEET NUMBER
S-001
SHEET 06 OF

3. STEEL FOR 54, 68, AND 97 MILS THICK (16, 14, AND 12 GAGE) STUDS AND JOISTS SHALL HAVE A MINIMUM YIELD STRENGHT OF 50 KSI. STEEL FOR THICKER STUDS AND JOISTS, ALL THICKNESSES OF TRACK, ALL DIAGONAL TENSION STRAPS AND BRACES, AND BRIDGING SHALL HAVE A MINIMUM YIELD STRENGHT OF 33 KSI. STEEL SHALL BE GALVANIZED OR THOROUGHLY COATED WITH RUST INHIBITIVE PAINT AT ALL LOCATIONS.
4. FASTENING OF COMPONENTS SHALL BE SELF TAPPING SCREWS OR WELDS. ALL WELDS OF GALVANIZED STEEL SHALL BE TOUCHED UP WITH ZINC RICH PAINT. ALL WELDS OF CARBON SHEET STEEL SHALL BE TOUCHED UP WITH RUST INHIBITIVE PAINT.
5. SCREWS SHALL BE SELF TAPPING, PAN HEAD, HEX HEAD, OR WAFER HEAD SHEET METAL SCREWS. SCREWS WHICH ARE REMOVED SHALL BE REPLACED BY A SCREW OF A LARGER DIAMETER WHERE THE REPLACEMENT IS MADE INTO AN EXISTING HOLE. REPLACE ALL SCREWS WHICH STRIP OUT MATERIAL.
6. SCREWS SHALL BE SPACED NO CLOSER THAN 5/8" OC AND WITH A MINIMUM FREE EDGE DISTANCE OF 1/2".
7. CLIP ANGLES OF FLAT CLIPS USED FOR ATTACHMENTS SHALL BE 20 GAGE MINIMUM UNO. WITH SCREW SPACING AND EDGE DISTANCES NOTED ABOVE.
8. ALL SCREWS #8 AND LARGER SHALL HAVE A MINIMUM HEAD SIZE OF 5/16".
9. ALL WELDING SHALL BE PERFORMED BY WELDERS EXPERIENCED IN COLD-FORMED STEEL FRAMING WORK. ALL WELDING SHALL USE E60 ELECTRODES (MINIMUM ROD DIAMETER = 1/8") AND SHALL CONFORM WITH THE LATEST AWS STANDARDS.
10. ALL STUDS SHALL BE SECURELY SEATED FOR FULL END BEARING ON TOP AND BOTTOM TRACK. PROVIDE DOUBLE STUDS AT ALL JAMBS, CORNERS, INTERSECTIONS, AND BEAM BEARINGS. UNO.
11. WALL BRIDGING AS RECOMMENDED BY STUD MANUFACTURER SHALL BE INSTALLED TO PREVENT BOTH WEAK AXIS BENDING AND STUD ROTATION AT 4'-0" MAX INTERVALS. WALLS 8'-0" OR SHORTER SHALL HAVE SINGLE ROW OF BRACING AT MID HEIGHT. ADDITIONALLY, BRIDGING SHALL BE PROVIDED AT ROOF LINES AND WHERE NOTED ON DRAWINGS. SOLID BLOCKING SHALL BE INSTALLED IN LIEU OF BRIDGING WHERE NOTED ON PLANS.

POWER ACTUATED FASTENERS

1. THE POWDER-ACTUATED FASTENERS SHALL HAVE THE FOLLOWING MINIMUM PROPERTIES:
   A. LENGTH = 0.937"
   B. DIAMETER = 0.177"
   C. FULLY KNURLED TIP
   D. TAPERED SHANK WITH (2) 0.590" DIAMETER STEEL CUPPED WASHERS
   E. ZINC-COATED HARDENED CARBON STEEL
2. POWDER ACTUATED FASTENERS SHALL HAVE A CURRENT ICC ES-REPORT.

DELEGATED DESIGN ITEMS

1. THE CONTRACTOR SHALL BE RESPONSIBLE FOR THE STRUCTURAL DESIGN, INSTALLATION AND ANCHORAGE OF THE FOLLOWING ITEMS. SUBMIT SHOP DRAWINGS AND STRUCTURAL CALCULATIONS TO THE ENGINEER OF RECORD AND AUTHORITY HAVING JURISDICTION DEMONSTRATING THAT A COMPLETE LOAD PATH HAS BEEN ESTABLISHED AND CODE REQUIREMENTS HAVE BEEN MET. INCLUDE LOADS, PRODUCT DATA, TECHNICAL INFORMATION, MANUFACTURER'S WRITTEN REQUIREMENTS AND AGENCY APPROVALS, AS APPLICABLE. THE SHOP DRAWINGS AND STRUCTURAL CALCULATIONS SHALL BE SIGNED AND SEALED BY A QUALIFIED PROFESSIONAL ENGINEER REGISTERED IN THE STATE OF THE PROJECT.
2. THE FOLLOWING ARE DELEGATED DESIGN ITEMS:
   A. ALL STRUCTURAL SYSTEMS AND COMPONENTS (THE SUPPLIED DESIGN IS PROVIDED AS A BASIS OF DESIGN ONLY). DESIGN DOCUMENTS FOR THE ANALYSIS, DRAWINGS, AND SPECIFICATIONS SHALL BE SIGNED AND SEALED BY A LICENSED STRUCTURAL ENGINEER.
3. COORDINATE ALL CONSTRUCTION WITH DELEGATED DESIGN ITEMS.
4. DELEGATED DESIGN ITEMS SHALL NOT BE INSTALLED UNTIL ALL RELATED SUBMITTALS HAVE BEEN REVIEWED AND APPROVED BY THE ENGINEERING OF RECORD AND AUTHORITY HAVING JURISDICTION.

HELICAL PILES

1. HELICAL PILES SHALL BE DESIGNED AND MANUFACTURED IN ACCORDANCE WITH THE CURRENT INTERNATIONAL BUILDING CODE (IBC) ADOPTED BY THE LOCAL JURISDICTION.
2. HELICAL PILES SHALL BE DISIGNED AND MANUFACTURED BY SUPPLIER.
3. HELICAL PILES SHALL BE RECOGNIZED BY ICC AND THE MANUFACTURER SHALL HOLD A CURRENT ICC-ES ESR REPORT SHOWING COMPLIANCE WITH AC358 AND CURRENT INTERNATIONAL BUILDING CODE (IBC) ADOPTED BY LOCAL JURISDICTION.
4. DIMENSIONS OF THE CENTRAL SHAFT AND THE NUMBER, SIZE, SPACING AND THICKNESS OF THE HELICAL BEARING PLATES SHALL BE DESIGNED AND FABRICATED TO SUPPORT THE SPECIFIED DESIGN LOADS.
5. MINIMUM AND MAXIMUM INSTALLATION TORQUES SHALL BE SPECIFIES BY THE HELICAL PILE MANUFACTURER. THE MINIMUM INSTALLATION TORQUE SHALL BE HIGH ENOUGH TO ACHIEVE THE REQUIRED BEARING CAPACITY, INCLUDING A SAFETY FACTOR OF 2. THE MAXIMUM INSTALLATION TORQUE SHALL NOT EXCEED THE ALLOWABLE TORSIONAL CAPACITY OF THE PILE SHEETS.
6. HELICAL PILES SHALL BE DESIGNED AND MANUFACTURED TO RESIST ALL STRESSES INDUCED BY INSTALLATION.
7. EXISTING CONDITIONS AND UNDERGROUND OBSTRUCTIONS SHALL BE CONFIRMED BY THE PILE INSTALLER. PROBING OR SCANNING MAY BE NECESSARY TO LOCATE UNDERGROUND OBSTRUCTIONS. REPORT ANY UNFORESEEN OBSTRUCTIONS TO THE STRUCTURAL ENGINEER.
8. LOCATIONS OF PILES SHALL NOT BE CHANGED WITHOUT WRITTEN APPROVAL FROM THE STRUCTURAL ENGINEER.
9. SPECIAL INSPECTION OF THE HELICAL PILE INSTALLATION SHALL BE PERFORMED IN ACCORDANCE WITH SECTION 1705.9 OF THE 2024 IBC. THE INSPECTOR SHALL RECORD THE FOLLOWING:
   A. EQUIPMENT USED
   B. PILE DIMENSION
   C. TIP ELEVATIONS
   D. FINAL DEPTH
   E. FINAL INSTALLATION TORQUE
   F. INSTALLATION DATE
   G. PILE MANUFACTURER
   H. INSTALLATION CONTRACTOR
   I. MINIMUM ALLOWABLE INSTALLATION TORQUE
   J. MAXIMUM ALLOWABLE INSTALLATION TORQUE
   K. HELIX PLATE CONFIGURATION OF EACH PILE
   L. ULTIMATE CAPACITY OF EACH PILE AS SPECIFIED BY MANUFACTURER
   M. ALLOWABLE CAPACITY OF EACH PILE AS SPECIFIED BY MANUFACTURER

STATEMENT OF QUALITY ASSURANCE / SPECIAL INSPECTIONS

1. QUALITY ASSURANCE / SPECIAL INSPECTION IS REQUIRED IN ACCORDANCE WITH THE UFC 3-301-01, AS SUMMARIZED BELOW.
2. THE SPECIAL INSPECTORS MUST BE QUALIFIED TO PERFORM THE TYPES OF INSPECTION SPECIFIED.
3. IT IS THE RESPONSIBILITY OF THE CONTRACTOR TO INFORM THE SPECIAL INSPECTOR OR INSPECTING AGENCY AT LEAST ONE WORKING DAY PRIOR TO PERFORMING ANY WORK THAT REQUIRES SPECIAL INSPECTION. ALL WORK PERFORMED WITHOUT SPECIAL INSPECTION IS SUBJECT TO REMOVAL.
4. THE SPECIAL INSPECTOR(S) SHALL OBSERVE THE INDICATED WORK FOR COMPLIANCE WITH THE CONTRACT DOCUMENTS AND SUBMIT RECORDS OF INSPECTION TO THE OWNER, ENGINEER OF RECORD AND AUTHORITY HAVING JURISDICTION.
5. SPECIAL INSPECTIONS SHALL BE PERFORMED BY A CERTIFIED OR QUALIFIED SPECIAL INSPECTOR(S), AS DETERMINED AND TO THE SATISFACTION OF THE OWNER, ENGINEER OF RECORD AND AUTHORITY HAVING JURISDICTION.
6. PERIODIC SPECIAL INSPECTION IS DEFINED AS THE PART-TIME OR INTERMITTENT INSPECTION OF THE WORK BY AN APPROVED INSPECTOR WHO IS PRESENT IN THE AREA WHERE THE WORK HAS BEEN OR IS BEING PERFORMED AND AT THE COMPLETION OF WORK. CONTINUOUS SPECIAL INSPECTION IS DEFINED AS THE FULL-TIME INSPECTION OF THE WORK BY AN APPROVED INSPECTOR WHO IS CONTINUOUSLY PRESENT AND MONITORING THE WORK PERFORMED. IN ALL CASES, THE INSPECTION SHALL BE COORDINATED AND PERFORMED SO THAT WORK CAN BE CORRECTED PRIOR TO OTHER RELATED WORK PROCEEDING AND COVERING THE INSPECTED WORK.
7. ASSOCIATED TESTING SHALL BE PERFORMED AS INDICATED IN THE FOLLOWING TABLES BY AN APPROVED AND ACCREDITED AGENCY AS DETERMINED AND TO THE SATISFACTION OF THE OWNER, ENGINEER OF RECORD AND AUTHORITY HAVING JURISDICTION.
8. SPECIAL INSPECTION AND ASSOCIATED TESTING REPORTS SHALL BE SUBMITTED TO THE ENGINEER OF RECORD, CONTRACTOR, AUTHORITY HAVING JURISDICTION, AND OWNER WITHIN ONE WEEK OF INSPECTION OR WITHIN ONE WEEK OF TEST COMPLETION.
9. AT THE CONCLUSION OF CONSTRUCTION, A FINAL REPORT SHALL BE SUBMITTED BY THE SPECIAL INSPECTOR(S) WHICH DOCUMENTS THE REQUIRED SPECIAL INSPECTIONS AND CORRECTION OF PREVIOUSLY NOTED DISCREPANCIES. THE FINAL REPORT SHALL BE SUBMITTED TO THE ENGINEER OF RECORD, CONTRACTOR, AUTHORITY HAVING JURISDICTION AND OWNER.
10. WORK REQUIRING SPECIAL INSPECTION THAT IS INSTALLED OR COVERED WITHOUT THE APPROVAL OF THE SPECIAL INSPECTOR IS SUBJECT TO REMOVAL OR EXPOSURE.
11. REFER TO THE FOLLOWING TABLES AND SPECIFICATIONS FOR SPECIFIC INSPECTION/TESTING REQUIREMENTS AND FREQUENCIES.

STRUCTURAL OBSERVATIONS

1. STRUCTURAL OBSERVATIONS SHALL BE PERFORMED IN ACCORDANCE WITH INTERNATIONAL BUILDING CODE (2024) AND STANDARDS REFERENCED THERIN WITH MODIFICATIONS PER UFC 1-200-01 DOD BUILDING CODE, WITH CHANGE 4 AND UFC-3-301-01 STRUCTURAL ENGINEERING, WITH CHANGE 4.
2. ON-SITE STRUCTURAL OBSERVATIONS SHALL BE PERFORMED AS NOTED IN THE STRUCTURAL OBSERVATION TABLE ON THIS SHEET.
3. STRUCTURAL OBSERVATION SHALL BE PERFORMED BY THE STRUCTURAL ENGINEER OF RECORD OR SELECTED DELEGATE TO VERIFY GENERAL CONFORMANCE WITH THE APPROVED CONSTRUCTION DOCUMENTS. STRUCTURAL OBSERVATION DOES NOT INCLUDE OR WAIVE THE RESPONSIBILITY FOR ANY REQUIRED SPECIAL INSPECTIONS OR INSPECTIONS BY A THIRD PARTY AGENCY OR THE BUILDING OFFICIAL.
4. STRUCTURAL OBSERVATION REPORTS, NOTING ANY DEFICIENCIES IN CONSTRUCTION, SHALL BE DELIVERED TO THE CONTRACTOR, BUILDING OFFICIAL, AND ENGINEER FOLLOWING EACH OBSERVATION. THE CONTRACTOR SHALL BE NOTIFIED ON-SITE, BY PHONE, OR EMAIL WITHIN 24 HOURS OF FINDING ANY DEFICIENCIES.
5. AT THE CONCLUSION OF CONSTRUCTION, A WRITTEN STATEMENT IS REQUIRED TO BE PROVIDED BY THE PERSON(S) PROVIDING THE STRUCTURAL OBSERVATION. THIS STATEMENT SHALL VERIFY WHETHER THE NECESSARY STRUCTURAL OBSERVATION SITE VISITS WERE MADE AND WHETHER THERE REMAIN ANY STRUCTURAL DEFICIENCIES THAT HAVE NOT BEEN RESOLVED. THE CONTRACTOR SHALL PROVIDE ALL NECESSARY INFORMATION REQUESTED BY THE STRUCTURAL OBSERVER TO MAKE THIS STATEMENT.
6. THE CONTRACTOR SHALL SCHEDULE AND FACILITATE STRUCTURAL OBSERVATION FOR THE ITEMS LISTED IN THE STRUCTURAL OBSERVATION TABLE ON THIS SHEET.

STRUCTURAL OBSERVATION TABLE

OBSERVATION ITEM	STAGE OF CONSTRUCTION	DESCRIPTION
FOOTING EXCAVATION AND REINFORCEMENT PRIOR TO POURING	PRIOR TO CONCRETE POURING	OBSERVE EXCAVATION AND REINFORCEMENT
COLD-FORM METAL STUD WALL AT 50% INSTALLATION	AT 50% OF INSTALLATION	OBSERVE PLACEMENT AND ATTACHMENT OF WALLS AND COMPONENTS.
STEEL CONSTRUCTUON AT 50% INSTALLATION	AT 50% OF INSTALLATION	OBSERVE PLACEMENT AND ATTACHMENT OF STEEL AND COMPONENTS.
METAL DECK AT 50% INSTALLATION	AT 50% OF INSTALLATION	OBSERVE PLACEMENT AND ATTACHMENT OF METAL DECK

TABLE 1705.6
REQUIRED VERIFICATION AND INSPECTION OF SOILS (BY GEOTECHNICAL ENGINEER)

VERIFICATION AND INSPECTION TASK	CONTINUOUS	PERIODIC
1. VERIFY MATERIALS BELOW SHALLOW FOUNDATION ARE ADEQUATE TO ACHIEVE THE DESIGN BEARING CAPACITY.	–	X
2. VERIFY EXCAVATIONS ARE EXTENDED TO PROPER DEPTH AND HAVE REACHED PROPER MATERIAL.	–	X
3. PERFORM CLASSIFICATION AND TESTING OF COMPACTED FILL MATERIALS.	–	X
4. VERIFY USE OF PROPER MATERIALS, DENSITIES AND LIFT THICKNESSES DURING PLACEMENT AND COMPACTION OF COMPACTED FILL.	X	–
5. PRIOR TO PLACEMENT OF COMPACTED FILL, OBSERVE SUBGRADE AND VERIFY THAT SITE HAS BEEN PREPARED PROPERLY.	–	X

TABLE 1705.3
REQUIRED VERIFICATION AND INSPECTION OF CONCRETE CONSTRUCTION

VERIFICATION AND INSPECTION	CONTINUOUS	PERIODIC	REFERENCED STANDARD
1. INSPECTION OF REINFORCING STEEL, INCLUDING PLACEMENT.	–	X	ACI 318: CH. 20, 25.2, 25.3, 26.6.1–26.6.3 IBC 1908.4
2. INSPECTION OF ANCHORS CAST IN CONCRETE	–	X	ACI 318: 17.8.2 IBC: –
3. INSPECT ANCHOR POST–INSTALLED IN HARDENED CONCRETE MEMBERS.			
a. ADHESIVE ANCHORS INSTALLED IN HORIZONTALLY OR UPWARDLY INCLINED ORIENTATION TO RESIST SUSTAINED TENSION LOADS.	X	–	ACI 318: 17.8.2.4 IBC: –
b. MECHANICAL ANCHORS AND ADHESIVE ANCHORS NOT DEFINED IN 3.a.	–	X	ACI 318: 17.8.2 IBC: –
4. VERIFYING USE OF REQUIRED DESIGN MIX.	–	X	ACI 318: CH. 19, 26.4.3, 26.4.4 IBC 1904.1, 1904.2, 1908.2, 1908.3
5. PRIOR TO CONCRETE PLACEMENT, FABRICATE SPECIMENS FOR STRENGTH TESTS, PERFORM SLUMP AND AIR CONTENT TESTS, AND DETERMINE THE TEMPERATURE OF THE CONCRETE.	X	–	ASTM C172, ASTM C31 ACI 318: 26.4, 26.12 IBC 1908.10
6. INSPECTION OF CONCRETE PLACEMENT FOR PROPER APPLICATION TECHNIQUES.	X	–	ACI 318: 26.5 IBC 1908.6, 1908.7, 1908.8
7. INSPECTION FOR MAINTENANCE OF SPECIFIED CURING TEMPERATURE AND TECHNIQUES.	–	X	ACI 318: 26.5.3–26.535 IBC 1908.9
8. INSPECT FORMWORK FOR SHAPE, LOCATION AND DIMENSIONS OF THE CONCRETE MEMBER BEING FORMED.	–	X	ACI 318: 26.11.1.2(b) IBC: –

AIR FORCE MATERIEL COMMAND
72 ABW CIVIL ENGINEER DIRECTORATE
TINKER AFB, OK

35% DESIGN

PROJECT INFORMATION
WWYK250063
INSTALL REACT VII FACILITY
B9001, V19
TINKER AIR FORCE BASE, OKLAHOMA

REVISIONS

MARK	DATE	DESCRIPTION

MANAGEMENT INFORMATION
ISSUE DATE:7 OCT 25
DESIGN GROUP:TEPA-CSAG
DESIGNED BY:L LUKE
DRAWN BY:T KISER
CHECKED BY:C HIXON
DESIGN FILE LOCATION:
Engr\Design\2020s\2025\2025006310_Support\0_3_Drawings\Model

SHEET TITLE
STRUCTURAL GENERAL NOTES AND SPECIAL INSPECTIONS

SHEET NUMBER
S-002

SHEET 07 OF

VERIFICATION AND INSPECTION OF COLD-FORMED STEEL FRAMING

VERIFICATION, INSPECTION, AND TESTING	INSPECTION FREQUENCY	
	CONTINUOUS	PERIODIC
1. MATERIAL VERIFICATION		
A) VERIFY COMPLIANCE OF COLD-FORMED STEEL STRUCTURAL MEMBERS (PRODUCT IDENTIFICATION PER SECTION A5.5) B) VERIFY COMPLIANCE OF CONNECTORS C) DOCUMENT ACCEPTANCE OR REACTION OF COLD-FORME...	X	-
2. INSPECTIONS PRIOR TO WELDING		
A) VERIFY WELDING PROCEDURES SPECIFICATIONS AVAILABLE B) VERIFY MANUFACTURER CERTIFICATIONS FOR WELDING CONSUMABLES AVAILABLE C) VERIFY MATERIAL IDENTIFICATION (TYPE AND GRADE) D) CHECK WELDING EQUIPMENT	-	X
3. INSPECTIONS DURING WELDING		
A) VERIFY USE OF QUALIFIED WELDERS B) VERIFY CONTROL AND HANDELING OF WELDING CONSUMABLES C) VERIFY ENVIRONMENTAL CONDITIONS (WIND SPEED, MOISTURE, TEMPERATURE) D) VERIFY WELDING PROCEDURE SPECIFICATIONS FOLLOWED	-	X
4. INSPECTIONS AFTER WELDING		
A) VERIFY COMPLIANCE OF WELDS B) VERIFY WELDS MEET VISUAL ACCEPTANCE CRITERIA C) VERIFY REPAIR ACTIVITIES D) DOCUMENT ACCEPTANCE OR REJECTION OF WELDED CONNECTIONS	X	-
5. INSPECTIONS PRIOR TO MECHANICAL FASTENING		
A) MECHANICAL FASTENER MANUFACTURER INSTALLATION INSTRUTURES AVAILABLE FOR MECHANICAL FASTENERS B) VERIFY PROPER TOOLS AVAILABLE FOR MECHANICAL FASTENER INSTALLATION C) VERIFY PROPER STORAGE FOR MECHANICAL FASTENERS	-	X
6. INSPECTION DURING MECHANICAL FASTENING		
A) VERIFY MECHANICAL FASTENERS ARE POSITIONED AS REQUIRED B) VERIFY MECHANICAL FASTENERS ARE INSTALLED IN ACCORDANCE WITH MANUFACTURER'S INSTRUCTIONS	-	X
7. INSPECTION AFTER MECHANICAL FASTENING		
A) VERIFY COMPLIANCE OF MECHANICAL FASTENERS B) VERIFY REPAIR ACTIVITIES C) DOCUMENT ACCEPTANCE OR REJECTION OF MECHANICALLY FASTENED CONNECTIONS	X	-
8. COLD-FORMED STEEL LIGHT-FRAME CONSTRUCTION		
A) VERIFY COMPLIANCE OF COLD-FORMED STEEL LIGHT-FRAME CONSTRUCTION (COMPONENT ASSEMBLY, STRUCTURAL MEMBER AND CONNECTOR SIZES AND LOCATIONS; BRACING, BLOCKING AND BEARING STIFFENER SIZES AND LOCATIONS; BEARING LENGTHS) B) DOCUMENT ACCEPTANCE OR REJECTION OF COLD-FORMED STEEL LIGHT-FRAME CONSTRUCTION	X	-
9. INSPECTION PRIOR TO INSTALLATION OF LATERAL FORCE-RESISTING SYSTEMS		
A) VERIFY COMPLIANCE OF SHEAR WALL AND DIAPHRAGM SHEATHING, DIAGONAL STRAP BRACING, AND HOLD-DOWNS B) DOCUMENT ACCEPTANCE OR REJECTION OF SHEAR WALL AND DIAPHRAGM SHEATHING, DIAGONAL STRAP BRACING, AND HOLD-DOWNS	X	-
10. INSPECTION PRIOR TO WELDING OF LATERAL FORCE-RESISTING SYSTEMS		
A) VERIFY WELDER IDENTIFICATION SYSTEM B) VERIFY FIT-UP WELDS (ALIGNMENT, GAPS, CONDITION OF STEEL SURFACES)	-	X
11. INSPECTION PRIOR TO MECHANICAL FASTENING OF LATERAL FORCE-RESISTING SYSTEMS		
A) VERIFY PROPER MECHANICAL FASTENERS SELECTED B) VERIFY PROPER INSTALLATION PROCEDURES SELECTED FOR MECHANICAL FASTENERS C) VERIFY CONNECTING ELEMENTS MEET APPLICABLE REQUIREMENTS FOR MECHANICAL FASTENERS	-	X
12. INSPECTION DURING INSTALLATION OF LATERAL FORCE-RESISTING SYSTEMS		
A) FOR SCREW CONNECTIONS, JOINT BROUGH TIGHT (E.G. CLAMPED) TO AVOID GAPS BETWEEN PILES B) FOR SCREW CONNECTIONS, TOOL ADJUSTED TO AVOID STRIPPED AND OVERDRIVEN FASTENERS C) FOR POST-INSTALLED CONNECTION TO CONCRETE, INSTALLATION IN ACCORDANCE WITH MANUFACTURER'S INSTRUCTIONS	X	-
13. INSPECTION AFTER INSTALLATION OF LATERAL FORCE-RESISTING SYSTEMS		
A) VERIFY COMPLIANCE OF COLD-FORMED STEEL LATERAL FORCE-RESISTING SYSTEM INSTALLATION B) DOCUMENT ACCEPTANCE OR REJECTION OF INSTALLATION OF COLD-FORMED STEEL LATERAL FORCE-RESISTING SYSTEM	X	-
14. VERIFY BRIDGING, HEAD OF WALL CONDITIONS/DEFLECTION TRACK.	-	X
15. FABRICATION PROCESS OF PREFABRICATED COLD-FORMED STRUCTURAL ELEMENTS AND ASSEMBLIES SHALL BE IN ACCORDANCE WITH IBC 1704.2.5 AND LOCAL AMENDMENTS.	-	X

STRUCTURAL STEEL

REFERENCE: IBC SECTION 1705.2.1. INSPECTIONS AND NON–DESTRUCTIVE TESTING OF STRUCTURAL STEEL ELEMENTS SHALL BE IN ACCORDANCE WITH THE QUALITY ASSURANCE REQUIREMENTS OF AISC 360, CHAPTER N.

FABRICATOR AND ERECTOR QUALITY CONTROL PROGRAM

REFERENCE AISC 360, CHAPTER N, SECTION N2.

THE FABRICATOR'S QUALITY CONTROL INSPECTOR SHALL INSPECT THE FOLLOWING AS A MINIMUM, AS APPLICABLE:

1. SHOP WELDING, HIGH–STRENGTH BOLTING, AND DETAILS IN ACCORDANCE WITH AISC 360 SECTION N5.
2. SHOP CUT AND FINISHED SURFACES IN ACCORDANCE IN ACCORDANCE WITH AISC 360, SECTION M2.
3. SHOP HEATING FOR STRAIGHTENING, CAMBERING AND CURVING IN ACCORDANCE WITH AISC 360, SECTION M2.1.
4. TOLERANCES FOR SHOP FABRICATION IN ACCORDANCE WITH SECTION 6 OF THE CODE OF STANDARD PRACTICE.

THE ERECTOR'S QUALITY CONTROL INSPECTOR SHALL INSPECT THE FOLLOWING AS A MINIMUM, AS APPLICABLE:

1. FIELD WELDING, HIGH–STRENGTH BOLTING, AND DETAILS IN ACCORDANCE WITH AISC 360, SECTION N5.
2. STEEL DECK AND HEADED STEEL STUD ANCHOR PLACEMENT AND ATTACHMENT IN ACCORDANCE WITH AISC 360, SECTION N6. FIELD CUT SURFACES IN ACCORDANCE WITH AISC 360, SECTION M2.2.
3. FIELD HEATING FOR STRAIGHTENING IN ACCORDANCE WITH AISC 360, SECTION M2.1. TOLERANCES FOR FIELD ERECTION IN ACCORDANCE WITH SECTION 7.13 OF THE CODE OF STANDARD PRACTICE.

FABRICATOR AND ERECTOR DOCUMENTS

REFERENCE AISC 360, CHAPTER N, SECTION N3.

SUBMITTALS FOR STEEL CONSTRUCTION AND AVAILABLE DOCUMENTS FOR STEEL CONSTRUCTION SHALL CONFORM TO AISC 360, SECTION N3.

INSPECTION AND NONDESTRUCTIVE TESTING PERSONNEL

REFERENCE AISC 360, CHAPTER N, SECTION N4

QUALITY CONTROL INSPECTOR (FABRICATOR OR ERECTOR) QUALIFICATIONS, QUALITY ASSURANCE INSPECTOR (SPECIAL INSPECTOR) QUALIFICATIONS AND NONDESTRUCTIVE TESTING PERSONNEL (INSPECTION AGENCY PERSONNEL) QUALIFICATIONS SHALL CONFORM TO AISC 360, SECTION N4.

MINIMUM REQUIREMENTS FOR INSPECTION OF STRUCTURAL STEEL BUILDINGS

REFERENCE AISC 360, CHAPTER N, SECTION N5.

QUALITY CONTROL INSPECTIONS BY THE FABRICATOR'S OR ERECTOR'S QUALITY CONTROL INSPECTOR (QCI) AND QUALITY ASSURANCE INSPECTIONS OF FABRICATED ITEMS AND THE ERECTED STEEL SYSTEM BY THE SPECIAL INSPECTOR (SI), SHALL CONFORM TO AISC 360, SECTION N5 AND TABLES N5.4–1, N5.4–2, N5.4–3, N5.6–1, N5.6–2 AND N5.6–3. IN THESE TABLES INSPECTION TASKS ARE AS FOLLOWS:
O–OBSERVE THESE ITEMS ON A RANDOM BASIS. OPERATIONS NEED NOT BE DELAYED PENDING THESE INSPECTIONS.
P–PERFORM THESE TASKS FOR EACH WELDED JOINT OR MEMBER.

NONDESTRUCTIVE TESTING OF WELDED JOINTS

NONDESTRUCTIVE TESTING OF WELDED JOINTS SHALL CONFORM TO AISC 360, SECTION N5 AND SHALL BE PERFORMED BY THE SPECIAL INSPECTOR (QUALITY ASSURANCE INSPECTOR) IN ACCORDANCE WITH AWS D1.1.

TABLE N5.4–3, AISC 360–22 INSPECTION TASKS AFTER WELDING

INSPECTION TASKS AFTER WELDING	QC	QA
WELDS CLEANED	O	O
SIZE, LENGTH AND LOCATION OF WELDS	P	P
WELDS MEET VISUAL ACCEPTANCE CRITERIA – CRACK PROHIBITION – WELD/BASE–METAL FUSION – CRATER CROSS SECTION – WELD PROFILES – WELD SIZE – UNDERCUT – POROSITY	P	P
ARC STRIKES	P	P
k–AREA[1]	P	P
BACKING REMOVED & WELD TABS REMOVED (IF REQUIRED)	P	P
REPAIR ACTIVITIES	P	P
DOCUMENT ACCEPTANCE OR REJECTION OF WELDED JOINT OR MEMBER	P	P

[1] WHEN WELDING OF DOUBLER PLATES, CONTINUITY PLATES OR STIFFENERS HAS BEEN PERFORMED IN THE k–AREA, VISUALLY INSPECT THE WEB k–AREA FOR CRACKS WITHIN 3 INCHES (75 mm) OF THE WELD.

TABLE N5.4–1, AISC 360–22 INSPECTION TASKS PRIOR TO WELDING

INSPECTION TASKS PRIOR TO WELDING	QC	QA
WELDING PROCEDURES SPECIFICATIONS (WPSs) AVAILABLE	P	P
MANUFACTURER CERTIFICATIONS FOR WELDING CONSUMABLES AVAILABLE	P	P
MATERIAL IDENTIFICATION (TYPE/GRADE)	O	O
WELDER IDENTIFICATION SYSTEM[1]	O	O
FIT–UP OF GROOVE WELDS (INCLUDING JOINT GEOMETRY) – JOINT PREPARATION – DIMENSIONS (ALIGNMENT, ROOT OPENING, ROOT FACE, BEVEL) – CLEANLINESS (CONDITION OF STEEL SURFACES) – SHIELDING GAS TYPE/FLOW RATE – TACKING (TACK WELD QUALITY AND LOCATION) – BACKING TYPE AND FIT (IF APPLICABLE)	O	O
CONFIGURATION AND FINISH OF ACCESS HOLES	O	O
FIT–UP OF FILLET WELDS – DIMENSIONS (ALIGNMENT, GAPS, AT ROOT) – CLEANLINESS (CONDITION OF STEEL SURFACES) – TACKING (TACK WELD QUALITY AND LOCATION)	O	O
CHECK WELDING EQUIPMENT	O	–

[1] THE FABRICATOR OR ERECTOR, AS APPLICABLE, SHALL MAINTAIN A SYSTEM BY WHICH A WELDER WHO HAS WELDED A JOINT OR MEMBER CAN BE IDENTIFIED. STAMPS, IF USED SHALL BE THE LOW–STRESS TYPE.

TABLE N5.4–2, AISC 360–22 INSPECTION TASKS DURING WELDING

INSPECTION TASKS DURING WELDING	QC	QA
USE OF QUALIFIED WELDERS	O	O
CONTROL AND HANDLING OF WELDING CONSUMABLES – PACKAGING – EXPOSURE CONTROL	O	O
NO WELDING OVER CRACKED TACK WELDS	O	O
ENVIRONMENTAL CONDITIONS – WIND SPEED WITHIN LIMITS – PRECIPITATION AND TEMPERATURE	O	O
WPS FOLLOWED – SETTINGS ON WELDING EQUIPMENT – TRAVEL SPEED – SELECTED WELDING MATERIALS – SHIELDING GAS TYPE/FLOW RATE – PREHEAT APPLIED – INTERPASS TEMPERATURE MAINTAINED (MIN/MAX) – PROPER POSITION (F,V, H, OH)	O	O
WELDING TECHNIQUES – INTERPASS AND FINAL CLEANING – EACH PASS WITHIN PROFILE LIMITATIONS – EACH PASS MEETS QUALITY REQUIREMENTS	O	O

SDI-QA/QC FOR INSTALLATION OF STEEL DECK REQUIRED PER IBC1705.2.3

TABLE 1.1 INSPECTION OR EXECUTION TASKS PRIOR TO MECHANICAL FASTENING

TASK	QC	QA
A) MANUFACTURER INSTALLATION INSTRUCTIONS AVAILABLE FOR MECHANICAL FASTENER	OBSERVE	OBSERVE
B) PROPER TOOLS AVAILABLE FOR FASTENER INSTALLATION	OBSERVE	OBSERVE
C) PROPER STORAGE FOR MECHANICAL FASTENERS	OBSERVE	OBSERVE

TABLE 1.2 INSPECTION OR EXECUTION TASKS DURING MECHANICAL FASTENING

TASK	QC	QA
A) FASTENERS ARE POSITIONED AS REQUIRED	OBSERVE	OBSERVE
B) FASTENERS ARE INSTALLED IN ACCORDANCE WITH MANUFACTURER'S INSTRUCTIONS	OBSERVE	OBSERVE

TABLE 1.3 INSPECTION OR EXECUTION TASKS AFTER MECHANICAL FASTENING

TASK	QC	QA
A) CHECK SPACING, TYPE, AND INSTALLATION OF SUPPORT FASTENERS	PERFORM	PERFORM
B) CHECK SPACING, TYPE, AND INSTALLATION OF SIDELAP FASTENERS	PERFORM	PERFORM
C) CHECK SPACING, TYPE, AND INSTALLATION OF PERIMETER FASTENERS	PERFORM	PERFORM
D) VERIFY REPAIR ACTIVITIES	PERFORM	PERFORM
E) DOCUMENT ACCEPTANCE OR REJECTION OF MECHANICAL FASTENERS	PERFORM	PERFORM

AIR FORCE MATERIEL COMMAND
72 ABW CIVIL ENGINEER DIRECTORATE
TINKER AFB, OK

35% DESIGN

PROJECT INFORMATION
WWYK250063
INSTALL REACT VII FACILITY
B9001, V19
TINKER AIR FORCE BASE, OKLAHOMA

REVISIONS

MARK	DATE	DESCRIPTION

MANAGEMENT INFORMATION
ISSUE DATE:7 OCT 25
DESIGN GROUP:TEPA-CSAG
DESIGNED BY:L LUKE
DRAWN BY:T KISER
CHECKED BY:C HIXON
DESIGN FILE LOCATION:
Engr\Design\2020s\2025\202500630_Support\0_3_Drawings\Model

SHEET TITLE
STRUCTURAL SPECIAL INSPECTIONS

SHEET NUMBER
S-003
SHEET 08 OF

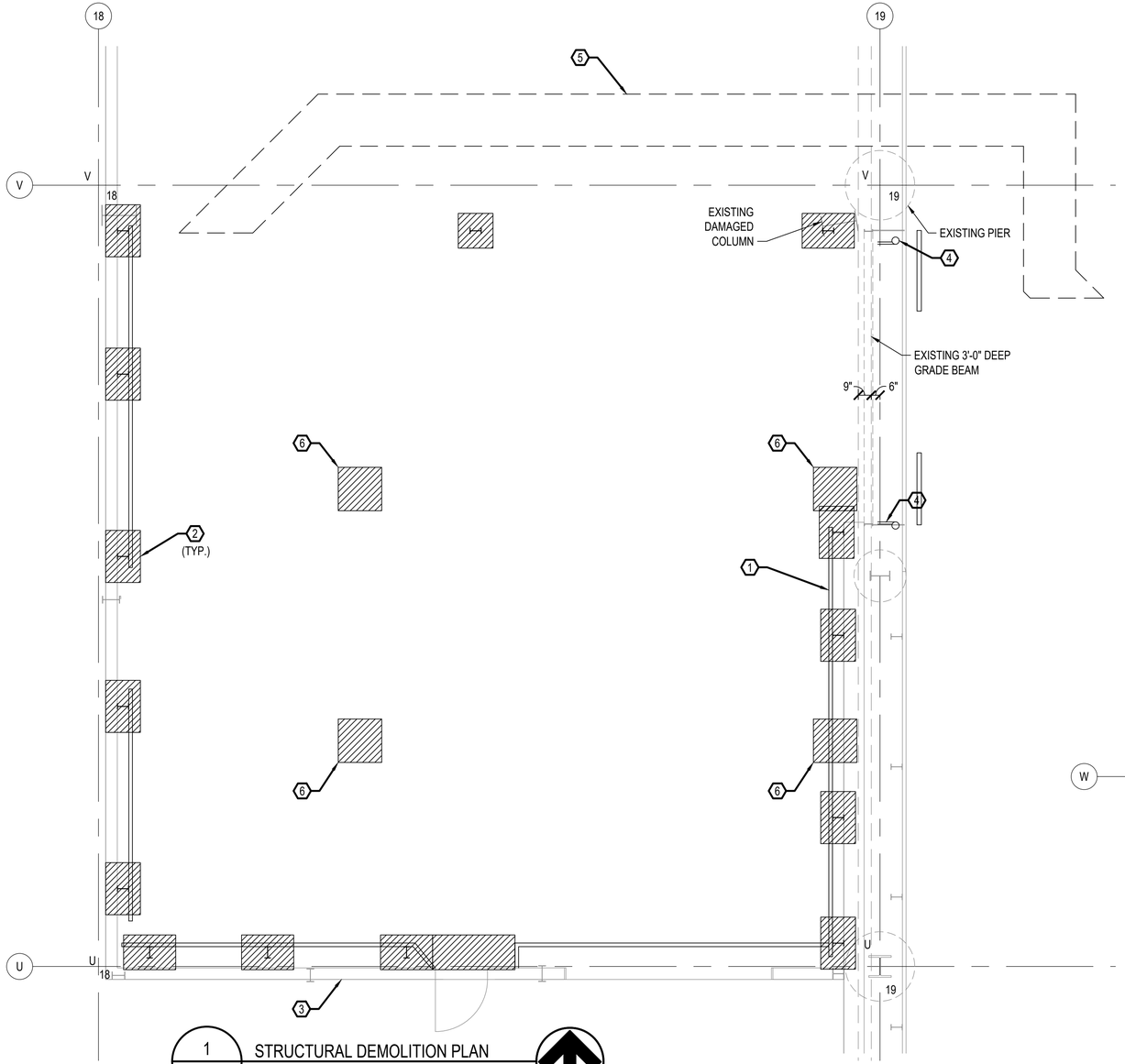

1 SD-101 STRUCTURAL DEMOLITION PLAN
SCALE: 1/4" = 1'-0"

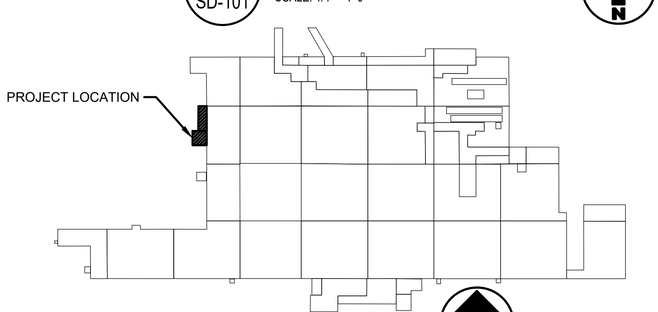

B9001 KEY PLAN

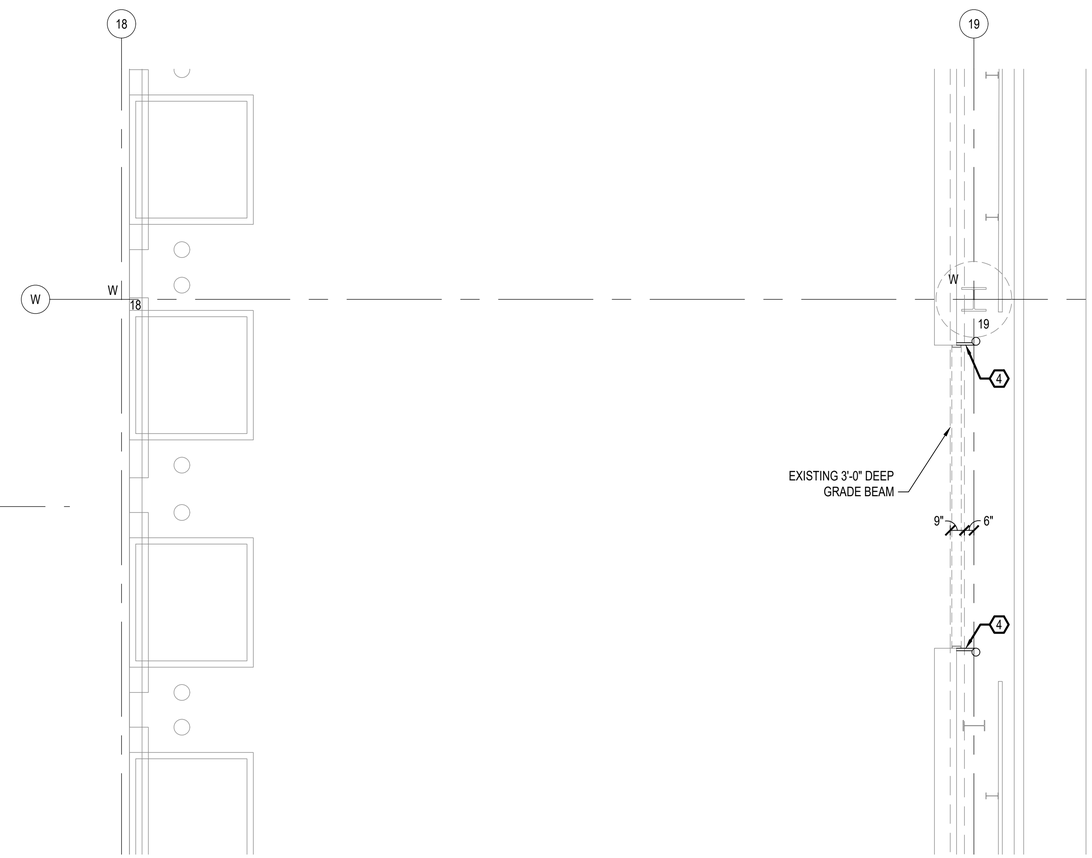

2 SD-101 STRUCTURAL DEMOLITION PLAN @ LOADING DOCK
SCALE: 1/4" = 1'-0"

GENERAL NOTES

1. THE DRAWING WAS PREPARED FROM EXISTING DRAWINGS AND LIMITED ACCESS FOR FIELD OBSERVATIONS. CONTRACTOR SHALL FIELD VERIFY EXISTING CONDITIONS FOR ACCURACY.

KEYED NOTES

1. DEMOLISH AND REMOVE STEEL GUARDRAILS AND POSTS. CUT BELOW FINISH FLOOR AND GRIND SMOOTH.
2. REPAIR CONCRETE SLAB-ON-GRADE AS REQUIRED IN ACCORDANCE WITH ACI RAP-7.
3. DEMOLISH AND REMOVE PATCH MATERIAL ON EXTERIOR CONCRETE FOUNDATION. REPAIR IN ACCORDANCE WITH ACI RAP-6.
4. DEMOLISH AND REMOVE CHANNEL BETWEEN OVERHEAD OPENING JAMB AND BOLLARD. BOLLARDS AND JAMBS TO REMAIN. APPLIES TO BOTH OVERHEAD OPENINGS ALONG GRID 19.
5. DEMO AND REMOVE EXISTING SLAB-ON-GRADE AS REQUIRED FOR NEW UNDERGROUND PLUMBING. AVOID EXISTING UTILITIES AND FOOTINGS.
6. DEMOLISH AND REMOVE EXISTING SLAB AS REQUIRED FOR NEW PILE CAPS AND HELICAL PILES.

AIR FORCE MATERIEL COMMAND
72 ABW CIVIL ENGINEER DIRECTORATE
TINKER AFB, OK

35% DESIGN

PROJECT INFORMATION
WWYK250063
INSTALL REACT VII FACILITY
B9001, V19
TINKER AIR FORCE BASE, OKLAHOMA

REVISIONS

MARK	DATE	DESCRIPTION

MANAGEMENT INFORMATION
ISSUE DATE:7 OCT 25
DESIGN GROUP:TEPA-CSAG
DESIGNED BY:L LUKE
DRAWN BY:T KISER
CHECKED BY:C HIXON
DESIGN FILE LOCATION:
Eng\\Design\2020s\2025\202500630_Support0_3_Drawings\Model

SHEET TITLE
STRUCTURAL DEMOLITION PLAN

SHEET NUMBER
SD-101
SHEET 09 OF

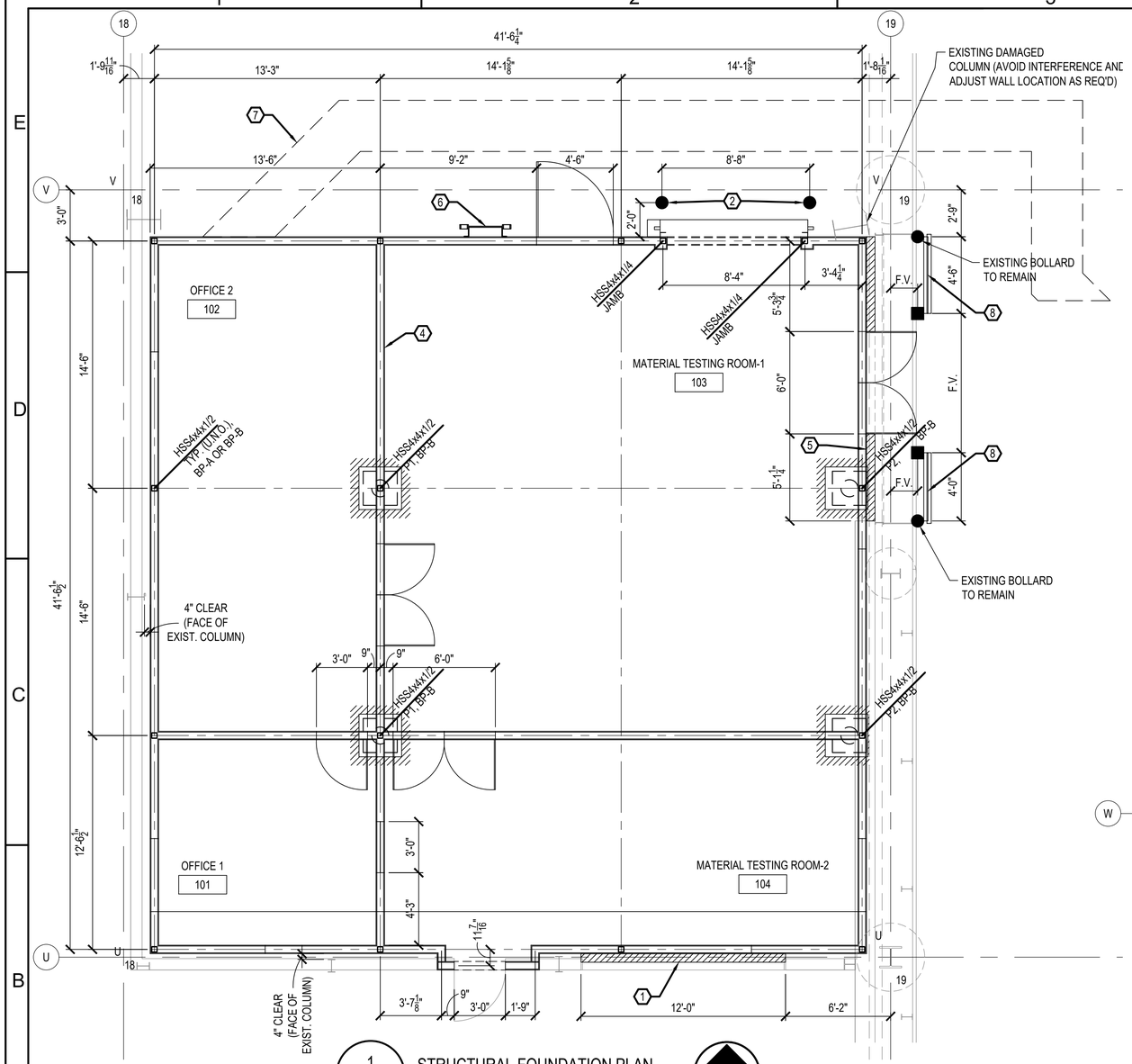

1 / S-101 STRUCTURAL FOUNDATION PLAN
SCALE: 1/4" = 1'-0"

KEYED NOTES

1. CONSTRUCT NEW 6"x6" CONCRETE CURB INSIDE METAL SIDING. PROVIDE (1)-#4 CONT. BAR AND #3 BENT DOWEL @ 12" O.C. EPOXY TO CONCRETE W/ 4" EMBEDMENT. REFER ARCH. FOR WATER STOP AND SEALANT.
2. PROVIDE AND INSTALL NEW CONCRETE FILLED METAL BOLLARD, PIPE 8" STD. ATTACH TO EXISTING CONCRETE SLAB.
3. PROVIDE AND INSTALL NEW STEEL VEHICLE BARRIER. WELD CROSS CHANNELS TO NEW HSS4X4X1/8 POST AND EXISTING PIPE BOLLARD.
4. NEW LT. GA. STUD PARTITION WALLS OR SHAFT WALLS, TYP.
5. NEW LT. GA. STUD INFILL WALL. PROVIDE LT. GA. FURRING TO RECEIVE METAL SIDING. ALIGN FLUSH WITH EXISTING STEEL CHANNEL JAMB.
6. PROVIDE STEEL ROOF ACCESS LADDER.
7. CONSTRUCT NEW SLAB-ON-GRADE TO INFILL NEW PIPING CUT-OUT. MATCH EXISTING AND DOWEL INTO EXISTING SLAB.
8. NEW VEHICLE BARRIER, ATTACH TO EXISTING BOLLARD.

GENERAL NOTES

1. THE DRAWING WAS PREPARED FROM EXISTING DRAWINGS AND LIMITED ACCESS FOR FIELD OBSERVATIONS. CONTRACTOR SHALL FIELD VERIFY EXISTING CONDITIONS FOR ACCURACY.
2. ALL ATTACHMENTS TO THE EXISTING CONCRETE SLAB -ON-GRADE THAT PENETRATE NEW EPOXY FLOOR MEMBRANE SHALL BE SET IN EPOXY AND COMPATIBLE WITH THE SYSTEM.

PILE SCHEDULE

PILE CAP		HELICAL PIER LOADS		
		LOAD	ASD	LRFD
P1	24"X24"X2'-0" REINF W/ (8)-#4 VERTS AND (6)-#4 TIES	P	29.5K	40.7K
		V	0.5K	0.7K
		M	5.2K-FT	7.4K-FT
P2	24"X24"X2'-0" REINF W/ (8)-#4 VERTS AND (6)-#4 TIES	P	19.5K	26.7K
		V	0.6K	0.8K
		M	24.9K-FT	34.3K-FT

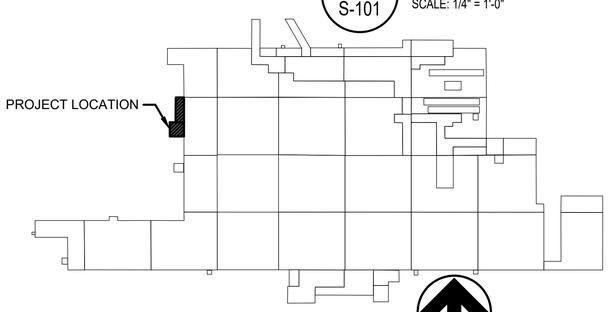

B9001 KEY PLAN

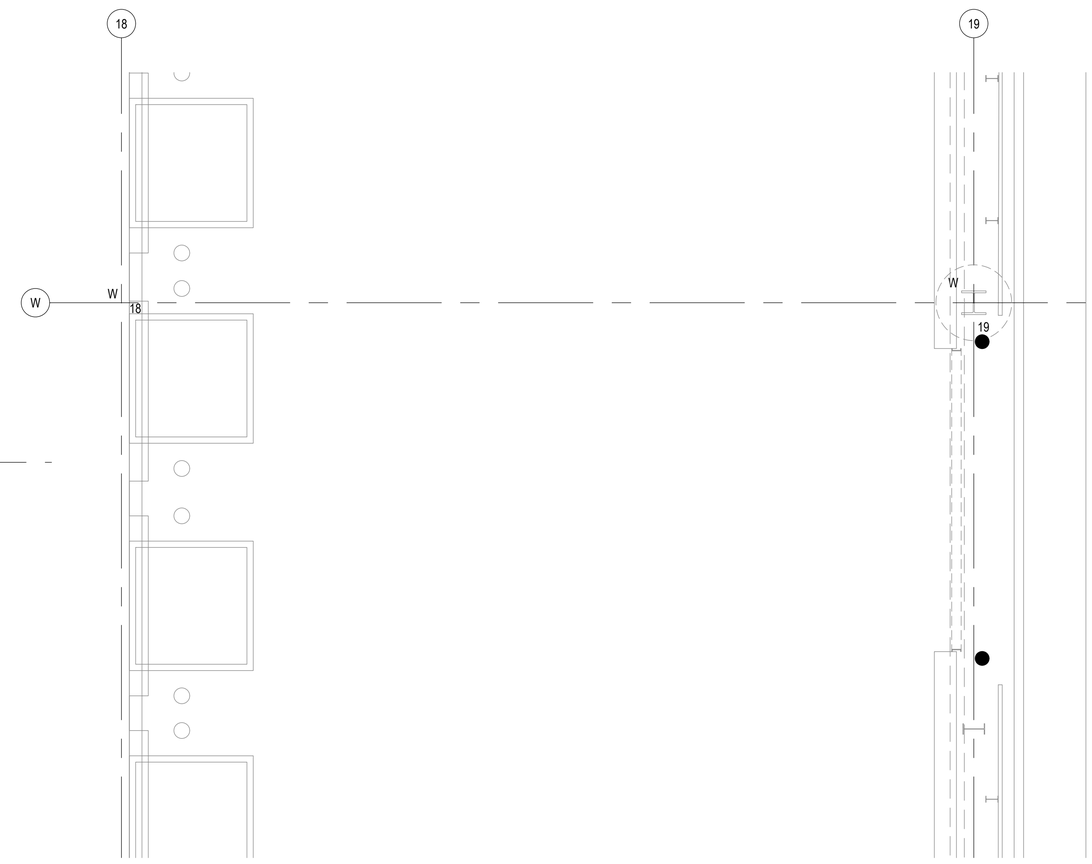

2 / S-101 STRUCTURAL BASE PLAN @ LOADING DOCK
SCALE: 1/4" = 1'-0"

AIR FORCE MATERIEL COMMAND
72 ABW CIVIL ENGINEER DIRECTORATE
TINKER AFB, OK

35% DESIGN

PROJECT INFORMATION
WWYK250063
INSTALL REACT VII FACILITY
B9001, V19
TINKER AIR FORCE BASE, OKLAHOMA

REVISIONS

MARK	DATE	DESCRIPTION

MANAGEMENT INFORMATION
ISSUE DATE:7 OCT 25
DESIGN GROUP:TEPA-CSAG
DESIGNED BY:L LUKE
DRAWN BY:T KISER
CHECKED BY:C HIXON
DESIGN FILE LOCATION:
Engr\Design\2020s\2025\202500630_Support\0_3_Drawings\Model

SHEET TITLE
STRUCTURAL FOUNDATION PLAN

SHEET NUMBER
S-101
SHEET 10 OF

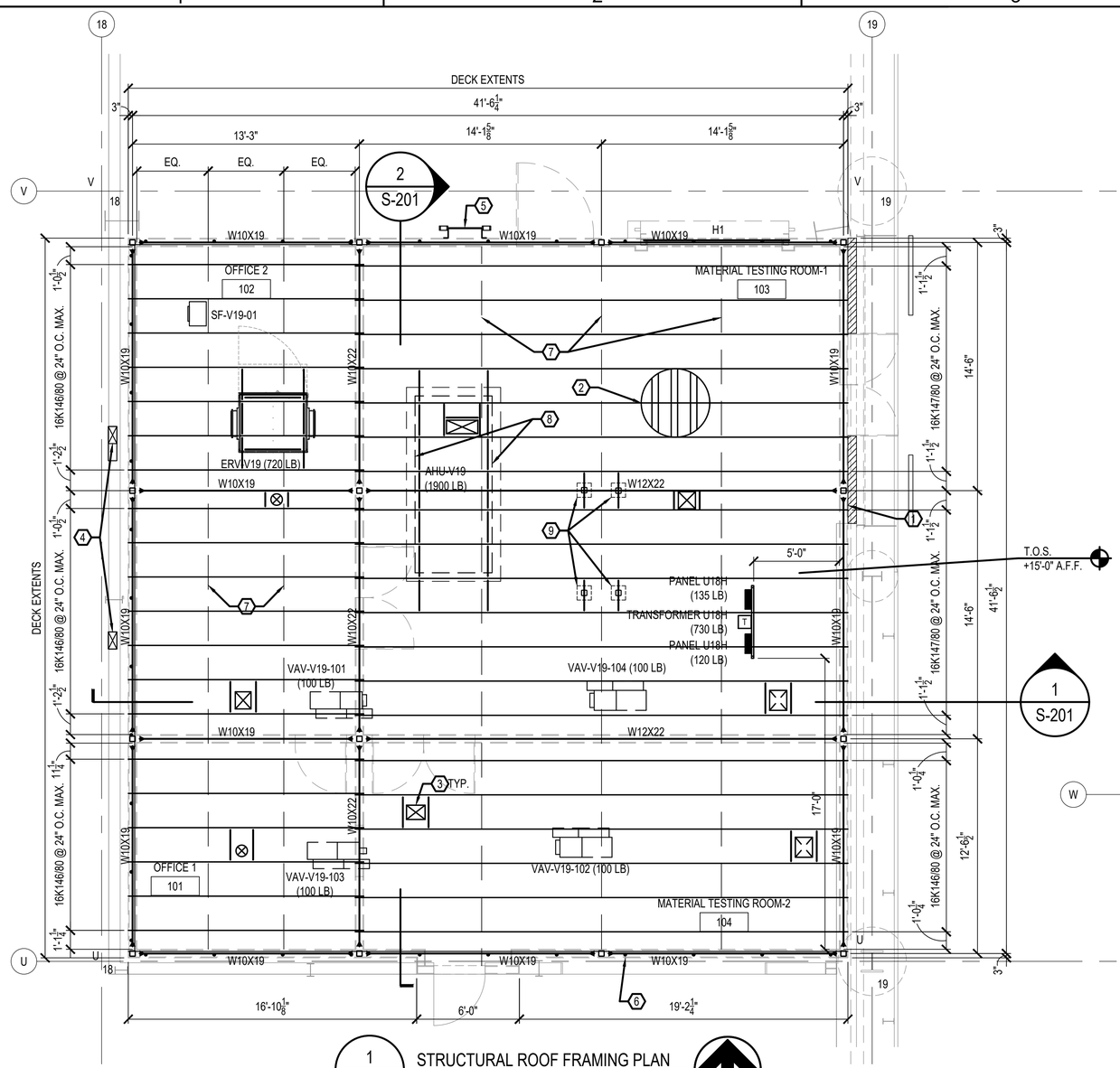

1 / S-102 STRUCTURAL ROOF FRAMING PLAN

SCALE: 1/4" = 1'-0"

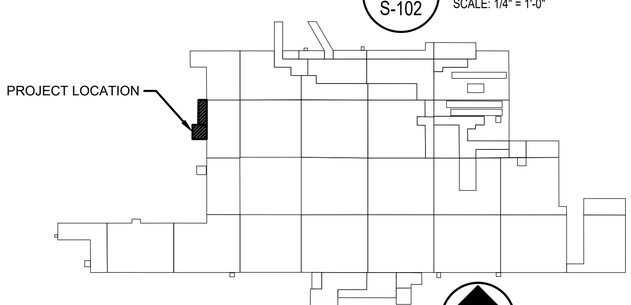

B9001 KEY PLAN

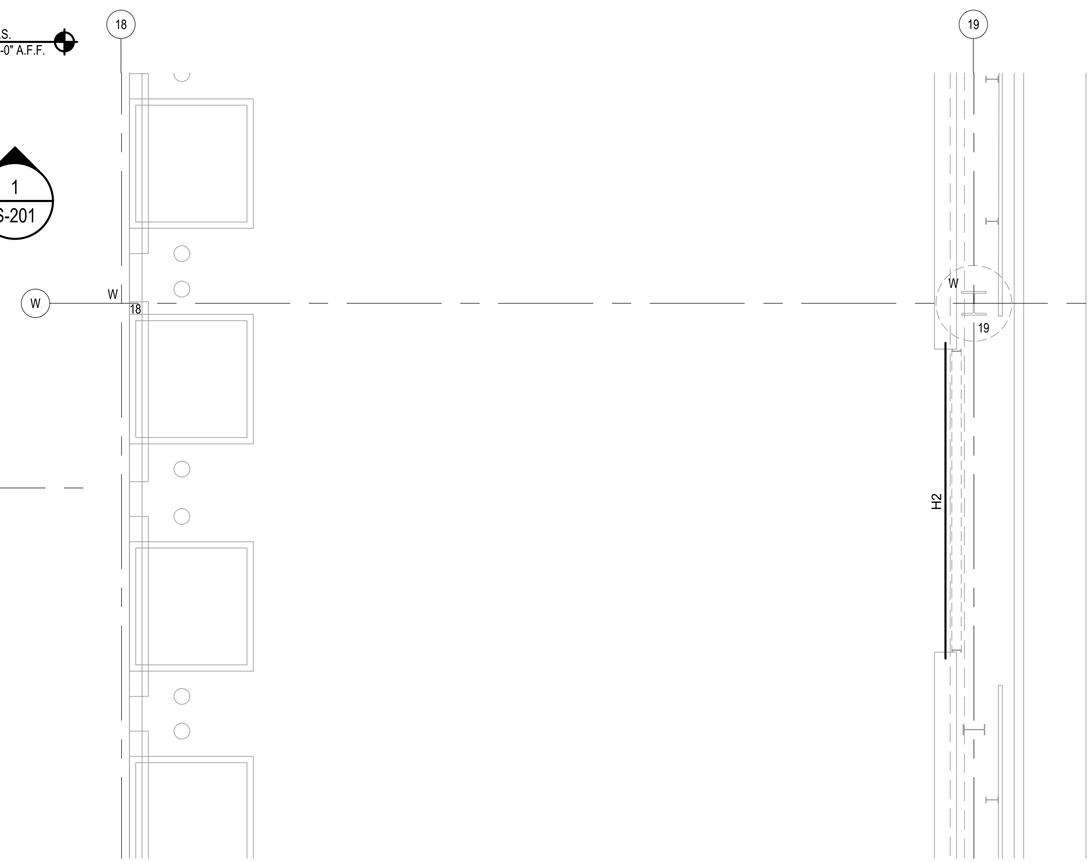

2 / S-102 STRUCTURAL FRAMIN PLAN @ LOADING DOCK

SCALE: 1/4" = 1'-0"

GENERAL NOTES

1. THE DRAWING WAS PREPARED FROM EXISTING DRAWINGS AND LIMITED ACCESS FOR FIELD OBSERVATIONS. CONTRACTOR SHALL FIELD VERIFY EXISTING CONDITIONS FOR ACCURACY.
2. DESIGN JOISTS FOR ROOF EQUIPMENT WEIGHTS SHOWN ON PLAN.
3. PROVIDE MISC. FRAMING AND SUPPORTS FOR ALL MEP ITEMS INCLUDING BUT NOT LIMITED TO VACUUM PIPING, CEILING REELS, COMPRESSED AIR PIPING, SPRINKLER PIPING, GAS PIPING, DUCTS, AND ELECTRICAL. REFER MEP DRAWINGS FOR LOCATIONS.

LEGEND

◀ DENOTES MOMENT CONNECTION

KEYED NOTES

1. LT. GA. STUD NLB PARTITION WALLS OR SHAFT WALLS, BELOW.
2. 1.5B22 STEEL ROOF DECK. FASTEN WITH #12 TEK SCREWS 36/4 PATTERN, #10 TEK SIDELAP @ 12" O.C., ALL PERIMETER FASTENING #12 TEK SCREWS @ 12" O.C. 3/4" THICK CONCRETE DECK PANELS OVER METAL DECK, ATTACH AS REQ'D.
3. ADJUST JOIST AND PROVIDE OPENING FRAMING TO ACCOMMODATE ROOF PENETRATION.
4. PROVIDE ADDITIONAL FRAMING AT EXISTING SIDE WALL STRUCTURE FOR NEW PENETRATIONS.
5. PROVIDE STEEL ROOF ACCESS LADDER.
6. PROVIDE STEEL GUARDRAIL AT NORTH, WEST AND SOUTH WALL. INCLUDE TOE PLATE AND ATTACH TO ROOF STRUCTURE.
7. PROVIDE JOIST BRIDGING.
8. PROVIDE FRAMING AS REQUIRED TO SUPPORT UNIT CURB. SIT CURB ON CONCRETE DECK PANELS AND ATTACH CURN TO FRAME SUPPORTS WITH FASTENERS.
9. PROVIDE SUPPORT FRAMING FOR RETRACTABLE ELECT./AIR HOSE REELS AS REQ'D.

AFMC
AIR FORCE MATERIEL COMMAND
72 ABW CIVIL ENGINEER DIRECTORATE
TINKER AFB, OK

35% DESIGN

PROJECT INFORMATION
WWYK250063
INSTALL REACT VII FACILITY
B9001, V19
TINKER AIR FORCE BASE, OKLAHOMA

REVISIONS

MARK	DATE	DESCRIPTION

MANAGEMENT INFORMATION
ISSUE DATE:7 OCT 25
DESIGN GROUP:TEPA-CSAG
DESIGNED BY:L LUKE
DRAWN BY:T KISER
CHECKED BY:C HIXON
DESIGN FILE LOCATION:
Engr\Design\2020s\2025\20250063\0_Support\0_3_Drawings\Model

SHEET TITLE
STRUCTURAL ROOF FRAMING PLAN

SHEET NUMBER
S-102
SHEET 11 OF

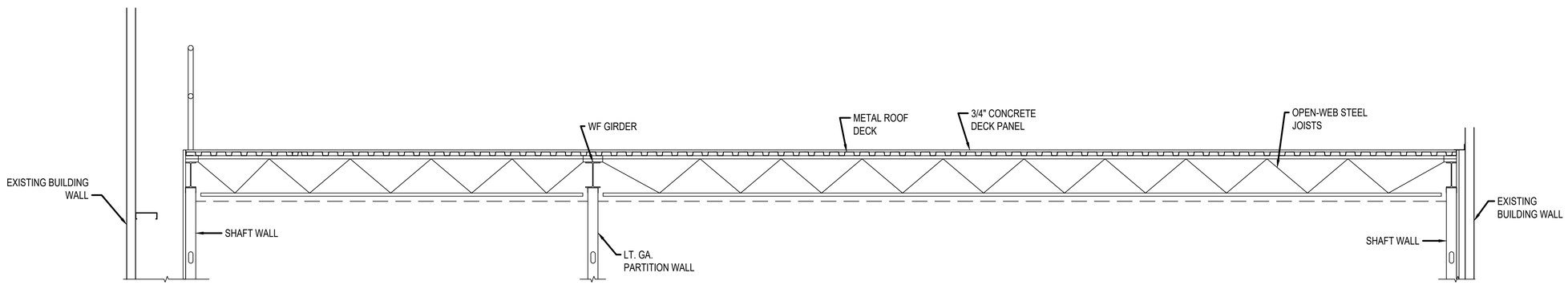

1 / S-201 STRUCTURAL ELEVATIONS [LOOKING NORTH]
SCALE: 1/2" = 1'-0"

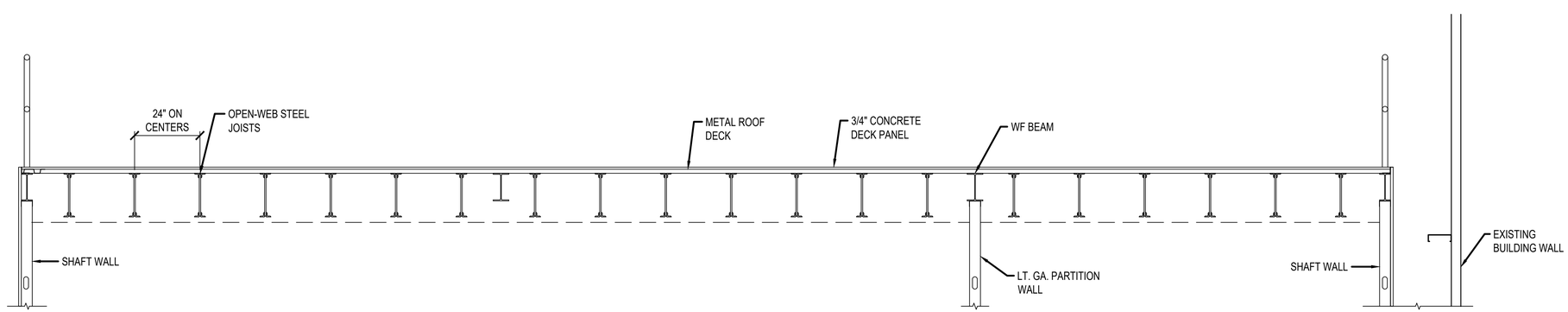

2 / S-201 STRUCTURAL ELEVATIONS [LOOKING EAST]
SCALE: 1/2" = 1'-0"

AIR FORCE MATERIEL COMMAND
72 ABW CIVIL ENGINEER DIRECTORATE
TINKER AFB, OK

35% DESIGN

PROJECT INFORMATION
WWYK250063
INSTALL REACT VII FACILITY
B9001, V19
TINKER AIR FORCE BASE, OKLAHOMA

REVISIONS

MARK	DATE	DESCRIPTION

MANAGEMENT INFORMATION
ISSUE DATE:7 OCT 25
DESIGN GROUP:TEPA-CSAG
DESIGNED BY:L LUKE
DRAWN BY:T KISER
CHECKED BY:C HIXON
DESIGN FILE LOCATION:
Engr\Design\2020s\2025\202500630_Support\0_3_Drawings\Model

SHEET TITLE
STRUCTURAL ELEVATIONS

SHEET NUMBER
S-201

SHEET 12 OF

NOTE: ALL DIMS. AND COMPONENTS ARE SHOWN AS A DESIGN BASIS ONLY.

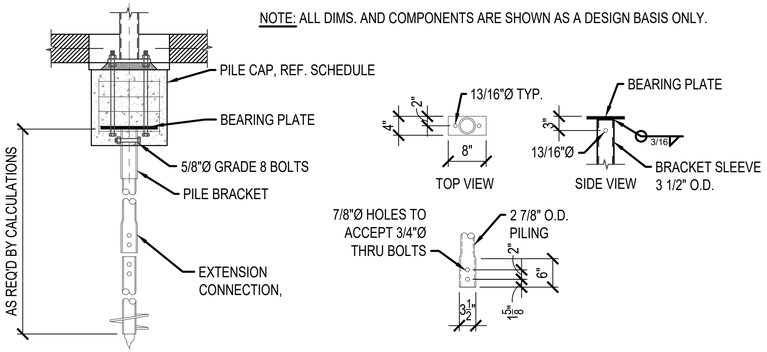

1 / S-501 HELICAL PILE DETAIL
SCALE: 3/4" = 1'-0"

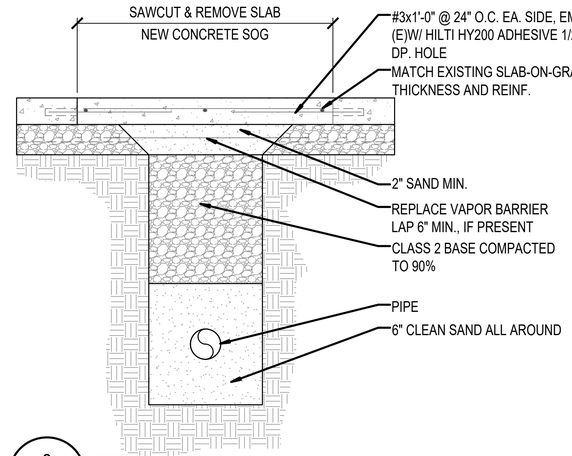

2 / S-501 TRENCH DETAIL
SCALE: 3/4" = 1'-0"

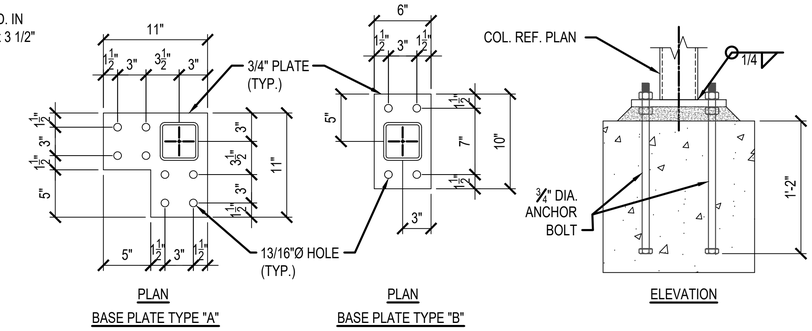

3 / S-501 BASEPLATE DETAILS
SCALE: 1 1/2" = 1'-0"

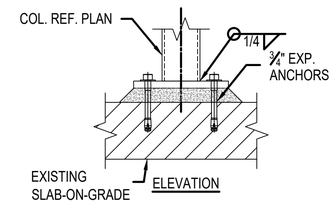

4 / S-501 COLUMN BASE AT EXISTING SLAB DETAIL
SCALE: 1 1/2" = 1'-0"

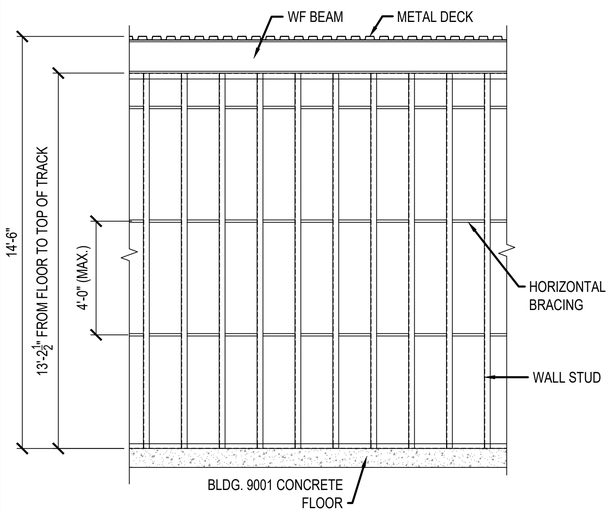

NOTE: ALL METAL STUD WALLS MUST HAVE HORIZONTAL BRACING EVERY 4' (MAX). FLOOR TO TOP OF TRACK DIMENSION SHOWN MAY VARY DEPENDING ON EXISTING FLOOR LEVELNESS.

5 / S-501 NLB LT. GA. WALL DETAIL
SCALE: 3/8" = 1'-0"

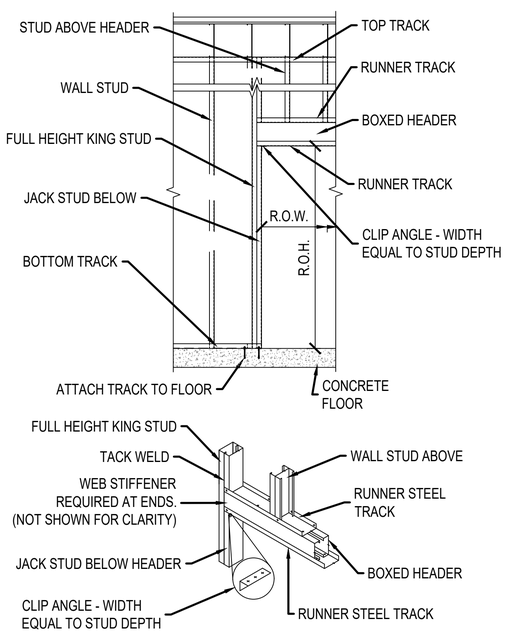

6 / S-501 NLB DOOR OPENING DETAIL
SCALE: 3/8" = 1'-0"

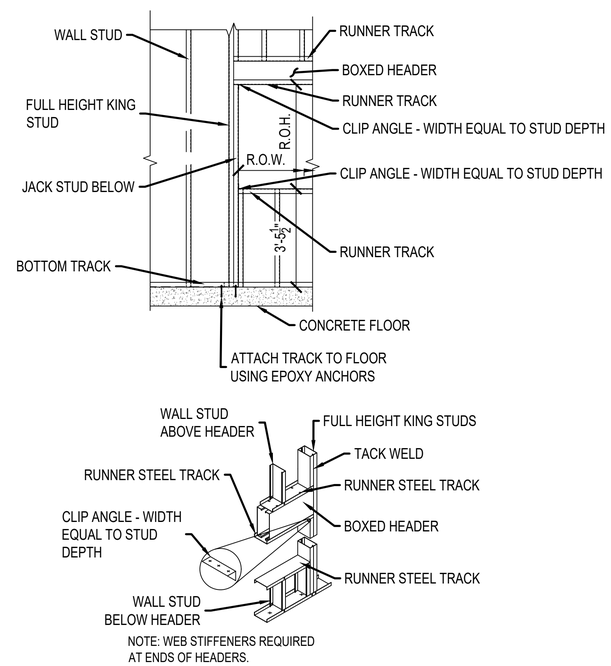

7 / S-501 NLB LT. GA. WINDOW OPENING DETAIL
SCALE: 3/8" = 1'-0"

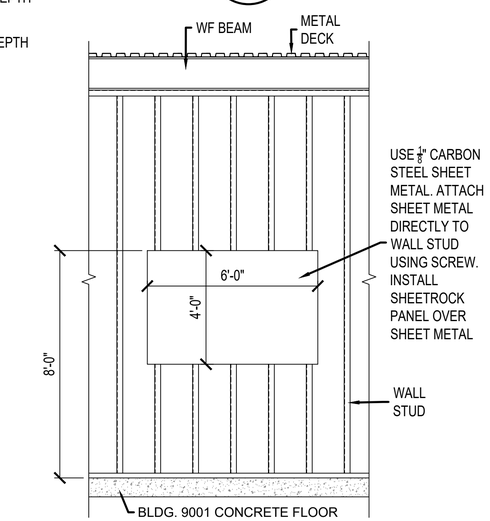

8 / S-501 TYP. TV MOUNT SHEET METAL SUPPORT DETAIL
SCALE: 3/8" = 1'-0"

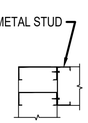

CORNER FRAMING PLAN
INSTALL CORNER FRAMING AT LOCATION WHERE STUD WALLS INTERSECT PERPENDICULAR

9 / S-501 DETAIL
SCALE: N.T.S.

AFMC
AIR FORCE MATERIEL COMMAND
72 ABW CIVIL ENGINEER DIRECTORATE
TINKER AFB, OK

35% DESIGN

PROJECT INFORMATION
WWYK250063
INSTALL REACT VII FACILITY
B9001, V19
TINKER AIR FORCE BASE, OKLAHOMA

REVISIONS

MARK	DATE	DESCRIPTION

MANAGEMENT INFORMATION
ISSUE DATE: 7 OCT 25
DESIGN GROUP: TEPA-CSAG
DESIGNED BY: L LUKE
DRAWN BY: T KISER
CHECKED BY: C HIXON
DESIGN FILE LOCATION: Engr\Design\2020s\2025\202500630_Support\0_3_Drawings\Model

SHEET TITLE
FOUNDATION AND NLB WALL DETAILS

SHEET NUMBER
S-501
SHEET 13 OF

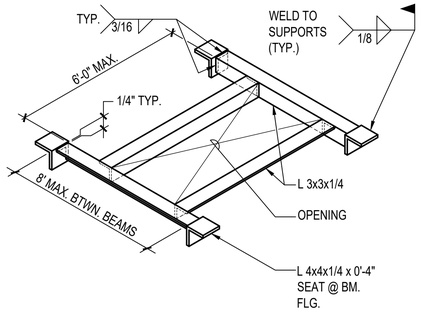

NOTE:

1. CONTRACTOR SHALL COORDINATE SIZE AND LOCATION REQUIREMENTS WITH SELECTED EQUIPMENT. ROOF DECK OPENING FRAMING SHALL BE SUBMITTED AS PART OF STRUCTURAL STEEL SHOP DRAWING PACKAGE.

1 / S-502 TYP. ROOF OPENING FRAME AND MECHANICAL UNIT SUPPORT
SCALE: N.T.S.

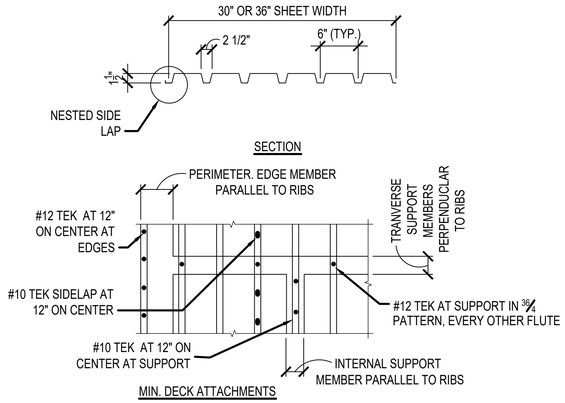

2 / S-502 DECK DIAPHRAGM DETAIL
SCALE: N.T.S.

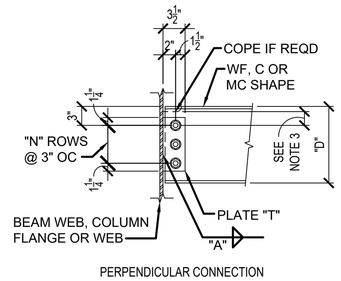

SINGLE PLATE BEAM CONNECTION SCHEDULE 3/4" DIA BOLTS			
NOMINAL BEAM DEPTH "D"	NUMBER OF BOLT ROWS "N"	PLATE THICKNESS "T"	WELD SIZE "A"
W10	2	5/16"	1/4"
W12	2	5/16"	1/4"

NOTES:
1. PROVIDE 3/16" WELD IF BEAM WEB IS LESS THAN 0.381" THICK.

3 / S-502 SINGLE PLATE BEAM CONNECTION
SCALE: 1" = 1'-0"

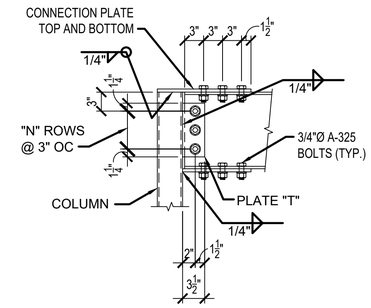

4 / S-502 MOMENT CONNECTION DETAIL
SCALE: 1" = 1'-0"

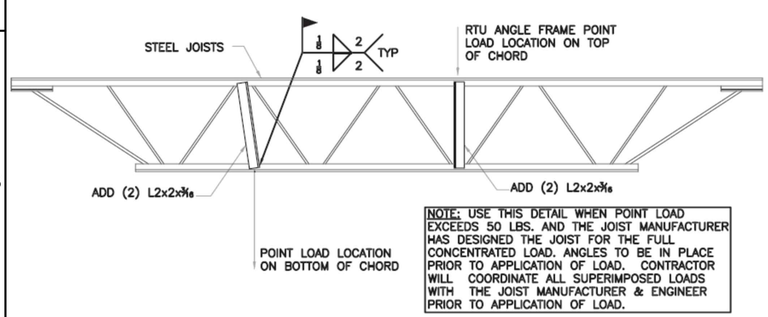

NOTE: USE THIS DETAIL WHEN POINT LOAD EXCEEDS 50 LBS. AND THE JOIST MANUFACTURER HAS DESIGNED THE JOIST FOR THE FULL CONCENTRATED LOAD. ANGLES TO BE IN PLACE PRIOR TO APPLICATION OF LOAD. CONTRACTOR WILL COORDINATE ALL SUPERIMPOSED LOADS WITH THE JOIST MANUFACTURER & ENGINEER PRIOR TO APPLICATION OF LOAD.

5 / S-502 JOIST REINFORCEMENT DETAIL
SCALE: N.T.S.

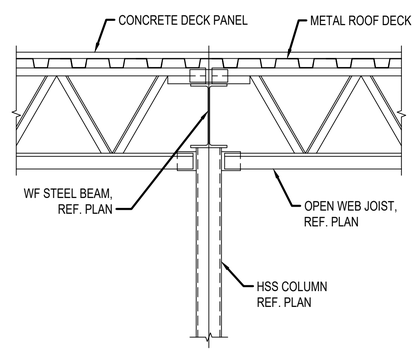

6 / S-502 FRAMING DETAIL
SCALE: 1" = 1'-0"

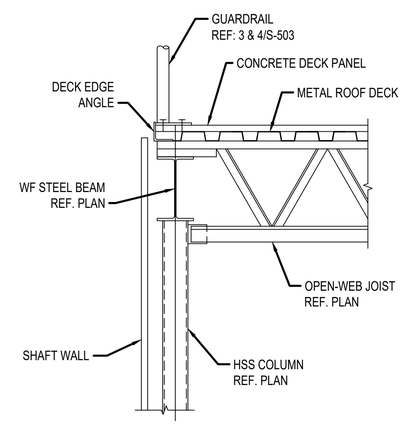

7 / S-502 FRAMING DETAIL
SCALE: 1" = 1'-0"

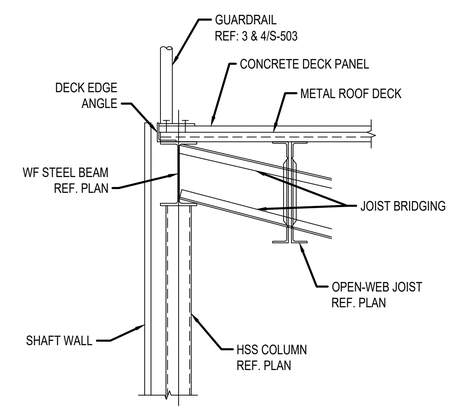

8 / S-502 FRAMING DETAIL
SCALE: 1" = 1'-0"

AIR FORCE MATERIEL COMMAND
72 ABW CIVIL ENGINEER DIRECTORATE
TINKER AFB, OK

35% DESIGN

PROJECT INFORMATION
WWYK250063
INSTALL REACT VII FACILITY
B9001, V19
TINKER AIR FORCE BASE, OKLAHOMA

REVISIONS

MARK	DATE	DESCRIPTION

MANAGEMENT INFORMATION
ISSUE DATE:7 OCT 25
DESIGN GROUP:TEPA-CSAG
DESIGNED BY:L LUKE
DRAWN BY:T KISER
CHECKED BY:C HIXON
DESIGN FILE LOCATION:
Engr\Design\2020s\2025\202500630_Support\0_3_Drawings\Model

SHEET TITLE
FRAMING DETAILS

SHEET NUMBER
S-502
SHEET 14 OF

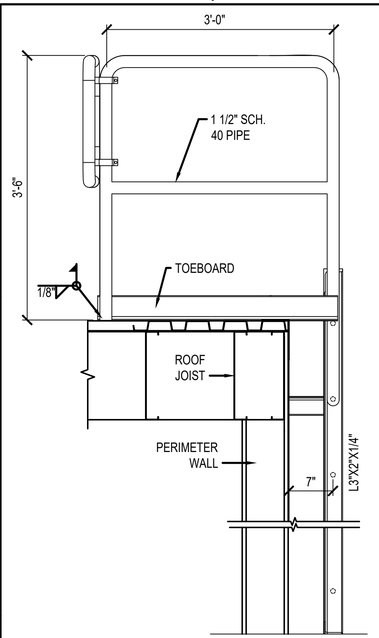

SIDE VIEW

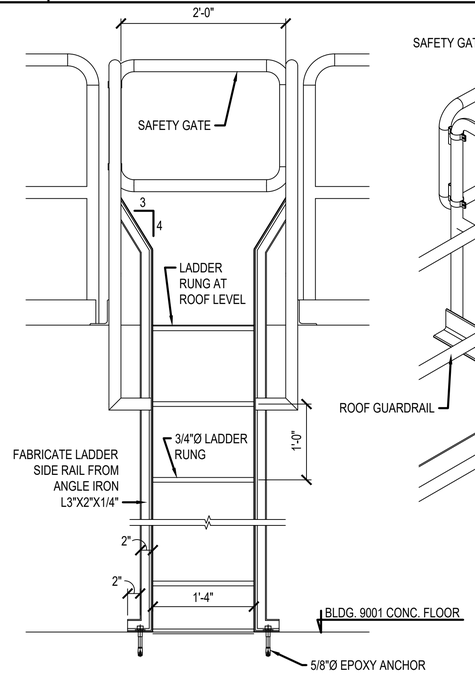

FRONT VIEW

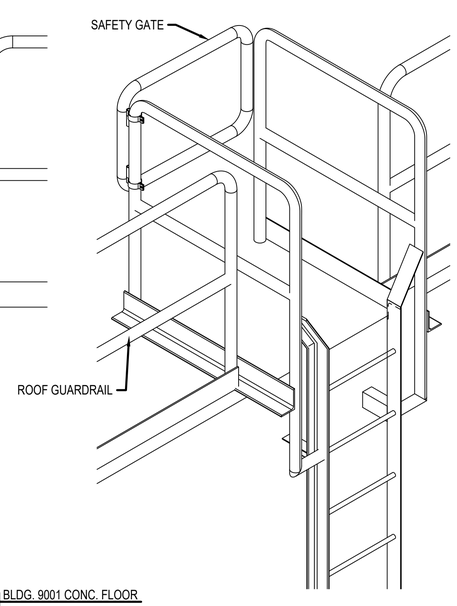

ISOMETRIC VIEW

1 / S-503 DETAIL
SCALE: 1" = 1'-0"

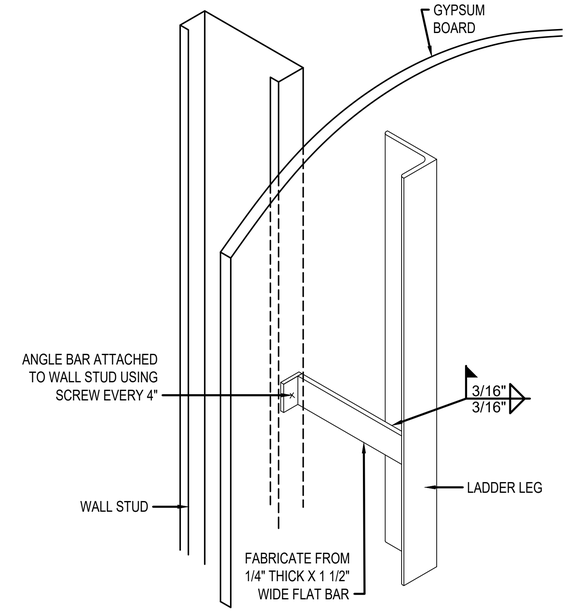

2 / S-503 DETAIL
SCALE: 3" = 1'-0"

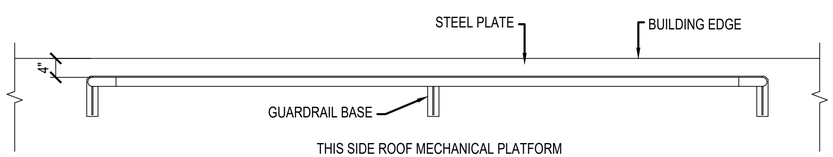

THIS SIDE ROOF MECHANICAL PLATFORM OR WALKING PLATFORM

PLAN VIEW

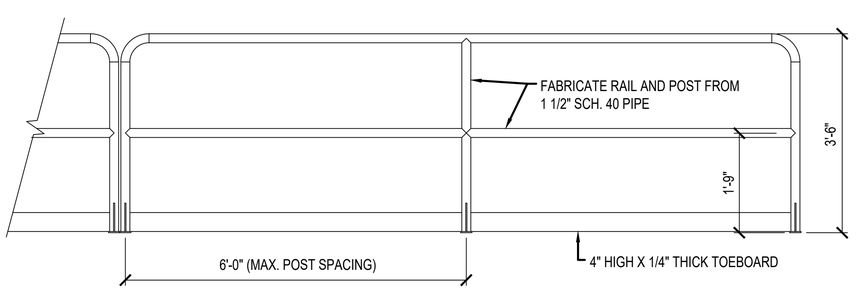

3 / S-503 DETAIL
SCALE: 3/4" = 1'-0"

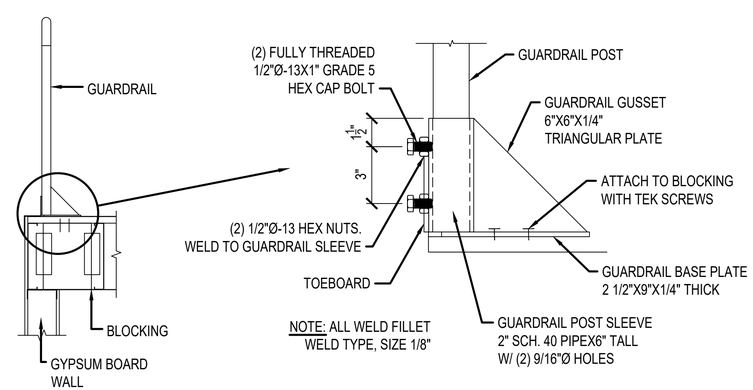

NOTE: ALL WELD FILLET WELD TYPE, SIZE 1/8"

4 / S-503 DETAIL
SCALE: 3" = 1'-0"

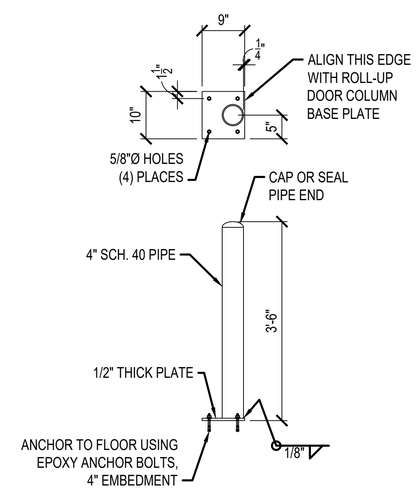

5 / S-503 DETAIL
SCALE: 3/4" = 1'-0"

AIR FORCE MATERIEL COMMAND
72 ABW CIVIL ENGINEER DIRECTORATE
TINKER AFB, OK

35% DESIGN

PROJECT INFORMATION
WWYK250063
INSTALL REACT VII FACILITY
B9001, V19
TINKER AIR FORCE BASE, OKLAHOMA

REVISIONS

MARK	DATE	DESCRIPTION

MANAGEMENT INFORMATION
ISSUE DATE:7 OCT 25
DESIGN GROUP:TEPA-CSAG
DESIGNED BY:L LUKE
DRAWN BY:T KISER
CHECKED BY:C HIXON
DESIGN FILE LOCATION:
Engr\Design\2020s\2025\202500630_Support\0_3_Drawings\Model

SHEET TITLE
GUARDRAIL AND LADDER DETAILS

SHEET NUMBER
S-503
SHEET 15 OF

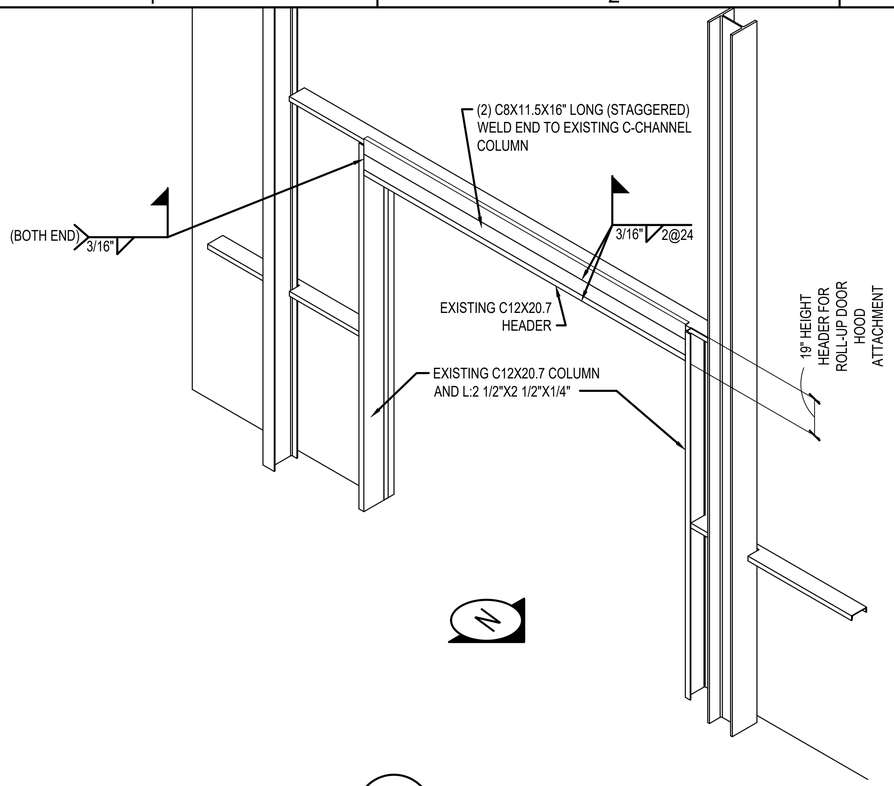

1 / S-504 DETAIL
SCALE: 3/8" = 1'-0"

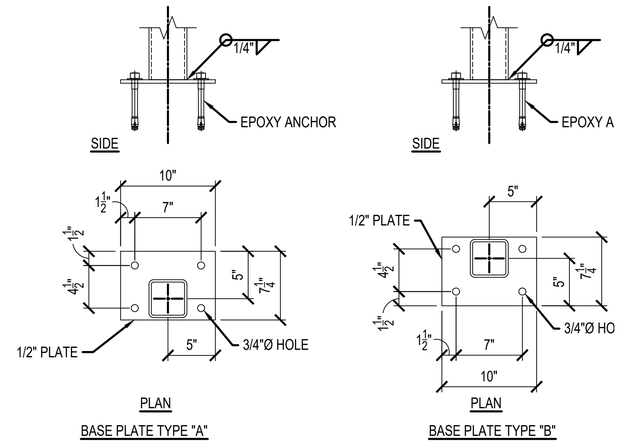

2 / S-504 DETAIL
SCALE: 1 1/2" = 1'-0"

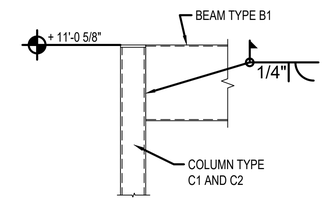

3 / S-504 FRAMING DETAIL
SCALE: 1" = 1'-0"

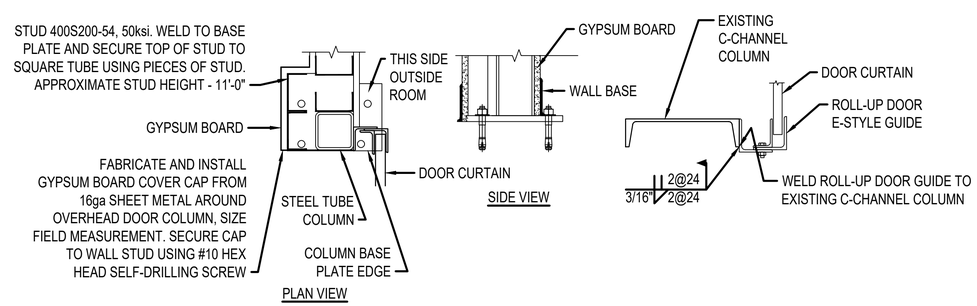

4 / S-504 DETAIL
SCALE: 1 1/2" = 1'-0"

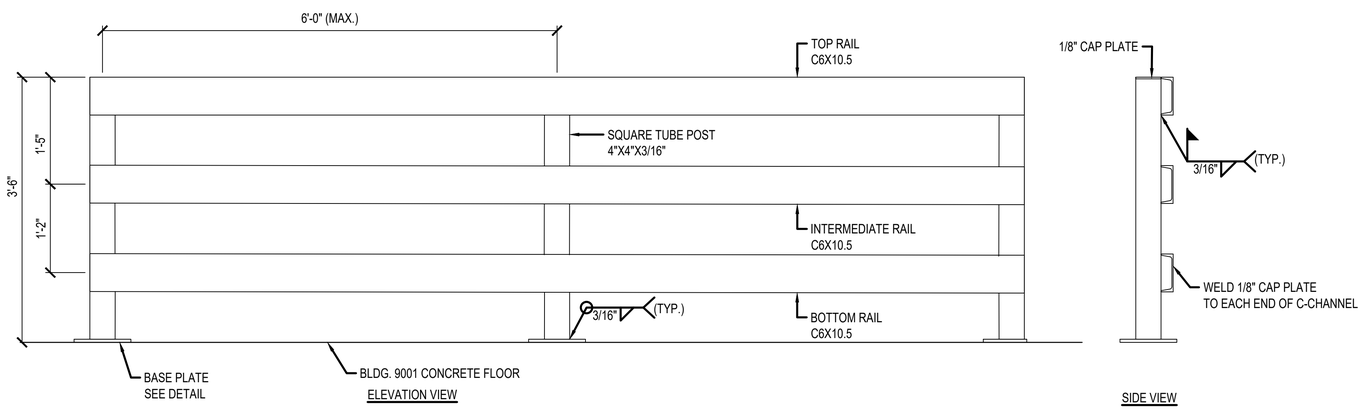

5 / S-504 DETAIL
SCALE: 1" = 1'-0"

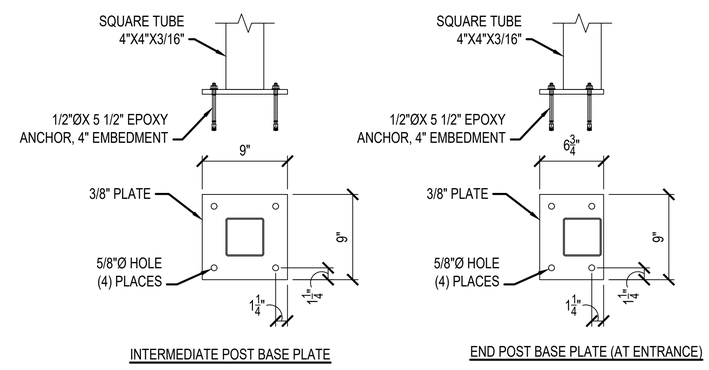

6 / S-504 DETAIL
SCALE: 1 1/2" = 1'-0"

AIR FORCE MATERIEL COMMAND
72 ABW CIVIL ENGINEER DIRECTORATE
TINKER AFB, OK

35% DESIGN

PROJECT INFORMATION
WWYK250063
INSTALL REACT VII FACILITY
B9001, V19
TINKER AIR FORCE BASE, OKLAHOMA

REVISIONS

MARK	DATE	DESCRIPTION

MANAGEMENT INFORMATION
ISSUE DATE:7 OCT 25
DESIGN GROUP:TEPA-CSAG
DESIGNED BY:L LUKE
DRAWN BY:T KISER
CHECKED BY:C HIXON
DESIGN FILE LOCATION:
Engr\Design\2020s\2025\20250063\0_Support\0_3_Drawings\Model

SHEET TITLE
GUARDRAIL AND O.H. DOOR DETAILS

SHEET NUMBER
S-504
SHEET 16 OF

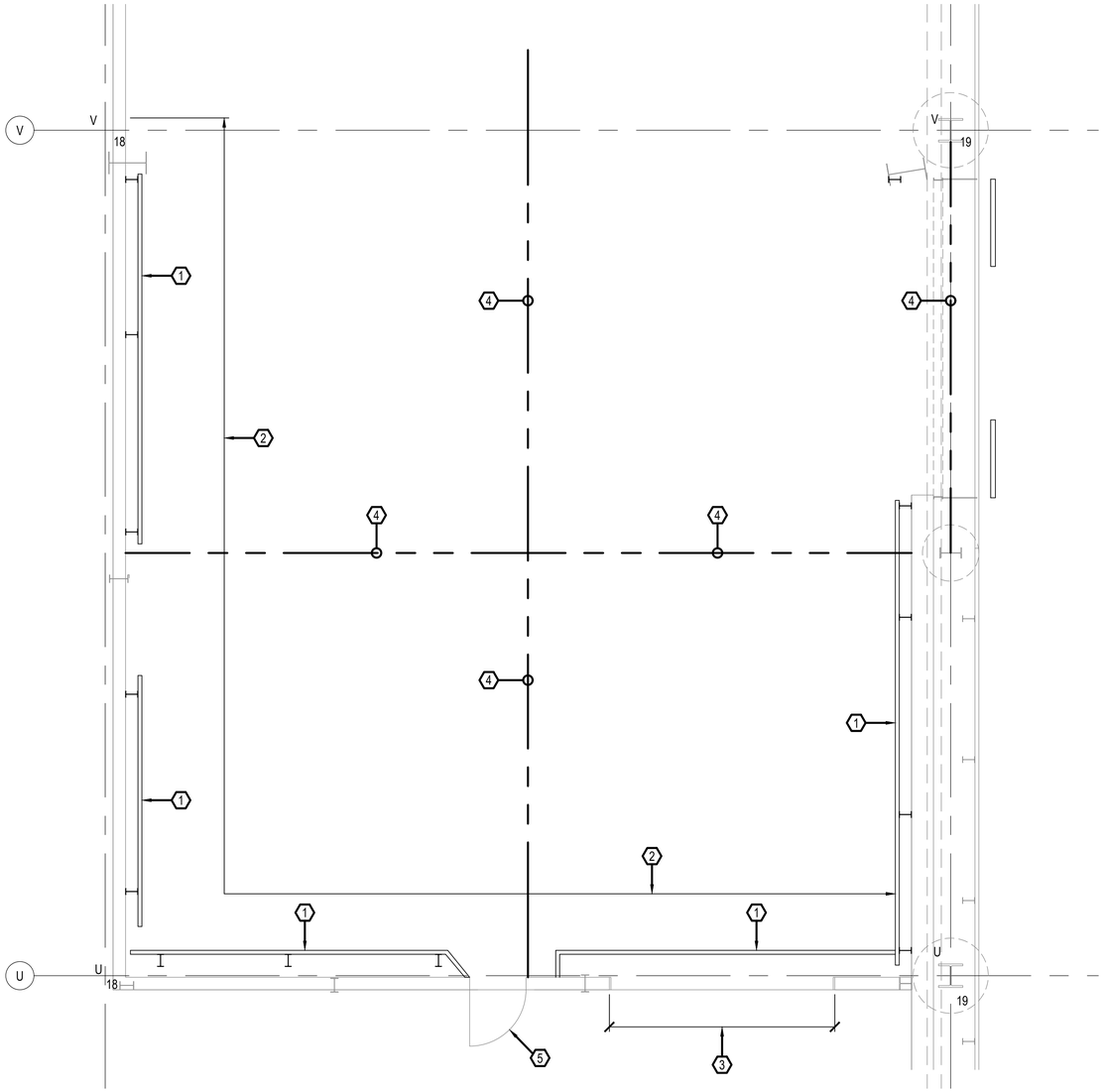

1 / AD-101 ARCHITECTURAL DEMOLITION PLAN
SCALE: 1/4" = 1'-0"

N

KEYED NOTES

1. REMOVE EXISTING GUARDRAIL.
2. REMOVE FOAM AT INSULATED PANEL SEAMS, CONCRETE CURBS, AND FRAME WORK AROUND BASE AREAS AT COLUMNS.
3. EXISTING INFILL WALL PANEL TO BE REMOVED AND REPLACED. REFER TO DETAIL DRAWINGS 1, 2, AND 3 ON SHEET A-501.
4. REMOVE UNEVEN MATERIAL OVER EXPANSION JOINTS AND REMOVE EXPANSION JOINT MATERIAL.
5. REMOVE EXISTING DOOR AND DOOR FRAME.

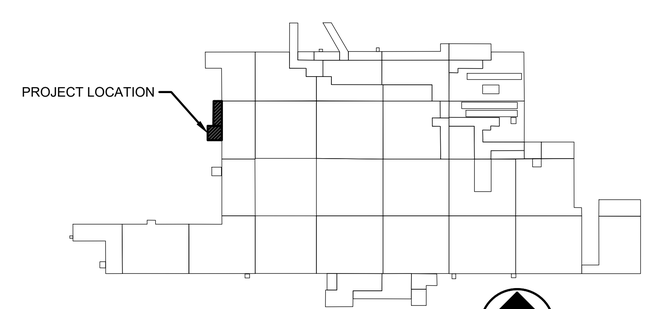

B9001 KEY PLAN

N

AIR FORCE MATERIEL COMMAND
72 ABW CIVIL ENGINEER DIRECTORATE
TINKER AFB, OK

35% DESIGN

PROJECT INFORMATION
WWYK250063
INSTALL REACT VII FACILITY
B9001, V19
TINKER AIR FORCE BASE, OKLAHOMA

REVISIONS

MARK	DATE	DESCRIPTION

MANAGEMENT INFORMATION
ISSUE DATE:7 OCT 25
DESIGN GROUP:TEPA-CSAG
DESIGNED BY:J LESTER
DRAWN BY:T KISER
CHECKED BY:C HIXON
DESIGN FILE LOCATION:
Engr\Design\2020s\2025\202500630_Support\0_3_Drawings\Model

SHEET TITLE
ARCHITECTURAL DEMOLITION PLAN

SHEET NUMBER
AD-101

SHEET 17 OF

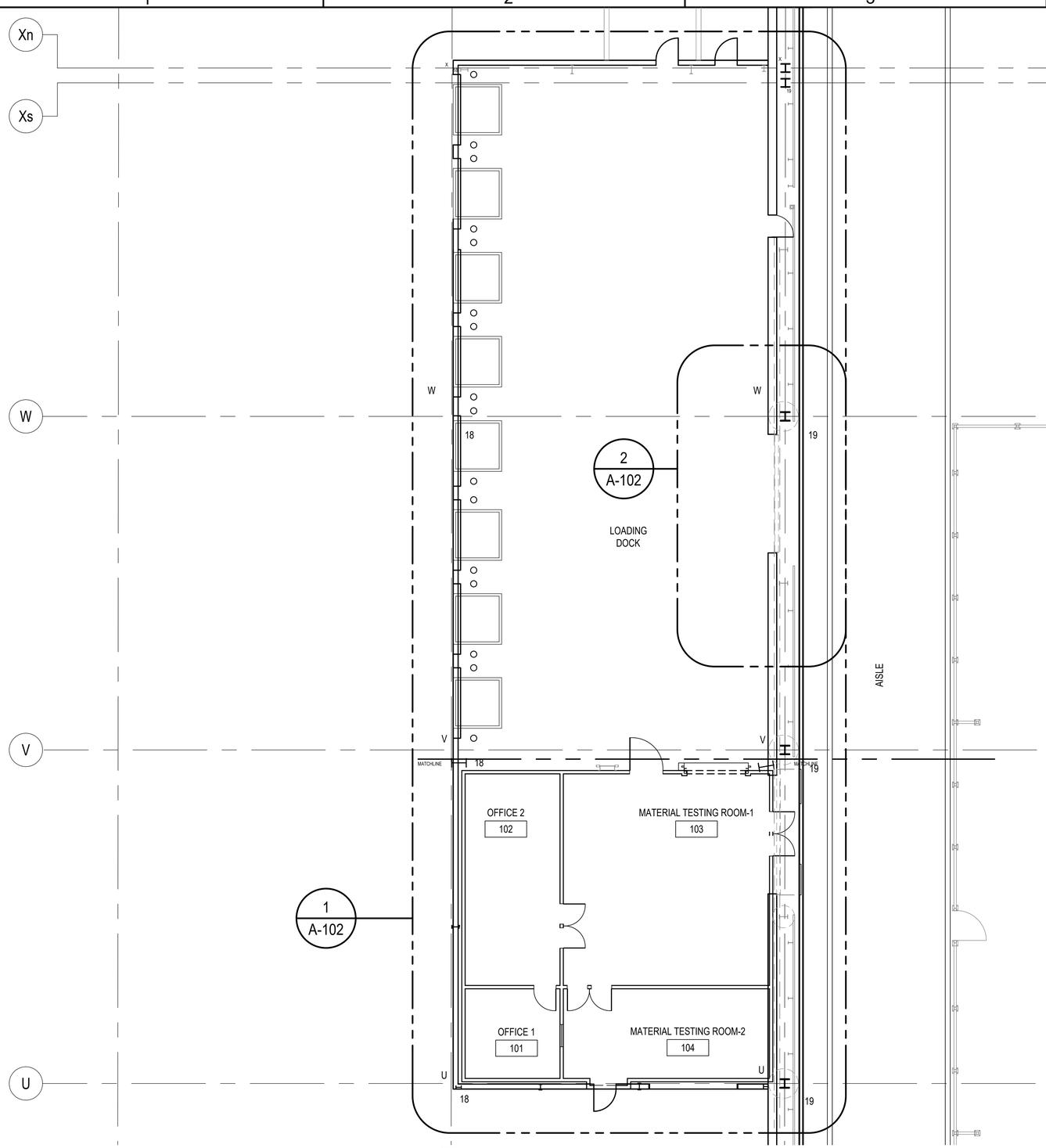

1 / A-101 REACT VII AND LOADING DOCK FLOOR PLAN

SCALE: 1/8" = 1'-0"

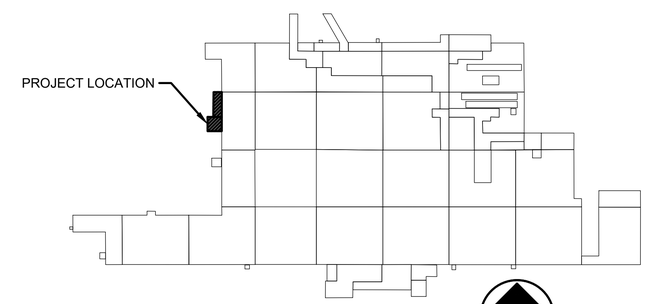

B9001 KEY PLAN

AIR FORCE MATERIEL COMMAND
72 ABW CIVIL ENGINEER DIRECTORATE
TINKER AFB, OK

35% DESIGN

PROJECT INFORMATION
WWYK250063
INSTALL REACT VII FACILITY
B9001, V19
TINKER AIR FORCE BASE, OKLAHOMA

REVISIONS

MARK	DATE	DESCRIPTION

MANAGEMENT INFORMATION
ISSUE DATE:7 OCT 25
DESIGN GROUP:TEPA-CSAG
DESIGNED BY:L LUKE
DRAWN BY:T KISER
CHECKED BY:C HIXON
DESIGN FILE LOCATION:
Engr\Design\2020s\2025\202500630_Support\0_3_Drawings\Model

SHEET TITLE
REACT VII AND LOADING DOCK FLOOR PLAN

SHEET NUMBER
A-101

SHEET 18 OF

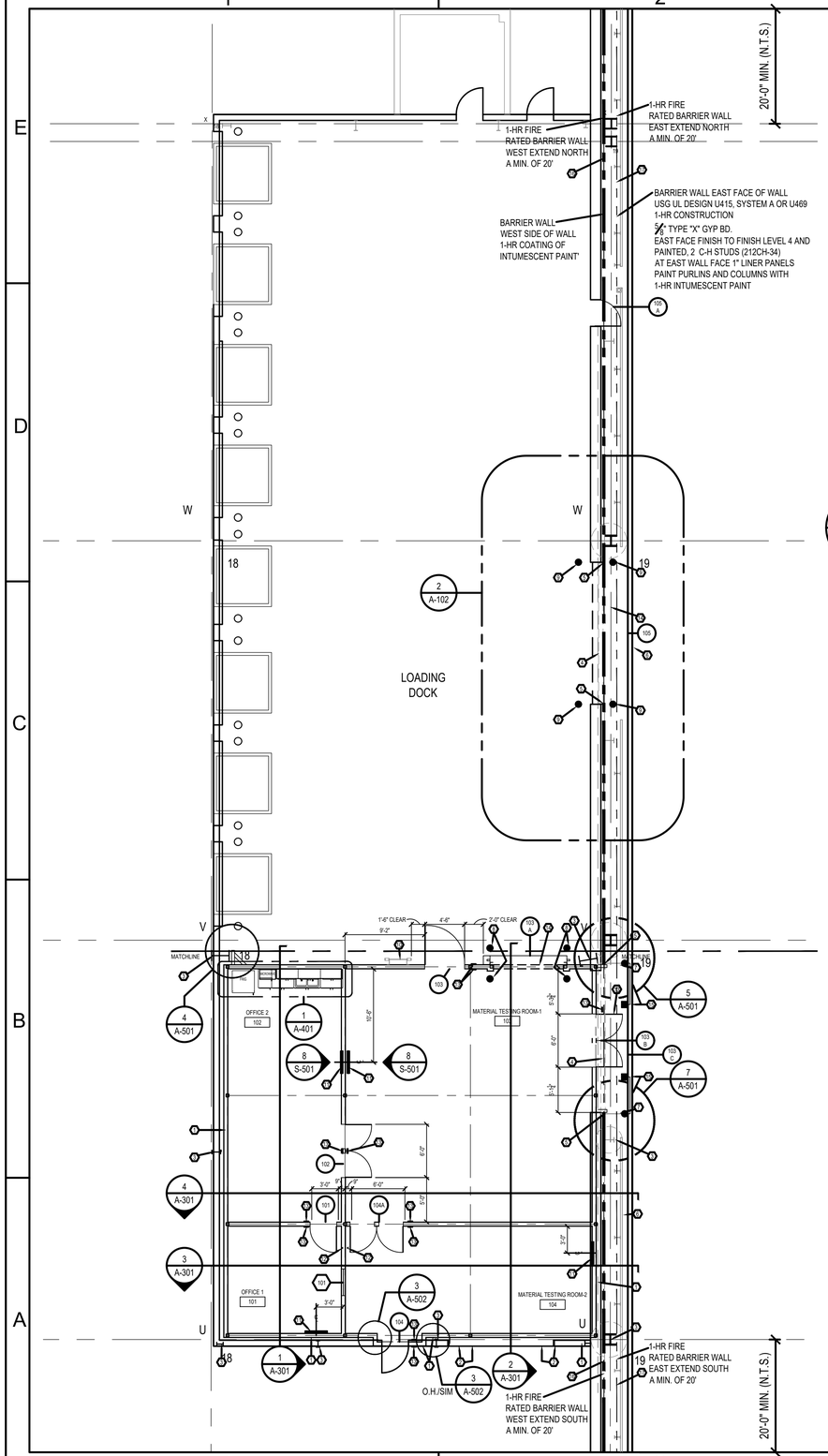

1 / A-102 FLOOR PLAN
SCALE: 1/8" = 1'-0"

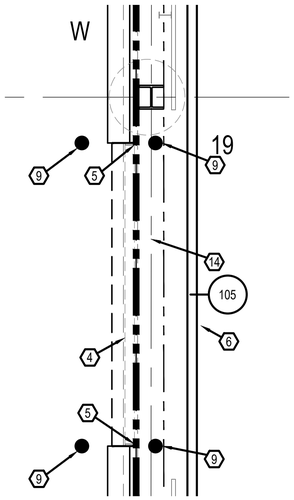

2 / A-102 ENLARGED FLOOR PLAN
SCALE: 1/4" = 1'-0"

KEYED NOTES

1. EXTERIOR SIDE OF REACT VII WALL FACED WITH 1" USG SHEET ROCK BRAND GYPSUM LINER PANEL.
2. NEW 6"X6" CONCRETE CURB WITH EXPANSION JOINT AT METAL FRAMING.
3. EXISTING STRUCTURAL COLUMN.
4. EXISTING CHANNEL FRAMING ABOVE.
5. EXISTING CHANNEL FRAMING.
6. EXISTING WHITE PAINTED LINE.
7. EXISTING BOLLARDS AND HORIZONTAL BARRIER TO REMAIN.
8. NEW 8" DIAMETER BOLLARD - SECURE TO CONCRETE FLOOR WITH CAPSULE ANCHORS AND THREADED ROD ASSEMBLY.
9. NEW 8" DIAMETER BOLLARDS
10. ROOF ACCESS LADDER
11. MONITOR - FLATSCREEN
12. DOOR WALL STOP
13. SIGNAGE
14. NEW OVERHEAD DOOR
15. VEHICLE BARRIER - REFER S-101
16. APPLY INTUMESCENT COATING TO ALL WALL STRUCTURAL MEMBERS. (COLUMNS, PURLINS, ETC. AND OF EAST SIDE BARRIER WALL. COATING SHALL ACHIEVE A MINIMUM OF A 1-HOUR FIRE RATING. ERECT SHAFTWALL UL DESIGN U415, SYSTEM A, OR U469 W/ 2 1/2" C-H, 24 GA. STUDS FROM CONCRETE SLAB TO FIRST PURLIN AND INTERMEDIATE LOCATIONS FROM PURLIN TO PURLIN. THEN FROM TOP PURLIN TO UNDERSIDE OF ROOF DECK. AT PURLINS INCLUDE Z-CLIPS ATTACHED TO PURLINS - Z-CLIPS TO HAVE A 1-HOUR RATED INTUMESCENT COATING.
17. APPLY INTUMESCENT COATING TO ALL WALL STRUCTURAL MEMBERS. (COLUMNS, PURLINS, ETC. AND TO FACE OF WEST SIDE OF BARRIER WALL. COATING SHALL ACHIEVE A MINIMUM OF A 1-HOUR FIRE RATING.

LEGEND:

1-HR FIRE RATED BARRIER WALL

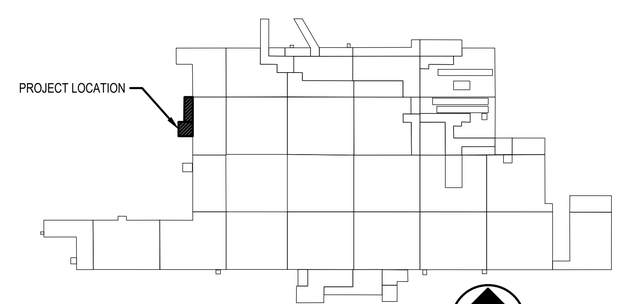

B9001 KEY PLAN

AIR FORCE MATERIEL COMMAND
72 ABW CIVIL ENGINEER DIRECTORATE
TINKER AFB, OK

35% DESIGN

PROJECT INFORMATION
WWYK250063
INSTALL REACT VII FACILITY
B9001, V19
TINKER AIR FORCE BASE, OKLAHOMA

REVISIONS

MARK	DATE	DESCRIPTION

MANAGEMENT INFORMATION
ISSUE DATE:7 OCT 25
DESIGN GROUP:TEPA-CSAG
DESIGNED BY:L LUKE
DRAWN BY:T KISER
CHECKED BY:C HIXON
DESIGN FILE LOCATION:
Engr\Design\2020s\2025\20250063\0_Support\0_3_Drawings\Model

SHEET TITLE
FLOOR PLAN

SHEET NUMBER
A-102

SHEET 19 OF

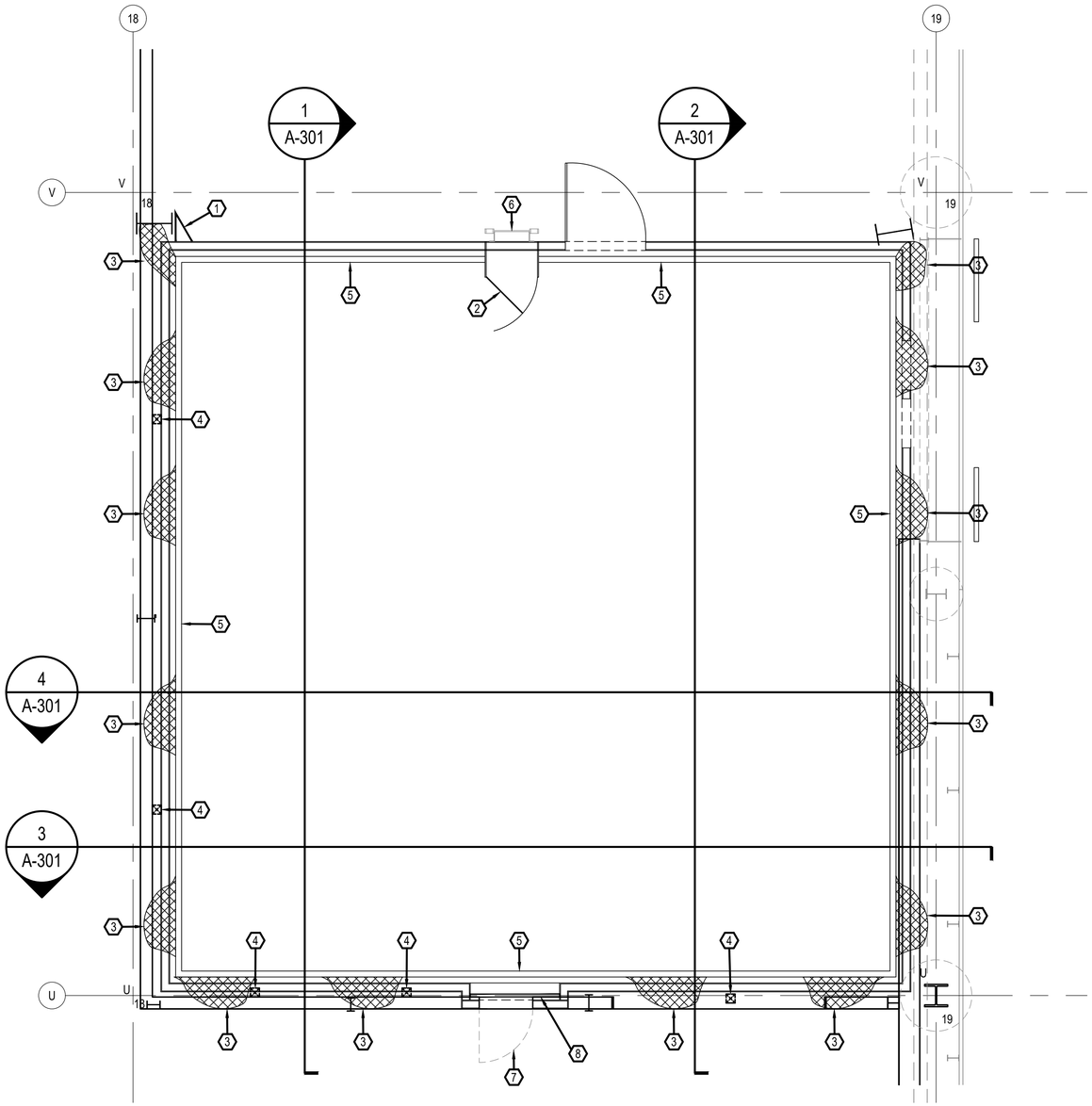

1 A-103 MEZZANINE PLAN
SCALE: 1/4" = 1'-0"

KEYED NOTES

1. VERTICAL CLOSURE - DO NOT ATTACH TO COLUMN.
2. SELF-CLOSING SAFETY GATE.
3. CONTINUOUS CONTAINMENT NETTING, POLYESTER, NET SIZE: 1/4" X 3/8", RATED AT 170 LBS PSI. AT WEST, EAST AND SOUTH SIDE OF MEZZANINE. REFER TO A-301.
4. REFER TO M-101 FOR PLACEMENT AND SIZE OF SUPPLY AIR DUCTS TO SPACES BETWEEN REACT VII WALL AND INSIDE FACE OF EXTERIOR WALL. NET TO HAVE BORDER AT ALL FACES OF DUCTS WHERE DUCT PENETRATES NETTING.
5. GUARD RAILING SYSTEM WITH TOE BOARD AT ALL (4) SIDES OF NEW BUILDING.
6. LADDER - REFER S-503.
7. DOOR 104 BELOW.
8. BALCO INC. WD-4 AT MEZZANINE LEVEL. PROVIDE FRAMING BELOW STRUCTO CRETE DECK PANELS TO SECURE EXPANSION JOINT COVER.

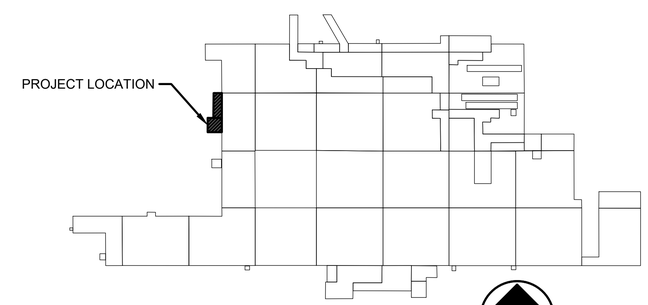

B9001 KEY PLAN

AIR FORCE MATERIEL COMMAND
72 ABW CIVIL ENGINEER DIRECTORATE
TINKER AFB, OK

35% DESIGN

PROJECT INFORMATION
WWYK250063
INSTALL REACT VII FACILITY
B9001, V19
TINKER AIR FORCE BASE, OKLAHOMA

REVISIONS

MARK	DATE	DESCRIPTION

MANAGEMENT INFORMATION
ISSUE DATE:7 OCT 25
DESIGN GROUP:TEPA-CSAG
DESIGNED BY:L LUKE
DRAWN BY:T KISER
CHECKED BY:C HIXON
DESIGN FILE LOCATION:
Engr\Design\2020s\2025\202500630_Support\0_3_Drawings\Model

SHEET TITLE
MEZZANINE PLAN

SHEET NUMBER
A-103
SHEET 20 OF

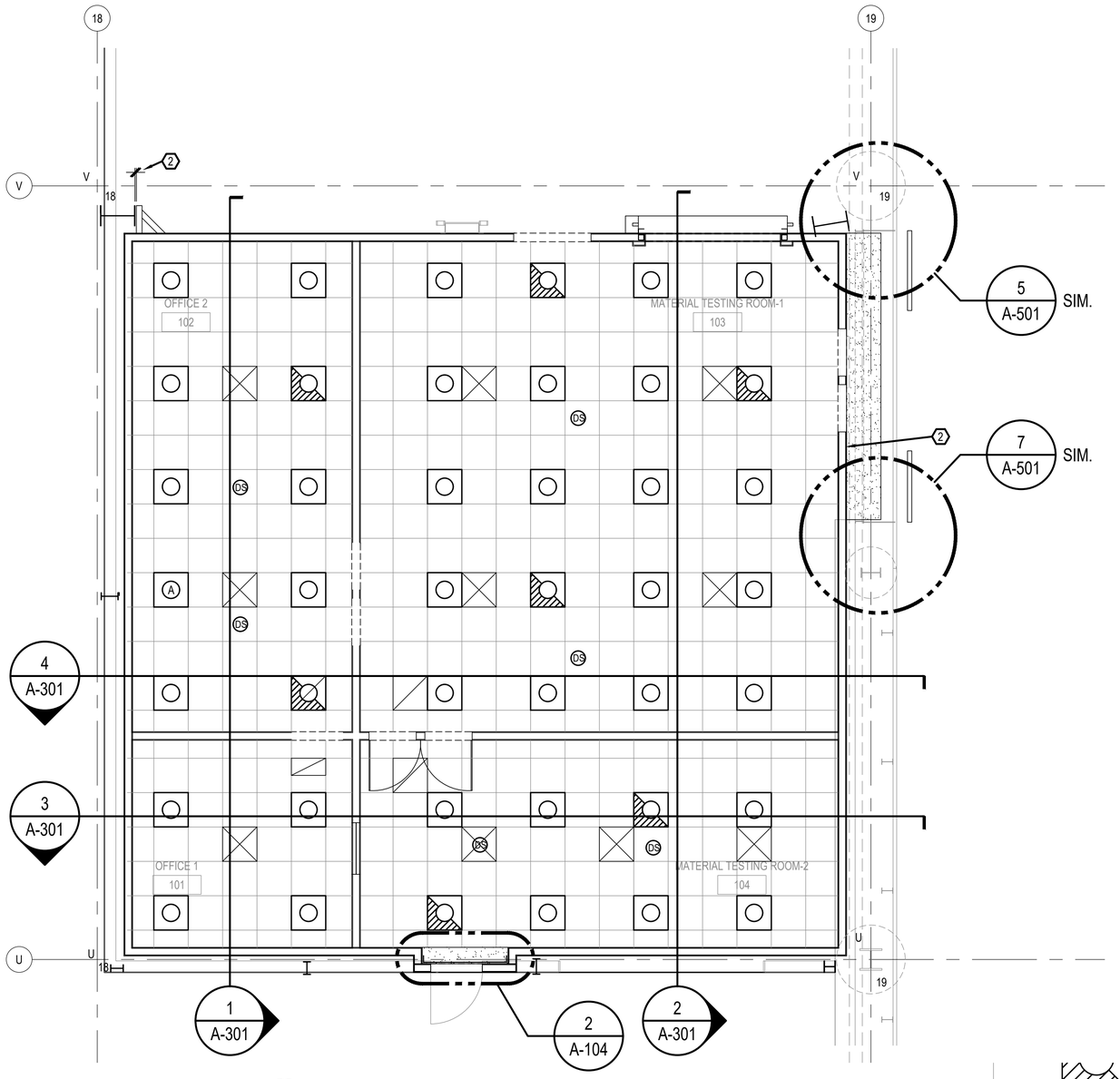

1 A-104 REFLECTED CEILING PLAN
SCALE: 1/4" = 1'-0"

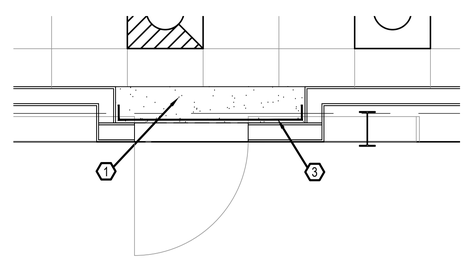

2 A-105 ENLARGED PLAN
SCALE: 1/2" = 1'-0"

GENERAL NOTES

1. COORDINATE PLACEMENT OF ELECTRICAL COMPONENTS WITH OTHER TRADES REQUIRING SPACE ON CEILING GRID.
2. 2 X 2 ACOUSTICAL GRID CEILING (TYP.)
3. BOTTOM OF CEILING 10'-0" ABOVE CONCRETE FLOOR.

KEYED NOTES

1. 5/8" GYPSUM BOARD CEILING
2. 1" CLEAR
3. REFER TO 3/A-502 FOR EXPANSION JOINT COVER

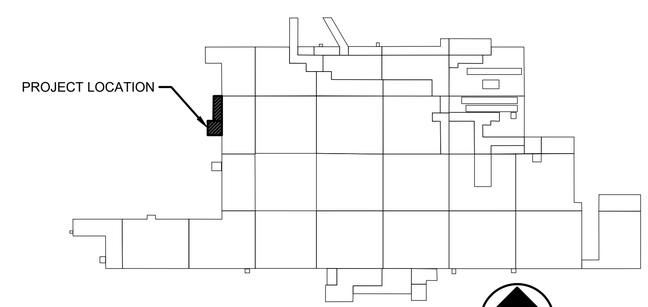

B9001 KEY PLAN

AIR FORCE MATERIEL COMMAND
72 ABW CIVIL ENGINEER DIRECTORATE
TINKER AFB, OK

35% DESIGN

PROJECT INFORMATION
WWYK250063
INSTALL REACT VII FACILITY
B9001, V19
TINKER AIR FORCE BASE, OKLAHOMA

REVISIONS

MARK	DATE	DESCRIPTION

MANAGEMENT INFORMATION
ISSUE DATE:7 OCT 25
DESIGN GROUP:TEPA-CSAG
DESIGNED BY:J LESTER
DRAWN BY:T KISER
CHECKED BY:C HIXON
DESIGN FILE LOCATION:
Engr\Design\2020s\2025\202500630_Support\0_3_Drawings\Model

SHEET TITLE
REFLECTED CEILING PLAN

SHEET NUMBER
A-104
SHEET 21 OF

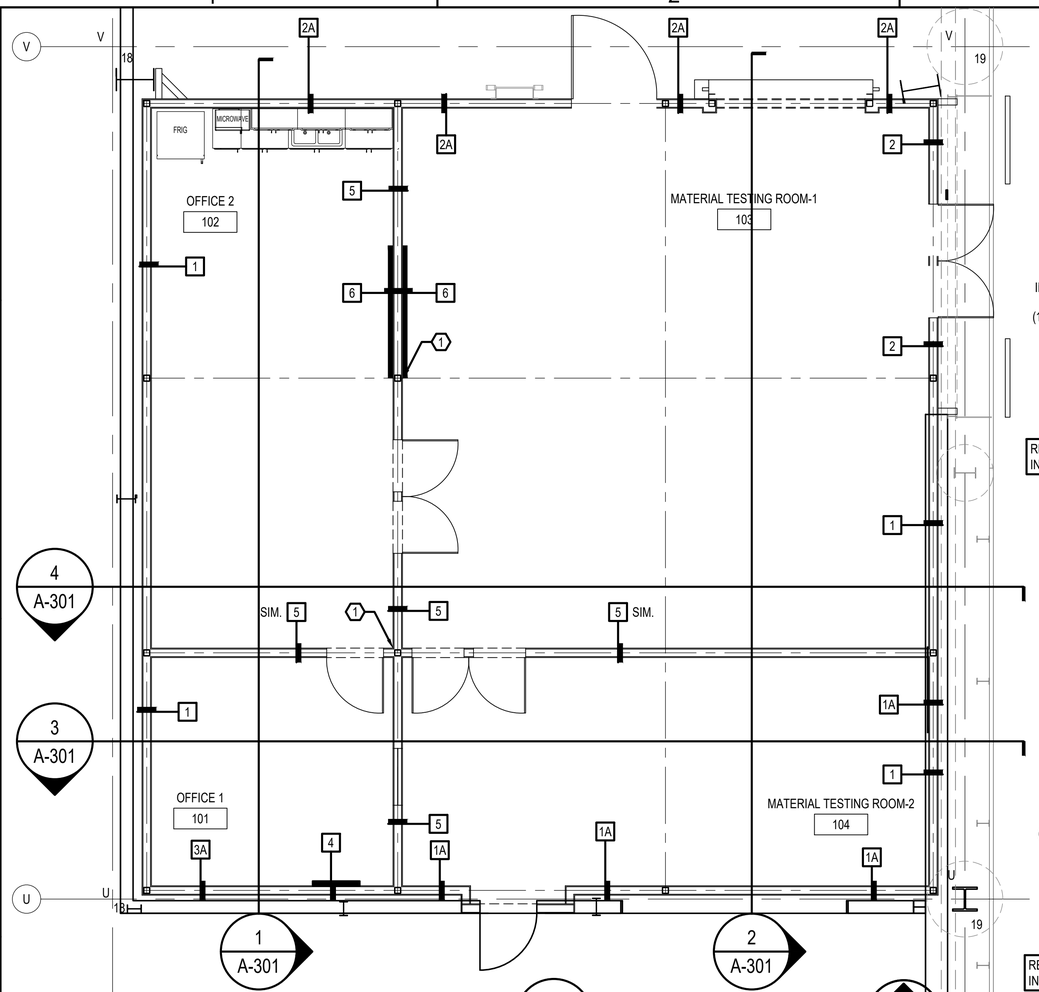

1 A-105 WALL TYPE PLAN
SCALE: 1/4" = 1'-0"

GENERAL NOTE

1. REFER TO S-201 FOR THE ROOF DECK STRUCTURAL DECK PANEL INFORMATION.

KEYED NOTE

1. COAT TUBE STEEL COLUMN AND BASE PLATE ASSEMBLY WITH 2-HOUR RATED INTUMESCENT PAINT.

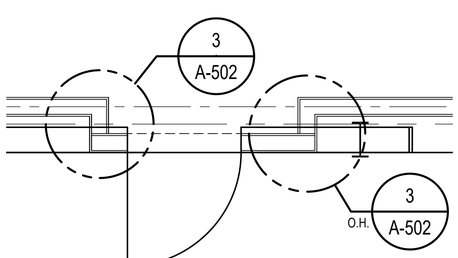

2 A-105 ENLARGED PLAN
SCALE: 1/2" = 1'-0"

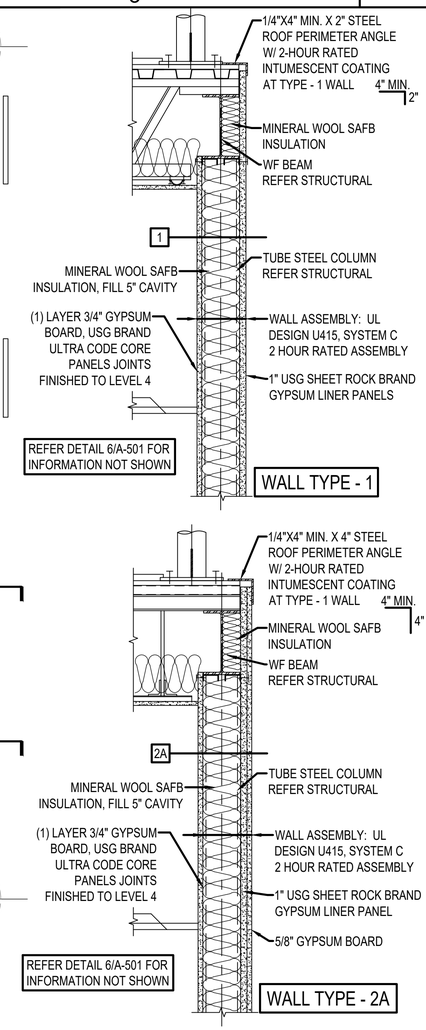

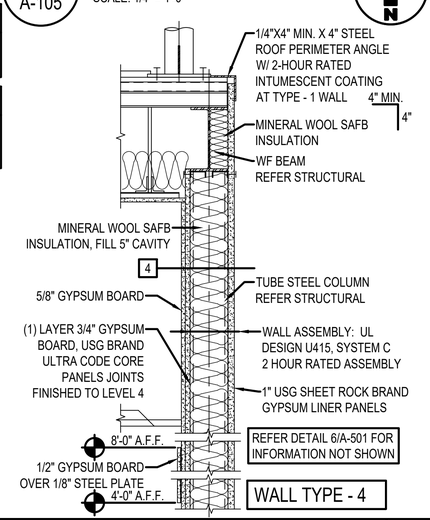

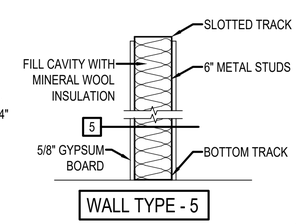

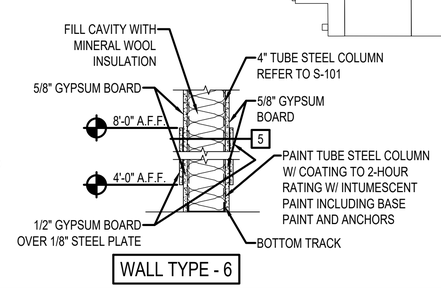

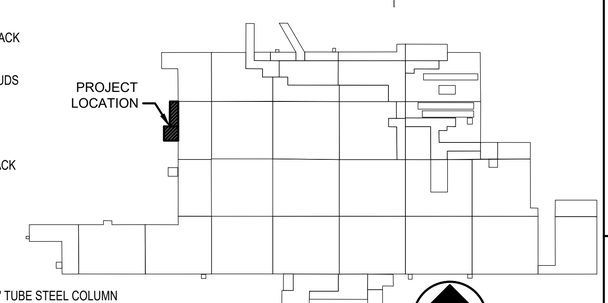

B9001 KEY PLAN

AIR FORCE MATERIEL COMMAND
72 ABW CIVIL ENGINEER DIRECTORATE
TINKER AFB, OK

35% DESIGN

PROJECT INFORMATION
WWYK250063
INSTALL REACT VII FACILITY
B9001, V19
TINKER AIR FORCE BASE, OKLAHOMA

REVISIONS
MARK | DATE | DESCRIPTION

MANAGEMENT INFORMATION
ISSUE DATE:7 OCT 25
DESIGN GROUP:TEPA-CSAG
DESIGNED BY:J.LESTER
DRAWN BY:T KISER
CHECKED BY:C HIXON
DESIGN FILE LOCATION:
Engr\Design\2020s\2025\202500063\0_Support\0_3_Drawings\Model

SHEET TITLE
WALL TYPE PLAN

SHEET NUMBER
A-105
SHEET 22 OF

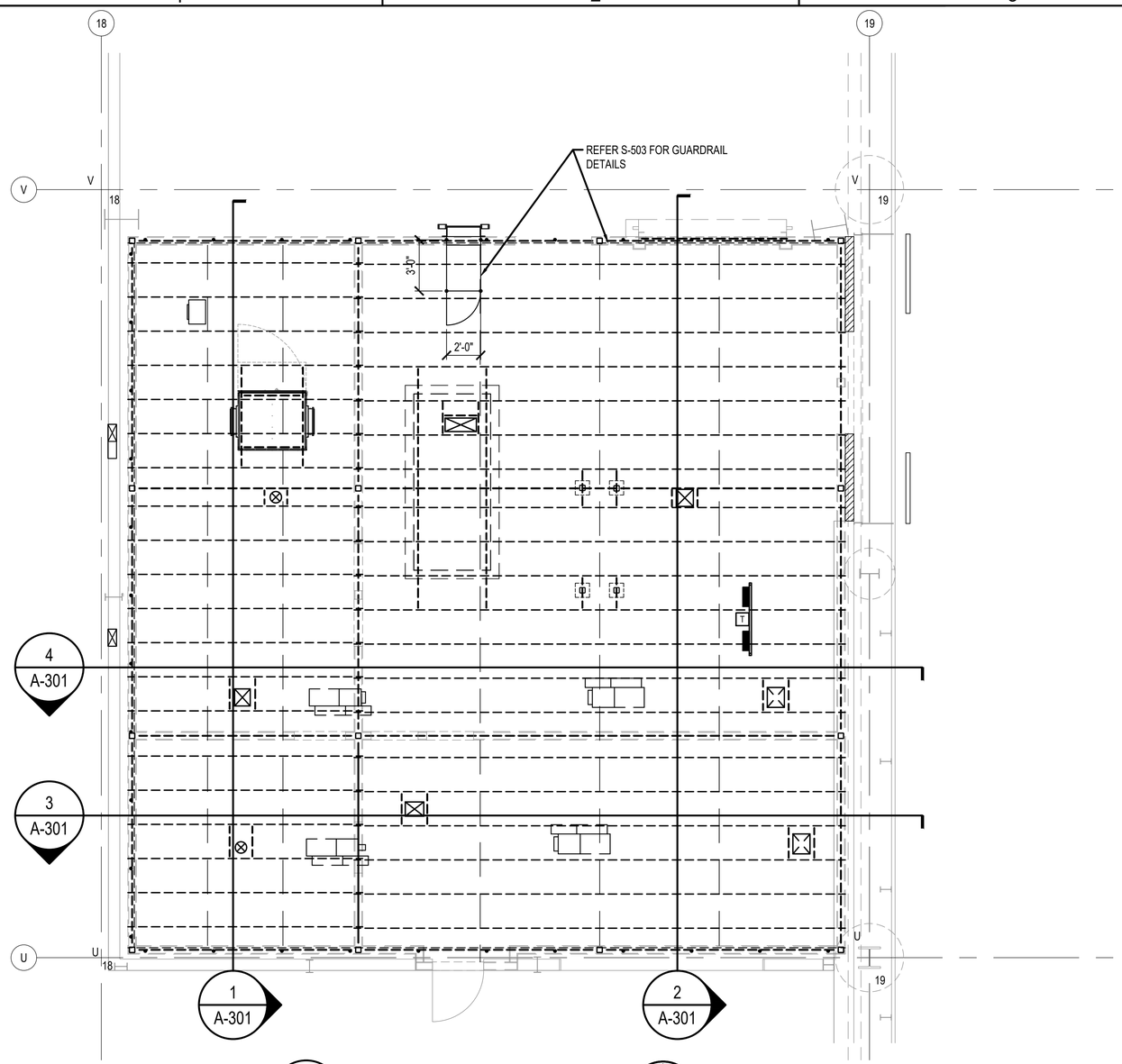

1 A-106 ARCHITECTURAL ROOF PLAN
SCALE: 1/4" = 1'-0"

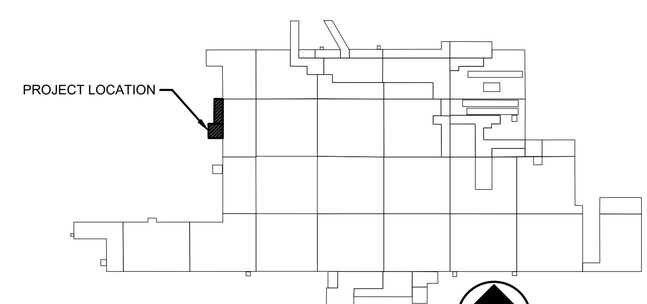

B9001 KEY PLAN

AIR FORCE MATERIEL COMMAND
72 ABW CIVIL ENGINEER DIRECTORATE
TINKER AFB, OK

35% DESIGN

PROJECT INFORMATION
WWYK250063
INSTALL REACT VII FACILITY
B9001, V19
TINKER AIR FORCE BASE, OKLAHOMA

REVISIONS

MARK	DATE	DESCRIPTION

MANAGEMENT INFORMATION
ISSUE DATE:7 OCT 25
DESIGN GROUP:TEPA-CSAG
DESIGNED BY:J LESTER
DRAWN BY:T KISER
CHECKED BY:C HIXON
DESIGN FILE LOCATION:
Engr\Design\2020s\2025\202500630_Support\0_3_Drawings\Model

SHEET TITLE
ARCHITECTURAL ROOF PLAN

SHEET NUMBER
A-106

SHEET 23 OF

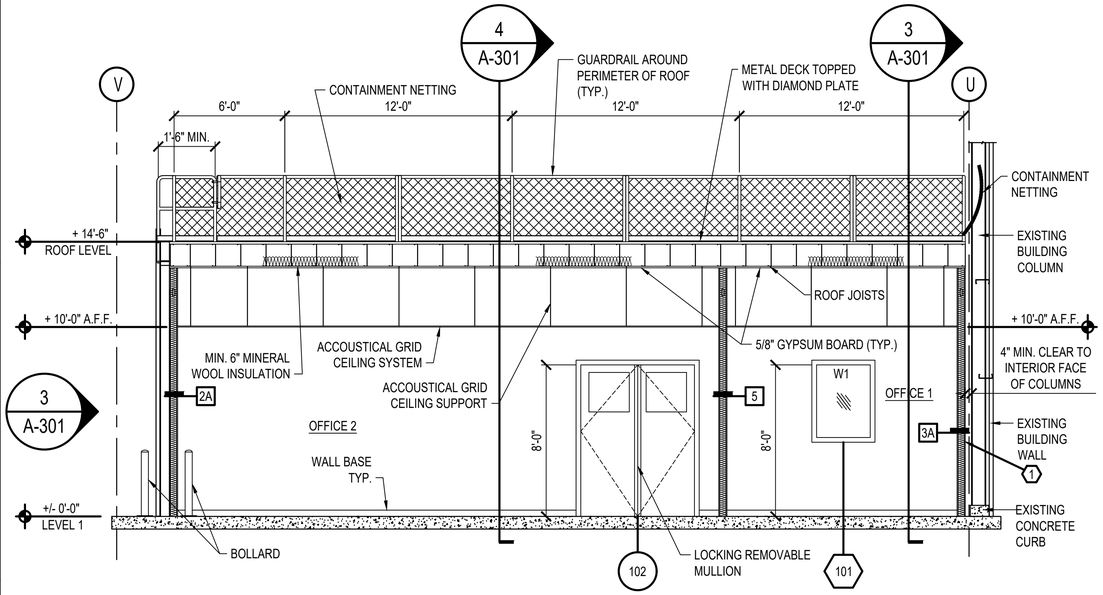

1 A-301 SECTION
SCALE: 1/4" = 1'-0"

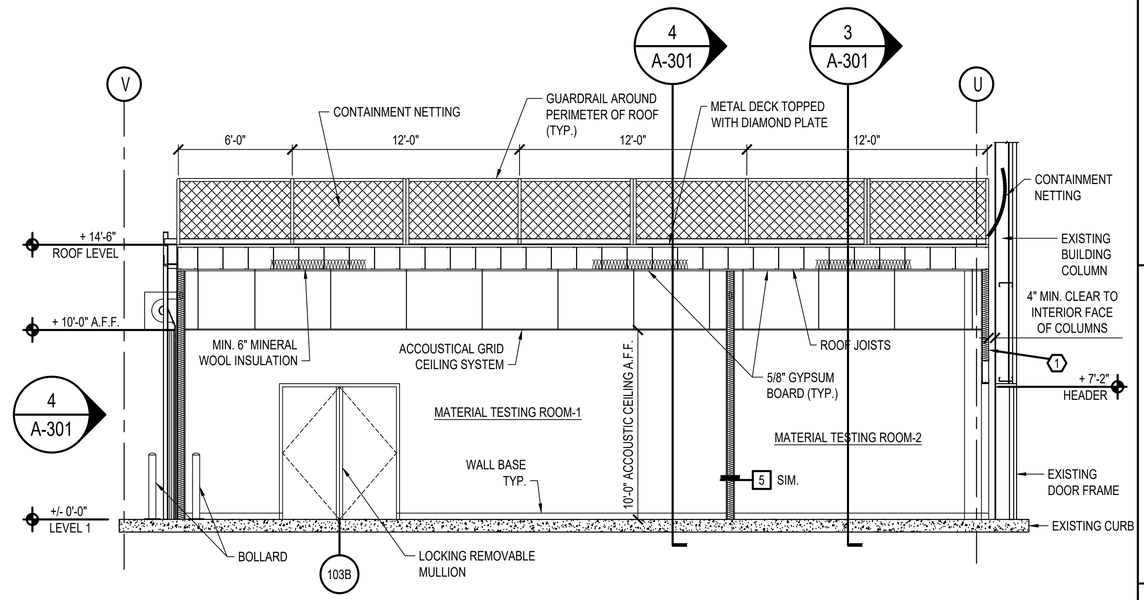

2 A-301 SECTION
SCALE: 1/4" = 1'-0"

KEYED NOTE
1 EXTERIOR SIDE OF REACT VII WALL FACED WITH METAL NETTING.

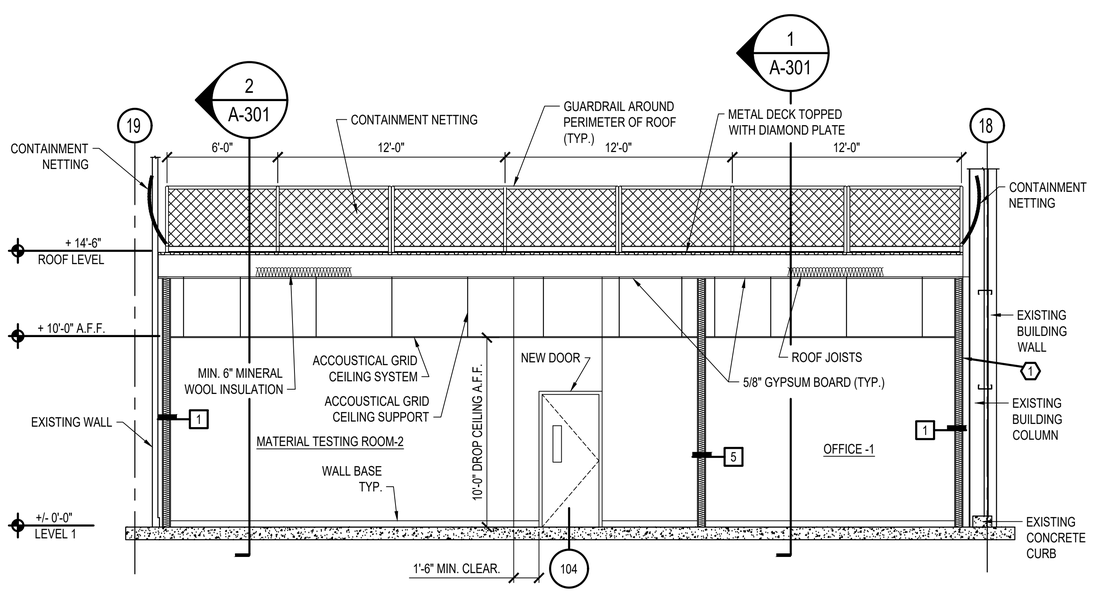

3 A-301 SECTION
SCALE: 1/4" = 1'-0"

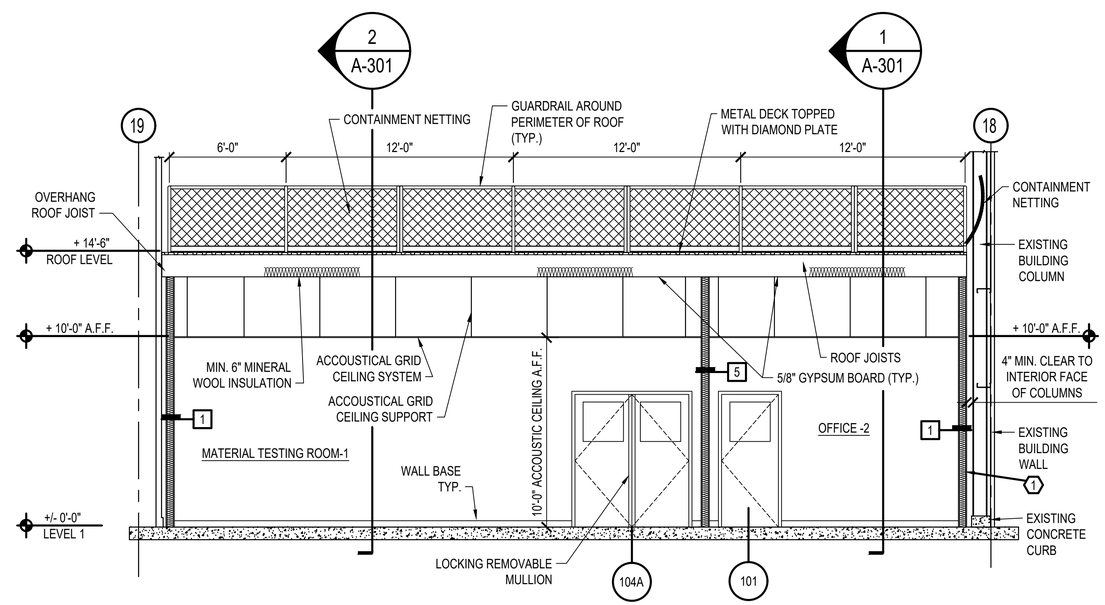

4 A-301 SECTION
SCALE: 1/4" = 1'-0"

AIR FORCE MATERIEL COMMAND
72 ABW CIVIL ENGINEER DIRECTORATE
TINKER AFB, OK

35% DESIGN

PROJECT INFORMATION
WWYK250063
INSTALL REACT VII FACILITY
B9001, V19
TINKER AIR FORCE BASE, OKLAHOMA

REVISIONS

MARK	DATE	DESCRIPTION

MANAGEMENT INFORMATION
ISSUE DATE:7 OCT 25
DESIGN GROUP:TEPA-CSAG
DESIGNED BY:J LESTER
DRAWN BY:T KISER
CHECKED BY:C HIXON
DESIGN FILE LOCATION:
Engr\Design\2020s\2025\202500630_Support\0_3_Drawings\Model

SHEET TITLE
SECTIONS

SHEET NUMBER
A-301

SHEET 24 OF

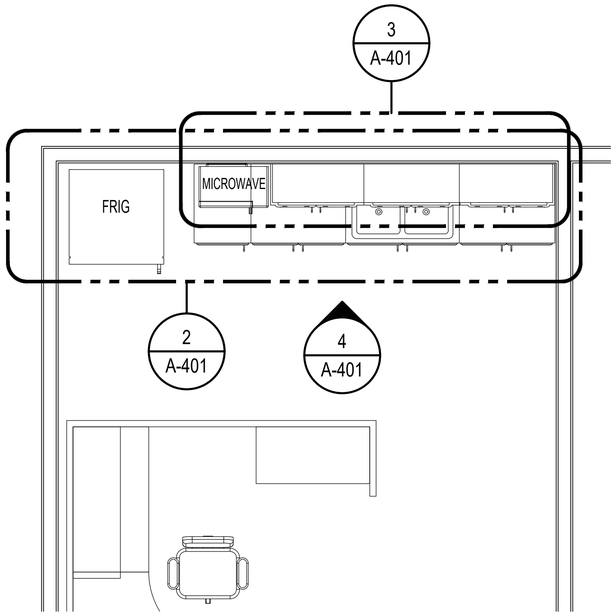

1 A-401 ENLARGED KITCHEN CABINET ASSEMBLY PLAN VIEW
SCALE: 1/2" = 1'-0"

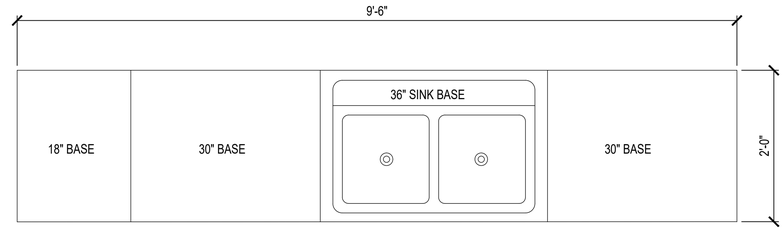

2 A-401 BASE CABINET PLAN VIEW
SCALE: 1" = 1'-0"

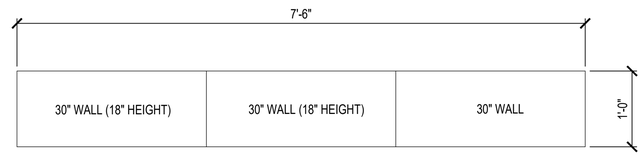

3 A-401 WALL CABINET PLAN VIEW
SCALE: 1" = 1'-0"

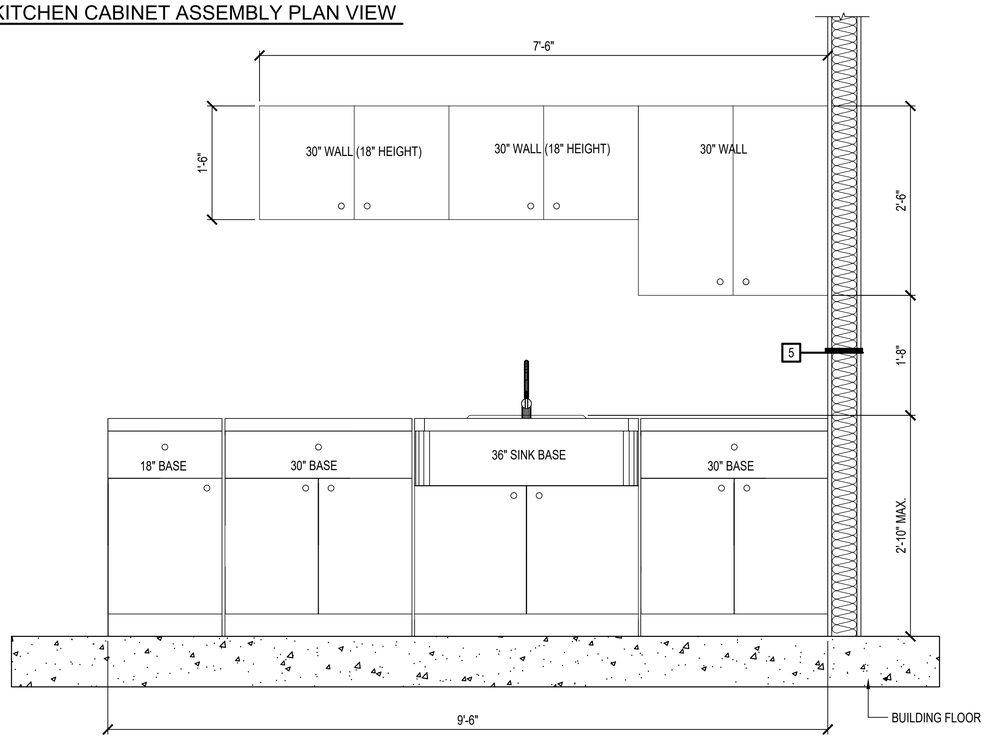

4 A-401 CABINET ELEVATION VIEW
SCALE: 1" = 1'-0"

GENERAL NOTES

1. BASE AND WALL CABINETS, COUNTERTOPS, DROP-IN DOUBLE BOWL SINK, STRAINERS, AND FAUCET AS SHOWN IN PLAN, ELEVATION VIEWS AND SPECIFICATIONS ON THIS SHEET.
2. USE BRONZE FINISH CABINET KNOBS, GRAINGER ITEM #451J54, 16 REQ'D.
3. REACH TO FAUCET TO COMPLY WITH ABA FIGURE 308.3.2.
4. COMPLY WITH ALL ABA REQUIREMENTS FOR PARALLEL APPROACH AT SINK BASE CABINET, COUNTERS PER ABA 606.
5. MAXIMUM HEIGHT MEASURED FROM FINISHED FLOOR TO TOP OF THE SINK RIM 34" MAX. PER ABA 606.3

KITCHEN CABINET AND SINK SPECIFICATION AND DIMENSIONS

ITEM	DESCRIPTION	DIMENSION			QUANTITY	REMARKS
		WIDTH (INCH)	DEPTH (INCH)	HEIGHT (INCH)		
1	MEDIUM OAK SINK BASE CABINET	36	24	34.5	1	
2	MEDIUM OAK 30" BASE CABINET	30	24	34.5	2	
3	MEDIUM OAK 18" BASE CABINET	18	24	34.5	1	
4	MEDIUM OAK WALL CABINET	30	12	30	1	
5	MEDIUM OAK WALL CABINET	30	12	18	2	
6	STRAIGHT LAMINATE COUNTER TOP, WINTER CARNIVAL GRANITE LOOK, FULL WRAP EDGE, BACKSPLASH	120	25	---	1	
7	STAINLESS STEEL SINK, DOUBLE-BOWL DROP-IN, 18 GAUGE, 4 HOLES, GRAINGER 4YK17 OR EQUAL.	33	22	---	1	
8	KITCHEN FAUCET, LEVER HANDLE, GRAINGER 4NEH8 OR EQUAL.	---	---	---	1	
9	SINK DRAIN BASKET STRAINER FOR 3-1/2" DIA. DRAIN HOLE, GRAINGER 39AP42 OR EQUAL.	---	---	---	2	

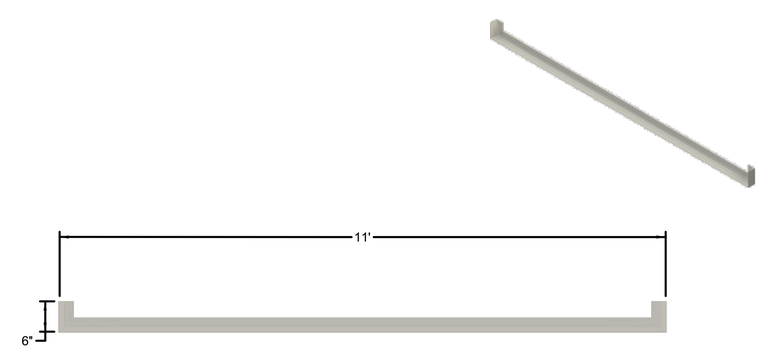

5 A-401 DETAIL
SCALE: NTS

AIR FORCE MATERIEL COMMAND
72 ABW CIVIL ENGINEER DIRECTORATE
TINKER AFB, OK

35% DESIGN

PROJECT INFORMATION
WWYK250063
INSTALL REACT VII FACILITY
B9001, V19
TINKER AIR FORCE BASE, OKLAHOMA

REVISIONS

MARK	DATE	DESCRIPTION

MANAGEMENT INFORMATION
ISSUE DATE:7 OCT 25
DESIGN GROUP:TEPA-CSAG
DESIGNED BY:J LESTER
DRAWN BY:T KISER
CHECKED BY:C HIXON
DESIGN FILE LOCATION:
Eng\\Design\2020s\2025\202500630_Support0_3_Drawings\Model

SHEET TITLE
ENLARGED PLAN, ELEVATION AND SCHEDULE

SHEET NUMBER
A-401
SHEET 25 OF

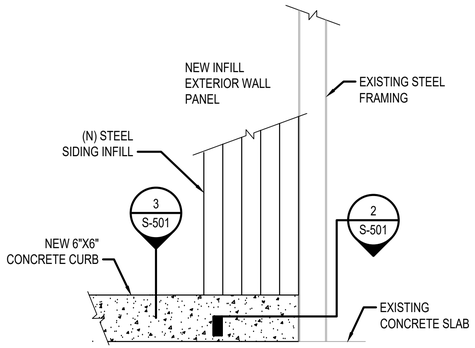

1 A-501 ELEVATION AT NEW CONCRETE CURB
SCALE: 1/2" = 1'-0"

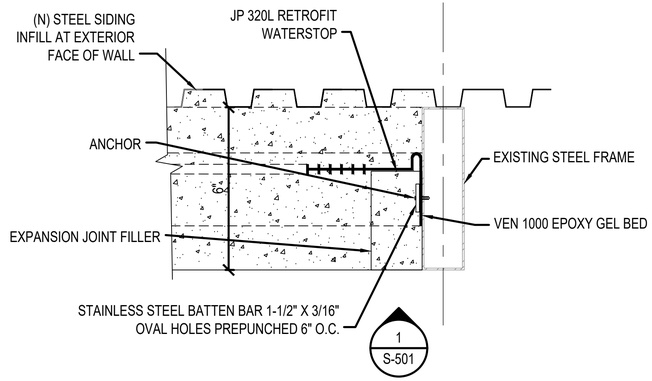

2 A-501 SECTION AT NEW CONCRETE CURB AT EXISTING COLUMN
SCALE: 3/4" = 1'-0"

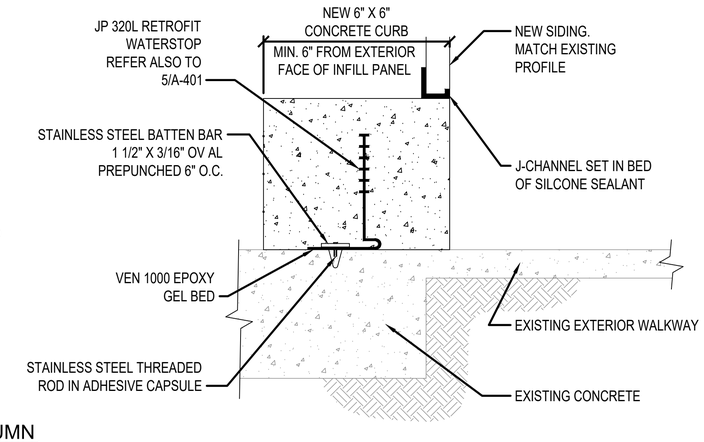

3 A-501 SECTION
SCALE: 3/4" = 1'-0"

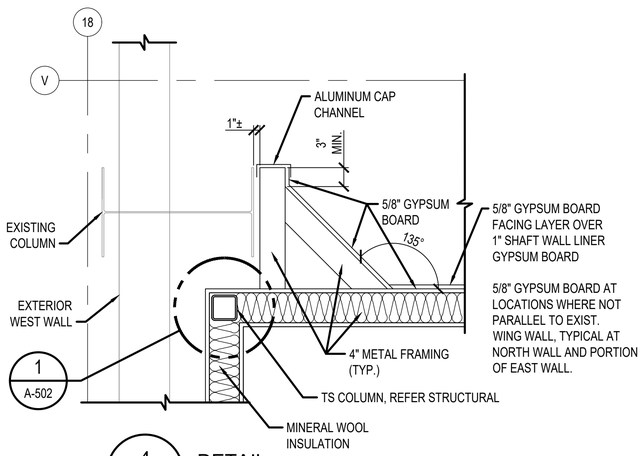

4 A-501 DETAIL
SCALE: 1" = 1'-0"

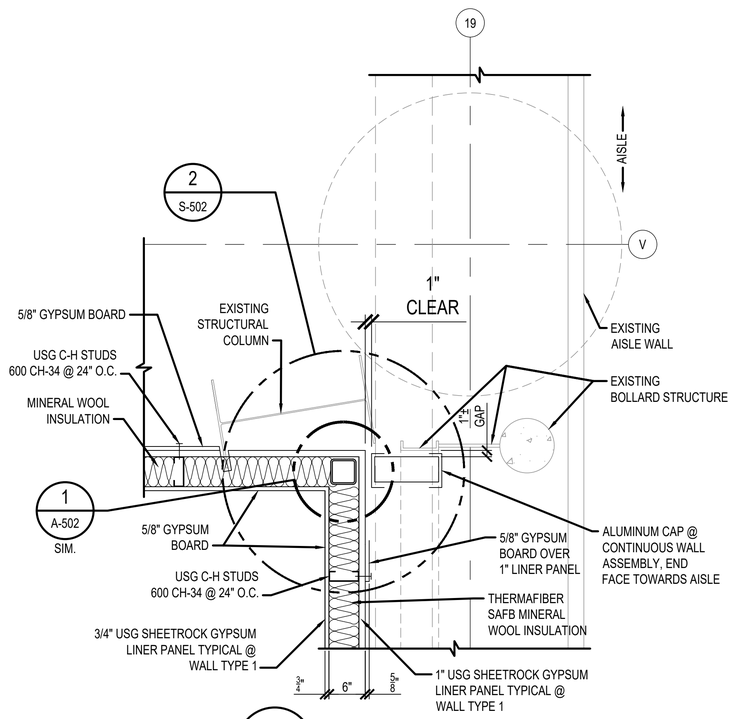

5 A-501 DETAIL
SCALE: 1" = 1'-0"

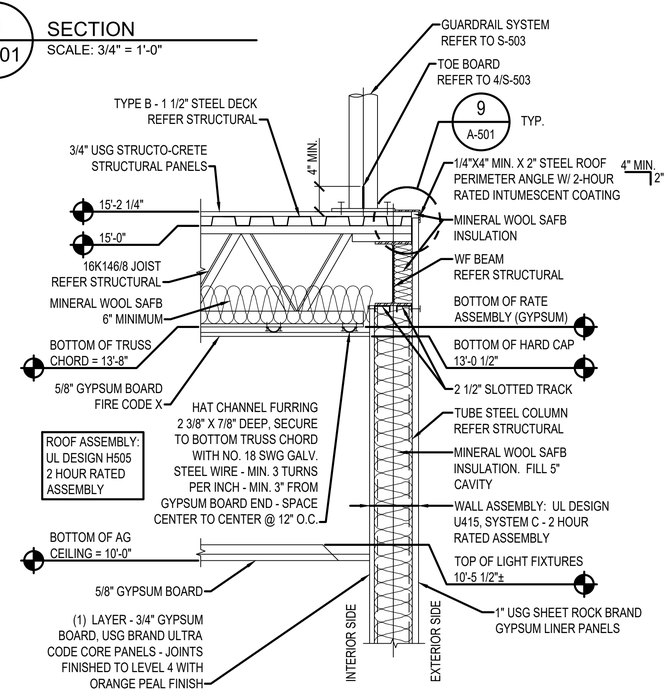

6 A-501 DETAIL
SCALE: 1" = 1'-0"

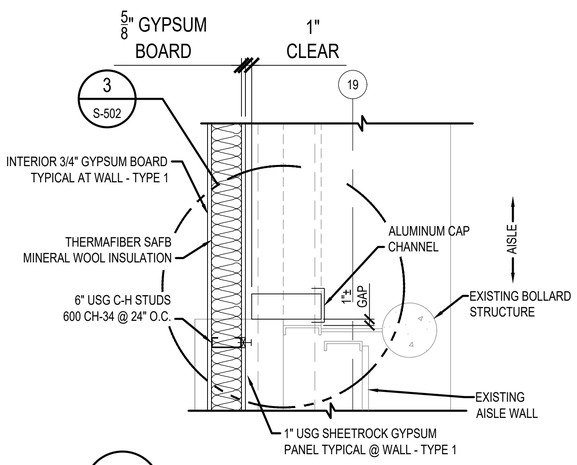

7 A-501 SECTION
SCALE: 1" = 1'-0"

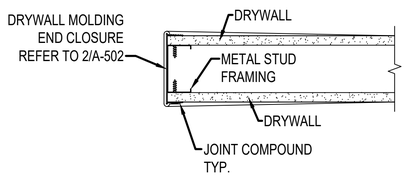

8 A-501 FRY REGLET ALUMINUM WALL END CAP DETAIL
SCALE: 3" = 1'-0"

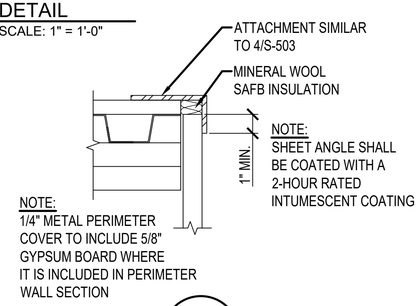

9 A-501 DETAIL
SCALE: 3" = 1'-0"

AIR FORCE MATERIEL COMMAND
72 ABW CIVIL ENGINEER DIRECTORATE
TINKER AFB, OK

35% DESIGN

PROJECT INFORMATION
WWYK250063
INSTALL REACT VII FACILITY
B9001, V19
TINKER AIR FORCE BASE, OKLAHOMA

REVISIONS

MARK	DATE	DESCRIPTION

MANAGEMENT INFORMATION
ISSUE DATE: 7 OCT 25
DESIGN GROUP: TEPA-CSAG
DESIGNED BY: J LESTER
DRAWN BY: T KISER
CHECKED BY: C HIXON
DESIGN FILE LOCATION: Engr\Design\2020s\2025\202500630\0_Support\0_3_Drawings\Model

SHEET TITLE
DETAILS

SHEET NUMBER
A-501
SHEET 26 OF

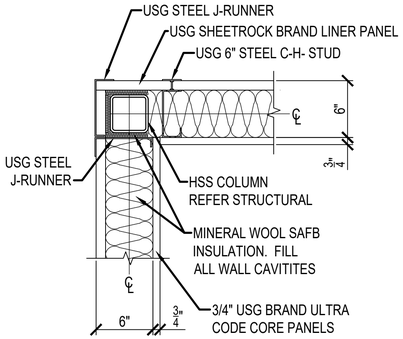

1 / A-502 TYPICAL OUTSIDE CORNER DETAIL
SCALE: 1 1/2" = 1'-0"

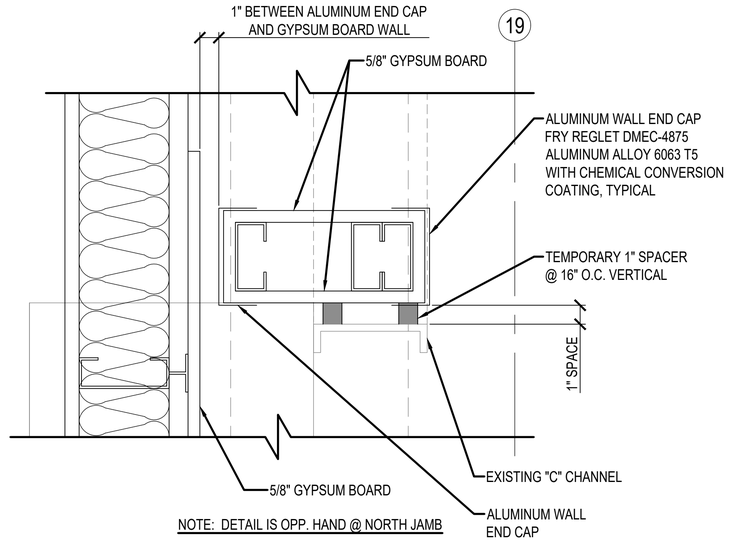

NOTE: DETAIL IS OPP. HAND @ NORTH JAMB

2 / A-502 SOUTH JAMB DETAIL
SCALE: 3" = 1'-0"

2HWDC-3
SNAP-ON WALL OR CEILING SYSTEM
CLEAR ANODIZED FINISH ALUMINUM COVER
MILL FINISH ALUMINUM BASE W/
2 HOUR FIRE BARRIER
UL LISTING WW-D-0071
50% MOVEMENT

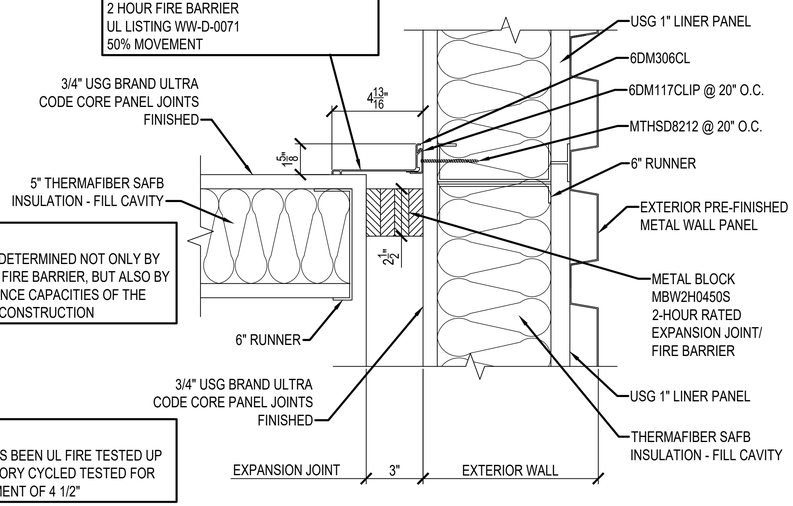

PLAN VIEW

NOTE:
FIRE RATING IS DETERMINED NOT ONLY BY THE METAMAT™ FIRE BARRIER, BUT ALSO BY THE PERFORMANCE CAPACITIES OF THE SURROUNDING CONSTRUCTION

NOTE:
MBF2H0450S HAS BEEN UL FIRE TESTED UP TO 4" AND FACTORY CYCLED TESTED FOR SEISMIC MOVEMENT OF 4 1/2"

3 / A-502 BALCO EXPANSION JOINT DETAIL @ SOUTH EXTERIOR DOOR AREA
SCALE: 3" = 1'-0"

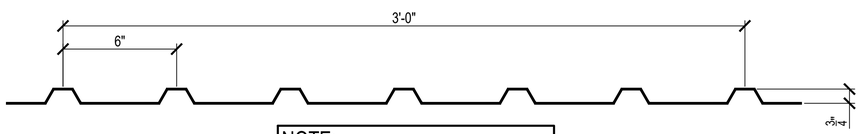

NOTE:
MATCH EXISTING WALL PANEL PROFILE

4 / A-502 METAL WALL PANEL DETAIL PROFILE
SCALE: 3" = 1'-0"

AIR FORCE MATERIEL COMMAND
72 ABW CIVIL ENGINEER DIRECTORATE
TINKER AFB, OK

35% DESIGN

PROJECT INFORMATION
WWYK250063
INSTALL REACT VII FACILITY
B9001, V19
TINKER AIR FORCE BASE, OKLAHOMA

REVISIONS

MARK	DATE	DESCRIPTION

MANAGEMENT INFORMATION
ISSUE DATE:7 OCT 25
DESIGN GROUP:TEPA-CSAG
DESIGNED BY:J LESTER
DRAWN BY:T KISER
CHECKED BY:C HIXON
DESIGN FILE LOCATION:
Eng\\Design\2020s\2025\202500630_Support0_3_Drawings\Model

SHEET TITLE
DETAILS

SHEET NUMBER
A-502
SHEET 26 OF

DOOR										
DOOR NUMBER	DOOR HANDING	HARDWARE GROUP	TYPE	WIDTH	HEIGHT	THICKNESS	MATERIAL	FINISH	REMARKS	FIRE RATING
101	LH	HWG-01	D1	3'-0"	7'-0"	0'-1 3/4"	HM	PT	HALF LITE	N.R.
102	PAIR OF DOORS, BOTH LEAVES ACTIVE	HWG-02	D1/PR	EA. 3'-0"	EA. 7'-0"	0'-1 3/4"	HM	PT	HALF LITES (1) EA. DOOR LEAF	N.R.
103	RHR	HWG-03	D4	4'-0"	7'-0"	0'-1 3/4"	STEEL	PT	HALF LITE	90 MIN.
103A	COILING-O.H. DOOR	HWG-04	D5	8'-0"	10'-0"	-		PT	OVERHEAD COILING DOOR. HOOD AND MOTOR TO BE ON ROOM 105 SIDE OF DOOR	90 MIN.
103B	PR	HWG-05	D3/PR	EA. 3'-0"	EA. 7'-0"	0'-1 3/4"	HM	PT	NO LITE	90 MIN.
103C	LHR	HDWG-03		EA. 3'-0"	EA. 7'-0"	0'-1 3/4"	HM	PT	OVERHEAD COILING DOOR. HOOD AND MOTOR TO BE ON AISLE 19 SIDE OF DOOR	45 MIN.
104	LHR	HWG-06	D4	3'-0"	7'-0"	0'-1 3/4"	HM	PT	INSULATED DOOR 4"X25" LITE	90 MIN.
104A	PR	HDWG-07	D2/PR	EA. 3'-0"	EA. 7'-0"	0'-1 3/4"	HM	PT	HALF LITE AT EACH DOOR LEAF	N.R.
105	COILING-O.H. DOOR	HDWG-08	D6	FIELD VERIFY	FIELD VERIFY	-	STEEL	PT	OVERHEAD COILING DOOR. HOOD AND MOTOR TO BE ON ROOM 105 SIDE OF DOOR	45 MIN.
105A	LHR	HDWG-09	D7	3'-0"	7'-0"	0'-1 3/4"	HM	PT	NO LITE	45 MIN.

GENERAL NOTES

1. REFER TO ABA, 404.2, 11 VISION LIGHT REQUIREMENTS

FRAME									
DOOR NUMBER	TYPE	MATERIAL	HEAD	JAMB	SILL	FIRE RATING	WALL DEPTH	FROM	TO
101	F1	WHM	+	+	-	N.R.	7 1/4"	102	101
102	F2	WHM	+	+	+	N.R.	7 1/4"	103	102
103	F3	WHM	+	+	-	90 MIN.	7 3/8"	105	103
103A	-	STL	+	+	-	90 MIN.	7 3/8"	105	103
103B	F2	WHM	+	+	-	90 MIN.	7 3/8"	AISLE	103
103C		STL				45 MIN.	FIELD VERIFY	AISLE	105
104	F1	WHM	+	+	+	90 MIN.	FIELD VERIFY	EXT	104
104A	F2	WHM	+	+	-	N.R.	-	103	104
105	-	STL	+	+	-	45 MIN.	FIELD VERIFY	AISLE	105
105A	F1	WHM				45 MIN.	FIELD VERIFY		

* FIELD VERIFY
\+ SUBMIT SHOP DRAWINGS

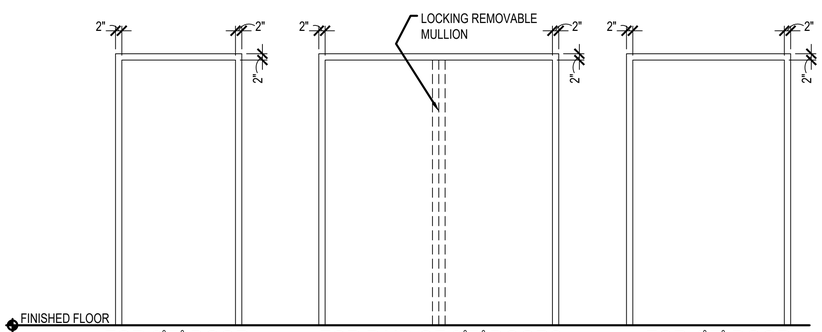

FOR 3°7° DOOR
DOOR FRAME TYPE F-1

FOR PAIR OF 3°7° DOORS
DOOR FRAME TYPE F-2

FOR 4°7° DOOR
DOOR FRAME TYPE F-3

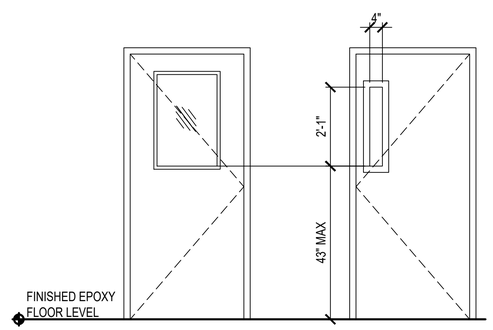

HALF GLASS SINGLE
DOOR TYPE D1

VISION WINDOW
DOOR TYPE D4

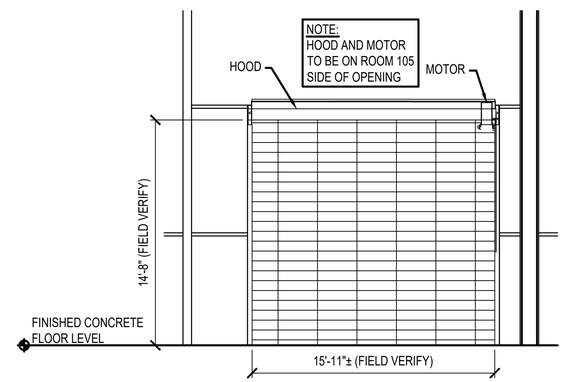

FRONT ELEVATION VIEW
DOOR TYPE 6

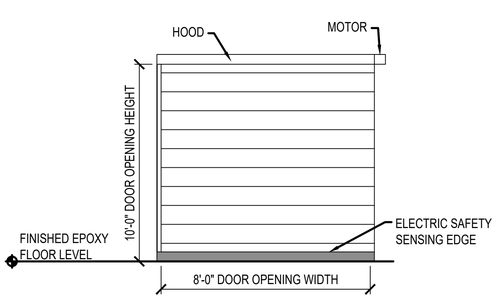

FRONT ELEVATION VIEW
DOOR TYPE 5

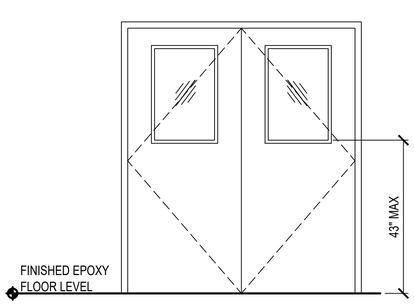

DOOR TYPE D2

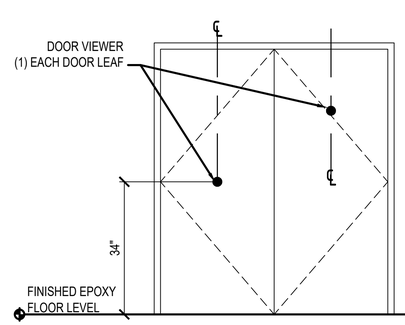

DOOR TYPE D3

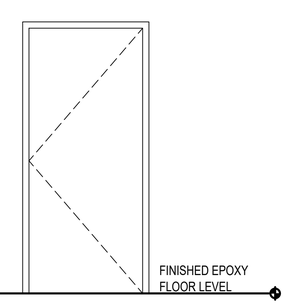

DOOR TYPE D7

AIR FORCE MATERIEL COMMAND
72 ABW CIVIL ENGINEER DIRECTORATE
TINKER AFB, OK

35% DESIGN

PROJECT INFORMATION
WWYK250063
INSTALL REACT VII FACILITY
B9001, V19
TINKER AIR FORCE BASE, OKLAHOMA

REVISIONS

MARK	DATE	DESCRIPTION

MANAGEMENT INFORMATION
ISSUE DATE:7 OCT 25
DESIGN GROUP:TEPA-CSAG
DESIGNED BY:J LESTER
DRAWN BY:T KISER
CHECKED BY:C HIXON
DESIGN FILE LOCATION:
Engr\Design\2020s\2025\202500630_Support\0_3_Drawings\Model

SHEET TITLE
WINDOW AND DOOR SCHEDULES

SHEET NUMBER
A-601

SHEET 28 OF

DOOR HARDWARE SCHEDULE

	HARDWARE GROUP 1	HARDWARE GROUP 2	HARDWARE GROUP 3	HARDWARE GROUP 4	HARDWARE GROUP 5	HARDWARE GROUP 6	HARDWARE GROUP 7	HARDWARE GROUP 8	HARDWARE GROUP 9
HINGES:	1-1/2 PAIR BALL BEARING HINGES. US32D FINISH.	2 PAIR BALL BEARING HINGES PER DOOR LEAF . US32D FINISH.	2 PAIR BALL BEARING HINGES WITH NON-REMOVEABLE PINS. US32D FINISH.	——	2 pair BALL BEARING HINGES PER DOOR LEAF WITH NON-REMOVEABLE PINS. US32D FINISH.	2 PAIR BALL BEARING HINGES WITH NON-REMOVEABLE PINS. US32D FINISH.	2 PAIR BALL BEARING HINGES PER DOOR LEAF . US32D FINISH.	——	2 PAIR BALL BEARING HINGES WITH NON-REMOVEABLE PINS. US32D FINISH.
Closer:	1 DOOR CLOSER WITH HOLD-OPEN FUNCTION.	1 DOOR CLOSER ON EACH DOOR LEAF WITHOUT HOLD OPEN FUNCTION .	1 DOOR CLOSER. WITHOUT HOLD OPEN FUNCTION .	——	1 DOOR CLOSER ON EACH DOOR LEAF WITHOUT HOLD OPEN FUNCTION.	1 DOOR CLOSER WITHOUT HOLD OPEN FUNCTION.	1 DOOR CLOSER ON EACH DOOR LEAF WITHOUT HOLD OPEN FUNCTION.	——	1 DOOR CLOSER WITHOUT HOLD OPEN FUNCTION.
LOCKSET CONTROLER:	MORTISE OFFICE PRIVACY LOCKSET ANSI/BHMA COMMERCIAL GRADE 1. WITH ANSI/ABA COMPLIANT LEVER HANDLES & BEST 7 PIN COMPATABLE CORE. US26D FINISH.	NO LOCKSET	SIMPLEX 8100 MORTISE MECHANICAL 5 PUSH BUTTON COMBINATION LOCK WITH KEY OVERIDE & BEST 7 PIN COMPATABLE CORE ON THE ROOM 105 SIDE OF THE DOOR. ANSI/ABA COMPLIANT ACTIVE LEVER HANDLES AT BOTH FACES OF THE DOOR. US26D FINISH.	OVERHEAD COILING DOOR WITH HOOD AND PUSH BUTTON CONTROLLER AT EACH ROOM SIDE OF DOOR.	SIMPLEX 8100 MECHANICAL 5 PUSH BUTTON LOCK WITH KEY OVERIDE & BEST 7 PIN COMPATABLE CORE ON NORTH DOOR LEAF ON AISLE 19 SIDE OF THE DOOR LEAF. AT THE SOUTH DOOR LEAF INSTALL A MORTISE LOCKSET WITH AN INACTIVE LEVER ON THE AISLE 19 SIDE OF THE DOOR AND AN ACTIVE LEVER ON ROOM 103 SIDE OF THE DOOR. ALL 4 LEVER HANDLES SHALL BE ANSI/ABA COMPLIANT LEVER HANDLES. US26D FINISH.	SIMPLEX 8010 MECHANICAL 5 PUSH BUTTON COMBINATION EXTERIOR RATED LOCK WITH KEY OVERIDE & BEST 7 PIN COMPATABLE CORE ON THE EXTERIOR SIDE OF THE DOOR. ANSI/ABA COMPLIANT LEVER HANDLE. US26D FINISH. VON DUPRIN XP98/99 RIM EXIT DEVICE. BHMA 626 FINISH.	NO LOCKSET	OVERHEAD COILING DOOR WITH HOOD AND PUSH BUTTON CONTROLLER AT EACH ROOM SIDE OF DOOR.	SIMPLEX 8010 MECHANICAL 5 PUSH BUTTON COMBINATION LOCK WITH KEY OVERIDE & BEST 7 PIN COMPATABLE CORE ON THE AISLE 19 SIDE OF THE DOOR. ANSI/ABA COMPLIANT LEVER HANDLE. US26D FINISH. VON DUPRIN XP98/99 RIM EXIT DEVICE. BHMA 626 FINISH.
DOOR KICK PLATE:	10"x34" KICK PLATE ON EACH FACE OF DOOR US32D FINISH.	10"x34" KICK PLATE ON EACH FACE OF EACH DOOR LEAF. US32D FINISH.	10"x 46" KICK PLATE ON EACH SIDE OF DOOR. US32D FINISH.	NONE	10"x34" KICK PLATE ON EACH FACE OF EACH DOOR LEAF. US32D FINISH.	10"x34" KICK PLATE ON ROOM 104 (INTERIOR) SIDE OF DOOR. US32D FINISH.	10"x34" KICK PLATE ON BOTH SIDES OF EACH DOOR LEAF. US32D FINISH.	NONE	10"x34" KICK PLATE ON EACH FACE OF DOOR. US32D FINISH.
DOOR PULL PLATE:	NONE	4"x16" STAINLESS STEEL (SST) PULL PLATES WITH 3/4" ROUND SST PULLS 6" CENTE TO CENTER, ANSI A 156.06, GRADE 1 ON EAST FACE OF EACH DOOR LEAF IN ROOM 103	NONE	NONE	NONE	NONE	4"x16" STAINLESS STEEL (SST) PULL PLATES WITH 3/4" ROUND SST PULLS 6" CENTE TO CENTER, ANSI A 156.06, GRADE 1 ON SOUTH FACE OF EACH DOOR LEAF IN ROOM 104	NONE	NONE
PUSH PLATE:	NONE	14"x6"SST PUSH PLATE , ANSI A 156.06, GRADE 1 ON WEST FACE OF EACH DOOR LEAF IN ROOM 103.	NONE	NONE	NONE	NONE	4"x16" SST PUSH PLATE , ANSI A 156.06, GRADE 1 ON NORTH FACE OF EACH DOOR LEAF IN ROOM 103.	NONE	NONE
DOOR STOP:	WALL MOUNTED DOOR STOP AT EAST WALL. REINFORCE FRAMING IN WALL.	NONE	NONE	NONE	NONE	NONE	WALL MOUNTED DOOR STOP. AT WEST WALL. REINFORCE FRAMING IN WALL.	NONE	NONE
REMOVABLE LOCKING CENTER MULLION:	NONE	1	NONE	NONE	1	NONE	1	NONE	NONE
THRESHOLD:	NONE	TRANSITION STRIP FROM EPOXY FLOOR TO CARPET TILE.	NONE	NONE	NONE	NGP 896V. OR EQUAL ABA COMPLIANT THRESHOLD SET IN BED OF WEATHER RESISTANT CLEAR SILICONE SEALANT. ANCHOR TO EXISTING CONCRETE PAVEMENT. UL RATED FOR USE WITH 90 MINUTE FIRE RATED DOOR/FRAME ASSEMBLY. ANSI/UL 10C.	NONE	NONE	NONE
DOOR BOTTOM / SWEEP:	NONE	1 EACH PER DOOR LEAF. 36" FULL MORTISE AUTOMATIC DOOR BOTTOM. ALUMINUMM MILL FINISH, WITH 2 RUBBER SEALS EACH. AIR INFILTRATION TESTED	1 - 48" FULL MORTISE AUTOMATIC DOOR BOTTOM. AIR INFILTRATION TESTED.	ELECTRIC SENSING SAFETY EDGE.	1 EACH PER DOOR LEAF. 36" FULL MORTISE AUTOMATIC DOOR BOTTOM. ALUMINUMM MILL FINISH, AIR INFILTRATION TESTED	1 - 36" FULL MORTISE AUTOMATIC DOOR BOTTOM. AIR INFILTRATION TESTED.	1- EACH PER DOOR LEAF. 36" FULL MORTISE AUTOMATIC DOOR BOTTOM. ALUMINUMM MILL FINISH, AIR INFILTRATION TESTED	ELECTRIC SENSING SAFETY EDGE.	1 - 36" FULL MORTISE AUTOMATIC DOOR BOTTOM. AIR INFILTRATION TESTED.
DOOR GASKET:	NONE	National Guard 5100 ADHESIVE MULLION SEAL. AT JAMBS & HEAD, Pemko S88 SYSTEM. OR APPROVED EQUAL.	AT JAMBS & HEAD, Pemko S88 SYSTEM . OR APPROVED EQUAL.	REPLACEABLE SMOKE SEAL PERIMETER GASKETS. UL 10 COMPLIANT.	National Guard 5100 ADHESIVE MULLION SEAL. AT JAMBS & HEAD, Pemko S88 SYSTEM . OR APPROVED EQUAL.	AT JAMBS & HEAD, Pemko S88 SYSTEM . OR APPROVED EQUAL.	National Guard 5100 ADHESIVE MULLION SEAL. AT JAMBS & HEAD, Pemko S88 SYSTEM. OR APPROVED EQUAL.	REPLACEABLE SMOKE SEAL PERIMETER GASKETS. UL 10 COMPLIANT.	AT JAMBS & HEAD, Pemko S88 SYSTEM . OR APPROVED EQUAL.
DOOR SILENCER:	3 - EACH AT STRIKE SIDE OF DOOR JAMB.	2- EACH AT EACH DOOR LEAF AT THE DOOR FRAME HEAD.	3 - EACH AT STRIKE SIDE OF DOOR JAMB.	NONE	2 - EACH FOR EACH DOOR LEAF AT THE DOOR FRAME HEAD.	3 EACH AT STRIKE SIDE OF DOOR JAMB.	2- EACH AT EACH DOOR LEAF AT THE DOOR FRAME HEAD.	NONE	3 EACH AT STRIKE SIDE OF DOOR JAMB.
DRIP STOP:	NONE	NONE	NONE	NONE	NONE	DOOR FRAME HEAD RAIN DRIP GUARD. DRIP CAP. DOOR BOTTOM DRIP GUARD AT DOTTOM OF EXTERIOR FACE OF DOOR.	NONE	NONE	NONE'
HARDWARE FINISH UNLESS OTHERWISE NOTED:	US32D	US32D	US32D	——	US32D	US32D	US32D	——	US32D
DOOR VIEWER:	NONE	NONE	NONE	NONE	190° ONE-WAY WIDE ANGLE DOOR VIEWER UL LISTED FIRE RATED TO 90 MINUTES. 1 FOR EACH DOOR LEAF. 626 SATIN CHROME FINISH	NONE	NONE	NONE	NONE
NOTE No. 1:	DOOR CLOSER MOUNTED ON ROOM 102 SIDE OF DOOR.	DOOR CLOSERS MOUNTED ON ROOM 102 SIDE OF DOOR.	NON - HOLD OPEN CLOSER MOUTED ON ROOM 103 SIDE OF DOOR.	PROVIDE DOORS WITH UL "S" LABEL IN ADDITION TO THE FIRE DOOR LABEL TO CERTIFY SMOKE CONTROL.	NON - HOLD OPEN CLOSERS MOUTED ON ROOM 103 SIDE OF EACH DOOR LEAF.	NON- HOLD OPEN CLOSER MOUTED ON ROOM 104 SIDE OF DOOR.	DOOR CLOSERS MOUNTED ON ROOM 103 SIDE OF DOOR.	——	NON- HOLD OPEN CLOSER MOUTED ON ROOM 105 SIDE OF DOOR.
NOTE No. 2:	DOOR 101 IS IN A NON FIRE-RATED WALL ASSEMBLY.	DOOR 102 IS IN A NON RIRE -RATED WALL ASSEMBLY.	DOOR 103 IS IN A 2 - HOUR RATED WALL ASSEMBLY	DOOR 103A IS IN A 2 -HOUR RATED WALL ASSEMBLY.	DOOR 103B IS IN A 2-HOUR RATED WALL ASSEMBLY.	DOOR 104 IS IN A 2-HOUR RATED SECTION OF THE EXTERIOR WALL.	DOOR 104A IS IN A NON RIRE RATED WALL ASSEMBLY.	DOORS 103c & Door 105 ARE IN A 1-HOUR RIRE RATED WALL ASSEMBLY.	DOOR 105A IS IN A 1-HOUR RATED SECTION OF THE BARRIER WALL.
NOTE No. 3:	——	——	DOOR HARDWARE TO MEET 90 MINUTE FIRE RATING REQUIREMENTS.	DOOR SYSTEM TO MEET 90 MINUTE FIRE RATING REQUIREMENT.	DOOR HARDWARE TO MEET 90 MINUTE FIRE RATING REQUIREMENTS.	DOOR HARDWARE TO MEET 90 MINUTE FIRE RATING REQUIREMENTS.	——	——	DOOR HARDWARE TO MEET 45 MINUTE FIRE RATING REQUIREMENTS.
DOOR LOCATION:	101	102	103	103A	103B	104	104A	103C/105	105A

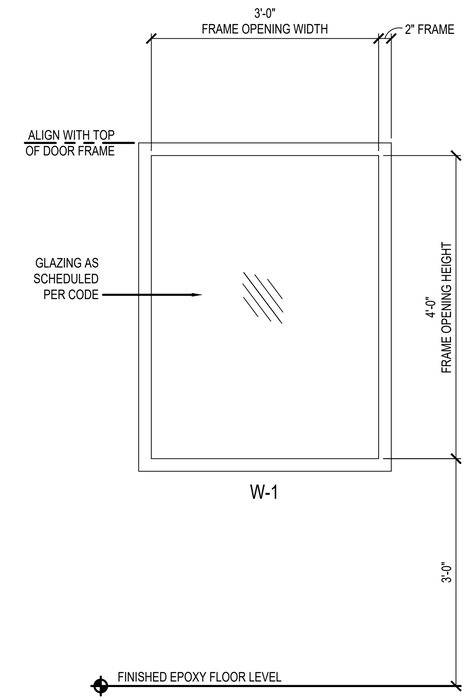

ROOM FINISH SCHEDULE

ROOM #	ROOM NAME	FLOOR	BASE	WALLS	CEILING BELOW ROOF PRAMONG	ROOM CEILING	UPPER CEILING	COMMENTS
101	OFFICE-1	CT OVER EP-1	B-1	PT-1	PT-2, CLG-2	CLG-1	CLG-2, PT-2	CARPET OVER EPOXY FLOOR
102	OFFICE-2	CT OVER EP-1	B-1	PT-1	PT-2, CLG-2	CLG-1	CLG-2, PT-2	CARPET OVER EPOXY FLOOR
103	MATERIAL TESSTING ROOM - 1	EP1	B-1	PT-1	PT-2, CLG-2	CLG-1	CLG-2, PT-2	EPOXY FLOOR
104	MATERIAL TESSTING ROOM - 2	EP1	B-1	PT-1	PT-2, CLG-2	CLG-1	CLG-2, PT-2	EPOXY FLOOR
EXPOSED EXT. WALLS			B-1	PT-1				
PT-1	SHERWIN WILLIAMS HIGH REFLECTIVE WHITE PROMAR 200 ZEROVOC INTERIOR LATEX WITH "EGGSHELL" SHEEN. FINISH LEVEL 4							
PT-2	SHERWIN WILLIAMS HIGH REFLECTIVE WHITE PROMAR 200 ZEROVOC INTERIOR LATEX WITH "EGGSHELL" SHEEN. FINISH LEVEL 4 WITH ORANGE PEEL FINISH FULL HEIGHT OF WALL.							
B-1	4 1/2" ROPPE BLACK 1/8" VINYL COVE WALL BASE							
CLG-1	2X2 ACOUSTICAL GRID CEILING							
CLG-2	5/8" GYPSUM BOARD TAPE & BED FINISH LEVEL 4.							
CT	CARPET TILE OVER EXPOXY FLOOR (EP-1							
EP-1	EPOXY FLOOR SYSTEM - FULL FOOTPRINT OF REACT VII TO CENTERLINE OF PERMIMETER WALLS. AT EAST REACT VII WALL, FINISH TO EXTENT TO WHITELINE AT AISLE 19 OR TO WEST SIDE OF EXISTING WALL ALONG AISLE 19							

WINDOW

WINDOW NUMBER	TYPE	WIDTH	HEIGHT	GLAZING	FRAME	FUNCTION	WALL DEPTH
101	W1	3'-0"	4'-0"	TEMPERED	WELDED ALM WITH STOPS	FIXED	5 1/4"

AIR FORCE MATERIEL COMMAND
72 ABW CIVIL ENGINEER DIRECTORATE
TINKER AFB, OK

35% DESIGN

PROJECT INFORMATION
WWYK250063
INSTALL REACT VII FACILITY
B9001, V19
TINKER AIR FORCE BASE, OKLAHOMA

REVISIONS

MARK	DATE	DESCRIPTION

MANAGEMENT INFORMATION
ISSUE DATE: 7 OCT 25
DESIGN GROUP: TEPA-CSAG
DESIGNED BY: J. LESTER
DRAWN BY: T. KISER
CHECKED BY: C. HIXON
DESIGN FILE LOCATION: Engr\Design\2020s\2025\202500630_Support\0_3_Drawings\Model

SHEET TITLE
WINDOW AND DOOR SCHEDULES

SHEET NUMBER
A-602
SHEET 29 OF

SYMBOLS LEGEND

SYMBOL	DESCRIPTION
AW	ACID WASTE
AV	ACID VENT
SS	SOIL OR WASTE
GT	GREASE TRAP WASTE
VENT	SOIL OR WASTE VENT
RD	ROOF DRAIN LINE
SD	STORM DRAIN
G	NATURAL GAS, LOW PRESS
MG	NATURAL GAS, MED PRESS
DCW	DOMESTIC COLD WATER
110°F	DOMESTIC HOT WATER (110°F)
HWR	DOMESTIC HOT WATER RETURN
140°F	DOMESTIC HOT WATER (140°F)
FP	FIRE PROTECTION WATER SUPPLY
SP	SPRINKLER MAIN
S	STEAM, LOW PRESS 0-15 PSI
MPS	STEAM, MED.PRESS 16-124 PSI
HPS	STEAM, HIGH PRESS 125 & ABOVE
C	CONDENSATE, LOW PRESS 0-15 PSI
MPC	CONDENSATE, MED PRESS 16-124 PSI
HPC	CONDENSATE, HIGH PRESS 125 PSI & ABOVE
CP	CONDENSATE, PUMPED
FST	FLASH STEAM
BFW	BOILER FEED WATER
BD	BLOWDOWN, BOILER, COOLING TOWER, ETC
BO	BOILER BLOWOFF: RELIEF VALVE
CHS	CHILLED WATER SUPPLY
CHR	CHILLED WATER RETURN
HS	HEATING WATER SUPPLY
HR	HEATING WATER RETURN
CS	CONDENSER WATER SUPPLY
CR	CONDENSER WATER RETURN
CD	CONDENSATE DRAIN
FOS	FUEL OIL SUPPLY
FOR	FUEL OIL RETURN
FOV	FUEL OIL VENT
RL	REFRIGERANT LIQUID
RS	REFRIGERANT SUCTION
RG	REFRIGERANT GAS
CF	CHEMICAL FEED
AF	ACID FEED
SW	SOFT WATER
DS	DISTILLED WATER
DI	DEMINERALIZED OR DEIONIZED WATER
PCW	PROCESS COLD WATER
CA	COMPRESSED AIR
BA	COMPRESSED AIR, BREATHING AIR
LA	COMPRESSED AIR, LABORATORY
PA	COMPRESSED AIR, PLANT
DV	DRY VACUUM, HOUSEKEEPING
WV	WET VACUUM, HOUSEKEEPING
V	VACUUM, MEDICAL
LV	VACUUM, LABORATORY
DWS	CHILLED DRINKING WATER SUPPLY
DWR	CHILLED DRINKING WATER RETURN
OX	OXYGEN
N	NITROGEN
NO	NITROUS OXIDE
H	HYDROGEN
Ar	ARGON
He	HELIUM
CO_2	CARBON DIOXIDE
CH_4	METHANE
HCL	HYDROGEN CHLORIDE
F	FLUORINE

SYMBOL	DESCRIPTION
	RISER DOWN (ELBOW)
	RISER UP (ELBOW)
	RISE OR DROP
	TEE DOWN
	TEE UP
	TOP CONNECTION
	BOTTOM CONNECTION
	SIDE CONNECTION
	GATE VALVE
	BALANCING VALVE
	PLUG COCK/GAS STOP
	CHECK VALVE
	BALL VALVE
	SOLENOID VALVE
	BUTTERFLY VALVE
	PRESSURE REDUCING VALVE
	TRIPLE DUTY VALVE
	NEEDLE VALVE
	CONTROL VALVE, 2 WAY PNEUMATIC
	CONTROL VALVE, 3 WAY PNEUMATIC
	ANGLE VALVE
	CONTROL VALVE, 2 WAY ELECTRIC
	CONTROL VALVE, 3 WAY ELECTRIC
	BACKFLOW PREVENTION DEVICE
	COMPRESSED AIR CONNECTION
	ASME RELIEF VALVE
	PRESSURE AND TEMPERATURE RELIEF
	REDUCER, ECCENTRIC
	REDUCER, CONCENTRIC
	CAP OR BLIND FLANGE
	STRAINER, "Y" TYPE
	BASKET TYPE
CO	CLEANOUT PLUG
CO	CLEANOUT, FLOOR
CO	CLEANOUT, WALL
	VACUUM BREAKER
HB	HOSE BIBB
WH	WALL HYDRANT
YH	YARD HYDRANT
	FLOW IN DIRECTION OF ARROW
	PIPE SLOPE IN DIRECTION OF ARROW
PT	PRESSURE AND TEMPERATURE TEST PLUG (PETES PLUG)
TI	TEMPERATURE INDICATOR
TW	THERMOMETER WELL
PI	PRESSURE GAUGE WITH GAUGE COCK & SNUBBER
	AIR VENT, AUTOMATIC
ACFM	FREE AIR VOLUME
SCFM	COMPRESSED AIR VOLUME

SYMBOL	DESCRIPTION
	UNION
	FLEXIBLE PIPE CONNECTION
	WATER HAMMER ARRESTOR
FD	FLOOR DRAIN
SD	SHOWER DRAIN
AD	AREA DRAIN
RD	ROOF DRAIN
T	TEMPERATURE/HUMIDITY SENSOR
DA	DRIP ASSEMBLY, REF DETAIL
TA	CONDENSATE TRAP ASSEMBLY REF DETAIL
PRS	PRESSURE REDUCING STATION REF DETAIL
11'-0"	UNINSULATED LINES- DISTANCE FROM FF TO BOP INSULATED LINES- DISTANCE FROM FF TO BOI
	REMOVE EXIST TO THIS POINT
	TIE-IN TO EXIST AT THIS POINT
	UPRIGHT SPRINKLER HEAD
	PENDANT SPRINKLER HEAD
	PENDANT SPRINKLER HEAD
	FIRE DEPARTMENT CONNECTION
	FIRE HYDRANT
FHC	FIRE HOSE CABINET FOR OCCUPANT'S USE
FHE	FIRE HOSE W/ FIRE EXTINGUISHER CABINET
HVC	FIRE HOSE VALVE IN CABINET
FEC	FIRE EXTINGUISHER CABINET
FE	HAND EXTINGUISHER
	DUCT SECTION, SUPPLY
	DUCT SECTION, RETURN
	DUCT SECTION, EXHAUST
	CEILING DIFFUSER SQUARE PATTERN. NO ARROWS INDICATE 4-WAY AIR PATTERN
	RETURN, EXHAUST, OR TRANSFER REGISTER
	SUPPLY AIR TROFFER SIDE OR TOP INLET
	SIDEWALL SUPPLY REGISTER OR GRILLE
	LINEAR DIFFUSER, NO ARROWS INDICATE 2-WAY AIR PATTERN
MD ACCESS	MVD = MANUAL DAMPER MTD = MOTORIZED DAMPER GD = GRAVITY DAMPER OA = OUTSIDE AIR DAMPER RA = RETURN AIR DAMPER BD = BACKDRAFT DAMPER FD = FIRE DAMPER SMD = SMOKE DAMPER RLA = RELIEF DAMPER
	90 DEGREE RECTANGULAR ELBOW UP WITH SINGLE THICKNESS TURNING VANES
	90 DEG. ELBOW UP
	90 DEGREE RECTANGULAR ELBOW DOWN WITH SINGLE THICKNESS TURNING VANES
	90 DEG. ELBOW DOWN

SYMBOL	DESCRIPTION
	90 DEGREE RECTANGULAR ELBOW WITH SINGLE THICKNESS TURNING VANES
	90 DEGREE ROUND ELBOW, HORIZONTAL
	45 DEG. RECTANGULAR BEND
	45 DEG. RECTANGULAR BEND, 1-1/2 RADIUS
	45 DEG. ROUND BEND, 1-1/2 RADIUS
	ROUND PRESSURE TAP WITH VOLUME DAMPER
	STRAIGHT SIDED BRANCH SPLIT. TRANSITION TO FULL SIZE BEFORE ELBOW.
	BRANCH SPLIT. TRANSITION TO SPLIT. TRANSITION TO FULL SIZE BEFORE ELBOW.
	WYE SPLIT. TRANSITION TO FULL SIZE BEFORE ELBOW.
	END CAPS
F	F= FALL IN DUCT ELEV R= RISE IN DUCT ELEV

NOTE: AIR DISTRIBUTION DEVICES ARE ARE DENOTED AS ILLUSTRATED BELOW:

DIFFUSER/GRILLE
AIR DISCHARGE (CUB. FT/MIN)

DUCTWORK TAP (SQUARE TO SQUARE)

DUCTWORK TAP (SQUARE TO ROUND)

SUPPLY DIFFUSER

RETURN GRILLE (REGISTER)

EXHAUST GRILLE (REGISTER)

TYPICAL RUNOUT

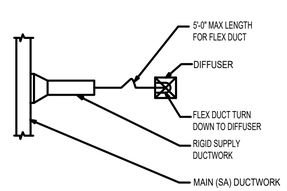

MECHANICAL ABBREVIATIONS

A	
A	AIR
ABV	ABOVE
AC	AIR COMPRESSOR
A/C	AIR CONDITIONER
ACFM	ACTUAL CUBIC FEET PER MINUTE
ACST	ACOUSTIC
ADD	ADDENDUM
ADJ	ADJUSTABLE
AFF	ABOVE FINISH FLOOR
AFMP	AIR FLOW MONITOR PRIMARY
AHU	AIR HANDLING UNIT
AL	ALUMINUM
ALT	ALTERNATE
AMP	AMPERE
APPD	APPROVED
APPROX	APPROXIMATE
APRS	AIR PRESSURE REDUCING STATION
ARCH	ARCHITECT, ARCHITECTURAL
ASSY	ASSEMBLY
AUTO	AUTOMATIC
AV	ACID VENT
AVG	AVERAGE
AVTR	ACID VENT THRU ROOF
AW	ACID WASTE
AFUE	ANNUAL FUEL UTILIZATION EFFICIENCY
APD	AIR PRESSURE DROP
AR	AIR RECEIVER
AD	REFRIGERATED AIR DRYER
B	
BA	BREATHING AIR, COMPRESSED
BFPD	BACK FLOW PREVENTION DEVICE
BG	BOTTLED GAS
BL	BUILDING LINE
BLDG	BUILDING
BLD FLG	BLIND FLANGE
BLW	BELOW
B/M	BILL OF MATERIALS
BOD	BOTTOM OF DUCT
BOP	BOTTOM OF PIPE
BOT	BOTTOM
BRKT	BRACKET
BS	BLACK STEEL
BSMT	BASEMENT
BTU/H	BRITISH THERMAL UNIT PER HOUR
C	
C or COND	CONDENSATE
C TO C	CENTER TO CENTER
CA	COMPRESSED AIR
CFM	CUBIC FEET PER MINUTE
CH	CHILLER
CHR	CHILLED WATER RETURN
CHS	CHILLED WATER SUPPLY
CI	CAST IRON
CIP	CAST IRON PIPE
CIR	CIRCLE,CIRCULAR
CL	CENTER LINE
CLG	CEILING
CO	CLEANOUT
COL	COLUMN
COMPR	COMPRESSOR
CONC	CONCRETE
CONN	CONNECTION
CONST	CONSTRUCTION
CONT	CONTINUE
CONTR	CONTRACTOR
CPM	CYCLES PER MINUTE
CPS	CYCLES PER SECOND
CS	CARBON STEEL
CSG	CASING
CT	COOLING TOWER
CTR	CENTER
Cu	COPPER
CU	CUBIC
CU FT or CF	CUBIC FOOT OR FEET
CU IN or CI	CUBIC INCH OR INCHES
DCW	DOMESTIC COLD WATER
CYC	CYCLE
CWP	CONDENSER WATER PUMP
D	
DA	DRIP ASSEMBLY
DB	DECIBEL
DC	DIRECT CURRENT
DEG or ^	DEGREE
DEPT	DEPARTMENT
DET	DETAIL
DF	DRINKING FOUNTAIN
DIA or 0	DIAMETER
DIAG	DIAGRAM
DIM	DIMENSION
DISC	DISCONNECT
DN	DOWN
DP	DEW POINT
DR	DRAIN
DS	DOWNSPOUT
DW	DISHWASHER
DWG	DRAWING
DWH	DOMESTIC HOT WATER
E	
E	EAST
EA	EACH
E/A	EXHAUST AIR
EAT	ENTERING AIR TEMPERATURE
EDB	ENTERING DRY BULB
E/E	END TO END
EFF	EFFICIENCY
EF	EXHAUST FAN
EL	ELEVATION
ELEC	ELECTRIC, ELECTRICAL
ELL	ELBOW
EMER	EMERGENCY
ENCL	ENCLOSURE
ENGR	ENGINEER
EQUIP	EQUIPMENT
ESP	EXTERNAL STATIC PRESSURE
EST	ESTIMATE
EWB	ENTERING WET BULB
EWC	ELECTRIC WATER COOLER
EWT	ENTERING WATER TEMPERATURE
EXH	EXHAUST
EXIST	EXISTING
EXP	EXPOSED
EXP JT	EXPANSION JOINT
EXT	EXTERIOR, EXTERNAL
EEW	EMERGENCY EYE WASH
EX	EXPANSION TANK

F	
F	FAHRENHEIT
FAB	FABRICATED
FC	FOOT CANDLE
FD	FLOOR DRAIN, FIRE DAMPER
FDN	FOUNDATION
FF	FLAT FACE FLANGE
FH	FUME HOOD
FIG	FIGURE
FIN	FINISH
FIX	FIXTURE
FL	FLOOR
FL MTD	FLOOR MOUNTED
FLG	FLANGE
FPM	FEET PER MINUTE
FPS	FEET PER SECOND
FR	FROM
FRC	FIRE RATED CEILING PENETRATION
FRW	FIRE RATED WALL PENETRATION
FT	FOOT, FEET
FTF	FACE TO FACE
FTG	FITTING
FTR	FLUE THRU THE ROOF
F/B	FACE AND BYPASS
FS	FLOOR SINK
G	
G	NATURAL GAS
GA	GAUGE
GAL	GALLON, GALLONS
GALV	GALVANIZED
GEN	GENERATOR
GI	GALVANIZED IRON
GPH	GALLONS PER HOUR
GPM	GALLONS PER MINUTE
GPRS	GAS PRESSURE REDUCING STATION
GR	GRADE
GSKT	GASKET
GCO	GROUND CLEANOUT
H	
HB	HOSE BIBB
HD	HEAD
HD WHL	HAND WHEEL
HGT	HEIGHT
HORZ	HORIZONTAL
HOSP	HOSPITAL
HP	HORSE POWER
HPT	HIGH POINT
HR	HOUR or HEATING WATER RETURN
HS	HEATING WATER SUPPLY
HTR	HEATER
HVY	HEAVY
HX	HEAT EXCHANGER
ID	INSIDE DIAMETER
IE	INVERT ELEVATION
IH	INTAKE HOOD
IN	INCH, INCHES
INS	INSULATION, INSULATE
INT	INTERIOR, INTERNAL
INV	INVERT
IPS	IRON PIPE SIZE
J	
JAN CLO	JANITOR'S CLOSET
JB	JUNCTION BOX
JT	JOINT
K	
K or M	THOUSAND
KP	KICK PLATE
KW	KILOWATT
KWH	KILOWATT HOUR
L	
L	LOUVER
LAB	LABORATORY
LAT	LEAVING AIR TEMPERATURE
LB	POUND, POUNDS
LDB	LEAVING DRY BULB
LDG	LANDING
LF	LINEAR FEET
LG	LONG
LH	LEFT HAND
LHR	LEFT HAND REVERSE
LKR	LOCKER
LP	LOW PRESSURE
LTCP	LOW TEMP. CONTROL PANEL
LVG	LEAVING
LWB	LEAVING WET BULB
LWT	LEAVING WATER TEMPERATURE
M	
M or K	THOUSAND
MACH	MACHINE
MACH RM	MACHINE ROOM
MATL	MATERIAL
MAX	MAXIMUM
MBH	THOUSAND BTUH
MECH	MECHANICAL
MED	MEDIUM
MET	METAL
MEZZ	MEZZANINE
MFG	MANUFACTURER, MANUFACTURED
MH	MANHOLE
MIN	MINIMUM
MISC	MISCELLANEOUS
MK	MARK
MOD	MODEL, MODIFY
MTG	MOUNTED
N	
N	NORTH
N.C.	NORMALLY CLOSED
NCOR	NON-CORROSIVE
NIP	NIPPLE
N.O.	NORMALLY OPEN
NO. or #	NUMBER
NOM	NOMINAL
NS	NON SLIP
NTS	NOT TO SCALE

O	
O/A	OUTSIDE AIR
OC	ON CENTER
OD	OUTSIDE DIAMETER
OFF	OFFICE
OPNG	OPENING
OPP	OPPOSITE
ORIG	ORIGINAL
OZ	OUNCE
P	
PAR	PARALLEL
PERF	PERFORATED
PERP	PERPENDICULAR
PH	PHASE
PHX	PLATE HEAT EXCHANGER
PL	PLATE
PLAT	PLATFORM
PLMB	PLUMBING
PNEU	PNEUMATIC
PRV	PRESSURE REDUCING VALVE
PSI	POUNDS PER SQUARE INCH
PSIA	POUNDS PER SQ INCH ABSOLUTE
PSIG	POUNDS PER SQ INCH GAGE
%	PERCENT
R	
R	RADIUS
R/A	RETURN AIR
RAD	RADIATOR, RADIANT
RD	ROOF DRAIN
RECIRC	RECIRCULATE, RECIRCULATOR
RECOV.	RECOVERY
RECT	RECTANGULAR
RED	REDUCER
REF	REFERENCE, REFER
REG	REGISTER, REGULATOR
REQ'D	REQUIRED
RET	RETURN
REV	REVICE, REVISION
RF	RAISED FACE FLANGE
RH	RELATIVE HUMIDITY
RL/A	RELIEF AIR
RM	ROOM
RPM	REVOLUTIONS PER MINUTE
RPS	REVOLUTIONS PER SECOND
RV	RELIEF VALVE
0	ROUND, DIAMETER
S	
S	SOUTH
S/A	SUPPLY AIR
SC	SELF CLOSING
SCI	SEWER CAST IRON PIPE
SCH	SCHEDULE, SCHEDULED
SEC	SECOND
SECT	SECTION
SENS	SENSIBLE
SERV	SERVICE
SEW	SEWER
SIM	SIMILAR
SP	STATIC PRESSURE
SO	SHUT OFF
SPEC	SPECIFICATIONS
SQ	SQUARE
SQ FT or SF	SQUARE FOOT OR FEET
SQ IN	SQUARE INCH OR INCHES
SS	STAINLESS STEEL
STA	STATION
STD	STANDARD
STRUCT	STRUCTURAL
SUP	SUPPLY
SUSP CLG	SUSPENDED CEILING
SWP	STEAM WORKING PRESSURE
T	
T/A	TRANSFER AIR
TAPD	TOTAL AIR PRESSURE DROP
TCP	TEMPERATURE CONTROL PANEL
TDH	TOTAL DYNAMIC HEAD
TEMP	TEMPERATURE
THD	THREAD
THK	THICK, THICKNESS
THRU	THROUGH
TOD	TOP OF DUCT
TRANS	TRANFORMER
TSP	TOTAL STATIC PRESSURE
T'STAT	THERMOSTAT
TYP	TYPICAL
U	
UH	UNIT HEATER
UL	UNDERWRITER'S LABORATORIES
UNFIN	UNFINISHED
UNO	UNLESS NOTED OTHERWISE
V	
V	VOLT
VAC	VACUUM
VEL	VELOCITY
VENT	VENTILATE, VENTILATION
VERT	VERTICAL
VFI	VARIABLE FREQUENCY INVERTER
VOL	VOLUME
VP	VENT PIPE or VELOCITY PRESSURE
VS	VENT STACK
VTR	VENT THRU THE ROOF
W	
W	WATT, WATER
W/	WITH
WB	WET BULB
W/C	WATER COLUMN
W CAB	WALL CABINET
WDW	WINDOW
WF	WIDE FLANGE (STEEL)
WG	WATER GAUGE
WH	WATER HEATER
WHA	WATER HAMMER ARRESTOR
WI	WROUGHT IRON
WM	WATER METER
W/O	WITHOUT
WP	WORKING POINT
WPRS	WATER PRES. REDUCING STATION
WT	WEIGHT
Y	
YD	YARD
YH	YARD HYDRANT
YP	YIELD POINT
YS	YIELD STRENGTH

AIR FORCE MATERIEL COMMAND
72 ABW CIVIL ENGINEER DIRECTORATE
TINKER AFB, OK

35% DESIGN

PROJECT INFORMATION
WWYK250063
INSTALL REACT VII FACILITY
B9001, V19
TINKER AIR FORCE BASE, OKLAHOMA

REVISIONS

MARK	DATE	DESCRIPTION

MANAGEMENT INFORMATION
ISSUE DATE:7 OCT 25
DESIGN GROUP:TEPA-CSAG
DESIGNED BY:S SEXTON
DRAWN BY:T KISER
CHECKED BY:C HIXON
DESIGN FILE LOCATION:
Engr\Design\2020s\2025\202500630_Support0_3_Drawings\Model

SHEET TITLE
MECHANICAL SYMBOLS AND ABBREVIATIONS

SHEET NUMBER
M-001
SHEET 30 OF

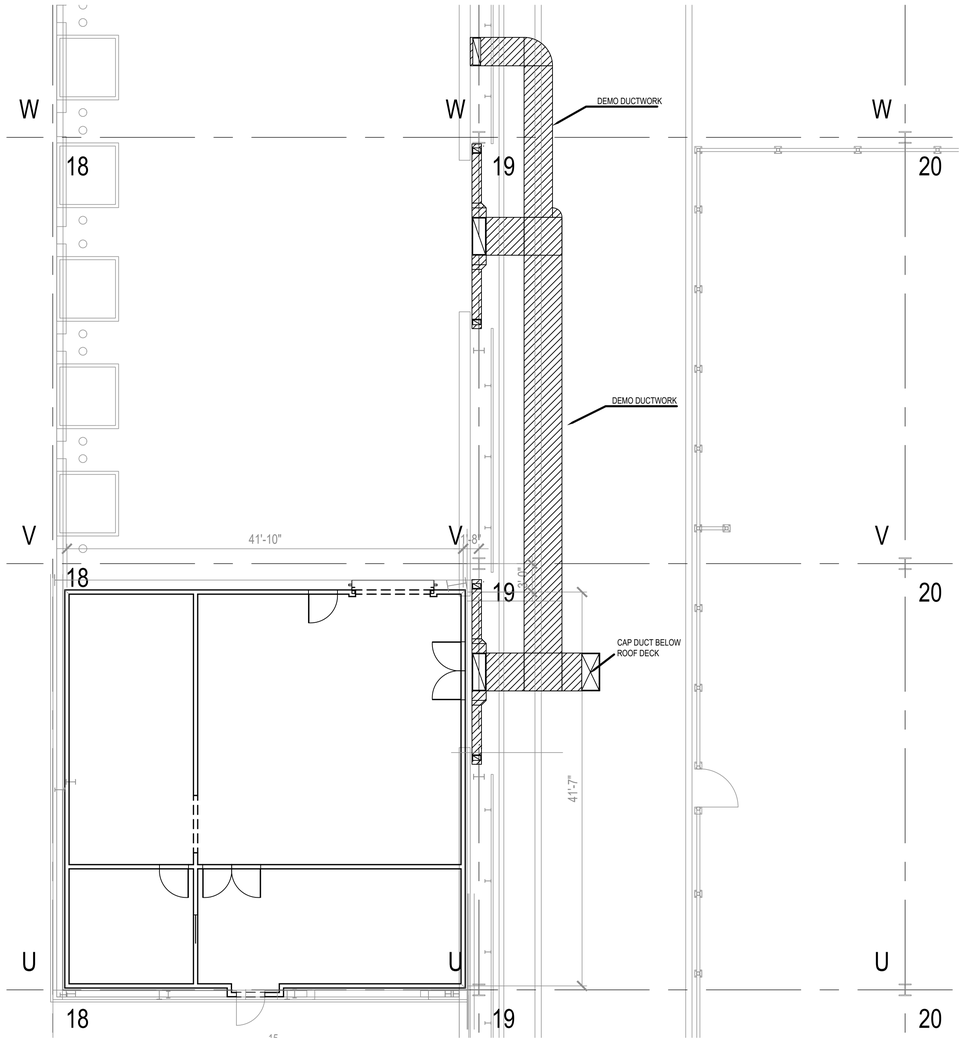

1 / MD-101 MECHANICAL DEMOLITION PLAN
SCALE: 1/4" = 1'-0"

GENERAL NOTES

1. EXISTING BUILDING SYSTEMS WERE TAKEN FROM AS-BUILT DRAWINGS AND MAY NOT BE ACCURATE IN EVERY DETAIL. CONTRACTOR TO VERIFY EXISTING CONDITIONS.

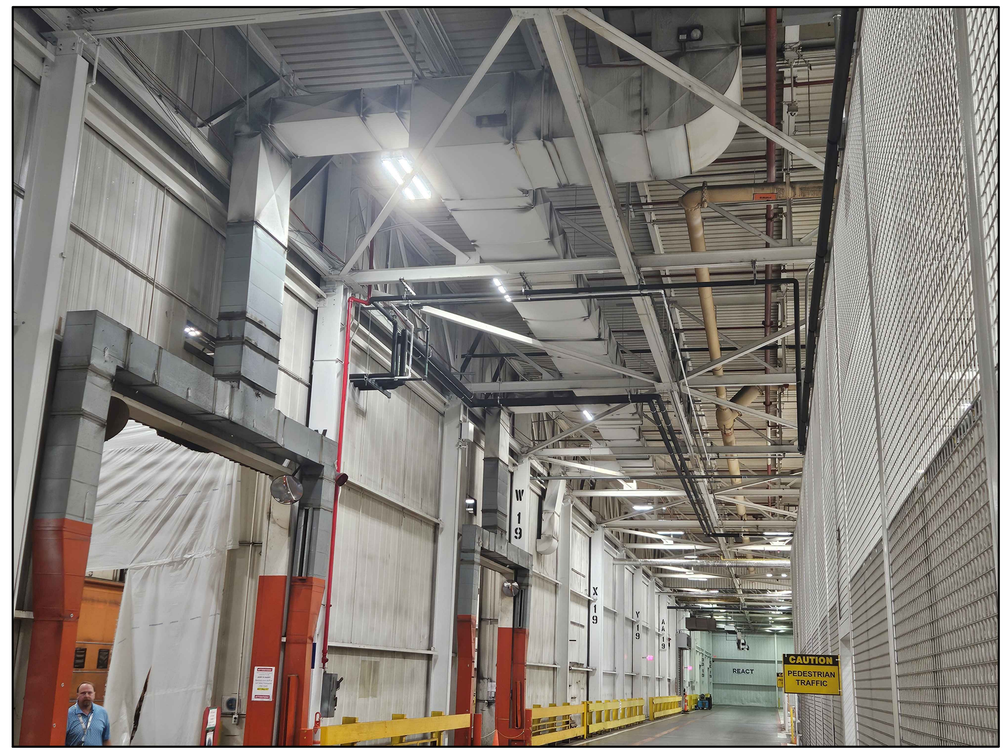

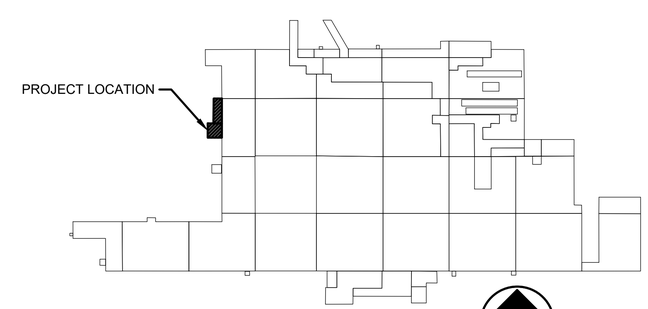

B9001 KEY PLAN

AIR FORCE MATERIEL COMMAND
72 ABW CIVIL ENGINEER DIRECTORATE
TINKER AFB, OK

35% DESIGN

PROJECT INFORMATION
WWYK250063
INSTALL REACT VII FACILITY
B9001, V19
TINKER AIR FORCE BASE, OKLAHOMA

REVISIONS

MARK	DATE	DESCRIPTION

MANAGEMENT INFORMATION
ISSUE DATE:7 OCT 25
DESIGN GROUP:TEPA-CSAG
DESIGNED BY:S SEXTON
DRAWN BY:T KISER
CHECKED BY:C HIXON
DESIGN FILE LOCATION:
Eng\Design\2020s\2025\202500630_Support\0_3_Drawings\Model

SHEET TITLE
MECHANICAL DEMOLITION PLAN

SHEET NUMBER
MD-101
SHEET 31 OF

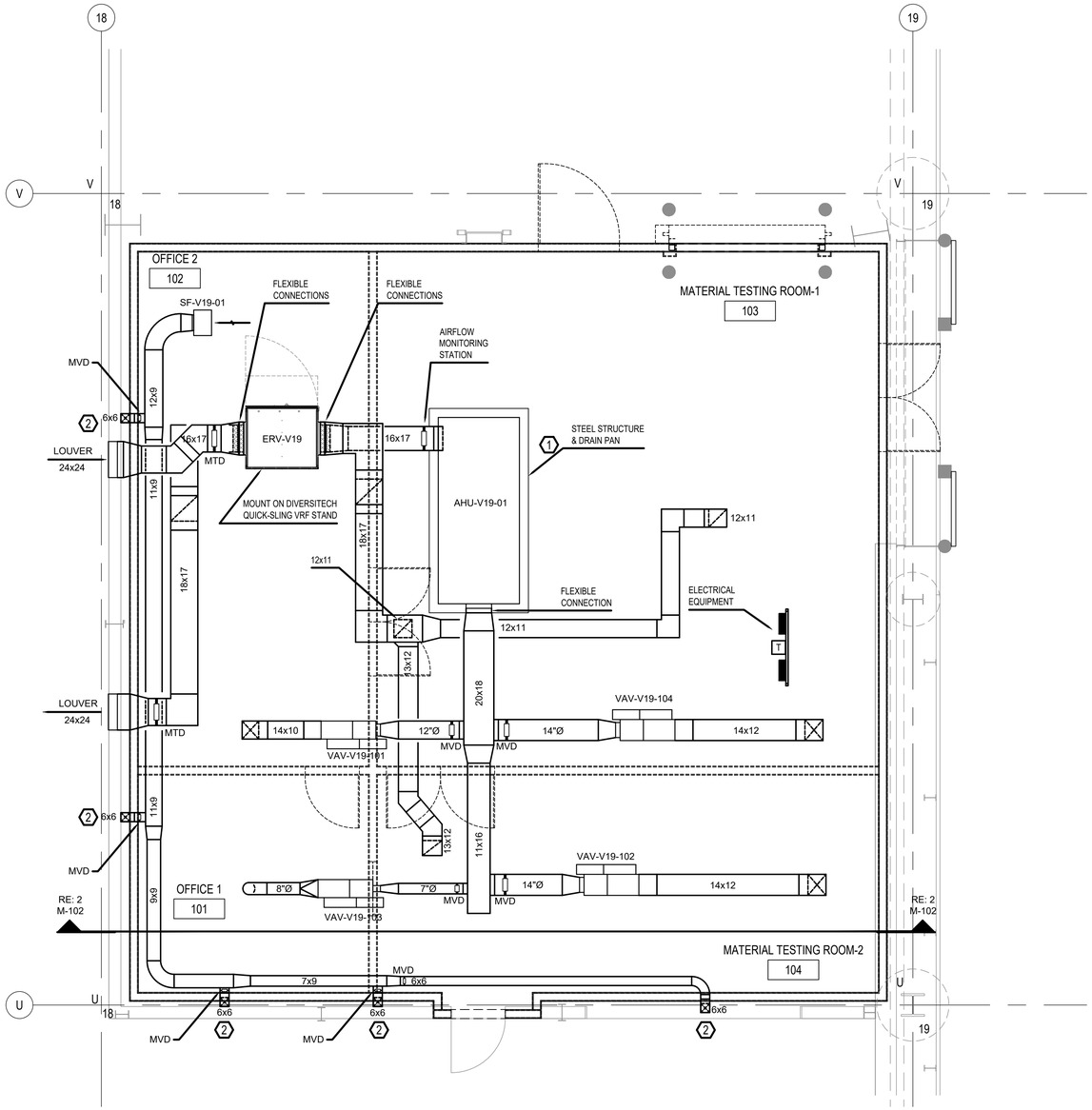

1 / M-101 MECHANICAL MEZZANINE PLAN
SCALE: 1/4" = 1'-0"

GENERAL NOTES

1. EXISTING BUILDING SYSTEMS WERE TAKEN FROM AS-BUILT DRAWINGS AND MAY NOT BE ACCURATE IN EVERY DETAIL. CONTRACTOR TO VERIFY EXISTING CONDITIONS.

KEYED NOTES

1. PROVIDE STEEL 'C' CHANNEL SUPPORT FOR AHU, 8" HIGH, TO EXTEND 6" PAST EACH SIDE OF THE AHU. PROVIDE CROSS CHANNEL UNDER THE FAN, COIL AND FILTER SECTIONS. PREPARE STEEL AND PAINT WHITE. PROVIDE 2" GALVANIZED, WELDED STEEL CONTAINMENT PAN UNDER AHU. TO BE SAME PLATFORM AS STEEL SUPPORT.

2. EXTEND 6x6 DUCT VERTICALLY WITHIN 12" AFF. DISTRIBUTION TO BE FIVE (5) HOLES ON EACH SIDE OF THE 6x6 DUCT, 18" AFF, 18" APART. REFER TO DETAILS 2 & 3 THIS SHEET.

2 / M-101 DUCT DETAIL –FRONT
SCALE: 1" = 1'-0"

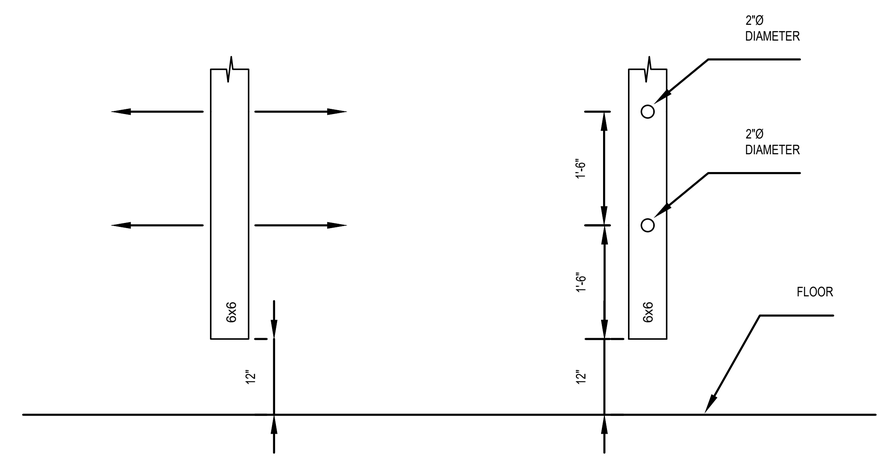

3 / M-101 DUCT DETAIL – SIDE
SCALE: 1" = 1'-0"

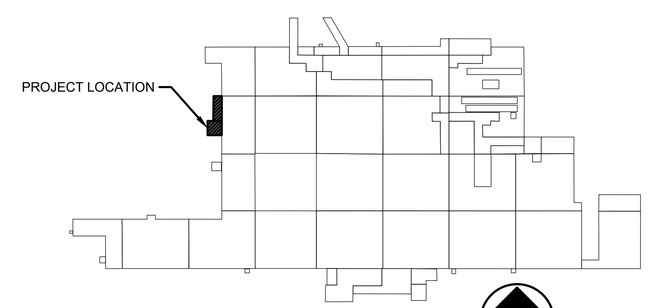

B9001 KEY PLAN

AIR FORCE MATERIEL COMMAND
72 ABW CIVIL ENGINEER DIRECTORATE
TINKER AFB, OK

35% DESIGN

PROJECT INFORMATION
WWYK250063
INSTALL REACT VII FACILITY
B9001, V19
TINKER AIR FORCE BASE, OKLAHOMA

REVISIONS

MARK	DATE	DESCRIPTION

MANAGEMENT INFORMATION
ISSUE DATE:7 OCT 25
DESIGN GROUP:TEPA-CSAG
DESIGNED BY:S SEXTON
DRAWN BY:T KISER
CHECKED BY:C HIXON
DESIGN FILE LOCATION:
Engr\Design\2020s\2025\202500063\0_Support\0_3_Drawings\Model

SHEET TITLE
MECHANICAL MEZZANINE PLAN

SHEET NUMBER
M-101
SHEET 32 OF

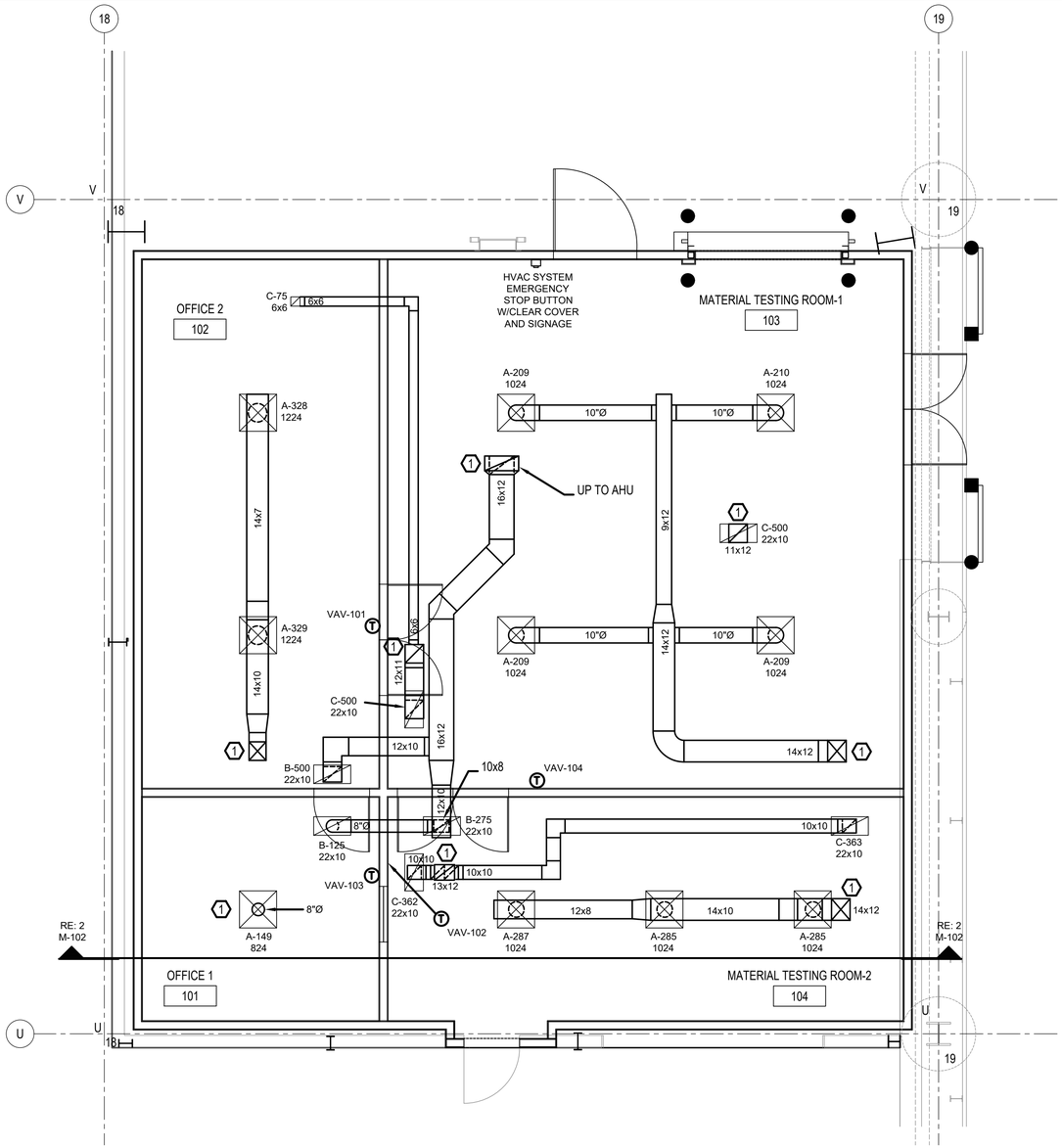

1 M-102 MECHANICAL FLOOR PLAN
SCALE: 1/4" = 1'-0"

GENERAL NOTES

1. EXISTING BUILDING SYSTEMS WERE TAKEN FROM AS-BUILT DRAWINGS AND MAY NOT BE ACCURATE IN EVERY DETAIL. CONTRACTOR TO VERIFY EXISTING CONDITIONS.

KEYED NOTES

1. PROVIDE DUCT FIRE DAMPER AT LID PENETRATION WITH ACCESS PANELS AS REQUIRED AND FIRE STOP.

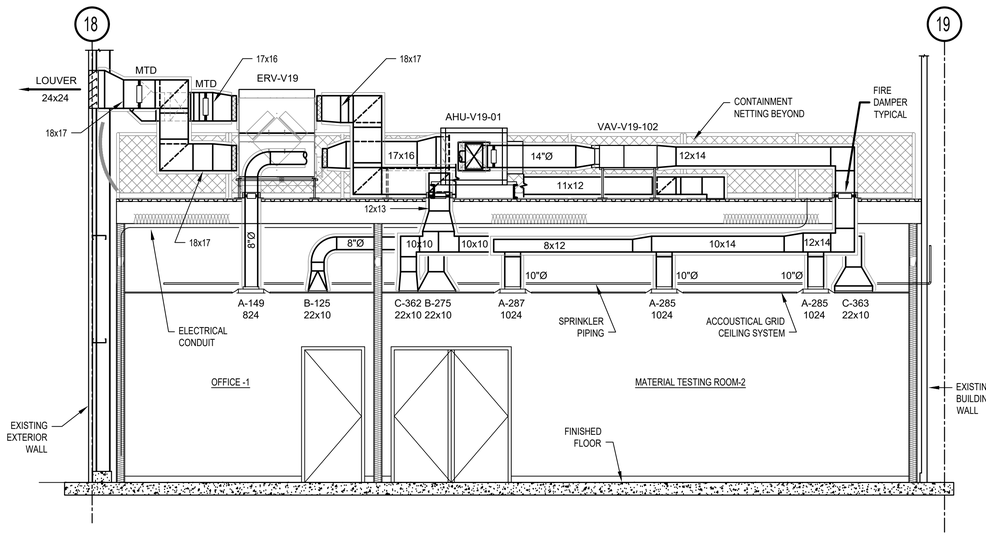

2 M-102 MECHANICAL SECTION
SCALE: 1/4" = 1'-0"

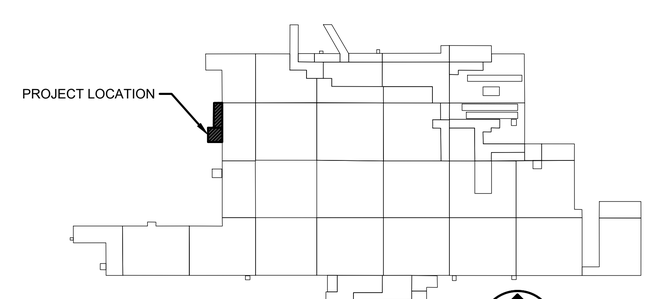

B9001 KEY PLAN

AIR FORCE MATERIEL COMMAND
72 ABW CIVIL ENGINEER DIRECTORATE
TINKER AFB, OK

35% DESIGN

PROJECT INFORMATION
WWYK250063
INSTALL REACT VII FACILITY
B9001, V19
TINKER AIR FORCE BASE, OKLAHOMA

REVISIONS

MARK	DATE	DESCRIPTION

MANAGEMENT INFORMATION
ISSUE DATE:7 OCT 25
DESIGN GROUP:TEPA-CSAG
DESIGNED BY:S SEXTON
DRAWN BY:T KISER
CHECKED BY:C HIXON
DESIGN FILE LOCATION:
Eng\Design\2020s\2025\202500630_Support\0_3_Drawings\Model

SHEET TITLE
MECHANICAL FLOOR PLAN

SHEET NUMBER
M-102
SHEET 33 OF

GENERAL NOTES

1. EXISTING BUILDING SYSTEMS WERE TAKEN FROM AS-BUILT DRAWINGS AND MAY NOT BE ACCURATE IN EVERY DETAIL. CONTRACTOR TO VERIFY EXISTING CONDITIONS.
2. REFER TO SHEET M-501 FOR PIPE DETAILS.

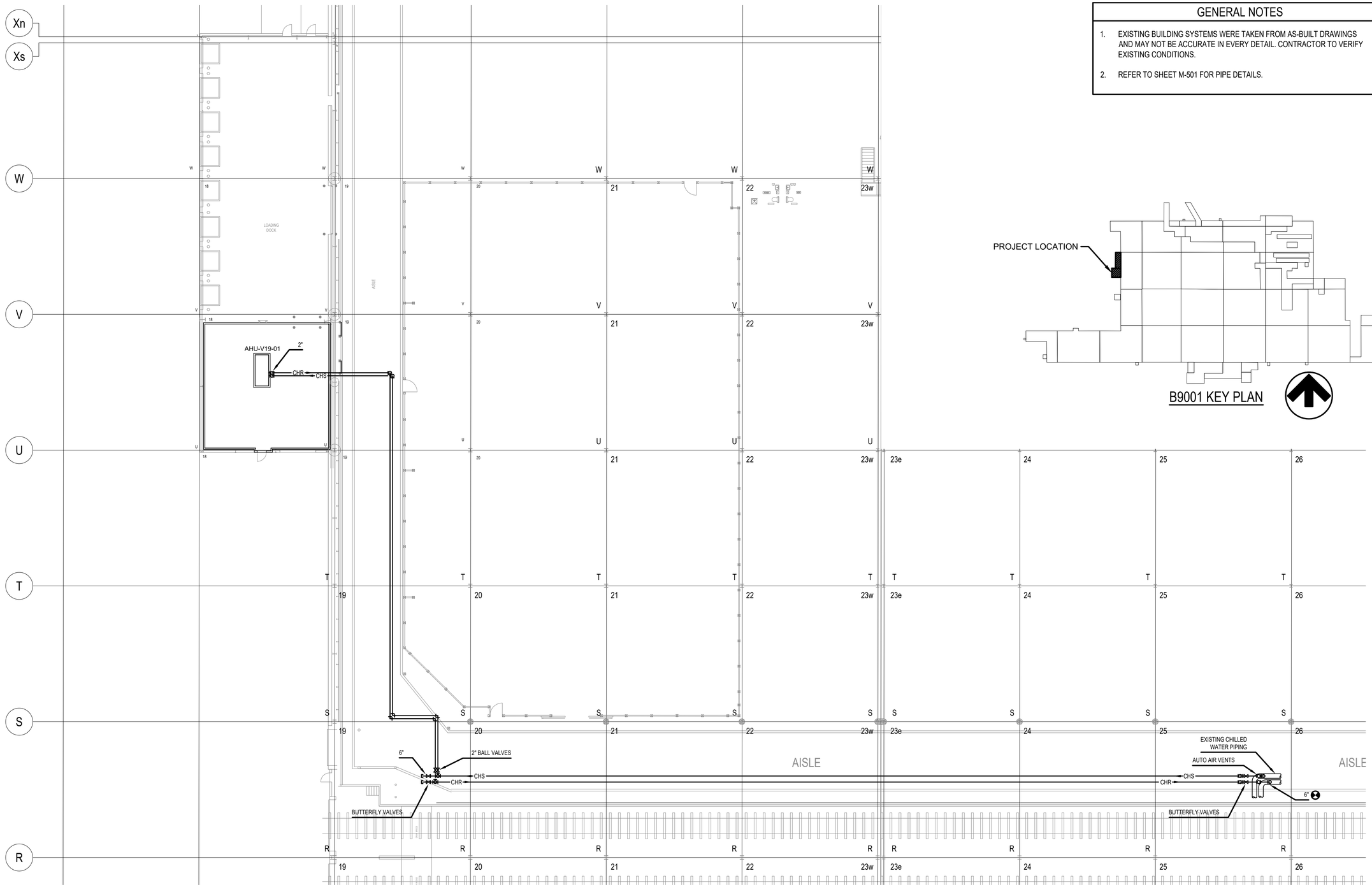

B9001 KEY PLAN

1 / M-103 HVAC PIPING FLOOR PLAN
SCALE: 1/16" = 1'-0"

N

AIR FORCE MATERIEL COMMAND
72 ABW CIVIL ENGINEER DIRECTORATE
TINKER AFB, OK

35% DESIGN

PROJECT INFORMATION
WWYK250063
INSTALL REACT VII FACILITY
B9001, V19
TINKER AIR FORCE BASE, OKLAHOMA

REVISIONS

MARK	DATE	DESCRIPTION

MANAGEMENT INFORMATION
ISSUE DATE:7 OCT 25
DESIGN GROUP:TEPA-CSAG
DESIGNED BY:S SEXTON
DRAWN BY:T KISER
CHECKED BY:C HIXON
DESIGN FILE LOCATION:
Eng\Design\2020s\2025\202500630_Support0_3_Drawings\Model

SHEET TITLE
HVAC PIPING FLOOR PLAN

SHEET NUMBER
M-103
SHEET 34 OF

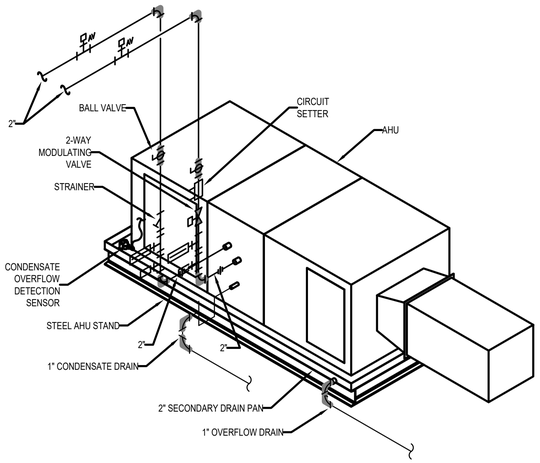

1 M501 AIR HANDLER PIPING ISOMETRIC DETAIL
SCALE: 1/2" = 1'-0"

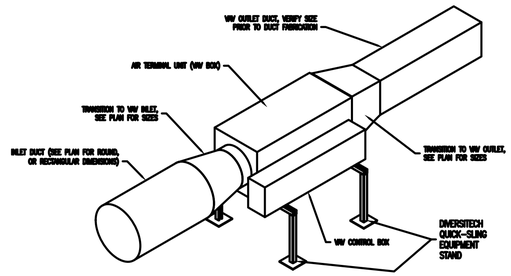

2 M501 DETAIL: AIR TERMINAL UNIT (VAV) INSTALLATION, TYP.
SCALE: 1/2" = 1'-0"

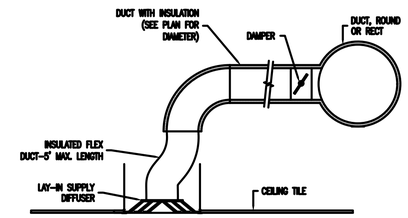

3 M501 DETAIL: SUPPLY AIR DUCT TO CEILING DIFFUSER
SCALE: 1/2" = 1'-0"

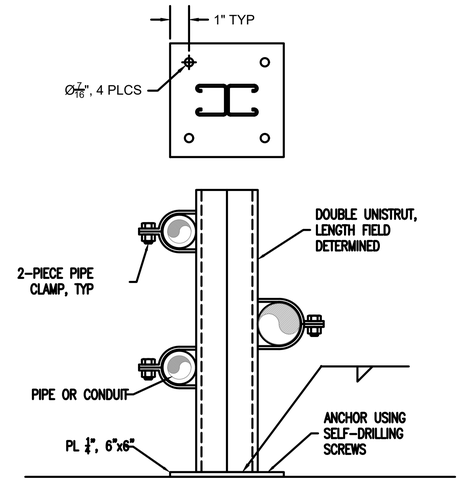

4 M501 PIPE SUPPORT DETAIL
SCALE: 3" = 1'-0"
SUPPORT PIPE FROM ROOF DECK

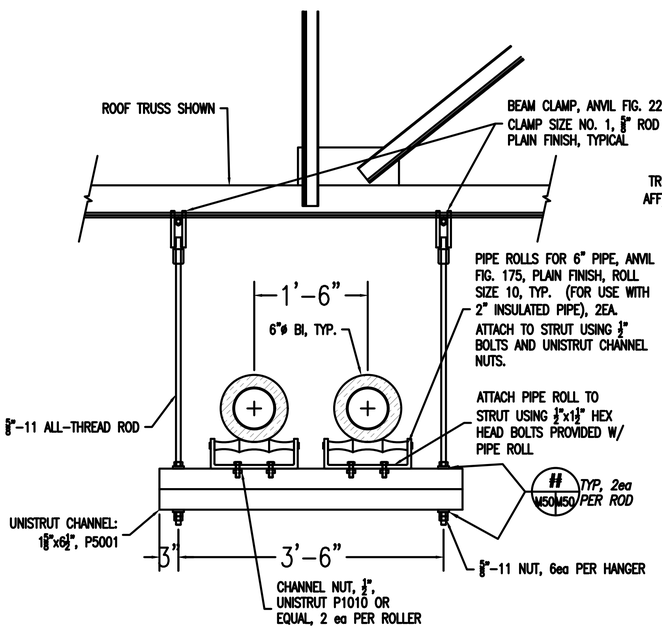

FRONT VIEW

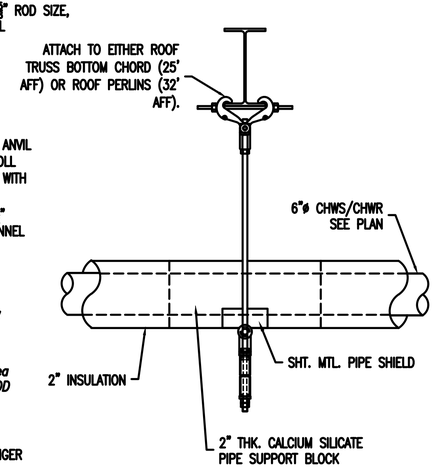

SIDE VIEW

4 M501 PIPE HANGER DETAIL H1
SCALE: 1" = 1'-0"
VERIFY SIZES OF STRUCTURE WITH INTENDED LOAD

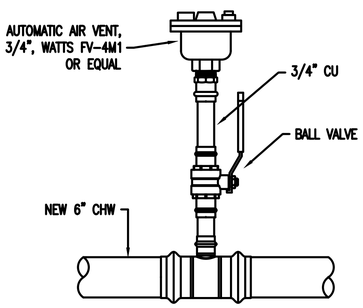

6 M501 AIR VENT DETAIL
SCALE: 3" = 1'-0"
TYPICAL, SUPPLY AND RETURN

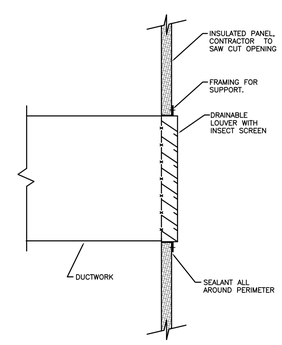

8 M501 LOUVER DETAIL
SCALE: 3" = 1'-0"
INSTALL IAW MANUFACTURERS RECOMMENDATIONS

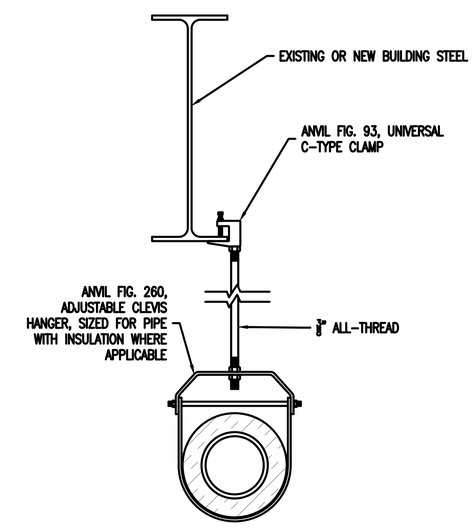

7 M501 PIPE HANGER DETAIL
SCALE: 3" = 1'-0"
SUPPORT PIPE FROM EXISTING STRUCTURE

AIR FORCE MATERIEL COMMAND
72 ABW CIVIL ENGINEER DIRECTORATE
TINKER AFB, OK

35% DESIGN

PROJECT INFORMATION
WWYK250063
INSTALL REACT VII FACILITY
B9001, V19
TINKER AIR FORCE BASE, OKLAHOMA

REVISIONS

MARK	DATE	DESCRIPTION

MANAGEMENT INFORMATION
ISSUE DATE:7 OCT 25
DESIGN GROUP:TEPA-CSAG
DESIGNED BY:S SEXTON
DRAWN BY:T KISER
CHECKED BY:C HIXON
DESIGN FILE LOCATION: Engr\Design\2020s\2025\202500631\0_Support\0_3_Drawings\Model

SHEET TITLE
DETAILS

SHEET NUMBER
M-501
SHEET 35 OF

AIR HANDLING UNIT SCHEDULE

MARK	LOCATION	SERVES	NOM. AIRFLOW (CFM)	MIN O.A. (CFM)	FAN						COILS							FILTERS		ACCESSORIES	BASIS OF DESIGN MANUFACTURER MODEL	NOTES
					SUPPLY FAN (BHP)	SUPPLY FAN (HP)	VOLTS/ PHASE	RPM	TSP (in wg)	EXT SP (in wg)	Rows/ FPI/ Fluid Vel (fps)	COOLING EAT (DB/WB)	COOLING LAT (DB/WB)	Air Pressure Drop (in)	Water ΔT (EFT/LFT)	Water Flowrate GPM	Water Pressure Drop (ft)	PRE-FILTER	FINAL FILTER			
AHU-V19	MEZZANINE	REACT VII	2,500	1,600	2.93	5	460/3	2,631	5.71	1.50	6 / 8 / 3.4	80/67	53.7/52.8	0.49	44/54	22	7.3	None	12" MERV 13	VFD DIRECT DRIVE	PACE / PAI-36x42	OP WT: 1542 lbs

NOTES: CASING SHALL BE 2" THICK DOUBLE WALL G90 GALVANIZED SHEETMETAL. FAN SHALL BE PLUG TYPE , CLASS II, SWSI, AIRFOIL TYPE BLADES, ALUMINUM WHEEL WITH GALVANIZED STEEL BASE MATERIAL.
FAN, FRAME AND MOTOR SHALL HAVE 2" SPRING ISOLATORS. PROVIDE VFD WITH FAN TO BE DIRECT DRIVE TYPE WITH AIR FLOW MONITORING.
AHU SHALL BE CERTIFIED BASED ON AHRI STANDARD 430/431.
AIR FILTER SHALL HAVE A MAXIMUM VELOCITY OF 400 FPM WITH A MAXIMUM INITIAL AIR PRESSURE DROP OF 0.30" AND BE 12" DEEP CARTRIDGE TYPE.
DRAIN PAN SHALL BE 304 STAINLESS STEEL OF WELDED CONSTRUCTION WITH UNDERSIDE INSULATION 1/2" THICK.
PROVIDE EBTRON GOLD SERIES GTX116E-P AIRFLOW MONITORING STATION IN THE OUTSIDE AIR DUCT AS INDICATED ON PLANS TO INCLUDE TEMPERATURE SENSOR AND REMOTE TRANSMITTER

AIR TERMINAL UNIT SCHEDULE

MARK	LOCATION	TYPE	INLET SIZE	CFM		OPER. PRESS. (IN. WG)		MAX RAD. N.C.		REHEAT COIL DATA						BASIS OF DESIGN	NOTES
				MAX	MIN	MIN	INLET	AT INLET PRESS.	SHOWN	CFM	E.A.T. (°F)	L.A.T. (°F)	CAP. (kW)	NO. STAGES	MAX AIR P.D. (IN. WG)	MANUFACTURER MODEL	
VAV-V19-101	MEZZANINE	VAV	8	657	250	0.02	1	20		250	55	94.5	2.5	SCR	0.20	TITUS / DESV	COILS 480/3
VAV-V19-102	MEZZANINE	VAV	10	857	250	0.02	1	24		250	55	94.5	3.0	SCR	0.20	TITUS / DESV	COILS 480/3
VAV-V19-103	MEZZANINE	VAV	4	149	50	0.04	1	27		50	55	94.5	2.5	SCR	0.20	TITUS / DESV	COILS 480/3
VAV-V19-104	MEZZANINE	VAV	10	837	250	0.02	1	27		250	55	94.5	3.0	SCR	0.20	TITUS / DESV	COILS 480/3

NOTES: HVAC CONTROLS CONTRACTOR TO PROVIDE ACTUATOR, CONTROLLER AND PROGRAMMING.

AIR DISTRIBUTION DEVICES SCHEDULE

Type: A-300 — Airflow (CFM)
Neck size (in): 824 — Size of device (in)

MARK	FINISH	MOUNTING LOCATION	BASIS OF DESIGN MANUFACTURER MODEL	NOTES
A	#26 WHITE	CEILING	TITUS OMNI	FIXED PATTERN, CEILING DIFFUSER WITH NOMINAL 24X24 MODULE. OPPOSED BLADE DAMPER AND FRAME STYLE FOR T-BAR MOUNTING
B	#26 WHITE	CEILING	TITUS 355RL	FIXED DEFLECTION RETURN GRILLE WITH OBD AND FRAME STYLE FOR T-BAR CEILING MOUNTING.
C	#26 WHITE	CEILING	TITUS 355RL	FIXED PATTERN EXHAUST REGISTER WITH OPPOSED BLADE DAMPER AND FRAME STYLE FOR SURFACE MOUNTING.

NOTES:

SUPPLY FAN SCHEDULE

MARK	LOCATION	SERVES	NOM. AIRFLOW (CFM)	OPERATING AIRFLOW (CFM)	S.P. (IN. WG)	FAN TYPE	BLADE TYPE	WHEEL DIA (IN.)	FAN RPM	S.P.L. 250 HZ MAX (dB)	MOTOR DATA				BASIS OF DESIGN MANUFACTURER MODEL	NOTES
											HP	V/PH	DRIVE TYPE	CONTROL TYPE		
SF-V19-01	MEZZANINE	EXTERIOR WALL	500	500	1/2	INLINE		6.313	1276		1/3	120/1	DIRECT	FSC	GEMINI / GN-720	

NOTES:

ENERGY RECOVERY UNIT SCHEDULE

MARK	LOCATION	SERVES	MIN. O.A. (CFM)	DESIGN O.A. (CFM)	ENERGY RECOVERY DATA						SUPPLY FAN DATA			EXHAUST FAN DATA			ELECTRICAL DATA				BASIS OF DESIGN MANUFACTURER/ MODEL	NOTES:
					WINTER HEAT RECOVERY			SUMMER HEAT RECOVERY			CFM	EXT. S.P. (IN. WG)	HP	CFM	EXT. S.P. (IN. WG)	HP	MCA	VOLT	PH	HZ		
					O.A. E.A.T DB/WB (°F)	R.A. E.A.T DB/WB (°F)	L.A.T. DB/WB (°F)	O.A. E.A.T DB/WB (°F)	R.A. E.A.T DB/WB (°F)	L.A.T. DB/WB (°F)												
ERV-V19	MEZZANINE	AHU-V19-01	1600	1600	12.5/10	70/51.1	53.9/40.8	99.5/73.9	75/62.3	81.9/68.0	1600	3/4	3	1800	3/4	3	6.5	460	3	60	RENEWAIRE HE-20	MERV 13 FILTERS

NOTES: DOUBLE WALL 20 GAUGE, G90 GALVANIZED STEEL, 1" EXPANDED FOAM INSULATED CONSTRUCTION
ADVANCED EC DIRECT DRIVES
MOTORIZED DAMPERS BOTH AIRSTREAMS
FACTORY MOUNTED NON-FUSED DISCONNECT
FILTER MONITOR BOTH AIRSTREAMS TO EMCS
PROVIDE INTERIOR VIBRATION ISOLATION OR UNIT TO STAND VIBRATION ISOLATION

AIR FORCE MATERIEL COMMAND
72 ABW CIVIL ENGINEER DIRECTORATE
TINKER AFB, OK

35% DESIGN

PROJECT INFORMATION
WWYK250063
INSTALL REACT VII FACILITY
B9001, V19
TINKER AIR FORCE BASE, OKLAHOMA

REVISIONS
MARK | DATE | DESCRIPTION

MANAGEMENT INFORMATION
ISSUE DATE:7 OCT 25
DESIGN GROUP:TEPA-CSAG
DESIGNED BY:S SEXTON
DRAWN BY:T KISER
CHECKED BY:C HIXON
DESIGN FILE LOCATION:
Engr\Design\2020s\2025\202500630_Support\0_3_Drawings\Model

SHEET TITLE
SCHEDULES

SHEET NUMBER
M-601
SHEET 36 OF

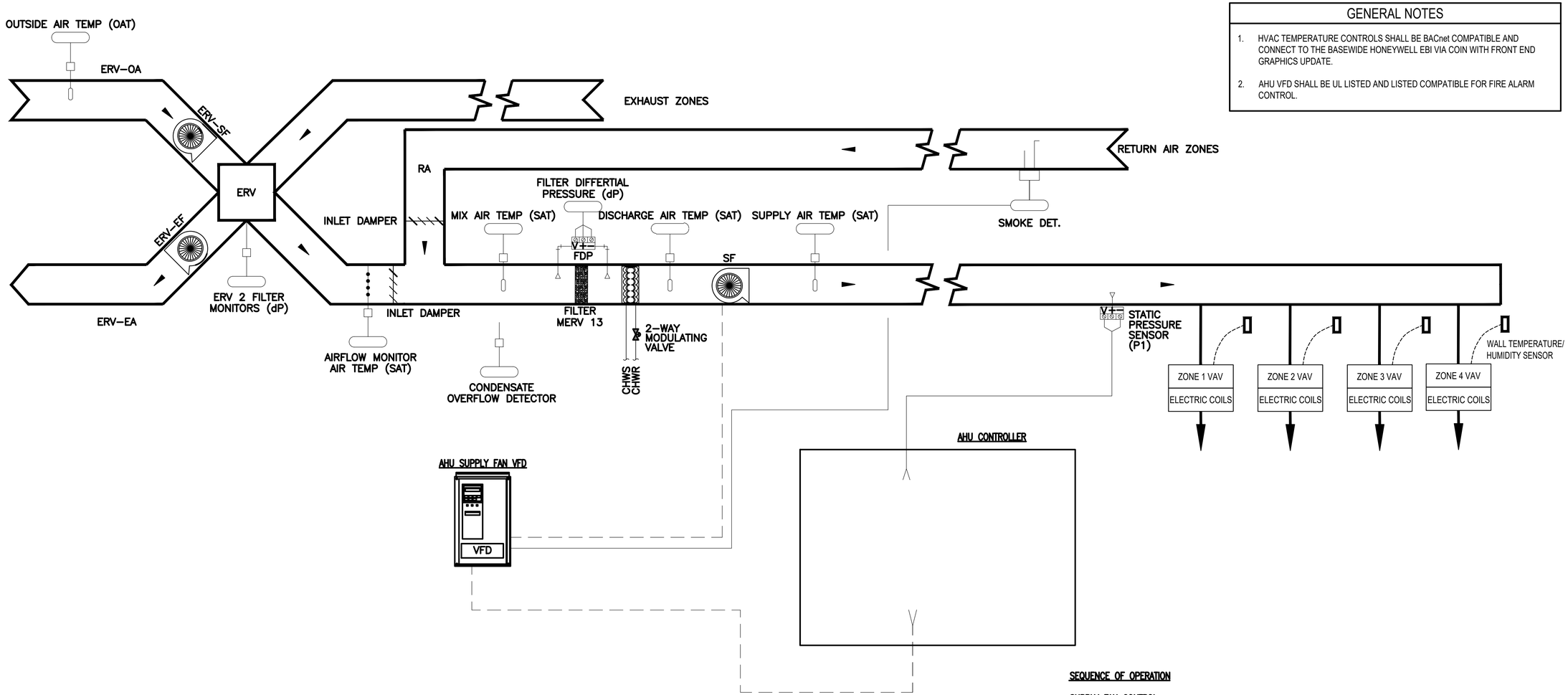

1 / M-602 HVAC SYSTEM SCHEMATIC
SCALE: NTS

GENERAL NOTES

1. HVAC TEMPERATURE CONTROLS SHALL BE BACnet COMPATIBLE AND CONNECT TO THE BASEWIDE HONEYWELL EBI VIA COIN WITH FRONT END GRAPHICS UPDATE.
2. AHU VFD SHALL BE UL LISTED AND LISTED COMPATIBLE FOR FIRE ALARM CONTROL.

SEQUENCE OF OPERATION

SUPPLY FAN CONTROL:
WHEN SYSTEM IS ENABLED, THE AHU CONTROLLER SHALL START THE SUPPLY FAN AND MODULATE THE FAN SPEED TO MAINTAIN THE DUCT STATIC PRESSURE SETPOINT.

SUPPLY FAN SHUTDOWN / ALARMS:
THE AHU SUPPLY FAN SHALL BE SHUT DOWN IN THE EVENT OF:
DETECTION OF COMBUSTION PRODUCTS BY DUCT SMOKE DETECTOR.
LOW MIXED AIR TEMPERATURE SENSOR ALARM.
FILTER DIFFERENTIAL PRESSURE ALARM.
ENCLOSURE E-STOP BUTTON PRESSED.
SECONDARY CONTAINMENT LIQUID SENSOR ALARM

OCCUPIED MODE: DURING OCCUPIED MODE THE ERV SHALL BE ENERGIZED WITH MOTORIZED DAMPERS OPENED ON THE OUTSIDE AND EXHAUST AIR DUCTS. COOLING COIL DICHARGE TEMPERATURE SENSOR SHALL MODULATE THE 2–WAY CHILLED WATER VALVE TO MAINTAIN A 55° F DISCHARGE AIR TEMPERATURE. VAV TERMINALS WITH REHEAT COILS SHALL MODULATE TO MAINTAIN SPACE TEMPERATURE SETPOINT. SUMMER SPACE SETPOINT TEMPERATURE SHALL BE 75° F, WINTER SETPOINT SHALL BE 70° F.

UNOCUPIED MODE: DURING UNOCCUPIED MODE THE ERV SHALL BE ENERGIZED AND THE MOTORIZED DAMPERS OPENED. COOLING COIL DICHARGE TEMPERATURE SENSOR SHALL MODULATE THE 2–WAY CHILLED WATER VALVE TO MAINTAIN A 60° F DISCHARGE AIR TEMPERATURE. VAV TERMINALS WITH REHEAT COILS SHALL MODULATE TO MAINTAIN SPACE TEMPERATURE SETPOINT. SUMMER SPACE SETPOINT TEMPERATURE SHALL BE 85° F, WINTER SETPOINT SHALL BE 65° F.

DEHUMIDIFICATION MODE: WHEN SPACE HUMIDITY RAISES ABOVE 60% RH THE ERV SHALL BE ENERGIZED AND THE MOTORIZED DAMPERS OPENED. COOLING COIL DICHARGE TEMPERATURE SENSOR SHALL MODULATE THE 2–WAY CHILLED WATER VALVE TO MAINTAIN A 54° F DISCHARGE AIR TEMPERATURE. VAV TERMINALS WITH REHEAT COILS SHALL MODULATE TO MAINTAIN SPACE TEMPERATURE SETPOINT.

SUPPLY AIR FAN SF–V19–01 SHALL BE DE–ENERGIZED ABOVE LOCAL OUTSIDE AIR TEMPERATURE SENSOR OF 35° F AND ENERGIZE BELOW 35° F.

AIR FORCE MATERIEL COMMAND
72 ABW CIVIL ENGINEER DIRECTORATE
TINKER AFB, OK

35% DESIGN

PROJECT INFORMATION
WWYK250063
INSTALL REACT VII FACILITY
B9001, V19
TINKER AIR FORCE BASE, OKLAHOMA

REVISIONS

MARK	DATE	DESCRIPTION

MANAGEMENT INFORMATION
ISSUE DATE:7 OCT 25
DESIGN GROUP:TEPA-CSAG
DESIGNED BY:S SEXTON
DRAWN BY:T KISER
CHECKED BY:C HIXON
DESIGN FILE LOCATION:
Engr\Design\2020s\2025\20250063\0_Support\0_3_Drawings\Model

SHEET TITLE
HVAC SCHEMATIC

SHEET NUMBER
M-602
SHEET 37 OF

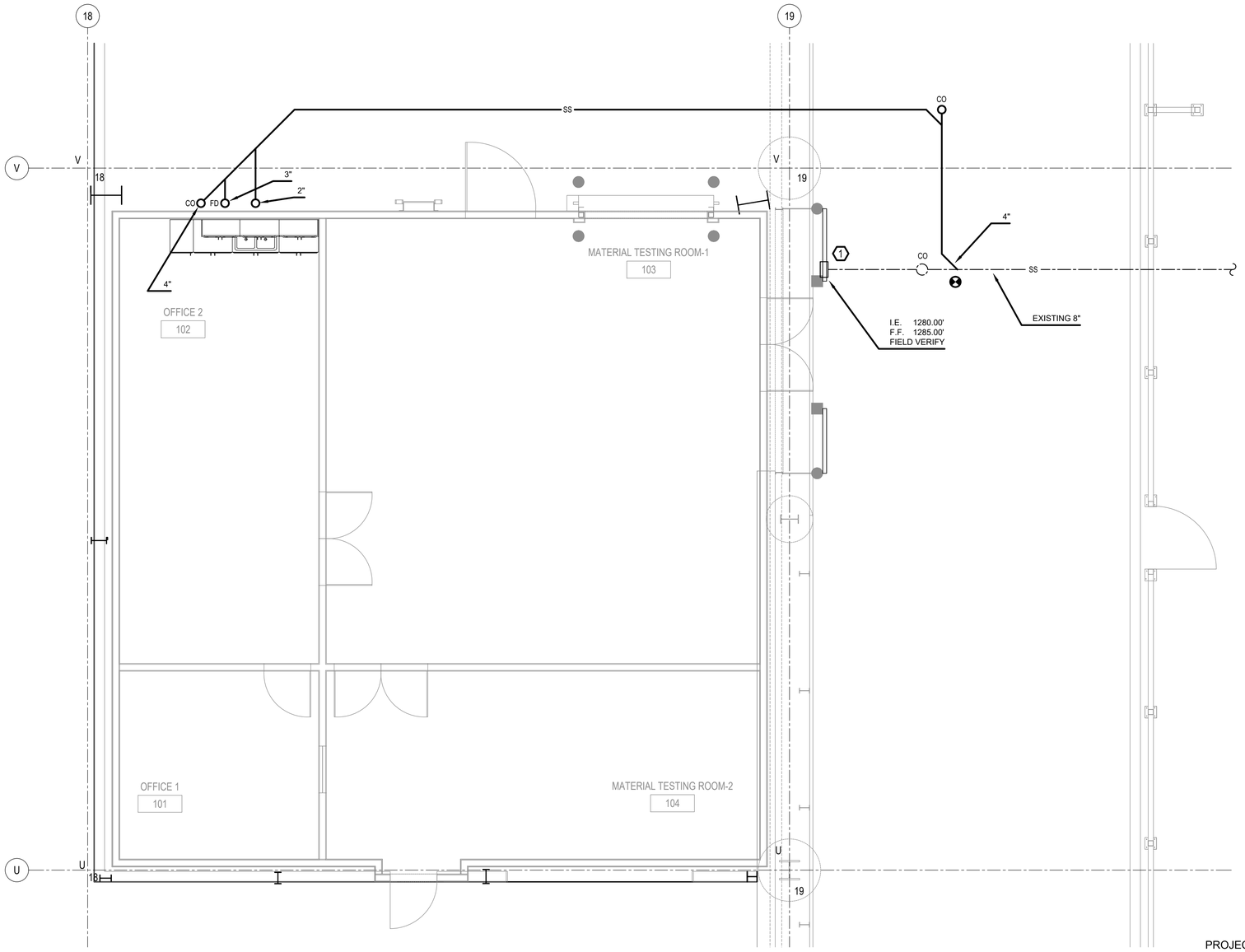

1 / P-101 UNDERFLOOR PLUMBING PLAN

SCALE: 1/4" = 1'-0"

GENERAL NOTES

1. EXISTING BUILDING SYSTEMS WERE TAKEN FROM AS-BUILT DRAWINGS AND MAY NOT BE ACCURATE IN EVERY DETAIL. CONTRACTOR TO VERIFY EXISTING CONDITIONS.

KEYED NOTES

1. VERIFY EXISTING FLOW LINE PRIOR TO CONSTRUCTION.

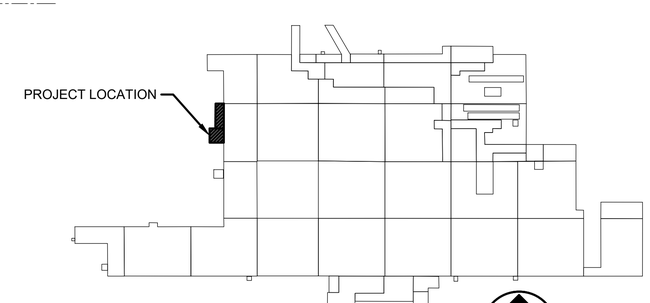

B9001 KEY PLAN

AIR FORCE MATERIEL COMMAND
72 ABW CIVIL ENGINEER DIRECTORATE
TINKER AFB, OK

35% DESIGN

PROJECT INFORMATION
WWYK250063
INSTALL REACT VII FACILITY
B9001, V19
TINKER AIR FORCE BASE, OKLAHOMA

REVISIONS

MARK	DATE	DESCRIPTION

MANAGEMENT INFORMATION
ISSUE DATE:7 OCT 25
DESIGN GROUP:TEPA-CSAG
DESIGNED BY:S SEXTON
DRAWN BY:T KISER
CHECKED BY:C HIXON
DESIGN FILE LOCATION:
Engr\Design\2020s\2025\202500630_Support\0_3_Drawings\Model

SHEET TITLE
UNDERFLOOR PLUMBING PLAN

SHEET NUMBER
P-101

SHEET 38 OF

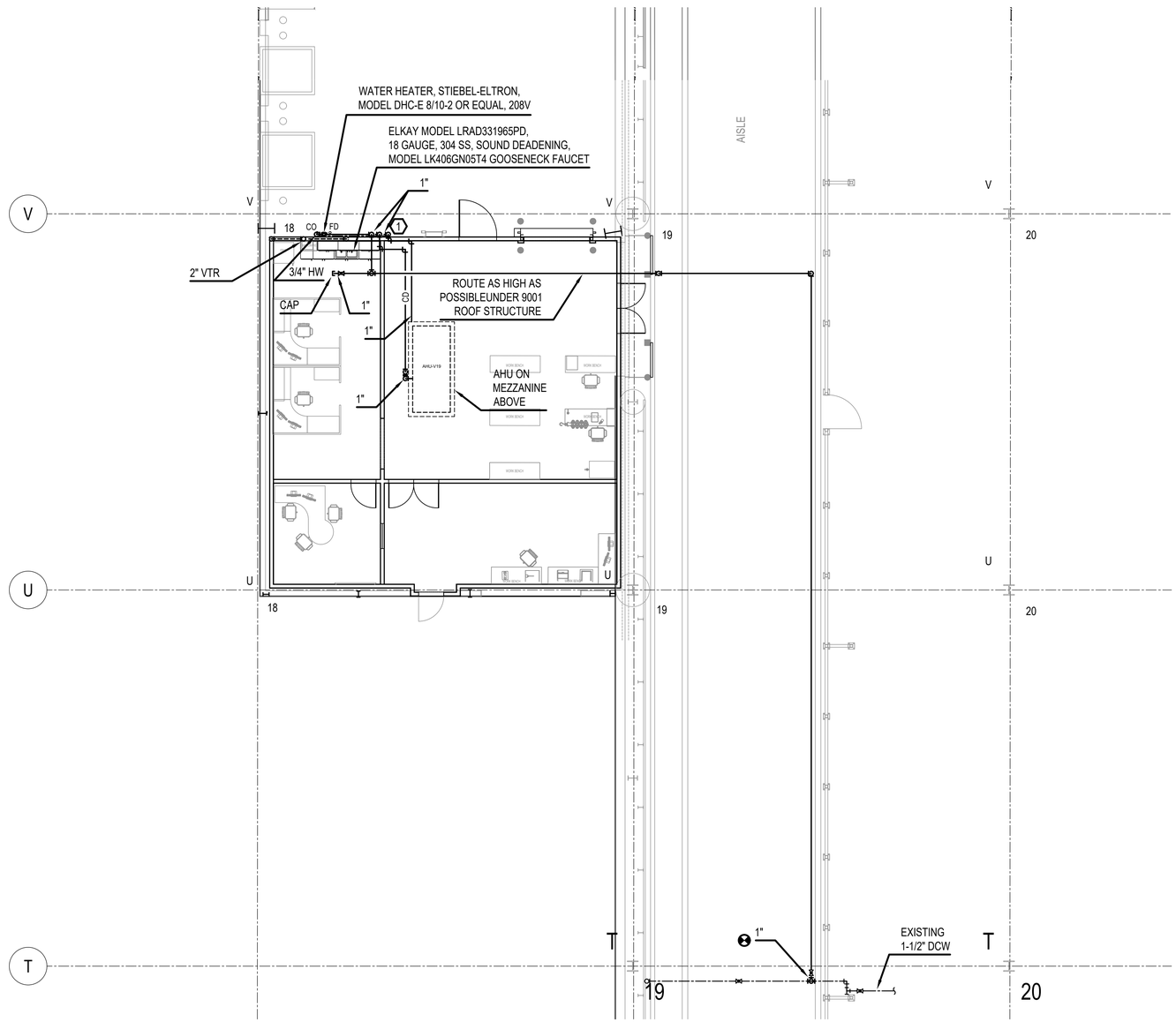

1 / P-102 PLUMBING FLOOR PLAN
SCALE: 1/8" = 1'-0"

GENERAL NOTES

1. EXISTING BUILDING SYSTEMS WERE TAKEN FROM AS-BUILT DRAWINGS AND MAY NOT BE ACCURATE IN EVERY DETAIL. CONTRACTOR TO VERIFY EXISTING CONDITIONS.

KEYED NOTES

1. ROUTE CONDENSATE DRAIN AND OVER PIPING TO FLOOR DRAIN. PROVIDE 90° EL AT FLOOR DRAIN FOR BOTH PIPES. CONDENSATE DRAIN TO BE INSULATED WITH 1/2" CLOSED CELL FOAM EPDM INSULATION.

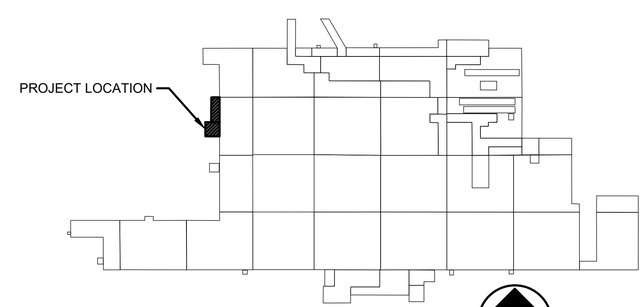

B9001 KEY PLAN

AIR FORCE MATERIEL COMMAND
72 ABW CIVIL ENGINEER DIRECTORATE
TINKER AFB, OK

35% DESIGN

PROJECT INFORMATION
WWYK250063
INSTALL REACT VII FACILITY
B9001, V19
TINKER AIR FORCE BASE, OKLAHOMA

REVISIONS

MARK	DATE	DESCRIPTION

MANAGEMENT INFORMATION
ISSUE DATE:7 OCT 25
DESIGN GROUP: TEPA-CSAG
DESIGNED BY: S SEXTON
DRAWN BY: T KISER
CHECKED BY: C HIXON
DESIGN FILE LOCATION:
Engr\Design\2020s\2025\202500630_Support\0_3_Drawings\Model

SHEET TITLE
PLUMBING FLOOR PLAN

SHEET NUMBER
P-102

SHEET 39 OF

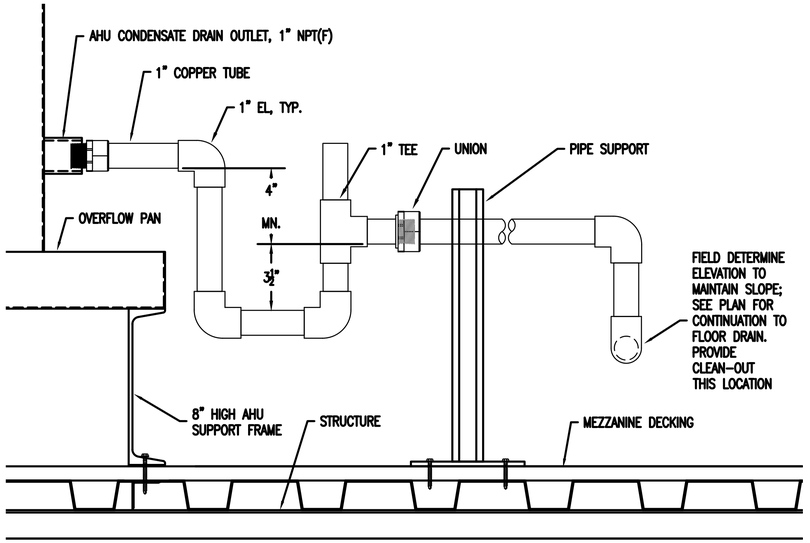

1 P501 AHU TRAPPED CONDENSATE DRAIN PIPING
SCALE: 3" = 1'-0"
PIPE INSULATION NOT SHOWN

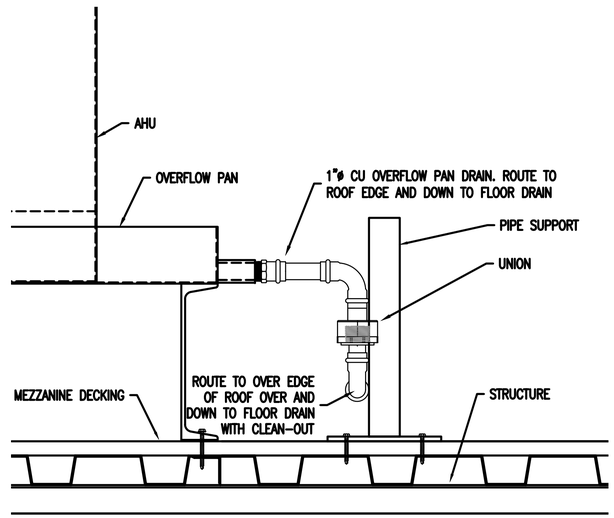

2 P501 AHU CONDENSATE OVERFLOW PAN DRAIN
SCALE: 3" = 1'-0"

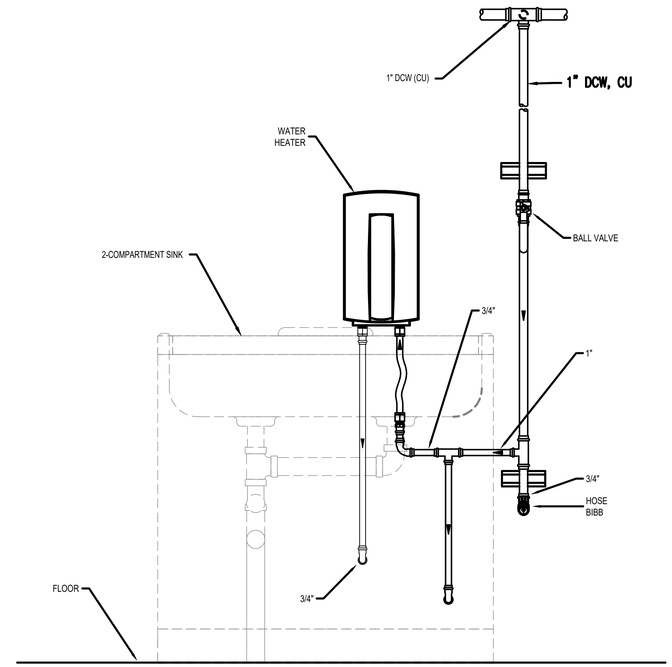

3 P501 POTABLE WATER PIPING DETAIL
SCALE: 1-1/2" = 1'-0"

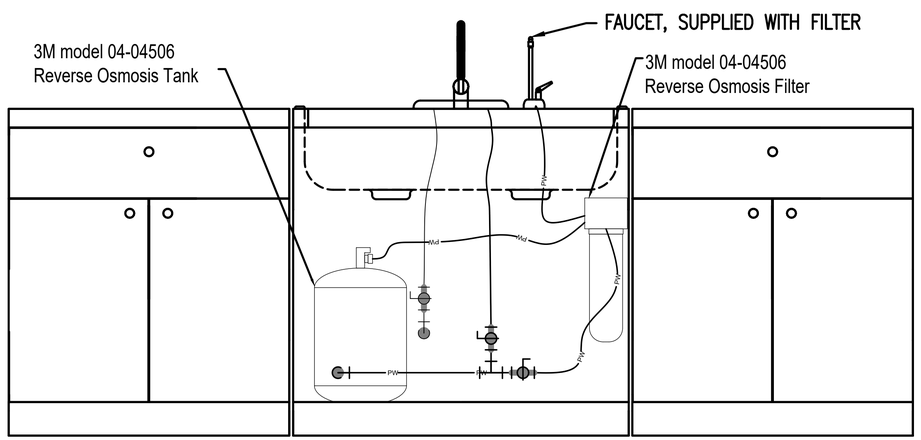

4 P501 REACT VII SINK PIPING DETAIL
SCALE: 1" = 1'-0"
SINK DRAIN PIPING NOT SHOWN FOR CLARITY

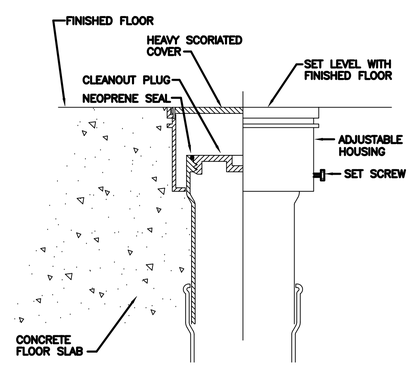

5 P501 SANITARY SEWER CLEAN-OUT DETAIL
SCALE: 3" = 1'-0"

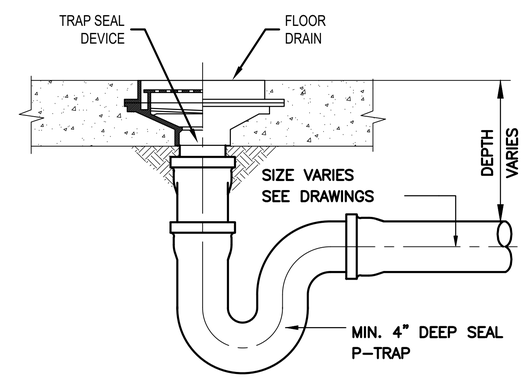

6 P501 FLOOR DRAIN DETAIL
SCALE: 3" = 1'-0"
TYPE I STRAINER

AIR FORCE MATERIEL COMMAND
72 ABW CIVIL ENGINEER DIRECTORATE
TINKER AFB, OK

35% DESIGN

PROJECT INFORMATION
WWYK250063
INSTALL REACT VII FACILITY
B9001, V19
TINKER AIR FORCE BASE, OKLAHOMA

REVISIONS
MARK | DATE | DESCRIPTION

MANAGEMENT INFORMATION
ISSUE DATE:7 OCT 25
DESIGN GROUP:TEPA-CSAG
DESIGNED BY:S.SEXTON
DRAWN BY:T KISER
CHECKED BY:C HIXON
DESIGN FILE LOCATION:
Engr\Design\2020s\2025\202500630_Support\0_3_Drawings\Model

SHEET TITLE
DETAILS

SHEET NUMBER
P-501
SHEET 40 OF

ELECTRICAL SYMBOLS LEGENDS AND ABBREVIATIONS

GENERAL NOTES:

(APPLICABLE TO ALL ELECTRICAL SHEETS)

1. EQUIPMENT INTERRUPTING CAPACITIES SPECIFIED IN THE CONTRACT DOCUMENTS ARE BASED UPON EQUIPMENT CHARACTERISTICS AND IMPEDANCES SHOWN ON THE DRAWINGS. IF ACTUAL INSTALLED EQUIPMENT DEVIATES FROM THESE CHARACTERISTICS OR HAS LOWER IMPEDANCES. THE CONTRACTOR SHALL INCREASE THE INTERRUPTING CAPACITIES OF ALL ITEMS ON THE LOAD SIDE OF THE DEVIANT EQUIPMENT IN DIRECT PROPORTION TO THE CHANGED CHARACTERISTICS. INTERRUPTING CAPACITIES SHALL NOT BE REDUCED TO VALUES LESS THAN THOSE REQUIRED BY THE CONTRACT DOCUMENTS.
2. FIRE STOP SHALL BE PROVIDED AT ALL LOCATIONS WHERE ELECTRICAL EQUIPMENT OR SYSTEMS PENETRATE FIRE RATED WALLS. SEE ARCHITECTURAL PLANS FOR RATED WALL LOCATIONS.
3. CONTROL WIRING P&ID'S FOR MECHANICAL EQUIPMENT ARE NOT SHOWN ON THESE SHEETS.
4. RISER AND ONE-LINE DIAGRAMS ARE MEANT TO SHOW ELECTRICAL RELATIONSHIPS FOR EQUIPMENT, AND THEREFORE MAY NOT INCLUDE ALL REQUIRED EQUIPMENT DEVICES, AND ACCESSORIES.

POWER SYMBOLS LEGEND

SYMBOL	DESCRIPTION
	RECEPTACLE, DUPLEX, 20A, 120V, GROUNDING 2W+G, NEMA 5-20R
C	RECEPTACLE, DUPLEX, SERVING COMPUTER LOAD. 20A, 120V, GROUNDING 2W+G RECEPTACLE, NEMA 5-20R
F	RECEPTACLE, DUPLEX, FLOOR MOUNTED, FLUSH, 20A, 120V, GROUNDING 2W+G NEMA 5-20R.
	RECEPTACLE, DUPLEX, CEILING MOUNTED, 20A, 120V, GROUNDING 2W+G, NEMA 5-20R
G	GFCI RECEPTACLE
	RECEPTACLE, DUPLEX, SPECIAL PURPOSE
	RECEPTACLE, QUADRAPLEX
	RECEPTACLE, SPECIAL PURPOSE
	SURFACE RECEPTACLE STRIP
C	RECEPTACLE, CLOCK
J	JUNCTION BOX, ABOVE CEILING
C J	JUNCTION BOX, WALL MOUNTED, SERVING COMPUTER LOAD.
W	WIREMOLD
$	SWITCH, TOGGLE, WALL MOUNTED, 20A., 120/277V RATED (AC ONLY), SINGLE-POLE, MOUNT 48" AFF
$2	SWITCH, TOGGLE, WALL MOUNTED, 20A., 120/277V RATED (AC ONLY), DOUBLE-POLE, MOUNT 48" AFF
$3	SWITCH, TOGGLE, WALL MOUNTED, 20A., 120/277V RATED (AC ONLY), THREE-WAY, SPDT. MOUNT 48" AFF
$4	SWITCH, TOGGLE, WALL MOUNTED, 20A., 120/277V RATED (AC ONLY), FOUR-WAY, SPDT. MOUNT 48" AFF
$DM	SWITCH, DIMMER, 120V, 1500 WATT. MOUNT 48" AFF
$M	SWITCH, MOTOR
S	SWITCH, PULL SWITCH, CEILING MOUNTED
	BRANCH CIRCUIT HOME RUN WITH NEUTRAL, PHASE AND EQUIPMENT GROUND RESPECTIVELY
EL-S	BRANCH CIRCUIT HOME RUN IDENTIFIER
T	TRANSFORMER, DRY TYPE
	SWITCH, DISCONNECT
	COMBINATION STARTER/DISCONNECT WITH HOA SWITCH-COORDINATE WITH MECH. CONTRACTOR.

POWER SYMBOLS LEGEND (CONTINUED)

SYMBOL	DESCRIPTION
	PANELBOARD, SURFACE MOUNTED
	PANELBOARD, RECESSED
	RACEWAY, ABOVE FLOOR
	RACEWAY, RISER UP
	RACEWAY, RISER DOWN
M 1/20HP	MOTOR W/HORSEPOWER
T	THERMOSTAT BY MECHANICAL CONTRACTOR
	CORD REEL, CEILING MOUNTED
	TELEPHONE RECEPTACLE, WALL MOUNTED
	DATA RECEPTACLE, WALL MOUNTED
	TELEPHONE/DATA RECEPTACLE, WALL MOUNTED
	BELL
S	SPEAKER, CEILING MOUNTED
M	MICROPHONE, CEILING MOUNTED
	SPEAKER CONTROL
	SOUND CABINET
	AUDIO/VISUAL PROJECTOR
TV	CABLE TV OUTLET
M	EXHAUST FAN
VFD	VARIABLE FREQUENCY DRIVER

LIGHTING SYMBOLS LEGEND

SYMBOL	DESCRIPTION
	2' x 2' LAY-IN LED FIXTURE
	2' x 2' LAY-IN LED EMERGENCY FIXTURE
	EXIT SIGN, LIGHTED, SURFACE OR PENDANT, CEILING MOUNTED W/LIGHTED FACE AND DIRECTIONAL ARROW.
	LED EMERGENCY EXIT SIGN
	BRANCH CIRCUIT HOME RUN

ONE-LINE & CONTROL SCHEMATIC LEGEND

SYMBOL	DESCRIPTION
	SCHEMATIC, CIRCUIT CONNECTIONS
	SCHEMATIC CIRCUIT
	ELECTRICAL BUSS
	SEPARABLE (PLUG-IN) CONNECTOR OR CONNECTION FOR DRAWOUT ASSEMBLIES
	CABLE OR WIRE
	SWITCH, DISCONNECT, FUSED, LOAD BREAK. FUSE AMPERE RATING [A] AND FUSE TYPE SHOWN NEXT TO SYMBOL
	TRANSFORMER, POWER, KVA RATING, WINDING VOLTAGES AND CONNECTIONS ARE SHOWN NEXT TO SYMBOL
	TRANSFORMER, CURRENT, TURNS RATIO, SHOWN NEXT TO SYMBOL
	GROUNDING CONNECTION. WHEN USED WITH TRANSFORMER WINDING SYMBOL IT INDICATES A NEUTRAL GROUNDING CONNECTION (ON SECONDARY SIDE ONLY)
D	DELTA CONNECTED
Y	WYE CONNECTED
	GROUNDED WYE WINDING CONNECTION
	RELAY OR CONTACTOR CONTACTS
	CIRCUIT BREAKER, MOLDED CASE, TRIP CURRENT [A] AND QUANTITY OF POLES [P] SHOWN NEXT TO SYMBOL
1200A 3P	SWITCH, DISCONNECT, NON-FUSED, LOAD BREAK. CONTINUOUS CURRENT RATING [A] AND QUANTITY OF POLES [P] SHOWN NEXT TO SYMBOL
	FUSE, AMPERE RATING [A] AND FUSE TYPE SHOWN NEXT TO SYMBOL
	MOTOR THERMAL OVERLOAD PROTECTOR
	INTEGRAL PHOTOELECTRIC CELL AND RELAY (PHOTOCONTROL)
M	WATTHOUR METER
C	CONTACTOR OR RELAY COIL. LETTER(S) INSIDE OF SYMBOL MATCH CONTACTS CONTROLLED
	SURGE ARRESTER, VALVE TYPE ARRESTER KV RATING SHOWN NEXT TO SYMBOL
	EQUIPMENT ENCLOSURE
SPD	SURGE PROTECTION DEVICE
GFP	GROUND FAULT PROTECTION

GROUNDING LEGEND

SYMBOL	DESCRIPTION
B	CONDUCTOR, BARE, UON
	GROUNDING CONNECTION, COUNTERPOISE TO GROUND ROD.

FIRE DETECTION SYMBOLS LEGEND

SYMBOL	DESCRIPTION
FCP	FIRE ALARM CONTROL PANEL
F	FIRE ALARM MANUAL PULL STATION
FSA	REMOTE ANNUNCIATOR PANEL
	FIRE ALARM SIGNALING DEVICE, VISUAL ONLY
	FIRE ALARM SIGNALING DEVICE, AUDIO/VISUAL, HORN AND LIGHT (1 ASSEMBLY)
	FIRE ALARM SIGNALING DEVICE, BELL
FTR	FIRE ALARM TRANSMITTER
135°	FIRE HEAT DETECTOR, W/ TEMPERATURE OR RATE OF RISE.
	SMOKE DETECTOR
	SPRINKLER SYSTEM VALVE TAMPER SWITCH
	SPRINKLER SYSTEM FLOW SWITCH
	FIREMANS TELEPHONE
ESR	ELEVATOR RECALL

SYMBOL MODIFIERS

SYMBOL	DESCRIPTION
AC	DEVICE MOUNTED ABOVE COUNTER TOP
AV	AUDIBLE AND VISUAL
C	RECEPTACLE SERVING COMPUTER LOAD.
E	EXISTING
F	FIXED TEMPERATURE
GFI	GROUND FAULT CIRCUIT INTERRUPTER
N	NEW
NL	NIGHT LIGHT
R	ITEM OR DEVICE RECESSED INTO MOUNTING SURFACE
RF	RADIO FREQUENCY
WP	WEATHERPROOF
WP	WATER PROOF

ABBREVIATIONS

A	AMPERES OR TRIP AMPERES
AC	ALTERNATING CURRENT
AFF	ABOVE FINISHED FLOOR
AFG	ABOVE FINISHED GRADE
AIC	SYMMETRICAL AMPS INTERRUPTING CAPACITY
AWG	AMERICAN WIRE GAUGE
A/R	AS REQUIRED
ARR.	ARRESTOR
BLDG	BUILDING
BRKT	BRACKET
C	CONDUIT
CB	CIRCUIT BREAKER
CKT	CIRCUIT
CL	CURRENT LIMITING
CO	CONDUIT ONLY
CTL	CONTROL
DC	DIRECT CURRENT
D.T.C.	DATA TERMINAL CABINET
EMCS	ENERGY MONITORING AND CONTROL SYSTEM
FACP	FIRE ALARM CONTROL PANEL
FT	FOOT, FEET
GFCI	GROUND FAULT CIRCUIT INTERRUPTER, 5MA PERSONNEL PROTECTION UNLESS OTHERWISE NOTED.
GRD	GROUND
HZ	HERTZ
IAW	IN ACCORDANCE WITH
IG	ISOLATED GROUND
IN	INCH, INCHES
IR	INFRARED
KV	KILOVOLTS
KVA	KILOVOLT AMPERES
KVAR	KILOVOLT AMPS REACTIVE
KWH	KILOWATT HOURS
L-L	LINE TO LINE
L-N	LINE TO NEUTRAL
MFR	MANUFACTURER
MH	MANHOLE
MIN	MINIMUM
MTD	MOUNTED
MTG	MOUNTING
N.C.	NORMALLY CLOSED
NEC	NATIONAL ELECTRICAL CODE
NEMA	NATIONAL ELECTRICAL MANUFACTURERS ASSOCIATION
NEUT	NEUTRAL
N.O.	NORMALLY OPEN
NLT	NOT LESS THAN
NMT	NOT MORE THAN
OH	OVERHEAD
PAS	PUBLIC ADDRESS SYSTEM
PE	PHOTOELECTRIC
PH	PHASE
PLCS	PLACES
PNL	PANELBOARD
PVC	POLYVINYL CHLORIDE ELECTRICAL RACEWAY USED ONLY U.G., CARLON OR EQUIVALENT
RC	RIGID STEEL CONDUIT
REF	REFERENCE
REQ'D	REQUIRED
RGC	RIGID GALVANIZED STEEL CONDUIT
RM	ROOM
RMC	RIGID METALIC CONDUIT
SHT	SHEET
SOB	STANDOFF BRACKET
SPACE	SPACE(S) ONLY (NO BREAKER DEVICE)
SPARE	SPARE BREAKER OR DEVICE
SPDT	SINGLE-POLE, DOUBLE-THROW
SPECS	CONTRACT SPECIFICATIONS
SPST	SINGLE-POLE, SINGLE-THROW
S/N	SOLID NEUTRAL
TB	TELEPHONE BACKBOARD
TYP	TYPICAL
UG	UNDERGROUND
UL	LISTED BY UNDERWRITER'S LABORATORIES
UON	UNLESS OTHERWISE NOTED
V	VOLTS
VA	VOLT AMPERES
W	WATT
WH	WEATHERHEAD
W/	WITH
Ø	PHASE
2W+G	CIRCUIT TYPE
3W+G	CIRCUIT TYPE
4W+G	CIRCUIT TYPE

SYMBOL NOTES

1. THESE SYMBOLS APPLY TO THE ENTIRE SET OF CONTRACT DRAWINGS.
2. ALL SYMBOLS ARE NOT NECESSARILY USED IN THE DRAWINGS FOR THIS PROJECT. LISTING OF SYMBOLS DOES NOT IMPLY THAT ALL SYMBOLS ARE USED IN THE CONTRACT DRAWINGS.
3. COLORS FOR ALL OUTLETS AND SWITCHES SHALL BE AS SHOWN ON ARCHITECTURAL PLANS.
4. ALL MOUNTING HEIGHTS SHOWN IN SYMBOL LEGEND SHALL BE AS PER TAS/ADA REQUIREMENTS UNLESS OTHERWISE NOTED ON THE ARCHITECTURAL DRAWINGS.
5. BRANCH CIRCUIT NUMBERS MAY BE SHOWN NEXT TO SYMBOLS IN MULTIWIRE CIRCUITS.
6. EQUIPMENT IDENTIFIERS, MATCHING EQUIPMENT SCHEDULES, ARE DISPLAYED ATTACHED TO SYMBOLS BY LEADER ARROWS, UON.
7. SYMBOL ORIENTATION DOES NOT IMPLY DEVICE OR EQUIPMENT ORIENTATION, UNLESS NOTED AS SUCH. SEE REFLECTED CEILING PLANS FOR LIGHT FIXTURE POSITIONS AND ORIENTATIONS.
8. SYMBOL SIZE DOES NOT IMPLY EQUIPMENT SIZE, UON.
9. LOWER CASE LETTER IN POSITION "X" INDICATES FIXTURES CONTROLLED BY SAME LETTER.
10. PLAN SYMBOLS USE THE FOLLOWING LINE TYPE CONVENTION AND ARE REPRESENTED AS FOLLOWS:

- LINETYPE, DENOTES EXISTING TO REMAIN
- LINETYPE, DENOTES EXISTING TO BE DEMOLISHED
- LINETYPE, DENOTES NEW U.G. OR CONCEALED CONSTRUCTION
- LINETYPE, DENOTES NEW CONSTRUCTION
- LINETYPE, DENOTES LIGHTING SWITCHLEG

AIR FORCE MATERIEL COMMAND
72 ABW CIVIL ENGINEER DIRECTORATE
TINKER AFB, OK

35% DESIGN

PROJECT INFORMATION
WWYK250063
INSTALL REACT VII FACILITY
B9001, V19
TINKER AIR FORCE BASE, OKLAHOMA

REVISIONS

MARK	DATE	DESCRIPTION

MANAGEMENT INFORMATION
ISSUE DATE:7 OCT 25
DESIGN GROUP:TEPA-CSAG
DESIGNED BY:D PERRY
DRAWN BY:T KISER
CHECKED BY:C HIXON
DESIGN FILE LOCATION: Engr\Design\2020s\2025\202500063\0_Support\0_3_Drawings\Model

SHEET TITLE
ELECTRICAL SYMBOLS AND ABBREVIATIONS

SHEET NUMBER
E-001
SHEET 41 OF

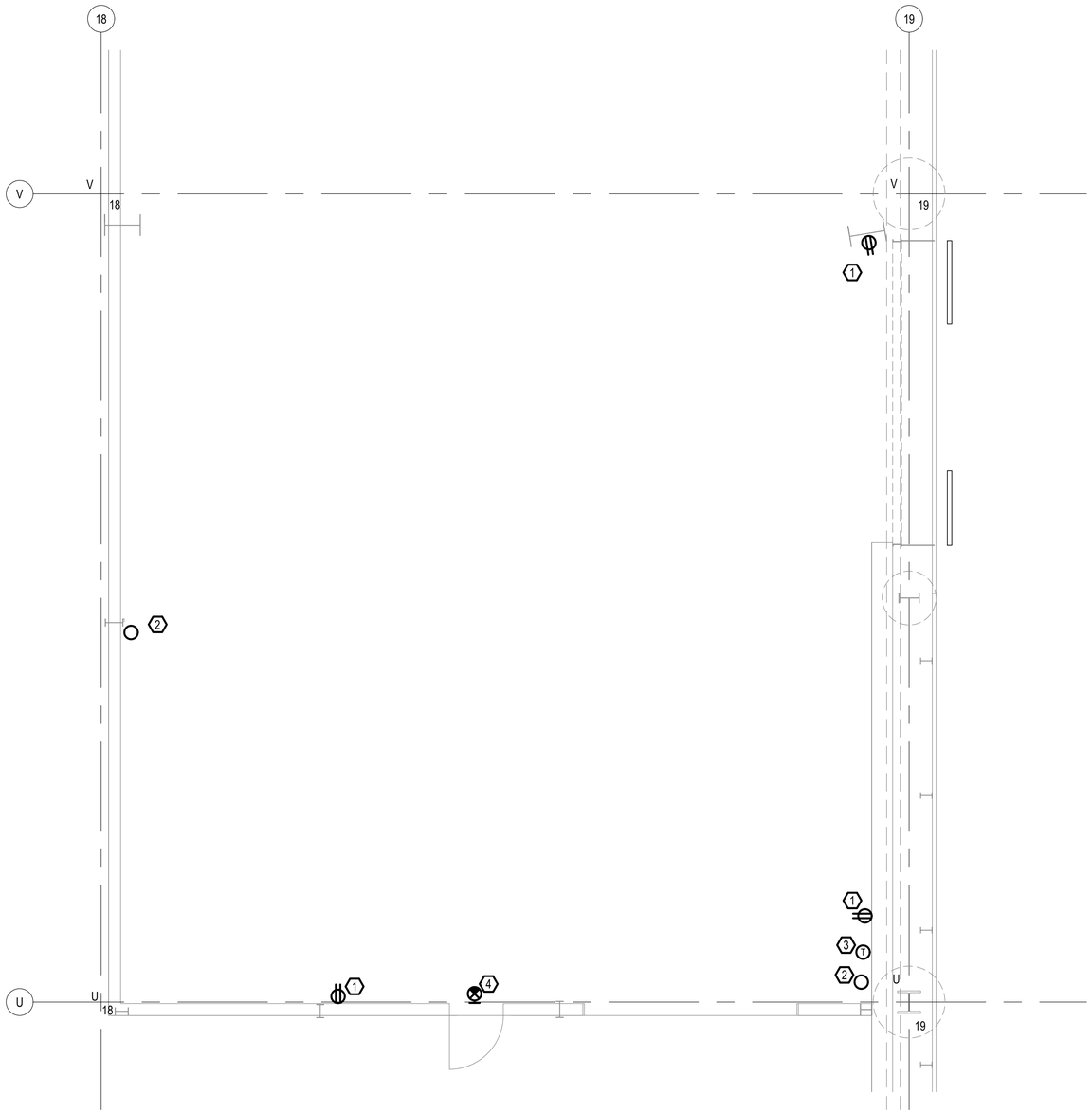

1 / ED-101 ELECTRICAL DEMOLITION PLAN
SCALE: 1/4" = 1'-0"

GENERAL NOTES

1. ALL ELECTRIC SERVICES, CONDUITS, AND COMPONENTS LOCATED WITHIN THE REACT VII SPACE SHALL BE REMOVED IF THEY ARE NOT IDENTIFIED ON THIS SHEET.

KEYED NOTES

1. EXISTING 120V RECEPTACLE REMOVE RECEPTACLE, CONDUIT, AND CONDUCTORS TO SOURCE OR NEAREST JUNCTION BOX WHERE THE CIRCUIT IS TAPPED OUTSIDE OF THE REMODEL AREA.
2. EXISTING DEAD-END CONDUIT WITH OR WITHOUT CONDUCTORS. REMOVE CONDUIT ANF CONDUCTORS TO SOURCE.
3. OLD NON-FUNCTIONAL THERMOSTAT. REMOVE TO SOURCE.
4. EXISTING EXIT SIGN. REMOVE SIGN, CONDUIT AND CONDUCTORS TO SOURCE.

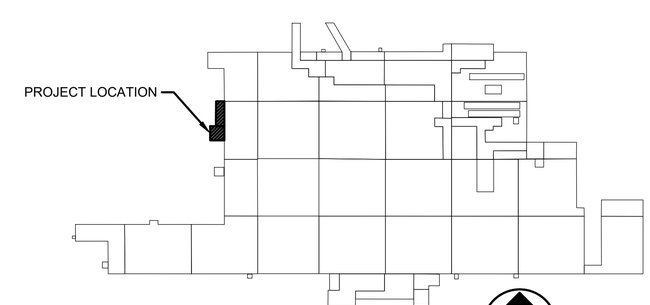

B9001 KEY PLAN

AIR FORCE MATERIEL COMMAND
72 ABW CIVIL ENGINEER DIRECTORATE
TINKER AFB, OK

35% DESIGN

PROJECT INFORMATION
WWYK250063
INSTALL REACT VII FACILITY
B9001, V19
TINKER AIR FORCE BASE, OKLAHOMA

REVISIONS

MARK	DATE	DESCRIPTION

MANAGEMENT INFORMATION
ISSUE DATE:7 OCT 25
DESIGN GROUP:TEPA-CSAG
DESIGNED BY:D PERRY
DRAWN BY:T KISER
CHECKED BY:C HIXON
DESIGN FILE LOCATION:
Engr\Design\2020s\2025\2025006310_Support0_3_Drawings\Model

SHEET TITLE
ELECTRICAL DEMOLITION PLAN

SHEET NUMBER
ED-101

SHEET 42 OF

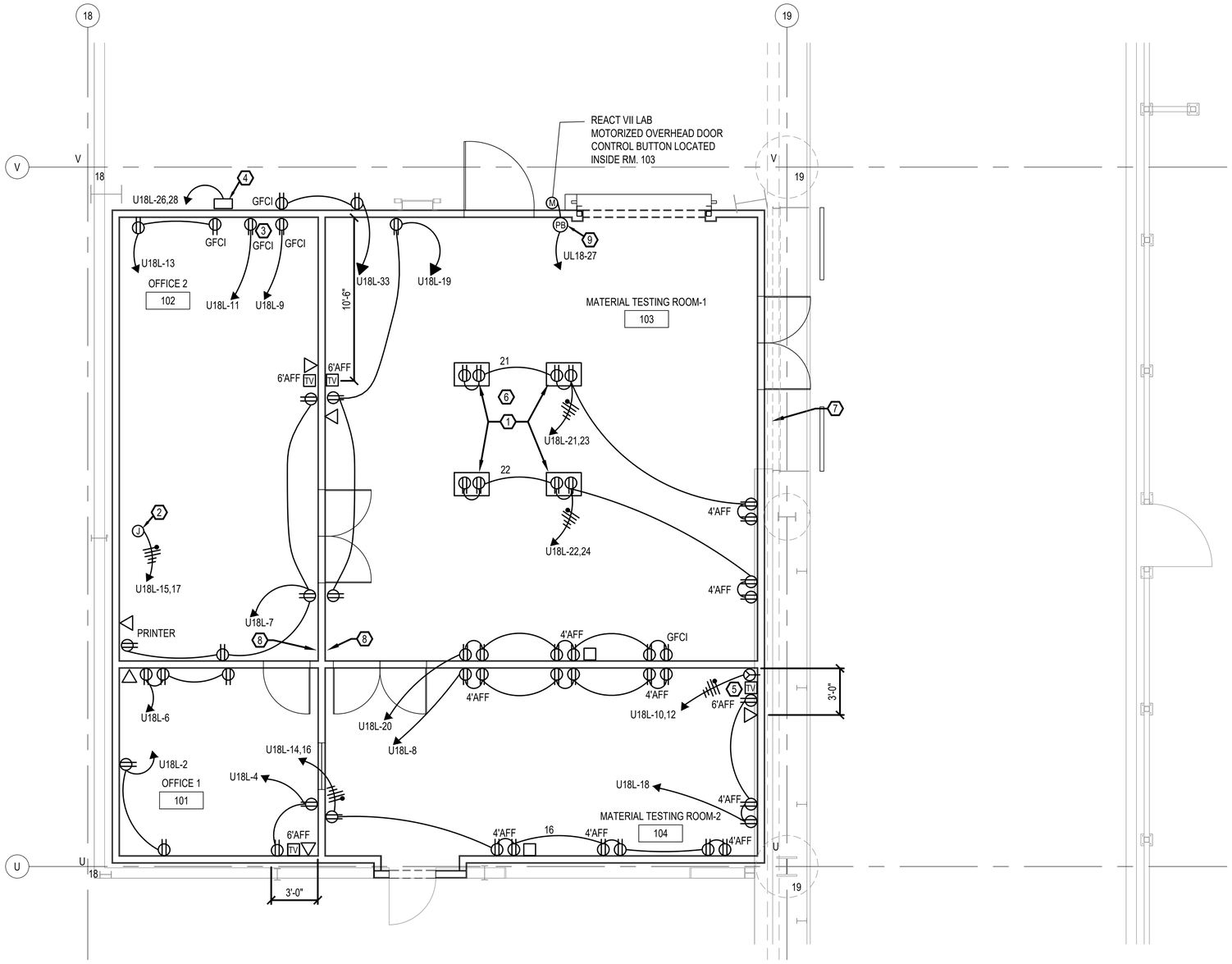

1 / E-101 ELECTRICAL POWER PLAN
SCALE: 1/4" = 1'-0"

GENERAL NOTES

1. INSTALL BRADLY OR EQUAL PRINTED LABELS ON ALL DEVICES AND BOX COVERS LISTING THE SOURCE PANEL AND CIRCUIT NUMBER COORDINATE WITH PANEL AS-BUILT.
2. UNLESS OTHERWISE NOTED MOUNT RECEPTACLES AND DATA BOXES AT 18-INCHES ABOVE FINISHED FLOOR (AFF)

KEYED NOTES

1. TYPICAL OF 4EA REEL CRAFT CORD REELS #L4545123-7Q WITH QUAD RECEPTACLE MOUNTED FLUSH ON THE BOTTOM OF THE ACOUSTICAL CEILING WITH STRUCTURAL SUPPORT FROM BUILDING STRUCTURE. REMOVE THE CORD CAP FOR SUPPLY CONNECTION ON THE REEL HARDWIRE INTO A 4" SQUARE JUNCTION BOX WITH BLANK COVER ABOVE THE REMOVABLE CEILING. INSTALL AN SO CORD GRIP HUBBELL #SHC1040 OR EQUAL ON THE CEILING PLATE TO ROUTE THE CORD ABOVE THE CEILING. REFER TO DETAILS ON MECHANICAL PRINTS FOR REEL SUPPORT AND MOUNTING DETAILS. APPROXIMATE LOCATION SHOWN. FIELD ADJUST LOCATION AS REQUIRED TO COINCIDE WITH ACOUSTICAL CEILING LAYOUT.
2. MOUNT J-BOX FOR FURNITURE POWER CONNECTION IN AN ACCESSIBLE LOCATION ABOVE THE REMOVABLE CEILING.
3. TYPICAL OF 3EA GFCI DUPLEX RECEPTACLES MOUNTED AT 8" ABOVE THE LOWER CABINET TOP AS SHOWN.
4. WATER HEATER.
5. INSTALL A HUBBELL #HBL2620 L6-30R RECEPTACLE WITH A #NP720WH WALLPLATE. MOUNT AT 18" AFF FLUSH IN THE WALL IN A 4" SQ BOX WITH A 5/8" SINGLE-GANG PLASTER RING.
6. COORDINATE LOCATION OF CEILING CORD REELS WITH ARCH. PLAN. WORKSTATION LAYOUT.
7. COORDINATE LOCATION OF DOOR BELL WITH ARCHITECTURAL PLANS.
8. COORDINATE LOCATION OF BOTH DOOR CHIMES WITH ARCHITECTURAL PLANS.
9. COORDINATE CONTROL STATION INSTALLATION WITH CONSTRUCTION OF RATED WALL ASSEMBLIES.

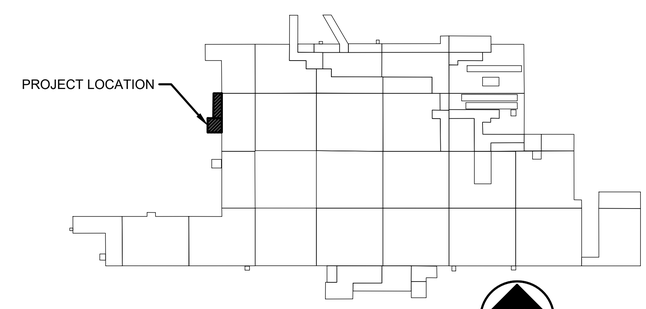

B9001 KEY PLAN

AIR FORCE MATERIEL COMMAND
72 ABW CIVIL ENGINEER DIRECTORATE
TINKER AFB, OK

35% DESIGN

PROJECT INFORMATION
WWYK250063
INSTALL REACT VII FACILITY
B9001, V19
TINKER AIR FORCE BASE, OKLAHOMA

REVISIONS

MARK	DATE	DESCRIPTION

MANAGEMENT INFORMATION
ISSUE DATE:7 OCT 25
DESIGN GROUP:TEPA-CSAG
DESIGNED BY:D PERRY
DRAWN BY:T KISER
CHECKED BY:C HIXON
DESIGN FILE LOCATION:
Engr\Design\2020s\2025\202500630_Support\0_3_Drawings\Model

SHEET TITLE
ELECTRICAL POWER PLAN

SHEET NUMBER
E-101

SHEET 43 OF

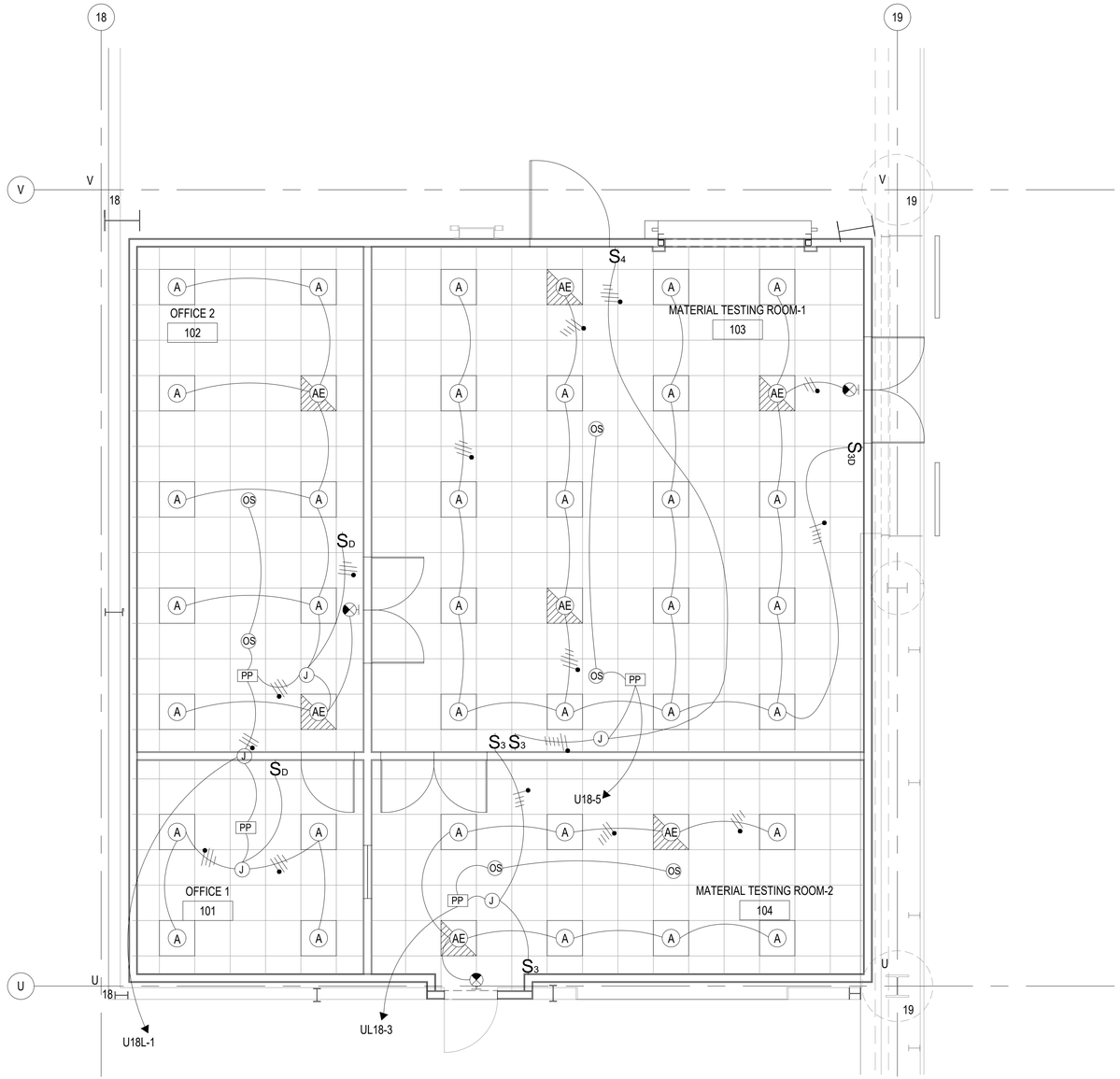

1 E-102 LIGHTING CONCEPTUAL PLAN
SCALE: 1/4" = 1'-0"

GENERAL NOTES

1. ALL CONDUCTORS ARE #12 in 3/4"C.
2. COORDINATE PLACEMENT OF ELECTRICAL COMPONENTS WITH OTHER TRADES REQUIRING SPACE ON CEILING GRID.
3. SEE SHEET FA-101 FOR FIRE PULL STATIONS.
4. ALL DEVICES AND BOX COVERS SHALL HAVE PRINTED LABELS IDENTIFYING CIRCUIT NUMBER.

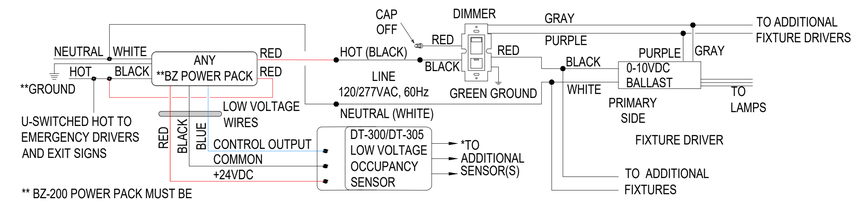

** BZ-200 POWER PACK MUST BE GROUNDED TO ENSURE SIGNAL INTEGRITY, NOT FOR SAFETY GROUND.

2 E-102 SINGLE LOCATION DIMMING SCHEMATIC
NTS

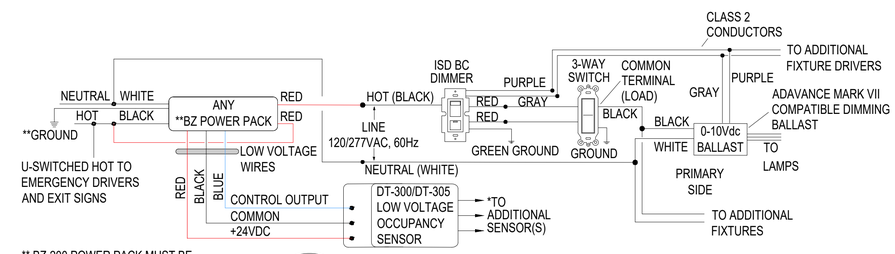

** BZ-200 POWER PACK MUST BE GROUNDED TO ENSURE SIGNAL

3 E-102 TWO LOCATION DIMMING SCHEMATIC
NTS

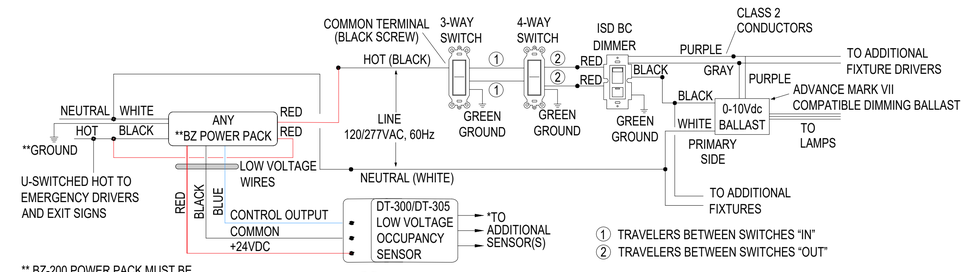

** BZ-200 POWER PACK MUST BE GROUNDED TO ENSURE SIGNAL INTEGRITY, NOT FOR SAFETY GROUND.

4 E-102 THREE LOCATION DIMMING SCHEMATIC
NTS

LIGHT FIXTURE SCHEDULE						
QUANTITY	DESIGNATION	PART NUMBER	DESCRIPTION	VOLTAGE	MOUNTING	NOTES
42	A	LITHONIA #2VTL2 48L ADP MVOLT EZB LP840	2FT BY 2FT LED VOLUMETRIC TROFFER	120	GRID	*1
7	AE	LITHONIA #2VTL2 48L ADP MVOLT EZB LP840 EL14L	2FT BY 2FT LED VOLUMETRIC TROFFER W/BATTERY PACK	120	GRID	*1, *2
3	X	DUAL LITE #EVEURWEI	LED EMERGENCY EXIT FIXTURE	120	WALL	*2

NOTES:
*1 INSTALL GRIP TIE OR EQUIVALENT SUPPORT FROM 2 OPPOSITE CORNERS OF EACH FIXTURE TO STRUCTURE FOR INDEPENDENT SUPPORT
*2 INSTALL AN UNSWITCHED HOT CONDUCTOR TO THE BATTERY PACK

USING AN OCTAGONAL J-BOX

1. PULL THE LOW VOLTAGE WIRES FROM THE POWER PACK INTO THE J-BOX THROUGH THE CONDUIT KNOCKOUT.
2. CONNECT THE LOW VOLTAGE WIRES TO THE APPROPRIATE TERMINALS ON THE SENSOR.
3. LOOSEN THE APPLIANCE MOUNTING SCREWS ATTACHED TO THE J-BOX
4. ALIGN THE SENSOR IN THE J-BOX SO THAT THE MOUNTING SCREWS ON THE BOX MATCH THE KEY HOLES ON THE SENSOR'S REAR HOUSING.
5. PUSH THE SENSOR UP INTO THE J--BOX AND TWIST IT SO THAT THE MOUNTING SCREWS ARE SEATED IN THE KEYHOLE SLOTS.
6. TIGHTEN THE TWO SCREWS TO SECURE THE SENSOR TO THE J-BOX.
7. SNAP THE FRONT COVER ONTO THE SENSOR.

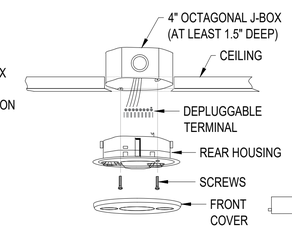

5 E-102 OCCUPANCY SENSOR INSTALLATION
NTS

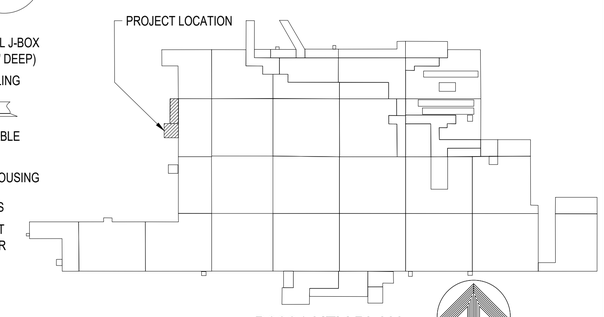

B9001 KEY PLAN

AIR FORCE MATERIEL COMMAND
72 ABW CIVIL ENGINEER DIRECTORATE
TINKER AFB, OK

35% DESIGN

PROJECT INFORMATION
WWYK250063
INSTALL REACT VII FACILITY
B9001, V19
TINKER AIR FORCE BASE, OKLAHOMA

REVISIONS

MARK	DATE	DESCRIPTION

MANAGEMENT INFORMATION
ISSUE DATE:7 OCT 25
DESIGN GROUP:TEPA-CSAG
DESIGNED BY:D PERRY
DRAWN BY:S STARR
CHECKED BY:C HIXON
DESIGN FILE LOCATION:
Engr\Design\2020s\2025\202500630_Support\0_3_Drawings\Model

SHEET TITLE
LIGHTING CONCEPTUAL PLAN

SHEET NUMBER
E-102
SHEET 44 OF

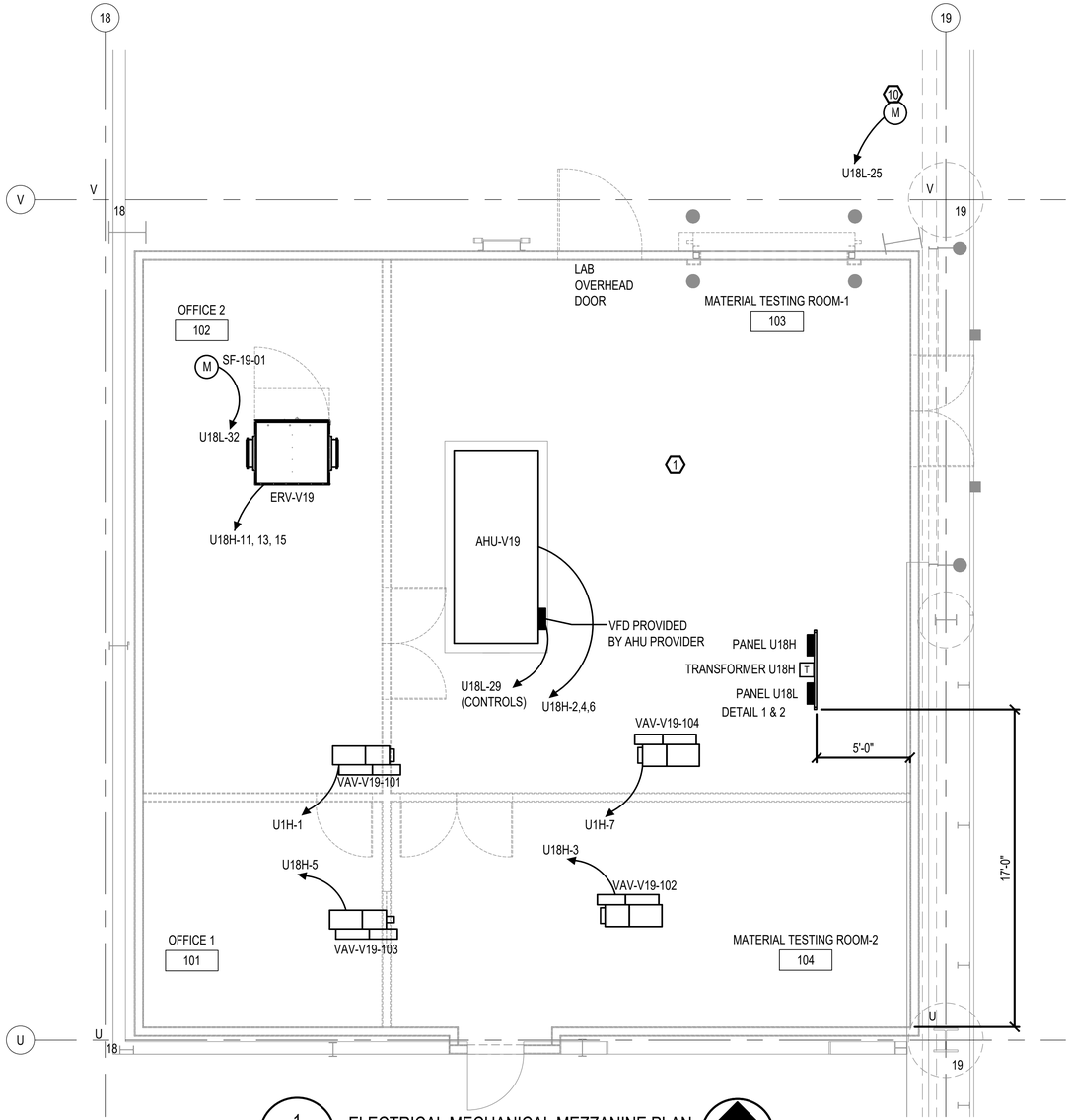

1 / E-103 ELECTRICAL MECHANICAL MEZZANINE PLAN
SCALE: 1/4" = 1'-0"

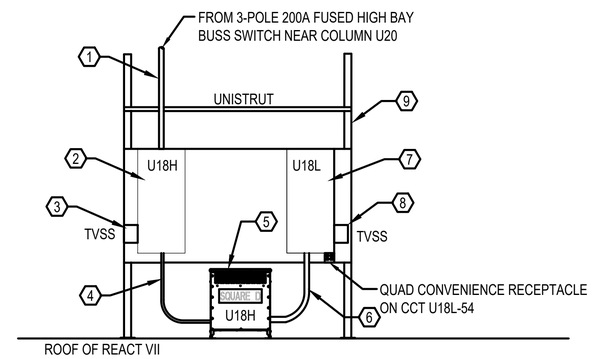

1 / E-103 PANEL UTILITY BACKBOARD ELEVATION
NTS

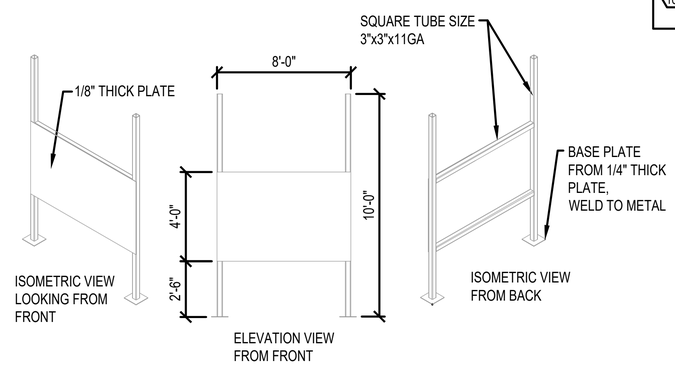

NOTES:
MOUNTING FRAME SHALL BE WELD CONSTRUCTION.
WELD SIZE 1/8" FILLET WELD.

SECURE EACH BASE PLATE BY WELDING TO ROOF DECK PLATING. WELD SIZE 1/8" FILLET WELD.

ATTACH THE FRAME TO THE BUILDING TRUSS USING UNISTRUT OR ANGLE IRON.

PAINT MOUNTING FRAME WHITE COLOR.

2 / E-103 PANEL UTILITY BACKBOARD DETAIL
NTS

GENERAL NOTES

1. COORDINATE POWER CIRCUIT SIZE WITH MECHANICAL COMPONENTS SELECTED.

KEYED NOTES

1. NEW 2 1/2" CONDUIT FROM THE HIGH BAY BUS REFER TO SHEET E-602 FOR DETAILS.
2. NEW 480V PANEL. REFER TO E-602 AND PANEL SCHEDULE SHEET E-601 FOR DETAILS.
3. NEW 480V DELTA TVSS. SEE PANEL SCHEDULE NOTES SHEET E-601 FOR DETAILS.
4. PRIMARY TRANSFORMER FEEDER. REFER TO SHEET E-602 FOR DETAILS.
5. NEW 480V TO 208Y/120V TRANSFORMER. REFER TO SHEET E-602 FOR DETAILS.
6. TRANSFORMER SECONDARY FEEDER TO NEW PANEL. REFER TO SHEET E-602 FOR DETAILS.
7. NEW 208V 3-PHASE PANEL. REFER TO SHEET E-601 FOR DETAILS.
8. NEW 208Y/120V TVSS. REFER TO PANEL SCHEDULE AND NOTES SHEET E-601FOR DETAILS.
9. NEW PANEL UTILITY BACKBOARD FOR PANEL INSTALLATION, REFER TO DETAIL THIS SHEET.
10. LARGE OVERHEAD DOOR.

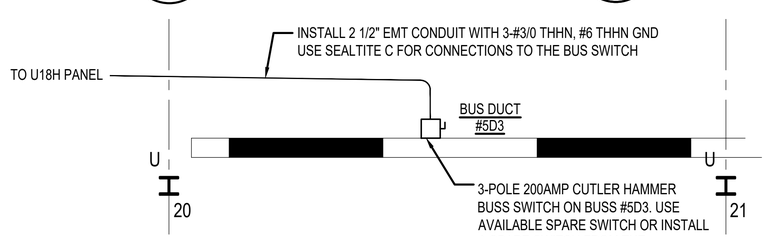

3 / E-103 BUSS DUCT #5D3 DETAIL
NTS

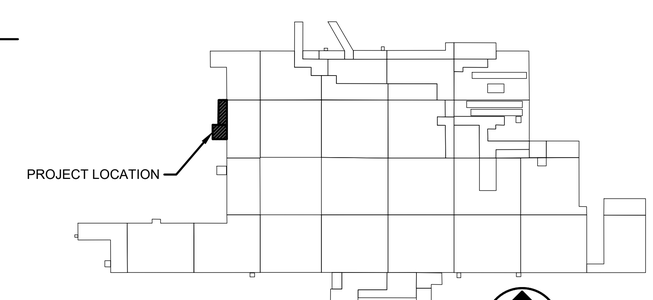

B9001 KEY PLAN

AIR FORCE MATERIEL COMMAND
72 ABW CIVIL ENGINEER DIRECTORATE
TINKER AFB, OK

35% DESIGN

PROJECT INFORMATION
WWYK250063
INSTALL REACT VII FACILITY
B9001, V19
TINKER AIR FORCE BASE, OKLAHOMA

REVISIONS
MARK | DATE | DESCRIPTION

MANAGEMENT INFORMATION
ISSUE DATE:7 OCT 25
DESIGN GROUP:TEPA-CSAG
DESIGNED BY:
DRAWN BY:T KISER
CHECKED BY:C HIXON
DESIGN FILE LOCATION:
Engr\Design\2020s\2025\202500630_Support\0_3_Drawings\Model

SHEET TITLE
ELECTRICAL
MECHANICAL
MEZZANINE PLAN

SHEET NUMBER
E-103

SHEET 45 OF

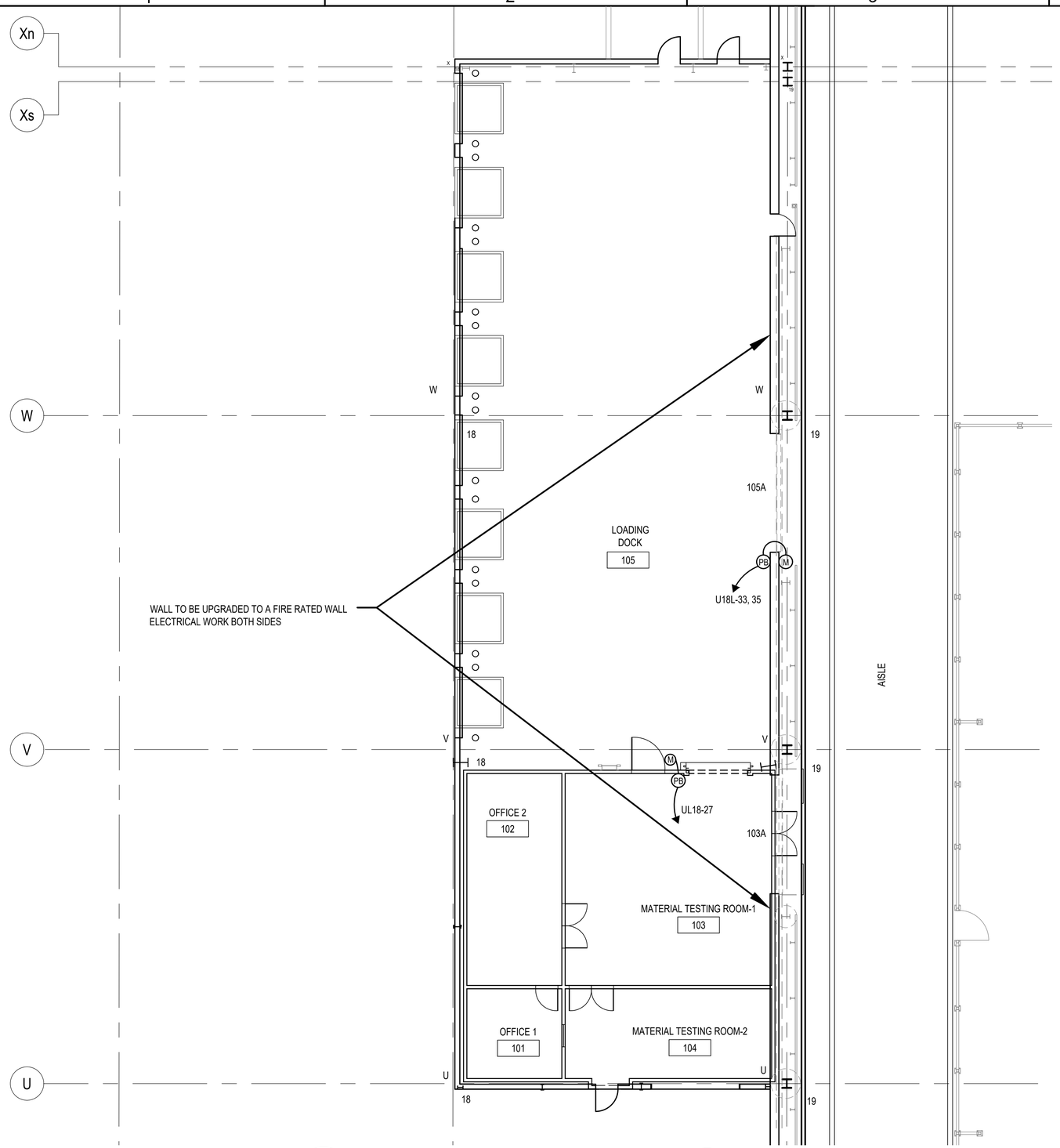

1 / E-104 OVERHEAD DOOR ELECTRICAL SPECIFICATIONS

SCALE: 1/8" = 1'-0"

GENERAL NOTES

1. EXISTING BUILDING SYSTEMS WERE TAKEN FROM AS-BUILT DRAWINGS AND MAY NOT BE ACCURATE IN EVERY DETAIL. CONTRACTOR TO VERIFY EXISTING CONDITIONS.

ELECTRICAL SCOPE FOR FIRE-RATED WALL UPGRADES

1. CONTRACTOR SHALL REMOVE, PRESERVE AND RE-INSTALL ALL EXISTING ELECTRICAL COMPONENTS LOCATED ON OR WITHIN WALLS DESIGNATED TO A FIRE-RATED ASSEMBLY. COORDINATE ALL WORK WITH THE GENERAL CONTRACTOR.VOLTAGE CABLING
2. AFFECTED COMPONENTS INCLUDE BUT ARE NOT LIMITED TO POWER / LIGHTING PANELS, JUNCTION BOXES, CONDUITS, WIRING DEVICES, FIRE ALARM DEVICES AND LOW VOLTAGE CABLING / OUTLETS.
3. PRIOR TO REMOVAL, SAFELY DE-ENERGIZE AND LOCKOUT / TAGOUT ALL AFFECTED SYSTEMS.
4. UPON COMPLETION OF RE-INSTALLATION, RE-ENERGIZE AND TEST ALL SYSTEMS TO ENSURE FULL FUNCTIONALITY.
5. ALL WORK SHALL COMPLY WITH THE CURRENT NEC AND ALL RELEVANT LIFE SAFETY STANDARDS.

OVERHEAD DOOR - ELECTRICAL SPECIFICATIONS

DOOR NO.	POWER	CONTROL STATION	CONTROL STATION MOUNTING	NOTES
103A	115 VAC - SINGLE PHASE	24V, 3 BUTTON, OPEN, CLOSE, STOP (STD)	NEMA 1 FLUSH INTERIOR	1. COORDINATE CONTROL STATION INSTALLATION WITH CONSTRUCTION OF RATED WALL ASSEMBLIES
105A	230 VAC - SINGLE PHASE	24V, 3 BUTTON, OPEN, CLOSE, STOP (STD)	NEMA 1 FLUSH INTERIOR	1. COORDINATE CONTROL STATION INSTALLATION WITH CONSTRUCTION OF RATED WALL ASSEMBLIES

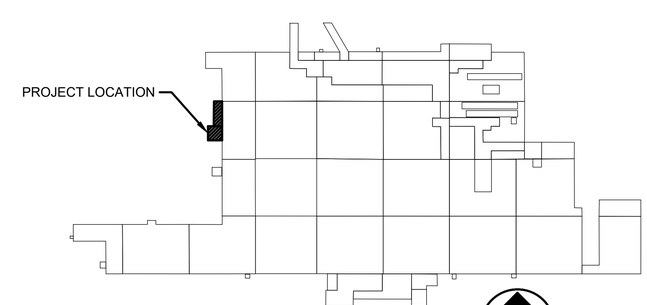

B9001 KEY PLAN

AIR FORCE MATERIEL COMMAND
72 ABW CIVIL ENGINEER DIRECTORATE
TINKER AFB, OK

35% DESIGN

PROJECT INFORMATION
WWYK250063
INSTALL REACT VII FACILITY
B9001, V19
TINKER AIR FORCE BASE, OKLAHOMA

REVISIONS

MARK	DATE	DESCRIPTION

MANAGEMENT INFORMATION
ISSUE DATE:7 OCT 25
DESIGN GROUP:TEPA-CSAG
DESIGNED BY:D PERRY
DRAWN BY:T KISER
CHECKED BY:C HIXON
DESIGN FILE LOCATION:
Engr\Design\2020s\2025\202500063\0_Support\0_3_Drawings\Model

SHEET TITLE
OVERHEAD DOOR ELECTRICAL SPECIFICATIONS

SHEET NUMBER
E-104

SHEET 46 OF

PANEL U18H SCHECULE

VOLTS (L-I) 480		**PHASE** 3		**WIRE** 4	S/N BUSS 100%		EG BUS 100%		MOUNT SURFACE		ENCLOSURE NEMA 1			
DISCONNECT Main Breaker				DISCONNECT AMPS 200			POWER AMPS 250				PANEL AIC 22K MINUM			
COMMENTS SQ D NF OR EQUAL WITH MAIN BREAKER														
					Load /Phase (VA)									
Circuit No.	**Trip Amp**	**No. Poles**	**Load Type**	**Load Served**	A		B		C	**Load Served**	**Load Type**	**No. Poles**	**Trip Amp**	**Circuit No.**
1	15	1	M	VAV - 101	**< 3741**					Air Handling Unit (AHU-1)	M	3	20	
						6860>								**2**
3	15	1	M	VAV - 102			**<732**							
								732>						**4**
5	15	1	M	VAV - 103					**<3160**					
										732>				**6**
7	15	1	M	VAV - 104	**<3160**					SPARE	F	1	20	**8**
						>								
9	20	1	F	SPARE			<		<		F	1	20	**10**
								>		>				
11	20	1	F	ERV-V19	<4000					SPARE	F	1	20	**12**
						>								
13	20	1	F	ERV-V19			<4000			SPARE	F	1	20	**14**
								>						
15	20	1	F	ERV-V19					<4000	SPARE	F	1	20	**16**
										>				
17	20	1	F	SPARE	<					SPARE	F	1	20	**18**
						>								
19		1	F				<				F	1		**20**
								>						
21		1	F						<		F	1		**22**
										>				
23		1	F		<						F	1		**24**
						>								
25		1	F				<				F	1		**26**
								>						
27		1	F						<		F	1		**28**
										>				
29		1	F		<						F	1		**30**
						>								
31		1	F				<				F	1		**32**
								>						
33		1	F						<		F	1		**34**
										>				
35		1	F								F	1		**36**
37	30	3	O	TVSS	< 0					75KVA	T	3	125	**38**
						37500>								
39							0							**40**
								37500>						
41									< 0					**42**
										37500>				
				TOTAL	41956		33403		33403					
	TOTAL CONNECTED LOAD 108.76 KVA													
	ESTIMATED DEMAND LOAD 87.0 KVA									**DEMAND LINE AMPS 109.2 AMPS**				
INSTALL TVSS EATON #SP1-480D (GRAINGER #787R41) OR EQUAL 480V, 50KA CONNECT TO 3P30A BREAKER IN PANEL AND KEEP LEADS AS SHORT AND STRAIGHT AS POSSIBLE WITH NO SHARP BENDS ALLOWED.														

SQD NF OR EQUAL 480V, 3-PHASE, 250 AMP
PANEL WITH #NF442L2C INTERIOR WITH
APPROPRIATE BREAKERS.

U18H

480V, 3PH, 3W, 200AT/250A BUS
18KAIC
FED FROM BUS 5D3

NOTE:
PROVIDE ARC FLASH LABELS PER UFC 3-560-01
AND TINKER ELECTRICAL STANDARDS

LABELS FOR NEW PANELS. ACRYLIC 6"W X 3"T WITH 3/8" TALL LETTERING FOR PANEL NAME AND 1/4" TALL LETTERING FOR VERBIAGE, WHITE LETTERING ON BLACK BACKGROUND OR BLACK LETTERING ON WHITE BACKGROUND. ATTACH WITH 2EA STAINLESS STEEL SCREWS PER BASE STANDARD. REPLACES QUESTION MARKS WITH INSTALL DATE IN "MONTH/ YEAR" WHEN KNOWN.

PANEL U18L SCHEDULE

VOLTS (L-I) 208		**PHASE** 3		**WIRE** 4	S/N BUSS 100%		EG BUS 100%		MOUNT SURFACE		ENCLOSURE NEMA 1			
DISCONNECT Main Breaker				DISCONNECT AMPS 225			POWER AMPS 225				PANEL AIC 10K MINUM			
COMMENTS NQ PANEL														
					Load /Phase (VA)									
Circuit No.	**Trip Amp**	**No. Poles**	**Load Type**	**Load Served**	A		B		C	**Load Served**	**Load Type**	**No. Poles**	**Trip Amp**	**Circuit No.**
1	20	1	L	ROOM LIGHTS 101 & 102	<536					ROOM 101 SW OFFICE	R	1	20	**2**
						540>								
3	20	1	L	ROOM LIGHTS 104			<380			ROOM 101 SW OFFICE	R	1	20	**4**
								360>						
5	20	1	L	ROOM LIGHTS 103					<766	ROOM 101 SW OFFICE	R	1	20	**6**
										360>				
7	20	1	R	ROOM 102 PRINTER AND RECP	<720					ROOM 104 NORTH RECPT	R	1	20	**8**
						1080>								
9	20	1	F	ROOM 102 EAST COUNTERTOP			<1500			ROOM 104 L6-30 RECPT	R	2	30	**10**
								2400>						
11	20	1	R	ROOM 102 CENTER COUNTERTOP					<1500					**12**
										2400>				
13	20	1	R	ROOM 102 WEST COUNTERTO	<1920					ROOM 104 RECPT	R	1	20	**14**
						540>								
15	20	1	R	ROOM 102 OFFICE FURNITURE FEED			<720			ROOM 104 RECPT	R	1	20	**16**
								720>						
17	20	1	R	ROOM 102 OFFICE FURNITURE FEED					<720	ROOM 104 RECPT	R	1	20	**18**
										540>				
19	20	1	R	ROOM 103 WEST RECPT	<540					ROOM 102 NE RECPT	R	1	20	**20**
						1080>								
21	20	1	R	ROOM 103 N CENTER CORD REEL			<540			ROOM 103 S CENTER CORD REEL	R	1	20	**22**
								540>						
23	20	1	R	ROOM 103 NE CENTER CORD REEL					<540	ROOM 103 SE CENTER CORD REE	R	1	20	**24**
										>				
25	20	1	O	SPARE	<					ELECTRIC HOT WATER HEATER	O	2	50	**26**
						7280>								
27	20	1	O	ROOM 103 OVERHEAD DOOR			<750							**28**
								7280>						
29	20	1	M	AHU-1 CONTROL PANEL					<1200	SPARE	S	1	20	**30**
										732>				
31	20	1	S	SPARE	<					SUPPLY FAN SFV-19-01	S	1	20	**32**
						>								
33	20	1	O	ROOM 105 OVERHEAD DOOR			100			SPARE	S	1	20	**34**
								>						
35									100	SPARE	S	1	20	**36**
										>				
37	15	1	O	DOORBELL	<500					SPARE			20	**38**
						>								
39	20			SPARE			<			SPARE			20	**40**
								>						
41	20			SPARE					<	SPARE			20	**42**
										>				
43					<									**44**
						>								
45							<							**46**
								>						
47									<					**48**
										>				
49	30	3	O	TVSS	< 0									**50**
						>								
51								0						**52**
								>						
53									< 0					**54**
										>				
				TOTAL	14736		15770		14106					
	TOTAL CONNECTED LOAD 33.0 KVA													
	ESTIMATED DEMAND LOAD 26.4 KVA									**DEMAND LINE AMPS 73.3 AMPS**				
INSTALL TVSS MERSEN FOR 201/120V, 50KAV, CONNECT TO 3P, 30A BREAKER IN PANEL AND KEEP LEADS AS SHORT AND STRAIGHT AS POSSIBLE WITH NOT SHARP BENDS.														

SQD NQ OR EQUAL 208V, 3-PHASE, 225 AMP
PANEL WITH #NQ454L2C INTERIOR WITH
APPROPRIATE BREAKERS.

U18L

208Y/120V, 3PH, 4W
10KAIC
FED FROM U18H VIA 75KVA XFMR

LABELS FOR NEW PANELS. ACRYLIC 6"W X 3"T WITH 3/8" TALL LETTERING FOR PANEL NAME AND 1/4" TALL LETTERING FOR VERBIAGE, WHITE LETTERING ON BLACK BACKGROUND OR BLACK LETTERING ON WHITE BACKGROUND. ATTACH WITH 2EA STAINLESS STEEL SCREWS PER BASE STANDARD. REPLACES QUESTION MARKS WITH INSTALL DATE IN "MONTH/ YEAR" WHEN KNOWN.

AIR FORCE MATERIEL COMMAND
72 ABW CIVIL ENGINEER DIRECTORATE
TINKER AFB, OK

35% DESIGN

PROJECT INFORMATION
WWYK250063
INSTALL REACT VII FACILITY
B9001, V19
TINKER AIR FORCE BASE, OKLAHOMA

REVISIONS
MARK | DATE | DESCRIPTION

MANAGEMENT INFORMATION
ISSUE DATE:7 OCT 25
DESIGN GROUP: TEPA-CSAG
DESIGNED BY:D PERRY
DRAWN BY:S STARR
CHECKED BY:C HIXON
DESIGN FILE LOCATION:
Engr\Design\2020s\2025\202500063\0_Support\0_3_Drawings\Model

SHEET TITLE
ELECTRICAL PANEL SCHEDULES

SHEET NUMBER
E-601

SHEET 47 OF

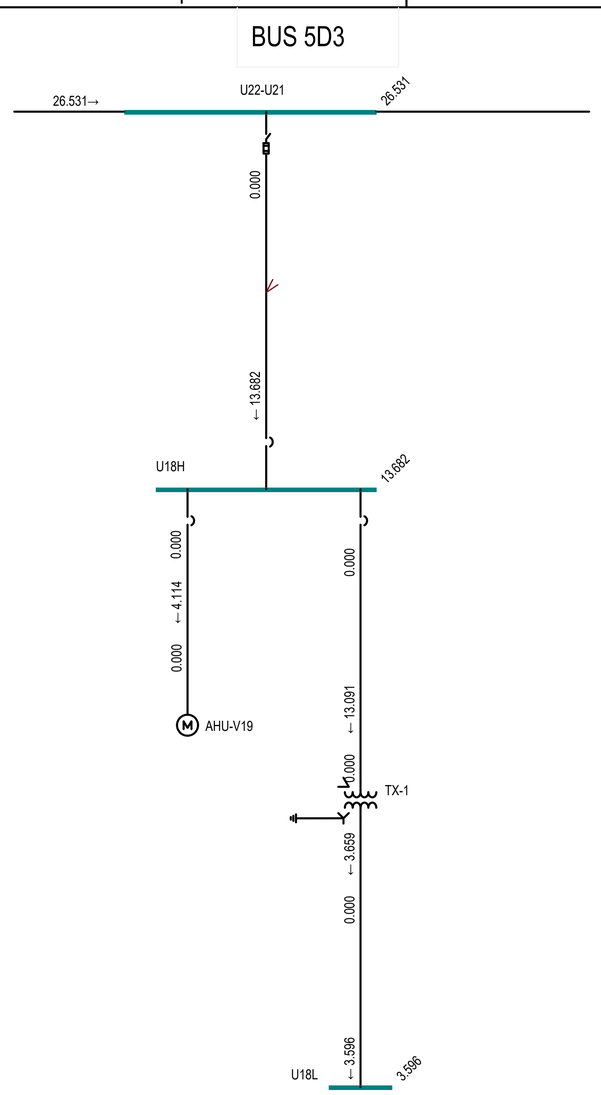

1 E-602 FAULT CURRENT ANALYSIS

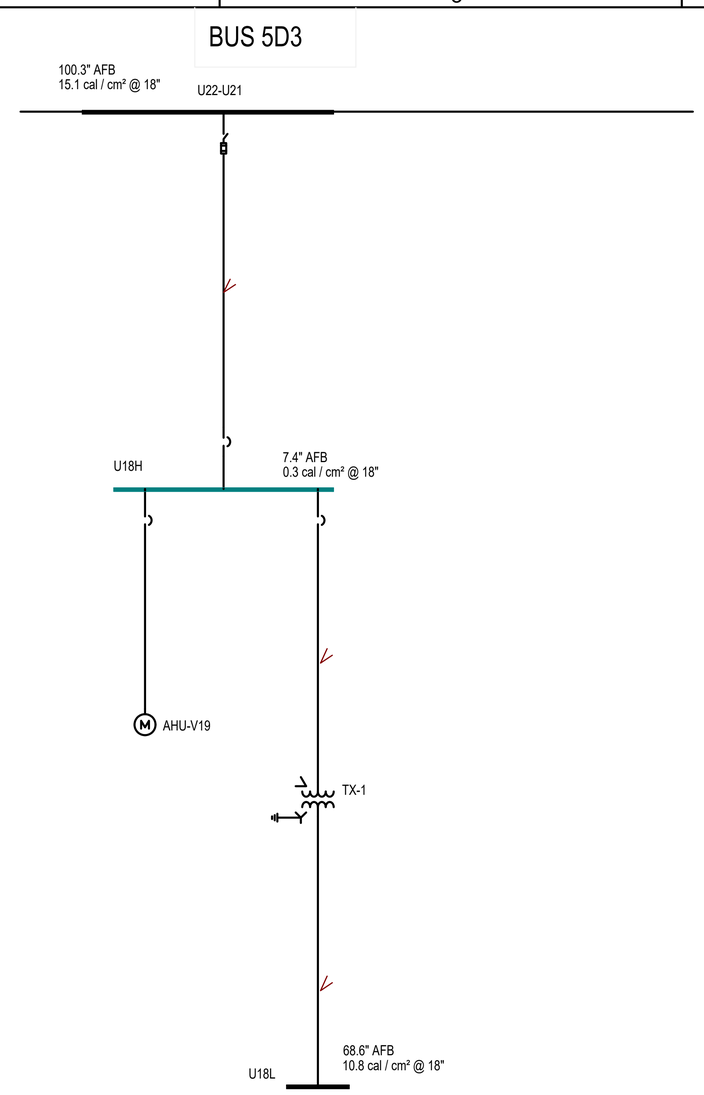

2 E-602 ARC FLASH ANALYSIS

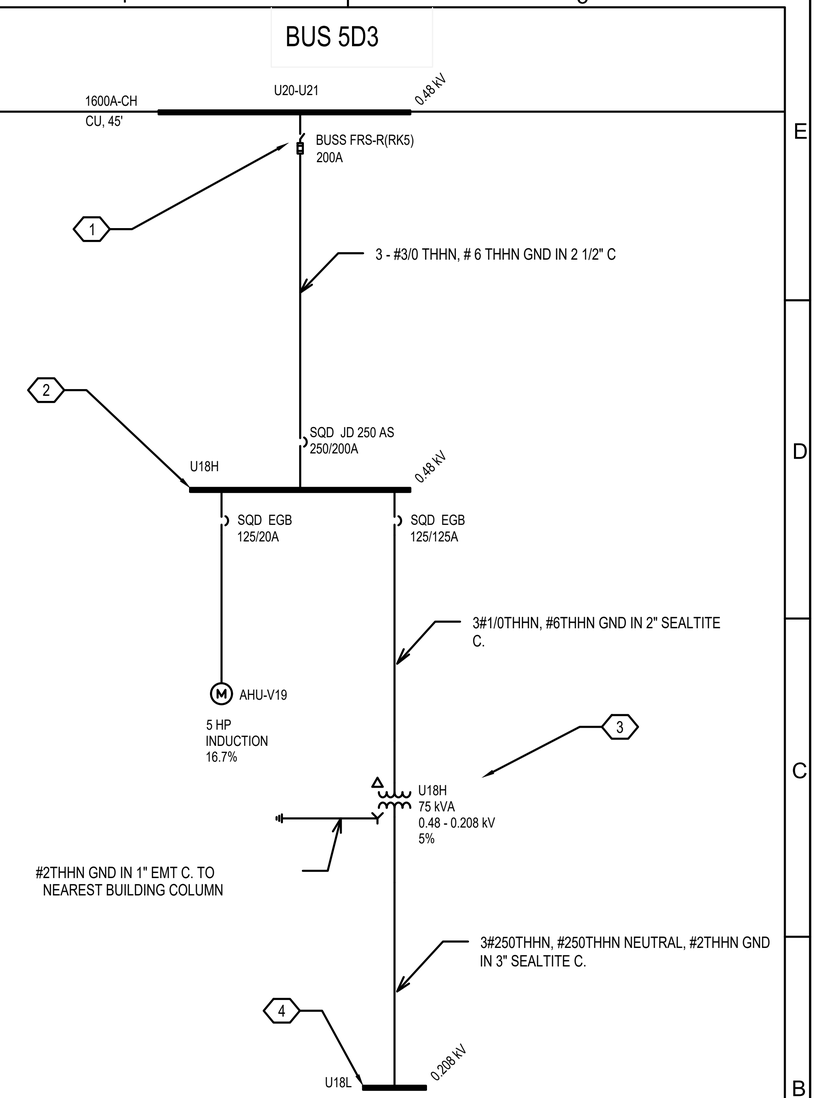

3 E-602 ELECTRICAL ONE-LINE

GENERAL NOTES

1. THE PURPOSE OF THIS PROJECT IS TO INSTALL A NEW REACT VII FOUNDRY EXPANSION FACILITY IN BUILDING 9001.
2. INSTALL BRADY OR EQUAL PRINTED LABELS ON ALL DEVICE AND BOX COVERS LISTING THE SOURCE PANEL AND CIRCUIT NUMBER. UPDATE PANEL SCHEDULES AFFECTED BY CHANGES MADE ON THIS PROJECT.
3. USE "RT" EXTERIOR RATED EMT FITTINGS IN AREA AROUND THE MECHANICAL WATER AND DRAIN PIPING.
4. ARC FLASH VALUES SHOWN ARE CALCULATED USING OVERCURRENT PROTECTION DATA BUT CANNOT BE VERIFIED SINCE CE HAS NOT PERFORMED ELECTRICAL MAINTENANCE FOR THE UPSTREAM REAL PROPERTY ELECTRICAL SYSTEM. INSTALL THE UFC COMPLIANT GENERAL ARC FLASH LABELS AS SHOWN ON SHEET E-602.

KEYED NOTES

1. INSTALL A SURPLUS 200A BUS SWITCH ON HIGH BAY BUS 5D3 AND INSTALL 3EA FRS-R-200 FUSES.
2. NEW 480V PANEL U18H MOUNTED ON ROOF OF REACT VII. SEE PANEL SCHEDULE ON SHEET E-601 FOR DETAILS.
3. NEW SQ D #EXN75T3HCU OR EQUAL 75KVA 480V TO 208Y/120V DRY TYPE TRANSFORMER MOUNTED ON THE ROOF OF REACT VII. PROVIDE A BURNDY KAU-KIT2 OR EQUAL LUG KIT FOR MAKING TRANSFORMER CONNECTIONS. BOND THE X0 TERMINAL TO THE CASE GND WITH A #2THHN GND CONDUCTOR AND INSTALL A #2 GEC AS NOTED ON THE ONE-LINE TO CONNECT TO BLDG STEEL WITH A BURNDY KA25U OR EQUAL GND LUG TO NEAREST BLDG COLUMN. SCRAPE OFF ANY PAINT AT THE POINT OF ATTACHMENT TO ENSURE A GOOD BOND.
4. NEW 208Y/120V PANEL U18L MOUNTED ON ROOF OF REACT VII. SEE PANEL SCHEDULE ON SHEET E-601 FOR DETAILS.

AIR FORCE MATERIEL COMMAND
72 ABW CIVIL ENGINEER DIRECTORATE
TINKER AFB, OK

35% DESIGN

PROJECT INFORMATION
WWYK250063
INSTALL REACT VII FACILITY
B9001, V19
TINKER AIR FORCE BASE, OKLAHOMA

REVISIONS

MARK	DATE	DESCRIPTION

MANAGEMENT INFORMATION
ISSUE DATE:7 OCT 25
DESIGN GROUP:TEPA-CSAG
DESIGNED BY:D PERRY
DRAWN BY:S STARR
CHECKED BY:C HIXON
DESIGN FILE LOCATION:
Engr\Design\2020s\2025\20250063\0_Support\0_3_Drawings\Model

SHEET TITLE
EASY POWER MODELS

SHEET NUMBER
E-602
SHEET 48 OF

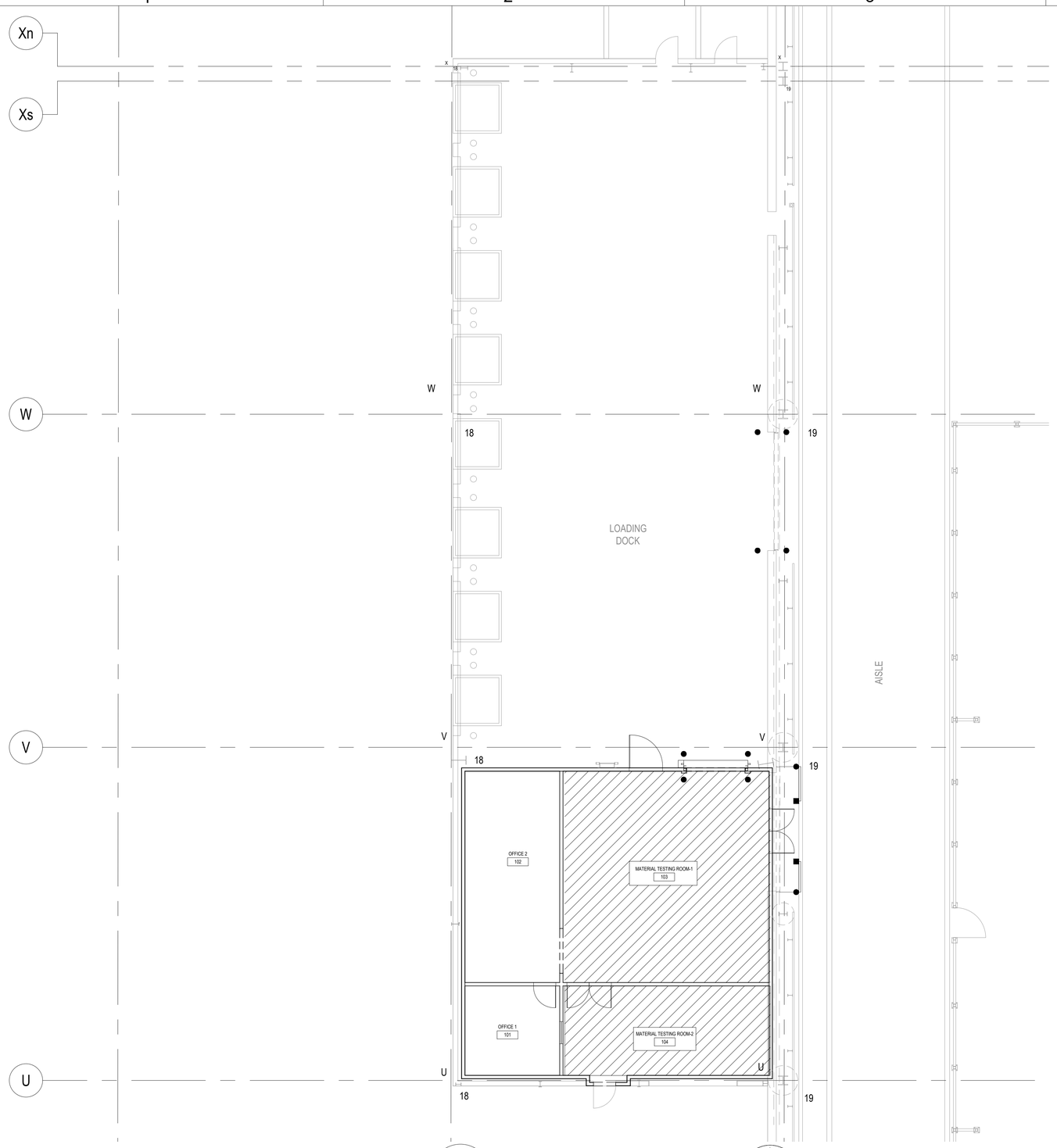

1 / FP101 FIRE PROTECTION PLAN
SCALE: 1/8" = 1'-0"

SPRINKLER SYSTEM SCHEDULE

AREA	HAZARD CLASS	SYSTEM TYPE	MIN. DENSITY (GPM/SQ.-FT.)	HYDRAULIC DESIGN AREA (SQ.-FT.)	HOSE STREAM* (GPM)	MIN. K-FACTOR	DURATION (MIN.)
	LIGHT HAZARD	WET	0.10	1500	250	5.6	60
	ORDINARY HAZARD	WET	0.20	2500	250	8.0	60

* HOSE STREAM DEMAND TO BE INCLUDED IN HYDRAULIC CALCULATIONS IN ACCORDANCE WITH NFPA 13.

NOTE:

CONTRACTOR SHALL BE RESPONSIBLE FOR DESIGNING A SPRINKLER SYSTEM THAT MINIMIZES FRICTION LOSSES AND PRESSURE DEMAND ON THE SYSTEM SUCH THAT THE EXISTING WATER SUPPLY IS CAPABLE OF MEETING SYSTEM DEMAND AND DURATION. THIS SHALL BE DONE AT NO ADDITIONAL COST TO THE GOVERNMENT.

B9001 FIRE SUPPRESSION SYSTEM IS SUPPORTED BY A BUILDING FIRE PUMP PROVIDING 2000 GPM AT 70 PSI. PRELIMINARY HYDRAULIC CALCULATIONS INDICATE ADEQUATE WATER SUPPLY AND PRESSURE TO SUPPORT THE FIRE SPRINKLER SYSTEM FOR THIS PROJECT. CONTRACTOR SHALL PERFORM THEIR OWN CALCULATIONS TO CONFIRM THIS ASSESSMENT.

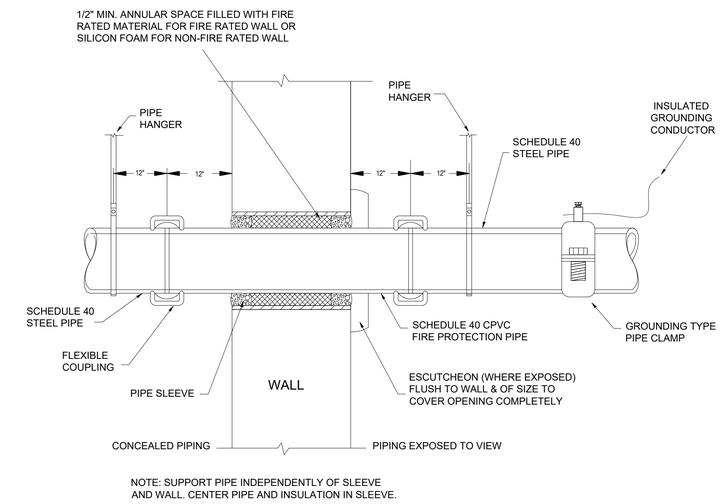

NOTE: SUPPORT PIPE INDEPENDENTLY OF SLEEVE AND WALL. CENTER PIPE AND INSULATION IN SLEEVE.

2 / FP101 TYPICAL FIRESTOP DETAIL - FIRE SUPPRESSION
SCALE: NTS

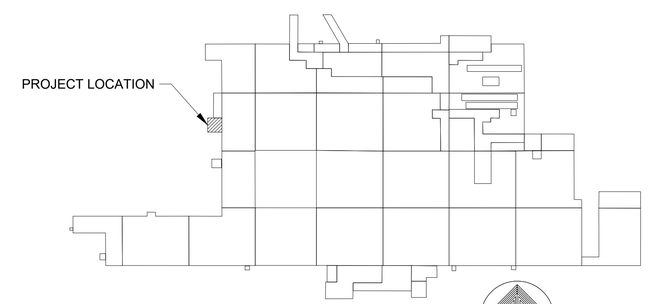

B9001 KEY PLAN

AIR FORCE MATERIEL COMMAND
72 ABW CIVIL ENGINEER DIRECTORATE
TINKER AFB, OK

35% DESIGN

PROJECT INFORMATION
WWYK250063
INSTALL REACT VII FACILITY
B9001, V19
TINKER AIR FORCE BASE, OKLAHOMA

REVISIONS

MARK	DATE	DESCRIPTION

MANAGEMENT INFORMATION
ISSUE DATE:7 OCT 25
DESIGN GROUP:TEPA-CSAG
DESIGNED BY:T ERB
DRAWN BY:T KISER
CHECKED BY:C HIXON
DESIGN FILE LOCATION:
Engr\Design\2020s\2025\202500630_Support\0_3_Drawings\Model

SHEET TITLE
FIRE PROTECTION PLAN

SHEET NUMBER
FP-101
SHEET 49 OF

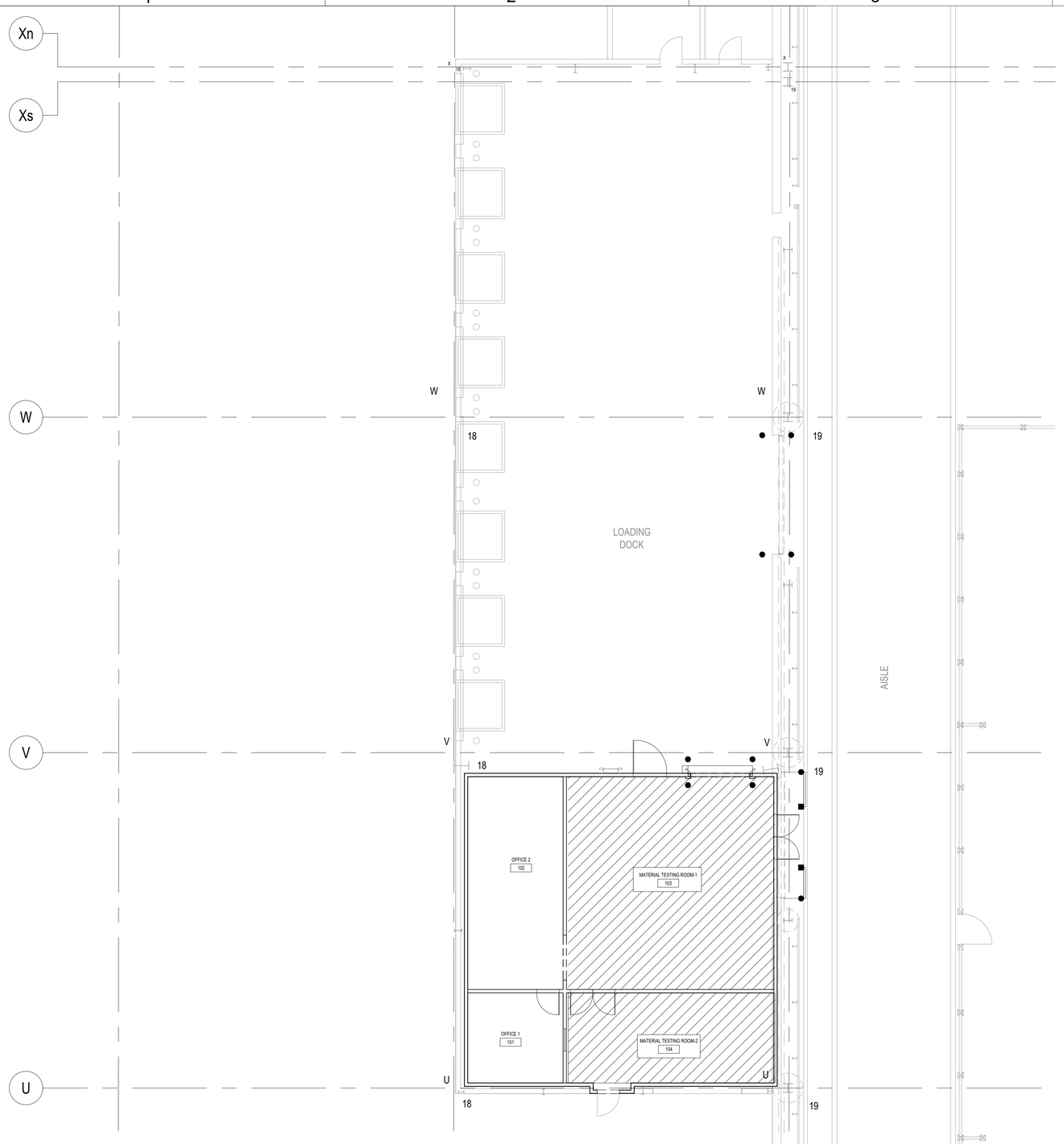

1 / FP101 FIRE PROTECTION PLAN
SCALE: 1/8" = 1'-0"

SPRINKLER SYSTEM SCHEDULE

AREA	HAZARD CLASS	SYSTEM TYPE	MIN. DENSITY (GPM/SQ.-FT.)	HYDRAULIC DESIGN AREA (SQ.-FT.)	HOSE STREAM* (GPM)	MIN. K-FACTOR	DURATION (MIN.)
	LIGHT HAZARD	WET	0.10	1500	250	5.6	60
	ORDINARY HAZARD	WET	0.20	2500	250	8.0	60

* HOSE STREAM DEMAND TO BE INCLUDED IN HYDRAULIC CALCULATIONS IN ACCORDANCE WITH NFPA 13.

NOTE:

CONTRACTOR SHALL BE RESPONSIBLE FOR DESIGNING A SPRINKLER SYSTEM THAT MINIMIZES FRICTION LOSSES AND PRESSURE DEMAND ON THE SYSTEM SUCH THAT THE EXISTING WATER SUPPLY IS CAPABLE OF MEETING SYSTEM DEMAND AND DURATION. THIS SHALL BE DONE AT NO ADDITIONAL COST TO THE GOVERNMENT.

B9001 FIRE SUPPRESSION SYSTEM IS SUPPORTED BY A BUILDING FIRE PUMP PROVIDING 2000 GPM AT 70 PSI. PRELIMINARY HYDRAULIC CALCULATIONS INDICATE ADEQUATE WATER SUPPLY AND PRESSURE TO SUPPORT THE FIRE SPRINKLER SYSTEM FOR THIS PROJECT. CONTRACTOR SHALL PERFORM THEIR OWN CALCULATIONS TO CONFIRM THIS ASSESSMENT.

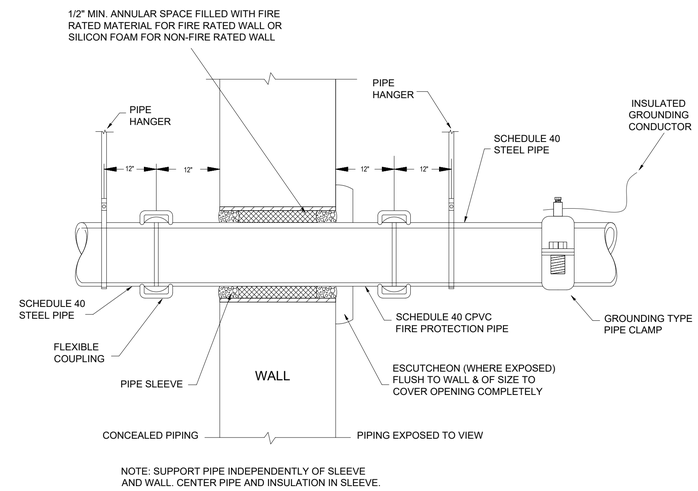

NOTE: SUPPORT PIPE INDEPENDENTLY OF SLEEVE AND WALL. CENTER PIPE AND INSULATION IN SLEEVE.

2 / FP101 TYPICAL FIRESTOP DETAIL - FIRE SUPPRESSION
SCALE: NTS

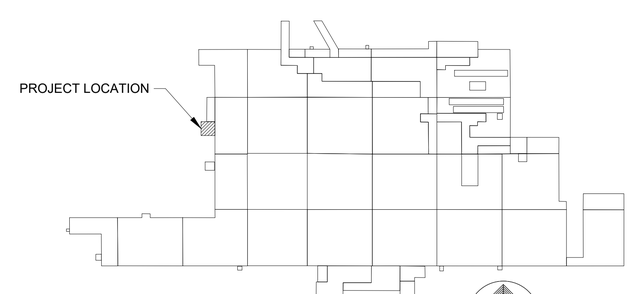

B9001 KEY PLAN

AIR FORCE MATERIEL COMMAND
72 ABW CIVIL ENGINEER DIRECTORATE
TINKER AFB, OK

35% DESIGN

PROJECT INFORMATION:
WWYK250063
INSTALL REACT VII FACILITY
B9001, V19
TINKER AIR FORCE BASE, OKLAHOMA

REVISIONS

MARK	DATE	DESCRIPTION

MANAGEMENT INFORMATION
ISSUE DATE:7 OCT 25
DESIGN GROUP:TEPA-CSAG
DESIGNED BY:T ERB
DRAWN BY:T KISER
CHECKED BY:C HIXON
DESIGN FILE LOCATION:
Engr\Design\2020s\2025\2025006310_Support\0_3_Drawings\Model

SHEET TITLE
FIRE PROTECTION PLAN

SHEET NUMBER
FP-101

SHEET 49 OF

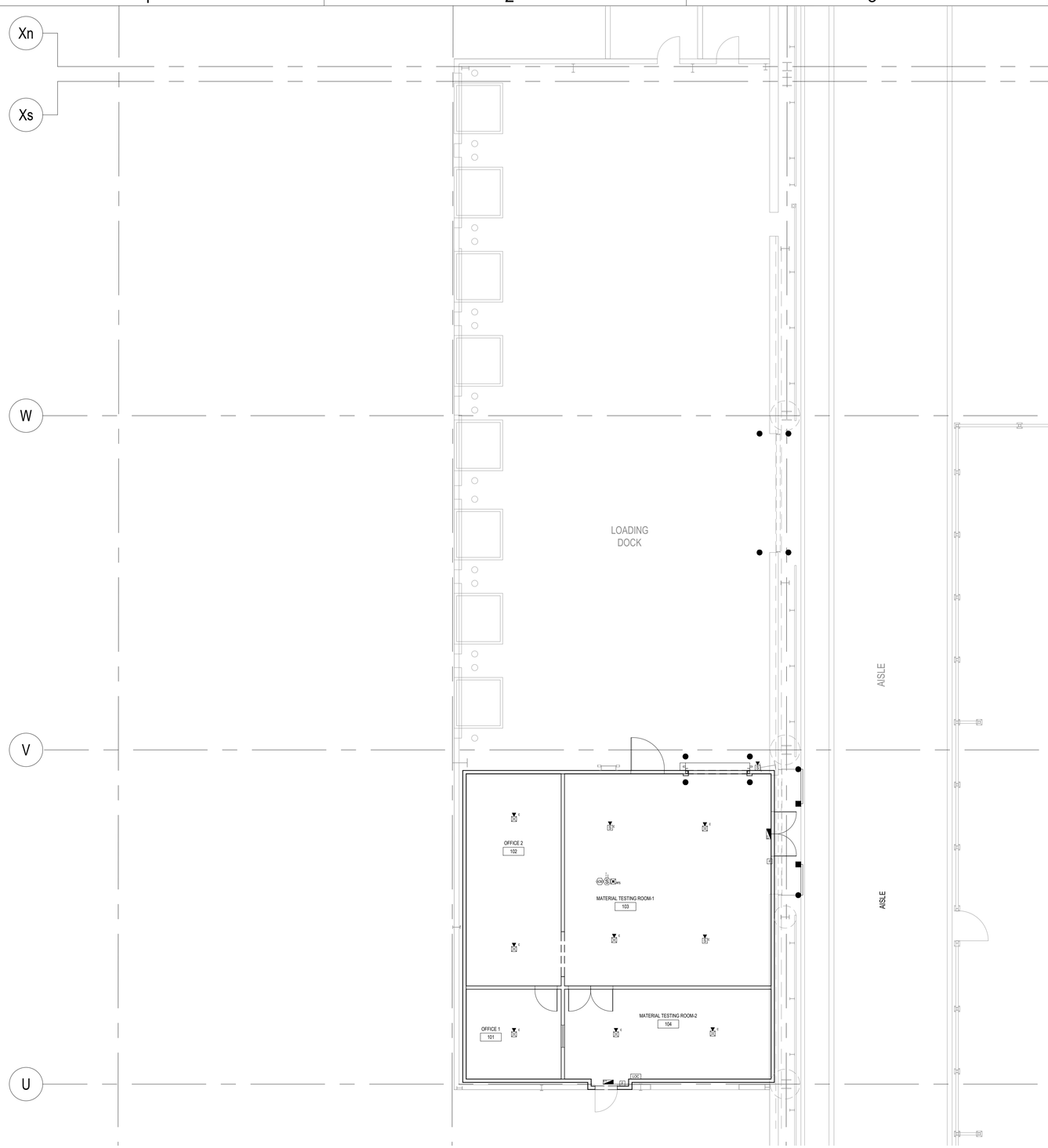

1 / FA101 FIRE ALARM AND MASS NOTIFICAITON PLAN
SCALE: 1/8" = 1'-0"

FIRE ALARM AND MASS NOTIFICATION SYMBOLS LEGEND

LOC	LOCAL OPERATORS CONSOLE
ET	EMERGENCY TEXTUAL VISIBLE APPLIANCE
F	MANUAL STATION, FIRE ALARM
C	SPEAKER STROBE, CLEAR STROBE
S	SPEAKER ONLY
S	DUCT MOUNTED SMOKE DETECTOR
RTS	REMOTE ALARM INDICATING AND TEST SWITCH
AOM	ADDRESSABLE OUTPUT MODULE
C	SUBSCRIPT DENOTES CEILING MOUNT DEVICE
E	SUBSCRIPT DENOTES EXISTING DEVICE TO REMAIN
WP	SUBSCRIPT DENOTES WEATHERPROOF DEVICE

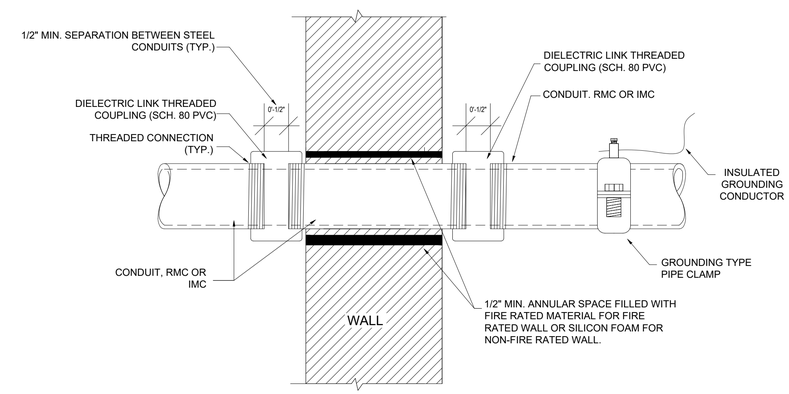

2 / FA101 TYPICAL FIRESTOP DETAIL - FIRE ALARM
SCALE: NTS

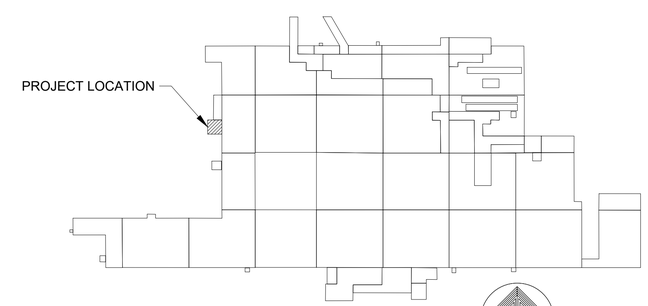

B9001 KEY PLAN

AIR FORCE MATERIEL COMMAND
72 ABW CIVIL ENGINEER DIRECTORATE
TINKER AFB, OK

35% DESIGN

PROJECT INFORMATION
WWYK250063
INSTALL REACT VII FACILITY
B9001, V19
TINKER AIR FORCE BASE, OKLAHOMA

REVISIONS

MARK	DATE	DESCRIPTION

MANAGEMENT INFORMATION
ISSUE DATE:7 OCT 25
DESIGN GROUP:TEPA-CSAG
DESIGNED BY:T ERB
DRAWN BY:T KISER
CHECKED BY:C HIXON
DESIGN FILE LOCATION:
Engr\Design\2020s\2025\202500631O_Support\0_3_Drawings\Model

SHEET TITLE
FIRE ALARM AND MASS NOTIFICATION PLAN

SHEET NUMBER
FA-101
SHEET 50 OF