MARK: SF-V19-01
PROJECT: REACT VII SA-01
DATE: 10/1/2025

GEMINI

Ceiling and Wall Blowers
200-700 Series

STANDARD CONSTRUCTION FEATURES:
Forward curved galvanized steel fan wheel - Corrosion resistant galvanized steel fan housing - Acoustically insulated housing - Aluminum backdraft damper with solid aluminum hinge rod mounted in nylon bushings - Permanently lubricated motor with built-in thermal overload protection and disconnect plug - Interchangeable panels with removable fasteners allows the discharge to be easily changed - Internal wiring box with disconnect receptacle - Powder-painted white steel grille - Plastic grille standard on sizes 222, 242, 322, and 342.

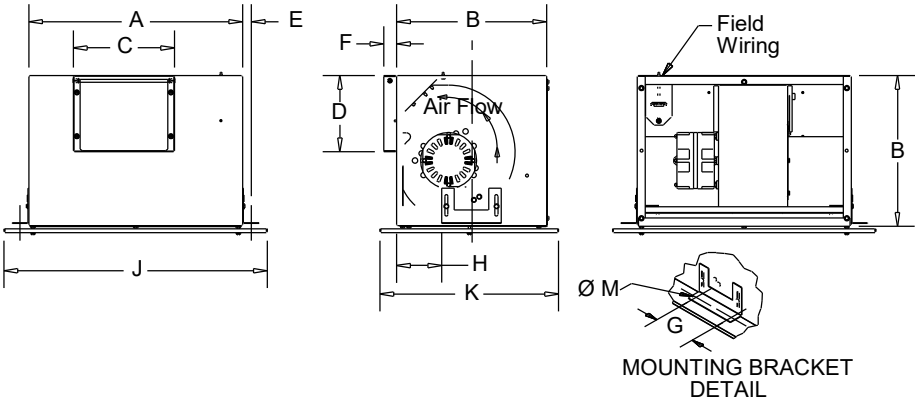

Performance

Qty	Catalog Number	Flow (CFM)	SP (inwc)	Nominal RPM	Input Watts	Speed Control
1	GC-720	500	.500	1276	181	FSC

Altitude (ft): 1303 Temperature (F): 75

Motor Information

Volts/Ph/Hz	Nameplate Amps
115/1/60	3.9

Sound Data Inlet Sound Power by Octave Band

1	2	3	4	5	6	7	8	LwA	dBA	Sones
67	65	63	58	52	46	46	46	60	48	4.0

Accessories:
DISCONNECT NEMA 1
FAN SPEED CONTROLLER 5 AMP 120 VOLT
GEMINI ISOLATOR KIT - ISOLATORS

Dimensions (inches)

A	17
B	11-7/8
C	10-1/2
D	4-3/4
E	13/16
F	1
G	4
H	3-9/16
Steel Grille J	21
Steel Grille K	14-1/4

M	1/2

NOTE: Accessories may affect dimensions shown.

Weight(lbs)***	Shipping	36	Unit	32

***Includes fan, motor & accessories.

Fan Curve

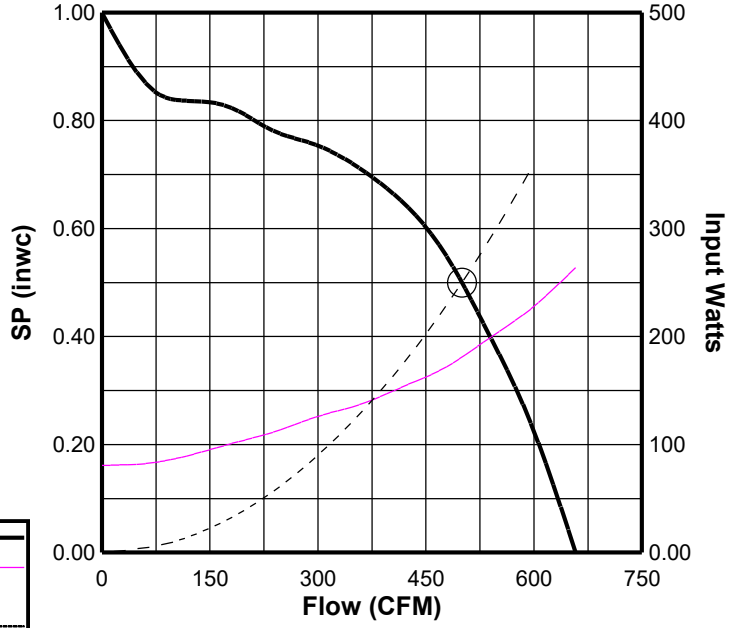

Fan Curve Legend

CFM vs SP	———
CFM vs Watts	———
Point of Operation	○
System Curve	- - - - - -

COOK

GEMINI

MARK: SF-V19-01
PROJECT: REACT VII SA-01
DATE: 10/1/2025

Performance

Catalog Number	Flow (CFM)	SP (inwc)	Nominal RPM	Input Watts	OVEL (mph)	TSPD (mph)	SE	Temp (°F)	ALT (ft)
GC-720	500	.500	1276	181	16	24	54%	75	1303

Sound Data Inlet Sound Power by Octave Band

1	2	3	4	5	6	7	8	LwA	dBA	Sones
67	65	63	58	52	46	46	46	60	48	4.0

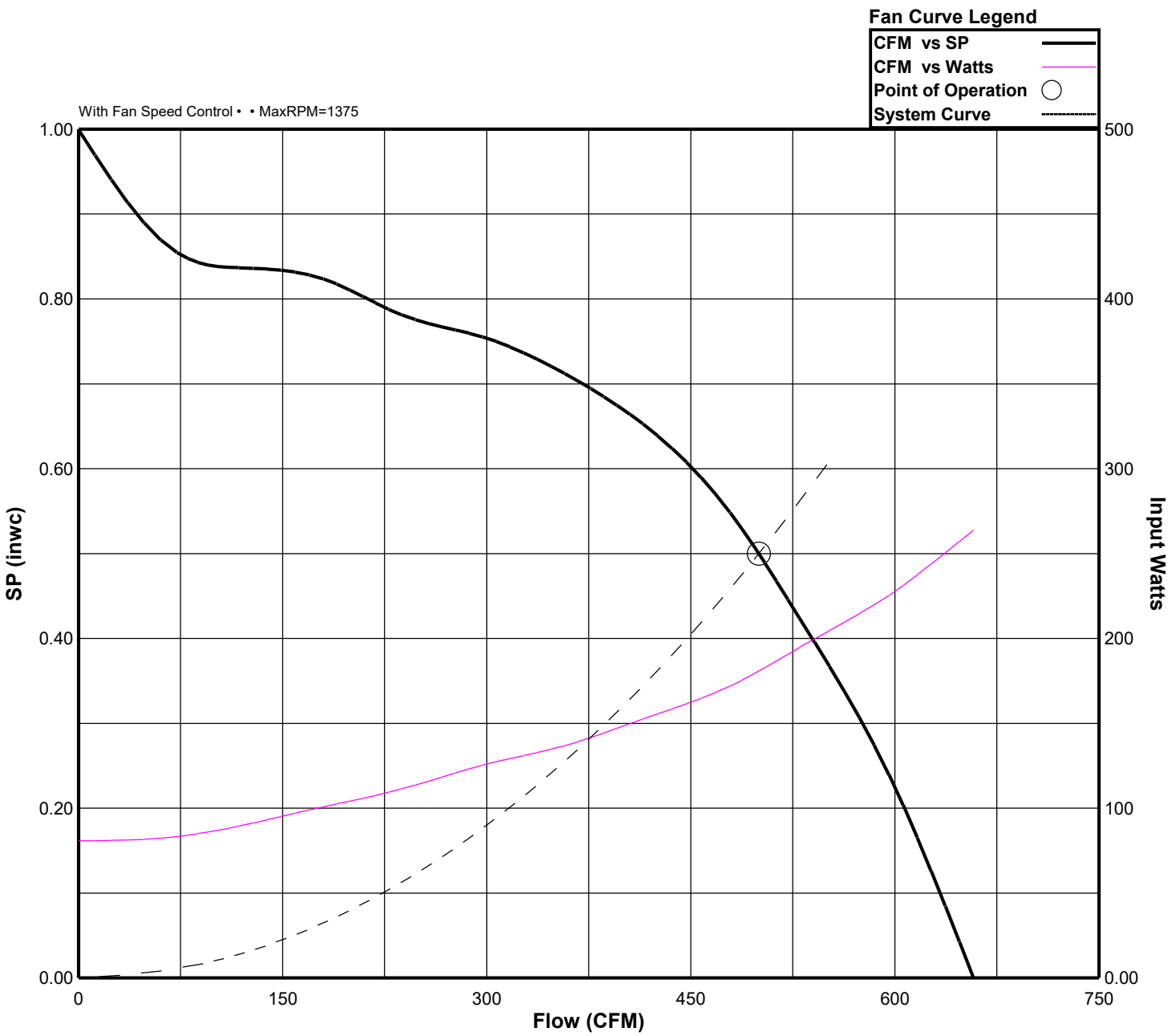

v10.1.162.14617

COOK

GEMINI

MARK: SF-V19-01
PROJECT: REACT VII SA-01
DATE: 10/1/2025

AMCA License Information

Loren Cook Company certifies that the GC-720 shown herein is licensed to bear the AMCA Seal. The ratings shown are based on tests and procedures performed in accordance with AMCA Publication 211 and AMCA Publication 311 and comply with the requirements of the AMCA Certified Ratings Program.

Performance certified is for installation type B: free inlet, ducted outlet. Speed (RPM/RPS) shown is nominal. Performance is based on actual speed of test. Performance ratings include the effects of inlet grille and backdraft damper. The sound ratings shown are loudness values in spherical sones at 5 ft. in a spherical free field calculated per AMCA Standard 301. Values shown are for Installation type B: free inlet spherical sone levels. The AMCA International licensed air and/or sound performance data has been modified for installation, appurtenances or accessories, etc. not included in the certified data. The modified performance is not AMCA licensed but is provided to aid in selection and applications of the product.

The sound power level ratings shown are in decibels, referred to 10(-12) watts calculated per AMCA Standard 301. Values shown are for inlet Lwi and LwiA sound power levels for installation type B: free inlet, ducted outlet. Ratings do not include the effects of duct end correction. The A-weighted sound ratings shown have been calculated per AMCA Standard 301. The dBA levels shown have been calculated for a distance of 5 ft in a hemispherical free field. The AMCA Certified Ratings Seal applies to sone ratings only. Octave Band, LwA and dBA levels are not AMCA International licensed.

PROJECT: REACT VII SA-01
DATE: 10/1/2025

FSC

Fan Speed Controls

STANDARD CONSTRUCTION FEATURES:

PRODUCT DESCRIPTION - Through the "Quadrac" integrated semi-conductor device it is now possible to offer this system with many advantages. Fewer semi-conductor parts mean greater reliability and the passivation process used in the manufacture of the semi-conductor insures long life. Printed circuit construction eliminates wiring difficulties and guarantees workmanship. All of these factors serve to offer the most important of all features - quality. SPEED CONTROL - Positive Off/On action in the control dial. Speed range set to the customer's requirements. CONTROL RATING - 120 volts, 60 cycles, 1 phase. Maximum ambient temperature - 120 degree F (5 AMP, 10 AMP, 15 AMP). 220/240 volt, 50/60 cycles, 1 phase. Maximum ambient temperature - 120 degree F (5 AMP, 10 AMP). 220/240 volt model not UL listed. Fan cannot have UL listing if furnished with prewired 220/240 volt FSC. 277 volt, 60 cycles, 1 phase. Maximum ambient temperature - 120 degree F (5 AMP). WARNING - Power must be turned off before installing this unit. STANDARD INSTALLATION - Fits any standard single gang box. Turn off power and connect the two wires on the control to the two switch wires in the usual manner. The connection box is not supplied. SPECIAL FEATURES - Complete range control, solid state "Quadrac" integrated circuitry, solid state construction for long reliable operating life, saves on electric bills.

Dimensions (inches)

Mark	Qty	Description
SF-V19-01	1	FSC 5 AMP 120 VOLT

FS-5

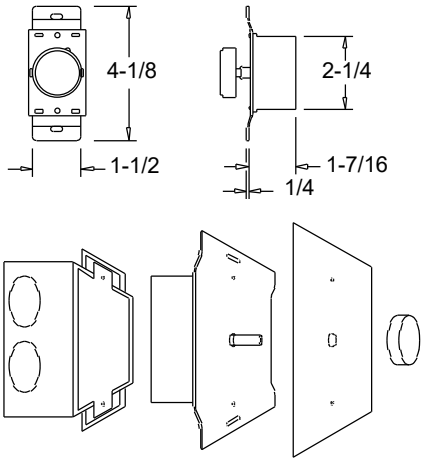

FS-10

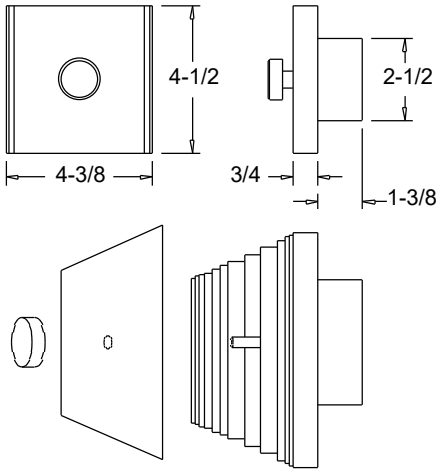

WIRING DIAGRAM

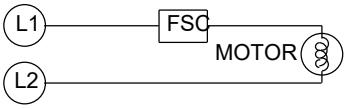

PROJECT: REACT VII SA-01
DATE: 10/1/2025

GEMINI

Gemini Isolator Kit
GIK
Rubber In Shear

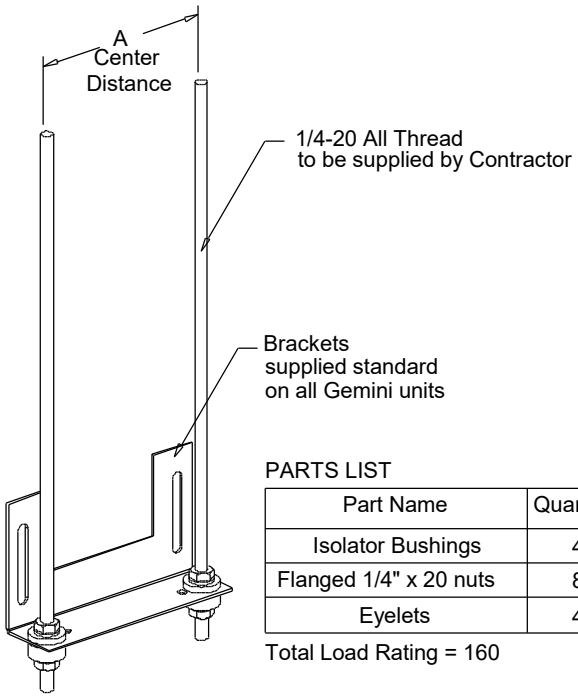

PARTS LIST

Part Name	Quantity
Isolator Bushings	4
Flanged 1/4" x 20 nuts	8
Eyelets	4

Total Load Rating = 160

Dimensions (inches)

Mark	Qty	Description	Part #	A
SF-V19-01	1	GEMINI ISOLATO	GIK	4