Input Power
115 VAC, 1 Phase

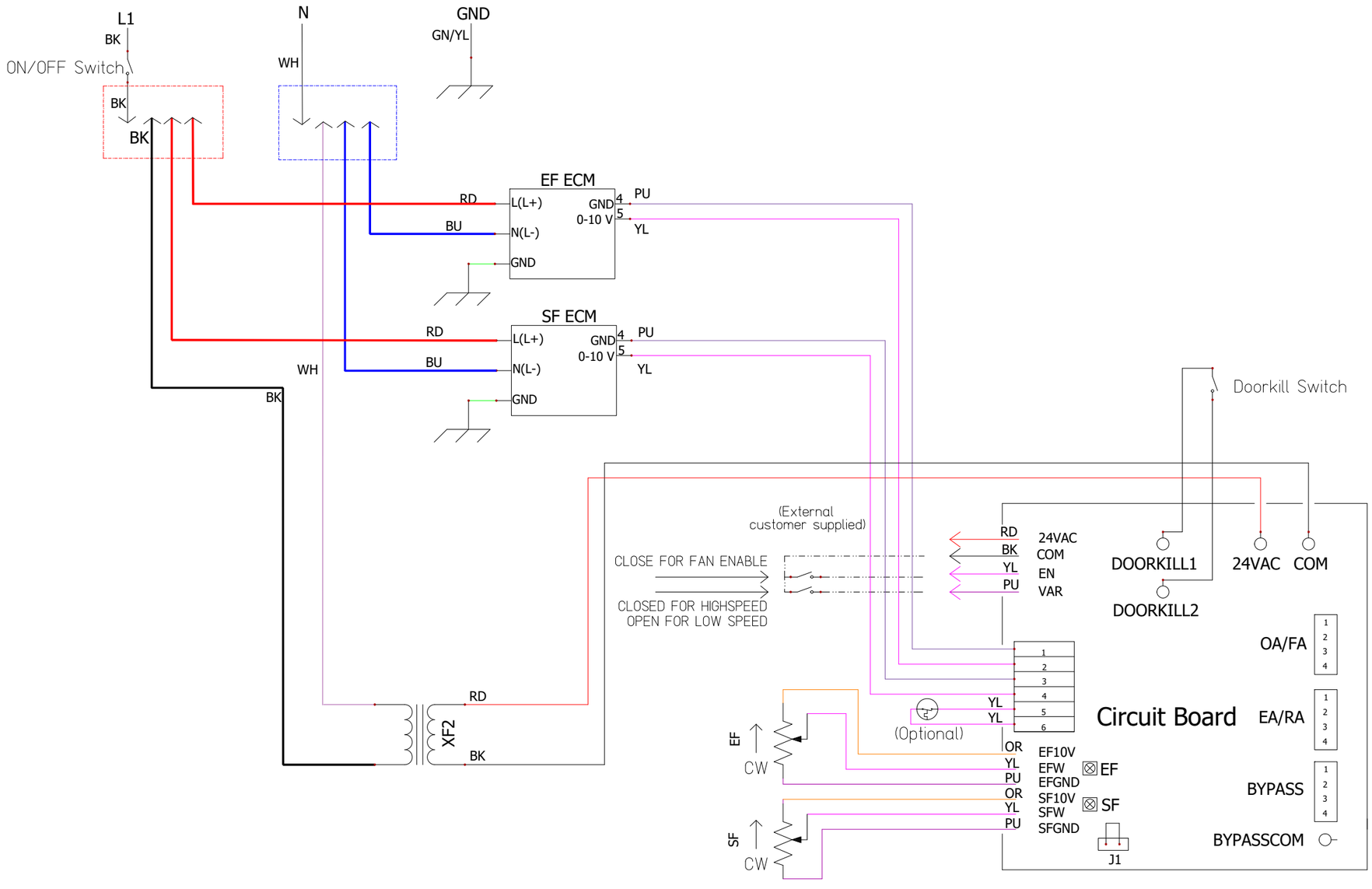

Note:
1. For high speed potentiometer wiring, the purple wire is located closest to the anti-rotation tab
2. For low speed mode fan adjustment, the board mounted potentiometers are EF (R9) and SF (R10)

REV.	DATE	NAME	CHANGES
1	9/3/2024	stimilsina	Changed field wiring connection
0	8/5/2024	stimilsina	New

RenewAire

Family	HE05
Description	No Damper
Config	HE05-JINV-S11EE---GNT---L_001