MATERIALS LIST

REV	PIECE NO	QTY	UNIT	DESCRIPTION	PART NUMBER/NSN OR SUPPLIER
A	1	30	FT	PIPE, 2" 00 SCH 40, ASTM A 56	STOCK
A	2	6	SF	PLATE, STEEL, 20.4#, ASTM A 36	STOCK
A	3	2	SF	PLATE, STEEL, 15.3#, ASTM A 36	STOCK
A	4	6	FT	ANGLE, STEEL, ASTM A 36, 6" X 4" X ⅜"	STOCK
–	5	X	EA	ELBOW, STEEL, 1-1/4 IPS GALV	MCM.CARR 4638K226 OR EQUAL
–	6	X	EA	PNEUMATIC SILENCER	NORGREN MBPIOA OR EQUAL

GENERAL NOTES

1. FOUNDATIONS ARE TO BE ANGLED AS NECESSARY SUCH THAT THE CENTERLINE OF PULL IS PERPENDICULAR TO CENTERLINE (AXLE) OF DRUM.

2. HEAD SHEAVE SHALL BE AIMED AT CENTER OF DRUM. (SEE SHEET 2).

3. HEAD SHEAVE TO DRUM DISTANCE MUST BE AT LEAST 10' TO MAINTAIN A MAXIMUM 1-1/2 FLEET ANGLE AGAINST BOTH DRUM FLANGES.

4. APPLIES TO INGERSOLL-RAND HU40 AND RAM WINCH HU40 REMAN.

REVISIONS

REV	SHT	ZONE	ITEM	DESCRIPTION	DATE	INITIALS & ORG
A	1	4A 4C		INCREASED FNDN SIZE FROM 4"X4" TO 6"X4" ANGLE ADDED BRACKETS TO FOUNDATION UPDATED MATERIAL QTY'S FOR ONE FOUNDATION	7/13	FWD/S/

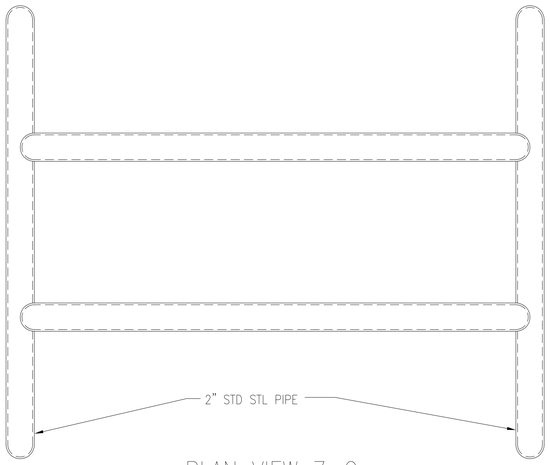

PLAN VIEW 7-C
SCALE: NONE

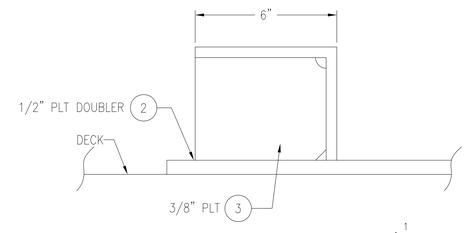

DETAIL 4-C A1
TYP CHOCK DETAIL
SCALE: NONE
[4-A]

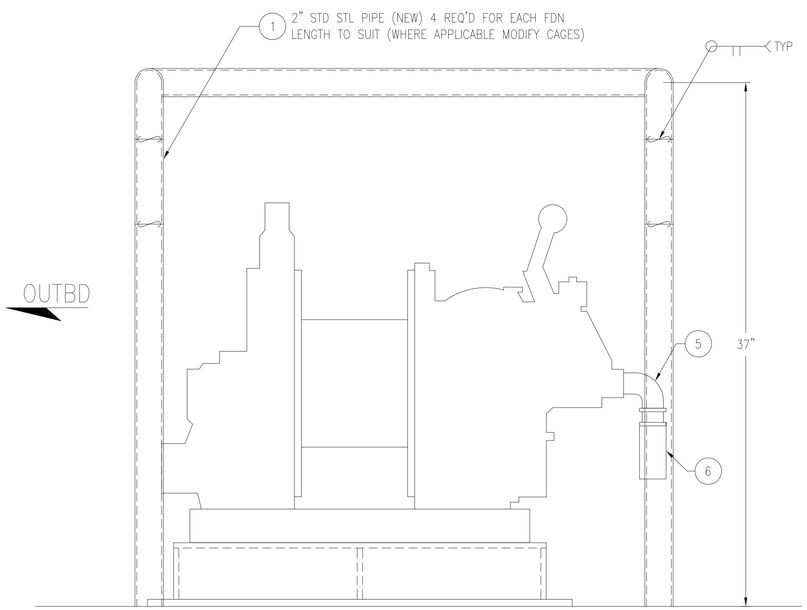

SECTION VIEW 7-A
LKG AFT, STBD SIDE MODIFIED PIPE GUARD TYP FOR ALL (3) FDNS (2 STBD, 1 PORT)
SCALE: NONE
[4-A]

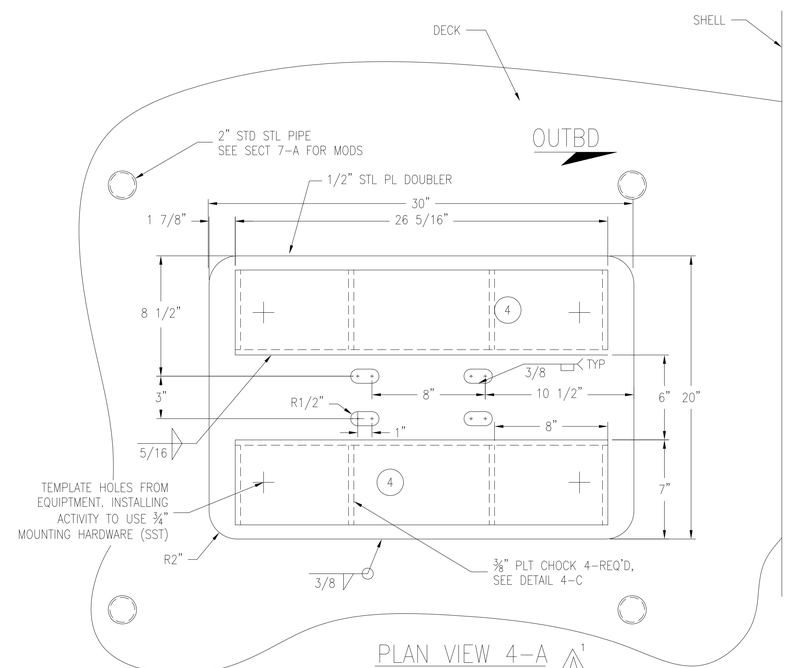

PLAN VIEW 4-A A1
SPUD WINCH FOUNDATION
SCALE: NONE

NO	TITLE	DRAWING NO

REFERENCE PLANS

SPECIAL NOTATIONS

DISTRIBUTION STATEMENT D– DISTRIBUTION AUTHORIZED TO DHS/CG/DOD AND THEIR CONTRACTORS; ADMINISTRATIVE AND OPERATIONAL PURPOSE; <01/01/2009>. OTHER REQUESTS SHALL BE REFERRED TO: COMMANDING OFFICER, USCG SFLC ESD TECHNICAL INFORMATION MANAGEMENT BRANCH, 2401 HAWKINS POINT ROAD, MAIL STOP 25/STINFO PROJECT MANAGER, BALTIMORE, MD 21226-5000.
WARNING–THIS DOCUMENT CONTAINS TECHNICAL DATA WHOSE EXPORT IS RESTRICTED BY THE ARMS EXPORT-CONTROL ACT (TITLE 22, U.S.C. SEC 2751, ET. SEQ.) OR THE EXPORT ADMINISTRATION ACT OF 1979, AS AMENDED, TITLE 50, U.S.C. APP 2401 ET. SEQ. VIOLATIONS OF THESE EXPORT LAWS ARE SUBJECT TO SEVERE CRIMINAL PENALTIES.
DESTRUCTION NOTICE–FOR UNCLASSIFIED, LIMITED DOCUMENTS, DESTROY BY ANY METHOD THAT WILL PREVENT DISCLOSURE OF CONTENTS OR RECONSTRUCTION OF THE DOCUMENT.

SHT	REV
2	–
1	A

SHEET REV STATUS

PLAN-SET	HULLS

APPLICABILITY

USCG ENGINEERING LOGISTICS CENTER
AUX-BRANCH

DESIGNED:
DRAWN: TJF/BB 12/16/09
CHECKED: B.K.B 12/16/09
APPROVED:
U.S.C.G. APPROVAL 1/19/10
CLYDE J. MARTIN /S/
SFLC-NAME-AUX MACHINERY SECTION

UNITED STATES COAST GUARD WASHINGTON, D.C. 20593
OFFICE OF NAVAL ENGINEERING

HU40 SERIES SPUD WINCH FOUNDATION AND INSTALLATION

SIZE	FSCM CAGE NO	U.S.C.G. DRAWING NO.	REV
D	81340	FL 1112-18	A

SCALE: AS NOTED 6.00 SQ FT SHEET 1 OF 2

REV# A | PH# I | 81-1112-FL | DWG NO

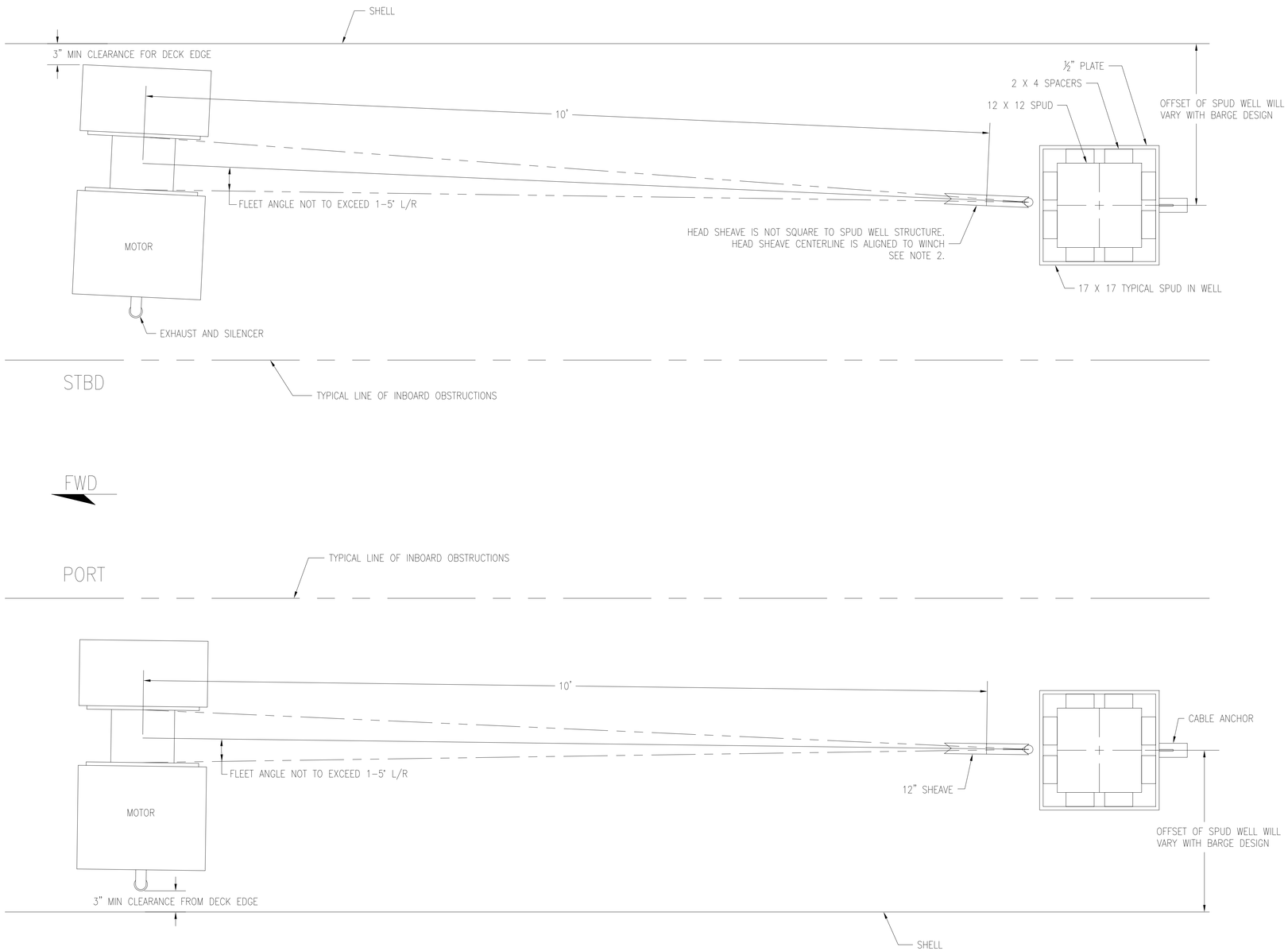

PLAN VIEW 13-A

SPUD WINCH INSTALLATION (TYP)

SCALE: 1-1/2" = 1'-0"

REVISIONS

REV	SHT	ZONE	ITEM	DESCRIPTION	DATE	INITIALS & ORG

UNITED STATES COAST GUARD WASHINGTON, D.C. 20593

OFFICE OF NAVAL ENGINEERING

HU40 SERIES SPUD WINCH FOUNDATION AND INSTALLATION

SIZE	FSCM CAGE NO	U.S.C.G. DRAWING NO.	REV
D	81340	FL-1112-18	-

SCALE: AS NOTED 6.00 SQ FT SHEET 2 OF 2

DWG NO FL-1112-18 SH 2 VER -

TABLE OF PADEYES AND LINKS

		EYE				PAD				LINK		
PADEYE SIZE	WORKING LOAD	A	B	C	TYPE WELD	D	E	F	G	DIA. ROD	WIDTH I.D.	LENGTH I.D.
1/2"	2,400	1/2"	7/8"	3/4"	1	3/8"	2 3/8"	2 1/8"	1/8"	5/8"	7/8"	2 1/16"
3/4"	5,800	3/4"	1"	1"	1	1/2"	3 3/8"	2 5/8"	3/16"	3/4"	1 1/8"	3"
1"	9,800	1"	1 3/8"	1 5/16"	1	3/4"	4 9/16"	3 5/8"	1/4"	1"	1 5/8"	4 1/16"
1 1/4"	14,600	1 1/4"	1 5/8"	1 9/16"	1	7/8"	5 9/16"	4 3/8"	5/16"	1 1/4"	1 7/8"	5"
1 1/2"	20,400	1 1/2"	2"	1 7/8"	2	1"	6 3/4"	5 1/4"	3/8"	1 1/2"	2 1/4"	6"
1 3/4"	27,400	1 3/4"	2 1/4"	2 1/8"	2	1 1/4"	7 3/4"	6 1/8"	3/8"	1 3/4"	2 5/8"	7"
2"	35,600	2"	2 3/8"	2 1/4"	2	1 3/8"	8 3/4"	6 3/4"	3/8"	2"	2 3/4"	7 1/2"
2 1/4"	45,400	2 1/4"	2 7/8"	2 5/8"	2	1 1/2"	9 3/4"	7 7/8"	3/8"	2 1/4"	3 3/8"	9"

NOTES:

1. LINKS TO BE OF MEDIUM STEEL, AISI, GR. 1023 W.
2. PADS AND EYES TO BE STRUCTURE STEEL, ASTM A-36 (SHIPS).
3. ALL WELDING TO BE IN ACCORDANCE WITH SECTION 39-I, GENERAL SPECS FOR SHIPS, DSN. DATED JULY 1954.
4. WHERE PADS ARE NOT SUPPORTED, SUITABLE HEADERS OR SUPPORTS SHALL BE PROVIDED.
5. (A1) NEW OR MODIFIED PADEYE INSTALLATIONS SHALL BE TESTED AT 200% OF WORKING LOAD. ALL SUBSEQUENT TESTING SUCH AS ROUTINE MAINTENANCE TESTS SHALL BE CONDUCTED AT 150% OF RATED LOAD.

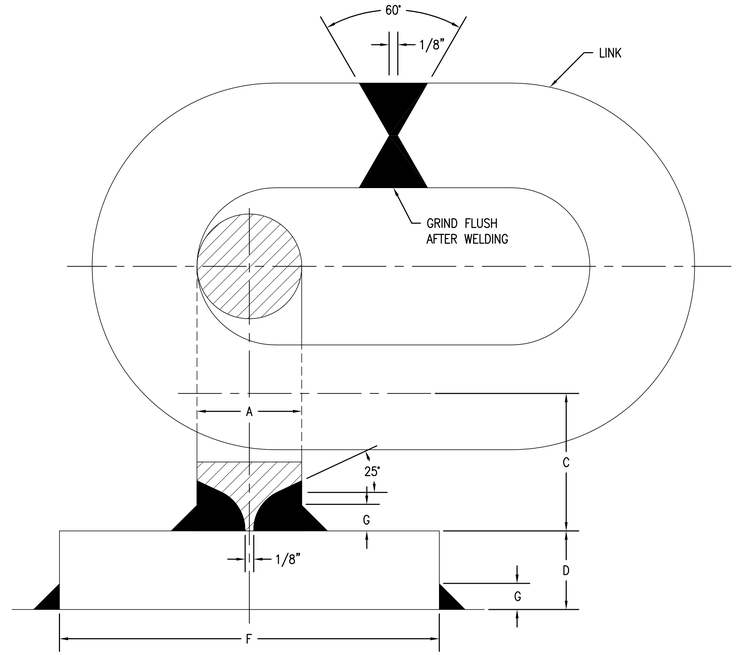

(2) SECTION 4-C

1 1/2" SIZE SHOWN

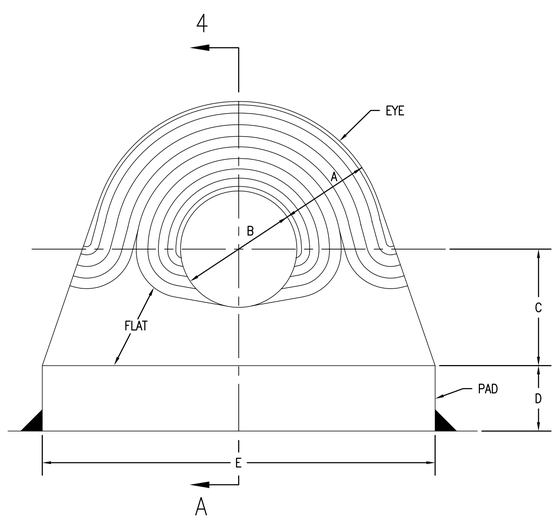

ELEVATION 6-A

1 1/4" SIZE SHOWN

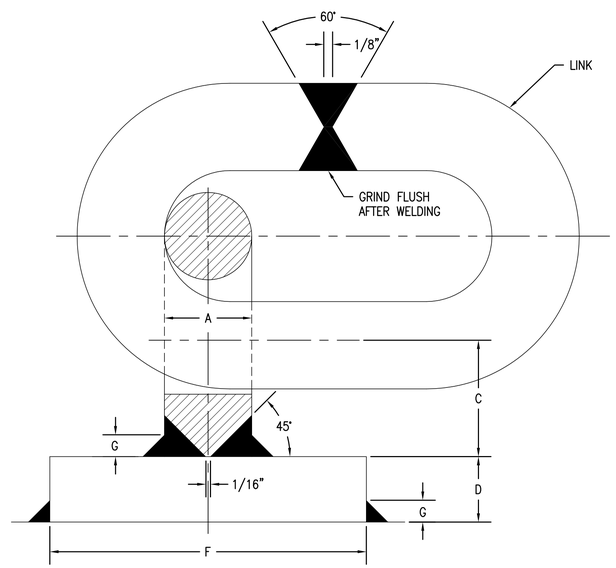

(1) SECTION 4-A

1 1/4" SIZE SHOWN

REVISIONS

REV	SHT	ZONE	DESCRIPTION	BY	APRVD	DATE
A	1	7-C	1.) REVISED NOTE 5 TO SUIT NEW TESTING PROCEDURES.	JGP	TGB KSL RK ELC025	6/3/98

GENERAL NOTES

THIS DRAWING SUPERSEDES DWG. NO. FL-1204-2

STINFO DESIGNATION

DISTRIBUTION STATEMENT D- DISTRIBUTION AUTHORIZED TO DHS/CG/DOD AND THEIR CONTRACTORS; ADMINISTRATIVE AND OPERATIONAL PURPOSE; 01/01/2009. OTHER REQUESTS SHALL BE REFERRED TO: COMMANDING OFFICER, USCG SFLC ESD TIMB, 2401 HAWKINS POINT ROAD, MAIL STOP 25/STINFO PROJECT MANAGER, BALTIMORE, MD 21226-5000. WARNING-THIS DOCUMENT CONTAINS TECHNICAL DATA WHOSE EXPORT IS RESTRICTED BY THE ARMS EXPORT-CONTROL ACT (TITLE 22, U.S.C. SEC 2751, ET. SEQ.) OR THE EXPORT ADMINISTRATION ACT OF 1979, AS AMENDED, TITLE 50, U.S.C. APP 2401 ET. SEQ. VIOLATIONS OF THESE EXPORT LAWS ARE SUBJECT TO SEVERE CRIMINAL PENALTIES. DESTRUCTION NOTICE-FOR UNCLASSIFIED, LIMITED DOCUMENTS, DESTROY BY ANY METHOD THAT WILL PREVENT DISCLOSURE OF CONTENTS OR RECONSTRUCTION OF THE DOCUMENT.

USCG YARD, CURTIS BAY
BALTIMORE, MARYLAND 21226

	INITIALS	DATE
DESIGN		
DRAWN	J.G.H.	9-10-96
CHECKED	W.A.S.	9-11-96

T. BEUKEMA /S/ 9-12-96
CHIEF HULL BRANCH

K. LISAK /S/ 9-12-96
CHIEF ENGINEERING

M. TILYOU /S/ 9-12-96
WT HDLG SYS. TEAM

U.S.C.G. APPROVAL 9-12-96
R. KALMUS /S/
ELC-025

U.S. COAST GUARD HEADQUARTERS WASHINGTON, D.C. 20593
NAVAL ENGINEERING DIVISION

FLEET
WELDED PADEYES
AND LINKS

SIZE	FSCM CAGE NO	U.S.C.G. DRAWING NO.	REV
D	81340	FL-1204-3	A

SCALE AS NOTED | 6.0 SQ FT | SHEET 1 OF 1
PLOT SCALE: FULL | FILE CODE: FL12043A.DWG

DWG NO FL-1204-3 SH 1 REV A

PLAN NO.	SUBJECT	PROGRAM "B" CLASS	B.M. NO.
160 B-WLIC-4809-1	ARRANGEMENT TANK VENTS & SOUNDING TUBES	160 FT WLIC CONSTR TENDER 42463	60 SHEET NO. 1 OF 4

ORIGINAL PREPARATION	BY	DATE
COMPILED	JJS/RB	11-12-75
CHECKED	EAK	11-13-75
APPROVED	B B	11-13-75

DISTRIBUTION	
IND DEPT	1
STRUCT SHOP	
SHOP X11	4
SHOP X12	
SHOP X13	
MECH SHOP	
SHOP X21	2
SHOP X22	
SHOP X23	
SHOP X30	
SERV SHOP	
SHOP X41	
SHOP X42	
SHOP X43	
SHOP X44	
SHOP X45	
SUPPLY DEPT	1
COMDT ENE	1
COMDT	
CG DIST	
ENGRG DIV	2
MGT SERVICE	
SICPC	1
QA STAFF	
PC DIV	
HQ WLIC PROJ MGR	1
160' WLIC STAFF	1
TOTAL	14

REVISIONS

BM REV.	BM APP'D. BY	BM REV. DATE	RELATED DWG. REV.	REMARKS
A	B B	5-27-76	B	DECREASED ITEM NOS. 11, 18, 25, 27, 29, 31 & 52. DELETED ITEM NO. 16. ADDED ITEM NOS 61, THRU 69. INCREASED ITEM NOS 9, 56, 58 & 60. ADDED SH. 4. DWG REVISED. JJS/EAK
B	JRD B	1-21-77	C	INCR ITEM NO. 9. DWG REVISED DM/RJL
C	JRD B	4-12-77	D	ADDED ITEM NOS 70 THRU 74 INCL. DWG REVISED. JJS/EAK

11/18/75 ok

PLAN NO. 160B-WLIC-4809-1 | SUBJECT ARR TANK VENTS & SOUNDING TUBES | PROGRAM "B" CLASS 160 FT WLIC | J.O. NO. 0300-60-42463 | NO. OF UNITS 1

REV.	ITEM NO.	PC. NO.	DESCRIPTION	QUAN	UNIT	REMARKS	DMR	SHOP → / PROD. DIR. → / SUPPLY →	DATE ORDERED / QUAN. STUBBED OUT / STOCK NUMBER	DATE RECEIVED / DATE STUBBED / TOTAL QUAN.	BADGE / SHOP / UNIT OF ISSUE	DATE ISSUED / RELEASED BY / UNIT COST
	1	1	PIPE, 2½" IPS, STL. GALV, STD WT.	65	FT	WW-P-404, ASTM A53	3-18-76		4710-00-277-5467	65	FT	
	2	2	DO EXCEPT 2" IPS.	105	FT	DO			4710-00-277-5466	105	FT	
	3	3	DO EXCEPT 1½" IPS.	30	FT	DO			4710-00-277-5469	30	FT	
	4	4	PIPE, 2" IPS, STL BLK, STD WT.	230	FT	DO			4710-00-277-8708	230	FT	
	5	5	TUBING, 90-10, CU-NI, 2" IPS X .083" WALL.	50	FT	MIL-T-16420			4710-00-289-8006	50	FT	
	6	6	NIPPLE, 2½" IPS, STL, STD WT, T.O.E. 2" LG.	2	EA	WW-P-404, ASTM A53			4710-00-277-8709	500	FT	
	7	7	DO EXCEPT 2" IPS.	12	EA	DO			4710-00-277-8708	2	FT	
	8	8	ELBOW 90°, 2½" IPS, STL, LONG RADIUS, STD WT, BW.	11	EA	TUBE TURN PART NO. 1			4730-00-231-8509	11	EA	
B	9	9	DO EXCEPT 2" IPS.	38	EA	DO			4730-00-LG0-5949	32	EA	
	10	10	DO EXCEPT 1½" IPS.	4	EA	DO			4730-00-529-5074	4	EA	
A	11	11	ELBOW 90°, 2" IPS, BRZ, SIL-BRZG.	14	EA	FLAGG FLOW NO. 5001-400			4730-00-542-5147	18	EA	
	12	12	ELBOW 45°, 2½" IPS, STL, LONG RADIUS, STD WT, BW.	4	EA	TUBE TURN PART NO. 5			4730-00-LG1-6485	4	EA	
	13	13	DO EXCEPT 2" IPS.	2	EA	DO			4730-00-LG1-3606	1	EA	
	14	14	TEE, 2" IPS, STL, STD WT, BW.	10	EA	DO NO. 20			4730-00-529-5083	10	EA	
	15	15	TEE, 2" IPS, EXTRA STRONG, BW.	2	EA	DO NO. 21			4730-00-257-2114	2	EA	
A	16	~~16~~	~~TEE, 2" IPS, BRZ, SIL-BRZG.~~	~~2~~	~~EA~~	~~FLAGG FLOW NO. 5021-400~~			4730-00-542-5253	2	EA	
	17	17	RETURN BEND 180°, 2½" IPS, STL, LONG RADIUS, STD WT, BW.	2	EA	TUBE TURN PART NO. 7			4730-00-LG6-0112	2	EA	
A	18	18	DO EXCEPT 2" IPS.	12	EA	DO			4730-00-LG0-6913	13	EA	
	19	19	DO EXCEPT 1½" IPS.	2	EA	DO			4730-00-LG3-4147	2	EA	
	20	20	RETURN BEND, OPEN PATTERN, 2" IPS, BRZ, SIL-BRZG.	2	EA	FLAGG FLOW NO. 5156-400			4730-00-LG2-8718	2	EA	
	21	21	PIPE, STL, BLK, XHVY, 3" IPS X .300" WALL, SPEC FED WW-P-00404	5	FT	STOCK # 4710-277-3963			4710-00-277-3963	5	FT	
	22	22	PIPE, STL, BLK, STD WT, 2½" IPS X .203" WALL, SPEC FED WW-P-00404	13	FT	DO 4710-278-5347			4710-00-278-5347	12	FT	
	23	23	TEE, 2½" IPS, STL, STD WT, BW	2	EA	TUBE TURN PART NO. 20			4730-00-529-5084	2	EA	
	24	24	ADAPTER, 2" SIL-BRZG FEMALE X 2" MNPT, BRZ	2	EA	FLAGG FLOW NO. 5060-400			4730-00-LG1-9174	2	EA	
A	25	25	FLANGE, 2" IPS, SLIP-ON, BRZ, 150# ANSI.	10	EA	DO 5070-400			4730-00-252-3508	12	EA	
	26	26	FLANGE, 1½" IPS, SLIP-ON, STL, 150# ANSI.	6	EA	TUBE TURN PART NO. 50			4730-00-235-4079	6	EA	
A	27	27	GASKET, RUBBER, CLOTH INSERTED, 2" IPS, 1/16" THK, 150# ANSI FLG.	8	EA	STOCK # 5330-LG2-7728			5330-00-LG2-7728	12	EA	
	28	28	DO EXCEPT 1½" IPS.	4	EA	DO -7726			5330-00-LG2-7726	4	EA	
A	29	29	BOLT, MACH, HEX HD, 5/8"-11 NC X 2" LG, BRZ.	32	EA				5306-00-543-5497	40	EA	
	30	30	BOLT, MACH, HEX HD, 1/2"-13 NC X 1½" LG, STL.	16	EA				5305-00-042-6417	16	EA	
A	31	31	NUT, HEX, REGULAR, BRZ, 5/8"-11 NC.	16	EA				5310-00-584-8001	32	EA	
	32	32	NUT, HEX, REGULAR, STL, 1/2"-13 NC.	16	EA				5310-00-768-0318	16	EA	
	33	33	VALVE, SWING CHECK, 2" FNPT, REGRIND. TYPE, 125#	7	EA	WALWORTH NO. 406			4820-00-288-9162	7	EA	
	34	34	FLAT BAR, 84" LONG X 4" WIDE X 1/4" THK, STL.	14	EA				9510-00-189-1565	98	FT	

NOTES:

U.S.C.G. YARD B.M. NO. 60

SHEET NO. 2 OF 4

NOTES:

B.M. NO. 60

SHEET NO. 2 OF 4

PLAN NO. 160B-WLIC-4809-1 | SUBJECT ARR TANK VENTS & SOUNDING TUBES | PROGRAM "B" CLASS 160 FT WLIC | J.O. NO. 0300-60-42463 | NO. OF UNITS 1

REV.	ITEM NO.	PC. NO.	DESCRIPTION	QUAN	UNIT	REMARKS	DMR	SHOP → / PROD. DIR. → / SUPPLY →	DATE ORDERED / QUAN. STUBBED OUT / STOCK NUMBER	DATE RECEIVED / DATE STUBBED / TOTAL QUAN.	BADGE / SHOP / UNIT OF ISSUE	DATE ISSUED / RELEASED BY / UNIT COST
	35	35	VENT CHECK VALVE, 2½" FNPT INCLUDING PROTECTIVE SCREEN	2	EA	TATE TEMCO NO. 52-20T	3-18-76		4820-00-LG3-4150	2	EA	
			AND FLOAT, SCREENS TO BE BRONZE, CAST STEEL BODY.						—			
	36	36	DO EXCEPT, 2" FNPT, FLAME SCREEN (40 MESH)	8	EA	DO			4820-00-LG3-4151	8	EA	
	37	37	VENT CHECK VALVE, 2" FNPT, W/BRONZE PROTECTIVE	3	EA	DO			4820-00-LG3-4152	3	EA	
			SCREEN, CAST STEEL BODY, (MODIFIED) ½ MESH.						—			
	38	38	VENT CHECK VALVE, 2" FNPT, INCLUDING BRONZE PROTECTIVE	2	EA	DO			4820-00-LG3-4153	2	EA	
			SCREEN AND FLOAT, BRONZE BODY, (MODIFIED).						—			
	39	39	VENT TERMINAL VALVE, 2" FNPT, INCLUDING BRONZE	2	EA	DO .52-40T			4820-00-LG3-4154	2	EA	
			FLAME SCREEN & PROTECTIVE SCREEN, CAST STL BODY.						—			
	40	40	DECK ACCESS BOX, 2" IPS, SOCKET WELD CONN, SST BODY,	15	EA	DO .58-61			4730-00-LG3-4149	15	EA	
			BRZ PLUG FITTED W/ASBESTOS GASKET, W/WRENCH NO. 57-80						—			
	41	41	FLAT BAR, 1" WIDE X ⅛" THK, STAINLESS STEEL.	20	FT				9515-00-204-4543	20	FT	
	42	42	CHAIN SASH, SIZE NO 8, MATL SIZE .035", 12" LG, SOLID BRZ.	1	EA	STOCK NO. 4010-228-9933			4010-00-228-9933	1	FT	
	43	43	CAP PIPE, 2" FNPT, STL, BLK, STD WT.	1	EA				4730-00-231-2416	1	EA	
	44	44	VALVE, LEVER GATE, 2" FNPT, BRZ, 75#	1	EA	LUNKENHEIMER FIG. 430			4820-00-287-2825	1	EA	
	45	45	CAP PIPE, 2" IPS, STL, EXTRA STRONG, BW.	1	EA	TUBE TURN PART NO. 81			4730-00-LG3-4148	1	EA	
	46	46	PIPE HANGER FOR 2½" IPS PIPE, ¼" X 1" FB, STL W/2 BOLTS & NUTS	20	EA	STOCK# 5340-LG2-6702			5340-00-LG2-6702	20	EA	
	47	47	DO EXCEPT 2" IPS PIPE.	74	EA	DO -6701			5340-00-LG2-6701	74	EA	
	48	48	PIPE HANGER FOR 1½" IPS PIPE, ⅛" X 1" FB, STL W/2 BOLTS & NUTS	5	EA	DO -6700			5340-00-LG2-6700	5	EA	
	49	49	ROD, SST, ROUND, ⅛" DIA	1	FT				9510-00-189-0574	1	FT	
	50	50	REDUCER, CONCENTRIC, 2½" X 2" IPS, STL, STD WT, BW.	3	EA	TUBE TURN PART NO. 90			4730-00-174-6808	3	EA	
	51	51	PIPE, 2½" IPS, STL, BLK, STD WT.	55	FT	WW-P-404, ASTM A 53			4710-00-278-5347	55	FT	
A	52	52	VALVE, GATE, 2" IPS, 150# ANSI, FLGD, BRZ BODY, NI-CU	2	EA	MILWAUKEE NO. 1306			4820-00-LG2-3201	4	EA	
			WEDGE, STEM & DISC RING.						—			
	53	53	DO EXCEPT 1½" IPS.	2	EA	DO			4820-00-LG2-2578	2	EA	
	55	54	FLG, PIPE, FORGED ST'L, 2½" IPS, 150# ANSI, SLIP-ON, WELD TYPE	2	EA		1-12-76		4730-00-235-4080	2	EA	
A	56	55	FLG. PIPE, FORGED ST'L, 2" IPS, 150# ANSI, SLIP-ON, WELD TYPE	8	EA		4-15-76		4730-00-221-6256	4	EA	
	57	56	GASKET, RUBBER CLOTH INSERTED, 2½" IPS, 150# ANSI, FLG, 1/16" THK	1	EA	5330-00-LG2-7730			5330-00-LG2-7730	1	EA	
A	58	57	NUT, HEX, REGULAR, ST'L, 5/8"-11 NC	20	EA		4-15-76		5310-00-763-8920	12	EA	
	59	58	BOLT, MACH, HEX HD, ST'L, 5/8"-11 NC X 2 3/4" LG	4	EA				5306-00-281-7116	4	EA	
A	60	59	BOLT, MACH, HEX HD, STL, 5/8"-11 NC X 2½" LG	16	EA		4-15-76		5305-00-724-5913	8	EA	
A	61	60	GASKET, ASBESTOS, ANSI 150# FLANGE, 2" IPS X 1/16" THK.	8	EA		4-15-76		5330-00-LG2-7624			
A	62	61	GASKET, ASBESTOS, ANSI 150# FLANGE 2½" IPS X 1/16" THK	2	EA		4-15-76		5330-00-LG2-7626			
A	63	62	ELBOW, 45°, 1½" IPS, STL, LONG RADIUS, STD. WT, BW.	4	EA	TUBE TURN PART NO. 5						

NOTES:

U.S.C.G. YARD B.M. NO. 60

SHEET NO. 3 OF 4

NOTES:

B.M. NO. 60

SHEET NO. 3 OF 4

PLAN NO. 160 B WLIC-4809-1

SUBJECT ARR TANK VENTS & SOUNDING TUBES.

PROGRAM B-CLASS 160 FT WLIC

J.O. NO. 0300-60-42463

NO. OF UNITS 1

REV.	ITEM NO.	PC. NO.	DESCRIPTION	QUAN	UNIT	REMARKS	DMR	SHOP → / PROD. DIR. → / SUPPLY →	DATE ORDERED / QUAN. STUBBED OUT / STOCK NUMBER	DATE RECEIVED / DATE STUBBED / TOTAL QUAN.	BADGE / SHOP / UNIT OF ISSUE	DATE ISSUED / RELEASED BY / UNIT COST
A	64	63	ELBOW 90°, 2" FNPT, STL, 2000#	1	EA		6-26-76					
	65	64	PIPE, 3" IPS, STL, GALV, STD WT.	20	FT	WW-P-404, ASTM A53						
	66	65	PIPE, STL, BLK, STD WT, 3½" IPS X .226 WALL, SPEC FED WW-P-00404	1	FT	STOCK NO. 4710-00-277-8711						
	67	66	RETURN BEND, 180°, 3" IPS, STL, LR, STD. WT, BW, GALV.	2	EA	TUBE TURN PART NO. 7						
	68	67	NIPPLE, 3" IPS, STL, STD. WT, GALV, T.O.E, 2" LG.	2	EA	WW-P-404, ASTM A53						
	69	68	VENT CHECK VALVE, 3" FNPT, INCLUDING BRZ PROTECTIVE	2	EA	TATE TEMCO NO. 52-20T						
↓			SCREEN & FLOAT, CAST STL BODY, GALV.									
C	70	69	HALF COUPLING, ½" FNPT, FORGED STL, 3000# WOG.	2	EA	CRANE CO. NO. 388						
C	71	70	ELBOW 90°, ½" FNPT, FORGED STL, 2000# WOG.	4	EA	DO NO. 240						
C	72	71	PIPE, ½" IPS, STL GALV, STD WT.	24	FT	WW-P-404, ASTM-A53						
C	73	72	VALVE GATE, ½" FNPT, BRZ BODY, SOLID WEDGE, DISC &	2	EA	MILWAUKEE NO. 1142 OR EQ						
			STEM OF BRZ, UNION BONNET, NON-RISING STEM, 200# WOG									
C	74	73	CONCENTRIC REDUCER, 1½" X ½" STL, STD WT, BW.	2	EA	CRANE CO. NO 359 E						

NOTES:

U.S.C.G. YARD B.M. NO. 60

SHEET NO. 4 OF 4

NOTES:

B.M. NO. 60

SHEET NO. 4 OF 4

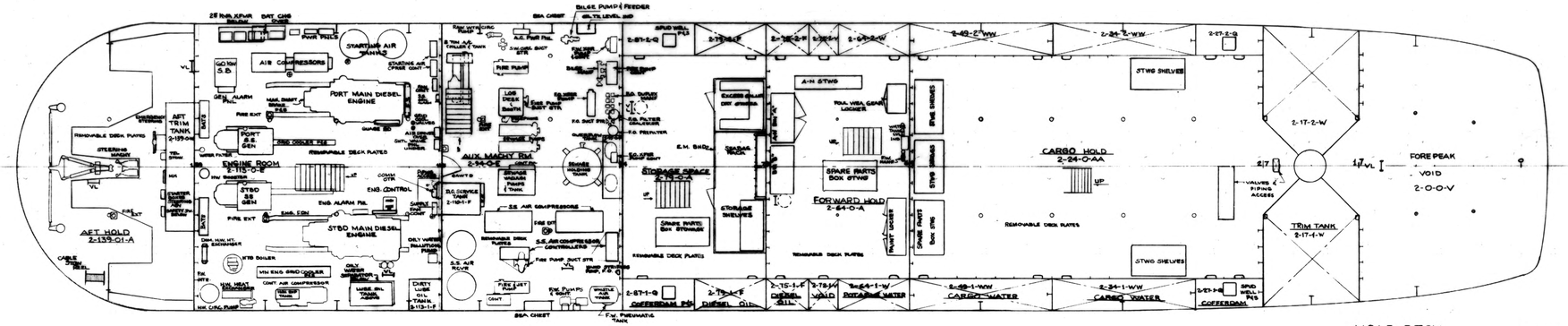

HOLD DECK

160WLIC-0103-2	REV —
SCALE: 3/16"=1'-0"	SHEET 3 OF 6

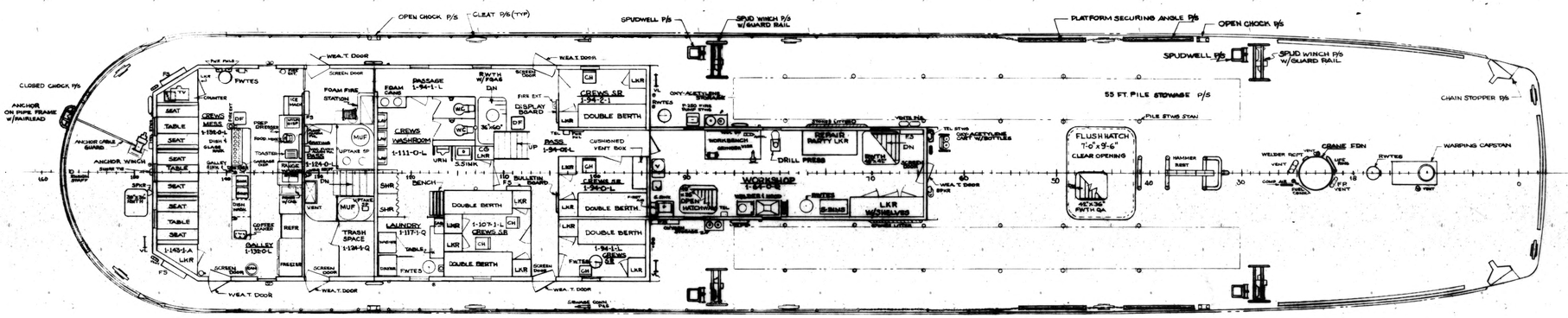

MAIN DECK

160WLIC-0103-2	REV —
SCALE: 3/16"=1'-0"	SHEET 2 OF 6

BOOKLET OF GENERAL PLANS

U.S. COAST GUARD CUTTER

PAMLICO WLIC 800

TABLE OF CONTENTS

SHEET NO.	TITLE
1.	TITLE SHEET
2.	MAIN DECK
3.	HOLD DECK
4.	UPPER DECK, PILOTHOUSE DECK, & PILOTHOUSE TOP
5.	OUTBOARD PROFILE
6.	INBOARD PROFILE

PRINCIPAL CHARACTERISTICS

Length over-all	160 feet 10 inches
Length on design water line	157 feet 6 inches
Beam extreme, molded	30 feet 0 inches
Depth molded, main deck	10 feet 0 inches
Camber	None
Sheer	None
Design draft, molded	4 feet 0 inches
Displacement, molded, to 4 feet 0 inches draft	411.2 long tons S.W.
Main propelling machinery, twin screw, shaft horsepower (approximate) each	500 Shp.
total two shafts	1000 Shp.
Sustained sea speed	11.0 knots
Sustained speed in 12 foot average water depth	9.6 knots
Cruising range at 11.0 knots	1380 nautical miles
Cruising range at 9.6 knots (shallow water)	1116 nautical miles
Fuel capacity (95%)	6349 gallons
Fresh water capacity (ship's water)(100%)	3558 gallons
Fresh water capacity (cargo water) (100%)	13,714 gallons

ACCOMODATIONS

C. O.	1
PO's	4
Crew	10
TOTAL	15

PLAN DISTRIBUTION	DATE ISSUED
INDUSTRIAL DEPT	
STRUCTURAL SHOP	
SHIPFITTER SECT.	
SHEETMETAL SECT.	
WELDING SECT.	
MECHANICAL SHOP	
PIPEFITTER SECT.	
MACHINE SECT.	
MARINE MACHINE SECT.	
ELECTRO SHOP	
SERVICES SHOP	
WOODWORKING SECT.	
PAINT SECT.	
MATERIAL HANDLING SECT.	
MARINE RAILWAY/DRYDOCK	
BOATBUILDING SECT.	
SUPPLY DEPT.	
CONST. (6) SHEET	
CONST.	
C.G. DISTRICT 8	
PAMLICO WLIC 800	
ENGINEERING DIV. HQ	
NAT. SERVICE REPROD FILES	
FIRE & SAFETY DEPT.	
PAMLICO SERVP	
ALTERATIONS	
TOTAL	

REVISION	PANEL	DATE	DESCRIPTION	BY	CHECKED

U.S. COAST GUARD YARD — SHIPYARD SER. NO.

INDUSTRIAL DEPARTMENT

DESIGNED - DRAWN - TRACED - CHECKED - DWG

160 FT. CONSTRUCTION TENDER

BOOKLET OF GENERAL PLANS

APPROVED — CHIEF ENGINEERING DIVISION — DATE 7-28-76

C.G. DRAWING NO. 160WLIC-0103-2 REV

SCALE 3/16"=1'-0" SHEET 1 OF 6

DISTRIBUTION STATEMENT D: DISTRIBUTION AUTHORIZED TO DHS(CGGOO AND THEIR CONTRACTORS; ADMINISTRATIVE AND OPERATIONAL PURPOSE; <01/01/2009>. OTHER REQUESTS SHALL BE REFERRED TO: COMMANDING OFFICER, USCG SFLC ESD TECHNICAL INFORMATION MANAGEMENT BRANCH, 2401 HAWKINS POINT ROAD, MAIL STOP 28/STINFO PROJECT MANAGER, BALTIMORE, MD 21226-5000.
WARNING - THIS DOCUMENT CONTAINS TECHNICAL DATA WHOSE EXPORT IS RESTRICTED BY THE ARMS EXPORT CONTROL ACT (TITLE 22, U.S.C. SEC 2751, ET. SEQ.) OR THE EXPORT ADMINISTRATION ACT OF 1979, AS AMENDED, TITLE 50, U.S.C. APP 2401 ET. SEQ. VIOLATIONS OF THESE EXPORT LAWS ARE SUBJECT TO SEVERE CRIMINAL PENALTIES.
DESTRUCTION NOTICE-FOR UNCLASSIFIED, LIMITED DOCUMENTS, DESTROY BY ANY METHOD THAT WILL PREVENT DISCLOSURE OF CONTENTS OR RECONSTRUCTION OF THE DOCUMENT.

REVISION	DATE	APPD.		BY
B	12/27/94	LCDR BARNES /s/ E-CHIEF I.C.TRL	THIS REVISION IS IN ACCORDANCE WITH SFLC ACTIVITY # 64386 "FIRE MONITOR REMOVAL". 1. REMOVED ALL FIRE MONITORS LOCATED ON THE PILOTHOUSE DECK. LOCATION-SHEETS 4,5,6.	PVOGEL-GESANG
A	3/25/88		NAVIGATION LIGHTS MODIFIED TO COMPLY WITH CURRENT REQUIREMENTS.	M. R. #5

U.S. COAST GUARD — HEADQUARTERS — WASHINGTON, D.C. 20590

NAVAL ENGINEERING

DESIGNED - DRAWN - TRACED - CHECKED - M. Hawkins

CHIEF, TECHNICAL SECTION

160 FT. CONSTRUCTION TENDER

BOOKLET OF GENERAL PLANS

APPROVED — U.S.C.G. CHIEF DESIGN BRANCH — DATE 11/2/88

PROJECT OFFICER

CHIEF, MAINT. BR. 12-21-87

FSCM NO.	C.G. DRAWING NO.	REV.
81340	160 WLIC-0103-2	B

SCALE 3/16"=1'-0" SHEET 1 OF 6

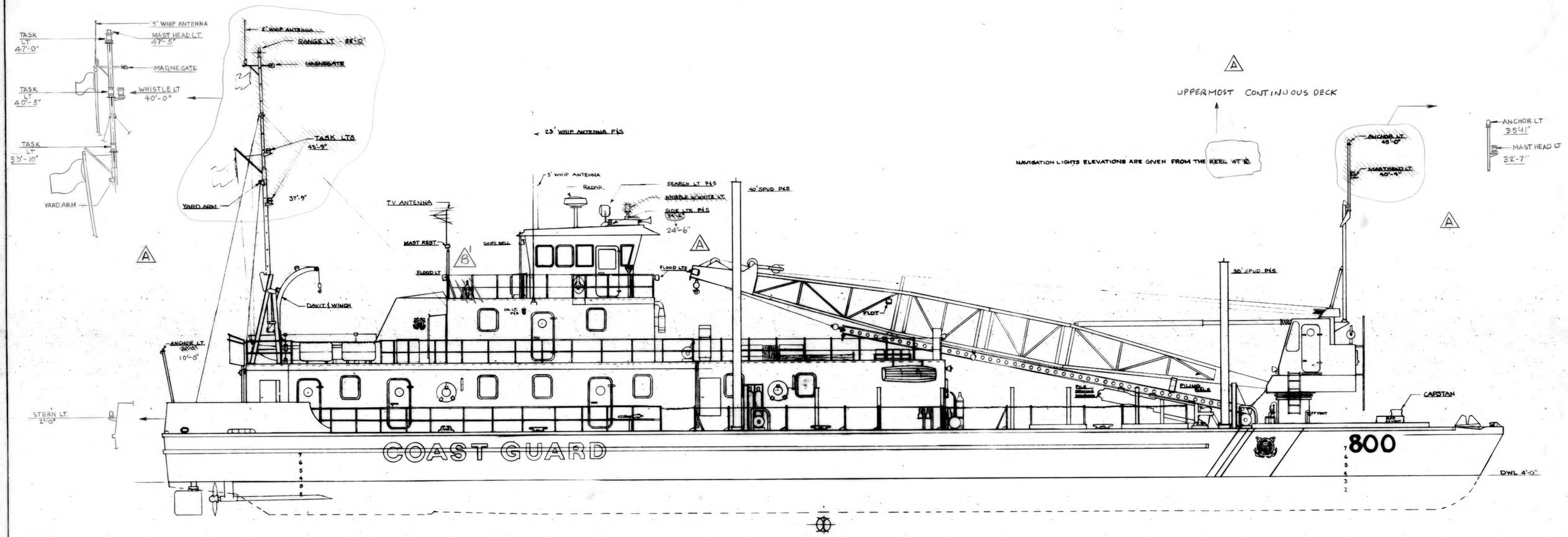

OUTBOARD PROFILE

160WLIC-0103-2	REV B
SCALE: 3/16"=1'-0"	SHEET 5 OF 6

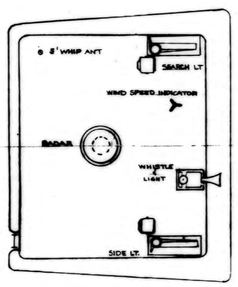

PILOTHOUSE TOP

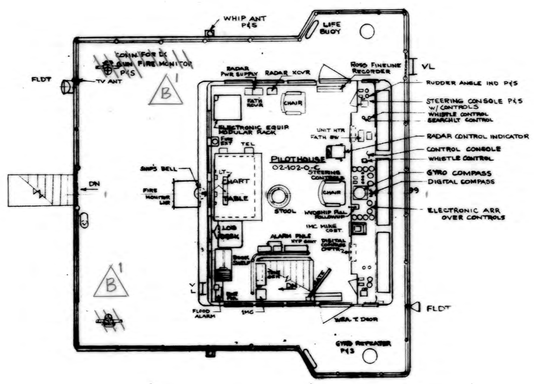

PILOTHOUSE DECK

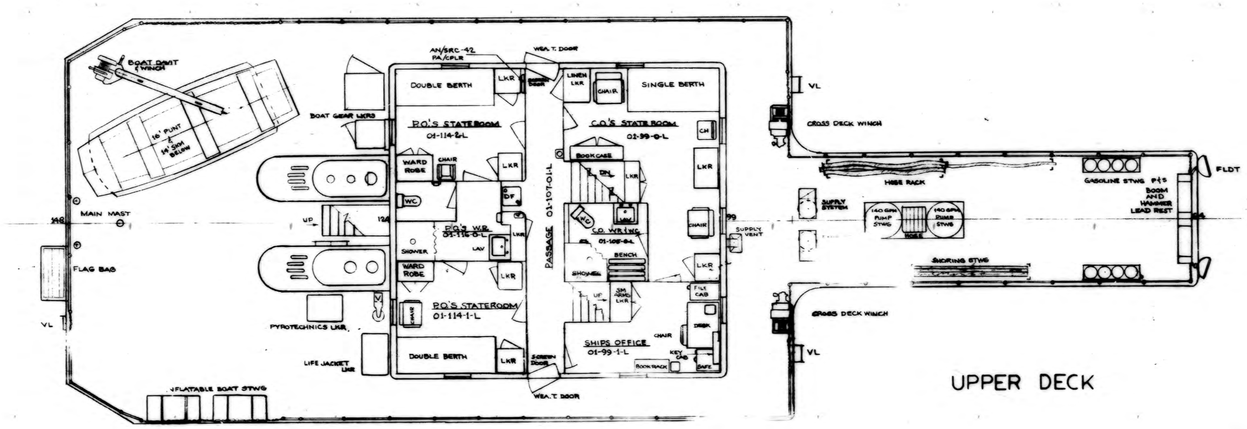

UPPER DECK

160WLIC-0103-2	REV B
SCALE: 3/16"=1'-0"	SHEET 4 OF 6

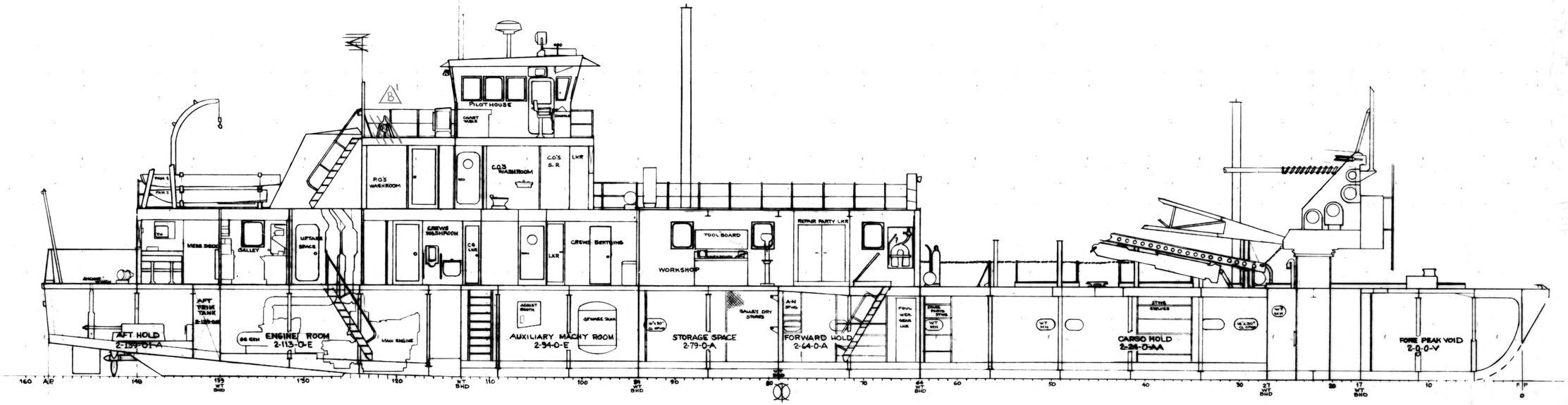

INBOARD PROFILE

160WLIC-0103-2	REV 8
SCALE: $\frac{3}{16}$"-1'-0"	SHEET 6 OF 6

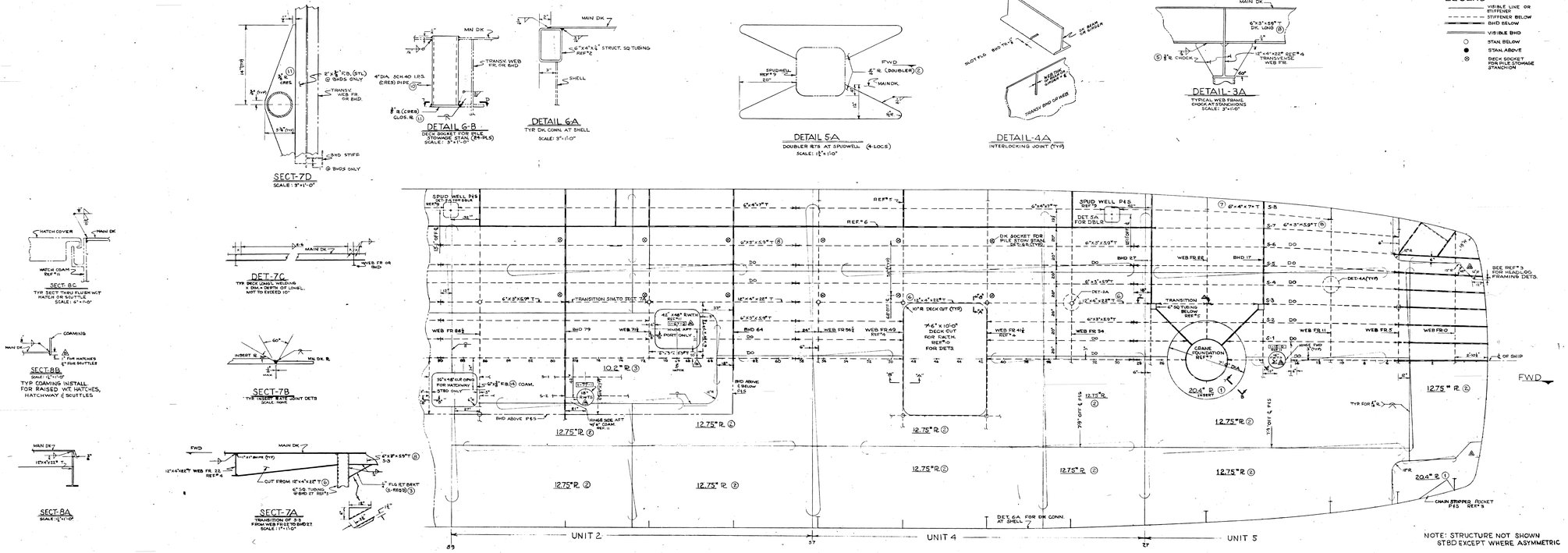

GENERAL NOTES

1. ALL STRUCTURE AND DECK FITTINGS ARE SYMMETRIC TO CENTERLINE OF SHIP.
2. SHARP OR RAGGED EDGES OR EXPOSED STRUCTURAL WORK SHALL BE REMOVED.
3. WELDING SHALL BE IN ACCORDANCE WITH REF. 13.
4. INSERT PLATES SHALL BE INSTALLED WITH UNDER SIDE OF PLATE FLUSH WITH UNDER SIDE OF DECK STATION.

REFERENCE PLANS

NO	TITLE	PLAN NO.
1	BILL OF MATERIAL	BM-10
2	SHELL PLT & EXPANSION & LONG. FR.	160 WLIC-1101-1
3	FOREPEAK & AFTER PEAK FRAMING	1102-1
4	WEB & TRANSVERSE FRAMING	1103-1
5	TRANSVERSE WT & GT BHDS	1105-1
6	LONG'L WT & GT BHDS & BOTT. TANKS	1105-2
7	CRANE FOUNDATION INSTALL & DETS.	1112-3
8	HULL FITTINGS & CHAIN STOPPERS	1201-1
9	SPUD WELLS & SPUDS	1205-1
10	CARGO HATCH COVER	1260-B1
11	W.T DOORS, SCUTTLES & MANHOLE SCHEDULE	1605-2
12	PAINTING SCHEDULE	1900-1
13	WELDING PROCEDURE & SEQUENCE	09001-1

RESERVATIONS

1. CARGO HATCH FOUNDATION (SEPA) INSERT AS & WHEN.

REVISION	PANEL	DATE	DESCRIPTION	BY	APPROV.
A	—	3-1-61	SHT 2 NOTES 5,8, FWD BOOM JUMPER	JOK	MAW
A	—	4-2-78	UNIT 2 REVISED FOR NEW SYS. PHASE	TT	MAW
A	—	11-18-78	REMOVED SECT 7 CARGO FDN INSERT & NOT REQD. SHT 2 & BHD REV.	TT	MAW
A	7(5)	1-14-79	ADD DIM OF SPACE FOR PIPE TO 16" BETWEEN FRS. LINE 1 AT WEB FR 26 TO 31 IN S & WEB FR 26 BHD 17 IN P. REV. SECT 7D TO SHOW 3" SHELL PLATE INSTEAD OF 2½" & STIFFENERS TO CONFORM	TT	MAW
A	4,5,8, 9 & 10	7-25-79	REV. DK INSERT FOR CHAIN STOPPERS. REV. LOC OF HATCHES & SCUTTLES INDICATED BY 1" & WEB FR 33 TO 36 IN S. BHD 27 IN P. REV. BM UNAFFECTED.	TT	MAW

U.S. COAST GUARD YARD — CURTIS BAY, MD.

INDUSTRIAL DEPARTMENT

160 FT CONSTRUCTION TENDER

MAIN DECK

FRAMING & PLATING

DESIGNED: DRAWN: DWG. TRACED: CHECKED: DAL

Eugene J. Tarsh — PROJECT ENGINEER

APPROVED: A. Wm. Fischer — MANAGER — DATE 5-15-78

U.S. DRAWING NO. 160 WLIC-1106-1

REV. —

SCALE AS SHOWN — SHEET 1 OF 4

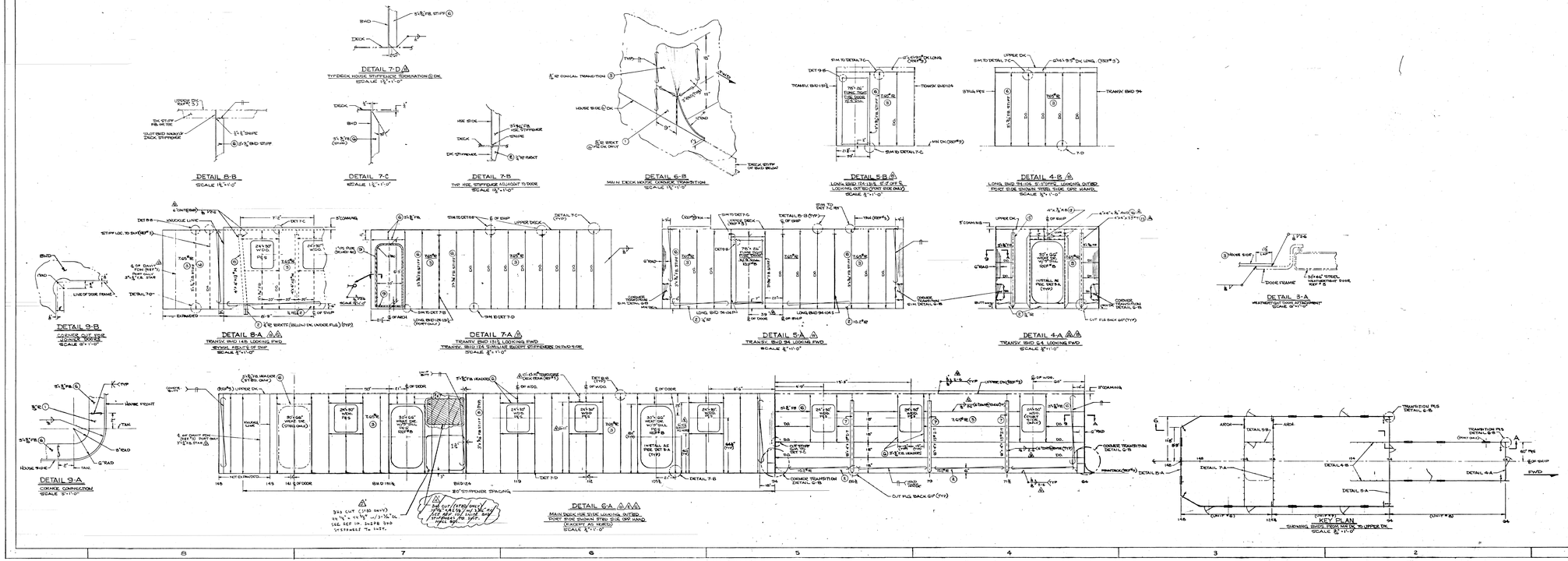

GENERAL NOTES

1. THE MAIN & UPPER DECKS, DO NOT HAVE GAMMOR OR SHEER.
2. THE MOLDED HEIGHT BETWEEN THE MAIN & UPPER DECK IS 7'-0".
3. WELDING OF THIS SHALL BE PERFORMED IN ACCORDANCE WITH NSPF-5.
4. APPLY TREC-291 HT SEALING COMPOUND PER IS BETWEEN ALL HOUSE, FLAT BOTTOM, SIDE SHEETING, TOP SHEETING, FLAT BOTTOM, SIDE, WINDOW FRAMES & DECKS. PER 3/8" DIA. (SOLID) PER # 10 (11).

REFERENCE PLANS

	TITLE	DWG NO.
1.	BILL OF MATERIAL	BM-1B
2.	DK. HSES. END, CASINGS AND STACKS	160WLIC 1107-1
3.	UPPER DECKS FRAMING AND SETS	160WLIC 1108-2
4.	TRANSV. BHD. FRAMING	160WLIC 1109-1
5.	PAINTING SCHEDULE OF MATERIALS	160WLIC 0900-1
6.	WELDING PROCEDURE & SEQUENCE	160WLIC 0900-1
7.	CASING AND STL. WINDOWS, MAG ON HSE.	16A-F 5.5.5
8.	H.E. & WRAT DOWNLIFTS, SCUTTLES, PLATES & PIPE	160WLIC 1109-2
9.	MAL DECK FRAMING AND SETS	160 WLIC 1108-1
10.	VENT. REDOT. MACH'Y SPACES	160 WLIC 1801-3

RESERVATIONS

1	-	6-7-06	SHT 2 REVISED, SH. 4 & 5 ADD.			
2	-	9-8-06	SHT 2 REVISED, SH. 2 & 3 ADD.			
3	7	3/21/07	MODIFIED STBD SIDE WALKWAY FLOOR TO CLEARANCE ISSUE AS REQUIRED.			
4	7	4/2/07	CLOSED REF. 10. ADDED STBD SIDE WALKWAY CUT FOR CLEARANCE			
5	8-9-10	8-8-07	DUE TO THE HOUSE SIDE STIFFENERS BEING TOO CLOSE TO THE WALKWAY, THERE IS NO ROOM TO INSTALL THE FLOOR PLATE. THE FLOOR PLATE WILL BE REMOVED AND THE WALKWAY WILL BE FABRICATED FROM 3/8" PLATE. THE WALKWAY WILL BE FABRICATED AS SHOWN ON DWG. 160WLIC 1108-1 SHEET 2 REV. 9.			
6	-	8-15-07				
7	G	11-5-07	REMOVED WEARING PLATE ON HOUSE SIDE, ADDED 3/8" PLATE TO WALKWAY, ADDED 3/8" PLATE TO DECK.			
8	8	11-8-07	REMOVED 3/8" PLATE ON WALKWAY & ADDED 3/8" PLATE ON DECK.			
9	-	4-17-08	REMOVED 3/8" PLATE ON WALKWAY & ADDED 3/8" PLATE ON DECK.			
10	-	5-14-08	REMOVED 3/8" PLATE ON WALKWAY & ADDED 3/8" PLATE ON DECK.			
11	9-10-11	3-6-09	REMOVED 3/8" PLATE ON WALKWAY & ADDED 3/8" PLATE ON DECK.			
12	11	9-18-09	END 64 STIFFS. REVISED, DISTRIBUTIONAL REVISED. SH. 4 & 5 REVISED.			

U.S. COAST GUARD			CUSTOM BASIC NO.
			INDUSTRIAL DEPARTMENT
DRAWN: WAB			160 FT. CONSTRUCTION TENDER
CHECKED:			DK. HSES. ENG. CASING AND STACKS
APPROVED:			
			160WLIC-1107-1
			SCALE: AS SHOWN

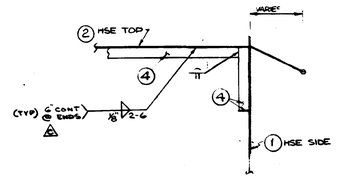

SECTION "6-C"
TYPICAL OUTBD STIFF CONN @ HSE TOP
SCALE: 3/4" = 1'-0"

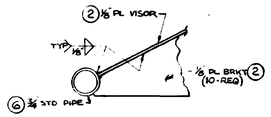

DETAIL "5-C"
TYPICAL VISOR CONNECTION
SCALE: 6" = 1'-0"

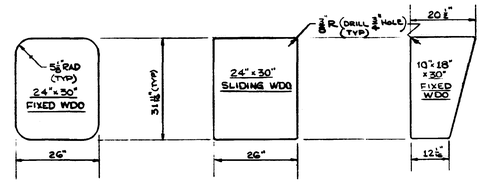

DETAIL "4-C"
TYPICAL R CUTS FOR WDOS
SCALE 3/4" = 1'-0"

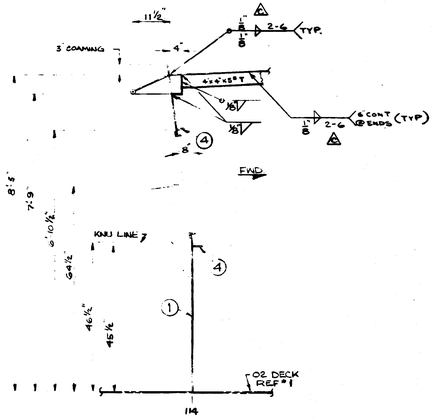

SECTION "5-B"
SCALE: 3/4" = 1'-0"

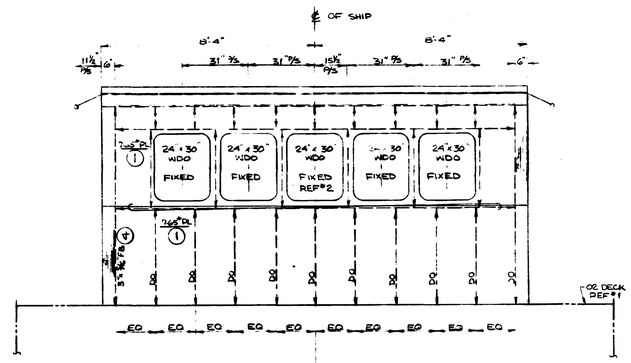

SECTION "4-B"
SCALE: 1/2" = 1'-0"

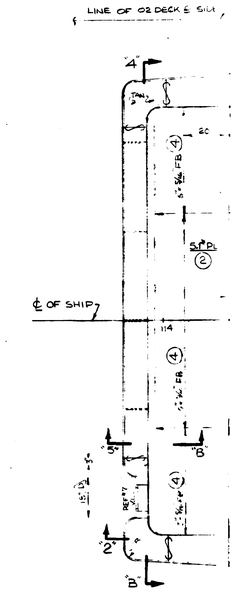

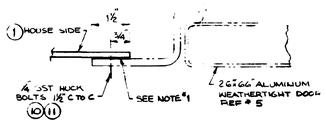

DETAIL "7-B"
WEATHERTIGHT DOOR ATTACHMENT
SCALE: 6" = 1'-0"

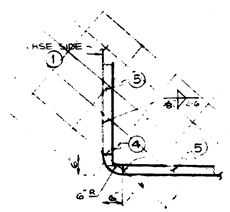

SECTION "6-B"
TYPICAL CORNER CONN
SCALE: 3/4" = 1'-0"

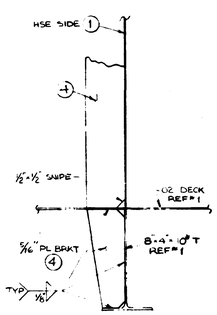

DETAIL 7-A
TYP DECKHOUSE STIFF TERMINATION
& DOOR SIDES ONLY
SCALE: 3" = 1'-0"

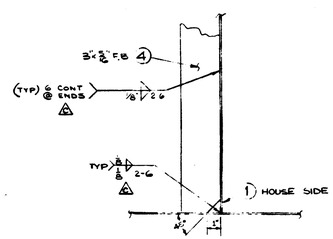

DETAIL "6-A"
TYP DECKHOUSE STIFF TERMINATION
EXCEPT @ SIDES OF DOORS
SCALE: 3" = 1'-0"

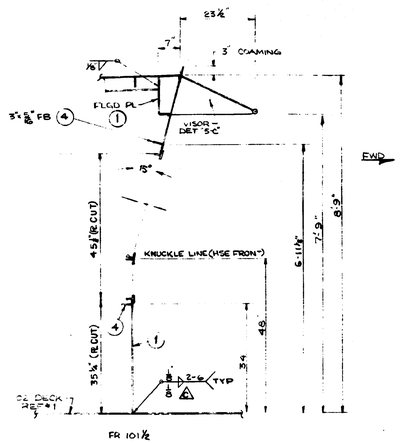

SECTION "5-A"
SCALE: 3/4" = 1'-0"

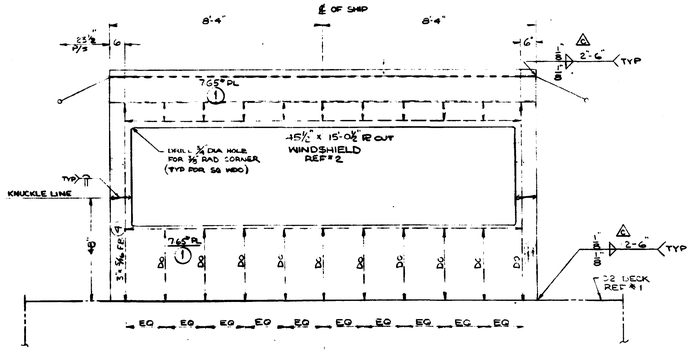

SECTION "4-A"
SCALE: 1/2" = 1'-0"

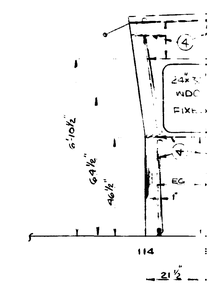

FR 1

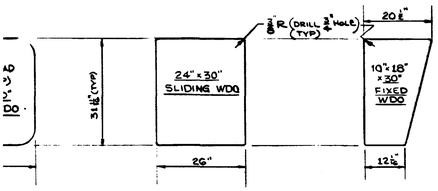

DETAIL "4-C" (B)

TYPICAL R CUTS FOR WDOS

SCALE ¾"=1'-0"

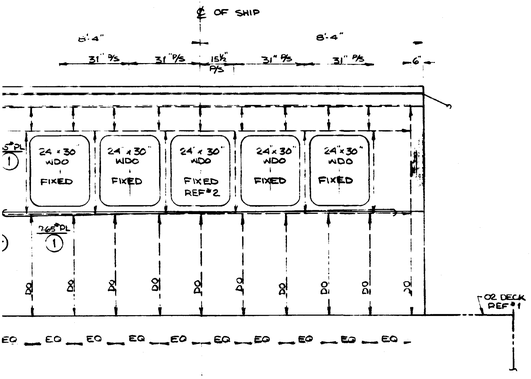

SECTION "4-B" (A)

SCALE: ½"=1'-0"

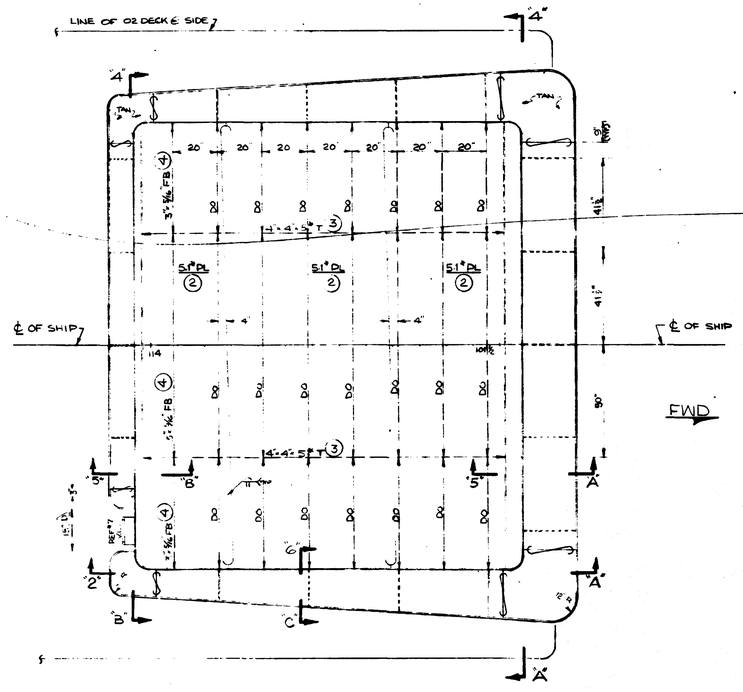

PLAN VIEW (D)

PILOTHOUSE TOP

SCALE: ½"=1'-0"

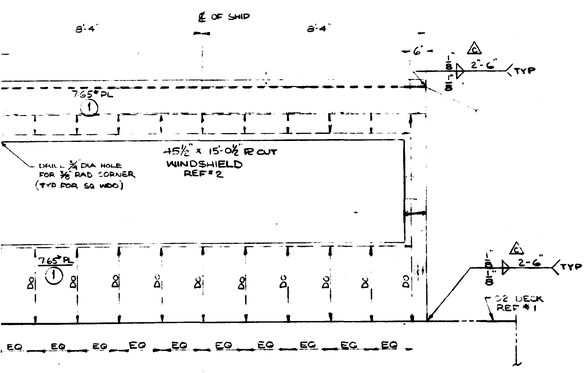

SECTION "4-A" (A) (B) (C)

SCALE: ½"=1'-0"

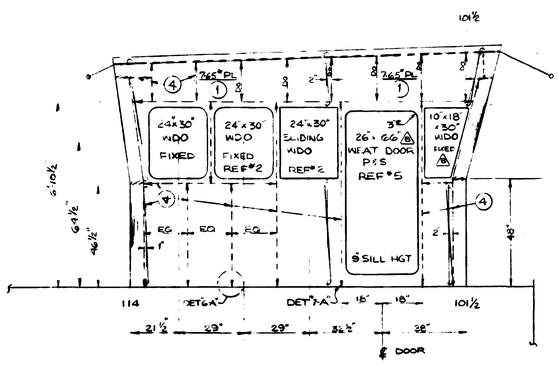

SECTION "2-A" (A) (B)

SHOWING STBD SIDE, PORT OPP HAND

SCALE: ½"=1'-0"

GENERAL NOTES

1. FAYING SURFACE OF ALUMINUM DOOR FRAMES & STL BHD, COAT ALUMINUM SURFACE WITH PRC SEAM COMPOUND PR-391-HT AND LET CURE. AT TIME OF ASSEMBLY COAT CLEAN STL FAYING SURFACE WITH PRC AND FASTEN JOINT WITH PC#10 & 11, REMOVE EXCESS PRC FROM OUTSIDE JOINT.
2. APPLY PRC-391-HT SEALING COMPOUND PC#9 BETWEEN ALL HOUSE SIDES & WINDOW FRAMES BEFORE FASTENING. TEMPLATE ALL MOUNTING HOLES FROM WINDOW FRAMES & DRILL FOR ⅝" DIA BOLTS. PC# 7 & 8.
3. PAINT IN ACCORDANCE WITH REF #3

REFERENCE PLANS

NO.	TITLE	PLAN NO.
1.	UPPER DECKS FRAMING & PLTG	160 WLIC-1106-2
2	[illegible] & MAIN DECK HOUSE	BM NO 338
3.	PAINTING SCHEDULE	160 WLIC-1900-1
4	BILL OF MATERIALS	BM NO-14
(A) 5	WT. & MAT. DRAWING, SCUTTLE & MANHOLE SCHED.	160 WLIC-1602-2
6	WELDING PROCEDURE	160 WLIC-0900-1
7	LADDERS	160 WLIC-1604-1

RESERVATIONS

REVISION	PANEL	DATE	DESCRIPTION	BY	APPR'D.
(D)	2	6-29-76	REV. 2: REAR VIEW CHANGED WINDOW SCUTTLE ATTACH TO EC 9 FROM HINGE TO CLOSE HIGH SCUPPER ADD NEW SCUPPER SCUTTLE & ADD ADDITIONAL BRACE TO WINDOW. CHGD UNAKCONDITIONS PER BM UNAFFECTED		
(C)	3,5&6	5-4-76	3. BM 14 REVISED TO INCL. [illegible] ITEM 1 (E2 1 A.W. 229 10 341/3020/1-5-76 AND ENCL THERE TO AND 10-341/3020/1-16-76. 2. REVISED WELDING SYMBOLS DET 6-A & SECT 6-C AND ADDED WELD SYMBOL SECT 5-B TO INDICATE CHAIN INTERMITTENT W/6" CONT @ ENDS TYP ALL STIFF. 1. REVISED WELDING SYMBOLS SECT 3-A, 5 & 6 DET 6-A AND ADDED WELDING SYMBOLS SECT 4A TO INDICATE CONTINUOUS WELD ON EXTERIOR DECKS PERIPHERIES AND INTERMITTENT ON INTERIOR		
(B)	2,4,5 & 7	4-4-75	DECREASED SIZE OF THIS DOORS FM 30"x66" TO 26"x66". INCREASED SIZE FWD SIDE WDOS FM 24"x18" TO 10"x18"x30" UNCD HEADER. ABV WINDSHIELD FM 7'-0" TO 2'-11½". ADDED W. SUTTER, WDOS 4-C & 5-A. ESTABLISHED KNUCKLE LINE 2-1 [illegible] 4-A & 5-A. BM UNAFFECTED	W. A. S.	
(A)	2,4,5 & 7	3-5-75	REMOVED 7"x2"x4" ANGLE FM BOT OF R THS BHDS & EXTENDED STIFFS TO DECK. REVISED DETAIL G-A TO SUIT. CHGD EFF #'S. DISTRIBUTION BLOCK. & BMKS. [illegible]	W. A. S.	

U.S. COAST GUARD YARD — CURTIS BAY, MD.

INDUSTRIAL DEPARTMENT

DESIGNED: DRAWN: DAL TRACED: CHECKED: S. TARVER

BRANCH HEAD

160 FT. CONSTRUCTION TENDER

PILOT HOUSE

APPROVED — DATE 7-8-74

CHIEF ENGINEERING DIVISION

C. G. DRAWING NO. 160WLIC-1107-2 REV. D

SCALE: AS SHOWN SHEET 1 OF 1

PLAN DISTRIBUTION		DATE ISSUED
INDUSTRIAL DEPT.		
STRUCTURAL SHOP	X11, X12, X13, X14, X15	
MECHANICAL SHOP	X21, X22, X23	
ELECTRO SHOP	X30, X41	
SERVICES SHOP	X42, X43, X44, X45	
SUPPLY DEPT.		
CONST (ENG)		
CONST		
C.G. DISTRICT		
W.L.C. SHOP		
ENGINEERING DIV. HQS		
INST. SERVICES - REPRO FILES		
G.I.A. SHOP		
HQ W.L.C. PROJ. MGR.		
ALTERATION TO:	A, B, C, D	

FR 2

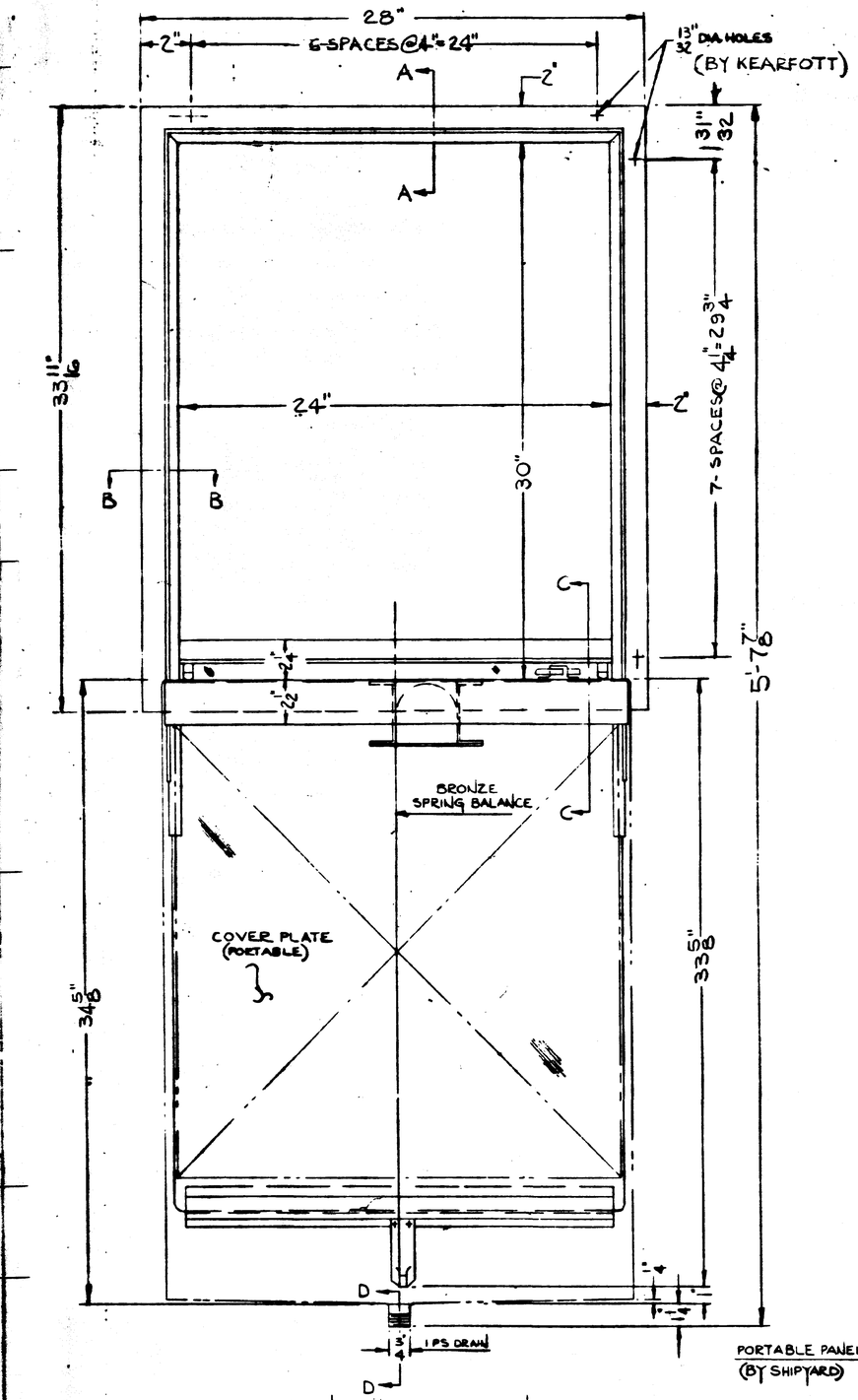

— ELEVATION — INBOARD LOOKING OUT —
(338/6) ITEM# 6 - 2 - WINDOWS REQ'D. AS SHOWN. / SHIP

NOTE: QUANTITIES LISTED ARE FOR ONE (1) SHIP.
THREE (3) SHIPSETS REQ'D.

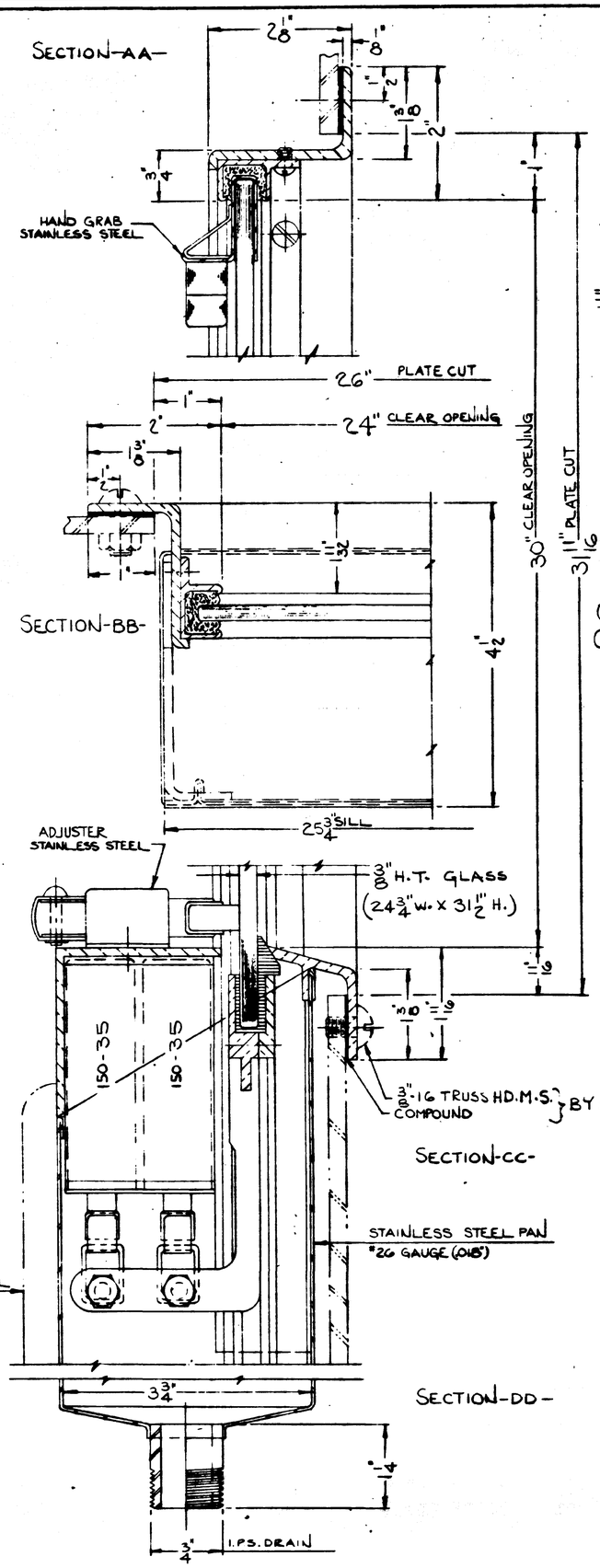

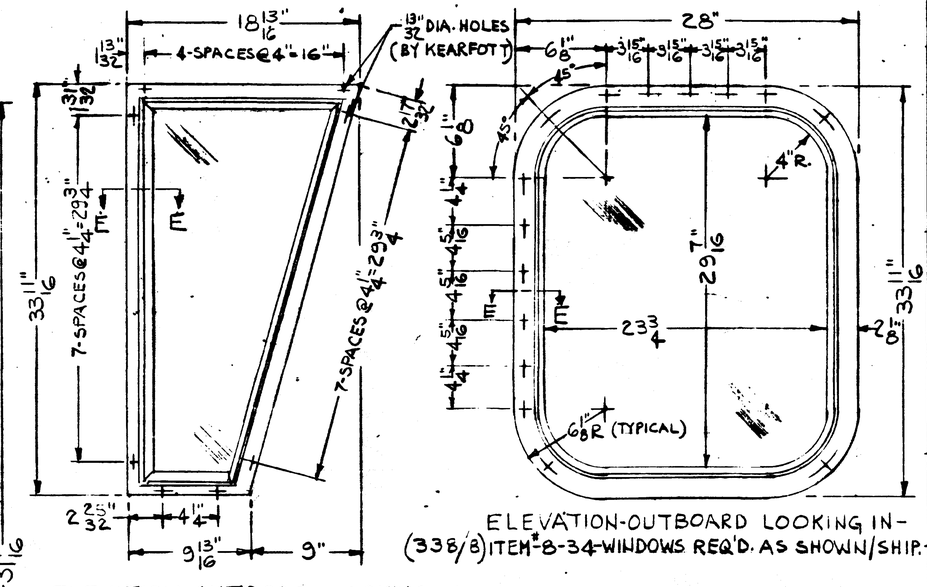

ELEVATION-OUTBOARD LOOKING IN —
(338/3) ITEM# 3 - 1 - WINDOW REQ'D. AS SHOWN/SHIP
(338/5) ITEM# 5 - 1 - WINDOW REQ'D. OPPOSITE/SHIP

ELEVATION-OUTBOARD LOOKING IN —
(338/8) ITEM# 8 - 34 - WINDOWS REQ'D. AS SHOWN/SHIP.

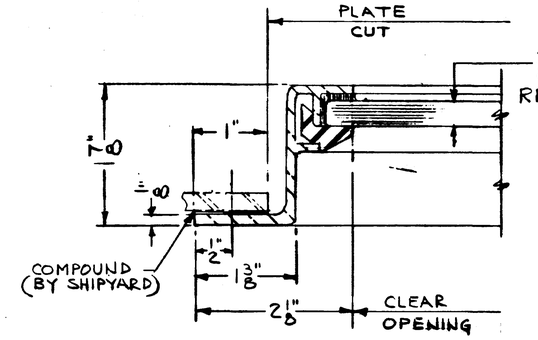

SECTION E-E

CERTIFIED BY D.R. Nicholson TITLE Mgr
DATE 9-18-74 KEARFOTT NEW YORK

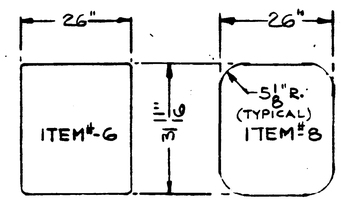

— PLATE CUT — — PLATE CUT —

— MATERIAL —
EXTRUDED BRONZE

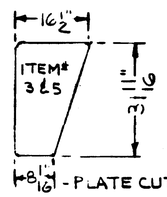

— PLATE CUT —

TRANSPORTATION DEPT.
U.S. COAST GUARD YARD
CURTIS BAY, MD.
P.O.# DOT-CG80-2386

Kearfott
DIVISION OF GENERAL PRECISION, INC.
21 WEST ST. NEW YORK, N.Y.

TYPE K-322-C WINDOW &
TYPE K-325-F FIXED WINDOWS

REV.	DATE	DESCRIPTION
A	9/21/74	CHANGED MOUNTING HOLES FROM 1/32 DIA. TO 13/32.

DRAWN BY	Y.L.	DATE	9-12-74
CHECKED BY	T.[illegible]	MARINE DEPT P.O.	474678
APPROVED BY		DWG NO	KS-17610-A
SCALE	[illegible]		

160WLIC-1202-2 5

REVISIONS				
ZONE	LTR	DESCRIPTION	DATE	APPROVED
		RELEASE		
	A	REDUCED INCLINE OF UPPER SECTION OF WINDOW FROM 24° TO 15°, ALSO CHANGED MOUNTING HOLES FROM 11/32 DIA. TO 13/32"	9/27/74	

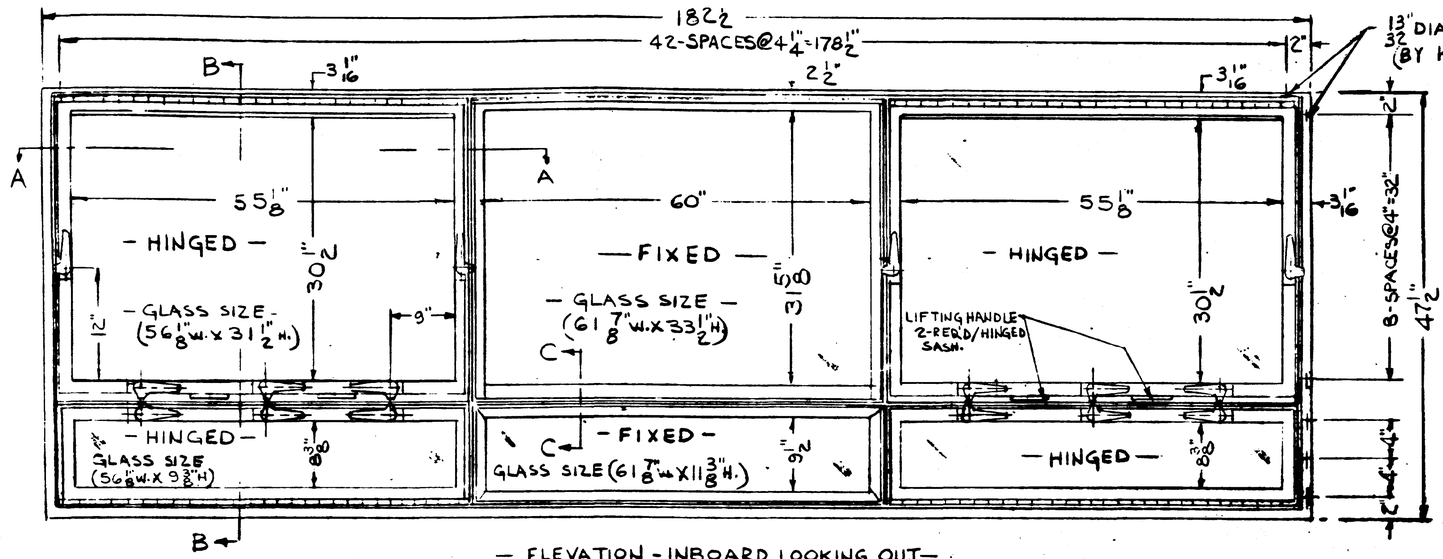

— ELEVATION - INBOARD LOOKING OUT —
(338/1) ITEM #-1-1-WINDOW REQ'D AS SHOWN/SHIP

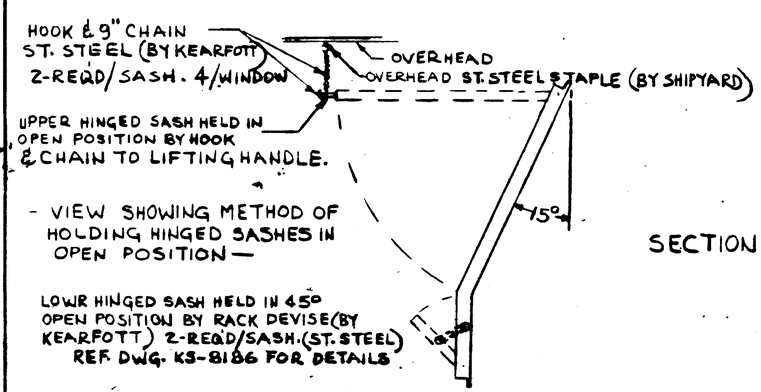

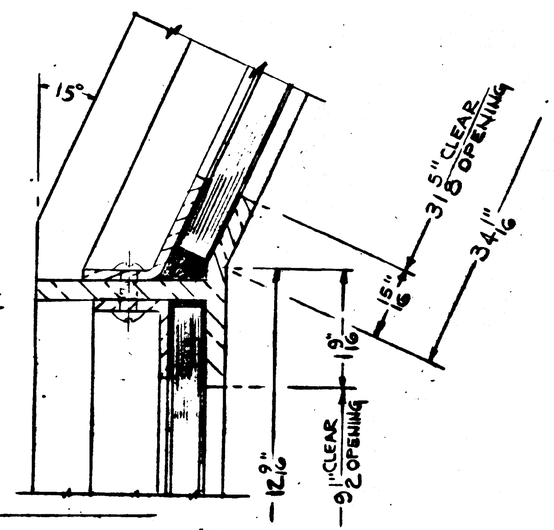

SECTION C-C

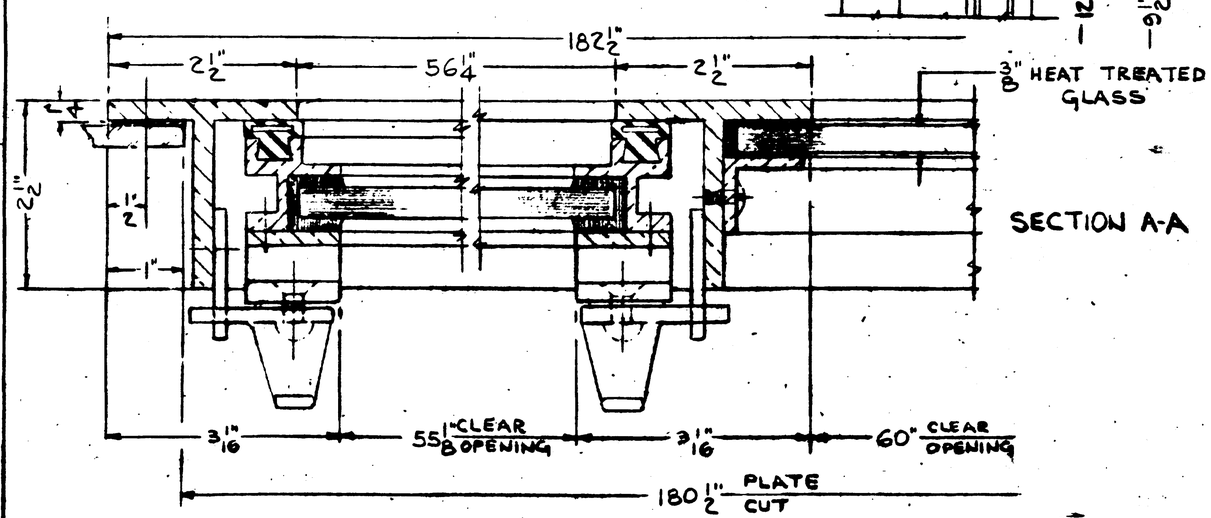

SECTION A-A

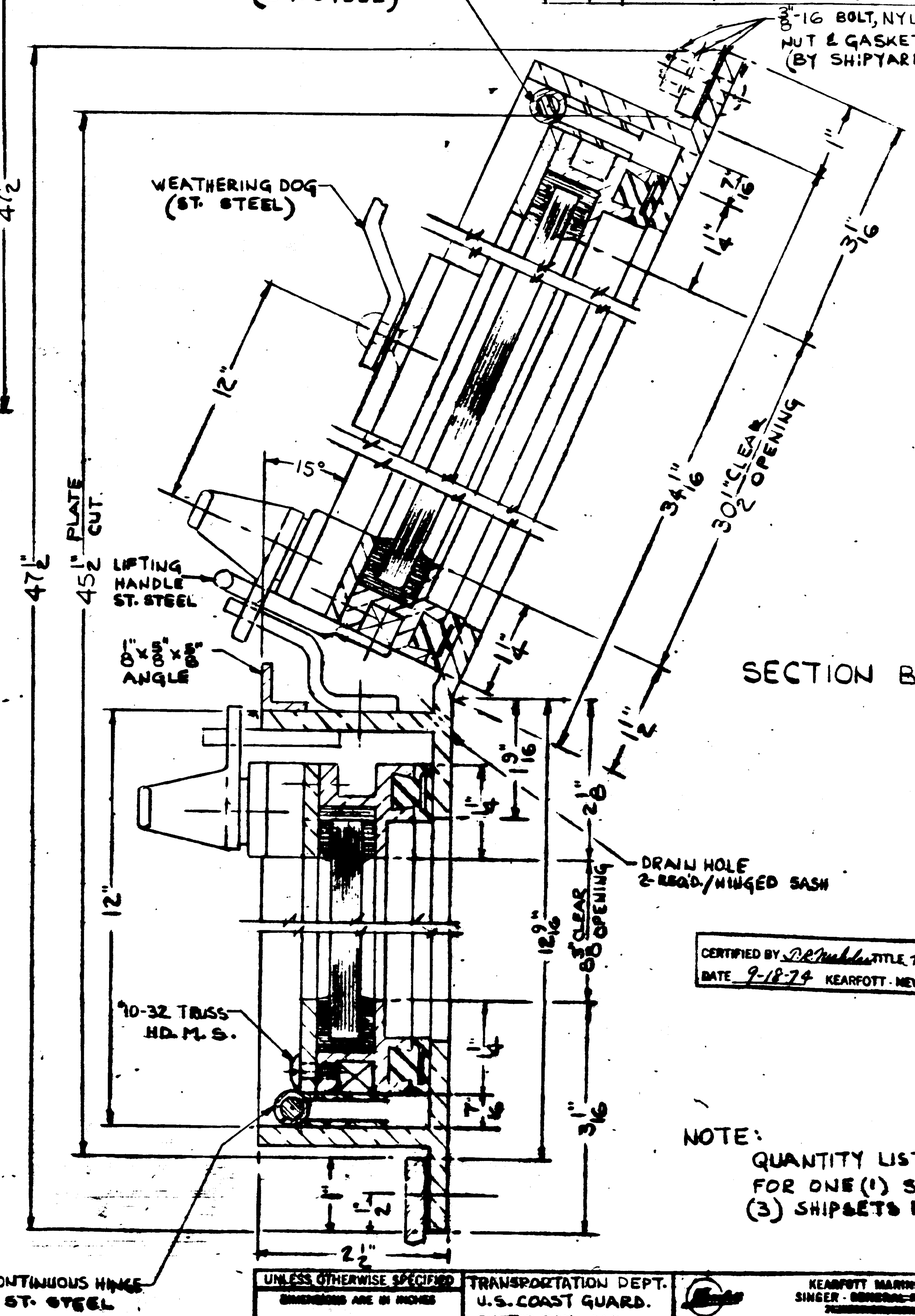

SECTION B-B

CERTIFIED BY D.R. Mahler TITLE Engr.
DATE 9-18-74 KEARFOTT - NEW YORK

NOTE:
QUANTITY LISTED IS FOR FOR ONE (1) SHIP; THREE (3) SHIPSETS REQ'D.

UNLESS OTHERWISE SPECIFIED DIMENSIONS ARE IN INCHES	TRANSPORTATION DEPT. U.S. COAST GUARD. CURTIS BAY, MD. P.O.# DOT-CG80-2386	KEARFOTT MARINE PRODUCTS SINGER - GENERAL PRECISION, INC.
MATERIAL: EXTRUDED BRONZE	DRAWN Y. L. 9-14-74 / CHECKED 9-17-74 / APPD.	SIX PANEL WINDSHIELD TYPE K-1000 OWLIC-1202-3
FINISH:	KEARFOTT P.O.# 474676	SIZE D / SCALE / SHEET / DWG NO. KS-3050-129-A

PLAN DISTRIBUTION	DATE ISSUED 4-1-75	4-29-75	5-6-75	8-18-75	9-8-75	11-26-75	12-1-75	2-6-76	4-13-76	9-24-76
INDUSTRIAL DEPT	1	1	1	1	1	1	1	1	—	—
STRUCTURAL SHOP								16	15	15
SHIPFITTER SECT. X11								8 & 14	7 & 14	14
SHEETMETAL SECT. X12						12		7, 8	6, 7	13, 14
WELDING SECT. X13						6 & 12	10	4, 5	4, 5	12, 13
MECHANICAL SHOP						1, 6 & 12	8 & 10	1, 4	1, 4	4, 7
PIPEFITTER SECT. X21						F	F	F	F	1, 5
MACHINE SECT. X22						H	H	H	H	H
MARINE MACHINE SECT. X23						S	S	S	S	S
ELECTRO SHOP X30										
SERVICES SHOP										
WOODWORKING SECT. X41										
PAINT SECT. X42	2	2	2	2	2	2	2	2	2	2
MATERIAL HANDLING SECT. X43										
MARINE RAILWAY & DRYDOCK X44										
BOATBUILDING SECT. X45										
SUPPLY DEPT.										
COMDT. (G-ENE)	2	2	2	1	1	1	1	1	1	
COMDT.										
C.G. DISTRICT										
HQ. WLIC PROJ. MGR	2	2	2	1	1	1	1	1	1	1
ENGINEERING DIV (H)	1	1	1	1	1	1	1	1	1	1
MGT. SERVICE REPROD FILES										
Q & A STAFF	1	1	1	1	1	1	1	1	1	1
GRAPHIC ARTS	1	1	1	1	1	1	1	1	1	1
160 FT WLIC STAFF	2	2	2	2	2	2	2	2	2	2
ALTERATION		A	B	C	D	E	F	G	H	J
TOTAL	10	10	10	10	10	10	10	10	10	10

REVISION	PANEL	DATE	DESCRIPTION	BY	APPR'D
J	15 14 13 12 7 6 5	9-24-76	ITEMS 1-7 DESIGN DEVELOPMENT, EXTERIOR & INTERIOR DADO'S. B.M AFF. 7. ADDED DADO WEAT DOOR FR. (REMARKS COLUMN) LINE 3 & ADDED LINE 7. 6. ADDED DADO WEAT DOOR FR (REMARKS COLUMN) LINE 10 & ADDED LINE 9. 5. ADDED DADO WEAT DOOR FRS (REMARKS COLUMN) LINE 6 & 12 AND ADDED LINES 4, 8-1 & 14 FOR INTERIOR DADO'S 4. ADDED DADO WEAT DOOR FRS (REMARKS COLUMN) LINE 4 & 18 AND ADDED LINES 9-1, 14-1 & 17-1 FOR INTERIOR DADO'S. 3. CHG'D HATCH & SCUTTLE COAMINGS TO BLUE GRAY IN LIEU OF SPAR 2. ADDED EXTERIOR DADO'S TO SUPRSTR & BULKWARK, LINE 12 & 15. 1. ADDED MAT'L SYMBOLS 56 AND 57 FOR EXTERIOR & INTERIOR DADO'S	E.J.Z.	B
H	7 6 5 4 & 15	4-13-76	ITEMS 1-4 DESIGN DEVELOPMENT, B.M. AFFECTED. 4. CHG'D MAT'L SYMBOL LINE 8 & 15 TO 16 IN LIEU OF 8. 3. CHG'D MAT'L SYMBOL LINE 7 TO 16 WAS 8 & CORRECTED GN TO 23 WAS 22 2. CORRECTED DESCRIPTION OF MAT'L SYMBOL 8 TO INCLUDE NSTM 9190.111 AND COLOR GREEN. ADDED MAT'L SYMBOL 16 & 45 1. ADDED GEN. NOTE NO. 39 SHT. 4 AND ADDED LINE 14, SHT 15	E.J.Z.	B
G	7 16 & 5 4 8 7	2-3-76	REVISED SPUD PAINTING TO INCLUDE ENTIRE SPUD, SHT. 7. LINE 17 & 18 (HQ. CHG). CORRECTED SPUD COLOR FROM SPAR TO BLK, SHT 7, LINE 18. RELOCATED HULL NO'S AFT & CHG'D FROM DECALS TO PAINTED. CHG'D SHIPS NAME FROM DECALS TO PAINTED. REVISED G.N. 27 29 & 34 AND ADDED # 30 TO REFLECT SUBJ. CHG'S (HQ. CHG). B.M. REV. ADDED PRECONSTR. PRIMER TO D.O. TANKS SHT 8. LINE 12-18 & G.N. # 18 (DES. DEV) ADDED "POSTABLE STANCHIONS FOR PILE STOWAGE" TO SHT 7, LINE 16.	E.J.Z.	B
F	10 10 8	12-16-75	3. CORRECTED LINE 18 BY DELETING BHD. 103 (INCORRECT) AND ADDED LINE 19 FOR BHD. 113 & D.O. TANK. DWG UNAFF. 2. CHG'D REMARKS COLUMN LINE 9 TO 8 MIL. MIN. IN LIEU OF 5. 1. ADDED LINE 16 FOR D.O. SERVICE TANK 2-110-1-F.	E.J.Z.	B
E	12 6	11-25-75	2. CHG'D SR NO SHT 12 LINE 10 FROM 1-107-3-L TO 1-107-1-L HQ. CHG 93433-10 (4-MAN SR) BM UNAFFECTED. 1. ADDED SPUDWELL INTERIORS SHT. 6 LINE 3. HQ CHG B.M UNAFF.	E.J.Z.	B
D	5 & 15 5, 8 & 9	9-4-75	2. ADDED SYSTEM FOR BATTERY TRAYS SHT. 15 & ADDED # 38 SHT. 5. 1. CHG'D FRESH WATER TANK COATING SYSTEM SHT 8 & 9. SHT. 5 DELETED ITEM 16, 17, 18 DEVOE 207 SYSTEM AND ADDED ITEM 17 & 18 "MOBIL 264" TWO COAT SYSTEM (C.G. CONTRACT) B.M. AFFECTED.	E.J.Z.	B
C	13 12 11 10 9 8 9 7 5 4	8-18-75	B.M AFFECTED CHG. NO'S 1, 2, 6, 7 & 8. 9. ADDED LINE 13 8. ADDED LINE 2 FOR OVERHEAD INSUL. BD. 7. ADDED LINE 4 & CHG'D LINE 8 TO INCLUDE 2 COATS PAINT OVER INSUL. BD. 6. CHG'D LINE 8 & 13 TO INCLUDE 2 COATS PAINT OVER INSUL. BD. LINE 15 DELETED "LONG BHD. 86' & ADDED "ABV. FL. PLTS." ADDED LINE 5. CHG'D LINE 12 TO ABV. MN DK & BELOW 22" W.L. & ADDED LINE 14 4. LINE 18 REMARKS CORRECTED TO READ 6 MILS WAS 8 LINES 1-5 REMARKS CORRECTED TO READ 6 MILS WAS 8. 3. CORRECTED LINE 10 1ST PRIME COAT TO 13 WAS 14. & LINE 11, 1ST & 2ND PRIME COATS TO 13-14 WAS 14-13. 2. CHG'D LINE 34 & 35 TO CG 40 & 41 WAS RED #12199 & BLUE 15182. CHG'D LINE 36 TO FLUORESENT ORANGE WAS INTERNL OR. 1. REVISED G.N. 31 TO INCLUDE FLUORESCENT ORANGE FOR LIFE BUOYS AND ADDED G.N. # 38 TO PAINT INSUL. BD.	E.J.Z.	B
B	3 & 4 7 4	5-4-75	ITEMS 1 & 3 1. A.W. COMDT APP'L TO YD. LTR ID-341/3-31-75 3. CORRECTED TITLE OF CG-263 TO "U.S. COAST GUARD COATINGS AND COLOR MANUAL" IN GEN. NOTES 1, 14, 21 & 26 SHTS. 3 & 4. 2. CORRECTED PAINT SHT. 7 LINE 3 TO SYM. 50 IN LIEU OF 15. 1. REVERSED PAINT NO'S 13 & 14 IN GEN. NOTE NO. 16.a TO AGREE W/MAT'L SYMBOLS SHT. 5 & B.M. 31. B.M. UNAFFECTED	E.J.Z.	B
A	5 5 16, 2 & 4	4-25-75	3. DELETED LINE 38 SHT. 5. HQ. SPEC. AMEND NO. 3 2. CHG'D LINE 25 SHT. 5 FROM EPOXY ENAMEL FSL-1-1-72 TO DECK AND FLOOR ENAMEL TT-E-487. CORRECTION. 1. DELETED AERIAL IDENTIFICATION CALL LETTERS FROM VISUAL IDENT. SHT. 16, GEN NOTE # 30 SHT. 4 AND REF. 9 SHT. 2. HQ SPEC AMEND. BM AFFECTED	E.J.Z.	B

US COAST GUARD YARD — CURTIS BAY, MD

INDUSTRIAL DEPARTMENT

DESIGNED -
DRAWN - DAL
TRACED -
CHECKED - [illegible]

J D. Crispino
BRANCH HEAD

160 FT. CONSTRUCTION TENDER

PAINTING SCHEDULE

APPROVED [illegible] — CHIEF ENGINEERING DIVISION — DATE 3-28-75

C. G. DRAWING NO 160WLIC-1900-1 — REV J

SCALE: NONE — SHEET 1 OF 16

1.5th

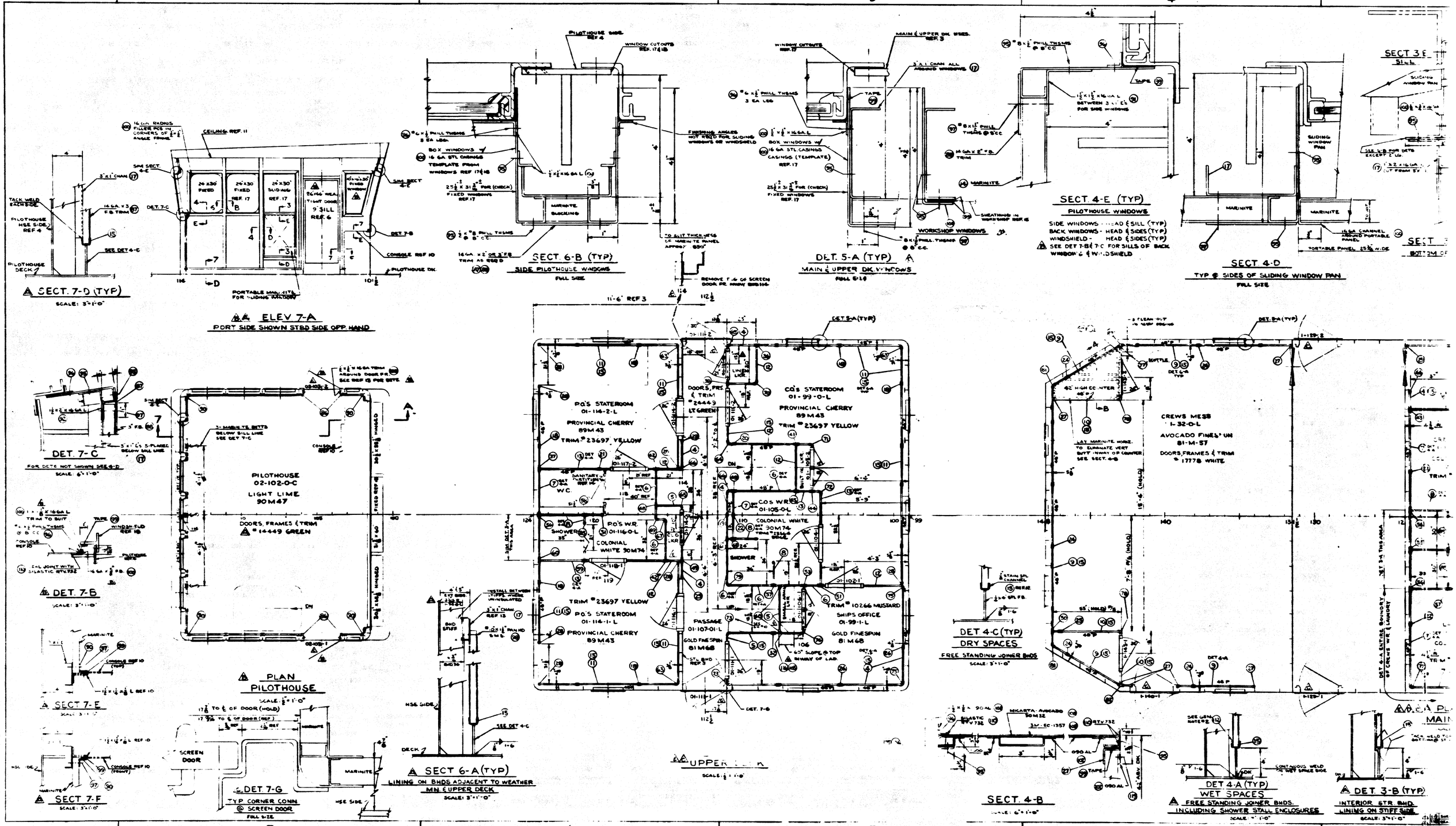
SECT. 7-D (TYP)
SCALE: 3"=1'-0"
ELEV 7-A
PORT SIDE SHOWN STBD SIDE OPP HAND
DET. 7-C
FOR DETS NOT SHOWN SEE 6-D
DET. 7-B
SECT 7-E
SECT 7-F
PLAN
PILOTHOUSE
PILOTHOUSE
02-102-0-C
LIGHT LIME
90M47
DOORS, FRAMES & TRIM
#14449 GREEN
DET. 7-G
TYP CORNER CONN
@ SCREEN DOOR
FULL SIZE
SECT. 6-B (TYP)
SIDE PILOTHOUSE WINDOWS
FULL SIZE
SECT 6-A (TYP)
LINING ON BHDS ADJACENT TO WEATHER
MN & UPPER DECK
SCALE: 3"=1'-0"
DET. 5-A (TYP)
MAIN & UPPER DK WINDOWS
FULL SIZE
WORKSHOP WINDOWS
SECT. 4-E (TYP)
PILOTHOUSE WINDOWS
SIDE WINDOWS - HEAD & SILL (TYP)
BACK WINDOWS - HEAD & SIDES (TYP)
WINDSHIELD - HEAD & SIDES (TYP)
SEE DET 7-B & 7-C FOR SILLS OF BACK WINDOWS & WINDSHIELD
SECT. 4-D
TYP @ SIDES OF SLIDING WINDOW PAN
FULL SIZE
SECT 3-E
SLIDING WINDOW PAN
PO'S STATEROOM
01-116-2-L
PROVINCIAL CHERRY
89M43
TRIM #23697 YELLOW
CO'S STATEROOM
01-99-0-L
PROVINCIAL CHERRY
89M43
TRIM #23697 YELLOW
DOORS, FRS & TRIM
#24449
LT GREEN
W.C.
PO'S W.R.
01-116-0-L
COLONIAL WHITE 30M74
CO'S WR
01-105-0-L
COLONIAL WHITE
30M74
TRIM #23697 YELLOW
PO'S STATEROOM
01-116-1-L
PROVINCIAL CHERRY
89M43
TRIM #23697 YELLOW
PASSAGE
01-107-01-L
GOLD FINESPUN
81M68
SHIPS OFFICE
01-99-1-L
GOLD FINESPUN
81M68
TRIM #10266 MUSTARD
UPPER DECK
SCALE: 1/4"=1'-0"
CREWS MESS
1-32-0-L
AVOCADO FINES' UN
81-M-57
DOORS, FRAMES & TRIM
#17778 WHITE
DET 4-C (TYP)
DRY SPACES
FREE STANDING JOINER BHDS
SECT. 4-B
DET. 4-A (TYP)
WET SPACES
FREE STANDING JOINER BHDS.
INCLUDING SHOWER STALL ENCLOSURES
DET. 3-B (TYP)
INTERIOR STR. BHD.
LINING ON STIFF SIDE

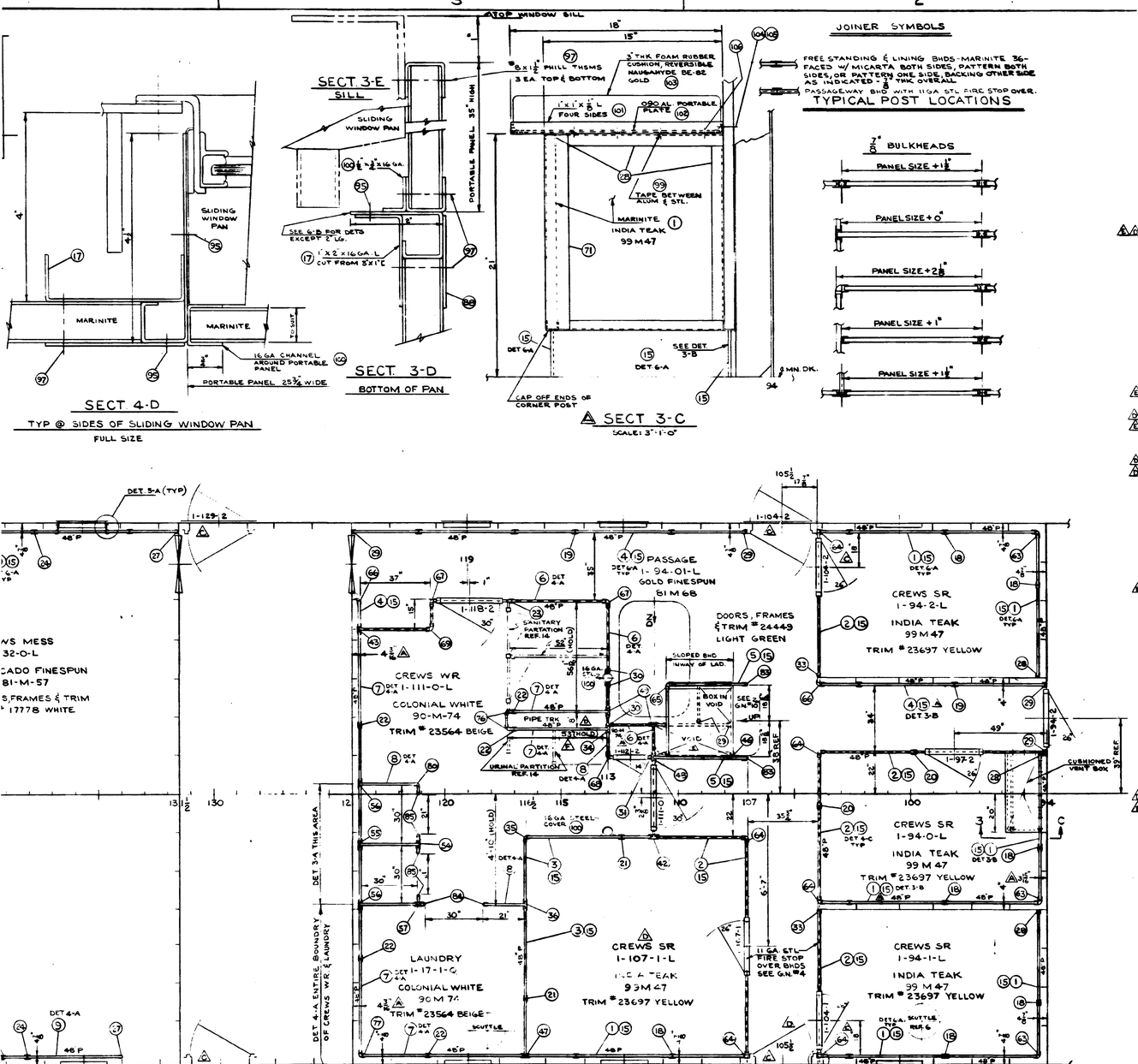

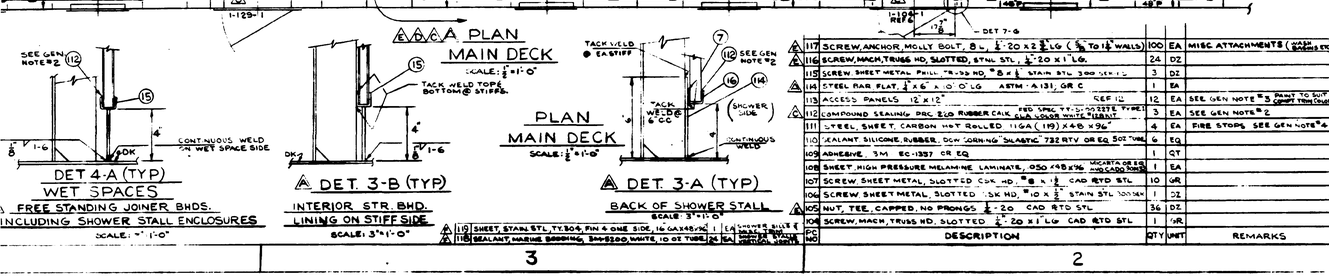

BILL OF MATERIALS

PC NO	DESCRIPTION	QTY	UNIT	REMARKS
1	MARINITE-36 3/4" THK. INDIA TEAK 99M47 W/BACKING OPP SIDE	16	EA	48"X96"
2	INDIA TEAK 99M47 W/GOLD FINESPUN 81M68	9	EA	
3	INDIA TEAK 99M47 W/COLONIAL WHITE 90M74	4	EA	
4	GOLD FINESPUN 81M68 W/BACKING OPP SIDE	16	EA	
5	GOLD FINE SPUN 81M68 BOTH SIDES	7	EA	
6	GOLD FINE SPUN 81M68 W/COLONIAL WHITE 90M74	10	EA	
7	COLONIAL WHITE 90M74 W/BACKING OPP SIDE	14	EA	
F	COLONIAL WHITE 90M74 BOTH SIDES	7	EA	
9	AVOCADO FINESPUN 81M57 W/BACKING OPP SIDE	12	EA	
10	AVOCADO FINESPUN 81M57 BOTH SIDES	3	EA	
11	PROVINCIAL CHERRY 89M48 W/BACKING OPP SIDE	20	EA	
12	PROVINCIAL CHERRY 89M48 W/GOLD F.S. 81M68	6	EA	
13	PROVINCIAL CHERRY 89M48 W/COL. WHITE 90M74	5	EA	
14	LIGHT LIME 90M47 W/BACKING OPP SIDE	10	EA	
15	BHD SHOE 3/4" STAIN STL CHAN WITH 3/8" x 4" STL F.B. X 10'-0" LG.	62	EA	REF 12
16	BHD SHOE 3/4" STAIN STL CHAN REF. 12	1	EA	
17	FURRING CHANNEL 3" X 1" X 16GA. X 10'-0" LG.	80	EA	
18	H POST 3/4" X 8'-0" LG.	23	EA	MALE - YELLOW 23697; FEMALE - PRIME
19	H POST 3/4" X 8'-0" LG.	7	EA	MALE - LIGHT GREEN 24449; FEMALE - PRIME
20	H POST 3/4" X 8'-0" LG.	3	EA	MALE - YELLOW 23697; FEMALE - LT GREEN 24449
21	H POST 3/4" X 8'-0" LG.	3	EA	MALE - YELLOW 23697; FEMALE - BEIGE 23564
22	H POST 3/4" X 8'-0" LG.	6	EA	MALE - BEIGE 23564; FEMALE - PRIME
23	H POST 3/4" X 8'-0" LG.	1	EA	MALE - BEIGE 23564; FEMALE - LIGHT GREEN #24449
24	H POST 3/4" X 8'-0" LG.	10	EA	MALE - WHITE 27778; FEMALE - PRIME
25	H POST 3/4" X 8'-0" LG.	1	EA	MALE - WHITE 27778; FEMALE - WHITE 27778
26	H POST 3/4" X 8'-0" LG.	3	EA	MALE - MUSTARD 10266; FEMALE - PRIME
27	END POST 3/4" X 8'-0" LG.	9	EA	WHITE 1-778
28	3/4" X 8'-0" LG.	12	EA	YELLOW 23697
29	3/4" X 8'-0" LG.	8	EA	LT GREEN 24449
30	3/4" X 8'-0" LG.	5	EA	LT GREEN #24449; BEIGE 23564
31	3/4" X 8'-0" LG.	1	EA	BEIGE 23564
32	H POST 3/4" X 8'-0" LG.	1	EA	MALE - LIGHT GREEN 24449; FEMALE - MUSTARD 10266
33	END POST 3/4" X 8'-0" LG.	2	EA	LT GREEN 24449; TE-LOW 23697
34	T-POST 3/4" X 8'-0" LG.	1	EA	LEG A BEIGE 23564; LEG B BEIGE 23564 GREEN 24449; INSIDE OUTSIDE BEIGE 23564
35	CORNER POST 3/4" X 8'-0" LG.	1	EA	INSIDE OUTSIDE YELLOW 23697; BLUE 23864
36	T-POST 3/4" X 8'-0" LG.	1	EA	LEG A BEIGE 23564; LEG B BEIGE 23564 FACE YELLOW 23697
37	T-POST 3/4" X 8'-0" LG.	1	EA	LEG A YELLOW 23697; LEG B BLUE 23864
38	3/4" X 8'-0" LG.	1	EA	LEG A GREEN 24449; LEG B YELLOW 23697 FACE-GREEN 24449
39	3/4" X 8'-0" LG.	1	EA	LEG A GREEN 24449; LEG B BLUE 23864 FACE BEIGE 23564
40	END POST FOR SLOPING BHDS	2	EA	LEG A MUSTARD 10266; LEG B GREEN 24449
41	T-POST 3/4" X 8'-0" LG.	1	EA	LEG A GREEN 24449; LEG B YELLOW 23697 FACE-YELLOW 23697
42	3/4" X 8'-0" LG.	3	EA	LEG A BEIGE 23564; LEG B GREEN 24449 FACE-GREEN 24449
43	3/4" X 8'-0" LG.	1	EA	LEG A BEIGE 23564; LEG B GREEN 24449 FACE-BEIGE 23564
44	3/4" X 8'-0" LG.	1	EA	LEG A YELLOW 23697; LEG B YELLOW 23697 FACE-BLUE 23864
45	3/4" X 8'-0" LG.	1	EA	LEG A YELLOW 23697; LEG B GREEN 24449 FACE-BLUE 23864
46	END POST FOR SLOPING BHDS	1	EA	LEG A GREEN 24449; LEG B GREEN 24449
47	T-POST 3/4" X 8'-0" LG.	1	EA	LEG A YELLOW 23697; LEG B BEIGE 23564 FACE PRIME
48	3/4" X 8'-0" LG.	2	EA	LEG A GREEN 24449; LEG B GREEN 24449 FACE-BEIGE 23564
49	3/4" X 8'-0" LG.	4	EA	LEG A GREEN 24449; LEG B BEIGE 23564 FACE-GREEN 24449
50	3/4" X 8'-0" LG.	1	EA	LEG A WHITE 1-778; LEG B WHITE 1-778 FACE-PRIME
51	3/4" X 8'-0" LG.	1	EA	LEG A YELLOW 23697; LEG B BLUE 23864 FACE-BLUE 23864
52	3/4" X 8'-0" LG.	1	EA	LEG A GREEN 24449; LEG B MUSTARD 10266 FACE-MUSTARD 10266
53	3/4" X 8'-0" LG.	1	EA	LEG A MUSTARD; LEG B MUSTARD FACE-BEIGE 23564
54	3/4" X 8'-0" LG.	1	EA	LEG A STAIN STL; LEG B STAIN STL FACE-STAIN STL
55	3/4" X 8'-0" LG.	1	EA	LEG A STAIN STL; LEG B STAIN STL FACE-PRIME
56	3/4" X 8'-0" LG.	3	EA	LEG A STAIN STL; LEG B BEIGE 23564 FACE-PRIME
57	3/4" X 8'-0" LG.	1	EA	LEG A STAIN STL; LEG B STAIN STL FACE-BEIGE 23564
58	3/4" X 8'-0" LG.	1	EA	LEG A STAIN STL; LEG B STAIN STL FACE BEIGE 23564
59	3/4" X 8'-0" LG.	1	EA	LEG A STAIN STL; LEG B STAIN STL FACE-BEIGE 23697
60	3/4" X 8'-0" LG.	1	EA	LEG A STAIN STL; LEG B YELLOW FACE-PRIME
61	3/4" X 8'-0" LG.	1	EA	LEG A BEIGE 23564; LEG B STAIN STL FACE-STAIN STL
62	3/4" X 8'-0" LG.	1	EA	LEG A BEIGE; LEG B PRIME
63	CORNER POST 3/4" X 8'-0" LG.	6	EA	INSIDE YELLOW 23697; OUTSIDE PRIME
64	3/4" X 8'-0" LG.	7	EA	INSIDE YELLOW 23697; OUTSIDE GREEN 24449
65	3/4" X 8'-0" LG.	3	EA	INSIDE GREEN 24449; OUTSIDE GREEN 24449
66	3/4" X 8'-0" LG.	4	EA	INSIDE BEIGE; OUTSIDE GREEN 24449
67	3/4" X 8'-0" LG.	1	EA	INSIDE BEIGE; OUTSIDE GREEN 24449
68	3/4" X 8'-0" LG.	1	EA	INSIDE BEIGE; OUTSIDE BEIGE 23564
69	3/4" X 8'-0" LG.	2	EA	INSIDE GREEN 24449; OUTSIDE BEIGE 23564
70	3/4" X 8'-0" LG.	1	EA	INSIDE GREEN 24449; OUTSIDE YELLOW 23697
71	3/4" X 8'-0" LG.	2	EA	INSIDE YELLOW 23697; OUTSIDE YELLOW 23697
72	3/4" X 8'-0" LG.	1	EA	INSIDE BEIGE; OUTSIDE BEIGE 23564
73	3/4" X 8'-0" LG.	2	EA	INSIDE MUSTARD 10266; OUTSIDE GREEN 24449
74	3/4" X 8'-0" LG.	1	EA	INSIDE MUSTARD 10266; OUTSIDE MUSTARD 10266
75	3/4" X 8'-0" LG.	2	EA	INSIDE MUSTARD 10266; OUTSIDE PRIME
76	3/4" X 8'-0" LG.	2	EA	INSIDE PRIME; OUTSIDE BEIGE 23564
77	3/4" X 8'-0" LG.	1	EA	INSIDE BEIGE 23564; OUTSIDE PRIME
78	3/4" X 8'-0" LG.	2	EA	INSIDE WHITE 1-778; OUTSIDE WHITE 1-778
79	3/4" X 8'-0" LG.	1	EA	INSIDE STAIN STL; OUTSIDE GREEN 24449
80	3/4" X 8'-0" LG.	1	EA	INSIDE STAIN STL; OUTSIDE BLUE 23564
81	VARIABLE ANGLE 3/4" X 8'-0" LG 120°	2	EA	INSIDE WHITE 1-778; OUTSIDE PRIME
82	VARIABLE ANGLE 3/4" X 8'-0" LG 150°	2	EA	INSIDE WHITE 1-778; OUTSIDE PRIME
83	BULLNOSE 3/4" X 8'-0" LG.	2	EA	GREEN 24449
84	3/4" X 8'-0" LG.	2	EA	BEIGE 23564
85	3/4" X 8'-0" LG.	8	EA	STAIN STL
86	LINING RETURN 3/4" X 8'-0" LG.	5	EA	GREEN 24449
87	STEEL, STRIP HOT ROLLED MILL EDGE, 14GA (.083) x 2" x 16'-0" AISI 1008	12	EA	GREEN 24449
88	STEEL, STRIP HOT ROLLED MILL EDGE, 14GA (.083) x 3" x 16'-0" AISI 1008	4	EA	GREEN 24449
89	ANGLE 1" x 1" x 16GA X 8'-0" LG REF. 12	2	EA	GREEN 24449
90	ANGLE 1" x 1" x 16GA X 8'-0" LG	5	EA	GREEN 24449
91	ANGLE 1" x 1" x 16GA X 8'-0" LG.	20	EA	PRIME
92	ANGLE 1" x 2" x 16GA X 10'-0" LG	2	EA	PRIME
93	CEILING CHANNEL 2" x 1 1/2" x 14GA X 10'-0" LG.	16	EA	PRIME
94	FURRING CHANNEL 1 1/2" X 2" X 16GA X 10'-0" LG	8	EA	PRIME
95	SCREW, SHEET METAL, PHILL, TRUSS HD. #8 X 3/4" CAD RTD STL	4	GR	
96	SCREW, SHEET METAL PHILL TRUSS HD. #6 X 3/4" CAD RTD STL	4	GR	
97	SCREW, SHEET METAL PHILL TRUSS HD. #6 X 1 1/2" CAD RTD STL	4	GR	
98	SCREW, SHEET METAL PAN HD. #10 X 1 1/2" CAD RTD STL	6	GR	
99	TAPE 3/4" THK. X 1" WIDE 200 FT. ROLL EC-1202 3M CO. OR EQ	4	EA	
100	SHEET, 5/8" [illegible] CARBON, 16 GA X 48" X 120" ASTM A 366 with MILL QUALITY	14	EA	
101	SHEET, ALUM ALLOY 5086-H111 .1 X 1 X 1/2" X 25'-0" LG	1	EA	
102	SHEET, ALUM ALLOY 5052-H32 .090 X 48" X 120"	3	EA	
103	CUSHION 3" THK FOAM RUBBER, REVERSIBLE, UPHOLSTERY TO BE NAUGAHYDE BE-82 GOLD OR EQ TO FIT 17 1/2" X 40" INSIDE DIMS	1	EA	
104	SCREW, MACH, TRUSS HD, SLOTTED 1/4" - 20 x 1/2" LG CAD RTD STL	10	GR	
105	NUT, TEE, CAPPED, NO PRONGS 1/4" - 20 CAD RTD STL	36	DZ	
106	SCREW, MACH, TRUSS HD, SLOTTED 1/4" - 20 x 1" LG CAD RTD STL	1	GR	
107	SCREW, MACH, TRUSS HD, SLOTTED 1/4" - 20 x 1/2" LG (3/8" TO 1 1/2" WALLS)	100	EA	MISC ATTACHMENTS (WASH, BUSHING ETC)
108	SCREW, MACH, TRUSS HD, SLOTTED, STNL STL, 1/4" - 20 x 1" LG.	24	DZ	
109	SCREW, SHEET METAL PHILL TR-SD HD, #8 x 3/4" STAIN STL 300 SERIES	3	DZ	
110	STEEL BAR FLAT 1/4" X 6" x 10'-0" LG ASTM-A-131, GR C	1	EA	
111	ACCESS PANELS 12" X 12" REF. 11	12	EA	SEE GEN NOTE #3 PAINT TO SUIT COMPT FINISH COLOR
112	COMPOUND SEALING PRC 2120 RUBBER CAULK RED SPEC. TT-S-00227E, TYPE II GRAY OR WHITE SEALANT	3	EA	SEE GEN NOTE #2
113	STEEL, SHEET, CARBON HOT ROLLED 11GA (.119) X 48" X 96"	4	EA	FIRE STOPS SEE GEN NOTE #4
114	SEALANT SILICONE, RUBBER, DOW CORNING SILASTIC 732 RTV OR EQ 502 TUBE	6	EQ	
115	ADHESIVE 3M EC-1357 OR EQ	1	QT	
116	SHEET, HIGH PRESSURE MELAMINE LAMINATE, .050 X 48" X 96" MICARTA OR EQ AND CAD BOND	1	EA	
117	SCREW, SHEET METAL, SLOTTED CSK HD, #8 x 1/2" CAD RTD STL	10	GR	
118	SCREW, SHEET METAL, SLOTTED CSK HD, #10 x 3/4" STAIN STL 300 SER	1	DZ	
119	SHEET, STAIN STL, TY 304, FIN 4 ONE SIDE, 16 GA X 48" X 96"	1	EA	SHOWER STALL & SURROUND VERTICAL SURFACE
118	SEALANT, MARINE BONDING, 3M-5200, WHITE, 10 OZ TUBE	24	EA	

PC NO	DESCRIPTION	QTY	UNIT	REMARKS

GENERAL NOTES

1. ALL BHDS JOHNS MANSVILLE MARINITE-36 OR EQUAL 3/4" THK OVERALL HIGH PRESSURE MELAMINE LAMINATE ASBESTOS BACKED 0.080 INCHES THICK WITH PATTERN BOTH SIDES OR PATTERN ONE SIDE AND BACKING OTHER SIDE AS INDICATED, IN FIRE RESISTANT LAMINATES.
2. MARINITE PANELS IN ALL WET SPACES, INCLUDING TOILET SPACES, GALLEY AND LAUNDRY, SHALL BE RECESSED IN THE SUPPORT CHANNELS BY LIBERAL USE OF PRC NO 220 RUBBER CAULK (FED.-SPEC TT-S-00227E, TYPE I, CLASS A).
3. HINGED ACCESS PANELS LATCHED WITH RECESSED QUICK-ACTING CAPTIVE FASTENERS OPERABLE WITHOUT TOOLS SHALL BE INSTALLED IN MARINITE BHDS. FOR NORMAL OR EMERGENCY ACCESS TO VALVES, DAMPERS, STUFFING TUBES THROUGH WATERTIGHT DECKS OR BHDS ETC.
4. DIVISIONAL MARINITE BULKHEADS FORMING PASSAGEWAY SHALL HAVE 11-GAUGE STEEL FIRE STOPS EXTENDING FROM THE CEILING TO THE UNDER-SIDE OF THE DECK AS INDICATED BY DOTTED LINE IN PANEL SEE REF. 3 FOR DETS.
5. THE JOINER SYSTEM SHALL BE INSTALLED SO THAT ANY PANEL OF MARINITE, BULKHEAD OR LINING MAY BE REMOVED WITHOUT REMOVING ADJACENT OR ABUTTING PANELS.
6. ALL DECORATIVE, PRE-FINISHED SURFACES SHALL BE COVERED FOR PROTECTION DURING DELIVERY, STORAGE, AND ERECTION AND UNTIL ALL WORK HAS BEEN COMPLETED WITHIN THE INDIVIDUAL SPACES.
7. ALL EXPOSED TRIM, CASINGS, H-POSTS, PILASTERS, ETC, SHALL BE STEEL FINISHED WITH BAKED ENAMEL BY THE FOLLOWING PROCEDURE:
   - A. CLEANING - TRICHLORETHYLENE VAPOR DEGREASED.
   - B. SURFACE PREPARATION - ONE COAT OF ALODINE #1200 AS FURNISHED BY AMCHEM PRODUCTS, INC. OR EQUAL, AND APPLIED IN ACCORDANCE WITH MANUFACTURER RECOMMENDATION.
   - C. PRIMING - ALL SURFACES PRIME COATED WITH PITTSBURGH PAINT CO. "DURACRON" #100 THERMOSETTING ACRYLIC PRIMER OR EQUAL BY DIP OR SPRAY METHOD AS REQUIRED. DRY THICKNESS .5 MIL AVERAGE, MINIMUM THICKNESS .3 MIL.
   - D. ENAMELING - ALL EXPOSED SURFACES ENAMELLED WITH PITTSBURGH PAINT CO. "DURACRON" #100 THERMOSETTING ACRYLIC ENAMEL, "DUPONT #710 LINE" HIGH BAKE UREA MODIFIED ALKYD ENAMEL OR EQUAL.
8. PAINT FINISH TO MATCH FED STD 595a COLORS AS SPECIFIED.
9. CONVENIENCE OUTLETS TO BE LOCATED 42" OFF DECK, EXCEPT IN WAY OF FURNITURE UNITS IN WHICH CASE HEIGHT IS TO BE 6" ABOVE TOP OF UNIT.
10. PROVIDE 16 GA (PC #100) STL SOFFITS AROUND LADDERWAY OPENINGS IN UPPER DK (FR. 107) AND PILOTHOUSE DK (FR. 106) TO SUIT COAMINGS. SLOPE FWD SOFFITS 60" FOR HEADROOM CLEARANCE.

REFERENCE PLANS

NO	TITLE	PLAN NO.
1	MAIN DECK FRAMING AND PLTG.	160WLIC-1106-1
2	UPPER DECKS FRAMING AND PLTG.	1106-2
3	DK HSES, ENG. CASING, AND STACKS	1107-1
4	PILOT HOUSE	1107-2
5	DECK COVERING	1400-1
6	W.T. & WEA.T DOORS, HATCHES, SCUTTLES & MANHOLE SCHEDULE	1602-2
7	JOINER DOOR SCHEDULE	1602-3
8	LADDERS & WORK PLATFORM	1604-1
9	PAINTING SCHEDULE	1900-1
10	PILOT HOUSE CONSOLE	2416-1
11	CEILING PLAN, MAIN, UPPER & PILOT HOUSE DECKS	3301-2
12	JOINER PART DETAILS	3301-3
13	TYPICAL JOINER DETAILS	3301-4
14	SANITARY PARTITIONS	3601-1
15	INSULATION & SHEATHING	3901-1
16	BILL OF MATERIAL	BM NO 42

RESERVATIONS

~~ALL JOINER BHD DECK AND LOWER SONUSTONE DET. 3-A, 3-B, SECT 3-C, DET 4-A, 4-D, SECT 6-A & 7-D~~

REVISION	PANEL	DATE	DESCRIPTION	BY	APPR'D
A	1 & 3	7-20-76	[illegible]	EJF	K B
E	2, 2, 2, 2, 6	2-18-76	[illegible]	EJF	B
D	5	11-19-75	[illegible]	EJF	B
C	2, 2, 2.3,5,6, 5,6, 2	9-2-75	[illegible]	EJF	B
B	4, 7, 7	4-15-75	[illegible]	EJF	B
A	1 & 3, 2, 2.3,6, 7, 2.3,4, 1.3,4,6	3-6-75	[illegible]	EJF	B

U.S. COAST GUARD YARD — CURTIS BAY, MD.

INDUSTRIAL DEPARTMENT

DESIGNED - DRAWN - TRACED - CHECKED - D.L.H.

BRANCH HEAD

APPROVED — DATE 12-17-74

CHIEF ENGINEERING DIVISION

160 FT. CONSTRUCTION TENDER
JOINER PLAN
MAIN, UPPER DECK & PILOTHOUSE

C.G. DRAWING NO. 160WLIC-3301-1 REV F

SCALE — SHEET 1 OF 1

PLAN DISTRIBUTION	1	2	3	4	5	6
INDUSTRIAL DEPT.	1	1	1	1	1	1
INSTRUMENT SHOP	1	4	4	4	4	4
		8	3	3	3	3
MECHANICAL SHOP	1	2	2	2	2	2
		2	2	2	2	2
ELECTRO SHOP	1	2	2	2	2	2
SERVICES SHOP	1	2	2	2	2	2
		2	2	2	2	2
SUPPLY DEPT.		1				
COMDT (ENG)	1	2	2	1	1	1
COMDT						
C.G. DISTRICT						
HQ WLIC PROJ. MGR.						
ENGINEERING DIV.	1	2	2	2	2	2
NOT SERVICES REPRO FILES						
C.G.A. STAFF						
160 FT WLIC STAFF	2	2	2	2	2	2
ALTERATION		A	B	C	D	E
TOTAL		2	2	2	2	2

TRACE PLAN 160WLIC-3301-1

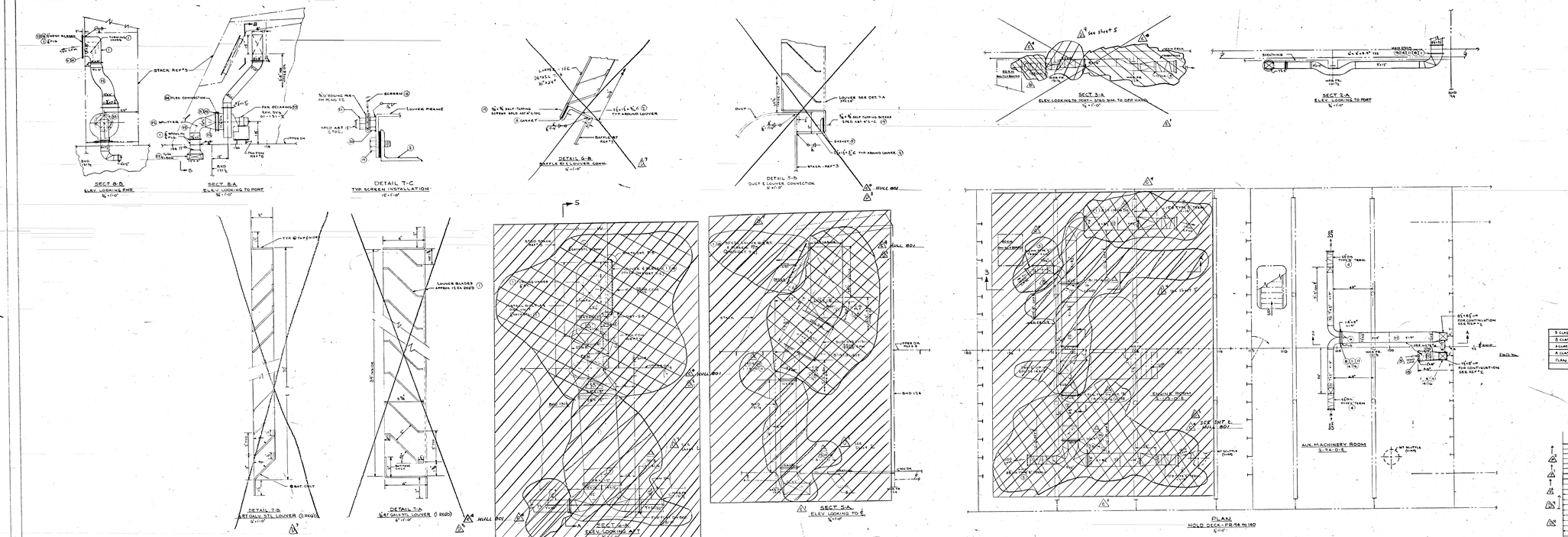

GENERAL NOTES

1. ALL MACHY SPACE DUCT TO BE HT CONSTR. WELDED SEAMS & FLGD JOINTS UNLESS OTHERWISE SHOWN & WHERE NECESSARY FOR TRACE DOWN PURPOSES.
2. "X" DIMS ARE GIVEN FM UNDER SIDE OF STL DK TO TOP OF RECT. DUCTS & ℄ OF RD. DUCTS.
3. ALL DUCTS TO BE SUFFICIENTLY BRACED TO THE STRUCTURE MAX DISTANCE 8'-0" USING PC NO'S, SA614.
4. SPLITTER DAMPERS TO BE INSTALLED AT ALL BRANCH TAKEOFFS. BALANCING DAMPERS @ ALL TERMINALS. LOCK DAMPERS IN PLACE AFTER BALANCING.
5. INSULATE ALL DUCTS IN MACHY SPACE & TRAS EXCEPT THOSE MARKED "DO NOT INSULATE" SEE ST. SA 7583. PREFREE DUCTS. REMOVE INSULATION & FINISH AS OUTLINED ON REF. 5A. DO NOT INSULATE ADJ. TERMINALS.

REFERENCE PLANS

NO	TITLE	PLAN NO.
1	BILL OF MATL	NO 83
2	VENT & AIR-COND. INS. UPPER & MID DKS, REF. DETS.	SD-NILL 1-801-6
3	DK. HRDS., ENG. CASING, AND STACKS	1-1571-1
4	UPPER DK. FRAMING & DETS.	1-1516-3
5	MISC. FDNS. OUTSIDE MACHY	1-1172-4
6	PAINTING SCHED.	1-1560-1

RESERVATIONS

△	1-7	6-7-68	1. SHEET 1: REVISED DIM. STANCHIONS & PIPES. 2. SHEET 2: REVISED VENT DUCT. 3. SHEET 3: REVISED DIM. IN SECT. APPLICABLE TO SHEET 1 & 2. 4. SHEET 5: REVISED DUCT. 5. ADDED SHEET 6 FOR PANELS (800)	
△	1-8-01	7-8-01	1. SHEET 1: REVISED DUCT DROP PLUS REMOVED DIM. ON FLOOR. ADDED HALON PIPE & DIM. TO DUCT. 2. SHEET 2: REVISED DUCT DROP. ADDED HALON PIPE. 3. SHEET 3: REVISED DUCT DETAILS AND ADDED HALON PIPE. 4. SHEET 4: REVISED DUCT DROP. 5. SHEET 5: REVISED DUCT DROP. 6. SHEET 6: REVISED DUCT DROP. ADDED HALON PIPE, GRAV. PIPES, GRAV. PIPES, TRAP. 7. ADDED SHEET 8 FOR PANELS (800) 8. EQUIPMENT REMOVED. ALL HULLS	
△	1-9-6	1-9-6	1. REFERENCE TO ALL HULLS 2. REVISED THE "W" VENT DUCT LOUVERS 3. REVISED APPLICABILITY TABLE	
△	1-9-16	1-9-16	1. HULL SHT 1: MODIFIED END DIM. VENT SHT 2: REVISED APPLICABILITY TABLE. 2. HULL SHT 2: CHANGED SUPPLY SYS. SCHEDULE. 3. HULL SHT 3: ADDED SYS. S-2, S-3. 4. HULL SHT 4: REPLACED HALON PIPE. 5. ADDED SHEETS 5, 6, AND 7.	
△	1-1-1	1-1-1	1. FLOOR'S TABLE 2. MODIFIED END. DIM. VENT SYS. 3. ADDED SHT 6.	
△	3-7	3-7-71	1. ADDED SHT 3. 2. MODIFIED SHT 2.	
△	6-8-76	6-8-76	ALTERED EXH DUCT IN AUX MACHY RM. FR 97 TO 160 STBD SIDE. ALTERED DUCT ENG RM. PORT SIDE FR. 97 TO 160 AT BATT. & BAFFLE BOARD. ON HANGER.	
△	4-4-75	4-4-75	ADDED PC NO 55 & M REVISED	

REVISIONS NUMBER	DATE	DESCRIPTION	DRAWN	CHECKED

U.S. COAST GUARD YARD — CURTIS BAY, MD.

INDUSTRIAL DEPARTMENT

160 FT. CONSTRUCTION TENDER

VENT ARR.

MACHY SPACES

DESIGNED — DRAWN — DS-M — CHECKED — WHB

Lt. Cmdr. USCG

Chief, Ship Design Branch

U.S. Coast Guard

160WLIC 3801-5

SCALE 1/4 SQUARE — SHEET 5 OF 7

△	17			F
△	18			F
△	19			F
△	20	NEW EXG ROOM SUP SYS. (-1.5H-1) (EXHS. BUT)		F
△	21			F
△	22	NEW STD ROOM SUP SYS. (-1.5H-1) (FOR. BUT)		F
△	23			F
△	24	NEW CHIP ROOM SUP SYS. (-1.5H-1) (FOR. BUT)		F
△	25			F
△	26			F
△	27	NEW GNG RM SUP SYS. (-1.5H-1)		F
△	28	NEW STEAM VENT EXH VENTS		F
△	29	EXH. SYS. (-1.5H-1) MAIN		F
△	30	DESIGNATION		
△	31-7	SUPP. DESIGNATE		

△ HULL 801

S CLASS	801 SACHNAW	
D CLASS	802 REDWOOD	
AGLASS	801 MUSKEGON	
A CLASS	800 JAMESTOWN	
PLAN SET	HULLS	

APPROVED BY:

PLAN CONTRACTOR — DRAWN — CHECKED — APPROVED — DATE

CHIEF, DESIGN DIVISION — CHIEF, DESIGN BRANCH — CHIEF, SHIP DESIGN BRANCH — CHIEF, MECHANICAL DESIGN BRANCH — CHIEF, ELECTRICAL DESIGN BRANCH — CHIEF, ENGINEERING DIVISION — CHIEF, ENGINEERING DEPARTMENT

MECHANICAL DESIGN BRANCH — ELECTRICAL DESIGN BRANCH — ENGINEERING DIVISION — ENGINEERING DEPARTMENT

CHIEF, SHIP DESIGN BRANCH — CHIEF, MECHANICAL DESIGN BRANCH — CHIEF, ELECTRICAL DESIGN BRANCH — CHIEF, ENGINEERING DIVISION — CHIEF,

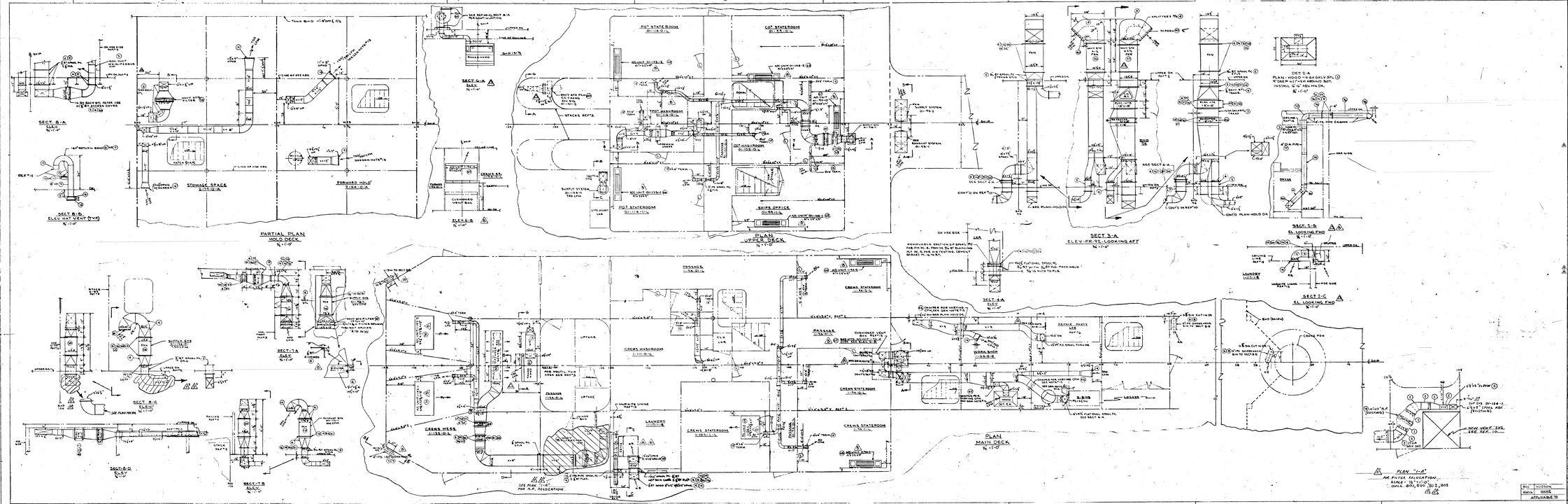

GENERAL NOTES

1. NEW VENT DUCTS UP TO 12" DIA. EACH SHALL BE GALV. DUCTS OF 20 GAGE FOR 6 TO 8 DIA. GALV. STEEL. OTHER DUCTS AS LISTED.
2. LAMINATE WORK TO BE FINISHED WITH FLUSH EDGE CAPS TO BE USED, PLUS JOINTS HIDDEN. SEAMLESS.
3. ALL SPIRAL VENT TRUNKS, BAFFLES, CURBS, ETC. TO BE TRIMMED, DURING INSTALLATION.
4. TO FITTED GRILLES PER NC 10-1, WHICH VENT CONSTRUCTION IN LOUVER CEILINGS (SHEET 5).
5. VENT TERMINALS SUITABLY TO BE FITTED W/ 1/4 INCH SCREENS PER NC 10-1 (WHERE NOT COVERED BY HOOD, ETC.).
6. ALL DUCT PLATE TO BE INCREASED WITH BEFTS UNLESS SHOWN OTHERWISE.
7. ALL DUCTS TO BE SUPPORTED WITH BRACKETS TO THE STRUCTURAL MAX. DISTANCE 8'-0", USING PT HOLES.
8. CHECK ARE SHOWN FOR UNDERSIDE OF THE RTL OR TO THE TOP OF BELT DUCTS 5 & 6 OF ROUND DUCTS.
9. INSTALL ELEMENTS PITS BOTH SIDES OF AFTER (FOR LIVING PURPOSES).
10. SPLITTER DAMPERS TO BE INSTALLED AT ALL BRANCH TAKE-OFFS. ALL DAMPERS OF ALL TERMINALS LOCK DAMPERS IN PLACE AFTER BAL. STD.
11. AIR-COOLING UNITS DROPPED ON BEFT 1, VENT FAN ON BEFT 2 (SHEET 4).
12. ALL SPIRAL PIS 16 PT WITH 1/4 FLGS UNLESS OTHERWISE NOTED.
13. NO. BALANCE SUPPLY EXHAUST DUCTS TO 300 CFM EACH AS SHOWN.
14. (A) PROVIDE SUPPLY AIR TO THE SHIPS OFFICE (SHEET 1).
(B) PROVIDE SUPPLY AIR TO THE SHIPS OFFICE (SHEET 1).
(C) THE POSITION OF THE DAMPERS FOR EACH AIRFLOW SHALL BE INDICATED ON THE DUCTS.
(D) INSTALL THE DAMPERS WITH HINGES ADJACENT DAMPERS WHEN WELDING IN WORK SHOPS, PROVIDE IN VICINITY OF THE REL VALVES, SEE BEFT 6.
15. INSTALL INSTALLED TEST CONDITIONS AS SHOWN ON BEFT 6, USING WATER IN INLET & AIR, 2 PC. 60" DIA. SHEET, OVER CAN. PR 1.5, FR 17 PRESSURE 3 IN. PR 1.5 PART ON BEFORE PART LAR.

REFERENCE PLANS

No.	TITLE	PLAN NO.
1	BILL OF MATL.	SH-1-67
2	UPPER DKS PLANING & PROF.	160 W.L.C.T.-1-1-1
3	SKLIGHTS, SUN CAPINGS & STYLES	1-1-57-1
4	WINDOWS, PORTLIGHTS, DOORS, HANDRAILS, ETC.	1-1-57-2
5	WINDOW FRAMING & DETS.	1-1-57-3
6	PTL. DOORS (CAN WTL. DOOR)	1-1-57-4
7	BILL OF MATL.	SH-1-57-1
8	BILL OF MATL.	SH-1-57
9	BILL OF MATL.	SH-1-55
10	VENT. AREA, HACHY SPACES	160 W.L.C.-1-8-1-1
11	TYPE VENT PIPE	FL-1-8-1-2, SHT. 80
12	WT CLOSURES FOR SMALL VENTS	FL-1-8-1-2-1
13	LINER PLAN, VENT DECK & FLAT-FOR	160 W.L.C.-1-3-1-1
14	LABEL PLATES (WALL VENT)	160 W.L.C.-1-3-1-1
15	CEILING PLAN, UPPER DKS & FLAT-FOR	160 W.L.C.-1-3-1-1
16	PORTABLE TEST CONDITIONS (AFTER BAL. OF SYSTEM)	FL-1-3-1-1-2, SHT. 4-5

RESERVATIONS

F	1	1-7-74	(1) UPDATED DIMENSIONS ON DUCTS ON SECTIONS ON PLANS & ADDED NOTE 13 (2) ADDED NOTE 14 (3) ADDED NOTE 15 (4) ADDED VENT DUCT AND FAN DATA (SHEET 1) (5) CHANGED (NC) AND (DB) DIMENSIONS (SHT.)			
E	1	7-2-70	PLAN 7-1-70, AIR FILTER REDESIGN APPLICABLE TO CAC. INSTALLED (SHULL 808)			
	2		AIR FILTER RELOCATED FOR NEW VENT SYS PR 16A-1-1-12, SFSD.			
	3		1. MOD. 1-8-1-1/2 SHT. "B-C"			
	4	4/14/71	2. ALTERED. SHP SYS. 21-1-1-1, 3. ADDED PLANS "1-A"			
C	—	12-10-70	BELL CHG. APPLICABILITY TO HULL 808 ONLY			
B	ALL	6-10-70	(1) ADD NO. VENT. BOXES & DUCT. IN WORK CRSM & CREWS WR. (2) ADD NEW VENT. BOXES & DUCTS IN CREWS STATEROOMS (3) REVISED DUCTS PLATE (4) REVISED DIMENSIONS ON DUCTS (5) REVISED DIMS. ON DUCTS (6) REVISED DIMS. ON DUCTS (7) CHANGED NO. OF NEW VENT. SYS. (8) ADDED NOTE 13 (9) ADDED NOTE 14 (10) ADDED NOTE 15 (11) ADDED NOTE 16 (NOTE: THIS REVISION APPLICABLE TO HULL 809 ONLY)			
A	6-3-70	REVISED BELL TYPES				
	6-8-70	ADDED CHAIN GUARDS TO VENT. SYS. (2) ADDED DUCTS, VENTS & FANS (3) ADDED DIMENSIONS OF AIR FILTER & FAN (4) ADDED DIMENSIONS OF AIR FILTER & FAN (5) ADDED MINED LAUNDRY & LOCKER ROOM, SECT 5-B & C, ADDED DUCTS "A, B, C" (6) ADD NEW VENT.				

REVISION	PLANS	DATE	NOTE

DESCRIPTION — CUSTOM SHT. NO.

LAB. SCHAFF BUILDING 10000

DESIGNED: GRAHAM
DRAWN: CHUN
CHECKED: FAN
SUPERVISOR: [illegible]

INDUSTRIAL DEPARTMENT

160 FT. CONSTRUCTION TENDER VENT & AIR-COND. MN, UPPER & HOLD DKS ARR & DETS

APPROVED: [illegible] 1-12-74

NAVSHIPS 660WLIC-3801-4

REVISIONS: [illegible] SHEET [illegible] OF [illegible]

HULL: HUDSON
BRAN: SHIPS
APPLICABLE TO

PLAN APPROVED
DRAWING APPROVED
PROJECT APPROVED
SHIPS APPROVED
SHIPS APPROVED
SHIPS APPROVED
SHIPS APPROVED
SHIPS APPROVED
SHIPS APPROVED

© NAVA
D. CHRISTOFLES

SYM	DATE	DESCRIPTION	BY	APPR
H	6.5.2	ENG. DWG. SUPER. LISTING: ADD SHAFT DIA. ADD SHAFT DIA. ADD SHAFT DIA.

SYM	DATE	DESCRIPTION	BY	APPR
H	6.5.2	ENG. DWG. SUPER. LISTING: ADD SHAFT DIA. ADD SHAFT DIA. ADD SHAFT DIA.

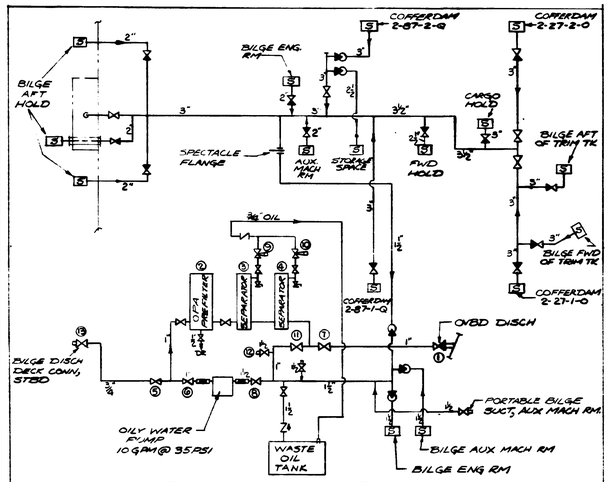

OILY POLLUTION ABATEMENT SYS. DIAGRAM

LEGEND	COMPONENT KEY
GATE VALVE	① O.P.A. OVBD DISCH VALVE
CHECK VALVE	② O.P.A. SYSTEM-PREFILTER
STOP CHECK	③ SEPARATOR-1ST FILTER COALESCER STAGE
ANGLE STOP CHECK	④ SEPARATOR-2ND FILTER COALESCER STAGE
ROSE BOX	⑤ PREFILTER INLET VALVE-OILY WATER
VALVE, ELECTRIC OPERATED	⑥ PREFILTER OUTLET VALVE-OILY WATER
HOSE GATE VALVE	⑦ O.P.A. SYSTEM WATER OUTLET VALVE
HOSE CONNECTION	⑧ OILY WATER PUMP INLET VALVE
SAMPLING VALVE	⑨ 1ST STAGE OIL OUTLET VALVE
	⑩ 2ND STAGE OIL OUTLET VALVE
	⑪ SEPARATOR RECOVERY VALVE
	⑫ WATER DISCHARGE TO SANI. SEW. OR BILGE
	⑬ MN DK. DISCH-DIRTY OIL TANK

MAKE PHOTOGRAPHIC NAMEPLATE OF MATTER WITHIN OUTLINE AND POST IN OPERATING AREA

DETAIL "9-A"
SCALE: NONE

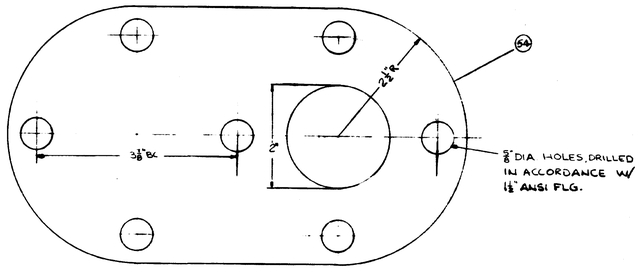

DETAIL "8-C"
SPECTACLE FLANGE
SCALE: ACTUAL SIZE

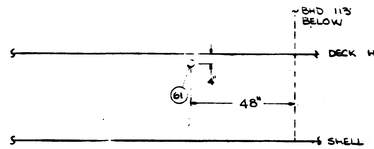

DETAIL "8-B"
LOCATION OF PENETRATION THRU DK
SCALE: NONE

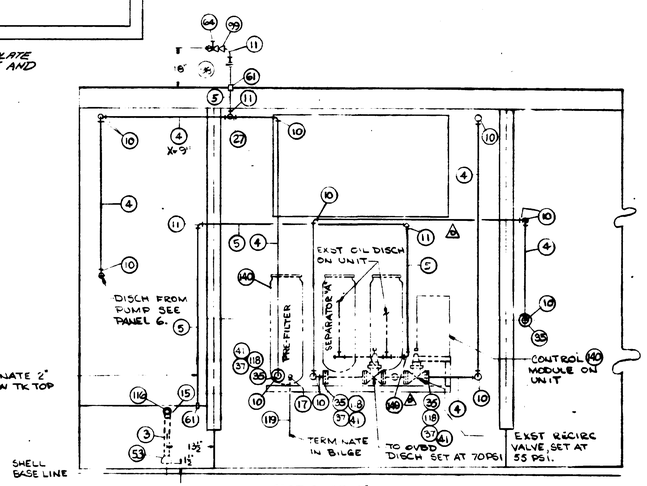

SECTION "8-A"
SCALE: 1/4" = 1'-0"

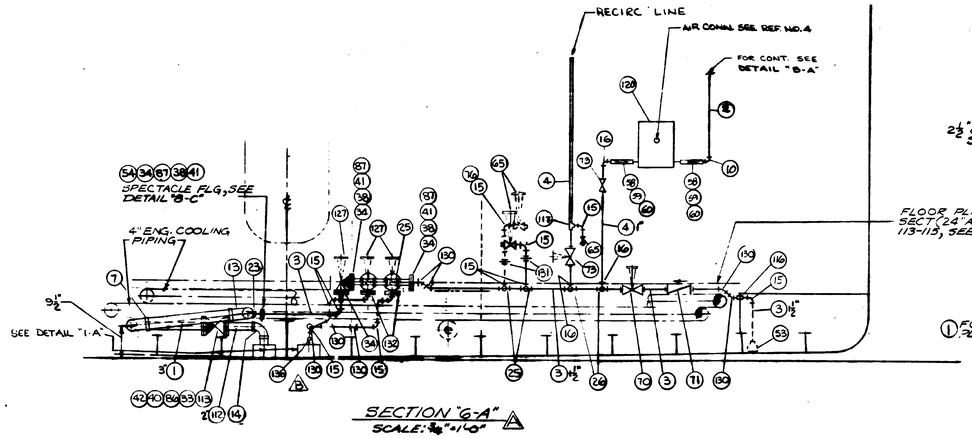

SECTION "G-A"
SCALE: 3/8" = 1'-0"

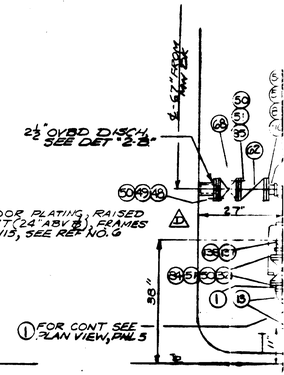

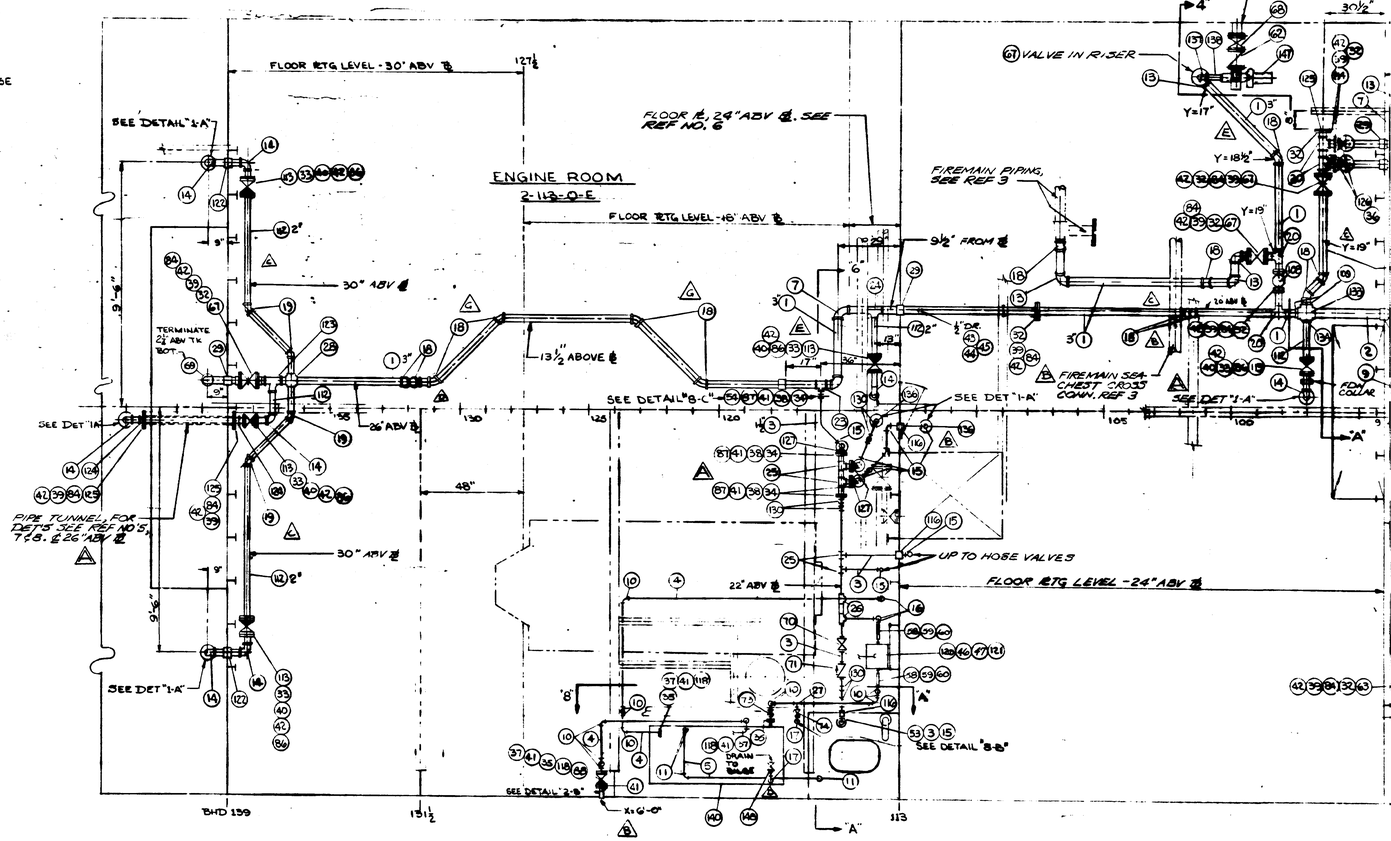

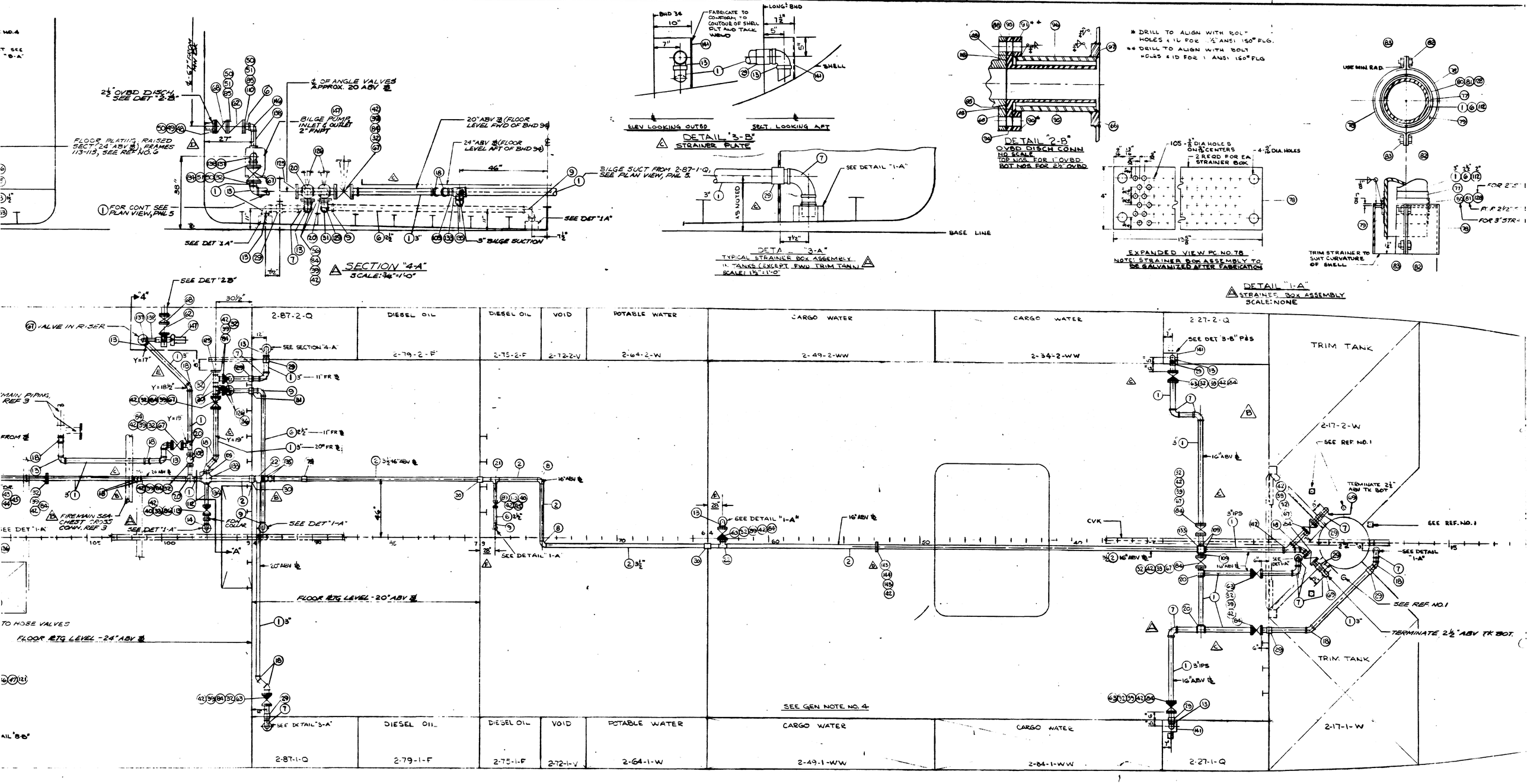
SECTION "4-A"
SCALE: 3/16"=1'-0"
2½" OVBD DISCH. SEE DET "2-B"
℄ OF ANGLE VALVES APPROX. 20 ABV ⅌
BILGE PUMP INLET & OUTLET 2" FNPT
FLOOR PLATING RAISED SECT. 24" ABV ⅌ FRAMES 113-113, SEE REF NO. 3
FOR CONT. SEE PLAN VIEW, PNL 5
20" ABV ⅌ (FLOOR LEVEL FWD OF BHD 34)
24" ABV ⅌ (FLOOR LEVEL AFT OF BHD 34)
BILGE SUCT FROM 2-87-1-Q, SEE PLAN VIEW, PNL 5
SEE DET "1A"
3" BILGE SUCTION
DETAIL "3-B"
STRAINER PLATE
ELEV LOOKING OUTBD
SECT. LOOKING AFT
FABRICATE TO CONFORM TO CONTOUR OF SHELL PLT AND TACK WELD
SHELL
DETAIL "2-B"
OVBD DISCH CONN
NO SCALE
TOP NOS. FOR 1" OVBD
BOT NOS. FOR 2½" OVBD
* DRILL TO ALIGN WITH BOLT HOLES & ID FOR ½" ANSI 150# FLG.
** DRILL TO ALIGN WITH BOLT HOLES & ID FOR 1 ANSI 150# FLG
DETAIL "3-A"
TYPICAL STRAINER BOX ASSEMBLY IN TANKS (EXCEPT FWD TRIM TANK)
SCALE: 1½"=1'-0"
BASE LINE
EXPANDED VIEW PC. NO. 78
NOTE: STRAINER BOX ASSEMBLY TO BE GALVANIZED AFTER FABRICATION
DETAIL "1-A"
STRAINER BOX ASSEMBLY
SCALE: NONE
TRIM STRAINER TO SUIT CURVATURE OF SHELL
USE MIN. RAD.
FOR 2" S
FOR 3" STR
2-87-2-Q
DIESEL OIL
2-79-2-F
DIESEL OIL
2-75-2-F
VOID
2-72-2-V
POTABLE WATER
2-64-2-W
CARGO WATER
2-49-2-WW
CARGO WATER
2-34-2-WW
2-27-2-Q
TRIM TANK
2-17-2-W
2-87-1-Q
DIESEL OIL
2-79-1-F
DIESEL OIL
2-75-1-F
VOID
2-72-1-V
POTABLE WATER
2-64-1-W
CARGO WATER
2-49-1-WW
CARGO WATER
2-84-1-WW
2-27-1-Q
TRIM TANK
2-17-1-W
VALVE IN RISER
SEE SECTION "4-A"
SEE DET "2B"
MAIN PIPING REF 3
FROM ⅌
FIREMAIN SEA CHEST CROSS CONN. REF 3
SEE DET "1-A"
FOR COLLAR
FLOOR RTG LEVEL - 20" ABV ⅌
FLOOR RTG LEVEL - 24" ABV ⅌
TO HOSE VALVES
SEE DETAIL "3-A"
SEE GEN NOTE NO. 4
SEE DETAIL "1-A"
SEE REF. NO. 1
TERMINATE 2½" ABV TK BOT.
CVK
HOLD
SCALE: ½"=1'-0"

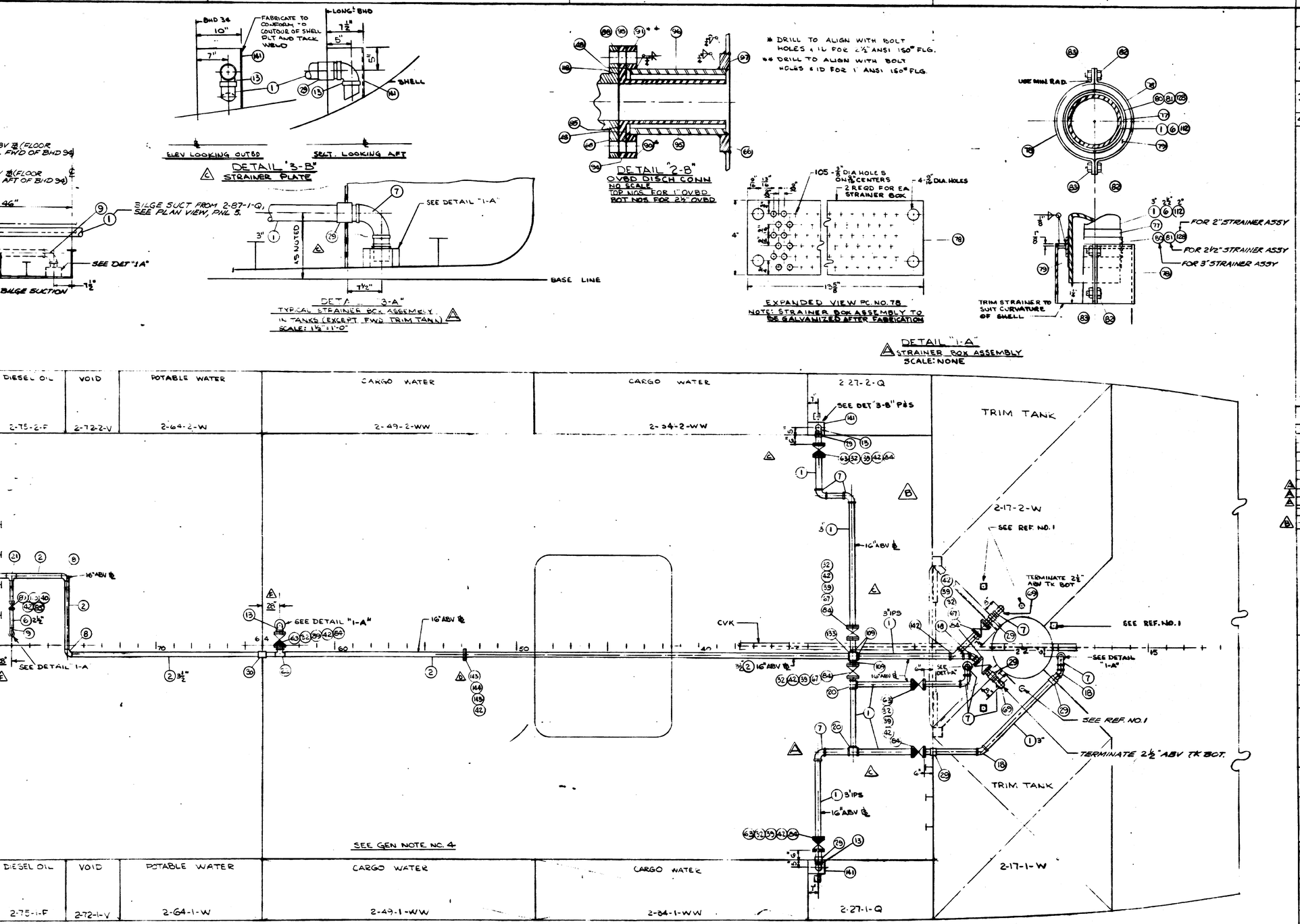

GENERAL NOTES

1. FLANGES SHALL BE INSTALLED WHERE NECESSARY FOR TAKE-DOWN PURPOSES.
2. PIPING SHALL BE SECURED BY 1/8" SYNTHETIC RUBBER LINED HANGERS SPACED NO MORE THAN 6 FEET APART USING PC. NOS 101, 102, 103, 104, 105, 106, & 107.
3. ALL PRESSURIZED PIPING TO BE TESTED AT 135% OF ITS WORKING PRESSURE, SUCTION LINES TO BE TESTED AT 30 PSI.
4. TANK ARRANGEMENT, AS SHOWN, APPLIES TO "A" CLASS

REFERENCE PLANS

NO.	TITLE	PLAN NO
1	ARR. TANK VENTS AND SOUNDING TUBES	160 WLIC-4809-1
2	DIAG. FIREMAIN, BALLAST, & BILGE SYS	160 WLIC-4801-1
3	ARR. FIREMAIN SYSTEM PIPING	160 WLIC-4801-2
4	ARR. COMPRESSED AIR SYSTEM	160 WLIC-4900-2
5	BILL OF MATERIALS	BM 56
6	PORTABLE DECKS & GRATINGS	160 WLIC-1106-3
7	LONG. WT & OT BHDS & BOTTOM TANKS	160 WLIC-1105-2
8	TRANSVERSE WT & OT BULKHEADS	160 WLIC-1105-1

RESERVATIONS

1. ~~WALK AND OUTLET ARRANGEMENT TO SUCT PUMP RESERVED PENDING REVIEW OF PUMP INSTALLATION.~~

REVISION	PANEL	DATE	DESCRIPTION	BY	APPR'D
G	6,7	5/27/82	IN PANELS 6 & 7 - REROUTED MAIN BILGE SUCTION PIPE TO CLEAR AIR GENERATOR. DEEP OIL PAN AS PER J.O. #4721 DELETED PC. NOS. 32, 39, 42, 84 AND ADDED PC. NO. 18. REVISED B/M		
F	3&4	8-13-76	ADDED BILGE SUCTION DIMS. BM UNAFECT	JRD	B
E	5,6,7,8	6-8-76	REVISED DWG "AS BUILT" ADDED DET "9A" FOR OPA SYS DIAGRAM BM REVISED.		
D	3,5,6,7	11-18-75	ADDED FLGS TO MAIN BILGE SUCTION LINE, CROSS CONN LINE FIREMAIN TO BILGE, VALVE TO SUCT. SIDE OF BILGE PUMP. BM REVISED.	CAW	
C	1,2,4,5,6,7	10-7-75	REVISED PIPING ON PL. 1 @ BHD 13.9 TO PANEL 6 @ FR. 96. AND FR. FR. 23 TO 34, SECT 4-A, DET "3-A" AND ADDED DETAIL "3-B" BM REVISED	CAW	
B	ALL	8-20-75	LIFTED RESERVATION NUMBER 1, REVISED DWG TO SHOW DIM. FR BASELINE. REVISED DROPLEGS FOR OPA SYS, INCL. DIM FOR OVBD OF OPA SYS, BM REVISED	GT	
A	1,2,3,4,5,6,7	3-19-75	REVISED MANIFOLD ARR'S, DETL DET 3A, SECT 6A, SECT 4A. ADDED SUCT. LEG AFT OF TRIM TANK & PNL 7. RELOCATED MANIFOLD FR 96 & SUCT LEG, FR. 92. ADDED REMARKS NOS 6, 7 & 8. BM REVISED		

U.S. COAST GUARD YARD — CURTIS BAY, MD.

INDUSTRIAL DEPARTMENT

DESIGNED: DRAWN: GT
TRACED
CHECKED: EAK

BRANCH HEAD

160 FT. CONSTRUCTION TENDER

ARRANGEMENT BALLAST AND BILGE PIPING

APPROVED B. W. Boies — CHIEF ENGINEERING DIVISION — DATE 8-13-74

C.G. DRAWING NO. 160WLIC-4801-3 REV G

SCALE AS NOTED — SHEET 1 OF 1

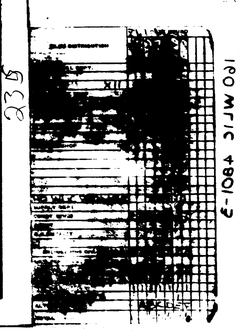

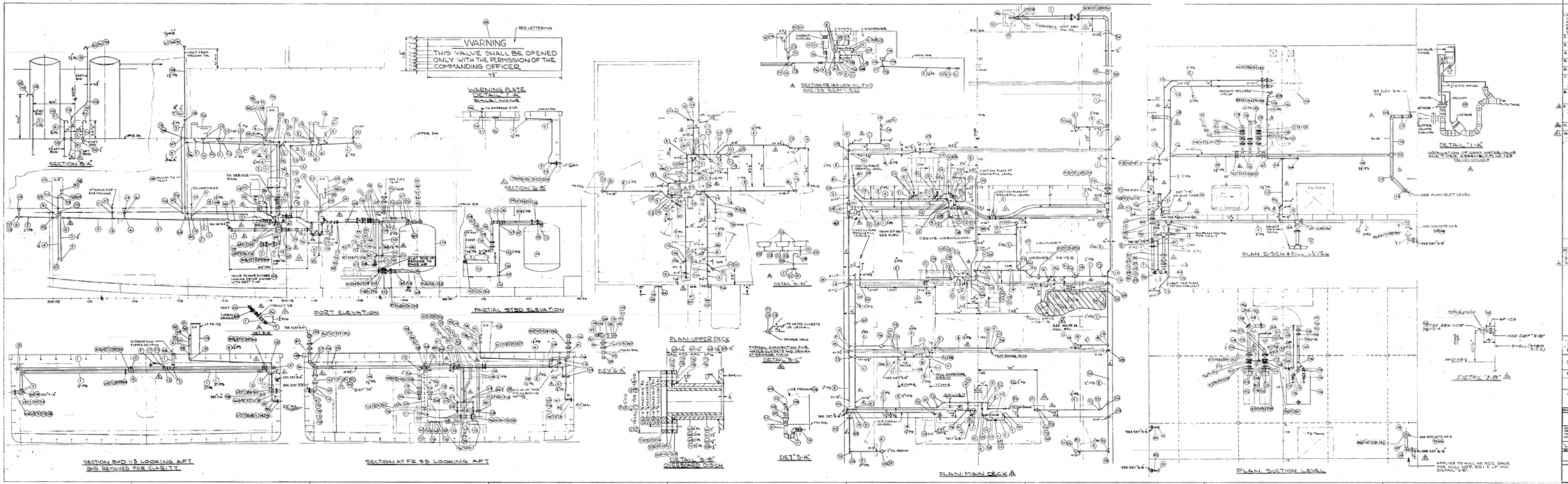

GENERAL NOTES

1. ALL PIPING NOT OF THICK BLACK LINE SHALL BE HOT DIPPED AFTER FABRICATION, WELDING AND FLANGES AND ALL FABRICATION HAS BEEN COMPLETED (WHERE NOT PRACTICABLE OR WHERE GALVANIZING HAS BEEN DESTROYED BY WELDING, GALVANIZE WITH APPROVED METAL SPRAY OR GALVANOLIUM METHODS).
2. ALL GRAVITY DRAINS SHALL HAVE A MINIMUM PITCH OF ¼ INCH PER FOOT.
3. ALL OVERBOARD DISCHARGES TERMINATE ABOVE WATERLINE UNLESS OTHERWISE SHOWN.
4. WARNING PLATES DETAIL 7-A ARE REQUIRED TO BE INSTALLED AT ALL OVERBOARD DISCHARGE VALVES.
5. PIPING AND COMPONENTS SUBJECT TO VACUUM SHALL BE TESTED AT FINAL.
6. ALL PIPING SYSTEMS SHALL BE TESTED TO 1.25 PRESSURE OF MAXIMUM SYSTEM PRESSURE.
7. VACUUM SEWAGE PIPING TO BE SUPPORTED OR BRACED ON AND 2 C HORIZONTAL AND 1 C VERTICAL MAXIMUM SPACING AND AT EACH CHANGE IN DIRECTION INCLUDING VERTICAL DROPS. SEE SPECIFICATION FOR DETAILS.
8. NOTE COUPLING HALF STRAINERS AND SUCT FILTERS STD 70123 SHALL BE PROVIDED BY THE SECEIVING HOSE AND ARE NOT SHOWN ON THE DRAWING. THE HOSE AND ARE NOT SHOWN ON THIS DRAWING.
9. PIPING AND TUBING CONNECTIONS MUST BE VACUUM TIGHT AND ENTIRE GRAY WATER DRIVE SYSTEM ASSEMBLIES AND PARTS SUPPLIED TO THE SHIP MUST BE SEALED SUCH THAT PRESSURE CHANGES IN THE SYSTEM DUE TO THE VACUUM IS TO BE LOCATED WITHIN 1 PSIG OF FINAL CONDITIONS.
10. VACUUM PUMP SUCTION PIPING MUST BE VACUUM TIGHT AND REQUIRES THE USE OF THREAD SEALANT ON THREADS.
11. GALV AND DISCARD ON DEV. FROM TRAIN EQ. INSTALL. ALL PIPE, FITTINGS, VALVES, ETC. TO BE GALV AND INSTALL 1% OFF AT FR 42 TO 85 FROM FINISH. DRAGE DIA TO THE NEW BASELINE FOR SHIPS 105 (FRONT).

REFERENCE PLANS

NO	TITLE	PLAN NO.
1	PLAN OF MAIN DECK	160WLIC-4808-1
2	PLAN OF MAIN SYSTEM DISCHARGE	160WLIC-4808-2
3	VACUUM PUMP ASSEMBLY	160WLIC-4808-3

REVISION PARA.	DATE	DESCRIPTION	BY	APPROVED
F	3	4/6/66	1. DELETED... TANK RM DRAIN... 2. ADDED NOTE 11	[illegible]
E	ALL	6-23-75	COMPLETE THIS REVISED TO AS BUILT	[illegible]
D	ALL	1-17-77	1. ADDED PIPING FOR BOILER ROOM DRAINS 2. ADDED PIPING FOR DRAIN IN GALLEY, BAR AND SUITE	[illegible]
C	13 & 15	5-6-13	1. ADDED VENT PIPE FOR DRAIN TANK 2. ADDED VENT PIPE FOR DRAIN IN MACHINERY SPACE	[illegible]
B	2,5,8	4-8-15	1. REVISED PIPING FOR TANK AT FWD END OF MAIN MACHINERY SPACE 2. ADDED DRAIN FOR TANK	[illegible]
A	2,5,7,11	12-8-76	1. REVISED PIPING FOR TANK AT FWD END OF MAIN MACHINERY SPACE 2. ADDED DRAIN FOR TANK	[illegible]

U.S. COAST GUARD YARD — 40 FEET — CONTR. DWG. NO.

DESIGNED - R.W.
DRAWN - R.W.
TRACED - [illegible]
CHECKED - R.W.

INDUSTRIAL DEPARTMENT

160 FT. CONSTRUCTION TENDER
POLLUTION ABATEMENT
AND
DRAINAGE SYSTEM

APPROVED: [illegible]
U.S. COAST GUARD

160WLIC-4808-1 — F

APPLIES TO HULL NO. 900 ONLY. FOR HULL NOS. 801 & UP SEE DETAIL 1-B.

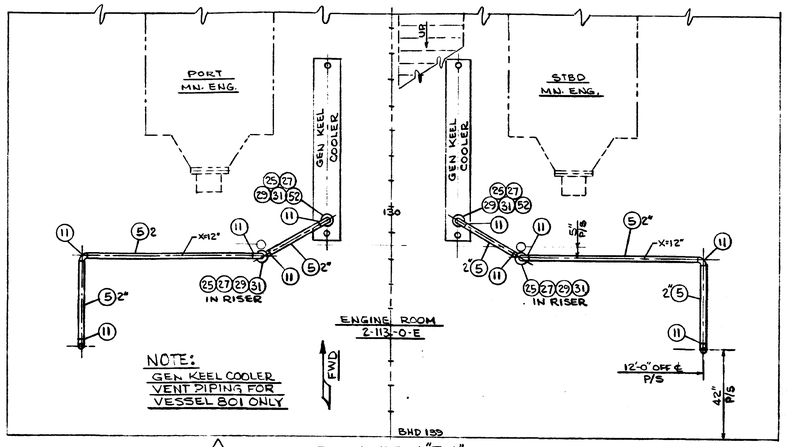

F PLAN VIEW-"7-A"

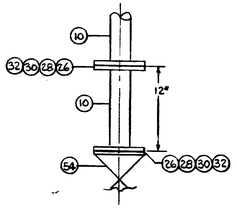

SECTION "G-C"
SEA CHEST VENT
NOT TO SCALE D

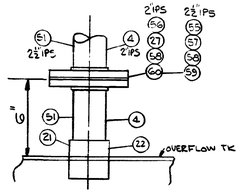

DETAIL "5-A"
SCALE: 3"=1'-0"
A

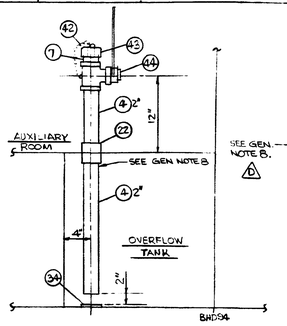

DETAIL "4-B"
SCALE: 1½"=1'-0"

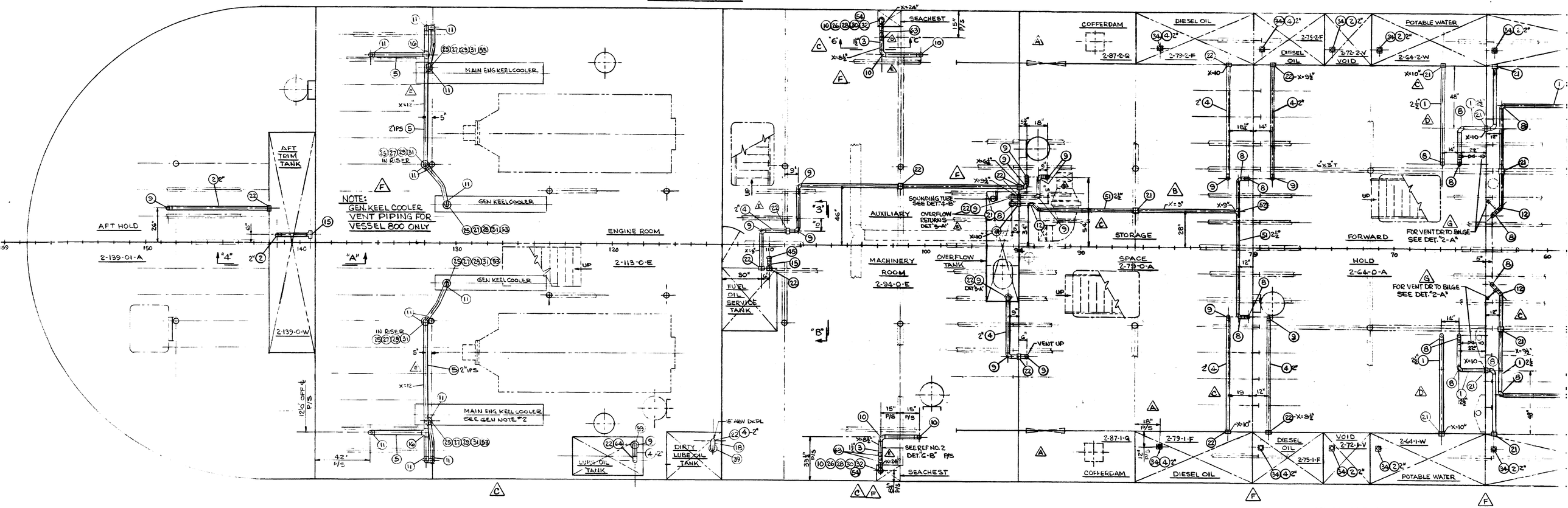

PLAN VIEW
HOLD DECK
SCALE: ½"=1'-0"

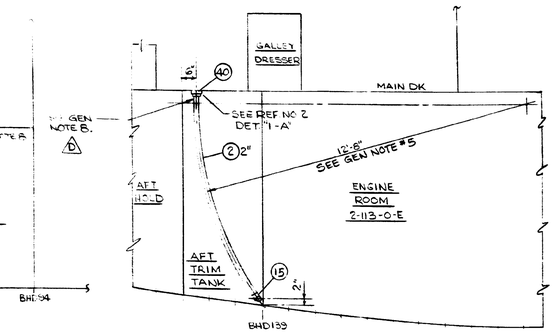

DETAIL "4-A"
SCALE: 1/2" = 1'-0"

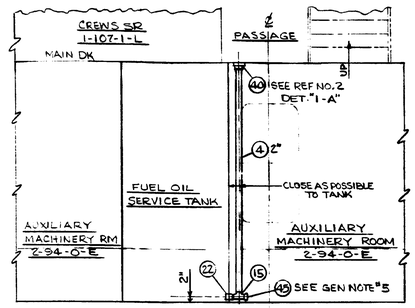

DETAIL "3-B"
SCALE: 1/2" = 1'-0"

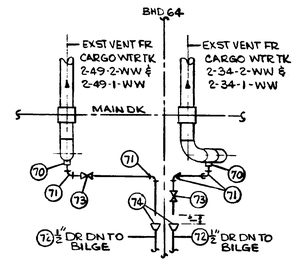

DETAIL "2-A"
℄ LOOKING PORT
STBD SIDE-OPPOSITE HAND
SCALE: NONE

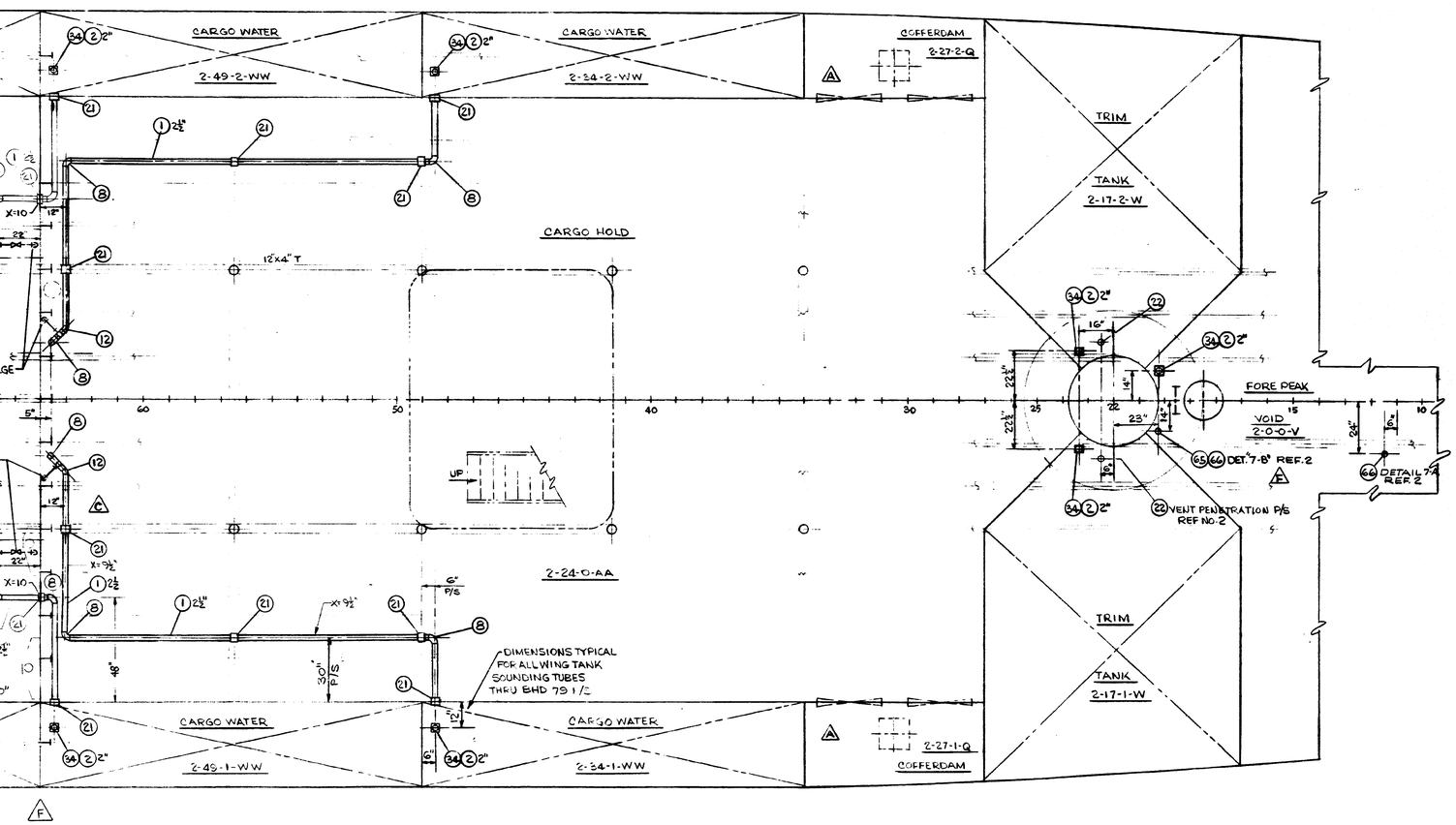

GENERAL NOTES

	1	FRESH WATER AND CARGO WATER SOUNDING RODS SHALL BE CALIBRATED IN ACCORDANCE WITH REF NO. 3
	2	GRID COOLERS SHALL BE FITTED WITH VENTS OF CU-NI AND BRONZE VALVES W/MONEL TRIM.
	3	AIR ESCAPES AND OVERFLOWS SHALL BE TESTED FOR UNOBSTRUCTED FLOW WITH COMPRESSED AIR OR OTHER FLUID AT NOT MORE THAN 100 PSI.
	4	GALVANIZING DESTROYED ON GALVANIZED PIPE AND ASSOCIATED FITTINGS, BY WELDING, SHALL BE RECOATED BY AN APPROVED METAL SPRAY OR GALVACON METHOD.
	5	SOUNDING TUBES MAY BE RUN AT ANGLES OR THEY MAY BE BENT TO A RADIUS OF NOT LESS THAN (10) TEN FEET.
	6	PIPE HANGERS PC NOS 46, 47 & 48 FOR NORMALLY DRY FERROUS PIPING SUCH AS SOUNDING TUBES, AIR ESCAPES, OVERFLOWS AND VENTS BOTH INSIDE AND OUTSIDE OF TANK SHALL NOT BE LINED.
C	7	FRESH WATER SOUNDING, DECK ACCESS BOX, TO HAVE A CHAMFER OF 1/4" (45°) AND BE PAINTED WHITE.
D	8.	DRILL TWO (2) 3/8" DIA. AIR VENT HOLES IN SOUNDING TUBES, 180° APART OR SPACE AS PRACTICAL, 4" TO 6" DOWN FROM TOP OF TANK.
E	9	AFTER INSTALLATION OF THREADED VALVES (PC NO. 33) SIL-BRZG ENDS TO INSURE TIGHTNESS OF SYSTEM.

REFERENCE PLANS

NO.	TITLE	PLAN NO.
1	BILL OF MATERIAL	BM #60
2	ARR TK VENTS & SOUNDING TUBES	160WLIC-4809-1 SH2
3	TANK SOUNDING TABLES.	160WLIC-2901-2

REVISION	PANEL	DATE	DESCRIPTION	BY	APPR'D
G	2/4	4-12-77	ADDED DRAINS TO VENTS FROM CARGO WTR TKS 2-34-1-WW, 2-34-2-WW, 2-49-1-WW & 2-49-2-WW. ADDED DET. "2-A". BM REVISED. SH 2 UNAFFECTED.	JJS	JRD B
F	ALL	5-21-76	ADDED GENERAL NOTE NO. 9. ADDED VENTS TO FORE PEAK VOID. DRAWING REVISED AS BUILT. ADDED PLANS "7-A" AND NOTES TO PLAN. BM & SH 2 REVISED.	JJS	B B
E	4-5-7	12-8-75	ADDED DET. "5-A". REVISED PIPING AT OVERFLOW TANK SEACHEST, KEEL COOLERS & FASERV. TK. SH 2 & BM REVISED	CAW	B B
D	4/6	7-30-75	ADDED GEN NOTE 8. ADDED SECTION "6-C". CHANGED VENT FROM TANKS 2-49-1-WW, 2-49-2-WW, 2-64-1-W, & 2-64-2-W. BM REVISED. SHEET 2 OF 2 REVISED	GT	B B
C	4 5 6 7 8	6-3-75	REVISED PIPING BHD 64. DELETED PC. NO. 12 AT FR 90. BHD 79 REVISED DIM FR 18" TO 20" REVISED VENT PIPING FROM RELOCATED KEEL COOLERS. ADDED VALVES AT KEEL COOLERS & SEA CHESTS. ADDED GEN NOTE NO. 7. BM & SH 2 OF 2 REVISED.	JJS	B B
B	5/6	2-11-75	CHANGED PIPE SIZE FROM OVERFLOW TK. FROM 2" TO 2½". BM REVISED.	JJS	B B
A	3/6	12/6/74	DELETED SOUNDING TUBES IN COFFERDAM AREAS. RELOCATED SOUNDING TUBES IN DC. TANKS BHD. 65. BM REVISED.	JJS	B B

U.S. COAST GUARD YARD — CURTIS BAY, MD.

INDUSTRIAL DEPARTMENT

DESIGNED
DRAWN JJS
TRACED
CHECKED
BRANCH HEAD

160 FT. CONSTRUCTION TENDER

ARRANGEMENT TANK VENTS AND SOUNDING TUBES

APPROVED — SHIPBUILDING ENGINEER — DATE 4-29-74

C.G. DRAWING No. 160WLIC-4809-1 — REV. G

SCALE AS NOTED — SHEET 1 OF 2

* SEPIA

NO WLIC PROJ MAN.
B (PAWLICO)
QEA STAFF
MEN
160' WLIC STAFF DIST. E (HUDSON)

ABCDEFG

MATERIALS LIST

REV	PC#	QTY	UNIT	MFR PART NO / NSN	DESCRIPTION	MATERIAL
–	1	1	EA	–	PIPE, 6" SCHED 120, 14' 6" LONG	STEEL ASTM A-53, GR B
–	2	1	EA	–	PIPE, 6" SCHED 120, 37' LONG	STEEL ASTM A-53, GR B
–	3	1	EA	JD NEUHAUS PROFI LIFTER 1100	WINCH, PNEUMATIC POWERED, WORKING LOAD LIMIT OF NO LESS THAN 1320LB WITH CAPACITY OF UPT TO 75FT OF 1/4 INCH DIA WIRE ROPE ON 3 LAYERS. DRUM SAFETY SHIELD. PNEUMATIC REMOTE CONTROL WITH 5FT OF HOSE PIPING CONNECTIONS IN US STANDARD SIZES. MARINE EPOXY PAINT "OFFSHORE YELLOW" MEETING ASME B30-7 OR EUROPEAN EQUIVALENT.	
–	4	1	EA	–	PLATE, 20.4#, THICK 7 5/8"X 7 5/8"	STEEL ASTM A-36
–	5	2	EA	–	PLATE, 20.4#, 7"X 7 11/16" (CUT TO TEMPLATE) SEE DETAIL 20-G	STEEL ASTM A-36
–	6	4	EA	–	PLATE, 20.4#, 8 1/8"X 8 1/8" (CUT TO TEMPLATE) SEE DETAIL 21-G	STEEL ASTM A-36
–	7	3	EA	–	6" SHEAVE, SELF LUBRICATING, (1/4" WIRE ROPE) CAST STL 1" DIA PIN	–
–	8	3	EA	MCMASTER CARR 92620A963	BOLT, 1"-8 UNC-2A X 4 1/2" LONG	SST 304 ALLOY
–	9	6	EA	MCMASTER CARR 96659A113	WASHER, FLAT, 1" STANDARD	BRASS
–	10	3	EA	MCMASTER CARR 91853A038	NUT, CASTLEATED HEX, 1"-8 UNC-2B ASTM-F594	SST 304 ALLOY
–	11	3	EA	MCMASTER CARR 98401A517	3/16" DIA X 2" LG COTTER PIN	SST 304 ALLOY
–	12	1	EA	–	BAR, FLAT, 1/4" THK. X 3 1/2", 22" LONG	STEEL
–	13	2	EA	–	PLATE, 15.3#, 2" X 5", SEE DETAIL 19-G	STEEL ASTM A-36
–	14	1	EA	–	PLATE, 20.4#, 6 11/16" ID X 8 3/4" OD SEE DETAIL 18-B	STEEL ASTM A-36
–	15	4	EA	MCMASTER CARR 92240A628	BOLT, HEX, 3/8-16 UNC-2A, 1 1/2" LONG ASTM-F593	STEEL
–	16	10	EA	MCMASTER CARR 91845A031	NUT, HEX, 3/8-16 UNC-2B ASTM-F594	STEEL
–	17	10	EA	MCMASTER CARR 92146A031	WASHER, MED SPRING LOCK, 3/8"	STEEL
–	18	1	EA	–	PLATE, 20.4#, 12" X 14" (CUT TO TEMPLATE) ASTM A-36	STEEL ASTM A-36
–	19	1	EA	–	CHANNEL, 15" x 40# x 12" LONG ASTM A-36	STEEL ASTM A-36
–	20	6	EA	MCMASTER CARR 92240A845	BOLT, HEX, 3/4-10 UNC-2A X 3" LG ASTM-F593	GALV STEEL
–	21	6	EA	MCMASTER CARR 91845A330	NUT, HEX, 3/4-10 UNC-2B ASTM-F594	GALV STEEL
–	22	6	EA	–	WASHER, 3/4" MEDIUM , BEVEL	GALV STEEL
–	23	1	EA	–	BAR, ROUND 3" DIA X 2 1/4" LONG, MACHINED, SEE DETAIL 21-A	STEEL ASTM A-36
–	24	1	EA	DELROYD PART #DR0160G	6" FLANGED RIM GEAR SEE NOTE 5	
–	25	1	EA	CROSBY-LAUGHLIN #1045336	SHOULDER NUT EYE BOLT, 2-1/2" ID, 1-1/4" DIA, 8" LONG	FORGED STEEL
–	26	3	EA	–	PLATE, 7.65#, SHEAVE GUARD SEE DETAIL 24-G	STEEL ASTM A-36
–	27	6	EA	MCMASTER CARR 92240A636	BOLT, HEX, 8-16 UNC-2A, 3" LONG ASTM-F593	STEEL
–	28	10	EA	MCMASTER CARR 92217A520	WASHER, FLAT, 3/8"	STEEL
–	29	6	EA	MCMASTER CARR 96659A112	WASHER, FLAT, 3/4"	GALV STEEL
–	30	6	EA	MCMASTER CARR 92146A036	WASHER, MED SPRING LOCK, 3/4"	GALV STEEL
–	31	1	EA	INGERSOLL RAND #LS2-600R-PH2M-GP	WINCH, AIR POWERED, NOM LOAD CAPACITY 1320LBS, NOM SPEED 66 FT/MINAIR CONSUMPTION AT NOM LOAD 0 – 141CFM, ROPE DIAM 5 16" – 1/4", WEIGHT W/O ROPE 75LBS	
–	32	1	EA	CROSBY #1050221 OR EQUAL	BULLARD CARGO HOOKWORKING LOAD LIMIT OF 1 TON, SELF CLOSING GATE, CLOSED SWIVEL BAIL.	FORGED STEEL
–	33	1	EA	CROSBY #1018419	SHACKLE, 3/8" SAFETY TYPE ANCHOR, WORKING LOAD LIMIT 1 TON	GALV STEEL
A	34	85	FT		WIRE ROPE ASSEMBLY, 85 FEET OF 1/4" DIA, 6X37 CLASSIFICATION, IWRC, GRADE XIP, WITH MINIMUM BREAKING STRENGTH OF 6800 LBS. ASSEMBLY TO INCLUDE CROSBY OPEN SEWAGE SOCKET, 1039021, OR EQUAL, ATTACHED BY SWAGING ASSEMBLY SHALL BE PULL TESTED TO 2720 LBS OR 0.40 PERCENT OF THE WIRE RBS. WIRE ROPE SHALL BE PRESSURE LUBRICATED WIH DYNAGARD-E OR DYNAGARD-BLUE WIRE ROPE LUBRICANT. ASSEMBLY SHALL BE PROVIDED WITH A PULL TEST CERTIFICATE.	
–	35	1	EA		OVER-HAUL WEIGHT 15# LEAD	
–	36	1	EA	CROSBY #1039897	FITTING, C-L TYPE G-417 CLOSED SPELTER SOCKET	FORGED STEEL
–	37	1	EA		PIPE, 8" SCHED 120, 34" LONG	STEEL ASTM A53 CLASS B
–	38	1	EA		BAR, ROUND 8 3/4" DIA x 3 1/4" LONG	STEEL ASTM A-36
–	39	2	EA	MCMASTER CARR 93705A537	HEX HD SOCKET SCREW, 1/4-20 UNC-2A 1/2" LG	
–	40	1	EA		PLATE, 1/2" THICK 4 1/2" x 3" SEE DETAIL 34-C	STEEL ASTM A-36
–	41	1	EA		PLATE, 3/8" THICK 9 1/2"x 15" SEE DETAIL 38-F	STEEL ASTM A-36
–	42	1	EA	OILITE AA3201-4	BEARING, OILITE BRONZE 2.752 ID x 3.254" OD x 2"	
–	43	1	EA		BEARING, UPPER, BRONZE 6.877" ID x 7.498" OD x 2" SEE DETAIL 35-G	
–	44	2	EA	MCMASTER CARR 1095K11	FITTING, GREASE ZERT 1/8"	
–	45	1	EA	DELROYD PART NUMBER DW0160G	WORM SHAFT ALLOY STEEL WITH HANDLE SEE NOTE 4	
–	46	2	EA	SEALMASTER NP-30	BEARING, PILLOW BLOCK, 1 7/8" SHAFT DIA, FOR WORM SHAFT PC 45	
–	47	4	EA	MCMASTER CARR 92240A718	BOLT, HEX HEAD 1/2"-13 x 2" LG ASTM F593	GALV STEEL
–	48	4	EA	MCMASTER CARR 92146A033	WASHER, LOCK, 1/2" MED SPRING	GALV STEEL
–	49	4	EA	MCMASTER CARR 91845A310	NUT, HEX, 1/2"-13 UNC-2-B ASTM F594	GALV STEEL
–	50	1	EA	OILITE PART #TT3800	BEARING, THRUST OILITE BRONZE, 3 7/8" NOM OD x 2 3/4" NOM ID	
–	51	1	EA	MCMASTER CARR 51205K182	COUPLING, 1/8" NPTF x 1/8" NPTF	SST 316
–	52	1	EA		PIPE, 1/8" STD x 3" LG STEEL ASTM A53, THREADED BOTH ENDS 1/8-27 NPTF	STEEL ASTM A-36
–	53	1	EA		BAR, ROUND 4" DIA x 3" LG	STEEL ASTM A-36
–	54	1	EA		PLATE, 15.3#, 5" x 3" SEE DETAIL 34-D	STEEL ASTM A-36
–	55	4	EA	MCMASTER CARR]98970A133	WASHER, FLAT, 1/2"	GALV STEEL
–	56	1	EA	–	PLATE, 20.4#, 4 1/2" DIA, SEE DETAIL 21-A	STEEL ASTM A-36
–	57	1	EA	–	PLATE, 20.4#, 6" DIA, SEE DETAIL 21-A	STEEL ASTM A-36
–	58	1	EA	–	PIPE, 5" SCHED 120, 46" LONG	STEEL ASTM A-53, GR B
–	59	1	EA	–	PIPE, 6" SCHED 120, 10" LONG	STEEL ASTM A-53, GR B

GENERAL NOTES

1. THIS DRAWING WAS CREATED IN ACCORDANCE WITH SFLC ACTIVITY NUMBER 21140, AND SUPERSEDES DRAWING 160 WLIC 8201-004. THE WORM GEAR, ITS SUPPORT FOUNDATION AND GEAR BEARINGS, AND RIM GEAR HAVE BEEN REVISED. DAVIT STRUCTURE WAS REVISED. DAVIT STRUCTURE HAS BEEN REINFORCED TO A STRUCTURAL RATING OF 1600 LBS. HOWEVER, USE OF INGERSOLL RAND LS2-600R WINCH (600KG = 1320LB) LIMITS WORKING LOAD LIMIT OF DAVIT ASSEMBLY TO 1320LBS.

2. PRIOR TO INSTALLING THE DAVIT REINFORCEMENT SLEEVE, DRILL 1" THRU HOLES AS DESCRIBED IN DRAWING INTO THE LOWER DAVIT ARM IN PREPARATION FOR WELDING THE SLEEVE TO THE LOWER ARM. THRU HOLES FOR WELDING IN THE UPPER ARM SHALL BE DRILLED PRIOR TO INSTALLATION AS WELL.

3. TESTS:
   - 3.1 STRUCTURAL STATIC LOAD TEST: ONE-TIME ONLY DURING INSTALLATION ACCEPTANCE. SUSPEND CERTIFIED TEST WEIGHT OF 3200LB +64/-0 FROM THE TIP OF THE BOOM, OVER THE STERN OF THE CUTTER FOR 10 MINUTES. DO NOT SUSPEND LOAD FROM DAVIT RIGGING OR WINCH. REMOVE LOAD AND INSPECT DAVIT FOR STRUCTURAL DEFORMATION OR DAMAGE (NONE ALLOWED). RECORD TEST IN REGISTRY OF LIFTING APPLIANCES/MACHINERY HISTORY.
   - 3.2 BRAKE TEST/MODIFIED PROOF LOAD TEST: ACCEPTANCE AFTER BRAKE REPLACEMENT OR ADJUSTMENT, BI-ANNUALLY (2 YRS), OR AS DIRECTED BY SFLC PRODUCT LINE. CERTIFIED TEST WEIGHT OF 1650LB +32/-0 (125% WLL OF 1320) SHALL BE GRUNT LIFTED BY THE WINCH AND RIGGING TO BE FREE AND CLEAR OF THE PIER OR BARGE, BRAKE SET, AND LOAD HELD FOR 10 MINUTES. THE DAVIT AND LOAD SHALL ALSO BE SWUNG AND LOAD LOWERED UNDER CONTROLLED CONDITIONS. CHECK FOR DAMAGE (NONE ALLOWED). RECORD TEST ON PLAQUE ON DAVIT, AND IN REGISTRY OF LIFTING APPLIANCES/MACHINERY HISTORY.
   - 3.3 DYNAMIC LOAD TEST: ACCEPTANCE, AFTER WINCH POWERTRAIN MAINTENANCE OR WIRE REPLACEMENT, BI-ANNAULLY (2 YRS), OR AS DIRECTED BY SFLC PRODUCT LINE. CERTIFIED TEST WT OF 1520LB +30/-0 (115% WORKING LOAD LIMIT OF 1320) SHALL BE LIFTED AND LOWERED TEN (10) TIMES BY THE WINCH AND RIGGING AT NOT LESS THAN 50 FPM. THE TEST LOAD SHALL BE SWUNG (ROTATED) AS FAR AS PRACTICAL IN BOTH DIRECTIONS. CHECK FOR DAMAGE (NON ALLOWED). RECORD TEST ON PLAQUE ON DAVIT, AND IN REGISTRY OF LIFTING APPLIANCES/MACHINERY HISTORY.
   - 3.4 ROUTINE OPERATIONAL TEST: ACCEPTANCE, ANNUALLY, OR AS DIRECTED BY SFLC PRODUCT LINE. PORTABLE TEST WEIGHT OF 88LB +/-4LB SHALL BE ADDED TO THE ASSIGNED WORKBOAT IN A DISTRIBUTED MANNER. THE BOAT SHALL BE LIFTED FROM ITS CRADLE, LAUNCHED, RECOVERED AND RE-CRADLED AT LEAST FIVE (5) TIMES. RECORDED SPEEDS SHALL BE NOT LESS THAN 50FPM VERTICAL. RECORD TEST ON LABEL ATTACHED TO DAVIT, AND IN REGISTRY OF LIFTING APPLIANCES/MACHINERY HISTORY.

4. ADJUST WORM GEAR TO RING GEAR SPACING TO PROVIDE CLEARANCE OF +0.003/-0.0 OVER THE 360 DEGREE RIM GEAR ROTATION.

5. RING GEAR ON DAVIT AND WORM GEAR ON BASE ARE A MARRIED PAIR TO BE REPLACED TOGETHER. DELROYD DR0160G & DW0160G (60 REV WORM GEAR = 1 REV RING GEAR).

6. ADJUST/SHIM WORM GEAR BEARINGS ON WORM SHAFT TO PROVIDE CLEARANCE OF 0.006 TO 0.010 INCHES.

7. LUBRICATE UPPER AND LOWER BEARING ZERK FITTINGS WITH AEROSHELL GREASE 6 (OR EQUAL) QUARTERLY, ROTATING DAVIT IN 120 DEGREE INCREMENTS. LUBRICATE WORM GEAR WITH MOBILTAC 375 NC (OR EQUAL) ENSURING COVERAGE OVER NORMAL WORKING RING TEETH, QUARTERLY.

8. ALL WELDING TO BE 1/4" FILLET ALL AROUND UNLESS OTHERWISE SPECIFIED.

9. REMOVE ALL BURRS AND SHARP EDGES.

10. SEE SHEET SIX (6) FOR INSTALLATION OF INNER SLEEVE REINFORCEMENT FOR NEW DAVIT CONSTRUCTION AS WELL AS FOR MODIFYING EXSITING DAVIT ASSEMBLIES.

11. THE INNER SLEEVE REINFORCEMENT, PC NO. 58, SHALL BE PLUG WELDED, 1-INCH DIA, IN FOUR (4) QUADRANTS AT NOT LESS THAN FIVE (5) POSITIONS.

12. OPEN SWAGE TYPE SOCKET ASSEMBLY COMPRESSED ON WIRE ROPE IS AN ACCEPTABLE ALTERNATIVE TO THE CLOSED SPECTER SOCKET AND SHACKLE.

13. ASSEMBLY MAY USE JD NEUHAUS WINCH (NO LONGER MANUFACTURED) OR INGERSALL RAND WINCH. DAVIT WORKING LOAD LIMIT IS BASED ON WINCH CAPABILITY.
14. WORM GEAR SHALL BE LUBRICATED IN ACCORDANCE WITH MPC A-M-10685.
15. TORQUE FASTENERS ACCORDING TO MANUFACTURES INSTRUCTIONS WHEN MOUNTING WINCH AND SLEWING GEAR EQUIPMENT TO DAVIT. APPLY THREAD LOCKING COMPOUND "LOCTITE 242" OR EQUIVALENT TO THREADS OF ALL FASTENERS.
16. THE NUMBER AND LETTER IN PARENTHESIS UNDER AN AUXILIARY VIEW DENOTES THE PARENT VIEW FROM WHICH IT WAS TAKEN.
17. BOAT DAVIT STRUCTURE SHALL BE PAINTED IN ACCORDANCE WITH USCG COATINGS AND COLOR MANUAL. COMDTINST M10360.3 (SERIES).
18. FABRICATION, WELDING AND INSPECTION SHALL BE AS SPECIFIED ON THIS DRAWING AND IN ACCORDANCE WITH MIL-STD-1689A.

REVISIONS

REV	SH	ZONE	ITEM	DESCRIPTION	DATE	APPVL SIG & ORG
A	1	3-F 3-D 7-C	1 2 3 4	REMOVED AND REPLACED NOTE 3. MODIFIED NOTE 13. ADDED NOTES 14, 15, 16, 17 & 18 UPDATED MATERIALS LIST ITEM 34.	11/20/12	JJR/PIF IBCTPL-SES2

NO.	TITLE	DRAWING NO.
4		
3		
2		
1	UPPER DECK FRAMING AND PLATING	160-WLIC 1106-2

REFERENCE PLANS

SPECIAL NOTATIONS

STINFO DESIGNATION

DISTRIBUTION STATEMENT D- DISTRIBUTION AUTHORIZED TO DHS/CG/DOD AND THEIR CONTRACTORS; ADMINISTRATIVE AND OPERATIONAL PURPOSE; 01/01/2009. OTHER REQUESTS SHALL BE REFERRED TO: COMMANDING OFFICER, USCG SFLC ESD TIMB, 2401 HAWKINS POINT ROAD, MAIL STOP 25/STINFO PROJECT MANAGER, BALTIMORE, MD 21226-5000. WARNING-THIS DOCUMENT CONTAINS TECHNICAL DATA WHOSE EXPORT IS RESTRICTED BY THE ARMS EXPORT-CONTROL ACT (TITLE 22, U.S.C. SEC 2751, ET. SEQ.) OR THE EXPORT ADMINISTRATION ACT OF 1979, AS AMENDED, TITLE 50, U.S.C. APP 2401 ET. SEQ. VIOLATIONS OF THESE EXPORT LAWS ARE SUBJECT TO SEVERE CRIMINAL PENALTIES. DESTRUCTION NOTICE-FOR UNCLASSIFIED, LIMITED DOCUMENTS, DESTROY BY ANY METHOD THAT WILL PREVENT DISCLOSURE OF CONTENTS OR RECONSTRUCTION OF THE DOCUMENT.

SUPERSEDES DRAWING 160-WLIC-8201-004

REV	SH	TITLE
7	–	SLEEVE PIPE INSTAL DETAILS HULLS 801 & 803
6	–	SLEEVE PIPE INSTAL DETAILS HULLS 800 & 802
5	–	PEDESTAL INSTALLATION DETAIL
4	–	PEDESTAL ASSEMBLY
3	–	DAVIT ARM INSTALLATION DETAIL
2	–	DAVIT ARM ASSEMBLY
1	A	TITLE SHEET

SHEET REVISION STATUS AND TITLE INDEX

PLAN SET	HULLS
160 WLIC	800, 801, 802 & 803

APPLICABILITY

ENGINEERING SERVICES DIVISION AUXILIARY BRANCH

DESIGNED	YZW /s/	NAME-AUX 06/01/15
DRAWN	JMR /s/	NAME-AUX 06/01/15
CHECKED	MRT /s/	NAME-AUX 06/01/15
APPROVAL	Sam /s/	NAME-AUX
U.S.C.G. APPROVAL	STEPHEN E. SHARPE /s/	05/20/11
CHIEF, AUXILIARY MACHINERY SECTION		

UNITED STATES COAST GUARD WASHINGTON, D.C. 20593

OFFICE OF NAVAL ENGINEERING

160' WLIC

160' BOAT DAVIT & PEDESTAL ASSEMBLY

SIZE	FSCM CAGE NO.	U.S.C.G. DRAWING NO.	REV
H	81340	160 WLIC-8201-007	A

SCALE: AS NOTED | 10.42 SQ FT | SHEET 1 OF 7

DWG NO 160 WLIC-8201-007 REV A SH 1

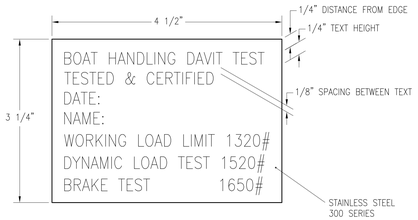

DETAIL 16–F

TEST PLATE
INSTALL ON WINCH PLATFORM OR WHERE EASILY READABLE
SCALE: NONE

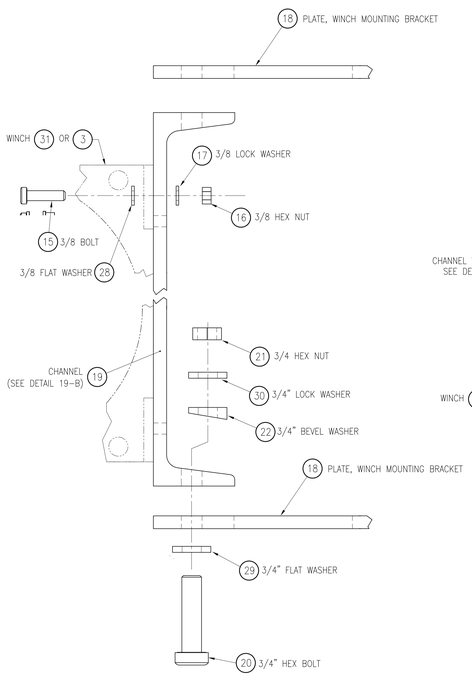

DETAIL 16–A

BOLTING ARRGT FOR
WINCH MOUNTING CHANNEL TO WINCH MOUNTING BRKT
WINCH SHOWN IS FOR HULLS 800 & 802 ONLY
MOUNTING SIMILAR FOR WINCH INSTALLED ON HULLS 801 & 803
SCALE: 6" = 1'–0"
(14–A)

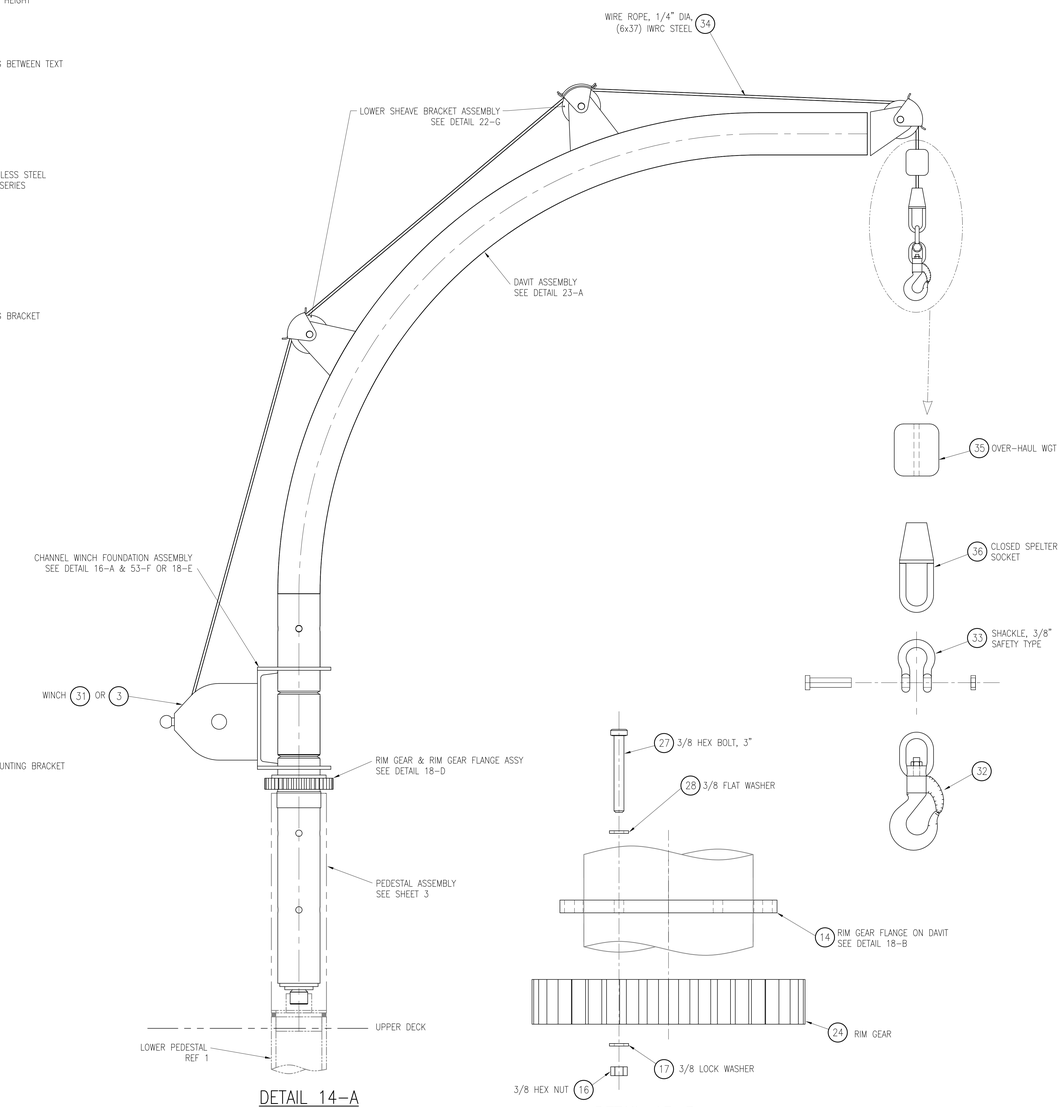

DETAIL 14–A

DAVIT ASSEMBLY
WINCH SHOWN FOR HULLS 800 & 802 ONLY
SEE SHEET 7 FOR WINCH FOR HULLS 801 & 803
SCALE: 1–1/2" = 1'–0"

DETAIL 13–B

BOLTING ARRGT FOR RIM GEAR/RIM GEAR FLANGE
FOR ASSEMBLY SEE DETAIL 18–D
SCALE: 6" = 1'–0"
(14–A)

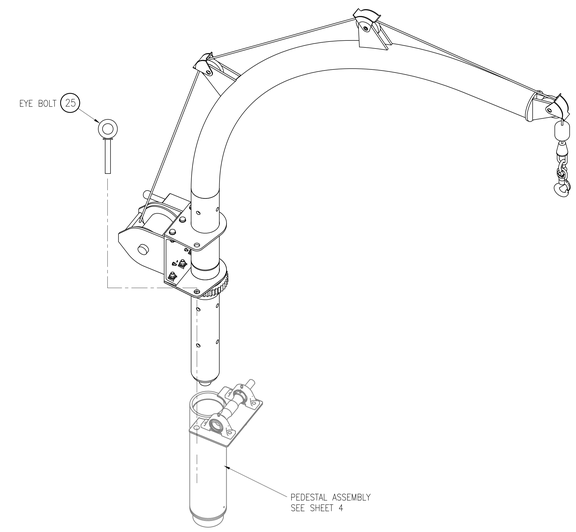

ARRANGEMENT 10–D

ISO DAVIT ARRGT
HULLS 800 & 802 ONLY
SCALE: 1" = 1'–0"

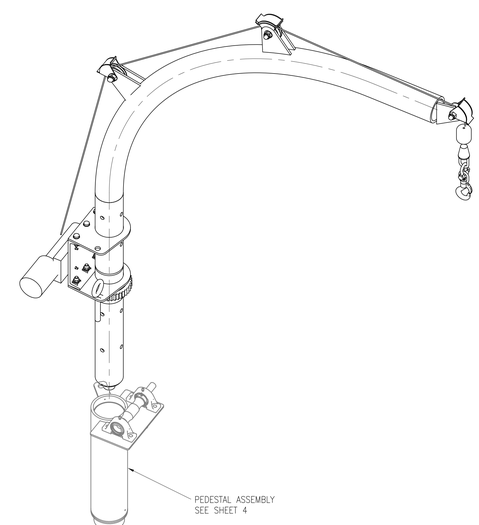

ARRANGEMENT 10–A

ISO DAVIT ARRGT
HULLS 801 & 803 ONLY
SCALE: 1" = 1'–0"

UNITED STATES COAST GUARD WASHINGTON, D.C. 20593
OFFICE OF NAVAL ENGINEERING
160' WLIC
160' BOAT DAVIT &
PEDESTAL ASSEMBLY
DAVIT ARM ASSEMBLY

SIZE	FSCM CAGE NO.	U.S.C.G. DRAWING NO.	REV
H	81340	160 WLIC-8201-007	–

SCALE: AS NOTED SHEET 2

DWG NO. 160 WLIC-8201-007 REV –

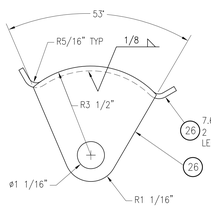

DETAIL 24–G
SHEAVE BRACKET GUARD ASSEMBLY
SCALE: 6" = 1'–0"
(22–G)

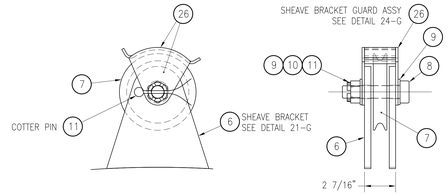

DETAIL 22–G
LOWER SHEAVE BRACKET ASSEMBLY
SCALE: 3" = 1'–0"
(14–A, 20–G, 23–A)

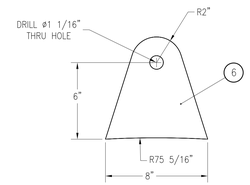

DETAIL 21–G
LOWER SHEAVE BRACKET
SCALE: 3" = 1'–0"
(22–G)

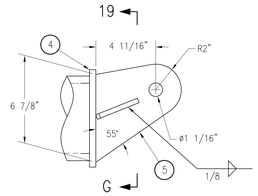

DETAIL 20–G
UPPER SHEAVE BRACKET ASSEMBLY
FOR INFO NOT SHOWN SEE DETAIL 22–G
SCALE: 3" = 1'–0"
(23–A)

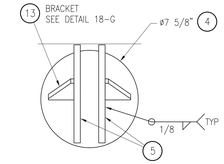

DETAIL 19–G
DAVIT ARM CAP PLATE
SCALE: 3" = 1'–0"
(20–G)

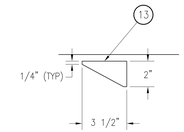

DETAIL 18–G
DAVIT ARM CAP PLATE
BRACKET
SCALE: 3" = 1'–0"
(19–G)

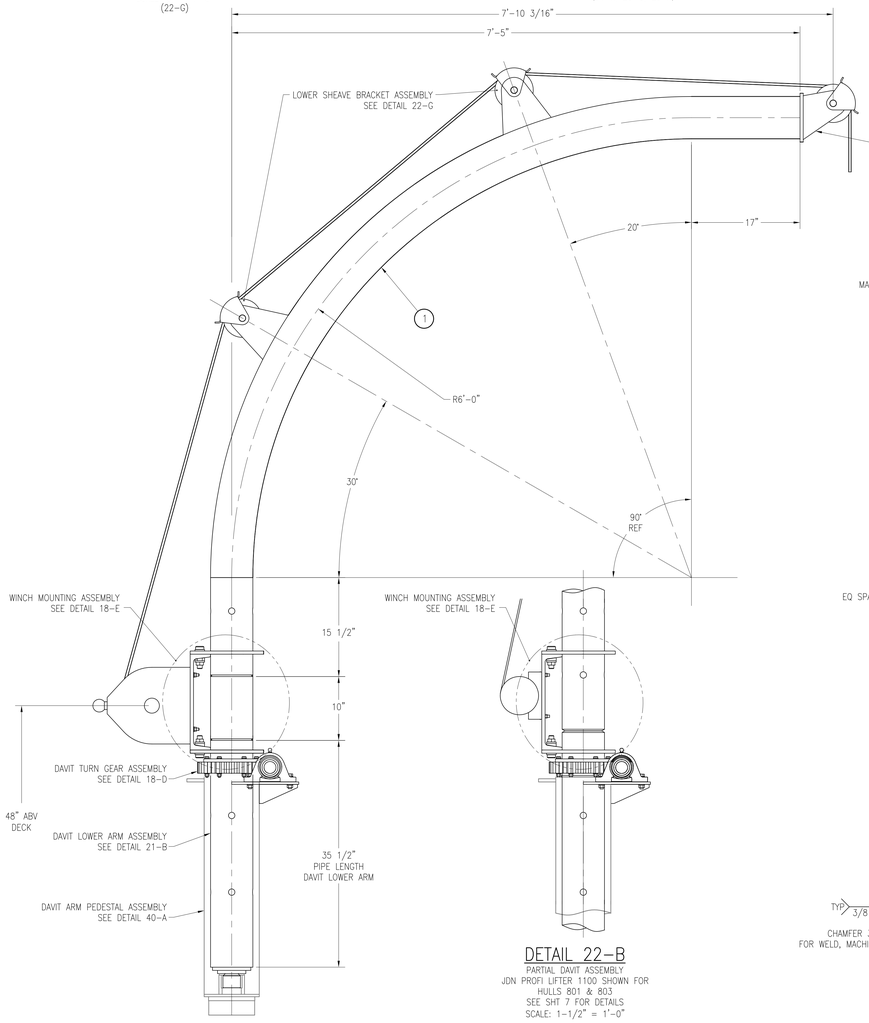

DETAIL 23–A
DAVIT ASSEMBLY
INGERSOLL RAND WINCH SHOWN FOR
HULLS 800 & 802 ONLY
SEE DETAIL 22–B FOR WINCH INSTL FOR HULLS 801 & 803
SCALE: 1–1/2" = 1'–0"
(14–A)

DETAIL 22–B
PARTIAL DAVIT ASSEMBLY
JDN PROFI LIFTER 1100 SHOWN FOR
HULLS 801 & 803
SEE SHT 7 FOR DETAILS
SCALE: 1–1/2" = 1'–0"

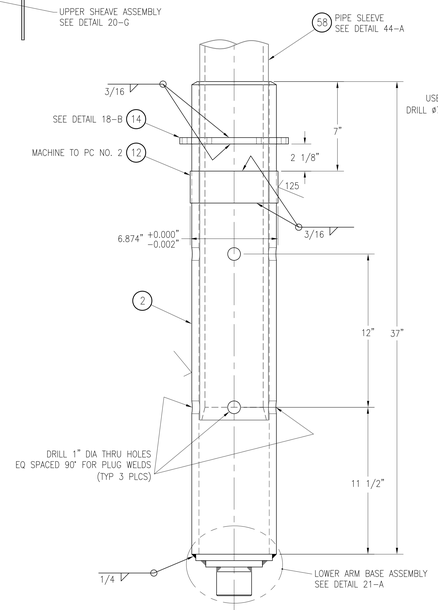

DETAIL 21–B
DAVIT LOWER ARM ASSEMBLY
SCALE: 3" = 1'–0"
(23–A, 45–B)

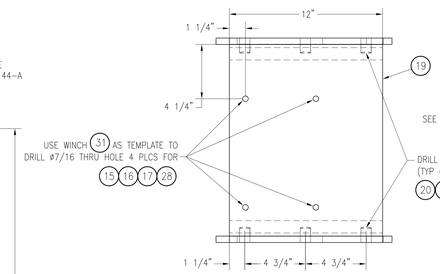

DETAIL 19–E
WINCH MOUNT CHANNEL
FOR HULLS 800 & 802 ONLY
SEE DETAIL 55–F FOR HULLS 801 & 803
WINCH NOT SHOWN FOR CLARITY
SCALE: 3" = 1'–0"
(18–E)

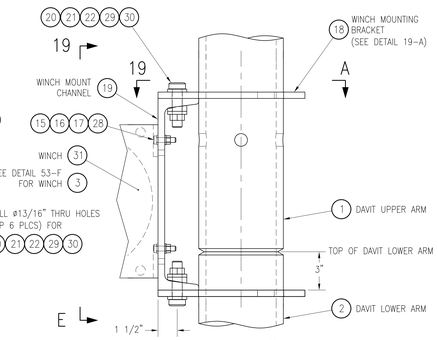

DETAIL 18–E
WINCH MOUNT ASSEMBLY
FOR HULLS 800 & 802 ONLY
SEE DETAIL 53–F FOR HULLS 801 & 803
SCALE: 3" = 1'–0"
(14–A, 23–A)

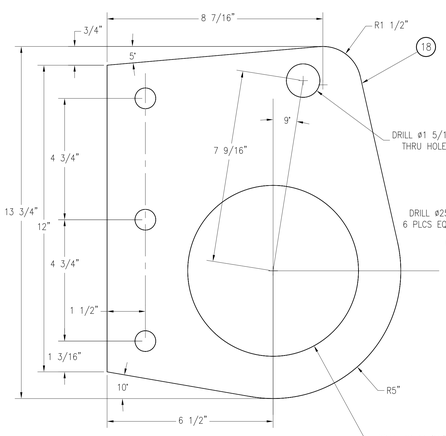

DETAIL 19–A
WINCH MOUNTING BRACKET
SCALE: 6" = 1'–0"
(18–E, 37–C, 53–F)

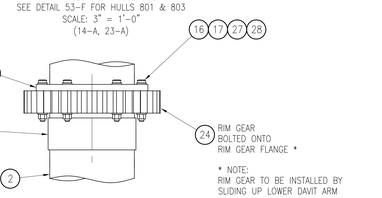

* NOTE:
RIM GEAR TO BE INSTALLED BY
SLIDING UP LOWER DAVIT ARM
PRIOR TO WELDING FLAT BAR, PC NO. 12.

DETAIL 18–D
RIM GEAR & FLANGE ASSEMBLY
SCALE: 3" = 1'–0"
(23–A)

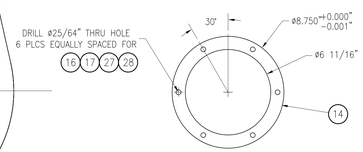

DETAIL 18–B
RIM GEAR FLANGE
SCALE: 3" = 1'–0"
(18–D, 21–B, 45–B, 53–A)

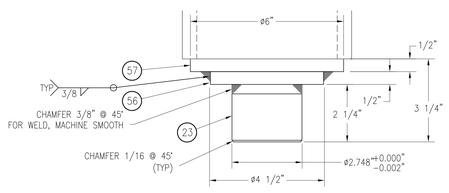

DETAIL 21–A
DAVIT LOWER ARM BASE ASSEMBLY
SCALE: 6" = 1'–0"
(21–B, 48–B, 54–A)

UNITED STATES COAST GUARD WASHINGTON, D.C. 20593
OFFICE OF NAVAL ENGINEERING
160' WLIC
160' BOAT DAVIT & PEDESTAL ASSEMBLY
DAVIT ARM INSTALLATION DETAILS

SIZE	FSCM CAGE NO.	U.S.C.G. DRAWING NO.	REV
H	81340	160 WLIC-8201-007	–

SCALE: AS NOTED SHEET 3

DWG NO 160 WLIC-8201-007 REV – SHT 3

160 WLIC-8201-007 DWG

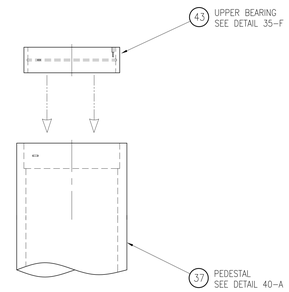

DETAIL 30-F
UPPER BEARING ASSEMBLY
SCALE: 3" = 1'-0"

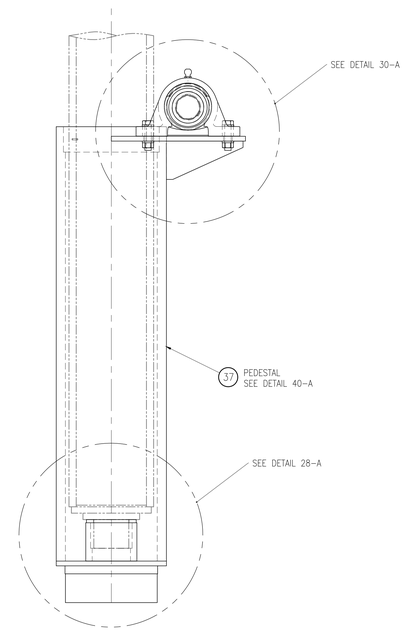

DETAIL 28-D
DAVIT PEDESTAL ARRGT
SCALE: 3" = 1'-0"

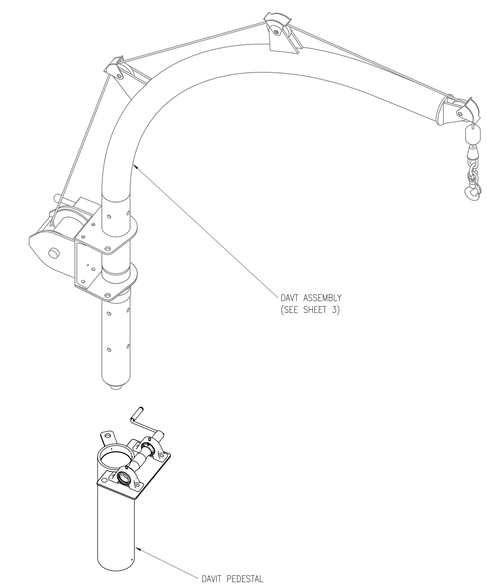

ARRANGEMENT 26-B
ISO PEDESTAL ARRGT
SCALE: NONE

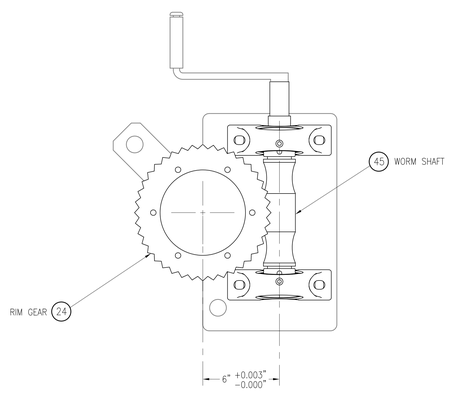

DETAIL 30-B
WORM GEAR ASSEMBLY
SEE NOTE 5
SCALE: 3" = 1'-0"

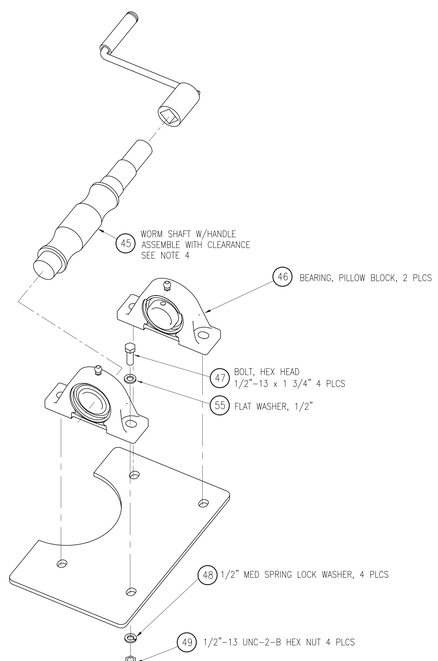

DETAIL 30-A
WORM GEAR FOUNDATION ASSEMBLY
SEE DETAIL 40-G
SCALE: 3" = 1'-0"
(28-D)

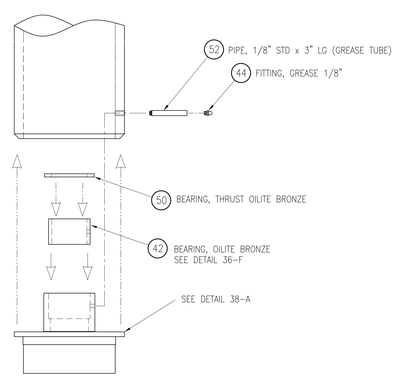

DETAIL 28-A
DAVIT LOWER ARM PEDESTAL BASE
SEE DETAIL 38-A
SCALE: 3" = 1'-0"
(28-D)

UNITED STATES COAST GUARD WASHINGTON, D.C. 20593
OFFICE OF NAVAL ENGINEERING
160' WLIC
160' BOAT DAVIT &
PEDESTAL ASSEMBLY
PEDESTAL ASSEMBLY

SIZE	FSCM CAGE NO.	U.S.C.G. DRAWING NO.	REV
H	81340	160 WLIC-8201-007	–

SCALE: AS NOTED SHEET 4

DWG NO 160 WLIC-8201-007 REV – SH 4

DWG NO 160 WLIC-8201-007 REV – SH 4

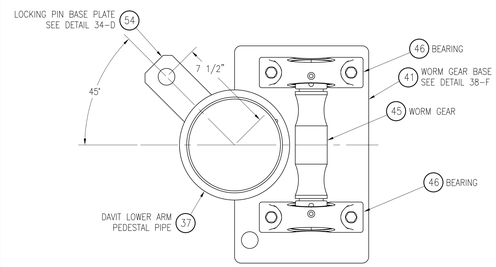

DETAIL 40-G
WORM GEAR FOUNDATION ASSEMBLY
SCALE: 3" = 1'-0"
(30-A, 40-A)

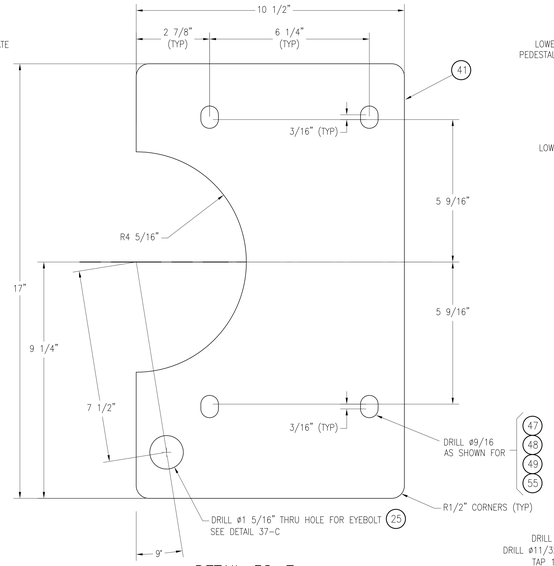

DETAIL 38-F
WORM GEAR BASE PLATE
SCALE: 6" = 1'-0"
(37-C, 40-G)

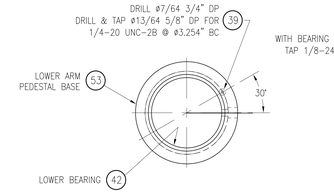

DETAIL 36-G
LOWER BEARING SET SCREW
SCALE: 6" = 1'-0"
(36-D, 36-F, 38-A)

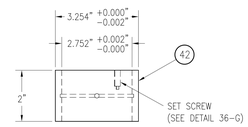

DETAIL 36-F
LOWER BEARING
SCALE: 6" = 1'-0"
(28-A, 36-D)

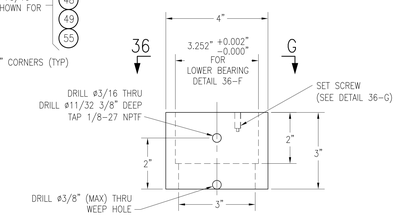

DETAIL 36-D
LOWER ARM PEDESTAL BASE
VIEW ROTATED 90° FOR CLARITY
SCALE: 6" = 1'-0"
(38-A)

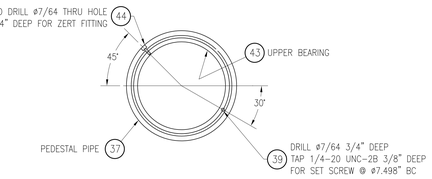

DETAIL 35-G
UPPER BEARING & ZERT FITTING
SCALE: 3" = 1'-0"
(35-B)

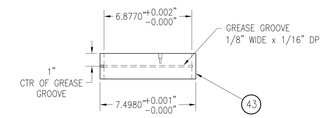

DETAIL 35-F
UPPER BEARING
VIEW ROTATED 45° COUNTERCLOCKWISE FOR CLARITY
SCALE: 3" = 1'-0"
(30-F, 35-B)

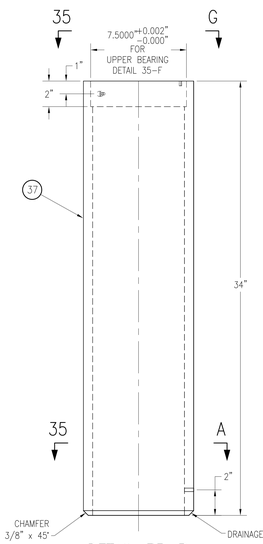

DETAIL 35-B
DAVIT LOWER ARM PEDESTAL PIPE
SCALE: 3" = 1'-0"
(40-A)

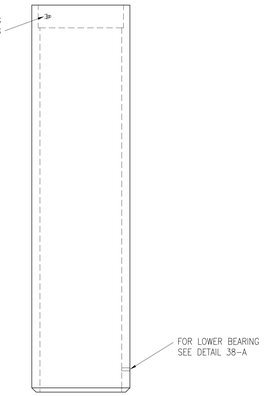

DETAIL 33-F
LUBRICATION POINTS
SCALE: NONE

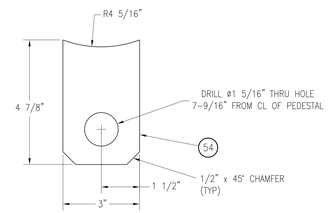

DETAIL 34-D
LOCKING PIN BASE PLATE
SCALE: 6" = 1'-0"
(37-A, 40-A, 40-G)

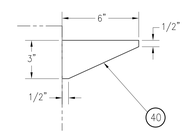

DETAIL 34-C
BRACKET FOR WORM GEAR BASE PLATE
SCALE: 3" = 1'-0"
(40-A)

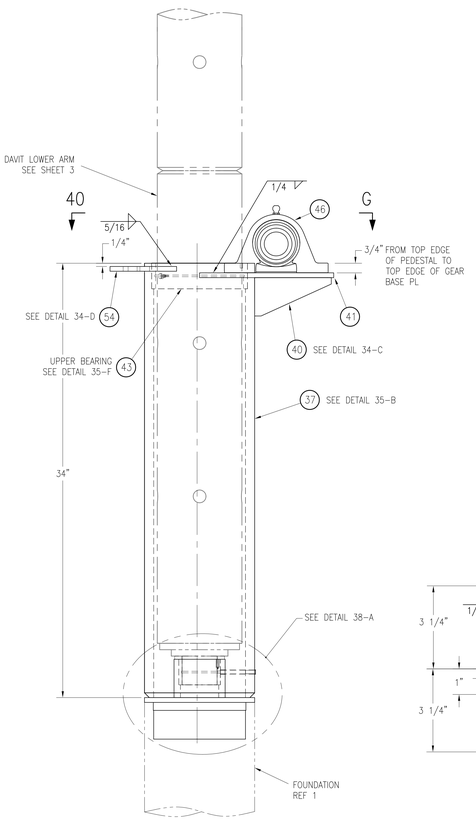

DETAIL 40-A
DAVIT ARM PEDESTAL ASSEMBLY
SCALE: 3" = 1'-0"
(23-A, 23-D, 28-D, 30-F)

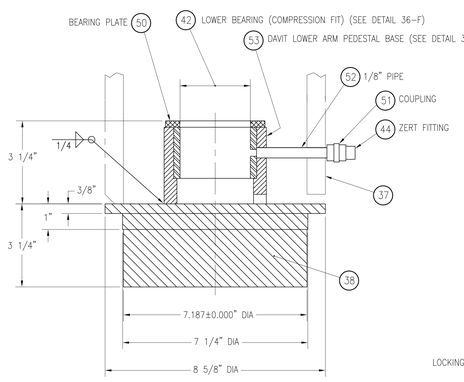

DETAIL 38-A
DAVIT LOWER ARM PEDESTAL BASE ASSEMBLY
SCALE: 6" = 1'-0"
(40-A)

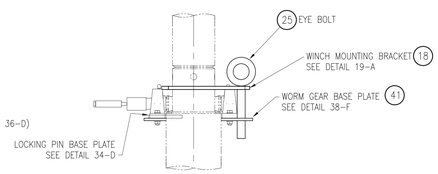

DETAIL 37-C
TOGGLE PIN IN WORKING POSTION
WINCH ASSEMBLY NOT SHOWN FOR CLARITY
SCALE: 1-1/2" = 1'-0"
(38-F)

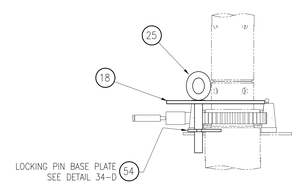

DETAIL 37-A
TOGGLE PIN IN STOWED POSITION
WINCH ASSEMBLY NOT SHOWN FOR CLARITY
SCALE: 1-1/2" = 1'-0"

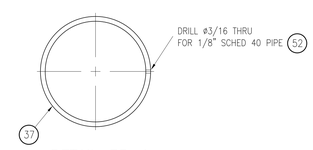

DETAIL 35-A
UPPER BEARING & PIPE ASSEMBLY
SCALE: 3" = 1'-0"
(35-B)

UNITED STATES COAST GUARD — WASHINGTON, D.C. 20593
OFFICE OF NAVAL ENGINEERING
160' — WLIC
160' BOAT DAVIT & PEDESTAL ASSEMBLY
PEDESTAL INSTALLATION DETAILS

SIZE	FSCM CAGE NO.	U.S.C.G. DRAWING NO.	REV
H	81340	160 WLIC-8201-007	-

SCALE: AS NOTED — SHEET 5

DWG NO 160 WLIC-8201-007 REV - SH 2 OF 9

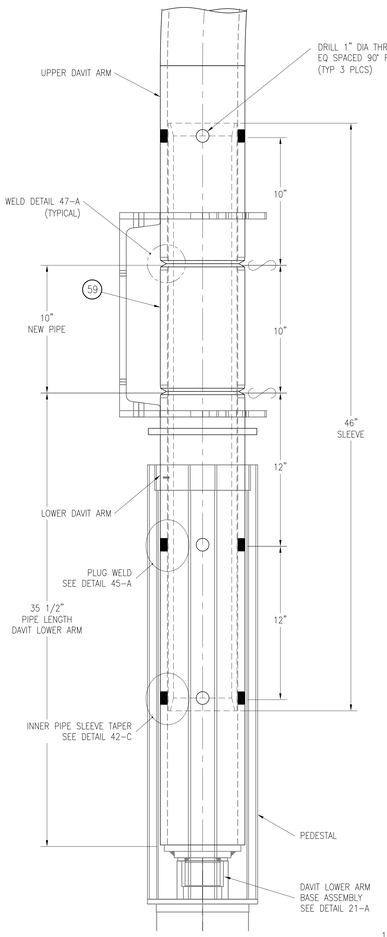

DETAIL 48-B
DAVIT ASSEMBLY MODIFICATION
SCALE: 3" = 1'-0"

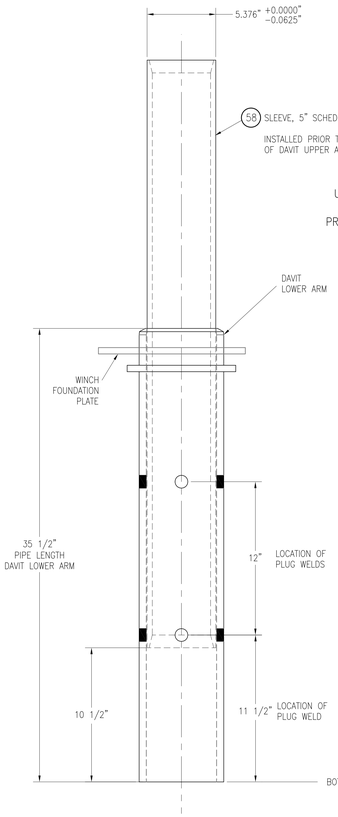

DETAIL 46-B
DAVIT ASSEMBLY MODIFICATION
INSERTION OF SLEEVE PIPE
SCALE: 1-1/2" = 1'-0"

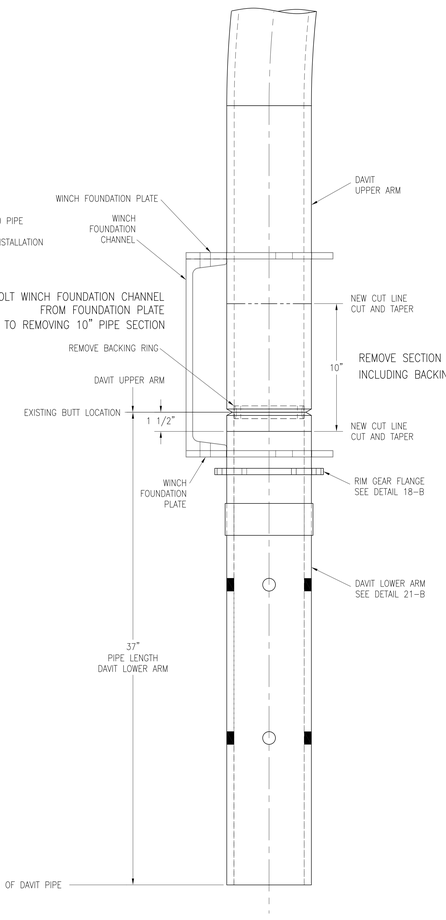

DETAIL 45-B
FOR HULLS 800 & 802 ONLY
REMOVAL OF EXISTING PIPE SECTION
SCALE: 3" = 1'-0"

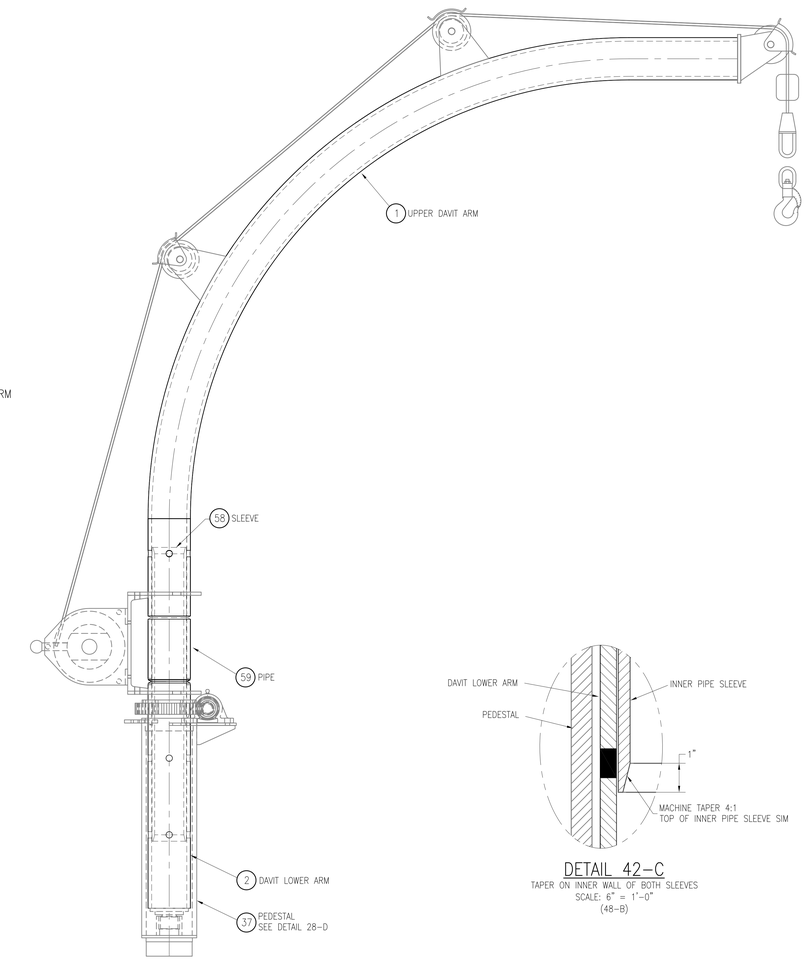

DETAIL 43-B
DAVIT ASSEMBLY
SHOWN FOR DAVIT MODIFICATION ONLY
FOR NEW INSTALLATION SEE SHEET 7
SCALE: 1-1/2" = 1'-0"

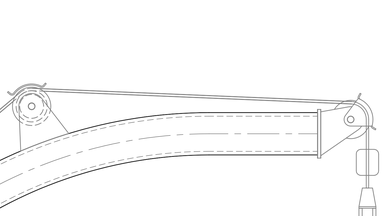

DETAIL 42-C
TAPER ON INNER WALL OF BOTH SLEEVES
SCALE: 6" = 1'-0"
(48-B)

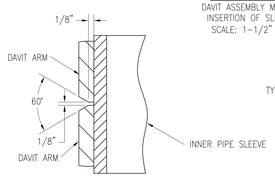

DETAIL 47-A
DAVIT BUTT WELD DETAIL
SCALE: NONE

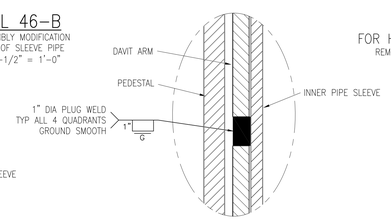

DETAIL 45-A
PLUG WELD DETAIL
SCALE: NO SCALE
(48-B)

THIS SHEET FOR SLEEVE INSERT PROCEDURE FOR
MODIFICATION
HULLS 800 & 802 ONLY

UNITED STATES COAST GUARD WASHINGTON, D.C. 20593
OFFICE OF NAVAL ENGINEERING
160' WLIC
160' BOAT DAVIT &
PEDESTAL ASSEMBLY
SLEEVE PIPE INSTALLATION DET
FOR HULLS 800 & 802 ONLY

SIZE	FSCM CAGE NO.	U.S.C.G. DRAWING NO.	REV
H	81340	160 WLIC-8201-007	-

SCALE: AS NOTED SHEET 6

DWG NO 160 WLIC-8201-007 REV -

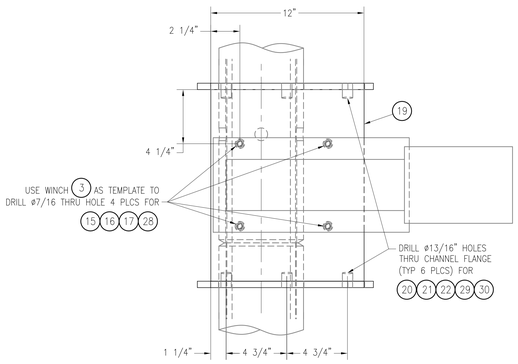

DETAIL 55-F
WINCH MOUNT CHANNEL
FOR HULLS 801 & 803 ONLY
SCALE: 3" = 1'-0"
(53-F)

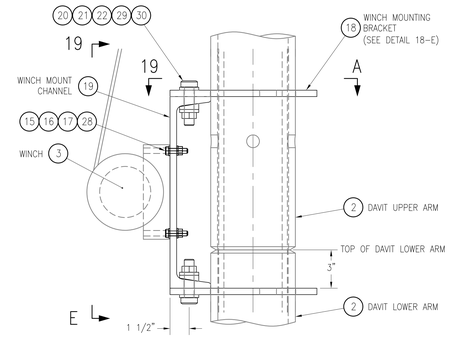

DETAIL 53-F
WINCH MOUNT ASSEMBLY
FOR HULLS 801 & 803 ONLY
SCALE: 3" = 1'-0"
(14-A, 22-B)

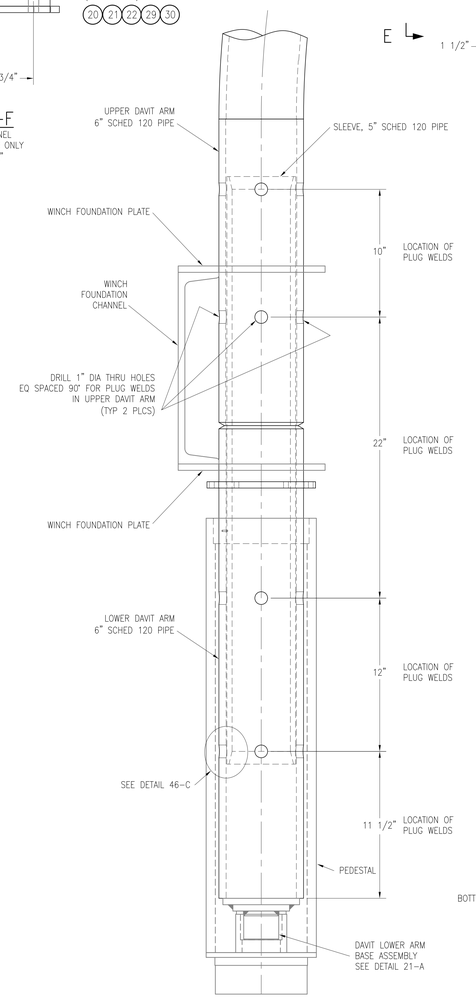

DETAIL 54-A
DAVIT ASSEMBLY WITH SLEEVE INSERT
SHOWN FOR NEW CONSTRUCTION ONLY
SCALE: 3" = 1'-0"

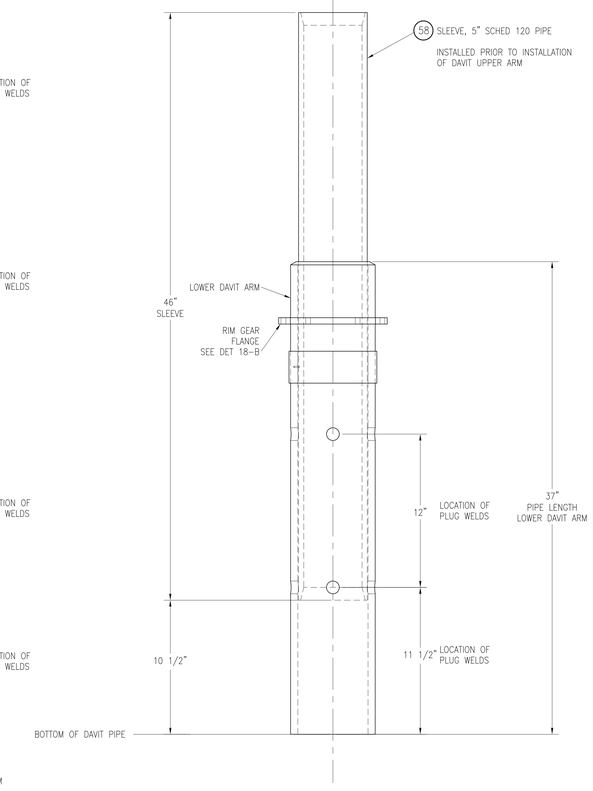

DETAIL 53-A
INSERTION OF SLEEVE PIPE
SHOWN FOR NEW CONSTRUCTION ONLY
SCALE: 1-1/2" = 1'-0"

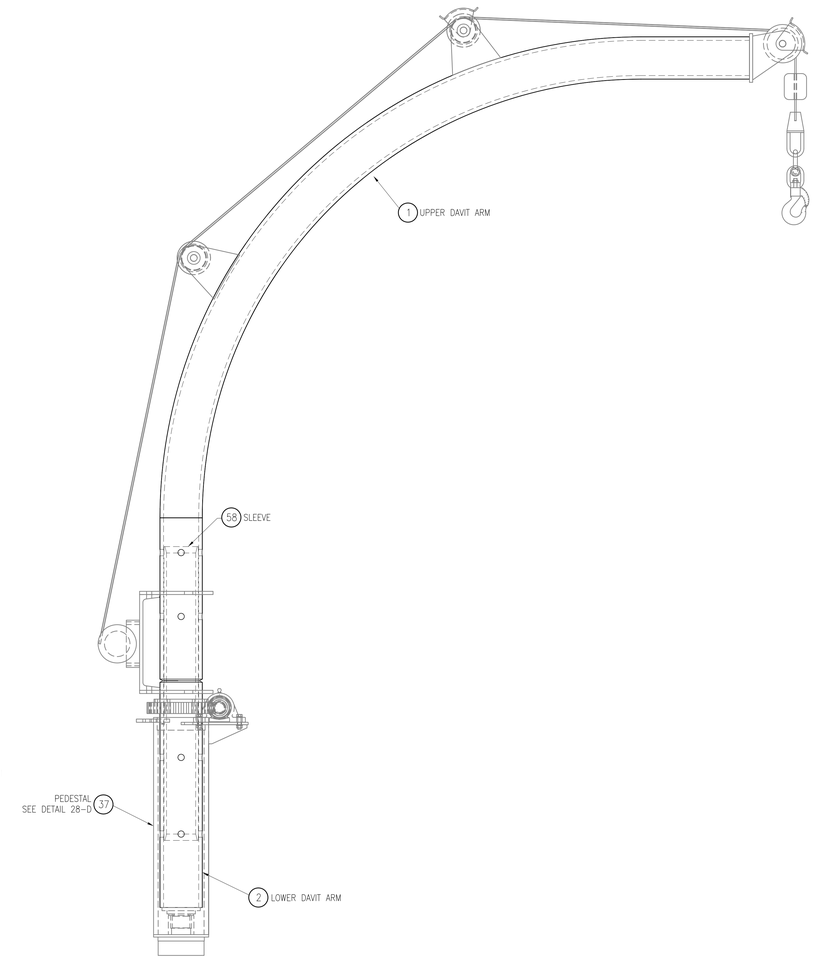

DETAIL 51-B
DAVIT ASSEMBLY FOR SLEEVE INSERT
SHOWN FOR NEW CONSTRUCTION ONLY
SCALE: 1-1/2" = 1'-0"

THIS SHEET FOR SLEEVE INSERT PROCEDURE FOR
NEW CONSTRUCTION
HULLS 801 & 803 ONLY

UNITED STATES COAST GUARD WASHINGTON, D.C. 20593
OFFICE OF NAVAL ENGINEERING
160' WLIC
160' BOAT DAVIT & PEDESTAL ASSEMBLY
SLEEVE PIPE INSTALLATION DET

SIZE	FSCM CAGE NO.	U.S.C.G. DRAWING NO.	REV
H	81340	160 WLIC-8201-007	-

SCALE: AS NOTED SHEET 7

DWG NO 160 WLIC-8201-007 REV -

160 WLIC-8201-007 REV -