DISTRIBUTION STATEMENT A.
APPROVED FOR PUBLIC RELEASE;
DISTRIBUTION IS UNLIMITED

CAD MAINTAINED. CHANGES SHALL BE INCORPORATED BY THE DESIGN ACTIVITY.

REVISIONS			
LTR	DESCRIPTION	DATE	APPROVED

NOTES: UNLESS OTHERWISE SPECIFIED

1.0 INTERPRET DRAWING IN ACCORDANCE WITH MIL-STD-100.

2.0 CERTAIN INFORMATION CONTAINED HEREIN IS PROTECTED BY UNITED STATES PATENTS 4,712,685 AND 4,546,874. ALL RULES AND REGULATIONS ARE GOVERNED BY THE UNITED STATES COMMISSIONER OF PATENTS AND TRADEMARKS. PERMISSION FOR EXACT DUPLICATION OF SAID MATERIAL IS PERMITTED THROUGH RFP N00383-89-R-3001 AND CONTRACT N00383-90-C-7642 FOR THE SOLE USE BY THE U.S. GOVERNMENT, FOR REPROCUREMENTS OF THIS REUSABLE CONTAINER. ANY OTHER DUPLICATION IS IN VIOLATION OF U.S. PATENT AND TRADEMARK LAWS.

3.0 FIRST ARTICLE REQUIREMENTS. THE PROCURING ACTIVITY RESERVES THE RIGHT TO PERFORM ANY FIRST ARTICLE TESTING TO DETERMINE ACCEPTABILITY OF THE ITEM IN ACCORDANCE WITH THE CONTRACT.

3.1 THE CONTAINER SHALL UNDERGO VISUAL AND DIMENSIONAL INSPECTION PRIOR TO ANY TESTING.

4.0 PRODUCTION INSPECTION. PRODUCTION INSPECTION SHALL BE WITNESSED BY A GOVERNMENT REPRESENTATIVE.

4.1 A ONE PERCENT SAMPLE OR A MINIMUM OF ONE PRODUCTION UNIT FROM EACH LOT, WHICHEVER IS GREATER, SHALL UNDERGO THE QUALITY INSPECTION OF PARAGRAPH 4.2. A LOT SHALL CONSIST OF ANY SCHEDULED SHIPMENT QUANTITY UNDER CONTRACT SUBMITTED AT ONE TIME FOR INSPECTION. REPRESENTATIVE SAMPLING SHALL BE USED, I.E., THE SAMPLES ARE TO BE SELECTED AT RANDOM THROUGHOUT THE LOT. IF ANY SAMPLE FAILS, THE NUMBER OF ORIGINAL SAMPLES SHALL BE DOUBLED AND SUBJECTED TO EXAMINATION/TEST. IF ANY OF THE SECOND SAMPLE SUBMISSION FAILS, THE LOT SHALL BE REJECTED. A REJECTED LOT MAY BE REWORKED ONLY ONCE BY THE CONTRACTOR, CORRECTING THE AREA OF DEFICIENCY. AFTER LOT CORRECTION, REPRESENTATIVE SAMPLING (DOUBLE THE ORIGINAL QUANTITY) SHALL UNDERGO EXAMINATION/TEST.

4.2 CONTAINERS SHALL BE EXAMINED FOR CONFORMANCE TO THE APPROVED FIRST ARTICLE SAMPLE AND DRAWING PACKAGE.

4.3 THE PROCURING ACTIVITY RESERVES THE RIGHT TO PERFORM TESTING ON PRODUCTION UNITS TO ASSURE REPEATABILITY OF PERFORMANCE.

5.0 THE UNITED STATES GOVERNMENT RESERVES THE RIGHT TO INVOKE STATISTICAL PROCESS CONTROL (SPC) REQUIREMENTS FOR THE QUALITY ASSURANCE OF THE REUSABLE MULTI-APPLICATION SHIPPING AND STORAGE CONTAINER DEPICTED IN THIS DRAWING PACKAGE. IF INVOKED, THE CONTRACTOR SHALL MONITOR THE CONTRACT IN ACCORDANCE WITH AMERICAN STANDARDS INSTITUTE (ANSI) Z1.1, Z1.2 AND Z1.3 / AMERICAN SOCIETY OF QUALITY CONTROL (ASQC) B.1, B.2 AND B.3. FEATURES TO BE MONITORED ARE INDICATED BY UPPER AND LOWER CONTROL SPECIFICATIONS.

6.0 ORIGINAL DESIGN ACTIVITY:
KIRCHHAN INDUSTRIES, INC.
27 HUGHES
IRVINE, CA. 92618
(60415)8302

FIND NO.	QTY REQD	CAGE CODE	PART NO. OR IDENTIFYING NO.	NOMENCLATURE OR DESCRIPTION	SPECIFICATION	NOTE
2	1		3321AS202	LID SUBASSEMBLY		
1	1		3321AS201	BASE SUBASSEMBLY		

REVISION	–	–
SHEET	1	2

SHEET REVISION RECORD

NEXT ASSY	USED ON
	OL 3321AS200

APPLICATION

UNLESS OTHERWISE SPECIFIED:
DIMENSIONS ARE IN INCHES
TOLERANCES ON:
FRACTIONS ± DECIMALS .10 .010 ± ANGLES ± 30°

MATERIAL:

CONTRACT NO. N00383-90-C-7642

DEPARTMENT OF THE NAVY
AVIATION SUPPLY OFFICE
700 ROBBINS AVE.
PHILADELPHIA, PA. 19111

DRAWN J. KIRCHHAN
CHECKED J.K.
REVIEWED MOREY
APPROVED
APPROVED FOR NAV AIR SYS COM
BY DIRECTION — DATE 3/19/98

DEPARTMENT OF THE NAVY
NAVAL AIR SYSTEMS COMMAND
WASHINGTON, D.C. 20360

MULTI-APPLICATIONAL REUSABLE CONTAINER

SIZE	CAGE CODE	DWG NO.
D	30003	3321AS200
SCALE		SHEET 1 OF 2

WHEN REFERRING TO THIS DRAWING STATE DRAWING NO., APPLICABLE ISSUE LETTER IF ANY, AND DATE

DISTRIBUTION STATEMENT A.
APPROVED FOR PUBLIC RELEASE;
DISTRIBUTION IS UNLIMITED

CAD MAINTAINED. CHANGES SHALL BE INCORPORATED BY THE DESIGN ACTIVITY.

REVISIONS			
LTR	DESCRIPTION	DATE	APPROVED

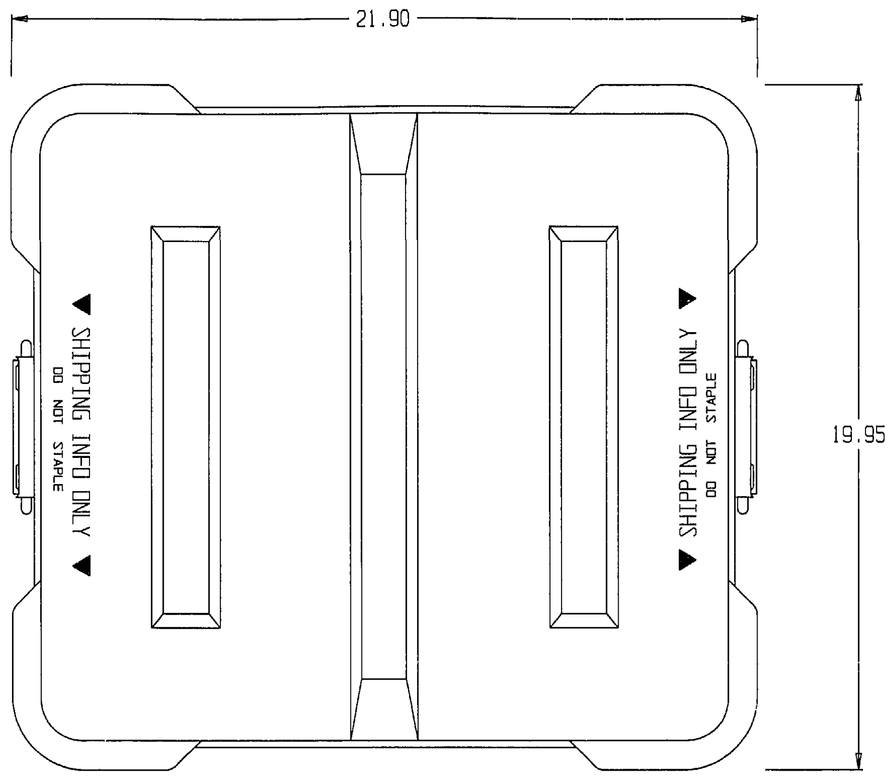

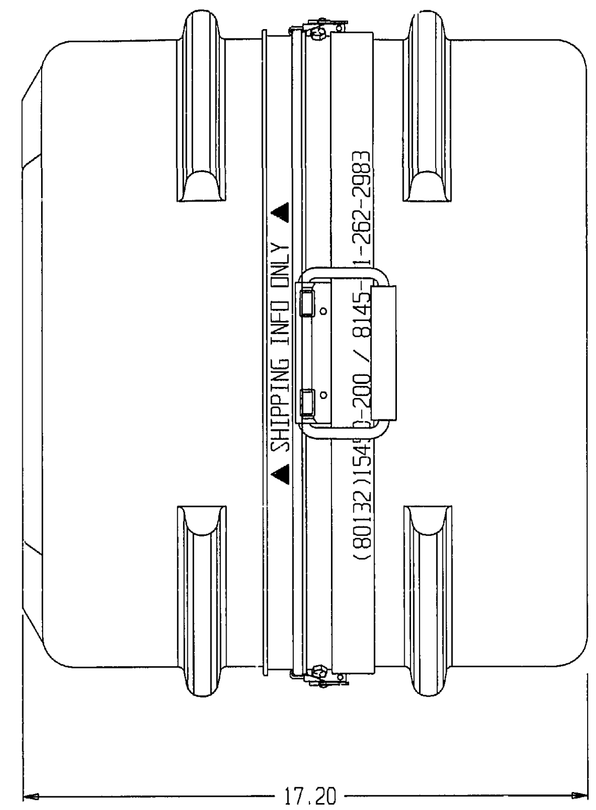

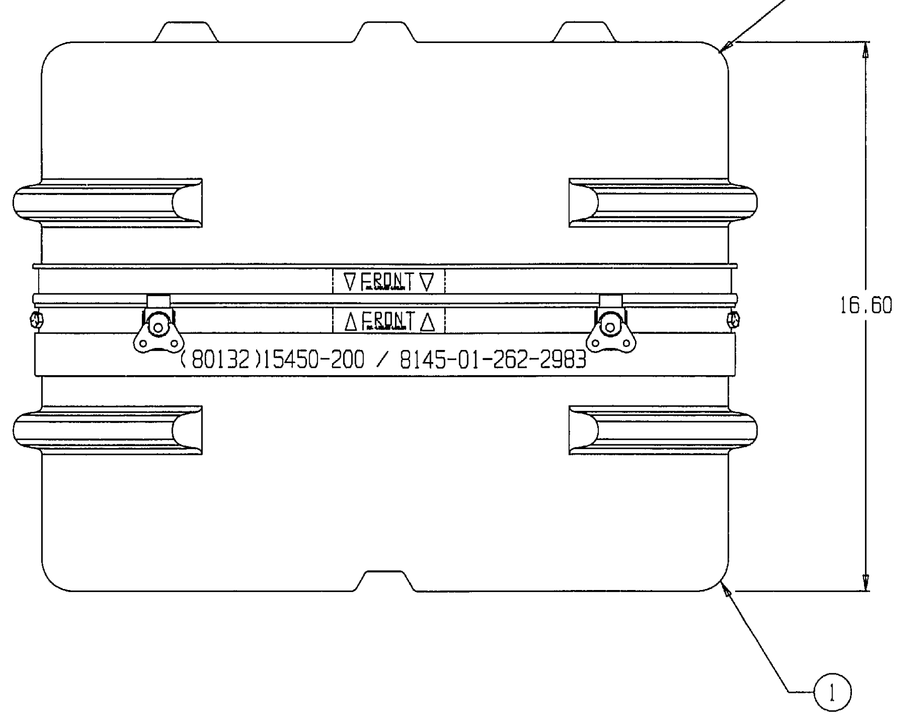

DRAWN J. KIRCHHAN	REVIEWED MOREY	SIZE D	CAGE CODE 30003	DWG NO. 3321AS200
CHECKED J.K.	APPROVED	SCALE 1/3		SHEET 2 OF 2

NAVSUP

NAVAL SUPPLY SYSTEMS COMMAND

NAVAL INVENTORY CONTROL POINT

ENGINEERING CHANGE ORDER

1. ECO NO.: O- 132

2. DRAWING/PART NO.	3. NOMENCLATURE	4. CURRENT REVISION
3321AS200	Multi-Applicational Reusable Container	

5. CUSTOMER	6. CUSTOMER DWG NO.	7. NEXT HIGHER ASSEMBLY NO.	8. END ITEM PRODUCT I.D.
NAVICP			15450-200

9. RN/SVR NO.	10. ECO REQUIRED BY:	11. ORIGINATOR	DATE
	NAVICP (80132)	Robert Steel 0771	7/21/05

12. DESCRIPTION OF CHANGE (WAS / IS):

Tolerance Block Change to:
Unless Otherwise Specified
Dimensions are in inches
Tolerance On
Fractions ±
Decimals XX ±.10
XXX ±.010
Angles ± ½°

13. REASON FOR CHANGE [INCLUDE JUSTIFICATION AND BACKUP DATA (IF AVAILABLE)]:

Angle Tolerance Drawings affected (All)
3321AS200, 3321AS201, 3321AS202, 3321AS203, 3321AS204, 3321AS205, 3321AS206
3321AS207, 3321AS208, 3321AS209, 3321AS210, 3321AS211, 3321AS212, 3321AS213
3321AS214, 3321AS215, 3321AS216, 3321AS217, 3321AS062

☐ VALUE ENGINEERING ☒ SPEC CHANGE ☒ CORRECTIONS ☐ IN-SERVICE ☐ SAFETY ☐ NEW DRAWING

14. DESIGN ENG. RECOMMENDS:	☐ CLASS 1 - MAJOR	17. ANALYSIS ENGINEER (As Required)	DATE
☐ FUTURE INCORP. (REASON):		18. DE PEER REVIEW (As Required)	DATE
☐ APPROVED AS REQUESTED	☐ DISAPPROVED 15. DE INITIALS	19. DESIGN ENGINEER	DATE
☐ STOP NOTICE ISSUED	16. ☐ FORMAL CCB REQUIRED	20. ENG MGT	DATE

21. PROGRAM MANAGEMENT *CUSTOMER INTERFACE REQUIREMENTS*	✓	22. DE CHECKS AREAS THAT REQUIRE REVIEW/CONCURRENCE	23. PLANNED EFFECTIVITY LOT: DATE: S/N
NOTIFY CUSTOMER ☐	☐	MANUFACTURING ENGINEERING	MATERIAL DISTRIBUTION & DISPOSITION
Note: Customer or FAA notification required on all PMA parts.	☐	MATERIALS AND PROCESSES	
APPROVAL REQUIRED ☐	☐	QUALITY ENGINEERING	
CDRL REFERENCE:	☐	ILS/R&M	
CONTRACT NO.	☐	ECO ORIGINATOR (IF NOT DE) Robert Steel	
RISK RELEASE ☐	☐	OTHER (SPECIFY)	
NO. COPIES TO CUSTOMER	✓	CONFIGURATION MGT MGR (LAST)	
PROGRAM MANAGER SIGNATURE		25. DRAFTING	
		26. ENGINEERING CHECK Robert Steel	MATERIAL PLANNING SIGNATURE

MATERIAL DISTRIBUTION & DISPOSITION	ORDER/LOT	QUANTITY	USE	CHANGE	SCRAP
a. FIELD		☐	☐	☐	☐
b. STORES		☐	☐	☐	☐
c. WIP BEYOND		☐	☐	☐	☐
d. WIP NOT BEYOND		☐	☐	☐	☐
e. NEXT RELEASE				☐	

24. CUSTOMER/DCMC CONCURRENCE	27. RLSD DWG REV.	28. CM RELEASE	30. DOCUMENT RELEASE

31. COMMENTS	29. DISTRIBUTION CODE

NAVSUP

NAVAL SUPPLY SYSTEMS COMMAND

NAVAL INVENTORY CONTROL POINT

ENGINEERING CHANGE ORDER

1. ECO NO.: O- 133

2. DRAWING/PART NO. 3321A5200	3. NOMENCLATURE Multi-Applicational Reusable Container		4. CURRENT REVISION
5. CUSTOMER NAVICP	6. CUSTOMER DWG NO.	7. NEXT HIGHER ASSEMBLY NO.	8. END ITEM PRODUCT I.D. 15450-200
9. RN/SVR NO.	10. ECO REQUIRED BY: NAVICP(80132)	11. ORIGINATOR Robert Steel 0771	DATE 8/1/05

12. DESCRIPTION OF CHANGE (WAS / IS):

Drawing 3321A5200 Sheet 1, zone D-8, B-8, Notes 1 & 4.2

Change Note 1 to:

1. Interpret drawings and revisions in accordance with ASME Y14.100, ASME Y14.24, ASME Y14.34, ASME Y14.35

Change Note 4.2 to:

4.2 Containers shall be examined for conformace to the approved drawing package

13. REASON FOR CHANGE [INCLUDE JUSTIFICATION AND BACKUP DATA (IF AVAILABLE)]:

Up date of Standards and clarification

☐ VALUE ENGINEERING ☒ SPEC CHANGE ☒ CORRECTIONS ☐ IN-SERVICE ☐ SAFETY ☐ NEW DRAWING

14. DESIGN ENG. RECOMMENDS:	☐ CLASS 1 - MAJOR	17. ANALYSIS ENGINEER (As Required)	DATE
☐ FUTURE INCORP. (REASON):		18. DE PEER REVIEW (As Required)	DATE
☐ APPROVED AS REQUESTED	☐ DISAPPROVED 15. DE INITIALS	19. DESIGN ENGINEER	DATE
☐ STOP NOTICE ISSUED	16. ☐ FORMAL CCB REQUIRED	20. ENG MGT	DATE

21. PROGRAM MANAGEMENT *CUSTOMER INTERFACE REQUIREMENTS*		✔	22. DE CHECKS AREAS THAT REQUIRE REVIEW/CONCURRENCE
NOTIFY CUSTOMER	☐	☐	MANUFACTURING ENGINEERING
Note: Customer or FAA notification required on all PMA parts.		☐	MATERIALS AND PROCESSES
APPROVAL REQUIRED	☐	☐	QUALITY ENGINEERING
CDRL REFERENCE:		☐	ILS/R&M
CONTRACT NO.		☐	ECO ORIGINATOR (IF NOT DE) Robert Steel
RISK RELEASE	☐	☐	OTHER (SPECIFY)
NO. COPIES TO CUSTOMER		✔	CONFIGURATION MGT MGR (LAST)
PROGRAM MANAGER SIGNATURE			25. DRAFTING
			26. ENGINEERING CHECK Robert Steel

23. PLANNED EFFECTIVITY

LOT: DATE: S/N

MATERIAL DISTRIBUTION & DISPOSITION	ORDER/LOT	QUANTITY	USE	CHANGE	SCRAP
a. FIELD		☐	☐	☐	☐
b. STORES		☐	☐	☐	☐
c. WIP BEYOND		☐	☐	☐	☐
d. WIP NOT BEYOND		☐	☐	☐	☐
e. NEXT RELEASE				☐	

MATERIAL PLANNING SIGNATURE

24. CUSTOMER/DCMC CONCURRENCE	27. RLSD DWG REV.	28. CM RELEASE	30. DOCUMENT RELEASE
31. COMMENTS		29. DISTRIBUTION CODE	

DISTRIBUTION STATEMENT A. APPROVED FOR PUBLIC RELEASE; DISTRIBUTION IS UNLIMITED

CAD MAINTAINED. CHANGES SHALL BE INCORPORATED BY THE DESIGN ACTIVITY.

DATA LIST

DEPARTMENT OF THE NAVY
NAVAL AIR SYSTEMS COMMAND
WASHINGTON, D.C. 20360

REV DATE | DL 3321AS200 | REV. –

LIST TITLE:
MULTI-APPLICATIONAL REUSABLE CONTAINER

DEPARTMENT OF THE NAVY
AVIATION SUPPLY OFFICE
700 ROBBINS AVE.
PHILADELPHIA, PA. 19111

BY DIRECTION 3/19/98 DATE
APPROVED FOR NAVAIRSYSCMD

30003 CAGE NO. | SHEET 3 OF 3 SHEETS

CAGE NO.	DWG SIZE	DOCUMENT NUMBER	SH NO.	REV	DOCUMENT NOMENCLATURE	SYM	LINE
		SAE AMS 3198			SPONGE, CHLOROPRENE RUBBER		1
		ANSI B18.2.1			HEX CAP SCREWS		2
		ANSI B18.22.1			PLAIN WASHERS		3
		ANSI B18.3			SOCKET CAP SHOULDER END SET SCREWS		4
		ANSI H35.2			AMERICAN NATIONAL DIMENSIONAL		5
					TOLERANCES FOR ALUMINUM MILL PRODUCTS		6
		ANSI Z1.1			GUIDE FOR QUALITY CONTROL CHARTS		7
		ANSI Z1.2			CONTROL CHART METHOD OF ANALYZING DATA		8
		ANSI Z1.3			CONTROL CHART METHOD OF CONTROLLING		9
					QUALITY DURING PRODUCTION		10
		ASTM B241/B241M			ALUMINUM ALLOY 6061, BAR STOCK		11
		ASTM B221/B221M			ALUMINUM ALLOY 6063 EXTRUDED		12
		ASTM B 633			SPECIFICATION FOR ELECTRODEPOSITED		13
					COATING FOR ZINC NICKEL ALLOY DEPOSITS		14
		ASTM B 633			PLATING, ZINC		15
		ASTM D 2000			RUBBER SYNTHETIC		16
		AWS A5.10			SPECIFICATION FOR ALUMINUM AND		17
					ALUMINUM ALLOY BARE WELDING RODS AND		18
					ELECTRODES		19
		FED-STD-595			COLORS		20
		FED-STD-751			STITCHES, SEAMS, AND STITCHINGS		21
		MIL-C-5541			CHEMICAL CONVERSION COATINGS ON		22
					ALUMINUM AND ALUMINUM ALLOYS		23
		MIL-I-43553			INK, MARKING, EPOXY BASE		24
		MIL-R-24243			RIVET, BLIND, NONSTRUCTURAL RETAINED		25
					MANDREL, CLOSED END DOMED HEAD		26
					ALUMINUM ALLOY		27
		MIL-STD-100			ENGINEERING DRAWING PRACTICES		28
		MIL-STD-130			MARKING		29
		MIL-STD-248			WELDING AND BRAZING PROCEDURE AND		30
					PERFORMANCE QUALIFICATIONS		31
		MIL-STD-1595			QUALIFICATION OF AIRCRAFT, MISSILE AND		32
					AEROSPACE FUSION WELDERS		33
		MIL-W-22248			WELDMENTS, ALUMINUM AND ALUMINUM ALLOY		34
		MIL-W-43668			WEBBING, TEXTILE, BULKED NYLON		35
		QQ-P-416			PLATING, CADMIUM (ELECTRODEPOSITED)		36
		TT-S-001657			SEALING COMPOUND -- SINGLE COMPONENT		37
					BUTYL RUBBER BASED, SOLVENT RELEASE		38
		V-T-285			THREAD, POLYESTER		39
							40
							41
							42
							43
							44
							45
							46

DL3321A

DISTRIBUTION STATEMENT A. APPROVED FOR PUBLIC RELEASE; DISTRIBUTION IS UNLIMITED

CAD MAINTAINED. CHANGES SHALL BE INCORPORATED BY THE DESIGN ACTIVITY.

DATA LIST

DEPARTMENT OF THE NAVY
NAVAL AIR SYSTEMS COMMAND
WASHINGTON, D.C. 20360

REV DATE | DL 3321AS200 | REV. –

LIST TITLE:
MULTI-APPLICATIONAL REUSABLE CONTAINER

DEPARTMENT OF THE NAVY
AVIATION SUPPLY OFFICE
700 ROBBINS AVE.
PHILADELPHIA, PA. 19111

BY DIRECTION 3/19/98 DATE
APPROVED FOR NAVAIRSYSCMD

30003 CAGE NO. | SHEET 2 OF 3 SHEETS

CAGE NO.	DWG SIZE	DOCUMENT NUMBER	SH NO.	REV	DOCUMENT NOMENCLATURE	SYM	LINE
	D	3321AS200	1		MULTI-APPLICATIONAL		1
	D	3321AS200	2		REUSABLE CONTAINER		2
	D	3321AS201	1		BASE SUBASSEMBLY		3
	D	3321AS201	2				4
	D	3321AS202	1		LID SUBASSEMBLY		5
	D	3321AS202	2				6
	D	3321AS203	1		PLATFORM		7
	D	3321AS204	1		CLOSURE, LID		8
	D	3321AS205	1		CLOSURE, BASE		9
	D	3321AS206	1		SHELL, LID		10
	D	3321AS206	2				11
	D	3321AS207	1		SHELL, BASE		12
	D	3321AS207	2				13
	D	3321AS208	1		RAIL, "E" SLOTTED		14
	D	3321AS209	1		RAIL "E"		15
	D	3321AS210	1		BRACKET		16
	D	3321AS211	1		MAT, CHLOROPRENE		17
	D	3321AS212	1		CHANNEL		18
	D	3321AS213	1		CHANNEL, END		19
	D	3321AS214	1		NAMEPLATE		20
	D	3321AS215	1		"O" RING		21
	D	3321AS216	1		PACKAGING SPECIFICATION		22
					(OEM TRANSPORTATION)		23
	D	3321AS217	1		CHANNEL, CENTER		24
	D	3321AS003	1	A	LABEL, ILLUSTRATION		25
	D	3321AS004	1	A	LABEL, (SID)		26
	D	3321AS005	1	A	STRAP		27
	D	3321AS006	1	A	SPACER		28
	D	3321AS007	1	A	LABEL, FRONT UPPER		29
	D	3321AS008	1	A	LABEL, FRONT LOWER		30
	D	3321AS011	1	A	LATCH		31
	D	3321AS012	1	A	HANDLE		32
	D	3321AS013	1	A	RESIN SPECIFICATION		33
	D	3321AS062	1		MOUNT, SHEAR		34
	D	3321AS050	1	A	TOOL, EXPANDER		35
							36
							37
							38
							39
							40
							41
							42
							43
							44
							45
							46

DL3321B

DISTRIBUTION STATEMENT A. APPROVED FOR PUBLIC RELEASE; DISTRIBUTION IS UNLIMITED

CAD MAINTAINED. CHANGES SHALL BE INCORPORATED BY THE DESIGN ACTIVITY.

DATA LIST

DEPARTMENT OF THE NAVY
NAVAL AIR SYSTEMS COMMAND
WASHINGTON, D.C. 20360

	SPECIFICATION	TYPE-MOD-SERIES
GOVT		
CONTR		

APPROVED FOR NAVAIRSYSCMD
BY DIRECTION 3/19/98 DATE

DEPARTMENT OF THE NAVY
AVIATION SUPPLY OFFICE
700 ROBBINS AVE.
PHILADELPHIA, PA. 19111

PREPARED	J. KIRCHAN
CHECKED	J.K.
REVIEWED	MIREY
APPROVED	

30003 CAGE NO. | DL 3321AS200 | SHEET 1 OF 3 SHEETS | REV. –

ITEM NOMENCLATURE:
MULTI-APPLICATIONAL REUSABLE CONTAINER

REV	REVISION DESCRIPTION	DATE	APVD	REV	REVISION DESCRIPTION	DATE	APVD

RECORD OF REVISION OF EACH SHEET

1	2	3	4	5	6	7	8	9	10	11	12	13	14	15	16	17	18	19	20	21	22	23	24	25	26	27	28	29	30	31	32	33	34	35	36	37	38	39
–	–	–																																				

DL3321C

DISTRIBUTION STATEMENT A.
APPROVED FOR PUBLIC RELEASE;
DISTRIBUTION IS UNLIMITED

CAD MAINTAINED. CHANGES SHALL BE INCORPORATED BY THE DESIGN ACTIVITY.

REVISIONS			
LTR	DESCRIPTION	DATE	APPROVED

NOTES: UNLESS OTHERWISE SPECIFIED

1. INTERPRET DRAWING IN ACCORDANCE WITH MIL-STD-100.
2. INSTALL SEALANT FIND 13 AS SHOWN PRIOR TO CRIMP.
3. CRIMP BY ROLL FORMING FIND 1. TO FIND 2., ONE PASS, MAXIMUM OVERLAP OF CRIMP SHALL NOT EXCEED ONE INCH.
4. APPLY SEALANT FIND 13 TO BOLT BODY FIND 7 PRIOR TO INSTALLATION.
5. TORQUE ALL 5/16-24 THREADS TO 15 FOOT POUNDS (+5/-0).
6. INSTALL FIND 6. (SHEAR MOUNT) WITH (MO/YR) VISIBLE FROM VERTICAL DOWN POSITION.
7. SHEAR MOUNTS SHALL BE NO OLDER THAN ONE (1) YEAR OLD WHEN INSTALLED IN THE CONTAINER.
8. ANY VISIBLE TWIST INDUCED TO SHEAR MOUNT BY BOLT TORQUE SHALL BE CORRECTED TO NO VISIBLE TWIST.
9. MATCH DRILL (NO. 29 DRILL) FOR FIND 11, DEBURR, INSTALL FIND 11.
   REMOVE AND DISCARD MANDRIL BUTT WITH APPROPRIATE DRIFT IN ITEM 11.
10. OTHER THAN WITNESS, EXCESS SEALANT IS NOT ALLOWED AT FIND 1, AND FIND 2 TRANSITION.
11. IDENTIFY IAW MIL-STD-130.
12. FIND 13 MAY BE PROCURED FROM:
    DAP INCORPORATED
    DAYTON, OHIO
    45401
    P/N 18174

FIND NO.	QTY REQD	CAGE CODE	PART NO. OR IDENTIFYING NO.	NOMENCLATURE OR DESCRIPTION	SPECIFICATION	NOTE
16	1		3321AS211	MAT, CHLOROPRENE		
15	2		3321AS005-50	STRAP		
14	1		3321AS008	LABEL, FRONT LOWER		
13	A/R		SEE NOTE 12	SEALANT	TT-S-001657	
12	4	07707	AD 68 H	RIVET	MIL-R-24243	
11	1	07707	SSD 48 BS	RIVET	MIL-R-24243	
10	4		5/16-24 X 3/8	BUTTON HEAD CAP SCR	ANSI B18.3	
9	4		3321AS006	SPACER		
8	4		5/16" WASHER	WASHER, FLAT	AN 960 C 516	
7	4		5/16-24 X 1.00	HEX HEAD MS ZP	ANSI B18.2.1	
6	4		3321AS062	MOUNT SHEAR		
5	4		3321AS011	LATCH		
4	2		3321AS012	HANDLE		
3	1		3321AS203	PLATFORM		
2	1		3321AS207	SHELL, BASE		
1	1		3321AS205	CLOSURE, BASE		

PARTS LIST

REVISION	–	–
SHEET	1	2

SHEET REVISION RECORD

3321AS200	DL 3321AS200
NEXT ASSY	USED ON

APPLICATION

UNLESS OTHERWISE SPECIFIED:
DIMENSIONS ARE IN INCHES
TOLERANCES ON:
FRACTIONS ± DECIMALS ± .10 .010 ANGLES ± 30'°

MATERIAL: SEE PARTS LIST

CONTRACT NO. N00383-90-C-7642
DEPARTMENT OF THE NAVY
AVIATION SUPPLY OFFICE
700 ROBBINS AVE.
PHILADELPHIA, PA. 19111

DEPARTMENT OF THE NAVY
NAVAL AIR SYSTEMS COMMAND
WASHINGTON, D.C. 20360

DRAWN J. KIRCHHAN
CHECKED J.K.
REVIEWED MOREY
APPROVED
APPROVED FOR NAV AIR SYS COM
BY DIRECTION 3/19/96 DATE

BASE SUBASSEMBLY

SIZE D | CAGE CODE 30003 | DWG NO. 3321AS201
SCALE 1/3 | SHEET 1 OF 2

WHEN REFERRING TO THIS DRAWING STATE DRAWING NO., APPLICABLE ISSUE LETTER IF ANY, AND DATE

DISTRIBUTION STATEMENT A.
APPROVED FOR PUBLIC RELEASE;
DISTRIBUTION IS UNLIMITED

CAD MAINTAINED. CHANGES SHALL BE INCORPORATED BY THE DESIGN ACTIVITY.

REVISIONS			
LTR	DESCRIPTION	DATE	APPROVED

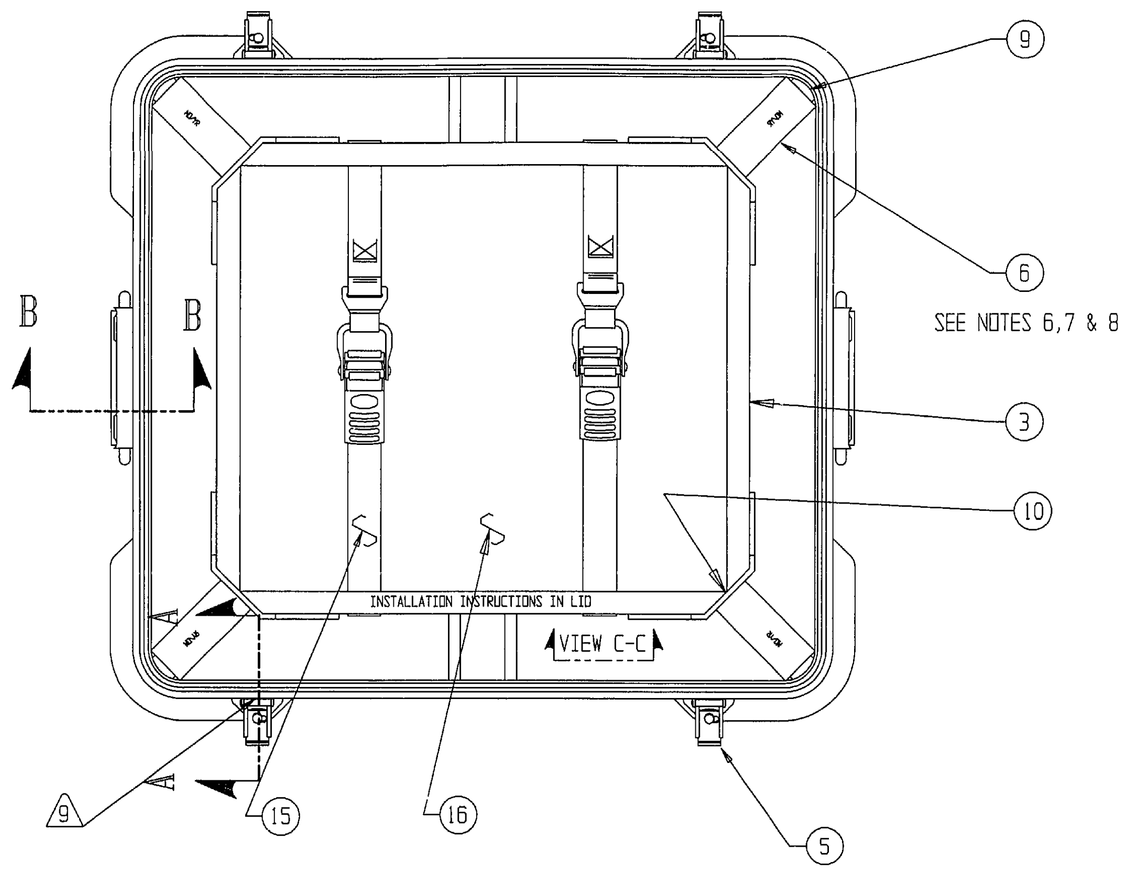

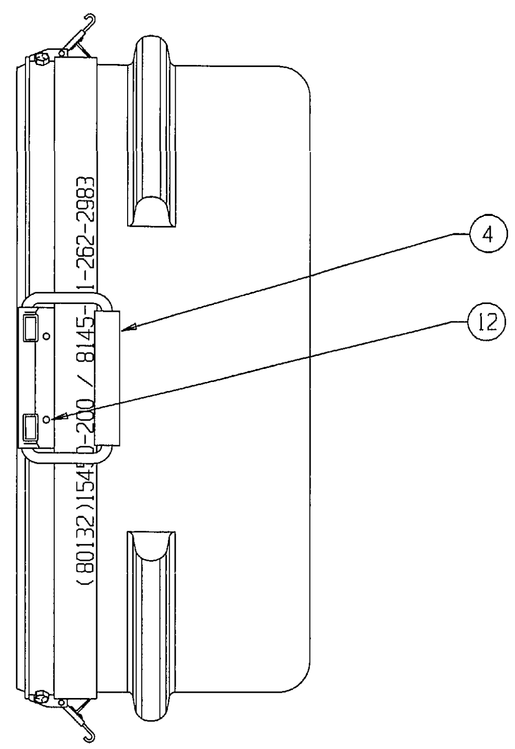

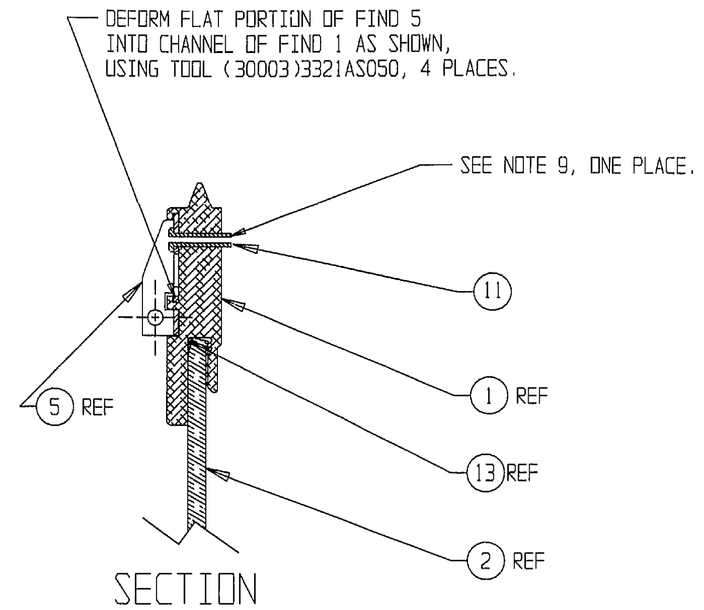

SECTION
A - A
1/1
ROTATED 90° CW

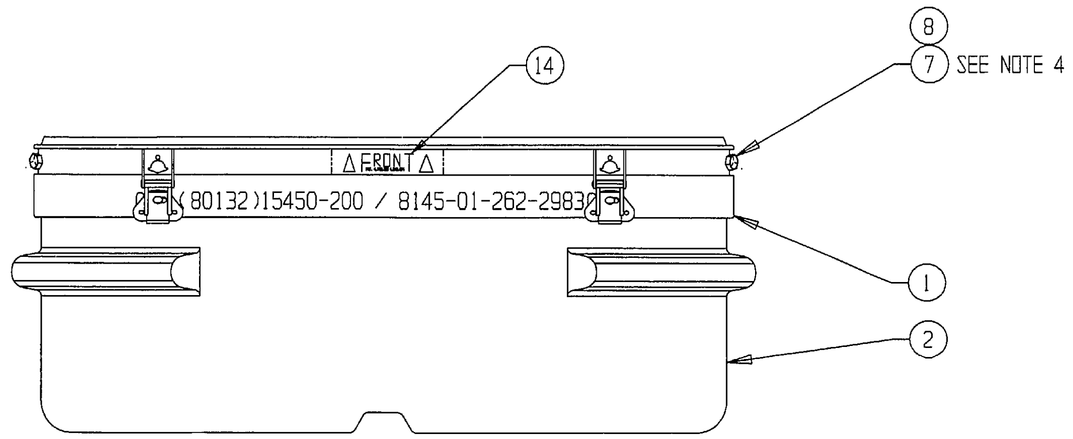

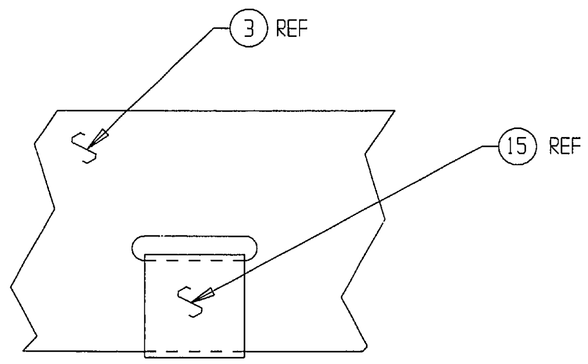

VIEW C-C
1/1
4PL

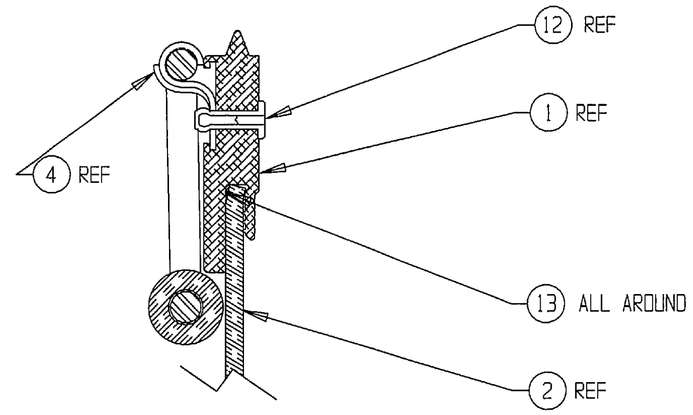

SECTION
B - B
1/1
2 PL

DRAWN J. KIRCHHAN	REVIEWED MOREY	SIZE D	CAGE CODE 30003	DWG NO. 3321AS201
CHECKED J.K.	APPROVED	SCALE 1/3		SHEET 2 OF 2

NAVSUP NAVAL SUPPLY SYSTEMS COMMAND

NAVAL INVENTORY CONTROL POINT

ENGINEERING CHANGE REQUEST/ORDER (CONTINUATION SHEET)

1. ECR NO.: 0-134

2. DWG/PART NO.	3. NOMENCLATURE	4. CURRENT REV.
3321AS201	Base Subassembly	

5. CONTINUATION ITEMS

Drawing 3321AS201, Sheet 2, Zone C-2

Change Qty of Find 11 to 4X

Install Find 11 on Find 5 (one each)

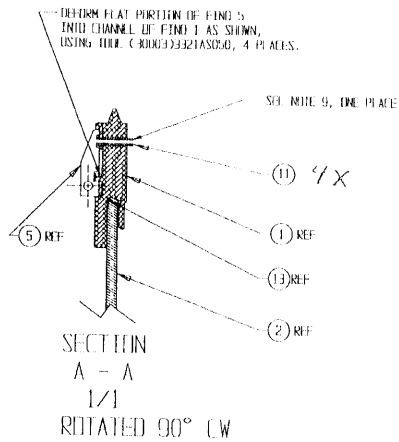

NAVSUP NAVAL SUPPLY SYSTEMS COMMAND

NAVAL INVENTORY CONTROL POINT

ENGINEERING CHANGE REQUEST/ORDER (CONTINUATION SHEET)

1. ECR NO.: 0-134

2. DWG/PART NO.	3. NOMENCLATURE	4. CURRENT REV.
3321A5201	Base Subassembly	

5. CONTINUATION ITEMS

Drawing 3321A5201 Sheet 2

Install Find 5 to dimension shown

Installation of Find 5 (Latch) Same both sides

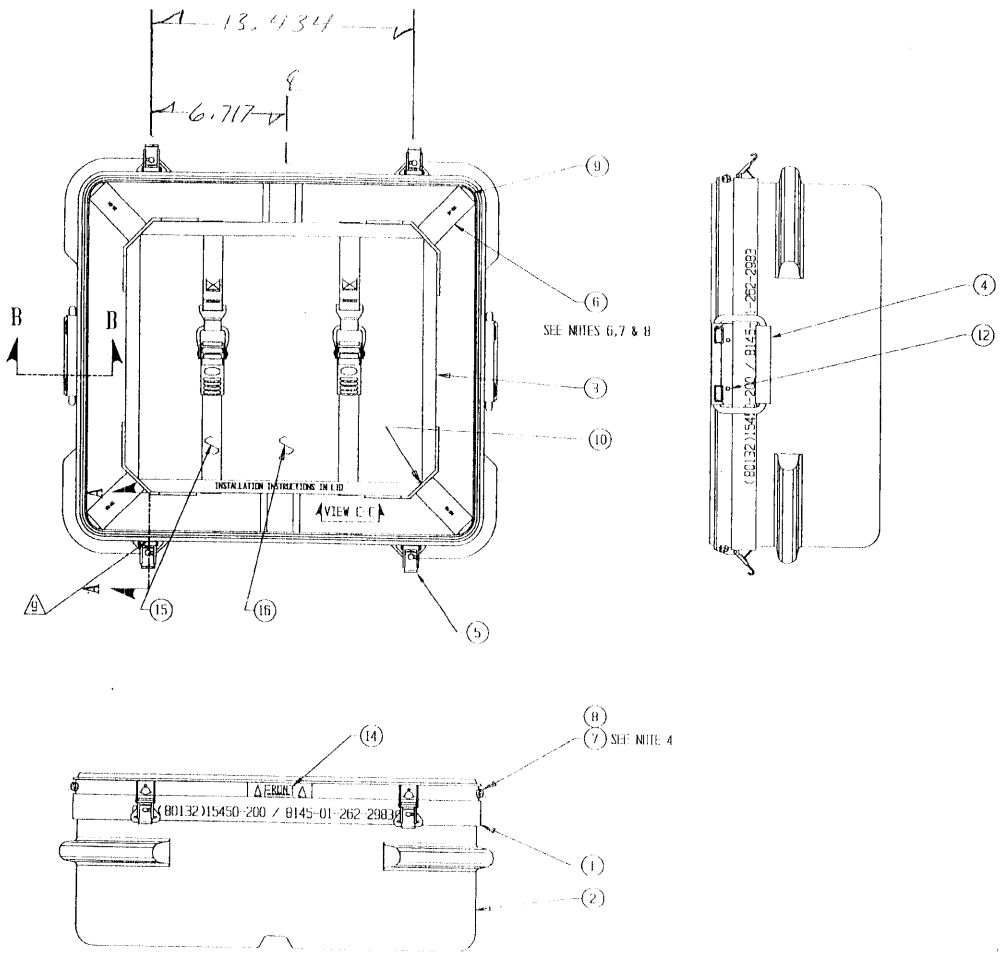

NAVSUP

NAVAL SUPPLY SYSTEMS COMMAND

NAVAL INVENTORY CONTROL POINT

ENGINEERING CHANGE ORDER

1. ECO NO.: O- 134

2. DRAWING/PART NO.	3. NOMENCLATURE	4. CURRENT REVISION
3321AS201	Base Subassembly	A

5. CUSTOMER	6. CUSTOMER DWG NO.	7. NEXT HIGHER ASSEMBLY NO.	8. END ITEM PRODUCT I.D.
NAVICP			15450-200

9. RN/SVR NO.	10. ECO REQUIRED BY:	11. ORIGINATOR	DATE
	NAVICP (80152)	Robert Steel 0771	8/1/05

12. DESCRIPTION OF CHANGE (WAS / IS):

Drawing 3321AS201, Sheet 1, Zone D-8, C-8 Notes 1 & 12
Change Note to:

1. Interpret drawings and revisions in accordance with ASME Y14.100, ASME Y14.24, ASME Y14.34, and ASME Y14.35

12. Find 13 may be Procured from:
DAP Inc
2400 Boston St. Suite 200
Baltimore, MD 21224

Tube P/N 18174
Case P/N 18218
Ref: Spec ASTM-C 1311

13. REASON FOR CHANGE [INCLUDE JUSTIFICATION AND BACKUP DATA (IF AVAILABLE)]:

Up date Standards and Clarifications

☐ VALUE ENGINEERING ☒ SPEC CHANGE ☒ CORRECTIONS ☐ IN-SERVICE ☐ SAFETY ☐ NEW DRAWING

14. DESIGN ENG. RECOMMENDS:	☐ CLASS 1 - MAJOR	17. ANALYSIS ENGINEER (As Required)	DATE
☐ FUTURE INCORP. (REASON):		18. DE PEER REVIEW (As Required)	DATE
☐ APPROVED AS REQUESTED	☐ DISAPPROVED 15. DE INITIALS	19. DESIGN ENGINEER	DATE
☐ STOP NOTICE ISSUED	16. ☐ FORMAL CCB REQUIRED	20. ENG MGT	DATE

21. PROGRAM MANAGEMENT CUSTOMER INTERFACE REQUIREMENTS		✓	22. DE CHECKS AREAS THAT REQUIRE REVIEW/CONCURRENCE
NOTIFY CUSTOMER	☐	☐	MANUFACTURING ENGINEERING
Note: Customer or FAA notification required on all PMA parts.		☐	MATERIALS AND PROCESSES
APPROVAL REQUIRED	☐	☐	QUALITY ENGINEERING
CDRL REFERENCE:		☐	ILS/R&M
CONTRACT NO.		☐	ECO ORIGINATOR (IF NOT DE) Robert Steel
RISK RELEASE	☐	☐	OTHER (SPECIFY)
NO. COPIES TO CUSTOMER		✓	CONFIGURATION MGT MGR (LAST)
PROGRAM MANAGER SIGNATURE			25. DRAFTING
			26. ENGINEERING CHECK Robert Steel

23. PLANNED EFFECTIVITY

LOT: DATE: S/N

MATERIAL DISTRIBUTION & DISPOSITION

	ORDER/LOT	QUANTITY	USE	CHANGE	SCRAP
a. FIELD		☐	☐	☐	☐
b. STORES		☐	☐	☐	☐
c. WIP BEYOND		☐	☐	☐	☐
d. WIP NOT BEYOND		☐	☐	☐	☐
e. NEXT RELEASE				☐	

MATERIAL PLANNING SIGNATURE

24. CUSTOMER/DCMC CONCURRENCE	27. RLSD DWG REV.	28. CM RELEASE	30. DOCUMENT RELEASE

31. COMMENTS

29. DISTRIBUTION CODE

DISTRIBUTION STATEMENT A.
APPROVED FOR PUBLIC RELEASE;
DISTRIBUTION IS UNLIMITED

CAD MAINTAINED. CHANGES SHALL BE INCORPORATED BY THE DESIGN ACTIVITY.

REVISIONS			
LTR	DESCRIPTION	DATE	APPROVED

NOTES: UNLESS OTHERWISE SPECIFIED

1. INTERPRET DRAWING IN ACCORDANCE WITH MIL-STD-100.
2. APPLY SEALANT FIND 6 AS SHOWN PRIOR TO CRIMP.
3. CRIMP BY ROLL FORMING FIND 1. TO FIND 2., ONE PASS, MAXIMUM OVERLAP OF CRIMP SHALL NOT EXCEED ONE INCH.
4. OTHER THAN WITNESS, EXCESS SEALANT IS NOT ALLOWED AT FIND 1, AND FIND 2 TRANSITION.
5. CONVERT SURFACE TO NON-POLAR PRIOR TO SILKSCREEN. SILKSCREEN NOMENCLATURE USING FIND 10 AS SHOWN.
6. APPLY A THIN FILM OF FIND 8 TO FIND 7, PRIOR TO ASSEMBLY.
7. FIND 8 MAY BE PROCURED FROM:
   GENERAL ELECTRIC CO.
   WATERFORD NY
   12188
   P/N G624
8. FIND 6 MAY BE PROCURED FROM:
   DAP INC.
   DAYTON OHIO
   45401
   P/N 18174

FIND NO.	QTY REQD	CAGE CODE	PART NO. OR IDENTIFYING NO.	NOMENCLATURE OR DESCRIPTION	SPECIFICATION	NOTE
10	A/R		TYPE I COLOR BLACK	INK, EPOXY	MIL-I-43553	5
9	2		3321AS004	LABEL, (S I O)		
8	A/R		SEE NOTE 7	DIELECTRIC COMPOUND		6
7	1		3321AS215	"O" RING		
6	A/R		SEE NOTE 8	SEALANT	TT-S-001657	2
5	1		3321AS007	LABEL, FRONT UPPER		
4	1		3321AS003	LABEL, ILLUSTRATION		
3	1		3321AS214	NAMEPLATE		
2	1		3321AS206	SHELL, LID		
1	1		3321AS204	CLOSURE, LID		

PARTS LIST

REVISION	3321AS200	OL 3321AS200
SHEET	NEXT ASSY	USED ON
SHEET REVISION RECORD	APPLICATION	

UNLESS OTHERWISE SPECIFIED:
DIMENSIONS ARE IN INCHES
TOLERANCES ON:
FRACTIONS ± DECIMALS .10 ± .010 ANGLES ± 30'°

MATERIAL:
SEE PARTS LIST

CONTRACT NO. N00383-90-C-7642
DEPARTMENT OF THE NAVY
AVIATION SUPPLY OFFICE
700 ROBBINS AVE.
PHILADELPHIA, PA. 19111

DRAWN J. KIRCHHAN
CHECKED J.K.
REVIEWED MOREY
APPROVED
APPROVED FOR NAV AIR SYS COM
BY DIRECTION — DATE 3/19/98

DEPARTMENT OF THE NAVY
NAVAL AIR SYSTEMS COMMAND
WASHINGTON, D.C. 20360

LID SUBASSEMBLY

SIZE	CAGE CODE	DWG NO.
D	30003	3321AS202
SCALE 1/3		SHEET 1 OF 2

WHEN REFERRING TO THIS DRAWING STATE DRAWING NO., APPLICABLE ISSUE LETTER IF ANY, AND DATE

DISTRIBUTION STATEMENT A.
APPROVED FOR PUBLIC RELEASE;
DISTRIBUTION IS UNLIMITED

CAD MAINTAINED. CHANGES SHALL BE INCORPORATED BY THE DESIGN ACTIVITY.

REVISIONS			
LTR	DESCRIPTION	DATE	APPROVED

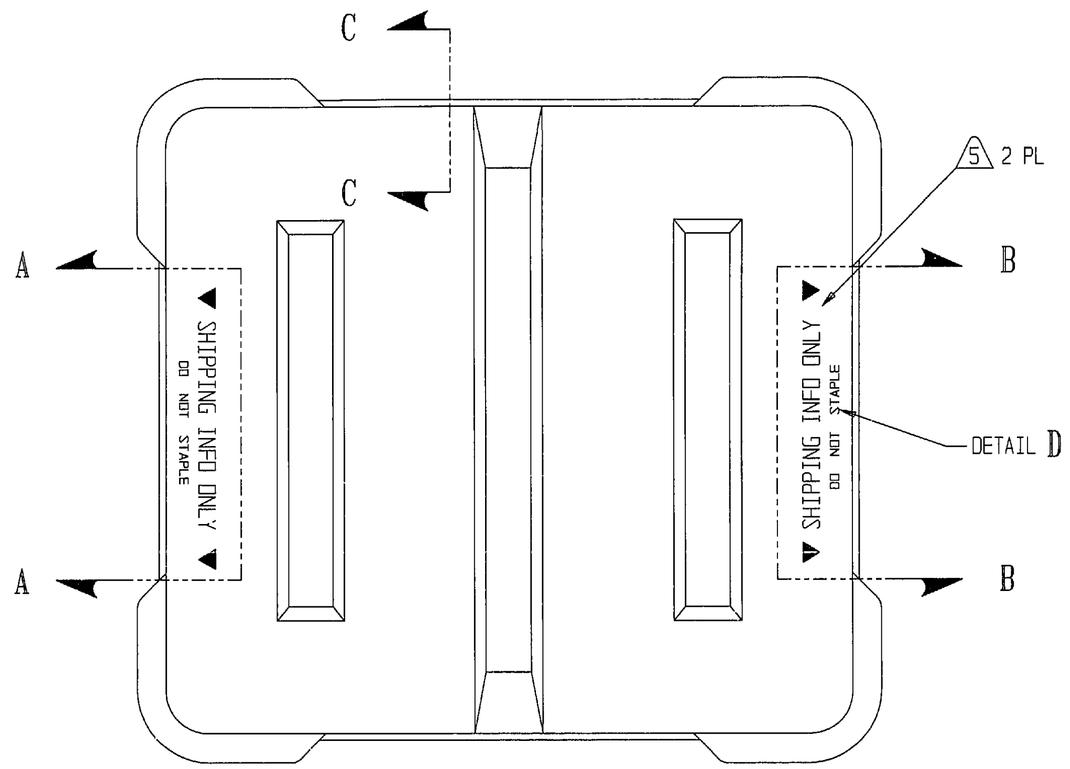

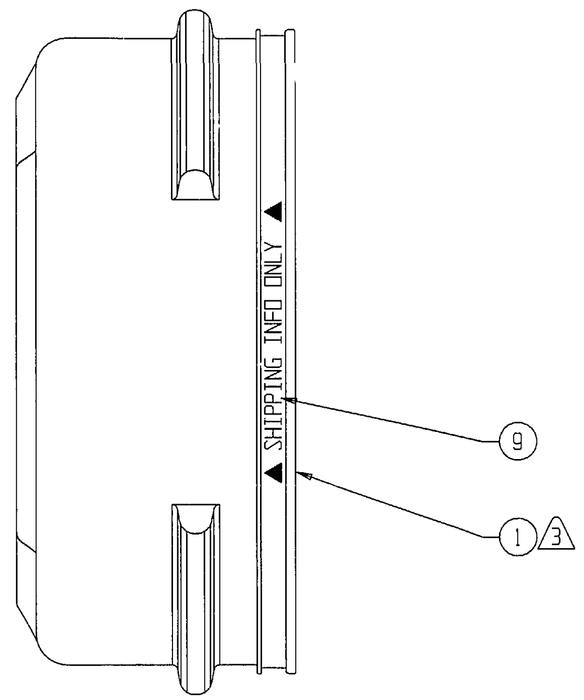

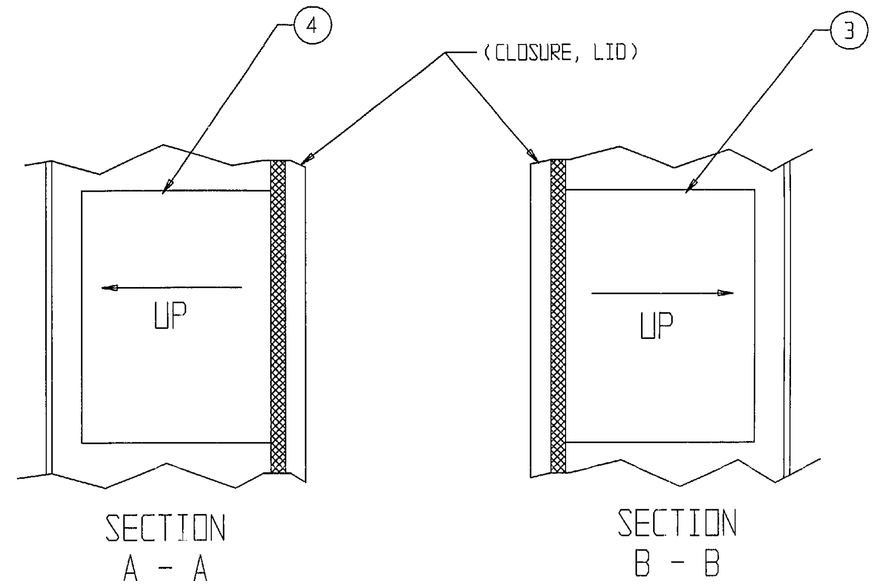

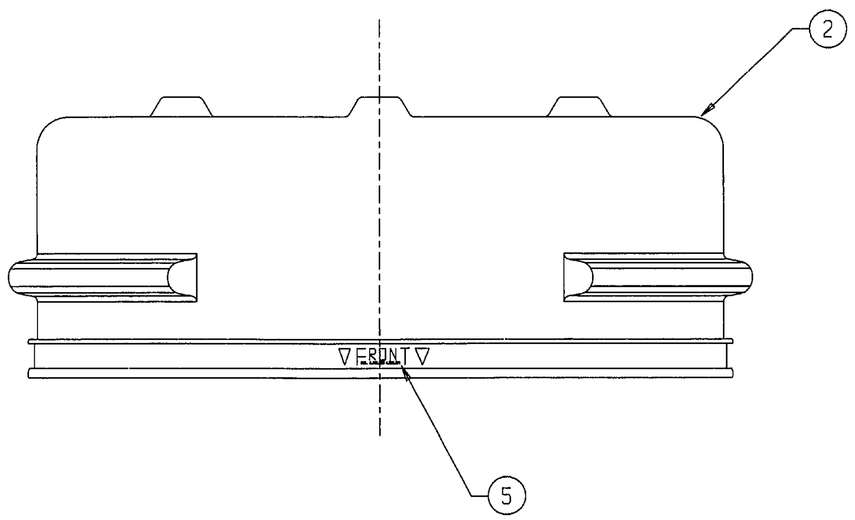

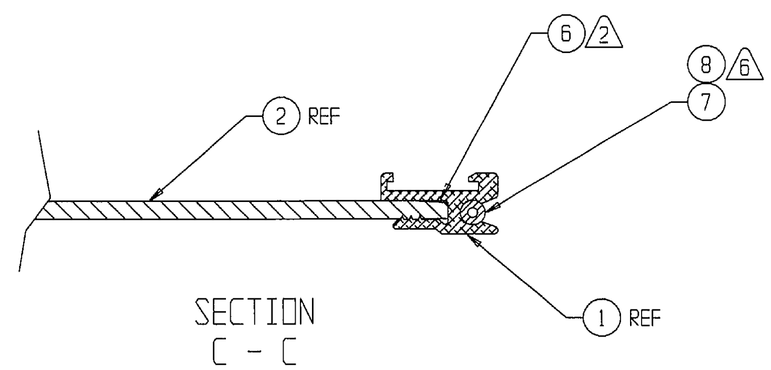

SECTION
C - C
1 X

HELVETICA 46 POINT 110% NORMAL TRACK.

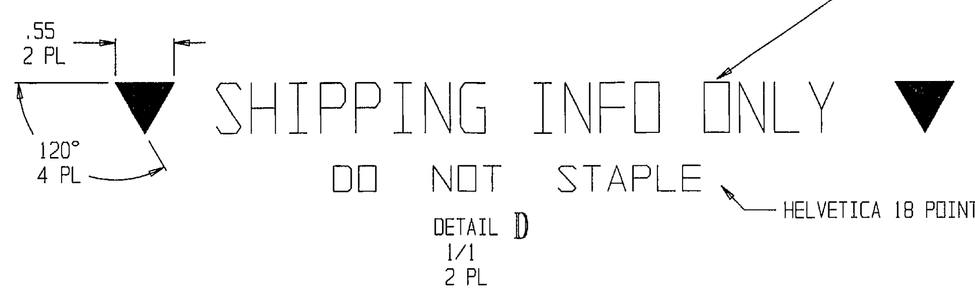

HELVETICA 18 POINT 130% TIGHT TRACK LETTER/WORD SPACE.

DETAIL D
1/1
2 PL

DRAWN J. KIRCHHAN	REVIEWED	SIZE D	FSCM NO. 30003	DWG NO. 3321AS202
CHECKED	APPROVED	SCALE 1/3		SHEET 2 OF 2

NAVSUP

NAVAL SUPPLY SYSTEMS COMMAND

NAVAL INVENTORY CONTROL POINT

ENGINEERING CHANGE ORDER

1. ECO NO.: O- 135

2. DRAWING/PART NO.	3. NOMENCLATURE	4. CURRENT REVISION
3321AS202	Lid Subassembly	

5. CUSTOMER	6. CUSTOMER DWG NO.	7. NEXT HIGHER ASSEMBLY NO.	8. END ITEM PRODUCT I.D.
NAVICP			15450-200

9. RN/SVR NO.	10. ECO REQUIRED BY:	11. ORIGINATOR	DATE
	NAVICP (80132)	Robert Steel 0771	8/1/05

12. DESCRIPTION OF CHANGE (WAS / IS):

Drawing 3321AS202

(see attached)

13. REASON FOR CHANGE [INCLUDE JUSTIFICATION AND BACKUP DATA (IF AVAILABLE)]:

Replace notes with Corrections
Add new stencil

☒ VALUE ENGINEERING ☒ SPEC CHANGE ☒ CORRECTIONS ☐ IN-SERVICE ☐ SAFETY ☐ NEW DRAWING

14. DESIGN ENG. RECOMMENDS:	☐ CLASS 1 - MAJOR	17. ANALYSIS ENGINEER (As Required)	DATE
☐ FUTURE INCORP. (REASON):		18. DE PEER REVIEW (As Required)	DATE
☐ APPROVED AS REQUESTED	☐ DISAPPROVED 15. DE INITIALS	19. DESIGN ENGINEER	DATE
☐ STOP NOTICE ISSUED	16. ☐ FORMAL CCB REQUIRED	20. ENG MGT	DATE

21. PROGRAM MANAGEMENT *CUSTOMER INTERFACE REQUIREMENTS*		✔	22. DE CHECKS AREAS THAT REQUIRE REVIEW/CONCURRENCE
NOTIFY CUSTOMER	☐	☐	MANUFACTURING ENGINEERING
Note: Customer or FAA notification required on all PMA parts.		☐	MATERIALS AND PROCESSES
APPROVAL REQUIRED	☐	☐	QUALITY ENGINEERING
CDRL REFERENCE:		☐	ILS/R&M
CONTRACT NO.		☐	ECO ORIGINATOR (IF NOT DE) Robert Steel
RISK RELEASE	☐	☐	OTHER (SPECIFY)
NO. COPIES TO CUSTOMER		✔	CONFIGURATION MGT MGR (LAST)
PROGRAM MANAGER SIGNATURE			25. DRAFTING
			26. ENGINEERING CHECK Robert Steel

23. PLANNED EFFECTIVITY

LOT: DATE: S/N

MATERIAL DISTRIBUTION & DISPOSITION	ORDER/LOT	QUANTITY	USE	CHANGE	SCRAP
a. FIELD		☐	☐	☐	☐
b. STORES		☐	☐	☐	☐
c. WIP BEYOND		☐	☐	☐	☐
d. WIP NOT BEYOND		☐	☐	☐	☐
e. NEXT RELEASE				☐	

MATERIAL PLANNING SIGNATURE

24. CUSTOMER/DCMC CONCURRENCE	27. RLSD DWG REV.	28. CM RELEASE	30. DOCUMENT RELEASE

31. COMMENTS

29. DISTRIBUTION CODE

NAVAL SUPPLY SYSTEMS COMMAND

NAVSUP

NAVAL INVENTORY CONTROL POINT

ENGINEERING CHANGE REQUEST/ORDER (CONTINUATION SHEET)

1. ECR NO.: 0-135

2. DWG/PART NO.	3. NOMENCLATURE	4. CURRENT REV.
3321A5202	Lid Subassembly	

5. CONTINUATION ITEMS

Drawing 3321A5202 Sheet 1, Zone D-8, Notes
Change Notes to:

NOTES:

1. INTERPRET DRAWING AND REVISIONS IN ACCORDANCE WITH ASME Y14.100, ASME Y14.24, ASME Y14.34, AND ASME Y14.35.

2. APPLY SEALANT FIND 6 AS SHOWN PRIOR TO CRIMP.

3. CRIMP BY ROLL FORMING FIND 1 TO FIND 2, ONE PASS, MAXIMUM OVERLAP OF CRIMP SHALL NOT EXCEED ONE INCH.

4. OTHER THAN WITNESS, EXCESS SEALANT IS NOT ALLOWED AT FIND 1 AND FIND 2 TRANSITION.

5. CONVERT SURFACE TO NON-POLAR PRIOR TO SILKSCREEN NOMENCLATURE AS SPECIFIED USING EPOXY INK CONFORMING TO A-A-56032 TYPE I, COLOR BLACK PER FED-STD-595, COLOR NUMBER 17038.

6. APPLY A THIN FILM OF FIND 8 TO FIND 7, PRIOR TO ASSEMBLY.

7. FIND 8 MAY BE PROCURED FROM:
   NOVAGARD INC
   5109 HAMILTON AVE
   CLEVELAND, OH. 44114
   P/N G624

8. FIND 6 MAY BE PROCURED FROM:
   DAP INC
   2400 BOSTON ST.
   SUITE 200
   BALTIMORE, MD. 21224
   TUBE P/N 18174
   CASE P/N 18218

NAVSUP

NAVAL SUPPLY SYSTEMS COMMAND

NAVAL INVENTORY CONTROL POINT

ENGINEERING CHANGE REQUEST/ORDER (CONTINUATION SHEET)

1. ECR NO.: 0-135

2. DWG/PART NO.	3. NOMENCLATURE	4. CURRENT REV.
3321AS202	Lid Subassembly	

5. CONTINUATION ITEMS

Drawing 3321AS202 Sheet 2, Zone C-7, C-6

Add Silkscreen nomenclature to top of lid

use Helvetica 46 Point 110% Normal Track

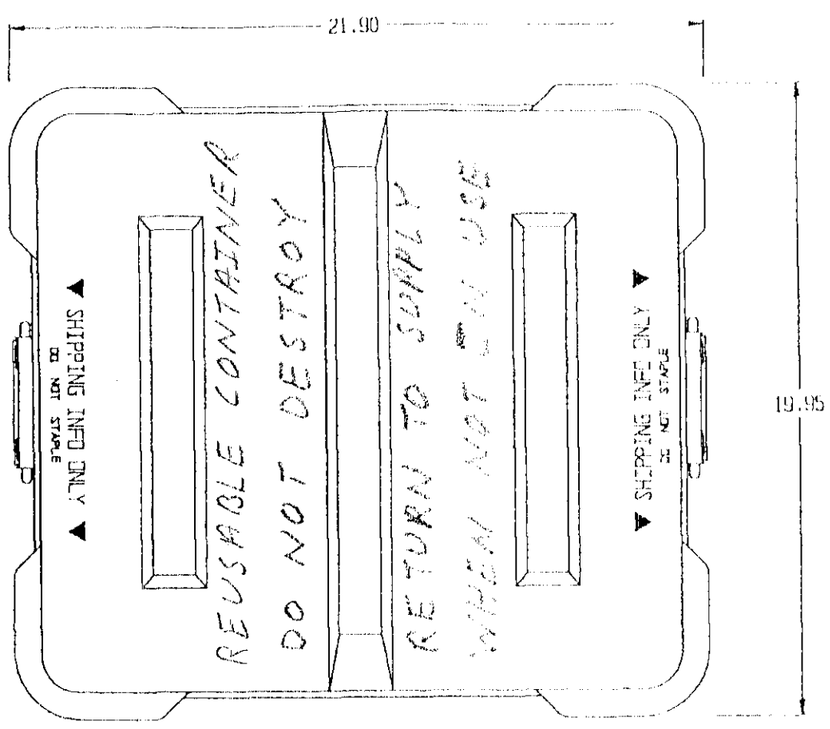

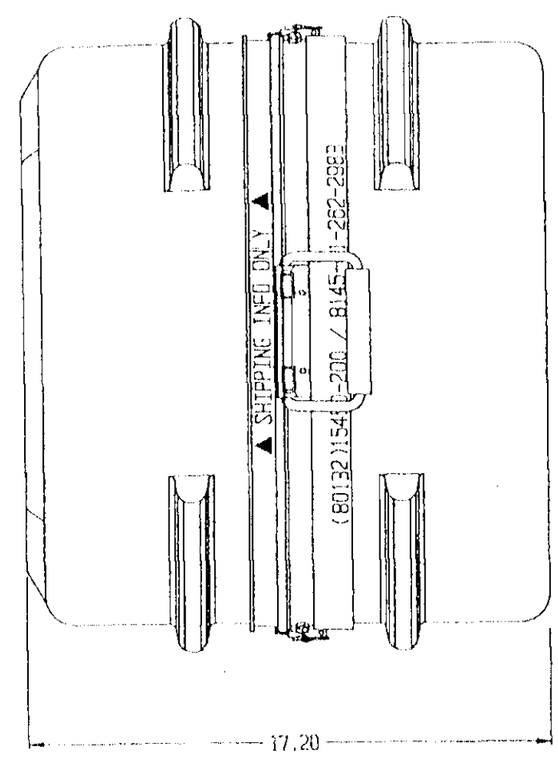

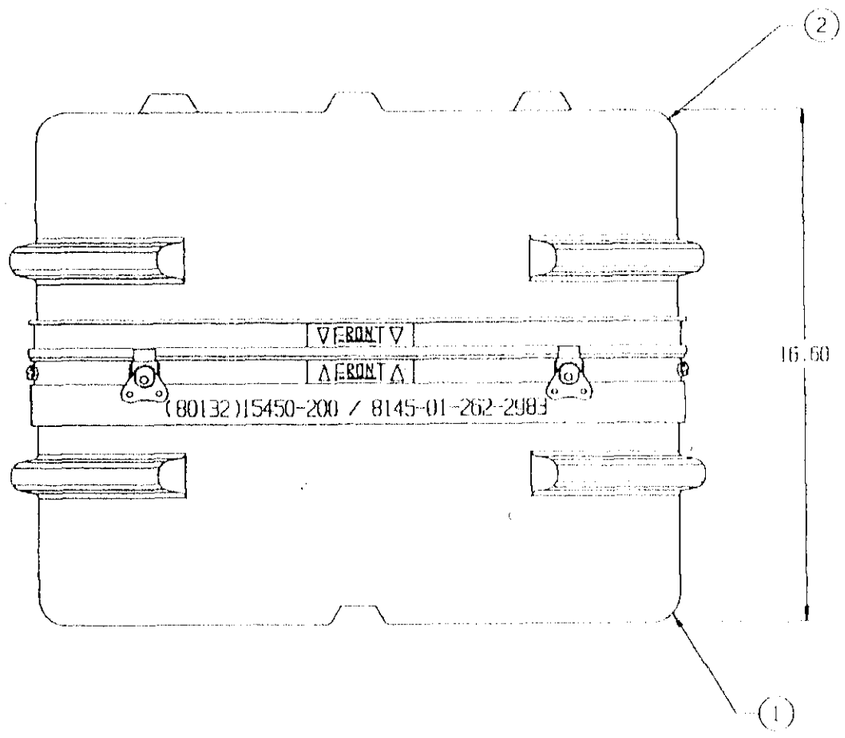

8	7	6	5	4	3	2	1

DISTRIBUTION STATEMENT A.
APPROVED FOR PUBLIC RELEASE;
DISTRIBUTION IS UNLIMITED

CAD MAINTAINED. CHANGES SHALL BE INCORPORATED BY THE DESIGN ACTIVITY.

REVISIONS			
LTR	DESCRIPTION	DATE	APPROVED

NOTES: UNLESS OTHERWISE SPECIFIED

1. INTERPRET DRAWING IN ACCORDANCE WITH MIL-STD-100.
2. COMPONENTS TO BE CLEANED USING ACID DEOXIDIZER PRIOR TO WELDING.
3. WELD IAW MIL-W-22248, CLASS 4. FILLER METAL TO BE ER4043, IAW AWS A5.10.
4. FIND 3 AND FIND 4 TO BE VERTICAL WITHIN 30'° AFTER WELDING.
5. CERTIFICATION IAW MIL-STD-1595 SHALL BE MAINTAINED THROUGHOUT PRODUCTION. ALTERNATE USE MIL-STD-248.
6. INSERT FINDS 5, 6, & 7 INTO FINDS 1 & 2 PRIOR TO WELDING.
7. CHEMFILM IAW MIL-C-5541 CLASS 1A, COLOR GOLD AFTER WELDING.
8. DIMENSION S.P.C. CONTROLLED RMS >1.33
   USL: +.020
   TARGET: AS DIMENSIONED FREQUENCY = 10:1
   LSL: -.020

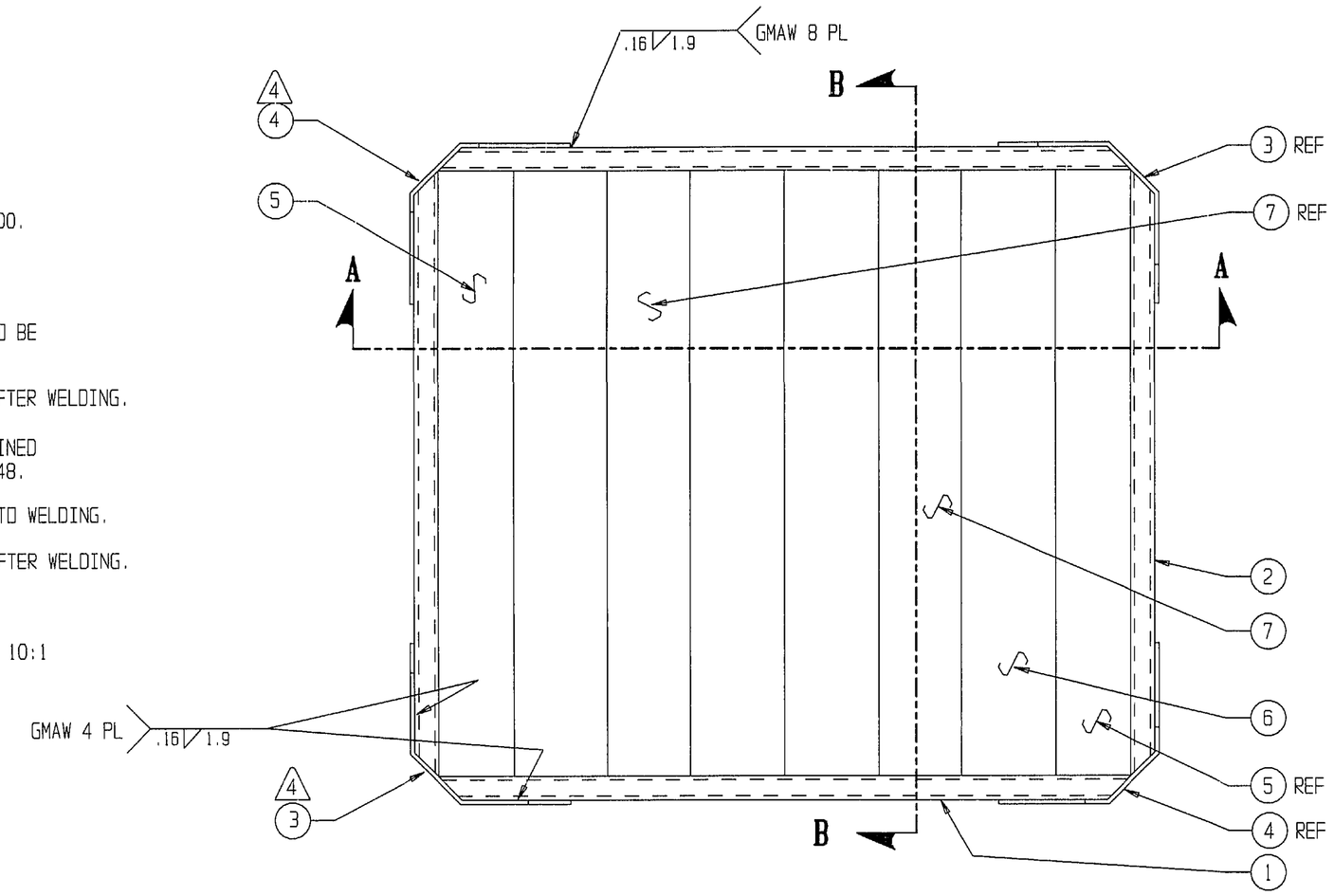

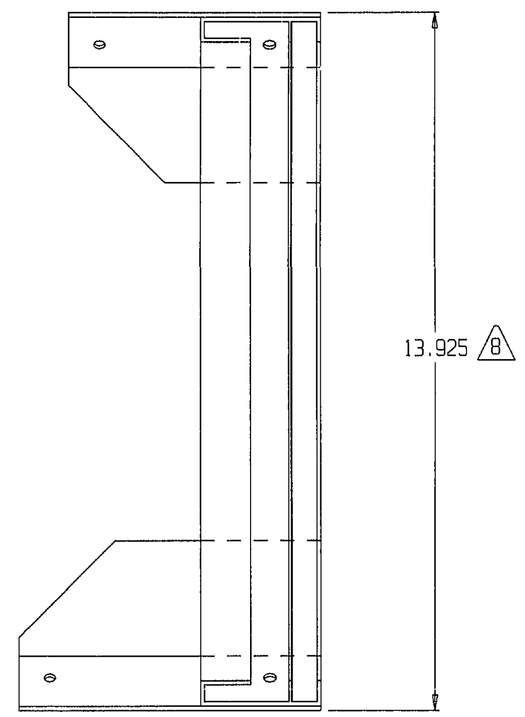

SECTION B - B

CROSSHATCH OMITTED FOR CLARITY

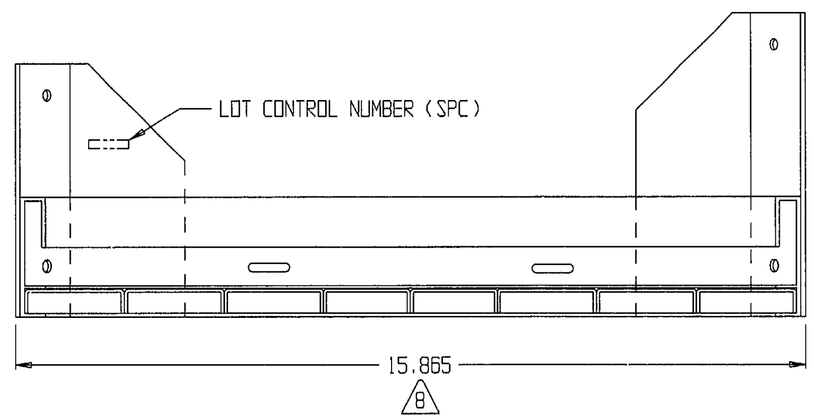

CROSSHATCH OMITTED FOR CLARITY

SECTION A - A

FIND NO.	QTY REQD	CAGE CODE	PART NO. OR IDENTIFYING NO.	NOMENCLATURE OR DESCRIPTION	SPECIFICATION	NOTE
7	2		3321AS217	CHANNEL		
6	4		3321AS212	CHANNEL		
5	2		3321AS213	CHANNEL, END		
4	2		3321AS210-1	BRACKET		
3	2		3321AS210-2	BRACKET		
2	2		3321AS209	RAIL "E"		
1	2		3321AS208	RAIL "E", SLOTTED		

PARTS LIST

REVISION	3321AS201	DL 3321AS200
SHEET	NEXT ASSY	USED ON
SHEET REVISION RECORD	APPLICATION	

UNLESS OTHERWISE SPECIFIED:
DIMENSIONS ARE IN INCHES
TOLERANCES ON:
FRACTIONS ± DECIMALS .10 .010 ± ANGLES ± 30'°

MATERIAL: SEE PARTS LIST

CONTRACT NO. N00383-90-C-7642
DEPARTMENT OF THE NAVY
AVIATION SUPPLY OFFICE
700 ROBBINS AVE.
PHILADELPHIA, PA. 19111

DRAWN J. KIRCHHAN
CHECKED J.K.
REVIEWED MOREY
APPROVED
APPROVED FOR NAV AIR SYS COM
BY DIRECTION 3/19/98 DATE

DEPARTMENT OF THE NAVY
NAVAL AIR SYSTEMS COMMAND
WASHINGTON, D.C. 20360

PLATFORM

SIZE	CAGE CODE	DWG NO.
D	30003	3321AS203
SCALE 1/2		SHEET 1 OF 1

WHEN REFERRING TO THIS DRAWING STATE DRAWING NO., APPLICABLE ISSUE LETTER IF ANY, AND DATE

NAVSUP NAVAL SUPPLY SYSTEMS COMMAND

NAVAL INVENTORY CONTROL POINT

ENGINEERING CHANGE ORDER

1. ECO NO.: O- 136

2. DRAWING/PART NO.	3. NOMENCLATURE	4. CURRENT REVISION
3321A5203	Platform	

5. CUSTOMER	6. CUSTOMER DWG NO.	7. NEXT HIGHER ASSEMBLY NO.	8. END ITEM PRODUCT I.D.
NAVICP			15450-200

9. RN/SVR NO.	10. ECO REQUIRED BY:	11. ORIGINATOR	DATE
	NAVICP (80132)	Robert Steel 0771	8/1/05

12. DESCRIPTION OF CHANGE (WAS / IS):

Drawing 3321A5203 Sheet 1

(see attached)

13. REASON FOR CHANGE [INCLUDE JUSTIFICATION AND BACKUP DATA (IF AVAILABLE)]:

Replace notes with Corrections

☐ VALUE ENGINEERING ☒ SPEC CHANGE ☒ CORRECTIONS ☐ IN-SERVICE ☐ SAFETY ☐ NEW DRAWING

14. DESIGN ENG. RECOMMENDS:	☐ CLASS 1 - MAJOR	17. ANALYSIS ENGINEER (As Required)	DATE
☐ FUTURE INCORP. (REASON):		18. DE PEER REVIEW (As Required)	DATE
☐ APPROVED AS REQUESTED	☐ DISAPPROVED 15. DE INITIALS	19. DESIGN ENGINEER	DATE
☐ STOP NOTICE ISSUED	16. ☐ FORMAL CCB REQUIRED	20. ENG MGT	DATE

21. PROGRAM MANAGEMENT *CUSTOMER INTERFACE REQUIREMENTS*	✓	22. DE CHECKS AREAS THAT REQUIRE REVIEW/CONCURRENCE
NOTIFY CUSTOMER ☐	☐	MANUFACTURING ENGINEERING
Note: Customer or FAA notification required on all PMA parts.	☐	MATERIALS AND PROCESSES
APPROVAL REQUIRED ☐	☐	QUALITY ENGINEERING
CDRL REFERENCE:	☐	ILS/R&M
CONTRACT NO.	☐	ECO ORIGINATOR (IF NOT DE)
RISK RELEASE ☐	☐	OTHER (SPECIFY)
NO. COPIES TO CUSTOMER	✓	CONFIGURATION MGT MGR (LAST)
PROGRAM MANAGER SIGNATURE		25. DRAFTING
		26. ENGINEERING CHECK

23. PLANNED EFFECTIVITY

LOT: DATE: S/N

MATERIAL DISTRIBUTION & DISPOSITION

	ORDER/LOT	QUANTITY	USE	CHANGE	SCRAP
a. FIELD		☐	☐	☐	☐
b. STORES		☐	☐	☐	☐
c. WIP BEYOND		☐	☐	☐	☐
d. WIP NOT BEYOND		☐	☐	☐	☐
e. NEXT RELEASE				☐	

MATERIAL PLANNING SIGNATURE

24. CUSTOMER/DCMC CONCURRENCE	27. RLSD DWG REV.	28. CM RELEASE	30. DOCUMENT RELEASE

31. COMMENTS	29. DISTRIBUTION CODE

NAVSUP NAVAL SUPPLY SYSTEMS COMMAND

NAVAL INVENTORY CONTROL POINT

ENGINEERING CHANGE REQUEST/ORDER (CONTINUATION SHEET)

1. ECR NO.: 0-136

2. DWG/PART NO.	3. NOMENCLATURE	4. CURRENT REV.
3321AS203	Platform	

5. CONTINUATION ITEMS

Drawing 3321AS203, Sheet 1, Zone D-8
Notes Changed to:

NOTES:

1. CLEANING:
PARTS TO BE WELDED SHALL BE CHEMICALLY CLEANED TO REMOVE SURFACE SOILS SUCH AS OILS, WAXES, GREASE, INKS, ETC. PER MIL-C-5541. EXCEPT THAT UNINHIBITED ALKALINE SOLUTIONS SHALL NOT BE USED.

2. DEOXIDIZING:
THE CLEANED PARTS SHALL BE CHEMICALLY DEOXIDIZED NO MORE THEN 10 DAYS PRIOR TO WELDING TO REMOVE THICK SURFACE OXIDE FILMS. (IF THE MATERIAL OR WORK IS EXPOSED TO AN OUTDOOR ENVIRONMENT, THIS TIME LIMIT SHALL BE REDUCED TO A MAXIMUM OF 3 DAYS TO ACCOUNT FOR ATMOSPHERIC EFFECTS). MECHANICAL CLEANING METHODS SHALL BE APPLIED JUST PRIOR TO THE ACTUAL START OF WELDING, TO REMOVE ANY REOXIDATION OR RESIDUAL THIN OXIDE FILMS.

3. CHEMICAL TREATMENT:
EITHER IMMERSION OR BRUSHING/WIPING SHALL APPLY AN ACID DEOXIDIZING TREATMENT, DEOXIDIZERS ACCEPTABLE FOR USE SHALL INCLUDE NITRIC ACID, SULFURIC CHROMIC, PHOSPHORIC CHROMIC OR EQUIVALENT SOLUTIONS. SODIUM HYDROXIDE SOLUTIONS SHALL NOT BE USED. CARE SHALL BE TAKEN TO ASSURE 100% SOLUTION COVERAGE OF THE AREA TO BE WELDED. TO ALLOW AN ADEQUATELY SIZED DEOXIDIZED AREA FOR GOOD WELDING. THE SOLUTION SHALL BE APPLIED TO AN AREA EXTENDING AT LEAST 2 INCHES FROM THE WELD SITE, OR ENDING AT ANY CLOSER ADJACENT EDGE.

NAVSUP NAVAL SUPPLY SYSTEMS COMMAND

NAVAL INVENTORY CONTROL POINT

ENGINEERING CHANGE REQUEST/ORDER (CONTINUATION SHEET)

1. ECR NO.: 0-136

2. DWG/PART NO.	3. NOMENCLATURE	4. CURRENT REV.
3321AS203	Platform	

5. CONTINUATION ITEMS

Drawing 3321AS203, Sheet 1, Zone D-8
Note Changed to: (Cont.)

4. WELDING ALUMINUM:
WELDING AND WELD INSPECTION SHALL BE IN ACCORDANCE WITH MIL-W-22248, CLASS 4, OR AWS D1.2 AND A WELD SPECIFICATION PROCEDURE (WPS). A WELDING REWORK SPECIFICATION PROCEDURE AND A WELD INSPECTION PROCEDURE SHALL ALSO BE USED.

EXCEPTIONS:
(1) VISUAL INSPECTION SHALL INCLUDE 5X (5 POWER) MAGNIFICATION WHEN SUSPECT CONDITION IS TO BE EXAMINED BEYOND THE CAPABILITY OF NORMAL VISION.
(2) CRITICAL AND MAJOR WELDS MAY BE SUBJECTED TO FURTHER NON-DESTRUCTIVE TESTING (SUCH AS DYE PENETRANT INSPECTION) AS PERSCRIBED BY THE BUYING ACTIVITY.

PROPER CONTROLS SHALL BE USED TO PREVENT MELT THROUGH OR BURN THROUGH. WELDER QUALIFICATIONS SHALL BE TO AMS-STD-1595, ALTERNATE D1.2. FILLER FOR WELDING 6000 SERIES SHALL BE ER-4043 PER AWS A5.10 FILLER FOR WELDING 5000 SERIES TO THEMSELVES OR TO 6000 SERIES SHALL BE ER-5356 OR ER-5556 PER AWS A5.10

5. CHEMICAL CONVERSION COATING (CHEMFILM), COLOR GOLD, IN ACCORDANCE WITH MIL-C-5541, CLASS 1A, AFTER WELDING.

6. FIND 3 AND 4 TO BE VERTICAL WITHIN 1/2° AFTER WELDING.

7. INSERT FINDS 5, 6,& 7 INTO FINDS 1 & 2 PRIOR TO WELDING.

8. SILKSCREEN NOMENCLATURE (HELVETICA 42 POINT COND.) EPOXY INK CONFORMING TO A-A-56032 TYPE I, COLOR BLACK PER FED-STD-595, COLOR NUMBER 17038, AS SHOWN

9. DIMENSION S.P.C. CONTROLLED RMS >1.33
USD +.020
TARGET: AS DIMENSIONED
FREQUENCY = 10:1
LSD -.020

10. INTERPRET DRAWING AND REVISIONS IN ACCORDANCE WITH ASME Y14.100, ASME Y14.24, ASME Y14.34, AND ASME Y14.35

NAVSUP NAVAL SUPPLY SYSTEMS COMMAND

NAVAL INVENTORY CONTROL POINT

ENGINEERING CHANGE REQUEST/ORDER (CONTINUATION SHEET)

1. ECR NO.: 0-136

2. DWG/PART NO.	3. NOMENCLATURE	4. CURRENT REV.
3321AS203	Platform	

5. CONTINUATION ITEMS

Drawing 3321AS203 Sheet 1, Zone C-6, D-6, C-2, B-5

Flag Note 4 Change to Flag Note 6

Flag Note 8 Change to Flag Note 9

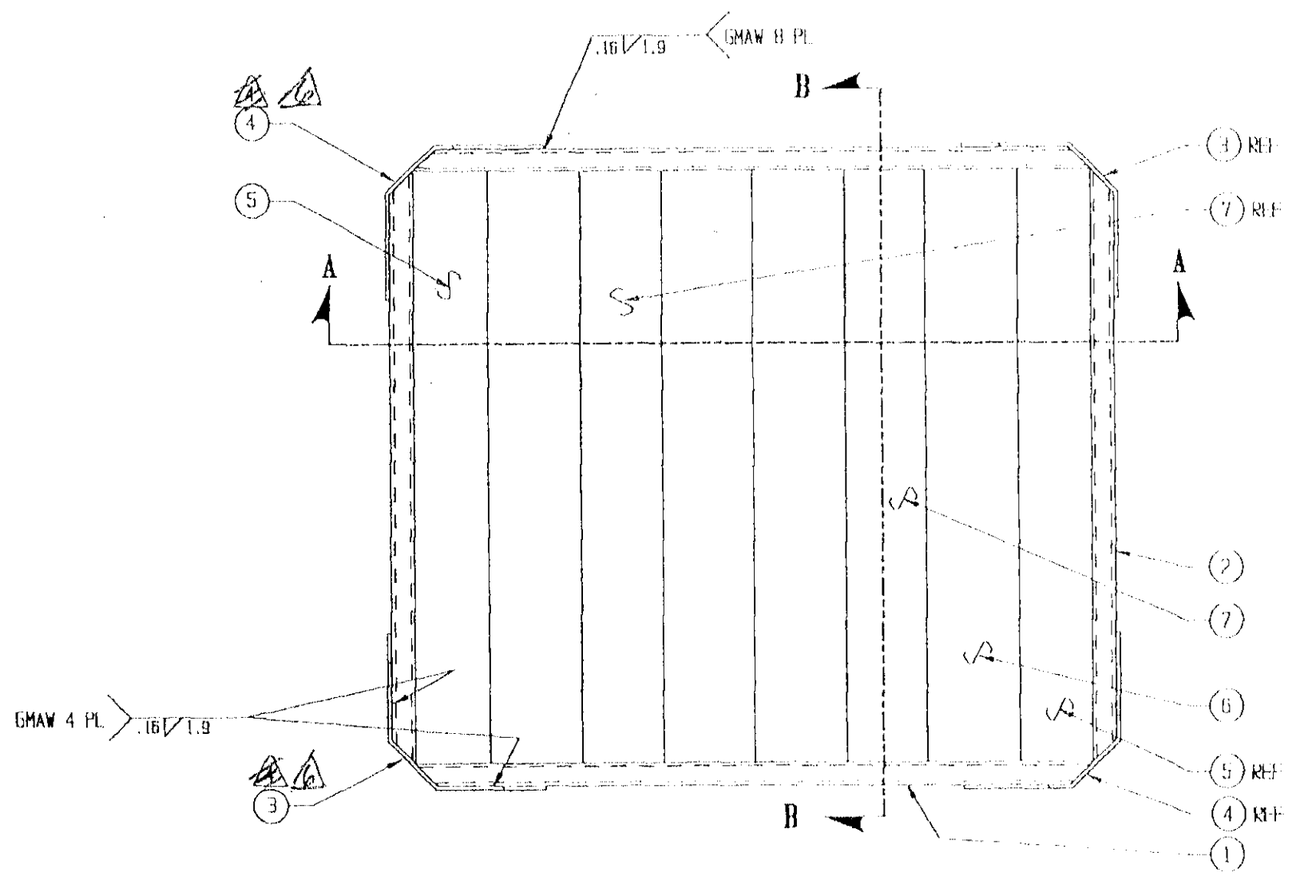

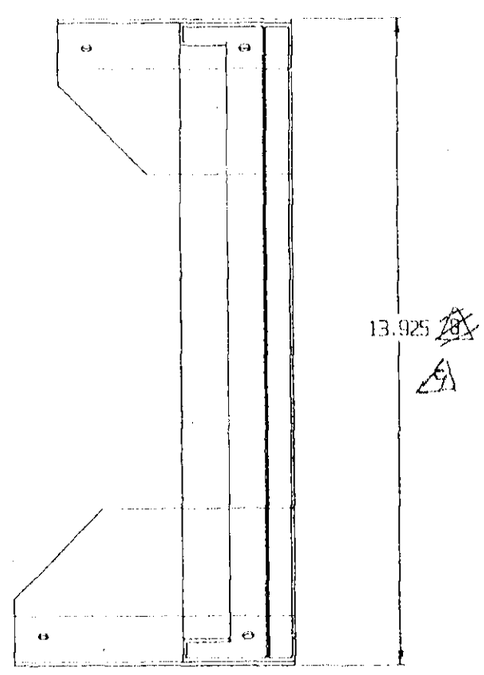

SECTION B - B

CROSSHATCH OMITTED FOR CLARITY

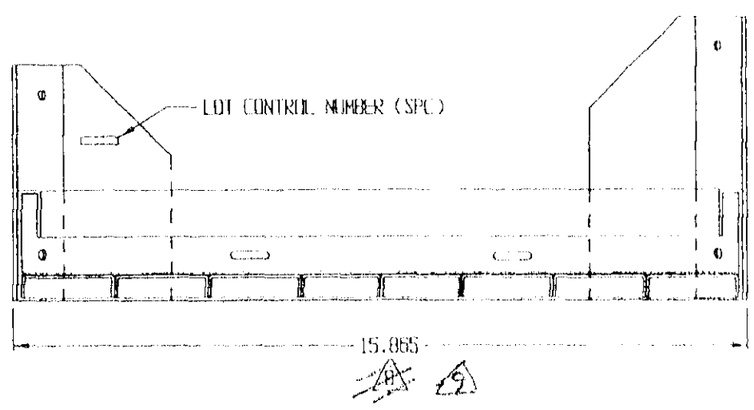

CROSSHATCH OMITTED FOR CLARITY

SECTION A - A

DISTRIBUTION STATEMENT A.
APPROVED FOR PUBLIC RELEASE;
DISTRIBUTION IS UNLIMITED

CAD MAINTAINED. CHANGES SHALL BE INCORPORATED BY THE DESIGN ACTIVITY.

REVISIONS			
LTR	DESCRIPTION	DATE	APPROVED

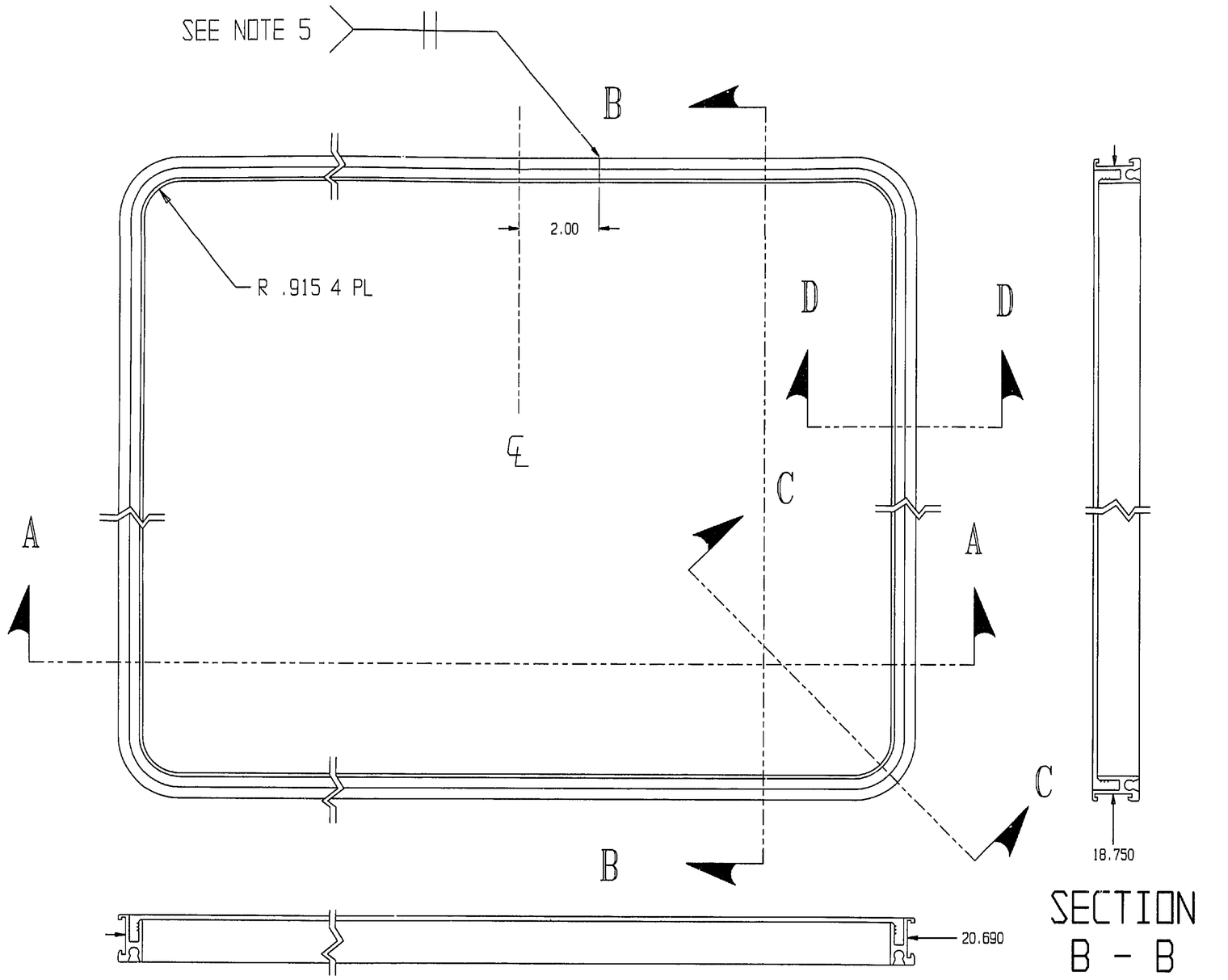

SECTION
A - A

CROSSHATCH OMITTED FOR CLARITY

SECTION
B - B

CROSSHATCH OMITTED FOR CLARITY

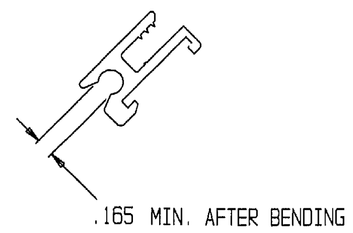

SECTION
C - C
1/1
4 PL

CROSSHATCH OMITTED FOR CLARITY

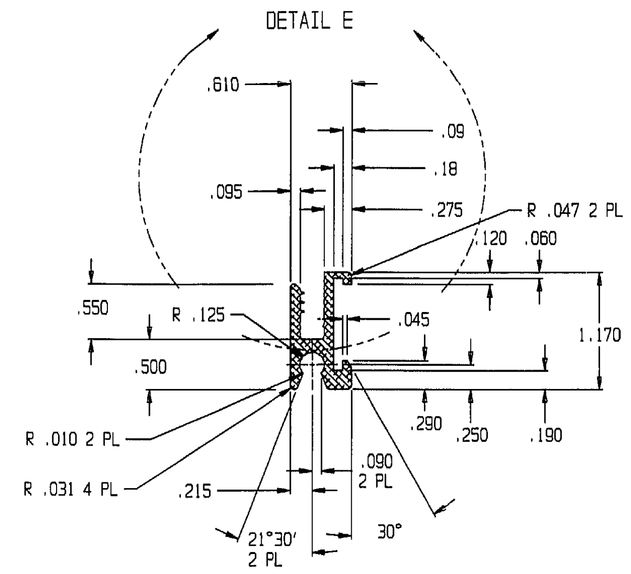

SECTION
D - D
1/1

SEE NOTE 4

UNITED STATES PATENT 4,546,874 HAS BEEN GRANTED ON THE PROJECTION WHICH CREATES A DYNAMIC SEAL WHEN ASSEMBLED WITH A COLD FLOWING MATERIAL.

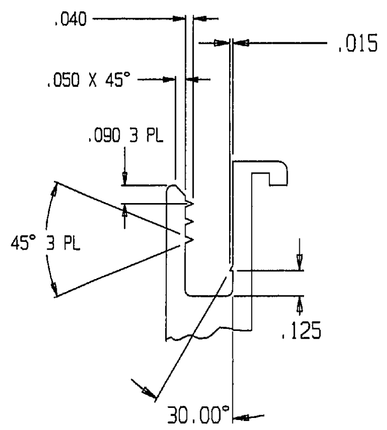

DETAIL E
2X

NOTES UNLESS OTHERWISE SPECIFIED:

1. INTERPRET DRAWING IN ACCORDANCE WITH MIL-STD-100.
2. WELD IAW MIL-W-22248 CLASS 4 USING WIRE CLASS ER 5356 IAW AWS A5.10. POSITIONAL QUALIFICATION OF WELDERS SHALL BE IAW MIL-STD-1595, ALTERNATE USE MIL-STD-248.
3. CHEMICAL FILM IAW MIL-C-5541 CLASS 1A GOLD.
4. TOLERANCES IAW ANSI H35.2 UNLESS OTHERWISE NOTED, ALL CORNERS ARE .010 R.
5. INSIDE JOINT TO BE FREE OF BURN THROUGH.

FIND NO.	QTY REQD	CAGE CODE	PART NO. OR IDENTIFYING NO.	NOMENCLATURE OR DESCRIPTION	SPECIFICATION	NOTE

PARTS LIST

| REVISION | | |

NAVSUP NAVAL SUPPLY SYSTEMS COMMAND

NAVAL INVENTORY CONTROL POINT

ENGINEERING CHANGE ORDER

1. ECO NO.: O- 137

2. DRAWING/PART NO.	3. NOMENCLATURE	4. CURRENT REVISION
3321AS204	Closure, Lid	

5. CUSTOMER	6. CUSTOMER DWG NO.	7. NEXT HIGHER ASSEMBLY NO.	8. END ITEM PRODUCT I.D.
NAVICP			15450-200

9. RN/SVR NO.	10. ECO REQUIRED BY:	11. ORIGINATOR	DATE
	NAVICP (80132)	Robert Steel 0771	8/1/05

12. DESCRIPTION OF CHANGE (WAS / IS):

See attached

13. REASON FOR CHANGE (INCLUDE JUSTIFICATION AND BACKUP DATA (IF AVAILABLE)):

Replaced notes with corrections
Changed Dim to inside for direct measurement

☒ VALUE ENGINEERING ☒ SPEC CHANGE ☒ CORRECTIONS ☐ IN-SERVICE ☐ SAFETY ☐ NEW DRAWING

14. DESIGN ENG. RECOMMENDS:	☐ CLASS 1 - MAJOR	17. ANALYSIS ENGINEER (As Required)	DATE
☐ FUTURE INCORP. (REASON):		18. DE PEER REVIEW (As Required)	DATE
☐ APPROVED AS REQUESTED	☐ DISAPPROVED 15. DE INITIALS	19. DESIGN ENGINEER	DATE
☐ STOP NOTICE ISSUED	16. ☐ FORMAL CCB REQUIRED	20. ENG MGT	DATE

21. PROGRAM MANAGEMENT *CUSTOMER INTERFACE REQUIREMENTS*		✔	22. DE CHECKS AREAS THAT REQUIRE REVIEW/CONCURRENCE
NOTIFY CUSTOMER	☐	☐	MANUFACTURING ENGINEERING
Note: Customer or FAA notification required on all PMA parts.		☐	MATERIALS AND PROCESSES
APPROVAL REQUIRED	☐	☐	QUALITY ENGINEERING
CDRL REFERENCE:		☐	ILS/R&M
CONTRACT NO.		☐	ECO ORIGINATOR (IF NOT DE) Robert Steel
RISK RELEASE	☐	☐	OTHER (SPECIFY)
NO. COPIES TO CUSTOMER		✔	CONFIGURATION MGT MGR (LAST)
PROGRAM MANAGER SIGNATURE			25. DRAFTING
			26. ENGINEERING CHECK Robert Steel

23. PLANNED EFFECTIVITY

LOT: DATE: S/N

MATERIAL DISTRIBUTION & DISPOSITION

	ORDER/LOT	QUANTITY	USE	CHANGE	SCRAP
a. FIELD		☐	☐	☐	☐
b. STORES		☐	☐	☐	☐
c. WIP BEYOND		☐	☐	☐	☐
d. WIP NOT BEYOND		☐	☐	☐	☐
e. NEXT RELEASE				☐	

MATERIAL PLANNING SIGNATURE

24. CUSTOMER/DCMC CONCURRENCE	27. RLSD DWG REV.	28. CM RELEASE	30. DOCUMENT RELEASE

31. COMMENTS

29. DISTRIBUTION CODE

NAVSUP NAVAL SUPPLY SYSTEMS COMMAND

NAVAL INVENTORY CONTROL POINT

ENGINEERING CHANGE REQUEST/ORDER (CONTINUATION SHEET)

1. ECR NO.: 0-137

2. DWG/PART NO.	3. NOMENCLATURE	4. CURRENT REV.
3321AS204	Closure Lid	

5. CONTINUATION ITEMS

Drawing 3321AS204 Sheet 1, Zone A-8
Change Note to:

NOTES:

1. CLEANING:
PARTS TO BE WELDED SHALL BE CHEMICALLY CLEANED TO REMOVE SURFACE SOILS SUCH AS OILS, WAXES, GREASE, INKS, ETC. PER MIL-C-5541. EXCEPT THAT UNINHIBITED ALKALINE SOLUTIONS SHALL NOT BE USED.

2. DEOXIDIZING:
THE CLEANED PARTS SHALL BE CHEMICALLY DEOXIDIZED NO MORE THEN 10 DAYS PRIOR TO WELDING TO REMOVE THICK SURFACE OXIDE FILMS. (IF THE MATERIAL OR WORK IS EXPOSED TO AN OUTDOOR ENVIRONMENT, THIS TIME LIMIT SHALL BE REDUCED TO A MAXIMUM OF 3 DAYS TO ACCOUNT FOR ATMOSPHERIC EFFECTS). MECHANICAL CLEANING METHODS SHALL BE APPLIED JUST PRIOR TO THE ACTUAL START OF WELDING, TO REMOVE ANY REOXIDATION OR RESIDUAL THIN OXIDE FILMS.

3. CHEMICAL TREATMENT:
EITHER IMMERSION OR BRUSHING/WIPING SHALL APPLY AN ACID DEOXIDIZING TREATMENT, DEOXIDIZERS ACCEPTABLE FOR USE SHALL INCLUDE NITRIC ACID, SULFURIC CHROMIC, PHOSPHORIC CHROMIC OR EQUIVALENT SOLUTIONS. SODIUM HYDROXIDE SOLUTIONS SHALL NOT BE USED. CARE SHALL BE TAKEN TO ASSURE 100% SOLUTION COVERAGE OF THE AREA TO BE WELDED. TO ALLOW AN ADEQUATELY SIZED DEOXIDIZED AREA FOR GOOD WELDING. THE SOLUTION SHALL BE APPLIED TO AN AREA EXTENDING AT LEAST 2 INCHES FROM THE WELD SITE, OR ENDING AT ANY CLOSER ADJACENT EDGE.

NAVSUP NAVAL SUPPLY SYSTEMS COMMAND

NAVAL INVENTORY CONTROL POINT

ENGINEERING CHANGE REQUEST/ORDER (CONTINUATION SHEET)

1. ECR NO.: 0-137

2. DWG/PART NO.	3. NOMENCLATURE	4. CURRENT REV.
3321AS204	Closure, Lid	

5. CONTINUATION ITEMS

Drawing 3321AS204 Sheet 1, Zone A-8

Change Notes to: (cont.)

4. WELDING ALUMINUM:
WELDING AND WELD INSPECTION SHALL BE IN ACCORDANCE WITH MIL-W-22248, CLASS 4, OR AWS D1.2 AND A WELD SPECIFICATION PROCEDURE (WPS). A WELDING REWORK SPECIFICATION PROCEDURE AND A WELD INSPECTION PROCEDURE SHALL ALSO BE USED.

EXCEPTIONS:

(1) VISUAL INSPECTION SHALL INCLUDE 5X (5 POWER) MAGNIFICATION WHEN SUSPECT CONDITION IS TO BE EXAMINED BEYOND THE CAPABILITY OF NORMAL VISION.

(2) CRITICAL AND MAJOR WELDS MAY BE SUBJECTED TO FURTHER NON-DESTRUCTIVE TESTING (SUCH AS DYE PENETRANT INSPECTION) AS PERSCRIBED BY THE BUYING ACTIVITY.

PROPER CONTROLS SHALL BE USED TO PREVENT MELT THROUGH OR BURN THROUGH. WELDER QUALIFICATIONS SHALL BE TO AMS-STD-1595, ALTERNATE D1.2. FILLER FOR WELDING 6000 SERIES SHALL BE ER-4043 PER AWS A5.10 FILLER FOR WELDING 5000 SERIES TO THEMSELVES OR TO 6000 SERIES SHALL BE ER-5356 OR ER-5556 PER AWS A5.10

5. CHEMICAL CONVERSION COATING (CHEMFILM), COLOR GOLD, IN ACCORDANCE WITH MIL-C-5541, CLASS 1A, AFTER WELDING.

6. EXTRUSION TOLERANCES SHALL APPLY IN ACCORDANCE WITH ANSI H35.2-2000 UNLESS OTHERWISE SPECIFIED. ALL CORNERS ARE .010 RADIUS.

7. GRIND MATING SURFACES OF SEALING FLANGE AND O-RING GROVE FLUSH.

8. INTERPRET DRAWING AND REVISIONS IN ACCORDANCE WITH ASME Y14.100, ASME Y14.24, ASME Y14.34, AND ASME Y14.35

NAVSUP NAVAL SUPPLY SYSTEMS COMMAND

NAVAL INVENTORY CONTROL POINT

ENGINEERING CHANGE REQUEST/ORDER (CONTINUATION SHEET)

1. ECR NO.: 0-137

2. DWG/PART NO.	3. NOMENCLATURE	4. CURRENT REV.
3321AS204	Closure Lid	

5. CONTINUATION ITEMS

Drawing 3321AS204, Sheet 1, Zone D-7, B-6, B-5, B-4, C-4, B-3

Change 20.690 & 18.750 Dimension to Ref.

Add 19.830 & 17.890 Inside Dimension as shown

Change "See Note 4" to: "See Note 6"

Change Weld Note to: "See Note 7"

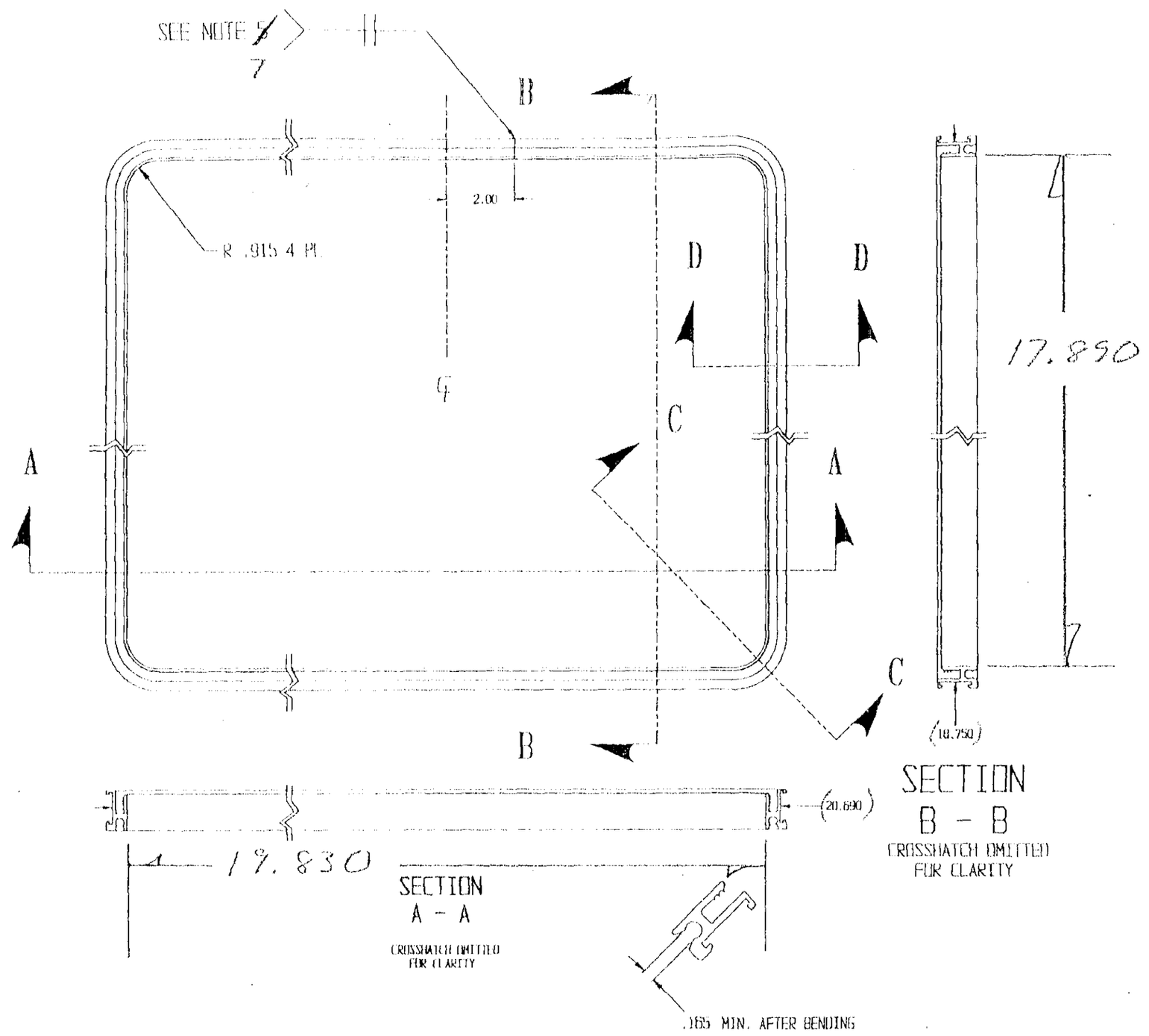

SECTION B - B
CROSSHATCH OMITTED FOR CLARITY

SECTION A - A
CROSSHATCH OMITTED FOR CLARITY

SECTION C - C
1/1
4 PL
CROSSHATCH OMITTED FOR CLARITY

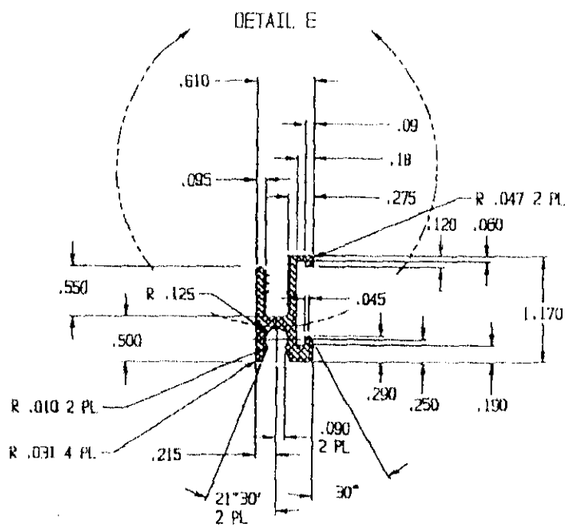

SECTION D - D
1/1

SEE NOTE ~~4~~ 6

UNITED STATES PATENT 4,546,874 HAS BEEN GRANTED ON THE PROJECTION WHICH CREATES A DYNAMIC SEAL WHEN ASSEMBLED WITH A COLD FLOWING MATERIAL.

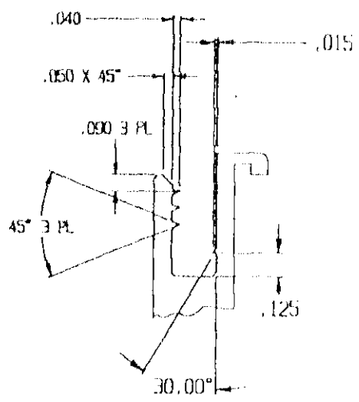

DETAIL F
2X

Add to Detail E
Crosshatch Omitted For Clarity

DISTRIBUTION STATEMENT A.
APPROVED FOR PUBLIC RELEASE;
DISTRIBUTION IS UNLIMITED

CAD MAINTAINED. CHANGES SHALL BE INCORPORATED BY THE DESIGN ACTIVITY.

REVISIONS			
LTR	DESCRIPTION	DATE	APPROVED

NOTES UNLESS OTHERWISE SPECIFIED:

1. INTERPRET DRAWING IAW MIL-STD-100.
2. WELD IAW MIL-W-22248 CLASS 4 USING WIRE CLASS ER 5356 IAW AWS A5.10. POSITIONAL QUALIFICATION OF WELDERS SHALL BE IAW MIL-STD-1595, ALTERNATE USE MIL-STD-248.
3. CHEMICAL FILM IAW MIL-C-5541 CLASS 1A GOLD.
4. SILKSCREEN NOMENCLATURE (HELVETICA BOLD 58 POINT 99.5% WIDTH) USING BLACK EPOXY INK CONFORMING TO MIL-I-43553 TYPE 1 FRONT AND RIGHT SIDES ONLY.
5. DIMENSION S.P.C. CONTROLLED RMS >1.33. AT TANGENT AREA
   USL: +.025
   TARGET: AS DIMENSIONED FREQUENCY = 10:1
   LSL: -.025
6. GRIND WELD AT TONGUE WITHIN .015 OF PARENT METAL ON SIDES, WELD TO BE FLAT AT TOP OF SEALING EDGE.
7. TOLERANCES IAW ANSI H35.2 UNLESS OTHERWISE NOTED, ALL CORNERS ARE .010 R.

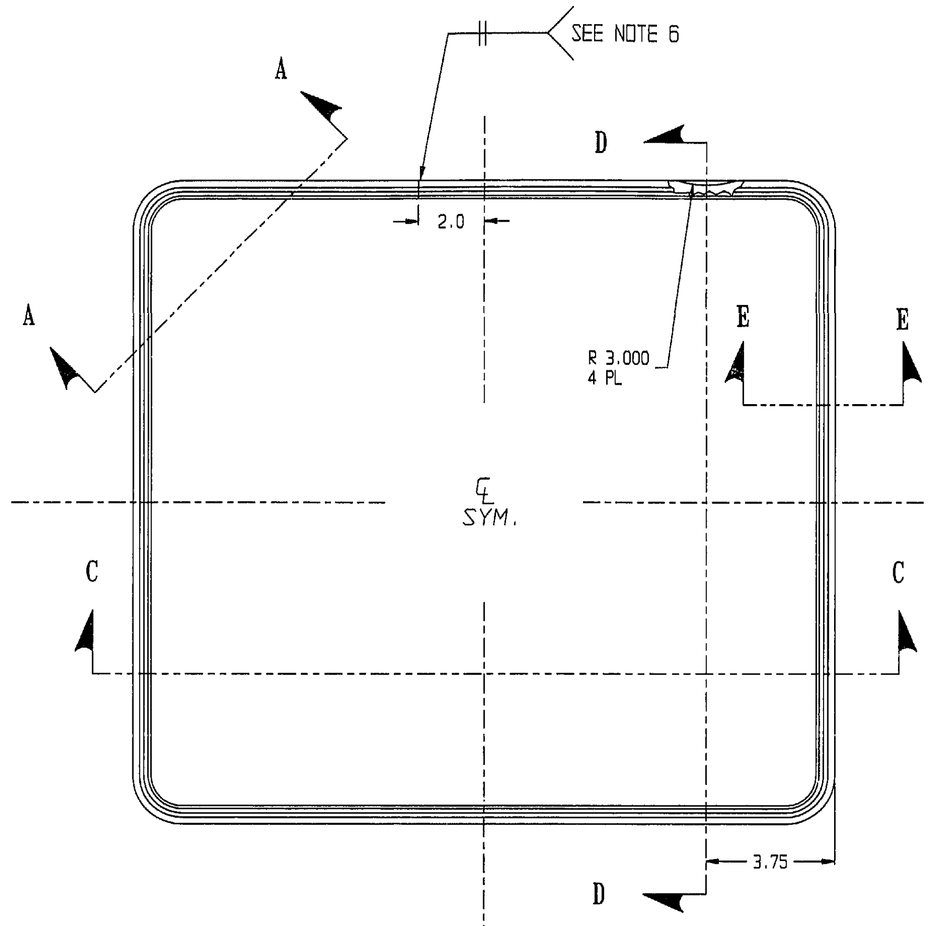

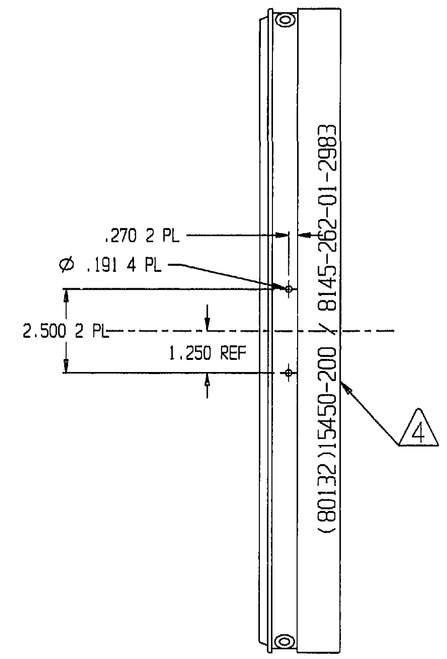

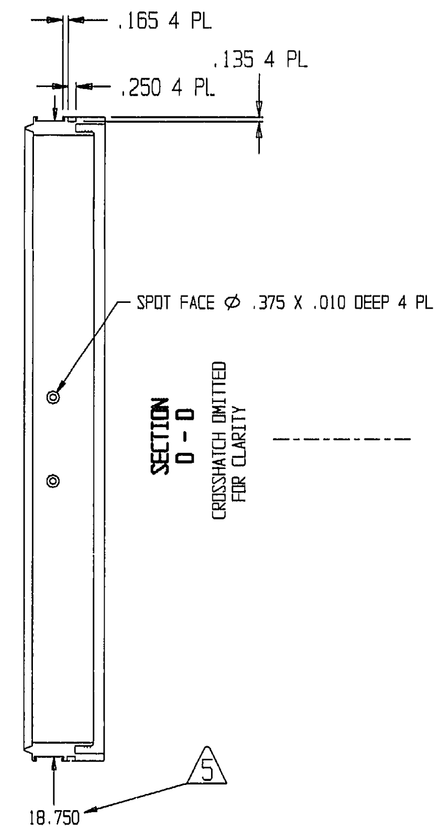

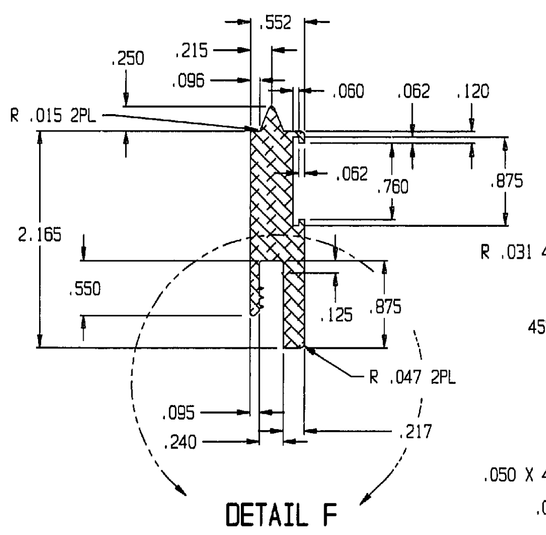

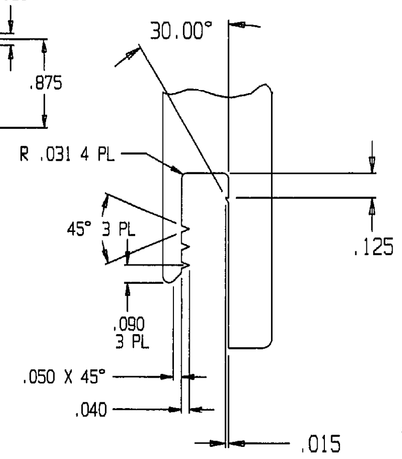

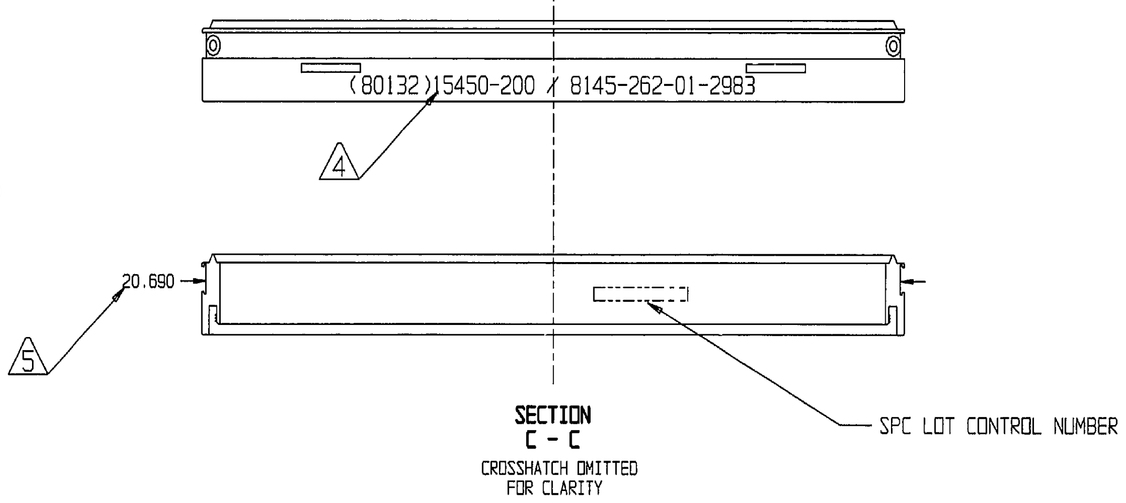

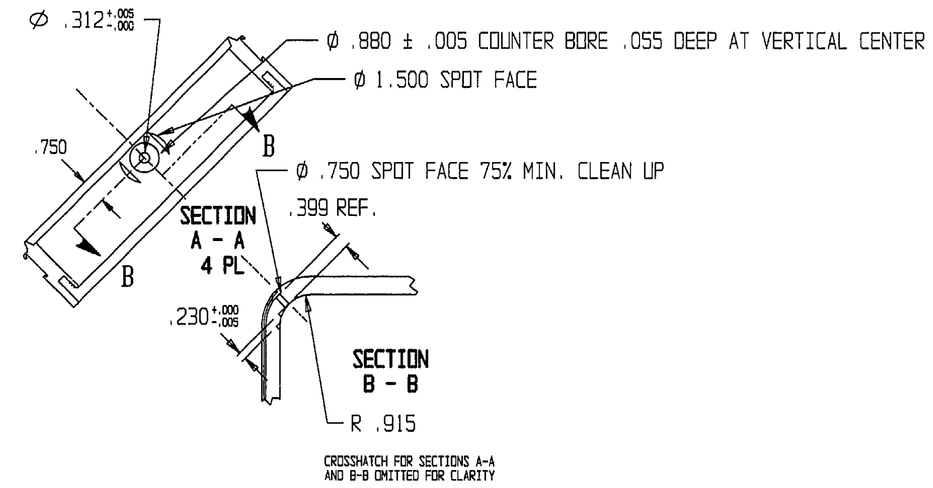

SECTION E - E
1/1
SEE NOTE 7

DETAIL F
2X

SECTION
C - C
CROSSHATCH OMITTED
FOR CLARITY

FIND NO.	QTY REQD	CAGE CODE	PART NO. OR IDENTIFYING NO.	NOMENCLATURE OR DESCRIPTION	SPECIFICATION	NOTE

PARTS LIST

UNITED STATES PATENT 4,546,874 HAS BEEN GRANTED ON THE PROJECTION WHICH CREATES A DYNAMIC SEAL WHEN ASSEMBLED WITH A COLD FLOWING MATERIAL.

UNITED STATES PATENT 4,712,685 HAS BEEN GRANTED FOR AN EQUIPMENT SHOCK MOUNTING MEANS FOR UTILIZATION WITH A CONTAINER FORMED OF PLASTIC.

REVISION		
SHEET		

SHEET REVISION RECORD

NEXT ASSY	USED ON
3321AS201	DL 3321AS200

APPLICATION

UNLESS OTHERWISE SPECIFIED:
DIMENSIONS ARE IN INCHES
TOLERANCES ON:
FRACTIONS ± DECIMALS ± .10 .010 ANGLES ± 30'°

MATERIAL:
6063-T52 PER
ASTM B221/B221M

CONTRACT NO. N00383-90-C-7642
DEPARTMENT OF THE NAVY
AVIATION SUPPLY OFFICE
700 ROBBINS AVE.
PHILADELPHIA, PA. 19111

DRAWN J. KIRCHHAN
CHECKED J.K.
REVIEWED MOREY
APPROVED
APPROVED FOR NAV AIR SYS COM
BY DIRECTION 3/19/95 DATE

DEPARTMENT OF THE NAVY
NAVAL AIR SYSTEMS COMMAND
WASHINGTON, D.C. 20360

CLOSURE, BASE

SIZE	CAGE CODE	DWG NO.
D	30003	3321AS205

SCALE 1/3 SHEET 1 OF 1

WHEN REFERRING TO THIS DRAWING STATE DRAWING NO., APPLICABLE ISSUE LETTER IF ANY, AND DATE

NAVSUP

NAVAL SUPPLY SYSTEMS COMMAND

NAVAL INVENTORY CONTROL POINT

ENGINEERING CHANGE ORDER

1. ECO NO.: O- 138

2. DRAWING/PART NO.	3. NOMENCLATURE	4. CURRENT REVISION
332185205	Closure, Base	

5. CUSTOMER	6. CUSTOMER DWG NO.	7. NEXT HIGHER ASSEMBLY NO.	8. END ITEM PRODUCT I.D.
NAVICP			15450-200

9. RN/SVR NO.	10. ECO REQUIRED BY:	11. ORIGINATOR	DATE
	NAVICP (80132)	Robert Steel 0771	8/3/05

12. DESCRIPTION OF CHANGE (WAS / IS):

See attached

13. REASON FOR CHANGE [INCLUDE JUSTIFICATION AND BACKUP DATA (IF AVAILABLE)]:

Inside dimensions are direct measurements
Change notes to define requirements

☒ VALUE ENGINEERING ☒ SPEC CHANGE ☒ CORRECTIONS ☐ IN-SERVICE ☐ SAFETY ☐ NEW DRAWING

14. DESIGN ENG. RECOMMENDS:	☐ CLASS 1 - MAJOR	17. ANALYSIS ENGINEER (As Required)	DATE
☐ FUTURE INCORP. (REASON):		18. DE PEER REVIEW (As Required)	DATE
☐ APPROVED AS REQUESTED	☐ DISAPPROVED 15. DE INITIALS	19. DESIGN ENGINEER	DATE
☐ STOP NOTICE ISSUED	16. ☐ FORMAL CCB REQUIRED	20. ENG MGT	DATE

21. PROGRAM MANAGEMENT *CUSTOMER INTERFACE REQUIREMENTS*	✔	22. DE CHECKS AREAS THAT REQUIRE REVIEW/CONCURRENCE
NOTIFY CUSTOMER ☐	☐	MANUFACTURING ENGINEERING
Note: Customer or FAA notification required on all PMA parts.	☐	MATERIALS AND PROCESSES
APPROVAL REQUIRED ☐	☐	QUALITY ENGINEERING
CDRL REFERENCE:	☐	ILS/R&M
CONTRACT NO.	☐	ECO ORIGINATOR (IF NOT DE) Robert Steel
RISK RELEASE ☐	☐	OTHER (SPECIFY)
NO. COPIES TO CUSTOMER	✔	CONFIGURATION MGT MGR (LAST)
PROGRAM MANAGER SIGNATURE		25. DRAFTING
		26. ENGINEERING CHECK Robert Steel

23. PLANNED EFFECTIVITY

LOT: DATE: S/N

MATERIAL DISTRIBUTION & DISPOSITION	ORDER/LOT	QUANTITY	USE	CHANGE	SCRAP
a. FIELD		☐	☐	☐	☐
b. STORES		☐	☐	☐	☐
c. WIP BEYOND		☐	☐	☐	☐
d. WIP NOT BEYOND		☐	☐	☐	☐
e. NEXT RELEASE				☐	

MATERIAL PLANNING SIGNATURE

24. CUSTOMER/DCMC CONCURRENCE	27. RLSD DWG REV.	28. CM RELEASE	30. DOCUMENT RELEASE

31. COMMENTS

29. DISTRIBUTION CODE

NAVSUP NAVAL SUPPLY SYSTEMS COMMAND

NAVAL INVENTORY CONTROL POINT

ENGINEERING CHANGE REQUEST/ORDER (CONTINUATION SHEET)

1. ECR NO.: 0-138

2. DWG/PART NO.	3. NOMENCLATURE	4. CURRENT REV.
3321AS205	Closure, Base	

5. CONTINUATION ITEMS

Drawing 3321AS205 Sheet 1, Zone D-8

Change Notes to:

(1 thru 5 with Note 1 through 10)

NOTES:

1. CLEANING:
PARTS TO BE WELDED SHALL BE CHEMICALLY CLEANED TO REMOVE SURFACE SOILS SUCH AS OILS, WAXES, GREASE, INKS, ETC. PER MIL-C-5541. EXCEPT THAT UNINHIBITED ALKALINE SOLUTIONS SHALL NOT BE USED.

2. DEOXIDIZING:
THE CLEANED PARTS SHALL BE CHEMICALLY DEOXIDIZED NO MORE THEN 10 DAYS PRIOR TO WELDING TO REMOVE THICK SURFACE OXIDE FILMS. (IF THE MATERIAL OR WORK IS EXPOSED TO AN OUTDOOR ENVIRONMENT, THIS TIME LIMIT SHALL BE REDUCED TO A MAXIMUM OF 3 DAYS TO ACCOUNT FOR ATMOSPHERIC EFFECTS). MECHANICAL CLEANING METHODS SHALL BE APPLIED JUST PRIOR TO THE ACTUAL START OF WELDING, TO REMOVE ANY REOXIDATION OR RESIDUAL THIN OXIDE FILMS.

3. CHEMICAL TREATMENT:
EITHER IMMERSION OR BRUSHING/WIPING SHALL APPLY AN ACID DEOXIDIZING TREATMENT, DEOXIDIZERS ACCEPTABLE FOR USE SHALL INCLUDE NITRIC ACID, SULFURIC CHROMIC, PHOSPHORIC CHROMIC OR EQUIVALENT SOLUTIONS. SODIUM HYDROXIDE SOLUTIONS SHALL NOT BE USED. CARE SHALL BE TAKEN TO ASSURE 100% SOLUTION COVERAGE OF THE AREA TO BE WELDED. TO ALLOW AN ADEQUATELY SIZED DEOXIDIZED AREA FOR GOOD WELDING. THE SOLUTION SHALL BE APPLIED TO AN AREA EXTENDING AT LEAST 2 INCHES FROM THE WELD SITE, OR ENDING AT ANY CLOSER ADJACENT EDGE.

NAVSUP NAVAL SUPPLY SYSTEMS COMMAND

NAVAL INVENTORY CONTROL POINT

ENGINEERING CHANGE REQUEST/ORDER (CONTINUATION SHEET)

1. ECR NO.: 0-138

2. DWG/PART NO.	3. NOMENCLATURE	4. CURRENT REV.
3321A5205	Closure, Base	

5. CONTINUATION ITEMS

Drawing 3321A5205 Sheet 1, Zone D-8 Change Notes to: (cont.)

4. WELDING ALUMINUM:
WELDING AND WELD INSPECTION SHALL BE IN ACCORDANCE WITH MIL-W-22248, CLASS 4, OR AWS D1.2 AND A WELD SPECIFICATION PROCEDURE (WPS). A WELDING REWORK SPECIFICATION PROCEDURE AND A WELD INSPECTION PROCEDURE SHALL ALSO BE USED.
EXCEPTIONS:
(1) VISUAL INSPECTION SHALL INCLUDE 5X (5 POWER) MAGNIFICATION WHEN SUSPECT CONDITION IS TO BE EXAMINED BEYOND THE CAPABILITY OF NORMAL VISION.
(2) CRITICAL AND MAJOR WELDS MAY BE SUBJECTED TO FURTHER NON-DESTRUCTIVE TESTING (SUCH AS DYE PENETRANT INSPECTION) AS PERSCRIBED BY THE BUYING ACTIVITY.
PROPER CONTROLS SHALL BE USED TO PREVENT MELT THROUGH OR BURN THROUGH. WELDER QUALIFICATIONS SHALL BE TO AMS-STD-1595, ALTERNATE D1.2. FILLER FOR WELDING 6000 SERIES SHALL BE ER-4043 PER AWS A5.10 FILLER FOR WELDING 5000 SERIES TO THEMSELVES OR TO 6000 SERIES SHALL BE ER-5356 OR ER-5556 PER AWS A5.10

5. CHEMICAL CONVERSION COATING (CHEMFILM), COLOR GOLD, IN ACCORDANCE WITH MIL-C-5541, CLASS 1A, AFTER WELDING.

6. SILKSCREEN NOMENCLATURE (HELVETICA BOND 58 POINT 99.5% WIDTH) EPOXY INK CONFORMING TO A-A-56032 TYPE I, COLOR BLACK PER FED-STD-595, COLOR NUMBER 17038, AS SHOWN (FRONT & RIGHT SIDES)

7. DIMENSION S.P.C. CONTROLLED RMS >1.33 AT TANGENT AREA
USD +.020
TARGET: AS DIMENSIONED
FREQUENCY = 10:1
LSD -.020

8. GRIND MATING SURFACES OF SEALING FLANGE AND TONGUE FLUSH WITH PARENT METAL.

9. EXTRUSION TOLERANCES SHALL APPLY IN ACCORDANCE WITH ANSI H35.2-2000 UNLESS OTHERWISE SPECIFIED. ALL CORNERS ARE .010 RADIUS.

10. INTERPRET DRAWING AND REVISIONS IN ACCORDANCE WITH ASME Y14.100, ASME Y14.24, ASME Y14.34, AND ASME Y14.35

NAVSUP

NAVAL SUPPLY SYSTEMS COMMAND

NAVAL INVENTORY CONTROL POINT

ENGINEERING CHANGE REQUEST/ORDER (CONTINUATION SHEET)

1. ECR NO.: 0-138

2. DWG/PART NO.	3. NOMENCLATURE	4. CURRENT REV.
3321A5205	Closure, Base	

5. CONTINUATION ITEMS

Drawing 3321A5205, Sheet 1, Zone B-6, B-5, D-5, B-3, C-3, A-8
Change Weld Flag Note to: "See Note 8"
Change Section E-E "See Note 7" to: "See Note 9"
Delete Flag Note 5
Change 20.690 & 18.750 to Ref.
Add 19.830 & 17.890 Inside Dimensions (As shown)
Add Flag Note 7 to 19.830 & 17.890

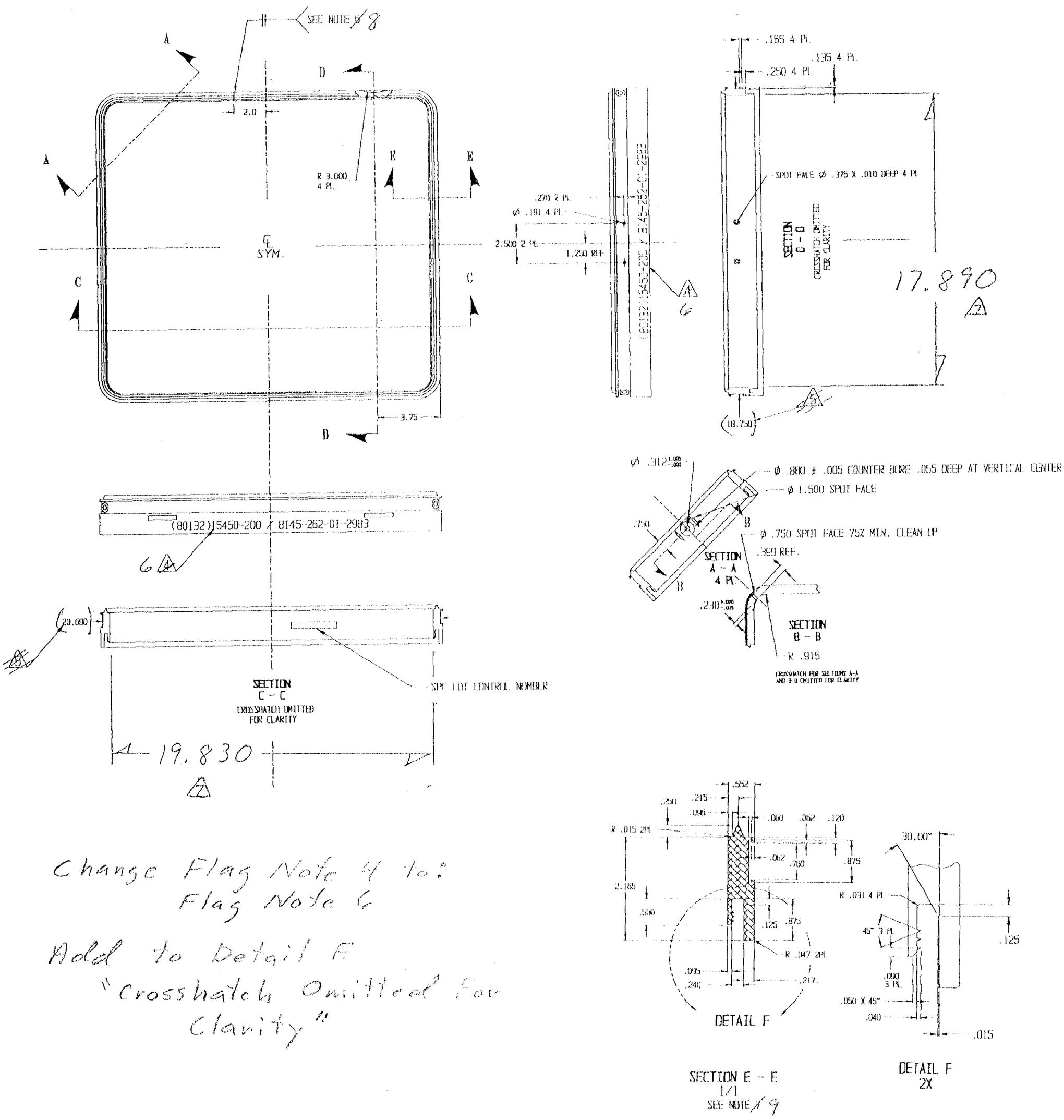

Change Flag Note 4 to:
Flag Note 6

Add to Detail F
"Crosshatch Omitted for Clarity"

DISTRIBUTION STATEMENT A.
APPROVED FOR PUBLIC RELEASE;
DISTRIBUTION IS UNLIMITED

CAD MAINTAINED. CHANGES SHALL BE INCORPORATED BY THE DESIGN ACTIVITY.

REVISIONS			
LTR	DESCRIPTION	DATE	APPROVED

NOTES: UNLESS OTHERWISE SPECIFIED

1. INTERPRET DRAWING IN ACCORDANCE WITH MIL-STD-100.
2. NOMINAL WALL THICKNESS .190
3. DIMENSIONS TO RADII ARE TO INTERSECTIONS OF.
4. SPC DATA REQUIRED. ALL MEASUREMENTS FROM WITHIN .5" RADIUS OF NON MACHINED FREE FORMED POINT SHOWN, 4 SIDES.
   USL = .222
   TARGET = .187 MIN. FREQUENCY 10:1
   LSL = .142

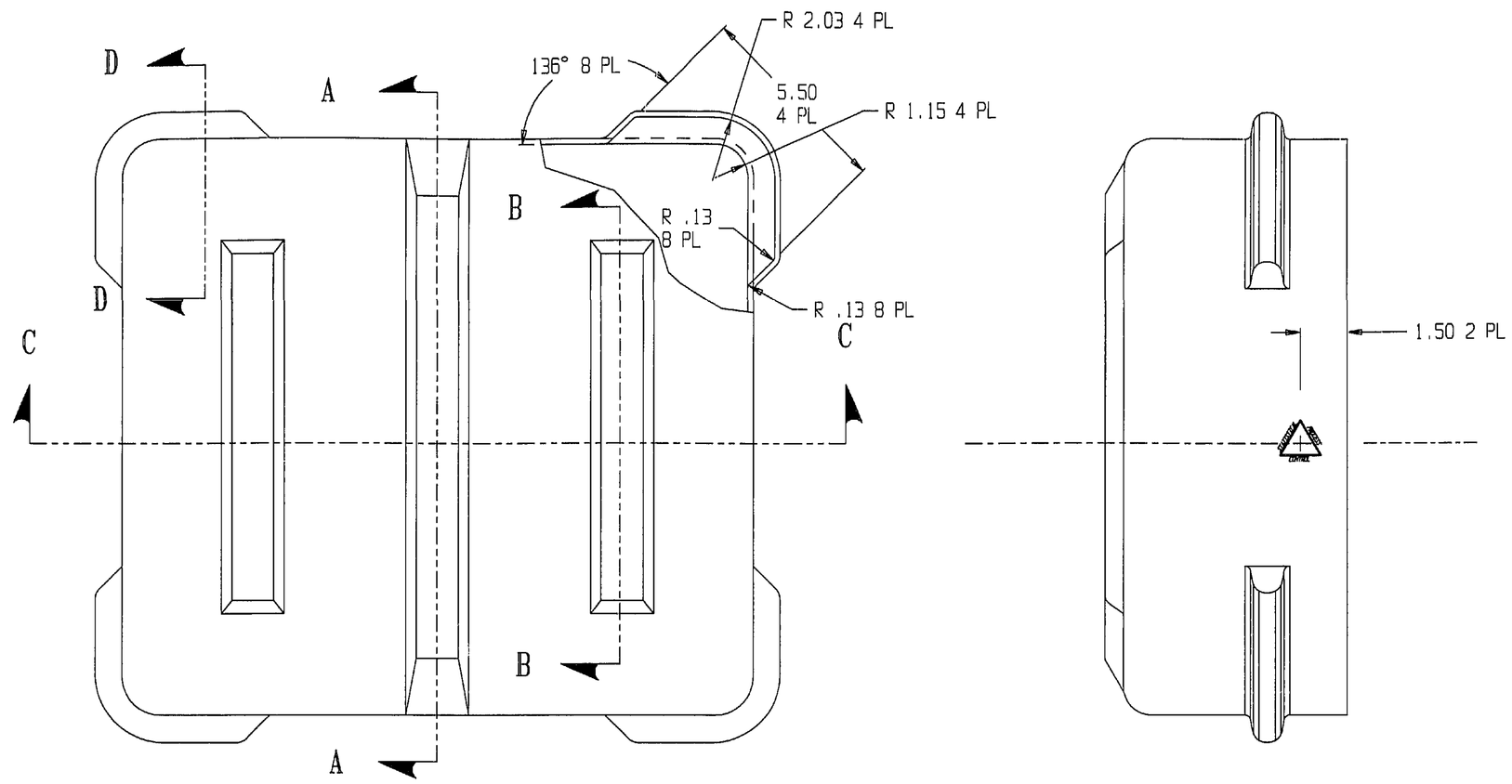

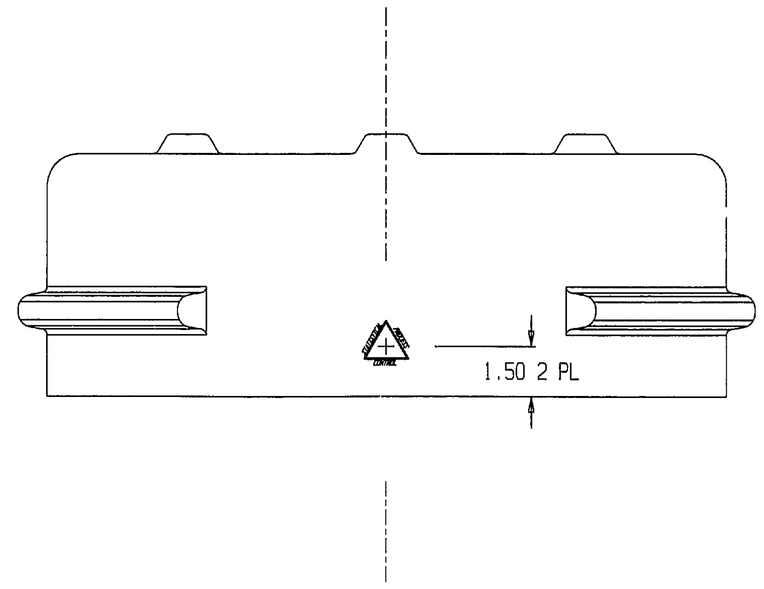

FIND NO.	QTY REQD	CAGE CODE	PART NO. OR IDENTIFYING NO.	NOMENCLATURE OR DESCRIPTION	SPECIFICATION	NOTE

PARTS LIST

REVISION	–	–
SHEET	1	2

SHEET REVISION RECORD

3321AS202	DL 3321AS200
NEXT ASSY	USED ON

APPLICATION

UNLESS OTHERWISE SPECIFIED:
DIMENSIONS ARE IN INCHES
TOLERANCES ON:

FRACTIONS	DECIMALS	ANGLES
±	± .04 / .010	± 30' °

MATERIAL:

SEE DWG. 3321AS013

CONTRACT NO. N00383-90-C-7642

DEPARTMENT OF THE NAVY
AVIATION SUPPLY OFFICE
700 ROBBINS AVE.
PHILADELPHIA, PA. 19111

DRAWN J. KIRCHHAN
CHECKED J.K.
REVIEWED MOREY
APPROVED
APPROVED FOR NAV AIR SYS COM
BY DIRECTION — DATE 3/12/92

DEPARTMENT OF THE NAVY
NAVAL AIR SYSTEMS COMMAND
WASHINGTON, D.C. 20360

SHELL, LID

SIZE	CAGE CODE	DWG NO.
D	30003	3321AS206

SCALE 1/3 — SHEET 1 OF 2

WHEN REFERRING TO THIS DRAWING STATE DRAWING NO., APPLICABLE ISSUE LETTER IF ANY, AND DATE

DISTRIBUTION STATEMENT A.
APPROVED FOR PUBLIC RELEASE;
DISTRIBUTION IS UNLIMITED

CAD MAINTAINED. CHANGES SHALL BE INCORPORATED BY THE DESIGN ACTIVITY.

REVISIONS			
LTR	DESCRIPTION	DATE	APPROVED

NOTE: ALL CROSSHATCH OMITTED FOR CLARITY.

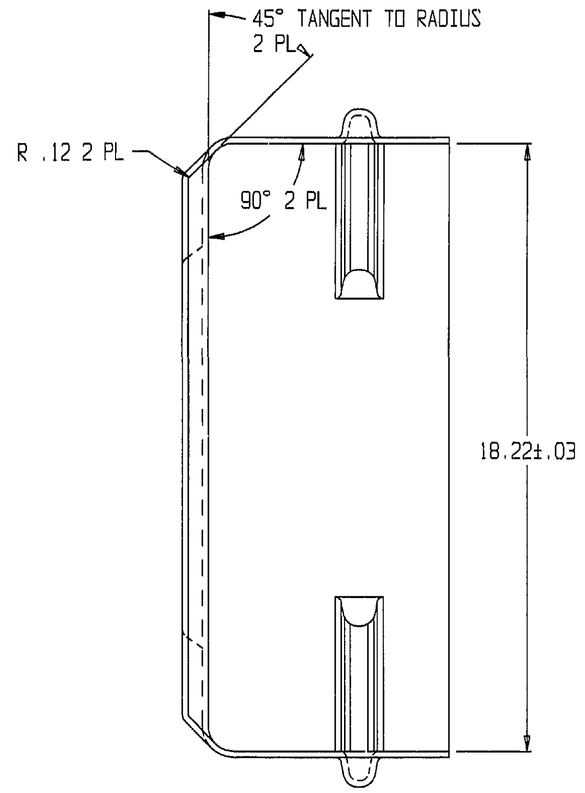

SECTION
A - A

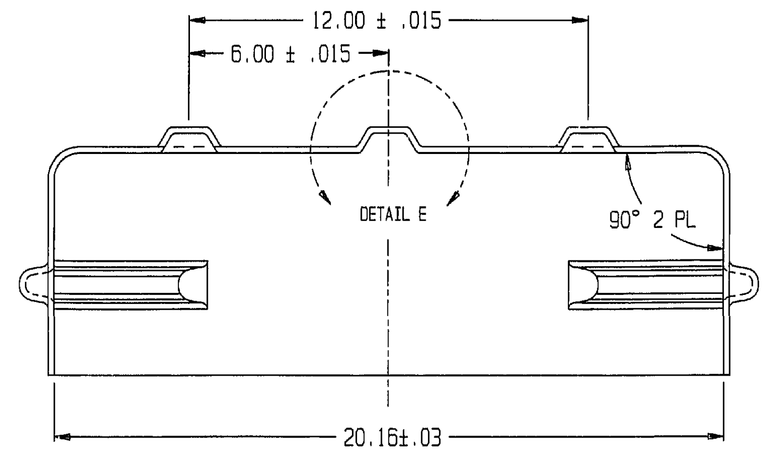

SECTION
C - C

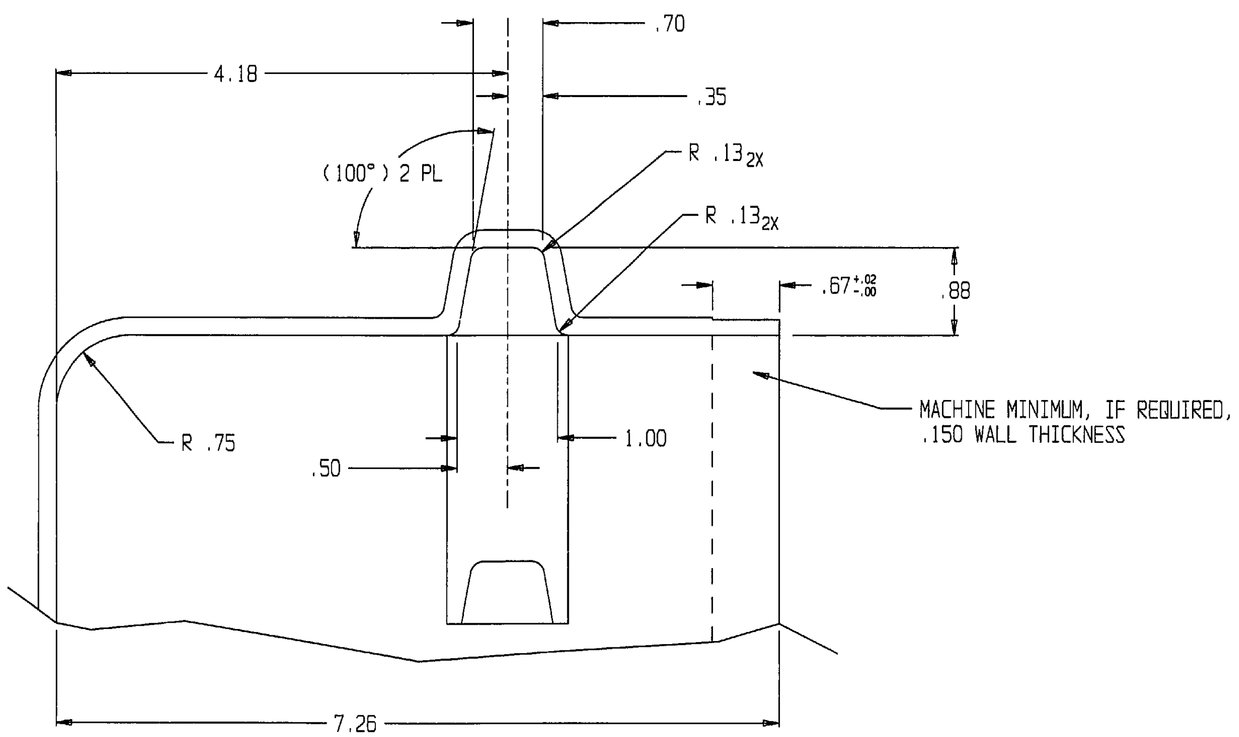

SECTION
D - D
1/1
4 PL

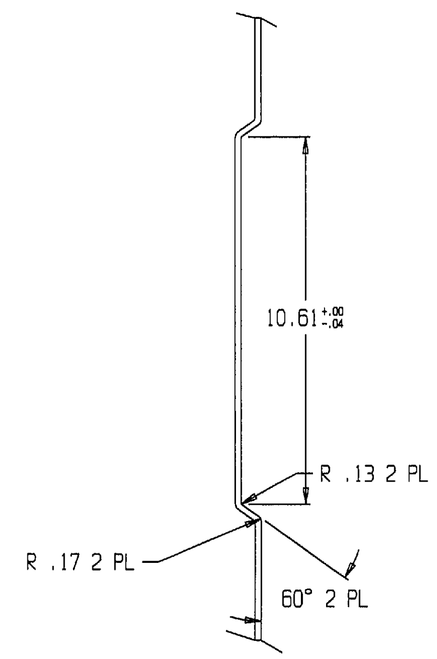

SECTION
B - B
2 PL

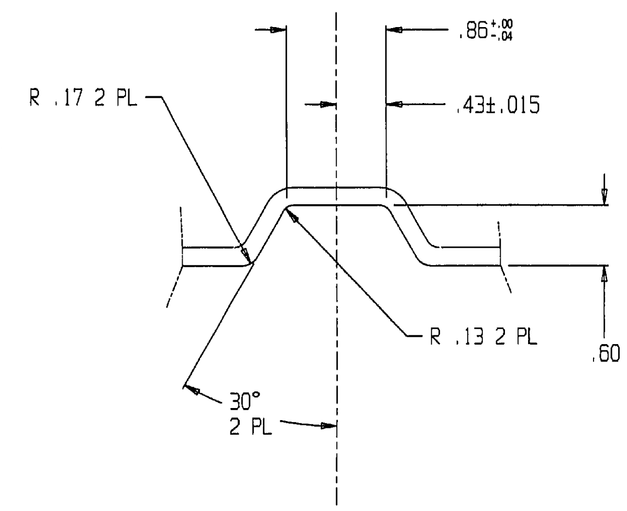

DETAIL E
1/1
3 PL

DRAWN J. KIRCHHAN	REVIEWED MOREY	SIZE D	CAGE CODE 30003	DWG NO. 3321AS206
CHECKED J.K.	APPROVED	SCALE 1/3		SHEET 2 OF 2

NAVSUP

NAVAL SUPPLY SYSTEMS COMMAND

NAVAL INVENTORY CONTROL POINT

ENGINEERING CHANGE ORDER

1. ECO NO.: O- 139

2. DRAWING/PART NO.	3. NOMENCLATURE	4. CURRENT REVISION
3321A5206	Shell, Lid	

5. CUSTOMER	6. CUSTOMER DWG NO.	7. NEXT HIGHER ASSEMBLY NO.	8. END ITEM PRODUCT I.D.
NAVICP			15450-200

9. RN/SVR NO.	10. ECO REQUIRED BY:	11. ORIGINATOR	DATE
	NAVICP (80132)	Robert Steel 0771	8/3/05

12. DESCRIPTION OF CHANGE (WAS / IS):

Drawing 3321A5206 Sheet 2, Zone D-8
Delete Crosshatch note
Add to Section Views & Section Details
"Crosshatch Omitted For Clarity"

13. REASON FOR CHANGE [INCLUDE JUSTIFICATION AND BACKUP DATA (IF AVAILABLE)]:

Clarification of Notes

☐ VALUE ENGINEERING ☒ SPEC CHANGE ☒ CORRECTIONS ☐ IN-SERVICE ☐ SAFETY ☐ NEW DRAWING

14. DESIGN ENG. RECOMMENDS:	☐ CLASS 1 - MAJOR	17. ANALYSIS ENGINEER (As Required)	DATE
☐ FUTURE INCORP. (REASON):		18. DE PEER REVIEW (As Required)	DATE
☐ APPROVED AS REQUESTED	☐ DISAPPROVED 15. DE INITIALS	19. DESIGN ENGINEER	DATE
☐ STOP NOTICE ISSUED	16. ☐ FORMAL CCB REQUIRED	20. ENG MGT	DATE

21. PROGRAM MANAGEMENT *CUSTOMER INTERFACE REQUIREMENTS*	✔	22. DE CHECKS AREAS THAT REQUIRE REVIEW/CONCURRENCE
NOTIFY CUSTOMER ☐	☐	MANUFACTURING ENGINEERING
Note: Customer or FAA notification required on all PMA parts.	☐	MATERIALS AND PROCESSES
APPROVAL REQUIRED ☐	☐	QUALITY ENGINEERING
CDRL REFERENCE:	☐	ILS/R&M
CONTRACT NO.	☐	ECO ORIGINATOR (IF NOT DE)
RISK RELEASE ☐	☐	OTHER (SPECIFY)
NO. COPIES TO CUSTOMER	✔	CONFIGURATION MGT MGR (LAST)
PROGRAM MANAGER SIGNATURE		25. DRAFTING
		26. ENGINEERING CHECK

23. PLANNED EFFECTIVITY

LOT: DATE: S/N

MATERIAL DISTRIBUTION & DISPOSITION	ORDER/LOT	QUANTITY	USE	CHANGE	SCRAP
a. FIELD		☐	☐	☐	☐
b. STORES		☐	☐	☐	☐
c. WIP BEYOND		☐	☐	☐	☐
d. WIP NOT BEYOND		☐	☐	☐	☐
e. NEXT RELEASE				☐	

MATERIAL PLANNING SIGNATURE

24. CUSTOMER/DCMC CONCURRENCE	27. RLSD DWG REV.	28. CM RELEASE	30. DOCUMENT RELEASE

31. COMMENTS

29. DISTRIBUTION CODE

NAVSUP NAVAL SUPPLY SYSTEMS COMMAND

NAVAL INVENTORY CONTROL POINT

ENGINEERING CHANGE REQUEST/ORDER (CONTINUATION SHEET)

1. ECR NO.: 0 - 139

2. DWG/PART NO.	3. NOMENCLATURE	4. CURRENT REV.
3321A5206	Shell, Lid	

5. CONTINUATION ITEMS

Drawing 3321A5206 Sheet 1, Zone D-8

Change Notes to:

NOTES:

1. NOMINAL WALL THICKNESS IS .187.

2. SPC DATA REQUIRED: MEASUREMENTS SHALL BE TAKEN FROM NON-MACHINED FREE FORMED POINTS, AS SHOWN, ON ALL 4 SIDES WITHIN .5 INCH OF THAT POINT.
   USL = .222
   TARGET = .187
   FREQUENCY = 10:1
   LSL = .142

3. DIMENSIONS OF RADII ARE FROM CENTER, SURFACES TO BE TANGENT TO RADII.

4. INTERPRET DRAWING AND REVISIONS IN ACCORDANCE WITH ASME Y14.100, ASME Y14.24, ASME Y14.34, AND ASME Y14.35

DISTRIBUTION STATEMENT A.
APPROVED FOR PUBLIC RELEASE;
DISTRIBUTION IS UNLIMITED

CAD MAINTAINED. CHANGES SHALL BE INCORPORATED BY THE DESIGN ACTIVITY.

REVISIONS			
LTR	DESCRIPTION	DATE	APPROVED

NOTES: UNLESS OTHERWISE SPECIFIED

1. INTERPRET DRAWING IN ACCORDANCE WITH MIL-STD-100.
2. NOMINAL WALL THICKNESS .190
3. DIMENSIONS TO RADII ARE TO INTERSECTIONS OF.
4. SPC DATA REQUIRED. ALL MEASUREMENTS FROM WITHIN .5" RADIUS OF NON MACHINED FREE FORMED POINT SHOWN, 4 SIDES.
   USL = .222
   TARGET = .187 MIN. FREQUENCY 10:1
   LSL = .142

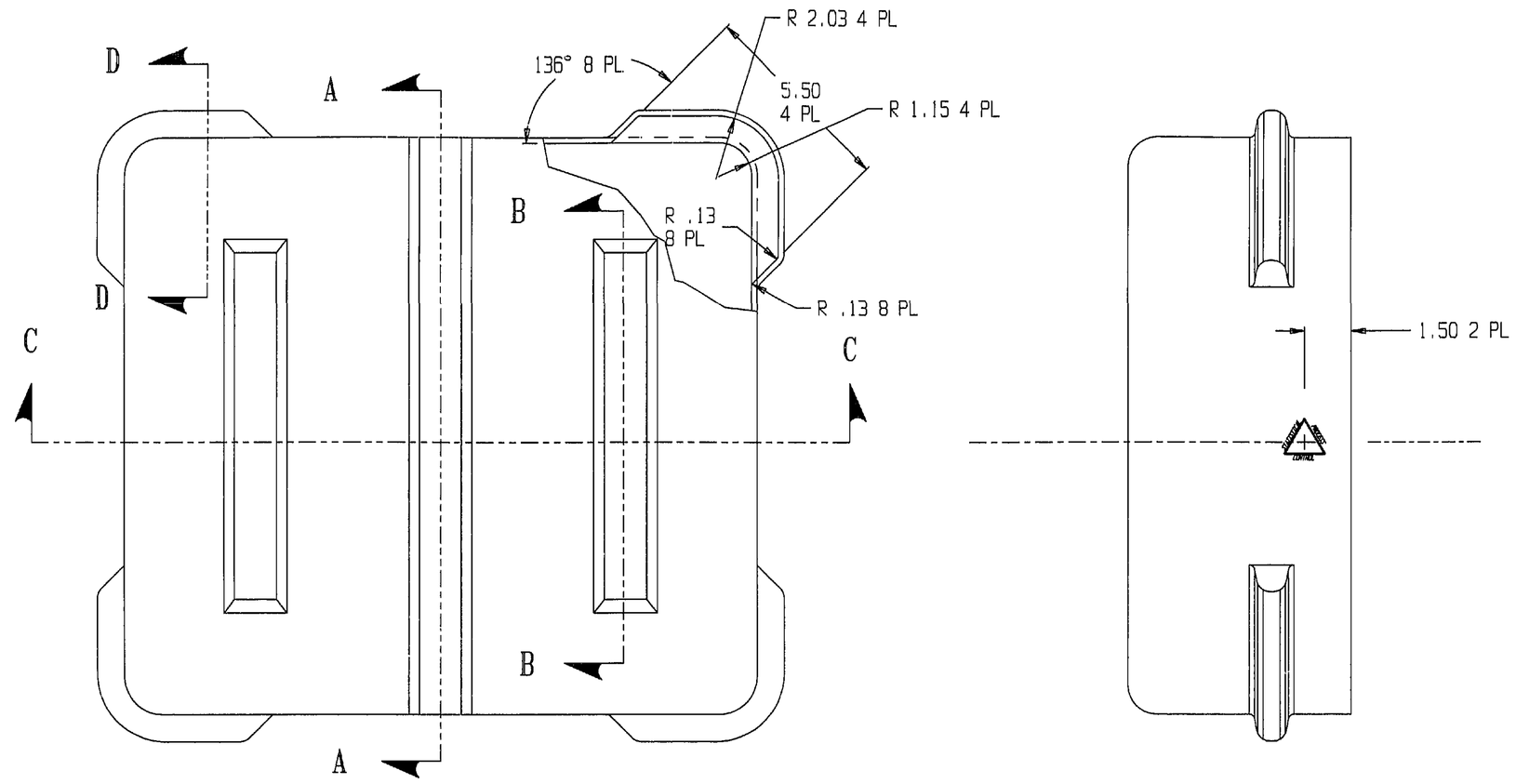

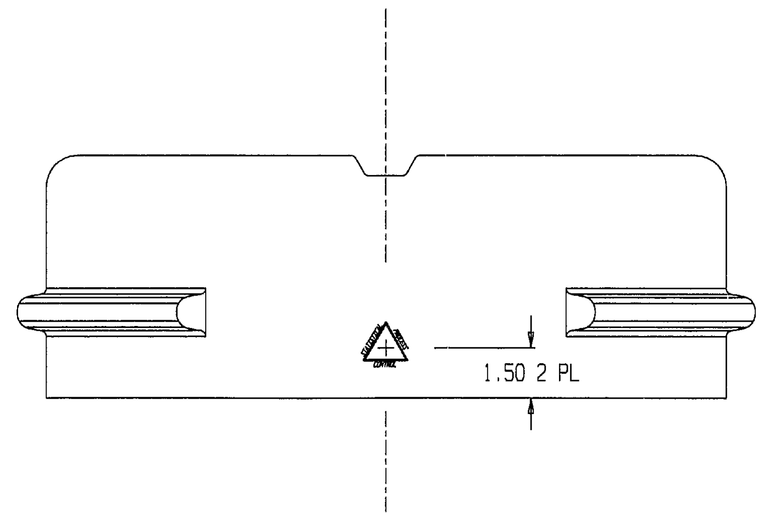

FIND NO.	QTY REQD	CAGE CODE	PART NO. OR IDENTIFYING NO.	NOMENCLATURE OR DESCRIPTION	SPECIFICATION	NOTE

PARTS LIST

REVISION	–	–
SHEET	1	2

SHEET REVISION RECORD

3321AS201	DL 3321AS200
NEXT ASSY	USED ON

APPLICATION

UNLESS OTHERWISE SPECIFIED:
DIMENSIONS ARE IN INCHES
TOLERANCES ON:
FRACTIONS ± DECIMALS .04 .010 ANGLES ± 30'°

MATERIAL:
SEE DWG. 3321AS013

CONTRACT NO. N00383-90-C-7642
DEPARTMENT OF THE NAVY
AVIATION SUPPLY OFFICE
700 ROBBINS AVE.
PHILADELPHIA, PA. 19111

DRAWN J. KIRCHHAN
CHECKED J.K.
REVIEWED MOREY
APPROVED
APPROVED FOR NAV AIR SYS COM
BY DIRECTION 3/19/95 DATE

DEPARTMENT OF THE NAVY
NAVAL AIR SYSTEMS COMMAND
WASHINGTON, D.C. 20360

SHELL, BASE

SIZE	CAGE CODE	DWG NO.
D	30003	3321AS207

SCALE 1/3 SHEET 1 OF 2

WHEN REFERRING TO THIS DRAWING STATE DRAWING NO., APPLICABLE ISSUE LETTER IF ANY, AND DATE

DISTRIBUTION STATEMENT A.
APPROVED FOR PUBLIC RELEASE;
DISTRIBUTION IS UNLIMITED

CAD MAINTAINED. CHANGES SHALL BE INCORPORATED BY THE DESIGN ACTIVITY.

REVISIONS			
LTR	DESCRIPTION	DATE	APPROVED

NOTE: ALL CROSSHATCH OMITTED FOR CLARITY.

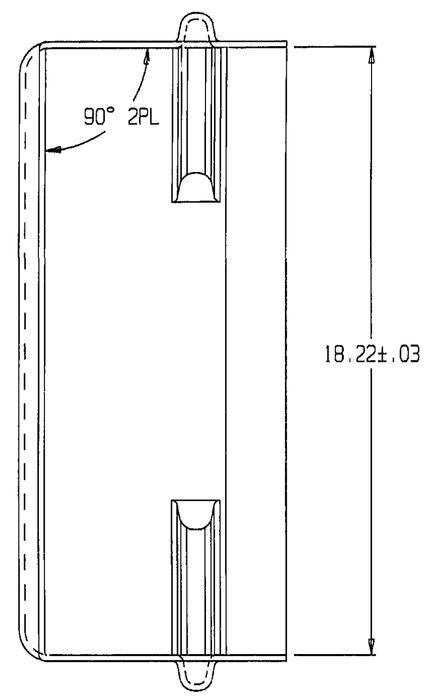

SECTION
A - A

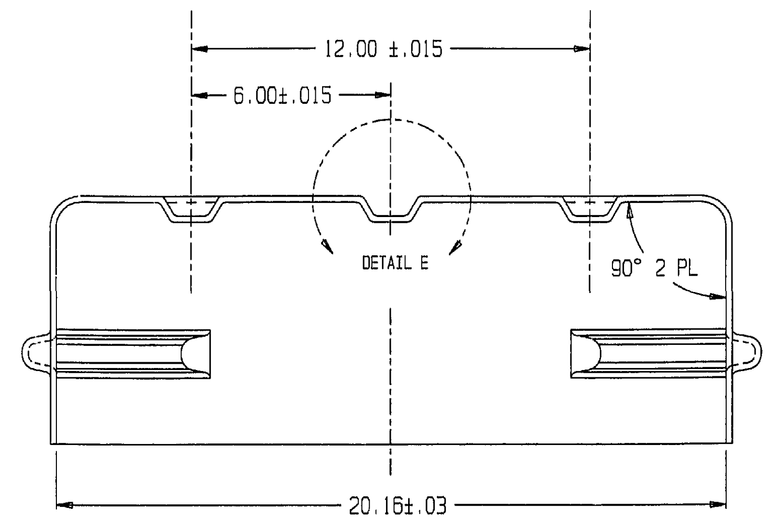

SECTION
C - C

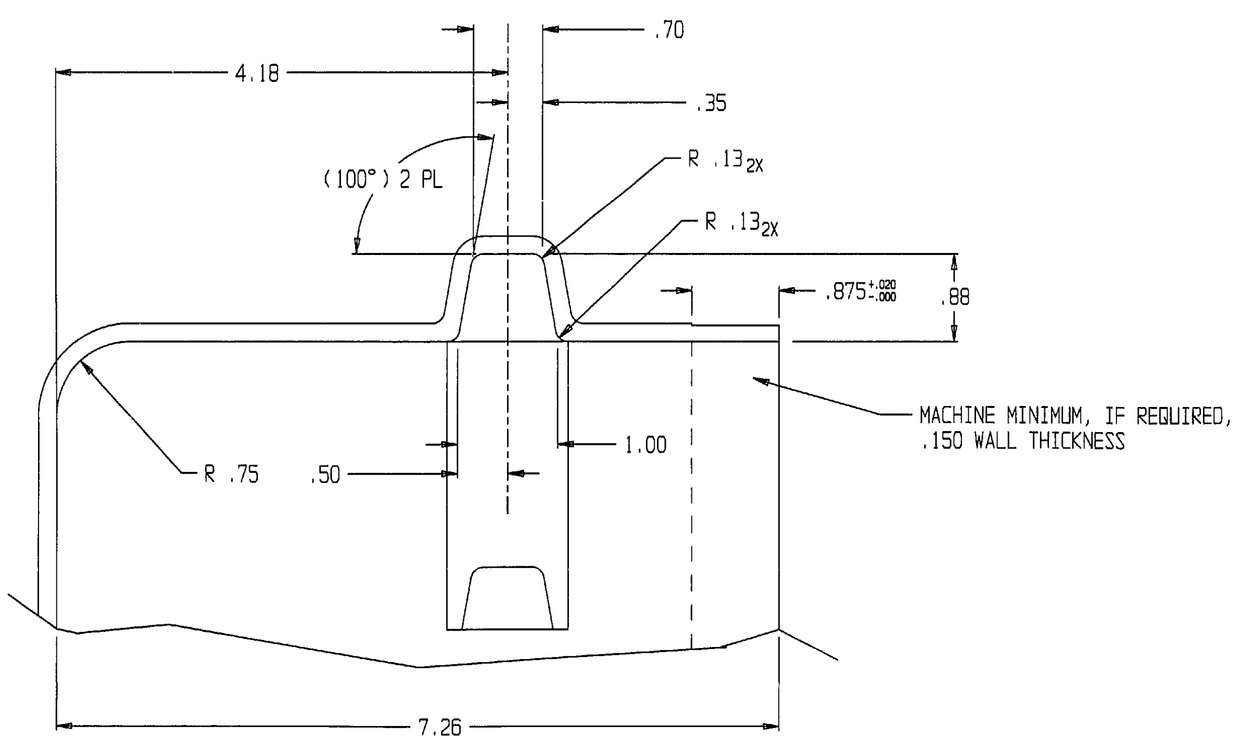

SECTION
D - D
1/1
4 PL

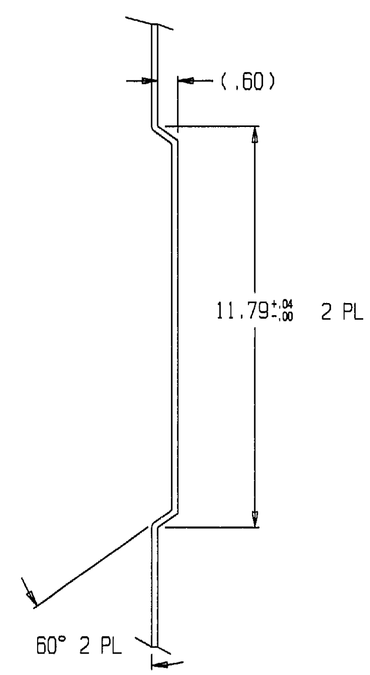

SECTION
B - B
2 PL

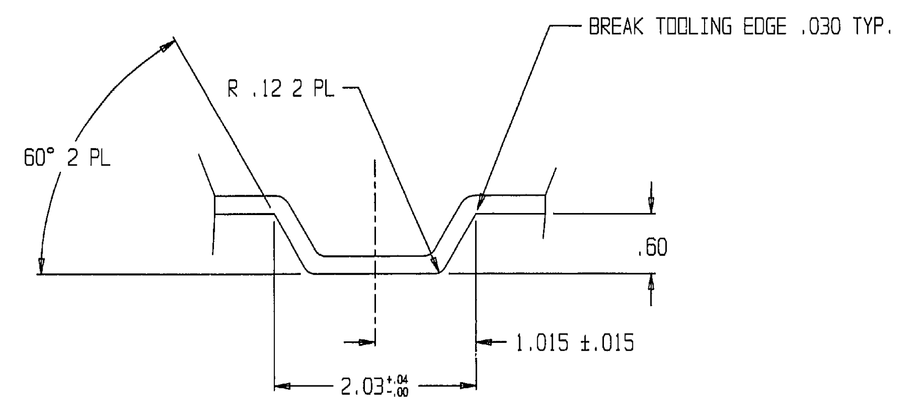

DETAIL E
1/1
3 PL

DRAWN J. KIRCHHAN	REVIEWED MOREY	SIZE D	CAGE CODE 30003	DWG NO. 3321AS207
CHECKED J.K.	APPROVED	SCALE 1/3		SHEET 2 OF 2

NAVSUP NAVAL SUPPLY SYSTEMS COMMAND

NAVAL INVENTORY CONTROL POINT

ENGINEERING CHANGE ORDER

1. ECO NO.: O- 140

2. DRAWING/PART NO.	3. NOMENCLATURE	4. CURRENT REVISION
3321AS207	Shell, Base	

5. CUSTOMER	6. CUSTOMER DWG NO.	7. NEXT HIGHER ASSEMBLY NO.	8. END ITEM PRODUCT I.D.
NAVICP			15450-200

9. RN/SVR NO.	10. ECO REQUIRED BY:	11. ORIGINATOR	DATE
	NAVICP (80132)	Robert Steel 0771	8/3/05

12. DESCRIPTION OF CHANGE (WAS / IS):

Drawing 3321AS207 Sheet 2, Zone D-8
Delete Crosshatch note
Add to Section Views & Section Details
"Crosshatch Omitted For Clarity"

13. REASON FOR CHANGE [INCLUDE JUSTIFICATION AND BACKUP DATA (IF AVAILABLE)]:

Clarification of Notes

☐ VALUE ENGINEERING ☒ SPEC CHANGE ☒ CORRECTIONS ☐ IN-SERVICE ☐ SAFETY ☐ NEW DRAWING

14. DESIGN ENG. RECOMMENDS:	☐ CLASS 1 - MAJOR	17. ANALYSIS ENGINEER (As Required)	DATE
☐ FUTURE INCORP. (REASON):		18. DE PEER REVIEW (As Required)	DATE
☐ APPROVED AS REQUESTED	☐ DISAPPROVED 15. DE INITIALS	19. DESIGN ENGINEER	DATE
☐ STOP NOTICE ISSUED	16. ☐ FORMAL CCB REQUIRED	20. ENG MGT	DATE

21. PROGRAM MANAGEMENT *CUSTOMER INTERFACE REQUIREMENTS*		22. DE CHECKS AREAS THAT REQUIRE REVIEW/CONCURRENCE	✔
NOTIFY CUSTOMER	☐	MANUFACTURING ENGINEERING	☐
Note: Customer or FAA notification required on all PMA parts.		MATERIALS AND PROCESSES	☐
APPROVAL REQUIRED	☐	QUALITY ENGINEERING	☐
CDRL REFERENCE:		ILS/R&M	☐
CONTRACT NO.		ECO ORIGINATOR (IF NOT DE) Robert Steel	☐
RISK RELEASE	☐	OTHER (SPECIFY)	☐
NO. COPIES TO CUSTOMER		CONFIGURATION MGT MGR (LAST)	✔
PROGRAM MANAGER SIGNATURE		25. DRAFTING	
		26. ENGINEERING CHECK Robert Steel	

23. PLANNED EFFECTIVITY

LOT: DATE: S/N

MATERIAL DISTRIBUTION & DISPOSITION	ORDER/LOT	QUANTITY	USE	CHANGE	SCRAP
a. FIELD		☐	☐	☐	☐
b. STORES		☐	☐	☐	☐
c. WIP BEYOND		☐	☐	☐	☐
d. WIP NOT BEYOND		☐	☐	☐	☐
e. NEXT RELEASE				☐	

MATERIAL PLANNING SIGNATURE

24. CUSTOMER/DCMC CONCURRENCE	27. RLSD DWG REV.	28. CM RELEASE	30. DOCUMENT RELEASE

31. COMMENTS	29. DISTRIBUTION CODE

NAVSUP NAVAL SUPPLY SYSTEMS COMMAND

NAVAL INVENTORY CONTROL POINT

ENGINEERING CHANGE REQUEST/ORDER (CONTINUATION SHEET)

1. ECR NO.: 0-140

2. DWG/PART NO.	3. NOMENCLATURE	4. CURRENT REV.
3321A5207	Shell, Base	

5. CONTINUATION ITEMS

Drawing 3321A5207, Sheet 1, Zone D-8

Change Notes to:

NOTES:

1. NOMINAL WALL THICKNESS IS .187.

2. SPC DATA REQUIRED: MEASUREMENTS SHALL BE TAKEN FROM NON-MACHINED FREE FORMED POINTS, AS SHOWN, ON ALL 4 SIDES WITHIN .5 INCH OF THAT POINT.
   USL = .222
   TARGET = .187
   FREQUENCY = 10:1
   LSL = .142

3. DIMENSIONS OF RADII ARE FROM CENTER. SURFACES TO BE TANGENT TO RADII.

4. INTERPRET DRAWING AND REVISIONS IN ACCORDANCE WITH ASME Y14.100, ASME Y14.24, ASME Y14.34, AND ASME Y14.35

DISTRIBUTION STATEMENT A.
APPROVED FOR PUBLIC RELEASE;
DISTRIBUTION IS UNLIMITED

CAD MAINTAINED. CHANGES SHALL BE INCORPORATED BY THE DESIGN ACTIVITY.

REVISIONS			
LTR	DESCRIPTION	DATE	APPROVED

NOTES: UNLESS OTHERWISE SPECIFIED

1. INTERPRET DRAWING IN ACCORDANCE WITH MIL-STD-100.
2. TOLERANCES PER ANSI H35.2 UNLESS OTHERWISE NOTED.

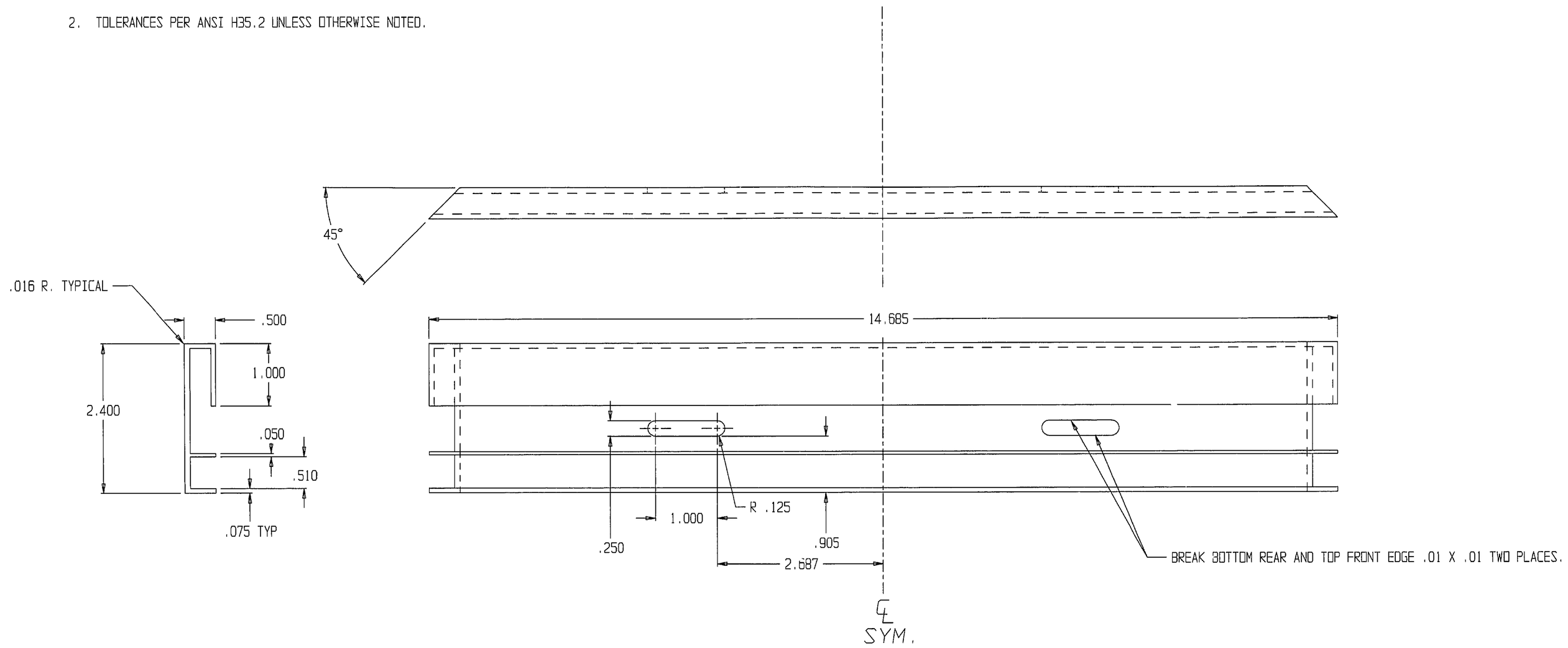

FIND NO.	QTY REQD	CAGE CODE	PART NO. OR IDENTIFYING NO.	NOMENCLATURE OR DESCRIPTION	SPECIFICATION	NOTE

PARTS LIST

REVISION	3321AS203	DL 3321AS200
SHEET	NEXT ASSY	USED ON
SHEET REVISION RECORD	APPLICATION	

UNLESS OTHERWISE SPECIFIED:
DIMENSIONS ARE IN INCHES
TOLERANCES ON:

FRACTIONS	DECIMALS	ANGLES
±	± .10 .010	± 30' °

MATERIAL:
6063-T6 PER
ASTM B221/B221M

CONTRACT NO. N00383-90-C-7642
DEPARTMENT OF THE NAVY
AVIATION SUPPLY OFFICE
700 ROBBINS AVE.
PHILADELPHIA, PA. 19111

DRAWN J. KIRCHHAN
CHECKED J.K.
REVIEWED MOREY
APPROVED
APPROVED FOR NAV AIR SYS COM
BY DIRECTION 3/19/98 DATE

DEPARTMENT OF THE NAVY
NAVAL AIR SYSTEMS COMMAND
WASHINGTON, D.C. 20360

RAIL "E", SLOTTED

SIZE	CAGE CODE	DWG NO.
D	30003	3321AS208
SCALE 1/1		SHEET 1 OF 1

WHEN REFERRING TO THIS DRAWING STATE DRAWING NO., APPLICABLE ISSUE LETTER IF ANY, AND DATE

NAVSUP NAVAL SUPPLY SYSTEMS COMMAND

NAVAL INVENTORY CONTROL POINT

ENGINEERING CHANGE ORDER

1. ECO NO.: O- 141

2. DRAWING/PART NO.	3. NOMENCLATURE	4. CURRENT REVISION
3321AS208	Rail "E" Slotted	

5. CUSTOMER	6. CUSTOMER DWG NO.	7. NEXT HIGHER ASSEMBLY NO.	8. END ITEM PRODUCT I.D.
NAVICP			15450-200

9. RN/SVR NO.	10. ECO REQUIRED BY:	11. ORIGINATOR	DATE
	NAVICP (80132)	Robert Steel 0771	8/3/05

12. DESCRIPTION OF CHANGE (WAS / IS):

Drawing 3321AS208, Sheet 1, Zone D-7
Change Notes to:

1. EXTRUSION TOLERANCES SHALL APPLY IN ACCORDANCE WITH ANSI H35.2-2000 UNLESS OTHERWISE SPECIFIED. ALL CORNERS ARE .016 RADIUS.

2. INTERPRET DRAWING AND REVISIONS IN ACCORDANCE WITH ASME Y14.100, ASME Y14.24, ASME Y14.34, AND ASME Y14.35

13. REASON FOR CHANGE (INCLUDE JUSTIFICATION AND BACKUP DATA (IF AVAILABLE)):

Up date and Clarification of Standards

☐ VALUE ENGINEERING ☐ SPEC CHANGE ☐ CORRECTIONS ☐ IN-SERVICE ☐ SAFETY ☐ NEW DRAWING

14. DESIGN ENG. RECOMMENDS:	☐ CLASS 1 - MAJOR	17. ANALYSIS ENGINEER (As Required)	DATE
☐ FUTURE INCORP. (REASON):		18. DE PEER REVIEW (As Required)	DATE
☐ APPROVED AS REQUESTED	☐ DISAPPROVED 15. DE INITIALS	19. DESIGN ENGINEER	DATE
☐ STOP NOTICE ISSUED	16. ☐ FORMAL CCB REQUIRED	20. ENG MGT	DATE

21. PROGRAM MANAGEMENT *CUSTOMER INTERFACE REQUIREMENTS*		✔	22. DE CHECKS AREAS THAT REQUIRE REVIEW/CONCURRENCE
NOTIFY CUSTOMER	☐	☐	MANUFACTURING ENGINEERING
Note: Customer or FAA notification required on all PMA parts.		☐	MATERIALS AND PROCESSES
APPROVAL REQUIRED	☐	☐	QUALITY ENGINEERING
CDRL REFERENCE:		☐	ILS/R&M
CONTRACT NO.		☐	ECO ORIGINATOR (IF NOT DE) Robert Steel
RISK RELEASE	☐	☐	OTHER (SPECIFY)
NO. COPIES TO CUSTOMER		✔	CONFIGURATION MGT MGR (LAST)
PROGRAM MANAGER SIGNATURE			25. DRAFTING
			26. ENGINEERING CHECK Robert Steel

23. PLANNED EFFECTIVITY

LOT: DATE: S/N

MATERIAL DISTRIBUTION & DISPOSITION	ORDER/LOT	QUANTITY	USE	CHANGE	SCRAP
a. FIELD		☐	☐	☐	☐
b. STORES		☐	☐	☐	☐
c. WIP BEYOND		☐	☐	☐	☐
d. WIP NOT BEYOND		☐	☐	☐	☐
e. NEXT RELEASE				☐	

MATERIAL PLANNING SIGNATURE

24. CUSTOMER/DCMC CONCURRENCE	27. RLSD DWG REV.	28. CM RELEASE	30. DOCUMENT RELEASE

31. COMMENTS

29. DISTRIBUTION CODE

DISTRIBUTION STATEMENT A.
APPROVED FOR PUBLIC RELEASE;
DISTRIBUTION IS UNLIMITED

CAD MAINTAINED. CHANGES SHALL BE INCORPORATED BY THE DESIGN ACTIVITY.

REVISIONS			
LTR	DESCRIPTION	DATE	APPROVED

NOTES: UNLESS OTHERWISE SPECIFIED

1. INTERPRET DRAWING IN ACCORDANCE WITH MIL-STD-100.
2. TOLERANCES PER ANSI H35.2 UNLESS OTHERWISE NOTED.

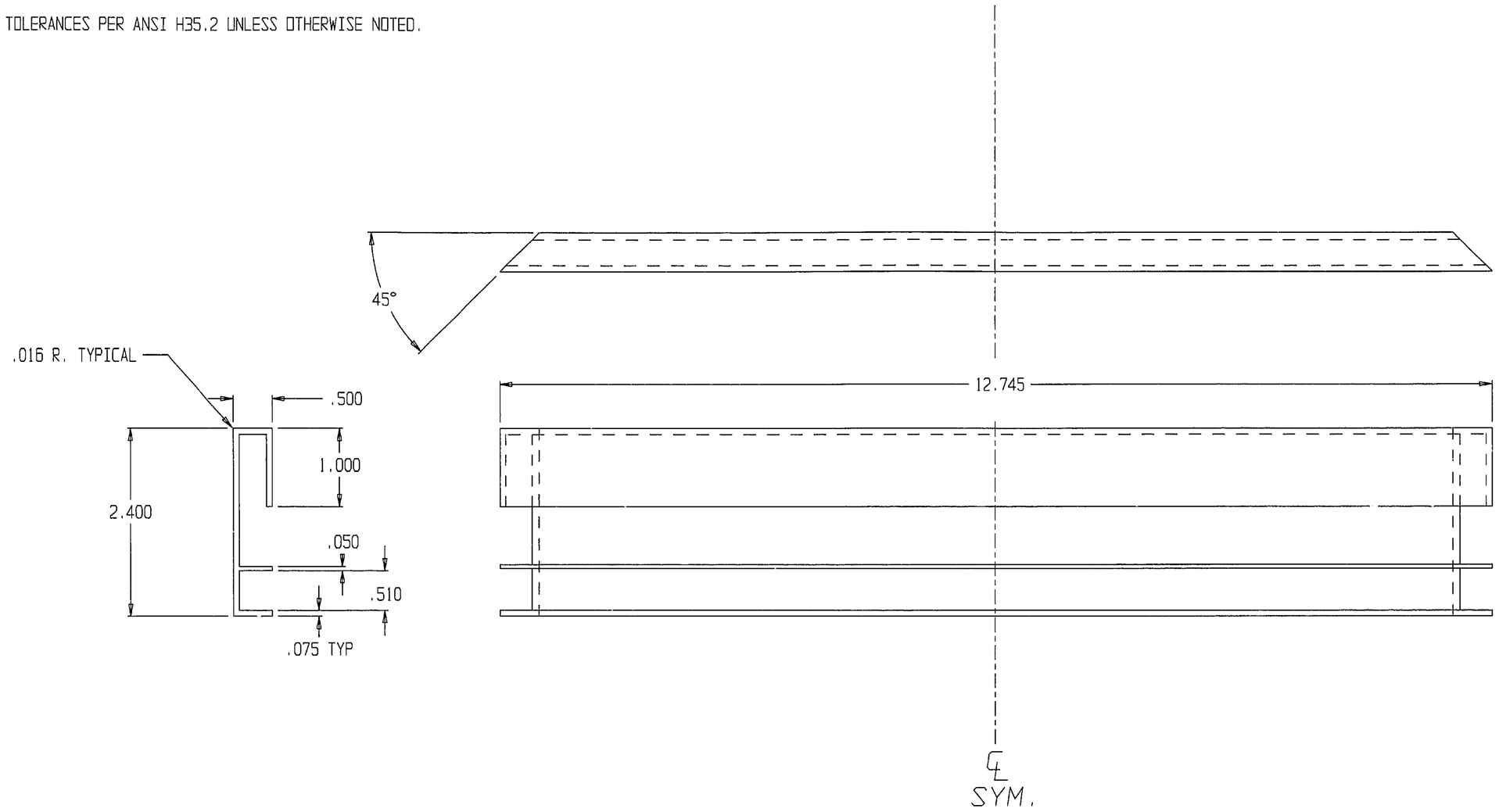

FIND NO.	QTY REQD	CAGE CODE	PART NO. OR IDENTIFYING NO.	NOMENCLATURE OR DESCRIPTION	SPECIFICATION	NOTE

PARTS LIST

| REVISION | | |

NAVSUP NAVAL SUPPLY SYSTEMS COMMAND

NAVAL INVENTORY CONTROL POINT

ENGINEERING CHANGE ORDER

1. ECO NO.: O- 142

2. DRAWING/PART NO.	3. NOMENCLATURE	4. CURRENT REVISION
3321A5209	Rail "E"	

5. CUSTOMER	6. CUSTOMER DWG NO.	7. NEXT HIGHER ASSEMBLY NO.	8. END ITEM PRODUCT I.D.
NAVICP			15450-200

9. RN/SVR NO.	10. ECO REQUIRED BY:	11. ORIGINATOR	DATE
	NAVICP (80132)	Robert Steel 0771	8/3/05

12. DESCRIPTION OF CHANGE (WAS / IS):

Drawing 3321A5209 Sheet 1, Zone D-7
Change Notes to:

1. EXTRUSION TOLERANCES SHALL APPLY IN ACCORDANCE WITH ANSI H35.2-2000 UNLESS OTHERWISE SPECIFIED. ALL CORNERS ARE .016 RADIUS.

2. INTERPRET DRAWING AND REVISIONS IN ACCORDANCE WITH ASME Y14.100, ASME Y14.24, ASME Y14.34, AND ASME Y14.35

13. REASON FOR CHANGE [INCLUDE JUSTIFICATION AND BACKUP DATA (IF AVAILABLE)]:

Up date and Clarification of Standards

☐ VALUE ENGINEERING ☒ SPEC CHANGE ☒ CORRECTIONS ☐ IN-SERVICE ☐ SAFETY ☐ NEW DRAWING

14. DESIGN ENG. RECOMMENDS:	☐ CLASS 1 - MAJOR	17. ANALYSIS ENGINEER (As Required)	DATE
☐ FUTURE INCORP. (REASON):		18. DE PEER REVIEW (As Required)	DATE
☐ APPROVED AS REQUESTED	☐ DISAPPROVED 15. DE INITIALS	19. DESIGN ENGINEER	DATE
☐ STOP NOTICE ISSUED	16. ☐ FORMAL CCB REQUIRED	20. ENG MGT	DATE

21. PROGRAM MANAGEMENT *CUSTOMER INTERFACE REQUIREMENTS*	✓	22. DE CHECKS AREAS THAT REQUIRE REVIEW/CONCURRENCE	23. PLANNED EFFECTIVITY LOT: DATE: S/N
NOTIFY CUSTOMER ☐	☐	MANUFACTURING ENGINEERING	MATERIAL DISTRIBUTION & DISPOSITION
Note: Customer or FAA notification required on all PMA parts.	☐	MATERIALS AND PROCESSES	
APPROVAL REQUIRED ☐	☐	QUALITY ENGINEERING	
CDRL REFERENCE:	☐	ILS/R&M	
CONTRACT NO.	☐	ECO ORIGINATOR (IF NOT DE) Robert Steel	
RISK RELEASE ☐	☐	OTHER (SPECIFY)	
NO. COPIES TO CUSTOMER	✓	CONFIGURATION MGT MGR (LAST)	
PROGRAM MANAGER SIGNATURE		25. DRAFTING	
		26. ENGINEERING CHECK Robert Steel	MATERIAL PLANNING SIGNATURE

	ORDER/LOT	QUANTITY	USE	CHANGE	SCRAP
a. FIELD		☐	☐	☐	☐
b. STORES		☐	☐	☐	☐
c. WIP BEYOND		☐	☐	☐	☐
d. WIP NOT BEYOND		☐	☐	☐	☐
e. NEXT RELEASE				☐	

24. CUSTOMER/DCMC CONCURRENCE	27. RLSD DWG REV.	28. CM RELEASE	30. DOCUMENT RELEASE

31. COMMENTS

29. DISTRIBUTION CODE

DISTRIBUTION STATEMENT A.
APPROVED FOR PUBLIC RELEASE;
DISTRIBUTION IS UNLIMITED

CAD MAINTAINED. CHANGES SHALL BE INCORPORATED BY THE DESIGN ACTIVITY.

REVISIONS			
LTR	DESCRIPTION	DATE	APPROVED

NOTES: UNLESS OTHERWISE SPECIFIED

1. INTERPRET DRAWING IN ACCORDANCE WITH MIL-STD-100.
2. BREAK SHEARED EDGES .01 TYP.
3. TOLERANCES IAW ANSI H35.2 UNLESS OTHERWISE NOTED.

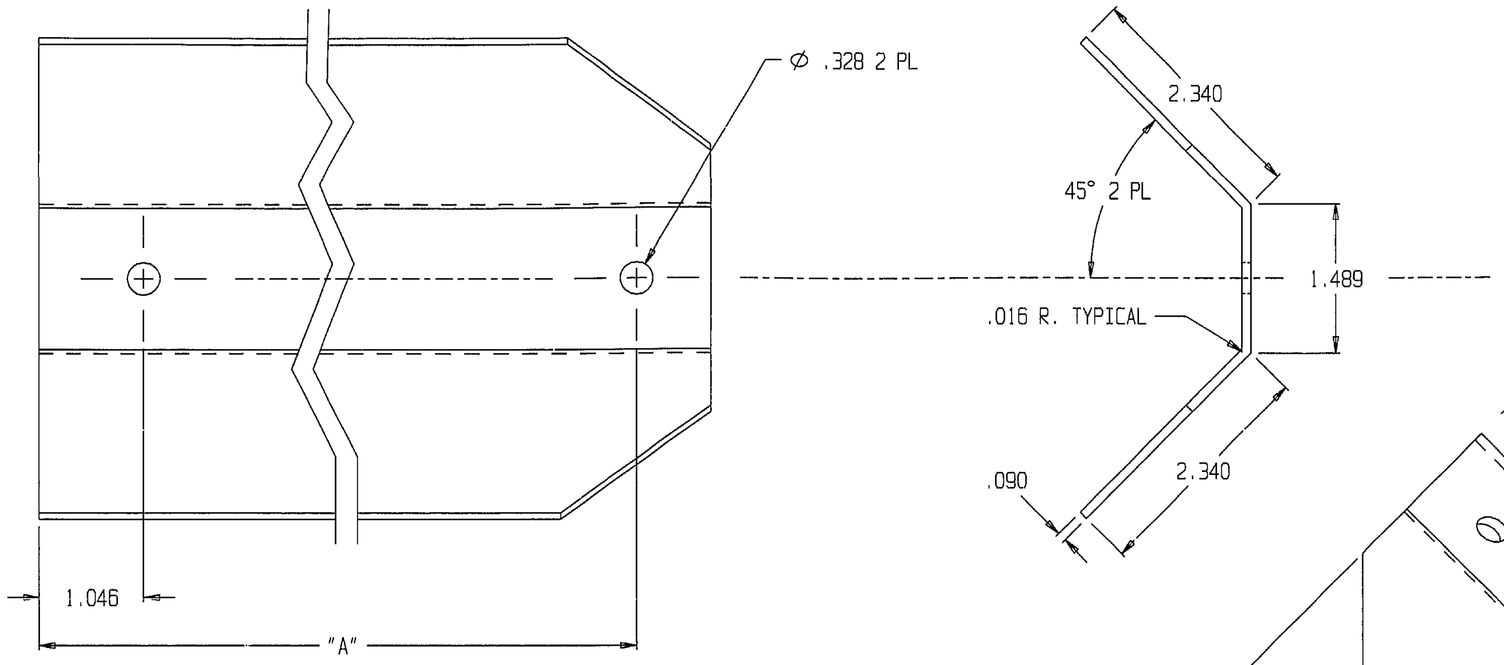

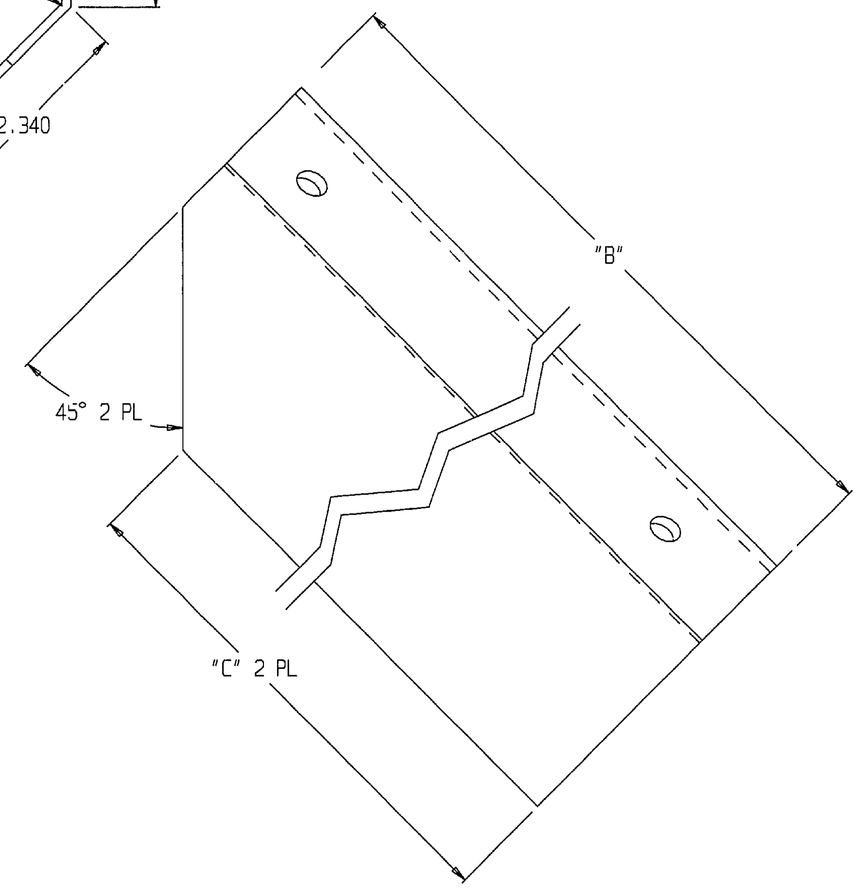

DASH NO.	"A"	"B"	"C"
-1	4.435	5.060	3.134
-2	5.435	6.060	4.134

FIND NO.	QTY REQD	CAGE CODE	PART NO. OR IDENTIFYING NO.	NOMENCLATURE OR DESCRIPTION	SPECIFICATION	NOTE

PARTS LIST

REVISION	3321AS203	DL 3321AS200
SHEET	NEXT ASSY	USED ON
SHEET REVISION RECORD	APPLICATION	

UNLESS OTHERWISE SPECIFIED:
DIMENSIONS ARE IN INCHES
TOLERANCES ON:
FRACTIONS ± DECIMALS .10 .010 ± ANGLES 30' °

MATERIAL:
6063-T6 PER
ASTM B221/B221M

CONTRACT NO. N00383-90-C-7642
DEPARTMENT OF THE NAVY
AVIATION SUPPLY OFFICE
700 ROBBINS AVE.
PHILADELPHIA, PA. 19111

DRAWN J. KIRCHHAN
CHECKED J.K.
REVIEWED MOREY
APPROVED
APPROVED FOR NAV AIR SYS COM
BY DIRECTION 3/19/98 DATE

DEPARTMENT OF THE NAVY
NAVAL AIR SYSTEMS COMMAND
WASHINGTON, D.C. 20360

BRACKET

SIZE	CAGE CODE	DWG NO.
D	30003	3321AS210
SCALE 1/1		SHEET 1 OF 1

WHEN REFERRING TO THIS DRAWING STATE DRAWING NO., APPLICABLE ISSUE LETTER IF ANY, AND DATE

6002_210

NAVSUP

NAVAL SUPPLY SYSTEMS COMMAND

NAVAL INVENTORY CONTROL POINT

ENGINEERING CHANGE ORDER

1. ECO NO.: O- 143

2. DRAWING/PART NO.	3. NOMENCLATURE	4. CURRENT REVISION
3321AS210	Bracket	

5. CUSTOMER	6. CUSTOMER DWG NO.	7. NEXT HIGHER ASSEMBLY NO.	8. END ITEM PRODUCT I.D.
NAVICP			15450-200

9. RN/SVR NO.	10. ECO REQUIRED BY:	11. ORIGINATOR		DATE
	NAVICP (80132)	Robert Steel	0771	8/3/05

12. DESCRIPTION OF CHANGE (WAS / IS):

See attached

13. REASON FOR CHANGE [INCLUDE JUSTIFICATION AND BACKUP DATA (IF AVAILABLE)]:

Up date and Clarification of Standards

☐ VALUE ENGINEERING ☒ SPEC CHANGE ☒ CORRECTIONS ☐ IN-SERVICE ☐ SAFETY ☐ NEW DRAWING

14. DESIGN ENG. RECOMMENDS:	☐ CLASS 1 - MAJOR	17. ANALYSIS ENGINEER (As Required)	DATE
☐ FUTURE INCORP. (REASON):		18. DE PEER REVIEW (As Required)	DATE
☐ APPROVED AS REQUESTED	☐ DISAPPROVED 15. DE INITIALS	19. DESIGN ENGINEER	DATE
☐ STOP NOTICE ISSUED	16. ☐ FORMAL CCB REQUIRED	20. ENG MGT	DATE

21. PROGRAM MANAGEMENT *CUSTOMER INTERFACE REQUIREMENTS*	✔	22. DE CHECKS AREAS THAT REQUIRE REVIEW/CONCURRENCE
NOTIFY CUSTOMER ☐	☐	MANUFACTURING ENGINEERING
Note: Customer or FAA notification required on all PMA parts.	☐	MATERIALS AND PROCESSES
APPROVAL REQUIRED ☐	☐	QUALITY ENGINEERING
CDRL REFERENCE:	☐	ILS/R&M
CONTRACT NO.	☐	ECO ORIGINATOR (IF NOT DE) Robert Steel
RISK RELEASE ☐	☐	OTHER (SPECIFY)
NO. COPIES TO CUSTOMER	✔	CONFIGURATION MGT MGR (LAST)
PROGRAM MANAGER SIGNATURE		25. DRAFTING
		26. ENGINEERING CHECK Robert Steel

23. PLANNED EFFECTIVITY

LOT: DATE: S/N

MATERIAL DISTRIBUTION & DISPOSITION	ORDER/LOT	QUANTITY	USE	CHANGE	SCRAP
a. FIELD		☐	☐	☐	☐
b. STORES		☐	☐	☐	☐
c. WIP BEYOND		☐	☐	☐	☐
d. WIP NOT BEYOND		☐	☐	☐	☐
e. NEXT RELEASE				☐	

MATERIAL PLANNING SIGNATURE

24. CUSTOMER/DCMC CONCURRENCE	27. RLSD DWG REV.	28. CM RELEASE	30. DOCUMENT RELEASE

31. COMMENTS	29. DISTRIBUTION CODE

NAVSUP NAVAL SUPPLY SYSTEMS COMMAND

NAVAL INVENTORY CONTROL POINT

ENGINEERING CHANGE REQUEST/ORDER (CONTINUATION SHEET)

1. ECR NO.: 0-143

2. DWG/PART NO.	3. NOMENCLATURE	4. CURRENT REV.
3321AS210	Bracket	

5. CONTINUATION ITEMS

Drawing 3321AS210 Sheet 1 Zone C-8

Change Notes to:

NOTES:

1. EXTRUSION TOLERANCES SHALL APPLY IN ACCORDANCE WITH ANSI H35.2-2000 UNLESS OTHERWISE SPECIFIED. ALL CORNERS ARE .016 RADIUS.

2. BREAK ALL SHARP EDGES .01 RADIUS MIN.

3. INTERPRET DRAWING AND REVISIONS IN ACCORDANCE WITH ASME Y14.100, ASME Y14.24, ASME Y14.34, AND ASME Y14.35

DISTRIBUTION STATEMENT A.
APPROVED FOR PUBLIC RELEASE;
DISTRIBUTION IS UNLIMITED

CAD MAINTAINED. CHANGES SHALL BE INCORPORATED BY THE DESIGN ACTIVITY.

REVISIONS			
LTR	DESCRIPTION	DATE	APPROVED

NOTES: UNLESS OTHERWISE SPECIFIED

1. INTERPRET DRAWING IN ACCORDANCE WITH MIL-STD-100.
2. IDENTIFY IAW MIL-STD-130.

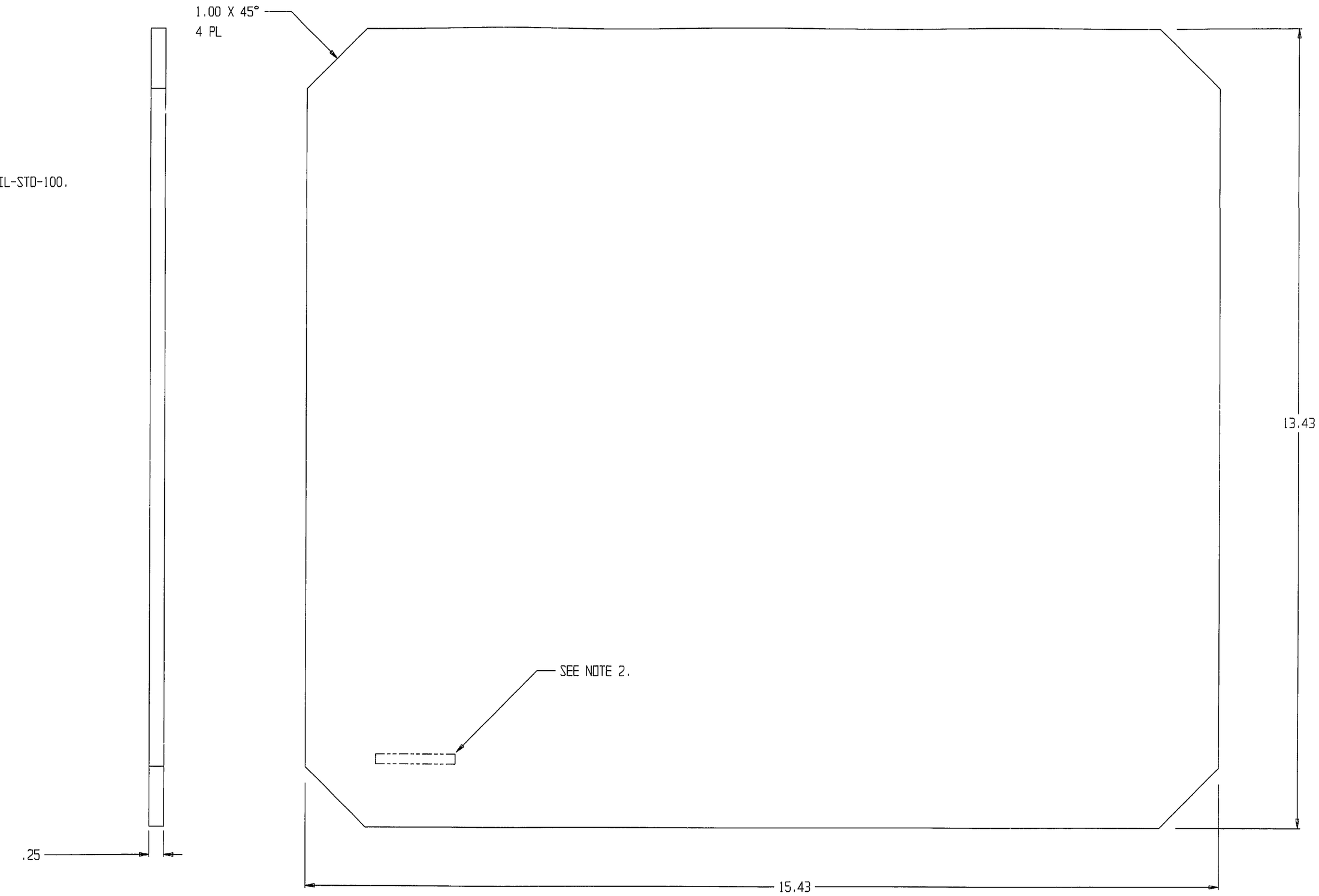

FIND NO.	QTY REQD	CAGE CODE	PART NO. OR IDENTIFYING NO.	NOMENCLATURE OR DESCRIPTION	SPECIFICATION	NOTE

PARTS LIST

REVISION	3321AS201	DL 3321AS200
SHEET	NEXT ASSY	USED ON
SHEET REVISION RECORD	APPLICATION	

UNLESS OTHERWISE SPECIFIED:
DIMENSIONS ARE IN INCHES
TOLERANCES ON:

FRACTIONS	DECIMALS	ANGLES
±	± .10 .010	± 30' °

MATERIAL:
SAE AMS 3198 COLOR BLACK, W/FABRIC FINISH

CONTRACT NO. N00383-90-C-7642
DEPARTMENT OF THE NAVY
AVIATION SUPPLY OFFICE
700 ROBBINS AVE.
PHILADELPHIA, PA. 19111

DRAWN J. KIRCHHAN
CHECKED J.K.
REVIEWED MOREY
APPROVED
APPROVED FOR NAV AIR SYS COM
BY DIRECTION 3/19/98 DATE

DEPARTMENT OF THE NAVY
NAVAL AIR SYSTEMS COMMAND
WASHINGTON, D.C. 20360

MAT, CHLOROPRENE

SIZE	CAGE CODE	DWG NO.
D	30003	3321AS211
SCALE FULL		SHEET 1 OF 1

WHEN REFERRING TO THIS DRAWING STATE DRAWING NO., APPLICABLE ISSUE LETTER IF ANY, AND DATE

BRC_211

NAVSUP

NAVAL SUPPLY SYSTEMS COMMAND

NAVAL INVENTORY CONTROL POINT

ENGINEERING CHANGE ORDER

1. ECO NO.: O- 1444

2. DRAWING/PART NO.	3. NOMENCLATURE	4. CURRENT REVISION
3321AS211	Mat, Chloroprene	

5. CUSTOMER	6. CUSTOMER DWG NO.	7. NEXT HIGHER ASSEMBLY NO.	8. END ITEM PRODUCT I.D.
NAVICP			15450-200

9. RN/SVR NO.	10. ECO REQUIRED BY:	11. ORIGINATOR	DATE
	NAVICP (80132)	Robert Steel 0771	8/3/05

12. DESCRIPTION OF CHANGE (WAS / IS):

Drawing 3321AS211 Sheet 1 Zone D-8
Change Notes to:

1. IDENTIFY IN ACCORDANCE WITH MIL-STD-130

2. INTERPRET DRAWING AND REVISIONS IN ACCORDANCE WITH ASME Y14.100, ASME Y14.24, ASME Y14.34, AND ASME Y14.35

13. REASON FOR CHANGE [INCLUDE JUSTIFICATION AND BACKUP DATA (IF AVAILABLE)]:

Up date Standards

☐ VALUE ENGINEERING ☒ SPEC CHANGE ☐ CORRECTIONS ☐ IN-SERVICE ☐ SAFETY ☐ NEW DRAWING

14. DESIGN ENG. RECOMMENDS:	☐ CLASS 1 - MAJOR	17. ANALYSIS ENGINEER (As Required)	DATE
☐ FUTURE INCORP. (REASON):		18. DE PEER REVIEW (As Required)	DATE
☐ APPROVED AS REQUESTED	☐ DISAPPROVED 15. DE INITIALS	19. DESIGN ENGINEER	DATE
☐ STOP NOTICE ISSUED	16. ☐ FORMAL CCB REQUIRED	20. ENG MGT	DATE

21. PROGRAM MANAGEMENT *CUSTOMER INTERFACE REQUIREMENTS*		✔	22. DE CHECKS AREAS THAT REQUIRE REVIEW/CONCURRENCE
NOTIFY CUSTOMER	☐	☐	MANUFACTURING ENGINEERING
Note: Customer or FAA notification required on all PMA parts.		☐	MATERIALS AND PROCESSES
APPROVAL REQUIRED	☐	☐	QUALITY ENGINEERING
CDRL REFERENCE:		☐	ILS/R&M
CONTRACT NO.		☐	ECO ORIGINATOR (IF NOT DE) Robert Steel
RISK RELEASE	☐	☐	OTHER (SPECIFY)
NO. COPIES TO CUSTOMER		✔	CONFIGURATION MGT MGR (LAST)
PROGRAM MANAGER SIGNATURE			25. DRAFTING
			26. ENGINEERING CHECK Robert Steel

23. PLANNED EFFECTIVITY

LOT: DATE: S/N

MATERIAL DISTRIBUTION & DISPOSITION	ORDER/LOT	QUANTITY	USE	CHANGE	SCRAP
a. FIELD		☐	☐	☐	☐
b. STORES		☐	☐	☐	☐
c. WIP BEYOND		☐	☐	☐	☐
d. WIP NOT BEYOND		☐	☐	☐	☐
e. NEXT RELEASE				☐	

MATERIAL PLANNING SIGNATURE

24. CUSTOMER/DCMC CONCURRENCE	27. RLSD DWG REV.	28. CM RELEASE	30. DOCUMENT RELEASE

31. COMMENTS	29. DISTRIBUTION CODE

DISTRIBUTION STATEMENT A.
APPROVED FOR PUBLIC RELEASE;
DISTRIBUTION IS UNLIMITED

CAD MAINTAINED. CHANGES SHALL BE INCORPORATED BY THE DESIGN ACTIVITY.

REVISIONS			
LTR	DESCRIPTION	DATE	APPROVED

NOTES: UNLESS OTHERWISE SPECIFIED

1. INTERPRET DRAWING IN ACCORDANCE WITH MIL-STD-100.
2. TOLERANCES IAW ANSI H35.2 UNLESS OTHERWISE NOTED.

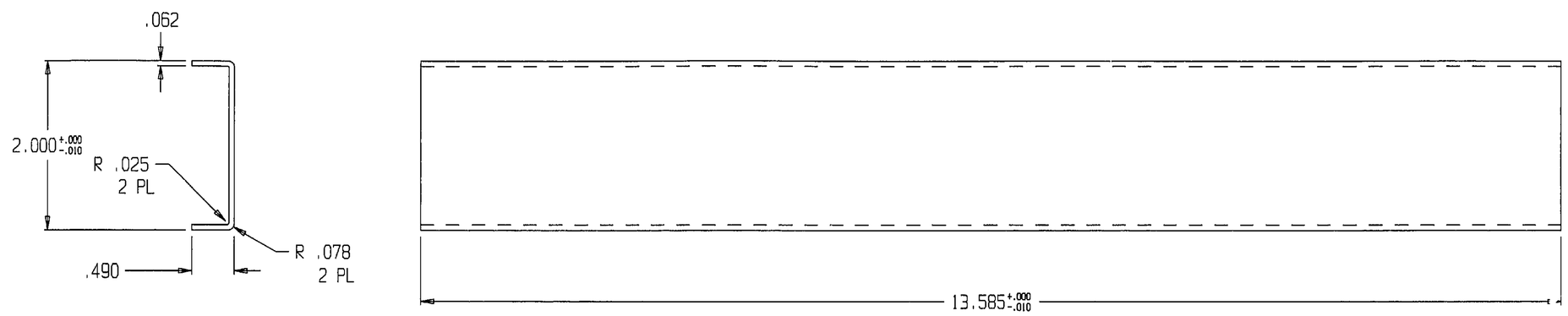

FIND NO.	QTY REQD	CAGE CODE	PART NO. OR IDENTIFYING NO.	NOMENCLATURE OR DESCRIPTION	SPECIFICATION	NOTE

PARTS LIST

REVISION	3321AS203	DL 3321AS200
SHEET	NEXT ASSY	USED ON
SHEET REVISION RECORD	APPLICATION	

UNLESS OTHERWISE SPECIFIED:
DIMENSIONS ARE IN INCHES
TOLERANCES ON:
FRACTIONS ± DECIMALS .10 ± .010 ANGLES ± 30'°

MATERIAL:
6063-T6 PER
ASTM B221/B221M

CONTRACT NO. N00383-90-C-7642
DEPARTMENT OF THE NAVY
AVIATION SUPPLY OFFICE
700 ROBBINS AVE.
PHILADELPHIA, PA. 19111

DRAWN J. KIRCHHAN
CHECKED J.K.
REVIEWED MOREY
APPROVED
APPROVED FOR NAV AIR SYS COM
BY DIRECTION 3/2/88 DATE

DEPARTMENT OF THE NAVY
NAVAL AIR SYSTEMS COMMAND
WASHINGTON, D.C. 20360

CHANNEL

SIZE	CAGE CODE	DWG NO.
D	30003	3321AS212
SCALE 1/1		SHEET 1 OF 1

WHEN REFERRING TO THIS DRAWING STATE DRAWING NO., APPLICABLE ISSUE LETTER IF ANY, AND DATE

8202,212

NAVSUP

NAVAL SUPPLY SYSTEMS COMMAND

NAVAL INVENTORY CONTROL POINT

ENGINEERING CHANGE ORDER

1. ECO NO.: O-145

2. DRAWING/PART NO.	3. NOMENCLATURE	4. CURRENT REVISION
3321A5212	Channel	

5. CUSTOMER	6. CUSTOMER DWG NO.	7. NEXT HIGHER ASSEMBLY NO.	8. END ITEM PRODUCT I.D.
NAVICP			15450-200

9. RN/SVR NO.	10. ECO REQUIRED BY:	11. ORIGINATOR	DATE
	NAVICP (80132)	Robert Steel 0771	8/3/05

12. DESCRIPTION OF CHANGE (WAS / IS):

Drawing 3321A5212 Sheet 1, Zone D-7
Change Note 1 to 2

1. EXTRUSION TOLERANCES SHALL APPLY IN ACCORDANCE WITH ANSI H35.2-2000 UNLESS OTHERWISE SPECIFIED.

2. INTERPRET DRAWING AND REVISIONS IN ACCORDANCE WITH ASME Y14.100, ASME Y14.24, ASME Y14.34, AND ASME Y14.35

13. REASON FOR CHANGE [INCLUDE JUSTIFICATION AND BACKUP DATA (IF AVAILABLE)]:

Up date Standards

☐ VALUE ENGINEERING ☒ SPEC CHANGE ☐ CORRECTIONS ☐ IN-SERVICE ☐ SAFETY ☐ NEW DRAWING

14. DESIGN ENG. RECOMMENDS:	☐ CLASS 1 - MAJOR	17. ANALYSIS ENGINEER (As Required)	DATE
☐ FUTURE INCORP. (REASON):		18. DE PEER REVIEW (As Required)	DATE
☐ APPROVED AS REQUESTED	☐ DISAPPROVED 15. DE INITIALS	19. DESIGN ENGINEER	DATE
☐ STOP NOTICE ISSUED	16. ☐ FORMAL CCB REQUIRED	20. ENG MGT	DATE

21. PROGRAM MANAGEMENT *CUSTOMER INTERFACE REQUIREMENTS*		✔	22. DE CHECKS AREAS THAT REQUIRE REVIEW/CONCURRENCE
NOTIFY CUSTOMER	☐	☐	MANUFACTURING ENGINEERING
Note: Customer or FAA notification required on all PMA parts.		☐	MATERIALS AND PROCESSES
APPROVAL REQUIRED	☐	☐	QUALITY ENGINEERING
CDRL REFERENCE:		☐	ILS/R&M
CONTRACT NO.		☐	ECO ORIGINATOR (IF NOT DE) Robert Steel
RISK RELEASE	☐	☐	OTHER (SPECIFY)
NO. COPIES TO CUSTOMER		✔	CONFIGURATION MGT MGR (LAST)
PROGRAM MANAGER SIGNATURE		25. DRAFTING	
		26. ENGINEERING CHECK Robert Steel	

23. PLANNED EFFECTIVITY

LOT: DATE: S/N

MATERIAL DISTRIBUTION & DISPOSITION	ORDER/LOT	QUANTITY	USE	CHANGE	SCRAP
a. FIELD		☐	☐	☐	☐
b. STORES		☐	☐	☐	☐
c. WIP BEYOND		☐	☐	☐	☐
d. WIP NOT BEYOND		☐	☐	☐	☐
e. NEXT RELEASE				☐	

MATERIAL PLANNING SIGNATURE

24. CUSTOMER/DCMC CONCURRENCE	27. RLSD DWG REV.	28. CM RELEASE	30. DOCUMENT RELEASE

31. COMMENTS

29. DISTRIBUTION CODE

DISTRIBUTION STATEMENT A.
APPROVED FOR PUBLIC RELEASE;
DISTRIBUTION IS UNLIMITED

CAD MAINTAINED. CHANGES SHALL BE INCORPORATED BY THE DESIGN ACTIVITY.

REVISIONS			
LTR	DESCRIPTION	DATE	APPROVED

NOTES: UNLESS OTHERWISE SPECIFIED

1. INTERPRET DRAWING IN ACCORDANCE WITH MIL-STD-100.
2. TOLERANCES IAW ANSI H35.2 UNLESS OTHERWISE NOTED.

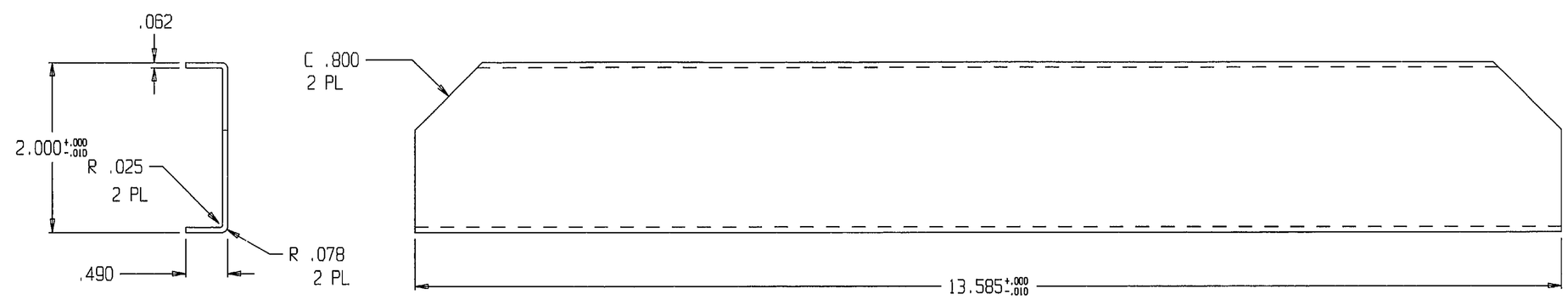

FIND NO.	QTY REQD	CAGE CODE	PART NO. OR IDENTIFYING NO.	NOMENCLATURE OR DESCRIPTION	SPECIFICATION	NOTE

PARTS LIST

| REVISION | | |

NAVSUP

NAVAL SUPPLY SYSTEMS COMMAND

NAVAL INVENTORY CONTROL POINT

ENGINEERING CHANGE ORDER

1. ECO NO.: O- 146

2. DRAWING/PART NO.	3. NOMENCLATURE	4. CURRENT REVISION
3321A5213	Channel, End	

5. CUSTOMER	6. CUSTOMER DWG NO.	7. NEXT HIGHER ASSEMBLY NO.	8. END ITEM PRODUCT I.D.
NAVICP			15450-200

9. RN/SVR NO.	10. ECO REQUIRED BY:	11. ORIGINATOR	DATE
	NAVICP(80138)	Robert Steel 0771	8/3/05

12. DESCRIPTION OF CHANGE (WAS / IS):

Drawing 3321A5213 Sheet 1, Zone D-7
Change Notes to:

1. EXTRUSION TOLERANCES SHALL APPLY IN ACCORDANCE WITH ANSI H35.2-2000 UNLESS OTHERWISE SPECIFIED.

2. INTERPRET DRAWING AND REVISIONS IN ACCORDANCE WITH ASME Y14.100, ASME Y14.24, ASME Y14.34, AND ASME Y14.35

13. REASON FOR CHANGE [INCLUDE JUSTIFICATION AND BACKUP DATA (IF AVAILABLE)]:

Up date Standards

☐ VALUE ENGINEERING ☒ SPEC CHANGE ☐ CORRECTIONS ☐ IN-SERVICE ☐ SAFETY ☐ NEW DRAWING

14. DESIGN ENG. RECOMMENDS:	☐ CLASS 1 - MAJOR	17. ANALYSIS ENGINEER (As Required)	DATE
☐ FUTURE INCORP. (REASON):		18. DE PEER REVIEW (As Required)	DATE
☐ APPROVED AS REQUESTED	☐ DISAPPROVED 15. DE INITIALS	19. DESIGN ENGINEER	DATE
☐ STOP NOTICE ISSUED	16. ☐ FORMAL CCB REQUIRED	20. ENG MGT	DATE

21. PROGRAM MANAGEMENT *CUSTOMER INTERFACE REQUIREMENTS*	✔	22. DE CHECKS AREAS THAT REQUIRE REVIEW/CONCURRENCE
NOTIFY CUSTOMER ☐	☐	MANUFACTURING ENGINEERING
Note: Customer or FAA notification required on all PMA parts.	☐	MATERIALS AND PROCESSES
APPROVAL REQUIRED ☐	☐	QUALITY ENGINEERING
CDRL REFERENCE:	☐	ILS/R&M
CONTRACT NO.	☐	ECO ORIGINATOR (IF NOT DE) Robert Steel
RISK RELEASE ☐	☐	OTHER (SPECIFY)
NO. COPIES TO CUSTOMER	✔	CONFIGURATION MGT MGR (LAST)
PROGRAM MANAGER SIGNATURE		25. DRAFTING
		26. ENGINEERING CHECK Robert Steel

23. PLANNED EFFECTIVITY

LOT: DATE: S/N

MATERIAL DISTRIBUTION & DISPOSITION	ORDER/LOT	QUANTITY	USE	CHANGE	SCRAP
a. FIELD		☐	☐	☐	☐
b. STORES		☐	☐	☐	☐
c. WIP BEYOND		☐	☐	☐	☐
d. WIP NOT BEYOND		☐	☐	☐	☐
e. NEXT RELEASE				☐	

MATERIAL PLANNING SIGNATURE

24. CUSTOMER/DCMC CONCURRENCE	27. RLSD DWG REV.	28. CM RELEASE	30. DOCUMENT RELEASE

31. COMMENTS

29. DISTRIBUTION CODE

DISTRIBUTION STATEMENT A.
APPROVED FOR PUBLIC RELEASE;
DISTRIBUTION IS UNLIMITED

CAD MAINTAINED. CHANGES SHALL BE INCORPORATED BY THE DESIGN ACTIVITY.

REVISIONS			
LTR	DESCRIPTION	DATE	APPROVED

NOTES: UNLESS OTHERWISE SPECIFIED

1. INTERPRET DRAWING IN ACCORDANCE WITH MIL-STD-100.
2. CONTRACT NUMBER, MANUFACTURER'S NAME AND PART NUMBER (WHEN APPLICABLE) ARE THE ONLY NAMEPLATE CHANGES ALLOWED ON SUBSEQUENT CONTRACTS.
3. ALL TEXT TO BE BLACK ON WHITE BACKGROUND.
4. LABEL STOCK, 42.5# BIAXIALLY ORIENTED POLYPROPYLENE WITH A RUBBER BASED PERMANENT ADHESIVE, SERVICE RANGE -50°F TO 150°F. AFTER PRINT, APPLY A CRYSTAL CLEAR 1.0 MIL POLYPROPYLENE FILM WITH ACRYLIC ADHESIVE, .5 MIL IN THICKNESS.

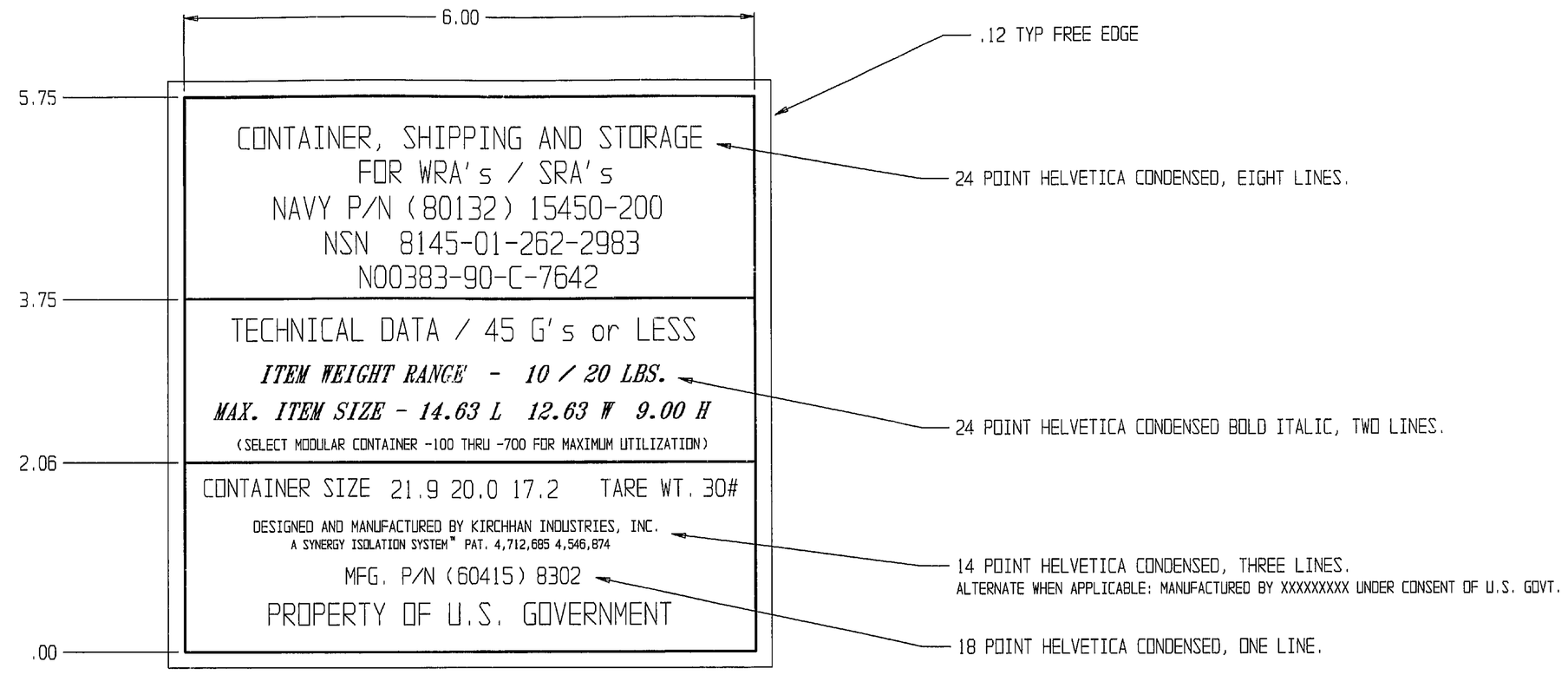

FIND NO.	QTY REQD	CAGE CODE	PART NO. OR IDENTIFYING NO.	NOMENCLATURE OR DESCRIPTION	SPECIFICATION	NOTE

PARTS LIST

REVISION	3321AS202	DL 3321AS200
SHEET	NEXT ASSY	USED ON
SHEET REVISION RECORD	APPLICATION	

UNLESS OTHERWISE SPECIFIED:
DIMENSIONS ARE IN INCHES
TOLERANCES ON:

FRACTIONS	DECIMALS	ANGLES
±	± .10 / .010	± 30'°

MATERIAL:
SEE NOTE 4

CONTRACT NO. N00383-90-C-7642
DEPARTMENT OF THE NAVY
AVIATION SUPPLY OFFICE
700 ROBBINS AVE.
PHILADELPHIA, PA. 19111

DRAWN J. KIRCHHAN
CHECKED J.K.
REVIEWED MOREY
APPROVED
APPROVED FOR NAV AIR SYS COM
BY/DIRECTION 3/19/98 DATE

DEPARTMENT OF THE NAVY
NAVAL AIR SYSTEMS COMMAND
WASHINGTON, D.C. 20360

NAMEPLATE

SIZE	CAGE CODE	DWG NO.
D	30003	3321AS214
SCALE NONE		SHEET 1 OF 1

WHEN REFERRING TO THIS DRAWING STATE DRAWING NO., APPLICABLE ISSUE LETTER IF ANY, AND DATE

DRG_214

NAVSUP

NAVAL SUPPLY SYSTEMS COMMAND

NAVAL INVENTORY CONTROL POINT

ENGINEERING CHANGE ORDER

1. ECO NO.: O- 147

2. DRAWING/PART NO.	3. NOMENCLATURE	4. CURRENT REVISION
3321HS214	Name Plate	

5. CUSTOMER	6. CUSTOMER DWG NO.	7. NEXT HIGHER ASSEMBLY NO.	8. END ITEM PRODUCT I.D.
NAVSEA			15450-200

9. RN/SVR NO.	10. ECO REQUIRED BY:	11. ORIGINATOR	DATE
	NAVSEA (00D3)	Robert Steel 0771	8/3/05

12. DESCRIPTION OF CHANGE (WAS / IS):

Drawing 3321HS214, Sheet, Zone D-8
Change Note 1 to:

1. Interpret Drawing and Revisions In Accordance with ASME Y14.100, ASME Y14.24, ASME Y14.34, and ASME Y14.35

Change "Property of US Government" (Zone B-5, B-4) to: "Property of U.S. Navy"

13. REASON FOR CHANGE (INCLUDE JUSTIFICATION AND BACKUP DATA (IF AVAILABLE)):

Update of Standard and Clarification

☐ VALUE ENGINEERING ☒ SPEC CHANGE ☒ CORRECTIONS ☐ IN-SERVICE ☐ SAFETY ☐ NEW DRAWING

14. DESIGN ENG. RECOMMENDS:	☐ CLASS 1 - MAJOR	17. ANALYSIS ENGINEER (As Required)	DATE
☐ FUTURE INCORP. (REASON):		18. DE PEER REVIEW (As Required)	DATE
☐ APPROVED AS REQUESTED	☐ DISAPPROVED 15. DE INITIALS	19. DESIGN ENGINEER	DATE
☐ STOP NOTICE ISSUED	16. ☐ FORMAL CCB REQUIRED	20. ENG MGT	DATE

21. PROGRAM MANAGEMENT *CUSTOMER INTERFACE REQUIREMENTS*	✔	22. DE CHECKS AREAS THAT REQUIRE REVIEW/CONCURRENCE
NOTIFY CUSTOMER ☐	☐	MANUFACTURING ENGINEERING
Note: Customer or FAA notification required on all PMA parts.	☐	MATERIALS AND PROCESSES
APPROVAL REQUIRED ☐	☐	QUALITY ENGINEERING
CDRL REFERENCE:	☐	ILS/R&M
CONTRACT NO.	☐	ECO ORIGINATOR (IF NOT DE)
RISK RELEASE ☐	☐	OTHER (SPECIFY)
NO. COPIES TO CUSTOMER	✔	CONFIGURATION MGT MGR (LAST)
PROGRAM MANAGER SIGNATURE		25. DRAFTING
		26. ENGINEERING CHECK

23. PLANNED EFFECTIVITY

LOT: DATE: S/N

MATERIAL DISTRIBUTION & DISPOSITION	ORDER/LOT	QUANTITY	USE	CHANGE	SCRAP
a. FIELD		☐	☐	☐	☐
b. STORES		☐	☐	☐	☐
c. WIP BEYOND		☐	☐	☐	☐
d. WIP NOT BEYOND		☐	☐	☐	☐
e. NEXT RELEASE				☐	

MATERIAL PLANNING SIGNATURE

24. CUSTOMER/DCMC CONCURRENCE	27. RLSD DWG REV.	28. CM RELEASE	30. DOCUMENT RELEASE

31. COMMENTS

29. DISTRIBUTION CODE

8	7	6	5	4	3	2	1

DISTRIBUTION STATEMENT A.
APPROVED FOR PUBLIC RELEASE;
DISTRIBUTION IS UNLIMITED

CAD MAINTAINED. CHANGES SHALL BE INCORPORATED BY THE DESIGN ACTIVITY.

REVISIONS			
LTR	DESCRIPTION	DATE	APPROVED

NOTES: UNLESS OTHERWISE SPECIFIED

1. INTERPRET DRAWING IN ACCORDANCE WITH MIL-STD-100.
2. BOND ENDS USING LOCTITE SUPER BONDER 409
3. THE BONDED JOINT WILL HAVE A MIN. BREAKING STRENGTH OF 30 LBS.
4. LOCTITE MAY BE PROCURED FROM:
   LOCTITE CORPORATION
   NEWINGTON CT
   06111
   P/N 40904

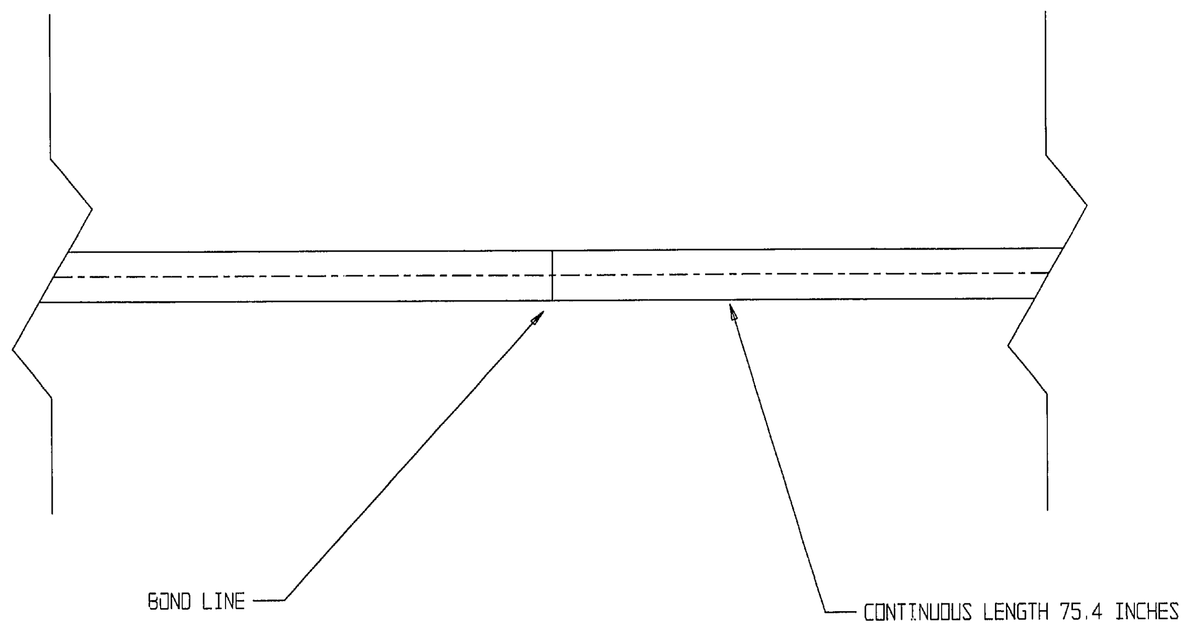

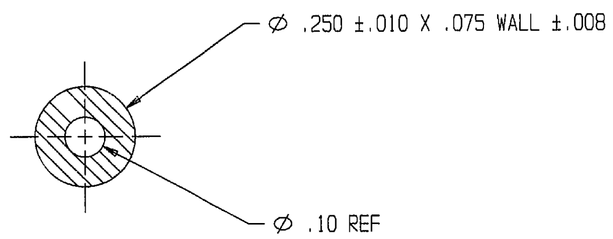

SCALE 4/1

FIND NO.	QTY REQD	CAGE CODE	PART NO. OR IDENTIFYING NO.	NOMENCLATURE OR DESCRIPTION	SPECIFICATION	NOTE

PARTS LIST

| REVISION | | |

NAVSUP

NAVAL SUPPLY SYSTEMS COMMAND

NAVAL INVENTORY CONTROL POINT

ENGINEERING CHANGE ORDER

1. ECO NO.: O-148

2. DRAWING/PART NO.	3. NOMENCLATURE	4. CURRENT REVISION
3321AS215	"O" Ring	

5. CUSTOMER	6. CUSTOMER DWG NO.	7. NEXT HIGHER ASSEMBLY NO.	8. END ITEM PRODUCT I.D.
NAVICP			15450-200

9. RN/SVR NO.	10. ECO REQUIRED BY:	11. ORIGINATOR	DATE
	NAVICP (Code 3)	Robert Steel 0271	8/3/05

12. DESCRIPTION OF CHANGE (WAS / IS):

Drawing 3321AS215 Sheet 1, Zone D-8
Change Note 1 to:
1. Interpret Drawing and Revisions In Accordance with ASME Y14.100, ASME Y14.24, ASME Y14.34, and ASME Y14.35

13. REASON FOR CHANGE (INCLUDE JUSTIFICATION AND BACKUP DATA (IF AVAILABLE)):

Up date Standard

☐ VALUE ENGINEERING ☒ SPEC CHANGE ☒ CORRECTIONS ☐ IN-SERVICE ☐ SAFETY ☐ NEW DRAWING

14. DESIGN ENG. RECOMMENDS:	☐ CLASS 1 - MAJOR	17. ANALYSIS ENGINEER (As Required)	DATE
☐ FUTURE INCORP. (REASON):		18. DE PEER REVIEW (As Required)	DATE
☐ APPROVED AS REQUESTED	☐ DISAPPROVED 15. DE INITIALS	19. DESIGN ENGINEER	DATE
☐ STOP NOTICE ISSUED	16. ☐ FORMAL CCB REQUIRED	20. ENG MGT	DATE

21. PROGRAM MANAGEMENT *CUSTOMER INTERFACE REQUIREMENTS*	✓	22. DE CHECKS AREAS THAT REQUIRE REVIEW/CONCURRENCE	23. PLANNED EFFECTIVITY LOT: DATE: S/N
NOTIFY CUSTOMER ☐	☐	MANUFACTURING ENGINEERING	MATERIAL DISTRIBUTION & DISPOSITION
Note: Customer or FAA notification required on all PMA parts.	☐	MATERIALS AND PROCESSES	
APPROVAL REQUIRED ☐	☐	QUALITY ENGINEERING	
CDRL REFERENCE:	☐	ILS/R&M	
CONTRACT NO.	☐	ECO ORIGINATOR (IF NOT DE) Robert Steel	
RISK RELEASE ☐	☐	OTHER (SPECIFY)	
NO. COPIES TO CUSTOMER	✓	CONFIGURATION MGT MGR (LAST)	
PROGRAM MANAGER SIGNATURE		25. DRAFTING	
		26. ENGINEERING CHECK Robert Steel	MATERIAL PLANNING SIGNATURE

	ORDER/LOT	QUANTITY	USE	CHANGE	SCRAP
a. FIELD		☐	☐	☐	☐
b. STORES		☐	☐	☐	☐
c. WIP BEYOND		☐	☐	☐	☐
d. WIP NOT BEYOND		☐	☐	☐	☐
e. NEXT RELEASE				☐	

24. CUSTOMER/DCMC CONCURRENCE	27. RLSD DWG REV.	28. CM RELEASE	30. DOCUMENT RELEASE

31. COMMENTS	29. DISTRIBUTION CODE

DISTRIBUTION STATEMENT A.
APPROVED FOR PUBLIC RELEASE;
DISTRIBUTION IS UNLIMITED

CAD MAINTAINED. CHANGES SHALL BE INCORPORATED BY THE DESIGN ACTIVITY.

REVISIONS			
LTR	DESCRIPTION	DATE	APPROVED

NOTES: UNLESS OTHERWISE SPECIFIED

1. INTERPRET DRAWING IN ACCORDANCE WITH MIL-STD-100.
2. CONTAINERS TO BE PALLETIZED PRIOR TO SHIPMENT, 20 PER PALLET.
3. CONTAINER SEPARATION SHALL BE PROVIDED BY INSERTING 2 X 2 INCH HONEYCOMB PANELS OR EQUIVALENT AS SHOWN.
4. CONTAINERS SHALL BE SECURED TO THE PALLET BY STRAPPING. STRAP SHALL BE 1/2 INCH WIDE 600# POLYPROPYLENE OR EQUIVALENT.
5. THE LOWER 60% MIN. OF THE PALLET TO BE SHRINK WRAPPED USING .8 MIL STOCK.

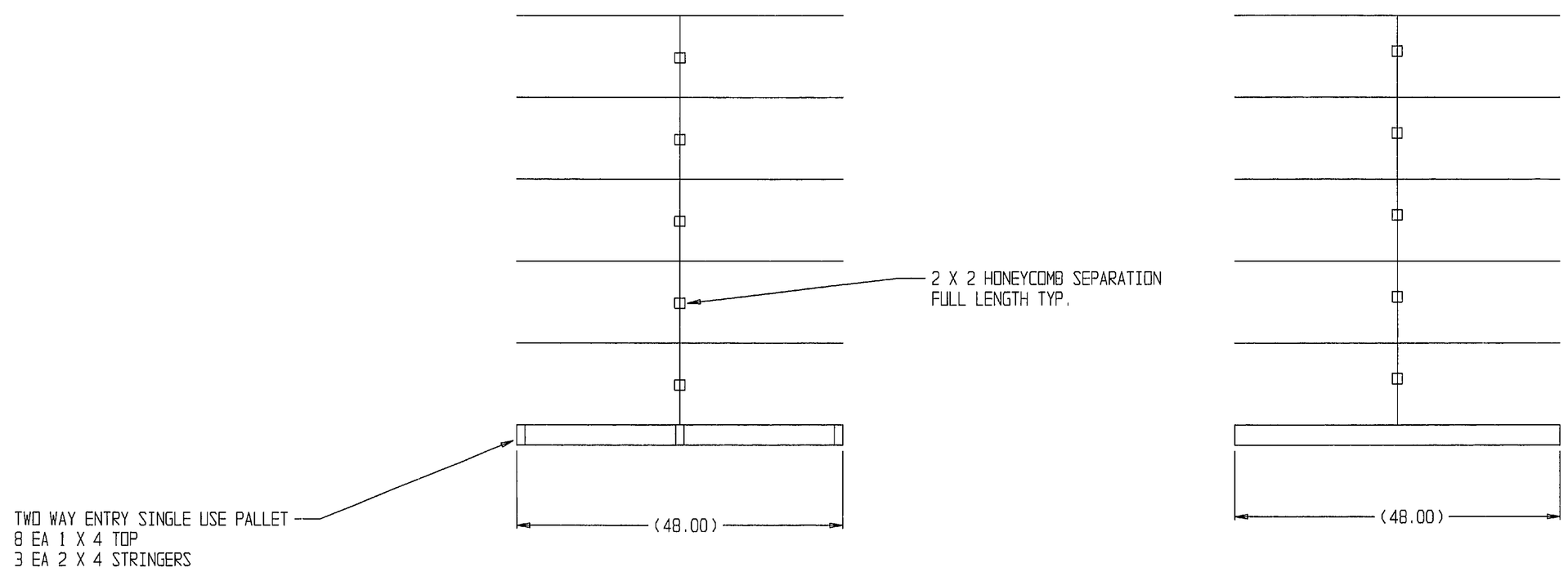

FIND NO.	QTY REQD	CAGE CODE	PART NO. OR IDENTIFYING NO.	NOMENCLATURE OR DESCRIPTION	SPECIFICATION	NOTE

PARTS LIST

| REVISION | | |

NAVSUP

NAVAL SUPPLY SYSTEMS COMMAND

NAVAL INVENTORY CONTROL POINT

ENGINEERING CHANGE ORDER

1. ECO NO.: O- 149

2. DRAWING/PART NO.	3. NOMENCLATURE	4. CURRENT REVISION
3321AS216	Packaging Specification	

5. CUSTOMER	6. CUSTOMER DWG NO.	7. NEXT HIGHER ASSEMBLY NO.	8. END ITEM PRODUCT I.D.
NAVICP			154150-200

9. RN/SVR NO.	10. ECO REQUIRED BY:	11. ORIGINATOR	DATE
	NAVICP (80132)	Robert Steel 0771	8/3/05

12. DESCRIPTION OF CHANGE (WAS / IS):

Drawing 3321AS216 Sheet 1, Zone D-8

Change Note 1 to:

1. Interpret Drawing and Revisions In Accordance With ASME Y14.100, ASME Y14.24, ASME Y14.34 and ASME Y14.35

Change Note 2 to:

2. Containers to be palletized prior to shipment

13. REASON FOR CHANGE [INCLUDE JUSTIFICATION AND BACKUP DATA (IF AVAILABLE)]:

Up date Standard & correct note

☐ VALUE ENGINEERING ☒ SPEC CHANGE ☒ CORRECTIONS ☐ IN-SERVICE ☐ SAFETY ☐ NEW DRAWING

14. DESIGN ENG. RECOMMENDS:	☐ CLASS 1 - MAJOR	17. ANALYSIS ENGINEER (As Required)	DATE
☐ FUTURE INCORP. (REASON):		18. DE PEER REVIEW (As Required)	DATE
☐ APPROVED AS REQUESTED	☐ DISAPPROVED 15. DE INITIALS	19. DESIGN ENGINEER	DATE
☐ STOP NOTICE ISSUED	16. ☐ FORMAL CCB REQUIRED	20. ENG MGT	DATE

21. PROGRAM MANAGEMENT *CUSTOMER INTERFACE REQUIREMENTS*		✔	22. DE CHECKS AREAS THAT REQUIRE REVIEW/CONCURRENCE
NOTIFY CUSTOMER	☐	☐	MANUFACTURING ENGINEERING
Note: Customer or FAA notification required on all PMA parts.		☐	MATERIALS AND PROCESSES
APPROVAL REQUIRED	☐	☐	QUALITY ENGINEERING
CDRL REFERENCE:		☐	ILS/R&M
CONTRACT NO.		☐	ECO ORIGINATOR (IF NOT DE) Robert Steel
RISK RELEASE	☐	☐	OTHER (SPECIFY)
NO. COPIES TO CUSTOMER		✔	CONFIGURATION MGT MGR (LAST)
PROGRAM MANAGER SIGNATURE			25. DRAFTING
			26. ENGINEERING CHECK Robert Steel

23. PLANNED EFFECTIVITY

LOT: DATE: S/N

MATERIAL DISTRIBUTION & DISPOSITION	ORDER/LOT	QUANTITY	USE	CHANGE	SCRAP
a. FIELD		☐	☐	☐	☐
b. STORES		☐	☐	☐	☐
c. WIP BEYOND		☐	☐	☐	☐
d. WIP NOT BEYOND		☐	☐	☐	☐
e. NEXT RELEASE				☐	

MATERIAL PLANNING SIGNATURE

24. CUSTOMER/DCMC CONCURRENCE	27. RLSD DWG REV.	28. CM RELEASE	30. DOCUMENT RELEASE

31. COMMENTS	29. DISTRIBUTION CODE

DISTRIBUTION STATEMENT A.
APPROVED FOR PUBLIC RELEASE;
DISTRIBUTION IS UNLIMITED

CAD MAINTAINED. CHANGES SHALL BE INCORPORATED BY THE DESIGN ACTIVITY.

REVISIONS			
LTR	DESCRIPTION	DATE	APPROVED

NOTES: UNLESS OTHERWISE SPECIFIED

1. INTERPRET DRAWING IN ACCORDANCE WITH MIL-STD-100.
2. TOLERANCES IAW ANSI H35.2 UNLESS OTHERWISE NOTED.

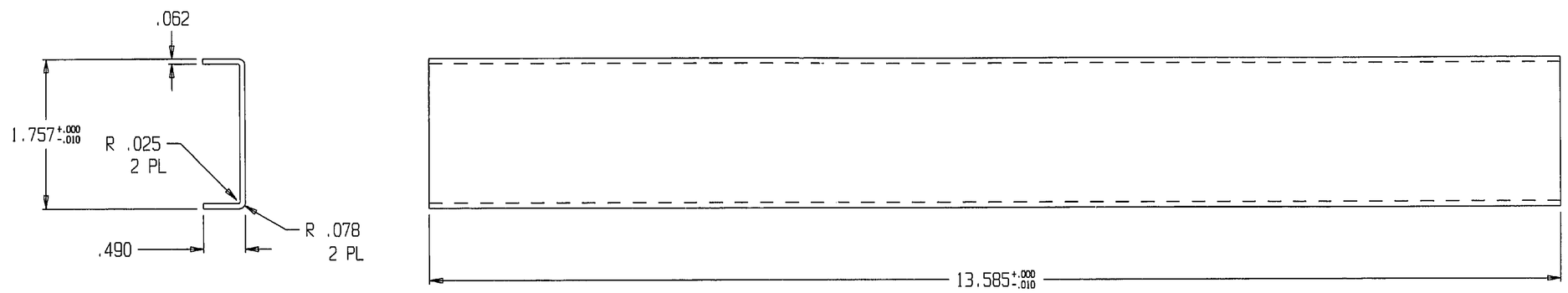

FIND NO.	QTY REQD	CAGE CODE	PART NO. OR IDENTIFYING NO.	NOMENCLATURE OR DESCRIPTION	SPECIFICATION	NOTE

PARTS LIST

| REVISION | | |

NAVSUP NAVAL SUPPLY SYSTEMS COMMAND

NAVAL INVENTORY CONTROL POINT

ENGINEERING CHANGE ORDER

1. ECO NO.: O- 150

2. DRAWING/PART NO.	3. NOMENCLATURE	4. CURRENT REVISION
3321A5217	Channel	

5. CUSTOMER	6. CUSTOMER DWG NO.	7. NEXT HIGHER ASSEMBLY NO.	8. END ITEM PRODUCT I.D.
NAVICP			

9. RN/SVR NO.	10. ECO REQUIRED BY:	11. ORIGINATOR	DATE
	NAVICP (60132)	Robert Steel 0771	8/3/05

12. DESCRIPTION OF CHANGE (WAS / IS):

Drawing 3321A5217 Sheet 1, Zone D-7
Change Notes to:

1. EXTRUSION TOLERANCES SHALL APPLY IN ACCORDANCE WITH ANSI H35.2-2000 UNLESS OTHERWISE SPECIFIED.

2. INTERPRET DRAWING AND REVISIONS IN ACCORDANCE WITH ASME Y14.100, ASME Y14.24, ASME Y14.34, AND ASME Y14.35

13. REASON FOR CHANGE (INCLUDE JUSTIFICATION AND BACKUP DATA (IF AVAILABLE)):

Up date Standard & Correct note

☐ VALUE ENGINEERING ☒ SPEC CHANGE ☒ CORRECTIONS ☐ IN-SERVICE ☐ SAFETY ☐ NEW DRAWING

14. DESIGN ENG. RECOMMENDS:	☐ CLASS 1 - MAJOR	17. ANALYSIS ENGINEER (As Required)	DATE
☐ FUTURE INCORP. (REASON):		18. DE PEER REVIEW (As Required)	DATE
☐ APPROVED AS REQUESTED	☐ DISAPPROVED 15. DE INITIALS	19. DESIGN ENGINEER	DATE
☐ STOP NOTICE ISSUED	16. ☐ FORMAL CCB REQUIRED	20. ENG MGT	DATE

21. PROGRAM MANAGEMENT *CUSTOMER INTERFACE REQUIREMENTS*	✓	22. DE CHECKS AREAS THAT REQUIRE REVIEW/CONCURRENCE	23. PLANNED EFFECTIVITY LOT: DATE: S/N
NOTIFY CUSTOMER ☐	☐	MANUFACTURING ENGINEERING	MATERIAL DISTRIBUTION & DISPOSITION
Note: Customer or FAA notification required on all PMA parts.	☐	MATERIALS AND PROCESSES	
APPROVAL REQUIRED ☐	☐	QUALITY ENGINEERING	
CDRL REFERENCE:	☐	ILS/R&M	
CONTRACT NO.	☐	ECO ORIGINATOR (IF NOT DE) Robert Steel	
RISK RELEASE ☐	☐	OTHER (SPECIFY)	
NO. COPIES TO CUSTOMER	✓	CONFIGURATION MGT MGR (LAST)	
PROGRAM MANAGER SIGNATURE		25. DRAFTING	
		26. ENGINEERING CHECK Robert Steel	MATERIAL PLANNING SIGNATURE

	ORDER/LOT	QUANTITY	USE	CHANGE	SCRAP
a. FIELD		☐	☐	☐	☐
b. STORES		☐	☐	☐	☐
c. WIP BEYOND		☐	☐	☐	☐
d. WIP NOT BEYOND		☐	☐	☐	☐
e. NEXT RELEASE				☐	

24. CUSTOMER/DCMC CONCURRENCE	27. RLSD DWG REV.	28. CM RELEASE	30. DOCUMENT RELEASE

31. COMMENTS	29. DISTRIBUTION CODE

DISTRIBUTION STATEMENT A.
APPROVED FOR PUBLIC RELEASE;
DISTRIBUTION IS UNLIMITED

CAD MAINTAINED. CHANGES SHALL BE INCORPORATED BY THE DESIGN ACTIVITY.

REVISIONS			
LTR	DESCRIPTION	DATE	APPROVED
A	ADDED DWGS. IN APPLICATION BLOCK	11/95	KIRCHHAN

NOTES: UNLESS OTHERWISE SPECIFIED

1. INTERPRET DRAWING IN ACCORDANCE WITH MIL-STD-100.
2. NOMENCLATURE TEXT AS SHOWN, PHOTO HALFTONE TO BE DETAILED, MINIMUM DOT COUNT, 65 DOTS PER INCH.
3. ALL TEXT TO BE BLACK ON WHITE BACKGROUND.
4. LABEL STOCK, 42.5# BIAXIALLY ORIENTED POLYPROPYLENE WITH A RUBBER BASED PERMANENT ADHESIVE, SERVICE RANGE -50°F TO 150°F. AFTER PRINT, APPLY A CRYSTAL CLEAR 1.0 MIL POLYPROPYLENE FILM WITH ACRYLIC ADHESIVE, .5 MIL IN THICKNESS.
5. A PROOF OF THE GRAPHICS IS AVAILABLE AND WILL BE SUPPLIED BY THE DESIGN ACTIVITY BY REQUEST.

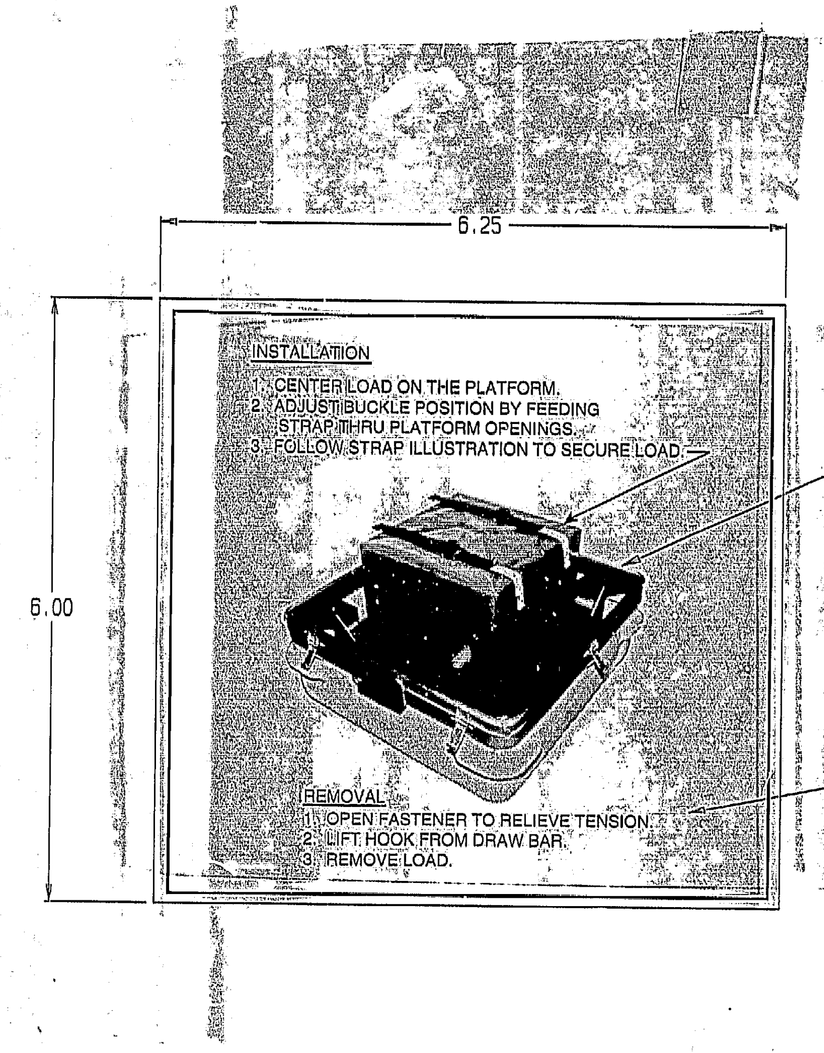

HALF-TONE ISOMETRIC PHOTOGRAPH AS SHOWN

HELVETICA 12 POINT TYP.

FIND NO.	QTY REQD	CAGE CODE	PART NO. OR IDENTIFYING NO.	NOMENCLATURE OR DESCRIPTION	SPECIFICATION	NOTE

PARTS LIST

REVISION	A
SHEET	1

SHEET REVISION RECORD

NEXT ASSY	USED ON
3321AS202	DL 3321AS200
3321AS102	DL 3321AS100
3321AS702	DL 3321AS700
3321AS602	DL 3321AS600
3321AS502	DL 3321AS500
3321AS402	DL 3321AS400
3321AS302	DL 3321AS300

APPLICATION

UNLESS OTHERWISE SPECIFIED:
DIMENSIONS ARE IN INCHES
TOLERANCES ON:
FRACTIONS ± DECIMALS .10 .010 ANGLES ± 30'°

MATERIAL:
SEE NOTE 4

CONTRACT NO. N00383-90-C-7642
DEPARTMENT OF THE NAVY
AVIATION SUPPLY OFFICE
700 ROBBINS AVE.
PHILADELPHIA, PA. 19111

DRAWN J. KIRCHHAN
CHECKED J.K.
REVIEWED MOREY
APPROVED
APPROVED FOR NAV AIR SYS COM
BY DIRECTION 12/4/90 DATE

DEPARTMENT OF THE NAVY
NAVAL AIR SYSTEMS COMMAND
WASHINGTON, D.C. 20360

LABEL, ILLUSTRATION

SIZE	CAGE CODE	DWG NO.
D	30003	3321AS003
SCALE NONE		SHEET 1 OF 1

WHEN REFERRING TO THIS DRAWING STATE DRAWING NO., APPLICABLE ISSUE LETTER IF ANY, AND DATE

DISTRIBUTION STATEMENT A.
APPROVED FOR PUBLIC RELEASE;
DISTRIBUTION IS UNLIMITED

CAD MAINTAINED. CHANGES SHALL BE INCORPORATED BY THE DESIGN ACTIVITY.

REVISIONS			
LTR	DESCRIPTION	DATE	APPROVED
A	ADDED DWGS. IN APPLICATION BLOCK	11/95	KIRCHHAN

NOTES: UNLESS OTHERWISE SPECIFIED

1. INTERPRET DRAWING IN ACCORDANCE WITH MIL-STD-100.
2. SILKSCREEN USING VINYL INK, COLOR BLACK, IAW FED-STD-595 17038 ON CLEAR POLYESTER LABEL STOCK, GLOSS, 3 MIL THICK ADHESIVE BACKED.

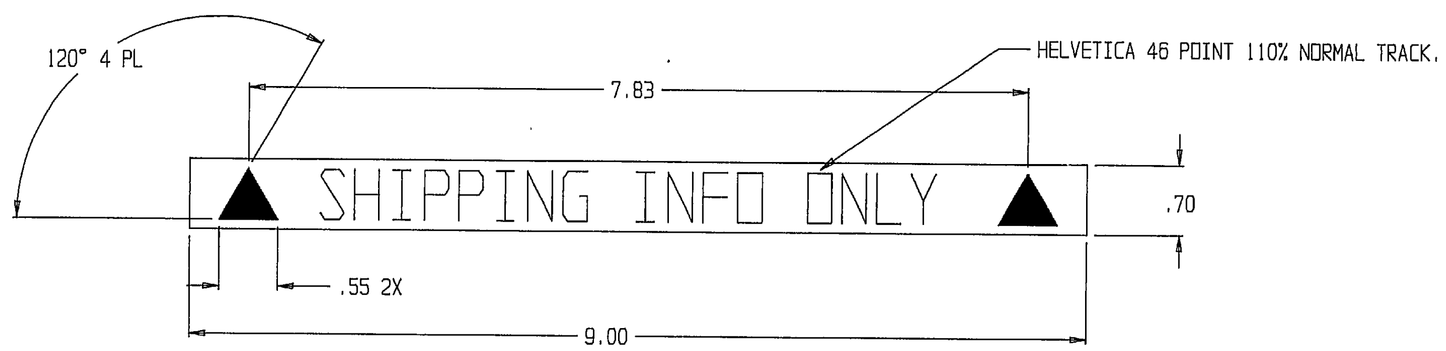

FIND NO.	QTY REQD	CAGE CODE	PART NO. OR IDENTIFYING NO.	NOMENCLATURE OR DESCRIPTION	SPECIFICATION	NOTE

PARTS LIST

3321AS202	DL 3321AS200
3321AS102	DL 3321AS100
3321AS702	DL 3321AS700
3321AS602	DL 3321AS600
3321AS502	DL 3321AS500
3321AS402	DL 3321AS400
3321AS302	DL 3321AS300
NEXT ASSY	USED ON

APPLICATION

REVISION	A
SHEET	1

SHEET REVISION RECORD

UNLESS OTHERWISE SPECIFIED:
DIMENSIONS ARE IN INCHES
TOLERANCES ON:
FRACTIONS ± DECIMALS .03 .010 ± ANGLES ± 30'°

MATERIAL:
SEE NOTE 2

CONTRACT NO. N00383-90-C-7642

DEPARTMENT OF THE NAVY
AVIATION SUPPLY OFFICE
700 ROBBINS AVE.
PHILADELPHIA, PA. 19111

DEPARTMENT OF THE NAVY
NAVAL AIR SYSTEMS COMMAND
WASHINGTON, D.C. 20360

DRAWN J. KIRCHHAN
CHECKED J.K.
REVIEWED MOREY
APPROVED
APPROVED FOR NAV AIR SYS COM
BY DIRECTION — DATE 12/9/96

LABEL, (SIO)

SIZE	CAGE CODE	DWG NO.
D	30003	3321AS004

SCALE 1/1 — SHEET 1 OF 1

WHEN REFERRING TO THIS DRAWING STATE DRAWING NO., APPLICABLE ISSUE LETTER IF ANY, AND DATE

DISTRIBUTION STATEMENT A.
APPROVED FOR PUBLIC RELEASE;
DISTRIBUTION IS UNLIMITED

CAD MAINTAINED. CHANGES SHALL BE INCORPORATED BY THE DESIGN ACTIVITY.

REVISIONS			
LTR	DESCRIPTION	DATE	APPROVED
A	ADDED DWGS. IN APPLICATION BLOCK	10/96	KIRCHHAN
	NOTE 7, WAS SIZE F, IS SIZE FF		
	NOTE 8, WAS SCF, IS SC3		
	SOURCE WAS A.G.M. CARGO-TIES, INC. IS AGM CONGTAINER CONTROLS, INC.		
B	ADDED 120" STRAP	12/97	KIRCHHAN

APPROVED SOURCE(S) OF SUPPLY			
CONTROL NO.	SUPPLIER DATA		
	CAGE CODE	PART NUMBER	NAME AND ADDRESS
3321AS005	08992	SEE TAB BLOCK	AGM CONTAINER CONTROLS, INC. 3526 E. FT. LOWELL RD. TUCSON, AZ 85716

NOTES: UNLESS OTHERWISE SPECIFIED

1. INTERPRET DRAWING IN ACCORDANCE WITH MIL-STD-100.
2. WEBBING IAW MIL-W-43668, TYPE II, EXCEPT 1.00 WIDE AND 2500 POUND BREAKING STRENGTH, COLOR ORANGE.
3. TENSILE STRENGTH OF STRAP ASSEMBLY 1000 POUNDS MINIMUM.
4. WEBBING ENDS, HOT WIRE CUT OR SEARED BEFORE STITCHING.
5. INSTRUCTION LABEL MATERIAL, WHITE POLYESTER FABRIC.
6. STITCHING; IAW FED-STD-751, TYPE 301. BACK STITCH ALL ENDS OF STITCHING MIN 1/4 INCH.
7. THREAD; IAW V-T-285, TYPE II, CLASS 1, SIZE FF, COLOR BLACK.
8. FINISH; FASTENER AND HOOK, ZINC PLATED IAW ASTM B 633 TYPE II, CLASS SC3.
9. IDENTIFICATION OF THE APPROVED SOURCE(S) OF SUPPLY HEREON IS NOT TO BE CONSTRUED AS A GUARANTEE OF PRESENT OR CONTINUED AVAILABILITY AS A SOURCE OF SUPPLY FOR THE ITEM(S).
10. ONLY THE ITEM DESCRIBED ON THIS DWG WHEN PROCURED FROM THE SUPPLIER LISTED HEREON IS APPROVED FOR USE IN THE APPLICATION SPECIFIED HEREON. A SUBSTITUTE ITEM SHALL NOT BE USED WITHOUT PRIOR APPROVAL BY THE PROCURING ACTIVITY.
11. IDENTIFY IAW MIL-STD-130.

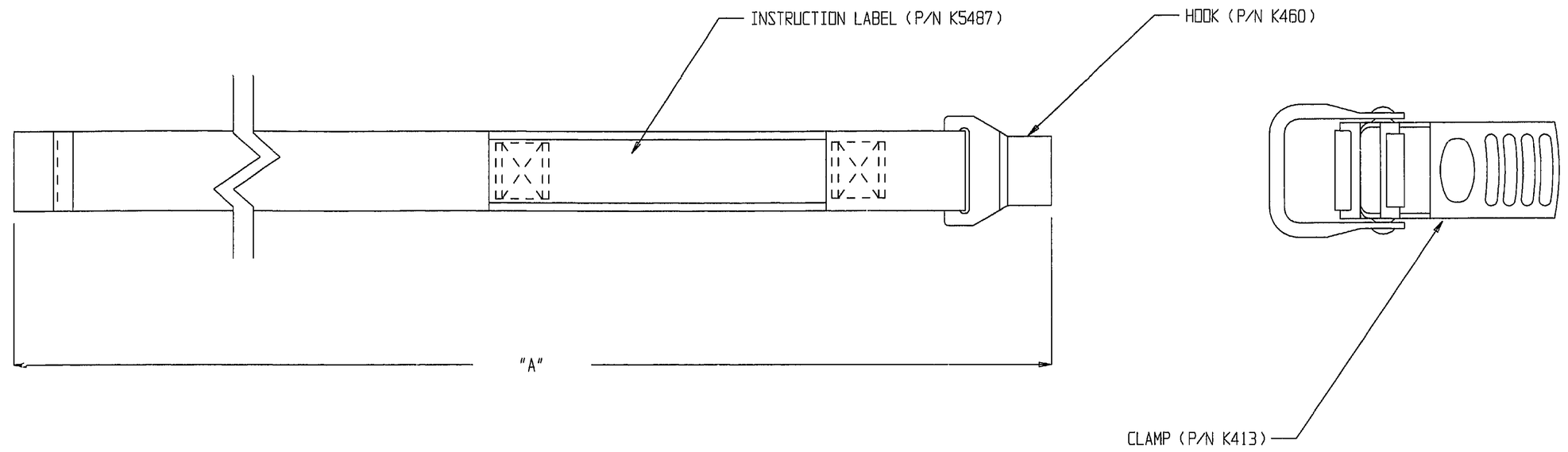

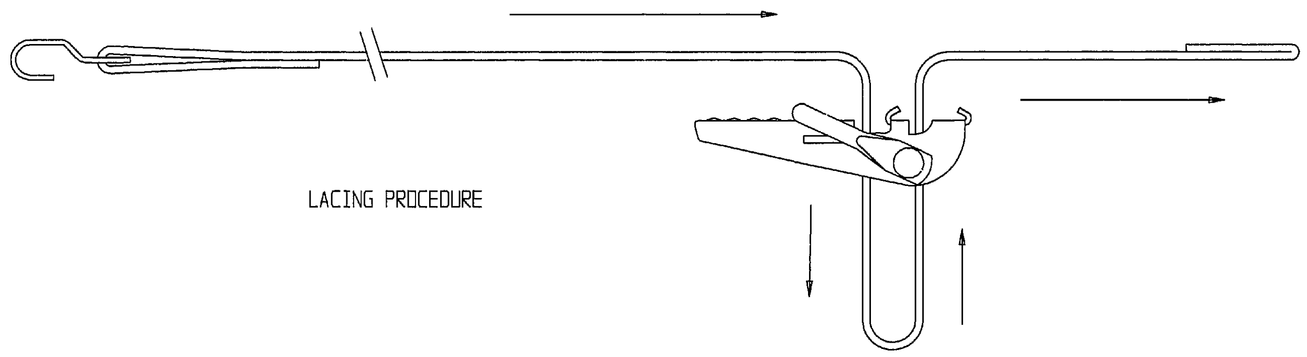

LACING PROCEDURE

PART NO.	VENDOR P/N	"A"
3321AS005-40	CT2703-40	40.0 ± .50
3321AS005-50	CT2703-50	50.0 ± .50
3321AS005-62	CT2703-62	62.0 ± .50
3321AS005-72	CT2703-72	72.0 ± .50
3321AS005-80	CT2703-80	80.0 ± .50
3321AS005-120	CT2703-120	120.0 ± .50

SOURCE CONTROL DRAWING

FIND NO.	QTY REQD	CAGE CODE	PART NO. OR IDENTIFYING NO.	NOMENCLATURE OR DESCRIPTION	SPECIFICATION	NOTE

PARTS LIST

REVISION	A	B
SHEET	1	1

SHEET REVISION RECORD

3321AS201	DL 3321AS200
3321AS101	DL 3321AS100
3321AS701	DL 3321AS700
3321AS601	DL 3321AS600
3321AS501	DL 3321AS500
3321AS401	DL 3321AS400
3321AS301	DL 3321AS300
NEXT ASSY	USED ON

APPLICATION

UNLESS OTHERWISE SPECIFIED:
DIMENSIONS ARE IN INCHES
TOLERANCES ON:
FRACTIONS ± DECIMALS .10 ± .010 ANGLES ± 30'°

MATERIAL: SEE NOTES

CONTRACT NO. N00383-90-C-7642

DEPARTMENT OF THE NAVY
AVIATION SUPPLY OFFICE
700 ROBBINS AVE.
PHILADELPHIA, PA. 19111

DRAWN J. KIRCHHAN
CHECKED J.K.
REVIEWED MOREY
APPROVED
APPROVED FOR NAV AIR SYS COM
BY DIRECTION 3/19/98 DATE

DEPARTMENT OF THE NAVY
NAVAL AIR SYSTEMS COMMAND
WASHINGTON, D.C. 20360

STRAP

SIZE	CAGE CODE	DWG NO.
D	30003	3321AS005
SCALE 1/1		SHEET 1 OF 1

WHEN REFERRING TO THIS DRAWING STATE DRAWING NO., APPLICABLE ISSUE LETTER IF ANY, AND DATE

DISTRIBUTION STATEMENT A.
APPROVED FOR PUBLIC RELEASE;
DISTRIBUTION IS UNLIMITED

CAD MAINTAINED. CHANGES SHALL BE INCORPORATED BY THE DESIGN ACTIVITY.

REVISIONS			
LTR	DESCRIPTION	DATE	APPROVED
A	ADDED DWGS. IN APPLICATION BLOCK	11/95	KIRCHHAN

NOTES: UNLESS OTHERWISE SPECIFIED

1. INTERPRET DRAWING IN ACCORDANCE WITH MIL-STD-100.
2. CHEMICAL FILM IAW MIL-C-5541 CLASS 1A GOLD.

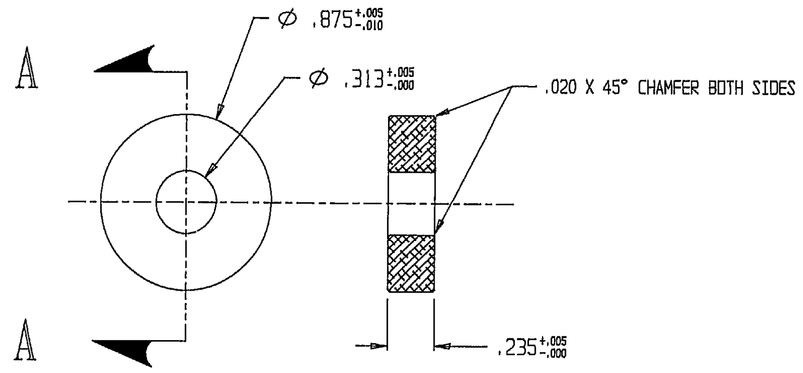

SECTION

A - A

FIND NO.	QTY REQD	CAGE CODE	PART NO. OR IDENTIFYING NO.	NOMENCLATURE OR DESCRIPTION	SPECIFICATION	NOTE

PARTS LIST

3321AS201	OL 3321AS200
3321AS701	OL 3321AS700
3321AS601	OL 3321AS600
3321AS501	OL 3321AS500
3321AS401	OL 3321AS400
3321AS301	OL 3321AS300
NEXT ASSY	USED ON

APPLICATION

REVISION	A
SHEET	1

SHEET REVISION RECORD

UNLESS OTHERWISE SPECIFIED:
DIMENSIONS ARE IN INCHES
TOLERANCES ON:
FRACTIONS ± DECIMALS .10 ± .010 ANGLES ± 30'°

MATERIAL:
6061-T6511
PER QQ-A-200/8

CONTRACT NO. N00383-90-C-7642
DEPARTMENT OF THE NAVY
AVIATION SUPPLY OFFICE
700 ROBBINS AVE.
PHILADELPHIA, PA. 19111

DRAWN J. KIRCHHAN
CHECKED J.K.
REVIEWED MOREY
APPROVED
APPROVED FOR NAV AIR SYS COM
BY DIRECTION R. Gates DATE 12/9/96

DEPARTMENT OF THE NAVY
NAVAL AIR SYSTEMS COMMAND
WASHINGTON, D.C. 20360

SPACER

SIZE	CAGE CODE	DWG NO.
D	30003	3321AS006
SCALE 2/1		SHEET 1 OF 1

WHEN REFERRING TO THIS DRAWING STATE DRAWING NO., APPLICABLE ISSUE LETTER IF ANY, AND DATE

DISTRIBUTION STATEMENT A.
APPROVED FOR PUBLIC RELEASE;
DISTRIBUTION IS UNLIMITED

CAD MAINTAINED. CHANGES SHALL BE INCORPORATED BY THE DESIGN ACTIVITY.

REVISIONS			
LTR	DESCRIPTION	DATE	APPROVED
A	ADDED DWGS. IN APPLICATION BLOCK	11/95	KIRCHHAN

NOTES: UNLESS OTHERWISE SPECIFIED

1. INTERPRET DRAWING IN ACCORDANCE WITH MIL-STD-100.

2. SILKSCREEN USING VINYL INK, COLOR, RED IAW FED-STD-595 11302 ON CLEAR POLYESTER LABEL STOCK, GLOSS, 3 MIL THICK, ADHESIVE BACKED.

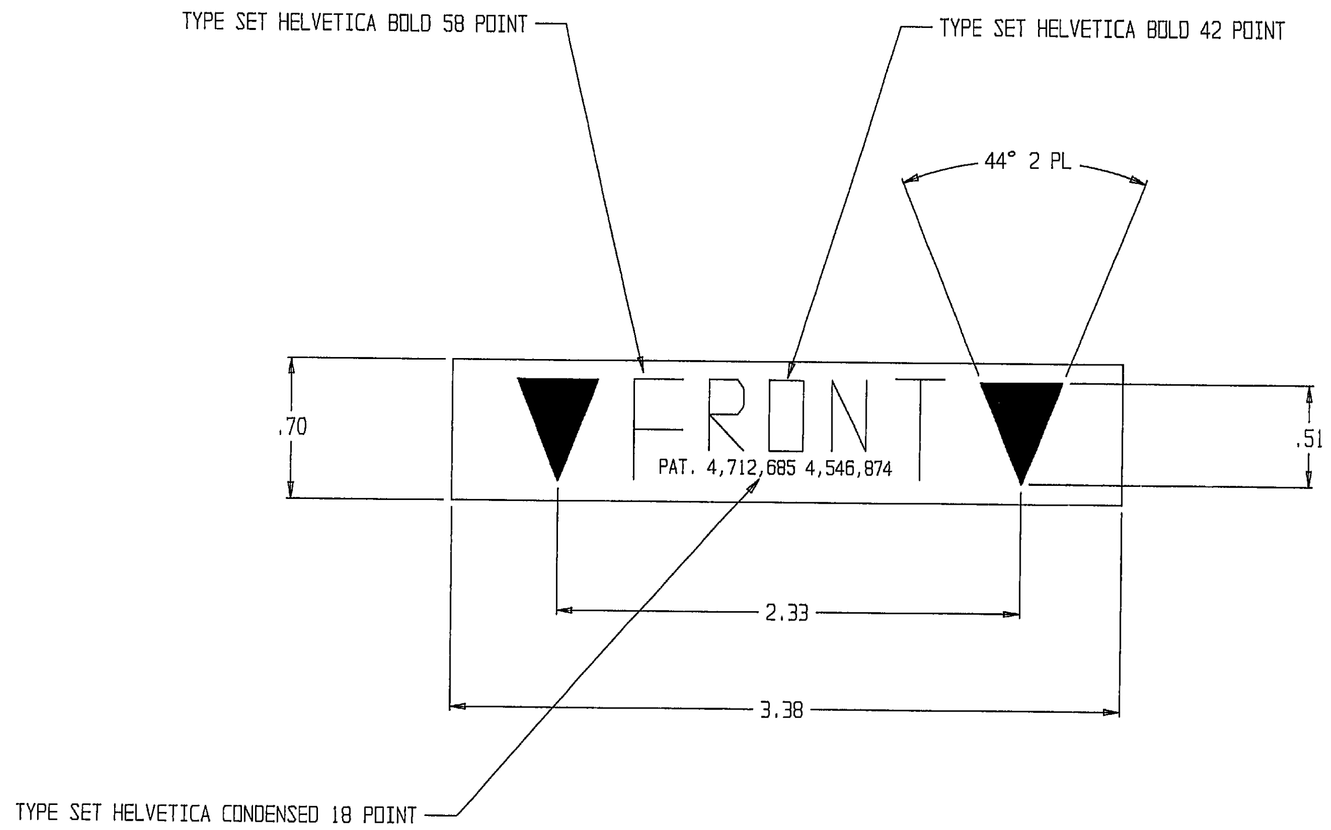

FIND NO.	QTY REQD	CAGE CODE	PART NO. OR IDENTIFYING NO.	NOMENCLATURE OR DESCRIPTION	SPECIFICATION	NOTE

PARTS LIST

REVISION	A													
SHEET	1													

SHEET REVISION RECORD

3321AS202	DL 3321AS200
3321AS102	DL 3321AS100
3321AS702	DL 3321AS700
3321AS602	DL 3321AS600
3321AS502	DL 3321AS500
3321AS402	DL 3321AS400
3321AS302	DL 3321AS300
NEXT ASSY	USED ON

APPLICATION

UNLESS OTHERWISE SPECIFIED:
DIMENSIONS ARE IN INCHES
TOLERANCES ON:
FRACTIONS ± DECIMALS .10 .010 ± ANGLES 30'°

MATERIAL:

SEE NOTE 2

CONTRACT NO. N00383-90-C-7642

DEPARTMENT OF THE NAVY
AVIATION SUPPLY OFFICE
700 ROBBINS AVE.
PHILADELPHIA, PA. 19111

DRAWN J. KIRCHHAN
CHECKED J.K.
REVIEWED MOREY
APPROVED
APPROVED FOR NAV AIR SYS COM
BY DIRECTION 12/8/96 DATE

DEPARTMENT OF THE NAVY
NAVAL AIR SYSTEMS COMMAND
WASHINGTON, D.C. 20360

LABEL, FRONT UPPER

SIZE	CAGE CODE	DWG NO.
D	30003	3321AS007
SCALE 2/1		SHEET 1 OF 1

WHEN REFERRING TO THIS DRAWING STATE DRAWING NO., APPLICABLE ISSUE LETTER IF ANY, AND DATE

DISTRIBUTION STATEMENT A.
APPROVED FOR PUBLIC RELEASE;
DISTRIBUTION IS UNLIMITED

CAD MAINTAINED. CHANGES SHALL BE INCORPORATED BY THE DESIGN ACTIVITY.

REVISIONS			
LTR	DESCRIPTION	DATE	APPROVED
A	ADDED DWGS. IN APPLICATION BLOCK	11/95	KIRCHHAN

NOTES: UNLESS OTHERWISE SPECIFIED

1. INTERPRET DRAWING IN ACCORDANCE WITH MIL-STD-100.

2. SILKSCREEN USING VINYL INK, COLOR RED, IAW FED-STD-595 11302
   ON CLEAR POLYESTER LABEL STOCK, GLOSS, 3 MIL THICK, ADHESIVE BACKED.

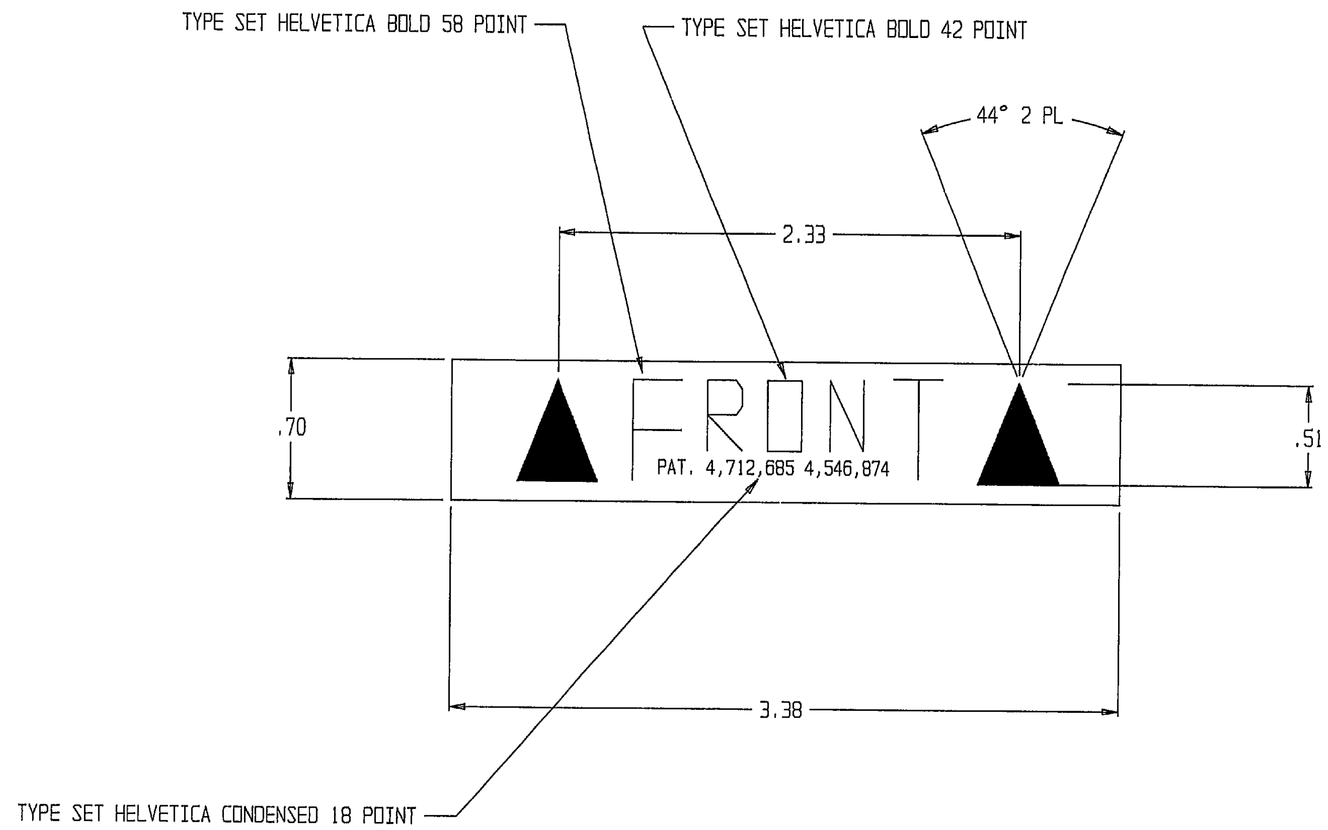

FIND NO.	QTY REQD	CAGE CODE	PART NO. OR IDENTIFYING NO.	NOMENCLATURE OR DESCRIPTION	SPECIFICATION	NOTE

PARTS LIST

3321AS201	DL 3321AS200
3321AS101	DL 3321AS100
3321AS701	DL 3321AS700
3321AS601	DL 3321AS600
3321AS501	DL 3321AS500
3321AS401	DL 3321AS400
3321AS301	DL 3321AS300
NEXT ASSY	USED ON

APPLICATION

REVISION	A
SHEET	1

SHEET REVISION RECORD

UNLESS OTHERWISE SPECIFIED:
DIMENSIONS ARE IN INCHES
TOLERANCES ON:
FRACTIONS ± DECIMALS .10 ± .010 ANGLES ± 30'°

MATERIAL:
SEE NOTE 2

CONTRACT NO. N00383-90-C-7642
DEPARTMENT OF THE NAVY
AVIATION SUPPLY OFFICE
700 ROBBINS AVE.
PHILADELPHIA, PA. 19111

DRAWN J. KIRCHHAN
CHECKED J.K.
REVIEWED MOREY
APPROVED
APPROVED FOR NAV AIR SYS COM
BY DIRECTION 1/9/96
DATE

DEPARTMENT OF THE NAVY
NAVAL AIR SYSTEMS COMMAND
WASHINGTON, D.C. 20360

LABEL, FRONT LOWER

SIZE	CAGE CODE	DWG NO.
D	30003	3321AS008

SCALE 2/1 SHEET 1 OF 1

WHEN REFERRING TO THIS DRAWING STATE DRAWING NO., APPLICABLE ISSUE LETTER IF ANY, AND DATE

DISTRIBUTION STATEMENT A.
APPROVED FOR PUBLIC RELEASE;
DISTRIBUTION IS UNLIMITED

CAD MAINTAINED. CHANGES SHALL BE INCORPORATED BY THE DESIGN ACTIVITY.

REVISIONS			
LTR	DESCRIPTION	DATE	APPROVED
A	ADDED DWGS. IN APPLICATION BLOCK	11/95	KIRCHHAN

SUGGESTED SOURCE(S) OF SUPPLY			
CONTROL NO.	SUPPLIER DATA		
	CAGE CODE	PART NUMBER	NAME AND ADDRESS
3321AS011	82240	K3-1635-77	SOUTHCO CORP. P.O. BOX 1985 ALBANY, N.Y. 12201

NOTES: UNLESS OTHERWISE SPECIFIED

1. INTERPRET DRAWING IN ACCORDANCE WITH MIL-STD-100.
2. IDENTIFICATION OF THE SUGGESTED ITEMS LISTED HEREON IS NOT TO BE CONSTRUED AS A GUARANTEE OF PRESENT OR CONTINUED AVAILABILITY.
3. STEEL FINISH SHALL BE ELECTRODEPOSITED ALKALINE ZINC NICKEL ALLOY .0003" MIN. WITH YELLOW CHROMATE CONVERSION COATING IAW ASTM B 841 CLASS 1, TYPE B.

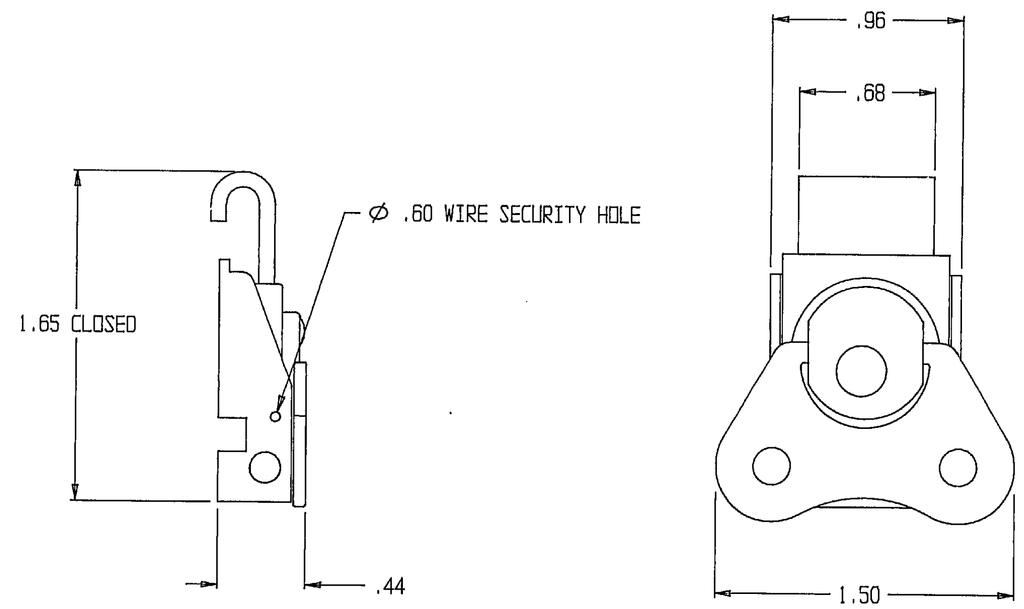

VENDOR ITEM DRAWING

FIND NO.	QTY REQD	CAGE CODE	PART NO. OR IDENTIFYING NO.	NOMENCLATURE OR DESCRIPTION	SPECIFICATION	NOTE

PARTS LIST

3321AS201	DL 3321AS200
3321AS101	DL 3321AS100
3321AS701	DL 3321AS700
3321AS601	DL 3321AS600
3321AS501	DL 3321AS500
3321AS401	DL 3321AS400
3321AS301	DL 3321AS300
NEXT ASSY	USED ON

APPLICATION

REVISION	A
SHEET	1

SHEET REVISION RECORD

UNLESS OTHERWISE SPECIFIED:
DIMENSIONS ARE IN INCHES
TOLERANCES ON:
FRACTIONS ± DECIMALS .10 ± .010 ANGLES ± 30'°

MATERIAL:

CONTRACT NO. N00383-90-C-7642

DEPARTMENT OF THE NAVY
AVIATION SUPPLY OFFICE
700 ROBBINS AVE.
PHILADELPHIA, PA. 19111

DRAWN J. KIRCHHAN
CHECKED J.K.
REVIEWED MOREY
APPROVED
APPROVED FOR NAV AIR SYS COM
BY DIRECTION
DATE 12/10/92

DEPARTMENT OF THE NAVY
NAVAL AIR SYSTEMS COMMAND
WASHINGTON, D.C. 20360

LATCH

SIZE	CAGE CODE	DWG NO.
D	30003	3321AS011

SCALE 2/1 SHEET 1 OF 1

WHEN REFERRING TO THIS DRAWING STATE DRAWING NO., APPLICABLE ISSUE LETTER IF ANY, AND DATE

NOTES:

1. INTERPRET DRAWING AND REVISIONS IN ACCORDANCE WITH ASME Y14.100, ASME Y14.24, ASME Y14.34, AND ASME Y14.35

2. IDENTIFICATION OF THE SUGGESTED ITEMS IS NOT TO BE CONSTRUED AS A GUARANTEE OF PRESENT OR CONTINUED AVAILABILITY.

3. STEEL PARTS SHALL BE PLATED WITH ELECTRODEPOSITED ALKALINE ZINC NICKEL IN ACCORDANCE WITH ASTM-B841 CLASS 1, TYPE B, GRADE 3

4. IDENTIFICATION MARKING PER MIL-STD-130 SHALL INCLUDE AS A MINIMUM:
   MFR. P/N K3-1635-77
   MFR. CAGE CODE 94222

DISTRIBUTION STATEMENT A.
APPROVED FOR PUBLIC RELEASE;
DISTRIBUTION IS UNLIMITED

CAD MAINTAINED. CHANGES SHALL BE INCORPORATED BY THE DESIGN ACTIVITY.

REVISIONS			
LTR	DESCRIPTION	DATE	APPROVED
A	ADDED DWGS. IN APPLICATION BLOCK	11/95	KIRCHHAN
B	(1-3) SEE NSWC IHD ECP I99079	10/26/99	S/VJG

SUGGESTED SOURCE(S) OF SUPPLY			
CONTROL NO.	SUPPLIER DATA		
	CAGE CODE	PART NUMBER	NAME AND ADDRESS
3321AS011	94222	K3-1635-77	SOUTHCO INC P.O. BOX 82316 PHILA. PA. 16182

NOTES: UNLESS OTHERWISE SPECIFIED

1. INTERPRET DRAWING IN ACCORDANCE WITH MIL-STD-100.
2. IDENTIFICATION OF THE SUGGESTED ITEMS HEREON IS NOT TO BE CONSTRUED AS A GUARANTEE OF PRESENT OR CONTINUED AVAILABILITY.
3. (B3) STEEL FINISH SHALL BE ELECTRODEPOSITED ALKALINE ZINC NICKEL ALLOY .0003" MIN. WITH YELLOW CHROMATE CONVERSION COATING IAW ASTM B841 CLASS 1, TYPE B, GRADE 3.
4. (B1) IDENTIFICATION MARKING PER MIL-STD-130 SHALL INCLUDE AS A MINIMUM:
   MFR. PART NUMBER
   MFR. CAGE CODE

(B2)

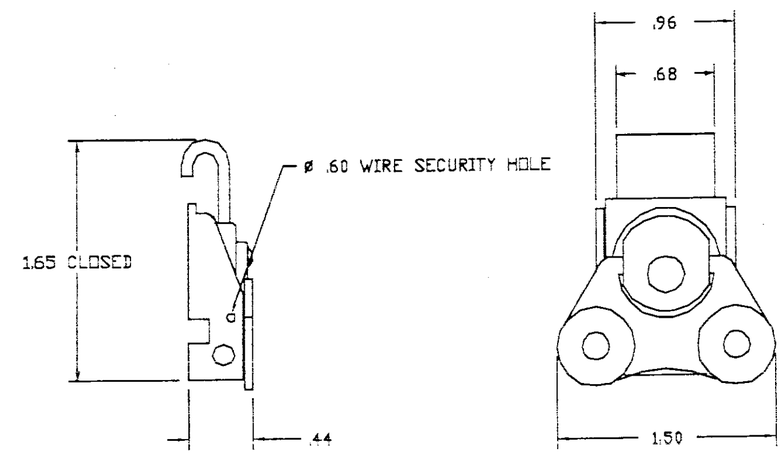

VENDOR ITEM DRAWING

FIND NO.	QTY REQD	CAGE CODE	PART NO. OR IDENTIFYING NO.	NOMENCLATURE OR DESCRIPTION	SPECIFICATION	NOTE

PARTS LIST

3321AS201	DL 3321AS200
3321AS101	DL 3321AS100
3321AS701	DL 3321AS700
3321AS601	DL 3321AS600
3321AS501	DL 3321AS500
3321AS401	DL 3321AS400
3321AS301	DL 3321AS300
NEXT ASSY	USED ON

APPLICATION

REVISION
SHEET
SHEET REVISION RECORD

UNLESS OTHERWISE SPECIFIED
DIMENSIONS ARE IN INCHES
TOLERANCES ON:
FRACTIONS DECIMALS ANGLES
± ± .10 .010 ± 30'
MATERIAL:

CONTRACT NO. N00383-90-C-7642
DEPARTMENT OF THE NAVY
AVIATION SUPPLY OFFICE
700 ROBBINS AVE.
PHILADELPHIA, PA. 19111

DRAWN J. KIRCHHAN
CHECKED J.K
REVIEWED MOREY
APPROVED S/R. SMITH
APPROVED FOR NAV AIR SYS COM
S/R ARTER 12/18/96
DIRECTOR DATE

DEPARTMENT OF THE NAVY
NAVAL AIR SYSTEMS COMMAND
WASHINGTON, D.C. 20360

LATCH

SIZE	CAGE CODE	DWG NO.
D	30003	3321AS011

SCALE 2/1 SHEET 1 OF 1

WHEN REFERRING TO THIS DRAWING STATE DRAWING NO., APPLICABLE ISSUE LETTER IF ANY, AND DATE

NAVSUP

NAVAL SUPPLY SYSTEMS COMMAND

NAVAL INVENTORY CONTROL POINT

ENGINEERING CHANGE ORDER

1. ECO NO.: O- 021

2. DRAWING/PART NO.	3. NOMENCLATURE	4. CURRENT REVISION
3321AS011	Latch	B

5. CUSTOMER	6. CUSTOMER DWG NO.	7. NEXT HIGHER ASSEMBLY NO.	8. END ITEM PRODUCT I.D.
NAVICP			15450-300

9. RN/SVR NO.	10. ECO REQUIRED BY:	11. ORIGINATOR	DATE
	NAVICP	Robert Steel 0771	01/25/05

12. DESCRIPTION OF CHANGE (WAS / IS):

Drawing 3321AS011 Sheet 1, Zone D-7 Notes
Change Notes
(See attached sheet)

13. REASON FOR CHANGE [INCLUDE JUSTIFICATION AND BACKUP DATA (IF AVAILABLE)]:

Clarification of Notes

☐ VALUE ENGINEERING ☐ SPEC CHANGE ☒ CORRECTIONS ☐ IN-SERVICE ☐ SAFETY ☐ NEW DRAWING

14. DESIGN ENG. RECOMMENDS:	☐ CLASS 1 - MAJOR	17. ANALYSIS ENGINEER (As Required)	DATE
☐ FUTURE INCORP. (REASON):		18. DE PEER REVIEW (As Required)	DATE
☐ APPROVED AS REQUESTED	☐ DISAPPROVED 15. DE INITIALS	19. DESIGN ENGINEER	DATE
☐ STOP NOTICE ISSUED	16. ☐ FORMAL CCB REQUIRED	20. ENG MGT	DATE

21. PROGRAM MANAGEMENT *CUSTOMER INTERFACE REQUIREMENTS*	✓	22. DE CHECKS AREAS THAT REQUIRE REVIEW/CONCURRENCE
NOTIFY CUSTOMER ☐	☐	MANUFACTURING ENGINEERING
Note: Customer or FAA notification required on all PMA parts.	☐	MATERIALS AND PROCESSES
APPROVAL REQUIRED ☐	☐	QUALITY ENGINEERING
CDRL REFERENCE:	☐	ILS/R&M
CONTRACT NO.	☐	ECO ORIGINATOR (IF NOT DE) Robert Steel
RISK RELEASE ☐	☐	OTHER (SPECIFY)
NO. COPIES TO CUSTOMER	✓	CONFIGURATION MGT MGR (LAST)
PROGRAM MANAGER SIGNATURE		25. DRAFTING
		26. ENGINEERING CHECK

23. PLANNED EFFECTIVITY

LOT: DATE: S/N

MATERIAL DISTRIBUTION & DISPOSITION	ORDER/LOT	QUANTITY	USE	CHANGE	SCRAP
a. FIELD		☐	☐	☐	☐
b. STORES		☐	☐	☐	☐
c. WIP BEYOND		☐	☐	☐	☐
d. WIP NOT BEYOND		☐	☐	☐	☐
e. NEXT RELEASE				☐	

MATERIAL PLANNING SIGNATURE

24. CUSTOMER/DCMC CONCURRENCE	27. RLSD DWG REV.	28. CM RELEASE	30. DOCUMENT RELEASE

31. COMMENTS

29. DISTRIBUTION CODE

NAVAL SUPPLY SYSTEMS COMMAND

NAVSUP

NAVAL INVENTORY CONTROL POINT

ENGINEERING CHANGE REQUEST/ORDER (CONTINUATION SHEET)

1. ECR NO.: 0-021

2. DWG/PART NO.	3. NOMENCLATURE	4. CURRENT REV.
3321A5011	Latch	B

CONTINUATION ITEMS

NOTES:

1. INTERPRET DRAWING AND REVISIONS IN ACCORDANCE WITH ASME Y14.100, ASME Y14.24, ASME Y14.34, AND ASME Y14.35

2. IDENTIFICATION OF THE SUGGESTED ITEMS IS NOT TO BE CONSTRUED AS A GUARANTEE OF PRESENT OR CONTINUED AVAILABILITY.

3. STEEL PARTS SHALL BE PLATED WITH ELECTRODEPOSITED ALKALINE ZINC NICKEL IN ACCORDANCE WITH ASTM-B841 CLASS 1, TYPE B, GRADE 3

4. IDENTIFICATION MARKING PER MIL-STD-130 SHALL INCLUDE AS A MINIMUM:
   MFR. P/N K3-1635-77
   MFR. CAGE CODE 94222

DISTRIBUTION STATEMENT A.
APPROVED FOR PUBLIC RELEASE;
DISTRIBUTION IS UNLIMITED

CAD MAINTAINED. CHANGES SHALL BE INCORPORATED BY THE DESIGN ACTIVITY.

REVISIONS			
LTR	DESCRIPTION	DATE	APPROVED
A	ADDED DWGS. IN APPLICATION BLOCK	11/95	KIRCHHAN
B	(1-2) SEE NSWC IHD ECP 199079	10/26/99	S/VJG

SUGGESTED SOURCE(S) OF SUPPLY			
CONTROL NO.	SUPPLIER DATA		
	CAGE CODE	PART NUMBER	NAME AND ADDRESS
3321AS012	98003	500-57-M15-ZB	NIELSEN SESSIONS P.O. BOX 368 HARTFORD CT 06141

(B2)

NOTES: UNLESS OTHERWISE SPECIFIED

1. INTERPRET DRAWING IN ACCORDANCE WITH MIL-STD-100.
2. IDENTIFICATION OF THE SUGGESTED ITEMS HEREON IS NOT TO BE CONSTRUED AS A GUARANTEE OF PRESENT OR CONTINUED AVAILABILITY.
3. MATERIALS AND FINISH:
   RETAINER - 1008 CRS ZINC PLATED
   BAIL - 1008 GALVANIZED STEEL WIRE
   GRIP - EPDM COMPOUND
4. (B1) IDENTIFICATION MARKING PER MIL-STD-130 SHALL INCLUDE AS A MINIMUM:
   MFR. PART NUMBER
   MFR. CAGE CODE

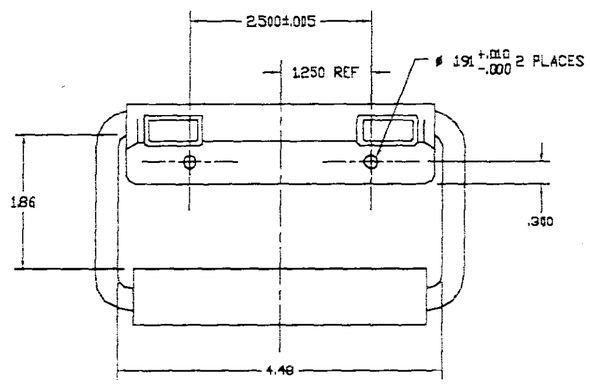

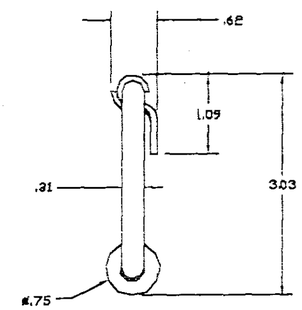

VENDOR ITEM DRAWING

FIND NO.	QTY REQD	CAGE CODE	PART NO. OR IDENTIFYING NO.	NOMENCLATURE OR DESCRIPTION	SPECIFICATION	NOTE

PARTS LIST

REVISION	
SHEET	

SHEET REVISION RECORD

3321AS201	DL 3321AS200
3321AS101	DL 3321AS100
3321AS701	DL 3321AS700
3321AS601	DL 3321AS600
3321AS501	DL 3321AS500
3321AS401	DL 3321AS400
3321AS301	DL 3321AS300
NEXT ASSY	USED ON

APPLICATION

UNLESS OTHERWISE SPECIFIED:
DIMENSIONS ARE IN INCHES
TOLERANCES ON:
FRACTIONS ± DECIMALS ± .10 .010 ANGLES ± 30'

MATERIAL:

CONTRACT NO. N00383-90-C-7642
DEPARTMENT OF THE NAVY
AVIATION SUPPLY OFFICE
700 ROBBINS AVE.
PHILADELPHIA, PA 19111

DEPARTMENT OF THE NAVY
NAVAL AIR SYSTEMS COMMAND
WASHINGTON, D.C. 20360

DRAWN	J. KIRCHHAN	
CHECKED	J.K.	
REVIEWED	MOREY	
APPROVED	S/R SMITH	
APPROVED FOR NAV AIR SYS COM	S/R. ARTER	12/9/96
	BY DIRECTION	DATE

HANDLE

SIZE	CAGE CODE	DWG NO.
D	30003	3321AS012
SCALE 1/1		SHEET 1 OF 1

WHEN REFERRING TO THIS DRAWING STATE DRAWING NO., APPLICABLE ISSUE LETTER IF ANY, AND DATE

NAVSUP

NAVAL SUPPLY SYSTEMS COMMAND

NAVAL INVENTORY CONTROL POINT

ENGINEERING CHANGE ORDER

1. ECO NO.: O- 022

2. DRAWING/PART NO.	3. NOMENCLATURE	4. CURRENT REVISION
3321AS012	Handle	B

5. CUSTOMER	6. CUSTOMER DWG NO.	7. NEXT HIGHER ASSEMBLY NO.	8. END ITEM PRODUCT I.D.
NAVICP			15450-300

9. RN/SVR NO.	10. ECO REQUIRED BY:	11. ORIGINATOR	DATE
	NAVICP (80132)	Robert Steel 0771	01/25/05

12. DESCRIPTION OF CHANGE (WAS / IS):

Drawing 3321AS012 Sheet 1, Zone D-7 Notes
Change Notes (See attached sheet)
Added Alternate part number

13. REASON FOR CHANGE [INCLUDE JUSTIFICATION AND BACKUP DATA (IF AVAILABLE)]:

Clarification of Notes
Added Alternate plating

☒ VALUE ENGINEERING ☐ SPEC CHANGE ☒ CORRECTIONS ☐ IN-SERVICE ☐ SAFETY ☐ NEW DRAWING

14. DESIGN ENG. RECOMMENDS:	☐ CLASS 1 - MAJOR	17. ANALYSIS ENGINEER (As Required)	DATE
☐ FUTURE INCORP. (REASON):		18. DE PEER REVIEW (As Required)	DATE
☐ APPROVED AS REQUESTED	☐ DISAPPROVED 15. DE INITIALS	19. DESIGN ENGINEER	DATE
☐ STOP NOTICE ISSUED	16. ☐ FORMAL CCB REQUIRED	20. ENG MGT	DATE

21. PROGRAM MANAGEMENT CUSTOMER INTERFACE REQUIREMENTS	✔	22. DE CHECKS AREAS THAT REQUIRE REVIEW/CONCURRENCE
NOTIFY CUSTOMER ☐	☐	MANUFACTURING ENGINEERING
Note: Customer or FAA notification required on all PMA parts.	☐	MATERIALS AND PROCESSES
APPROVAL REQUIRED ☐	☐	QUALITY ENGINEERING
CDRL REFERENCE:	☐	ILS/R&M
CONTRACT NO.	☐	ECO ORIGINATOR (IF NOT DE) Robert Steel
RISK RELEASE ☐	☐	OTHER (SPECIFY)
NO. COPIES TO CUSTOMER	✔	CONFIGURATION MGT MGR (LAST)
PROGRAM MANAGER SIGNATURE		25. DRAFTING
		26. ENGINEERING CHECK

23. PLANNED EFFECTIVITY

LOT: DATE: S/N

MATERIAL DISTRIBUTION & DISPOSITION	ORDER/LOT	QUANTITY	USE	CHANGE	SCRAP
a. FIELD		☐	☐	☐	☐
b. STORES		☐	☐	☐	☐
c. WIP BEYOND		☐	☐	☐	☐
d. WIP NOT BEYOND		☐	☐	☐	☐
e. NEXT RELEASE				☐	

MATERIAL PLANNING SIGNATURE

24. CUSTOMER/DCMC CONCURRENCE	27. RLSD DWG REV.	28. CM RELEASE

30. DOCUMENT RELEASE

31. COMMENTS

29. DISTRIBUTION CODE

ENGINEERING CHANGE REQUEST/ORDER (CONTINUATION SHEET)

1. ECR NO.: 0-022		
2. DWG/PART NO. 3321AS012	3. NOMENCLATURE Handle	4. CURRENT REV. B

CONTINUATION ITEMS

NOTES:

1. INTERPRET DRAWING AND REVISIONS IN ACCORDANCE WITH ASME Y14.100, ASME Y14.24, ASME Y14.34, AND ASME Y14.35

2. IDENTIFICATION OF THE SUGGESTED ITEMS IS NOT TO BE CONSTRUED AS A GUARANTEE OF PRESENT OR CONTINUED AVAILABILITY.

3. MATERIALS AND FINISH:
   RETAINER – 1008 CRS ZINC PLATED
   BAIL – 1008 GALVANIZED STEEL WIRE
   GRIP – EPDM COMPOUND

4. IDENTIFICATION MARKING PER MIL-STD-130 SHALL INCLUDE AS A MINIMUM:
   MFR. P/N 500-57-M15-ZB
   MFR. CAGE CODE 98003

5. ALTERNATE PART NUMBER AND FINISH:
   ALTERNATE MFR. P/N 500-57-M15-XF
   MFR. CAGE CODE 98003
   ALTERNATE FINISH ON RETAINER & BAIL ELECTRODEPOSITED ALKALINE ZINC NICKEL IN ACCORDANCE WITH ASTM-B841 CLASS 1, TYPE B, GRADE 3

DISTRIBUTION STATEMENT A.
APPROVED FOR PUBLIC RELEASE;
DISTRIBUTION IS UNLIMITED

CAD MAINTAINED. CHANGES SHALL BE INCORPORATED BY THE DESIGN ACTIVITY.

REVISIONS			
LTR	DESCRIPTION	DATE	APPROVED
A	ADDED DWGS. IN APPLICATION BLOCK	11/95	KIRCHHAN
B	REPLACED PO CONC 61-48 WHT WITH PM11279E108	05/97	KIRCHHAN
	CHANGED MIXING RATIOS		
C	(1) SEE NSWC IHD ECP 199079	10/26/99	S/W.JG

APPROVED SOURCE(S) OF SUPPLY			
CONTROL NO.	SUPPLIER DATA		
	CAGE CODE	PART NUMBER	NAME AND ADDRESS
3321AS013		BA-50-100 BA-7794	PAXON POLYMER COMPANY 12875 N. SCENIC HIGHWAY BATON ROUGE, LA 70892
		PM 11279E108	TECHMER PM 18420 LAUREL PARK ROAD RANCHO DOMINGUEZ, CA 90220

(C1)

NOTES: UNLESS OTHERWISE SPECIFIED

1. INTERPRET DRAWING IN ACCORDANCE WITH MIL-STD-100.

2. FORMULATION
2.1 PAXON POLYMER COMPANY - BA 50-100 60%
2.2 PAXON POLYMER COMPANY - BA 710 35%
2.3 TECHMER PM - PM11279E108 5%

3. THE CONTAINER MANUFACTURER SHALL BE RESPONSIBLE FOR THE FORMULATION AND MANUFACTURING PROCESS.

4. THE CONTAINER MANUFACTURER SHALL BE RESPONSIBLE FOR THE CONFORMANCE TO ONE OF THE FOLLOWING APPLICABLE MULTI-APPLICATIONAL REUSABLE CONTAINERS DRAWINGS: 3321AS100
3321AS200
3321AS300
3321AS400
3321AS500
3321AS600
3321AS700

5. IDENTIFICATION OF THE APPROVED ITEMS HEREON IS NOT TO BE CONSTRUED AS A GUARANTEE OF PRESENT OR CONTINUED AVAILABILITY.

6. ONLY THE ITEM DESCRIBED ON THIS DWG WHEN PROCURED FROM THE SUPPLIER LISTED HEREON IS APPROVED FOR USE IN THE APPLICATION SPECIFIED HEREON. A SUBSTITUTE ITEM SHALL NOT BE USED WITHOUT PRIOR APPROVAL BY THE PROCURING ACTIVITY.

SOURCE CONTROL DRAWING

FIND NO.	QTY REQD	CAGE CODE	PART NO. OR IDENTIFYING NO.	NOMENCLATURE OR DESCRIPTION	SPECIFICATION	NOTE

PARTS LIST

REVISION	
SHEET	

SHEET REVISION RECORD

3321AS206, 207	DL 3321AS200
3321AS106, 107	DL 3321AS100
3321AS706, 707	DL 3321AS700
3321AS606, 607	DL 3321AS600
3321AS506, 507	DL 3321AS500
3321AS406, 407	DL 3321AS400
3321AS306, 307	DL 3321AS300
NEXT ASSY	USED ON

APPLICATION

UNLESS OTHERWISE SPECIFIED
DIMENSIONS ARE IN INCHES
TOLERANCES ON:
FRACTIONS DECIMALS ANGLES
± ± .10 .010 ± 30'

MATERIAL:
SEE NOTES

CONTRACT NO. N00383-90-D-7642
DEPARTMENT OF THE NAVY
AVIATION SUPPLY OFFICE
700 ROBBINS AVE.
PHILADELPHIA, PA 19111

DRAWN J. KIRCHHAN
CHECKED J.K.
REVIEWED MOREY
APPROVED S/R. SMITH
APPROVED FOR NAV AIR SYS COM
S/R. ARTER 12-9-96
BY DIRECTION DATE

DEPARTMENT OF THE NAVY
NAVAL AIR SYSTEMS COMMAND
WASHINGTON, D.C. 20360

RESIN SPECIFICATION

SIZE	CAGE CODE	DWG NO.
D	30003	3321AS013
SCALE NONE		SHEET 1 OF 1

WHEN REFERRING TO THIS DRAWING STATE DRAWING NO., APPLICABLE ISSUE LETTER IF ANY, AND DATE

O'Neil
Color & Compounding

Refuse To Compromise

INTERACT TFPE (9018813C)

25% talc-filled high molecular weight high density polyethylene, that can be used as either a stand-alone compound or let-down into various olefin bases to increase stiffness.

Preliminary Material Properties

Typical Properties (1)			
MECHANICAL	**Value**	**Unit**	**Method**
Tensile Stress, break	1,780	psi	ASTM D638
Tensile Stress, yield	4,000	Psi	ASTM D638
Elongation at break	15%	%	ASTM D638
Flexural Modulus, .05 in/min 2 in. span	360,000	Psi	ASTM D790
IMPACT	**Value**	**Unit**	**Method**
Izod Impact, notched 73°F	NA	Ft-lb/in	ASTM D256
Izod Impact, notched -22°F	NA	Ft-lb/in	ASTM D256
THERMAL	**Value**	**Unit**	**Method**
HDT, 66 psi, unannealed	N/A	°F	ASTM D648
HDT, 264 psi, unannealed	N/A	°F	ASTM D648
PHYSICAL/RHEOLOGICAL	**Value**	**Unit**	**Method**
Specific Gravity	1.10	-	ASTM D792
Mold Shrinkage, flow, 0.125" (2)	N/A	In/in	O'Neil
Mold Shrinkage, xflow, 0.125" (2)	N/A	In/in	O'Neil
FLAMMABILITY (3)	**Value**	**Unit**	**Method**
N/A	N/A	N/A	N/A

Revised 4/06/05

THESE VALUES ARE NOT INTENDED FOR SPECIFICATION PURPOSES

(1) Typical values only. Variations within normal tolerances are possible for various colors.
(2) Only typical data for selection purposes. Not to be used for part or tool design.
(3) This rating is not intended to reflect hazards presented by this or any other material under actual fire conditions.

Disclaimer: Each user bears full responsibility for making its own determination as to the suitability of each material, product, recommendation or advice set forth by O'Neil. Each user must identify and perform all tests and analyses necessary to assure that its finished parts incorporating O'Neil materials or products will be safe and suitable for use under end-use conditions. Nothing in this or any other document, nor any oral recommendation or advice, shall be deemed to alter, vary, supersede, or waive any provision of O'Neil's Standard Condition of Sale or this Disclaimer, unless any such modification is specifically agreed to in a writing signed by O'Neil. No statement contained herein concerning a possible or suggested use of any material, product or design is intended, or should be construed, to grant any license under any patent or other intellectual property right of O'Neil or any of its subsidiaries or affiliates covering such use or design, or as a recommendation for the use of such material, product or design in the infringement of any patent or other intellectual property right.

For further information, please contact Brian C. Matachun, bmatachun@oneilcolor.com

O'Neil Color & Compounding Corporation
Garfield, NJ △ Jasper TN.
800-282-7933 800-234-6159

Created on 4/13/2005 10:56 AM

ExxonMobil Chemical

PAXON™

High Density Polyethylene

BA7794 Blow Molding & Sheet Extrusion Resin

Description

BA7794 is a 25% talc-filled, high molecular weight, high density polyethylene. This color matchable material has been specifically developed as a cost effective resin for applications requiring excellent stiffness, impact and heat deflection temperatures. Its design features include excellent rigidity, dimensional stability, warpage resistance, and heat deflection temperature. It also has good low temperature impact resistance. Resin must be dried just prior to the blow molding or sheet extrusion process.

Applications

- Automotive seat backs
- Automotive dunnage trays
- Automotive load floors
- Refrigerator liners
- Ice chests
- Other recreational applications

Properties	ASTM Method	Nominal Value	
		Units (English)	Units (SI)
Mechanical (23°C, 50% relative humidity, unless otherwise noted)			
Tensile Strength at Yield	D-638	4,100 psi	28 MPa
Tensile Strength at Break	D-638	1,700 psi	12 MPa
Elongation at Yield	D-638	7%	7%
Elongation at Break	D-638	20%	20%
Flexural Modulus[1]	D-790	380,000 psi	2,620 MPa
Tensile Impact	D-1822	45 ft lbs/in^2	9.5 joules/cm^2
Gardner Impact	D-3029	350 in/lbs	40 joules
Thermal			
Heat Deflection Temperature,66 psi load	D-648	210°F	99°C
Coefficient of Linear Thermal Expansion	D-696	5.2×10^{-5} in/in°F	9×10^{-4} cm/cm°C

1. Method1, Procedure A (1"x3"x0.125"), Tangent calculation.

AMERICAS - PETD REV. PRINTED 04/02/02

©2001 ExxonMobil. The user may forward, distribute, and/or photocopy this copyrighted document only if unaltered and complete, including all of its headers, footers, disclaimers, and other information. You may not copy this document to a Web site. The information in this document relates only to the named product or materials when not in combination with any other product or materials. We based the information on data believed to be reliable on the date compiled, but we do not represent, warrant, or otherwise guarantee, expressly or impliedly, the merchantability, fitness for a particular purpose, suitability, accuracy, reliability, or completeness of this information or the products, materials, or processes described. The user is solely responsible for all determinations regarding any use of material or product and any process in its territories of interest. We expressly disclaim liability for any loss, damage, or injury directly or indirectly suffered or incurred as a result of or related to anyone using or relying on any of the information in this document. There is no warranty against patent infringement, nor any endorsement of any product or process, and we expressly disclaim any contrary implication. The terms, "we", "our", "ExxonMobil Chemical", or "ExxonMobil" are used for convenience, and may include any one or more of ExxonMobil Chemical Company, Exxon Mobil Corporation, or any affiliates they directly or indirectly steward.

NAVSUP

NAVAL SUPPLY SYSTEMS COMMAND

NAVAL INVENTORY CONTROL POINT

ENGINEERING CHANGE ORDER

1. ECO NO.: O-023

DRAWING/PART NO. 3321A5013	3. NOMENCLATURE Resin Specification		4. CURRENT REVISION C
5. CUSTOMER NAVICP	6. CUSTOMER DWG NO.	7. NEXT HIGHER ASSEMBLY NO.	8. END ITEM PRODUCT I.D. 15450-300
9. RN/SVR NO.	10. ECO REQUIRED BY: NAVICP(80132)	11. ORIGINATOR Robert Steel 0771	DATE 01/25/05

12. DESCRIPTION OF CHANGE (WAS / IS):

Drawing 3321A5013 Sheet 1, Zone C-6 Note 2.2
Change Note 2.2 to:

2.2 O'Neil Color & Compounding - Interact
TFPE 90188130 35 lb
Alternate Material
Paxon BA 7794 can be used until the supply is exhausted

13. REASON FOR CHANGE [INCLUDE JUSTIFICATION AND BACKUP DATA (IF AVAILABLE)]:

Clarification of part number

☐ VALUE ENGINEERING ☐ SPEC CHANGE ☒ CORRECTIONS ☐ IN-SERVICE ☐ SAFETY ☐ NEW DRAWING

14. DESIGN ENG. RECOMMENDS:	☐ CLASS 1 – MAJOR	17. ANALYSIS ENGINEER (As Required)	DATE
☐ FUTURE INCORP. (REASON):		18. DE PEER REVIEW (As Required)	DATE
☐ APPROVED AS REQUESTED	☐ DISAPPROVED 15. DE INITIALS	19. DESIGN ENGINEER	DATE
☐ STOP NOTICE ISSUED	16. ☐ FORMAL CCB REQUIRED	20. ENG MGT	DATE

21. PROGRAM MANAGEMENT CUSTOMER INTERFACE REQUIREMENTS	✓	22. DE CHECKS AREAS THAT REQUIRE REVIEW/CONCURRENCE	23. PLANNED EFFECTIVITY LOT: DATE: S/N
NOTIFY CUSTOMER ☐	☐	MANUFACTURING ENGINEERING	MATERIAL DISTRIBUTION & DISPOSITION
Note: Customer or FAA notification required on all PMA parts.	☐	MATERIALS AND PROCESSES	
APPROVAL REQUIRED ☐	☐	QUALITY ENGINEERING	
CDRL REFERENCE:	☐	ILS/R&M	
CONTRACT NO.	☐	ECO ORIGINATOR (IF NOT DE) Robert Steel	
RISK RELEASE ☐	☐	OTHER (SPECIFY)	
NO. COPIES TO CUSTOMER	✓	CONFIGURATION MGT MGR (LAST)	
PROGRAM MANAGER SIGNATURE		25. DRAFTING	
		26. ENGINEERING CHECK	

MATERIAL DISTRIBUTION & DISPOSITION	ORDER/LOT	QUANTITY	USE	CHANGE	SCRAP
a. FIELD		☐	☐	☐	☐
b. STORES		☐	☐	☐	☐
c. WIP BEYOND		☐	☐	☐	☐
d. WIP NOT BEYOND		☐	☐	☐	☐
e. NEXT RELEASE				☐	

MATERIAL PLANNING SIGNATURE

24. CUSTOMER/DCMC CONCURRENCE	27. RLSD DWG REV.	28. CM RELEASE	30. DOCUMENT RELEASE

31. COMMENTS

29. DISTRIBUTION CODE:

ENGINEERING CHANGE REQUEST/ORDER (CONTINUATION SHEET)

1. ECR NO.: 0-023

2. DWG/PART NO.	3. NOMENCLATURE	4. CURRENT REV.
3321A5013	Resin Specification	C

CONTINUATION ITEMS

O'Neil

Color & Compounding

Refuse To Compromise

INTERACT TFPE (9018813C)

25% talc-filled high molecular weight high density polyethylene, that can be used as either a stand-alone compound or let-down into various olefin bases to increase stiffness.

Preliminary Material Properties

Typical Properties (1)

MECHANICAL	Value	Unit	Method
Tensile Stress, break	1,780	psi	ASTM D638
Tensile Stress, yield	4,000	Psi	ASTM D638
Elongation at break	15%	%	ASTM D638
Flexural Modulus, .05 in/min 2 in. span	360,000	Psi	ASTM D790
IMPACT	**Value**	**Unit**	**Method**
Izod Impact, notched 73°F	NA	Ft-lb/in	ASTM D256
Izod Impact, notched -22°F	NA	Ft-lb/in	ASTM D256
THERMAL	**Value**	**Unit**	**Method**
HDT, 66 psi, unannealed	N/A	°F	ASTM D648
HDT, 264 psi, unannealed	N/A	°F	ASTM D648
PHYSICAL/RHEOLOGICAL	**Value**	**Unit**	**Method**
Specific Gravity	1.10	-	ASTM D792
Mold Shrinkage, flow, 0.125" (2)	N/A	In/in	O'Neil
Mold Shrinkage, xflow, 0.125" (2)	N/A	In/in	O'Neil
FLAMMABILITY (3)	**Value**	**Unit**	**Method**
N/A	N/A	N/A	N/A

Revised 4/06/05

THESE VALUES ARE NOT INTENDED FOR SPECIFICATION PURPOSES

(1) Typical values only. Variations within normal tolerances are possible for various colors.
(2) Only typical data for selection purposes. Not to be used for part or tool design.
(3) This rating is not intended to reflect hazards presented by this or any other material under actual fire conditions.

Disclaimer: Each user bears full responsibility for making its own determination as to the suitability of each material, product, recommendation or advice set forth by O'Neil. Each user must identify and perform all tests and analyses necessary to assure that its finished parts incorporating O'Neil materials or products will be safe and suitable for use under end-use conditions. Nothing in this or any other document, nor any oral recommendation or advice, shall be deemed to alter, vary, supersede, or waive any provision of O'Neil's Standard Condition of Sale or this Disclaimer, unless any such modification is specifically agreed to in a writing signed by O'Neil. No statement contained herein concerning a possible or suggested use of any material, product or design is intended, or should be construed, to grant any license under any patent or other intellectual property right of O'Neil or any of its subsidiaries or affiliates covering such use or design, or as a recommendation for the use of such material, product or design in the infringement of any patent or other intellectual property right.

For further information, please contact Brian C. Matachun, bmatachun@oneilcolor.com

O'Neil Color & Compounding Corporation

Garfield, NJ ^ Jasper TN

800-282-7933 800-234-6159

Created on 4/13/2005 10:56 AM

ENGINEERING CHANGE REQUEST/ORDER (CONTINUATION SHEET)

1. ECR NO.: 0-023		
2. DWG/PART NO. 3321AD013	3. NOMENCLATURE: Resin Specification	4. CURRENT REV. C

CONTINUATION ITEMS

ExxonMobil Chemical

PAXON™

High Density Polyethylene

BA7794 Blow Molding & Sheet Extrusion Resin

Description

BA7794 is a 25% talc-filled, high molecular weight, high density polyethylene. This color matchable material has been specifically developed as a cost effective resin for applications requiring excellent stiffness, impact and heat deflection temperatures. Its design features include excellent rigidity, dimensional stability, warpage resistance, and heat deflection temperature. It also has good low temperature impact resistance. Resin must be dried just prior to the blow molding or sheet extrusion process.

Applications

- Automotive seat backs
- Automotive dunnage trays
- Automotive load floors
- Refrigerator liners
- Ice chests
- Other recreational applications

Properties	ASTM Method	Nominal Value	
		Units (English)	Units (SI)
Mechanical (23°C, 50% relative humidity, unless otherwise noted)			
Tensile Strength at Yield	D-638	4,100 psi	28 MPa
Tensile Strength at Break	D-638	1,700 psi	12 MPa
Elongation at Yield	D-638	7%	7%
Elongation at Break	D-638	20%	20%
Flexural Modulus[1]	D-790	380,000 psi	2,620 MPa
Tensile Impact	D-1822	45 ft lbs/in^2	9.5 joules/cm^2
Gardner Impact	D-3029	350 in/lbs	40 joules
Thermal			
Heat Deflection Temperature,66 psi load	D-648	210°F	99°C
Coefficient of Linear Thermal Expansion	D-696	5.2×10^{-5} in/in°F	9×10^{-4} cm/cm°C

1. Method1, Procedure A (1"x3"x0.125"), Tangent calculation.

DISTRIBUTION STATEMENT A.
APPROVED FOR PUBLIC RELEASE;
DISTRIBUTION IS UNLIMITED

CAD MAINTAINED. CHANGES SHALL BE INCORPORATED BY THE DESIGN ACTIVITY.

REVISIONS			
LTR	DESCRIPTION	DATE	APPROVED
A	ADDED DWGS. IN APPLICATION BLOCK	11/95	KIRCHHAN

NOTES: UNLESS OTHERWISE SPECIFIED

1. INTERPRET DRAWING IN ACCORDANCE WITH MIL-STD-100.

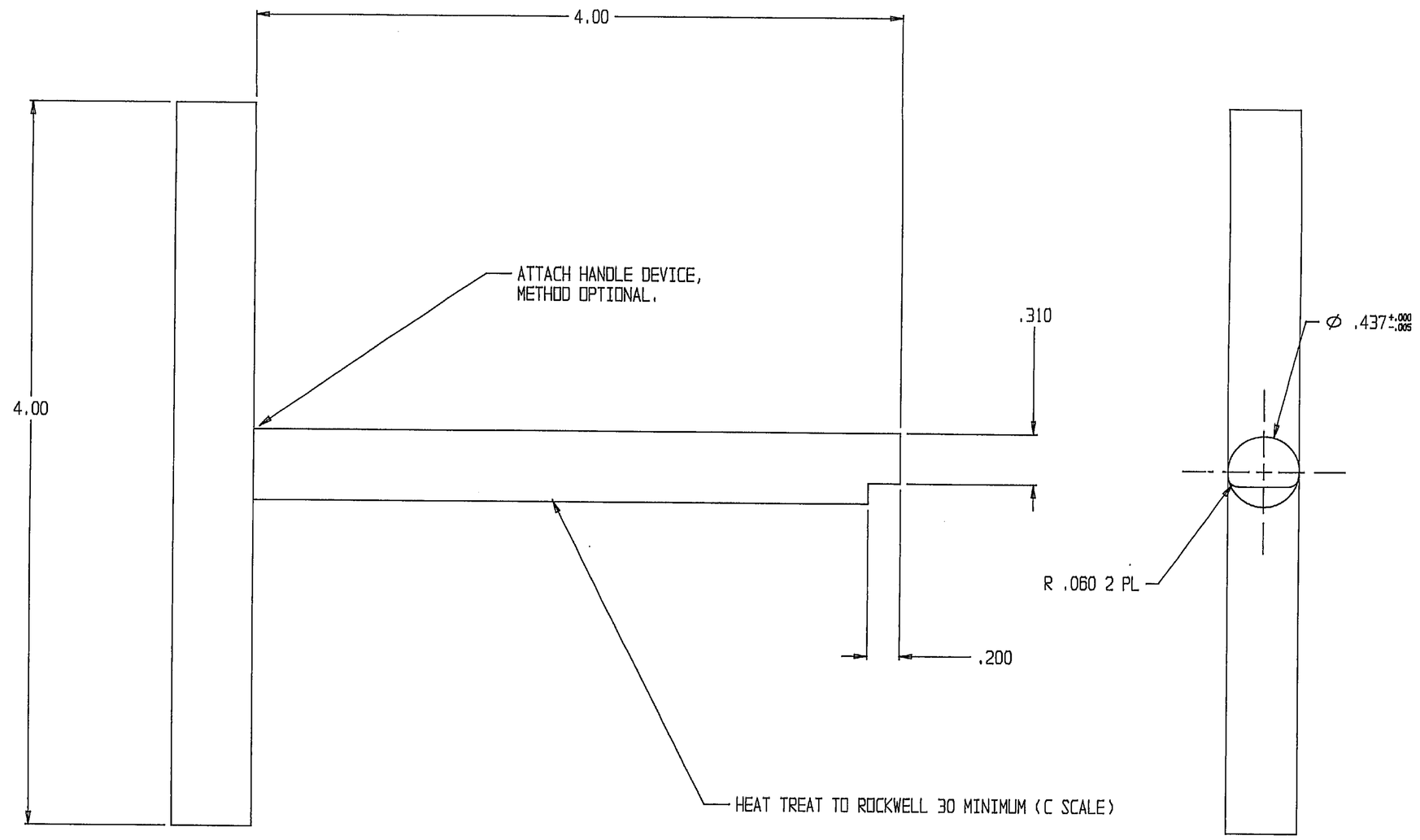

FIND NO.	QTY REQD	CAGE CODE	PART NO. OR IDENTIFYING NO.	NOMENCLATURE OR DESCRIPTION	SPECIFICATION	NOTE

PARTS LIST

REVISION	A														
SHEET	1														

SHEET REVISION RECORD

3321AS201	DL 3321AS200
3321AS101	DL 3321AS100
3321AS701	DL 3321AS700
3321AS601	DL 3321AS600
3321AS501	DL 3321AS500
3321AS401	DL 3321AS400
3321AS301	DL 3321AS300
NEXT ASSY	USED ON

APPLICATION

UNLESS OTHERWISE SPECIFIED:
DIMENSIONS ARE IN INCHES
TOLERANCES ON:
FRACTIONS ± DECIMALS ± .10 .010 ANGLES ± 30'°

MATERIAL:
BAR, ROUND TOOL STEEL, TYPE 01
IAW ASTM:A681

CONTRACT NO. N00383-90-C-7642
DEPARTMENT OF THE NAVY
AVIATION SUPPLY OFFICE
700 ROBBINS AVE.
PHILADELPHIA, PA. 19111

DRAWN J. KIRCHHAN
CHECKED J.K.
REVIEWED MOREY
APPROVED
APPROVED FOR NAV AIR SYS COM
BY DIRECTION
DATE 12/8/94

DEPARTMENT OF THE NAVY
NAVAL AIR SYSTEMS COMMAND
WASHINGTON, D.C. 20360

TOOL, EXPANDER

SIZE	CAGE CODE	DWG NO.
D	30003	3321AS050

SCALE 2/1 SHEET 1 OF 1

WHEN REFERRING TO THIS DRAWING STATE DRAWING NO., APPLICABLE ISSUE LETTER IF ANY, AND DATE

DISTRIBUTION STATEMENT A.
APPROVED FOR PUBLIC RELEASE;
DISTRIBUTION IS UNLIMITED

CAD MAINTAINED. CHANGES SHALL BE INCORPORATED BY THE DESIGN ACTIVITY.

REVISIONS			
LTR	DESCRIPTION	DATE	APPROVED

APPROVED SOURCE(S) OF SUPPLY			
CONTROL NO.	SUPPLIER DATA		
	CAGE CODE	PART NUMBER	NAME AND ADDRESS
3321AS062	71985	C460-1H	DOW-ELCO, INC. 1313 W. OLYMPIC BLVD. MONTEBELLO, CA 90640

NOTES: UNLESS OTHERWISE SPECIFIED

1. INTERPRET DRAWING IN ACCORDANCE WITH MIL-STD-100.
2. MATERIAL; ELASTOMERIC IAW ASTM D 2000 WIDE TEMPERATURE.
   ANCHOR; STEEL, CADMIUM PLATED IAW QQ-P-416, TYPE II, CLASS 2.
3. SPC DATA REQUIRED, IN POUNDS PER INCH SUSTAINED DEFLECTION.
   USL = 56
   TARGET = 48 20% MIN SAMPLING (RMS MIN 1.33)
   LSL = 40
4. IDENTIFICATION OF THE APPROVED SOURCE(S) OF SUPPLY HEREON IS NOT TO BE CONSTRUED AS A GUARANTEE OF PRESENT OR CONTINUED AVAILABILITY AS A SOURCE OF SUPPLY FOR THE ITEM(S).
5. ONLY THE ITEM DESCRIBED ON THIS DWG WHEN PROCURED FROM THE SUPPLIER LISTED HEREON IS APPROVED FOR USE IN THE APPLICATION SPECIFIED HEREON. A SUBSTITUTE ITEM SHALL NOT BE USED WITHOUT PRIOR APPROVAL BY THE PROCURING ACTIVITY.
6. THE CONTAINER MANUFACTURER SHALL BE RESPONSIBLE FOR THE STATED PERFORMANCE REQUIREMENTS ON DRAWING NUMBER (30003) 3321AS200.
7. IDENTIFY IAW MIL-STD-130.

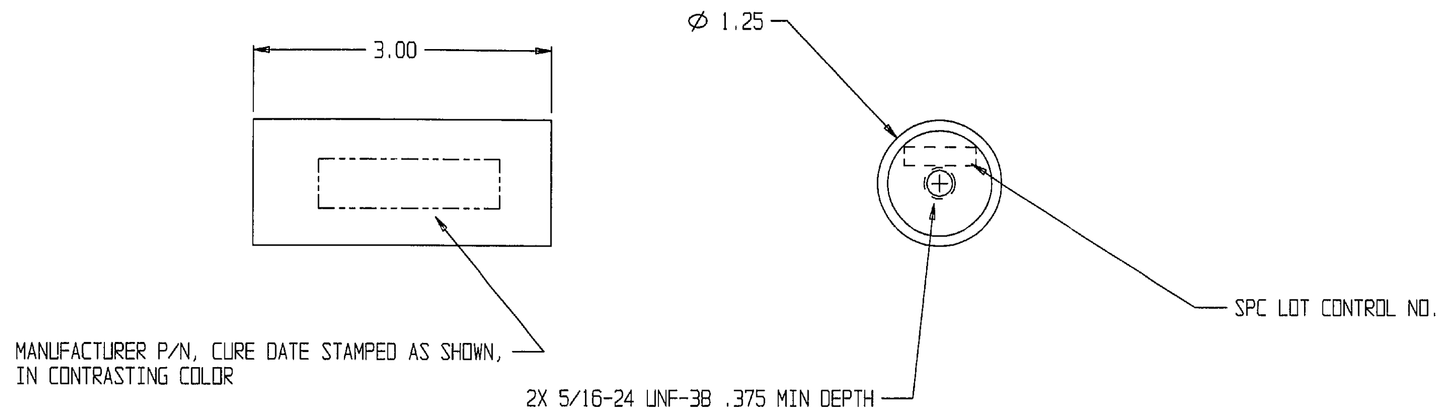

SOURCE CONTROL DRAWING

FIND NO.	QTY REQD	CAGE CODE	PART NO. OR IDENTIFYING NO.	NOMENCLATURE OR DESCRIPTION	SPECIFICATION	NOTE

PARTS LIST

REVISION	3321AS201	DL 3321AS200
SHEET	NEXT ASSY	USED ON
SHEET REVISION RECORD	APPLICATION	

UNLESS OTHERWISE SPECIFIED:
DIMENSIONS ARE IN INCHES
TOLERANCES ON:
FRACTIONS ± ; DECIMALS ± .10 .010 ; ANGLES ± 30'°

MATERIAL: SEE NOTE 2.

CONTRACT NO. N00383-90-C-7642
DEPARTMENT OF THE NAVY
AVIATION SUPPLY OFFICE
700 ROBBINS AVE.
PHILADELPHIA, PA. 19111

DRAWN J. KIRCHHAN
CHECKED J.K.
REVIEWED MOREY
APPROVED
APPROVED FOR NAV AIR SYS COM
BY DIRECTION 3/19/98 DATE

DEPARTMENT OF THE NAVY
NAVAL AIR SYSTEMS COMMAND
WASHINGTON, D.C. 20360

MOUNT, SHEAR

SIZE D | CAGE CODE 30003 | DWG NO. 3321AS062
SCALE 1/1 | SHEET 1 OF 1

WHEN REFERRING TO THIS DRAWING STATE DRAWING NO., APPLICABLE ISSUE LETTER IF ANY, AND DATE

NAVSUP NAVAL SUPPLY SYSTEMS COMMAND

NAVAL INVENTORY CONTROL POINT

ENGINEERING CHANGE ORDER

1. ECO NO.: O- 151

2. DRAWING/PART NO.	3. NOMENCLATURE	4. CURRENT REVISION
3321A5062	Mount, Shear	

5. CUSTOMER	6. CUSTOMER DWG NO.	7. NEXT HIGHER ASSEMBLY NO.	8. END ITEM PRODUCT I.D.
NAVICP			15450-200

9. RN/SVR NO.	10. ECO REQUIRED BY:	11. ORIGINATOR	DATE
	NAVICP (80130)	Robert Steel 0771	8/3/05

12. DESCRIPTION OF CHANGE (WAS / IS):

See attached

13. REASON FOR CHANGE [INCLUDE JUSTIFICATION AND BACKUP DATA (IF AVAILABLE)]:

Up date Standard & correct notes

☐ VALUE ENGINEERING ☐ SPEC CHANGE ☐ CORRECTIONS ☐ IN-SERVICE ☐ SAFETY ☐ NEW DRAWING

14. DESIGN ENG. RECOMMENDS:	☐ CLASS 1 - MAJOR	17. ANALYSIS ENGINEER (As Required)	DATE
☐ FUTURE INCORP. (REASON):		18. DE PEER REVIEW (As Required)	DATE
☐ APPROVED AS REQUESTED	☐ DISAPPROVED 15. DE INITIALS	19. DESIGN ENGINEER	DATE
☐ STOP NOTICE ISSUED	16. ☐ FORMAL CCB REQUIRED	20. ENG MGT	DATE

21. PROGRAM MANAGEMENT *CUSTOMER INTERFACE REQUIREMENTS*	✓	22. DE CHECKS AREAS THAT REQUIRE REVIEW/CONCURRENCE
NOTIFY CUSTOMER ☐	☐	MANUFACTURING ENGINEERING
Note: Customer or FAA notification required on all PMA parts.	☐	MATERIALS AND PROCESSES
APPROVAL REQUIRED ☐	☐	QUALITY ENGINEERING
CDRL REFERENCE:	☐	ILS/R&M
CONTRACT NO.	☐	ECO ORIGINATOR (IF NOT DE) Robert Steel
RISK RELEASE ☐	☐	OTHER (SPECIFY)
NO. COPIES TO CUSTOMER	✓	CONFIGURATION MGT MGR (LAST)
PROGRAM MANAGER SIGNATURE		25. DRAFTING
		26. ENGINEERING CHECK Robert Steel

23. PLANNED EFFECTIVITY

LOT: DATE: S/N

MATERIAL DISTRIBUTION & DISPOSITION	ORDER/LOT	QUANTITY	USE	CHANGE	SCRAP
a. FIELD		☐	☐	☐	☐
b. STORES		☐	☐	☐	☐
c. WIP BEYOND		☐	☐	☐	☐
d. WIP NOT BEYOND		☐	☐	☐	☐
e. NEXT RELEASE				☐	

MATERIAL PLANNING SIGNATURE

24. CUSTOMER/DCMC CONCURRENCE	27. RLSD DWG REV.	28. CM RELEASE	30. DOCUMENT RELEASE

31. COMMENTS	29. DISTRIBUTION CODE

NAVSUP NAVAL SUPPLY SYSTEMS COMMAND

NAVAL INVENTORY CONTROL POINT

ENGINEERING CHANGE REQUEST/ORDER (CONTINUATION SHEET)

1. ECR NO.: 0-151		
2. DWG/PART NO. 3321AS062	3. NOMENCLATURE Mount, Shear	4. CURRENT REV.

5. CONTINUATION ITEMS

Drawing 3321AS062, Sheet 1, Zone C-1, B-7
Change Note 1, 2, & 7 to:

NOTES:

1. INTERPRET DRAWING AND REVISIONS IN ACCORDANCE WITH ASME Y14.100, ASME Y14.24, ASME Y14.34, AND ASME Y14.35

2. MATERIAL: ELASTOMERIC IAW ASTM D2000 WIDE TEMPERATURE. ANCHOR: STEEL, CADMIUM PLATED IAW QQ-P-416, TYPE II, CLASS 2. ALTERNATE TO CAD PLATE: ALKALINE ZINC NICKEL IN ACCORDANCE WITH ASTM-B841 CLASS 1, TYPE B, GRADE 3.

7. SHOCK MOUNT: EACH SHOCK MOUNT SHALL BE MARKED WITH ITS MANUFACTURING PART NUMBER AND CURE DATE (MONTH AND YEAR) ON THE TOP SURFACE OF THE FLEXING ELEMENT USING WHITE WATERPROOF INK CONFORMING TO A-A-56032. SHOCK MOUNTS SHALL BE NO OLDER THAN ONE (1) YEAR OLD WHEN INSTALLED IN THE CONTAINER.

"Distribution Statement D: Distribution authorized to the Department of Defense and U.S. DoD contractors only, vulnerability information, 11 October 2012, other requests shall be referred to Commanding Officer Naval Supply Weapon Systems Support Philadelphia Pennsylvania 19111 (Attn Code N241.10)"

WARNING - This document contains technical data whose export is restricted by the Arms Export Control Act (Title 22, U.S.C., Sec 2751, et seq.) or the Export Administration Act of 1979 (Title 50, U.S.C., App. 2401 et seq.) as amended. Violations of these export laws are subject to severe criminal penalties. Disseminate in accordance with provisions of DoD Directive 5230.25.

Destruction Note - Destroy by any method that will prevent disclosure of contents or reconstruction of the document.

REVISIONS				
ZONE	REV	DESCRIPTION	DATE	APPROVED
	A	1. UPDATED NOTE 2	9/28/09	FCL
	B	1. REVISED NOTE 5, ADDED NOTE 8	10/30/09	FCL
	C	1. DESIGN P/N WAS MFR P/N 2. MFR/CAGE WAS MFR	4/10/17	FCL

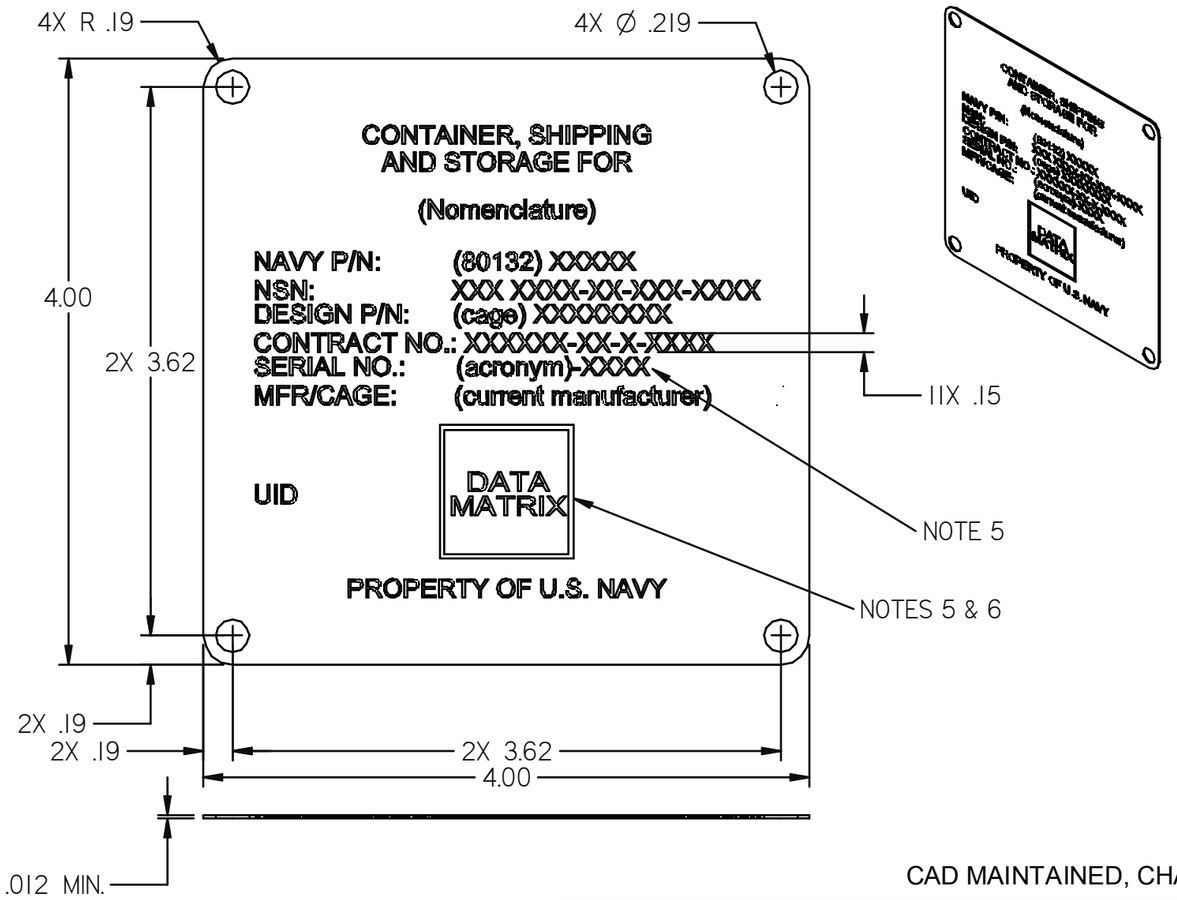

NOTES:

1. CHARACTERS TO BE GOTHIC BOLD. LOCATE TEXT APPROXIMATELY AS SHOWN. TEXT SIZE TO BE APPROXIMATELY AS SHOWN.

2. MATERIAL: .012 (.03MM) MINIMUM THICKNESS, PHOTOSENSITIVE, ANODIZED ALUMINUM PLATE, HIGH STRENGTH ADHESIVE BACKED. RIVETS WILL BE USED TO SECURE THE NAMEPLATE AND WILL BE SEALED ACCORDINGLY IF THE PRESSURE BOUNDARY IS PENETRATED.

3. CHARACTERS AND DATA MATRIX TO BE BLACK ON A NATURAL BACKGROUND.

4. REFERENCE SPECIFICATION MIL-DTL-15024, TYPE H, STYLE IV.

5. CONTACT NAVSUP CODE N241.10 FOR ASSIGNMENT OF SERIAL NUMBER(S).

6. DATA MATRIX ECC 200 SYMBOL USING ISO 15434 SYNTAX AND THE SEMANTICS OF ISO 15418. SUBSTITUTE "^{R}s" SYMBOL WITH ASCII CODE 30, "^{G}s" SYMBOL WITH ASCII CODE 29, AND "^{E}OT" WITH ASCII CODE 4. EXACT CONTENTS OF MATRIX TO BE THE FOLLOWING, ALL AS ONE CONTINUOUS STRING, WITHOUT SPACES:

   $[)>^{R}s06^{G}s17V(\text{vendor cage})^{G}s1P(\text{container p/n})^{G}sS\ [(\text{program acronym})\text{-SERIAL NO.}]^{R}s^{E}OT$

   EXAMPLE, FOR SERIAL NUMBER 0001:

   $[)>^{R}s06^{G}s17V80132^{G}s1P779E001\text{-}1^{G}sSARS\text{-}0001^{R}s^{E}OT$

7. FOR REFERNCE ONLY: INFORMATION IS BASED ON UII CONSTRUCT #2: CAGE CODE, ORIGINAL PART NO., SERIAL NO., AND DATA IDENTIFIERS (FORMAT 06).

8. ANY VARIATION TO THE NAMEPLATE (I.E. SIZE, MOUNTING HOLE DIMENSION AND LOCATION, OR NOMENCLATURE) SHALL BE APPROVED BY NAVICP.

CAD MAINTAINED, CHANGES SHALL BE INCORPORATED BY THE DESIGN ACTIVITY.

QTY REQ'D	ITEM NO.	CAGE CODE	PART NO. IDENTIFY NUMBER	NOMENCLATURE OR DESCRIPTION	MATERIAL	THICK GAUGE	WIDTH OD/ID	LENGTH	DATA: SPECIFICATION NOTES, VENDORS
	1		15930	NAMEPLATE	NOTE 2	.012	4.00	4.00	

PARTS LIST

NEXT ASSEMBLY	USED ON
APPLICATION	

UNLESS OTHERWISE SPECIFIED DIMS ARE IN INCHES

TOLERANCES ON:
ANGLES: ± 2°
FRACTIONS: ± 1/16
DECIMALS: .X ± .1
.XX ± .06
.XXX ± .015
HOLE SIZES: +.007 -.001
BEND R .00 TO .09: ±.010
.091 AND ABOVE: ±.015
BREAK EDGES: .01 - .03R

CONTRACT NUMBER

DATE: 2/12/09

DRAWN BY FCL	DATE 02/09	
CHECKED BY IG	DATE 02/09	
APPROVED BY JVD	DATE 02/09	
QC APPROVED BY RWC	DATE 02/09	

NAVAL INVENTORY CONTROL POINT
700 ROBBINS AVE. PHILADELPHIA,PA

CONTAINER NAMEPLATE

SIZE	CAGE CODE	DWG NO.	REV
B	80132	15930	C

SCALE: WEIGHT: SHEET: 1 OF 1

DEPARTMENT OF THE NAVY
NAVSUP WEAPON SYSTEMS SUPPORT
CODE P0771 PACKAGING ENGINEERING TEAM
BUILDING 1, ROOM 2500
700 ROBBINS AVENUE
PHILADELPHIA PA 19111-5098

ENGINEERING CHANGE ORDER

1. ECO NO.: -320

2. DRAWING/PART NO.:	3. PART NOMENCLATURE:	4. REVISION:
3321AS062	Mount, Shear	A
5. CONTAINER NSN:	**6. CONTAINER NOMENCLATURE:**	**7. DATE:**
01-262-2983	Multi-Application Reusable Container	12/14/2018
8. NEXT HIGHER ASSEMBLY:	**9. REQUESTED BY:**	
3321AS201	Jamal Samah	

10. DESCRIPTION OF CHANGE (WAS/IS):

Add H.A. King shock mount as an approved alternate.

Part Number: (13008) 7899

11. REASON FOR CHANGE [INCLUDE JUSTIFICATION AND BACKUP DATA (IF AVAILABLE)]:

Delivery delays and long lead times for existing mount manufacturer has resulted in qualification for an alternate shock mount source.

☒ VALUE ENGINEERING ☐ SPEC CHANGE ☐ CORRECTIONS ☒ IN-SERVICE ☐ SAFETY ☐ NEW DRAWING

12. COMMENTS:

This mount is qualified by similarity as the -300 mount successfully passed all test requirements.

13. ECO ORIGINATOR SIGNATURE:	14. DATE:
Jamal M. Samah	12/14/2018
15. ENGINEERING CHECK SIGNATURE:	**16. DATE:**
Jamal M. Samah	01/03/2019