DocuSign Envelope ID: D16E763E-792E-48D0-A737-9749BB7E7906

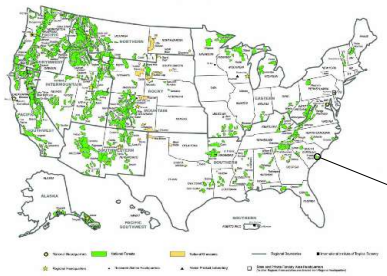

LOCATION MAP

BRIDGE 202 – 0.3: LATITUDE: 33.03588; LONGITUDE: –79.67364

UNITED STATES DEPARTMENT OF AGRICULTURE
FOREST SERVICE

SOUTHERN REGION

FRANCIS MARION–SUMTER NATIONAL FOREST

SUMTER NATIONAL FOREST
FRANCIS MARION
RANGER DISTRICT
HUGER, SC

BRIDGE CONSTRUCTION DRAWINGS FOR

BRIDGE ON NFSR 202, MILE POST 3.1

INDEX OF SHEETS

SHEET	DESCRIPTION
1	TITLE SHEET
2	CONVENTIONAL SYMBOLS
3	TYPICAL SECTIONS
4	PLAN/PROFILE
5	GUARDRAIL DETAIL SHEET
6–8	CROSS SECTIONS
9–11	EROSION CONTROL PLAN
12–13	TRAFFIC MANAGEMENT PLAN
14–25	STRUCTURE PLANS

SOUTH CAROLINA PROFESSIONAL ENGINEER No. 30028 Thomas Fletcher 9/23/2022

REVIEWED AND APPROVED BY

REVIEWED BY: KARL BUCHHOLZ (Digitally signed by KARL BUCHHOLZ Date: 2022.07.05 08:01:46-04'00') DATE: _____
Forest Engineer

RECOMMENDED BY: GREGORY CUNNINGHAM (Digitally signed by GREGORY CUNNINGHAM Date: 2023.07.05 10:49:29 -04'00') DATE: _____
Engineering Staff Officer

APPROVED BY: JEREMIAH ZAMORA (Digitally signed by JEREMIAH ZAMORA Date: 2023.07.06 14:55:34-04'00') DATE: _____
District Ranger

APPROVED BY: DERRICK MORRIS (Digitally signed by DERRICK MORRIS Date: 2023.07.05 15:49:43 -04'00') DATE: _____
Forest Supervisor

APPROVED BY: MARK MENG (Digitally signed by MARK MENG Date: 2023.07.10 08:13:00 -04'00') DATE: _____
Regional Director of Engineering

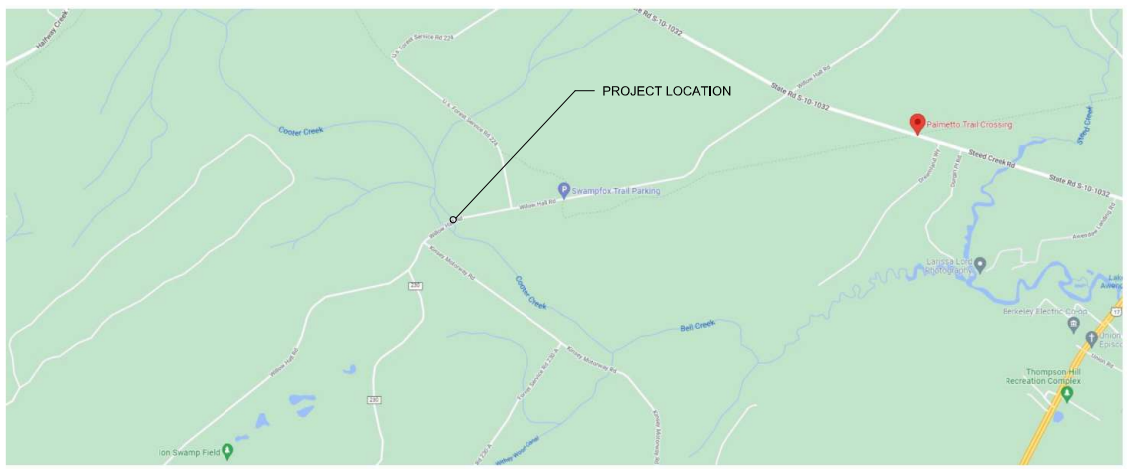

PROJECT SITE N.T.S.

USDA United States Department of Agriculture Forest Service

(R8)
SOUTHERN REGION

PROJECT NAME

FRANCIS MARION-SUMTER NATIONAL FOREST BRIDGE REPLACEMENT

FRANCIS MARION-SUMTER NATIONAL FOREST

FRANCIS MARION-SUMTER NATIONAL FOREST
FRANCIS MARION RANGER DISTRICT

DRAWING TITLE

TITLE SHEET

DATE 08/08/2022	
ARCHIVE NO. XXX.dwg	
DESIGNER TLF	DWG SHEET NO. 01
DRAWN CBP	
CHECKED JLT	SHEET 001 OF 25
PROJECT NO.	

7/13/18 09:50 GWGRIFFIN C:\USERS\GWGRIFFIN\DOCUMENTS\BRIDGES\0831_REGIONAL DESIGN STANDARDS\TI-103-TITLE.DWG;

DocuSign Envelope ID: D16E763E-792E-48D0-A737-9749BB7E7906

Note: Not to Scale

**S.U.E. = Subsurface Utility Engineering*

CONVENTIONAL PLAN SHEET SYMBOLS

BOUNDARIES AND PROPERTY:

- State Line
- County Line
- Township Line
- City Line
- Reservation Line
- Property Line
- Existing Iron Pin — EIP
- Computed Property Corner
- Property Monument — EPM
- Parcel/Sequence Number — 123
- Existing Fence Line
- Proposed Woven Wire Fence
- Proposed Chain Link Fence
- Proposed Barbed Wire Fence
- Existing Wetland Boundary — WLB
- Proposed Wetland Boundary — WLB

BUILDINGS AND OTHER CULTURE:

- Gas Pump Vent or U/G Tank Cap
- Sign — S
- Well — W
- Small Mine
- Foundation
- Area Outline
- Cemetery
- Building
- School
- Church
- Dam

HYDROLOGY:

- Stream or Body of Water
- Hydro, Pool or Reservoir
- Jurisdictional Stream — JS
- Buffer Zone 1 — BZ 1
- Buffer Zone 2 — BZ 2
- Flow Arrow
- Disappearing Stream
- Spring
- Wetland
- Proposed Lateral, Tail, Head Ditch — FLOW
- False Sump

- Hedge
- Woods Line
- Orchard
- Vineyard — Vineyard

RIGHT OF WAY & PROJECT CONTROL:

- Secondary Horiz and Vert Control Point
- Primary Horiz Control Point
- Primary Horiz and Vert Control Point
- Exist Permanent Easment Pin and Cap
- New Permanent Easement Pin and Cap
- Vertical Benchmark
- Existing Right of Way Marker
- Existing Right of Way Line
- New Right of Way Line
- New Right of Way Line with Pin and Cap
- New Right of Way Line with Concrete or Granite R/W Marker
- New Control of Access Line with Concrete C/A Marker
- Existing Control of Access
- New Control of Access
- Existing Easement Line — E
- New Temporary Construction Easement — E
- New Temporary Drainage Easement — TDE
- New Permanent Drainage Easement — PDE
- New Permanent Drainage / Utility Easement — DUE
- New Permanent Utility Easement — PUE
- New Temporary Utility Easement — TUE
- New Aerial Utility Easement — AUE

ROADS AND RELATED FEATURES:

- Existing Edge of Pavement
- Existing Curb
- Proposed Slope Stakes Cut — C
- Proposed Slope Stakes Fill — F
- Proposed Curb Ramp — CR
- Existing Metal Guardrail
- Proposed Guardrail
- Existing Cable Guiderail
- Proposed Cable Guiderail
- Equality Symbol
- Pavement Removal

VEGETATION:

- Single Tree
- Single Shrub

EXISTING STRUCTURES:

MAJOR:

- Bridge, Tunnel or Box Culvert — CONC
- Bridge Wing Wall, Head Wall and End Wall — CONC WW

MINOR:

- Head and End Wall — CONC HW
- Pipe Culvert
- Footbridge
- Drainage Box: Catch Basin, DI or JB — CB
- Paved Ditch Gutter
- Storm Sewer Manhole — S
- Storm Sewer — S

UTILITIES:

POWER:

- Existing Power Pole
- Proposed Power Pole
- Existing Joint Use Pole
- Proposed Joint Use Pole
- Power Manhole — P
- Power Line Tower
- Power Transformer
- U/G Power Cable Hand Hole
- H-Frame Pole
- U/G Power Line LOS B (S.U.E.*) — P
- U/G Power Line LOS C (S.U.E.*) — P
- U/G Power Line LOS D (S.U.E.*) — P

TELEPHONE:

- Existing Telephone Pole
- Proposed Telephone Pole
- Telephone Manhole — T
- Telephone Pedestal — T
- Telephone Cell Tower
- U/G Telephone Cable Hand Hole — HH
- U/G Telephone Cable LOS B (S.U.E.*) — T
- U/G Telephone Cable LOS C (S.U.E.*) — T
- U/G Telephone Cable LOS D (S.U.E.*) — T
- U/G Telephone Conduit LOS B (S.U.E.*) — TC
- U/G Telephone Conduit LOS C (S.U.E.*) — TC
- U/G Telephone Conduit LOS D (S.U.E.*) — TC
- U/G Fiber Optics Cable LOS B (S.U.E.*) — T FO
- U/G Fiber Optics Cable LOS C (S.U.E.*) — T FO
- U/G Fiber Optics Cable LOS D (S.U.E.*) — T FO

WATER:

- Water Manhole — W
- Water Meter
- Water Valve
- Water Hydrant
- U/G Water Line LOS B (S.U.E.*) — W
- U/G Water Line LOS C (S.U.E.*) — W
- U/G Water Line LOS D (S.U.E.*) — W
- Above Ground Water Line — A/G Water

TV:

- TV Pedestal — C
- TV Tower
- U/G TV Cable Hand Hole — HH
- U/G TV Cable LOS B (S.U.E.*) — TV
- U/G TV Cable LOS C (S.U.E.*) — TV
- U/G TV Cable LOS D (S.U.E.*) — TV
- U/G Fiber Optic Cable LOS B (S.U.E.*) — TV FO
- U/G Fiber Optic Cable LOS C (S.U.E.*) — TV FO
- U/G Fiber Optic Cable LOS D (S.U.E.*) — TV FO

GAS:

- Gas Valve
- Gas Meter
- U/G Gas Line LOS B (S.U.E.*) — G
- U/G Gas Line LOS C (S.U.E.*) — G
- U/G Gas Line LOS D (S.U.E.*) — G
- Above Ground Gas Line — A/G Gas

SANITARY SEWER:

- Sanitary Sewer Manhole
- Sanitary Sewer Cleanout
- U/G Sanitary Sewer Line — SS
- Above Ground Sanitary Sewer — A/G Sanitary Sewer
- SS Forced Main Line LOS B (S.U.E.*) — FSS
- SS Forced Main Line LOS C (S.U.E.*) — FSS
- SS Forced Main Line LOS D (S.U.E.*) — FSS

MISCELLANEOUS:

- Utility Pole
- Utility Pole with Base
- Utility Located Object
- Utility Traffic Signal Box — S
- Utility Unknown U/G Line LOS B (S.U.E.*) — ?UTL
- U/G Tank; Water, Gas, Oil
- Underground Storage Tank, Approx. Loc.
- A/G Tank; Water, Gas, Oil
- Geoenvironmental Boring
- U/G Test Hole LOS A (S.U.E.*)
- Abandoned According to Utility Records — AATUR
- End of Information — E.O.I.

SOUTH CAROLINA PROFESSIONAL SEAL — No. 30028 — Registered Engineer — Thomas Fletcher — 11/23/2022

U.S.D.A. FOREST SERVICE
REGION 8

FRANCIS MARION–SUMTER
NATIONAL FORESTS
FRANCIS MARION RANGER DISTRICT

CONVENTIONAL SYMBOLS

TGS ENGINEERS
201 W. MARION ST
SHELBY, NC 28150
PH (704) 476-0003
CORP. LICENSE NO.: C-0275

DocuSign Envelope ID: D16E763E-792E-48D0-A737-9749BB7E7906

PROJECT REFERENCE NO.	SHEET NO.
ROAD 202	3
ROADWAY DESIGN ENGINEER	PAVEMENT DESIGN ENGINEER

SOUTH CAROLINA PROFESSIONAL ENGINEER No. 30028 Thomas L. Fletcher 9/23/2022

DOCUMENT NOT CONSIDERED FINAL UNLESS ALL SIGNATURES COMPLETED

TGS ENGINEERS
201 W MARION ST. STE. 200
SHELBY, NC 28150
PH (704) 476-0003
CORP. LICENSE NO.: C-0275

FINAL PAVEMENT SCHEDULE

C1	PROP. VAR. DEPTH ASPHALT CONCRETE SURFACE COURSE, TYPE S9.5B, AT AN AVERAGE RATE OF 110 LBS. PER SQ. YD. PER 1" DEPTH. TO BE PLACED IN LAYERS NOT TO EXCEED 1½" IN DEPTH.
J	8" AGGREGATE BASE COURSE
T	EARTH MATERIAL.

PAVEMENT EDGE SLOPES ARE 1:1 UNLESS SHOWN OTHERWISE.

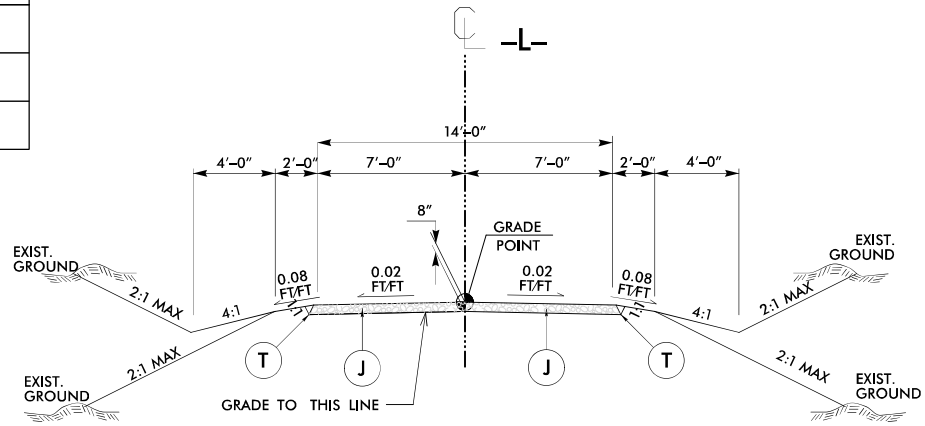

TYPICAL SECTION NO. 1

USE TYPICAL SECTION NO. 1

-L- STA. 11+00.00 TO -L- STA. 12+53.87

-L- STA. 13+26.13 TO -L- STA. 14+50.00

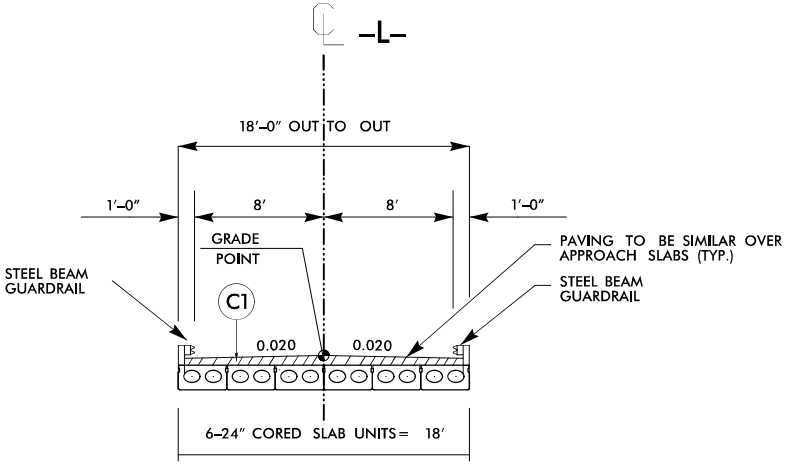

TYPICAL SECTION NO. 2

USE TYPICAL SECTION NO. 2

-L- STA. 12+53.87 TO -L- STA. 13+26.13

9/6/2022
R:\US Forest Service\South Carolina Bridge Design 2021-2022\Site 202\Roadway\Proj\Site202_Rdy_typ.dgn
User:jaurner

6/2/99

DocuSign Envelope ID: D16E763E-792E-48D0-A737-9749BB7E7906

8/17/99

REVISIONS

FRANCIS MARION–SUMTER NATIONAL FOREST
BRIDGE ON ROUTE 202 MILEPOST 3.1

PROJECT REFERENCE NO.	SHEET NO.
Road 202	4
R/W SHEET NO.	
ROADWAY DESIGN ENGINEER	HYDRAULICS ENGINEER

SOUTH CAROLINA PROFESSIONAL ENGINEER No. 30028 — Thomas L. Fletcher — 9/23/2022

DOCUMENT NOT CONSIDERED FINAL UNLESS ALL SIGNATURES COMPLETED

TGS ENGINEERS
201 W. MARION ST
SHELBY, NC 28150
PH. (704) 476–0003
CORP. LICENSE NO.: C–0275

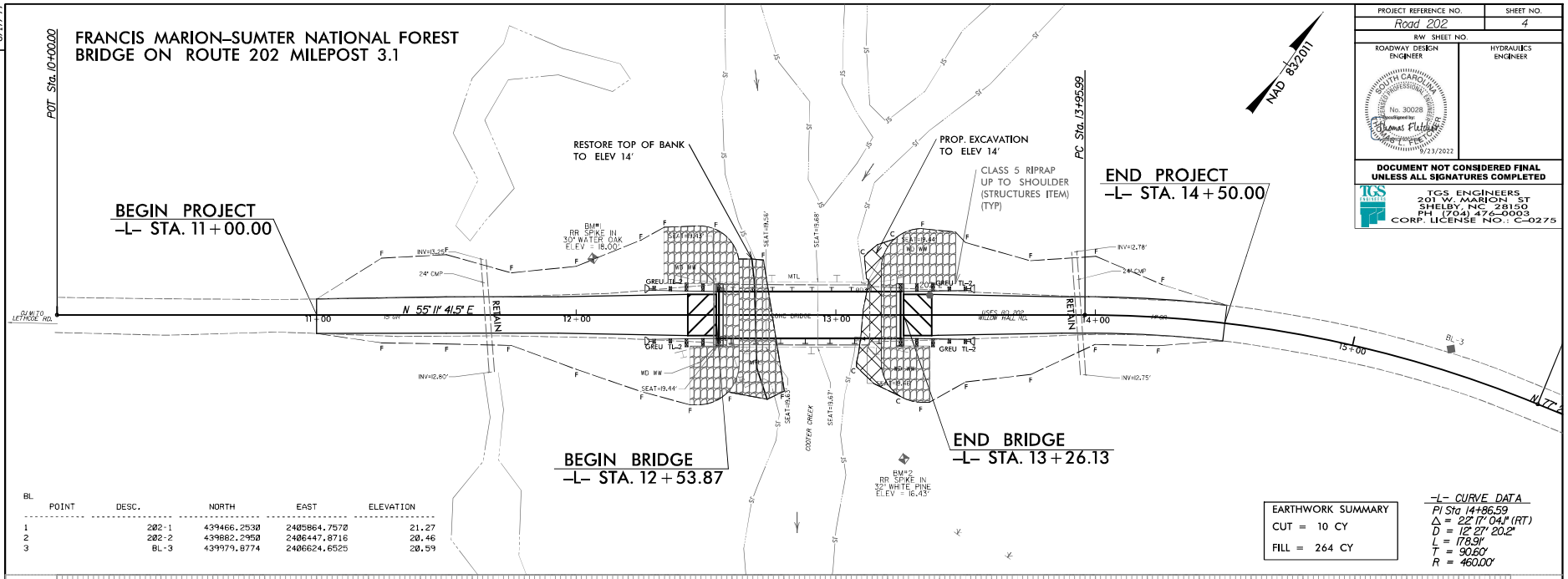

BL

POINT	DESC.	NORTH	EAST	ELEVATION
1	202-1	439466.2530	2405864.7570	21.27
2	202-2	439882.2950	2406447.8716	20.46
3	BL-3	439979.8774	2406624.6525	20.59

EARTHWORK SUMMARY	
CUT =	10 CY
FILL =	264 CY

–L– CURVE DATA
PI Sta 14+86.59
Δ = 22° 17' 04.1" (RT)
D = 12° 27' 20.2"
L = 178.91'
T = 90.60'
R = 460.00'

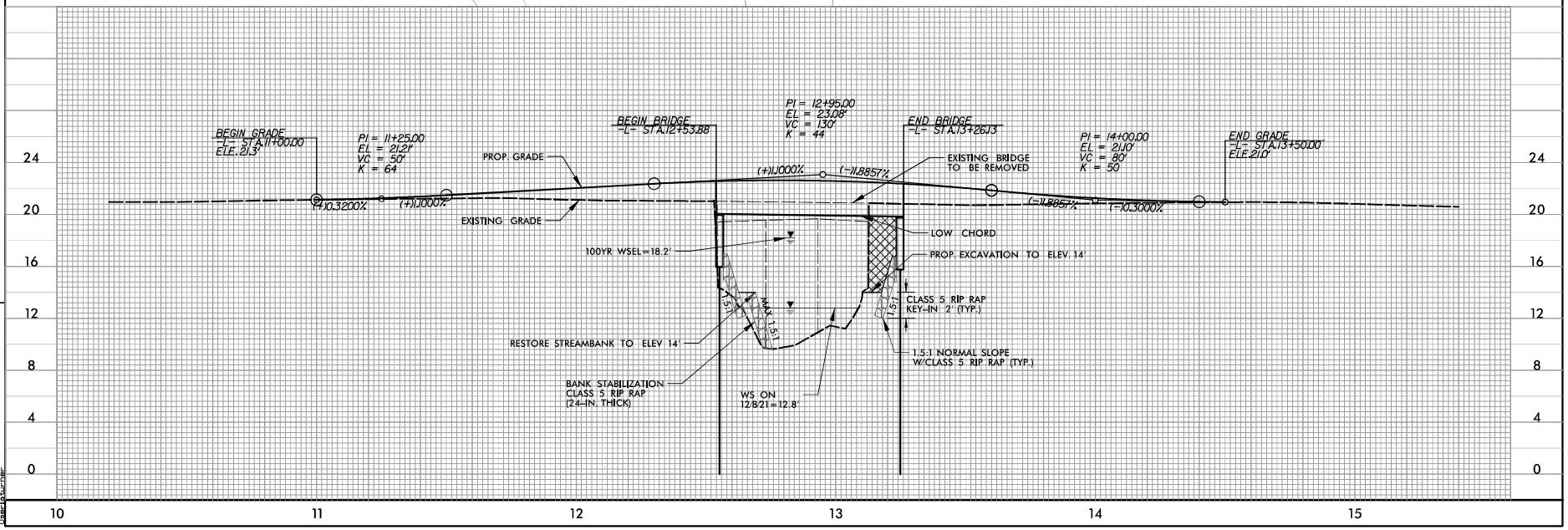

9/17/2022
X:\US Forest Service\South Carolina Bridge Design 2021-2022\Site 202\Roadway\Proj\Site202_Rdy_psh.dgn
User:swilcher

DocuSign Envelope ID: D16E763E-792E-48D0-A737-9749BB7E7906

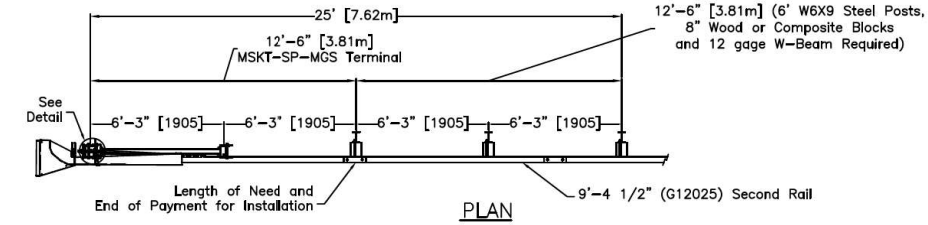

PLAN

TRAFFIC

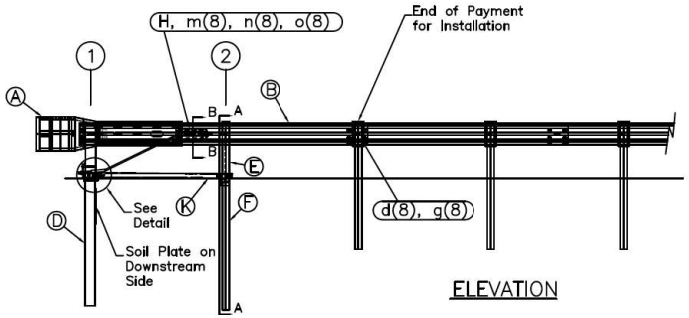

ELEVATION

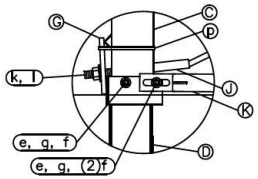

Post #1 Connection Detail

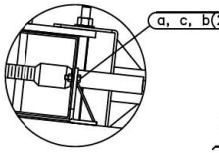

Impact Head Connection Detail

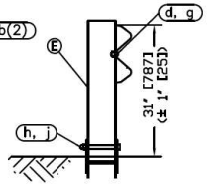

SECTION A-A
Post #2

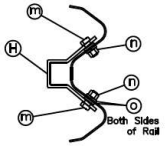

SECTION B-B
Anchor Bracket

ITEM	QTY	BILL OF MATERIALS	ITEM NO.
A	1	IMPACT HEAD	MS3000
B	1	W-BEAM GUARDRAIL END SECTION, 12 Ga.	SF1303
C	1	FIRST POST TOP (6X6X¼" Tube)	MTPHP1A
D	1	FIRST POST BOTTOM (6' W6X15)	MTPHP1B
E	1	SECOND POST ASSEMBLY TOP	UHP2A
F	1	SECOND POST ASSEMBLY BOTTOM	HP2B
G	1	BEARING PLATE	E750
H	1	CABLE ANCHOR BOX	S760
J	1	BCT CABLE ANCHOR ASSEMBLY	E770
K	1	STRUT	MS785
HARDWARE (ALL DIMENSIONS IN INCHES)			
a	2	5/16 x 1 HEX BOLT GRD 5	B5160104A
b	4	5/16 WASHER	W0516
c	2	5/16 HEX NUT	N0516
d	9	5/8 Dia. x 1 1/4 SPLICE BOLT (POST #2)	B580122
e	2	5/8 Dia. x 9 HEX BOLT GRD 5	B580904A
f	3	5/8 WASHER	W050
g	11	5/8 Dia. H.G.R NUT	N050
h	1	3/4 Dia. x 8 1/2 HEX BOLT GRD A449	B340854A
j	1	3/4 Dia. HEX NUT	N030
k	2	1 ANCHOR CABLE HEX NUT	N100
l	2	1 ANCHOR CABLE WASHER	W100
m	8	1/2 RSI SHOULDER BOLT W/WASHER	SB12A
n	8	1/2 STRUCTURAL NUT	N012A
o	8	1/2 STRUCTURAL WASHER	W012A
p	1	BEARING PLATE RETAINER TIE	CT-100ST

GENERAL NOTES:

1. All bolts, nuts, cable assemblies, cable anchors and bearing plates shall be galvanized.
2. The lower sections of the Posts 1&2 shall not protrude more than 4 in [100] above the ground (measured along a 5' [1.5m] cord). Site grading may be necessary to meet this requirement.
3. The lower section of the hinged post should not be driven with the upper post attached. If the post is placed in a drilled hole, the backfill material must be satisfactorily compacted to prevent settlement.
4. When competent rock is encountered, a 12" [300] Ø post hole, 20 in. [500] deep cored into the rock surface may be used if approved by the engineer for Posts 1 and/or 2. Granular material will be placed in the bottom of the hole, approximately 2.5" [60] deep to provide drainage. The first and/or second post can be field cut to length, placed in the hole and backfilled with suitable backfill. The soil plate may be trimmed if required.
5. The breakaway cable assembly must be taut. A locking device (vice grips or channel lock pliers) should be used to prevent the cable from twisting when tightening nuts.

MSKT-SP-MGS Terminal Test Level 2		Sheet: 1
		Date: 07/30/16
		By: JRR
Drawing Name: MSKT-SP-MGS-TL2	Scale: None	Rev: 0

SOUTH CAROLINA PROFESSIONAL ENGINEER No. 30028 Digitally signed by: Thomas L. Fletcher THOMAS L. FLETCHER

9/23/2022

U.S.D.A. FOREST SERVICE
REGION 8

FRANCIS MARION-SUMTER
NATIONAL FORESTS
FRANCIS MARION RANGER DISTRICT

GREU TL-2 DETAIL SHEET

TGS ENGINEERS
201 W. MARION ST
SHELBY, NC 28150
PH (704) 476-0003
CORP. LICENSE NO.: C-0275

DocuSign Envelope ID: D16E7635-792E-48D0-A737-9749BB7E7996

0 5 10	PROJ. REFERENCE NO.	SHEET NO.
	ROAD 202	6

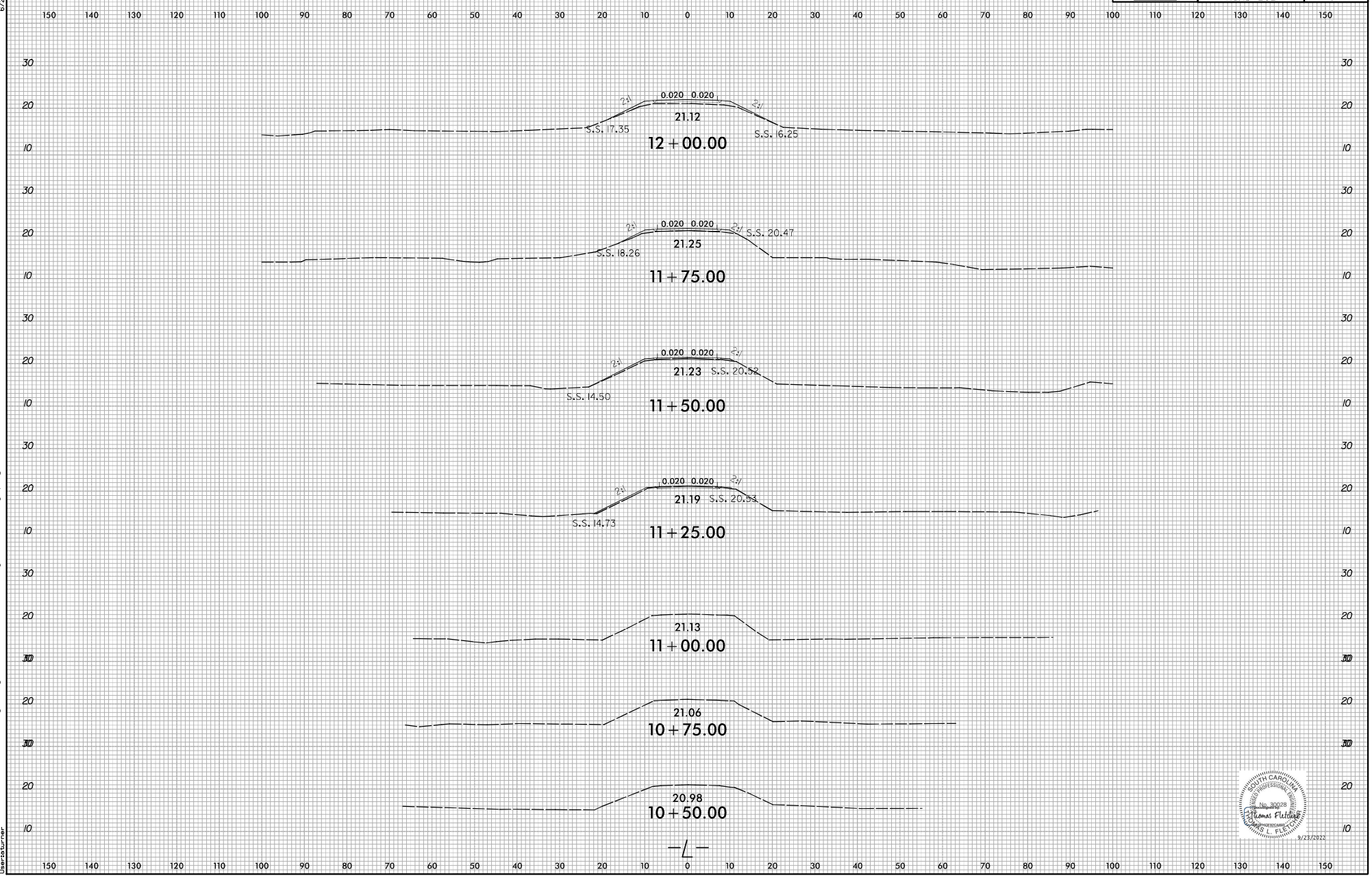

SOUTH CAROLINA PROFESSIONAL ENGINEER No. 30028 THOMAS L. FLETCHER 9/27/2022

6/23/16

9/16/2022
X:\US Forest Service\South Carolina Bridge Design 2021-2022\Site 202\Roadway\XSC\Site202_Rdy_xpl.dgn
Uservatorner

DocuSign Envelope ID: D16E763E-792E-48D0-A737-9749BB7E7996

PROJ. REFERENCE NO.	SHEET NO.
ROAD 202	7

0 5 10

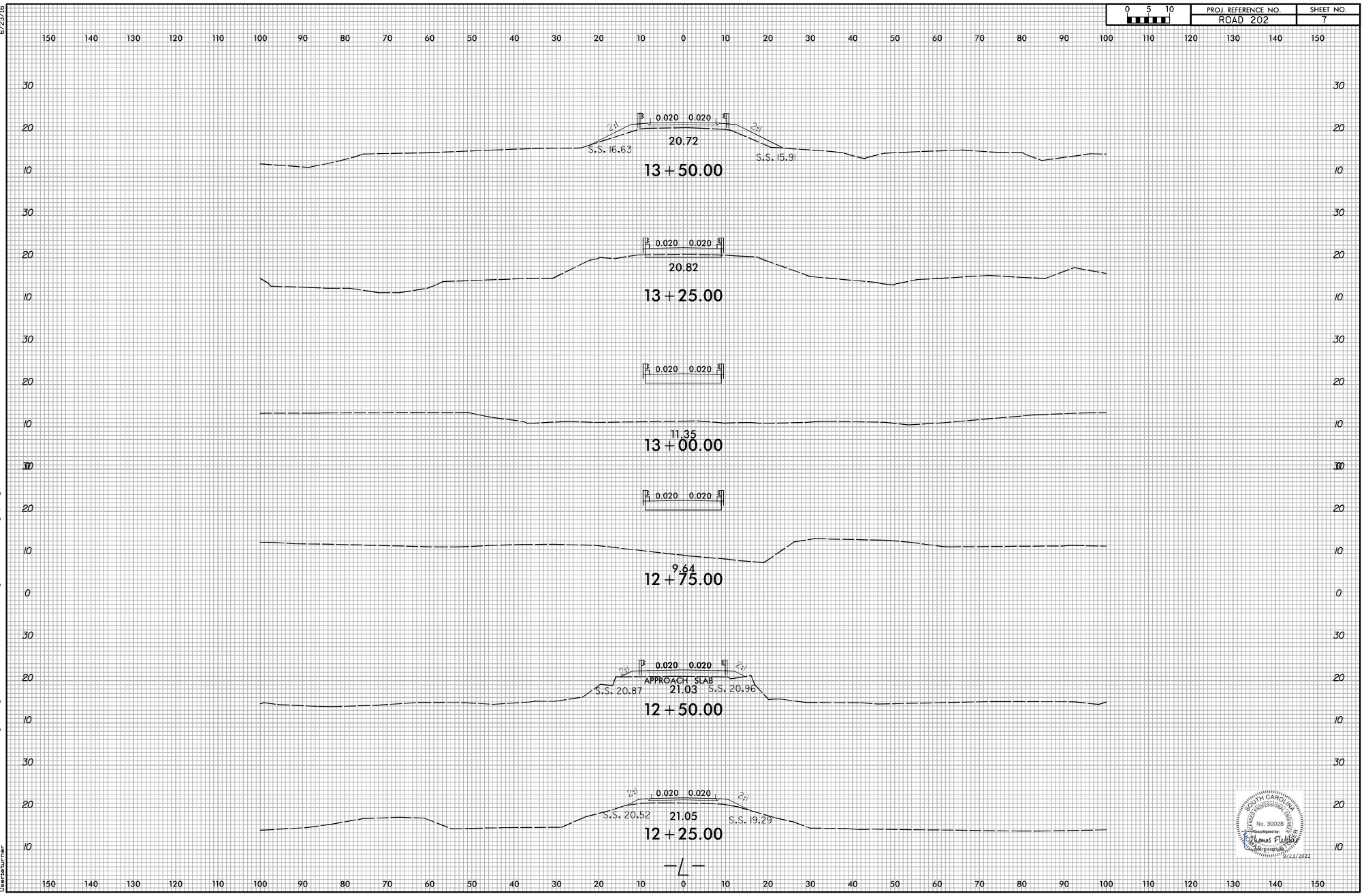

SOUTH CAROLINA PROFESSIONAL ENGINEER No. 30028 DocuSigned by: Thomas Flowers 9/23/2022

6/23/16

9/16/2022
X:\US Forest Service\South Carolina Bridge Design 2021-2022\Site 202\Roadway\XSC\Site202_Rdy_xpl.dgn
Usersaturner

DocuSign Envelope ID: D16E763E-792E-48D0-A737-9749BB7E7996

0 5 10	PROJ. REFERENCE NO.	SHEET NO.
	ROAD 202	8

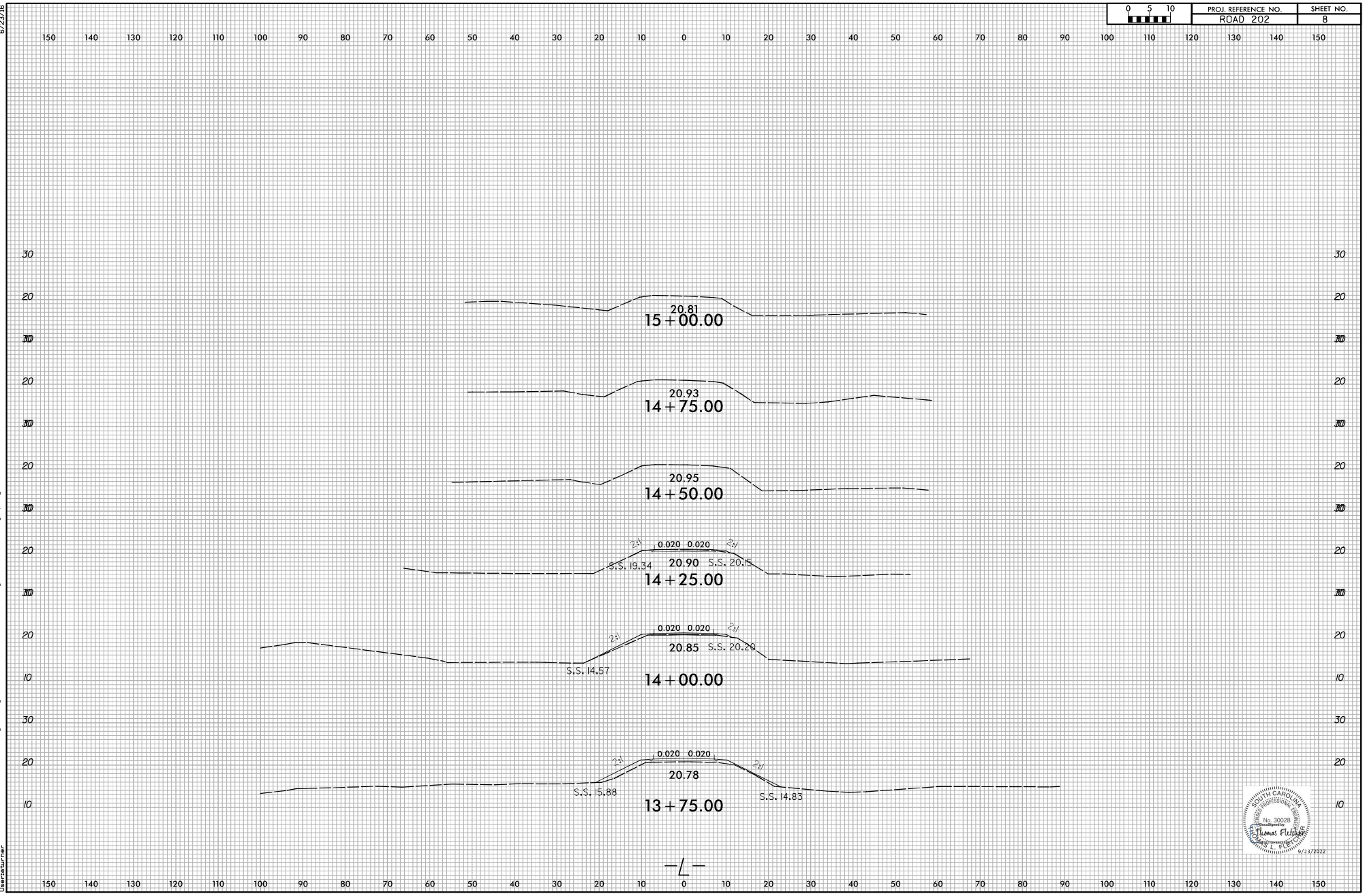

SOUTH CAROLINA PROFESSIONAL ENGINEER No. 30028 Digitally signed by Thomas Fletcher THOMAS L. FLETCHER 9/23/2022

6/23/16

9/16/2022
X:\US Forest Service\South Carolina Bridge Design 2021-2022\Site 202\Roadway\XSC\Site202_Rdy_xpl.dgn
User:turner

DocuSign Envelope ID: D16E763E-792E-48D0-A737-9749BB7E7906

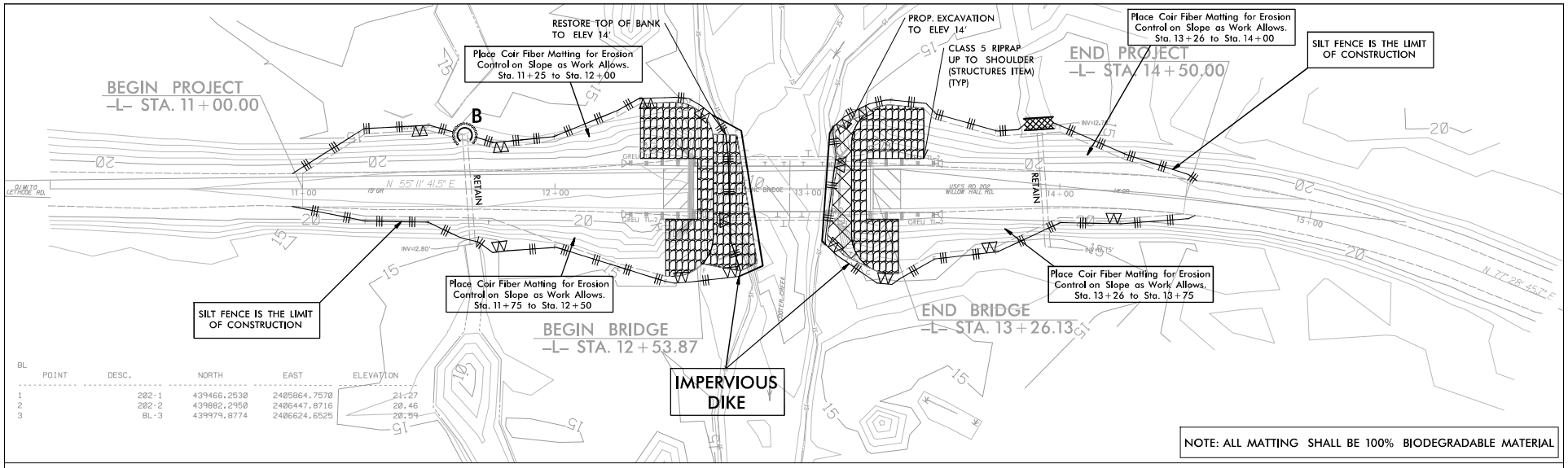

BL

POINT	DESC.	NORTH	EAST	ELEVATION
1	202-1	439466.2530	2405864.7570	21.27
2	202-2	439882.2950	2406447.8716	20.46
3	BL-3	439979.8774	2406624.6525	20.59

SOIL STABILIZATION TIMEFRAMES

SITE DESCRIPTION	STABILIZATION TIME	TIMEFRAME EXCEPTIONS
PERIMETER DIKES, SWALES, DITCHES AND SLOPES	7 DAYS	NONE
HIGH QUALITY WATER (HQW) ZONES	7 DAYS	NONE
SLOPES STEEPER THAN 3:1	7 DAYS	IF SLOPES ARE 10' OR LESS IN LENGTH AND ARE NOT STEEPER THAN 2:1, 14 DAYS ARE ALLOWED.
SLOPES 3:1 OR FLATTER	14 DAYS	7 DAYS FOR SLOPES GREATER THAN 50' IN LENGTH.
ALL OTHER AREAS WITH SLOPES FLATTER THAN 4:1	14 DAYS	NONE, EXCEPT FOR PERIMETERS AND HQW ZONES.

EROSION AND SEDIMENT CONTROL MEASURES

Description	Symbol
Temporary Silt Fence	
Special Sediment Control Fence	
Temporary Rock Silt Check Type-A	
Rock Pipe Inlet Sediment Trap Type-B	

ALL EROSION CONTROL PAY ITEMS SHOWN IN BOLD

PERIMETER EROSION CONTROL MEASURES SHALL BE INSTALLED DURING CLEARING AND GRUBBING PHASE.

ALL ACTIVITY SHALL ABIDE BY THE STANDARD SPECIFICATIONS FOR CONSTRUCTION OF ROADS AND BRIDGES ON FEDERAL HIGHWAY PROJECTS – FP-14

SOUTH CAROLINA PROFESSIONAL ENGINEER No. 30028 Thomas Fletcher 9/23/2022

U.S.D.A. FOREST SERVICE REGION 8

FRANCIS MARION-SUMTER NATIONAL FOREST
BRIDGE ON ROUTE 202
MILEPOST 3.1

EROSION CONTROL PLAN

TGS ENGINEERS
TGS ENGINEERS
201 W MARION ST
SHELBY, NC 28150
PH (704) 476-0003
CORP. LICENSE NO.: C-0275

DocuSign Envelope ID: D16E763E-792E-48D0-A737-9749BB7E7906

TEMPORARY SILT FENCE

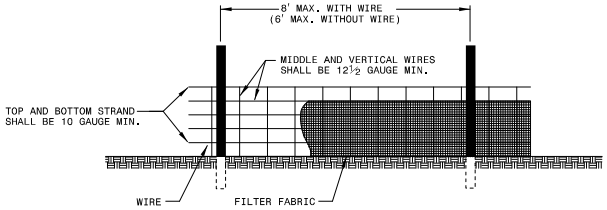

NOTES
USE WIRE A MINIMUM OF 32" IN WIDTH AND WITH A MINIMUM OF 6 LINE WIRES WITH 12" STAY SPACING.
USE FILTER FABRIC A MINIMUM OF 36" IN WIDTH AND FASTEN ADEQUATELY TO THE WIRE AS DIRECTED BY THE ENGINEER.
PROVIDE 5'-0" STEEL POST OF THE SELF-FASTENER ANGLE STEEL TYPE.

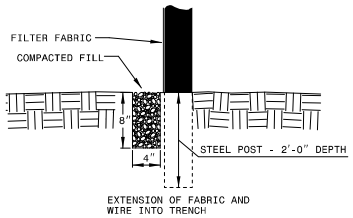

SPECIAL SEDIMENT CONTROL FENCE

GENERAL NOTES:

USE NO. 5 OR NO. 57 STONE FOR SEDIMENT CONTROL STONE.

USE HARDWARE CLOTH 24 GAUGE WIRE MESH WITH 1/4 INCH MESH OPENINGS.

INSTALL 5 FT. SELF FASTENER ANGLE STEEL POST 2 FT. DEEP MINIMUM.

SPACE POST A MAXIMUM OF 3 FT.

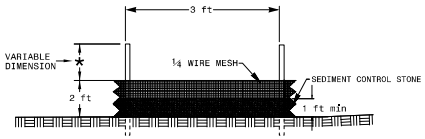

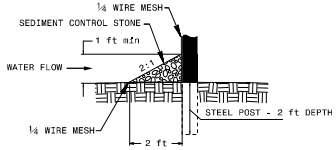

TEMPORARY ROCK SILT CHECK TYPE A

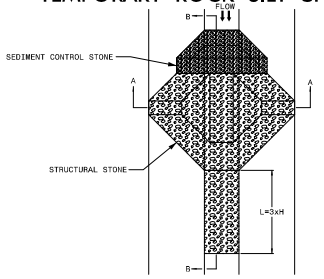

PLAN

NOTE
USE CLASS 'B' EROSION CONTROL STONE FOR STRUCTURAL STONE.
USE NO. 5 OR NO. 57 STONE FOR SEDIMENT CONTROL STONE.

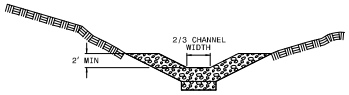

SECTION A-A

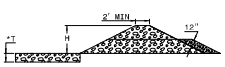

SECTION B-B
*T = 12" MIN., 18" MAX.

MATTING INSTALLATION DETAIL

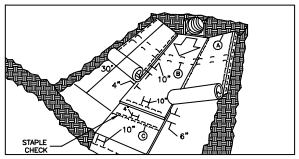

MATTING IN DITCHES

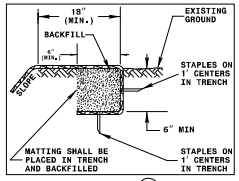

DIAGRAM (A)

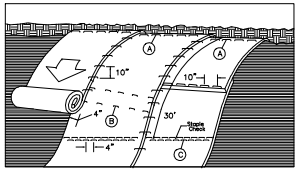

MATTING ON SLOPES

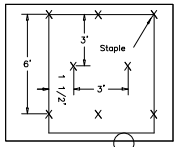

DIAGRAM (B)

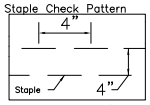

DIAGRAM (C)

NOTES:

THIS DETAIL APPLIES TO STRAW, EXCELSIOR, AND PERMANENT SOIL REINFORCEMENT MAT (PSRM) INSTALLATION.

STAPLES SHALL BE MD. 11 GAUGE STEEL WIRE FORMED INTO A "U" SHAPE WITH A MINIMUM THROAT WIDTH OF 1 INCH AND NOT LESS THAN 6 INCHES IN LENGTH.

NOT TO SCALE

SOUTH CAROLINA PROFESSIONAL ENGINEER No. 30028 Thomas L. Fletcher 9/23/2022

U.S.D.A. FOREST SERVICE REGION 8	FRANCIS MARION–SUMTER NATIONAL FOREST BRIDGE ON ROUTE 202 MILEPOST 3.1	EROSION CONTROL PLAN DETAILS	TGS ENGINEERS 201 W MARION ST SHELBY, NC 28150 PH (704) 476-0003 CORP. LICENSE NO.: C-0275	10/25

DocuSign Envelope ID: D16E763E-792E-48D0-A737-9749BB7E7906

ROCK PIPE INLET SEDIMENT TRAP TYPE `B'

NOTE:
USE CLASS 'A' EROSION CONTROL STON FOR STRUCTURAL STONE.
USE NO. 5 OR NO. 57 STONE FOR SEDIMENT CONTROL.
CONSTRUCT TOP OF BERM A MINIMUM OF ONE FOOT BELOW THE SHOULDER OR DIVERSION POINT.
PROVIDE A TOTAL SEDIMENT TRAP VOLUME OF 1800± CUBIC FEET PER ACRE OF DISTURBED AREA. SOME OF THE REQUIRED VOLUME MAY BE PROVIDED BY OTHER UP OR DOWNSTREAM CONTROLS.

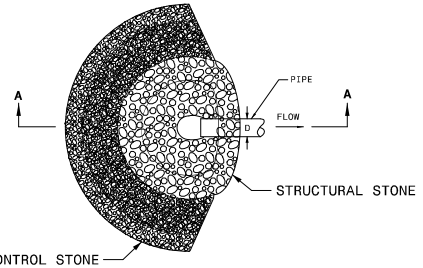

PLAN

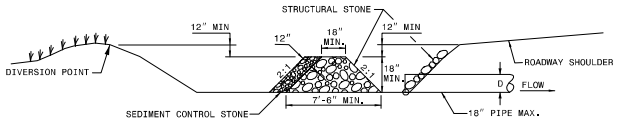

SECTION A-A

IMPERVIOUS DIKE

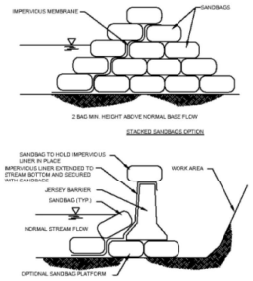

STANDARD CONSTRUCTION DETAIL
SANDBAG DIVERSION DAM OR COFFERDAM
NOT TO SCALE

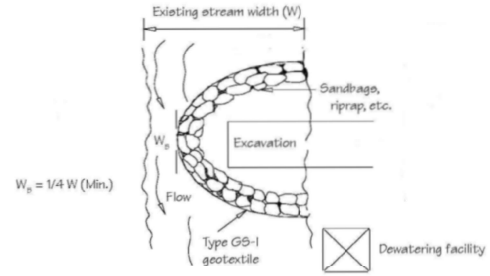

NOTE: For full stream crossings, separate cofferdams shall be constructed from each bank.

Notes:
1) Construction shall be performed during low flow conditions
2) Cofferdam shall not impede the flow of the stream.
3) Large rocks, woody vegetation, or other material in the stream bed and/or banks which may preclude proper installation shall be removed.
4) Cofferdam shall be constructed of clean, non-erodible materials and shall be of an adequate height to keep stream flow from overtopping into the isolated work area.
5) Water from the isolated work area shall be pumped to a well vegetated area. Flow from the dewatering operation shall not be of a velocity which results in erosion of the receiving uplands.
6) Immediately following completion of in-stream work, the cofferdam shall be removed and the stream bed and banks shall be graded and stabilized in accordance with the approved plans.

SOUTH CAROLINA PROFESSIONAL ENGINEER No. 30028 Thomas S. Fletcher
9/23/2022

U.S.D.A. FOREST SERVICE REGION 8	FRANCIS MARION–SUMTER NATIONAL FOREST BRIDGE ON ROUTE 202 MILEPOST 3.6	EROSION CONTROL PLAN DETAILS	TGS ENGINEERS 201 W MARION ST SHELBY, NC 28150 PH (704) 476-0003 CORP. LICENSE NO.: C-0275	11	25

DocuSign Envelope ID: D16E763E-792E-48D0-A737-9749BB7E7906

UNITED STATES DEPARTMENT OF AGRICULTURE
FOREST SERVICE
HUGER, SOUTH CAROLINA
TRANSPORTATION MANAGEMENT PLAN

①

R11-3
60" x 30"

TYPE III BARRICADE

②

R11-4
60" x 30"

TYPE III BARRICADE

③

R11-2
48" x 30"

TYPE III BARRICADE

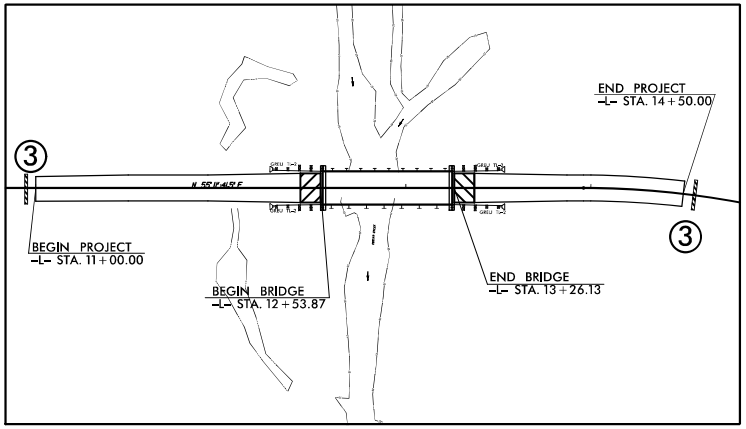

GENERAL NOTES

CHANGES MAY BE REQUIRED WHEN PHYSICAL DIMENSIONS IN THE DETAIL DRAWINGS, STANDARD DETAILS, AND ROADWAY DETAILS ARE NOT ATTAINABLE TO MEET FIELD CONDITIONS OR RESULT IN DUPLICATE OR UNDESIRED OVERLAPPING OF DEVICES. MODIFICATION MAY INCLUDE: MOVING, SUPPLEMENTING, COVERING, OR REMOVAL OF DEVICES AS DIRECTED BY THE ENGINEER.

THE FOLLOWING GENERAL NOTES APPLY AT ALL TIMES FOR THE DURATION OF THE CONSTRUCTION PROJECT EXCEPT WHEN OTHERWISE NOTED IN THE PLAN OR DIRECTED BY THE ENGINEER.

TRAFFIC PATTERN ALTERATIONS

A) NOTIFY THE ENGINEER TWENTY ONE (21) CALENDAR DAYS PRIOR TO ANY TRAFFIC PATTERN ALTERATION.

SIGNING

B) PROVIDE PERMANENT SIGNING.

C) PROVIDE SIGNING AND DEVICES REQUIRED TO CLOSE THE ROAD ACCORDING TO THE ROADWAY STANDARD DRAWINGS AND TRAFFIC CONTROL PLANS.

D) COVER OR REMOVE ALL SIGNS AND DEVICES REQUIRED TO CLOSE THE ROAD WHEN ROAD CLOSURE IS NOT IN OPERATION.

E) ENSURE ALL NECESSARY SIGNING IS IN PLACE PRIOR TO ALTERING ANY TRAFFIC PATTERN.

TRAFFIC CONTROL DEVICES

F) PLACE TYPE III BARRICADES, WITH "ROAD CLOSED" SIGN R11-2 ATTACHED, OF SUFFICIENT LENGTH TO CLOSE ENTIRE ROADWAY.

MANAGEMENT STRATEGIES

DURING CONSTRUCTION OF PROPOSED STRUCTURE, NFSR 202 WILL BE CLOSED TO THROUGH TRAFFIC.

LEGEND

GENERAL

- EXIST. PVMT.
- NORTH ARROW
- PROPOSED PVMT.
- WORK AREA

TRAFFIC CONTROL DEVICES

- BARRICADE (TYPE III)
- DRUM

SOUTH CAROLINA PROFESSIONAL ENGINEER No. 30028 THOMAS L. FLETCHER
Thomas Fletcher
9/23/2022

U.S.D.A. FOREST SERVICE REGION 8	FRANCIS MARION–SUMTER NATIONAL FOREST FRANCIS MARION RANGER DISTRICT	TRAFFIC MANAGEMENT PLAN	TGS ENGINEERS 201 W. MARION ST SHELBY, NC 28150 PH (704) 476-0003 CORP. LICENSE NO.: C-0275	12/25

DocuSign Envelope ID: D16E763E-792E-48D0-A737-9749BB7E7906

UNITED STATES DEPARTMENT OF AGRICULTURE
FOREST SERVICE
HUGER, SOUTH CAROLINA
TRANSPORTATION MANAGEMENT PLAN

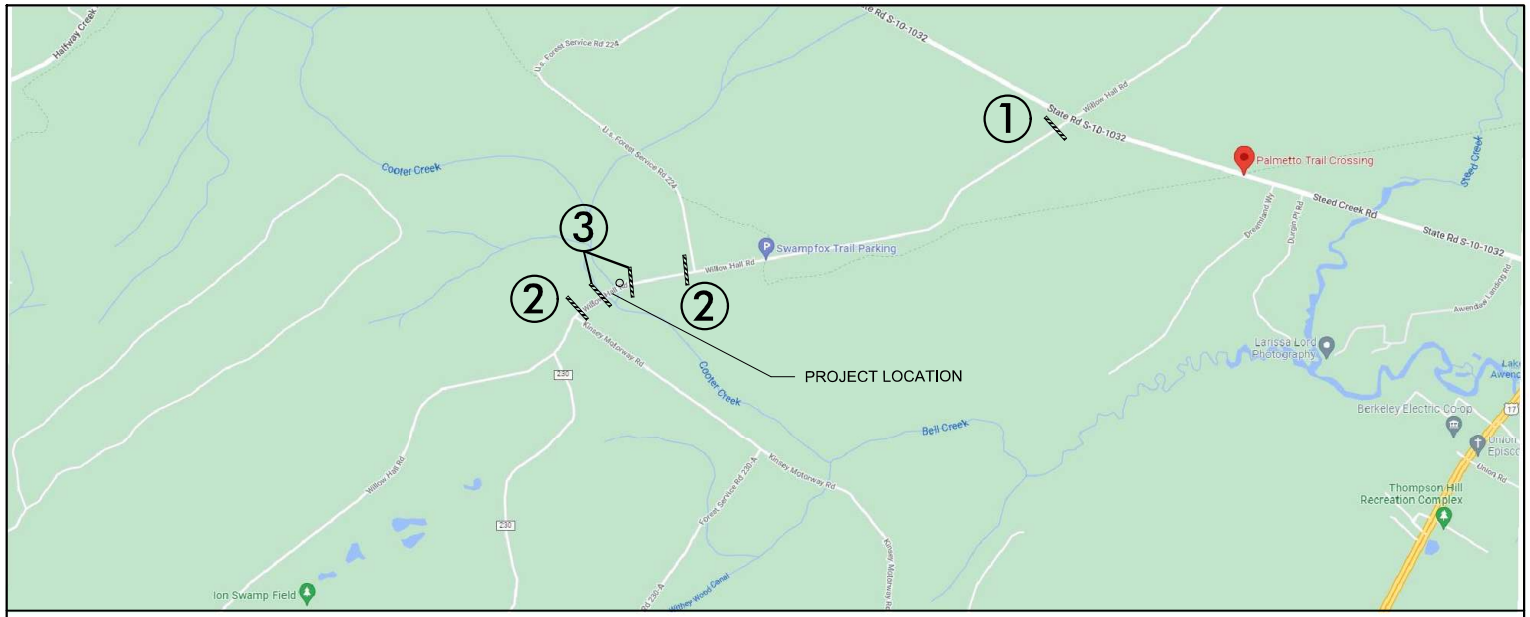

VICINITY MAP

9/23/2022

	U.S.D.A. FOREST SERVICE REGION 8	FRANCIS MARION–SUMTER NATIONAL FOREST FRANCIS MARION RANGER DISTRICT	TRAFFIC MANAGEMENT PLAN	TGS ENGINEERS 201 W. MARION ST SHELBY, NC 28150 PH (704) 476-0003 CORP. LICENSE NO.: C-0275	13/25

DocuSign Envelope ID: D16E763E-792E-48D0-A737-9749BB7E7906

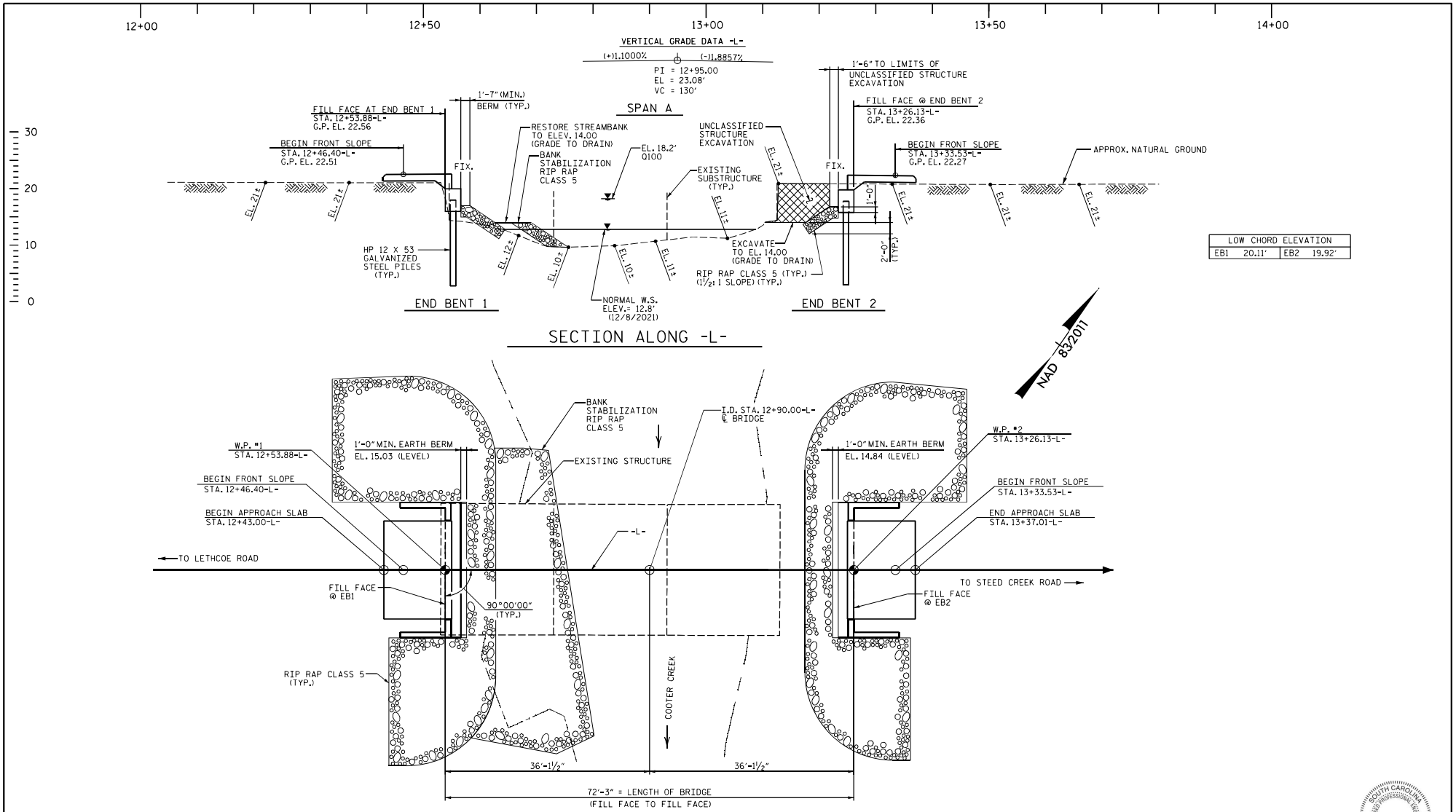

SOUTH CAROLINA REGISTERED PROFESSIONAL ENGINEER
No. 30028
Thomas Fletcher
THOMAS L. FLETCHER
9/23/2022

U.S.D.A. FOREST SERVICE REGION 8	FRANCIS MARION–SUMTER NATIONAL FOREST BRIDGE ON ROUTE 202	GENERAL DRAWING	TGS ENGINEERS 804–C N. LAFAYETTE ST SHELBY, NC 28150 PH (704) 476–0003 CORP. LICENSE NO.: C–0275	14 / 25

DocuSign Envelope ID: D16E763E-792E-48D0-A737-9749BB7E7906

BENCH MARK #1: RR SPIKE IN BASE OF 30" WATER OAK; 21.8' LT. OF STA. 12+06.53-L-; ELEV.= 18.00'

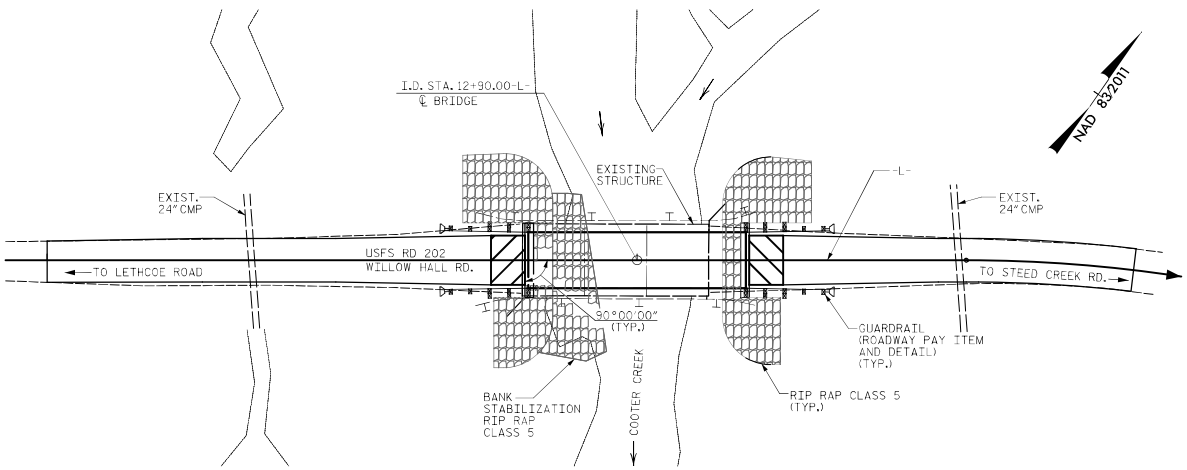

LOCATION SKETCH

NOTES

ASSUMED LIVE LOAD = HL-93 OR ALTERNATE LOADING.

FOR EROSION CONTROL MEASURES, SEE EROSION CONTROL PLANS.

THIS BRIDGE HAS BEEN DESIGNED IN ACCORDANCE WITH THE AASHTO LRFD BRIDGE DESIGN SPECIFICATIONS.

THIS BRIDGE IS LOCATED IN SEISMIC ZONE 2A.

STANDARD SPECIFICATIONS AS REFERENCED WITHIN THESE STRUCTURE PLANS REFER TO THE "STANDARD SPECIFICATIONS FOR CONSTRUCTION OF ROADS AND BRIDGES ON FEDERAL HIGHWAY PROJECTS, FP-14" AS PUBLISHED BY THE USDOT FEDERAL HIGHWAY ADMINISTRATION.

THE EXISTING STRUCTURE CONSISTING OF A 60' LONG BY 24' WIDE (CONCRETE DECK ON CONCRETE CHANNEL BEAMS) 3-SPAN BRIDGE SHALL BE REMOVED. THE EXISTING BRIDGE IS PRESENTLY POSTED FOR LOAD LIMIT. SHOULD THE STRUCTURAL INTEGRITY OF THE BRIDGE DETERIORATE DURING CONSTRUCTION OF THE PROPOSED BRIDGE, A LOAD LIMIT MAY BE POSTED AND MAY BE REDUCED AS FOUND NECESSARY DURING THE LIFE OF THE PROJECT.

REMOVAL OF THE EXISTING BRIDGE SHALL BE PERFORMED SO AS NOT TO ALLOW DEBRIS TO FALL INTO WATER, THE CONTRACTOR SHALL REMOVE THE BRIDGE AND SUBMIT PLANS FOR DEMOLITION IN ACCORDANCE WITH SECTION 203 OF THE STANDARD SPECIFICATIONS.

ALL MATERIALS FROM THE REMOVAL OF THE EXISTING BRIDGE SHALL BE LEGALLY DISPOSED OF OFF U.S. FOREST SERVICE LANDS.

THE MATERIAL SHOWN IN THE CROSS-HATCHED AREA ON SHEET 14 SHALL BE INCLUDED AS PART OF THE CONTRACT BID ITEM FOR UNCLASSIFIED STRUCTURE EXCAVATION.

NO VEHICULAR LOADING OR HEAVY CONSTRUCTION EQUIPMENT LOADING SHALL BE PLACED ON APPROACH FILL BETWEEN WINGWALLS AND BEHIND ABUTMENTS UNTIL THE APPROACH SLAB HAS BEEN CONSTRUCTED AND ACHIEVED ADEQUATE STRENGTH.

FOR EARTHQUAKE DRAINS, SEE SPECIAL PROVISIONS.

MATERIALS:

CONCRETE

END BENTS: MIN. 28 DAY COMPRESSIVE STRENGTH = 3000 PSI.

APPROACH SLABS & CURBS: MIN. 28 DAY COMPRESSIVE STRENGTH = 4500 PSI.

CORED SLABS: f'c = 7000 PSI (MIN. 28 DAY COMPRESSIVE STRENGTH).
f'ci = 5500 PSI (MIN. COMPRESSIVE STRENGTH AT RELEASE).

REINFORCING STEEL

REINFORCING BARS: DEFORMED GRADE 60, AASHTO M31.

PRESTRESSING STRANDS: 0.6"Ø LOW-RELAXATION STRANDS, UNCOATED SEVEN WIRE STEEL STRAND, GRADE 270, AASHTO M203.

TOTAL BILL OF MATERIAL

ITEM	REMOVAL OF EXISTING STRUCTURE	DYNAMIC LOAD TESTING	UNCLASSIFIED STRUCTURE EXCAVATION	STRUCTURAL CONCRETE (3000 PSI)	BRIDGE APPROACH SLABS	3'-0" x 2'-0" PRESTRESSED CONCRETE CORED SLABS		REINFORCING STEEL (UNCOATED)	HP12x53 GALVANIZED STEEL PILES		RIP RAP CLASS 5	EARTHWORK GEOTEXTILES	BEARING DEVICES	BRIDGE RAIL	EARTHQUAKE DRAINS
	LUMP SUM	EACH	LUMP SUM	C.Y.	LUMP SUM	NO.	LIN. FT.	LBS.	NO.	LIN. FT.	TONS	SQ. YDS.	LUMP SUM	LIN. FT.	LUMP SUM
SUPERSTRUCTURE						6	420.00							144.50	
END BENT 1				15.3				1709	5	350	485	540			LUMP SUM
END BENT 2			LUMP SUM	15.3				1709	5	375	135	150			LUMP SUM
TOTALS	LUMP SUM	2	LUMP SUM	30.6	LUMP SUM	6	420.00	3418	10	725	620	690	LUMP SUM	144.50	LUMP SUM

SOUTH CAROLINA REGISTERED PROFESSIONAL ENGINEER
No. 30728
Thomas Fletcher
THOMAS L. FLETCHER
9/23/2022

U.S.D.A. FOREST SERVICE
REGION 8

FRANCIS MARION–SUMTER
NATIONAL FOREST
BRIDGE ON ROUTE 202

GENERAL DRAWING

TGS ENGINEERS
804–C N. LAFAYETTE ST
SHELBY, NC 28150
PH (704) 476–0003
CORP. LICENSE NO.: C–0275

DocuSign Envelope ID: D16E763E-792E-48D0-A737-9749B87E7906

EARTHQUAKE DRAINS ARE REQUIRED AT END BENT 1 AND END BENT 2. THE CONTRACTOR IS RESPONSIBLE FOR THE FINAL DESIGN, PLANS, AND INSTALLATION. EARTHQUAKE DRAINS SHALL BE DESIGNED TO BE WITHIN THE LIMITS OF CONSTRUCTION AS SHOWN WITHIN THE PLANS.

REFERENCE THE USDOT FHWA STANDARD SPECIFICATION FOR CONSTRUCTION OF ROADS AND BRIDGES ON FEDERAL HIGHWAY PROJECTS STANDARD SPECIFICATIONS FOR HIGHWAY CONSTRUCTION FOR DRIVEN PILE FOUNDATIONS (DIVISION 550).

NOTES INCLUDED IN THESE PLANS ARE IN ADDITION TO THE REQUIREMENTS OF THE STANDARD SPECIFICATIONS.

GALVANIZED STEEL H-PILES ARE REQUIRED FOR CORROSION PROTECTION.

WITH RESPECT TO DRIVING CAPACITY, THE REQUIRED PILE BEARING RESISTANCE OF THE PILES AT THIS SITE MAY NOT BE REFLECTED IN THE DYNAMIC MEASUREMENTS DURING INITIAL INSTALLATION, BUT RATHER AT SOME TIME FOLLOWING INSTALLATION AS THE PILE "SETS UP". THEREFORE, EVEN IF THE REQUIRED CAPACITY IS NOT MEASURED DURING INITIAL PILE INSTALLATION, DYNAMIC TESTING WILL BE A USEFUL TOOL FOR MEASURING DRIVING STRESSES. HOWEVER, A RESTRIKE TEST (THAT IS, A TEST AT SOME TIME FOLLOWING INITIAL PILE DRIVING) WILL BE NECESSARY TO CONFIRM THE ULTIMATE PILE BEARING RESISTANCE IF IT IS NOT ACHIEVED DURING INSTALLATION. IT IS RECOMMENDED THAT RESTRIKE TESTS BE PERFORMED A MINIMUM OF 1 TO 3 DAYS FOLLOWING INITIAL DRIVING TO MEASURE THE ULTIMATE PILE BEARING RESISTANCE.

SUMMARY OF DRIVEN PILES

PARAMETERS	PILE SIZE	ESTIMATED TIP ELEVATION (NAVD88) (FT.)	MINIMUM TIP ELEVATION (NAVD88) (FT.)	DYNAMIC TEST SET-UPS
END BENT 1	HP12x53	-48	-18	2[1]
END BENT 2	HP12x53	-52	-18	

1. DYNAMIC TEST SET-UP SHOULD BE ON AN INITIAL END BENT PILE DURING INSTALLATION AND INCLUDES A SEPARATE SET-UP FOR RE-STRIKING IF NECESSARY.

PILE BEARING

PARAMETERS	END BENT 1	END BENT 2
MAXIMUM FACTORED DESIGN LOAD	57 TONS	57 TONS
GEOTECHNICAL RESISTANCE FACTOR *	0.65	0.65
NOMINAL RESISTANCE	130 TONS	130 TONS
REQUIRED DRIVING RESISTANCE	90 TONS	90 TONS

* METHOD OF CONTROLLING INSTALLATION OF PILES AND VERIFYING THEIR RESISTANCE: RESISTANCE AND STRESSES WILL BE VERIFIED BY PILE DRIVING ANALYZER (PDA) AND CAPWAP ANALYSIS OF INDEX PILE(S) DURING DRIVING. A PILE INSTALLATION CHART DEVELOPED FROM THE ANALYSIS WILL BE USED TO VERIFY THE RESISTANCE OF PRODUCTION PILES.

SEISMIC DESIGN PARAMETERS

SEISMIC DESIGN PARAMETER	ACCELERATION (g)
PGA	0.38
S_{DS}	0.74
S_{D1}	0.28

DRIVABILITY ANALYSIS

PARAMETERS	END BENT 1 & END BENT 2
SKIN QUAKE (IN.)	0.10
TOE QUAKE (IN.)	0.10
SKIN DAMPING (S/FT.)	0.10
TOE DAMPING (S/FT.)	0.15
% SKIN FRICTION	100%
% END BEARING	0%
DISTRIBUTION SHAPE NO.	VARIABLE
BEARING GRAPH	PROPORTIONAL
PILE PENETRATION	100%
HAMMER ENERGY RANGE[2]	10 TO 20 FT-KIPS

2. THE HAMMER SELECTION SHALL BE BASED ON A WAVE EQUATION ANALYSIS.

SOUTH CAROLINA PROFESSIONAL ENGINEER No. 30028 Registered Thomas Fletcher THOMAS L. FLETCHER 9/23/2022

U.S.D.A. FOREST SERVICE
REGION 8

FRANCIS MARION–SUMTER
NATIONAL FOREST
BRIDGE ON ROUTE 202

GENERAL DRAWING

TGS ENGINEERS
804–C N. LAFAYETTE ST
SHELBY, NC 28150
PH (704) 476–0003
CORP. LICENSE NO.: C–0275

DocuSign Envelope ID: D16E763E-792E-48D0-A737-9749BB7E7906

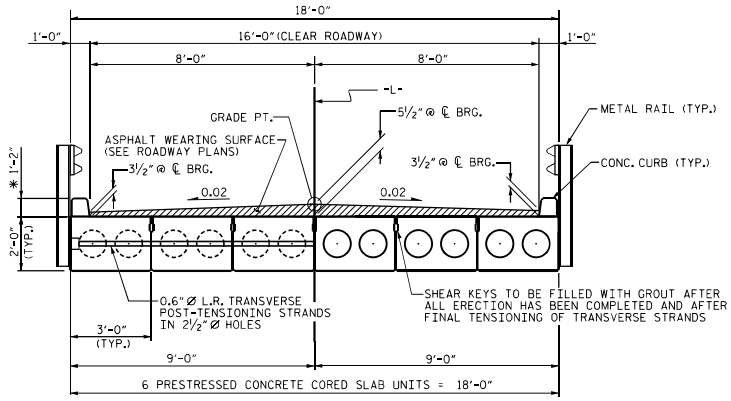

HALF SECTION
AT INTERMEDIATE DIAPHRAGMS

HALF SECTION
THROUGH VOIDS

TYPICAL SECTION

* THE MAXIMUM CURB HEIGHT AND ASPHALT THICKNESS IS SHOWN. THE HEIGHT OF THE CURB AND ASPHALT THICKNESS VARIES WHILE THE TOP OF THE CURB FOLLOWS THE PROFILE OF THE GUTTERLINE. FOR CURB HEIGHT DETAILS AND ASPHALT THICKNESS, SEE THE SUPERSTRUCTURE DETAILS.

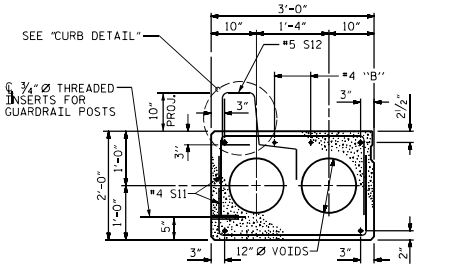

EXTERIOR SLAB SECTION

(FOR PRESTRESSED STRAND LAYOUT, SEE INTERIOR SLAB SECTION.)

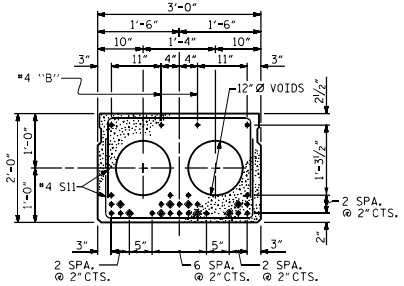

INTERIOR SLAB SECTION

(28 STRANDS REQUIRED)

0.6'' Ø LOW RELAXATION STRAND LAYOUT

◆ BOND SHALL BE BROKEN ON THESE STRANDS FOR A DISTANCE OF 12'-0" FROM END OF CORED SLAB UNIT. SEE STANDARD SPECIFICATIONS, ARTICLE 553.08(C).

DEBONDING LEGEND

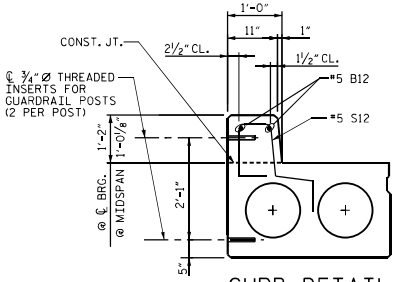

CURB DETAIL

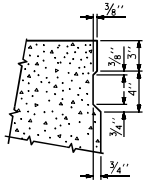

SHEAR KEY DETAIL

NOTE: OMIT SHEAR KEY ON OUTSIDE FACE OF EXTERIOR CORED SLABS.

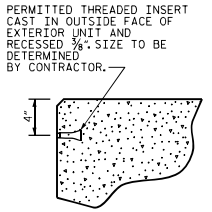

THREADED INSERT DETAIL

FIXED END

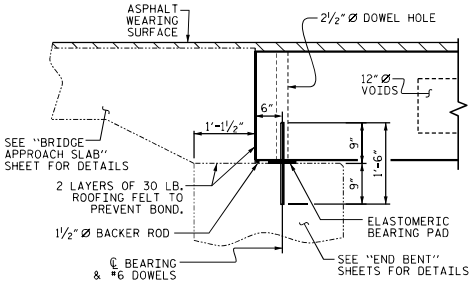

SECTION AT END BENT

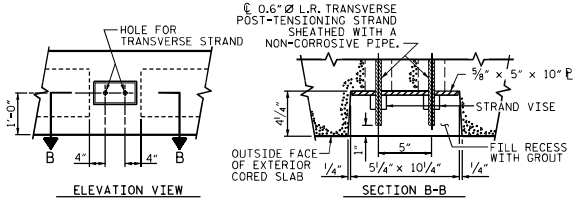

GROUTED RECESS AT END OF POST-TENSIONED STRAND-CORED SLABS

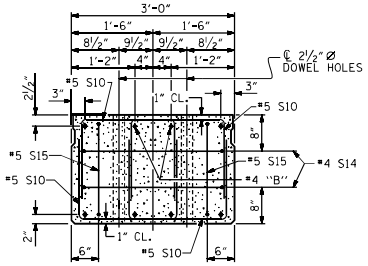

END ELEVATION

SHOWING PLACEMENT OF DOUBLE STIRRUPS AND LOCATION OF DOWEL HOLES. (STRAND LAYOUT NOT SHOWN.) INTERIOR SLAB UNIT SHOWN-EXTERIOR SLAB UNIT SIMILAR EXCEPT SHEAR KEY LOCATION.

SOUTH CAROLINA PROFESSIONAL ENGINEER No. 30028 THOMAS L. FLETCHER
Thomas Fletcher
9/23/2022

U.S.D.A. FOREST SERVICE REGION 8	FRANCIS MARION–SUMTER NATIONAL FOREST BRIDGE ON ROUTE 202	SUPERSTRUCTURE DETAILS	TGS ENGINEERS 804–C N. LAFAYETTE ST SHELBY, NC 28150 PH (704) 476–0003 CORP. LICENSE NO.: C–0275	17 / 25

DocuSign Envelope ID: D16E763E-792E-48D0-A737-9749BB7E7906

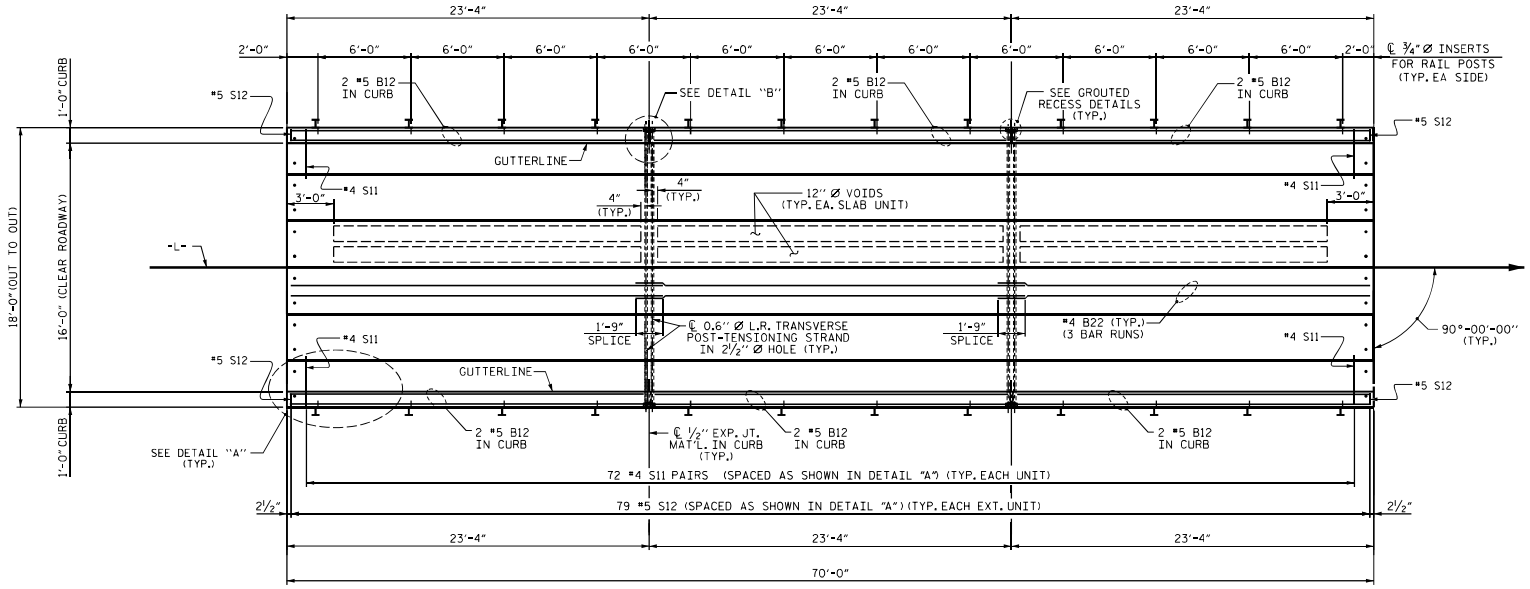

PLAN OF UNIT

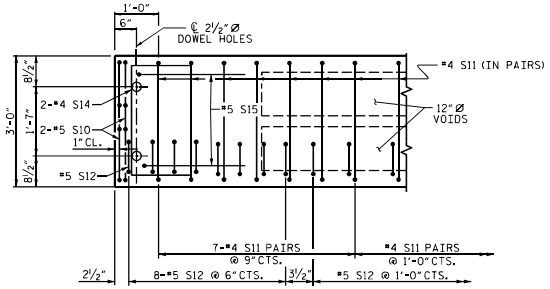

DETAIL "A"

(TYPICAL EACH END OF UNIT)
NOTE: EXTERIOR UNIT SHOWN - INTERIOR UNIT SIMILAR EXCEPT OMIT #5 S12 BARS.

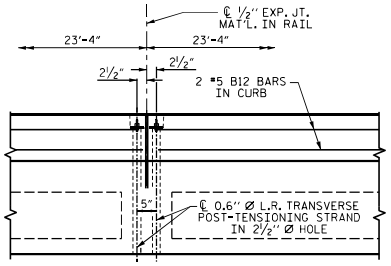

DETAIL "B"

SOUTH CAROLINA PROFESSIONAL ENGINEER No. 30028 Thomas Fletcher
9/23/2022

U.S.D.A. FOREST SERVICE REGION 8	FRANCIS MARION–SUMTER NATIONAL FOREST BRIDGE ON ROUTE 202	SUPERSTRUCTURE DETAILS	TGS ENGINEERS 804–C N. LAFAYETTE ST SHELBY, NC 28150 PH (704) 476–0003 CORP. LICENSE NO.: C–0275	18 / 25

DocuSign Envelope ID: D16E763E-792E-48D0-A737-9749BB7E7906

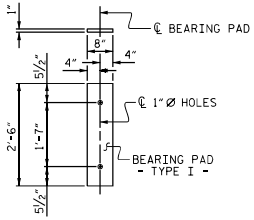

FIXED END
(TYPE I - 12 REQ'D)

ELASTOMERIC BEARING DETAILS

ELASTOMER IN ALL BEARINGS SHALL BE 60 DUROMETER HARDNESS.

BILL OF MATERIAL FOR ONE 70' CORED SLAB UNIT

				EXTERIOR UNIT		INTERIOR UNIT	
BAR	NUMBER	SIZE	TYPE	LENGTH	WEIGHT	LENGTH	WEIGHT
B22	6	#4	STR	24'-6"	98	24'-6"	98
S10	8	#5	2	4'-9"	40	4'-9"	40
S11	144	#4	2	5'-10"	561	5'-10"	561
✱S12	79	#5	1	4'-9"	391		
S14	4	#4	2	5'-7"	15	5'-7"	15
S15	4	#5	2	7'-1"	30	7'-1"	30
REINFORCING STEEL			LBS.		744		744
✱EPOXY COATED REINFORCING STEEL			LBS.		391		
7000 P.S.I. CONCRETE			CU. YDS.		11.8		11.8
0.6" Ø L.R. STRANDS			No.		28		28

DEAD LOAD DEFLECTION AND CAMBER

	3'-0" x 2'-0"
70' CORED SLAB UNIT	0.6" Ø L.R. STRAND
CAMBER (SLAB ALONE IN PLACE)	2¼" ↑
DEFLECTION DUE TO SUPERIMPOSED DEAD LOAD✱✱	⅜" ↓
FINAL CAMBER	1⅞" ↑

✱✱ INCLUDES FUTURE WEARING SURFACE

BAR TYPES

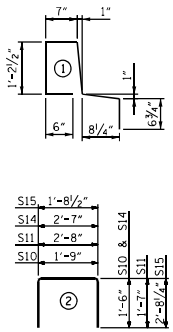

ALL BAR DIMENSIONS ARE OUT TO OUT

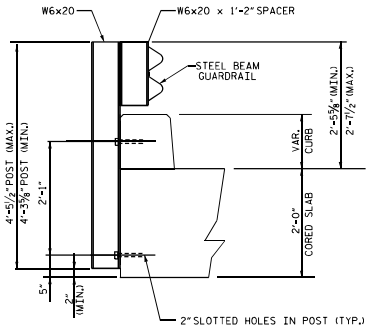

TYPICAL GUARDRAIL POST ON BRIDGE

24 REQUIRED

BILL OF MATERIAL FOR CONCRETE CURB & BRIDGE RAIL

BAR	BARS PER PAIR OF EXTERIOR UNITS	TOTAL NO.	SIZE	TYPE	LENGTH	WEIGHT
✱B12	70' UNIT	12	#5	STR	22'-11"	287
✱EPOXY COATED REINFORCING STEEL				LBS.		287
CONCRETE (4500 PSI)				CU.YDS.		5.8
BRIDGE RAIL				LN. FT.		144.50

GUTTERLINE ASPHALT THICKNESS & CURB HEIGHT

	ASPHALT OVERLAY THICKNESS @ MID-SPAN	CURB HEIGHT @ MID-SPAN
70' UNITS	1⅝"	1'-0⅛"

CONCRETE RELEASE STRENGTH

UNIT	PSI
70' UNITS	5500

CORED SLABS REQUIRED

	NUMBER	LENGTH	TOTAL LENGTH
70' UNIT			
EXTERIOR C.S.	2	70'-0"	140'-0"
INTERIOR C.S.	4	70'-0"	280'-0"
TOTAL	6		420'-0"

GRADE 270 STRANDS

	0.6" Ø L.R.
AREA (SQUARE INCHES)	0.217
ULTIMATE STRENGTH (LBS. PER STRAND)	58.600
APPLIED PRESTRESS (LBS. PER STRAND)	43,950

NOTES

ALL PRESTRESSING STRANDS SHALL BE 7-WIRE LOW RELAXATION GRADE 270 STRANDS AND SHALL CONFORM TO AASHTO M203 EXCEPT FOR SAMPLING REQUIREMENTS WHICH SHALL BE IN ACCORDANCE WITH THE STANDARD SPECIFICATIONS.

ALL REINFORCING STEEL CAST WITH THE CORED SLAB SECTIONS SHALL BE AASHTO M31 GRADE 60 AND SHALL BE INCLUDED IN THE UNIT PRICE BID FOR PRESTRESSED CONCRETE CORED SLABS.

RECESSES FOR TRANSVERSE STRANDS SHALL BE GROUTED AFTER THE TENSIONING OF THE STRANDS.

THE 2½" Ø DOWEL HOLES AT FIXED ENDS OF SLAB SECTIONS SHALL BE FILLED WITH NON-SHRINK GROUT.

THE BACKER RODS SHALL CONFORM TO THE REQUIREMENTS OF TYPE M BOND BREAKER. SEE SECTION 712 OF THE STANDARD SPECIFICATIONS.

WHEN CORED SLABS ARE CAST, AN INTERNAL HOLD-DOWN SYSTEM SHALL BE EMPLOYED TO PREVENT VOIDS FROM RISING OR MOVING SIDEWAYS. AT LEAST SIX WEEKS PRIOR TO CASTING CORED SLABS, THE CONTRACTOR SHALL SUBMIT TO THE ENGINEER FOR REVIEW AND COMMENT, DETAILED DRAWINGS OF THE PROPOSED HOLD-DOWN SYSTEM. IN ADDITION TO STRUCTURAL DETAILS, LOCATION AND SPACING OF THE HOLD-DOWNS SHALL BE INDICATED.

ALL REINFORCING STEEL IN THE CONCRETE CURB SHALL BE EPOXY COATED.

PRESTRESSING STRANDS SHALL BE CUT FLUSH WITH THE CORED SLAB UNIT ENDS.

APPLY EPOXY PROTECTIVE COATING TO CORED SLAB UNIT ENDS.

FLAME CUTTING OF THE TRANSVERSE POST-TENSIONING STRAND IS NOT ALLOWED.

THE TRANSFER OF LOAD FROM THE ANCHORAGES TO THE CORED SLAB UNIT SHALL BE DONE WHEN THE CONCRETE HAS REACHED A COMPRESSIVE STRENGTH OF NOT LESS THAN THE REQUIRED STRENGTH SHOWN IN THE "CONCRETE RELEASE STRENGTH" TABLE.

THE ¾" Ø THREADED INSERTS ARE DETAILED FOR THE CONTRACTOR TO ATTACH GUARDRAIL POSTS.

THE ¾" Ø THREADED INSERTS IN THE EXTERIOR UNITS SHALL BE SPACED AS SHOWN ON THE PLANS AND GALVANIZED IN ACCORDANCE WITH SECTION 717.07 OF THE STANDARD SPECIFICATIONS. STAINLESS STEEL THREADED INSERTS MAY BE USED AS AN ALTERNATE.

THE COST OF THE ¾" Ø THREADED INSERTS SHALL BE INCLUDED IN THE PRICE BID FOR THE PRECAST UNITS.

THE BOLTS USED FOR ATTACHING GUARDRAIL POSTS TO BRIDGE SHALL BE ASTM A325 AND GALVANIZED.

VERTICAL GROOVED CONTRACTION JOINTS, ½" IN DEPTH, SHALL BE TOOLED IN ALL EXPOSED FACES OF THE CURB AND IN ACCORDANCE WITH ARTICLE 609.05(a)(1) OF THE STANDARD SPECIFICATIONS. A VERTICAL CONTRACTION JOINT SHALL BE LOCATED AT EACH THIRD POINT BETWEEN CURB EXPANSION JOINTS. ONLY ONE CONTRACTION JOINT IS REQUIRED AT MIDPOINT OF CURB SEGMENTS LESS THAN 20 FEET IN LENGTH AND NO CONTRACTION JOINTS ARE REQUIRED FOR THOSE SEGMENTS LESS THAN 10 FEET IN LENGTH.

MAINTAIN A SYMMETRIC TENSION FORCE BETWEEN EACH PAIR OF TRANSVERSE POST TENSIONING STRANDS IN THE DIAPHRAGM.

FOR GROUT FOR STRUCTURES, SEE SECTION 725.13 OF THE STANDARD SPECIFICATIONS.

PAYMENT FOR THE CONCRETE CURB SHALL BE INCLUDED IN THE PRICE BID IN LINEAR FEET FOR "BRIDGE RAIL"

THE PERMITTED THREADED INSERTS ARE DETAILED AS AN OPTION FOR THE CONTRACTOR TO ATTACH FALSEWORK AND FORMWORK DURING CONSTRUCTION.

THE PERMITTED THREADED INSERTS IN THE EXTERIOR UNITS SHALL BE SIZED BY THE CONTRACTOR, SPACED AT 4'-0" CENTERS AND GALVANIZED IN ACCORDANCE WITH SECTION 717.07 OF THE STANDARD SPECIFICATIONS. STAINLESS STEEL THREADED INSERTS MAY BE USED AS AN ALTERNATE.

THE PERMITTED THREADED INSERTS SHALL BE GROUTED BY THE CONTRACTOR IMMEDIATELY FOLLOWING REMOVAL OF THE FALSEWORK.

THE COST OF THE PERMITTED THREADED INSERTS SHALL BE INCLUDED IN THE PRICE BID FOR THE PRECAST UNITS.

LIFTING POINT HARDWARE SHALL BE CUT FLUSH WITH THE TOP OF THE CORED SLAB UNITS.

SOUTH CAROLINA REGISTERED PROFESSIONAL ENGINEER No. 30028 THOMAS L. FLETCHER
9/23/2022

U.S.D.A. FOREST SERVICE REGION 8	FRANCIS MARION–SUMTER NATIONAL FOREST BRIDGE ON ROUTE 202	SUPERSTRUCTURE DETAILS	TGS ENGINEERS 804–C N. LAFAYETTE ST SHELBY, NC 28150 PH (704) 476–0003 CORP. LICENSE NO.: C–0275	19 / 25

DocuSign Envelope ID: D16E763E-792E-48D0-A737-9749BB7E7906

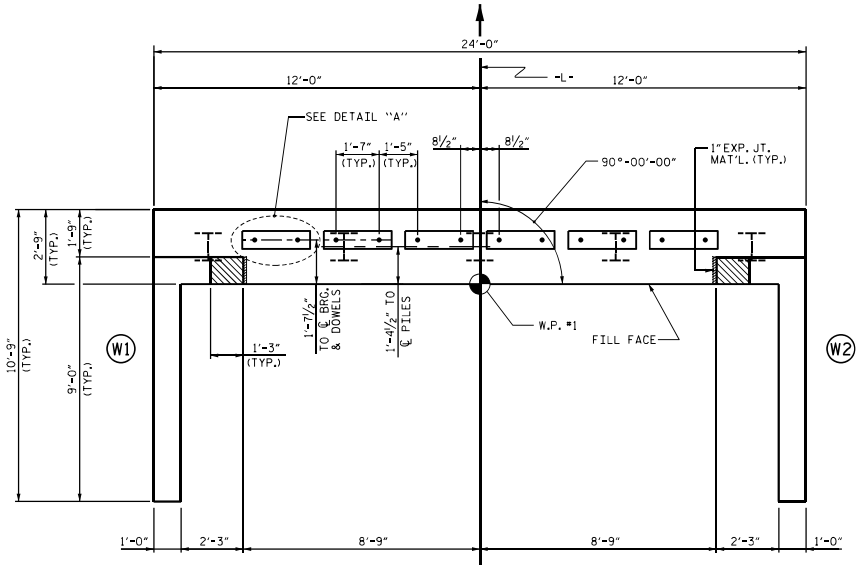

PLAN

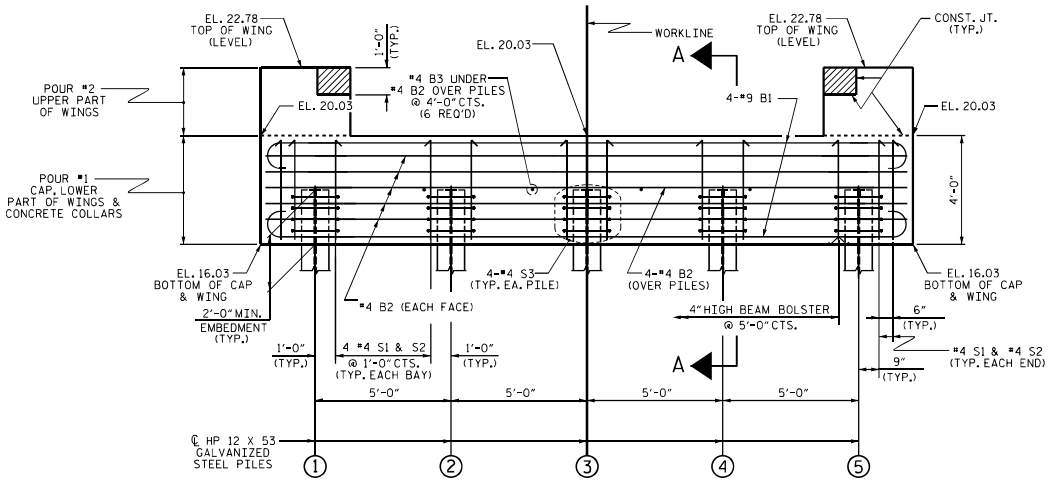

ELEVATION

WINGS NOT SHOWN FOR CLARITY.
CONCRETE COLLARS FOR STEEL PILES NOT SHOWN IN PLAN AND ELEVATION VIEWS FOR CLARITY.

NOTES

STIRRUPS IN CAP MAY BE SHIFTED AS NECESSARY TO CLEAR DOWELS.

THE CONCRETE IN THE SHADED AREA OF THE WING SHALL BE POURED AFTER THE CURB IS CAST IF SLIP FORMING IS USED.

SOUTH CAROLINA PROFESSIONAL ENGINEER No. 30028 Digitally signed by: Thomas Fletcher Date: 2022.09.23 09:45:57 -04'00' 9/23/2022

U.S.D.A. FOREST SERVICE REGION 8	FRANCIS MARION–SUMTER NATIONAL FOREST BRIDGE ON ROUTE 202	SUBSTRUCTURE END BENT 1	TGS ENGINEERS 804–C N. LAFAYETTE ST SHELBY, NC 28150 PH (704) 476–0003 CORP. LICENSE NO.: C–0275	20/25

DocuSign Envelope ID: D16E763E-792E-48D0-A737-9749BB7E7906

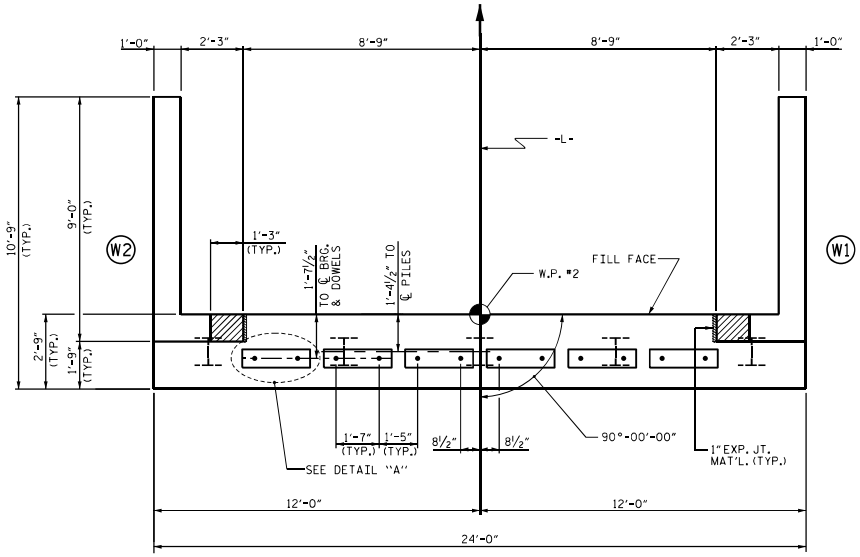

PLAN

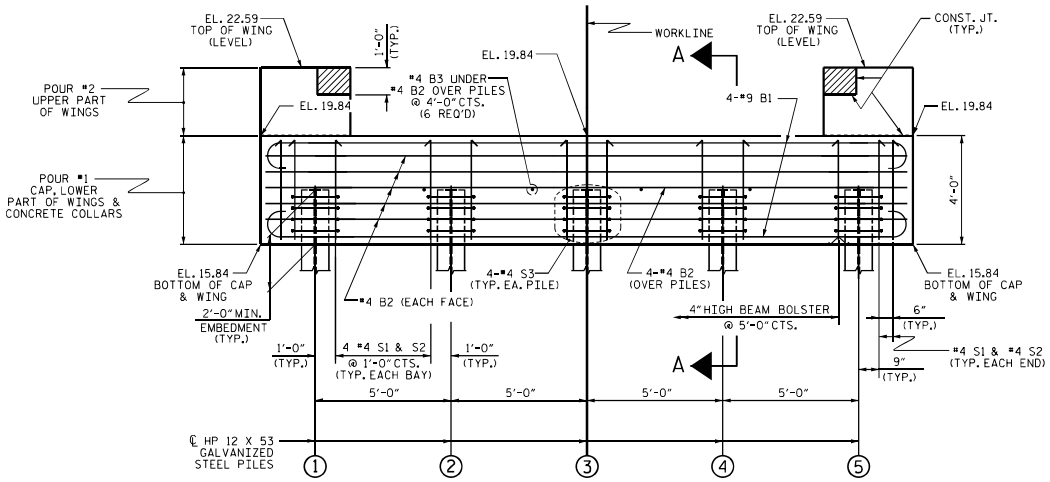

ELEVATION

WINGS NOT SHOWN FOR CLARITY.
CONCRETE COLLARS FOR STEEL PILES NOT SHOWN IN PLAN AND ELEVATION VIEWS FOR CLARITY.

NOTES

STIRRUPS IN CAP MAY BE SHIFTED AS NECESSARY TO CLEAR DOWELS.

THE CONCRETE IN THE SHADED AREA OF THE WING SHALL BE POURED AFTER THE CURB IS CAST IF SLIP FORMING IS USED.

SOUTH CAROLINA REGISTERED PROFESSIONAL ENGINEER No. 30028 THOMAS L. FLETCHER
9/23/2022

U.S.D.A. FOREST SERVICE REGION 8	FRANCIS MARION–SUMTER NATIONAL FOREST BRIDGE ON ROUTE 202	SUBSTRUCTURE END BENT 2	TGS ENGINEERS 804–C N. LAFAYETTE ST SHELBY, NC 28150 PH (704) 476–0003 CORP. LICENSE NO.: C–0275	21 / 25

DocuSign Envelope ID: D16E763E-792E-48D0-A737-9749BB7E7906

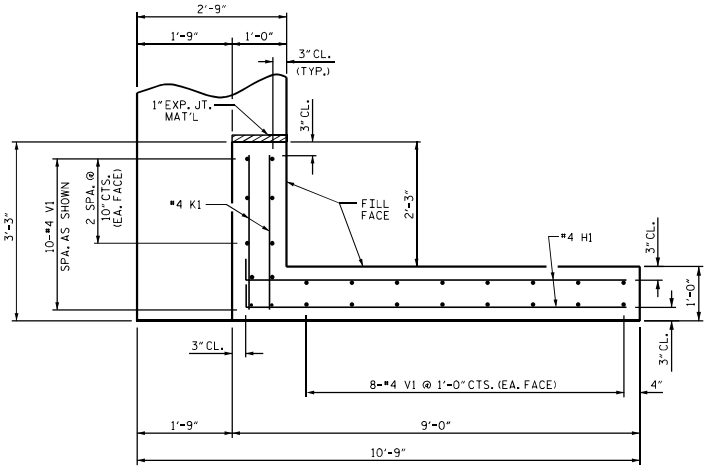

PLAN OF WING (W1)

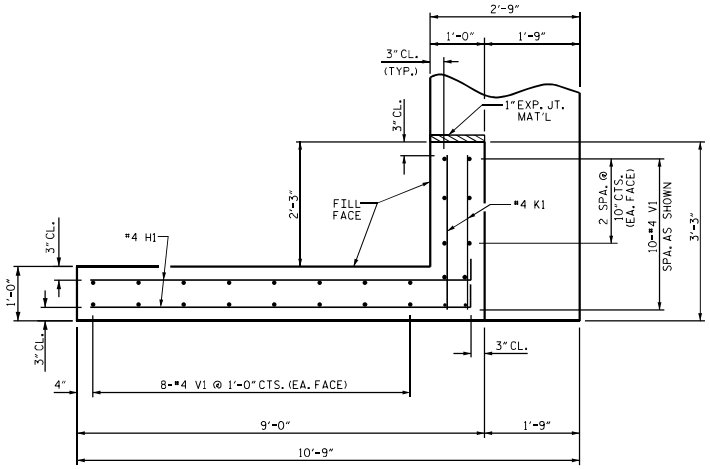

PLAN OF WING (W2)

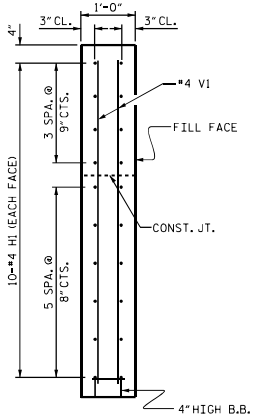

SECTION X-X

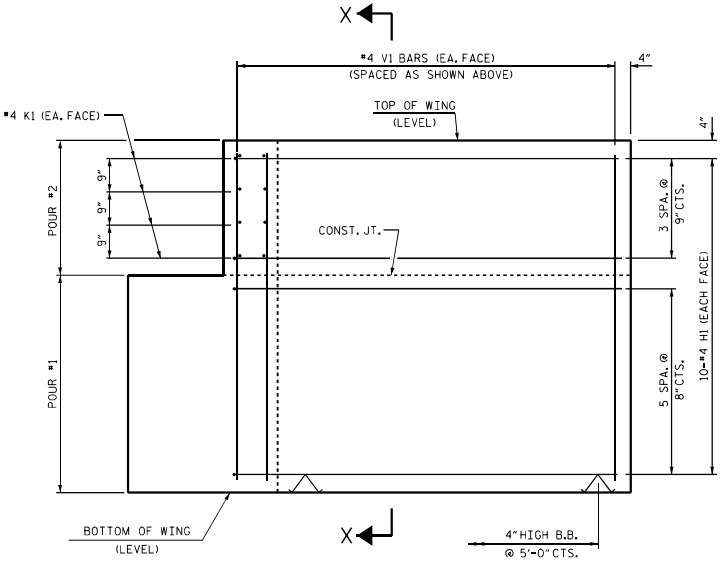

ELEVATION OF WING (W1)

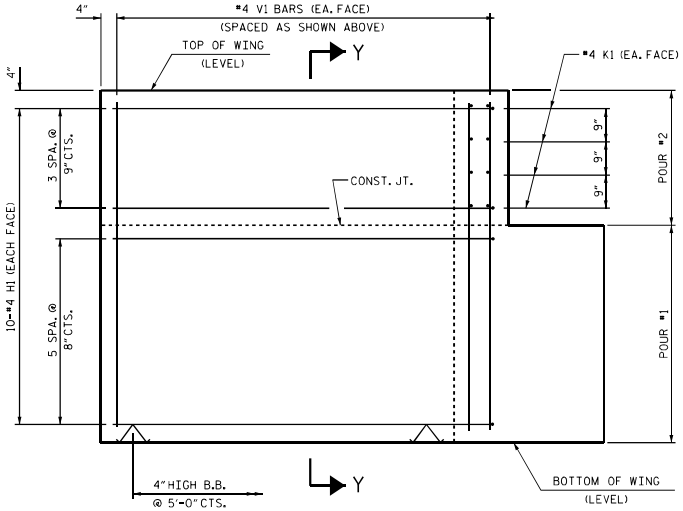

ELEVATION OF WING (W2)

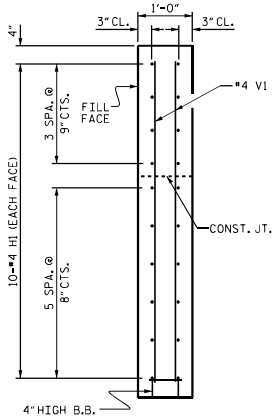

SECTION Y-Y

WING DETAILS

SOUTH CAROLINA PROFESSIONAL ENGINEER No. 30028 Digitally signed by Thomas Fletcher Date: 2022.09.23 09:42:41 -04'00' 9/23/2022

U.S.D.A. FOREST SERVICE REGION 8	FRANCIS MARION–SUMTER NATIONAL FOREST BRIDGE ON ROUTE 202	SUBSTRUCTURE WING DETAILS	TGS ENGINEERS 804–C N. LAFAYETTE ST SHELBY, NC 28150 PH (704) 476–0003 CORP. LICENSE NO.: C–0275	22	25

DocuSign Envelope ID: D16E763E-792E-48D0-A737-9749BB7E7906

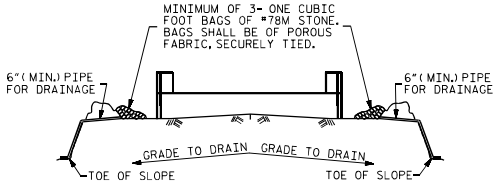

BAGGED STONE AND PIPE SHALL BE PLACED IMMEDIATELY AFTER COMPLETION OF END BENT EXCAVATION. PIPE MAY BE EITHER CONCRETE, CORRUGATED STEEL, CORRUGATED ALUMINUM ALLOY, OR CORRUGATED PLASTIC. PERFORATED PIPE WILL NOT BE ALLOWED.

BAGGED STONE SHALL REMAIN IN PLACE UNTIL THE ENGINEER DIRECTS THAT IT BE REMOVED. THE CONTRACTOR SHALL REMOVE AND DISPOSE OF SILT ACCUMULATIONS AT BAGGED STONE WHEN SO DIRECTED BY THE ENGINEER. BAGS SHALL BE REMOVED AND REPLACED WHENEVER THE ENGINEER DETERMINES THAT THEY HAVE DETERIORATED AND LOST THEIR EFFECTIVENESS.

NO SEPARATE PAYMENT WILL BE MADE FOR THIS WORK AND THE ENTIRE COST OF THIS WORK SHALL BE INCLUDED IN THE UNIT CONTRACT PRICE BID FOR THE SEVERAL PAY ITEMS.

TEMPORARY DRAINAGE AT END BENT

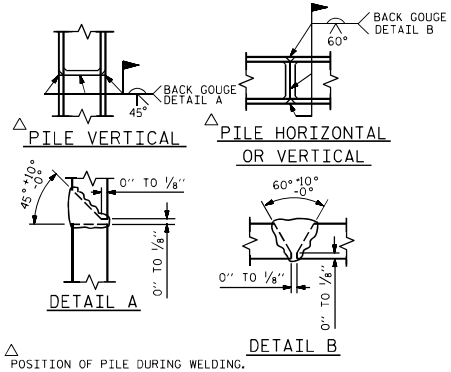

△ POSITION OF PILE DURING WELDING.

PILE SPLICE DETAILS

BAR TYPES

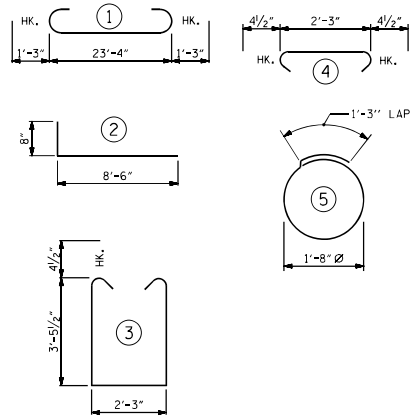

ALL BAR DIMENSIONS ARE OUT TO OUT.

END BENT 1	END BENT 2
HP 12 X 53 GALVANIZED STEEL PILES NO: 5 LIN. FT.= 350	HP 12 X 53 GALVANIZED STEEL PILES NO: 5 LIN. FT.= 375

BILL OF MATERIAL FOR ONE END BENT

BAR	NO.	SIZE	TYPE	LENGTH	WEIGHT
B1	8	#9	1	25'-10"	703
B2	14	#4	STR	23'-6"	220
B3	6	#4	STR	2'-3"	9
D1	12	#6	STR	1'-6"	27
H1	40	#4	2	9'-2"	245
K1	16	#4	STR	2'-8"	29
S1	20	#4	3	9'-11"	132
S2	20	#4	4	3'-0"	40
S3	20	#4	5	6'-6"	87
V1	52	#4	STR	6'-3"	217

REINFORCING STEEL (FOR ONE END BENT) 1709 LBS.

CLASS A CONCRETE BREAKDOWN (FOR ONE END BENT)

CAP, LOWER PART OF WINGS & COLLARS 13.0 C.Y.

POUR #2 UPPER PART OF WINGS 2.3 C.Y.

TOTAL CLASS A CONCRETE 15.3 C.Y.

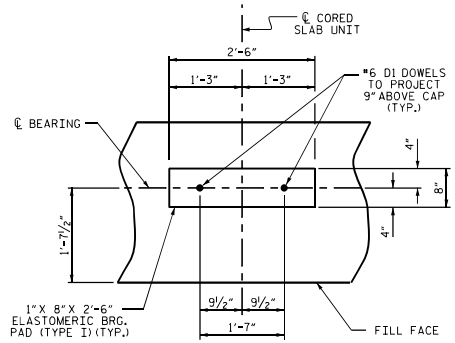

DETAIL "A"

(END BENT 1 SHOWN, END BENT 2 SIMILAR BY ROTATION)

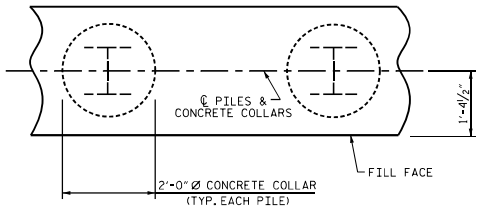

PLAN

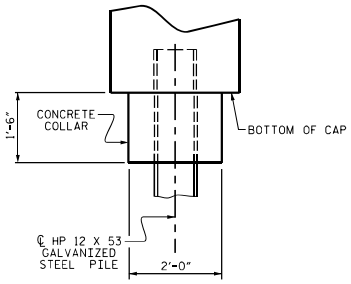

ELEVATION

CORROSION PROTECTION FOR STEEL PILES DETAIL

(END BENT 1 SHOWN, END BENT 2 SIMILAR BY ROTATION)

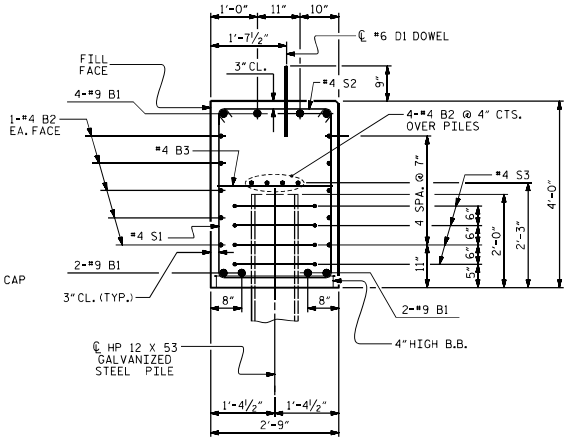

SECTION A-A

(CONCRETE COLLAR NOT SHOWN FOR CLARITY. SEE "CORROSION PROTECTION FOR STEEL PILES DETAIL.")

SOUTH CAROLINA REGISTERED PROFESSIONAL ENGINEER No. 30028 THOMAS L. FLETCHER
9/23/2022

U.S.D.A. FOREST SERVICE REGION 8	FRANCIS MARION–SUMTER NATIONAL FOREST BRIDGE ON ROUTE 202	SUBSTRUCTURE END BENTS 1 & 2 DETAILS	TGS ENGINEERS 804–C N. LAFAYETTE ST SHELBY, NC 28150 PH (704) 476–0003 CORP. LICENSE NO.: C–0275	23/25

DocuSign Envelope ID: D16E763E-792E-48D0-A737-9749BB7E7906

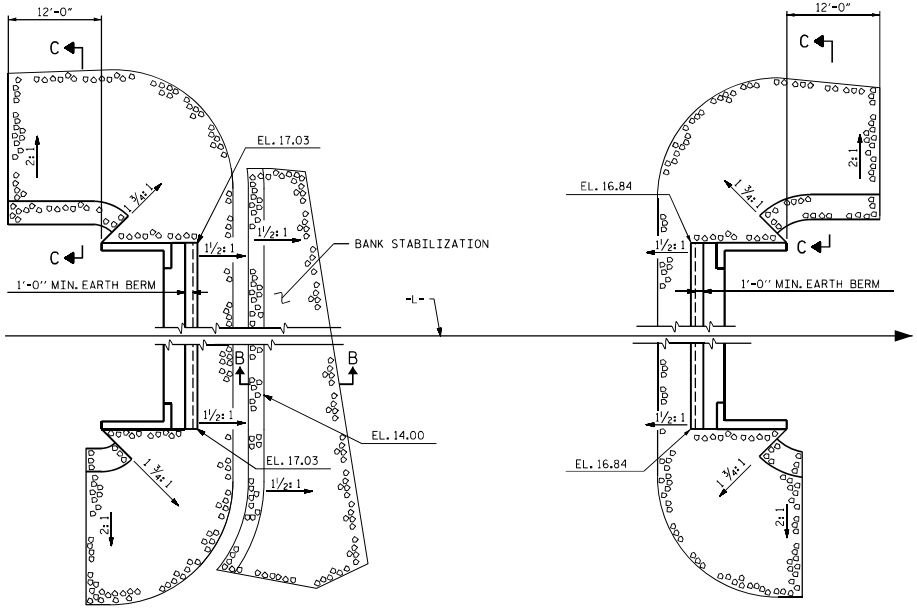

END BENT 1

END BENT 2

RIP RAP

ESTIMATED QUANTITIES		
BRIDGE @ STA. 12+90.00-L-	RIP RAP CLASS 5	EARTHWORK GEOTEXTILES
	TONS	SQUARE YARDS
END BENT 1	145	160
STREAM BANK STABILIZATION @ EB1	340	380
END BENT 2	135	150

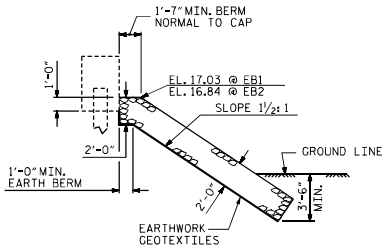

℄ SECTION

BERM RIP RAPPED

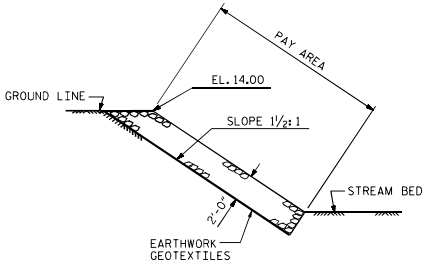

SECTION B-B

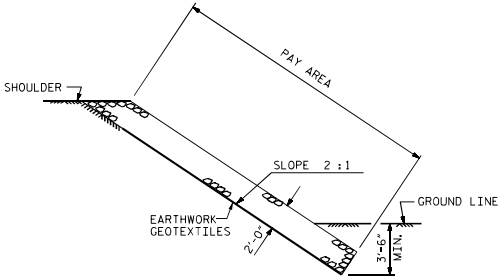

SECTION C-C

U.S.D.A. FOREST SERVICE REGION 8	FRANCIS MARION–SUMTER NATIONAL FOREST BRIDGE ON ROUTE 202	RIP RAP	TGS ENGINEERS 804–C N. LAFAYETTE ST SHELBY, NC 28150 PH (704) 476–0003 CORP. LICENSE NO.: C–0275	24/25

DocuSign Envelope ID: D16E763E-792E-48D0-A737-9749BB7E7906

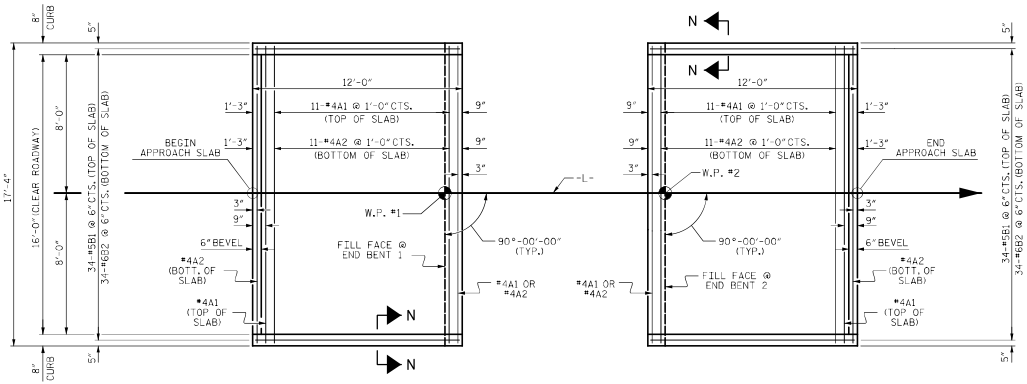

PLAN @ END BENT 1

PLAN @ END BENT 2

DIMENSIONS SHOWN ARE TYPICAL FOR BOTH APPROACH SLABS

NOTES

FOR BRIDGE APPROACH FILL INCLUDING GEOTEXTILE, 4" Ø DRAINAGE PIPE, AND GRANULAR BACKFILL, SEE ROADWAY PLANS.

GEOTEXTILE SHALL BE CLASS 1 IN ACCORDANCE WITH THE STANDARD SPECIFICATIONS SECTION 714.

GRANULAR BACKFILL SHALL BE IN ACCORDANCE WITH STANDARD SPECIFICATIONS SECTION 703.03(a).

GRANULAR BACKFILL IS TO BE CONTINUOUS ALONG FILL FACE OF BACKWALL FROM OUTSIDE EDGE TO OUTSIDE EDGE OF APPROACH SLAB.

AREA BETWEEN THE WINGWALL AND APPROACH SLAB SHALL BE GRADED TO DRAIN THE WATER AWAY FROM THE FILL FACE OF THE BRIDGE AND SHALL BE PAVED. SEE ROADWAY PLANS.

FOR THE 4" Ø DRAINAGE PIPE OUTLET(S), SEE ROADWAY STANDARD DRAWINGS.

APPROACH SLAB GROOVING IS NOT REQUIRED.

BILL OF MATERIAL

APPROACH SLAB AT EB 1

BAR	NO.	SIZE	TYPE	LENGTH	WEIGHT
* A1	13	#4	STR	17'-0"	148
A2	13	#4	STR	17'-0"	148
* B1	34	#5	STR	11'-2"	396
B2	34	#6	STR	11'-8"	596
REINFORCING STEEL				LBS.	744
* EPOXY COATED REINFORCING STEEL				LBS.	544
4500 PSI CONCRETE				C. Y.	9.2

APPROACH SLAB AT EB 2

BAR	NO.	SIZE	TYPE	LENGTH	WEIGHT
* A1	13	#4	STR	17'-0"	148
A2	13	#4	STR	17'-0"	148
* B1	34	#5	STR	11'-2"	396
B2	34	#6	STR	11'-8"	596
REINFORCING STEEL				LBS.	744
* EPOXY COATED REINFORCING STEEL				LBS.	544
4500 PSI CONCRETE				C. Y.	9.2

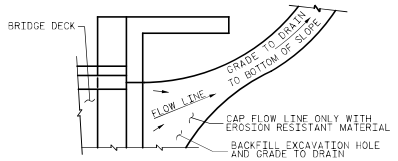

NOTE: IF THE APPROACH SLAB IS NOT CONSTRUCTED IMMEDIATELY AFTER THE BACKFILLING OF THE END BENT EXCAVATION, GRADE TO DRAIN TO THE BOTTOM OF THE SLOPE AND PROVIDE EROSION RESISTANT MATERIAL, SUCH AS FIBERGLASS ROVING OR AS DIRECTED BY THE ENGINEER TO PREVENT SOIL EROSION AND TO PROTECT THE AREA ADJACENT TO THE STRUCTURE. THE CONTRACTOR WILL BE REQUIRED TO REMOVE THESE MATERIALS PRIOR TO CONSTRUCTION OF THE APPROACH SLAB.

TEMPORARY DRAINAGE DETAIL

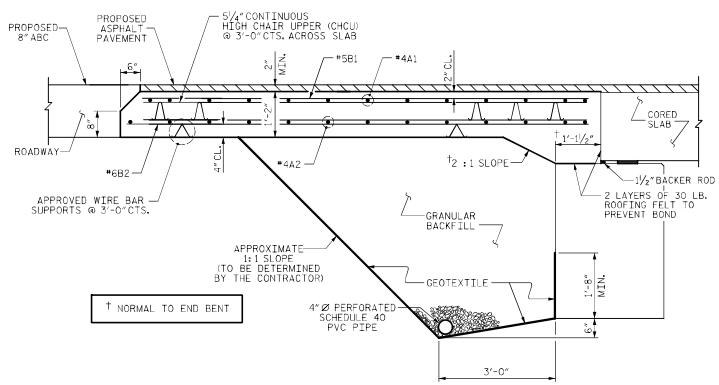

† NORMAL TO END BENT

SECTION THRU SLAB

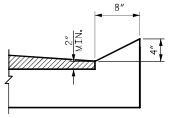

SECTION N-N

CURB DETAILS

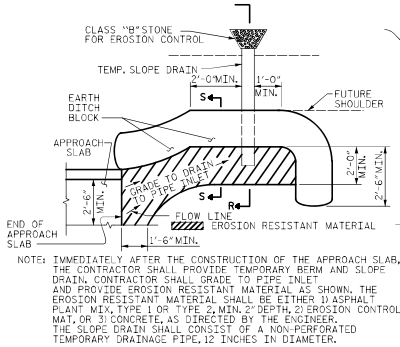

NOTE: IMMEDIATELY AFTER THE CONSTRUCTION OF THE APPROACH SLAB, THE CONTRACTOR SHALL PROVIDE TEMPORARY BERM AND SLOPE DRAIN. CONTRACTOR SHALL GRADE TO PIPE INLET AND PROVIDE EROSION RESISTANT MATERIAL AS SHOWN. THE EROSION RESISTANT MATERIAL SHALL BE EITHER 1) ASPHALT PLANT MIX, TYPE 1 OR TYPE 2, MIN. 2" DEPTH, 2) EROSION CONTROL MAT, OR 3) CONCRETE, AS DIRECTED BY THE ENGINEER. THE SLOPE DRAIN SHALL CONSIST OF A NON-PERFORATED TEMPORARY DRAINAGE PIPE, 12 INCHES IN DIAMETER.

PLAN VIEW

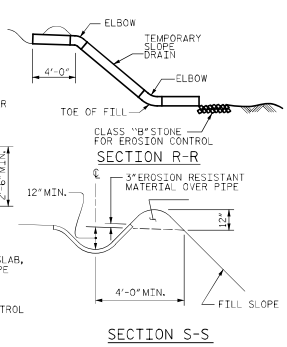

SECTION S-S

TEMPORARY BERM AND SLOPE DRAIN DETAILS

(TO BE USED WHEN SHOULDER BERM GUTTER IS REQUIRED)

SOUTH CAROLINA PROFESSIONAL ENGINEER No. 30028 Thomas Fletcher 9/23/2022

U.S.D.A. FOREST SERVICE
REGION 8

FRANCIS MARION–SUMTER
NATIONAL FOREST
BRIDGE ON ROUTE 202

APPROACH SLABS

TGS ENGINEERS
804-C N. LAFAYETTE ST
SHELBY, NC 28150
PH (704) 476-0003
CORP. LICENSE NO.: C-0275