Record Drawing

Date: March 16, 2016

***Project Number*:**

Project Name:
NOAA Weather Station

CHARLESTON, SC
Prepared For:
Carolina Comfort Solutions
2006 ROCKLAND RD.
COLUMBIA, SC 29210

Sold To:

Customer P.O. Number:

Customer Project Number:

Trane Sales Office:
COLUMBIA MAIN OFFICE
111 LOTT COURT
WEST COLUMBIA, SC 29169

Phone: 803-936-4700
Fax:
Web:

Architect:

Mechanical Contractor:

Mechanical Engineer:

Trane Contracting Team:

Account Manager: Kent Koehn
kkoehn@trane.com

Project Manager: Jeff Kindle
jeff.kindle@trane.com

Designed By: Jan Van Sise
jcvansise@trane.com

NOAA Weather Station
CHARLESTON, SC

Customer Contact

Carolina Comfort Solutions
2006 ROCKLAND RD.
COLUMBIA, SC 29210

TRANE PROJECT TEAM

SALESPERSON:	PROJECT MANAGER:	DESIGNED BY:
Kent Koehn	Jeff Kindle	Jan Van Sise

THIS DRAWING SET IS THE PROPERTY OF TRANE. DESIGN INFORMATION, DRAWINGS, DETAILS OR SPECIFICATION DATA MAY NOT BE REPRODUCED OR DUPLICATED NOR MAY ANY WORK BE EXECUTED HEREFROM WITHOUT THE WRITTEN AUTHORIZATION OF TRANE.

TITLE PAGE

CID:	PID:	PROJECT ID:	NUM.	REVISION	DATE:	BY:
			4			
PROJECT:			3			
NOAA WEATHER STATION			2			
			1	AS-BUILT DRAWING	2/24/2016	JP
CHARLESTON, SC			0	INSTALLATION DRAWING	1/6/2016	JVS

COLUMBIA MAIN OFFICE	SALESPERSON:	DESIGNED BY:	CHECKED BY:
111 LOTT COURT	K KOEHN	J VAN SISE	
WEST COLUMBIA, SC 29169	FILE NAME: NOAA_CHS.AXD		DWG: 1
803-936-4700			

INDEX OF CONTROL SYSTEM DRAWINGS

DRAWING NUMBER	DRAWING TITLE	REVISION LEVEL	REVISION DATE	COMMENTS
1	TITLE PAGE	AS-BUILT DRAWING	2/24/2016	
2	DRAWING INDEX	AS-BUILT DRAWING	2/24/2016	
3	LEGEND	AS-BUILT DRAWING	2/24/2016	
4	COMMUNICATION RISER	AS-BUILT DRAWING	2/24/2016	
5	SYSTEM CONTROLLER SC - 1WIRING DETAIL	AS-BUILT DRAWING	2/24/2016	
6	AHU-1FLOW DIAGRAM	AS-BUILT DRAWING	2/24/2016	
7	AHU-1UC600-1WIRING DETAIL	AS-BUILT DRAWING	2/24/2016	
8	AHU - 1XM30 - 1WIRING DETAIL	AS-BUILT DRAWING	2/24/2016	
9	AHU - 1XM32 - 2 WIRING DETAIL	AS-BUILT DRAWING	2/24/2016	
10	AHU-2 FLOW DIAGRAM	AS-BUILT DRAWING	2/24/2016	
11	AHU-2 UC600-2 WIRING DETAIL	AS-BUILT DRAWING	2/24/2016	
12	AHU-3 FLOW DIAGRAM	AS-BUILT DRAWING	2/24/2016	
13	AHU-3 UC600-3 WIRING DETAIL	AS-BUILT DRAWING	2/24/2016	
14	CONDENSING UNIT WIRING	AS-BUILT DRAWING	2/24/2016	
15	EDH 1- 3, 9 - 10 UC210 WIRING DETAIL	AS-BUILT DRAWING	2/24/2016	
16	EDH 4 - 8 UC210 WIRING DETAIL	AS-BUILT DRAWING	2/24/2016	
17	DETAIL SHEET # 1	AS-BUILT DRAWING	2/24/2016	
18	DETAIL SHEET # 2	AS-BUILT DRAWING	2/24/2016	
19	BILL OF MATERIALS	AS-BUILT DRAWING	2/24/2016	

TRANE

DRAWING INDEX

CID:	PID:	PROJECT ID:	NUM.	REVISION	DATE:	BY:
			4			
PROJECT: NOAA WEATHER STATION			3			
			2			
			1	AS-BUILT DRAWING	2/24/2016	JP
CHARLESTON, SC			0	INSTALLATION DRAWING	1/6/2016	JVS

COLUMBIA MAIN OFFICE
111 LOTT COURT
WEST COLUMBIA, SC 29169
803-936-4700

SALESPERSON: K KOEHN
DESIGNED BY: J VAN SISE
CHECKED BY:
FILE NAME: NOAA_CHS.AXD
DWG: 2

Symbol Legend

AFS AIR FLOW STATION	AFS AIR FLOW STATION, FAN MOUNTED	ALM ALARM, BELL	ALM ALARM, STROBE
ALM ALARM, PIEZIO	BLENDER, AIR	BURNER, FUEL-FIRED DIRECT	COIL, COAXIAL
C / C COIL, CHW, DX, HW, STEAM, ETC.	CONTROL POINT	CS OR CSR CS - CURRENT SENSOR ~ CSR - CURRENT SENSOR W/RELAY	D DAMPER, OPPOSED OR PARALLEL
D TRAQ DAMPER	DA ACTUATOR, DAMPER	DPS SENSOR, DIFFERENTIAL PRESSURE	DPS, DPT AIR DIFFERENTIAL SWITCH OR SENSOR
H L DPT, DPS DIFFERENTIAL PRESSURE SWITCH OR SENSOR	EXCHANGER, FUEL FIRE HEAT	EXCHANGER, FLUID HEAT	FAN OR PUMP
FAN, ROOF TOP	FILTER, AIR	FILTER, AIR BAG	FILTER, AIR HEPA
FILTER, AIR ROLL	FLT SWITCH, FLOAT	FS FIRESTAT	FS SENSOR, FLOW
HEATER, ELECTRIC DUCT	HDW SENSOR, ROOM STATIC PRESSURE	HDW TUBE, STATIC PRESSURE	HE, TEH SENSOR, DUCT HUMIDITY AND TEMPERATURE
HE, TEH SENSOR, HUMIDITY OR TEMPERATURE AND HUMIDITY	IAQ SENSOR, INDOOR AIR QUALITY	IRQ SENSOR, INDOOR AIR QUALITY (CO2)	LLT THERMOSTAT, LOW LIMIT
MS STARTER, MOTOR	OCC SENSOR, OCCUPANCY	PT TRANSMITTER, PRESSURE	R RELAY
R RELAY, SOCKET	RB SENSOR, OUTDOOR PRESSURE	RST SWITCH, RESET STATION	SD DETECTOR, SMOKE
SEQ SEQUENCER	ON OFF SW SWITCH	SOL SOLENOID, AIR	SW SWITCH, BUTTON
T THERMOSTAT, WALL	TC COMPOUND, THERMAL	TE SENSOR, AVERAGING TEMPERATURE	TE SENSOR, STRAP ON TEMPERATURE
AUTO SW SWITCH, ROTARY	TE SENSOR, TEMPERATURE	TE SENSOR, ZONE	TMR TIMER, ELECTRONIC WALL
TMR TIMER, WALL	TW WELL, THERMAL	TX TRANSFORMER	UV LIGHT, ULTRAVIOLET
VAL VALVE, 2-WAY COIL	VAL VALVE, 3-WAY COIL	VAL VALVE, DUCT HUMIDIFIER	VFD VARIABLE FREQUENCY DRIVE

Wiring and Project Notes

ELECTRICAL CONTRACTOR FOR TRANE:

1. REFER TO DEVICE INSTALLATION MANUALS FOR SPECIFIC WIRING REQUIREMENTS.

2. FIELD WIRING MUST BE IN ACCORDANCE WITH NATIONAL ELECTRICAL CODE, STATE AND LOCAL BUILDING CODES, AND DIVISION 16 OF SPECIFICATIONS.

3. TAG ALL CONTROL WIRING AT EACH END OF THE CABLE OR WIRE PER TAGS SHOWN IN ATTACHED DRAWINGS.

4. AVOID OVER TIGHTENING CABLE TIES AND OTHER FORMS OF CABLE WRAPS. THIS CAN DAMAGE THE WIRES INSIDE THE CABLES.

5. DO NOT CABLE TIE TO INSULATED WATER, STEAM OR OTHER LINES.

6. IN OPEN PLENUMS, AVOID RUNNING WIRE NEAR LIGHTING BALLASTS, ESPECIALLY THOSE USING 277 VAC.

7. ALL PANELS AND FIELD DEVICES LISTED IN THIS DOCUMENT ARE TO BE INSTALLED BY CONTROLS ELECTRICAL SUBCONTRACTOR UNLESS OTHERWISE NOTED ON DRAWINGS.

8. MOUNT ALL ROOM SENSORS AND SWITCHES AS SHOWN ON THE CONSTRUCTION DOCUMENTS, UNLESS OTHERWISE DIRECTED IN WRITING BY THE OWNER AND/OR ENGINEER.

9. FLEXIBLE CONDUIT IS NOT TO EXCEED 24" IN LENGTH.

10. CONTROL PANELS ARE NOT TO BE USED AS JUNCTION BOXES OR RACEWAYS. WIRING THAT DOES NOT TERMINATE IN A CONTROL PANEL IS NOT TO BE RUN WITHIN THE PANEL.

11. BINARY INPUT LIMITS: 1000 FT (300 M).

12. 0~10 VDC ANALOG INPUT LIMITS: 300 FT (100 M).

13. 0~20 MA ANALOG INPUT LIMITS: 1000 FT (300 M).

14. VARIABLE RESISTANCE ANALOG INPUT LIMITS: 300 FT (100 M).

15. ANALOG OUTPUT LIMITS: 1000 FT (300 M).

16. BINARY OUTPUT LIMITS: 1000 FT (300 M).

17. WIRING POWER FROM THE AC OUT TERMINALS TO POWER ANALOG INPUT DEVICES WILL CAUSE IMMEDIATE CONTROLLER FAILURE IF INPUT DEVICE USES HALF-WAVE RECTIFICATION. WHEN UNSURE, USE A SEPARATE POWER SUPPLY FOR DEVICE.

18. GENERAL COMMUNICATION GUIDE: DO NOT RUN COMMUNICATION LINK WIRING IN THE SAME CONDUIT OR WIRE BUNDLE WITH AC-POWER WIRES (INCLUDING CONDUCTORS RUNNING FROM TRIAC-TYPE OUTPUTS). KEEP POLARITY CONSISTENT THROUGHOUT THE SITE. MAKE SURE THAT THE 24 VAC POWER SUPPLIES ARE CONSISTENT IN HOW THEY ARE GROUNDED. AVOID SHARING 24 VAC BETWEEN CONTROLLERS. USE ONLY ONE TYPE OF COMMUNICATION CABLE; DO NOT MIX CABLE. IF AN EXISTING JOB USED ALTERNATE CABLE, CONTINUE USING THE SAME CABLE AFTER APPROVAL FROM THE PROJECT MANAGER.

19. BACNET MS/TP COMMUNICATION CABLE MUST BE SHIELDED TWISTED PAIR, 18 AWG MINIMUM, STRANDED, TINNED COPPER CONDUCTORS. SHIELD MUST BE CONTINUOUS THROUGHOUT, ISOLATED FROM OTHER CONDUCTORS OR GROUND, AND GROUNDED AT THE SYSTEM CONTROLLER ONLY. MAXIMUM CAPACITANCE BETWEEN CONDUCTORS IS 24 PICOFARADS PER FOOT. MAXIMUM DISTANCE IS 4000 FT (1372 M). MAXIMUM OF 60 TRANE DEVICES PER LINK BUT LESS WHEN COMBINED WITH NON-TRANE DEVICES. EXPANSION MODULE LINK LIMIT IS 656 FT (200 M). A TRACER BACNET TERMINATOR IS REQUIRED AT EACH END OF THE COMMUNICATION LINK. TOPOLOGY MUST BE DAISY CHAINED.

20. LONTALK (COMM 5) COMMUNICATION CABLE MUST BE LEVEL 4 UNSHIELDED, 22 AWG WITH MAXIMUM CAPACITANCE BETWEEN CONDUCTORS OF 17 PICOFARADS PER FOOT. MAXIMUM DISTANCE IS 4500 FT (1400 M). MAXIMUM DEVICES IS 60 DEVICES WITHOUT REPEATER AND 120 WITH REPEATER. ONE REPEATER PER LINK CAN BE USED FOR AN ADDITIONAL 4500 FT (1400 M), 60 DEVICES. EX2 LINK LIMIT IS 1000 FT (300 M). CCP III LINK LIMIT IS 3500 FT (1090 M). 105 OHMS, 1%, ¼ WATT TERMINATION RESISTORS ARE REQUIRED AT EACH END FOR LEVEL 4 WIRE AND 82 OHMS, 1%, ¼ WATT AT EACH END FOR 18 AWG SHIELDED (PURPLE) WIRE. TOPOLOGY MUST BE DAISY CHAINED.

21. COMM 3 AND COMM 4 COMMUNICATION CABLE MUST BE SHIELDED TWISTED PAIR, 18AWG MINIMUM, STRANDED, TINNED COPPER CONDUCTORS. SHIELD MUST BE CONTINUOUS THROUGHOUT, ISOLATED FROM OTHER CONDUCTORS OR GROUND, AND GROUNDED AT BCU ONLY. MAXIMUM CAPACITANCE BETWEEN CONDUCTORS IS 24 PICOFARADS PER FOOT. MAXIMUM DISTANCE IS 5000 FT (1715 M). UNDER CERTAIN CONDITIONS, TERMINATION RESISTORS ARE REQUIRED ON A COMM 3 COMMUNICATION LINK.

22. ETHERNET LAN COMMUNICATION CABLE MAXIMUM DISTANCE IS 295 FT (90 M) PLUS 33 FT (10 M) FOR PATCH CABLES.

MECHANICAL CONTRACTOR:

1. DAMPERS ARE TO BE INSTALLED BY SHEET METAL CONTRACTOR UNLESS OTHERWISE NOTED.

2. CONTROL VALVES AND ACCESSORIES INSTALLED DIRECTLY INTO PIPING (SENSOR WELLS, THREADOLETS, ETC.) ARE TO BE INSTALLED BY MECHANICAL CONTRACTOR.

3. FLOW DIAGRAMS SHALL NOT BE A GUIDE FOR PIPE AND VALVE INSTALLATION. REFER TO THE VALVE MANUFACTURER'S INSTALLATION INSTRUCTIONS FOR INSTALLATION GUIDANCE.

Cable Matrix

CT	TRANE NUMBER*	DESCRIPTION	WIRE COLORS
A	052003	18/2 TWIST SHLD PURPLE COMM CABLE	WHT, BLK
B		FACTORY PROVIDED CABLE	
C	105500	22/2 TWIST NON-SHLD BLUE COMM CABLE	WHT, BLK
D	002320	18/2 TWIST SHLD PLEN WHITE CABLE	WHT, BLK
E	002330	18/3 TWIST SHLD PLEN WHITE CABLE	WHT, BLK, RED
F	002340	18/4 TWIST SHLD PLEN WHITE CABLE	WHT, BLK, RED, GRN
J		1 PAIR #14 THHN STRANDED IN CONDUIT	WHT, BLK
L		ETHERNET RG58 THNNET PLEN CABLE	
M	555619	ETHERNET CAT-5 PLEN CABLE	
O	002352	18/8 TWIST SHLD PLEN WHITE CABLE	WHT, BLK, RED, ORN, YEL, GRN, BLU, BRN
P	106502	22/2 TWIST SHLD PLEN ORANGE COMM CABLE	WHT, BLK
Q	761360	16/2 SOLID RED SMOKE DETECTOR CABLE	WHT, BLK
2C	510001	18/2 SOLID PLENUM THERMOSTAT CABLE	WHT, RED
3C	51002-04	18/3 SOLID PLENUM THERMOSTAT CABLE	WHT, RED, GRN
5C	510004	18/5 SOLID PLENUM THERMOSTAT CABLE	WHT, RED, GRN, YEL, BLU
8C	510007	18/8 SOLID PLENUM THERMOSTAT CABLE	WHT, RED GRN, YEL, BLU, ORN, BLK, BRN
10C		18/10 SOLID PLENUM THERMOSTAT CABLE	WHT, RED, GRN, YEL, BLU, ORN, BLK, BRN, GRY, PNK
12C		18/12 SOLID PLENUM THERMOSTAT CABLE	WHT, RED, GRN, YEL, BLU, ORN, BLK, BRN, GRY, PNK, PUR, TAN

* When ordering cable specify jacket color. Part numbers are subject to change without notice.

CABLE MATRIX NOTES:
KEEP ALL COMMUNICATION LINK WIRING IN A DAISY CHAIN CONFIGURATION. ALL CABLE WIRING MUST BE TRANE RECOMMENDED WIRING , ESPECIALLY COMMUNICATION CABLES. CONTACT TRANE FOR RECOMMENDED CABLES AND SPECIFICATIONS.

CABLE INFORMATION SHAPE (CIS):
EACH CABLE CONNECTION HAS A CIS WHICH PROVIDES SOME OR ALL OF THE INFORMATION INDICATED BELOW:

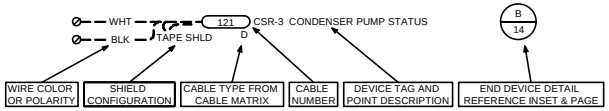

SHIELDING NOTE:

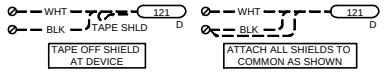

FLOW SHAPE NOTES:

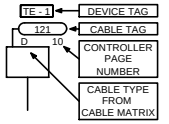

FIELD WIRING NOTE:

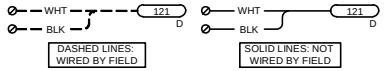

Field, Factory And Existing Device Note:

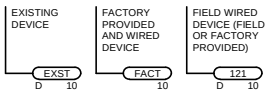

RISER 'WIRING BY' NOTE:

EC - ELECTRICAL CONTRACTOR
ESC - ELECTRICAL SUBCONTRACTOR
OTHERS
TRANE
EXIST - EXISTING POWER

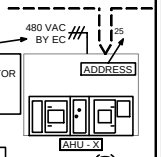

FACTORY MOUNTED DEVICE WITH FIELD MOUNTED CONTROLLER:

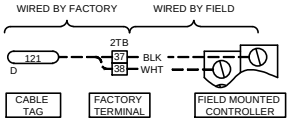

WIRELESS COMMUNICATION INTERFACE DISPLAYING SUBNET NUMBER

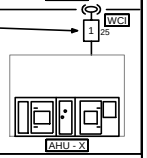

LEGEND

CID:	PID:	PROJECT ID:	NUM.	REVISION	DATE:	BY:
			4			
			3			
			2			
			1	AS-BUILT DRAWING	2/24/2016	JP
			0	INSTALLATION DRAWING	1/6/2016	JVS

PROJECT:
NOAA WEATHER STATION
CHARLESTON, SC

COLUMBIA MAIN OFFICE
111 LOTT COURT
WEST COLUMBIA, SC 29169
803-936-4700

SALESPERSON: K KOEHN
DESIGNED BY: J VAN SISE
CHECKED BY:

FILE NAME: NOAA_CHS.AXD

DWG: 3

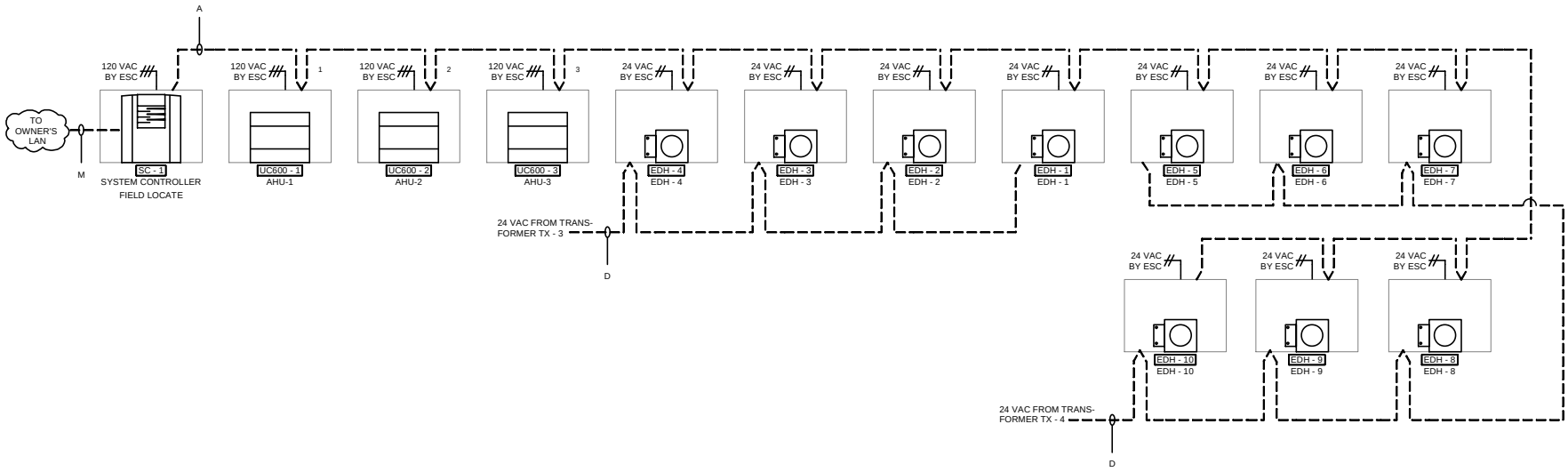

COMMUNICATION RISER

CID:	PID:	PROJECT ID:	NUM.	REVISION	DATE:	BY:
			4			
PROJECT:			3			
NOAA WEATHER STATION			2			
			1	AS-BUILT DRAWING	2/24/2016	JP
CHARLESTON, SC			0	INSTALLATION DRAWING	1/6/2016	JVS

COLUMBIA MAIN OFFICE 111 LOTT COURT WEST COLUMBIA, SC 29169 803-936-4700	SALESPERSON: K KOEHN	DESIGNED BY: J VAN SISE	CHECKED BY:
	FILE NAME: NOAA_CHS.AXD		DWG: 4

TYPICAL FOR 1
(SYSTEM CONTROLLER)

BILL OF MATERIALS				
TAG	QTY	VENDOR	PART NO	DESCRIPTION
ENC - 4	1	TRANE	X13651559010	ENC, TRACER UC MEDIUM, 120 VAC OUTLET
SC - 1	1	TRANE	BMSC000AAA01100	TRACER SC
SFT - 1	1	TRANE	BMCF000AAA0AE00	TRACER SC15 SOFTWARE
TBT - 2	1	TRANE	X13651524-01	TRANE BACNET TERMINATOR (2/PKG)

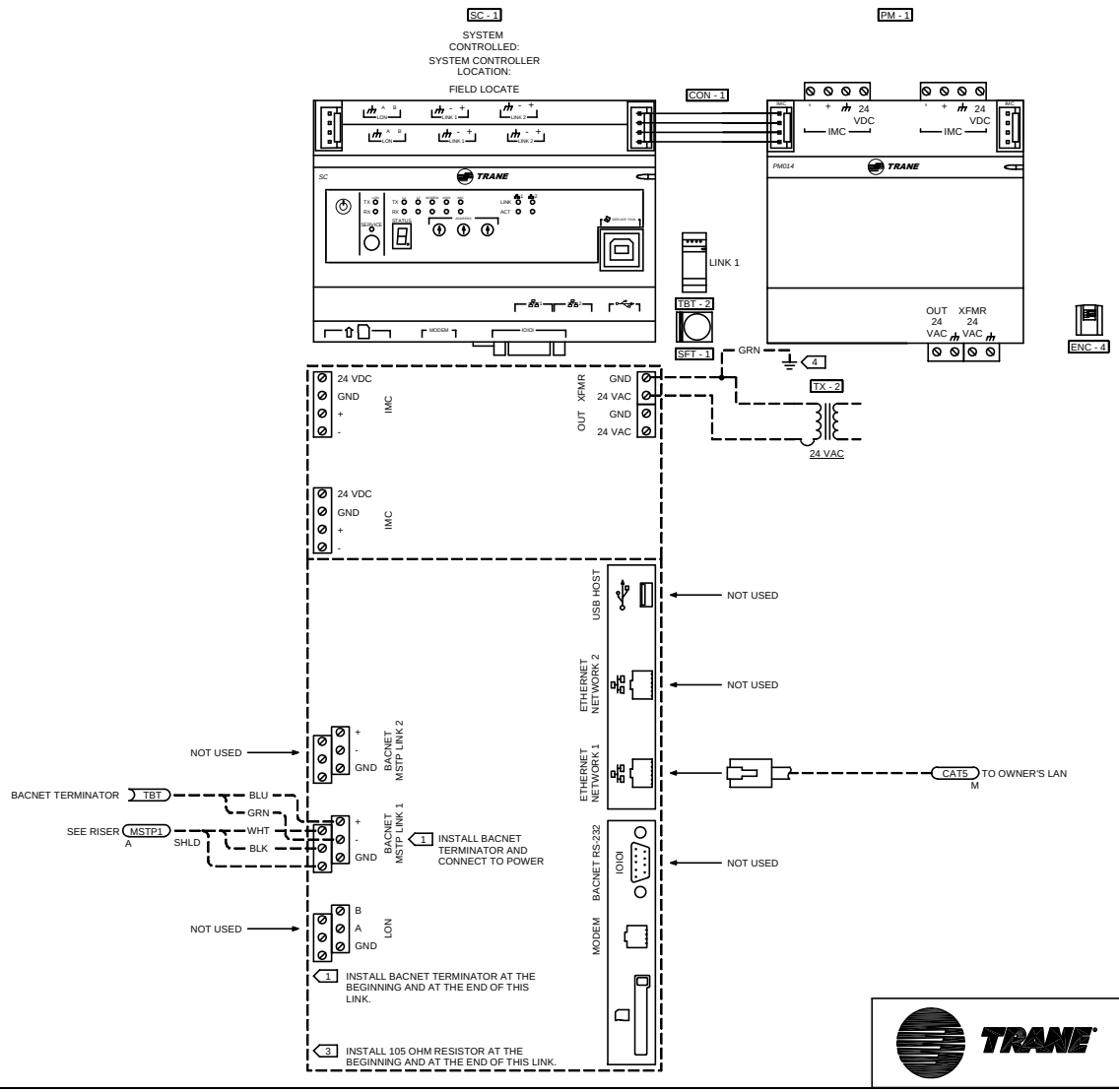

A
21

4 DEVICE MUST BE GROUNDED WITH FACTORY PROVIDED GROUND WIRE AS DETAILED IN THE DEVICE INSTALLATION LITERATURE.

SYSTEM CONTROLLER SC - 1 WIRING DETAIL

CID:	PID:	PROJECT ID:	NUM.	REVISION	DATE:	BY:
			4			
PROJECT:			3			
NOAA WEATHER STATION			2			
			1	AS-BUILT DRAWING	2/24/2016	JP
CHARLESTON, SC			0	INSTALLATION DRAWING	1/6/2016	JVS

COLUMBIA MAIN OFFICE
111 LOTT COURT
WEST COLUMBIA, SC 29169
803-936-4700

SALESPERSON: K KOEHN
DESIGNED BY: J VAN SISE
CHECKED BY:
FILE NAME: NOAA_CHS.AXD
DWG: 5

BILL OF MATERIALS				
TAG	QTY	VENDOR	PART NO	DESCRIPTION
HE - 1, TEH - 3	2	TRANE	X1379044401	3%ROOM RH SENS, TEMP
TE - 1	1	TRANE	4190-1046	TEMP SENS, AVG, BALCO, 22FT
TE - 2	1	TRANE	4190 0133	TEMP SENS, DUCT/IMM, THERM 6 IN
TEH - 1, TEH - 2	2	TRANE	4190-7020	3%DUCT RH SENS, TEMP
DA - 1, DA - 2	2	BELIMO	AF24-SR US	ACT PROP 24VAC SR 133IN-LB
CS - 1	1	KELE	RIBXGA	CUR SW, 0.75-150A, SPLIT, NO
DPS - 1	1	KELE	P32AC-2	DIFF PRES SW, 0.05-5 IN WC
R - Y1, R - 4	2	KELE	RIBU2C	RLY DPDT, LED, 10-30 VAC/DC/120 VAC
R - Y2	1	KELE	RIBU1C	RLY SPDT, LED, 10-30 VAC/DC/120 VAC
TE - 17	1	KELE	ST-MP3-X25	STRAP-ON 10K NTC THERMISTOR

SEQUENCE OF OPERATION:

AIR HANDLING UNITS AHU-1 & AHU-2:
AHU-1 & 2 SERVE THE OPERATIONS AREA AND ARE OPERATED ON A 24 HOUR SCHEDULE. ONLY ONE AIR HANDLING UNIT SHALL OPERATE, AND THE NON-OPERATING UNIT SHALL SERVE AS A BACKUP. THE BACKUP UNIT SHALL BE STARTED AUTOMATICALLY UPON FAILURE OF THE OTHER UNIT. AHU-1 & 2 SHALL BE PROGRAMMED TO ALTERNATE TO MAINTAIN EQUAL RUN TIME. THE SUPPLY AIR FAN SHALL RUN CONTINUOUSLY. A SUPPLY AIR TEMPERATURE SENSOR SHALL STAGE THE AIR COOLED CONDENSING UNIT (ACU) TO MAINTAIN 55 DEG. F DISCHARGE AIR TEMPERATURE. THE SUPPLY AIR TEMPERATURE SHALL BE RESET TO SATISFY THE ROOM TEMPERATURE SENSOR WITH THE MAXIMUM COOLING DEMAND. AN OUTSIDE AIR ECONOMIZER CYCLE SHALL BE PROVIDED WITH COMPARATIVE ENTHALPY CONTROL. A MIXED AIR TEMPERATURE SENSOR SHALL MODULATE THE OUTSIDE AND RETURN AIR DAMPERS DURING THE ECONOMIZER CYCLE. MINIMUM OUTSIDE AIR SHALL BE PROVIDED WHEN THE UNIT IS NOT IN THE ECONOMIZER CYCLE. HUMIDITY SHALL BE CONTROLLED BY THE SPACE HUMIDITY SENSOR. HEATING IS PROVIDED BY INDIVIDUAL ELECTRIC DUCT HEATERS (EDH). SMOKE DETECTORS IN THE SUPPLY AND RETURN AIR DUCTWORK SHALL DE-ENERGIZE THE SUPPLY AIR FAN UPON SENSING SMOKE. UPON LOSS OF COMMERCIAL POWER, THE AIR HANDLING UNIT SHALL BE PROGRAMMED FOR A TIMED DELAY RESTART. ELECTRIC DUCT HEATER EDH-2 SHALL NOT OPERATE ON EMERGENCY POWER.

HUMIDIFIER:
THE HUMIDIFIER SHALL NOT BE ALLOWED TO OPERATE UNLESS THE AIR HANDLING UNIT SUPPLY AIR FAN IS IN OPERATION. AN AIRFLOW SWITCH SHALL DE-ENERGIZE THE HUMIDIFIER UPON LOSS OF AIRFLOW. THE STEAM SOLENOID VALARE INTERLOCKED TO OPEN WHEN THE CORRESPONDING AIR HANDLING UNIT IS IN OPERATION. THE SPACE HUMIDITY SENSOR SHALL MODULATR THE HUMIDIFIER. WHEN THE HUMIDIFIER IS ENERGIZED, THE SUPPLY AIR TEMPERATURE SHALL BE RESET TO 65 DEG. F. WHEN THE HUMIDIFIER IS DE-ENERGIZED, SUPPLY AIR TEMPERATURE SHALL BE SET BACK TO 55 DEG. F.A SIGNAL FROM THE DUCT MOUNTED HIGH LIMIT HUMIDITY SENSOR SHALL DE-ENERGIZE THE HUMIDIFIER.

AHU - 1

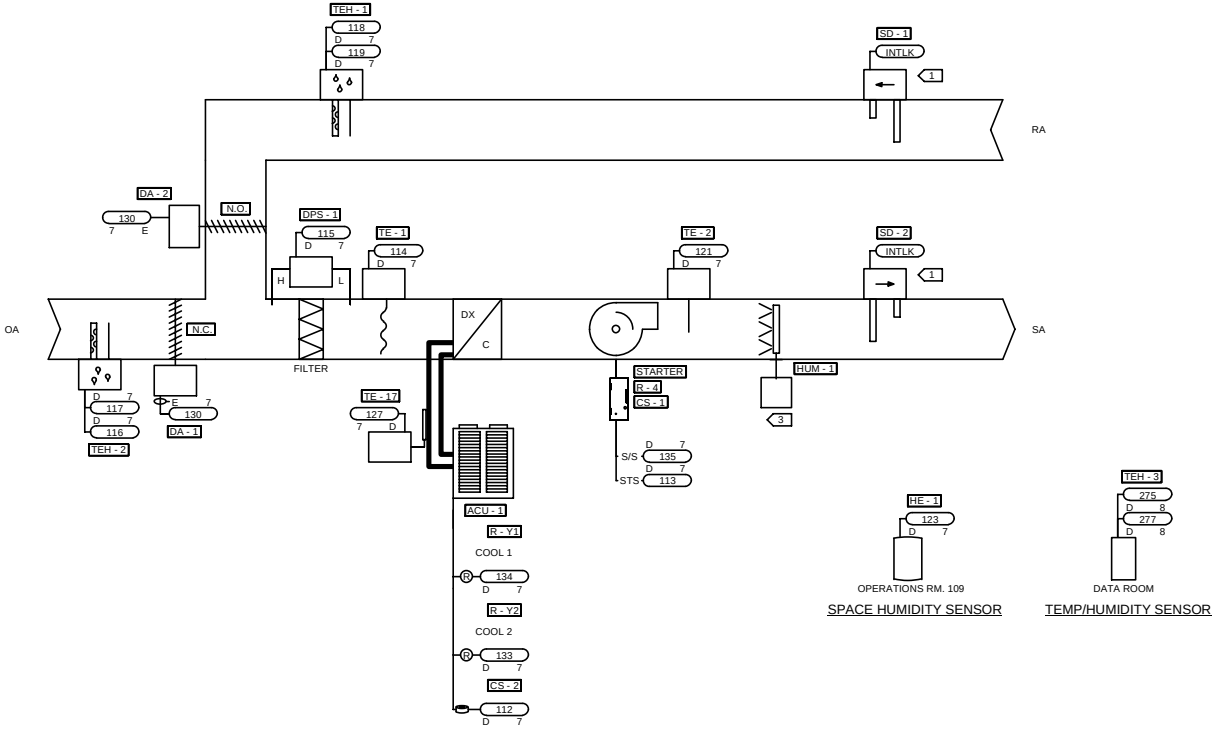

3 EXISTING HUMIDIFIER INTERLOCK/SAFETY CONTROLS ARE EXISTING (NOT SHOWN).

1 EXISTING SMOKE DETECTORS ARE HARDWIRED TO FAN STARTER FOR SHUTDOWN.

AHU-1 FLOW DIAGRAM

CID:	PID:	PROJECT ID:	NUM.	REVISION	DATE:	BY:
			4			
PROJECT: NOAA WEATHER STATION			3			
			2			
			1	AS-BUILT DRAWING	2/24/2016	JP
CHARLESTON, SC			0	INSTALLATION DRAWING	1/6/2016	JVS

COLUMBIA MAIN OFFICE
111 LOTT COURT
WEST COLUMBIA, SC 29169
803-936-4700

SALESPERSON: K KOEHN
DESIGNED BY: J VAN SISE
CHECKED BY:
FILE NAME: NOAA_CHS.AXD
DWG: 6

TYPICAL FOR 1
(AHU-1)

BILL OF MATERIALS				
TAG	QTY	VENDOR	PART NO	DESCRIPTION
UC600 - 1	1	TRANE	BMUC600AAA01000B	UC600 CONTROLLER, FRAME MOUNT

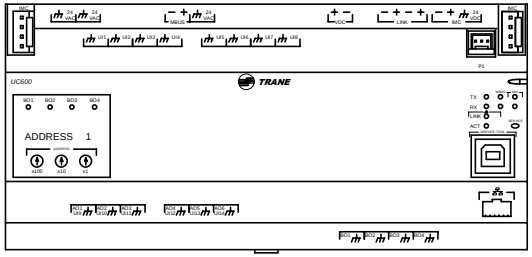

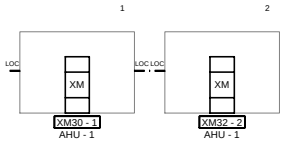

SYSTEM CONTROLLED:
AHU-1
LOCATION:

ETHERNET NETWORK — NOT USED

Point	Terminal	Wire	Shield	Destination
CS - 2 ACU -1 STATUS	112 D	BRN	SHLD	UI8
CS - 1 SUPPLY FAN STATUS	113 D	BRN, WHT	SHLD	UI7
TE - 1 MIXED AIR TEMP (BALCO)	114 D	BLK, WHT	SHLD	UI6
DPS - 1 FILTER STATUS	115 D	BLK, WHT	SHLD	UI5
TEH - 2 OUTSIDE AIR TEMPERATURE	116 D	BLK, WHT	SHLD	UI4
TEH - 2 OUTSIDE AIR HUMIDITY	117 D	BLK, GRN	SHLD	UI3
TEH - 1 RETURN AIR TEMPERATURE	118 D	RED, WHT	SHLD	UI2
TEH - 1 RETURN AIR HUMIDITY	119 D	BLK, GRN	SHLD	UI1
SEE RISER	MSTP1 A	RED		
SEE RISER	MSTP1 A	WHT, BLK	SHLD	LINK
SEE RISER	MSTP1 A	WHT, BLK		LINK
120 VAC BY ESC	TX - 1	24VAC, GRN		XFRM
TE - 2 DISCHARGE AIR TEMP	121 D	WHT, BLK	SHLD	AO6/UI14
HE - 1 SPACE HUMIDITY SENSOR (4-20 MA)	123 D	WHT, BLK	SHLD	AO5/UI13
GENERATOR RUN STATUS	175	WHT, BLK	SHLD	AO4/UI12
TE - 17 CIRCUIT 1 SUCTION TEMPERATURE	127 D	WHT, BLK	SHLD	AO3/UI11
DA - 1 (F/17); DA - 2 (F/17) OA/RA DAMPERS	130 E	WHT, RED, BLK	SHLD	AO1/UI9
R - Y2 COOLING STAGE 2	133 D	WHT, GRN	SHLD	BO3
R - Y1 COOLING STAGE 1 & LLSV	134 D	RED, BLK	SHLD	BO2
R - 4 SUPPLY FAN START/STOP	135 D	WHT, BLK	SHLD	BO1

1 DEVICE MUST BE GROUNDED WITH FACTORY PROVIDED GROUND WIRE AS DETAILED IN THE DEVICE INSTALLATION LITERATURE.

AHU-1 UC600-1 WIRING DETAIL

CID:	PID:	PROJECT ID:	NUM.	REVISION	DATE:	BY:
			4			
			3			
			2			
			1	AS-BUILT DRAWING	2/24/2016	JP
			0	INSTALLATION DRAWING	1/6/2016	JVS

PROJECT:
NOAA WEATHER STATION
CHARLESTON, SC

COLUMBIA MAIN OFFICE
111 LOTT COURT
WEST COLUMBIA, SC 29169
803-936-4700

SALESPERSON: K KOEHN
DESIGNED BY: J VAN SISE
CHECKED BY:
FILE NAME: NOAA_CHS.AXD
DWG: 7

TYPICAL FOR 1
(AHU - 1)

XM30 - 1

SYSTEM CONTROLLED:
AHU - 1
LOCATION:

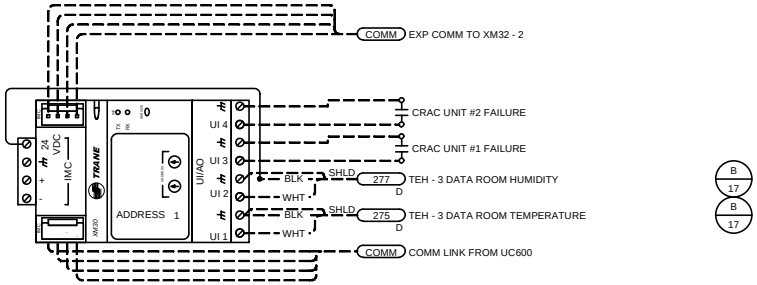

B
17

B
17

BILL OF MATERIALS				
TAG	QTY	VENDOR	PART NO	DESCRIPTION
XM30 - 1	1	TRANE	X13651537010	4 POINT UI/AO EXPANSION MODULE

AHU - 1 XM30 - 1 WIRING DETAIL

CID:	PID:	PROJECT ID:	NUM.	REVISION	DATE:	BY:
			4			
PROJECT:			3			
NOAA WEATHER STATION			2			
			1	AS-BUILT DRAWING	2/24/2016	JP
CHARLESTON, SC			0	INSTALLATION DRAWING	1/6/2016	JVS

COLUMBIA MAIN OFFICE
111 LOTT COURT
WEST COLUMBIA, SC 29169
803-936-4700

SALESPERSON: K KOEHN
DESIGNED BY: J VAN SISE
CHECKED BY:
FILE NAME: NOAA_CHS.AXD
DWG: 8

TYPICAL FOR 1
(AHU - 1)

XM32 - 2

SYSTEM CONTROLLED:
AHU - 1
LOCATION:

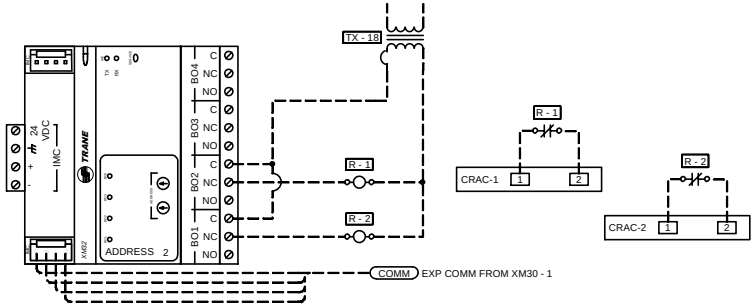

BILL OF MATERIALS				
TAG	QTY	VENDOR	PART NO	DESCRIPTION
XM32 - 2	1	TRANE	X13651563010	4 POINT BO EXPANSION MODULE

AHU - 1 XM32 - 2 WIRING DETAIL

CID:	PID:	PROJECT ID:	NUM.	REVISION	DATE:	BY:
			4			
PROJECT: NOAA WEATHER STATION			3			
			2			
			1	AS-BUILT DRAWING	2/24/2016	JP
CHARLESTON, SC			0	INSTALLATION DRAWING	1/6/2016	JVS

COLUMBIA MAIN OFFICE
111 LOTT COURT
WEST COLUMBIA, SC 29169
803-936-4700

SALESPERSON: K KOEHN
DESIGNED BY: J VAN SISE
CHECKED BY:
FILE NAME: NOAA_CHS.AXD
DWG: 9

BILL OF MATERIALS				
TAG	QTY	VENDOR	PART NO	DESCRIPTION
TE - 1	1	TRANE	4190-1046	TEMP SENS, AVG, BALCO, 22FT
TE - 2	1	TRANE	4190 1133	TEMP SENS, DUCT/IMM., THERM 6 IN
TEH - 1, TEH - 2	2	TRANE	4190-7020	3%DUCT RH SENS, TEMP
DA - 1 DA - 2	2	BELIMO	AF24-SR US	ACT PROP 24VAC SR 133IN-LB
CS - 1	1	KELE	RIBXGA	CUR SW, 0.75-150A, SPLIT, NO
DPS - 1	1	KELE	P32AC-2	DIFF PRES SW, 0.05-5 IN WC
R - Y1 R - 4	2	KELE	RIBU2C	RLY DPDT, LED, 10-30 VAC/DC/120 VAC
R - Y2	1	KELE	RIBU1C	RLY SPDT, LED, 10-30 VAC/DC/120 VAC
TE - 19	1	KELE	ST-MP3-X25	STRAP-ON 10K NTC THERMISTOR

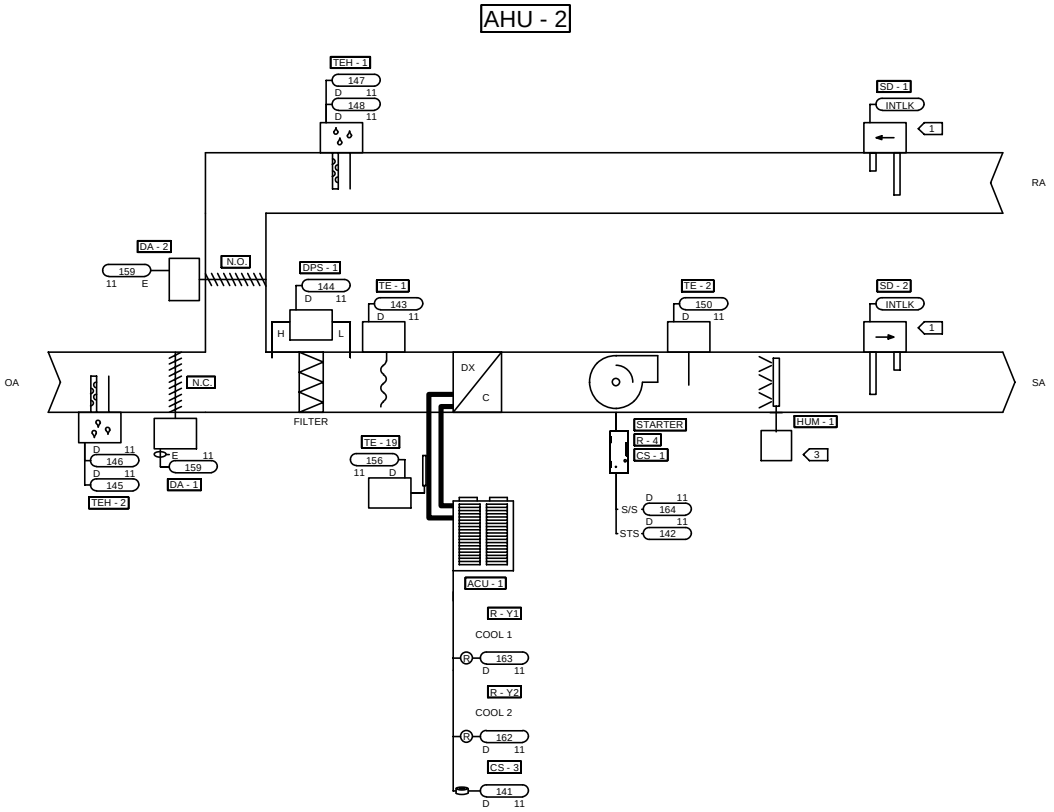

3 EXISTING HUMIDIFIER INTERLOCK/SAFETY CONTROLS ARE EXISTING (NOT SHOWN).

2 CONNECT TO CONTACTS OF EXISTING STATUS RELAY.

1 EXISTING SMOKE DETECTORS ARE HARDWIRED TO FAN STARTER FOR SHUTDOWN.

AHU-2 FLOW DIAGRAM

CID:	PID:	PROJECT ID:	NUM.	REVISION	DATE:	BY:
			4			
PROJECT:			3			
NOAA WEATHER STATION			2			
			1	AS-BUILT DRAWING	2/24/2016	JP
CHARLESTON, SC			0	INSTALLATION DRAWING	1/6/2016	JVS

COLUMBIA MAIN OFFICE
111 LOTT COURT
WEST COLUMBIA, SC 29169
803-936-4700

SALESPERSON: K KOEHN
DESIGNED BY: J VAN SISE
CHECKED BY:
FILE NAME: NOAA_CHS.AXD
DWG: 10

TYPICAL FOR 1
(AHU-2)

BILL OF MATERIALS				
TAG	QTY	VENDOR	PART NO	DESCRIPTION
UC600 - 2	1	TRANE	3M UC600AAA01D001	UC600 CONTROLLER, FRAME MOUNT

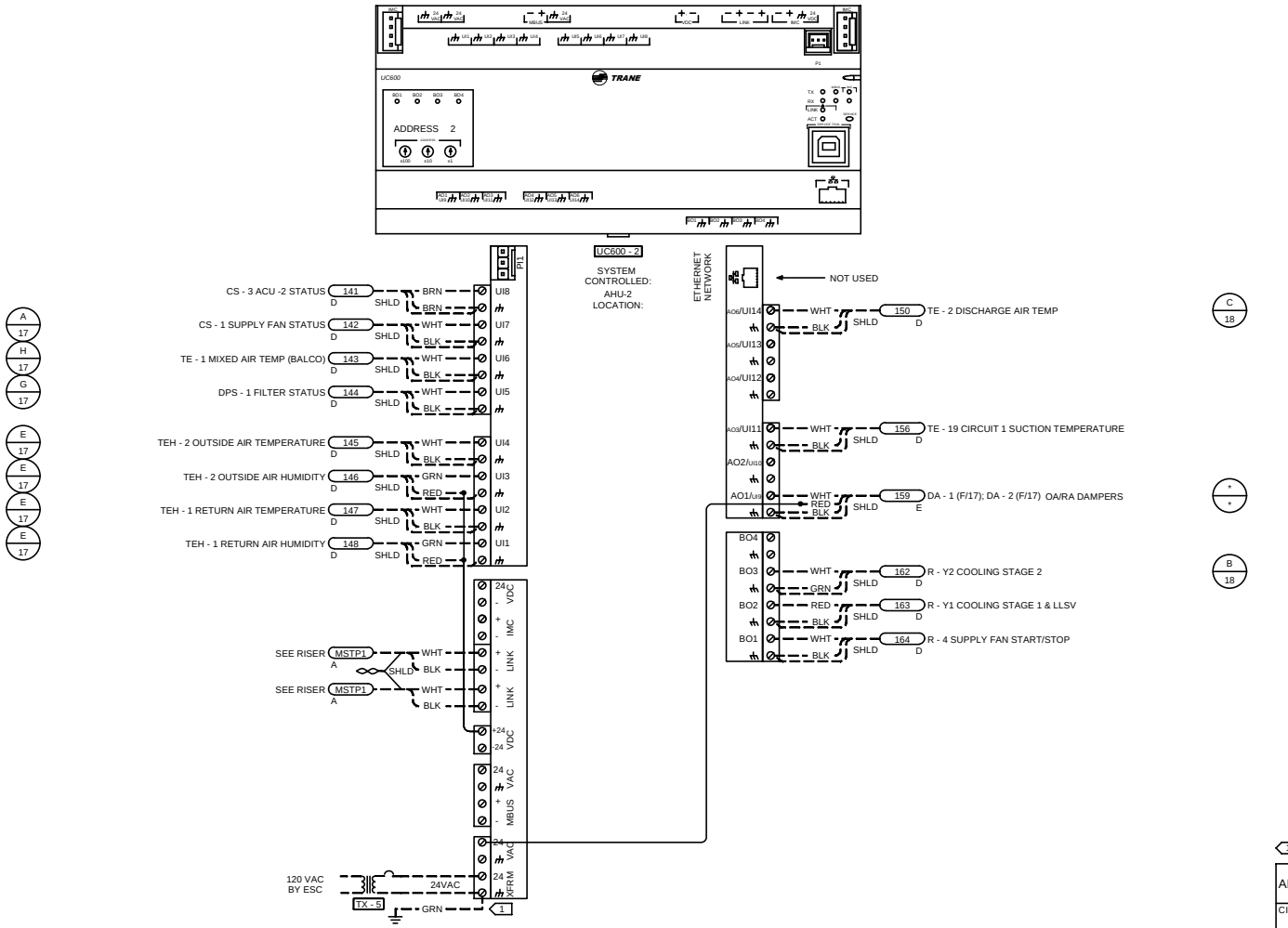

1 DEVICE MUST BE GROUNDED WITH FACTORY PROVIDED GROUND WIRE AS DETAILED IN THE DEVICE INSTALLATION LITERATURE.

AHU-2 UC600-2 WIRING DETAIL

CID:	PID:	PROJECT ID:	NUM.	REVISION	DATE:	BY:
			4			
PROJECT: NOAA WEATHER STATION			3			
			2			
			1	AS-BUILT DRAWING	2/24/2016	JP
CHARLESTON, SC			0	INSTALLATION DRAWING	1/6/2016	JVS

COLUMBIA MAIN OFFICE
111 LOTT COURT
WEST COLUMBIA, SC 29169
803-936-4700

SALESPERSON: K KOEHN
DESIGNED BY: J VAN SISE
CHECKED BY:
FILE NAME: NOAA_CHS.AXD
DWG: 11

BILL OF MATERIALS				
TAG	QTY	VENDOR	PART NO	DESCRIPTION
TE - 1	1	TRANE	4190-1046	TEMP SENS, AVG, BALCO, 22FT
TE - 2, TE - 3, TE - 21	3	TRANE	4190-1133	TEMP SENS, DUCT/IMM, THERM 6 IN
DA - 1 DA - 2	2	BELIMO	AF24-SR US	ACT PROP 24 VAC SR 133IN-LB
CS - 1	1	KELE	RIBXGA	CUR SW, 0.75-150A, SPLIT, NO
DPS - 1	1	KELE	P32AC-2	DIFF PRES SW, 0.05-5 IN WC
R - Y1, R - 4	2	KELE	RIBU2C	RLY DPDT, LED, 10-30 VAC/DC/120 VAC
R - Y2	1	KELE	RIBU1C	RLY SPDT, LED, 10-30 VAC/DC/120 VAC
TE - 22	1	KELE	ST-MP3-X25	STRAP-ON 10K NTC THERMISTOR

SEQUENCE OF OPERATION:

AIR HANDLING UNIT AHU-3:
AHU-3 SERVES THE ADMINISTRATION AREA AND OPERATES ON AN 8 HOUR SCHEDULE WITH NIGHT SETBACK. THE OPERATION OF AHU-3 IS SIMILAR TO AHU-1 AND AHU-2 WITH THE FOLLOWING EXCEPTIONS:
(1) OUTSIDE AIR ECONOMIZER CYCLE IS CONTROLLED BY OUTSIDE AIR TEMPERATURE.
(2) NO HUMIDITY CONTROL.

AHU-3, ACU-3 AND ASSOCIATED ELECTRIC DUCT HEATERS SHALL NOT OPERATE ON EMERGENCY POWER. UPON RESTORATION OF COMMERCIAL POWER, AHU-3 ACU-3 AND ASSOCIATED ELECTRIC DUCT HEATERS SHALL RETURN TO NORMAL OPERATING MODE. THE AIR HANDLING UNIT SHALL BE PROGRAMMED FOR A TIMED DELAY RESTART.

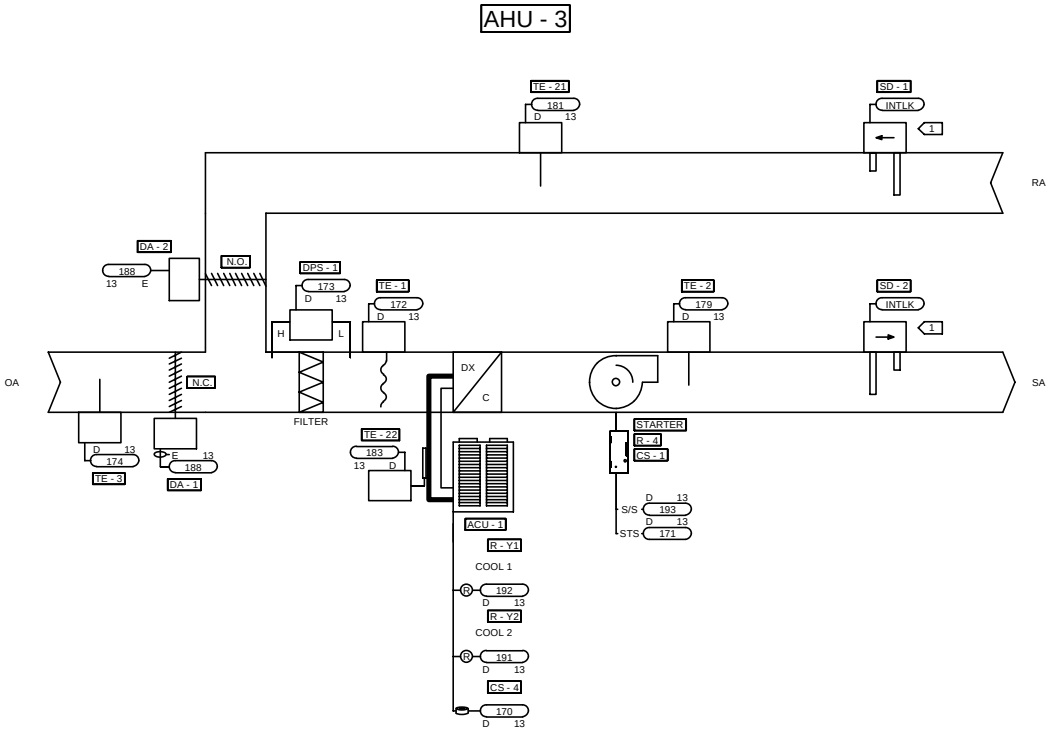

2 CONNECT TO CONTACTS OF EXISTING STATUS RELAY.

1 EXISTING SMOKE DETECTORS ARE HARDWIRED TO FAN STARTER FOR SHUTDOWN.

AHU-3 FLOW DIAGRAM

CID:	PID:	PROJECT ID:	NUM.	REVISION	DATE:	BY:
			4			
PROJECT:			3			
NOAA WEATHER STATION			2			
			1	AS-BUILT DRAWING	2/24/2016	JP
CHARLESTON, SC			0	INSTALLATION DRAWING	1/6/2016	JVS

COLUMBIA MAIN OFFICE
111 LOTT COURT
WEST COLUMBIA, SC 29169
803-936-4700

SALESPERSON: K KOEHN
DESIGNED BY: J VAN SISE
CHECKED BY:
FILE NAME: NOAA_CHS.AXD
DWG: 12

TYPICAL FOR 1
(AHU-3)

BILL OF MATERIALS				
TAG	QTY	VENDOR	PART NO	DESCRIPTION
ENC - 2	1	TRANE	X13651552010	ENC, TRACER UC LARGE, 120 VAC OUTLET
UC600 - 3	1	TRANE	BMUC600AAA01D003	UC600 CONTROLLER, FRAME MOUNT

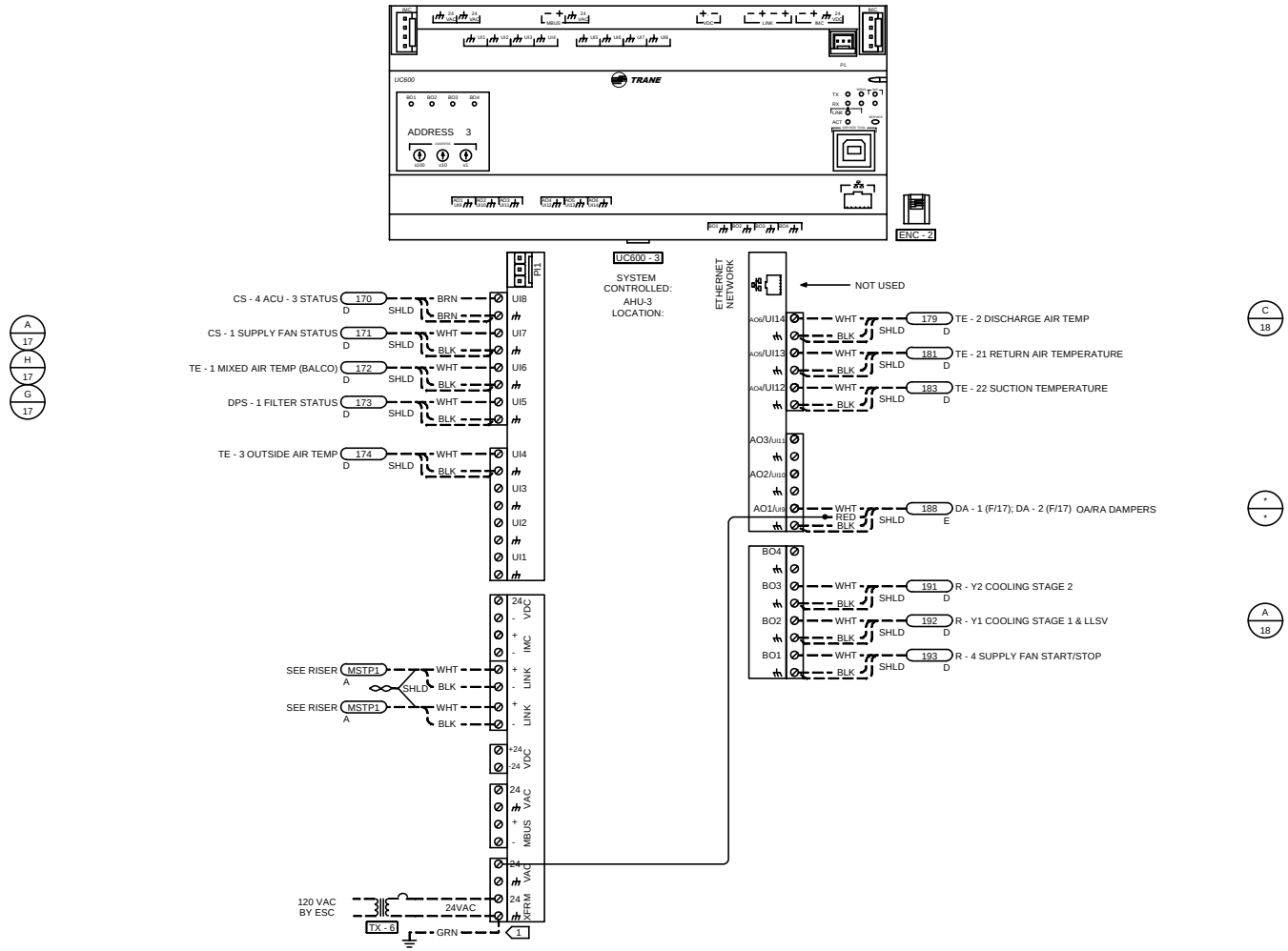

1 DEVICE MUST BE GROUNDED WITH FACTORY PROVIDED GROUND WIRE AS DETAILED IN THE DEVICE INSTALLATION LITERATURE.

AHU-3 UC600-3 WIRING DETAIL

CID:	PID:	PROJECT ID:	NUM.	REVISION	DATE:	BY:
			4			
PROJECT:			3			
NOAA WEATHER STATION			2			
			1	AS-BUILT DRAWING	2/24/2016	JP
CHARLESTON, SC			0	INSTALLATION DRAWING	1/6/2016	JVS

COLUMBIA MAIN OFFICE
111 LOTT COURT
WEST COLUMBIA, SC 29169
803-936-4700

SALESPERSON: K KOEHN
DESIGNED BY: J VAN SISE
CHECKED BY:
FILE NAME: NOAA_CHS.AXD
DWG: 13

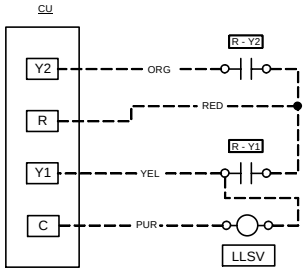

CONDENSING UNIT WIRING

CID:	PID:	PROJECT ID:	NUM.	REVISION	DATE:	BY:
			4			
PROJECT: NOAA WEATHER STATION			3			
			2			
			1	AS-BUILT DRAWING	2/24/2016	JP
CHARLESTON, SC			0	INSTALLATION DRAWING	1/6/2016	JVS

COLUMBIA MAIN OFFICE
111 LOTT COURT
WEST COLUMBIA, SC 29169
803-936-4700

SALESPERSON: K KOEHN
DESIGNED BY: J VAN SISE
CHECKED BY:
FILE NAME: NOAA_CHS.AXD
DWG: 14

TYPICAL FOR 5
(EDH - 1, EDH - 2, EDH - 3, EDH - 9, EDH - 10)

BILL OF MATERIALS				
TAG	QTY	VENDOR	PART NO	DESCRIPTION
EDH - 1	5	TRANE	X13651610010	UC210 VAV, FLOW SENS, MTG
TE - 32	5	TRANE	4 1901129	TEMP SENS, DUCT, THERM, 4 IN
TE - 33	5	TRANE	X13511527 01	TEMP SENS ZONE THERM O/U SP

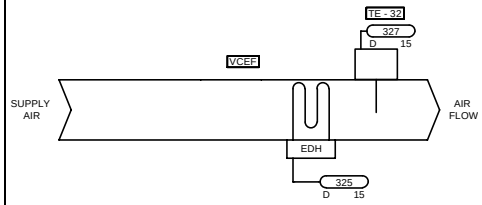

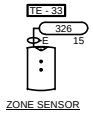

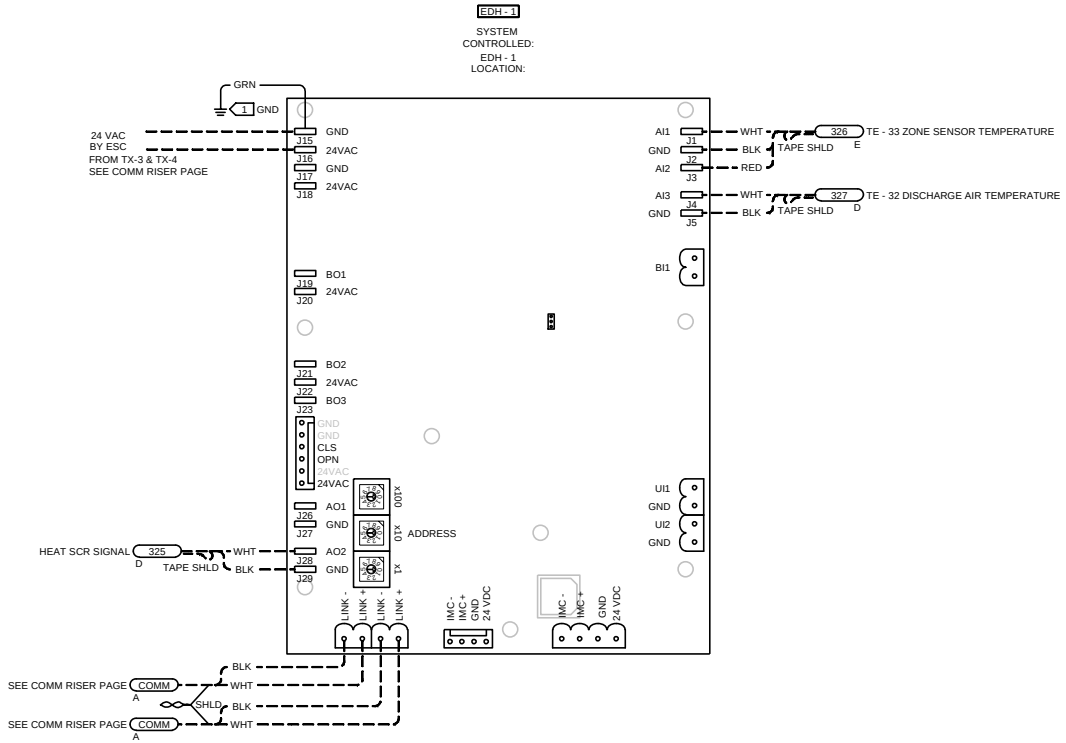

SEQUENCE OF OPERATION:
WHEN SPACE HEATING IS REQUIRED AS DETERMINED BY THE ZONE THERMOSTAT THE CONTROLLER SHALL MODULATE THE HEAT TO CONTROL THE DISCHARGE AIR TEMPERATURE EQUAL TO THE DISCHARGE AIR HEATING SETPOINT. (100 DEG. ADJ.)

C 17

D 17

1 DEVICE MUST BE GROUNDED WITH FACTORY PROVIDED GROUND WIRE AS DETAILED IN THE DEVICE INSTALLATION LITERATURE.

EDH 1 - 3, 9 - 10 UC210 WIRING DETAIL

CID:	PID:	PROJECT ID:	NUM.	REVISION	DATE:	BY:
			4			
			3			
			2			
			1	AS-BUILT DRAWING	2/24/2016	JP
			0	INSTALLATION DRAWING	1/6/2016	JVS

PROJECT:
NOAA WEATHER STATION
CHARLESTON, SC

COLUMBIA MAIN OFFICE
111 LOTT COURT
WEST COLUMBIA, SC 29169
803-936-4700

SALESPERSON: K KOEHN
DESIGNED BY: J VAN SISE
CHECKED BY:
FILE NAME: NOAA_CHS.AXD
DWG: 15

TYPICAL FOR 5
(EDH - 4, EDH - 8, EDH - 7, EDH - 6, EDH - 5)

BILL OF MATERIALS				
TAG	QTY	VENDOR	PART NO	DESCRIPTION
EDH - 4	5	TRANE	X13651610010	UC210 VAV, FLOW SENS, MTG
TE - 30	5	TRANE	4 1901129	TEMP SENS, DUCT, THERM, 4 IN
TE - 31	5	TRANE	X13511527 01	TEMP SENS ZONE THERM O/U SP

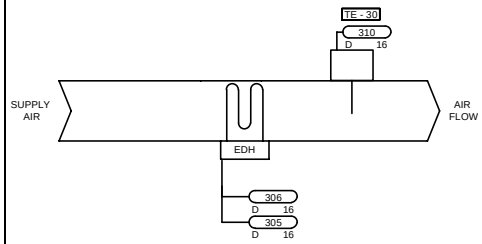

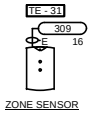

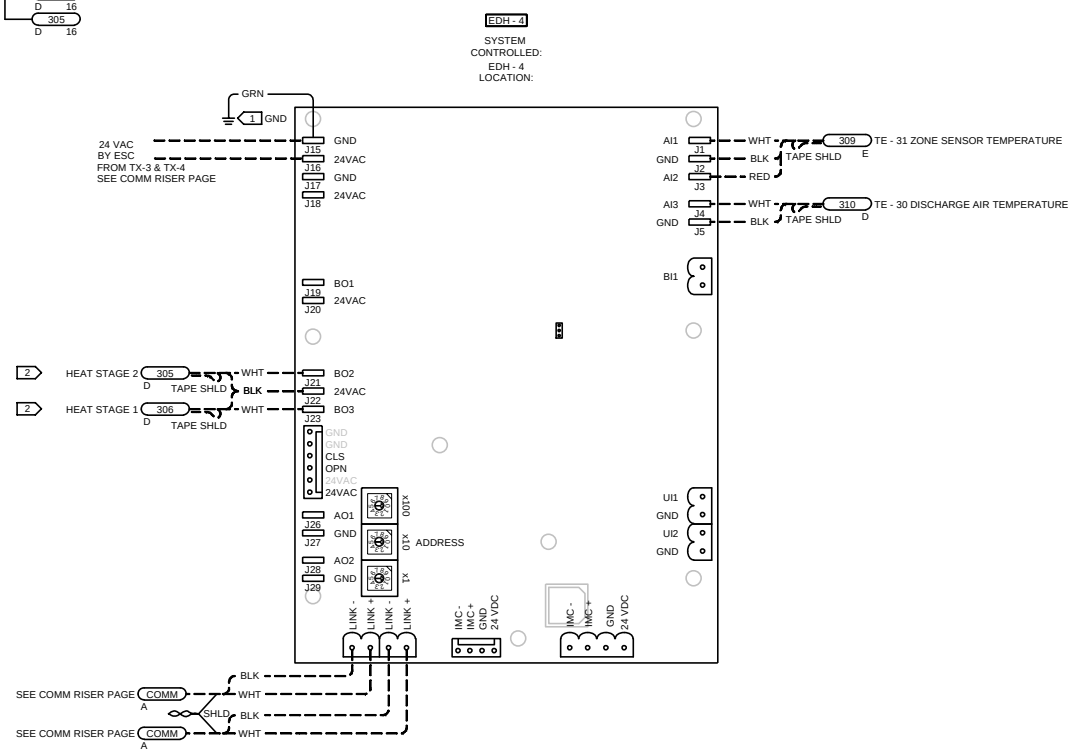

SEQUENCE OF OPERATION:
WHEN SPACE HEATING IS REQUIRED AS DETERMINED BY THE ZONE THERMOSTAT THE CONTROLLER SHALL STAGE THE HEAT TO CONTROL THE DISCHARGE AIR TEMPERATURE EQUAL TO THE DISCHARGE AIR HEATING SETPOINT. (100 DEG. ADJ.)

C 17

D 17

2 CONTROLLER OUTPUTS SWITCH COMMON SIDE OF CIRCUIT.

1 DEVICE MUST BE GROUNDED WITH FACTORY PROVIDED GROUND WIRE AS DETAILED IN THE DEVICE INSTALLATION LITERATURE.

EDH 4 - 8 UC210 WIRING DETAIL

CID:	PID:	PROJECT ID:	NUM.	REVISION	DATE:	BY:
			4			
PROJECT:			3			
NOAA WEATHER STATION			2			
			1	AS-BUILT DRAWING	2/24/2016	JP
CHARLESTON, SC			0	INSTALLATION DRAWING	1/6/2016	JVS

COLUMBIA MAIN OFFICE
111 LOTT COURT
WEST COLUMBIA, SC 29169
803-936-4700

SALESPERSON: K KOEHN
DESIGNED BY: J VAN SISE
CHECKED BY:
FILE NAME: NOAA_CHS.AXD
DWG: 16

CURRENT OPERATED SWITCH, SPILT-CORE, ADJ. TRIP, LEDS
KELE
RIBXGA

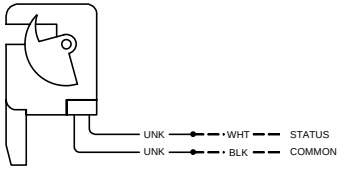

A

SENSOR ZONE RH +/- 3% AND TEMP
TRANE
X1379044401

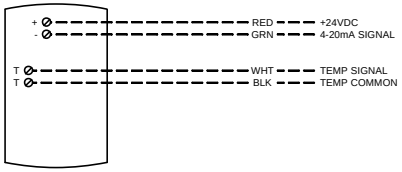

B

ZONE SENSOR THERM + SETPOINT + OCC/UNOC
TRANE
X1351152701

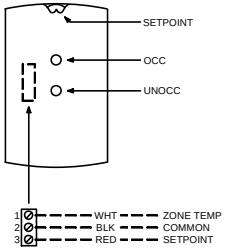

C

SENSOR TEMP 4" DUCT THERM
TRANE
41901129

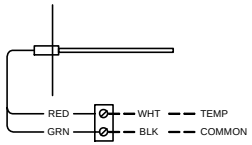

D

SENSOR DUCT RH +/- 3% AND TEMP
TRANE
4190-7020

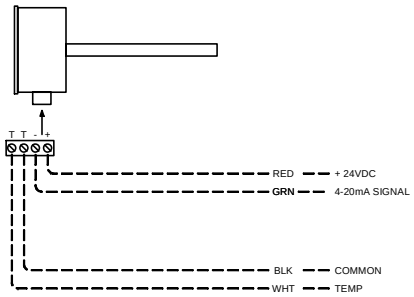

E

ACTUATORS MOD, 24VAC/DC, 133 IN-LB
BELIMO
AF24-SR US

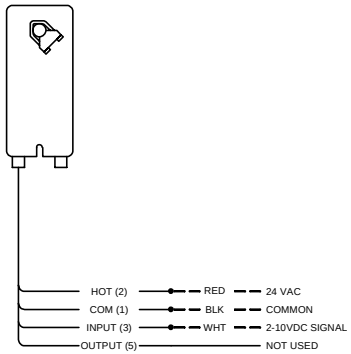

F

SWITCH AIR DP P32 0.05-5"
KELE
P32AC-2

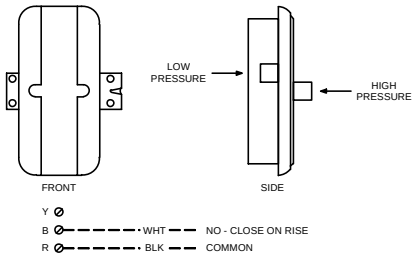

G

SENSOR TEMP DUCT 22 FT. AVG BALCO
TRANE
4190-1046

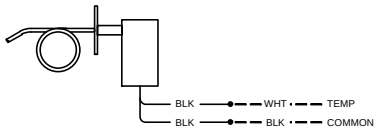

H

DETAIL SHEET #1

CID:	PID:	PROJECT ID:	NUM.	REVISION	DATE:	BY:
			4			
PROJECT: NOAA WEATHER STATION			3			
			2			
			1	AS-BUILT DRAWING	2/24/2016	JP
CHARLESTON, SC			0	INSTALLATION DRAWING	1/6/2016	JVS

COLUMBIA MAIN OFFICE
111 LOTT COURT
WEST COLUMBIA, SC 29169
803-936-4700

SALESPERSON: K KOEHN
DESIGNED BY: J VAN SISE
CHECKED BY:
FILE NAME: NOAA_CHS.AXD
DWG: 17

DUAL DPDT RELAY

KELE

RIBU2C

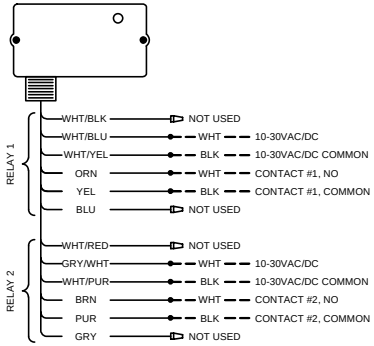

A

SPDT RELAY

KELE

RIBU1C

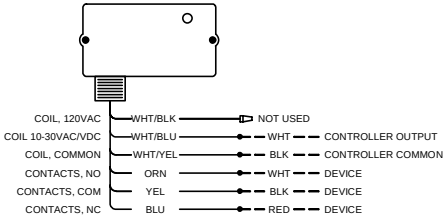

B

SENSOR TEMP 6" DUCT/IMM THERM

TRANE

41901133

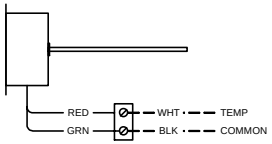

C

DETAIL SHEET #2

CID:	PID:	PROJECT ID:	NUM.	REVISION	DATE:	BY:
			4			
			3			
			2			
			1	AS-BUILT DRAWING	2/24/2016	JP
			0	INSTALLATION DRAWING	1/6/2016	JVS

PROJECT:
NOAA WEATHER STATION

CHARLESTON, SC

COLUMBIA MAIN OFFICE
111 LOTT COURT
WEST COLUMBIA, SC 29169
803-936-4700

SALESPERSON: K KOEHN

DESIGNED BY: J VAN SISE

CHECKED BY:

FILE NAME: NOAA_CHS.AXD

DWG: 18

BILL OF MATERIALS				
TAG PREFIX	QTY	VENDOR	PART NO	DESCRIPTION
TE	3	TRANE	4190-1046	TEMP SENS, AVG, BALCO, 22FT
TEH	4	TRANE	4190-7020	3%DUCT RH SENS, TEMP
TE	10	TRANE	41901129	TEMP SENS, DUCT, THERM, 4 IN
TE	5	TRANE	41901133	TEMP SENS, DUCT/IMM, THERM 6 IN
SFT	1	TRANE	BMCF000AAA0AE00	TRACER SC15 SOFTWARE
SC	1	TRANE	BMSC000AAA01100	TRACER SC
UC600	3	TRANE	BMUC600AAA0100011	UC600 CONTROLLER, FRAME MOUNT
TE	10	TRANE	X1351152701	TEMP SENS ZONE THERM O/U SP
TBT	1	TRANE	X13651524-01	TRANE BACNET TERMINATOR (2/PKG)
XM30	1	TRANE	X13651537010	4 POINT UI/AO EXPANSION MODULE
ENC	1	TRANE	X13651552010	ENC, TRACER UC LARGE, 120 VAC OUTLET
ENC	1	TRANE	X13651559010	ENC, TRACER UC MEDIUM, 120 VAC OUTLET
XM32	1	TRANE	X13651563010	4 POINT BO EXPANSION MODULE
EDH	10	TRANE	X13651610010	UC210 VAV, FLOW SENS, MTG
HE, TEH	2	TRANE	X1379044401	3%ROOM RH SENS, TEMP
DA	6	BELIMO	AF24-SR US	ACT PROP 24VAC SR 133IN-LB
DPS	3	KELE	P32AC-2	DIFF PRES SW, 0.05-5 IN WC
R	3	KELE	RIBU1C	RLY SPDT, LED, 10-30 VAC/DC/120 VAC
R	6	KELE	RIBU2C	RLY DPDT, LED, 10-30 VAC/DC/120 VAC
CS	3	KELE	RIBXGA	CUR SW, 0.75-150A, SPLIT, NO
TE	3	KELE	ST-MP3-X25	STRAP-ON 10K NTC THERMISTOR

TRANE

BILL OF MATERIALS

CID:	PID:	PROJECT ID:	NUM.	REVISION	DATE:	BY:
			4			
PROJECT: NOAA WEATHER STATION			3			
			2			
			1	AS-BUILT DRAWING	2/24/2016	JP
CHARLESTON, SC			0	INSTALLATION DRAWING	1/6/2016	JVS

COLUMBIA MAIN OFFICE
111 LOTT COURT
WEST COLUMBIA, SC 29169
803-936-4700

SALESPERSON: K KOEHN
DESIGNED BY: J VAN SISE
CHECKED BY:
FILE NAME: NOAA_CHS.AXD
DWG: 19