Record Drawing

Date: March 16, 2016

***Project Number*:**

Project Name:
NOAA Weather Station

CHARLESTON, SC
Prepared For:
Carolina Comfort Solutions
2006 ROCKLAND RD.
COLUMBIA, SC 29210

Sold To:

Customer P.O. Number:

Customer Project Number:

Trane Sales Office:
COLUMBIA MAIN OFFICE
111 LOTT COURT
WEST COLUMBIA, SC 29169

Phone: 803-936-4700
Fax:
Web:

Architect:

Mechanical Contractor:

Mechanical Engineer:

Trane Contracting Team:

Account Manager: Kent Koehn
kkoehn@trane.com

Project Manager: Jeff Kindle
jeff.kindle@trane.com

Designed By: Jan Van Sise
jcvansise@trane.com

Data Sheet Index

Following is a list of data sheets included in this submittal in the order that they appear.

APPLICATION CONTROLLERS

TRANE	BMUC600AAA0100011	BAS-PRC063-EN_03042011.pdf	1 - 4
TRANE	X13651538-01	X39641159_01A.pdf	5 - 8

END DEVICES AND ACCESSORIES

TRANE	4190-1046	4190-1046.pdf	9
TRANE	41901129	32703409B_41901129.pdf	10 - 11
TRANE	41901133	32703301C_4190-1133.pdf	12 - 13
TRANE	4190-7020	32703262H_4190-7020_21.pdf	14 - 17
TRANE	X1351152701	BAS-PRC027-EN.pdf	18 - 19
TRANE	X13651524-01	X39641151-01A.pdf	20 - 23
TRANE	X13651537010	BAS-PRC035-EN.pdf	24 - 25
TRANE	X13651552010	X39641192-01D_11142011.pdf	26 - 27
TRANE	X13651559010	X39641180-01C_05092011.pdf	28 - 29
TRANE	X13651563010	BAS-PRC052.pdf	30 - 31
TRANE	X1379044401	BAS-PRC026-EN.pdf	32 - 33
BELIMO	AF24-SR US	AF24_MFT_S.pdf	34 - 47
KELE	P32AC-2	P32Series.pdf	48
KELE	RIBU2C, RIBU1C	RIB_RIBT-Pilot.pdf	49 - 50
KELE	RIBXGA	RIBXK_RIBXG_RIBXK420.pdf	51

Product Data Sheet

Tracer™ UC600 Programmable Controller

Ordering number: BMUC600AAA0100011

The Tracer UC600 controller is a multi-purpose, programmable, wireless-compatible device. This field-installed device is designed to control the following types of equipment:

- Air-handling units (AHUs)
- Central heating and cooling plants
- Cooling towers
- Generic input/output (I/O) control

Features and Benefits

Feature	Benefit
BACnet MS/TP	An open standard building automation communications protocol which enables connections to other BAS systems and controllers
Configurable and fully programmable	• Factory programs available through quick configuration for lowest setup time • Programmable for flexibility to meet unique sequence or hardware needs
Total of 19 built-in I/O hardware terminations	Meets most applied product needs with built-in I/O or with additional custom programming on the controller
Expandable up to 120 hardware terminations	Flexibility to meet additional equipment needs
Data logging—25,000 samples	Easier investigation of equipment, zone, or building problems
Removable connectors, DIN rail mounting, multiple service tool connections	Ease of installation and service

March 2011

BAS-PRC063-EN

Controller Specifications and Agency Compliance

Storage	
Temperature:	-67°F to 203°F (-55°C to 95°C)
Relative humidity:	Between 5% to 95% (noncondensing)
Operating	
Temperature:	-40°F to 158°F (-40°C to 70°C)
Humidity:	Between 5% to 95% (noncondensing)
Power:	20.4–27.6 Vac (24 Vac, ±15% nominal) 50 or 60 Hz, 26 VA (26 VA plus a maximum of 12 VA for each binary output) 24 Vdc, ±10%, device max load 600 mA
Mounting weight of controller:	Mounting surface must support 1.3 lb. (0.6 kg)
Environmental rating (enclosure):	NEMA 1
Installation:	UL 840: Category 3
Pollution	UL 840: Degree 2
Wiring/Transformer	
18 AWG is recommended for the circuit between the transformer and the controller.	
• UL listed, Class 2 power transformer, 24 Vac ±10%, device max load 26 VA. • The transformer must be sized to provide adequate power to the UC600 controller (26 VA) and external device outputs. • UC600 requires 26VA: 26VA is for UC600+ IO + two expansion modules (XM30 or XM32).	
Agency Compliance	
• UL916 PAZX, Open Energy Management Equipment • UL94-5V, Flammability • CE Marked • FCC Part 15, Subpart B, Class B Limit	

Controller dimensions

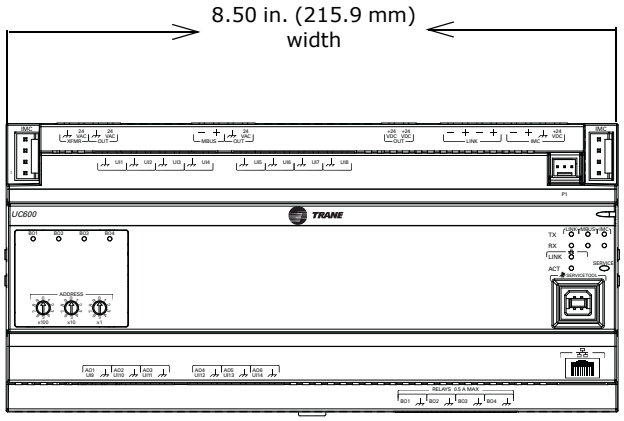

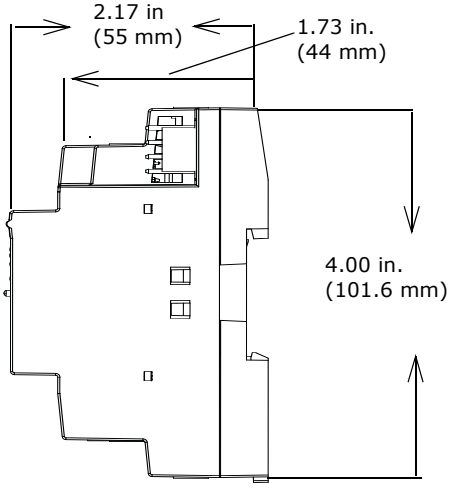

Input and Output Specifications

Input/Output type	Quantity	Types	Range	Notes
Universal Input	8	Thermistor	10kΩ – Type II, 10kΩ –Type III, 2252Ω – Type II, 20kΩ – Type IV, 100 kΩ	The UC600 is limited to 10 combined 0–20 mA inputs and/or outputs.
		Resistive (setpoint)	100Ω – 1MΩ	
		RTD	Balco™ (Ni-Fe), 1kΩ; 375 (Pt), 1kΩ	
		Current	0–20 mA (linear)	
		Voltage	0–20 Vdc (linear)	
		Binary	Dry contact	
		Pulse Accumulator	Minimum 20 ms, opened or closed	
Universal Input/ Analog Output	Configure using any combination of analog or binary inputs/analog outputs			
Inputs	6	Thermistor	10kΩ – Type II, 10kΩ –Type III, 2252Ω – Type II, 20kΩ – Type IV, 100 kΩ	
		Resistive (setpoint)	100Ω –1MΩ	
		RTD	Balco™ (Ni-Fe), 1kΩ; 375 (Pt), 1kΩ	
		Current	0–20 mA (linear)	
		Voltage	0–20 Vdc (linear)	
		Binary	Dry contact	
		Pulse accumulator	Minimum 20 ms, opened or closed	
Outputs		Current	0–20 mA @16 V	
		Voltage	0–10 Vdc @20 mA	
		Pulse	12.5ms to 1 second (12.5ms resolution), 1 second to 60 seconds (0.5 second resolution)	
Binary Output	4	Relay (form A) wet	24 VAC, 0.5A maximum	Ranges are given per contact.
Pressure Input	1	3-wire	0–5 in H_2O	Pressure input supplied with 5 Vdc. Designed for Kavlico™ pressure transducers.
Point total	**19**			

Trane optimizes the performance of homes and buildings around the world. A business of Ingersoll Rand, the leader in creating and sustaining safe, comfortable and energy efficient environments, Trane offers a broad portfolio of advanced controls and HVAC systems, comprehensive building services, and parts. For more information, visit www.Trane.com.

Trane has a policy of continuous product and product data improvement and reserves the right to change design and specifications without notice.

© 2011 Trane All rights reserved

BAS-PRC063-EN 04 Mar 2011

New

Installation Instructions

Installing the PM014 Power Supply Module

Order Number: X13651538-01

This document describes how to install a new power supply module. Refer to *Power Supply Module PM014 Installation, Operation, and Troubleshooting Guide* (BAS-SVX33-EN) for detailed information for this power supply module.

⚠WARNING
Hazardous Voltage!

Power supply module PM014 contains hazardous voltage during normal operation. Do not open the power supply module under any circumstances. Failure to comply could result in death or serious injury. There are no serviceable parts.

Mounting the Power Supply Module

Important: *Installation of the power supply module must be performed by qualified personnel. The power supply module must be mounted onto a DIN rail inside an enclosure that meets all local electrical codes.*

Observe the following:

- Ensure that the enclosure allows for a minimum 2.0 in. (51 mm) vent clearance around the top and bottom of the power supply vents.
- Do not mount the power supply module on a flat surface, such as on a floor or on top of a table. Mount in an upright position with the front facing outward. Refer to BAS-SVX33-EN for more details.

NOTICE
Avoid Equipment Damage!

Do not use excessive force. Excessive force could cause equipment damage.

Follow these steps to mount the power supply module:

1. Hook the power supply module DIN rail groove to the edge of the DIN rail closest to the IMC pin connectors (Figure 1, p. 2).
2. Press down on the side of the power supply that holds the DIN rail latch. Press until you hear the latch click.

© 2009 Trane. All rights reserved

3. Place a DIN rail end-stop at each end of the row of modules to prevent shifting.

Figure 1. Mounting and repositioning the power supply module

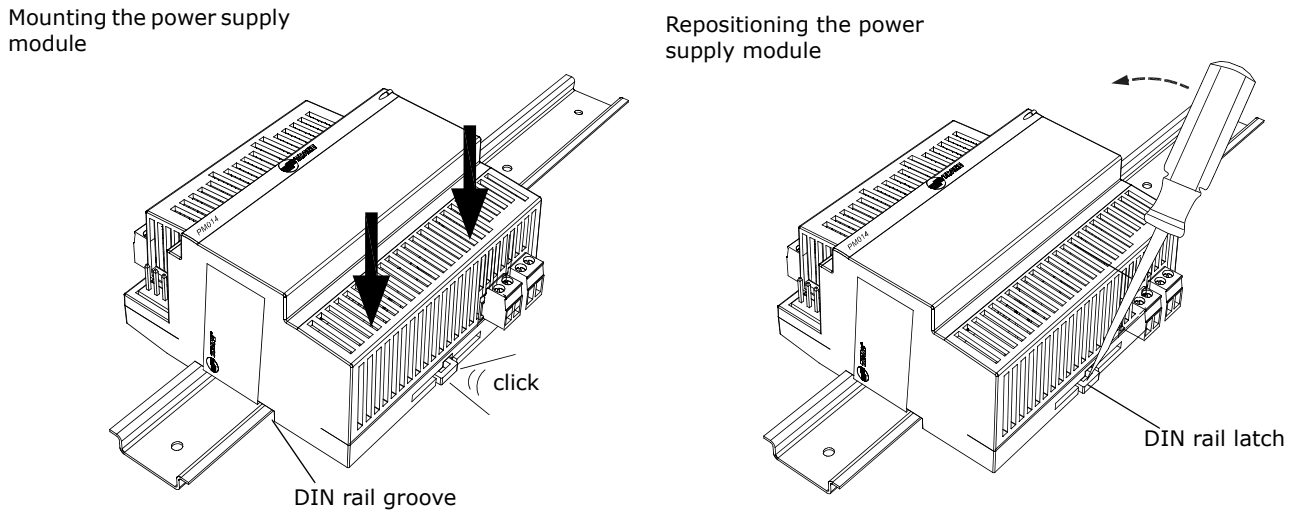

Follow these steps to remove or reposition the power supply module:

1. Perform lockout/tagout procedures for line voltage power to the electrical cabinet.
2. Insert a flat-head screwdriver into the DIN rail latch as illustrated in Figure 1.
3. Push the screwdriver forward to pry the DIN rail latch and free the power supply module.
4. Lift the side of the power supply module with DIN rail latch to fully disengage it from the DIN rail.
5. To reposition the power supply, push on it until it snaps back into place on the DIN rail.

Wiring AC Power

After the power supply module has been properly mounted, install input power and field wiring. Refer to Figure 2, p. 3 for wiring connection locations on the power supply module. Refer to Table 1, p. 3 for the recommended connectors.

Installing Power Input Wire

Follow these steps to install power input wiring:

1. Perform lockout/tagout procedures for line voltage to the electrical cabinet.
2. Install power input wire for the 24 Vac input connection by using 18 AWG wire and the recommended connector.

   Refer to BAS-SVX33-EN for acceptable output current versus wiring distance.

Note: *Strip the wire to expose 0.28 in. (7mm) of bare wire for inserting into the terminal blocks.After tightening the screws, verify that the wire cannot be easily pulled out by lightly tugging on each wire. For reference, the screw terminals should be tightened to 0.5 to 0.6 N-m (71-85 Ozf-in, 4.4-5.3 Lbf-in).*

⚠WARNING
Verify Input Voltage!

Connection to voltages beyond ratings will cause shock and fire hazards and damage anything connected to the power supply.

Use a 75 VA class II transformer. Smaller transformers can be used to reduce output current from the power supply. Refer to BAS-SVX33-EN for more details.

Figure 2. Wiring connections

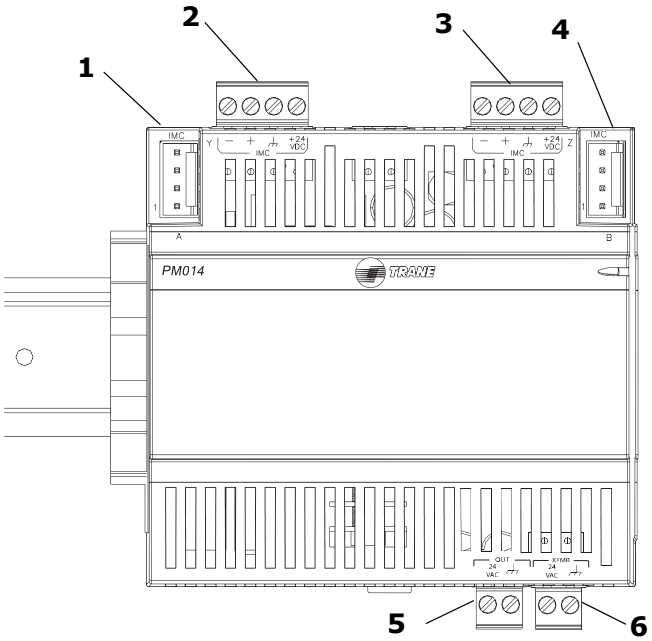

Table 1. Recommended connectors

Location	Description	Recommended Connector
1	IMC pin connection	CAB01202 or CAB01203
2	IMC plug-type terminal block (a)	CON00431
3	IMC plug-type terminal block (a)	CON00431
4	IMC pin connection	CAB01202 or CAB01203
5	24 Vac output	CON00429
6(b)	24 Vac input	CON00429

(a) The + and - terminals are for the IMC bus comm lines. Although there is no transceiver on the power supply, it serves as a "hub" for products that use an IMC bus. Module s can be wired into one of the connectors to obtain access to power and communications for the entire IMC link.
(b) The 24 Vac input connection must be connected to functional earth ground for referencing the IMC bus and for electromagnetic compatibility.

Grounding the Power Supply Module

The preferred grounding location for the power supply module is at the 24 Vac input connection. Install both the ground wire and the return wire for the 24 Vac transformer into the same connection terminal as illustrated in Figure 3, p. 4.

Important: *Trane does not recommend connecting the ground wire to one leg of the 24 VAC transformer output at the transformer lead.*

While this method may save wire, it causes the ground reference for the output of the power supply module to "bounce." This effect is more severe when longer wires (and smaller wire gauge) exist between the transformer and the power supply module and may cause problems with modules that are connected to the power supply module.

Figure 3. Grounding the power supply module

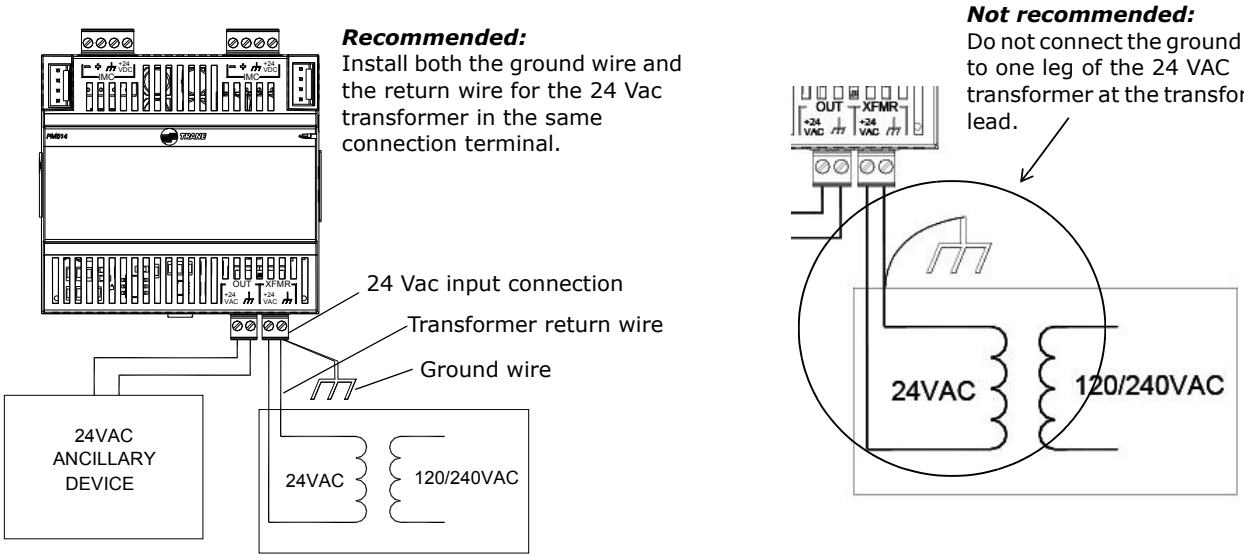

Starting Up the Power Supply Module

Follow these steps to start up the power supply module:

1. Ensure that the input voltage is 24 Vac.
2. Remove the lockout/tagout from the line voltage power to the electrical cabinet.
3. Apply power.

Note: *Initially, the power supply module may take up to 10 seconds to start. Subsequent starts take approximately 2 seconds.*

Operating Tips

- Power supply module PM014 contains hazardous voltage during normal operation.
- If the power supply status LED blinks or does not light when power is applied to the power supply, failure may have occurred.
- No serviceable components are inside the power supply. Replace upon failure.
- Refer to BAS-SVX33-EN for troubleshooting tips.

Trane and the Trane logo are trademarks of Trane in the United States and other countries. All trademarks referenced in this document are the trademarks of their respective owners.

Literature Order Number	X39641159-01A
Date	June 2009
Supersedes	New

www.trane.com

For more information, contact your local Trane office or e-mail us at comfort@trane.com

Trane has a policy of continuous product and product data improvement and reserves the right to change design and specifications without notice.

ACCESSORY	TYPE OF ACCESSORY
4190-1046	22' [6.70m] DUCT AVERAGING TEMPERATURE SENSOR

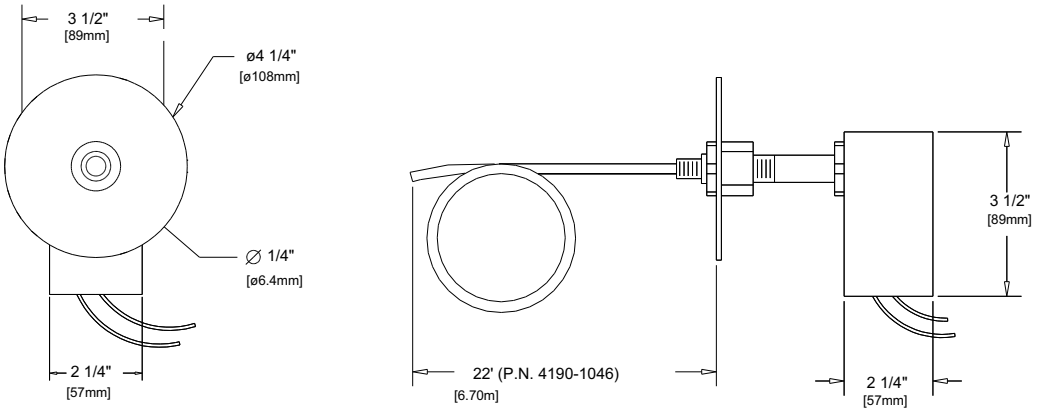

SPECIFICATIONS:

PACKAGE

MOUNTING	DUCT
WIRING CONNECTION	TWO 12" [305mm] BLACK PIGTAIL LEADS

SENSOR

TEMP RANGE	-40°F to 220°F [-40°C TO 104°C] 4
SENSING ELEMENT	RESISTANCE WIRE
RESISTANCE	1000 OHMS AT 70° F [21° C], CHANGES 2.20 OHMS PER 1° F [.55° C] AT 70° F [21° C]

MOUNTING NOTES:

1. MOUNT TEMPERATURE SENSOR IN DUCT WHERE THE AIRSTREAM IS TYPICAL OF THE AIR TEMPERATURE.
2. MOUNT AT FLAT SURFACE OF DUCT.
3. SERPENTINE AVERAGING ELEMENT ACROSS AIR STREAM.
4. CAUTION-AVOID SHARP BENDS. THE MINIMUM BEND DIAMETER IS 3 INCHES [76mm].

CUSTOMER CONNECTIONS

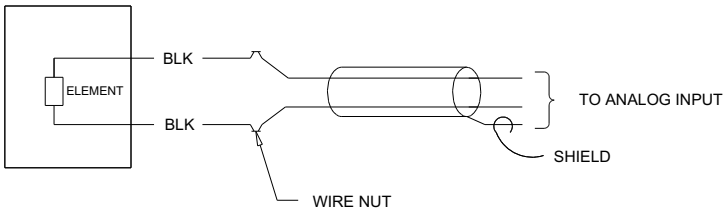

CUSTOMER NOTE:

1. COMPONENTS AND WIRING SHOWN DASHED ARE FURNISHED AND INSTALLED BY CUSTOMER.
2. ALL CUSTOMER WIRING MUST BE IN ACCORDANCE WITH NATIONAL ELECTRIC CODES AND LOCAL CODES.
3. ANALOG INPUT WIRING MUST BE 18 GA. SHIELDED TWISTED PAIR (TRANE BASD WIRE #400-20-28, Q-4166 OR EQUIVALENT.) SHIELD MUST BE CUT BACK AND TAPED AT SENSOR.

4 SENSOR RANGE IS DEPENDENT ON SIGNAL CONDITIONING MODULE (SCM) WHEN USED WITH TRACER 100 OR TRS. USE SCM-9 (3350-8009) FOR 40° TO 80° F [4° TO 27° C], SCM-24 (3350-8024) FOR 90° TO 220° F [32° TO 104° C] OR SCM -30 (3350-8030) FOR -30° TO 240° F [-34° TO 116° C].

⚠ WARNING	⚠ ADVERTISSEMENT	⚠ CAUTION
HAZARDOUS VOLTAGE! DISCONNECT ALL ELECTRIC POWER INCLUDING REMOTE DISCONNECTS BEFORE SERVICING. FAILURE TO DISCONNECT POWER BEFORE SERVICING CAN CAUSE SEVERE PERSONAL INJURY OR DEATH.	VOLTAGE HASARDEUX! DECONNECTEZ TOUTES LES SOURCES ELECTRIQUES INCLUANT LES DISJONCTEURS SITUES A DISTANCE AVANT D'EFFECTUER L'ENTRETIEN. FAUTE DE DECONNECTER LA SOURCE ELECTRIQUE AVANT D'EFFECTUER L'ENTRETIEN PEUT ENTRAINER DES BLESSURES CORPORELLES SEVERES OU LA MORT.	USE COPPER CONDUCTORS ONLY! UNIT TERMINALS ARE NOT DESIGNED TO ACCEPT OTHER TYPES OF CONDUCTORS. FAILURE TO DO SO MAY CAUSE DAMAGE TO THE EQUIPMENT.

Installation Sheet

Duct Thermistor Temperature Sensor (4 inch) with 6 Foot Leads

4190 1129

The 4-inch duct temperature sensor (Figure 1) with 6 foot leads monitors duct temperature. This sensor is used when a conduit box is neither requested nor desired.

Figure 1. Duct temperature sensor

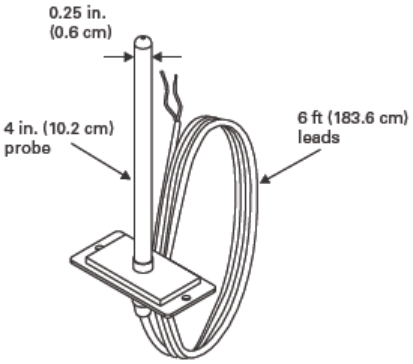

Specifications

Accuracy:	±0.36°F (0.2°C), from 32F to 158°F (0°C to 70°C)
Operating temperature range:	From -30°F to 220°F (-34°C to 104°C)
Sensing element:	Thermistor
Resistance:	10,000 kΩ at 77°F (25°C)
Drift:	0.04°F (0.2°C) after 10 years within temperature range

© 2008 Trane All rights reserved

Duct Mounting

Note: For proper sensor operation, the gasket seal must be used when mounting the sensor in a duct.

If the sensor is used to monitor duct temperatures, complete the following steps:

1. Drill a 3/8 inch hole on a flat surface on the duct where air-stream temperature is typical of the ambient air temperature.
2. Insert the probe into the hole and fasten the sensor to the duct with two No. 8 sheet-metal screws (not provided).
3. Connect the sensor leads to the controller analog input as shown in figure 2.

Figure 2. Wiring diagram

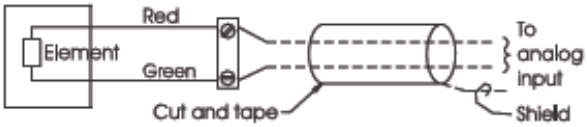

Trane and the Trane logo are trademarks of Trane in the United States and other countries. All trademarks referenced in this document are the trademarks of their respective owners.

Literature Order Number	3270 3409 B
Date	Month 2008
Supersedes	3270 3409 A

Trane

For more information, contact your local Trane office or e-mail us at comfort@trane.com

Trane has a policy of continuous product and product data improvement and reserves the right to change design and specifications without notice.

6 in. Duct/Immersion Thermistor Temperature Sensor

Ordering number: 4190 1133

Description

The 6 in. duct/immersion temperature sensor (Figure 1) with conduit box monitors duct temperature or water temperature. A neoprene gasket seal and ½ in. MNPT well fitting are provided for your convenience. Use one or the other accordingly for duct- or well-mounted applications. If this sensor is used to monitor water temperature, an immersion well (4190 1112 or 4190 1113) is required.

Figure 1: Duct/immersion temperature sensor

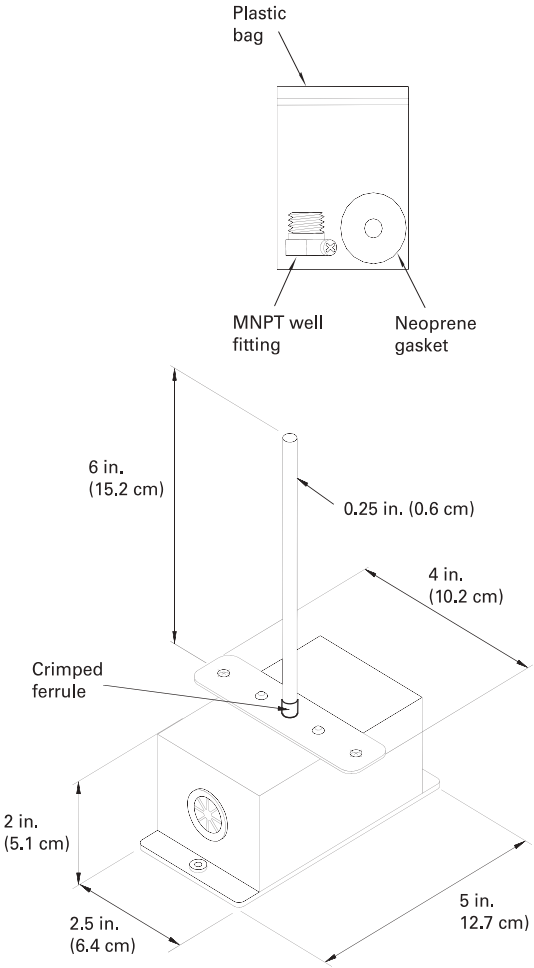

Specifications

Operating temperature range	-30°F to 220°F (-34°C to 104°C)
Sensing element	Thermistor
Resistance	10,000 Ω at 77°F (25°C)
Accuracy	±0.36°F (0.2°C), from 32°F to 158°F (0°C to 70°C)
Drift	0.04°F (0.02°C) after 10 years within temperature range

Duct mounting

If the sensor is used to monitor duct temperatures, complete the following steps:

IMPORTANT

For proper sensor operation, the gasket seal must be used when mounting the sensor in a duct.

1. Hold the sticky side of the neoprene gasket seal down and slide the gasket seal over the sensor probe.
2. Press the gasket securely to the sensor housing.
3. Drill a 3/8-inch hole on a flat surface of the duct where air stream temperature is typical of the ambient air temperature.
4. Insert the probe into the hole and fasten the sensor to the duct with two No. 8 sheet metal screws (not provided).
5. Connect the sensor leads to the controller analog input (Figure 2).

Figure 2: Wiring diagram

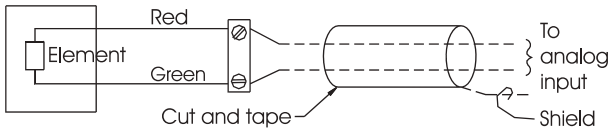

© 2008 Trane All rights reserved

Immersion well mounting

If the sensor is used to monitor water temperature, an immersion well (4190 1112 or 4190 1113) is required. Complete the following steps for well mounting:

1. Locate both the MNPT well fitting provided with the sensor and the appropriate immersion well.

CAUTION
Avoid Equipment Damage

When using an immersion well, do not use the gasket seal. The seal will prevent the well from engaging completely with the crimped ferrule at the base of the probe.

2. Discard neoprene gasket seal provided with the sensor.
3. Loosen the set screw on the well fitting and thread the fitting into the immersion well. Tighten the fitting securely to the well.
4. Apply thermal compound (4190 1114) to the probe tip and inside the immersion well.
5. Slide the probe into the immersion well until:
   - Well fitting engages crimped ferrule at the base of the probe (Figure 1 on page 1)
   - Junction box seats against the well fitting
6. Tighten the set screw to hold the sensor in place.
7. Connect the sensor leads to the controller analog input (Figure 2 on page 1).

™ ® The following are trademarks or registered trademarks of Trane: Trane.

Installation Sheet

±3% Relative Humidity and Temperature Sensor

Order numbers: X13790444010, 4190 7020, X13790445010, 4190 7021

The ±3% relative humidity (RH) and temperature sensor utilizes a polymer capacitive-sensing element that provides superior performance and longevity. The polymer capacitive element has excellent recovery from saturation compared to other humidity sensing technologies.

Before installation, verify receiving one of the four following sensors:

Room humidity and temperature sensor (ordering number X13790444010)

Duct humidity sensor (ordering number 4190 7020)

Outdoor air humidity sensor, 4–20 mA (ordering number 4190 7021)

Outdoor air humidity sensor without temperature sensor, 20–4 mA (ordering number X13790445010)

Note: All sensors have a range of 0–100% RH and ±3% RH sensing accuracy. A 10 kΩ thermistor is available for temperature sensing.

Power Requirements

The relative humidity sensor requires 24 Vdc to operate.

Warnings, Cautions, and Notices

Warnings, cautions, and notices are provided in appropriate places throughout this document:

⚠ **WARNING**: Indicates a potentially hazardous situation which, if not avoided, could result in death or serious injury.

⚠ **CAUTION**: Indicates a potentially hazardous situation which, if not avoided, may result in minor or moderate injury. It may also be used to alert against unsafe practices.

NOTICE: Indicates a situation that may result in equipment or property-damage only accidents.

March 2008

© 2008 Trane All rights reserved

3270 3262 Rev H

Sensor Specifications

Accuracy:	±3% RH over 20–95% RH at 77°F (25°C). Includes hysteresis, linearity, and repeatability.
Operating temperature range:	From -20°F to 140°F (-29°C to 60°C)
Supply voltage:	18-36 Vdc
Drift rate:	Less than 1% per year
Operating measurement range:	0-99% RH, noncondensing
Sensing element:	Polymer capacitive
Output characteristics:	4-20 mA for 0-100% RH (*X13790486010 is 20- mA for 0-100% RH*)
Repeatability:	0.5% RH
Hysteresis:	Less that 1% RH
Sensitivity:	0.1% RH
Storage temperature:	From -85°F to 158°F (-65°C to 70°C)
Thermistor resistance:	10 kΩ at 77°F
Temperature accuracy:	±0.36°F (±0.2°C)

Sensor Dimensions and Locating Best Practices

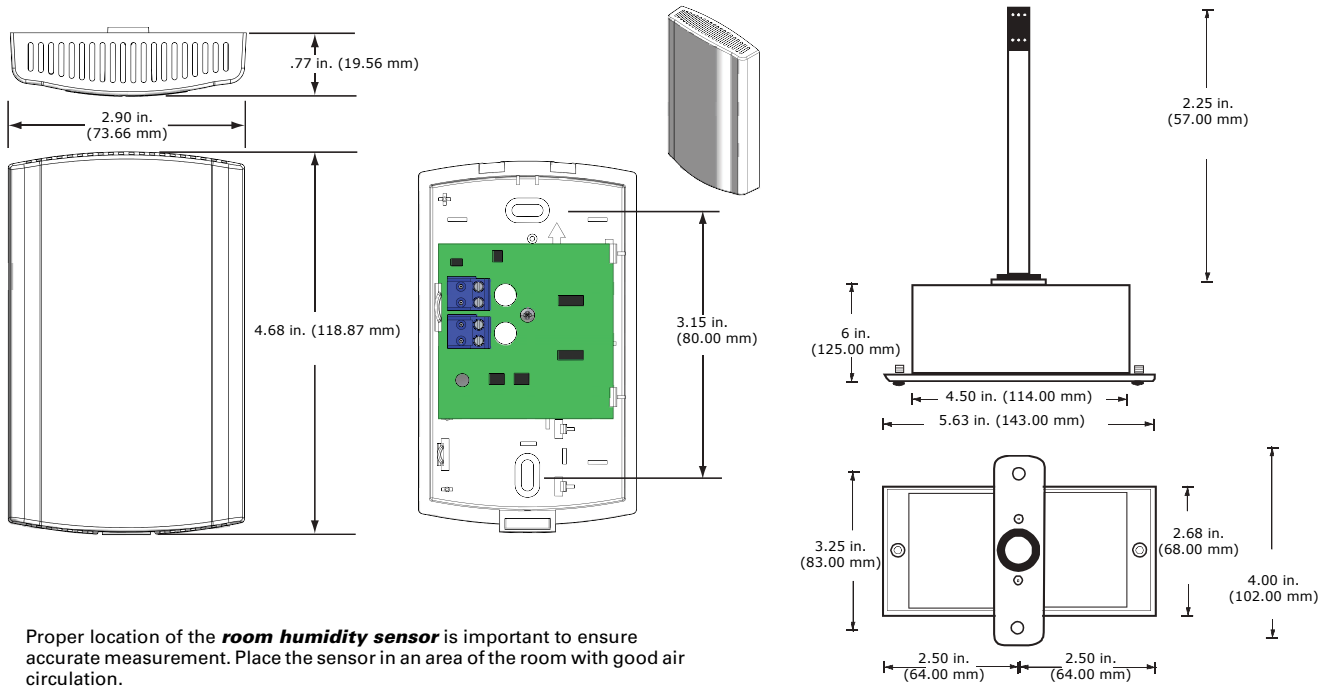

Proper location of the ***room humidity sensor*** is important to ensure accurate measurement. Place the sensor in an area of the room with good air circulation.

Places to avoid when locating the sensor:

- Locations subject to draft from windows, doors, or diffusers
- Surfaces with an uncooled or unheated area behind them, such as an outside wall or the wall of an unoccupied store room
- Near heat sources, such as radiant heat from the sun, heat from appliances, or heat from concealed pipes or chimneys
- Dead spots behind doors, draperies, or in corners
- Walls having excessive vibration
- Corrosive environments such as near swimming pools or in hospital rooms

Place the ***duct humidity sensor*** in an area of the duct that has good air flow. Mount the sensor so that the 6-inch probe is located in the center of the duct. The transmitter should be mounted away from fans, corners, heating and cooling coils, sparging valves, and other equipment that will affect the relative humidity measurement.

Sensor Dimensions and Locating Best Practices (continued)

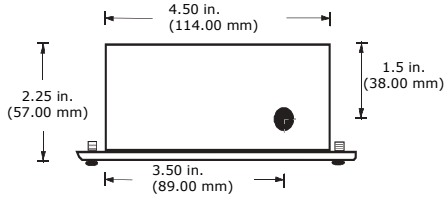

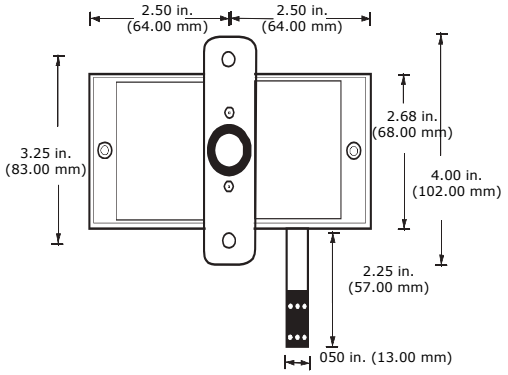

Place the ***outdoor air humidity sensor*** on an outside wall, preferably on the north side of the building. Mount the sensor in a sheltered area under an roof overhang that is protected from rain and sun-heated air rising up the wall of the building.

Mounting

To mount the ***room humidity sensor***, first choose a flat interior surface that is approximately 54 inches (1.4 m) from the floor and then:

1. Remove sensor cover by pressing on the thumb tab at the bottom of the enclosure. Tilt the cover forward and raise it over the top of the back plate.
2. Feed the wires through the base.
3. Attach sensor to drywall or plaster (hardware not included with the sensor).
   Note: For a 2 × 4 junction box, mount the sensor using two #6-32 screws.
4. Connect the controller wires to the terminals on the sensor (refer to the next section about wiring).
5. Replace cover by engaging tab hinges on top of the unit and then push to snap in place.

—or—

To mount the ***duct humidity sensor***:

1. Drill a 5/8″ hole through a flat vertical surface of the duct.
2. Using #8 self-tapping screws (not provided), mount the sensor on the duct surface with the knockout pointing downwards.
3. Feed wires through the knockout and connect as described in the next section, "Wiring".

—or—

To mount the ***outdoor air humidity sensor***:

1. Orient the sensor with the probe pointing downward.
2. Using corrosion-resistant screws, attach sensor to the building.
3. Feed wires through the knockout and connect as described in the next section, "Wiring".

Wiring

Note: Analog input wire must be 18-gauge shielded twisted pair (equivalent to Trane wire number 400 2028). Cut back and tape the shield at the sensor. Ground the shield at the controller. Before starting wiring, refer to the illustration, "Specific Controller-type Wiring, p 4".

NOTICE

Equipment malfunction!

Do not run sensor wires and ac power wires together in the same conduit or wire bundle. This may cause malfunction due to electrical noise.

Connect the controller wires to the terminals on the sensor as follows:

1. Remove the blue terminal block **(A)** by carefully pulling it off the circuit board.
2. Locate the (+) and (-) terminal markings **(B)** on the board.
3. Attach the supply voltage to the (+) lead and the signal wire to the (-) lead.
4. Complete the wiring.
5. Replace the terminal block **(C)** on the circuit board and apply power to the unit.
6. Check for appropriate output signal using a digital volt meter (DVM) set on the dc milliamperes connected in series with the (-) terminal.

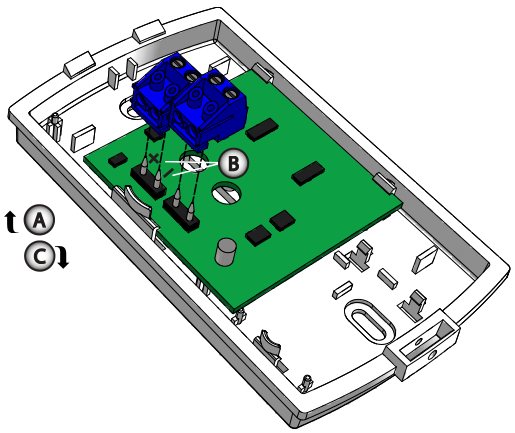

Specific Controller-type Wiring

Tracer ZN520 sensor

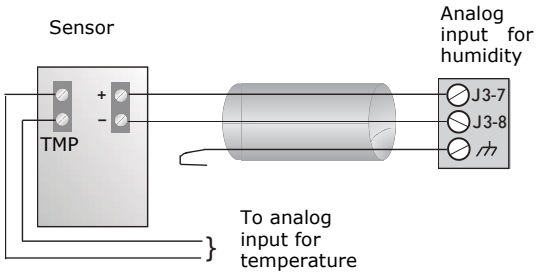

Tracer ZN521 sensor

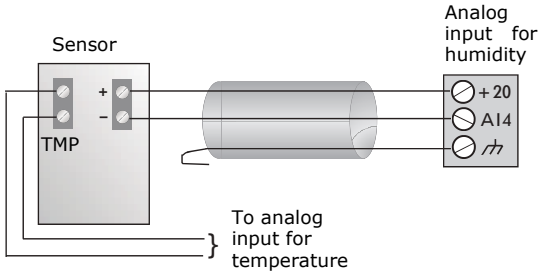

PCM/UPCM sensor

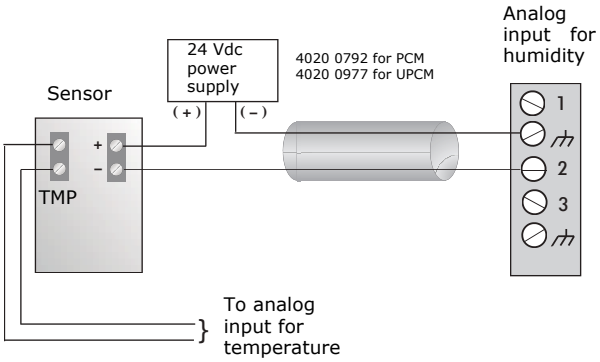

MP581 sensor

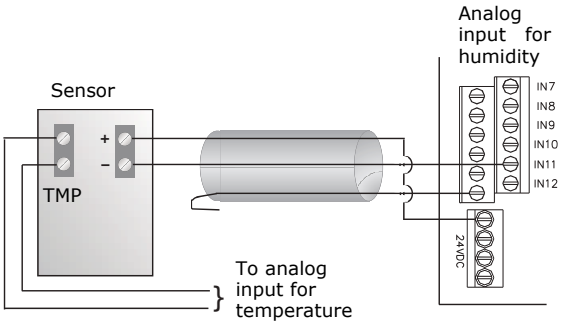

Voyager or Precedent ReliaTel sensor

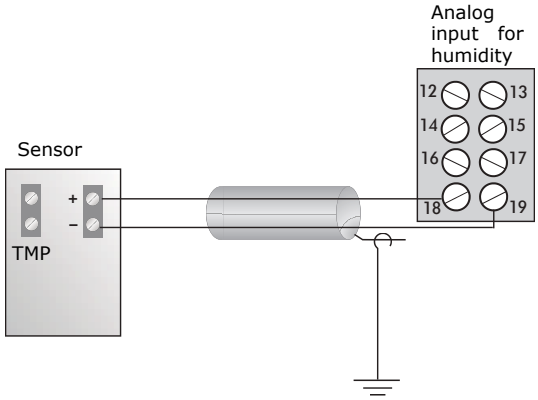

Intellipak II sensor

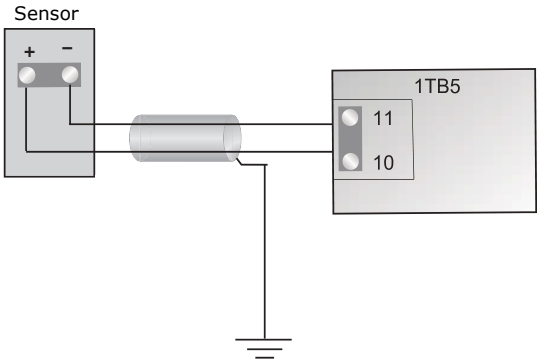

Trane, the Trane logo, IntelliPak, Precedent, ReliaTel, and Voyager are trademarks of Trane in the United States and other countries. All trademarks referenced in this document are the trademarks of their respective owners.

Literature Order Number	3270 3262 Rev H
Date	March 2008
Supersedes	3270 3262 Rev G

www.trane.com

For more information, contact your local Trane office or e-mail us at comfort@trane.com

Trane has a policy of continuous product and product data improvement and reserves the right to change design and specifications without notice.

Product Data Sheet

Zone Sensors

Trane™ offers a full line of wireless and wired temperature sensors. Wireless temperature sensors are an ideal and cost-effective alternative to wired sensors that provide easy and flexible installation. Conventional wired sensors are best suited where wireless sensors are not allowed or when a wired connection to a service tool is required.

Features, Benefits, and Part Numbers:

Features	Benefits
Temperature-only sensors	Simplifies tenant interaction by moving the temperature setpoint to a centralized source.
Temperature setpoint control	Allows the tenant to choose a temperature setpoint that satisfies their personal preference.
Occupancy override	Allows the tenant to request temporary timed override system operation that permits the building conditions to remain in occupied comfort conditions.
COMM module (optional)	Compatible with all Trane-wired temperature sensors. This optional accessory provides local RJ22 connection to Trane service tools for easy, low cost maintenance.
Hot/cold thumbwheel (optional)	Allows the tenant to choose a temperature setpoint relative to their zone of comfort as opposed to exact numbers.

Part Numbers				
Description				
Setpoint	Occupancy	Part Number	BAYSENS	Global Parts
Single	Yes	X1351152701	BAYSENS074A	SEN01447
NA	No	X1351152801	BAYSENS077A	SEN01448
Single	No	X1351152901	BAYSENS075A	SEN01449
NA	Yes	X1351153001	BAYSENS073A	SEN01450
COMM Module (Box of 12)		X1365146702	BAYCOMM005A	CON01313
Thumbwheel; Hot/Cold (Box of 12)		X1316105702	NA	KNB00182

© 2007 Trane All rights reserved

Specifications

Description	
Sensor operating temperature	From 32°F to 122°F (0°C to 50°C)
Storage temperature	From -40°F to 185°F (-40°C to 85°C)
Storage/operating humidity range	5% to 95% relative humidity (RH), noncondensing
Thermistor accuracy	0.2°C at 25°C, 1%
Setpoint functional range	45°F to 90°F (7.2°C to 32.2°C)
Setpoint thumbwheel markings	50°F to 85°F (in 5°F increments) with */** icons on thumbwheel 11°C to 29°C (in 3°C increments) with */** icons on thumbwheel
Housing material	Polycarbonate/ABS (suitable for plenum mounting), UV protection, UL 94: 5 VA flammability rating
Mounting	Fits a standard 2 in. by 4 in. junction box (vertical mount only). Mounting holes are spaced 3.2 in. (83 mm) apart on vertical center line. Includes mounting screws for junction box or wall anchors for sheet-rock walls. Overall dimensions: 2.9 in (74 mm) by 4.7 in. (119 mm)

Schematic (Typical)

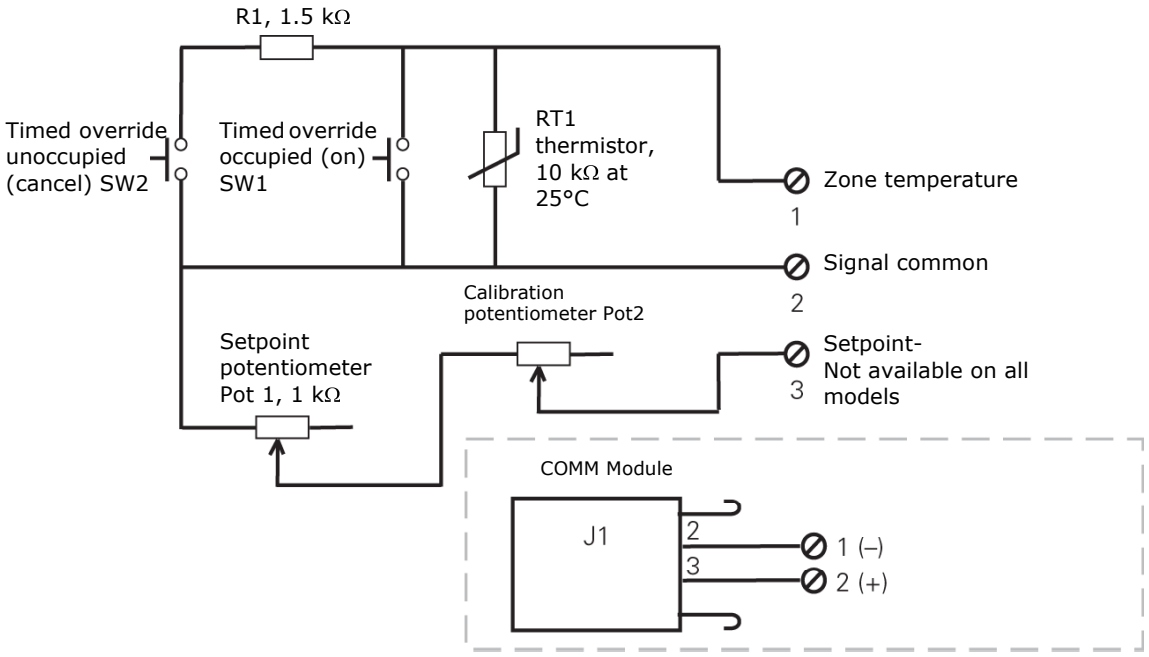

Trane and the Trane logo are trademarks of Trane in the United States and other countries. All trademarks referenced in this document are the trademarks of their respective owners.

Literature Order Number	BAS-PRC027-EN
Date	November 2007
Supersedes	New

www.trane.com

For more information, contact your local Trane office or e-mail us at comfort@trane.com

Trane has a policy of continuous product and product data improvement and reserves the right to change design and specifications without notice.

Installation Instructions

Tracer™ BACnet™ Terminator

Ordering Number: X13651524-01

Package Contents

The following items are included in the box when you order this part (X13651524-01):

- Two (2) Tracer BACnet Terminators
- Two (2) wire cables with IMC connectors
- Installation instructions (X39641151-01A)

BACnet Wiring Guidelines

Follow these guidelines for BACnet wiring:

- Use 18 AWG, 24 pF/ft., communication wire (Trane purple wire).
- All BACnet links must be properly terminated. Use a Tracer BACnet terminator at each end of the link.
- Use the daisy chain topology for BACnet links.
- Limit the BACnet link to 4,000 ft.
- Limit the link to 60 devices when all the devices on the link are Trane devices.
- Limit the link to 32 devices when there are both Trane and non-Trane devices on the link.
- Maintain polarity across the BACnet communication link.

March 2009

© 2009 Trane All rights reserved

X39641151-01A

BACnet Link Configuration and Power Wiring

Figure 1 illustrates valid daisy-chain configurations and Tracer BACnet terminator locations. The Tracer BACnet terminator is a powered device that needs to be connected to either 24 Vac or 24 Vdc power. Wire cables are supplied for the most common application, which is connecting to the IMC bus to power the module (refer to Figure 2, p. 3).

The Tracer BACnet terminator must also be placed on the communication link using the terminals and locations shown in the Figure 1 and Figure 2, p. 3 (BACnet communication wiring can be terminated on LINK 1 or LINK 2 on the Tracer SC).

Notes: *Communication Wiring*

- *Maintain +/– polarity across the communication link.*
- *The communication wire shield must be connected to the ground terminal of the link termination block at the Tracer SC. The Tracer SC provides the ground for the BACnet/MSTP link.*
- *The communication wire to the Tracer BACnet terminator should have the shield conductor taped back at each end of the link. The shield conductor is never connected to ground at the Tracer BACnet terminator.*
- *Shield conductors are tied together and taped back at each BACnet device between the Tracer SC and the BACnet terminator.*

Figure 1. Communication Link Configurations for Tracer SC and Tracer BACnet Terminator

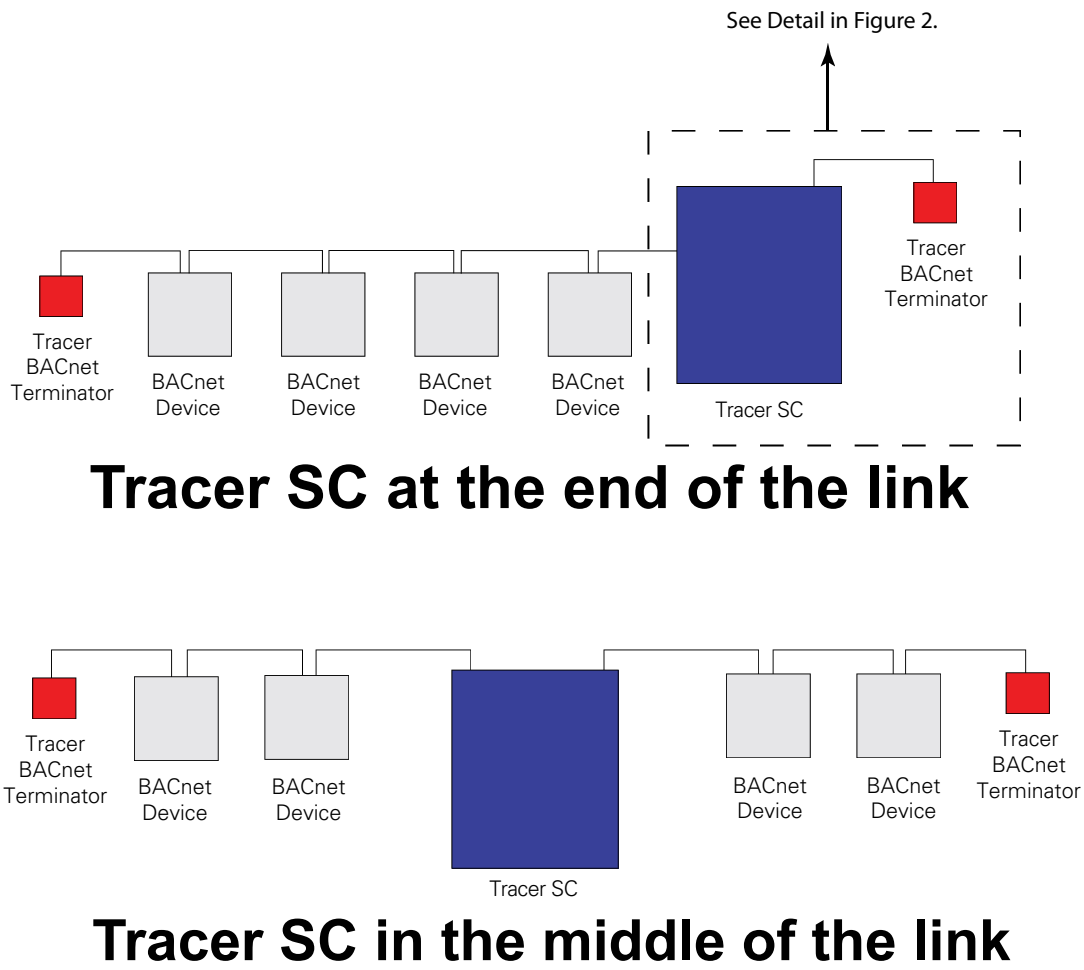

Figure 2. Tracer SC and Tracer BACnet Terminator Wiring

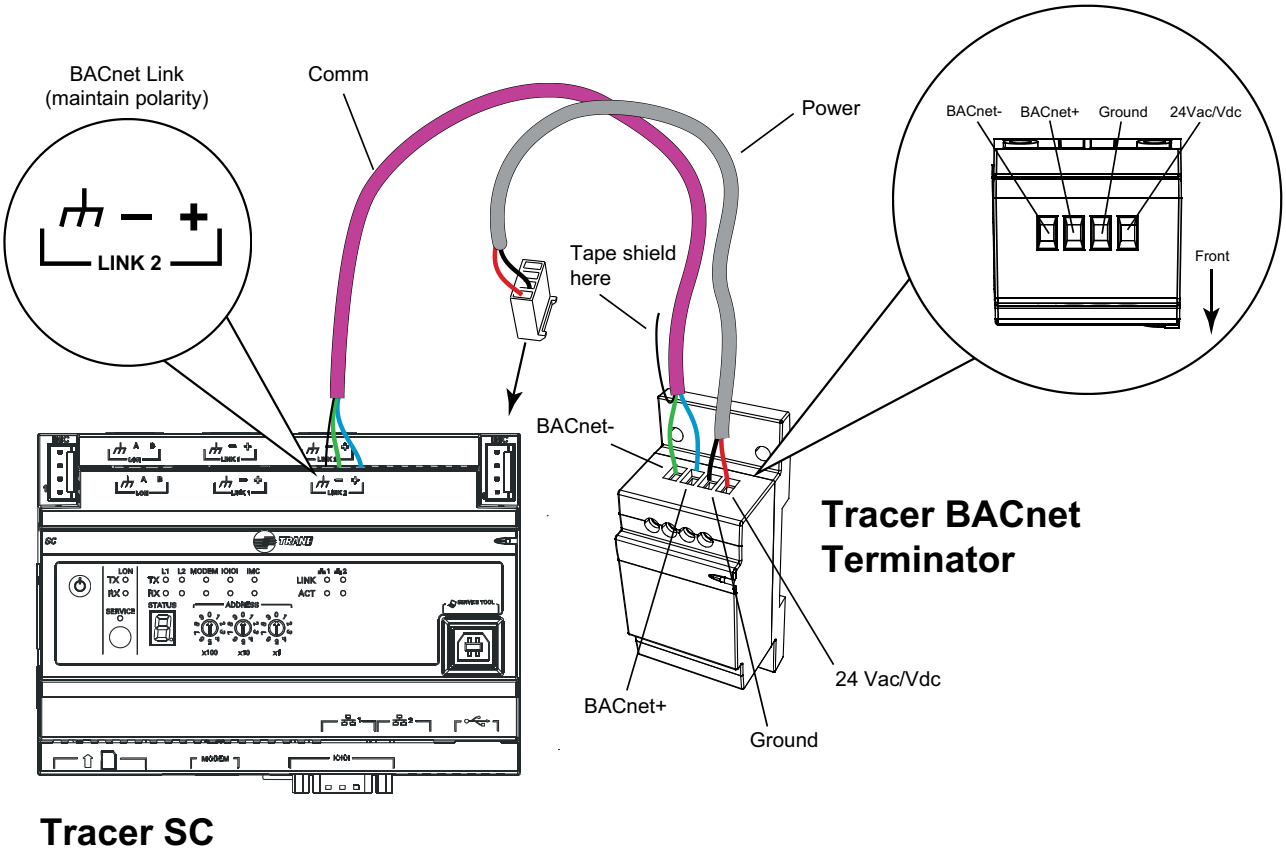

Installation Options

Option 1

Install the Tracer BACnet terminator directly on the din rail.

Notice:

Avoid Equipment Damage! Do not use excessive force to install the Tracer BACnet terminator to the DIN rail. Excessive force could result in damage to the plastic enclosure.

To mount device:

1. Hook device over top of DIN rail (see Figure 3A, p. 4).
2. Gently push on lower half of device in the direction of arrow until the release clip clicks into place.

To remove or reposition device:

1. Disconnect all connectors before removing or repositioning.
2. Insert screwdriver into slotted release clip and gently pry upward on the clip with the screwdriver (see Figure 3B).
3. While holding tension on the clip, lift device upward to remove or reposition.
4. If repositioned, push on the device until the release clip clicks back into place to secure the device to DIN rail.

Figure 3. Installation options - option 1

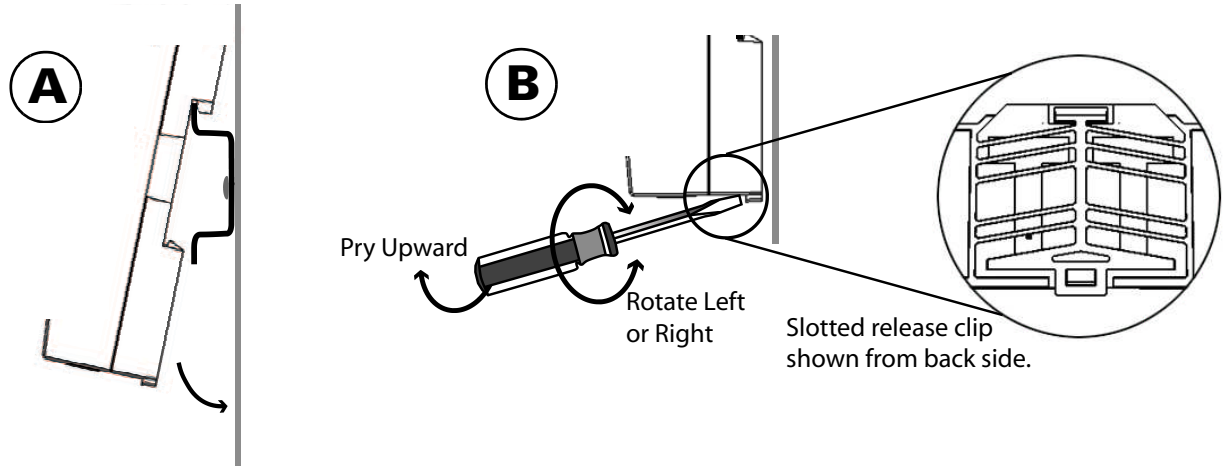

Figure 4. Installation options - option 2

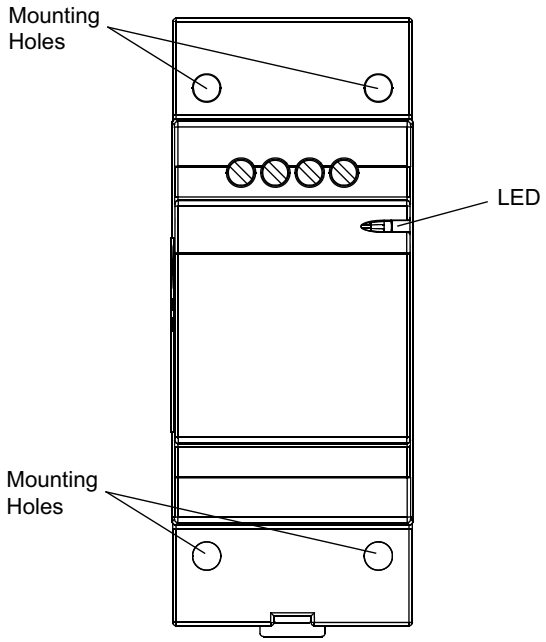

Option 2

Mount the Tracer BACnet terminator using screws. The Tracer BACnet terminator has four mounting holes provided in the plastic enclosure (see Figure 4). Screws to mount the unit are not included.

Troubleshooting

The LED on the front of the Tracer BACnet terminator (Figure 4) indicates that the unit is powered. If after wiring the BACnet terminator, the LED is not lit solid green, the unit may be wired incorrectly.

Trane and the Trane logo are trademarks of Trane in the United States and other countries. All trademarks referenced in this document are the trademarks of their respective owners.

Literature Order Number	X39641151-01A
Date	March 2009
Supersedes	New

www.trane.com

For more information, contact your local Trane office or e-mail us at comfort@trane.com

Trane has a policy of continuous product and product data improvement and reserves the right to change design and specifications without notice.

Product Data Sheet

Tracer™ XM30 Expansion Module

Ordering Number: X13651537010

The Tracer XM30 Expansion Module provides additional points when needed for Tracer UC400 applications. Each expansion module has a total of 4 points that can be configured using any combination of inputs/outputs (refer to the table below). A maximum of eight (8) expansion modules can be added to a Tracer UC400. Use of a PM014 DC power supply is required for applications requiring more than two XM30 modules.

Packaged Contents

- One (1) XM30 expansion module
- One (1) bag of 2-pin and 4-pin terminal connectors
- One (1) IMC cable harness

Important: *Visually inspect contents for obvious defects or damage. All components have been thoroughly inspected before leaving the factory. Any claims for damage incurred during shipment should be filed immediately with the carrier.*

XM30 Configurable Connections

The table below provides information about the XM30 configurable connections.

Connection	Quantity	Types	Range
Inputs	**Can be configured using any combination of analog or binary inputs/analog outputs**	Thermistor	2252 Ω, 10k, 20k, 100kΩ
		Resistive (Setpoint)	100 Ω to 1 MΩ
		RTD	1 kΩ; platinum, Balco™ or nickel
		Current	0–20 mA (linear)
		Voltage	0–20 Vdc (linear)
		Binary	Dry Contact
		Pulse Accumulator	Minimum 20 milliseconds open or closed
Outputs		Current	0–20 mA @ 16V
		Voltage	0–16 Vdc @ 20mA
Overall Point Total	**4**		

© 2009 Trane. All rights reserved.

Storage/Operating Environment Specifications and Agency Compliance

Storage	
Temperature:	-67°F to 203°F (-55°C to 95°C)
Relative humidity:	5% to 95% (noncondensing)
Operating	
Temperature:	-40°F to 158°F (-40°C to 70°C)
Humidity:	5% to 95% (noncondensing)
Power:	24 Vdc ±10%, 120 mA
• Mounting weight of controller: • Mounting weight of controller with terminal connectors:	• Mounting surface must support .27 lb. (.122 kg) • Mounting surface must support .31 lb. (.142 kg)
Environmental rating (enclosure):	NEMA 1
Installation:	UL 840: Category 3
Pollution:	UL 840: Degree 2
Agency Compliance	
• UL916 PAZX- Open Energy Management Equipment • UL94-5V Flammability • CE Marked • FCC Part 15, Subpart B, Class B Limit	

XM30 Dimensions

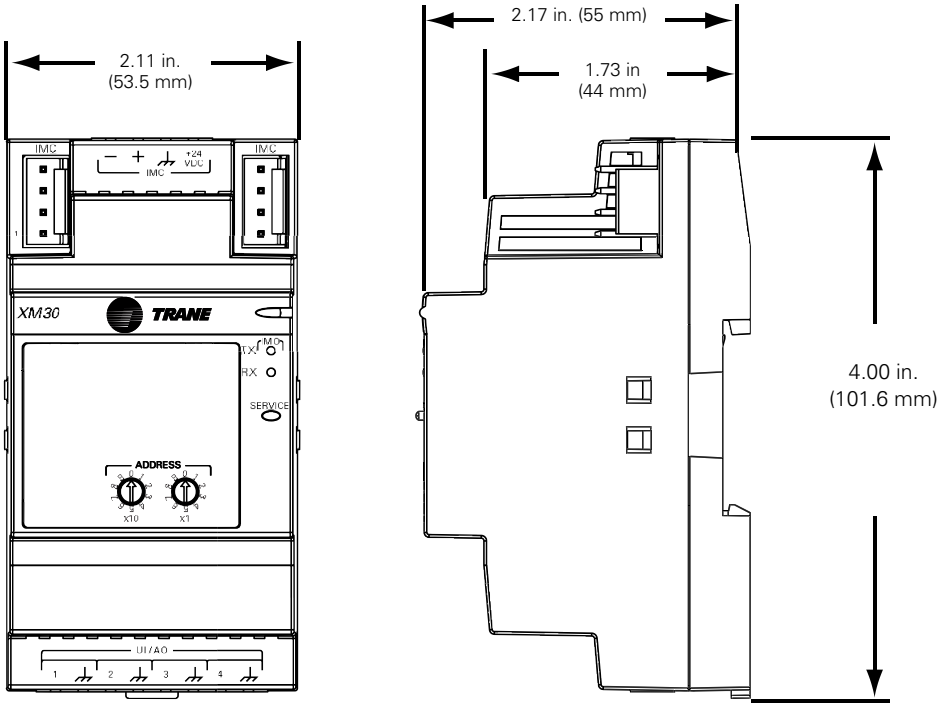

Tracer, Trane and the Trane logo are trademarks of Trane in the United States and other countries. All trademarks referenced in this document are the trademarks of their respective owners.

Literature Order Number	BAS-PRC035-EN
Date	December 2009
Supersedes	July 2009

www.trane.com

For more information, contact your local Trane office or e-mail us at comfort@trane.com

Trane has a policy of continuous product and product data improvement and reserves the right to change design and specifications without notice.

Installation Instructions

Large Enclosure for Tracer DIN-mounted Controllers (120 Vac)

Ordering Numbers: X13651552-01 (solid door)
X13651553-01 (display-capable door)

⚠ SAFETY WARNING

Only qualified personnel should install and service the equipment. The installation, starting up, and servicing of heating, ventilating, and air-conditioning equipment can be hazardous and requires specific knowledge and training. Improperly installed, adjusted or altered equipment by an unqualified person could result in death or serious injury. When working on the equipment, observe all precautions in the literature and on the tags, stickers, and labels that are attached to the equipment.

October 2011 **X39641192-01D**

© 2011 Trane
All rights reserved

1

Packaged Contents

- One (1) enclosure
- Six (6) #10 (5mm) screws with anchors
- Five (5) M4 screws
- One copy of the installation instructions

Model Numbers

Before installing the controller, verify the correct model for local power requirements. The model number is on the shipping label or on the product label inside the enclosure.

Warnings, Cautions, and Notices

⚠CAUTION

Use the equipment only as specified!

The use of the enclosure in a manner not specified in this document may impair the protection provided by the enclosure.

NOTICE

Avoid Equipment Damage!

Install and use the controllers as specified by the manufacturer. Failure to do so could result in equipment damage.

2

Specifications and Dimensions

Operating Environment Specifications

Make sure that the operating environment conforms to the specifications listed in Table 1.

Table 1. Specifications

Temperature	From 0°C to 50°C (32°F to 122°F)
Humidity	5–95% non-condensing
Power requirements	120 Vac, 6A maximum, 1 phase, 50/60 Hz
Weight	Mounting surface must be able to support 55 kg (120 lb).
Dimensions	62 cm x 73.3 cm x 10.7 cm (24.5 in. x 28.9 in. x 4.2 in.)
Installation	U.L. 840: Category 3
Pollution	U.L. 840: Degree 2

The power output of the panel is derated at higher ambient temperatures to account for the heat rise in the panel. Table 2 shows the ratings.

Table 2. Power output (per transformer)

VA at 24 Vac	Temperature Range C°/F°
85	up to 35°C (95°F)
65	up to 45°C (113°F)
45	up to 50°C (122°F)

3

DIN Unit Widths

The following table provides DIN unit width measurements for Trane devices.The enclosure DIN rail is approximately 33 DIN unit widths.

Table 3. DIN unit width measurements

Device	Device Width (mm/in)	DIN Unit Widths (1 unit = 18 mm)
Tracer SC system controller	143.6 mm/5.6 in	8
Tracer UC400 controller	143.6 mm/5.6 in	8
Tracer UC600 controller	215.5 mm/8.50 in.	12
Tracer UC800 controller	71.6 mm/2.8 in	4
Tracer XM30 expansion module	53.6 mm/2.1 in	3
Tracer XM32 expansion module	71.6 mm/2.8 in	4
Tracer XM70 expansion module	215.5 mm/8.50 in.	12
PM014 power supply module	107.6 mm/4.2 in	6
Tracer BACnet terminator	35.6 mm/1.4 in	2

4

Clearances and Dimensions

Minimum clearances and internal enclosure dimensions are shown in Figure 1.
Ensure that the selected mounting location provides adequate space for the minimum clearances.
For external enclosure dimensions, see Figure 2.

Figure 1. Minimum Clearances and Internal Dimensions

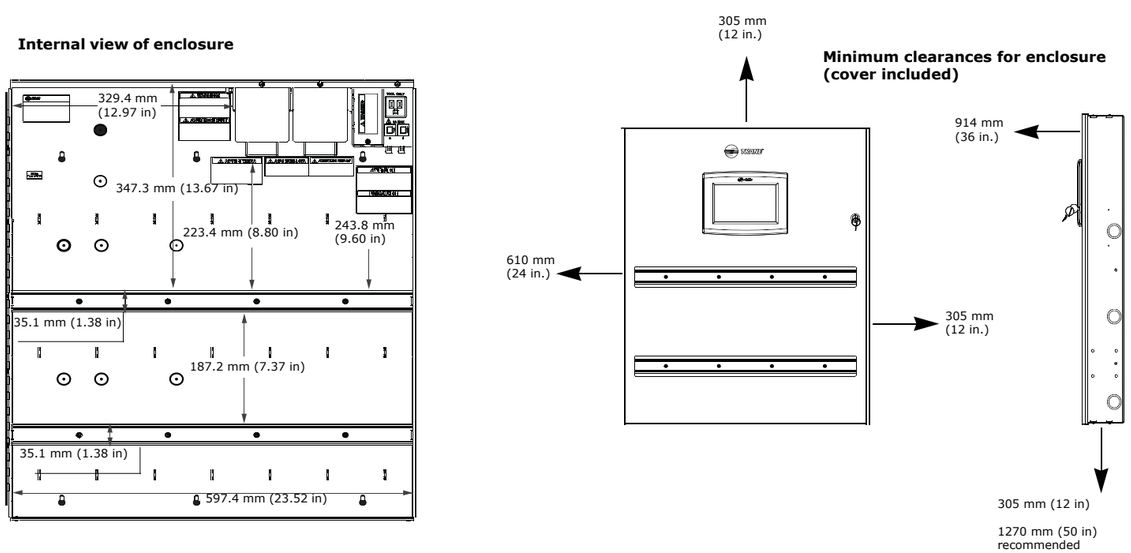

5

Figure 2. External dimensions

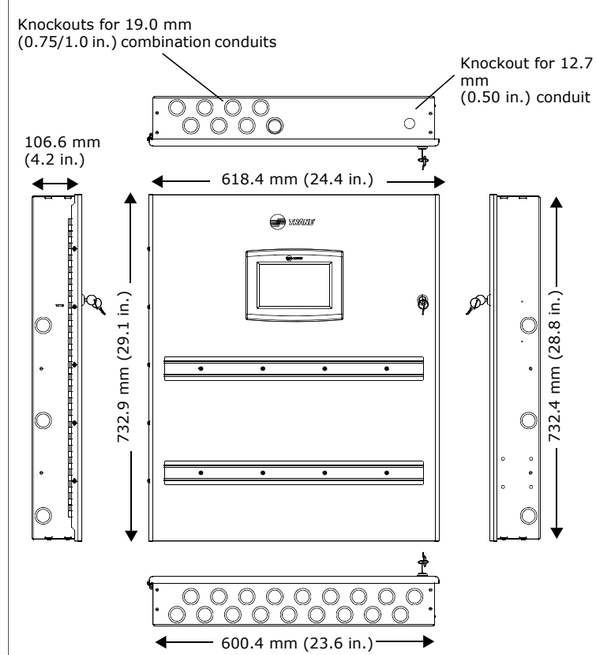

6

Mounting and Wiring

Location

Ensure that the location meets the operating environment requirements and clearances described in previous sections. The controller must be installed indoors. Trane recommends locating the controller:

- Near the controlled equipment to reduce wiring
- Where service personnel have easy access
- Where public access is restricted to minimize the possibility of tampering or vandalism

Mounting Instructions

To mount the enclosure:

1. Use the enclosure as a template and mark the location of the six mounting holes on the mounting surface.
2. Set aside the enclosure and drill holes for the screws at the marked locations.

   Note: *Drill holes for #10 screws and #10 wall anchors. Use wall anchors if the mounting surface is dry wall or masonry.*

3. Secure the enclosure to the mounting surface with the enclosed #10 screws and #10 wall anchors.

7

Wiring High-voltage AC Power

Read all warnings and cautions prior to wiring high-voltage AC power.

⚠WARNING
Hazardous Voltage!

Disconnect all electrical power, including remote disconnects, before servicing. Follow proper lockout/tagout procedures to ensure the power cannot be inadvertently energized. Failure to disconnect power before servicing could result in death or serious injury.

⚠WARNING
Proper Field Wiring and Grounding Required!

All field wiring MUST be performed by qualified personnel. Improperly installed and grounded field wiring poses FIRE and ELECTROCUTION hazards. To avoid these hazards, you MUST follow requirements for field wiring installation and grounding as described in NEC and your local/state electrical codes. Failure to follow code could result in death or serious injury.

Notice:
Use Copper Conductors Only!

Unit terminals are designed to accept copper conductors only. Other conductors could cause equipment damage.

To ensure proper operation of the controller, install the power supply circuit in accordance with the following guidelines:

- The panel must receive power from a dedicated power circuit. Failure to comply could cause panel malfunctions.
- A disconnect switch for the dedicated power circuit must be near the panel, within easy reach of the operator, and marked as the disconnecting device for the panel.
- 24 Vac or higher power-wire conduits or wire bundles must not contain input or output wires. Failure to comply could cause the controller to malfunction due to electrical noise.

8

- Power wiring must comply with the National Electrical Code™ (NEC) and applicable electrical codes.
- 120 Vac wiring requires three-wire service (line, neutral, ground).

  Note: *The transformer voltage utilization range is 98–132 Vac (120 Vac nominal). The panel automatically detects whether the current is 50 or 60 cycle.*

To connect 120 Vac power wires:

1. Lock open the supply-power disconnect switch.
2. At the top-right corner of the enclosure, remove the knockout for 0.75 inch (19 mm) conduit.
3. Open or remove the enclosure door if has already been installed.
4. Inside of the enclosure at the top-right corner, remove the line voltage area cover plate.
5. Feed the 120 Vac power wire into the enclosure.
6. Connect the line wire to the **'L'** terminal as shown in Figure 3. Connect the neutral wire to the **'N'** terminal as shown in Figure 3.
7. Connect the green ground wire to the chassis ground screw as shown in Figure 3.

   Note: *The ground wire should be continuous back to the circuit breaker panel.*

⚠Warning
Hazardous Voltage!

The cover plate must be in place when the controller is operating. Failure to replace the cover plate could result in death or serious injury.

8. Replace the cover plate.
9. On a field-supplied label, record the location of the circuit breaker panel and the electrical circuit. Attach the label to the cover plate.

9

Figure 3. AC wiring for 120 Vac

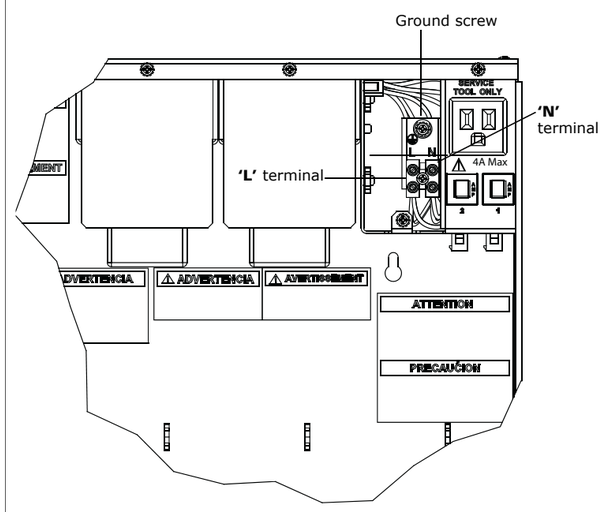

10

Installing the Enclosure Door

To install the enclosure door:

1. Remove packaging from the door and locate the provided hardware (five M4 screws).
2. Position the door on the front of the enclosure in its approximate position, with the lock on the right-hand side.
3. Lock the enclosure door to assist in holding the door on the enclosure.
4. Align the screw holes with the threaded hardware on the door hinge so that the screws can be inserted through the door (Figure 4).
5. Insert one screw into a screw hole on the upper half of the door; finger tighten only.
6. Insert the remaining four screws in the screw holes; finger tighten only.
7. While applying slight upward pressure on the door, use a screwdriver to securely tighten one screw on the upper portion of the door and one screw on the lower portion of the door.
8. Unlock the door and ensure that it opens and closes freely.
9. Securely tighten the remaining screws.

11

Figure 4. Installing the enclosure door

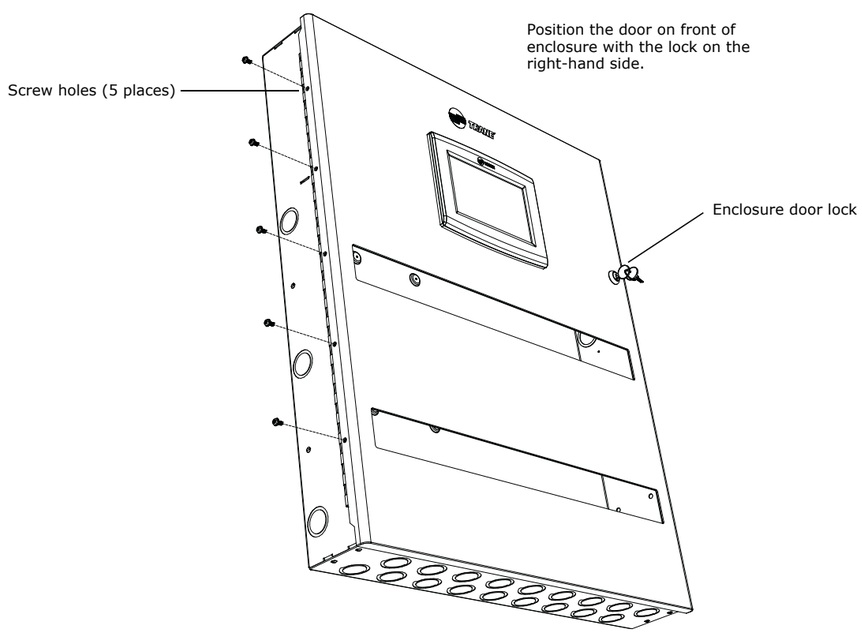

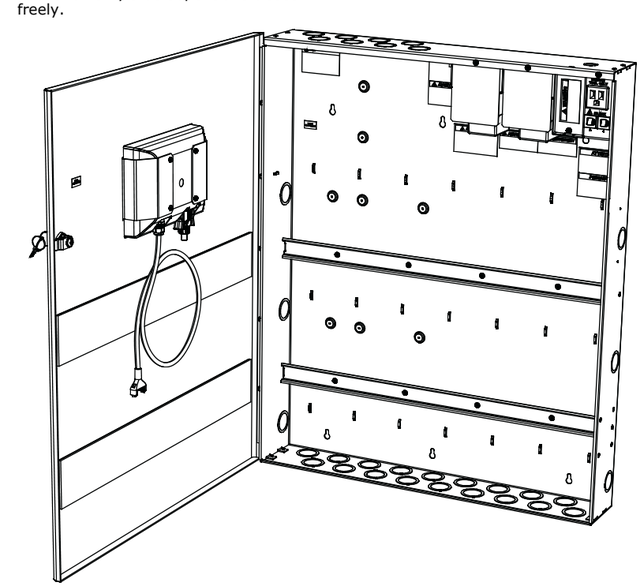

12

Agency Listings and Compliance

United States compliance
UL Listed — UL 916 Energy Management Accessory

Canada compliance
CUL Listed — CSA C22.2 No. 205

Trane optimizes the performance of homes and buildings around the world. A business of Ingersoll Rand, the leader in creating and sustaining safe, comfortable and energy efficient environments, Trane offers a broad portfolio of advanced controls and HVAC systems, comprehensive building services, and parts.
For more information, visit www.Trane.com.

Trane has a policy of continuous product and product data improvement and reserves the right to change design and specifications without notice

© 2011 Trane All rights reserved
X39641192-01D 14 Nov 2011
Supersedes X39641192-01C (06 Jun 2011)

We are committed to using environmentally conscious print practices that reduce waste

Ingersoll Rand

Installation Instructions

Enclosure for Tracer DIN-mounted Controllers

Order Number: X13651559010 (120 Vac, w/outlet)

1

Packaged Contents

- One (1) enclosure with 120 Vac outlet (5 A max.)
- Four (4) #10 (5mm) screws with anchors
- One copy of the installation instructions

Model Numbers

Before installing the controller, verify the correct model for local power requirements. The model number is on the shipping label or on the product label inside the enclosure.

May 2011 © 2011 Trane. All rights reserved. **X39641180-01C**

2

Warnings, Cautions, and Notices

⚠ **WARNING**: Indicates a potentially hazardous situation which, if not avoided, could result in death or serious injury.

⚠ **CAUTION**: Indicates a potentially hazardous situation which, if not avoided, could result in minor or moderate injury. It may also be used to alert against unsafe practices.

NOTICE: Indicates a situation that could result in equipment or property-damage only accidents.

⚠ CAUTION

Use the equipment only as specified!

The use of the enclosure in a manner not specified in this document may impair the protection provided by the enclosure.

Notice:

Avoid Equipment Damage!

Install and use the controllers as specified by the manufacturer. Failure to do so could result in equipment damage.

⚠ SAFETY WARNING

Only qualified personnel should install and service the equipment. The installation, starting up, and servicing of heating, ventilating, and air-conditioning equipment can be hazardous and requires specific knowledge and training. Improperly installed, adjusted or altered equipment by an unqualified person could result in death or serious injury. When working on the equipment, observe all precautions in the literature and on the tags, stickers, and labels that are attached to the equipment.

3

Specifications and Dimensions

Operating Environment Specifications

Make sure that the operating environment conforms to the specifications listed in Table 1.

Table 1. Specifications

Temperature	From 32°F to 122°F (0°C to 50°C)
Humidity	5–95% non-condensing
Power requirements	120 Vac, 6A maximum, 1 phase, 50/60 Hz
Weight	Mounting surface must be able to support 60 lb. (28 kg)
Dimensions	16 ½ in. × 14 ¾ in. × 5 ½ in. (418 mm × 373 mm × 140 mm)
Installation	U.L. 840: Category 3
Pollution	U.L. 840: Degree 2

The power output of the panel is de-rated at higher ambient temperatures to account for the heat rise in the panel. Table 2 shows the ratings.

Table 2. Power Output

VA at 24 Vac	Temperature Range C°/F°
85	up to 35°C (95°F)
75	up to 45°C (113°F)
50	up to 50°C (122°F)

4

DIN Unit Width

The following table provides DIN unit width measurements for Trane devices.

Table 3. DIN unit width measurements

Device	Device Width (mm/in)	DIN Unit Width (1 unit = 18 mm)
Tracer SC system controller	143.6 mm/5.6 in	8
Tracer UC400 controller	143.6 mm/5.6 in	8
Tracer UC600 controller	215.5 mm/8.5 in	12
Tracer UC800 controller	71.6 mm/2.8 in	4
Tracer XM30 expansion module	53.6 mm/2.1 in	3
Tracer XM32 expansion module	71.6 mm/2.8 in	4
PM014 power supply module	107.6 mm/4.2 in	6
Tracer BACnet terminator	35.6 mm/1.4 in	2

5

Minimum clearances and internal enclosure dimensions are provided in Figure 1. Ensure that the selected location provides enough space for the minimum clearances. External dimensions are shown in Figure 2, panel 6.

Figure 1. Minimum clearances and internal dimensions

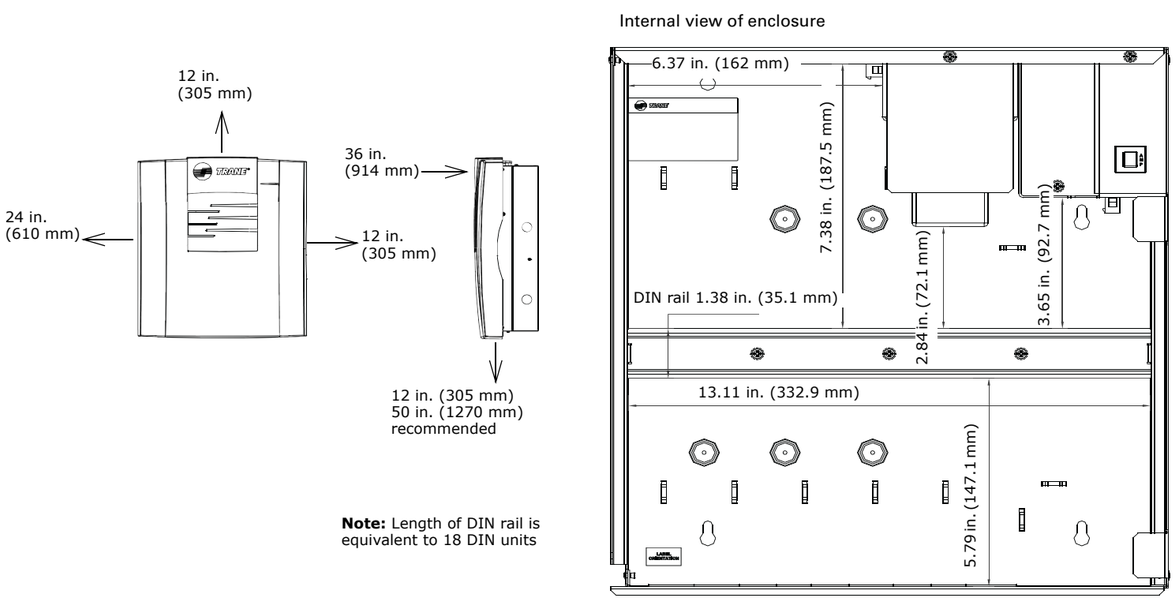

6

Figure 2. External dimensions

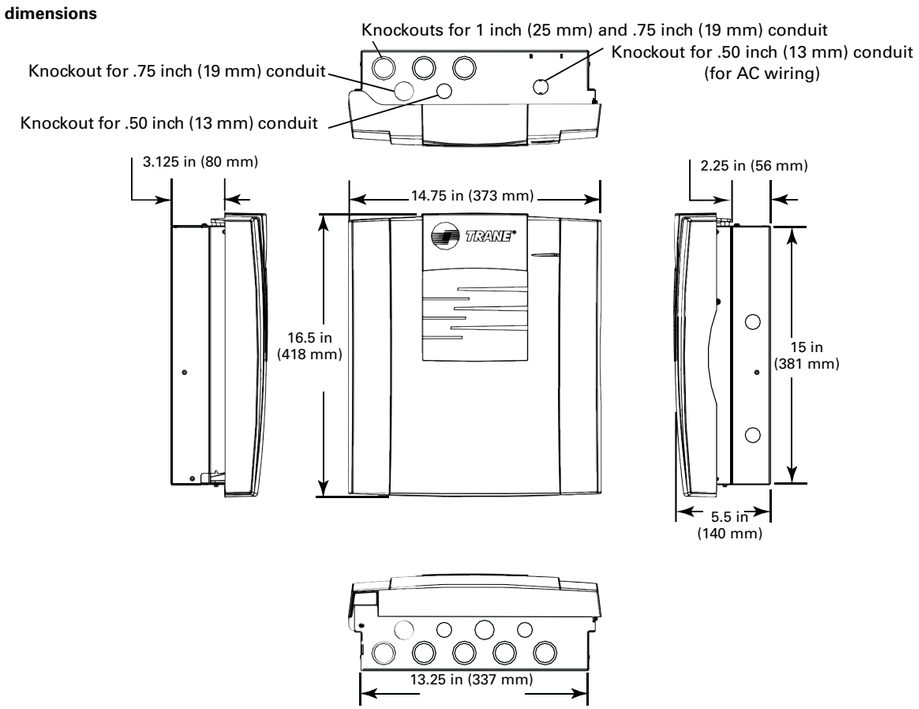

7

Mounting and Wiring

Location

Ensure that the location meets the operating environment requirements and clearance requirements described in the previous sections. The controller must be installed indoors. Trane recommends locating the controller:

- Near the controlled equipment to reduce wiring
- Where service personnel have easy access
- Where public access is restricted to minimize the possibility of tampering or vandalism

Mounting Instructions

To mount the enclosure:

1. Use the enclosure as a template and mark the location of the four mounting holes on the mounting surface.
2. Set aside the enclosure and drill holes for the screws at the marked locations.

   Note: *Drill holes for #10 (5 mm) screws or #10 wall anchors. Use wall anchors if the mounting surface is dry wall or masonry.*
3. Secure the enclosure to the mounting surface with the enclosed #10 (5 mm) screws or #10 wall anchors.

Wiring High-voltage AC Power

⚠ WARNING

Hazardous Voltage!

Disconnect all electrical power, including remote disconnects, before servicing. Follow proper lockout/tagout procedures to ensure the power cannot be inadvertently energized. Failure to disconnect power before servicing could result in death or serious injury.

8

⚠WARNING

Proper Field Wiring and Grounding Required!

All field wiring MUST be performed by qualified personnel. Improperly installed and grounded field wiring poses FIRE and ELECTROCUTION hazards. To avoid these hazards, you MUST follow requirements for field wiring installation and grounding as described in NEC and your local/state electrical codes. Failure to follow code could result in death or serious injury.

Notice:

Use Copper Conductors Only!

Unit terminals are designed to accept copper conductors only. Other conductors could cause equipment damage.

To ensure proper operation of the controller, install the power supply circuit in accordance with the following guidelines:

- The panel must receive power from a dedicated power circuit. Failure to comply could cause panel malfunctions.
- A disconnect switch for the dedicated power circuit must be near the panel, within easy reach of the operator, and marked as the disconnecting device for the panel.
- 24 Vac or higher power-wire conduits or wire bundles must not contain input/output wires. Failure to comply could cause the controller to malfunction due to electrical noise.
- Power wiring must comply with the National Electrical Code™ (NEC) and applicable local electrical codes.
- 120 Vac wiring requires three-wire service (line, neutral, ground).

  Note: *The transformer voltage utilization range is 98–132 Vac (120 Vac nominal). The panel automatically detects whether the current is 50 or 60 cycle.*

9

To connect 120 Vac power wires:

1. Lock open the supply-power disconnect switch.
2. At the top-right corner of the enclosure, remove the knockout for .50 inch (13 mm) conduit.
3. Open or remove the enclosure door if it is already installed.
4. Inside of the enclosure at the top-right corner, remove the line voltage area cover plate.
5. Feed the high-voltage power wire into the enclosure.
6. Connect the line wire to the **'L'** terminal as shownin Figure 3.

Figure 3. AC wiring for 120 Vac

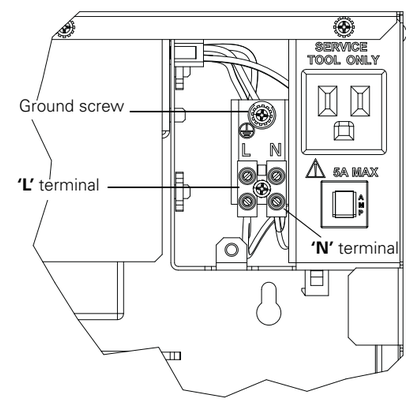

10

7. Connect the neutral wire to the **'N'** terminal as shown above.
8. Connect the green ground wire to the chassis ground screw as shown above.

   Note: *The ground wire should be continuous back to the circuit breaker panel.*

⚠ Warning

Hazardous Voltage!

The cover plate must be in place when the controller is operating. Failure to replace the cover plate could result in death or serious injury.

9. Replace the cover plate.
10. On a field-supplied label, record the location of the circuit breaker panel and the electrical circuit. Attach the label to the cover plate.

11

Installing the Enclosure Door

Note: *Before installing the enclosure door, unpack the door and check for missing or damaged parts and any cracks in the plastic. Then, ensure that the magnetic catch is installed.*

To install the enclosure door:

1. Hold the door at a 90° angle from the enclosure as shown in Figure 4.
2. Align the hinge pegs on the door with the hinge holes on the enclosure.
3. Gently lower the door until it rests securely in the hinge holes.
4. Verify that the door swings freely on the hinges and that the magnetic catch holds the door securely when it is closed.

12

Figure 4. Proper door alignment

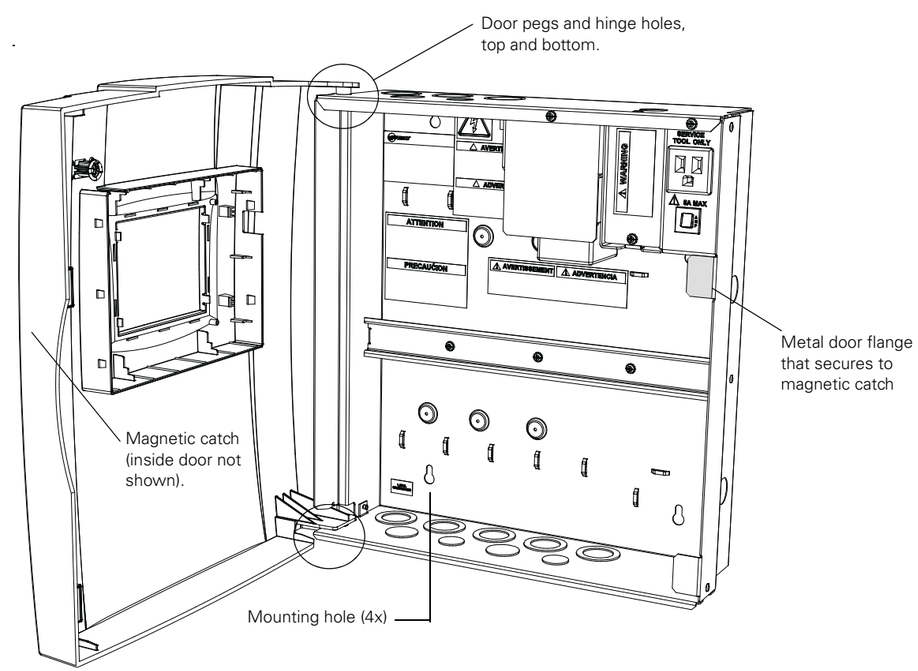

14

Agency Listings/Compliance

United States compliance

- UL Listed — UL 916 Energy Management Accessory

Canada compliance

- CUL Listed — CSA C22.2 No. 205

Trane optimizes the performance of homes and buildings around the world. A business of Ingersoll Rand, the leader in creating and sustaining safe, comfortable and energy efficient environments, Trane offers a broad portfolio of advanced controls and HVAC systems, comprehensive building services, and parts.
For more information, visit www.Trane.com.

Trane has a policy of continuous product and product data improvement and reserves the right to change design and specifications without notice

© 2010 Trane All rights reserved
X39641180-01C 09 May 2011
Supersedes X39641180-01B
(08 Dec 2010)

Ingersoll Rand

Product Data Sheet

Tracer™ XM32 Expansion Module

The Tracer XM32 Expansion Module provides additional points when needed for Tracer UC400 and UC600 applications. Each expansion module has a total of four (4) relay outputs. Use of a PM014 24Vac/24Vdc power supply (*Order Number X136515380*) is required for applications requiring more than two expansion modules.

Packaged Contents

- One (1) XM32 expansion module
- One (1) bag of 3-pin and 4-pin terminal connectors
- One (1) IMC cable harness

Important: *Visually inspect contents for obvious defects or damage. All components have been thoroughly inspected before leaving the factory. Any claims for damage incurred during shipment should be filed immediately with the carrier.*

XM32 Configurable Connections

The table below provides information about the XM32 configurable connections.

Table 1. Device connections

Connection	Quantity	Types	Range	Notes
Binary output (BO1 to BO4)	4	General purpose	10 A; up to 277 Vac	POWER NEEDS TO BE WIRED TO THE BINARY OUTPUT. ALL OUTPUTS ARE ISOLATED FROM EACH OTHER AND FROM GROUND OR POWER. ***RANGES GIVEN ARE PER CONTACT.***
		Motor	1/3 hp @ 125 Vac *or* 1/2 hp @ 277	
		Pilot duty (inductive load)	2 A; up to 125 Vac	
		Resistive load	8 A; up to 250 Vac *or* 10 A; up to 30 Vac *or* 10 A; up to 30 Vdc	

© 2011 Trane. All rights reserved.

Specifications and Dimensions

Storage	
Temperature:	-67°F to 203°F (-55°C to 95°C)
Relative humidity:	5% to 95% (noncondensing)
Operating	
Temperature:	-40°F to 158°F (-40°C to 70°C)
Humidity:	5% to 95% (noncondensing)
Power:	24 Vdc ±10%, 100 mA
• Mounting weight of controller: • Mounting weight of controller with terminal connectors:	• Mounting surface must support .43 lb. (.195 kg) • Mounting surface must support .47 lb. (.213 kg)
Environmental rating (enclosure):	NEMA 1
Installation:	UL 840: Category 3
Pollution:	UL 840: Degree 2
Agency Compliance	
• UL916 PAZX- Open Energy Management Equipment • UL94-5V Flammability • CE Marked • FCC Part 15, Subpart B, Class B Limit	

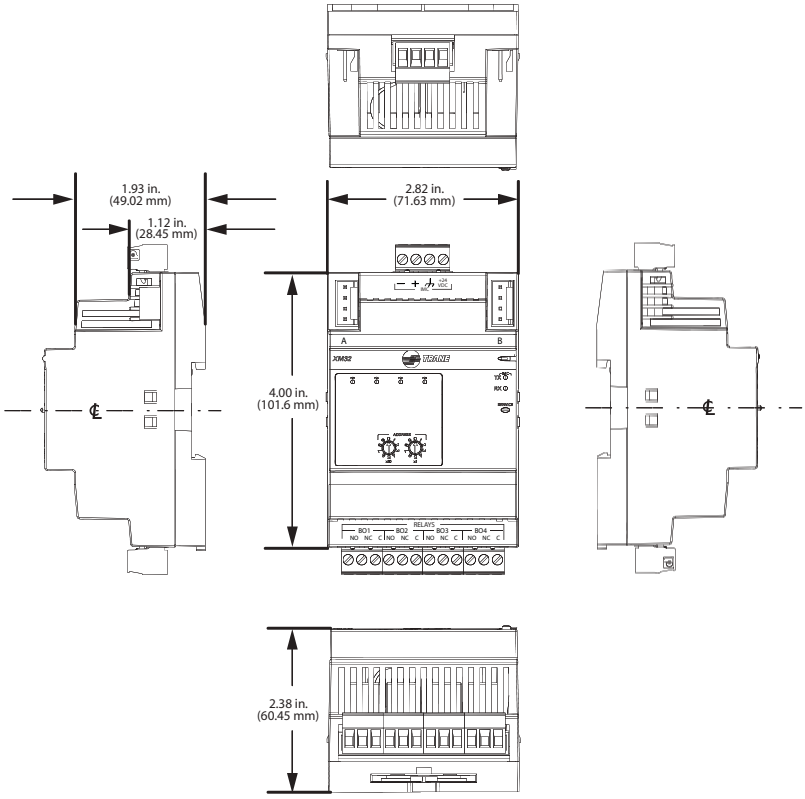

Trane optimizes the performance of homes and buildings around the world. A business of Ingersoll Rand, the leader in creating and sustaining safe, comfortable and energy efficient environments, Trane offers a broad portfolio of advanced controls and HVAC systems, comprehensive building services, and parts. For more information, visit www.Trane.com.

Trane has a policy of continuous product and product data improvement and reserves the right to change design and specifications without notice.

© 2011 Trane. All rights reserved.

BAS-PRC052-EN 15 Apr 2011
Supersedes: BAS-PRC052-EN 03 Mar 2011

Product Data Sheet

Combination Zone Sensors

Trane™ relative humidity and temperature sensors utilize a polymer capacitive-sensing element for reliable sensing accuracy and superb recovery from saturation. Temperature output is provided by a 10 kΩ, Type II thermistor. Both sensors are housed in a common enclosure for reduced installation costs and improved appearance.

Features, Benefits, and Part Number:

Features	Benefits
Two sensors in one enclosure	Reduces installation costs and improved building aesthetics
High accuracy	Reduces energy costs and improves environmental control and comfort
Maintenance-free design	Reduces field calibration and maintenance costs
Polymer capacitive element	Superb recovery from saturation reduces maintenance and downtime
Trane wall enclosure	Consistent enclosure design improves building aesthetics

Model Description		Part Number	BAYSENS	Global Parts
Sensors	3% Relative Humidity and Temperature	X1379044401	BAYSENS036A	SEN01177

January 2008

© 2008 Trane All rights reserved

BAS-PRC026-EN

Specifications

Description	
Sensor operating temperature	From -20°F to 140°F (-29°C to 60°C)
Storage temperature	From -85°F to 158°F (-65°C to 70°C)
Operating humidity range	From -40°F to 185°F (-40°C to 85°C)
Storage/operating humidity range	99% relative humidity (RH), noncondensing
Accuracy	±3% RH over 20% to 95% RH at 77°F (25°C) and includes hysteresis, linearity, and repeatability
Hysteresis	Less that 1% RH
Repeatability	0.5% RH
Sensitivity	0.1% RH
Thermistor resistance	10 kΩ at 77°F
Temperature accuracy	±0.36°F (±0.2°C)
Supply voltage	18 to 36 Vdc
Output characteristics	4-20 mA for 0% to 100% RH
Drift rate	Less that 1% per year
Sensing element	Polymer capacitive
Mounting	Fits a standard 2 in. by 4 in. junction box (vertical mount only). Mounting holes are spaced 3.2 in. (83 mm) apart on vertical center line. Includes mounting screws for junction box or wall anchors for sheet-rock walls. Overall dimensions: 2.9 in (74 mm) by 4.7 in. (119 mm)

Schematic (Typical)

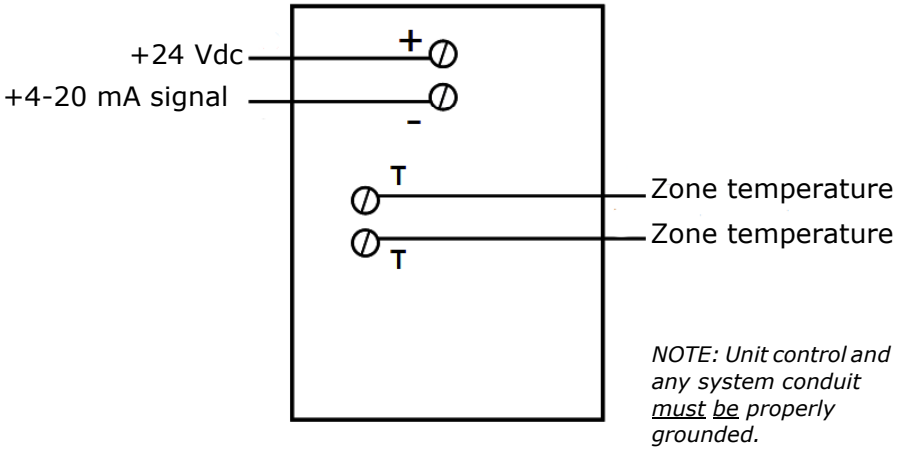

NOTE: Unit control and any system conduit must be properly grounded.

Trane and the Trane logo are trademarks of Trane in the United States and other countries. All trademarks referenced in this document are the trademarks of their respective owners.

Literature Order Number	BAS-PRC026-EN
Date	January 2008
Supersedes	New

www.trane.com

For more information, contact your local Trane office or e-mail us at comfort@trane.com

Trane has a policy of continuous product and product data improvement and reserves the right to change design and specifications without notice.

AF24-MFT (-S) US

Proportional damper actuator, Spring Return Fail-Safe, Multi-Function Technology®

Technical Data	AF24-MFT (-S) US
Power supply	24 VAC, ± 20%, 50/60 Hz 24 VDC, ±10%
Power consumption	2.5 W holding 6 W running
Transformer sizing	10 VA (Class 2 power source)
Electrical connection	3 ft, 18 GA, appliance cable, 1/2" conduit connector
Overload protection	electronic throughout 0 to 95° rotation
Operating range Y*	2 to 10 VDC 4 to 20 mA (w/500 Ω, 1/4 W resistor) ZG-R01
Input impedance	100kΩ for 2 to 10 VDC (0.1 mA) 500Ω for 4 to 20 mA 1500Ω for PWM, Floating point and On-Off control
Feedback output U*	2 to 10 VDC, 0.5 mA max
Torque	min 133 in-lb (15 Nm)
Direction of rotation*	spring: reversible with cw/ccw mounting motor: reversible with built-in switch
Mech. angle of rotation*	95°, adjustable 35° to 95° w/ZDB-AF2
Running time motor*	150 seconds constant
Running time spring	<20 sec spring return fail safe position
Angle of Rotation Adaptation*	Off (Default)
Override control*	Min. (Min Position) = 0% - ZS (Mid. Position) = 50% - Max. (Max. Position) = 100%
Position indication	visual indicator, 0° to 95° (0° is spring return position)
Auxiliary switches (AF24-MFT-S US)	2 x SPDT 7A (2.5A) @ 250 VAC, UL listed one set at +5°, one adjustable 25° to 85°
Manual override	3 mm hex crank (supplied)
Humidity	5 to 95% RH, non-condensing
Ambient temperature	-22 to +122° F (-30 to +50° C)
Storage temperature	-40 to +176° F (-40 to +80° C)
Housing	NEMA 2, IP54
Housing material	zinc coated metal
Noise level	less than 45 dB (A)
Agency listings	UL 873 listed, CE, CSA C22.2 No. 24 certified
Quality standard	ISO 9001
Servicing	maintenance free
Weight	6.0 lbs. (2.7 kg.)

* Variable when configured with MFT options

- **Torque min. 133 in-lb**
- **Control 2 to 10 VDC (DEFAULT)**
- **Feedback 2 to 10 VDC (DEFAULT)**

Application
For proportional modulation of dampers and control valves in HVAC systems. The AF24-MFT US provides mechanical spring return operation for reliable fail-safe application.

Default/Configuration
Default parameters for 2 to 10 VDC applications of the AF24-MFT US actuator are assigned during manufacturing. If required, custom versions of the actuator can be ordered. The parameters noted in the Technical Data table are variable.

These parameters can be changed by three means:
- Pre-set configurations from Belimo
- Custom configurations from Belimo
- Configurations set by the customer using the MFT-Handy® or the MFT-Actuate™ PC software application.

Operation
The AF24-MFT US actuator provides 95° of rotation and is provided with a graduated position indicator showing 0° to 95°. The actuator will synchronize the 0° mechanical stop or the physical damper or valve mechanical stop and use this point for its zero position during normal control operations. A unique manual override allows the setting of any actuator position within its 95° of rotation with no power applied.This mechanism can be released physically by the use of a crank supplied with the actuator. When power is applied the manual override is released and the actuator drives toward the fail-safe position.

The actuator uses a brushless DC motor which is controlled by an Application Specific Integrated Circuit (ASIC) and a microprocessor. The microprocessor provides the intelligence to the ASIC to provide a constant rotation rate and to know the actuator's exact position. The ASIC monitors and controls the brushless DC motor's rotation and provides a Digital Rotation Sensing (DRS) function to prevent damage to the actuator in a stall condition. The position feedback signal is generated without the need for mechanical feedback potentiometers using DRS. The actuator may be stalled anywhere in its normal rotation without the need of mechanical end switches.

The AF24-MFT US is mounted directly to control shafts up to 1.05" diameter by means of its universal clamp and anti-rotation bracket. A crankarm and several mounting brackets are available for damper applications where the actuator cannot be direct coupled to the damper shaft. The spring return system provides minimum specified torque to the application during a power interruption. The AF24-MFT US actuator is shipped at +5° (5° from full fail-safe) to provide automatic compression against damper gaskets for tight shut-off.

Note: Please See Documentation on Multi-Function Technology (pg 255)

Dimensions [All numbers in brackets are in millimeters.]

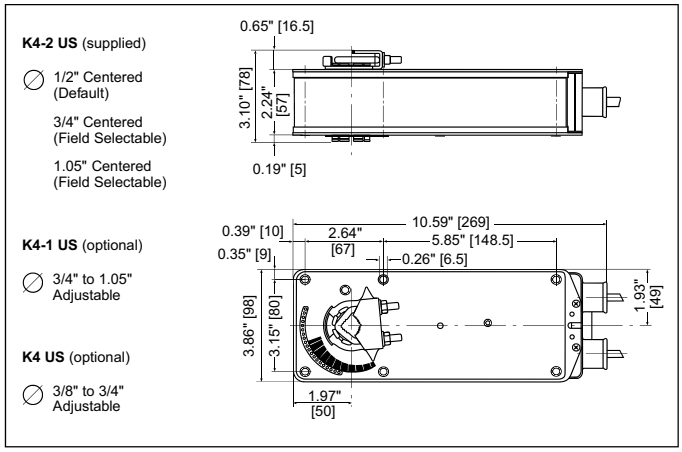

I20618 - Subject to change. © Belimo Aircontrols (USA), Inc.

Standard Wiring

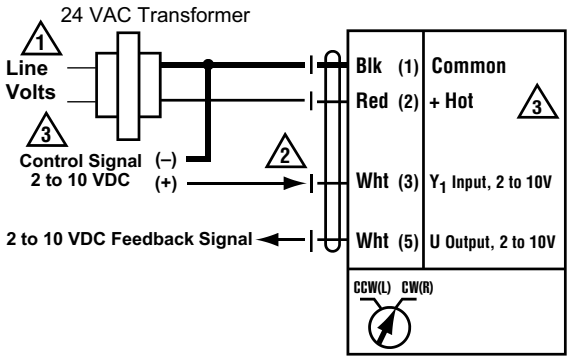

Override to zero position

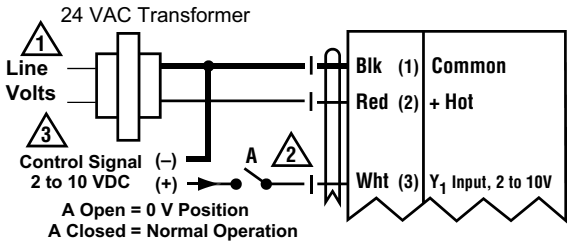

Override to 10 V position

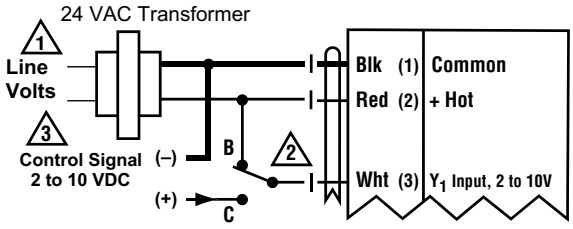

Override control to min, mid, max, positions

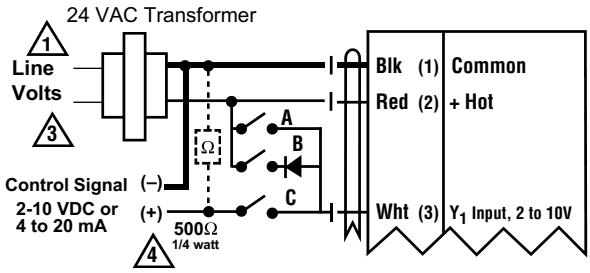

	Functions	a	b	c
Min*	0%			
Mid*	50%			
Max*	100%			
Normal**	Control mode acc. to Y			

* Default selectable 0-100%. See Configuration Data Sheet.
** Customizable. See Configuration Data Sheet.

2 to 10 VDC Control Signal

Standard Wiring

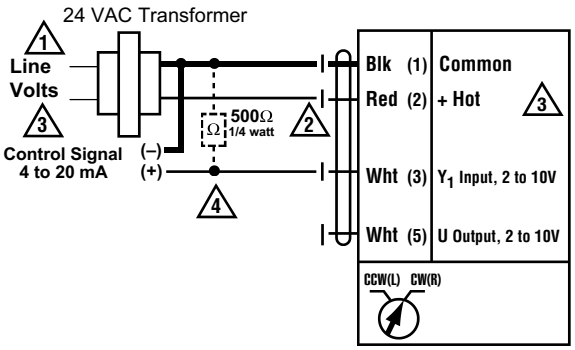

Override to zero position

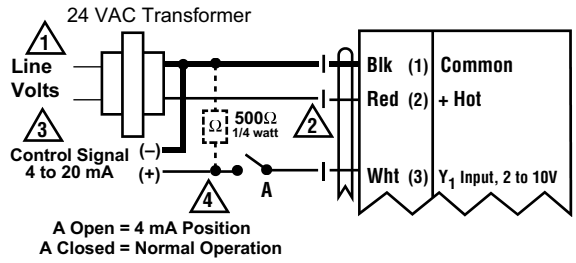

Override to 20 mA position

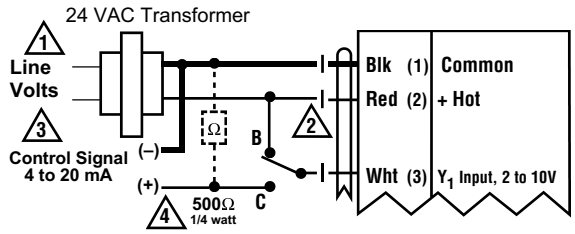

B Closed = 20 mA Position
C Closed = Normal Operation

With a 4-20 mA Input, up to 4 actuators may be wired in parallel. A 2% shift in the signal is seen when using a 500Ω resistor. Power consumption must be observed.

4 to 20 mA Control Signal

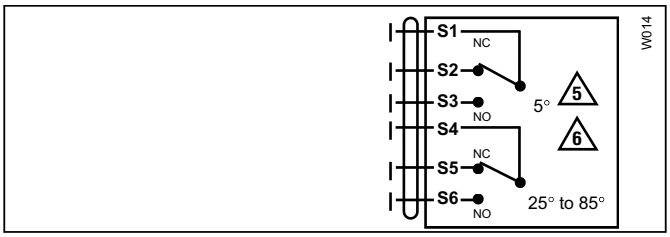

Auxiliary Switch AF24-MFT-S US

Notes

1. Provide overload protection and disconnect as required.
2. Actuators may be connected in parallel if not mechanically mounted to the same shaft. Power consumption and input impedance must be observed.
3. Actuator may also be powered by 24 VDC.
4. ZG-R01 may be used.
5. For end position indication, interlock control, fan startup, etc., AF24-MFT-S US incorporates two built-in auxiliary switches: 2 x SPDT, 7A (2.5A) @250 VAC, UL listed, one switch is fixed at +5°, one is adjustable 25° to 85°.
6. Meets UL and CSA requirements without the need of an electrical ground connection.

I20618 - Subject to change. © Belimo Aircontrols (USA), Inc.

Ordering example – Non-Spring Return

The ordering process for the new Flexible non-spring return actuators is simple. First select a base actuator that meets the needs of the application and then add the desired options.

1. Base actuator **LMX24-MFT (LM100)**

Select a base actuator

- Torque or linear force, control input, position feedback, power supply…
- See page 40 for complete list of non-spring base actuators.

2. Clamp option **3/4" dia. universal clamp (6)**

Select clamp that accommodates the damper shaft

- LM defaults to a 5/8" dia. clamp, but the 3/4" option can be selected as seen in this example.
- NM and AM default to a 1/2" dia. clamp that also accommodates 3/4" and 1.05" dia. shafts.
- GM accommodates a 1.05" dia. shafts. A 3/4" dia. clamp is available for retrofits of past GM and SM types.

3. Electrical Connection option **16 ft. [5m] 18 GA, plenum rated cable (C5)**

- Default connection is a 3 ft. [1m] long cable. 10 ft [3m] or 16ft [5m] cables are also available.
- Actuators with a "-T" in the model number have a screw terminal strip, which default to a NEMA 1 enclosure rating. A NEMA 2 cover for the terminal strip can be selected.

4. Programming **P-20003 (W03)**

- For –3 and –SR type actuators only the running time can be changed. This is a one-time factory setting.
- For –MFT type actuators refer to page 41 for available configurations.

5. Total **LMX24-MFT (LM100 6 C5 W03)**

Ordering example – Spring Return

1. Base actuator **AF24-MFT-S US**

Select a base actuator

2. Programming **P-10003 (A03)**
2 – 10 VDC input / 0 – 5 VDC feedback

Select pre-set programming code

- P-100xx (Axx) Control voltage applications
- P-200xx (Wxx) Pulse width modulation applications
- P-300xx (Fxx) Floating point applications
- P-400xx (Jxx) On/Off applications
- Or create custom MFT configuration codes, see page 41
- Or create custom MFT configurations in the field with MFT-Actuate PC software.

3. Total **AF24-MFT-S US + P10003**

Order confirmation and invoice example for spring return actuators:

Line Item	Model	Qty
10	AF24-MFT US **P-10003**	10
20	LF24-MFT US **P-20002**	10
30	AF24-MFT US **P-10006**	5
40	**99981-00100**	25

The part number 99981-00100 is a requirement for Belimo as a designation for all the configurations in an order. This product's description will read "MFT CONFIGURATION CHARGE, (P-…/ V-…)". It is used to confirm the correct quantities and to invoice the proper fee for the MFT configurations. The total quantity of configurations is represented in this one line item.The product line item will list the specific configuration below the actuator ordered. If you have more than one model with multiple configurations, each change in configuration will be shown on separate line items. As an example lines 10 and 30 are the same model actuator with different configurations.

I20618 - Subject to change. © Belimo Aircontrols (USA), Inc.

Spring Return MFT Actuators

Model Description

AF 24 –MFT –S US

MFT Configuration

Programming Code

Auxiliary Switch

–S	Built-In

Power Supply

24 VAC/DC

Electrical Connection

US	3 ft Cable

Control Type

-MFT	Multi-function Technology
-MFT95	0 to 135 ohm
-MFT-20	6 to 9 VDC 20 VDC power supply

Actuator family and torque output

Actuator	Torque
AF24-MFT US	133 in-lb
AF24-MFT-S US	
AF24-MFT95 US	
NF24-MFT US	60 in-lb
LF24-MFT US	35 in-lb
LF24-MFT-S US	
LF24-MFT-20 US	
LF24-MFT-S-20 US	

Options

Code	Description (MFT Only)
A01	P-10001
A02	P-10002
A03	P-10003
A28	P-10028
W02	P-20002
W03	P-20003
F02	P-30001

Common or default configurations are configured at no charge. Uncommon or custom codes will be configured by Belimo for a $30.00 list add to each actuator. See page 41 for an extended list of MFT programming codes.

I20618 - Subject to change. © Belimo Aircontrols (USA), Inc.

Pre-set MFT Configurations

DC Voltage Control, P-1000… (A…)

Spring Return

AF24-MFT(-S) US 133 in-lb	LF24-MFT(-S) US 35 in-lb
NF24-MFT US 60 in-lb	LF24-MFT(-S)-20 US 35 in-lb

Non-Spring Return

GMX24-MFT 360 in-lb	NMX24-MFT 90 in-lb
AMX24-MFT 180 in-lb	LMX24-MFT 45 in-lb

Application

P-1000… configuration types are used for VDC control applications. Pre-set configurations are listed which offer solutions for standard control applications.
Additional pre-set configurations are listed which offer solutions for non-standard control application for:

- Adjustable Start and Stop points
- Sequencing actuators
- Combination for master slave

LISTED 94D5 TEMP. IND & REG. EQUIP.

Wiring – VDC

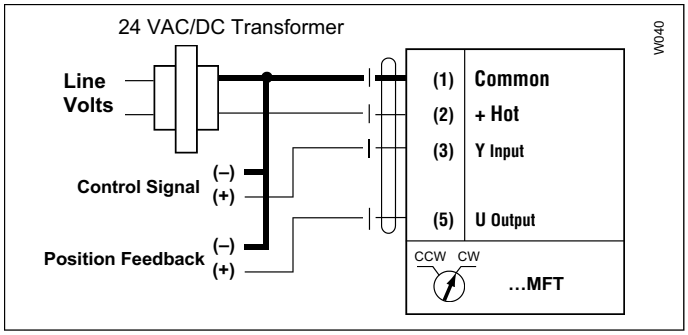

Select a Configuration

	Configration Description	Code	Input Range	Position Feedback	Running Time	Torque %	Adaptation
VOLTAGE	**P-10001***	**A01**	**2.0 to 10.0 VDC**	**2.0 to 10.0 VDC**	**150**	**100**	**MANUAL**
	P-10002	A02	0.5 to 10.0 VDC	0.0 to 10.0 VDC	150	100	MANUAL
	P-10003	A03	2.0 to 10.0 VDC	0.0 to 5.0 VDC	150	100	MANUAL
	P-10004	A04	4.0 to 7.0 VDC	2.0 to 10.0 VDC	150	100	MANUAL
	P-10005	A05	6.0 to 9.0 VDC	2.0 to 10.0 VDC	150	100	MANUAL
	P-10006	A06	10.5 to 13.5 VDC	2.0 to 10.0 VDC	150	100	MANUAL
	P-10007	A07	0.5 to 5.0 VDC	2.0 to 10.0 VDC	150	100	MANUAL
	P-10008	A08	0.5 to 5.0 VDC	0.0 to 10.0 VDC	150	100	MANUAL
	P-10009	A09	5.0 to 10.0 VDC	2.0 to 10.0 VDC	150	100	MANUAL
	P-10010	A10	5.0 to 10.0 VDC	0.0 to 10.0 VDC	150	100	MANUAL
	P-10013	A13	0.5 to 10.0 VDC	2.0 to 10.0 VDC	150	100	MANUAL
	P-10015	A15	2.0 to 5.0 VDC	2.0 to 10.0 VDC	150	100	MANUAL
	P-10016	A16	2.0 to 6.0 VDC	2.0 to 10.0 VDC	150	100	MANUAL
	P-10017	A17	6.0 to 10.0 VDC	2.0 to 10.0 VDC	150	100	MANUAL
	P-10018	A18	14 to 17 VDC	2.0 to 10.0 VDC	150	100	MANUAL
	P-10020	A20	9.0 to 12.0 VDC	2.0 to 10.0 VDC	150	100	MANUAL
	P-10028	A28	0.5 to 10.0 VDC	0.0 to 10.0 VDC	100	100	MANUAL
	P-10031	A31	0.5 to 4.0 VDC	2.0 to 10.0 VDC	150	100	MANUAL
	P-10063	A63	0.5 to 4.5 VDC	0.5 to 4.5 VDC	150	100	MANUAL
	P-10064	A64	5.5 to 10.0 VDC	5.5 to 10.0 VDC	150	100	MANUAL
	P-10091	A91	2.0 to 10.0 VDC	2.0 to 10.0 VDC	95	100	MANUAL

* P-10001 (A01) is the default configuration code.

I20618 - Subject to change. © Belimo Aircontrols (USA), Inc.

Pre-set MFT Configurations

Pulse Width Modulation Control, P-2000… (W…)

Spring Return

AF24-MFT(-S) US 133 in-lb	LF24-MFT(-S) US 35 in-lb
NF24-MFT US 60 in-lb	LF24-MFT(-S)-20 US 35 in-lb

Non-Spring Return

GMX24-MFT 360 in-lb	NMX24-MFT 90 in-lb
AMX24-MFT 180 in-lb	LMX24-MFT 45 in-lb

Application

P-2000… configuration types are used for Pulse Width Modulation control outputs. Most D.D.C. controllers have digital outputs which incorporate a default PWM range. This enables a D.O. to be used as a proportional output when needed. Simply select the appropriate configuration code according to your application.

LISTED 94D5 TEMP. IND & REG. EQUIP.

Wiring – PWM, triac source and sink

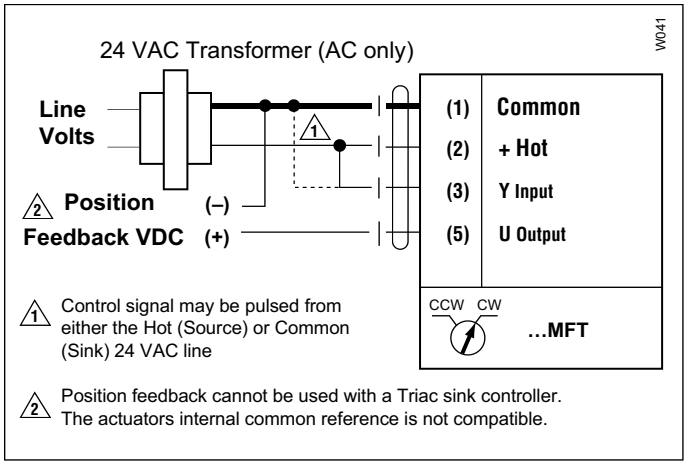

Select a Configuration

PULSE WIDTH MODULATION	Configration Description	Code	Input Range	Position Feedback	Running Time	Torque %	Adaptation
	P-20001	W01	0.59 to 2.93 sec	2.0 to 10.0 VDC	150	100	MANUAL
	P-20002	W02	0.02 to 5.00 sec	2.0 to 10.0 VDC	150	100	MANUAL
	P-20003	W03	0.10 to 25.50 sec	2.0 to 10.0 VDC	150	100	MANUAL
	P-20004	W04	0.10 to 25.60 sec	2.0 to 10.0 VDC	150	100	MANUAL
	P-20005	W05	0.10 to 5.20 sec	0.0 to 5.0 VDC	150	100	MANUAL
	P-20012	W12	0.50 to 25.50 sec	0.0 to 10.0 VDC	150	100	MANUAL
	P-20013	W13	0.50 to 2.93 sec	0.0 to 5.0 VDC	150	100	MANUAL
	P-20014	W14	0.10 to 10.00 sec	2.0 to 10.0 VDC	150	100	MANUAL

I20618 - Subject to change. © Belimo Aircontrols (USA), Inc.

Pre-set MFT Configurations

Floating Point Control, P-3000… (F…)

Spring Return

AF24-MFT(-S) US 133 in-lb	LF24-MFT(-S) US 35 in-lb
NF24-MFT US 60 in-lb	LF24-MFT(-S)-20 US 35 in-lb

Non-Spring Return

GMX24-MFT 360 in-lb	NMX24-MFT 90 in-lb
AMX24-MFT 180 in-lb	LMX24-MFT 45 in-lb

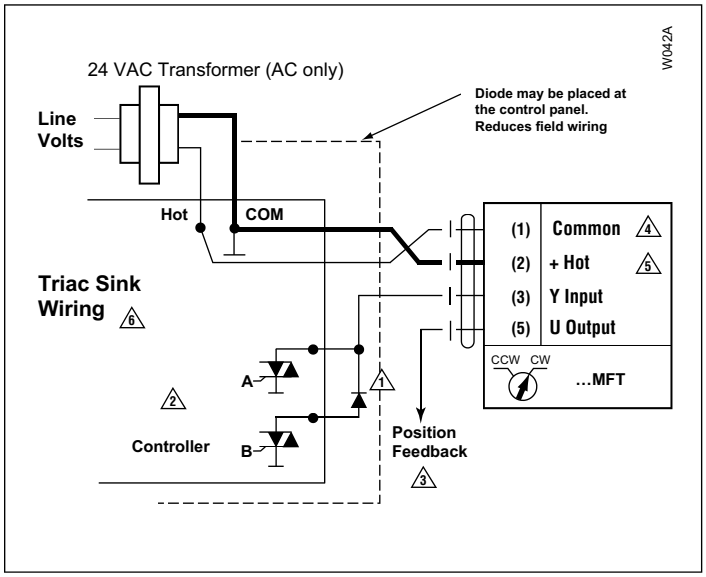

Note: Diode is internal on non-spring return type actuators, connect to controller using wires 3 and 4.

Application

P-3000… configuration types are used for floating point control outputs. In this application MFT actuators offer constant running time and standard feedback options. A IN4004 or IN4007 diode is required for spring return actuators only.

Wiring – Floating Point

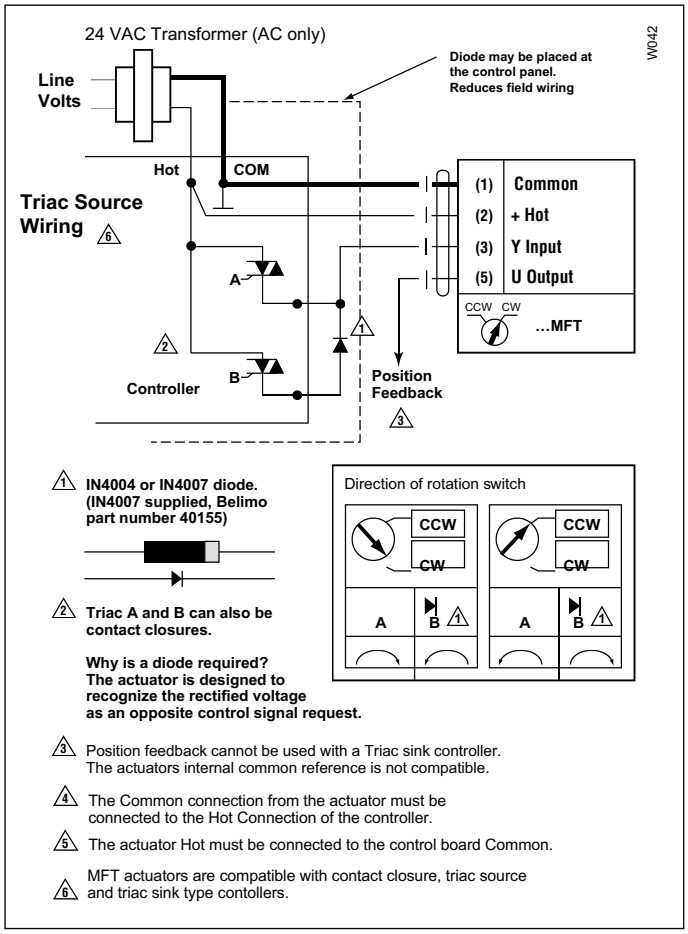

Note: Diode is internal on non-spring return type actuators, connect to controller using wires 3 and 4.

Select a Configuration

FLOATING POINT CONTROL	Configration Description	Code	Input Range	Position Feedback	Running Time	Torque %	Adaptation
	P-30001	F01	Floating Point	2.0 to 10.0 VDC	150	100	MANUAL
	P-30002	F02	Floating Point	0.0 to 10.0 VDC	150	100	MANUAL
	P-30003	F03	Floating Point	2.0 to 10.0 VDC	100	100	MANUAL
	P-30004	F04	Floating Point	0.0 to 5.0 VDC	100	100	MANUAL
	P-30005	F05	Floating Point	0.0 to 10.0 VDC	100	100	MANUAL
	P-30006	F06	Floating Point	0.0 to 5.0 VDC	150	100	MANUAL
	P-30007	F07	Floating Point	2.0 to 10.0 VDC	300	100	MANUAL
	P-30008	F08	Floating Point	2.0 to 10.0 VDC	75	100	MANUAL
	P-30009	F09	Floating Point	2.0 to 10.0 VDC	85	100	MANUAL
	P-30010	F10	Floating Point	0.0 to 2.5 VDC	150	100	MANUAL

I20618 - Subject to change. © Belimo Aircontrols (USA), Inc.

Pre-set MFT Configurations

On/Off Control, P-4000… (J…)

Spring Return

AF24-MFT(-S) US 133 in-lb	LF24-MFT(-S) US 35 in-lb
NF24-MFT US 60 in-lb	LF24-MFT(-S)-20 US 35 in-lb

Non-Spring Return

GMX24-MFT 360 in-lb	NMX24-MFT 90 in-lb
AMX24-MFT 180 in-lb	LMX24-MFT 45 in-lb

Application

P-4000… configuration types are used for on/off control outputs. The configuration allows for service replacement of on/off actuators when a true on/off actuator is not available. In addition the MFT actuator offers additional functionality in the on/off mode, such as configuration P-40003 with minimum position and 2 to 10 VDC feedback.

LISTED 94D5 TEMP. IND & REG. EQUIP.

Wiring – Two Position

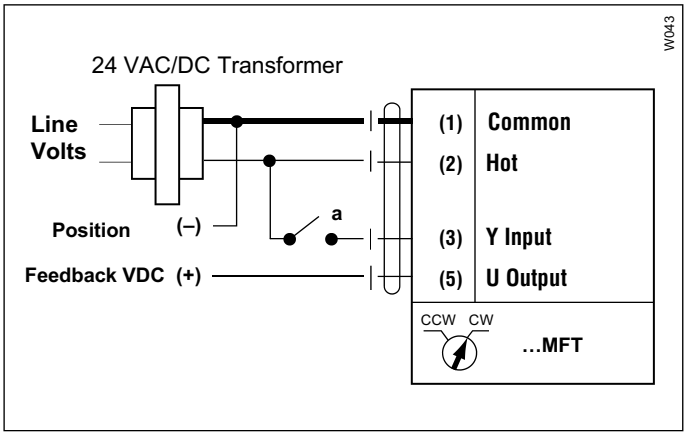

Select a Configuration

ON/OFF CONTROL	Configration Description	Code	Input Range	Position Feedback	Running Time	Torque %	Adaptation
	P-40001	J01	On/Off	2.0 to 10.0 VDC	75	100	MANUAL
	P-40002	J02	On/Off	2.0 to 10.0 VDC	150	100	MANUAL
	P-40003	J03	On/Off	2.0 to 10.0 VDC	75	100	MANUAL
	P-40004	J04	On/Off	0.0 to 5.0 VDC	100	100	MANUAL
	P-40005	J05	On/Off	0.0 to 10.0 VDC	100	100	MANUAL

I20618 - Subject to change. © Belimo Aircontrols (USA), Inc.

Control

	Specifications	Parameter Variables	Description
INPUT	**VDC**	• Start: 0.5 to 30 VDC • Stop: 2.5 to 32 VDC (Minimum 2 VDC between start and stop required)	P-100…(A…) configuration types are used for VDC control applications. Pre-set configurations are listed which offer solutions for standard control applications. Additional pre-set configurations are list which offer solutions for non-standard control application for: • Sequencing Actuators • Adjustable Start and Stop Points • Combination for Master Slave
INPUT	**Pulse Width Modulation (PWM)**	PWM Range • 0.02 to 50 sec. range minimum interval • 20 [ms] between pulses • Minimum cycle duration 520 [ms]	P-200… (W…) configuration types are used for pulse width modulation control outputs with four standard ranges. There must be at least one second between the min pulses allowed (0.02 sec.) and the max pulse allowed (50 sec.). (eg: 0.02 to 1.02 sec.)
INPUT	**Floating Point**		P-300… (F...) configuration types are used for floating point control outputs. In this application MFT actuators offer constant running time and standard feedback options. A 1N4004 diode is required for spring return actuators. The actuator is designed to recognize the rectified voltage as an opposite control signal request.
INPUT	**On/Off**		P-400… (J…) configuration types are used for on/off control outputs. The configuration allows for service replacement of on/off actuators when a true on/off actuator is not available. In addition the MFT actuator offers additional functionality in the on/off mode, such as configuration P-40003 (J03) with minimum position and 2 to 10 VDC feedback.
FEEDBACK	**Position Feedback**	Position Feedback Range • Start: 0.5 to 8 VDC Selectable • Stop: 2 to 10 VDC Selectable	The default-operating mode of the U5 output is 2 to 10 VDC for position feedback. Matching the controllers feedback input voltage is possible by selecting a pre-set configuration (page 278) or by creating a custom configuration (page 279).
SENSITIVITY	**Control Sensitivity**	Normal (Default)	MFT actuators are designed with a unique non-symmetrical dead band. The actuator follows an increasing control signal with a 80 mV resolution. If the signal changes in the opposite direction, the actuator will no respond until the control signal changes by 200 mV. This allows the MFT actuator to track even the slightest deviation very accuratly, yet allowing the actuator to "wait" for a much larger change in control signal. *See figure 2.*
SENSITIVITY		Reduced	Upon detecting an un-stable control loop, the "reduced" setting can be manually selected via the PC software. This will reduce the sensitivity of the actuator by 50%. Meaning, control accuracy will now be 160 mV for signal changes in the same direction. And a 400 mV signal change in the opposite direction is needed for the actuator to change direction. Once driving in the opposite direction the actuator will respond in 160 mV increments. Upon improving the control loop stability you can return the actuator to the "Normal" mode.

I20618 - Subject to change. © Belimo Aircontrols (USA), Inc.

Figure 2

Control Accuracy and Stability (AF / NF / LF)

All MFT actuators have built-in brushless DC motors which provide better accuracy and longer service life.

The …MFT US actuators are designed with a unique non-symmetrical deadband. The actuator follows an increasing or decreasing control signal with a 40 mV resolution. If the signal changes in the opposite direction, the actuator will not respond until the control signal changes by 200 mV. This allows these actuators to track even the slightest deviation very accurately, yet allowing the actuator to "wait" for a much larger change in control signal due to control signal instability.

AF / NF / LF Actuators responds to a 40 mV signal when not changing direction from stop position.

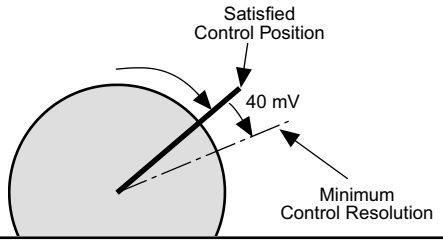

AF / NF / LF Actuators responds to a 200 mV signal when reversing direction from stop position.

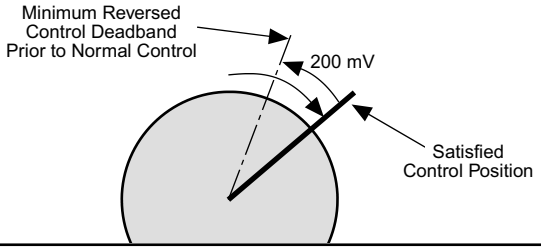

Control Accuracy and Stability (GM / AM / NM / LM / AH / LH / LU)

All Belimo actuators have built-in brushless DC motors which provide better accuracy and longer service life.

Belimo non-spring return actuators are designed with a unique non-symmetrical deadband. The actuator follows an increasing or decreasing control signal with a 75 mV resolution. If the signal changes in the opposite direction, the actuator will not respond until the control signal changes by 175 mV. This allows these actuators to track even the slightest deviation very accurately, yet allowing the actuator to "wait" for a much larger change in control signal due to control signal instability.

Actuator responds to a 75 mV signal when not changing direction from stop position.

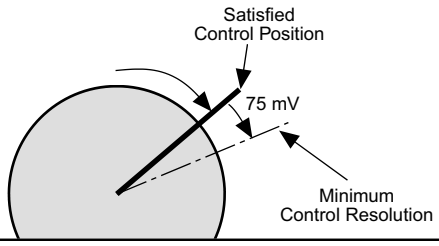

Actuator responds to a 175 mV signal when reversing direction from stop position.

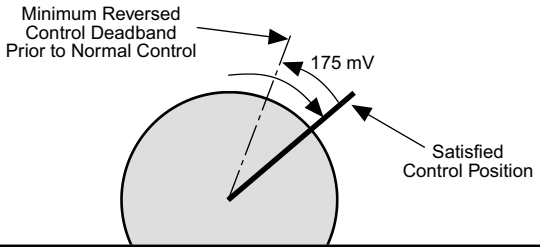

I20618 - Subject to change. © Belimo Aircontrols (USA), Inc.

Motion

	Specifications	Parameter Variables	Description
RUNNING TIME	**AF / NF / LF**	75 to 300 seconds	Running time is selectable allowing for customizing the actuator for the application at hand. Adjustable running time allows for: • Matching HVAC system sequence of operation. • Improving control loop stability. • Reducing actuating noise (slower running). • Retrofit applications The running time is constant and independent of load.
	GM	70 to 280 seconds	
	AM	90 to 350 seconds	
	NM	45 to 170 seconds	
	LM	35 to 150 seconds	
ROTATION	**Direction of Rotation**	Default or Reversed	The direction of rotation can be "Direct" or "Reverse" acting of the control signal. The direction of rotation is selected from a CW and CCW switch located on the actuator. An alternative method of changing the direction of rotation is to use the PC-Tool software. This option allows you to make remote set-up corrections without having the need to be at the actuator. Selection of the direction of rotation is only possible via the PC-Tool software or manually with the switch on the actuator. Selection via a preset configuration is not an option.
	Intermediate Position Control (Override Control)	• Minimum Position (Default 0%) • Intermediate Position (Default 50%) • Maximum Position (Default 100%) Intermediate Positions are achieved through 'forced override' positions. ***See Figure 3 – Forced Overrides.***	All intermediate settings are adjustable from 0 to 100%. Programmed as default, these control positions are possible by using the wiring diagram in Figure 3. The override functions can be sued as a means to test the actuator's functionality during equipment servicing or troubleshooting. Intermediate positions can also be integrated into the control circuit as a part of the sequence of operation. The Min, Mid, and Max positions can be used in any MFT control mode. • VDC: For stand-alone controllers where a minimum position is needed. • PWM: Eliminate add-on accessories. • Floating Point: New functionality to a common application. • On/Off: New functionality to a common application. – Satisfy combustion air requirements or boiler sequencing with O/A damper. – Eliminates secondary minimum position dampers.

Figure 3 - Forced Overrides

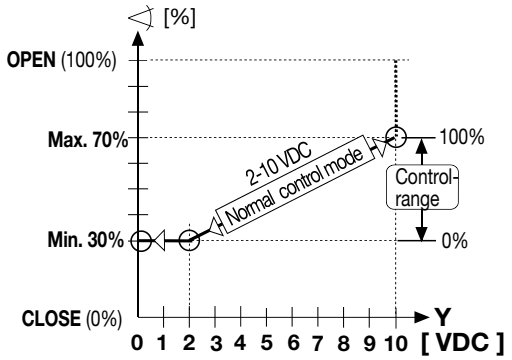

Full control signal range is maintained between min and max rotation positions.
i.e.: AM24-MFT on Belimo CCV, adjusting actuator to damper flow characteristics.

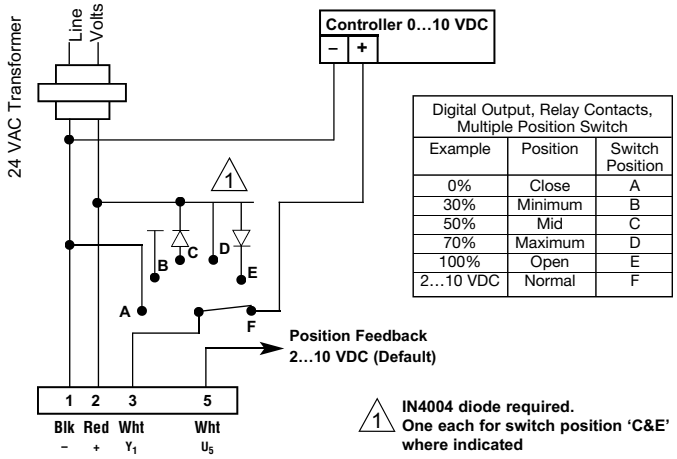

Digital Output, Relay Contacts, Multiple Position Switch		
Example	Position	Switch Position
0%	Close	A
30%	Minimum	B
50%	Mid	C
70%	Maximum	D
100%	Open	E
2...10 VDC	Normal	F

I20618 - Subject to change. © Belimo Aircontrols (USA), Inc.

Motion

Specifications		Parameter Variables	Description
	Adaptation	OFF	When the manual override button is depressed, and released, the actuator will perform synchronization. The actuator will simply drive to the mechanical zero position and return to its last control position.
		ON – Manual	The default setting for adaptation is “ON – Manual”. When the ON-Manual setting is selected, adaptation is initiated by: • Pressing the manual override button twice (GM / AM / NM / LM). • Clicking the manual override crank twice (AF). • Clicking the CW/CCW switch twice (NF and LF). When adaptation is selected, (On-Manual or Automatic) the actuator will drive one full cycle to its mechanical end stops OR the valves mechanical seats. Upon completion of this cycle the actuators working range (input, feedback and running time) will be adapted to the actual mechanical angle of rotation.
		ON – Automatic	When the ON-Automatic setting is selected at every power-up the actuator will automatically adapt to the mechanical angle of rotation. Also upon pressing the manual override button or CW/CCW switch, adaptation is initiated (See above).
Mechanical Relationship	**Sound and Running Time**	All Actuators	As the speed of the actuator increases, there is an increase in the sound power level.
	Torque and Running Time	Spring Return (AF / NF / LF)	Though the running time remains constant, at approximately the 100-second range there is a loss in output torque. This is due to the association of runtime to torque. To gain a faster running time there is a loss in torque. ***See figure 4***

MFT

Figure 4

Torque and Run Time, AF24-MFT US

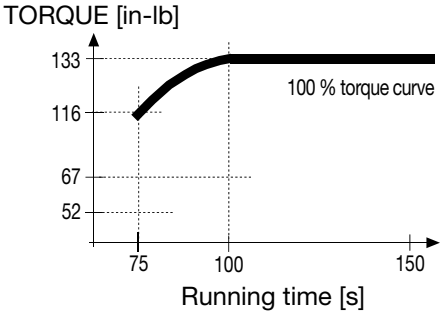

Torque and Run Time, NF24-MFT US

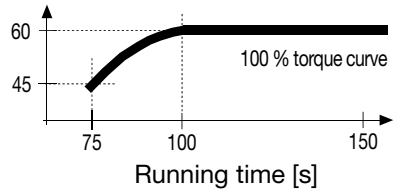

Torque and Run Time, LF24-MFT US

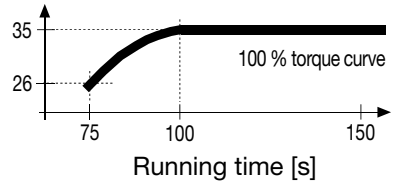

I20618 - Subject to change. © Belimo Aircontrols (USA), Inc.

Sevice

	Specifications	Parameter Variables	Description
DISPLAYS	**Identification**	Serial Number	Displays the actuators internal serial number. The serial number is also printed on a label at the side of the actuator.
		Actuator Type / Software Version	Displays the actuator nomenclature (AF24-MFT US) and MFT software version.
		Assembly Location	Displays the where the actuator was assembled.
		Setpoint	Displays the actual control input position as a percentage. As signal input changes you will see the setpoint percentage change accordingly.
	Actual Values	Actual	Displays the actual position as a percentage. As the setpoint changes the actual position percentage will increase or decrease accordingly. If the actuator is capable of rotating the damper or valve, this can be of benefit when troubleshooting an application.
	Function	Control Type & Setting	Displays the actual control type and operating range.
		Feedback Type & Setting	Displays the actual feedback signal type and operating range.
		Torque % Setting	Displays the actual torque setting.
		Running Time	Displays the actual running time as programmed.
		Direction of Rotation	Displays the status of the direction of rotation option (Normal or Reversed).
		Min, Mid, Max Position	Displays the actual position setting of the Intermediate position control. See page 270 for more details.
		Adaptation	Displays the actual setting of the adaptation function (OFF, ON-Manual, ON-Automatic). See page 271 for more information.
		Sensitivity / Hysteresis	Displays the actual setting of the sensitivity button (Normal or Reduced).
		Synchronization	Displays the actual setting of the synchronization function (Normal, Sync at 0%, Sync at 100%).
	Data Log	Total Time / Operating Time	Total number of hours the actuator is connected to a power supply.
		Active Time	Total number of hours the actuator is in mechanical motion.
		Stop / Go Ratio (Hunting %)	Displays a percentage the total number of hours the actuator has spent in mechanical motion, comparing the total time to the active time.
	Sensitivity	Normal, Reduced	Displays the setting of the sensitivity function. See page 268 for more information.
FUNCTIONS	**Messages**		Displays all messages present. Messages can be deleted as well.
	Function Test		This function enables you to check for complete opening and closing of the actuator. The test report contains: • Information on the Project • Identification on the Actuator • A list of fault messages pending before the start of the test • The test steps and results • The current actuator settings This is of benefit when troubleshooting an application, as the actuator will drive the damper or valve. This gives an opportunity to observe the installation to identify any possible problems.
	Adaptation	See Adaptation on page 271.	Initiates the adaptation feature of the MFT actuator. The actuators working range (input, feedback, and running time) will be adapted to the actual angle of rotation. This is of benefit when troubleshooting an application, as the actuator will drive the damper or valve. This gives you an opportunity to observe the installation to identify any possible problems.
	Synchronization	Normal	At initial commissioning, when the manual override button is pressed, the actuator runs to a default position defined by the position of the CW/CCW direction of rotation switch.
		Sync at 0%	At each power-up (includes power failures), the actuator runs to a default position defined by the position of the CW/CCW direction of rotation switch.
		Sync at 100%	At each power-up (includes power failures), the actuator runs to a default position of the CW/CCW direction of rotation switch.

I20618 - Subject to change. © Belimo Aircontrols (USA), Inc.

Wiring Multiple MFT Actuators

ATTENTION

Please note the method of wiring multiple Belimo …MFT US actuators to a single control shaft for damper and valve applications.

MFT= Master-Slave

Applications which require more torque than one actuator is a very common installation. The current Belimo solution is to mount multiple actuators onto the damper or valve. In the past this required the installer to wire the actuators in a "master-slave" arrangement. This was typical for the AF24-SR US actuator.

By adding more actuators you can effectively increase the torque proportional to the minimum specified torque times the number of actuators. This is a normal installation typically seen on the following installations.

- **Large dampers or valves**
- **Large multiple section dampers**
- **Rack and Pinion style globe valves**
- **Ball or Butterfly valves**

For retro-fit of an existing AF24-SR US which is wired in "Master-Slave", rewire the installation so the remaining AF24-SR US is now the "Master" and the new AF24-MFT US is the "Slave".

Multiple actuators mounted to one control shaft

Model	Max. Qty Per Shaft	Torque Generated
AF24-MFT(-S) US	4	532 in-lb
NF24-MFT(-S) US	1	60 in-lb
LF24-MFT(-S) US	1	35 in-lb
GMX24-MFT	2	720 in-lb
AMX24-MFT	1	180 in-lb
NMX24-MFT	1	90 in-lb
LMX24-MFT	1	45 in-lb

The wiring method for multiple actuators mounted to shafts which are ***not*** mechanically connecting other actuators is to wire the control signal in parallel with each actuator

Multiple XM24-MFT95…

Exception: No mechanical dual mounting of AF24-MFT95 US is possible. Electrical parallel wiring of AF24-MFT95 US is possible only for mechanically separate applications.

Solution: For increased torque requirement use AF24-MFT95 US as a master and the slave must be an AF24-MFT US. The masters feedback must match the slaves input signal. (Both are default 2-10 VDC.)

Notes

1. Provide overload protection and disconnect as required.
2. Actuators may be connected in parallel if not mechanically mounted to the same shaft. Power consumption and input impedance must be observed.
3. Actuator may also be powered by 24 VDC.
4. ZG-R01 may be used.
5. Control signal may be pulsed from either the Hot or Common 24 VAC line.

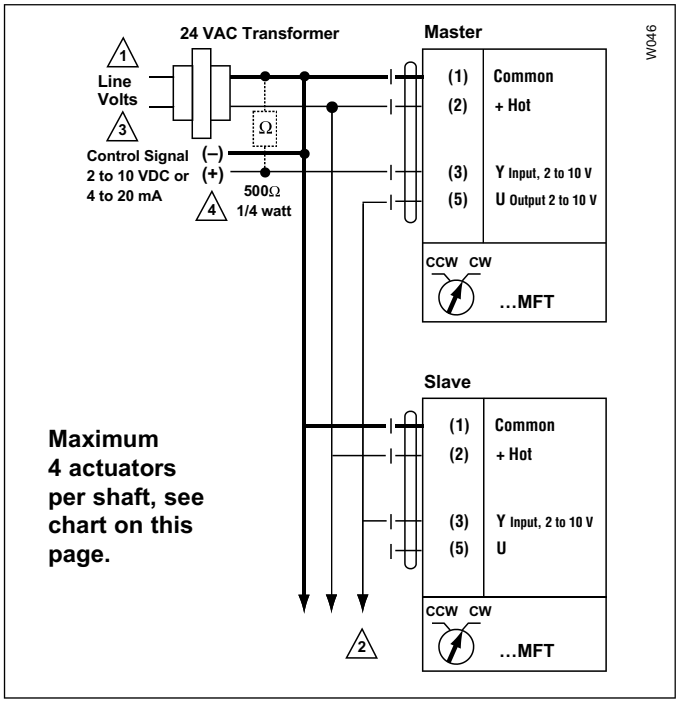

Wiring multiple …MFT actuators to <u>one shaft</u>. All MFT actuators are wired in master-slave configuration.

Wiring of multiple …MFT actuators on valves must be master-slave (wires 3-5).

MFT actuator configurations should also co-ordinate with each other. Meaning the master input = controllers output. Master output = slave input. Slave output = controller input.

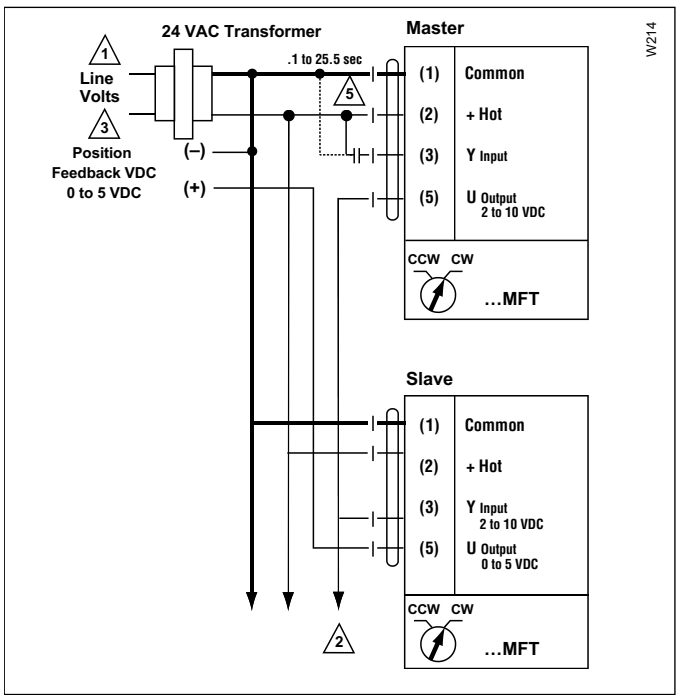

Controller Output	Master Feedback	Slave Input	Slave Feedback
0.1 to 25.5 sec	2 to 10 VDC	2 to 10 VDC	0 to 5 VDC

I20618 - Subject to change. © Belimo Aircontrols (USA), Inc.

DIFFERENTIAL PRESSURE SWITCH

P32 SERIES

DESCRIPTION

The **P32 Series Differential Pressure Switch** is used to detect differential pressure or low-positive gauge pressure by using only the high-pressure connection and leaving the low-pressure connector open. It can also detect vacuum by using only the low-pressure connection and leaving the high-pressure connector open to ambient pressure.

The **P32 Series** is factory set at the bottom of its operating range with the diaphragm in a vertical plane. The setting will change if mounted in other positions.

The **P32AF** has a close differential, and the **P32AC** has a standard differential.

FEATURES

- ***Easy-to-read setpoint scale***
- ***Versatile mounting options***
- ***Durable construction***
- ***Setpoint switching repeatability***

P32 Switch with L Bracket

APPLICATION

- ***Air proving with electric duct heaters, humidifiers, and more***
- ***Maximum airflow controller for variable volume systems***
- ***Reheat duct-powered systems***
- ***Clogged filter detection***
- ***Detection of icing of air conditioning coils and initiation of defrost cycle***

SPECIFICATIONS

Ambient temp	-40°F (-40°C) min, 165°F (75°C) max
Connector	High pressure: metal 1/8" FNPT inside x 1/2" NPSM outside; low pressure: molded 1/8" FNPT
Overpressure	1 psig (6.9 kPa)
Mounting	Direct or with mounting bracket (supplied)
Shipping weight	1.0 lb (0.45 kg); 1.1 lb (0.5 kg) with fittings
Electrical ratings	

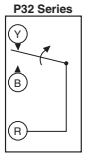

Type P32AF Close Differential, 1/4 hp

Motor Ratings VAC	120	208	240
AC full load amp	5.8	3.35	2.9
AC locked rotor amp	34.8	20.1	17.4
Noninductive or resistive load 10A, 24-277 VAC			
Pilot duty - 125 VA, 24 VAC; 360 VA, 120-277 VAC			

Type P32AC Standard Differential, 1/2 hp

Motor Ratings VAC	120	208	240
AC full load amp	9.8	5.65	4.9
AC locked rotor amp	58.8	33.9	29.4
Noninductive or Resistive Load 10A, 24-277 VAC			
Pilot duty - 125 VA, 24 VAC; 360 VA, 120-277 VAC			

Model	Contact Action	Range "W.C. (Pa)	Differential "W.C. (Pa)		Setpoint	Scale Plate	Bracket
			Min Setpoint	Max Setpoint			
P32AC-1	SPDT	0.15-12 (37.4-2990)	0.07 (17.4)	0.6 (149.5)	Adjustable	Yes	L
P32AC-2*	SPDT	0.05-5 (12.5-1246)	0.04 (10.0)	0.20 (49.8)	Adjustable	Yes	U
P32AF-1	SPDT	0.05-5 (12.5-1246)	0.025 (6.2)	0.11 (27.4)	Adjustable	Yes	L
P32AF-2*	SPDT	0.05-5 (12.5-1246)	0.025 (6.2)	0.11 (27.4)	Adjustable	Yes	U

*Supplied with 1/4" compression fitting, 4" extension tube, two mounting screws, gasket, angle barb fitting installed

ORDERING INFORMATION

Specify model number as shown in Specifications above.
Add a **-C** to the end of the model number to request specific calibration.

RELAY IN A BOX
RIB, RIBT PILOT SERIES

DESCRIPTION

The **Relay In A Box (RIB) Pilot Series** controls most BAS, HVAC, low-horsepower motor, and lighting applications. The relays come mounted and prewired in a housing, which saves the installer the time, trouble, and expense of buying separate components (relay, socket, mounting rail, and enclosure) and assembling them on the job or at the shop.

The **RIB Pilot Series** has a protruding 1/2" or 3/4" NPT nipple from which all wires exit (except **T Series**). To install, remove a conduit knockout in the equipment, insert the wires and nipple through the hole, tighten the locknut, and connect the wires.

RIB Pilot Series - 10A Relays
The **RIB Pilot Series** has relay contacts rated for 10A and is used to control light electrical loads, drive power relays/contactors, or sense the voltage being fed to electrical loads. The **RIB Pilot Series** requires a low coil drive current and is provided with circuitry to allow powering the relay coil from a wide range of AC or DC voltages.

RIBT Series - High/Low Voltage Separation
The **RIBT Series** is designed to provide physically separate entrances for connections to the relay input coil and output contacts. Relay contact wires exit the housing through a 1/2" or 3/4" NPT nipple. The cover of the **RIBT Series** is removable, and the coil drive wires can enter the housing through one of two convenient openings with star bushings or 1/2" conduit. The coil drive wires are secured to screw terminals within a separate wiring compartment in the **RIBT Series**. Most of the **RIBs** in the **Pilot Series** are also available in the **T Series**.

NEW!

Functional Devices, Inc. RIB

RIBU1C

RIBU1S

c UL us

FEATURES

- ***Convenient and economical to use***
- ***Relay status indicator via LED***
- ***Coil uses low current and accepts a wide range of AC and DC voltages***
- ***Closed/Open/Auto switch option available***
- ***Nipple- or screw-mountable***
- ***Compact, gray plastic enclosure***
- ***Color-coded wires for eliminating errors***
- ***UL listed for UL 916 Energy Management and UL 864 Fire***
- ***Made in the USA***

SPECIFICATIONS - GENERAL

Enclosure size

A	1.7"H x 2.8"W x 1.5"D (4.32 x 7.11 x 3.81 cm)
B	4.0"H x 4.0"W x 1.8"D (10.16 x 10.16 x 4.57 cm)
G	2.3"H x 3.2"W x 1.8"D (5.84 x 8.13 x 4.57 cm)
Operating temp	-30° to 140°F (-34° to 60°C)
Humidity	5% to 95% non-condensing
Life rating (all relays)	10 million cycles min mechanical
Relay status	LED, ON - relay activated
Housing	Plenum rated, NEMA 1, optional NEMA 4

Coil pull-in/drop-out (nominal values)

	PULL-IN		DROP-OUT	
COIL DRIVE	**DC**	**AC**	**DC**	**AC**
10-30 VAC/VDC	10	9	2.8	2.1
24 VAC/VDC	20	18	3.8	3
120 VAC	–	102	–	9
208-277 VAC	–	176	–	13

Wire length	16" (40.6 cm)
Agency approvals	UL listed, UL 916 Energy Management UL 864 Fire, ULC listed, CSFM
Weight	Approx. 1.0 lb (0.45 kg)
Warranty	1 year

RELAY IN A BOX

RIB, RIBT PILOT SERIES

SPECIFICATIONS - PILOT SERIES

MODEL	TYPE	COIL DRIVE	SIZE/ HUB	OVR SW	RELAY CONTACT RATINGS	RELAY CONTACT WIRING	RELAY COIL DRIVE DATA
RIBU1C* **RIBU1C-N4†**	1-SPDT	10-30 VAC/VDC 120 VAC 50/60 Hz	A-1/2	–	10A resistive 120/240/277 VAC 10A resistive 28 VDC 480 VA pilot duty 240/277 VAC 480 VA ballast 277 VAC 600W tungsten 120 VAC N.O. 240W tungsten 120 VAC N.C. 1/3 hp for N.O. 120/240 VAC 1/6 hp for N.C. 120/240 VAC 1/4 hp for N.O. 277 VAC 1/8 hp for N.C. 277 VAC	**Relay #1** NC (blue) COM (yellow) NO (orange) **Relay #2** (if present) NC (gray) COM (purple) NO (brown)	**Wiring** **Relay #1** Common - White/Yellow wire 10-30 VAC/VDC - White/Blue wire 120 VAC - White/Black wire 208-277 VAC - White/Brown wire **Relay #2** (if present) Common - White/Purple wire 10-30 VAC/VDC - Gray/White wire 120 VAC - White/Red wire 208-277 VAC - White/Orange wire **Input Current** 30 mA @ 10 VAC 32 mA @ 12 VAC 42 mA @ 24 VAC 50 mA @ 30 VAC 25 mA @ 120 VAC 35 mA @ 208-277 VAC 12 mA @ 10 VDC 14 mA @ 12 VDC 16 mA @ 24 VDC 18 mA @ 30 VDC
RIBU2C*	2-SPDT		G-3/4	–			
RIBH1C* **RIBH1C-N4†**	1-SPDT	10-30 VAC 208-277 VAC 50/60 Hz	A-1/2	–			
RIBH2C*	2-SPDT		G-3/4	–			
RIBU1SC*	1-SPDT	10-30 VAC/VDC 120 VAC 50/60 Hz	G-1/2	Yes-2	10A resistive 277 VAC 480 VA pilot duty 277 VAC 480 VA ballast 277 VAC 600W tungsten 120 VAC N.O. 240W tungsten 120 VAC N.C. 1/3 hp for N.O. 120-240 VAC 1/6 hp for N.C. 120-240 VAC 1/4 hp for N.O. 277 VAC 1/8 hp for N.C. 277 VAC Status Contact on **RIBU1SM** and **RIBH1SM**: 5A max @ 277 VAC	Auto Manual (yellow) Common N.C. - Closed Open N.O. - Closed (blue) N.C. (orange) N.O. **Relay #1** (orange) Closed (orange) Open Auto **Relay #2 of RIBU2S2** Closed (brown) Open (brown) Auto **Relay #2 of RIBU2SC** NC (gray) COM (purple) NO (brown) **STATUS** = 2nd Pole of switch of **RIBU1SM**, **RIBH1SM** Closed (brown) Open (purple) Auto (gray)	
RIBH1SC*	1-SPDT	10-30 VAC 208-277 VAC 50/60 Hz	G-1/2	Yes-2			
RIBU1S*	1-SPST-NO**	10-30 VAC/VDC 120 VAC 50/60 Hz	G-1/2	Yes			
RIBU2SC	1-SPST-NO** 1-SPDT		G-3/4	Yes			
RIBU2S2	2-SPST-NO**		B-3/4	Yes-2			
RIBU1SM	1-SPST-NO**		G-1/2	Yes + Status			
RIBH1S*	1-SPST-NO**	10-30 VAC/VDC 208-277 VAC 50/60 Hz	G-1/2	Yes			
RIBH1SM	1-SPST-NO**		G-1/2	Yes + Status			
RIB2401D* **RIB2401D-N4†**	1-DPDT	24 VAC/VDC 120 VAC 50/60- Hz	A-1/2	–	10A resistive 30 VDC 10A resistive 277 VAC 1/2 hp for N.O. 120/240 VAC 1/3 hp for N.C. 120/240 VAC	NC (blue) COM (yellow) NO (orange)	**Wiring** Common - White/Yellow wire 24 VAC/VDC - White/Blue wire 120 VAC - White/Black wire 208-277 VAC - White/Brown wire **Input Current** 29 mA @ 24 VAC 22 mA @ 24 VDC 28 mA @ 120 VAC 32 mA @ 208-277 VAC
RIB2402D **RIB2402D-N4†**	1-DPDT	24 VAC/VDC 208-277 VAC 50/60 Hz	A-1/2	–	10A resistive 30 VDC 10A resistive 277 VAC 180 VA pilot duty 120 VAC 1/8 hp for N.C. 120 VAC	NC (gray) COM (purple) NO (brown)	
RIBL3C	3-SPST-NO	10-30 VAC/VDC 50/60 Hz	B-1/2	–	10A resistive 120-277 VAC 10A resistive 28 VDC 480 VA pilot duty 240-277 VAC 480 VA ballast 277 VAC 600W tungsten 120 VAC N.O. 240W tungsten 120 VAC N.C. 1/3 hp for N.O. 120-240 VAC 1/6 hp for N.C. 120-240 VAC 1/4 hp for N.O. 277 VAC 1/8 hp for N.C. 277 VAC	**Relay #1** (black) (black) **Relay #2** (blue) (blue) **Relay #3** (yellow) (yellow) **Relay #4 (if present)** NC (gray) COM (purple) NO (brown)	**Wiring** Common - White/Red wire Relay#1 - White/Black wire Relay#2 - White/Blue wire Relay#3 - White/Yellow wire Relay#4 - White/Brown wire (if present) **Input Current** 30 mA @ 10 VAC 12 mA @ 10 VDC 32 mA @ 12 VAC 14 mA @ 12 VDC 42 mA @ 24 VAC 16 mA @ 24 VDC 50 mA @ 30 VAC 18 mA @ 30 VDC
RIBL4C	3-SPST-NO 1-SPDT		B-1/2	–			
SIB02S	SPDT Manual Switch	–	A-1/2	Yes	Switch ratings 20A 277 VAC	(blue) (yellow) (orange)	No Relay Switch Only

ORDERING INFORMATION

Order by model number

* Models may be ordered in **RIBT Series** with high/low voltage separation.

** Can be ordered normally closed by adding - **NC** after the model number. Contact Kele.

† N4 has NEMA 4 housing

CURRENT-OPERATED SWITCHES AND TRANSDUCERS

RIBXK, RIBXG, RIBXK420 SERIES

DESCRIPTION

The **RIBXK, RIBXG,** and **RIBXK420 Series** include both current-operated switches and current transducers. Solid-core and split-core current-operated switch models have a solid-state switch that operates when the current level sensed by the internal current transformer exceeds a fixed or adjustable set-point. Solid-core current transducer models output a 4-20 mA signal proportional to the line current being monitored.

FEATURES

- ***Solid- and split-core switch models have fixed (Go/No go) or adjustable trip points***
- ***Solid-wire transducer models have a 4-20 mA output***
- ***Low cost***
- ***Ratcheting cam clamp to secure switch to wire***
- ***Removable mounting tab***

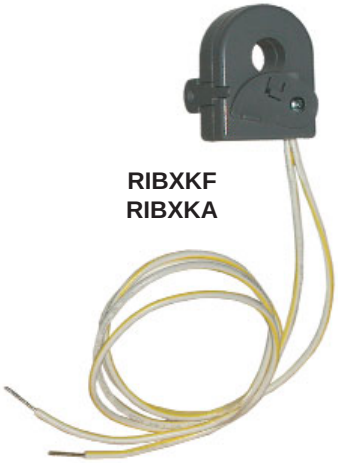

RIBXKF
RIBXKA

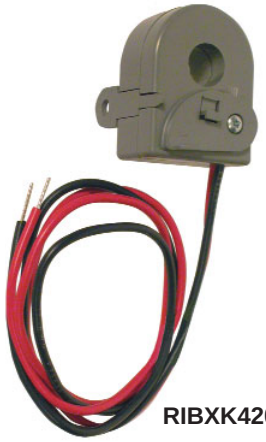

RIBXK420

RIBXKTF
RIBXKTA

RIBXGTF

c UL us LISTED

SPECIFICATIONS

RIBXK, RIBXG SERIES	
Monitored AC current	
RIBXKF, RIBXKTF	0.25-150A
RIBXKA, RIBXKTA	0.5-150A
RIBXGF, RIBXGTF	0.35-150A
RIBXGA, RIBXGTA	0.75-150A
Switch trip point	
RIBXKF, RIBXKTF	0.25A, fixed
RIBXKA, RIBXKTA	0.5-150A, adjustable
RIBXGF, RIBXGTF	0.35A, fixed
RIBXGFL, RIBXGTFL	0.75A, fixed
RIBXGA, RIBXGTA	0.75-150A, adjustable
Switch type	Solid state, normally open
Switch rating	30 VAC/VDC, 0.4A max
Off-state leakage	<30 µA @ 30 VAC/VDC
On-state voltage drop	<0.3 VAC/VDC @ 0.1A, <1.6 VAC/VDC @ 0.4A
RIBXK420 SERIES	
Output	4-20 mA, 30 mA max
Accuracy	±5% FS
Linearity	±1% FS
Power	24 VDC
Max loop resistance	500Ω@ 24 VDC
Input range	20, 50, or 100A
General	
Connections	16" (40.6 cm), 18 AWG, 600V wires or terminals for 14-22 AWG
Temp	-30° to 140°F (-34.4° to 60°C)
Max sense voltage	600 VAC
Weight	0.3 lb (0.13 kg)
Agency approvals	UL listed, UL916, UL864

DIMENSIONS/WIRING

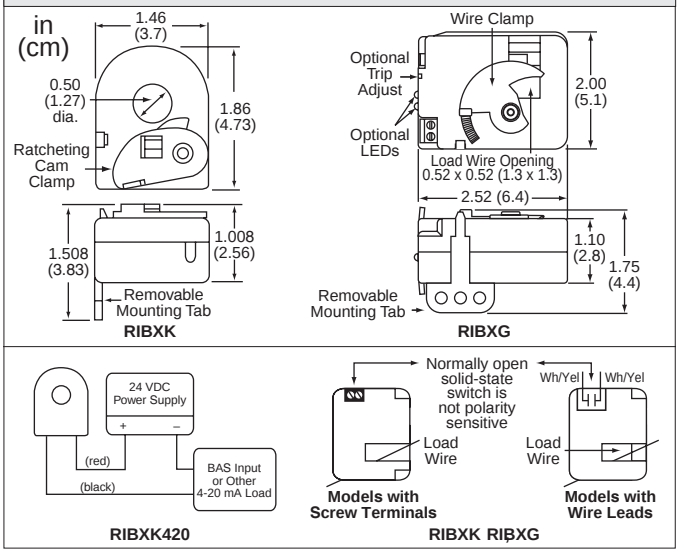

ORDERING INFORMATION

MODEL	DESCRIPTION
RIBXKF	Solid-core current-operated switch, wire leads, fixed trip
RIBXKTF	Solid-core current-operated switch, terminals, fixed trip
RIBXKA	Solid-core current-operated switch, wire leads, adjustable trip
RIBXKTA	Solid-core current-operated switch, terminals, adjustable trip
RIBXK420-20	Solid-core current transducer, 0-20A
RIBXK420-50	Solid-core current transducer, 0-50A
RIBXK420-100	Solid-core current transducer, 0-100A
RIBXGF	Split-core current-operated switch, fixed 0.35A trip, wire leads
RIBXGTF	Split-core current-operated switch, fixed 0.35A trip, terminal strip
RIBXGFL	Split-core current-operated switch, fixed 0.75A trip, wire leads, LEDs
RIBXGTFL	Split-core current-operated switch, fixed 0.75A trip, terminal strip, LEDs
RIBXGA	Split-core current-operated switch, adjustable trip, wire leads, LEDs
RIBXGTA	Split-core current-operated switch, adjustable trip, terminal strip, LEDs