Installation, Operation, and Maintenance

Split System Cooling Condensers

6-20 Tons

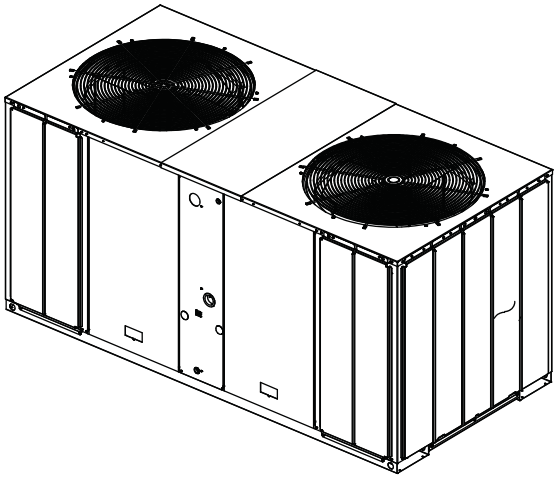

(60 Hz)	(50 Hz)
TTA073D***A	TTA061D***A
TTA090D***A	TTA076D***A
TTA120D/E/F***A	TTA086D***A
TTA150E***A	TTA101D/E/F***A
TTA180E/F***A	TTA126E***A
TTA240E***A	TTA156E/F***A
TTA240F**BA	TTA201E/F***A

⚠SAFETY WARNING

Only qualified personnel should install and service the equipment. The installation, starting up, and servicing of heating, ventilating, and air-conditioning equipment can be hazardous and requires specific knowledge and training. Improperly installed, adjusted or altered equipment by an unqualified person could result in death or serious injury. When working on the equipment, observe all precautions in the literature and on the tags, stickers, and labels that are attached to the equipment.

March 2011

SS-SVX10A-EN

Warnings, Cautions and Notices

Warnings, Cautions and Notices. Note that warnings, cautions and notices appear at appropriate intervals throughout this manual. Warnings are provided to alert installing contractors to potential hazards that could result in personal injury or death. Cautions are designed to alert personnel to hazardous situations that could result in personal injury, while notices indicate a situation that could result in equipment or property-damage-only accidents.

Your personal safety and the proper operation of this machine depend upon the strict observance of these precautions.

ATTENTION: Warnings, Cautions and Notices appear at appropriate sections throughout this literature. Read these carefully.

⚠ **WARNING**: Indicates a potentially hazardous situation which, if not avoided, could result in death or serious injury.

⚠ **CAUTION**: Indicates a potentially hazardous situation which, if not avoided, could result in minor or moderate injury. It could also be used to alert against unsafe practices.

NOTICE: Indicates a situation that could result in equipment or property-damage only accidents.

Important Environmental Concerns!

Scientific research has shown that certain man-made chemicals can affect the earth's naturally occurring stratospheric ozone layer when released to the atmosphere. In particular, several of the identified chemicals that may affect the ozone layer are refrigerants that contain Chlorine, Fluorine and Carbon (CFCs) and those containing Hydrogen, Chlorine, Fluorine and Carbon (HCFCs). Not all refrigerants containing these compounds have the same potential impact to the environment. Trane advocates the responsible handling of all refrigerants-including industry replacements for CFCs such as HCFCs and HFCs.

Responsible Refrigerant Practices!

Trane believes that responsible refrigerant practices are important to the environment, our customers, and the air conditioning industry. All technicians who handle refrigerants must be certified. The Federal Clean Air Act (Section 608) sets forth the requirements for handling, reclaiming, recovering and recycling of certain refrigerants and the equipment that is used in these service procedures. In addition, some states or municipalities may have additional requirements that must also be adhered to for responsible management of refrigerants. Know the applicable laws and follow them.

⚠ WARNING
R-410A Refrigerant under Higher Pressure than R-22!

The unit described in this manual uses R-410A refrigerant which operates at higher pressures than R-22 refrigerant. Use ONLY R-410A rated service equipment or components with this unit. For specific handling concerns with R-410A, please contact your local Trane representative. Failure to use R-410A rated service equipment or components could result in equipment or components exploding under R-410A high pressures which could result in death, serious injury, or equipment damage.

© 2011 Trane All rights reserved

⚠WARNING
Contains R-410A Refrigerant!

System contains oil and refrigerant under high pressure. Recover refrigerant to relieve pressure before opening the system. See unit nameplate for refrigerant type. Do not use non-approved refrigerants, refrigerant substitutes, or refrigerant additives. Failure to follow proper procedures or the use of non-approved refrigerants, refrigerant substitutes, or refrigerant additives could result in death or serious injury or equipment damage.

Important: *DO NOT release refrigerant to the atmosphere! If adding or removing refrigerant is required, the service technician must comply with all federal, state, and local laws.*

Important: *One copy of this document ships inside the control panel of each unit and is customer property. It must be retained by the unit's maintenance personnel.*

⚠WARNING
Personal Protective Equipment (PPE) Required!

Installing/servicing this unit could result in exposure to electrical, mechanical and chemical hazards.

- **Before installing/servicing this unit, technicians MUST put on all Personal Protective Equipment (PPE) recommended for the work being undertaken. ALWAYS refer to appropriate MSDS and OSHA guidelines for proper PPE.**
- **When working with or around hazardous chemicals, ALWAYS refer to appropriate MSDS and OSHA guidelines for information on allowable personal exposure levels, proper respiratory protection and handling recommendations.**
- **If there is a risk of arc or flash, technicians MUST put on all Personal Protective Equipment (PPE) in accordance with NFPA70E for arc/flash protection PRIOR to servicing the unit.**

Failure to follow recommendations could result in death or serious injury.

This booklet describes proper installation, operation, and maintenance procedures for air cooled systems. By carefully reviewing the information within this manual and following the instructions, the risk of improper operation and/or component damage will be minimized.

It is important that periodic maintenance be performed to help assure trouble free operation. A maintenance schedule is provided at the end of this manual. Should equipment failure occur, contact a qualified service organization with qualified, experienced HVAC technicians to properly diagnose and repair this equipment.

All phases of this installation must comply with the NATIONAL, STATE & LOCAL CODES. In addition to local codes, the installation must conform with National Electric Code -ANSI/NFPA NO. 70 LATEST REVISION.

Any individual installing, maintaining, or servicing this equipment must be properly trained, licensed and qualified.

Table of Contents

Model Number Description 6

General Information 7
- Installation Checklist 7
- Unit Inspection 7
- Inspection Checklist 7
- Initial Leak Test 7
- Lifting Recommendations 7

Pre-Installation 9
- Clearances 9
- Unit Mounting 9

Dimensional Data 11

Electrical Data 19

Installation 22
- Refrigerant Piping Guidelines 22
- Refrigerant Piping Procedures (Outdoor Units) 22
- Refrigerant Piping Procedure (Indoor Unit) 24
- Leak Check 25
- Insulating and Isolating Refrigerant Lines 26
- Refrigerant Charging Procedure 26
- Liquid Charging 27
- Electrical Wiring 28
- Unit Power Supply 29
- Field Wiring- Electromechanical Control 29
- Field Wiring- ReliaTel™ Control 31
- Field Wiring 33
- Refrigerant Circuit 34

Charging Charts 35

Pre-Start 40

Start-Up 42
- Electromechanical Controls 42
- ReliaTel™ Controls 43
- ReliaTel™ Control Cooling Mode 43

Service Test Modes ReliaTel™ Controls 45
- Test Modes 45

Troubleshooting 46
- Trouble Shooting ReliaTel™ Controls 46
- System Status Checkout Procedure 47
- Simultaneous Heat and Cool Failure 47
- Resetting Cooling and Heating Lockouts 48
- Zone Temperature Sensor (ZTS) Service Indicator 49

Programmable & Digital Zone Sensor Test 51

Maintenance 52
Monthly 52
Annually (Cooling Season) 52
Coil Cleaning 52
Maintenance Log 54

Warranty 55
For Commercial Unitary Equipment Rated Under 20 Tons and Related Accessories 55
Commercial Equipment Rated 20 Tons and Larger and Related Accessories (Parts Only) 56

Wiring Diagram Matrix 57

Model Number Description

TTA	240	F	3	00	*	*
1 2 3	4 5 6	7	8	9 10	11	12

Model Number Description

All products are identified by a multiple-character model number that precisely identifies a particular type of unit. An explanation of the alphanumeric identification code is provided. Its use will enable the owner/operator, installing contractors, and service engineers to define the operation, specific components, and other options for any specific unit.

Note: *When ordering replacement parts or requesting service, be sure to refer to the specific model number, serial number, and DL number (if applicable) stamped on the unit nameplate.*

DIGITS 1 - 3: Product Type

TTA = Split System Cooling

DIGITS 4 - 6: Nominal Gross Cooling Capacity (MBh)

061 = 5 Tons (50 Hz)
076 = 6.25 Tons (50 Hz)
086 = 7 Tons (50 Hz)
101 = 8.33 Tons (50 Hz)
126 = 10.4 Tons (50 Hz)
156 = 13.0 Tons (50 Hz)
201 = 16.7 Tons (50 Hz)
073 = 6 Tons (60 Hz)
090 = 7½ Tons (60 Hz)
120 = 10 Tons (60 Hz)
150 = 12½ Tons (60 Hz)
180 = 15 Tons (60 Hz)
240 = 20 Tons (60 Hz)

DIGIT 7: Major Development Sequence

D = Single Circuit
E = Dual Circuit
F = Manifold Scroll Compressors

DIGIT 8: Electrical Characteristics

3 = 208-230/60/3
4 = 460/60/3
W = 575/60/3
D = 380-415/50/3
K = 380/60/3

DIGITS 9 - 10: Factory Installed Options

00 = Packed Stock
0S = Black Epoxy Coated Coil
0R = ReliaTel, no LCI Board
0T = ReliaTel, no LCI Board with Black Epoxy Coated Coil
0U = ReliaTel, with LCI Board
0W = ReliaTel, with LCI Board and Black Epoxy Coated Coil
H0 = Hailguard with Packed Stock
HS = Hailguard with Black Epoxy Coated Coil
HR = Hailguard with ReliaTel, no LCI Board
HT = Hailguard with ReliaTel, no LCI Board with Black Epoxy Coated Coil
HU = Hailguard with ReliaTel, with LCI Board
HW = Hailguard with ReliaTel, with LCI Board and Black Epoxy Coated Coil

DIGITS 11: Minor Design Sequence

*= Current Design Sequence[1]

DIGITS 12: Service Digit

* = Current Design Sequence[1]

[1] * = sequential alpha character

General Information

Installation procedures should be performed in the sequence that they appear in this manual. Do not destroy or remove the manual from the unit. The manual should remain weather-protected and with the unit until all installation procedures are complete.

Note: *It is not the intention of this manual to cover all possible variations in systems that may occur or to provide comprehensive information concerning every possible contingency that may be encountered during an installation. If additional information is required or if specific problems arise that are not fully discussed in this manual, contact your local sales office.*

Note: *"Warnings" and "Cautions" appear at appropriate places in this manual. Your personal safety and the proper operation of this machine require that you follow them carefully. The Company assumes no liability for installations or servicing performed by unqualified personnel.*

Installation Checklist

An "Installation Checklist" is provided at the end of the installation section of this manual. Use the checklist to verify that all necessary installation procedures have been completed. Do not use the checklist as a substitute for reading the information contained in the manual. Read the entire manual before beginning installation procedures.

Unit Inspection

Inspect material carefully for any shipping damage. If damaged, it must be reported to, and claims made against the transportation company. Compare the information that appears on the unit nameplate with ordering and submittal data to insure the proper unit was shipped. Available power supply must be compatible with electrical characteristics specified on component nameplates. Replace damaged parts with authorized parts only.

Inspection Checklist

To protect against loss due to damage incurred in transit, complete the following checklist upon receipt of the unit.

1. Inspect individual pieces of the shipment before accepting the unit. Check for obvious damage to the unit or packing material.
2. Inspect the unit for concealed damage before it is stored and as soon as possible after delivery. Concealed damage must be reported within 15 days. If concealed damage is discovered, stop unpacking the shipment. Do not remove damaged material from the receiving location. Take photos of the damage if possible. The owner must provide reasonable evidence that the damage did not occur after delivery.
3. Notify the carrier's terminal of damage immediately by phone and by mail. Request an immediate joint inspection of the damage by the carrier and the consignee.
4. Notify the sales representative and arrange for repair. Do not repair the unit until the damage is inspected by the carrier's representative.

Initial Leak Test

All **TTA** units are shipped with a holding charge of nitrogen in each circuit. Remove the service panel(s) shown in Figure 3, p. 12 - Figure 9, p. 18. Locate the liquid line or suction line service valve for each circuit. Install gauges to determine if the circuits are still pressurized. If not, the charge has escaped. Repair as required to obtain a leak-free circuit.

Lifting Recommendations

Before preparing the unit for lifting, estimate the approximate center of gravity for lifting safety. Because of placement of internal components, the unit weight may be unevenly distributed. Approximate unit weights are given in Table 1 and Table 2, p. 8.

Table 1. TTA Unit and Corner Weights — kg (50 Hz)

Tons	Model No.	Shipping Max (kg)	Net Max (kg)	Corner Weights			
				1	2	3	4
5	TTA061D	164	135	38	41	20	36
6.25	TTA076D	163	134	38	40	20	36
7	TTA086D	213	181	61	47	32	41
8.33	TTA101D	210	178	60	47	31	40
	TTA101E	230	197	62	57	40	39
	TTA101F	229	197	58	63	37	39
10.4	TTA126E	244	211	59	68	36	49
13	TTA156E	383	325	93	92	68	72
	TTA156F	383	326	88	94	69	76
16.7	TTA201E	437	377	118	108	74	77
	TTA201F	435	376	116	112	69	79

Table 2. TTA Unit and Corner Weights — lbs (60 Hz)

Tons	Model No.	Shipping Max (lbs)	Net Max (lbs)	Corner Weights			
				1	2	3	4
6	TTA073D	365	300	85	90	44	81
7½	TTA090D	363	298	84	89	44	81
10	TTA120D	467	395	133	103	70	89
	TTA120E	510	438	137	127	88	86
	TTA120F	509	438	129	140	83	86
12½	TTA150E	543	468	130	151	79	108
15	TTA180E	850	723	207	204	151	161
	TTA180F	852	725	196	208	153	168
20	TTA240E	970	837	262	240	164	171
	TTA240F	966	835	257	249	153	176

⚠ WARNING
Improper Unit Lift!

Each of the cables (chains or slings) used to lift the unit must be capable of supporting the entire weight of the unit. Lifting cables (chains or slings) may not be of the same length. Adjust as necessary for even unit lift. Other lifting arrangements may cause equipment or property-only damage. Failure to properly lift unit could result in death or serious injury. Refer to Table 1 and Table 2 for unit weight.

The crated unit can be moved using a forklift of suitable capacity. For lifting the unit, attach lifting straps or slings securely to the lifting holes at each corner. Use spreader bars to protect the unit casing from damage. Test lift the unit to determine proper balance and stability.

NOTICE
Equipment Damage!

Use spreader bars to prevent lifting straps from damaging the unit. Install bars between lifting straps. This will prevent the straps from crushing the unit cabinet or damaging the unit finish.

Pre-Installation

Clearances

Provide enough space around the unit to allow unrestricted access to all service points. Refer to Figure 3, p. 12 - Figure 9, p. 18 for unit dimensions and minimum required service and free air clearances. Observe the following points to ensure proper unit operation.

1. Do not install the unit under a low overhang. Condenser discharge must not be restricted. See notes in Figure 3, p. 12 - Figure 9, p. 18.

Note: Important! Do not obstruct condenser discharge air. This can result in warm air recirculation through the coil.

2. Do not locate the unit in a position where runoff water can fall into the fan discharge openings.
3. Condenser intake air is supplied from three or four sides of the unit. Adhere to the minimum required clearances given in Figure 3, p. 12 - Figure 9, p. 18.

Unit Mounting

⚠ WARNING
Mounting Integrity!

Ensure that the roof structure supports are strong enough to support the weight of the unit and any accessories. Failure to do so could result in death or serious injury or possible equipment or property-only damage.

Rooftop Mounting

If the unit will be roof mounted, determine for certain that the structure is strong enough to support the unit and any required accessories. Unit weights are given in Table 1 and Table 2, p. 8. The unit should be elevated on a level, field fabricated four-inch steel or wood 4" x 4" mounting frame. Complete the frame and secure it into position before lifting the unit to the roof. The mounting frame must support a minimum of three of the unit's four sides and should span roof supports to distribute the load on the roof.

Figure 1. Roof Mounted Unit

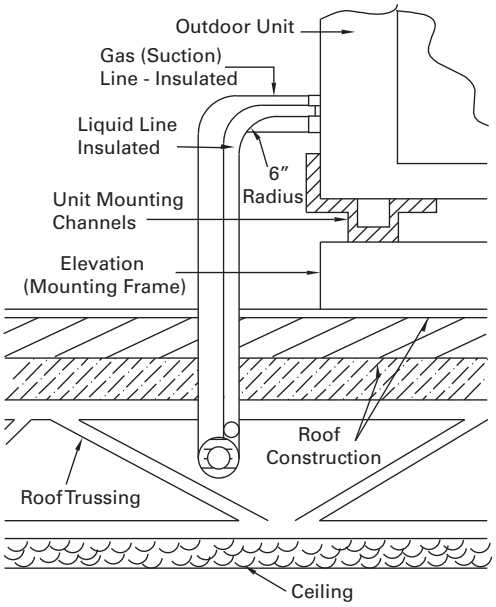

Ground Level Mounting

4. For ground level installation, the unit base should be adequately supported and hold the unit near level. The installation must meet the guidelines set forth in local codes. The support should extend two inches beyond the unit base channels at all points. The unit and support must be isolated from any adjacent structure to prevent possible noise or vibration problems. Any ground level location must comply with required clearances given in Figure 3, p. 12 - Figure 9, p. 18.

Refrigerant Piping

⚠WARNING
R-410A Refrigerant under Higher Pressure than R-22!

The unit described in this manual uses R-410A refrigerant which operates at higher pressures than R-22 refrigerant. Use ONLY R-410A rated service equipment or components with this unit. For specific handling concerns with R-410A, please contact your local Trane representative. Failure to use R-410A rated service equipment or components could result in equipment or components exploding under R-410A high pressures which could result in death, serious injury, or equipment damage.

Roof Damage!

System contains oil and refrigerant under high pressure. Roofs should be protected from exposure to oils and refrigerant in the system. If rooftop is not protected damage to the roof may occur.

Structural Preparation

Important: *Refer to local building codes for proper installation. All installation must comply with local building codes.*

Dimensional Data

Figure 2. TTA Quick Reference

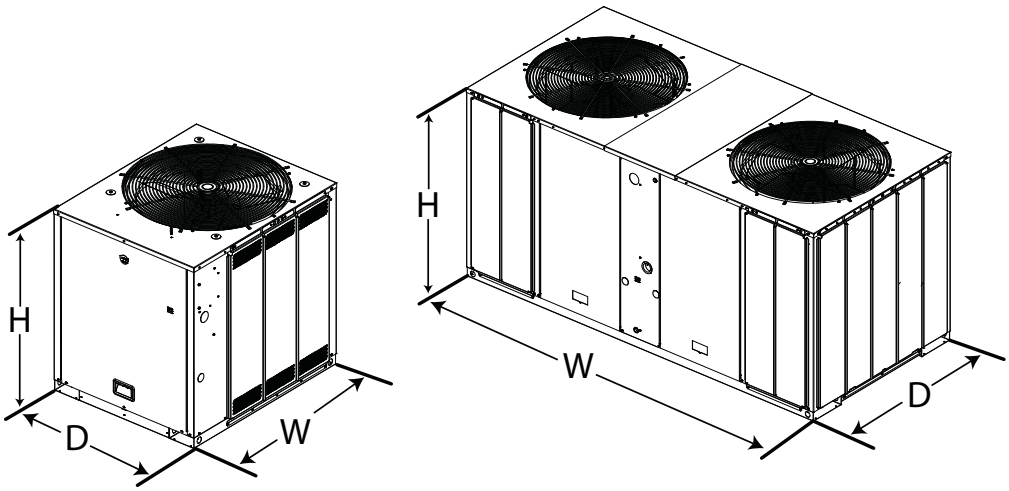

	H - lb (kg)	W - lb (kg)	D - lb (kg)
TTA 061, 073, 076, 090	39.125 (993.8)	42.125 (1070)	36 (914.4)
TTA 086, 101, 120	39.125 (993.8)	52.125 (1324)	40 (1016)
TTA126, 150	45.125 (1146.1)	52.125 (1324)	40 (1016)
TTA 156, 180, 201, 240	45.125 (1146.1)	95.5 (2425.7)	45.875 (1165.2)

Note: *Full dimensional data available on next pages.*

Figure 3. TTA061, 073, 076, 090 Condensing Unit, Single Compressor

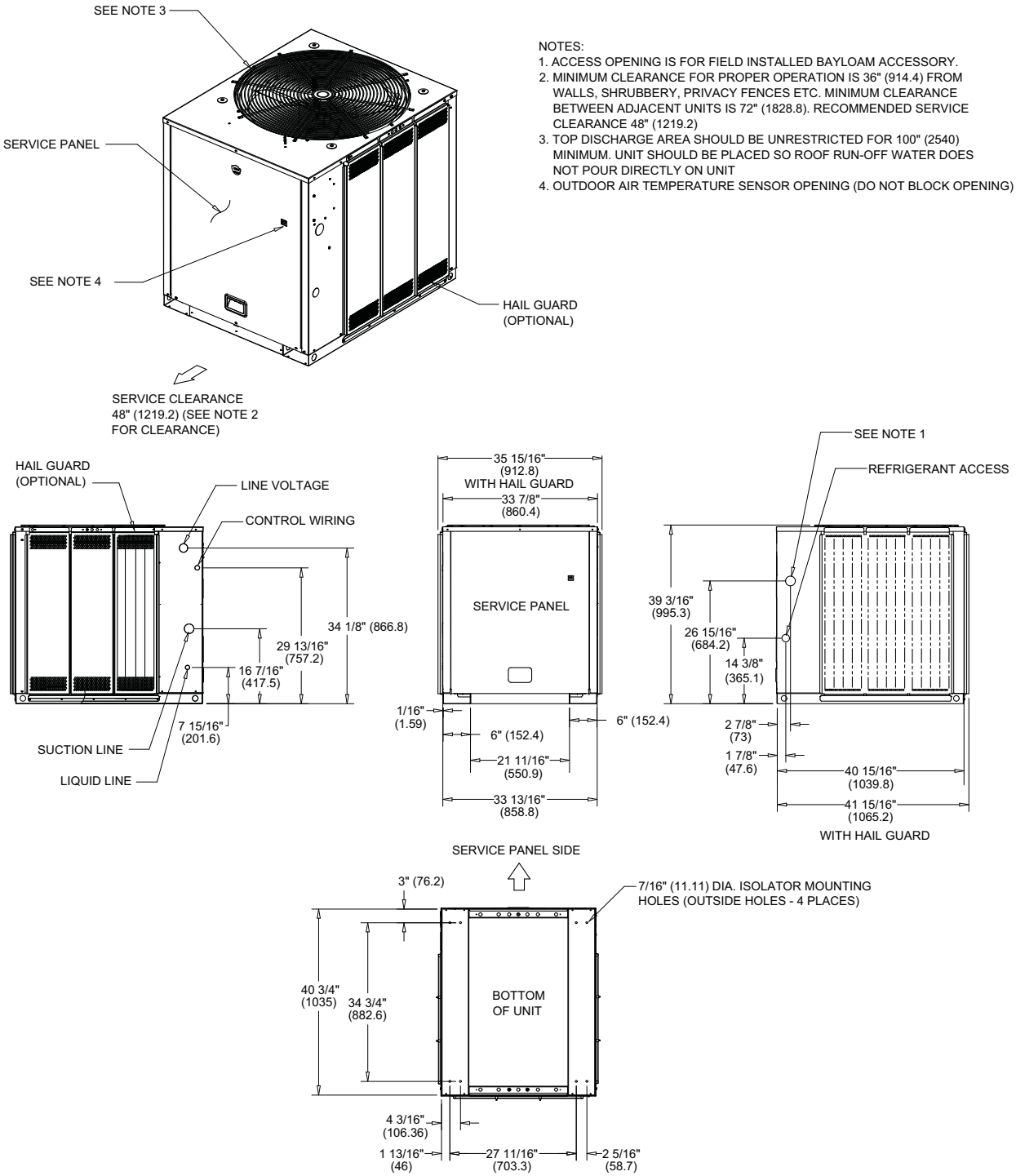

Figure 4. TTA086, 101, 120 Condensing Unit, Single Compressor

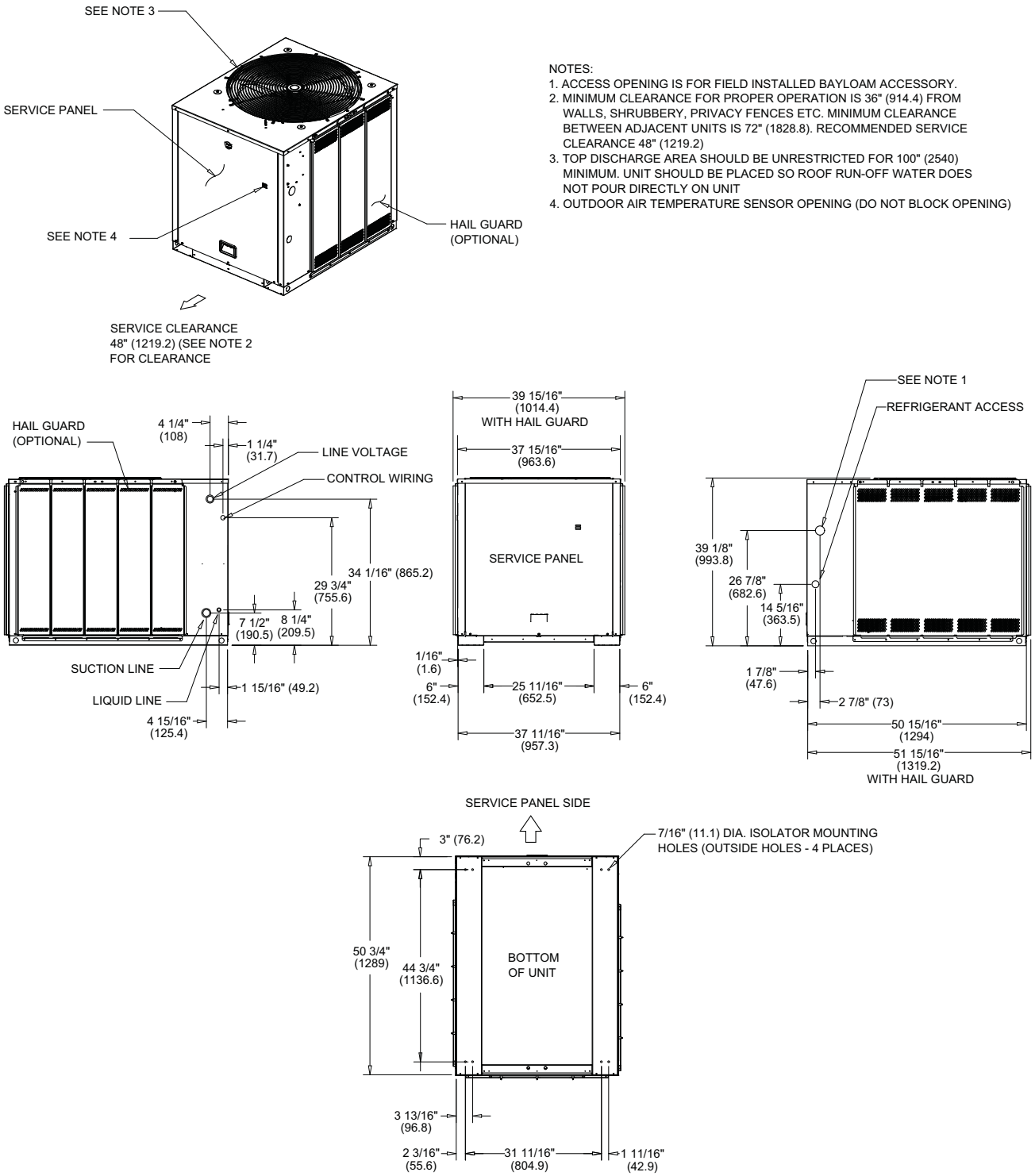

Figure 5. TTA101, 120 Condensing Unit, Dual Compressor

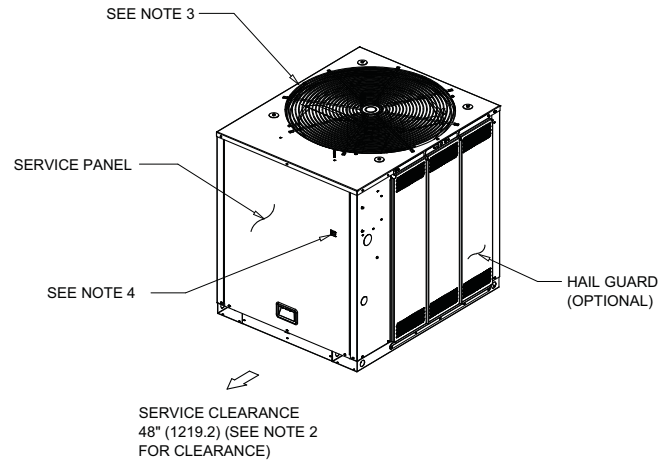

NOTES:
1. ACCESS OPENING IS FOR FIELD INSTALLED BAYLOAM ACCESSORY.
2. MINIMUM CLEARANCE FOR PROPER OPERATION IS 36" (914.4) FROM WALLS, SHRUBBERY, PRIVACY FENCES ETC. MINIMUM CLEARANCE BETWEEN ADJACENT UNITS IS 72" (1828.8). RECOMMENDED SERVICE CLEARANCE 48" (1219.2)
3. TOP DISCHARGE AREA SHOULD BE UNRESTRICTED FOR 100" (2540) MINIMUM. UNIT SHOULD BE PLACED SO ROOF RUN-OFF WATER DOES NOT POUR DIRECTLY ON UNIT
4. OUTDOOR AIR TEMPERATURE SENSOR OPENING (DO NOT BLOCK OPENING).

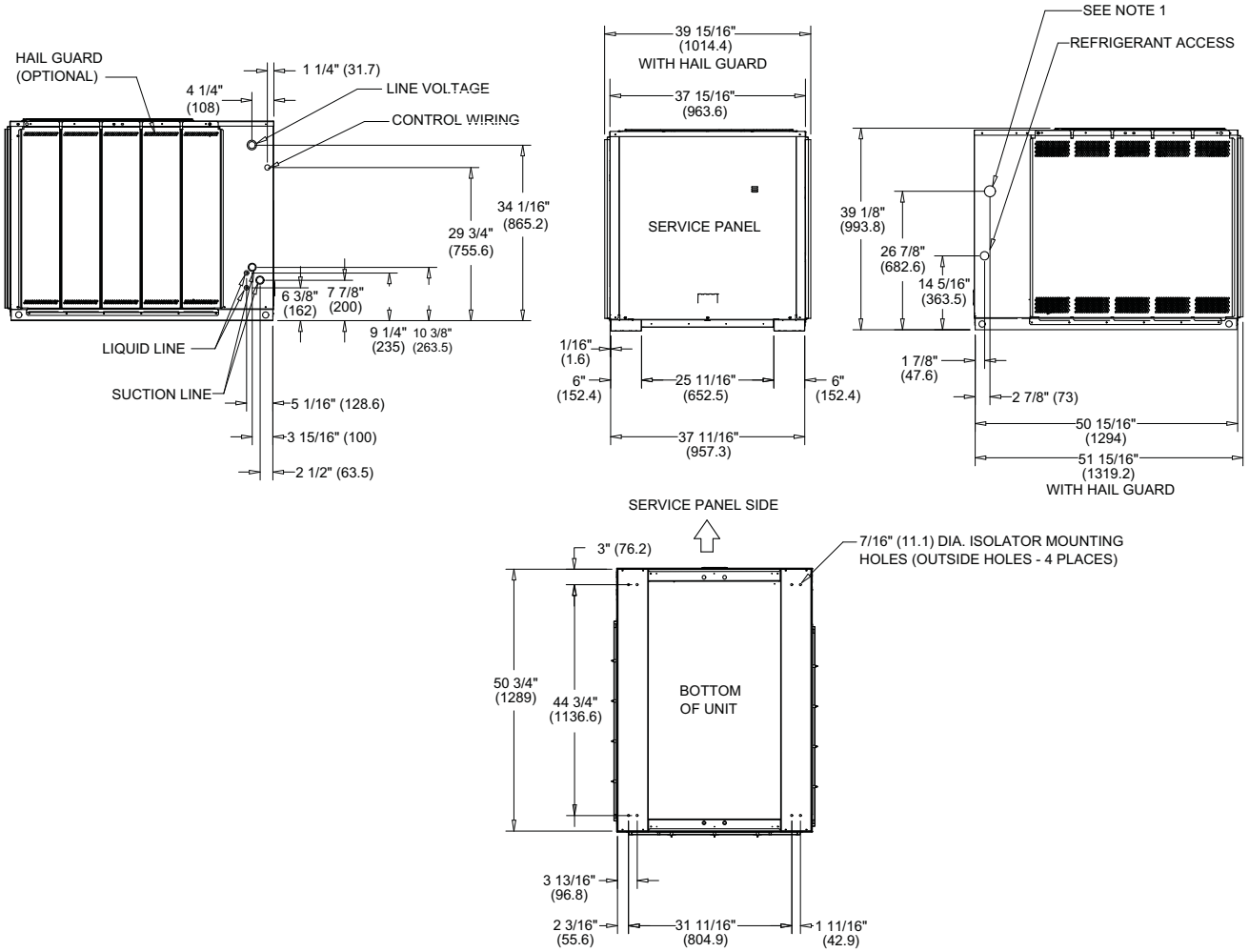

Figure 6. TTA101, 120 Condensing Unit, Manifolded Compressor

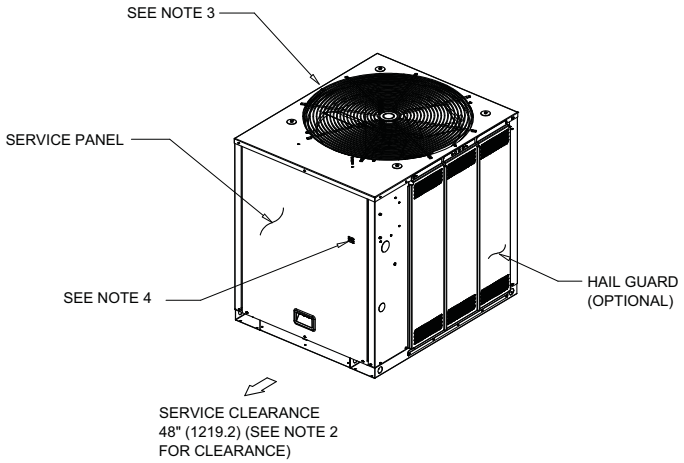

NOTES:
1. ACCESS OPENING IS FOR FIELD INSTALLED BAYLOAM ACCESSORY.
2. MINIMUM CLEARANCE FOR PROPER OPERATION IS 36" (914.4) FROM WALLS, SHRUBBERY, PRIVACY FENCES ETC. MINIMUM CLEARANCE BETWEEN ADJACENT UNITS IS 72" (1828.8). RECOMMENDED SERVICE CLEARANCE 48" (1219.2)
3. TOP DISCHARGE AREA SHOULD BE UNRESTRICTED FOR 100" (2540) MINIMUM. UNIT SHOULD BE PLACED SO ROOF RUN-OFF WATER DOES NOT POUR DIRECTLY ON UNIT
4. OUTDOOR AIR TEMPERATURE SENSOR OPENING (DO NOT BLOCK OPENING)

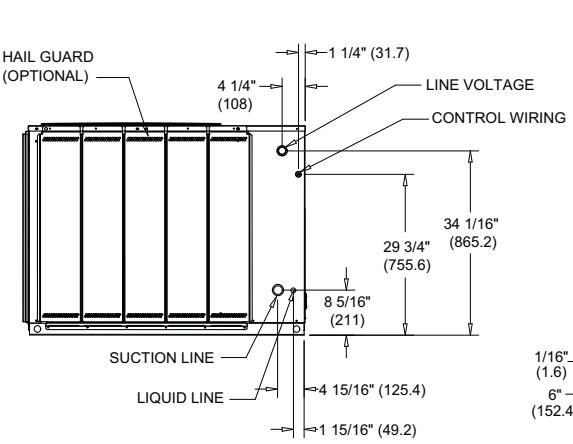

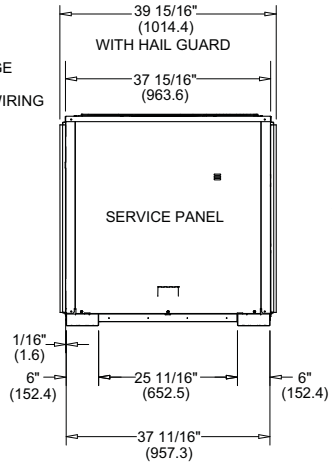

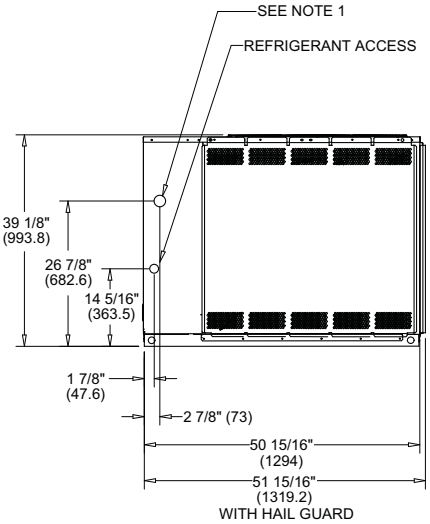

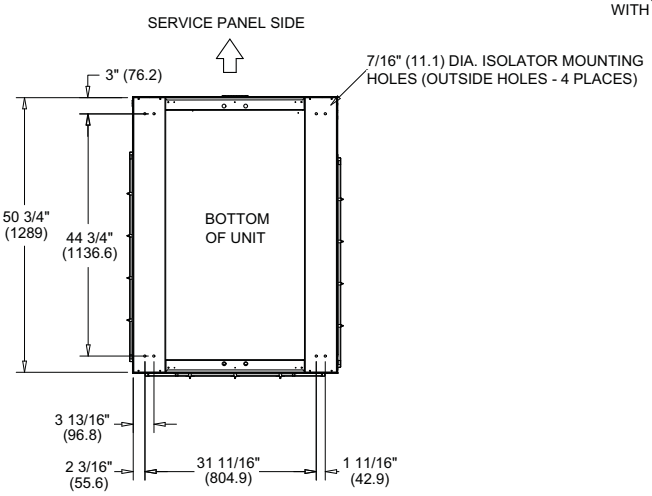

Figure 7. TTA126, 150 Condensing Unit, Dual Compressor

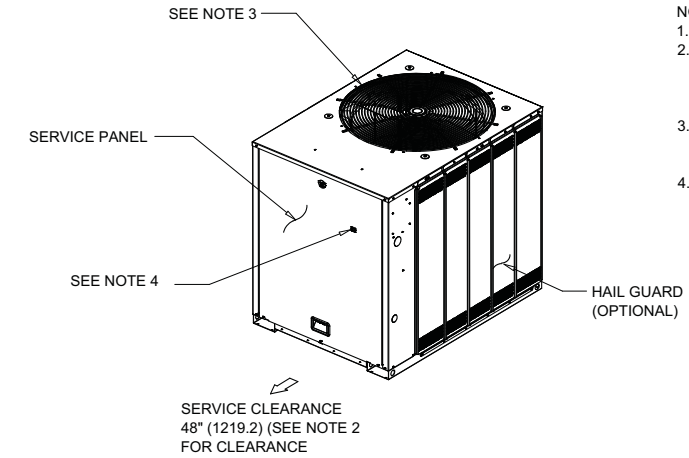

NOTES:
1. ACCESS OPENING IS FOR FIELD INSTALLED BAYLOAM ACCESSORY.
2. MINIMUM CLEARANCE FOR PROPER OPERATION IS 36" (914.4) FROM WALLS, SHRUBBERY, PRIVACY FENCES ETC. MINIMUM CLEARANCE BETWEEN ADJACENT UNITS IS 72" (1828.8). RECOMMENDED SERVICE CLEARANCE 48" (1219.2)
3. TOP DISCHARGE AREA SHOULD BE UNRESTRICTED FOR 100" (2540) MINIMUM. UNIT SHOULD BE PLACED SO ROOF RUN-OFF WATER DOES NOT POUR DIRECTLY ON UNIT
4. OUTDOOR AIR TEMPERATURE SENSOR OPENING (DO NOT BLOCK OPENING).

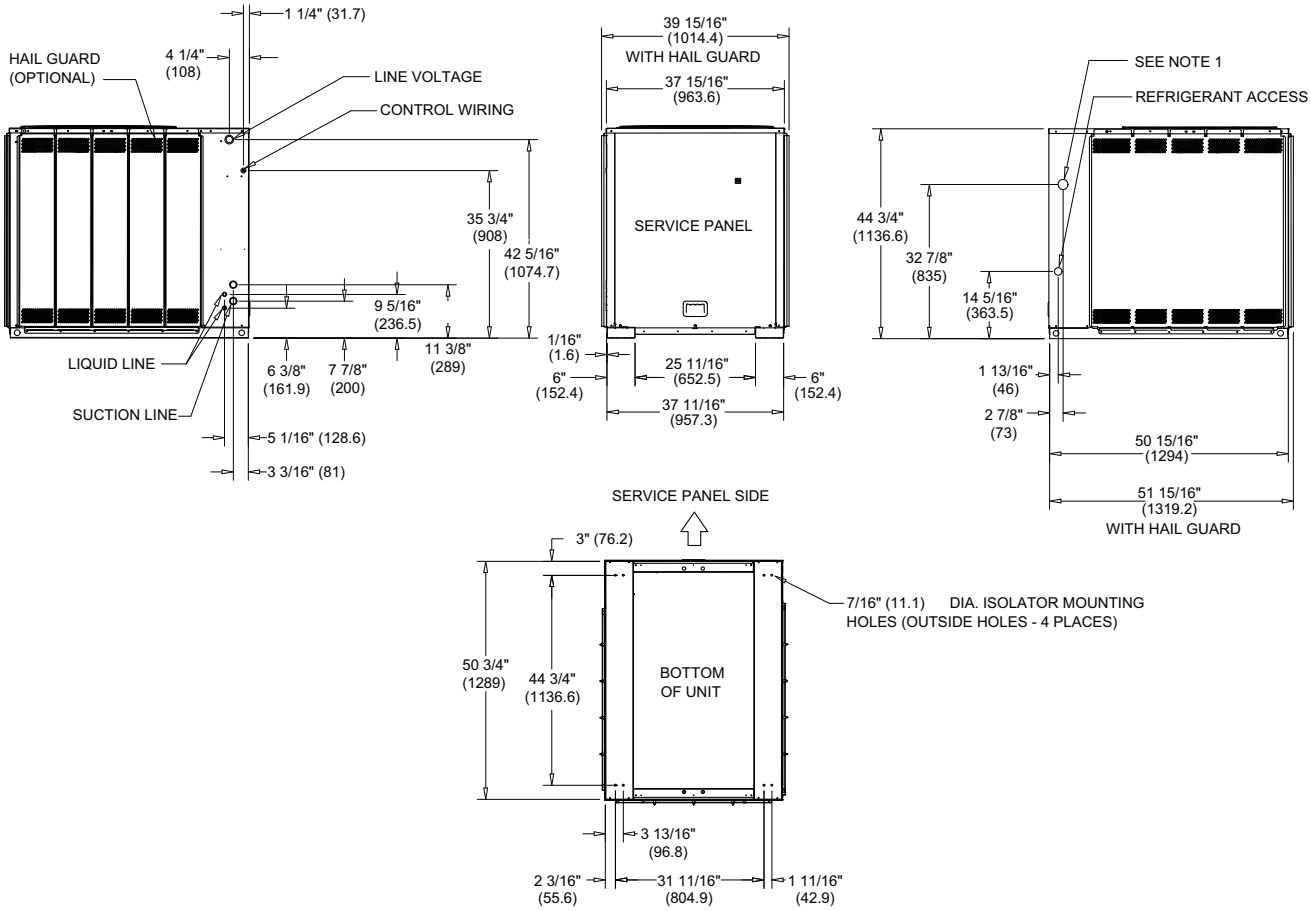

Figure 8. TTA156, 180, 201, 240 Condensing Unit, Dual Compressor

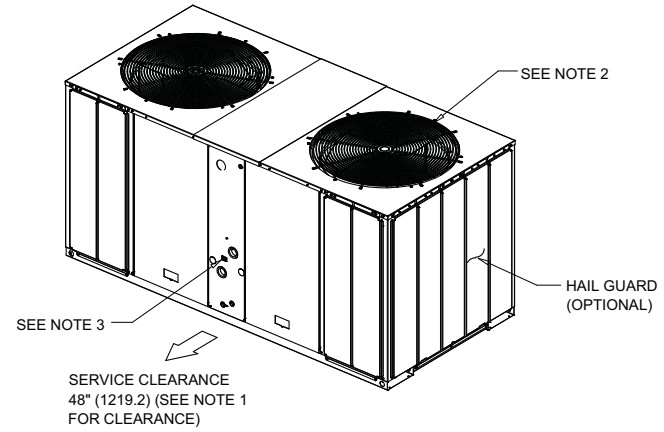

NOTES:
1. MINIMUM CLEARANCE FOR PROPER OPERATION IS 36" (914.4) FROM WALLS, SHRUBBERY, PRIVACY FENCES ETC. MINIMUM CLEARANCE BETWEEN ADJACENT UNITS IS 72" (1828.8). RECOMMENDED SERVICE CLEARANCE 48" (1219.2)
2. TOP DISCHARGE AREA SHOULD BE UNRESTRICTED FOR 100" (2540) MINIMUM. UNIT SHOULD BE PLACED SO ROOF RUN-OFF WATER DOES NOT POUR DIRECTLY ON UNIT
3. OUTDOOR AIR TEMPERATURE SENSOR OPENING (DO NOT BLOCK OPENING)

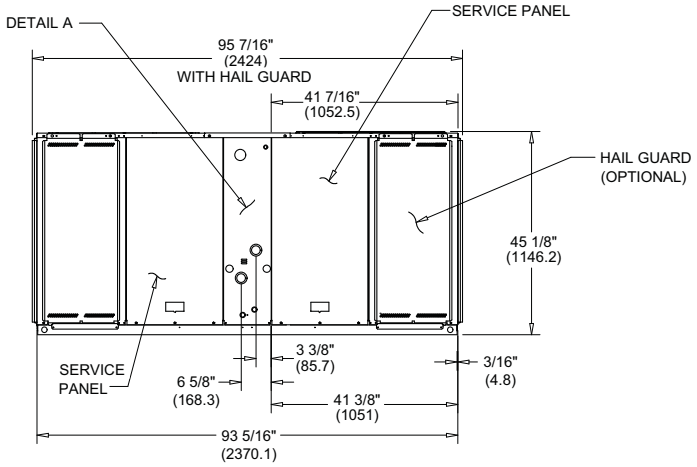

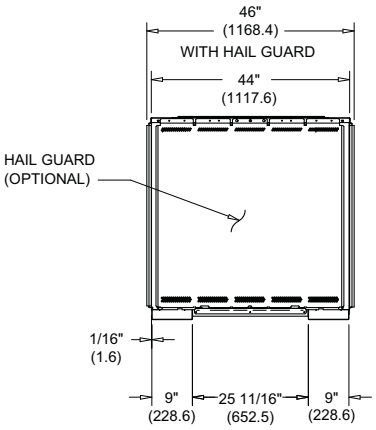

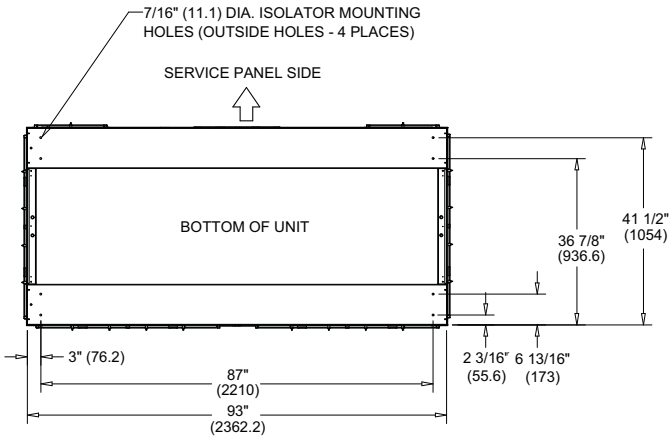

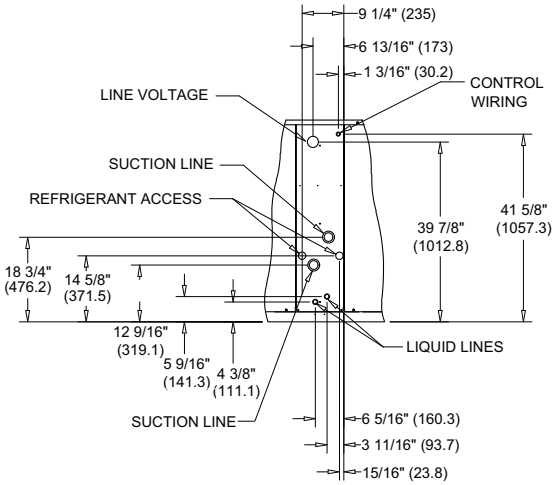

FRONT DETAIL A

DIMENSIONAL DETAIL

Figure 9. TTA156, 180, 201, 240 Condensing Unit, Manifolded Compressor

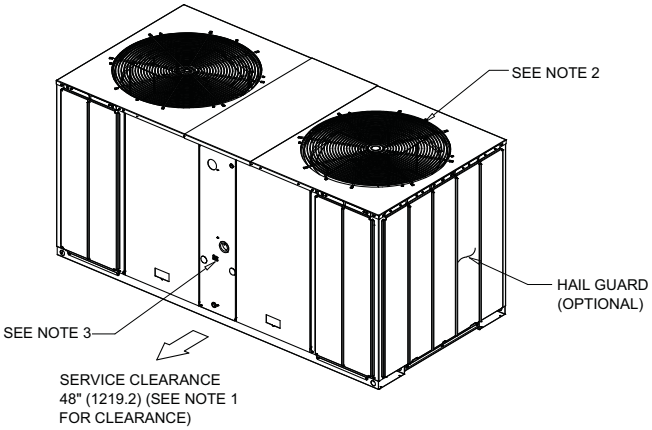

NOTES:
1. MINIMUM CLEARANCE FOR PROPER OPERATION IS 36" (914.4) FROM WALLS, SHRUBBERY, PRIVACY FENCES ETC. MINIMUM CLEARANCE BETWEEN ADJACENT UNITS IS 72" (1828.8). RECOMMENDED SERVICE CLEARANCE 48" (1219.2)
2. TOP DISCHARGE AREA SHOULD BE UNRESTRICTED FOR 100" (2540) MINIMUM. UNIT SHOULD BE PLACED SO ROOF RUN-OFF WATER DOES NOT POUR DIRECTLY ON UNIT
3. OUTDOOR AIR TEMPERATURE SENSOR OPENING (DO NOT BLOCK OPENING)

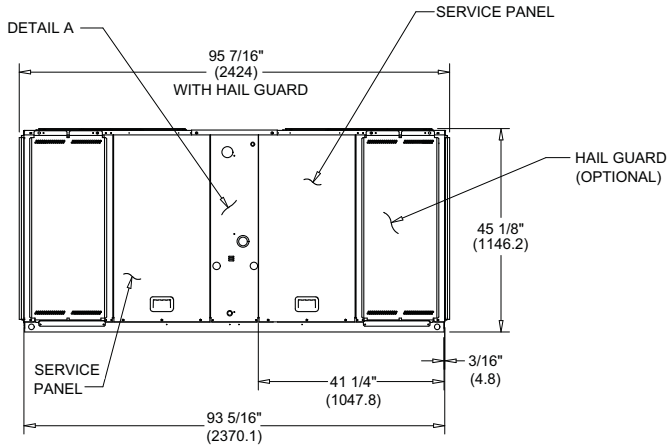

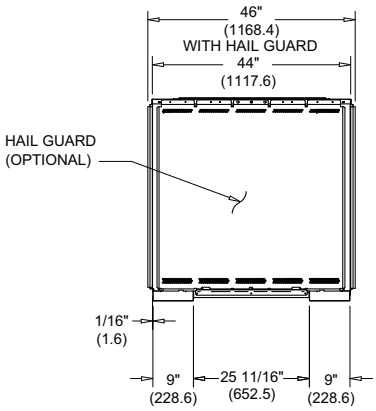

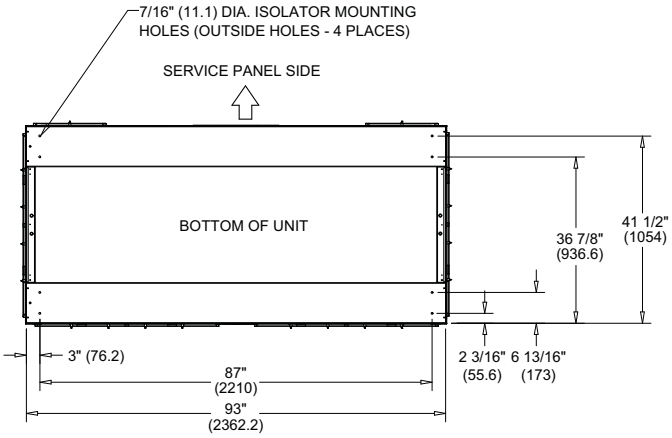

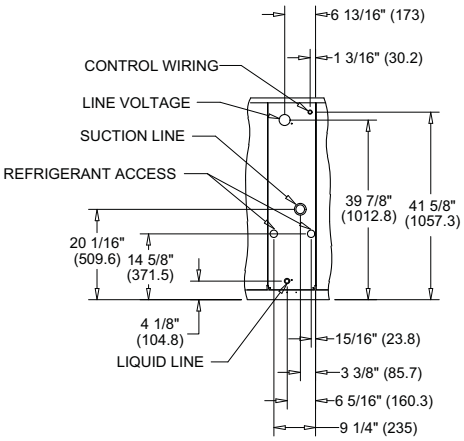

FRONT DETAIL A

DIMENSIONAL DETAIL

Electrical Data

Table 3. Electrical Characteristics — Compressor and Condenser Fan Motors — 50 Hz

Tons	Unit Model No.	Compressor Motor					Condenser Fan Motor				
					Amps					Amps	
					RLA	LRA				FLA	LRA
		No.	Volts	Phase	(Ea.)	(Ea.)	No.	Volts	Phase	(Ea.)	(Ea.)
5	TTA061DD	1	380-415-50	3	10.9	74	1	380-415-50	1	1.6	3.8
6.25	TTA076DD	1	380-415-50	3	12.5	101	1	380-415-50	1	1.6	3.8
7	TTA086DD	1	380-415-50	3	15.2	142	1	380-415-50	1	1.9	5.8
8.33	TTA101DD	1	380-415-50	3	17.2	111	1	380-415-50	1	1.9	5.8
	TTA101ED	2	380-415-50	3	8.0	51.5	1	380-415-50	1	1.9	5.8
	TTA101FD	2	380-415-50	3	9.9	64	1	380-415-50	1	1.9	5.8
10.4	TTA126ED	2	380-415-50	3	10.9	75	1	380-415-50	1	1.9	5.8
13.0	TTA156ED	2	380-415-50	3	12.5	101	2	380-415-50	1	1.9	5.8
	TTA156FD	2	380-415-50	3	12.5	101	2	380-415-50	1	1.9	5.8
16.7	TTA201ED	2	380-415-50	3	19.1	142	2	380-415-50	1	1.9	5.8
	TTA201FD	2	380-415-50	3	19.1	142	2	380-415-50	1	1.9	5.8

Note: Electrical characteristics reflect nameplate values and are calculated in accordance with UL and ARI specifications.

Table 4. Unit Wiring — Condensing Units — 50 Hz

Unit Model No.	Unit Operating Voltage	Maximum Circuit Ampacity	Maximum Fuse Size or Maximum Circuit Breaker
TTA061DD	380/415	15.2	20
TTA076DD	380/415	17.3	25
TTA086DD	380/415	20.9	25
TTA101DD	380/415	23.4	30
TTA101ED	380/415	19.9	25
TTA101FD	380/415	24.2	30
TTA126ED	380/415	26.4	30
TTA156ED	380/415	32.0	40
TTA156FD	380/415	32.0	40
TTA201ED	380/415	46.9	60
TTA201FD	380/415	46.9	60

Table 5. Electrical Characteristics — Compressor and Condenser Fan Motors —60 Hz

Tons	Unit Model No.	Compressor Motor					Condenser Fan Motor				
					Amps					Amps	
					RLA	LRA				FLA	LRA
		No.	Volts	Phase	(Ea.)	(Ea.)	No.	Volts	Phase	(Ea.)	(Ea.)
6	TTA073D3	1	208-230	3	22.4	149	1	208-230	1	3.1	8.1
	TTA073D4	1	460	3	10.6	75	1	460	1	1.6	3.8
	TTA073DK	1	380	3	11.3	88	1	380	1	2.7	7
	TTA073DW	1	575	3	7.9	54	1	575	1	1.2	3
7½	TTA090D3	1	208-230	3	25	164	1	208-230	1	3.1	8.1
	TTA090D4	1	460	3	12.9	100	1	460	1	1.6	3.8
	TTA090DK	1	380	3	14.3	94.3	1	380	1	2.7	7
	TTA090DW	1	575	3	10.6	78	1	575	1	1.2	3
10	TTA120D3	1	208-230	3	30.1	225	1	208-230	1	5	14.4
	TTA120D4	1	460	3	16.7	114	1	460	1	2.5	5.8
	TTA120DK	1	380	3	19.8	140	1	380	1	3.4	7.8
	TTA120DW	1	575	3	12.4	80	1	575	1	2	5.1
	TTA120E3	2	208-230	3	16	110	1	208-230	1	5	14.4
	TTA120E4	2	460	3	7.8	52	1	460	1	2.5	5.8
	TTA120EK	2	380	3	10.4	65.6	1	380	1	3.4	7.8
	TTA120EW	2	575	3	6	38.9	1	575	1	2	5.1
	TTA120F3	2	208-230	3	17.6	123	1	208-230	1	5	14.4
	TTA120F4	2	460	3	9.6	62	1	460	1	2.5	5.8
	TTA120FW	2	575	3	6.1	40	1	575	1	2	5.1
12½	TTA150E3	2	208-230	3	22.4	149	1	208-230	1	5	14.4
	TTA150E4	2	460	3	10.6	75	1	460	1	2.5	5.8
	TTA150EK	2	380	3	11.3	88	1	380	1	3.4	7.8
	TTA150EW	2	575	3	8.6	54	1	575	1	2	5.1
15	TTA180E3	2	208-230	3	25	164	2	208-230	1	5	14.4
	TTA180E4	2	460	3	12.2	100	2	460	1	2.5	5.8
	TTA180EK	2	380	3	14.3	94.3	2	380	1	3.4	7.8
	TTA180EW	2	575	3	9.6	78	2	575	1	2	5.1
	TTA180F3	2	208-230	3	25	164	2	208-230	1	5	14.4
	TTA180F4	2	460	3	12.2	100	2	460	1	2.5	5.8
	TTA180FK	2	380	3	14.3	94.3	2	380	1	3.4	7.8
	TTA180FW	2	575	3	9.9	78	2	575	1	2	5.1
20	TTA240E3	2	208-230	3	39.1	267	2	208-230	1	5	14.4
	TTA240E4	2	460	3	18.6	142	2	460	1	2.5	5.8
	TTA240EK	2	380	3	23.1	160	2	380	1	3.4	7.8
	TTA240EW	2	575	3	15.4	103	2	575	1	2	5.1
	TTA240F3	2	208-230	3	39.1	267	2	208-230	1	5	14.4
	TTA240F4	2	460	3	19.8	142	2	460	1	2.5	5.8
	TTA240FK	2	380	3	23.1	160	2	380	1	3.4	7.8
	TTA240FW	2	575	3	15.8	103	2	575	1	2	5.1

Note: Electrical characteristics reflect nameplate values and are calculated in accordance with cULus and ARI specifications.

Table 6. Unit Wiring — Condensing Units — 60 Hz

Tons	Unit Model Number	Unit Operating Voltage Range	Minimum Circuit Ampacity	Maximum Fuse or HACR Circuit Breaker Size[a]
6	TTA073D3	187-253	31.1	40
	TTA073D4	414-506	14.9	20
	TTA073DK	342-418	16.8	20
	TTA073DW	518-632	11.1	15
7½	TTA090D3	187-253	34.4	45
	TTA090D4	414-506	17.7	25
	TTA090DK	342-418	20.6	25
	TTA090DW	518-632	14.5	20
10	TTA120D3	187-253	42.6	60
	TTA120D4	414-506	23.4	30
	TTA120DK	342-418	28.2	35
	TTA120DW	518-632	17.5	25
	TTA120E3	187-253	41.0	45
	TTA120E4	414-506	20.1	25
	TTA120EK	342-418	26.9	30
	TTA120EW	518-632	15.5	20
	TTA120F3	187-253	44.6	50
	TTA120F4	414-506	24.1	30
	TTA120FW	518-632	15.7	20
12½	TTA150E3	187-253	55.4	70
	TTA150E4	414-506	26.4	30
	TTA150EK	342-418	28.8	35
	TTA150EW	518-632	21.4	25
15	TTA180E3	187-253	66.3	80
	TTA180E4	414-506	32.5	40
	TTA180EK	342-418	39.0	45
	TTA180EW	518-632	25.6	30
	TTA180F3	187-253	66.3	80
	TTA180F4	414-506	32.5	40
	TTA180FK	342-418	39.0	45
	TTA180FW	518-632	26.3	30
20	TTA240E3	187-253	98.0	110
	TTA240E4	414-506	46.9	60
	TTA240EK	342-418	58.8	70
	TTA240EW	518-632	38.7	45
	TTA240F3	187-253	98.0	110
	TTA240F4	414-506	49.6	60
	TTA240FK	342-418	58.8	70
	TTA240FW	518-632	39.6	45

Note: Electrical characteristics reflect nameplate values and are calculated in accordance with cULus and ARI specifications. 7½ and 10 ton values are system rated; 12½, 15 and 20 ton values are condensing unit only rated.

(a) HACR type circuit breaker per NEC.

Installation

Refrigerant Piping Guidelines

Figure 10. Allowable elevation difference: Cooling only TTA *above* indoor unit

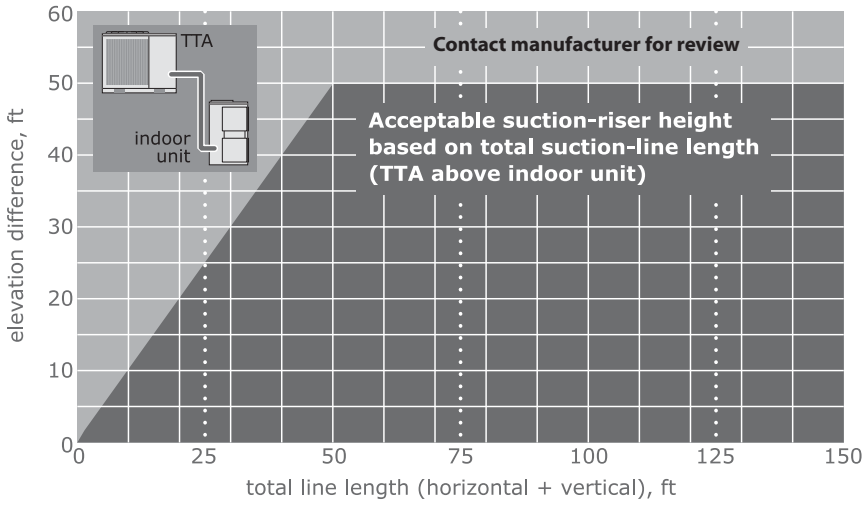

Figure 11. Allowable elevation difference: TTA *below* indoor unit

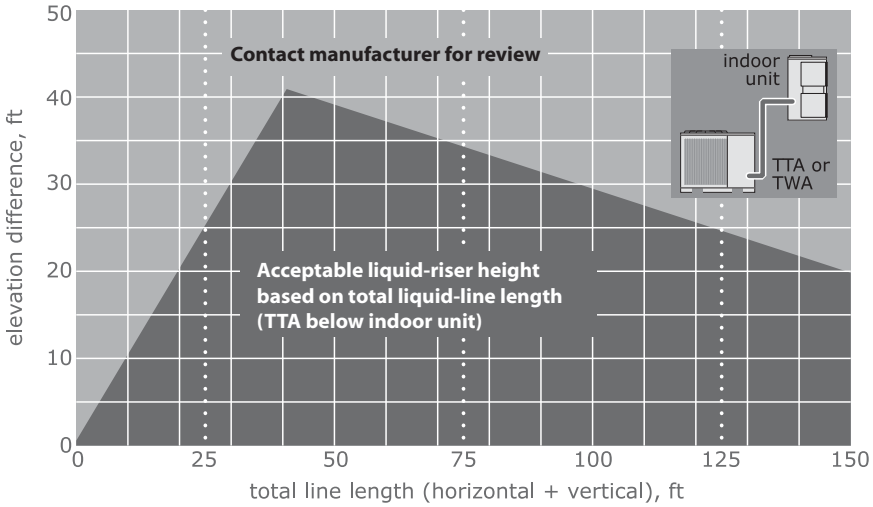

Note: *Route refrigerant piping for minimum linear length, minimum number of bends and fittings (no reducers) and minimum amount of line exposed to outdoor ambients.*

Refrigerant Piping Procedures (Outdoor Units)

⚠WARNING

R-410A Refrigerant under Higher Pressure than R-22!

The unit described in this manual uses R-410A refrigerant which operates at higher pressures than R-22 refrigerant. Use ONLY R-410A rated service equipment or components with this unit. For specific handling concerns with R-410A, please contact your local Trane representative.

Failure to use R-410A rated service equipment or components could result in equipment or components exploding under R-410A high pressures which could result in death, serious injury, or equipment damage.

Each TTA unit ships with a holding charge of dry nitrogen. The nitrogen should be removed and the entire system evacuated (at the proper time) to avoid possible contamination.

1. Remove the compressor service access panel.
2. Locate the liquid and suction line service valves. Check that the piping connection stubs on the valves (Figure 12, p. 23) line up properly with the holes in the unit cabinet

Figure 12. Outdoor Units - Refrigerant Piping (with dry nitrogen)

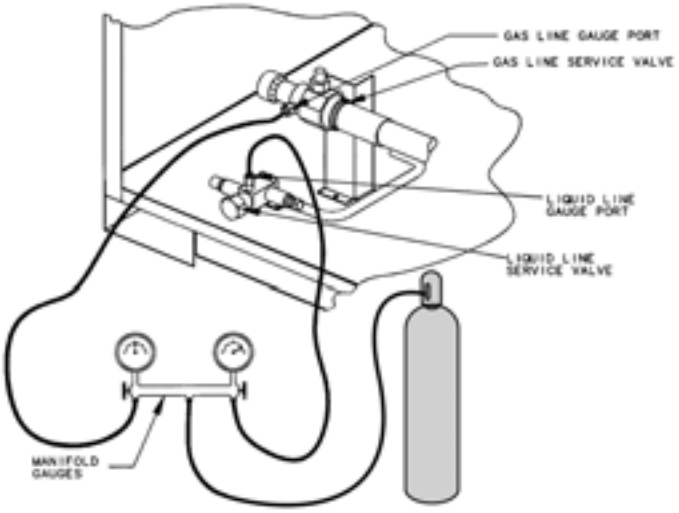

3. Remove the refrigerant connection seal caps and open the service valve slowly to release the nitrogen from the unit.

NOTICE
System Component Damage!

Do not remove the seal caps from refrigerant connections, or open the service valves until prepared to braze refrigerant lines to the connections. Excessive exposure to atmosphere (> 5 min.) may allow moisture or dirt to contaminate the system, damaging valve seals and causing ice formation in system components.

⚠WARNING
Hazard of Explosion and Deadly Gases!

Never solder, braze or weld on refrigerant lines or any unit components that are above atmospheric pressure or where refrigerant may be present. Always remove refrigerant by following the guidelines established by the EPA Federal Clean Air Act or other state or local codes as appropriate. After refrigerant removal, use dry nitrogen to bring system back to atmospheric pressure before opening system for repairs. Mixtures of refrigerants and air under pressure may become combustible in the presence of an ignition source leading to an explosion. Excessive heat from soldering, brazing or welding with refrigerant vapors present can form highly toxic gases and extremely corrosive acids. Failure to follow all proper safe refrigerant handling practices could result in death or serious injury.

4. Cut, fit and braze tubing, starting at the outdoor unit and work toward the indoor unit. See recommended tube sizes, Table 8, p. 27.

Note: *Use long radius ells for all 90° bends.*

All brazing should be done using a 2 to 3 psig dry nitrogen purge flowing through the pipe being brazed, Figure 12.

NOTICE
System Component Damage!

Install a regulating valve between the nitrogen source and the gauge manifold (Figure 12). Unregulated pressure can damage system components.

NOTICE
System Component Damage!

Wet-wrap all valves and protect painted surfaces from excessive heat. Heat can damage system components and the unit finish.

5. Shut off nitrogen supply. Shut off the manifold valve for the line that is connected to the suction line service valve. Disconnect the line from the gauge port on the valve.

Refrigerant Piping Procedure (Indoor Unit)

Once liquid and suction lines are complete to the refrigerant connections on the indoor unit, remove the gauge port core(s) on the indoor unit connection stubs to release the dry nitrogen charge.

NOTICE
Unit Damage!

Do not apply heat to remove seal caps until the gauge port cores have been removed. If seal caps are intact, application of heat may generate excessive pressure in the unit and result in damage to the coil or expansion valve.

1. Remove both seal caps from the indoor unit connection stubs.

NOTICE
Equipment Damage!

Do not remove the seal caps from refrigerant connections, or open the service valves until prepared to braze refrigerant lines to the connections. Due to the high hygroscopic properties of the R410A oil, excessive exposure to atmosphere will allow moisture to contaminate the system, damaging the compressor.

2. Turn nitrogen supply on. Nitrogen enters thorough liquid line gauge port.
3. Braze the liquid line connections.
4. Open the gauge port on the suction line and then braze the suction line to the connection stub. Nitrogen will bleed out the open gauge port on the suction line.
5. Shut off nitrogen supply.

Leak Check

⚠WARNING
Hazard of Explosion!

Use only dry nitrogen with a pressure regulator for pressurizing unit. Do not use acetylene, oxygen or compressed air or mixtures containing them for pressure testing. Do not use mixtures of a hydrogen containing refrigerant and air above atmospheric pressure for pressure testing as they may become flammable and could result in an explosion. Refrigerant, when used as a trace gas should only be mixed with dry nitrogen for pressurizing units. Failure to follow these recommendations could result in death or serious injury or equipment or property-only damage.

⚠WARNING
Hazard of Explosion!

Never use an open flame to detect gas leaks. Explosive conditions may occur. Use a leak test solution or other approved methods for leak testing. Failure to follow recommended safe leak test procedures could result in death or serious injury or equipment or property-only-damage.

After the brazing operation of refrigerant lines to both the outdoor and indoor unit is completed, the field brazed connections must be checked for leaks. Pressurize the system through the service valve with dry nitrogen to 200 psi. Use soap bubbles or other leak-checking methods to ensure that all field joints are leak free. If not, release pressure, repair and repeat leak test.

System Evacuation

1. After completion of leak check, evacuate the system.
2. Attach appropriate hoses from manifold gauge to gas and liquid line pressure taps.

Note: *Unnecessary switching of hoses can be avoided and complete evacuation of all lines leading to sealed system can be accomplished with manifold center hose and connecting branch hose to a cylinder of R-410A and vacuum pump.*

3. Attach center hose of manifold gauges to vacuum pump.

NOTICE
Operating Under Vacuum

Do not operate or apply power to the compressor while under a vacuum. Failure to follow these instructions will result in compressor failure.

4. Evacuate the system to hold a 500 micron vacuum.
5. Close off valve to vacuum pump and observe the micron gauge. If gauge pressure rises above 500 microns in one (1) minute, then evacuation is incomplete or the system has a leak.
6. If vacuum gauge does not rise above 500 microns in one (1) minute, the evacuation should be complete.

NOTICE
Equipment Damage

Charge with access port on the liquid line service valve only.

7. With vacuum pump and micron gauge blanked off, open valve on R-410A cylinder and allow refrigerant pressure to build up to about 80 psig.
8. Close valve on the R-410A supply cylinder. Close valves on manifold gauge set and remove refrigerant charging hoses from liquid and gas gauge ports.
9. Leak test the entire system. Using proper procedures and caution, as described in the previous section, repair any leaks found and repeat the leak test.

Insulating and Isolating Refrigerant Lines

Insulate the entire suction line with refrigerant piping insulation. Also insulate any portion of the liquid line exposed to temperature extremes. Insulate and isolate liquid and suction lines from each other. Isolate refrigerant lines from the structure and any duct work.

Note: *To prevent possible noise or vibration problems, be certain to isolate refrigerant lines from the building.*

Important: *All suction and hot gas bypass piping (if installed) should be insulated from the termination in the air handler to the condensing unit cabinet entry. Failure to do so can cause condensate drip off and performance degradation.*

Important: *Prior to starting a unit is it is advisable to have the approved oils available in the event that oil is required to be added to the system.*

NOTICE
Equipment Damage!

This is POE oil which readily absorbs moisture, always use new oil and never leave the containers open to atmosphere while not in use.

Table 7. TTA Approved Oils

Unit Model Number	Approved Oils
TTA061, TTA073, TTA076, TTA090, TTA101, TTA120, TTA126, TTA150, TTA156, TTA180	Trane Oil Part Number OIL00094 (1 quart container)
TTA086, TTA201, TTA240	Trane Oil Part Number OIL00079 (1 quart container) or OIL00080 (1 gallon container).

For units equipped with compressors containing site glasses, the oil level must be visible through the sight glass when the compressor is running under stabilized conditions and a few minutes after the compressor has stopped.

Refrigerant Charging Procedure

If charging by weight, refer to Table 8, p. 27 for starting change. If refrigerant adjustments are needed because of length of line, refer to charging curves and superheat with matched air handler beginning on p. 35.

Charge by weight through the gauge port on the liquid line. Once the charge enters the system, backseat (open) the liquid line service valve and disconnect the charging line and replace the cap on the gauge port.

Notes:

- *R-410A should only be charged in the liquid state.*
- *When possible, always charge the refrigerant into the liquid line of the unit.*
- *If the entire charge can't be charged into the liquid line, the balance of the unit charge can be metered through a charging manifold set as liquid preferably through a schrader valve into the suction line to the compressor — only while the compressor is running.*
- *Check and adjust superheat using* Table 9, p. 35*, then re-check charging chart to determine if charge corrections are necessary.*

NOTICE
Equipment Damage!

Never charge liquid refrigerant into the suction line of the unit with the compressor off.

Figure 13. Outdoor Units - Refrigerant Piping

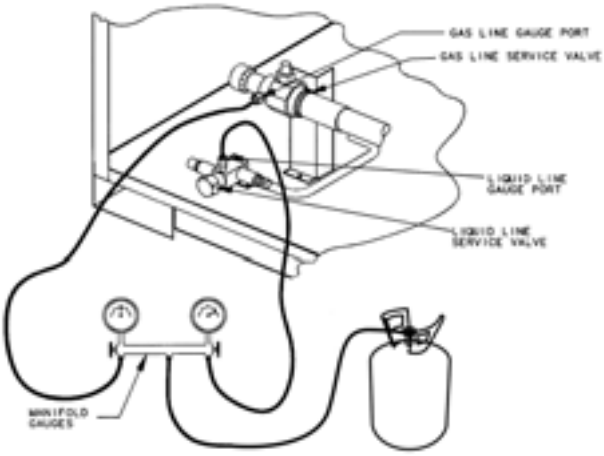

Table 8. Estimated charge levels at ARI rated line lengths (25 feet) - 50 & 60 Hz

	Refrigerant Charge		Per Circuit	
Matched Set	**Circuit 1**	**Circuit 2**	**Liquid Line Diameter**	**Vapor Line Diameter**
TTA061D w/TWE076D[a]	15.7	N/A	0.5 (1/2”)	1.125 (1 1/8”)
TTA073D w/TWE090D[a]	15.7	N/A	0.5 (1/2”)	1.125 (1 1/8”)
TTA076D w/TWE076D	17.6	N/A	0.625 (5/8”)	1.375 (1 3/8”)
TTA086D w/TWE101D	22.5	N/A	0.5 (1/2”)	1.375 (1 3/8”)
TTA090D w/TWE090D	17.6	N/A	0.625 (5/8”)	1.375 (1 3/8”)
TTA101D w/TWE101D	22.5	N/A	0.5 (1/2”)	1.375 (1 3/8”)
TTA120D w/TWE120D	22.5	N/A	0.5 (1/2”)	1.375 (1 3/8”)
TTA101E w/TWE101E	12.2	12.6	0.5 (1/2”)	1.125 (1 1/8”)
TTA120E w/TWE101D	12.2	12.6	0.5 (1/2”)	1.125 (1 1/8”)
TTA101F w/TWE101D	21.2	N/A	0.5 (1/2”)	1.375 (1 3/8”)
TTA120F w/TWE120D	21.2	N/A	0.5 (1/2”)	1.375 (1 3/8”)
TTA126E w/TWE126E	15.2	15.5	0.5 (1/2”)	1.125 (1 1/8”)
TTA150E w/TWE150E	15.2	15.5	0.5 (1/2”)	1.125 (1 1/8”)
TTA156E w/TWE156E	19.5	19.5	0.5 (1/2”)	1.375 (1 3/8”)
TTA180E w/TWE180E	19.5	19.5	0.5 (1/2”)	1.375 (1 3/8”)
TTA156F w/TWE156E	37.6	N/A	0.625 (5/8”)	1.625 (1 5/8”)
TTA180F w/TWE180E	37.6	N/A	0.625 (5/8”)	1.625 (1 5/8”)
TTA201E w/TWE201E	21.9	21.9	0.5 (1/2”)	1.375 (1 3/8”)
TTA240E w/TWE240E	21.9	21.9	0.5 (1/2”)	1.375 (1 3/8”)
TTA201F w/TWE201E	41.3	N/A	0.625 (5/8”)	1.625 (1 5/8”)
TTA240F w/TWE240E	41.3	N/A	0.625 (5/8”)	1.625 (1 5/8”)

(a) TTA061D and TTA073D need a reducer for vapor line. (1.375 to 1.125 inch) (1 3/8” to 1 1/8”)

Liquid Charging

This procedure is accomplished with the unit operating. Electrical connections must be complete. Do not proceed until the system is ready to operate.

Note: *The compressor access panel must be installed when the unit is running and being charged. Manifold hoses must be routed through refrigerant gauge access hole(s). See dimensional diagrams for specific locations (Figure 3, p. 12 - Figure 9, p. 18).*

⚠WARNING
Live Electrical Components!

During installation, testing, servicing and troubleshooting of this product, it may be necessary to work with live electrical components. Have a qualified licensed electrician or other individual who has been properly trained in handling live electrical components perform these tasks. Failure to follow all electrical safety precautions when exposed to live electrical components could result in death or serious injury.

1. Turn on power to the unit. Allow the system to run for 5 to 10 minutes to stabilize operating conditions.
2. Measure airflow across the indoor coil. Compare the measurements with the fan performance data in the Data/Submittal or Service Facts. Once proper airflow is established, compare discharge pressure and liquid temperature to the "Charging Charts," p. 35. Add or remove refrigerant (liquid only) as required to obtain correct discharge pressure and liquid temperature. Check suction line superheat and condenser sub-cooling to ensure the unit is operating properly.
3. Disconnect all power to the unit.

Important: *If the unit is charged and left without power until a later date, the crankcase heater should be energized for a minimum of 8 hours prior to powering the compressor(s).*

⚠ WARNING
Hazardous Voltage w/Capacitors!

Disconnect all electric power, including remote disconnects and discharge all motor start/run capacitors before servicing. Follow proper lockout/tagout procedures to ensure the power cannot be inadvertently energized. For variable frequency drives or other energy storing components provided by Trane or others, refer to the appropriate manufacturer's literature for allowable waiting periods for discharge of capacitors. Verify with an appropriate voltmeter that all capacitors have discharged. Failure to disconnect power and discharge capacitors before servicing could result in death or serious injury.

4. Remove the charging system from the unit.
5. Replace all panels.

Electrical Wiring

⚠WARNING
Electrocution and Fire Hazards with Improperly Installed and Grounded Field Wiring!

Improperly installed and grounded field wiring poses FIRE & ELECTROCUTION hazards. To avoid these hazards, you MUST follow requirements for field wiring installation and grounding as described in NEC and your local/state electrical codes. All field wiring MUST be performed by qualified personnel. Failure to follow these requirements could result in death or serious injury.

TTA field wiring consists of providing power supply to the unit, installing the system indoor thermostat and providing low voltage system interconnecting wiring. Access to electrical connection locations is shown in *Figure 3, p. 12 - Figure 9, p. 18.*

Unit Power Supply

The installer must provide line voltage circuit(s) to the unit main power terminals as shown by the unit wiring diagrams in Service Facts or field wiring. Power supply must include a disconnect switch in a location convenient to the unit. Ground the unit according to local codes and provide flexible conduit if codes require and/or if vibration transmission may cause noise problems.

Important: *All wiring must comply with applicable local and national (NEC) codes. Type and location of disconnect switches must comply with all applicable codes.*

⚠ WARNING
Ground Wire!

All field-installed wiring must be completed by qualified personnel. All field-installed wiring must comply with NEC and applicable local codes. Failure to follow this instruction could result in death or serious injuries.

NOTICE
Equipment Damage!

Use copper conductors only! Unit terminals are not designed to accept other types of conductors. Failure to do so could result in possible equipment damage.

Field Wiring- Electromechanical Control

Determine proper wire sizes and unit protective fusing requirements by referring to the unit nameplate and/or the unit Service Facts. Field wiring diagrams for accessories are shipped with the accessory.

⚠WARNING
Hazardous Voltage w/Capacitors!

Disconnect all electric power, including remote disconnects and discharge all motor start/run capacitors before servicing. Follow proper lockout/tagout procedures to ensure the power cannot be inadvertently energized. For variable frequency drives or other energy storing components provided by Trane or others, refer to the appropriate manufacturer's literature for allowable waiting periods for discharge of capacitors. Verify with an appropriate voltmeter that all capacitors have discharged. Failure to disconnect power and discharge capacitors before servicing could result in death or serious injury.

Low Voltage Wiring

Mount the indoor thermostat, zone sensor, or Night Setback Panel (NSB) in accordance with the corresponding thermostat installation instructions. Install color-coded, weather-proof, multi-wire cable according to the interconnecting wiring diagrams in the Air Handler IOM.

For Electromechanical Controls

Wiring shown with dashed lines is to be furnished and installed by the customer. All customer-supplied wiring must be copper only and must conform to NEC and local electrical codes. Codes may require line of sight between disconnect switch and unit.

Note: *When electric heater accessory is used, single point power entry or dual point power entry is field optional. Single point power entry option is through electric heater only.*

Figure 14. Thermostat and Control Connections — Electromechanical Controls

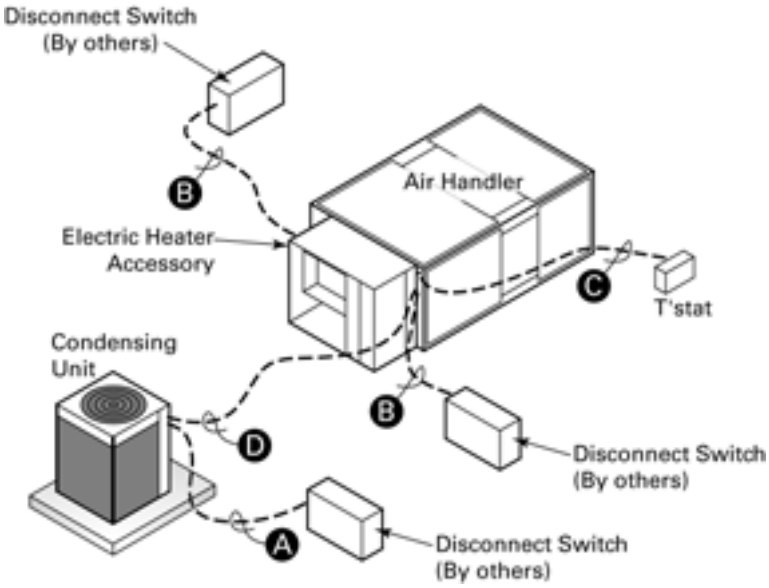

60 Hz - TTA/TWE

TTA073D/TWE090D	TTA120F/TWE120E[a]	TTA240F/TWE240E[a]
TTA090D/TWE090D	TTA150E/TWE150E	(2) TTA073D/TWE150E
TTA090D/TWE120D	TTA180E/TWE180E	(2) TTA090D/TWE180E
TTA120D/TWE120D	TTA180E/TWE240E	(2) TTA120D/TWE240E
TTA120E/TWE120E	TTA180F/TWE180E[a]	(2) TTA120F/TWE240E
TTA120F/TWE120D	TTA240E/TWE240E	

50 Hz - TTA/TWE

TTA061DD/TWE076DD	TTA101FD/TWE101DD	TTA201ED/TWE201ED
TTA076DD/TWE076DD	TTA126ED/TWE126ED	TTA201FD/TWE201ED[a]
TTA086DD/TWE101DD	TTA156ED/TWE156ED	(2) TTA061DD/TWE126ED
TTA101DD/TWE101DD	TTA156ED/TWE201ED	(2) TTA076DD/TWE156ED
TTA101ED/TWE101ED	TTA156FD/TWE156ED[a]	(2) TTA101DD/TWE201ED

(a) Need to manifold the dual circuit indoor unit when connecting to a Manifolded outdoor unit.

Field Wiring:

A. 3 power wires. Line voltage for 3 phase (2 wires for single phase)

B. 3 power wires. Line voltage for 3 phase (2 wires for single phase)

C. **Conventional thermostat**: 3 to 7 wires depending on stages of electric heat

D. 3 to 7 wires depending on type of outdoor unit(s)

Field Wiring- ReliaTel™ Control

Wiring shown with dashed lines is to be furnished and installed by the customer. All customer-supplied wiring must be copper only and must conform to NEC and local electrical codes. Codes may require line of sight between disconnect switch and unit.

⚠WARNING
Hazardous Voltage w/Capacitors!

Disconnect all electric power, including remote disconnects and discharge all motor start/run capacitors before servicing. Follow proper lockout/tagout procedures to ensure the power cannot be inadvertently energized. For variable frequency drives or other energy storing components provided by Trane or others, refer to the appropriate manufacturer's literature for allowable waiting periods for discharge of capacitors. Verify with an appropriate voltmeter that all capacitors have discharged. Failure to disconnect power and discharge capacitors before servicing could result in death or serious injury.

Notes:

1. When electric heater accessory is used, single point power entry or dual point power entry is field optional. Single point power entry option is through electric heater only.
2. ***Choose only one of the following; Thermostat, Zone Sensor, or NSB Panel.

Figure 15. Thermostat and Control Connections — ReliaTel™ Controls

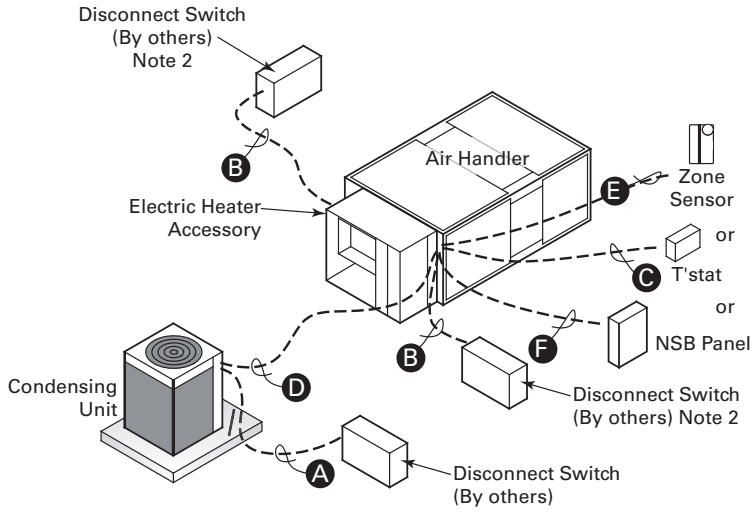

60 Hz - TTA/TWE

TTA073D/TWE090D	TTA120F/TWE120E[(a)]	TTA240F/TWE240E[(a)]
TTA090D/TWE090D	TTA150E/TWE150E	(2) TTA073D/TWE150E
TTA090D/TWE120D	TTA180E/TWE180E	(2) TTA090D/TWE180E
TTA120D/TWE120D	TTA180E/TWE240E	(2) TTA120D/TWE240E
TTA120E/TWE120E	TTA180F/TWE180E[(a)]	(2) TTA120F/TWE240E
TTA120F/TWE120D	TTA240E/TWE240E	

50 Hz - TTA/TWE

TTA061DD/TWE076DD	TTA101FD/TWE101DD	TTA201ED/TWE201ED
TTA076DD/TWE076DD	TTA126ED/TWE126ED	TTA201FD/TWE201ED[(a)]
TTA086DD/TWE101DD	TTA156ED/TWE156ED	(2) TTA061DD/TWE126ED
TTA101DD/TWE101DD	TTA156ED/TWE201ED	(2) TTA076DD/TWE156ED
TTA101ED/TWE101ED	TTA156FD/TWE156ED[(a)]	(2) TTA101DD/TWE201ED

(a) Need to manifold the dual circuit indoor unit when connecting to a Manifolded outdoor unit.

Field Wiring:

A. 3 power wires, line voltage for 3 phase, (2 power wires for single phase)

B. 3 power wires, line voltage for 3 phase, (2 power wires for single phase)

C. **Conventional thermostat**: 3 to 7 wires depending on stages of electric heat
Zone Sensor: 4 to 10 wires depending on zone sensor model [1]

D. 3 to 7 wires depending on type of outdoor unit(s).

[1] See Zone Sensor wiring instructions for wiring information (ReliaTel Controls only).

Field Wiring

Figure 16. Night Setback Panel Field Wiring

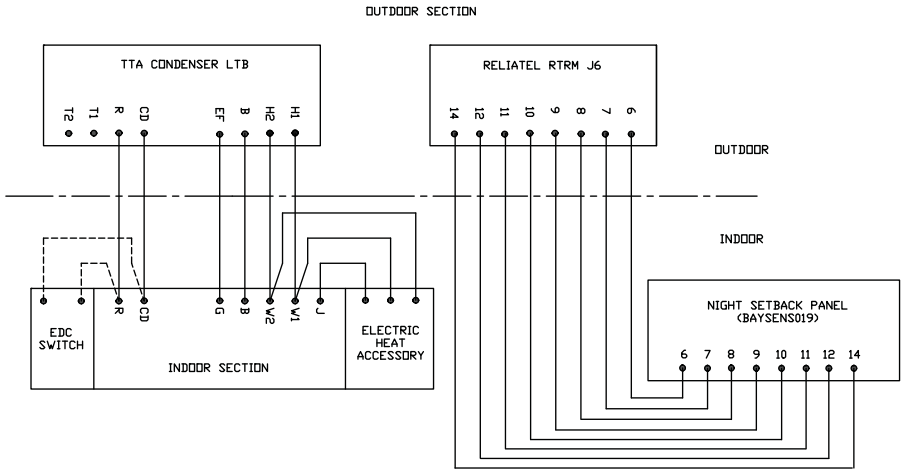

Figure 17. Zone Sensor Field Wiring

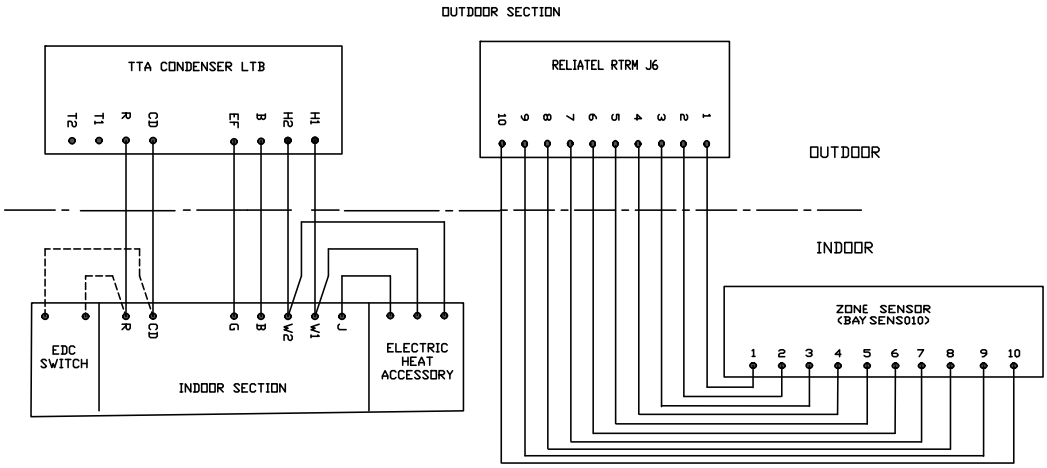

Figure 18. Thermostat Field Wiring

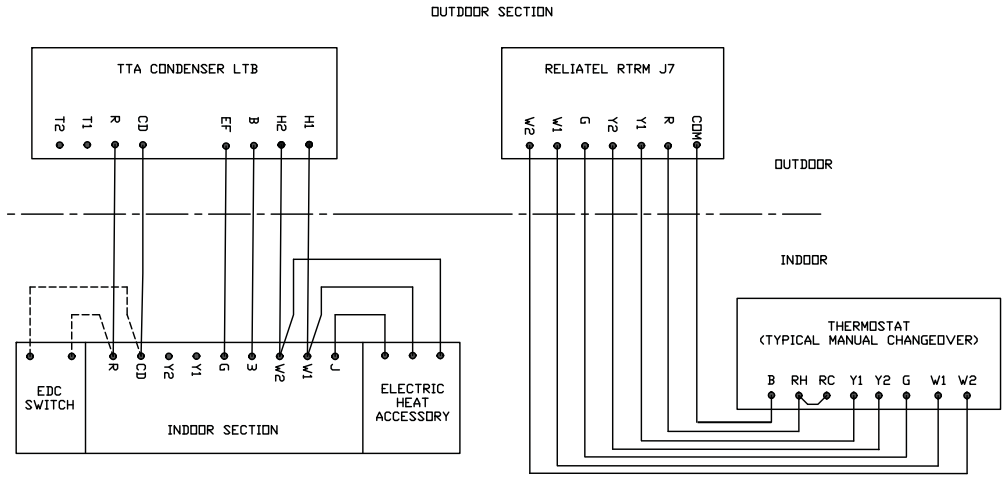

Refrigerant Circuit

Figure 19. Typical Split System Cooling Refrigerant Circuit

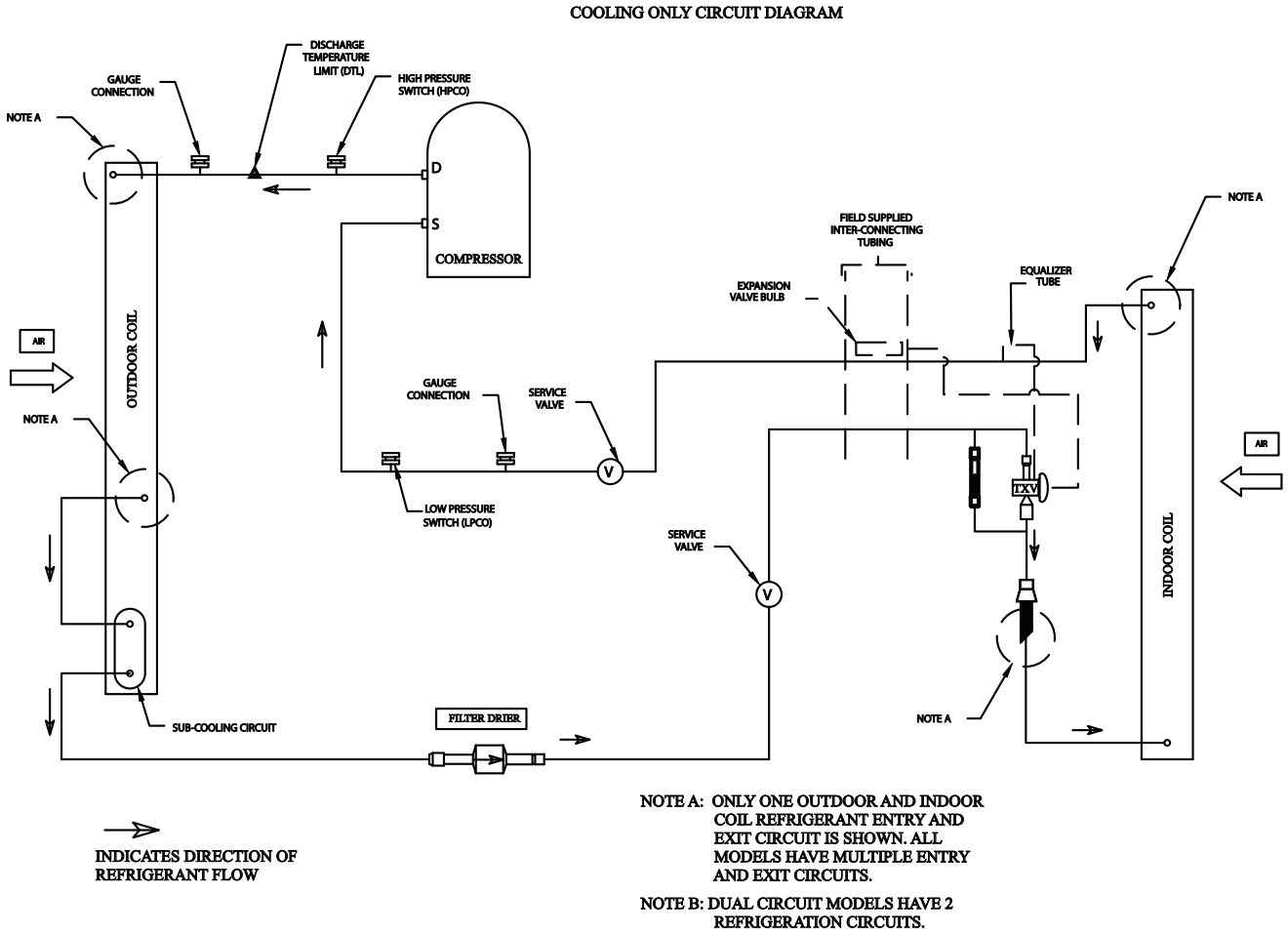

Charging Charts

Table 9. TTA Superheat with Matched TWE Air Handler - 50 & 60 Hz

Condenser	Air Handler	Cooling Superheat	
		Circuit 1	Circuit 2
TTA061D	TWE076D	16.8	—
TTA073D	TWE090D	16.8	—
TTA076D	TWE076D	12.8	—
TTA086D	TWE101D	15.5	—
TTA090D	TWE090D	12.8	—
TTA101D	TWE101D	15.5	—
TTA101E	TWE101E	12.6	12.6
TTA101F	TWE101D	11.4	—
TTA120D	TWE120D	15.5	—
TTA120E	TWE120E	12.6	12.6
TTA120F	TWE120D	11.4	—
TTA126E	TWE126E	13.6	13.6
TTA150E	TWE150E	13.6	13.6
TTA156E	TWE156E	18.4	18.4
TTA156F	TWE156E	19.1	—
TTA180E	TWE180E	18.4	18.4
TTA180F	TWE180E	19.1	—
TTA201E	TWE201E	15.2	15.2
TTA201F	TWE201E	12.9	—
TTA240E	TWE240E	15.2	15.2
TTA240F	TWE240E	12.9	—

Notes:

1. A preset, adjustable TXV is provided for each circuit in the TWE models. If the application causes the superheat to deviate from the values shown above by more than 1 degree - after the system has achieved steady state - the TXV should be adjusted to provide the values shown as measured at the compressor.
2. The values given above have been tested and are approved for the matched sets shown. If an alternate combination is used, an expansion device should be used that provides 16-20°F degrees of superheat measured at the compressor.
3. Check and adjust superheat using this table, then re-check charging chart to determine if charge corrections are necessary.

Charging Charts

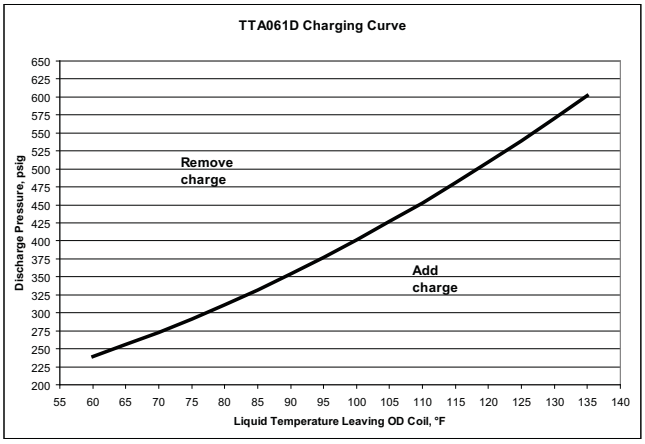

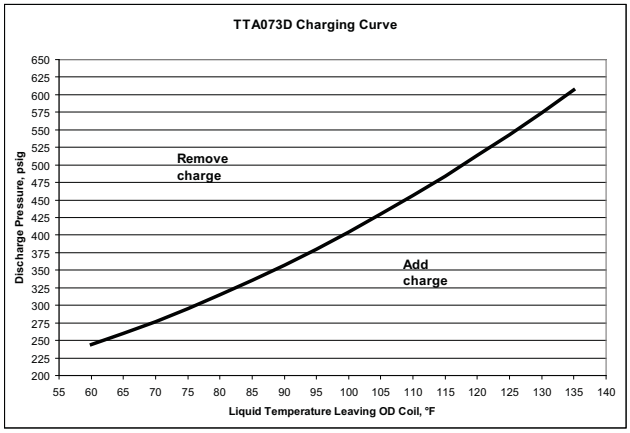

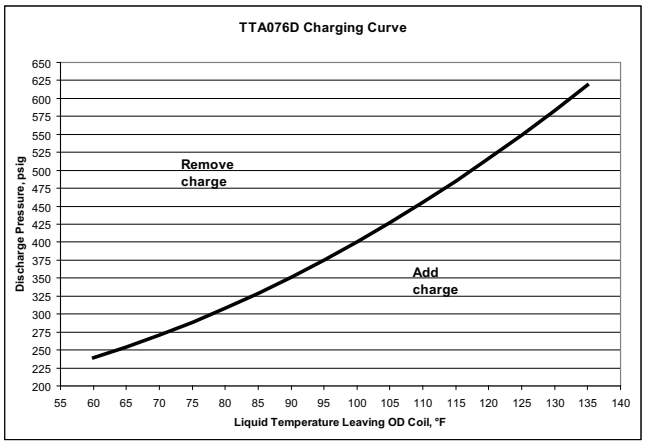

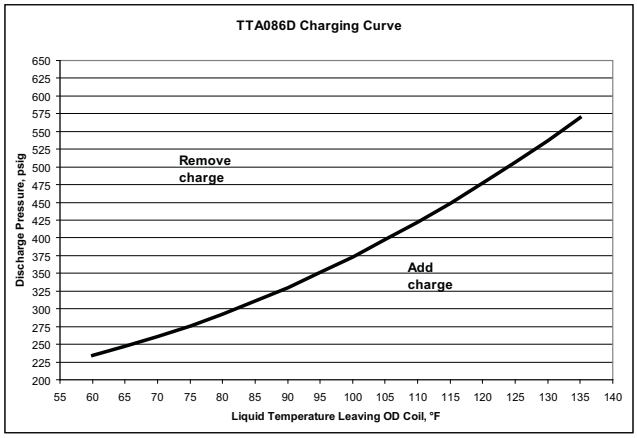

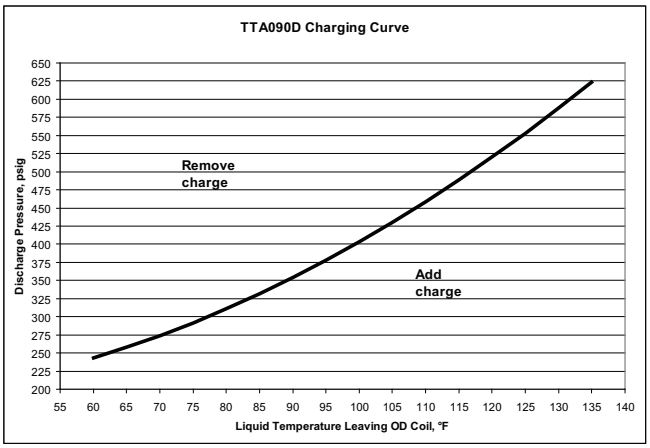

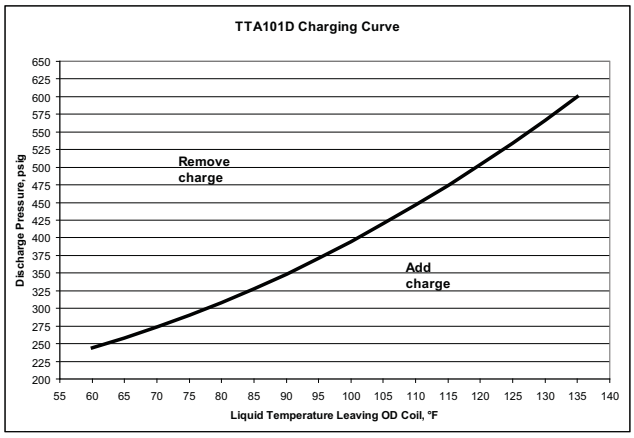

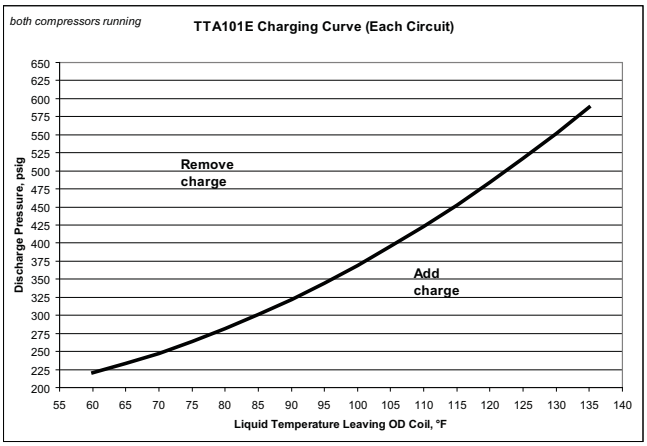
both compressors running
TTA101E Charging Curve (Each Circuit)
Discharge Pressure, psig
Remove charge
Add charge
Liquid Temperature Leaving OD Coil, °F

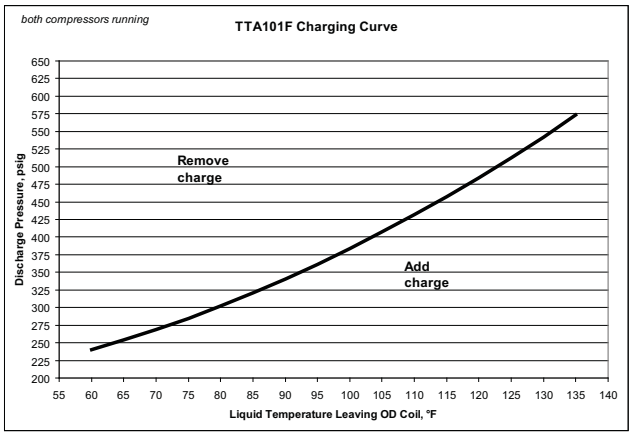
both compressors running
TTA101F Charging Curve
Discharge Pressure, psig
Remove charge
Add charge
Liquid Temperature Leaving OD Coil, °F

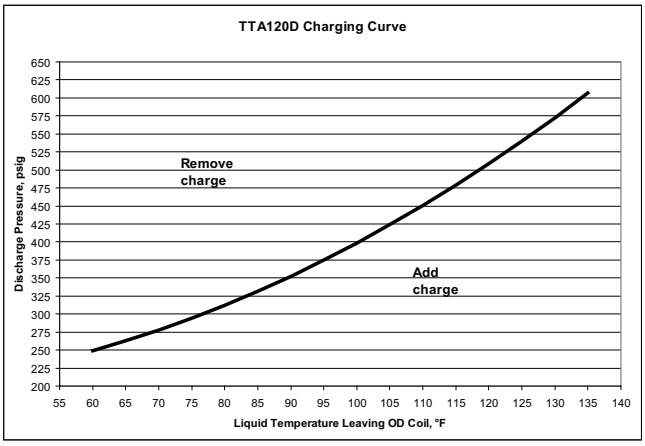
TTA120D Charging Curve
Discharge Pressure, psig
Remove charge
Add charge
Liquid Temperature Leaving OD Coil, °F

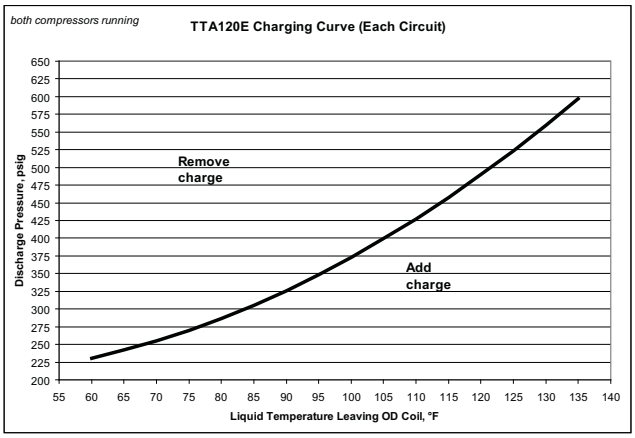
both compressors running
TTA120E Charging Curve (Each Circuit)
Discharge Pressure, psig
Remove charge
Add charge
Liquid Temperature Leaving OD Coil, °F

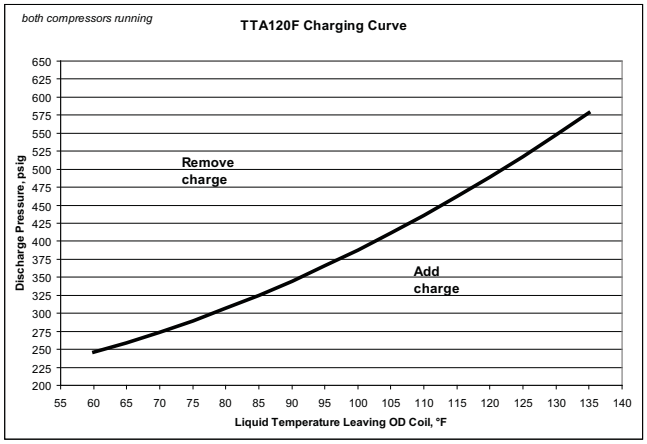
both compressors running
TTA120F Charging Curve
Discharge Pressure, psig
Remove charge
Add charge
Liquid Temperature Leaving OD Coil, °F

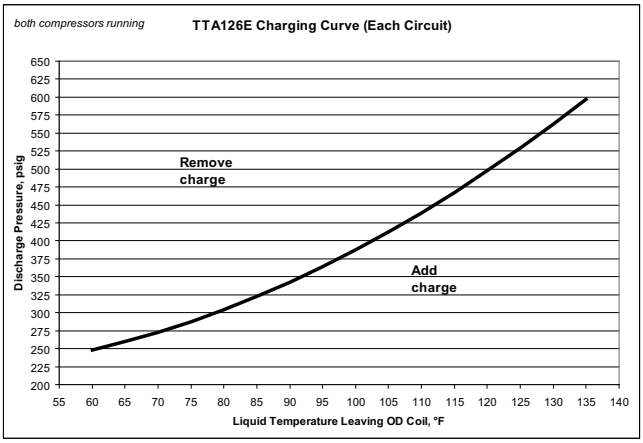
both compressors running
TTA126E Charging Curve (Each Circuit)
Discharge Pressure, psig
Remove charge
Add charge
Liquid Temperature Leaving OD Coil, °F

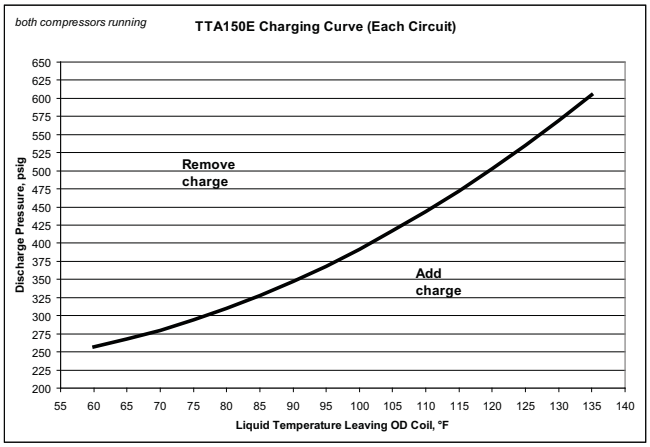
both compressors running
TTA150E Charging Curve (Each Circuit)
Discharge Pressure, psig
Remove charge
Add charge
Liquid Temperature Leaving OD Coil, °F

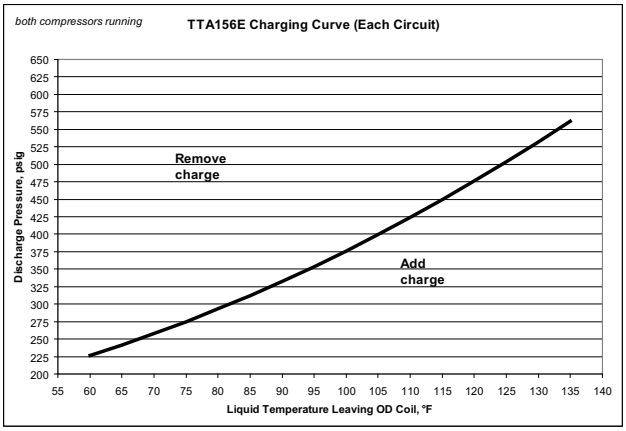
both compressors running
TTA156E Charging Curve (Each Circuit)
Discharge Pressure, psig
Remove charge
Add charge
Liquid Temperature Leaving OD Coil, °F

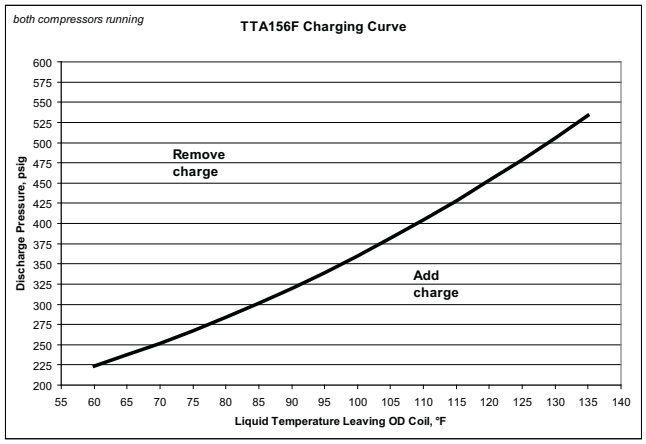
both compressors running
TTA156F Charging Curve
Discharge Pressure, psig
Remove charge
Add charge
Liquid Temperature Leaving OD Coil, °F

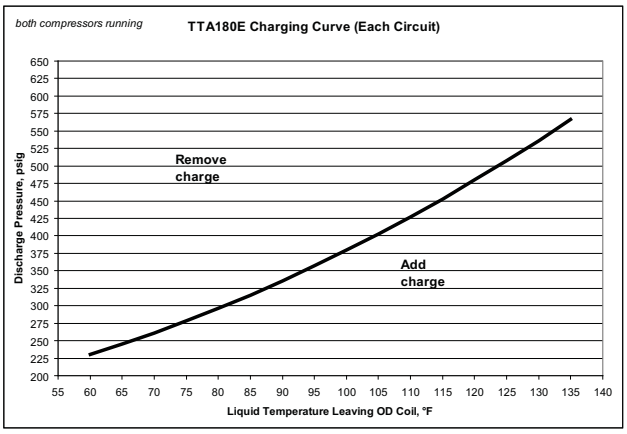
both compressors running
TTA180E Charging Curve (Each Circuit)
Discharge Pressure, psig
Remove charge
Add charge
Liquid Temperature Leaving OD Coil, °F

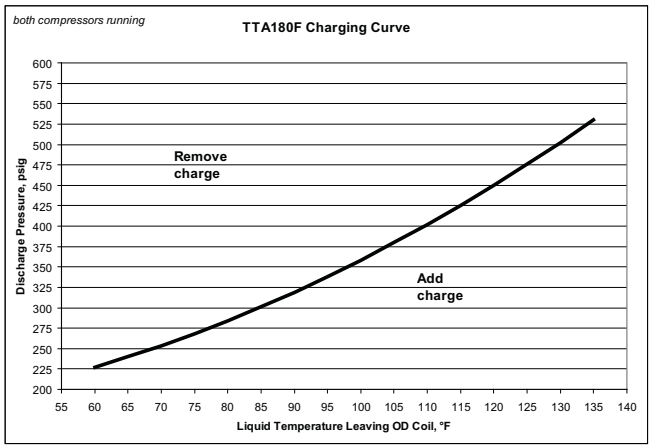
both compressors running
TTA180F Charging Curve
Discharge Pressure, psig
Remove charge
Add charge
Liquid Temperature Leaving OD Coil, °F

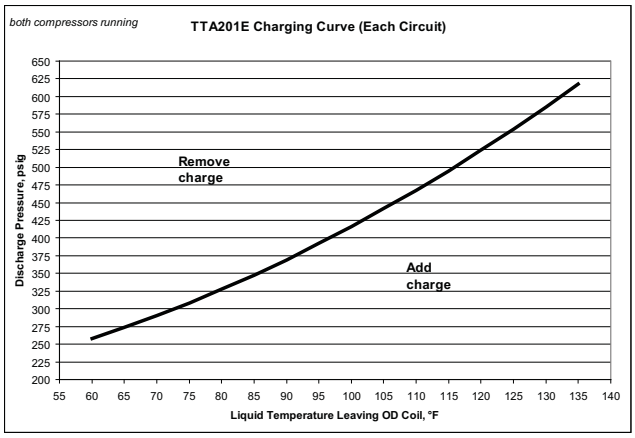
both compressors running
TTA201E Charging Curve (Each Circuit)
Discharge Pressure, psig
Remove charge
Add charge
Liquid Temperature Leaving OD Coil, °F

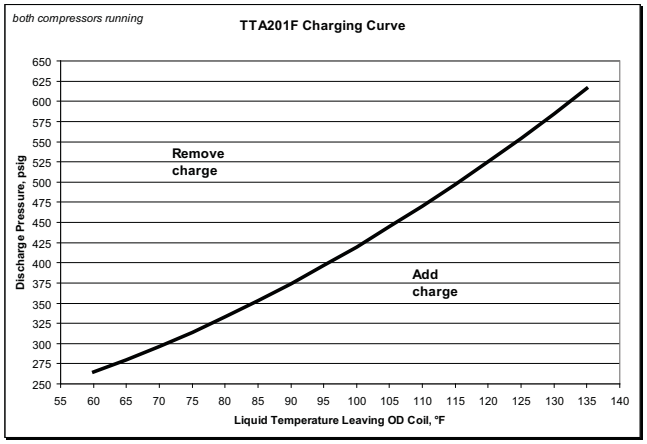
both compressors running
TTA201F Charging Curve
Discharge Pressure, psig
650
625
600
575
550
525
500
475
450
425
400
375
350
325
300
275
250
Remove
charge
Add
charge
55 60 65 70 75 80 85 90 95 100 105 110 115 120 125 130 135 140
Liquid Temperature Leaving OD Coil, °F

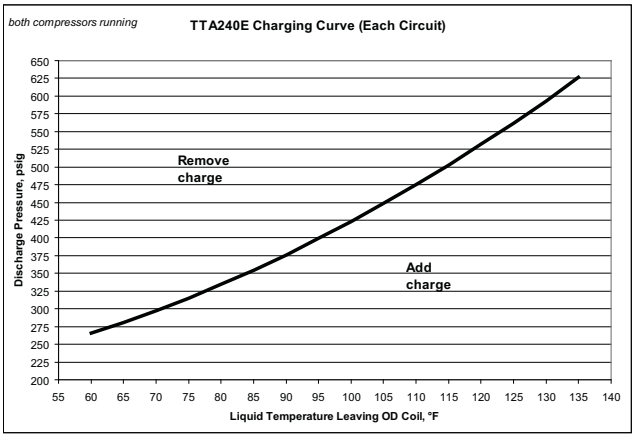
both compressors running
TTA240E Charging Curve (Each Circuit)
Discharge Pressure, psig
650
625
600
575
550
525
500
475
450
425
400
375
350
325
300
275
250
225
200
Remove
charge
Add
charge
55 60 65 70 75 80 85 90 95 100 105 110 115 120 125 130 135 140
Liquid Temperature Leaving OD Coil, °F

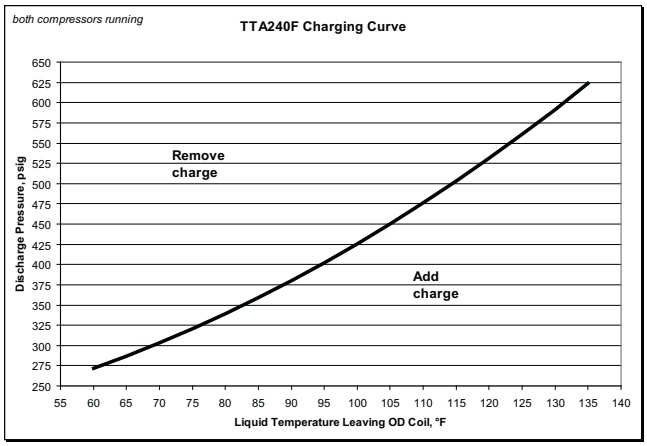
both compressors running
TTA240F Charging Curve
Discharge Pressure, psig
650
625
600
575
550
525
500
475
450
425
400
375
350
325
300
275
250
Remove
charge
Add
charge
55 60 65 70 75 80 85 90 95 100 105 110 115 120 125 130 135 140
Liquid Temperature Leaving OD Coil, °F

Pre-Start

Control Circuit Features

Note: *Not all of these features may be required for your unit, check electrical schematic.*

Discharge Temperature Limit (DTL)

The control's sensor is located on the discharge line. This device will shut off the compressor and the outdoor fan(s) if the discharge temperature exceeds the DTL setting. Once the discharge temperature has returned to normal, the compressor will cycle back on.

Low Outdoor Ambient Cooling

The Evaporator Defrost Control is standard equipment on Air Handlers and will permit low ambient cooling down to 50°F. For cooling operation down to 0°F, use an Accessory Head Pressure Control on the outdoor unit.

Evaporator Defrost Control (EDC)

This control is located in the Air Handler of Split Units. The control's sensing tube is embedded vertically in the evaporator coil, near the center. This device will stop the compressor if the indoor coil temperature drops below its setting. The indoor air will still circulate across the coil bringing the temperature of the coil back up to the cut-in temperature of the evaporator defrost control.

Low Pressure Cut-Out (LPCO)

This control's sensor is located in the suction (gas) line, near the compressor. This control will stop the compressor and the outdoor fans if suction pressure drops below the Low Pressure Cut-Out setting. Once the suction pressure has returned to normal, the compressor and outdoor fans will cycle back on.

High Pressure Cut-Out (HPCO)

This control's sensor is located in the discharge line. This device will shut off the compressor and the outdoor fan(s) if the discharge pressure exceeds the High Pressure Cut-Out's setting. Once the discharge pressure has returned to normal, the compressor will cycle back on.

⚠WARNING

Prevent Injury!

Due to agency safety requirements, no schrader core is be installed beneath the HPCO. Removal of the HPCO without evacuating the system charge could cause injury and release of refrigerant.

Internal Overload Protector (IOL)

This device is embedded in the compressor. It will shut off the compressor if the discharge temperature of the compressor exceeds its design trip temperature.

Note: *The IOL will put the compressor back in operation once the compressor motor heat has dropped below the trip setting; however, a check of the refrigerant and electrical systems should be made to determine the cause and be corrected.*

Installation Checklist

Complete this checklist once the unit is installed to verify that all recommended procedures have been accomplished before starting the system. Do not operate the system until all items covered by this checklist are complete.

1. Inspect unit location for proper required service clearances.
2. Inspect unit location for proper free air clearances.
3. Inspect unit location for secure, level mounting position.

Refrigerant Piping

1. Properly sized/constructed liquid and suction lines connected to stubs at both the indoor and outdoor units?
2. Insulated the entire suction line?
3. Insulated portions of liquid line exposed to extremes in temperature?
4. Performed initial leak test?
5. Evacuated each refrigerant circuit to 500 microns?
6. Charged each circuit with proper amount of R-410A?

Electrical Wiring

1. Provided unit power wiring (with disconnect) to proper terminals in the unit control section?
2. Installed system indoor thermostat?
3. Installed system low voltage interconnecting wiring to proper terminals of outdoor unit, indoor unit and system thermostat?

Start-Up

Electromechanical Controls

Unit Model Number Digits 9 and 10 = 00, 0S, H0 and HS

Sequence of Operation

Once the unit is properly installed and pre-start procedures are complete, start the unit by turning the System Switch on the indoor thermostat to either HEAT, COOL or AUTO. The system should operate normally.

NOTICE

Equipment Damage!

Ensure the disconnect for the indoor air handler is closed before operating the system. Operating the outdoor unit without the indoor fan energized can cause unit trip-out on high pressure control and/or liquid flood back to the compressor.

General

Operation of the system cooling (and optional heating) cycles is controlled by the position of the system switch on the room thermostat. Once the system switch is placed in either the **HEAT** or **COOL** position, unit operation is automatic. The optional automatic changeover thermostat, when in the **AUTO** position, automatically changes to heat or cool with sufficient room temperature change.

Evaporator Fan (Indoor Supply Air)

The evaporator fan is controlled by an **ON/AUTO** switch on the room thermostat. With the switch positioned at **AUTO** and the system operating in the cooling mode, fan operation coincides with the cooling run cycles. If the system is equipped with heat and is operating in the heating mode while the fan switch is at **AUTO**, fan operation coincides with the heating run cycles. When the fan switch is positioned at **ON,** fan operation is continuous.

Cooling Mode

With the disconnect switch in the **ON** position, current is supplied to the compressor sump heater(s), phase monitor and control transformer. The sump heater(s) supplies heat to the compressor(s) during the **"Off"** cycle. The phase monitor looks at the incoming power to verify that there is no reversed phase, no phase imbalance, and no loss of phase. If the phase monitor detects any of these three conditions, it will shut off control voltage. The transformer steps down the line voltage to 24V for the low voltage control circuit. When the room thermostat system switch is positioned at **COOL** and the fan switch is at **AUTO**, the compressor contactor energizes on a call for cooling. When the contacts of the compressor contactor close, operation of the compressor and condenser fan begins. The evaporator fan contactor also energizes on a call for cooling and initiates evaporator fan operation.

On units with dual circuits, the second stage of cooling is initiated as a result of the 2-stage thermostat calling for additional cooling.

ReliaTel™ Controls

Unit Model Number Digits 9 and 10 = 0R, 0T, 0U, 0W, HR, HT, HU, and HW

Sequence of Operation

Once the unit is properly installed and pre-start procedures are complete, start the unit by turning the System Switch on the indoor thermostat to either HEAT, COOL or AUTO. The system should operate normally.

NOTICE

Equipment Damage!

Ensure the disconnect for the indoor air handler is closed before operating the system. Operating the outdoor unit without the indoor fan energized can cause unit trip-out on high pressure control and/or liquid flood back to the compressor.

The ReliaTel™ Control is a microelectronic control feature, which provides operating functions that are significantly different than conventional Electromechanical units. The ReliaTel™ Refrigeration Module **(RTRM)** uses Proportional/Integral control algorithms to perform specific unit functions that govern the unit operation in response to application conditions.

The RTRM provides compressor anti-short cycle timing functions through minimum **"Off"** and **"On"** timing to increase reliability, performance and to maximize unit efficiency. Upon power initialization, the RTRM performs self-diagnostic checks to ensure that all internal controls are functioning. It checks the configuration parameters against the components connected to the system. The system LED located on the RTRM module is turned **"On"** within one second after power-up if all internal operations are okay.

ReliaTel™ Control Cooling Mode

For Zone Sensor Control

When the system switch is set to the **COOL** position and the zone temperature rises above the cooling setpoint, the RTRM energizes the compressor contactor, provided the high and low pressure and the discharge temperature limit controls are closed. When the compressor contacts close, the compressor and the outdoor fan motor start to maintain the zone temperature to within ± 2°F of the sensor setpoint at the sensed location. On units with dual circuits, the second stage of cooling is initiated as a result of the Proportional/Integral control algorithms calling for additional cooling.

For Thermostat Control:

When the room thermostat system switch is positioned at **COOL** and the fan switch is at **AUTO**, the RTRM energizes the compressor contactor, provided the high and low pressure and the discharge temperature limit controls are closed. When the contacts of the compressor contactor close, operation of the compressor and condenser fan begins. The evaporator fan contactor also energizes on a call for cooling and initiates evaporator fan operation. On units with dual circuits, the second stage of cooling is initiated as a result of the 2-stage thermostat calling for additional cooling.

Note: *Irregular unit operation may occur when the unit is controlled with a triac-switching thermostat. Please review the approved thermostat vendor list for all recommended relay-switching thermostats.*

ReliaTel™ Control Evaporator Fan Operation

When the fan selection switch is set to the **AUTO** position, the RTRM energizes the evaporator fan relay coil approximately 1 second after energizing the compressor contactor coil in the cooling mode. In the heating mode, the RTRM energizes the evaporator fan relay coil approximately 1 second before energizing the electric heat contactors. The RTRM de-energizes the evaporator fan

relay coil approximately 60 seconds on dual compressor units and 80 seconds on single compressor units after the cooling requirement has been satisfied to enhance unit efficiency. When the heating cycle is terminated, the evaporator fan relay coil is de-energized at the same time as the heater contactors. When the fan selection switch is set to the **ON** position, the RTRM keeps the evaporator fan relay coil energized for continuous fan motor operation.

ReliaTel™ Control Heating Operation

Electric heat is factory disabled on all split systemunits with ReliaTel control (jumper placed between J2-1 and J2-2 RTRM inputs). To configure the unit for electric heat, cut or remove the jumper wire between J2-1 and J2-2 on the RTRM. All split system units with ReliaTel control are also configured from the factory for only 1-stage of electric heat (jumper placed between J1-3 and J1-6 RTRM inputs). To configure the unit for 2-stages of electric heat, cut or remove the jumper placed between J1-3 and J1-6 RTRM inputs.

When the system switch is set to the **HEAT** position and heating is required, the RTRM energizes the Heat 1 relay coil on the RTRM. When the Heat 1 relay contacts close, the first stage electric heat contactor is energized. If the first stage of electric heat cannot satisfy the heating requirement, the RTRM energizes the Heat 2 relay coil on the RTRM. When the Heat 2 relay contacts close, the second stage electric heat contactor is energized. The first and second stages of heat are cycled **"On"** and **"Off"** as required to maintain the zone.

Service Test Modes ReliaTel™ Controls

Test Modes

Upon power initialization, the RTRM performs self-diagnostic checks to ensure that all internal controls are functional. It also checks the configuration parameters against the components connected to the system. The system LED located on the RTRM module is turned “On” within one second of power-up if internal operation is okay.

Use one of the following “Test” procedures to bypass some time delays and to start the unit at the control panel. Each step of unit operation can be activated individually by temporarily shorting across the “Test” terminals for 2 to 3 seconds. The system LED located on the RTRM module will blink when the test mode has been initiated. The unit can be left in any “Test” step for up to one hour before it will automatically terminate, or it can be terminated by opening the main power disconnect switch. Once the test mode has been terminated, the system LED will glow continuously and the unit will revert to the “System” control.

There are three methods in which the “Service Test” can be cycled at LTB-Test 1(T1) and LTB-Test 2 (T2).

1. Step Test Mode

This method initiates the different components of the unit, one at a time, by temporarily shorting across the two test terminals for 2 to 3 seconds.

For the initial start-up of the unit, this method allows the technician to cycle a component **“On”** and have up to one hour to complete the check. Service Test Mode will be ignored if a short is present across Test 1 and Test 2 at start-up.

2. Resistance Test Mode

This method can be used for start-up when a decade box for variable resistance outputs is available. This method initiates the different components of the unit, one at a time, when a specific resistance value is placed across the two test terminals. The unit will remain in the specific test mode for approximately one hour even though the resistance is left on the test terminals.

Table 10. Service Test Guide for Component Operation

Test Step	Mode	Fan	Comp 1	Comp 2	Heat 1	Heat 2	Ohms
1	Fan	On	Off	Off	Off	Off	2.2K
2	Cool 1	On	On[a]	Off	Off	Off	4.7K
3[b]	Cool 2	On	On[a]	On[a]	Off	Off	6.8K
4[b]	Heat 1	On	Off	Off	On	Off	10K
5[b]	Heat 2	On	Off	Off	On	On	15K

(a) The condenser fans will operate any time a compressor is ON.
(b) Steps for optional accessories and non-applicable modes in unit will be skipped.

3. Auto Test Mode

This method is not recommended for start-up due to the short timing between individual component steps. This method initiates the different components of the unit, one at a time, when a fixed jumper is installed across the test terminals. The unit will start the first test step and change to the next step every 30 seconds. At the end of the test mode, control of the unit will automatically revert to the applied “System” control method. For unit test steps, test modes, and step resistance values to cycle the various components, refer to Table 10.

Troubleshooting

Trouble Shooting ReliaTel™ Controls

⚠ WARNING
Live Electrical Components!

During installation, testing, servicing and troubleshooting of this product, it may be necessary to work with live electrical components. Have a qualified licensed electrician or other individual who has been properly trained in handling live electrical components perform these tasks. Failure to follow all electrical safety precautions when exposed to live electrical components could result in death or serious injury.

The RTRM has the ability to provide the service personnel with some unit diagnostics and system status information.

Before turning the main power disconnect switch "Off," follow the steps below to check the ReliaTel™ Refrigeration Module (RTRM). All diagnostics & system status information stored in the RTRM will be lost when the main power is turned "**Off**".

To prevent injury or death from electrocution, it is the responsibility of the technician to recognize this hazard and use extreme care when performing service procedures with the electrical power energized.

Note: *The J6 & J7 screw terminals must be tightened in order to accurately measure voltage in the required steps.*

1. Verify that the system LED on the RTRM is burning continuously. If the LED is lit, go to Step 3.
2. If the LED is not lit, verify that 24 VAC is present between J1-1 and J1-2. If 24 VAC is present, proceed to Step 3. If 24 VAC is not present, check the unit main power supply, check transformer (TNS1). Proceed to Step 3 if necessary.
3. Utilizing "Method 1" or "Method 2" in the "System Status Checkout Procedure" section, check the following:
   - System status
   - Heating status
   - Cooling status

Note: *If a System failure is indicated, proceed to Step 4. If no failures are indicated, proceed to Step 5.*

4. If a System failure is indicated, recheck Step 1 and Step 2. If the LED is not lit in Step 1, and 24 VAC is present in Step 2, then the RTRM has failed. Replace the RTRM.
5. If no failures are indicated, use one of the TEST mode procedures described in the "Unit Start-Up" section to start the unit. This procedure will allow you to check all of the RTRM outputs, and all of the external controls (relays, contactors, etc.) that the RTRM outputs energize, for each respective mode. Proceed to Step 6.
6. Step the system through all of the available modes, and verify operation of all outputs, controls, and modes. If a problem in operation is noted in any mode, you may leave the system in that mode for up to one hour while troubleshooting. Refer to the sequence of operations for each mode, to assist in verifying proper operation. Make the necessary repairs and proceed to Step 7 and Step 8.
7. If no abnormal operating conditions appear in the test mode, exit the test mode by turning the power "Off" at the main power disconnect switch.
8. Refer to the individual component test procedures if other microelectronic components are suspect.

System Status Checkout Procedure

"System Status" is checked by using one of the following two methods:

Method 1. If the Zone Sensor Module (ZSM) is equipped with a remote panel with LED status indication, you can check the unit within the space. If the ZSM does not have LED's, use Method 2. BAYSENS010B, BAYSENS011B, BAYSENS019A, BAYSENS020A, BAYSENS021A, BAYSENS023A, BAYSENS109 and BAYSENS110 all have the remote panel indication feature. The LED descriptions are listed below.

LED 1 (System)

- "On" during normal operation.
- "Off" if a system failure occurs or the LED fails.
- "Flashing" indicates test mode.

LED 2 (Heat)

- "On" when the heat cycle is operating.
- "Off" when the heat cycle terminates or the LED fails.
- "Flashing" indicates a heating failure.

LED 3 (Cool)

- "On" when the cooling cycle is operating.
- "Off" when the cooling cycle terminates or the LED fails.
- "Flashing" indicates a cooling failure.

The following information describes the complete listing of failure indication causes.

System Failure

Check the voltage between terminals 6 and 9 on J6, it should read approximately 32 VDC. If no voltage is present, a System failure has occurred. Refer to Step 4 in the previous section for the recommended troubleshooting procedure.

Cooling Failure

1. Cooling and heating set point (slide pot) on the zone sensor has failed. Refer to the "Zone Sensor Test Procedure" section.
2. Zone temperature thermistor ZTEMP on ZTS failed. Refer to the "Zone Sensor Test Procedure" section.
3. CC1 or CC2 24 VAC control circuit has opened, check CC1 & CC2 coils, and any of the controls below that apply to the unit (HPC1, HPC2, DTL1, DTL2).
4. LPC1 has opened during the 3 minute minimum "on time" during 4 consecutive compressor starts, check LPC1 or LPC2 by testing voltage between the J1-8 & J3-2 terminals on the RTRM and ground. If 24 VAC is present, the LPCs have not tripped. If no voltage is present, LPCs have tripped.

Simultaneous Heat and Cool Failure

⚠ WARNING
Live Electrical Components!

During installation, testing, servicing and troubleshooting of this product, it may be necessary to work with live electrical components. Have a qualified licensed electrician or other individual who has been properly trained in handling live electrical components perform these tasks. Failure to follow all electrical safety precautions when exposed to live electrical components could result in death or serious injury.

1. Emergency Stop is activated.

Method 2

The second method for determining system status is done by checking voltage readings at the RTRM (J6). The system indication descriptions and the approximate voltages are listed below.

System Failure

Measure the voltage between terminals J6-9 & J6-6.

- Normal Operation = approximately 32 VDC
- System Failure = less than 1 VDC, approximately 0.75 VDC
- Test Mode = voltage alternates between 32 VDC & 0.75 VDC

Heat Failure

Measure the voltage between terminals J6-7 & J6-6.

- Heat Operating = approximately 32 VDC
- Heat Off = less than 1 VDC, approximately 0.75 VDC
- Heating Failure = voltage alternates between 32 VDC & 0.75 VDC

Cool Failure

Measure the voltage between terminals J6-8 & J6-6.

- Cool Operating = approximately 32 VDC
- Cool Off = less than 1 VDC, approximately 0.75 VDC
- Cooling Failure = voltage alternates between 32 VDC & 0.75 VDC

To use LED's for quick status information at the unit, purchase a BAYSENS010B ZSM and connect wires with alligator clamps to terminals 6 through 10. Connected each respective terminal wire (6 through 10) from the Zone Sensor to the unit J6 terminals 6 through 10.

Note: *If the system is equipped with a programmable zone sensor, (BAYSENS019A, or BAYSENS023A), the LED indicators will not function while the BAYSENS010A is connected.*

Resetting Cooling and Heating Lockouts

Cooling Failures and Heating Lockouts are reset in an identical manner. Method 1 explains resetting the system from the space; Method 2 explains resetting the system at the unit.

Note: *Before resetting Cooling Failures and Heating Lockouts check the Failure Status Diagnostics by the methods previously explained. Diagnostics will be lost when the power to the unit is disconnected.*

Method 1

To reset the system from the space, turn the **MODE** selection switch at the zone sensor to the **OFF** position. After approximately 30 seconds, turn the **MODE** selection switch to the desired mode, i.e. **HEAT**, **COOL**, or **AUTO**.

Method 2

To reset the system at the unit, cycle the unit power by turning the disconnect switch "**Off**" and then **"On".**

Lockouts can be cleared through the building management system. Refer to the building management system instructions for more information.

Zone Temperature Sensor (ZTS) Service Indicator

The ZSM SERVICE LED is a generic indicator that will signal the closing of a Normally Open switch at any time, providing the Indoor Motor (IDM) is operating. This indicator is usually used to indicate an airside fan failure.

The RTRM will ignore the closing of this Normally Open switch for 2 (±1) minutes. This helps prevent nuisance SERVICE LED indications.

Temperature Tests

Note: *These procedures are not for programmable or digital models and are conducted with the Zone Sensor Module electrically removed from the system.*

Test 1 - Zone Temperature Thermistor (ZTEMP)

This component can be tested by measuring the resistance between terminals 1 and 2 on the Zone Temperature Sensor. Below are some typical indoor temperatures, and corresponding resistive values.

Table 11. Typical Indoor Temperatures and Values

Zone Temperature	*Nominal Resistance*
50°F or 10.0°C	19.9 Kohms
55°F or 12.8°C	17.47 Kohms
60°F or 15.6°C	15.3 Kohms
65°F or 18.3°C	13.49 Kohms
70°F or 21.1°C	11.9 Kohms
75°F or 23.9°C	10.50 Kohms
80°F or 26.7°C	9.3 Kohms
85°F or 29.4°C	8.25 Kohms
90°F or 32.2°C	7.3 Kohms

Test 2 - Cooling Set Point (CSP) and Heating Set Point (HSP)

Cool SP = Terminals 2 and 3

Range = 100 to 900 Ohms approximate

Heat SP = Terminals 2 and 5

Range = 100 to 900 Ohms approximate

Table 12. Test 3 - System Mode and Fan Selection

Resistance Valves (Ohms)	Zone Sensor Unit/Fan Mode	Local Unit Mode	Local Fan Mode
2.32K	Off/Auto	Off	Auto
4.87K	Cool/Auto	Cool	Auto
7.68K	Auto/Auto	Auto	Auto
10.77K	Off/On	Off	On
13.32K	Cool/On	Cool	On
16.13K	Auto/On	Auto	On
19.48K	Heat/Auto	Heat	Auto
27.93K	Heat/On	Heat	On
35.0K	Emergency Heat/Auto	Emergency Heat	Auto
43.45K	Emergency Heat/On	Emergency Heat	On
Out of Range (Short)	INVALID/Short	Invalid (CV), Auto (VAV)	Invalid
Out of Range (Open)	INVALID/Open	Invalid (CV), Off (VAV)	Invalid

Test 3 - System Mode and Fan Selection

The combined resistance of the Mode selection switch and the Fan selection switch can be measured between terminals 2 and 4 on the Zone Sensor. The possible switch combinations are listed in Table 12, p. 50 with their corresponding resistance values.

Test 4 - LED Indicator Test, (SYS ON, HEAT, & COOL)

⚠ WARNING
Live Electrical Components!

During installation, testing, servicing and troubleshooting of this product, it may be necessary to work with live electrical components. Have a qualified licensed electrician or other individual who has been properly trained in handling live electrical components perform these tasks. Failure to follow all electrical safety precautions when exposed to live electrical components could result in death or serious injury.

Method 1

Testing the LED using a meter with diode test function. Test both forward and reverse bias. Forward bias should measure a voltage drop of 1.5 to 2.5 volts, depending on your meter. Reverse bias will show an Over Load, or open circuit indication if LED is functional.

Method 2

Testing the LED with an analog Ohmmeter. Connect Ohmmeter across LED in one direction, then reverse the leads for the opposite direction. The LED should have at least 100 times more resistance in reverse direction, as compared with the forward direction. If high resistance in both directions, LED is open. If low in both directions, LED is shorted.

Method 3

To test LED's with ZSM connected to unit, test voltages at LED terminals on ZSM. A measurement of 32 VDC, across an unlit LED, means the LED has failed.

Important: *Measurements should be made from LED common (ZSM terminal 6 to respective LED terminal). Refer to the Zone Sensor Module (ZSM) Terminal Identification table at the beginning of this section.*

Programmable & Digital Zone Sensor Test

Testing serial communication voltage

1. Verify 24 VAC is present between terminals J6-14 & J6-11.

⚠ WARNING
Live Electrical Components!

During installation, testing, servicing and troubleshooting of this product, it may be necessary to work with live electrical components. Have a qualified licensed electrician or other individual who has been properly trained in handling live electrical components perform these tasks. Failure to follow all electrical safety precautions when exposed to live electrical components could result in death or serious injury.

2. Disconnect wires from J6-11 and J6-12. Measure the voltage between J6-11 and J6-12, should be about 32 VDC.
3. Reconnect wires to terminals J6-11 and J6-12. Measure voltage again between J6-11 and J6-12, voltage should flash high and low every 0.5 seconds. The voltage on the low end will measure about 19 VDC, while the voltage on the high end will measure from approximately 24 to 38 VDC.
4. Verify all modes of operation, by running the unit through all of the steps in the “Test Modes” section discussed in “Unit Start-Up.”
5. After verifying proper unit operation, exit the test mode. Turn the fan on continuously at the ZSM, by pressing the button with the fan symbol. If the fan comes on and runs continuously, the ZSM is good. If you are not able to turn the fan on, the ZSM is defective.

RLCI Loss of Communications

If the RLCI loses input from the building management system, the RTRM will control in the default mode after approximately 15 minutes. If the RTRM loses the Heating and Cooling setpoint input, the RTRM will control in the default mode instantaneously. The temperature sensing thermistor in the Zone Sensor Module is the only component required for the “Default Mode” to operate.

Maintenance

⚠ WARNING

Hazardous Voltage w/Capacitors!

Disconnect all electric power, including remote disconnects and discharge all motor start/run capacitors before servicing. Follow proper lockout/tagout procedures to ensure the power cannot be inadvertently energized. For variable frequency drives or other energy storing components provided by Trane or others, refer to the appropriate manufacturer's literature for allowable waiting periods for discharge of capacitors. Verify with an appropriate voltmeter that all capacitors have discharged. Failure to disconnect power and discharge capacitors before servicing could result in death or serious injury.

NOTICE

Operating Under Vacuum

Do not operate or apply power to the compressor while under a vacuum. Failure to follow these instructions will result in compressor failure.

Perform all of the indicated maintenance procedures at the intervals scheduled. This will prolong the life of the unit and reduce the possibility of costly equipment failure.

Monthly

Conduct the following maintenance inspections once per month.

1. Check unit wiring to ensure all connections are tight and that the wiring insulation is intact.
2. Inspect the condenser coils for dirt and debris. If the coils appear dirty, clean them.
3. With the unit operating in the cooling mode, check the suction and discharge pressures and compare them with Pressure Curve values in unit Service Facts. Record these readings on the "Maintenance Log."

Annually (Cooling Season)

The following maintenance procedures must be performed at the beginning of each cooling season to ensure efficient unit operation.

1. Perform all of the monthly maintenance inspections.
2. With the unit operating, check unit superheat and record the reading in the "Maintenance Log."
3. Remove any accumulation of dust and/or dirt from the unit casing.
4. Remove corrosion from any surface and repaint. Check the gasket around the control panel door to ensure it fits correctly and is in good condition to prevent water leakage.
5. Inspect the control panel wiring to ensure that all connections are tight and that the insulation is intact.

Note: *Condenser fan motors are permanently lubricated.*

6. Check refrigerant piping and fittings for leaks.
7. Inspect the condenser coils for dirt and debris. If the coils appear dirty, clean them.

Coil Cleaning

Regular coil maintenance, including annual cleaning-enhances the unit's operating efficiency by minimizing:

- compressor head pressure and amperage draw;
- water carryover;
- fan brake horsepower and
- static pressure losses.

At least once each year-or more often if the unit is located in a “dirty” environment-clean the evaporator and condenser coils using the instructions outlined below. Be sure to follow these instructions as closely as possible to avoid damaging the coils. To clean refrigerant coils, use a soft brush and a sprayer. Contact your local Parts Center for appropriate detergents.

1. Remove enough panels from the unit to gain safe access to coils.

⚠WARNING
No Step Surface!

Do not walk on the sheet metal base. Walking on the base could cause the supporting metal to collapse. Failure of the base could result in death or serious injury.

2. Straighten any bent coil fins with a fin comb.
3. Remove loose dirt and debris from both sides of the coil with a soft brush.
4. Mix the detergent with water according to the manufacturer's instructions. If desired, heat the solution to 150° F maximum to improve its cleansing capability.
5. Pour the cleaning solution into the sprayer.
6. Spray the leaving-airflow side of the coil first; then spray the opposite side of the coil. Allow the cleaning solution to stand on the coil for five minutes.
7. Rinse both sides of the coil with cool, clean water.
8. Inspect both sides of the coil; if it still appears to be dirty, repeat Steps 7 and 8.
9. Reinstall all of the components and panels removed in Step 1; then restore power to the unit.
10. Using a fin comb, straighten any coil fins that were inadvertently bent during the cleaning process.

Maintenance Log

Date	Ambient Temp. (°F)	Evaporator Entering Air		Compressor				Superheat (°F) (at compressor)		Subcooling (°F) (at service valve)	
		Dry Bulb	Wet Bulb	Suction Pressure		Discharge Pressure					
				(C1)	(C2)	(C1)	(C2)	Circuit #1	Circuit #2	Circuit #1	Circuit #2

Note: Perform each inspection once per month (during cooling season) while unit is operating

Warranty

For Commercial Unitary Equipment Rated Under 20 Tons and Related Accessories

Products Covered — This warranty is extended by Trane, and applies to the following products:

- All packaged and split system air conditioners and heat pumps have a rated capacity of less than 20 tons.
- All packaged combinations gas/electric air conditioners having a rated capacity of less than 20 tons.
- All packaged combination gas/electric air conditioners having a rated capacity of 1 ½ through 5 tons single phase electric power and used for commercial applications. (As used in this warranty, a commercial application is any application where the end purchaser uses the product for other than personal, family or household purposes.)
- All accessories for the above products which are sold by Trane and applied in accordance with Trane specifications.

Basic Warranty

The warrantor warrants for a period of twelve (12) months from the initial start-up or eighteen (18) months from date of shipment, whichever is sooner, that the products covered by this warranty (1) are free from defects in material and manufacture, and (2) have the capacities and ratings set forth in the warrantor's catalogs and bulletins.

Extended Four-Year Warranty On Compressors

The warrantor warrants for a period of four (4) years commencing twelve (12) months from date of installations or eighteen (18) months from date of shipment, whichever is sooner, that the compressor in any product covered by this warranty (1) is free from defects in material and manufacture, and (2) has the capacities and ratings set forth in the warrantor's catalogs and bulletins.

Exclusions And Limitations

The warrantor's obligations and liabilities under this warranty are limited to furnishing F.O.B. factory or warehouse at the warrantor-designated shipping point, freight allowed to Buyer's city (or port of export for shipments outside the conterminous United States) a replacement product or, at the option of the warrantor, parts for the repair of the product not conforming to this warranty and which have been returned to the warrantor.

The warrantor's warranty is conditional on the Customer providing written notice to the warrantor within thirty (30) days of the discovery of the defect. No product shall be returned to the warrantor without the warrantor's written permission. No liability whatever shall attach to warrantor until said products have been fully paid for and then said liability shall be limited to the purchase price of the equipment shown to be defective.

The warranty does not apply to any compressor or gas-fired heat exchanger which has been repaired or altered in such manner as, in the judgement of the warrantor, affects its stability or reliability. This warranty does not cover (1) any heat exchanger which has been fired with an improper type of fuel (2) a heat exchanger which is installed in a beauty parlor, dry cleaning establishment, de-greasing plant or in any corrosive atmosphere; or (3) any heat exchanger which is not shown to be defective by the warrantor's inspection.

This warranty does not cover damage due to accident, abuse, improper use, external causes, freezing, corrosion, erosion or deterioration.

Local transportation, related service labor, air filters, diagnosis calls, refrigerant and related items are not covered.

THE WARRANTY AND LIABILITY SET FORTH HEREIN ARE IN LIEU OF ALL OTHER WARRANTIES AND LIABILITIES, WHETHER IN CONTRACT OR IN NEGLIGENCE, EXPRESS OR IMPLIED, IN LAW OR IN FACT, INCLUDING IMPLIED WARRANTIES OR MERCHANTABILITY AND FITNESS FOR A PARTICULAR PURPOSE AND ANY IMPLIED WARRANTIES OTHERWISE ARISING FROM THE

COURSE OF DEALING OR TRADE. IN NO EVENT SHALL THE WARRANTOR BE LIABLE FOR ANY INCIDENTAL OR CONSEQUENTIAL DAMAGES.

The warrantor makes certain further warranty protection available on an optional, extra-cost basis. Any further warranty must be in writing. If you wish further help or information concerning this warranty, contact:

Trane — Warrantor, 2701 Wilma Rudolph Blvd., Clarksville, TN 37040

Commercial Equipment Rated 20 Tons and Larger and Related Accessories (Parts Only)

Products Covered — This warranty is extended by Trane, and applies only to commercial equipment rated 20 tons and larger and related accessories purchased and retained for use within the U.S.A. and Canada.

Warrantor warrants for a period of 12 months from initial start-up or 18 months from date of shipment, whichever is less, that the products covered by this warranty (1) are free from defects in material and manufacture, and (2) have the capacities and ratings set forth in catalogs and bulletins; provided, that no warranty is made against corrosion, erosion or deterioration.

Warrantor's obligations and liabilities under this warranty are limited to furnishing, F.O.B. factory replacement parts (or equipment at the option of Warrantor) for all Warrantor's products not conforming to this warranty. Warrantor shall not be obligated to pay for the cost of lost refrigerant. No liability whatever shall attach to Warrantor until said products have been paid for and then said liability shall be limited to the purchase price of the equipment shown to be defective.

The Warranty and Liability set forth herein are in lieu of all other warranties and liabilities, whether in contract or in negligence, express or implied, in law or in fact, including implied warranties of merchantability and fitness for particular use, and in no event shall warrantor be liable for any incidental or consequential damages

Some states do not allow limitations on how long an implied warranty lasts or do not allow the exclusion or limitation of incidental or consequential damages, so the above limitation or exclusion may not apply to you. This warranty gives you specific legal rights, and you may also have other rights which vary from state to state.

Trane — Warrantor, 2701 Wilma Rudolph Blvd., Clarksville, TN 37040

GW-598-4799

Wiring Diagram Matrix

Note: *Wiring diagrams are available through e-Library or by contacting your local sales office.*

DIAGRAM NO.	DIAGRAM TYPE	UNIT MODEL NO'S
2313-0403	Power/Control Diagram	TTA061DD0RAA, TTA061DD0TAA, TTA061DDHRAA, TTA061DDHTAA, TTA061DD0UAA, TTA061DD0WAA, TTA061DDHUAA, TTA061DDHWAA, TTA073D30RAA, TTA073D30TAA, TTA073D3HRAA, TTA073D3HTAA, TTA073D30UAA, TTA073D30WAA, TTA073D3HUAA, TTA073D3HWAA, TTA073D40RAA, TTA073D40TAA, TTA073D4HRAA, TTA073D4HTAA, TTA073D40UAA, TTA073D40WAA, TTA073D4HUAA, TTA073D4HWAA, TTA073DW0RAA, TTA073DW0TAA, TTA073DWHRAA, TTA073DWHTAA, TTA073DW0UAA, TTA073DW0WAA, TTA073DWHUAA, TTA073DWHWAA, TTA073DK0RAA, TTA073DK0TAA, TTA073DKHRAA, TTA073DKHTAA, TTA073DK0UAA, TTA073DK0WAA, TTA073DKHUAA, TTA073DKHWAA, TTA086DD0RAA, TTA086DD0TAA, TTA086DDHRAA, TTA086DDHTAA, TTA086DD0UAA, TTA086DD0WAA, TTA086DDHUAA, TTA086DDHWAA, TTA076DD0RAA, TTA076DD0TAA, TTA076DDHRAA, TTA076DDHTAA, TTA076DD0UAA, TTA076DD0WAA, TTA076DDHUAA, TTA076DDHWAA, TTA090D30RAA, TTA090D30TAA, TTA090D3HRAA, TTA090D3HTAA, TTA090D30UAA, TTA090D30WAA, TTA090D3HUAA, TTA090D3HWAA, TTA090D40RAA, TTA090D40TAA, TTA090D4HRAA, TTA090D4HTAA, TTA090D40UAA, TTA090D40WAA, TTA090D4HUAA, TTA090D4HWAA, TTA090DW0RAA, TTA090DW0TAA, TTA090DWHRAA, TTA090DWHTAA, TTA090DW0UAA, TTA090DW0WAA, TTA090DWHUAA, TTA090DWHWAA, TTA090DK0RAA, TTA090DK0TAA, TTA090DKHRAA, TTA090DKHTAA, TTA090DK0UAA, TTA090DK0WAA, TTA090DKHUAA, TTA090DKHWAA, TTA101DD0RAA, TTA101DD0TAA, TTA101DDHRAA, TTA101DDHTAA, TTA101DD0UAA, TTA101DD0WAA, TTA101DDHUAA, TTA101DDHWAA, TTA120D40RAA, TTA120D40TAA, TTA120D4HRAA, TTA120D4HTAA, TTA120D40UAA, TTA120D40WAA, TTA120D4HUAA, TTA120D4HWAA, TTA120DW0RAA, TTA120DW0TAA, TTA120DWHRAA, TTA120DWHTAA, TTA120DW0UAA, TTA120DW0WAA, TTA120DWHUAA, TTA120DWHWAA, TTA120DK0RAA, TTA120DK0TAA, TTA120DKHRAA, TTA120DKHTAA, TTA120DK0UAA, TTA120DK0WAA, TTA120DKHUAA, TTA120DKHWAA, TTA156ED0RAA, TTA156ED0TAA, TTA156EDHRAA, TTA156EDHTAA, TTA156ED0UAA, TTA156ED0WAA, TTA156EDHUAA, TTA156EDHWAA, TTA180E30RAA, TTA180E30TAA, TTA180E3HRAA, TTA180E3HTAA, TTA180E30UAA, TTA180E30WAA, TTA180E3HUAA, TTA180E3HWAA, TTA180E40RAA, TTA180E40TAA, TTA180E4HRAA, TTA180E4HTAA, TTA180E40UAA, TTA180E40WAA, TTA180E4HUAA, TTA180E4HWAA, TTA180EW0RAA, TTA180EW0TAA, TTA180EWHRAA, TTA180EWHTAA, TTA180EW0UAA, TTA180EW0WAA, TTA180EWHUAA, TTA180EWHWAA, TTA180EK0RAA, TTA180EK0TAA, TTA180EKHRAA, TTA180EKHTAA, TTA180EK0UAA, TTA180EK0WAA, TTA180EKHUAA, TTA180EKHWAA, TTA201ED0RAA, TTA201ED0TAA, TTA201EDHRAA, TTA201EDHTAA, TTA201ED0UAA, TTA201ED0WAA, TTA201EDHUAA, TTA201EDHWAA, TTA240E40RAA, TTA240E40TAA, TTA240E4HRAA, TTA240E4HTAA, TTA240E40UAA, TTA240E40WAA, TTA240E4HUAA, TTA240E4HWAA, TTA240EW0RAA, TTA240EW0TAA, TTA240EWHRAA, TTA240EWHTAA, TTA240EW0UAA, TTA240EW0WAA, TTA240EWHUAA, TTA240EWHWAA, TTA240EK0RAA, TTA240EK0TAA, TTA240EKHRAA, TTA240EKHTAA, TTA240EK0UAA, TTA240EK0WAA, TTA240EKHUAA, TTA240EKHWAA
2313-0404	Power/Control Diagram	TTA156ED0RAA, TTA156ED0TAA, TTA156EDHRAA, TTA156EDHTAA, TTA156ED0UAA, TTA156ED0WAA, TTA156EDHUAA, TTA156EDHWAA, TTA180E30RAA, TTA180E30TAA, TTA180E3HRAA, TTA180E3HTAA, TTA180E30UAA, TTA180E30WAA, TTA180E3HUAA, TTA180E3HWAA, TTA180E40RAA, TTA180E40TAA, TTA180E4HRAA, TTA180E4HTAA, TTA180E40UAA, TTA180E40WAA, TTA180E4HUAA, TTA180E4HWAA, TTA180EW0RAA, TTA180EW0TAA, TTA180EWHRAA, TTA180EWHTAA, TTA180EW0UAA, TTA180EW0WAA, TTA180EWHUAA, TTA180EWHWAA, TTA180EK0RAA, TTA180EK0TAA, TTA180EKHRAA, TTA180EKHTAA, TTA180EK0UAA, TTA180EK0WAA, TTA180EKHUAA, TTA180EKHWAA, TTA201ED0RAA, TTA201ED0TAA, TTA201EDHRAA, TTA201EDHTAA, TTA201ED0UAA, TTA201ED0WAA, TTA201EDHUAA, TTA201EDHWAA, TTA240E40RAA, TTA240E40TAA, TTA240E4HRAA, TTA240E4HTAA, TTA240E40UAA, TTA240E40WAA, TTA240E4HUAA, TTA240E4HWAA, TTA240EW0RAA, TTA240EW0TAA, TTA240EWHRAA, TTA240EWHTAA, TTA240EW0UAA,TTA240EW0WAA, TTA240EWHUAA, TTA240EWHWAA, TTA240EK0RAA, TTA240EK0TAA, TTA061DD00AA, TTA061DD0SAA, TTA061DDH0AA, TTA061DDHSAA, TTA073D300AA, TTA073D30SAA, TTA073D3H0AA, TTA073D3HSAA, TTA073D400AA, TTA073D40SAA, TTA073D4H0AA, TTA073D4HSAA, TTA073DW00AA, TTA073DW0SAA, TTA073DWH0AA, TTA073DWHSAA, TTA073DK00AA, TTA073DK0SAA, TTA073DKH0AA, TTA073DKHSAA, TTA086DD00AA, TTA086DD0SAA, TTA086DDH0AA, TTA086DDHSAA, TTA076DD00AA, TTA076DD0SAA, TTA076DDH0AA, TTA076DDHSAA, TTA090D300AA, TTA090D30SAA, TTA090D3H0AA, TTA090D3HSAA, TTA090D400AA, TTA090D40SAA, TTA090D4H0AA, TTA090D4HSAA, TTA090DW00AA, TTA090DW0SAA, TTA090DWH0AA, TTA090DWHSAA, TTA090DK00AA, TTA090DK0SAA, TTA090DKH0AA, TTA090DKHSAA, TTA101DD00AA,TTA101DD0SAA, TTA101DDH0AA, TTA101DDHSAA, TTA120D400AA, TTA120D40SAA, TTA120D4H0AA, TTA120D4HSAA, TTA120DW00AA, TTA120DW0SAA, TTA120DWH0AA, TTA120DWHSAA, TTA120DK00AA, TTA120DK0SAA, TTA120DKH0AA, TTA120DKHSAA, TTA156ED00AA, TTA156ED0SAA, TTA156EDH0AA, TTA156EDHSAA, TTA180E300AA, TTA180E30SAA, TTA180E3H0AA, TTA180E3HSAA, TTA180E400AA, TTA180E40SAA, TTA180E4H0AA, TTA180E4HSAA, TTA180EW00AA, TTA180EW0SAA, TTA180EWH0AA, TTA180EWHSAA, TTA240EW00AA, TTA240EW0SAA, TTA180EK00AA, TTA180EK0SAA, TTA180EKH0AA, TTA180EKHSAA, TTA201ED00AA, TTA201ED0SAA, TTA201EDH0AA, TTA201EDHSAA, TTA240E400AA, TTA240E40SAA, TTA240E4H0AA, TTA240E4HSAA, TTA240EW00AA, TTA240EW0SAA, TTA240EWH0AA, TTA240EWHSAA, TTA240EK00AA, TTA240EK0SAA, TTA240EKH0AA, TTA240EKHSAA
2313-0407	Power/Control Diagram	TTA120D30RAA, TTA120D30TAA, TTA120D3HRAA, TTA120D3HTAA, TTA120D30UAA, TTA120D30WAA, TTA120D3HUAA, TTA120D3HWAA, TTA240E30RAA, TTA240E30TAA, TTA240E3HRAA, TTA240E3HTAA, TTA240E30UAA, TTA240E30WAA, TTA240E3HUAA, TTA240E3HWAA
2313-0408	Power/Control Diagram	TTA120D300AA, TTA120D30SAA, TTA120D3H0AA, TTA120D3HSAA, TTA240E300AA, TTA240E30SAA, TTA240E3H0AA, TTA240E3HSAA
2313-0409	Power/Control Diagram	TTA240F300AA, TTA240F30SAA, TTA240F3H0AA, TTA240F3HSAA
2313-0410	Power/Control Diagram	TTA240F30RAA, TTA240F30TAA, TTA240F3HRAA, TTA240F3HTAA, TTA240F30UAA, TTA240F30WAA, TTA240F3HUAA, TTA240F3HWAA

Wiring Diagram Matrix

DIAGRAM NO.	DIAGRAM TYPE	UNIT MODEL NO'S
2313-0411	Power/Control Diagram	TTA101FD0RAA, TTA101FD0TAA, TTA101FDHRAA, TTA101FDHTAA, TTA101FD0UAA, TTA101FD0WAA, TTA101FDHUAA, TTA101FDHWAA, TTA120F30RAA, TTA120F30TAA, TTA120F3HRAA, TTA120F3HTAA, TTA120F30UAA, TTA120F30WAA, TTA120F3HUAA, TTA120F3HWAA, TTA120F40RAA, TTA120F40TAA, TTA120F4HRAA, TTA120F4HTAA, TTA120F40UAA, TTA120F40WAA, TTA120F4HUAA, TTA120F4HWAA, TTA120FW0RAA, TTA120FW0TAA, TTA120FWHRAA, TTA120FWHTAA, TTA120FW0UAA, TTA120FW0WAA, TTA120FWHUAA, TTA120FWHWAA, TTA156FD0RAA, TTA156FD0TAA, TTA156FDHRAA, TTA156FDHTAA, TTA156FD0UAA, TTA156FD0WAA, TTA156FDHUAA, TTA156FDHWAA, TTA180F30RAA, TTA180F30TAA, TTA180F3HRAA, TTA180F3HTAA, TTA180F30UAA, TTA180F30WAA, TTA180F3HUAA, TTA180F3HWAA, TTA180F40RAA, TTA180F40TAA, TTA180F4HRAA, TTA180F4HTAA, TTA180F40UAA, TTA180F40WAA, TTA180F4HUAA, TTA180F4HWAA, TTA180FW0RAA, TTA180FW0TAA, TTA180FWHRAA, TTA180FWHTAA, TTA180FW0UAA, TTA180FW0WAA, TTA180FWHUAA, TTA180FWHWAA, TTA180FK0RAA, TTA180FK0TAA, TTA180FKHRAA, TTA180FKHTAA, TTA180FK0UAA, TTA180FK0WAA, TTA180FKHUAA, TTA180FKHWAA, TTA201FD0RAA, TTA201FD0TAA, TTA201FDHRAA, TTA201FDHTAA, TTA201FD0UAA, TTA201FD0WAA, TTA201FDHUAA, TTA201FDHWAA, TTA240F40RAA, TTA240F40TAA, TTA240F4HRAA, TTA240F4HTAA, TTA240F40UAA, TTA240F40WAA, TTA240F4HUAA, TTA240F4HWAA, TTA240FW0RAA, TTA240FW0TAA, TTA240FWHRAA, TTA240FWHTAA, TTA240FW0UAA, TTA240FW0WAA, TTA240FWHUAA, TTA240FWHWAA, TTA240FK0RAA, TTA240FK0TAA, TTA240FKHRAA, TTA240FKHTAA, TTA240FK0UAA, TTA240FK0WAA, TTA240FKHUAA, TTA240FKHWAA
2313-0412	Power/Control Diagram	TTA101FD00AA, TTA101FD0SAA, TTA101FDH0AA, TTA101FDHSAA, TTA120F300AA, TTA120F30SAA, TTA120F3H0AA, TTA120F3HSAA, TTA120F400AA, TTA120F40SAA, TTA120F4H0AA, TTA120F4HSAA, TTA120FW00AA, TTA120FW0SAA, TTA120FWH0AA, TTA120FWHSAA, TTA156FD00AA, TTA156FD0SAA, TTA156FDH0AA, TTA156FDHSAA, TTA180F300AA, TTA180F30SAA, TTA180F3H0AA, TTA180F3HSAA, TTA180F400AA, TTA180F40SAA, TTA180F4H0AA, TTA180F4HSAA, TTA180FW00AA, TTA180FW0SAA, TTA180FWH0AA, TTA180FWHSAA, TTA180FK00AA, TTA180FK0SAA, TTA180FKH0AA, TTA180FKHSAA, TTA201FD00AA, TTA201FD0SAA, TTA201FDH0AA, TTA201FDHSAA, TTA240F400AA, TTA240F40SAA, TTA240F4H0AA, TTA240F4HSAA, TTA240FW00AA, TTA240FW0SAA, TTA240FWH0AA, TTA240FWHSAA, TTA240FK00AA, TTA240FK0SAA, TTA240FKH0AA, TTA240FKHSAA
2313-0413	Connection Diagram	TTA061DD00AA, TTA061DD0SAA, TTA061DDH0AA, TTA061DDHSAA, TTA073D300AA, TTA073D30SAA, TTA073D3H0AA, TTA073D3HSAA, TTA073D400AA, TTA073D40SAA, TTA073D4H0AA, TTA073D4HSAA, TTA073DW00AA, TTA073DW0SAA, TTA073DWH0AA, TTA073DWHSAA, TTA073DK00AA, TTA073DK0SAA, TTA073DKH0AA, TTA073DKHSAA, TTA086DD00AA, TTA086DD0SAA, TTA086DDH0AA, TTA086DDHSAA, TTA076DD00AA, TTA076DD0SAA, TTA076DDH0AA, TTA076DDHSAA, TTA090D300AA, TTA090D30SAA, TTA090D3H0AA, TTA090D3HSAA, TTA090D400AA, TTA090D40SAA, TTA090D4H0AA, TTA090D4HSAA, TTA090DW00AA, TTA090DW0SAA, TTA090DWH0AA, TTA090DWHSAA, TTA090DK00AA, TTA090DK0SAA, TTA090DKH0AA, TTA090DKHSAA, TTA101DD00AA, TTA101DD0SAA, TTA101DDH0AA, TTA101DDHSAA, TTA120D400AA, TTA120D40SAA, TTA120D4H0AA, TTA120D4HSAA, TTA120DW00AA, TTA120DW0SAA, TTA120DWH0AA, TTA120DWHSAA, TTA120DK00AA, TTA120DK0SAA, TTA120DKH0AA, TTA120DKHSAA
2313-0414	Connection Diagram	TTA120D300AA, TTA120D30SAA, TTA120D3H0AA, TTA120D3HSAA
2313-0415	Connection Diagram	TTA101FD00AA, TTA101FD0SAA, TTA101FDH0AA, TTA101FDHSAA, TTA120F300AA, TTA120F30SAA, TTA120F3H0AA, TTA120F3HSAA, TTA120F400AA, TTA120F40SAA, TTA120F4H0AA, TTA120F4HSAA, TTA120FW00AA, TTA120FW0SAA, TTA120FWH0AA, TTA120FWHSAA
2313-0416	Connection Diagram	TTA061DD0RAA, TTA061DD0TAA, TTA061DDHRAA, TTA061DDHTAA, TTA061DD0UAA, TTA061DD0WAA, TTA061DDHUAA, TTA061DDHWAA, TTA073D30RAA, TTA073D30TAA, TTA073D3HRAA, TTA073D3HTAA, TTA073D30UAA, TTA073D30WAA, TTA073D3HUAA, TTA073D3HWAA, TTA073D40RAA, TTA073D40TAA, TTA073D4HRAA, TTA073D4HTAA, TTA073D40UAA, TTA073D40WAA, TTA073D4HUAA, TTA073D4HWAA, TTA073DW0RAA, TTA073DW0TAA, TTA073DWHRAA, TTA073DWHTAA, TTA073DW0UAA, TTA073DW0WAA, TTA073DWHUAA, TTA073DWHWAA, TTA073DK0RAA, TTA073DK0TAA, TTA073DKHRAA, TTA073DKHTAA, TTA073DK0UAA, TTA073DK0WAA, TTA073DKHUAA, TTA073DKHWAA, TTA086DD0RAA, TTA086DD0TAA, TTA086DDHRAA, TTA086DDHTAA, TTA086DD0UAA, TTA086DD0WAA, TTA086DDHUAA, TTA086DDHWAA, TTA076DD0RAA, TTA076DD0TAA, TTA076DDHRAA, TTA076DDHTAA, TTA076DD0UAA, TTA076DD0WAA, TTA076DDHUAA, TTA076DDHWAA, TTA090D30RAA, TTA090D30TAA, TTA090D3HRAA, TTA090D3HTAA, TTA090D30UAA, TTA090D30WAA, TTA090D3HUAA, TTA090D3HWAA, TTA090D40RAA, TTA090D40TAA, TTA090D4HRAA, TTA090D4HTAA, TTA090D40UAA, TTA090D40WAA, TTA090D4HUAA, TTA090D4HWAA, TTA090DW0RAA, TTA090DW0TAA, TTA090DWHRAA, TTA090DWHTAA, TTA090DW0UAA, TTA090DW0WAA, TTA090DWHUAA, TTA090DWHWAA, TTA090DK0RAA, TTA090DK0TAA, TTA090DKHRAA, TTA090DKHTAA, TTA090DK0UAA, TTA090DK0WAA, TTA090DKHUAA, TTA090DKHWAA, TTA101DD0RAA, TTA101DD0TAA, TTA101DDHRAA, TTA101DDHTAA, TTA101DD0UAA, TTA101DD0WAA, TTA101DDHUAA, TTA101DDHWAA, TTA120D40RAA, TTA120D40TAA, TTA120D4HRAA, TTA120D4HTAA, TTA120D40UAA, TTA120D40WAA, TTA120D4HUAA, TTA120D4HWAA, TTA120DW0RAA, TTA120DW0TAA, TTA120DWHRAA, TTA120DWHTAA, TTA120DW0UAA, TTA120DW0WAA, TTA120DWHUAA, TTA120DWHWAA, TTA120DK0RAA, TTA120DK0TAA, TTA120DKHRAA, TTA120DKHTAA, TTA120DK0UAA, TTA120DK0WAA, TTA120DKHUAA, TTA120DKHWAA
2313-0417	Connection Diagram	TTA120D30RAA, TTA120D30TAA, TTA120D3HRAA, TTA120D3HTAA, TTA120D30UAA, TTA120D30WAA, TTA120D3HUAA, TTA120D3HWAA
2313-0418	Connection Diagram	TTA101FD0RAA, TTA101FD0TAA, TTA101FDHRAA, TTA101FDHTAA, TTA101FD0UAA, TTA101FD0WAA, TTA101FDHUAA, TTA101FDHWAA, TTA120F30RAA, TTA120F30TAA, TTA120F3HRAA, TTA120F3HTAA, TTA120F30UAA, TTA120F30WAA, TTA120F3HUAA, TTA120F3HWAA, TTA120F40RAA, TTA120F40TAA, TTA120F4HRAA, TTA120F4HTAA, TTA120F40UAA, TTA120F40WAA, TTA120F4HUAA, TTA120F4HWAA, TTA120FW0RAA, TTA120FW0TAA, TTA120FWHRAA, TTA120FWHTAA, TTA120FW0UAA, TTA120FW0WAA, TTA120FWHUAA, TTA120FWHWAA

DIAGRAM NO.	DIAGRAM TYPE	UNIT MODEL NO'S
2313-0421	Connection Diagram	TTA156ED00AA, TTA156ED0SAA, TTA156EDH0AA, TTA156EDHSAA, TTA180E300AA, TTA180E30SAA, TTA180E3H0AA, TTA180E3HSAA, TTA180E400AA, TTA180E40SAA, TTA180E4H0AA, TTA180E4HSAA, TTA180EW00AA, TTA180EW0SAA, TTA180EWH0AA, TTA180EWHSAA, TTA240EW00AA, TTA240EW0SAA, TTA180EK00AA, TTA180EK0SAA, TTA180EKH0AA, TTA180EKHSAA, TTA201ED00AA, TTA201ED0SAA, TTA201EDH0AA, TTA201EDHSAA, TTA240E400AA, TTA240E40SAA, TTA240E4H0AA, TTA240E4HSAA, TTA240EW00AA, TTA240EW0SAA, TTA240EWH0AA, TTA240EWHSAA, TTA240EK00AA, TTA240EK0SAA, TTA240EKH0AA, TTA240EKHSAA
2313-0422	Connection Diagram	TTA240E300AA, TTA240E30SAA, TTA240E3H0AA, TTA240E3HSAA
2313-0423	Connection Diagram	TTA156FD00AA, TTA156FD0SAA, TTA156FDH0AA, TTA156FDHSAA, TTA180F300AA, TTA180F30SAA, TTA180F3H0AA, TTA180F3HSAA, TTA180F400AA, TTA180F40SAA, TTA180F4H0AA, TTA180F4HSAA, TTA180FW00AA, TTA180FW0SAA, TTA180FWH0AA, TTA180FWHSAA, TTA180FK00AA, TTA180FK0SAA, TTA180FKH0AA, TTA180FKHSAA, TTA201FD00AA, TTA201FD0SAA, TTA201FDH0AA, TTA201FDHSAA, TTA240F400AA, TTA240F40SAA, TTA240F4H0AA, TTA240F4HSAA, TTA240FW00AA, TTA240FW0SAA, TTA240FWH0AA, TTA240FWHSAA, TTA240FK00AA, TTA240FK0SAA, TTA240FKH0AA, TTA240FKHSAA
2313-0424	Connection Diagram	TTA240F300AA, TTA240F30SAA, TTA240F3H0AA, TTA240F3HSAA
2313-0425	Connection Diagram	TTA156ED0RAA, TTA156ED0TAA, TTA156EDHRAA, TTA156EDHTAA, TTA156ED0UAA, TTA156ED0WAA, TTA156EDHUAA, TTA156EDHWAA, TTA180E30RAA, TTA180E30TAA, TTA180E3HRAA, TTA180E3HTAA, TTA180E30UAA, TTA180E30WAA, TTA180E3HUAA, TTA180E3HWAA, TTA180E40RAA, TTA180E40TAA, TTA180E4HRAA, TTA180E4HTAA, TTA180E40UAA, TTA180E40WAA, TTA180E4HUAA, TTA180E4HWAA, TTA180EW0RAA, TTA180EW0TAA, TTA180EWHRAA, TTA180EWHTAA, TTA180EW0UAA, TTA180EW0WAA, TTA180EWHUAA, TTA180EWHWAA, TTA180EK0RAA, TTA180EK0TAA, TTA180EKHRAA, TTA180EKHTAA, TTA180EK0UAA, TTA180EK0WAA, TTA180EKHUAA, TTA180EKHWAA, TTA201ED0RAA, TTA201ED0TAA, TTA201EDHRAA, TTA201EDHTAA, TTA201ED0UAA, TTA201ED0WAA, TTA201EDHUAA, TTA201EDHWAA, TTA240E40RAA, TTA240E40TAA, TTA240E4HRAA, TTA240E4HTAA, TTA240E40UAA, TTA240E40WAA, TTA240E4HUAA, TTA240E4HWAA, TTA240EW0RAA, TTA240EW0TAA, TTA240EWHRAA, TTA240EWHTAA, TTA240EW0UAA, TTA240EW0WAA, TTA240EWHUAA, TTA240EWHWAA, TTA240EK0RAA, TTA240EK0TAA, TTA240EKHRAA, TTA240EKHTAA, TTA240EK0UAA, TTA240EK0WAA, TTA240EKHUAA, TTA240EKHWAA
2313-0426	Connection Diagram	TTA240E30RAA, TTA240E30TAA, TTA240E3HRAA, TTA240E3HTAA, TTA240E30UAA, TTA240E30WAA, TTA240E3HUAA, TTA240E3HWAA
2313-0427	Connection Diagram	TTA156FD0RAA, TTA156FD0TAA, TTA156FDHRAA, TTA156FDHTAA, TTA156FD0UAA, TTA156FD0WAA, TTA156FDHUAA, TTA156FDHWAA, TTA180F30RAA, TTA180F30TAA, TTA180F3HRAA, TTA180F3HTAA, TTA180F30UAA, TTA180F30WAA, TTA180F3HUAA, TTA180F3HWAA, TTA180F40RAA, TTA180F40TAA, TTA180F4HRAA, TTA180F4HTAA, TTA180F40UAA, TTA180F40WAA, TTA180F4HUAA, TTA180F4HWAA, TTA180FW0RAA, TTA180FW0TAA, TTA180FWHRAA, TTA180FWHTAA, TTA180FW0UAA, TTA180FW0WAA, TTA180FWHUAA, TTA180FWHWAA, TTA180FK0RAA, TTA180FK0TAA, TTA180FKHRAA, TTA180FKHTAA, TTA180FK0UAA, TTA180FK0WAA, TTA180FKHUAA, TTA180FKHWAA, TTA201FD0RAA, TTA201FD0TAA, TTA201FDHRAA, TTA201FDHTAA, TTA201FD0UAA, TTA201FD0WAA, TTA201FDHUAA, TTA201FDHWAA, TTA240F40RAA, TTA240F40TAA, TTA240F4HRAA, TTA240F4HTAA, TTA240F40UAA, TTA240F40WAA, TTA240F4HUAA, TTA240F4HWAA, TTA240FW0RAA, TTA240FW0TAA, TTA240FWHRAA, TTA240FWHTAA, TTA240FW0UAA, TTA240FW0WAA, TTA240FWHUAA, TTA240FWHWAA, TTA240FK0RAA, TTA240FK0TAA, TTA240FKHRAA, TTA240FKHTAA, TTA240FK0UAA, TTA240FK0WAA, TTA240FKHUAA, TTA240FKHWAA
2313-0428	Connection Diagram	TTA240F30RAA, TTA240F30TAA, TTA240F3HRAA, TTA240F3HTAA, TTA240F30UAA, TTA240F30WAA, TTA240F3HUAA, TTA240F3HWAA
2313-0433	Power/Control Diagram	TTA101ED00AA, TTA101ED0SAA, TTA101EDH0AA, TTA101EDHSAA, TTA120E300AA, TTA120E30SAA, TTA120E3H0AA, TTA120E3HSAA, TTA120E400AA, TTA120E40SAA, TTA120E4H0AA, TTA120E4HSAA, TTA120EW00AA, TTA120EW0SAA, TTA120EWH0AA, TTA120EWHSAA, TTA120EK00AA, TTA120EK0SAA, TTA120EKH0AA, TTA120EKHSAA, TTA126ED00AA, TTA126ED0SAA, TTA126EDH0AA, TTA126EDHSAA, TTA150E300AA, TTA150E30SAA, TTA150E3H0AA, TTA150E3HSAA, TTA150E400AA, TTA150E40SAA, TTA150E4H0AA, TTA150E4HSAA, TTA150EW00AA, TTA150EW0SAA, TTA150EWH0AA, TTA150EWHSAA, TTA150EK00AA, TTA150EK0SAA, TTA150EKH0AA, TTA150EKHSAA
2313-0434	Connection Diagram	TTA101ED00AA, TTA101ED0SAA, TTA101EDH0AA, TTA101EDHSAA, TTA120E300AA, TTA120E30SAA, TTA120E3H0AA, TTA120E3HSAA, TTA120E400AA, TTA120E40SAA, TTA120E4H0AA, TTA120E4HSAA, TTA120EW00AA, TTA120EW0SAA, TTA120EWH0AA, TTA120EWHSAA, TTA120EK00AA, TTA120EK0SAA, TTA120EKH0AA, TTA120EKHSAA, TTA126ED00AA, TTA126ED0SAA, TTA126EDH0AA, TTA126EDHSAA, TTA150E300AA, TTA150E30SAA, TTA150E3H0AA, TTA150E3HSAA, TTA150E400AA, TTA150E40SAA, TTA150E4H0AA, TTA150E4HSAA, TTA150EW00AA, TTA150EW0SAA, TTA150EWH0AA, TTA150EWHSAA, TTA150EK00AA, TTA150EK0SAA, TTA150EKH0AA, TTA150EKHSAA

Wiring Diagram Matrix

DIAGRAM NO.	DIAGRAM TYPE	UNIT MODEL NO'S
2313-0435	Power/Control Diagram	TTA101ED0RAA, TTA101ED0TAA, TTA101EDHRAA, TTA101EDHTAA, TTA101ED0UAA, TTA101ED0WAA, TTA101EDHUAA, TTA101EDHWAA, TTA120E30RAA, TTA120E30TAA, TTA120E3HRAA, TTA120E3HTAA, TTA120E30UAA, TTA120E30WAA, TTA120E3HUAA, TTA120E3HWAA, TTA120E40RAA, TTA120E40TAA, TTA120E4HRAA, TTA120E4HTAA, TTA120E40UAA, TTA120E40WAA, TTA120E4HUAA, TTA120E4HWAA, TTA120EW0RAA, TTA120EW0TAA, TTA120EWHRAA, TTA120EWHTAA, TTA120EW0UAA, TTA120EW0WAA, TTA120EWHUAA, TTA120EWHWAA, TTA120EK0RAA, TTA120EK0TAA, TTA120EKHRAA, TTA120EKHTAA, TTA120EK0UAA, TTA120EK0WAA, TTA120EKHUAA, TTA120EKHWAA, TTA126ED0RAA, TTA126ED0TAA, TTA126EDHRAA, TTA126EDHTAA, TTA126ED0UAA, TTA126ED0WAA, TTA126EDHUAA, TTA126EDHWAA, TTA150E30RAA, TTA150E30TAA, TTA150E3HRAA, TTA150E3HTAA, TTA150E30UAA, TTA150E30WAA, TTA150E3HUAA, TTA150E3HWAA, TTA150E40RAA, TTA150E40TAA, TTA150E4HRAA, TTA150E4HTAA, TTA150E40UAA, TTA150E40WAA, TTA150E4HUAA, TTA150E4HWAA, TTA150EW0RAA, TTA150EW0TAA, TTA150EWHRAA, TTA150EWHTAA, TTA150EW0UAA, TTA150EW0WAA, TTA150EWHUAA, TTA150EWHWAA, TTA150EK0RAA, TTA150EK0TAA, TTA150EKHRAA, TTA150EKHTAA, TTA150EK0UAA, TTA150EK0WAA, TTA150EKHUAA, TTA150EKHWAA
2313-0436	Connection Diagram	TTA101ED0RAA, TTA101ED0TAA, TTA101EDHRAA, TTA101EDHTAA, TTA101ED0UAA, TTA101ED0WAA, TTA101EDHUAA, TTA101EDHWAA, TTA120E30RAA, TTA120E30TAA, TTA120E3HRAA, TTA120E3HTAA, TTA120E30UAA, TTA120E30WAA, TTA120E3HUAA, TTA120E3HWAA, TTA120E40RAA, TTA120E40TAA, TTA120E4HRAA, TTA120E4HTAA, TTA120E40UAA, TTA120E40WAA, TTA120E4HUAA, TTA120E4HWAA, TTA120EW0RAA, TTA120EW0TAA, TTA120EWHRAA, TTA120EWHTAA, TTA120EW0UAA, TTA120EW0WAA, TTA120EWHUAA, TTA120EWHWAA, TTA120EK0RAA, TTA120EK0TAA, TTA120EKHRAA, TTA120EKHTAA, TTA120EK0UAA, TTA120EK0WAA, TTA120EKHUAA, TTA120EKHWAA, TTA126ED0RAA, TTA126ED0TAA, TTA126EDHRAA, TTA126EDHTAA, TTA126ED0UAA, TTA126ED0WAA, TTA126EDHUAA, TTA126EDHWAA, TTA150E30RAA, TTA150E30TAA, TTA150E3HRAA, TTA150E3HTAA, TTA150E30UAA, TTA150E30WAA, TTA150E3HUAA, TTA150E3HWAA, TTA150E40RAA, TTA150E40TAA, TTA150E4HRAA, TTA150E4HTAA, TTA150E40UAA, TTA150E40WAA, TTA150E4HUAA, TTA150E4HWAA, TTA150EW0RAA, TTA150EW0TAA, TTA150EWHRAA, TTA150EWHTAA, TTA150EW0UAA, TTA150EW0WAA, TTA150EWHUAA, TTA150EWHWAA, TTA150EK0RAA, TTA150EK0TAA, TTA150EKHRAA, TTA150EKHTAA, TTA150EK0UAA, TTA150EK0WAA, TTA150EKHUAA, TTA150EKHWAA

Note: Wiring diagrams are available via e-Library.

The manufacturer optimizes the performance of homes and buildings around the world. A business of Ingersoll Rand, the leader in creating and sustaining safe, comfortable and energy efficient environments,the manufacturer offers a broad portfolio of advanced controls and HVAC systems, comprehensive building services, and parts. For more information, visit www.IRCO.com.

The manufacturer has a policy of continuous product and product data improvement and reserves the right to change design and specifications without notice.

© 2011 Trane All rights reserved
SS-SVX10A-EN 31 Mar 2011
Supersedes SS-SVX10A-EN (Nov 2010)

Ingersoll Rand