PARTS LIST

ITEM	QTY	PART NUMBER	DESCRIPTION
1	1	251110M-ST-201	TRAILER FRAME FABRICATION
2	1	251110M-ST-202	REMOVABLE HITCH ASSEMBLY
3	1	251110M-ST-203	HEADACHE RACK FABRICATION
4	2	251110M-ST-204	TANDEM-AXLE FENDER FABRICATION
5	3	251110M-ST-205	CASTER TRACK STOP FABRICATION
6	2	251110M-ST-206A	SWIVEL TRAILER CASTER ASSEMBLY
7	2	251110M-ST-206B	RIGID TRAILER CASTER ASSEMBLY
8	3	251110M-ST-207	TRAILER TAIL RAMP ASSEMBLY
9	2	420LB DOT CYLINDER	420# PROPANE DOT CYLINDER
10	4	BULLDOG: #190756	SQUARE TUBE TRAILER JACK - 8,000LBS CAPACITY
11	4	MAXXIMA #M09300R-DV	3/4" ROUND MARKER LIGHT, RED, 12/24VDC
12	6	MAXXIMA #M09300Y-DV	3/4" ROUND MARKER LIGHT, AMBER, 12/24VDC
13	4	MCMASTER-CARR #92865A628	HEX HEAD SCREW, 3/8-16UNC x 1-1/2"LG, GRADE 5, ZINC-PLATED STEEL
14	6	MCMASTER-CARR: #5906K518	THRUST BEARING, 3/4" DIA. x 1-1/4"OD, BRONZE
15	4	MCMASTER-CARR: #90126A031	PLAIN WASHER, 3/8", ZINC-PLATED STEEL
16	8	MCMASTER-CARR: #90126A033	PLAIN WASHER, 1/2", ZINC-PLATED STEEL
17	6	MCMASTER-CARR: #90520A108	COTTER PIN, 1/8", STEEL
18	4	MCMASTER-CARR: #91102A760	LOCK WASHER, 3/8", ZINC-PLATED STEEL

PARTS LIST

ITEM	QTY	PART NUMBER	DESCRIPTION
19	8	MCMASTER-CARR: #91102A770	LOCK WASHER, 1/2", ZINC-PLATED STEEL
20	6	MCMASTER-CARR: #92390A491	CLEVIS PIN, 5/8" DIA. x 1" USABLE LENGTH, 18-8SS
21	8	MCMASTER-CARR: #92865A718	HEX HEAD SCREW, 1/2-13UNC x 1-3/4"LG, GRADE 5, ZINC-PLATED STEEL
22	4	MCMASTER-CARR: #95462A031	HEX NUT, 3/8-16UNC, GRADE 5, ZINC-PLATED STEEL
23	8	MCMASTER-CARR: #95462A033	HEX NUT, 1/2-13UNC, GRADE 5, ZINC-PLATED STEEL
24	4	MCMASTER-CARR: #98416A562	CLEVIS PIN W/ WIRE RETAINER, 1/2" DIA. x 3-3/32" USABLE LENGTH, ZINC PLATED STEEL
25	1	MCMASTER-CARR: #98497A370	3/4" LOOP-GRIP CLEVIS PIN WITH LOCKING RING, 6" USABLE LENGTH, STAINLESS STEEL
26	1	SMITTYBILT: #97205	X20 WINCH W/ STEEL CABLE AND REMOTE, 5K CAP.
27	1	SMITTYBILT: #97517	X20 GEN2 WINCH W/ STEEL CABLE AND REMOTE, 17.5K CAP
28	1	TPO: 09DHDSSKTTK9578865	9K ELECTRIC BRAKE TRAILER AXLE ASSEMBLY
29	3	TRUCK-LITE: #10076R	2-1/2" MARKER LIGHT - 10 SERIES, LOW PROFILE, LED, RED, 8 DIODE, FEMALE PL-10, 12V, KIT
30	2	TRUCK-LITE: #44092R	4" STOP/TURN/TAIL LIGHT - SUPER 44, LED, RED, 6 DIODE, STRAIGHT PL-3 FEMALE, 12V, KIT
31	1	E-TRAILER #TJD-8000	SQUARE TOP-WIND JACK WITH FOOTPLATE, CAPACITY 8,000 LBS, 28-3/4" LIFT

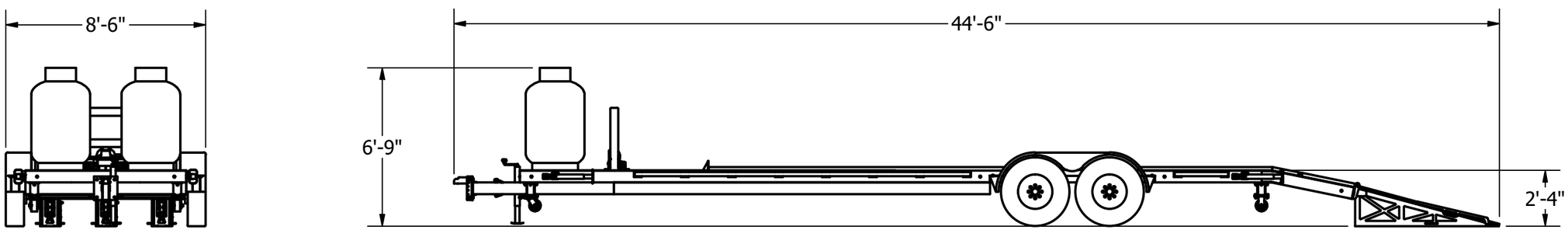

QUANTITY REQUIRED - 1

REV	DATE	DESCRIPTION
1	10/22/25	INITIAL RELEASE

REVISION HISTORY

STANDARD DIMENSION TOLERANCES UNLESS OTHERWISE SPECIFIED

Frac. +/- 1/16

.xx = +/- .030

.xxx = +/- .015

THIS DRAWING AND/OR TECHNICAL INFORMATION IS THE PROPERTY OF KIRILA FIRE TRAINING FACILITIES, INC. AND IS ISSUED FOR ENGINEERING OF MANUFACTURING PURPOSES ONLY. IT CANNOT BE REPRODUCED OR USED WITHOUT WRITTEN PERMISSION FROM KIRILA FIRE TRAINING FACILITIES, INC.

Kirila Fire Training Facilities, Inc.
3007 SR7
Fowler, OH 44418
www.kirilafire.com

UNLESS OTHERWISE SPECIFIED, DIMENSIONS ARE IN INCHES.

TITLE: F35 TRAINER TRAILER ASSEMBLY

DRAWN: MLD

DATE: 8/4/2025

DWG NO. 251110M-ST-200

REF: RAMSTEIN AB, GERMANY

ENG: RPM

REV. 1

PROJECT: 251110M-F35 & TRAILER-1225

SCALE: NTS

SHT. 1 OF 3

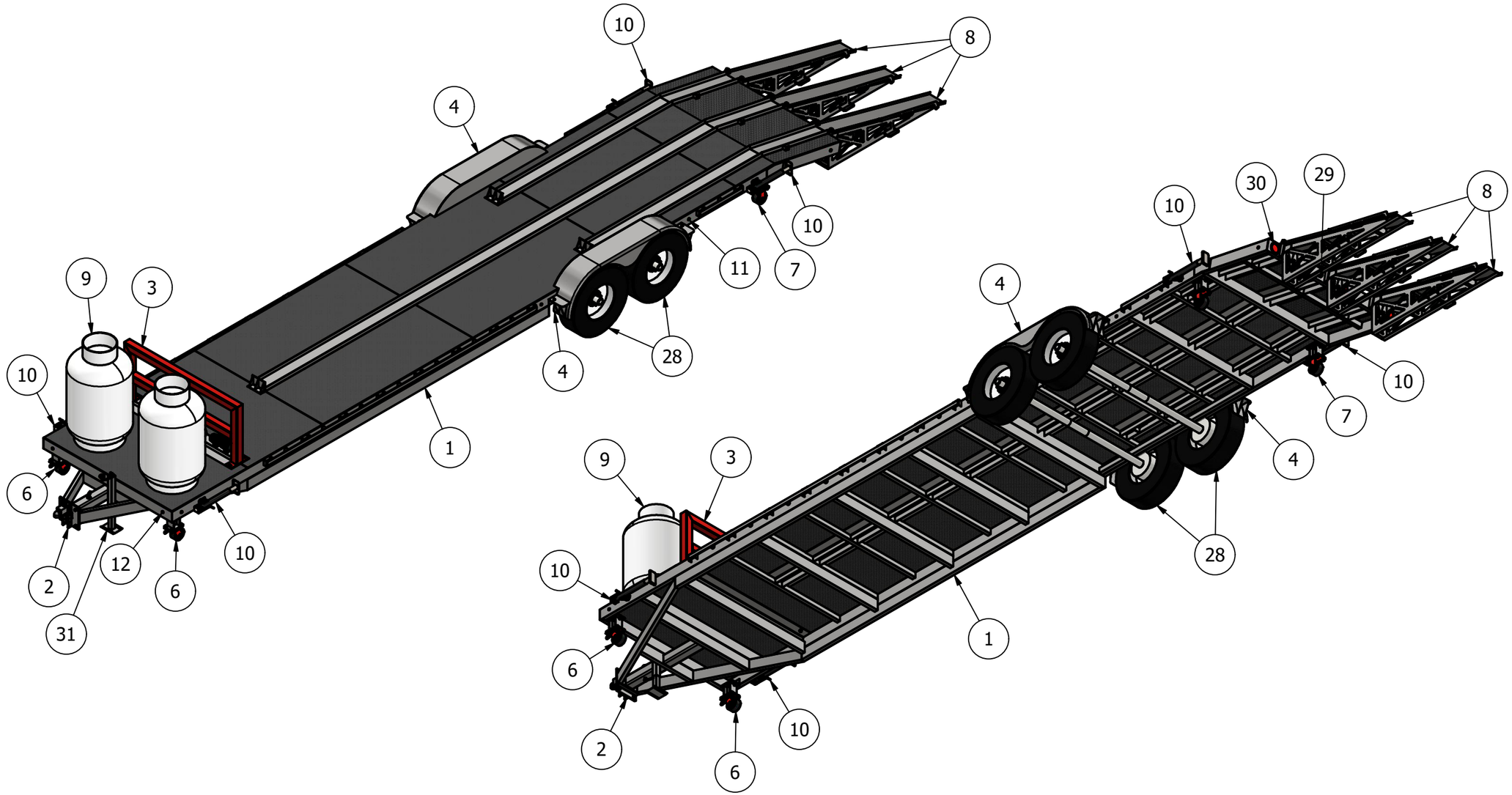

STANDARD DIMENSION TOLERANCES UNLESS OTHERWISE SPECIFIED Frac. +/- 1/16 .xx = +/- .030 .xxx = +/- .015 THIS DRAWING AND/OR TECHNICAL INFORMATION IS THE PROPERTY OF KIRILA FIRE TRAINING FACILITIES, INC. AND IS ISSUED FOR ENGINEERING OF MANUFACTURING PURPOSES ONLY. IT CANNOT BE REPRODUCED OR USED WITHOUT WRITTEN PERMISSION FROM KIRILA FIRE TRAINING FACILITIES, INC.	Kirila Fire Training Facilities, Inc. 3007 SR7 Fowler, OH 44418 www.kirilafire.com UNLESS OTHERWISE SPECIFIED, DIMENSIONS ARE IN INCHES.	TITLE: F35 TRAINER TRAILER ASSEMBLY DRAWN: MLD DATE: 8/4/2025 REF: RAMSTEIN AB, GERMANY PROJECT: 251110M-F35 & TRAILER-1225	DWG NO. 251110M-ST-200 ENG: RPM REV. 1 SCALE: NTS SHT. 2 OF 3

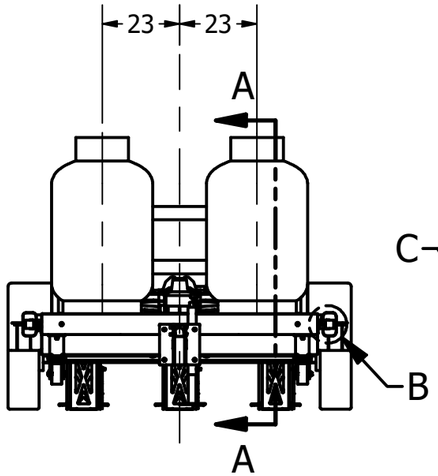

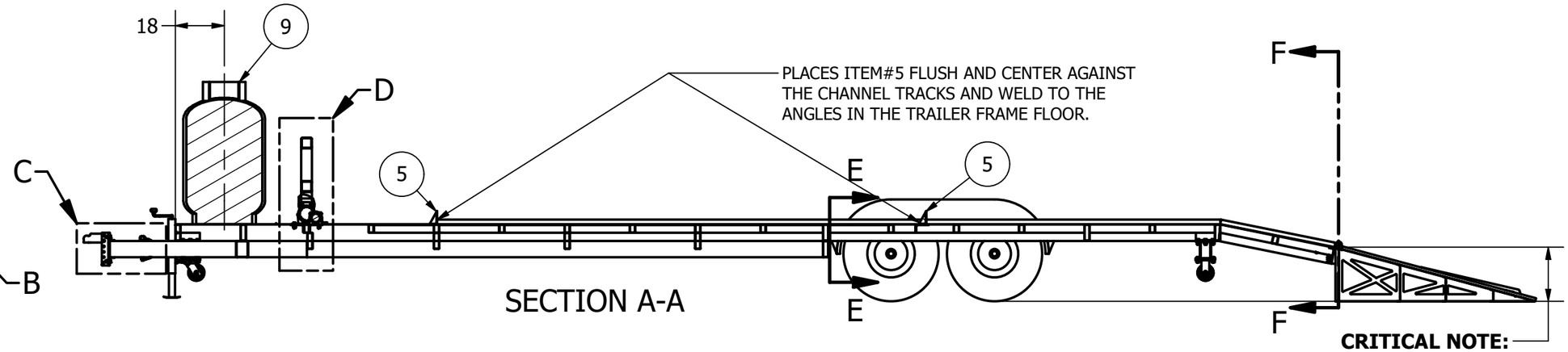

SECTION A-A

CRITICAL NOTE:
ALL STABILIZER JACKS MUST BE ADJUSTED UNTIL THE REAR OF THE DOVETAIL AND THE RAMPS ALINE AND ARE LAYING FLAT ON THE GROUND BEFORE LOADING OR UNLOADING

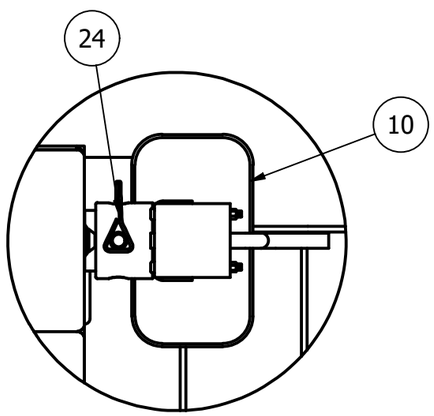

DETAIL B

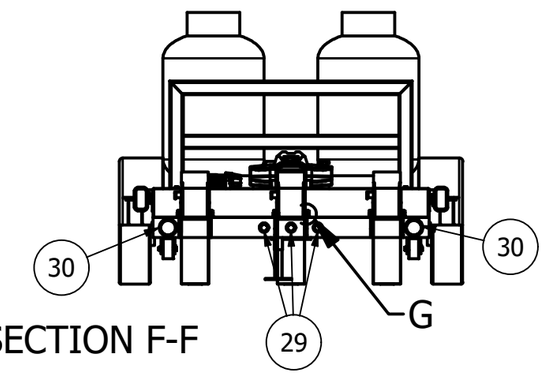

SECTION F-F

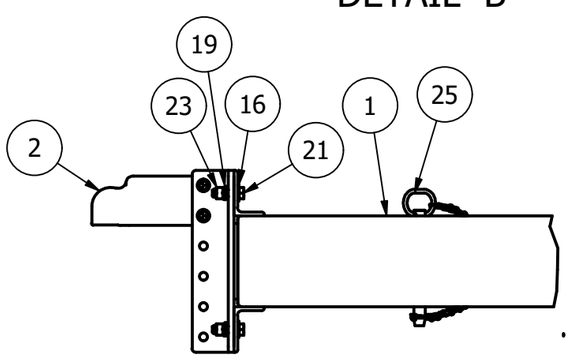

DETAIL C

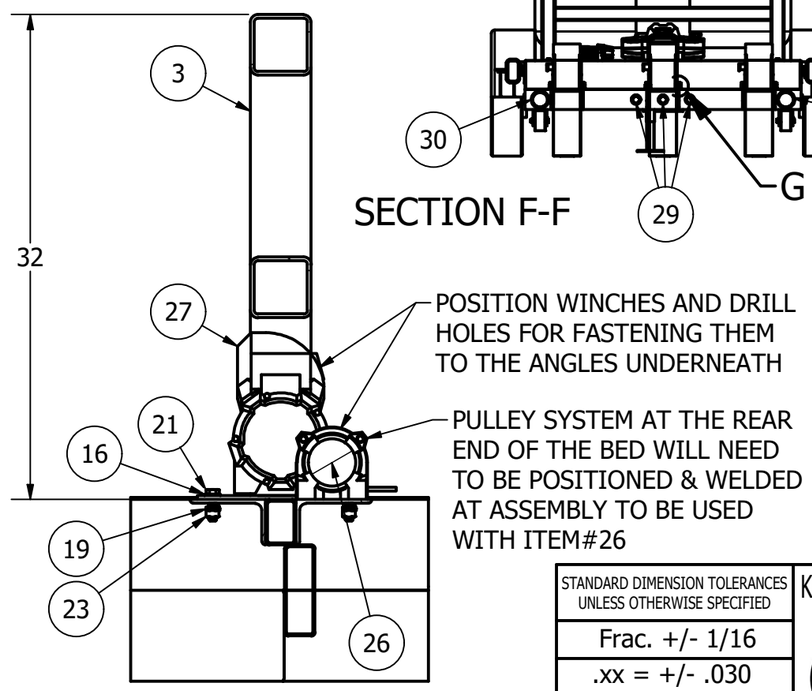

DETAIL D

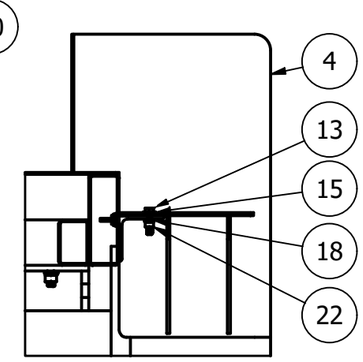

SECTION E-E

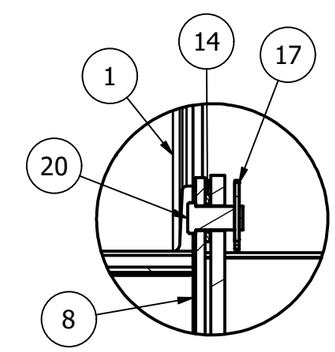

DETAIL G

STANDARD DIMENSION TOLERANCES UNLESS OTHERWISE SPECIFIED Frac. +/- 1/16 .xx = +/- .030 .xxx = +/- .015	Kirila Fire Training Facilities, Inc. 3007 SR7 Fowler, OH 44418 www.kirilafire.com	TITLE: F35 TRAINER TRAILER ASSEMBLY	
		DRAWN: MLD	DWG NO. 251110M-ST-200
		DATE: 8/4/2025	
		REF: RAMSTEIN AB, GERMANY	ENG: RPM / REV. 1
	UNLESS OTHERWISE SPECIFIED, DIMENSIONS ARE IN INCHES.	PROJECT: 251110M-F35 & TRAILER-1225	SCALE: NTS / SHT. 3 OF 3

THIS DRAWING AND/OR TECHNICAL INFORMATION IS THE PROPERTY OF KIRILA FIRE TRAINING FACILITIES, INC. AND IS ISSUED FOR ENGINEERING OF MANUFACTURING PURPOSES ONLY. IT CANNOT BE REPRODUCED OR USED WITHOUT WRITTEN PERMISSION FROM KIRILA FIRE TRAINING FACILITIES, INC.