NIAGARA FALLS AIR RESERVE STATION

RVKQ 21-0019 AIRFIELD JOINT SEALANT REPAIRS

APRIL 2026

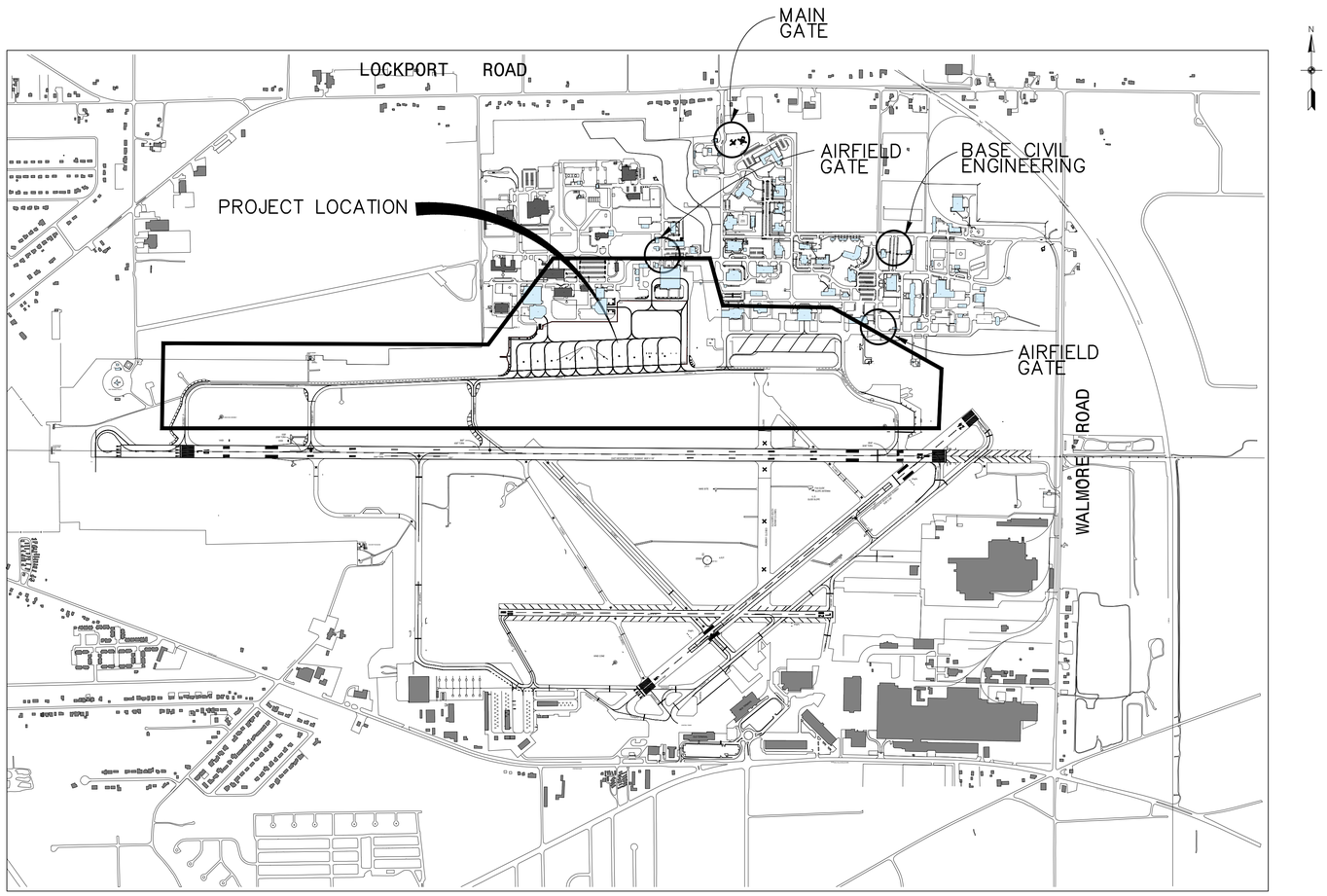

NIAGARA FALLS AIR RESERVE STATION MAP

NO SCALE

LIST OF DRAWINGS

DRAWING NUMBER	DRAWING TITLE
C-001	COVER SHEET
C-002	GENERAL NOTES
V-101	EXISTING CONDITIONS PLAN
CS101	SITE PLAN
PS101	PROJECT PHASING PLAN
P-1	PHASE 1 PLAN
P-2	PHASE 2 PLAN
P-3	PHASE 3 PLAN
P-4	PHASE 4 PLAN
P-5	PHASE 5 PLAN
P-6	PHASE 6 PLAN
CS501	SITE DETAILS

CONTACT PHONE NUMBERS AT NFARS

AIR TRAFFIC CONTROL TOWER
(716) 297-1310

AIRFIELD MANAGEMENT
(716) 236-2175
(716) 236-2358 (alt)

AIR BASE FIRE DEPARTMENT
(716) 236-2086

EMERGENCY NUMBER (ON BASE 911)
(716) 236-2117

REV	DATE	DESCRIPTION	INITIAL
-	-	-	-

Removal of this caveat is prohibited. This material is For Official Use Only.

LIMITED DISTRIBUTION
Distribution authorized to DoD, IAW 10 U.S.C. § 130 & 455. Release Authorized to U.S. DoD contractors IAW 48 C.F.R. §252.245-7000

Although every effort has been made to ensure the accuracy of information, errors and conditions originating from physical sources used to develop the database maybe reflected in the data supplied. The end user must be aware of the data conditions and ultimately bear responsibility and the appropriate use of the information with respect to possible errors, original map scale, collection methodology, currency of data, and other conditions specific to certain data.

Unauthorized reproduction, distribution, publication, or exhibition of this material is STRICTLY PROHIBITED. Refer other requests to 914 MSG/CEC. Destroy as "For Official Use Only". 914 MSG/CEC shall not be liable for any errors, omissions, or damages that result from noncompliance of this message.

DEPARTMENT OF THE AIR FORCE
DIRECTORATE OF ENGINEERING & SERVICES DCS/LEE-WASHINGTON, D.C.

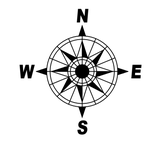

AIR FORCE RESERVE
AIRFIELD JOINT SEALANT REPAIRS
COVER SHEET
NIAGARA FALLS AIR RESERVE STATION
NEW YORK

SCALE: NOT TO SCALE	DATE: APRIL 2026	TAB NO.
AFI 32-7062, AIR FORCE COMPREHENSIVE PLNG		C-001
AFRC-914th AW		

NIAGARA FALLS AIR RESERVE STATION

RVKQ 21-0019 AIRFIELD JOINT SEALANT REPAIRS

APRIL 2026

GENERAL NOTES:

1. THE SCOPE OF WORK SHOWN ON THE CIVIL PLANS SHALL BE PERFORMED IN ACCORDANCE WITH THE REQUIREMENTS OF THE DETAILS PROJECT SPECIFICATIONS AND APPLICABLE FEDERAL, STATE, LOCAL, AND OSHA REQUIREMENTS.
2. THE DESIGN SHOWN IS BASED ON THE ENGINEERS UNDERSTANDING OF THE EXISTING SITE CONDITIONS WITHIN THE PROJECT BOUNDARY. EXISTING PLANIMETRIC FEATURES ARE BASED ON RECORD PLANS AND GIS INFORMATION PROVIDED BY NIAGARA FALLS RESERVE STATION.
3. THE CONTRACTOR SHALL FIELD VERIFY ALL SPECIFICATIONS, DIMENSIONS, AND QUANTITIES PRIOR TO ORDERING MATERIAL. ANY DISCREPANCIES, AMBIGUITIES OR CHANGES MUST BE VERFIED AND CONFIRMED IN WRITING TO THE CONTRACTING OFFICER.
4. THE CONTRACTOR SHALL BE SOLELY RESPONSIBLE FOR ENSURING COMPLIANCE BY ITS SUBCONTRACTORS WITH THE PROVISIONS OF THE CONTRACT AND STATEMENT OF WORK, AND SHALL ENSURE THAT WORK SHALL BE PERFORMED BY WORKMEN SKILLED IN THEIR PARTICULAR TRADES, AND CERTIFIED AS REQUIRED BY FEDERAL, STATE AND LOCAL LAWS AND/OR CODES.
5. CONTRACTOR AND ASSOCIATED SUB-CONTRACTORS SHALL PROVIDE A SAFE AND HEALTHFUL WORK ENVIRONMENT FOR THEIR EMPLOYEES AS PRESCRIBED IN FAR 52.236-14, 29 CFR PART 1910, PERTINENT PROVISIONS OF AR 385-10, AND LOCAL REGULATIONS, POLICIES, AND STANDARD OPERATING PROCEDURES. CONTRACTOR SHALL SAFEGUARD PUBLIC AND GOVERNMENT PERSONNEL PROPERTY AND EQUIPMENT, AS WELL AS AVOID INTERRUPTION OF GOVERNMENT OPERATIONS. THE CONTRACTOR SHALL REPORT ACCIDENTS OR LOSSES TO THE CONTRACTING OFFICER AS SPECIFIED IN RELEVANT REGULATIONS AND STANDARDS. WHENEVER THE CONTRACTOR BECOMES AWARE OF SERIOUS OR IMMINENT DANGER TO GOVERNMENT, CIVILIAN OR CONTRACTOR PERSONNEL, THE CONTRACTOR SHALL TAKE IMMEDIATE CORRECTIVE ACTION.
6. THE CONTRACTOR IS SPECIFICALLY CAUTIONED THAT THE LOCATION OF EXISTING UTILITIES SHOWN ON THIS PLAN HAVE BEEN DETERMINED FROM THE BEST INFORMATION AVAILABLE AND ARE GIVEN FOR CONVENIENCE ONLY. THE ENGINEER ASSUMES NO RESPONSIBILITY FOR THEIR ACCURACY.
7. CONTRACTOR SHALL FIELD VERIFY EXISTING SITE CONDITIONS INCLUDING THE LOCATION OF UNDERGROUND UTILITIES, PRIOR TO CONSTRUCTION. NOTIFY ENGINEER OF ANY DISCREPANCIES AFFECTING THE SCOPE OF WORK.
8. PROTECT PROPERTY CORNERS AND BENCHMARKS WITHIN THE PROJECT BOUNDARY TO THE EXTENT PRACTICABLE. RELOCATE BENCHMARKS AS NECESSARY WITH A TOLERANCE OF 0.010 VERTICAL FEET.
9. UNLESS OTHERWISE NOTED, THE CONTRACTOR SHALL OBTAIN THE NECESSARY PERMITS REQUIRED BY LOCAL STATE AND FEDERAL AGENCIES PRIOR TO CONSTRUCTION AND BE RESPONSIBLE FOR ANY ASSOCIATED FEES.
10. PRIOR TO OBTAINING A DIG PERMIT, THE CONTRACTOR IS RESPONSIBLE FOR LOCATING AND MARKING ALL UTILITIES IN THE WORK AREA, INCLUDING THE OWNERS UTILITIES. THE CONTRACTOR SHALL USE STANDARD UTILITY LOCATING METHODS AND EQUIPMENT INCLUDING LOCATORS AND GROUND PENETRATING RADAR.
11. THE CONTRACTOR IS RESPONSIBLE FOR PRESERVING THE INTEGRITY OF SURROUNDING PAVEMENT DURING DEMOLITION AND IS RESPONSIBLE FOR REPAIRING OR REPLACING ANY DAMAGED CONCRETE PAVEMENT TO THE SATISFACTION OF THE GOVERNMENT, AT NO ADDITIONAL COST TO THE GOVERNMENT.
12. CONTRACTOR IS RESPONSIBLE FOR MAINTAINING AIRFIELD PAVEMENTS WITHIN THE WORK AREA TO PREVENT ANY ACCUMULATION OF DIRT OR FOREIGN OBJECT DEBRIS. CONTRACTOR SHALL SWEEP AND CLEAN AIRFIELD PAVEMENTS WITHIN THE WORK AREA WITH A SELF-PROPELLED VACUUM PICKUP SWEEPER AS NEEDED AT A MINIMUM AT THE END OF EVERY WORKDAY.
13. DURING THE PROGRESS AND AT THE COMPLETION OF WORK, THE CONTRACTOR SHALL REMOVE ALL CONTRACT-GENERATED DEBRIS FROM GOVERNMENT PROPERTY AND DISPOSE OF THE DEBRIS OFF SITE AT AN APPROVED LANDFILL/FACILITY, AT THE CONTRACTOR'S EXPENSE. DUE TO MANDATING OF SOLID WASTE ANNUAL-REPORTING REQUIREMENTS, THE CONTRACTOR SHALL PROVIDE ANY AND ALL RECEIPTS, MANIFEST/SOL, AND/OR OTHER WRITTEN RECORD OF TYPES OF WASTE AND AMOUNTS DISPOSED WITHIN 30 CALENDAR DAYS OF THE COMPLETION OF THE PROJECT. DISPOSAL SHALL BE IN ACCORDANCE WITH LOCAL, STATE AND FEDERAL LAWS AND REGULATIONS. IN CASE OF CONFLICT OR AMBIGUITY AMONG THESE LAWS AND REGULATIONS, THE MOST STRINGENT LAW OR REGULATION SHALL APPLY.
14. STORMWATER MANAGEMENT: IN LOCATION OF DISTURBANCES WHERE STORM DRAINS ARE LOCATED, DRAINS SHALL BE COVERED, MANAGED, AND INSPECTED BY THE CONTRACTOR'S PROJECT MANAGER TO MAKE SURE NO DEBRIS WILL FIND ITS WAY INTO STORM SEWER SYSTEM. THIS INSPECTION SHALL TAKE PLACE DAILY AS WORK IS PROGRESSING.
15. POLLUTION PREVENTION THE CONTRACTOR SHALL MONITOR EQUIPMENT FOR LEAKING FLUIDS, CONTAIN AND CLEAN UP ANY SPILLS, IF POSSIBLE, AND CONTACT NFARS FIRE DEPARTMENT AT 716-236-2117 REGARDING ANY SPILLS. THE CONTRACTOR SHALL PREVENT OILY OR OTHER HAZARDOUS SUBSTANCES FROM ENTERING THE GROUND, DRAINAGE AREAS, STORM DRAINAGE SYSTEM, OR LOCAL BODIES OF WATER.
16. BURNING OF TRASH OR RUBBISH IS NOT PERMITTED.
17. CONTRACTOR IS RESPONSIBLE FOR PROVIDING, INSTALLING AND THE REMOVING ANY TEMPORARY SIGNAGE, BARRIERS, BARRICADE TAPE, ETC., WHICH MAY BE REQUIRED TO CONTROL PEDESTRIAN AND/OR VEHICLE TRAFFIC IN THE WORK AREA. CONTRACTOR IS RESPONSIBLE FOR REMOVING BARRIERS AT THE CONCLUSION OF THE PROJECT.
18. THE CONTRACTOR SHALL USE THE AREAS DESIGNATED BY THE CONTRACTING OFFICE FOR STORAGE OF MATERIALS AND VEHICLES.
19. CONSTRUCTION PERSONNEL WHO OPERATE VEHICLES WITHIN THE AIRFIELD WILL BE REQUIRED TO OBTAIN AIRFIELD DRIVERS TRAINING OR BE ACCOMPANIED BY AN ESCORT. CONTRACTOR SHALL COORDINATE TRAINING THROUGH AIRFIELD MANAGEMENT (716)236-2398.
20. THE CONTRACTOR SHALL SUBMIT ON COMPANY LETTERHEAD TO THE CONTRACTING OFFICER AN "ENTRY AUTHORIZATION LETTER" REGISTERING ALL MOTOR VEHICLES AND DRIVER/OPERATOR'S INFORMATION AS REQUIRED TO ACCESS INDIVIDUAL INSTALLATIONS. THE CONTRACTOR SHALL ENSURE ALL MOTOR VEHICLES, DRIVERS AND OPERATORS ARE QUALIFIED, LICENSED AND INSURED.
21. THE CONTRACTOR'S PERSONNEL, WHEN OPERATING MOTOR VEHICLES, SHALL ABIDE BY POSTED SPEED LIMITS.
22. THE CONTRACTOR EMPLOYEES SHALL ABIDE BY THE DOD SMOKING POLICY
23. THE CONTRACTOR SHALL GIVE THE CONTRACTING OFFICER OR CONTRACTING OFFICER'S REPRESENTATIVE (COR) A 72 HOUR NOTICE OF THE CONTRACTOR'S INTENT TO COMMENCE WORK. THE CONTRACTOR SHALL NOTIFY AIRFIELD MANAGEMENT WHEN ENROUTE TO WORK AREA AND WHEN COMPLETED FOR THE DAY BY CHECKING IN AND OUT, IN PERSON, AT BUILDING 700, ROOM 120. THE CONTRACTOR SHALL ALSO NOTIFY SECURITY FORCES SQUADRON AT (716) 236-2280.
24. THE CONTRACTOR SHALL PROVIDE A CONSTRUCTION SCHEDULE WITH PROPOSED HOURS AND DAYS OF WORK AT LEAST 21 DAYS PRIOR TO START OF WORK FOR GOVERNMENT REVIEW AND APPROVAL. ANY CHANGES TO THE APPROVED SCHEDULE MUST BE SUBMITTED AT LEAST 10 DAYS IN ADVANCE FOR REVIEW AND APPROVAL.
25. THE CONTRACTOR SHALL EXECUTE ALL WORK IN ACCORDANCE WITH THE CONSTRUCTION SAFETY PHASING PLAN (CSPP) AS PROVIDED. NO MODIFICATIONS TO OR DEVIATIONS FROM THIS PLAN ARE ALLOWED WITHOUT WRITTEN APPROVAL FROM 914 MSG/CEC.
26. WORK HOURS ARE 7:15 AM (0715) TO 4:00 PM (1600) MONDAY THROUGH FRIDAY. WORK IS NOT ALLOWED ON WEEKENDS OR GOVERNMENT HOLIDAYS UNLESS REQUESTED IN WRITING AND APPROVED BY 914 CONTRACTING OFFICER AT MINIMUM 7 CALENDAR DAYS IN ADVANCE.
27. THE JOINT SEALANT MATERIAL SHALL CONFORM TO THE PRODUCT REQUIREMENTS DETAILED IN THE SPECIFICATION DOCUMENT. JET FUEL RESISTANCE SEALANT IS REQUIRED ON THE AIRFIELD APRON AND TAXIWAY.
28. ALL CONCRETE REPAIR AREAS SHALL BE PROTECTED FROM RAINWATER INFILTRATION WITH IMPERVIOUS TARP OR LINING.

REV	DATE	DESCRIPTION	INITIAL
-	-	-	-

Removal of this caveat is prohibited. This material is For Official Use Only.

LIMITED DISTRIBUTION
Distribution authorized to DoD, IAW 10 U.S.C. § 130 & 455. Release Authorized to U.S. DoD contractors IAW 48 C.F.R. §252.245-7000

Although every effort has been made to ensure the accuracy of information, errors and conditions originating from physical sources used to develop the database maybe reflected in the data supplied. The end user must be aware of the data conditions and ultimately bear responsibility and the appropriate use of the information with respect to possible errors, original map scale, collection methodology, currency of data, and other conditions specific to certain data.

Unauthorized reproduction, distribution, publication, or exhibition of this material is STRICTLY PROHIBITED. Refer other requests to 914 MSG/CEC. Destroy as "For Official Use Only". 914 MSG/CEC shall not be liable for any errors, omissions, or damages that result from noncompliance of this message.

DEPARTMENT OF THE AIR FORCE
DIRECTORATE OF ENGINEERING & SERVICES DCS/LEE-WASHINGTON, D.C.

AIR FORCE RESERVE
AIRFIELD JOINT SEALANT REPAIRS
GENERAL NOTES
NIAGARA FALLS AIR RESERVE STATION
NEW YORK

SCALE: NOT TO SCALE | DATE: APRIL 2026 | TAB NO. C-002

AFI 32-7062, AIR FORCE COMPREHENSIVE PLNG

AFRC-914th AW

LEGEND

PROPERTY LINE

GENERAL NOTES:

1. THE INFORMATION SHOWN ON THIS PLAN ARE FROM AS-BUILT DRAWINGS FROM PREVIOUS PROJECTS AND SHOULD BE USED FOR REFERENCE ONLY. THE CONTRACTOR SHALL PREPARE THEIR OWN SURVEY AND FIELD VERIFY ANY INFORMATION SHOWN ON THIS PLAN BEFORE CONSTRUCTION.

2. PRIOR TO ANY CONSTRUCTION, CONTRACTOR SHALL BE RESPONSIBLE TO VERIFY EXISTING ELEVATIONS, AND UTILITY LOCATIONS AS SHOWN ON PLANS. ANY DISCREPANCIES SHALL BE REPORTED TO THE CONTRACTING OFFICER REPRESENTATIVE (COR).

3. CONTRACTOR SHALL VERIFY EXISTING ELEVATIONS AND INVERTS.

4. THE LOCATION OF ALL UNDERGROUND UTILITIES SHOWN HEREON ARE BASED UPON ABOVE GROUND EVIDENCE AND AVAILABLE BASE MAPPING. THERE MAY ALSO BE OTHER EXISTING UTILITIES FOR WHICH NO ABOVE GROUND EVIDENCE IS OBSERVABLE. PRIOR TO ANY CONSTRUCTION, THE CONTRACTOR SHALL VERIFY THE LOCATION OF ALL UNDERGROUND UTILITIES. THE CONTRACTING OFFICER REPRESENTATIVE (COR) SHOULD BE NOTIFIED OF ANY CONFLICTS OR DISCREPANCIES PRIOR TO INSTALLATION.

5. NIAGARA FALLS ARS OWNS ALL THE UTILITIES INSIDE THE POST CONTRACTOR SHALL OBTAIN A DIG PERMIT FROM THE ARS BEFORE ANY WORK IS DONE. ALL UTILITIES WORK SHALL BE COORDINATED WITH NIAGARA FALLS ARS.

300 150 0 300 600FT

SCALE: 1" = 300'

N

REV	DATE	DESCRIPTION	INITIAL
-	-	-	-

Removal of this caveat is prohibited. This material is For Official Use Only.

LIMITED DISTRIBUTION
Distribution authorized to DoD, IAW 10 U.S.C. § 130 & 455. Release Authorized to U.S. DoD contractors IAW 48 C.F.R. §252.245-7000

Although every effort has been made to ensure the accuracy of information, errors and conditions originating from physical sources used to develop the database maybe reflected in the data supplied. The end user must be aware of the data conditions and ultimately bear responsibility and the appropriate use of the information with respect to possible errors, original map scale, collection methodology, currency of data, and other conditions specific to certain data.

Unauthorized reproduction, distribution, publication, or exhibition of this material is STRICTLY PROHIBITED. Refer other requests to 914 MSG/CEC. Destroy as "For Official Use Only". 914 MSG/CEC shall not be liable for any errors, omissions, or damages that result from noncompliance of this message.

DEPARTMENT OF THE AIR FORCE
DIRECTORATE OF ENGINEERING & SERVICES DCS/LEE-WASHINGTON, D.C.

AIR FORCE RESERVE

AIRFIELD JOINT SEALANT REPAIRS
EXISTING CONDITIONS PLAN
NIAGARA FALLS AIR RESERVE STATION
NEW YORK

SCALE: 1 INCH = 300 FT | DATE: APRIL 2026 | TAB NO. V-101

AFI 32-7062, AIR FORCE COMPREHENSIVE PLNG

AFRC-914th AW

LEGEND

- JOINT SEALANT TO BE REPLACED
- AREA OF NO WORK
- CONTRACTOR WORK LIMITS
- PROPERTY LINE

SITE NOTES

1 JOINT SEALANT TO BE REMOVED AND REPLACED, SEE DETAILS, SH. CS501

GENERAL NOTES:

1. ALL DIMENSIONS ARE IN FEET.
2. JET FUEL RESISTANCE JOINT SEALANT IS REQUIRED ON THE AIRFIELD APRONS.
3. THE CONTRACTOR SHALL BE RESPONSIBLE TO REPLACE ANY PAVEMENT MARKING THAT ARE REMOVED DUE TO SPALL OR JOINT SEALANT REPAIRS.
4. THE LOCATIONS SHOWN ON THIS PLAN ARE APPROXIMATED BASED ON OLD SURVEY DATA. THE CONTRACTOR SHALL FIELD VERIFY EXACT LOCATIONS AND DIMENSIONS IN THE FIELD.

300 150 0 300 600FT

SCALE: 1"= 300'

N

REV	DATE	DESCRIPTION	INITIAL
-	-	-	-

Removal of this caveat is prohibited. This material is For Official Use Only.

LIMITED DISTRIBUTION
Distribution authorized to DoD, IAW 10 U.S.C. § 130 & 455. Release Authorized to U.S. DoD contractors IAW 48 C.F.R. §252.245-7000

Although every effort has been made to ensure the accuracy of information, errors and conditions originating from physical sources used to develop the database maybe reflected in the data supplied. The end user must be aware of the data conditions and ultimately bear responsibility and the appropriate use of the information with respect to possible errors, original map scale, collection methodology, currency of data, and other conditions specific to certain data.

Unauthorized reproduction, distribution, publication, or exhibition of this material is STRICTLY PROHIBITED. Refer other requests to 914 MSG/CEC. Destroy as "For Official Use Only". 914 MSG/CEC shall not be liable for any errors, omissions, or damages that result from noncompliance of this message.

DEPARTMENT OF THE AIR FORCE
DIRECTORATE OF ENGINEERING & SERVICES DCS/LEE-WASHINGTON, D.C.

AIR FORCE RESERVE
AIRFIELD JOINT SEALANT REPAIRS
SITE PLAN
NIAGARA FALLS AIR RESERVE STATION
NEW YORK

SCALE: 1 INCH = 300 FT | DATE: APRIL 2026 | TAB NO. CS101

AFI 32-7062, AIR FORCE COMPREHENSIVE PLNG

AFRC-914th AW

LEGEND:

- PROPERTY LINE
- HAUL ROUTE
- WORK AREA 1
- WORK AREA 2
- WORK AREA 3
- WORK AREA 4
- WORK AREA 5
- WORK AREA 6
- AREA OF NO WORK

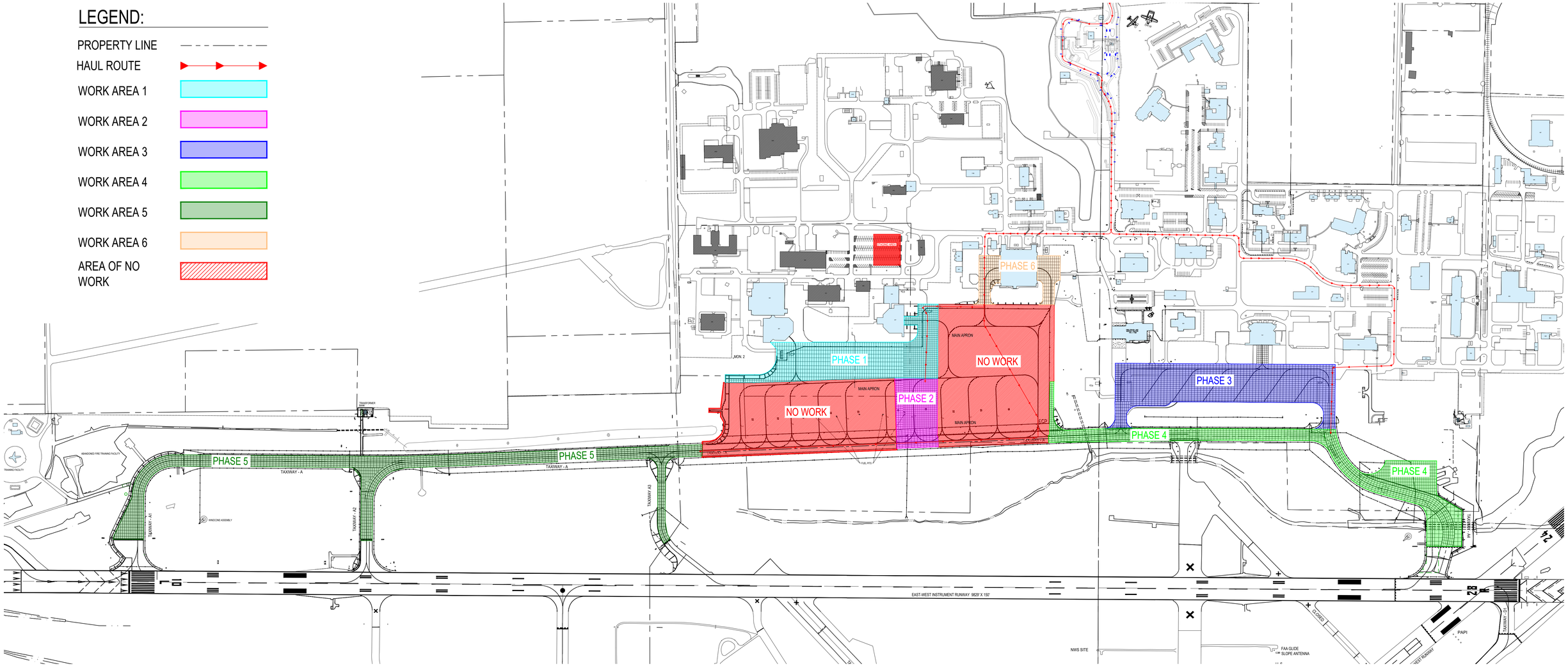

GENERAL NOTES:

1. ACCESS GATE SHALL BE LOCKED OR CONTRACTOR WILL PROVIDE POSITIVE CONTROL OVER ALL PEOPLE ENTERING THE WORK SITE.
2. THE CONTRACTOR WILL NOTIFY AIRFIELD MANAGEMENT WHEN ENROUTE TO THE WORK AREA AND WHEN COMPLETED FOR THE DAY. THE CONTRACTOR WILL ALSO NOTIFY SECURITY FORCES.
3. CONSTRUCTION ACTIVITIES SHALL BE LIMITED WITHIN THE LIMITS OF THE CONSTRUCTION ZONE. ACCESS TO ACTIVE AIRCRAFT OPERATIONAL AREAS IS PROHIBITED. AREAS OUTSIDE OF THE LIMITS OF CONSTRUCTION ZONE ARE CONSIDERED ACTIVE AIRCRAFT OPERATIONAL AREAS.
4. RED LINE ON THE AIRFIELD IS THE RESTRICTED LINE. THE CONTRACTOR SHALL NOT CROSS THE RED LINE IN ANY CIRCUMSTANCES WITHOUT PRIOR COORDINATION WITH SECURITY FORCES AND AIRFIELD MANAGEMENT.

0 300 600 1200

SCALE: 1" = 300'-0"

N W E S

GRID COORDINATES: NAD 83
STATE PLANE NEW YORK WEST 3103

REV	DATE	DESCRIPTION	INITIAL
-	-	-	-

Removal of this caveat is prohibited. This material is For Official Use Only.

LIMITED DISTRIBUTION
Distribution authorized to DoD, IAW 10 U.S.C. § 130 & 455. Release Authorized to U.S. DoD contractors IAW 48 C.F.R. §252.245-7000

Although every effort has been made to ensure the accuracy of information, errors and conditions originating from physical sources used to develop the database maybe reflected in the data supplied. The end user must be aware of the data conditions and ultimately bear responsibility and the appropriate use of the information with respect to possible errors, original map scale, collection methodology, currency of data, and other conditions specific to certain data.

Unauthorized reproduction, distribution, publication, or exhibition of this material is STRICTLY PROHIBITED. Refer other requests to 914 MSG/CEC. Destroy as "For Official Use Only". 914 MSG/CEC shall not be liable for any errors, omissions, or damages that result from noncompliance of this message.

DEPARTMENT OF THE AIR FORCE
DIRECTORATE OF ENGINEERING & SERVICES DCS/LEE-WASHINGTON, D.C.

AIR FORCE RESERVE

AIRFIELD JOINT SEALANT REPAIRS
HAULING AND PHASING PLAN
NIAGARA FALLS AIR RESERVE STATION
NEW YORK

SCALE: 1 INCH = 300 FT	DATE: APRIL 2026	TAB NO. PS101
AFI 32-7062, AIR FORCE COMPREHENSIVE PLNG		
AFRC-914th AW		

LEGEND:

PROPERTY LINE	
WORK AREA 1	
WORK AREA 2	
WORK AREA 3	
WORK AREA 4	
WORK AREA 5	
WORK AREA 6	
FREE ZONE BARRICADES	

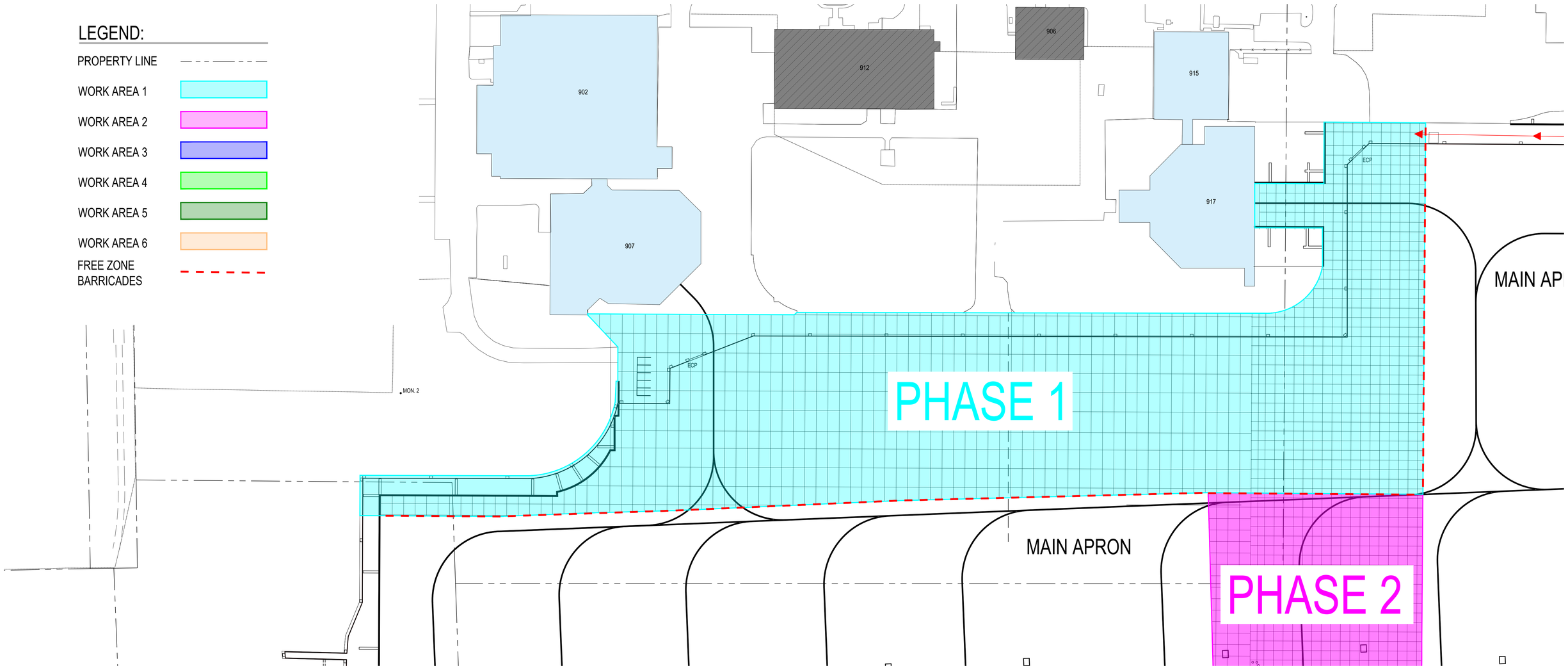

GENERAL NOTES:

1. ACCESS GATE SHALL BE LOCKED OR CONTRACTOR WILL PROVIDE POSITIVE CONTROL OVER ALL PEOPLE ENTERING THE WORK SITE.
2. THE CONTRACTOR WILL NOTIFY AIRFIELD MANAGEMENT WHEN ENROUTE TO THE WORK AREA AND WHEN COMPLETED FOR THE DAY. THE CONTRACTOR WILL ALSO NOTIFY SECURITY FORCES.
3. CONSTRUCTION ACTIVITIES SHALL BE LIMITED WITHIN THE LIMITS OF THE CONSTRUCTION ZONE. ACCESS TO ACTIVE AIRCRAFT OPERATIONAL AREAS IS PROHIBITED. AREAS OUTSIDE OF THE LIMITS OF CONSTRUCTION ZONE ARE CONSIDERED ACTIVE AIRCRAFT OPERATIONAL AREAS.
4. RED LINE ON THE AIRFIELD IS THE RESTRICTED LINE. THE CONTRACTOR SHALL NOT CROSS THE RED LINE IN ANY CIRCUMSTANCES WITHOUT PRIOR COORDINATION WITH SECURITY FORCES AND AIRFIELD MANAGEMENT.

0 60 120 240

SCALE: 1" = 60'-0"

N
W E
S

GRID COORDINATES: NAD 83
STATE PLANE NEW YORK WEST 3103

REV	DATE	DESCRIPTION	INITIAL
-	-	-	-

Removal of this caveat is prohibited. This material is For Official Use Only.

LIMITED DISTRIBUTION
Distribution authorized to DoD, IAW 10 U.S.C. § 130 & 455. Release Authorized to U.S. DoD contractors IAW 48 C.F.R. §252.245-7000

Although every effort has been made to ensure the accuracy of information, errors and conditions originating from physical sources used to develop the database maybe reflected in the data supplied. The end user must be aware of the data conditions and ultimately bear responsibility and the appropriate use of the information with respect to possible errors, original map scale, collection methodology, currency of data, and other conditions specific to certain data.

Unauthorized reproduction, distribution, publication, or exhibition of this material is STRICTLY PROHIBITED. Refer other requests to 914 MSG/CEC. Destroy as "For Official Use Only". 914 MSG/CEC shall not be liable for any errors, omissions, or damages that result from noncompliance of this message.

DEPARTMENT OF THE AIR FORCE
DIRECTORATE OF ENGINEERING & SERVICES DCS/LEE-WASHINGTON, D.C.

AIR FORCE RESERVE
AIRFIELD JOINT SEALANT REPAIRS
PHASE 1 PLAN
NIAGARA FALLS AIR RESERVE STATION
NEW YORK

SCALE: 1 INCH = 60 FT | DATE: APRIL 2026 | TAB NO. P-1

AFI 32-7062, AIR FORCE COMPREHENSIVE PLNG

AFRC-914th AW

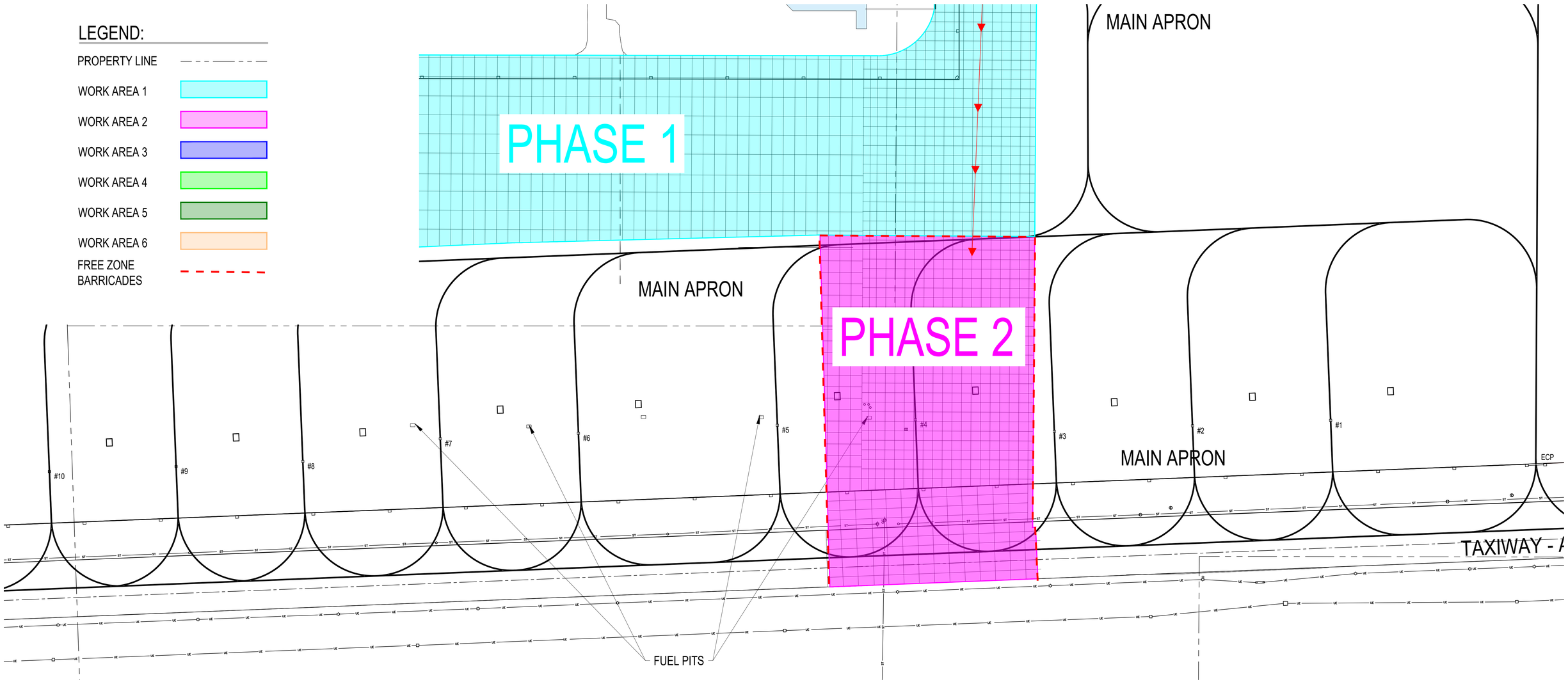

GENERAL NOTES:

1. ACCESS GATE SHALL BE LOCKED OR CONTRACTOR WILL PROVIDE POSITIVE CONTROL OVER ALL PEOPLE ENTERING THE WORK SITE.
2. THE CONTRACTOR WILL NOTIFY AIRFIELD MANAGEMENT WHEN ENROUTE TO THE WORK AREA AND WHEN COMPLETED FOR THE DAY. THE CONTRACTOR WILL ALSO NOTIFY SECURITY FORCES.
3. CONSTRUCTION ACTIVITIES SHALL BE LIMITED WITHIN THE LIMITS OF THE CONSTRUCTION ZONE. ACCESS TO ACTIVE AIRCRAFT OPERATIONAL AREAS IS PROHIBITED. AREAS OUTSIDE OF THE LIMITS OF CONSTRUCTION ZONE ARE CONSIDERED ACTIVE AIRCRAFT OPERATIONAL AREAS.
4. RED LINE ON THE AIRFIELD IS THE RESTRICTED LINE. THE CONTRACTOR SHALL NOT CROSS THE RED LINE IN ANY CIRCUMSTANCES WITHOUT PRIOR COORDINATION WITH SECURITY FORCES AND AIRFIELD MANAGEMENT.

0 60 120 240

SCALE: 1" = 60'-0"

N
W E
S

GRID COORDINATES: NAD 83
STATE PLANE NEW YORK WEST 3103

REV	DATE	DESCRIPTION	INITIAL
-	-	-	-

Removal of this caveat is prohibited. This material is For Official Use Only.

LIMITED DISTRIBUTION
Distribution authorized to DoD, IAW 10 U.S.C. § 130 & 455. Release Authorized to U.S. DoD contractors IAW 48 C.F.R. §252.245-7000

Although every effort has been made to ensure the accuracy of information, errors and conditions originating from physical sources used to develop the database maybe reflected in the data supplied. The end user must be aware of the data conditions and ultimately bear responsibility and the appropriate use of the information with respect to possible errors, original map scale, collection methodology, currency of data, and other conditions specific to certain data.

Unauthorized reproduction, distribution, publication, or exhibition of this material is STRICTLY PROHIBITED. Refer other requests to 914 MSG/CEC. Destroy as "For Official Use Only". 914 MSG/CEC shall not be liable for any errors, omissions, or damages that result from noncompliance of this message.

DEPARTMENT OF THE AIR FORCE
DIRECTORATE OF ENGINEERING & SERVICES DCS/LEE-WASHINGTON, D.C.

AIR FORCE RESERVE
AIRFIELD JOINT SEALANT REPAIRS
PHASE 2 PLAN
NIAGARA FALLS AIR RESERVE STATION
NEW YORK

SCALE: 1 INCH = 60 FT
DATE: APRIL 2026
TAB NO. P-2
AFI 32-7062, AIR FORCE COMPREHENSIVE PLNG
AFRC-914th AW

LEGEND:

- PROPERTY LINE
- WORK AREA 1
- WORK AREA 2
- WORK AREA 3
- WORK AREA 4
- WORK AREA 5
- WORK AREA 6
- FREE ZONE BARRICADES

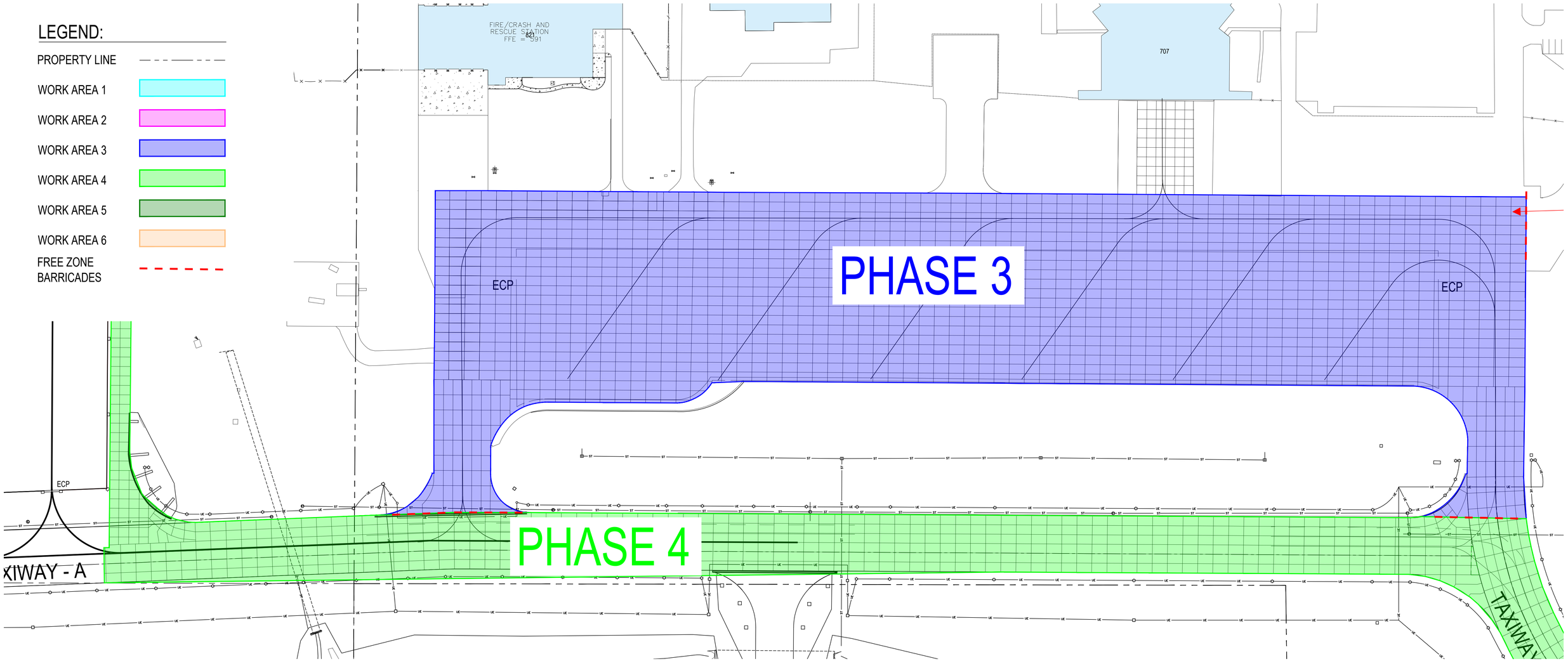

GENERAL NOTES:

1. ACCESS GATE SHALL BE LOCKED OR CONTRACTOR WILL PROVIDE POSITIVE CONTROL OVER ALL PEOPLE ENTERING THE WORK SITE.
2. THE CONTRACTOR WILL NOTIFY AIRFIELD MANAGEMENT WHEN ENROUTE TO THE WORK AREA AND WHEN COMPLETED FOR THE DAY. THE CONTRACTOR WILL ALSO NOTIFY SECURITY FORCES.
3. CONSTRUCTION ACTIVITIES SHALL BE LIMITED WITHIN THE LIMITS OF THE CONSTRUCTION ZONE. ACCESS TO ACTIVE AIRCRAFT OPERATIONAL AREAS IS PROHIBITED. AREAS OUTSIDE OF THE LIMITS OF CONSTRUCTION ZONE ARE CONSIDERED ACTIVE AIRCRAFT OPERATIONAL AREAS.
4. RED LINE ON THE AIRFIELD IS THE RESTRICTED LINE. THE CONTRACTOR SHALL NOT CROSS THE RED LINE IN ANY CIRCUMSTANCES WITHOUT PRIOR COORDINATION WITH SECURITY FORCES AND AIRFIELD MANAGEMENT.

0 60 120 240

SCALE: 1" = 60'-0"

N W E S

GRID COORDINATES: NAD 83
STATE PLANE NEW YORK WEST 3103

REV	DATE	DESCRIPTION	INITIAL
-	-	-	-

Removal of this caveat is prohibited. This material is For Official Use Only.

LIMITED DISTRIBUTION
Distribution authorized to DoD, IAW 10 U.S.C. § 130 & 455. Release Authorized to U.S. DoD contractors IAW 48 C.F.R. §252.245-7000

Although every effort has been made to ensure the accuracy of information, errors and conditions originating from physical sources used to develop the database maybe reflected in the data supplied. The end user must be aware of the data conditions and ultimately bear responsibility and the appropriate use of the information with respect to possible errors, original map scale, collection methodology, currency of data, and other conditions specific to certain data.

Unauthorized reproduction, distribution, publication, or exhibition of this material is STRICTLY PROHIBITED. Refer other requests to 914 MSG/CEC. Destroy as "For Official Use Only". 914 MSG/CEC shall not be liable for any errors, omissions, or damages that result from noncompliance of this message.

DEPARTMENT OF THE AIR FORCE
DIRECTORATE OF ENGINEERING & SERVICES DCS/LEE-WASHINGTON, D.C.

AIR FORCE RESERVE
AIRFIELD JOINT SEALANT REPAIRS
PHASE 3 PLAN
NIAGARA FALLS AIR RESERVE STATION
NEW YORK

SCALE: 1 INCH = 60 FT	DATE: APRIL 2026	TAB NO. P-3
AFI 32-7062, AIR FORCE COMPREHENSIVE PLNG		
AFRC-914th AW		

LEGEND:

- PROPERTY LINE
- WORK AREA 1
- WORK AREA 2
- WORK AREA 3
- WORK AREA 4
- WORK AREA 5
- WORK AREA 6
- FREE ZONE BARRICADES

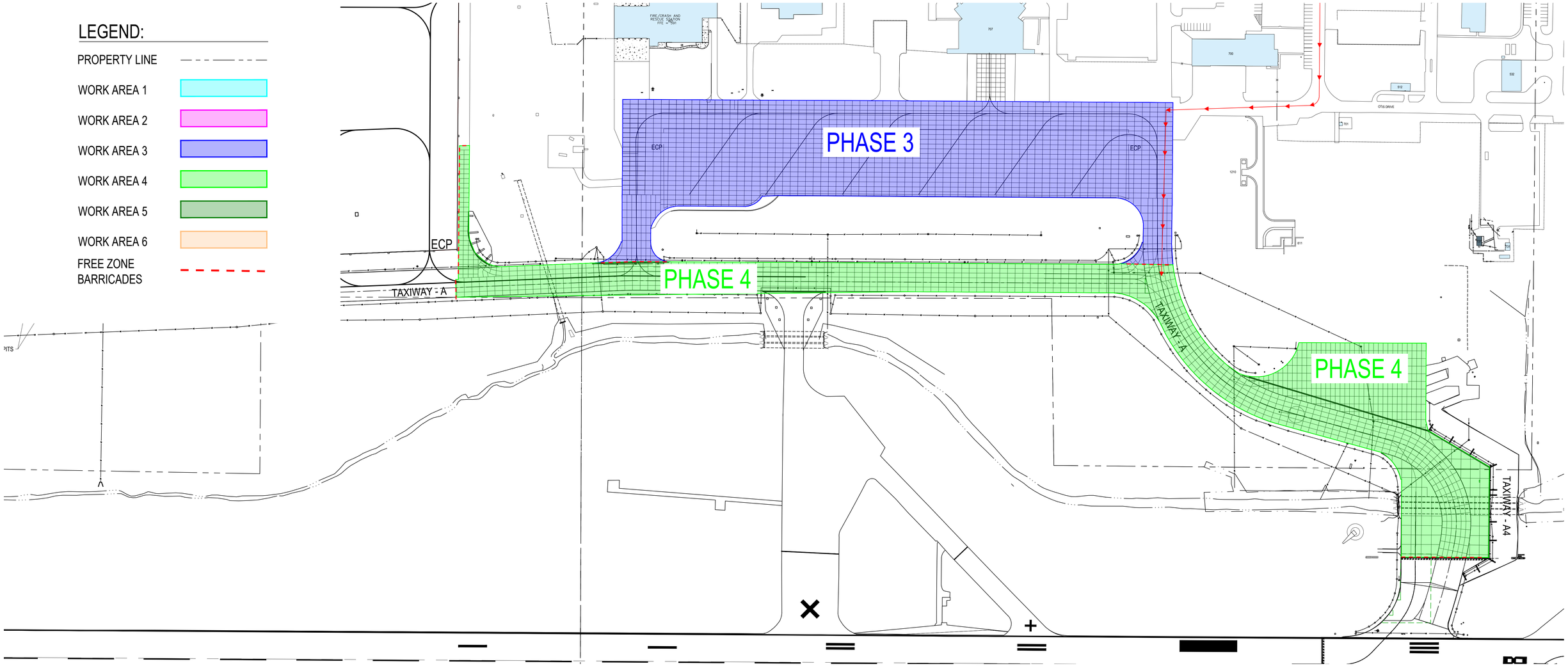

GENERAL NOTES:

1. ACCESS GATE SHALL BE LOCKED OR CONTRACTOR WILL PROVIDE POSITIVE CONTROL OVER ALL PEOPLE ENTERING THE WORK SITE.
2. THE CONTRACTOR WILL NOTIFY AIRFIELD MANAGEMENT WHEN ENROUTE TO THE WORK AREA AND WHEN COMPLETED FOR THE DAY. THE CONTRACTOR WILL ALSO NOTIFY SECURITY FORCES.
3. CONSTRUCTION ACTIVITIES SHALL BE LIMITED WITHIN THE LIMITS OF THE CONSTRUCTION ZONE. ACCESS TO ACTIVE AIRCRAFT OPERATIONAL AREAS IS PROHIBITED. AREAS OUTSIDE OF THE LIMITS OF CONSTRUCTION ZONE ARE CONSIDERED ACTIVE AIRCRAFT OPERATIONAL AREAS.
4. RED LINE ON THE AIRFIELD IS THE RESTRICTED LINE. THE CONTRACTOR SHALL NOT CROSS THE RED LINE IN ANY CIRCUMSTANCES WITHOUT PRIOR COORDINATION WITH SECURITY FORCES AND AIRFIELD MANAGEMENT.

0 120 240 480

SCALE: 1" = 120'-0"

N
W E
S

GRID COORDINATES: NAD 83
STATE PLANE NEW YORK WEST 3103

REV	DATE	DESCRIPTION	INITIAL
-	-	-	-

Removal of this caveat is prohibited. This material is For Official Use Only.

LIMITED DISTRIBUTION
Distribution authorized to DoD, IAW 10 U.S.C. § 130 & 455. Release Authorized to U.S. DoD contractors IAW 48 C.F.R. §252.245-7000

Although every effort has been made to ensure the accuracy of information, errors and conditions originating from physical sources used to develop the database maybe reflected in the data supplied. The end user must be aware of the data conditions and ultimately bear responsibility and the appropriate use of the information with respect to possible errors, original map scale, collection methodology, currency of data, and other conditions specific to certain data.

Unauthorized reproduction, distribution, publication, or exhibition of this material is STRICTLY PROHIBITED. Refer other requests to 914 MSG/CEC. Destroy as "For Official Use Only". 914 MSG/CEC shall not be liable for any errors, omissions, or damages that result from noncompliance of this message.

DEPARTMENT OF THE AIR FORCE
DIRECTORATE OF ENGINEERING & SERVICES DCS/LEE-WASHINGTON, D.C.

AIR FORCE RESERVE
AIRFIELD JOINT SEALANT REPAIRS
PHASE 4 PLAN
NIAGARA FALLS AIR RESERVE STATION
NEW YORK

SCALE: 1 INCH = 120 FT | DATE: APRIL 2026 | TAB NO. P-4

AFI 32-7062, AIR FORCE COMPREHENSIVE PLNG

AFRC-914th AW

LEGEND:

- PROPERTY LINE
- WORK AREA 1
- WORK AREA 2
- WORK AREA 3
- WORK AREA 4
- WORK AREA 5
- WORK AREA 6
- FREE ZONE BARRICADES

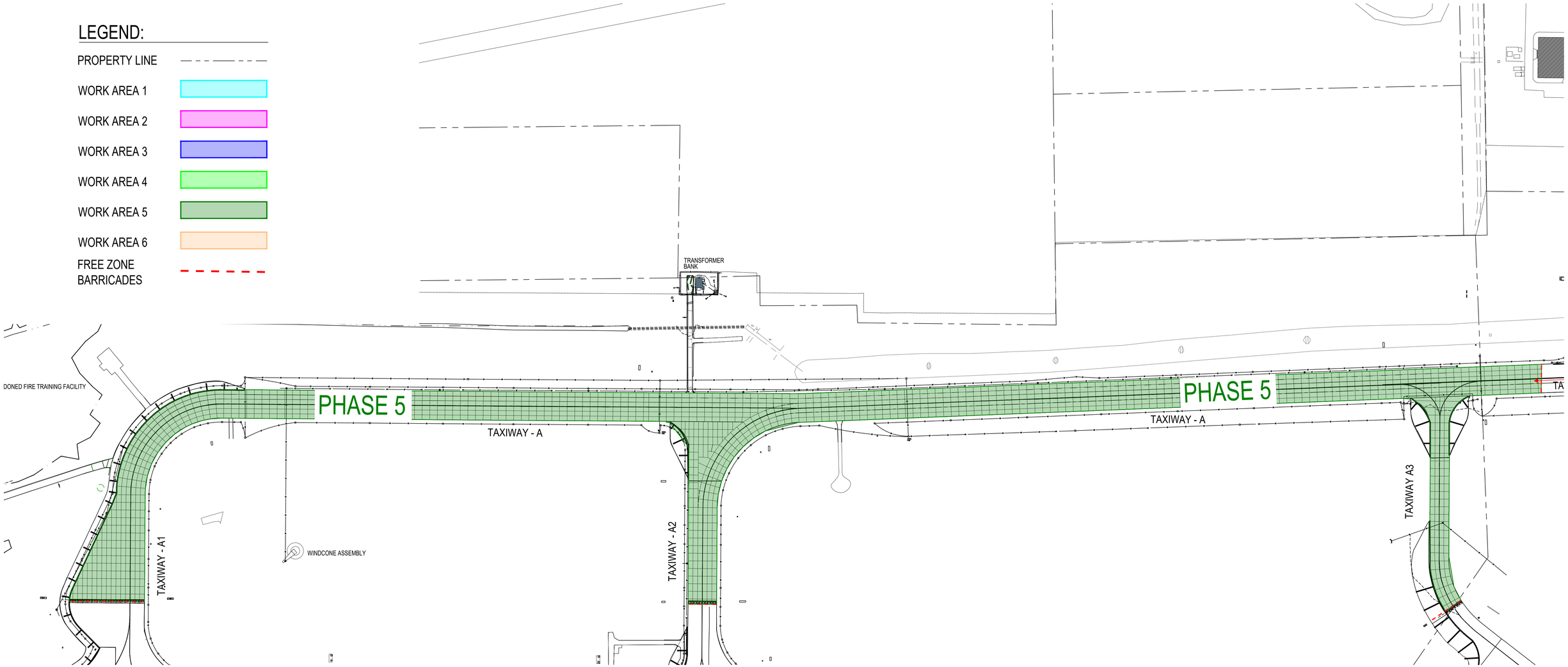

GENERAL NOTES:

1. ACCESS GATE SHALL BE LOCKED OR CONTRACTOR WILL PROVIDE POSITIVE CONTROL OVER ALL PEOPLE ENTERING THE WORK SITE.
2. THE CONTRACTOR WILL NOTIFY AIRFIELD MANAGEMENT WHEN ENROUTE TO THE WORK AREA AND WHEN COMPLETED FOR THE DAY. THE CONTRACTOR WILL ALSO NOTIFY SECURITY FORCES.
3. CONSTRUCTION ACTIVITIES SHALL BE LIMITED WITHIN THE LIMITS OF THE CONSTRUCTION ZONE. ACCESS TO ACTIVE AIRCRAFT OPERATIONAL AREAS IS PROHIBITED. AREAS OUTSIDE OF THE LIMITS OF CONSTRUCTION ZONE ARE CONSIDERED ACTIVE AIRCRAFT OPERATIONAL AREAS.
4. RED LINE ON THE AIRFIELD IS THE RESTRICTED LINE. THE CONTRACTOR SHALL NOT CROSS THE RED LINE IN ANY CIRCUMSTANCES WITHOUT PRIOR COORDINATION WITH SECURITY FORCES AND AIRFIELD MANAGEMENT.

0 120 240 480

SCALE: 1" = 120'-0"

N
W E
S

GRID COORDINATES: NAD 83
STATE PLANE NEW YORK WEST 3103

REV	DATE	DESCRIPTION	INITIAL
-	-	-	-

Removal of this caveat is prohibited. This material is For Official Use Only.

LIMITED DISTRIBUTION
Distribution authorized to DoD, IAW 10 U.S.C. § 130 & 455. Release Authorized to U.S. DoD contractors IAW 48 C.F.R. §252.245-7000

Although every effort has been made to ensure the accuracy of information, errors and conditions originating from physical sources used to develop the database maybe reflected in the data supplied. The end user must be aware of the data conditions and ultimately bear responsibility and the appropriate use of the information with respect to possible errors, original map scale, collection methodology, currency of data, and other conditions specific to certain data.

Unauthorized reproduction, distribution, publication, or exhibition of this material is STRICTLY PROHIBITED. Refer other requests to 914 MSG/CEC. Destroy as "For Official Use Only". 914 MSG/CEC shall not be liable for any errors, omissions, or damages that result from noncompliance of this message.

DEPARTMENT OF THE AIR FORCE
DIRECTORATE OF ENGINEERING & SERVICES DCS/LEE-WASHINGTON, D.C.

AIR FORCE RESERVE
AIRFIELD JOINT SEALANT REPAIRS
PHASE 5 PLAN
NIAGARA FALLS AIR RESERVE STATION
NEW YORK

SCALE: 1 INCH = 120 FT | DATE: APRIL 2026 | TAB NO. P-5

AFI 32-7062, AIR FORCE COMPREHENSIVE PLNG

AFRC-914th AW

LEGEND:

- PROPERTY LINE
- WORK AREA 1
- WORK AREA 2
- WORK AREA 3
- WORK AREA 4
- WORK AREA 5
- WORK AREA 6
- FREE ZONE BARRICADES

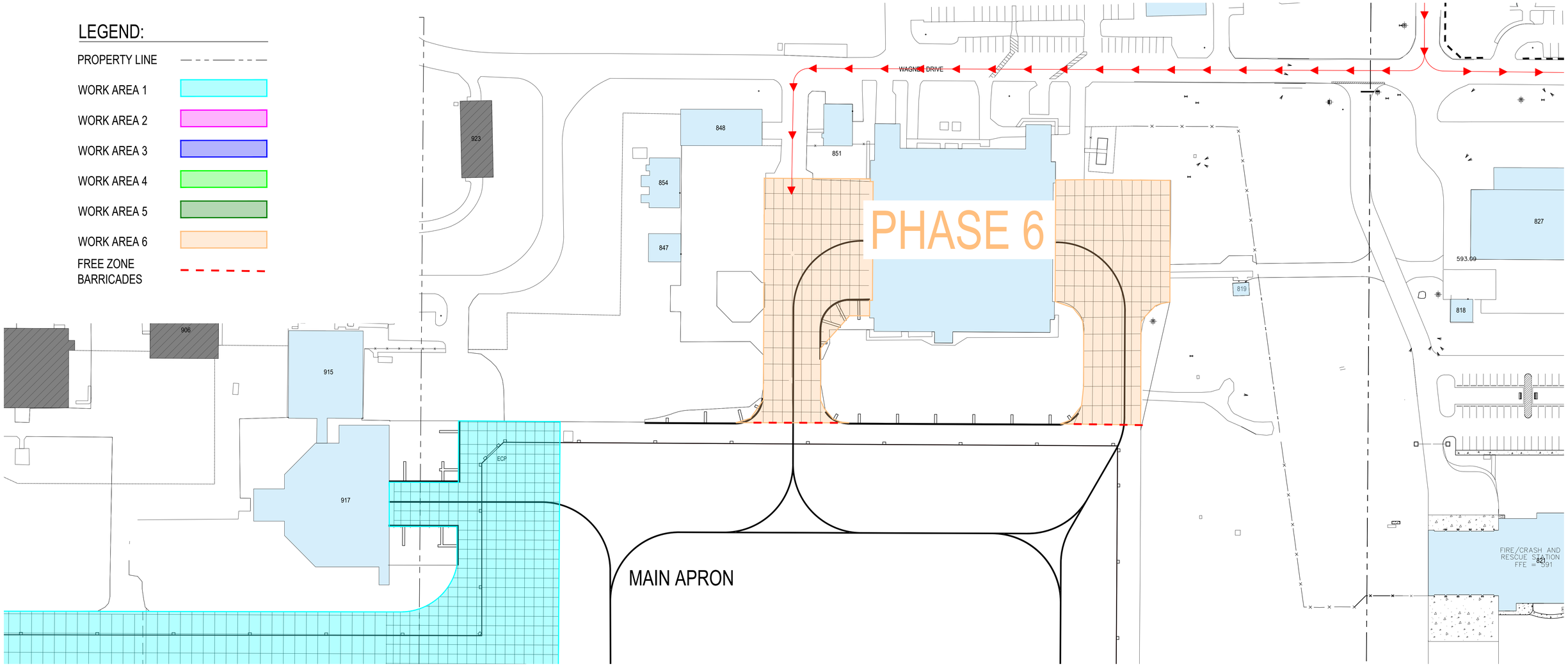

GENERAL NOTES:

1. ACCESS GATE SHALL BE LOCKED OR CONTRACTOR WILL PROVIDE POSITIVE CONTROL OVER ALL PEOPLE ENTERING THE WORK SITE.
2. THE CONTRACTOR WILL NOTIFY AIRFIELD MANAGEMENT WHEN ENROUTE TO THE WORK AREA AND WHEN COMPLETED FOR THE DAY. THE CONTRACTOR WILL ALSO NOTIFY SECURITY FORCES.
3. CONSTRUCTION ACTIVITIES SHALL BE LIMITED WITHIN THE LIMITS OF THE CONSTRUCTION ZONE. ACCESS TO ACTIVE AIRCRAFT OPERATIONAL AREAS IS PROHIBITED. AREAS OUTSIDE OF THE LIMITS OF CONSTRUCTION ZONE ARE CONSIDERED ACTIVE AIRCRAFT OPERATIONAL AREAS.
4. RED LINE ON THE AIRFIELD IS THE RESTRICTED LINE. THE CONTRACTOR SHALL NOT CROSS THE RED LINE IN ANY CIRCUMSTANCES WITHOUT PRIOR COORDINATION WITH SECURITY FORCES AND AIRFIELD MANAGEMENT.

0 60 120 240

SCALE: 1" = 60'-0"

N W E S

GRID COORDINATES: NAD 83
STATE PLANE NEW YORK WEST 3103

REV	DATE	DESCRIPTION	INITIAL
-	-	-	-

Removal of this caveat is prohibited. This material is For Official Use Only.

LIMITED DISTRIBUTION
Distribution authorized to DoD, IAW 10 U.S.C. § 130 & 455. Release Authorized to U.S. DoD contractors IAW 48 C.F.R. §252.245-7000

Although every effort has been made to ensure the accuracy of information, errors and conditions originating from physical sources used to develop the database maybe reflected in the data supplied. The end user must be aware of the data conditions and ultimately bear responsibility and the appropriate use of the information with respect to possible errors, original map scale, collection methodology, currency of data, and other conditions specific to certain data.

Unauthorized reproduction, distribution, publication, or exhibition of this material is STRICTLY PROHIBITED. Refer other requests to 914 MSG/CEC. Destroy as "For Official Use Only". 914 MSG/CEC shall not be liable for any errors, omissions, or damages that result from noncompliance of this message.

DEPARTMENT OF THE AIR FORCE
DIRECTORATE OF ENGINEERING & SERVICES DCS/LEE-WASHINGTON, D.C.

AIR FORCE RESERVE
AIRFIELD JOINT SEALANT REPAIRS
PHASE 6 PLAN
NIAGARA FALLS AIR RESERVE STATION
NEW YORK

SCALE: 1 INCH = 60 FT | DATE: APRIL 2026 | TAB NO. P-6

AFI 32-7062, AIR FORCE COMPREHENSIVE PLNG

AFRC-914th AW

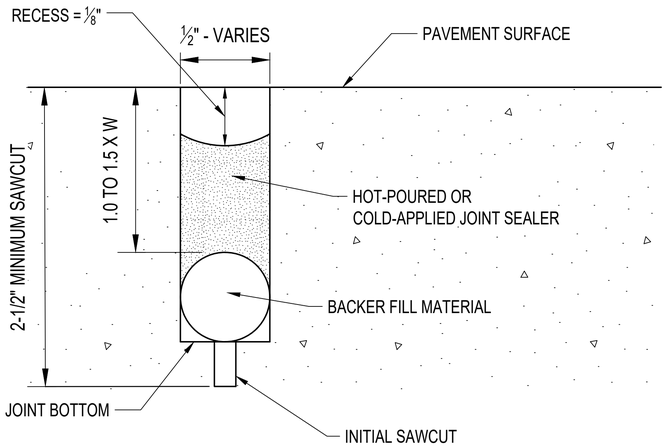

NOTES:
1. JOINT SEALANT ON AIRFIELD APRON PAVEMENTS MUST BE JET FUEL RESISTANT.

BACKER ROD JOINT SEALANT DETAIL
NOT TO SCALE

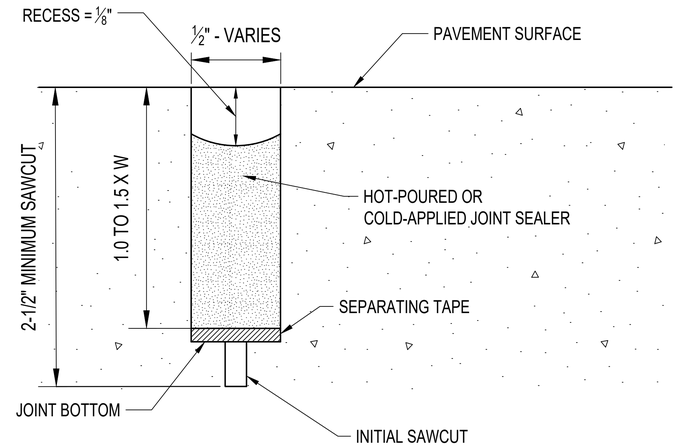

NOTES:
1. JOINT SEALANT ON AIRFIELD APRON PAVEMENTS MUST BE JET FUEL RESISTANT.

SEPARATING TAPE JOINT SEALANT DETAIL
NOT TO SCALE

1 - FLASHING RED SOLAR POWERED HAZARD LIGHT ON EACH BARRICADE.
LIGHTS MUST MEET THE FOLLOWING REQUIREMENTS:
SIZE - 12"(H) X 8"(W) X 3"(D)
FLASHING RATE 60+/- TIMES/MINUTE
0.40 WATT SOLAR PANEL POWER
1200MA NICKEL HYDRIDE CELLS ENERGY
L.E.D. (20,000 HOURS LIFE) ILLUMINATION
OVERCHARGE PROTECTION BUILT IN.
THREE NIGHTS USE WITH 6 HOURS SUNCHARGE.
ON/OFF SWITCH-AUTOMATIC ON DUSK, OFF DAWN. LIGHT MUST HAVE
MANUAL ON/OFF SWITCH FOR OPERATION IN LOW VISIBLITY DURING
DAYLIGHT HOURS.

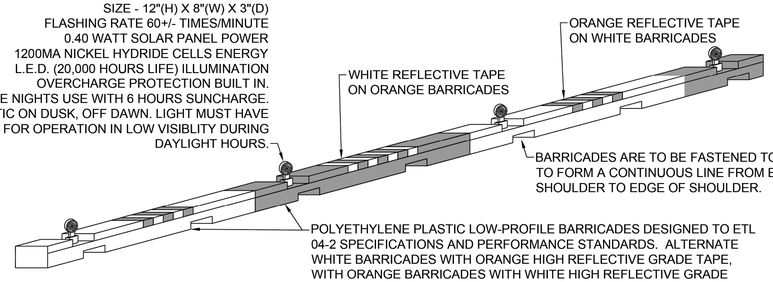

POLYETHYLENE PLASTIC LOW-PROFILE BARRICADES DESIGNED TO ETL 04-2 SPECIFICATIONS AND PERFORMANCE STANDARDS. ALTERNATE WHITE BARRICADES WITH ORANGE HIGH REFLECTIVE GRADE TAPE, WITH ORANGE BARRICADES WITH WHITE HIGH REFLECTIVE GRADE TAPE. FILL BARRICADES WITH WATER TO CAPACITY. BARRICADES ARE APPROXIMATELY 6"(H) X 6"(W) X 6'(L).

A1 TYPE 1 LOW PROFILE BARRICADE
SCALE: N.T.S.

REV	DATE	DESCRIPTION	INITIAL
-	-	-	-

Removal of this caveat is prohibited. This material is For Official Use Only.

LIMITED DISTRIBUTION
Distribution authorized to DoD, IAW 10 U.S.C. § 130 & 455. Release Authorized to U.S. DoD contractors IAW 48 C.F.R. §252.245-7000

Although every effort has been made to ensure the accuracy of information, errors and conditions originating from physical sources used to develop the database maybe reflected in the data supplied. The end user must be aware of the data conditions and ultimately bear responsibility and the appropriate use of the information with respect to possible errors, original map scale, collection methodology, currency of data, and other conditions specific to certain data.

Unauthorized reproduction, distribution, publication, or exhibition of this material is STRICTLY PROHIBITED. Refer other requests to 914 MSG/CEC. Destroy as "For Official Use Only". 914 MSG/CEC shall not be liable for any errors, omissions, or damages that result from noncompliance of this message.

DEPARTMENT OF THE AIR FORCE
DIRECTORATE OF ENGINEERING & SERVICES DCS/LEE-WASHINGTON, D.C.

AIR FORCE RESERVE
AIRFIELD JOINT SEALANT REPAIRS
SITE DETAILS
NIAGARA FALLS AIR RESERVE STATION
NEW YORK

SCALE: N.T.S.
DATE: APRIL 2026
TAB NO. CS501
AFI 32-7062, AIR FORCE COMPREHENSIVE PLNG
AFRC-914th AW