BUILDING 7019 RENOVATIONS
MCOLF ATLANTIC
MARINE CORPS AIR STATION CHERRY POINT

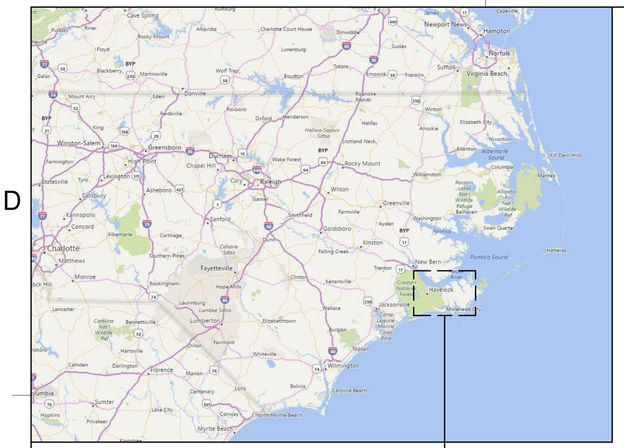

D1 REGIONAL MAP
SCALE: NOT TO SCALE

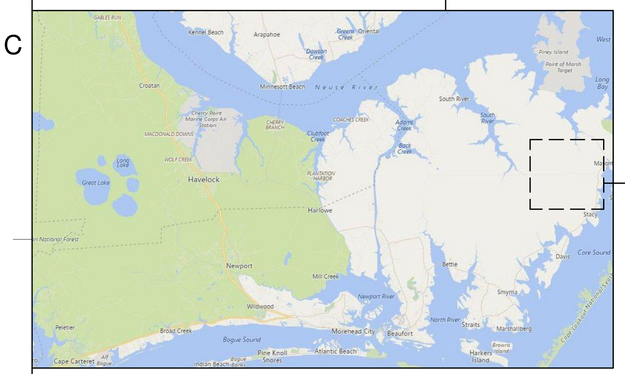

B1 VICINITY MAP
SCALE: NOT TO SCALE

A1 BUILDING LOCATION MAP
SCALE: NOT TO SCALE

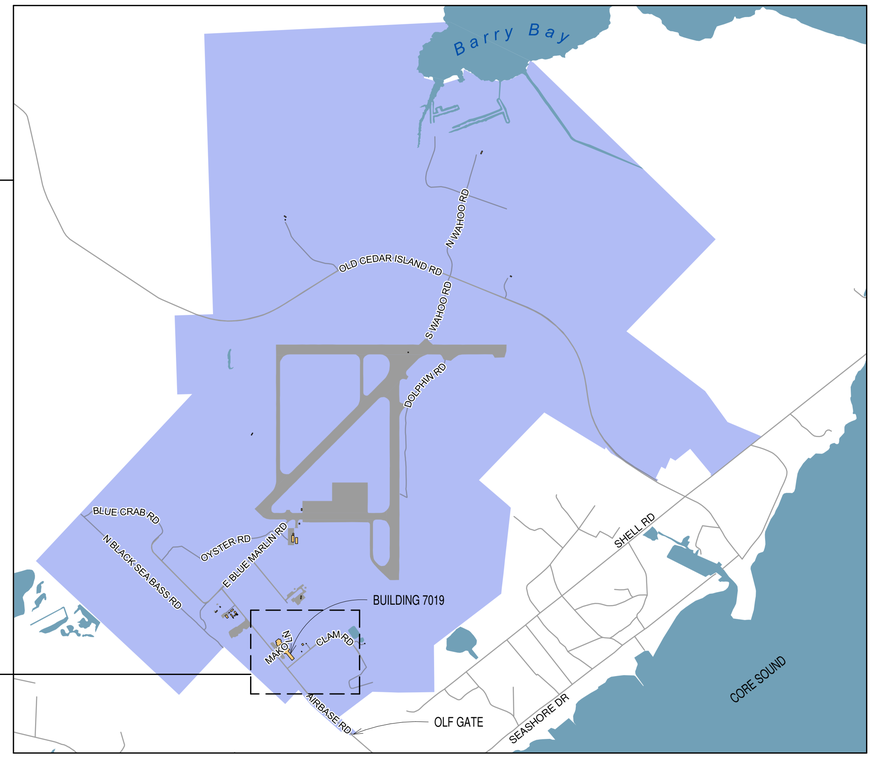

B3 MCOLF ATLANTIC INSTALLATION MAP
SCALE: NOT TO SCALE

SYM	DESCRIPTION	DATE	APPR

NAVFAC

DARDEN J. EURE, III REGISTERED ARCHITECT NORTH CAROLINA 8840 NEW BERN NC
01 JUL 2026 SEAL

mbf architects pa
317-C Pollock Street | New Bern, NC 28560
252.637.6373 | mbfarchitects.com
A/E INFO

APPROVED
FOR COMMANDER NAVFAC
ACTIVITY
PERRY.HEATHER.MELYNN.1388599614 Digitally signed by PERRY.HEATHER.MELYNN.1388599614 Date: 2026.07.05 17:19:19 -04'00'
SATISFACTORY Y/N

DES	REL	DRW	REL	CHK	DJE,III

PM/DM	L. PEED
BRANCH MANAGER	H. PERRY
CHIEF ENG/ARCH	P. FAULKNER
FIRE PROTECTION	D. CHASTAIN

DEPARTMENT OF THE NAVY
NAVAL FACILITIES ENGINEERING COMMAND
IPT: MARINE CORPS AIR STATION
NAVAL FACILITIES ENGINEERING COMMAND ~ MIDATLANTIC
NAVAL STATION - NORFOLK, VA
CHERRY POINT, NC
MCOLF ATLANTIC
BUILDING 7019 RENOVATIONS
TITLE SHEET

SCALE:	AS INDICATED
STATION DESIGN WON:	7406712
STATION CONSTRUCTION WON:	7406712
NAVFAC DRAWING NO.	12939426
SHEET	1 OF 148
	G-001

DRAWFORM REVISION: 25 AUGUST 2020

MBF ARCHITECTS P.A. REGISTERED ARCHITECTURAL CORPORATION CERT. NO. 50679 NORTH CAROLINA NEW BERN N.C.

7/1/2026 6:49:00 PM G-001
C:\Users\ejgmon\Documents\2509 ARCH 2023_ejgmonPWCRM.rvt

INDEX OF DRAWINGS

SHEET NO		NAVFAC NO	PLATE NO	SHEET TITLE
			G	**GENERAL**
1	OF 148	12939426	G-001	TITLE SHEET
2	OF 148	12939427	G-002	INDEX OF DRAWINGS
			GI	**LIFE SAFETY**
3	OF 148	12939428	GI001	LIFE SAFETY GENERAL NOTES AND LEGEND
4	OF 148	12939429	GI002	CODE COMPLIANCE SITE PLAN
5	OF 148	12939430	GI101	LIFE SAFETY FLOOR PLAN
			C	**CIVIL**
6	OF 148	12939431	C-001	CIVIL NOTES, LEGEND AND ABBREVIATIONS
7	OF 148	12939432	C-100	OVERALL SITE PLAN
8	OF 148	12939433	CD101	ENLARGED SITE PLAN - EXISTING CONDITIONS AND DEMOLITION
9	OF 148	12939434	CS101	SITE PLAN LAYOUT
10	OF 148	12939435	CG101	SITE GRADING PLAN
11	OF 148	12939436	CU101	SITE UTILITY PLAN
12	OF 148	12939437	CS501	DETAILS
13	OF 148	12939438	CS502	DETAILS
14	OF 148	12939439	CS503	DETAILS
15	OF 148	12939440	CG501	DETAILS
16	OF 148	12939441	CG502	DETAILS
17	OF 148	12939442	CG503	DETAILS
18	OF 148	12939443	CU501	DETAILS
19	OF 148	12939444	CU502	DETAILS
			S	**STRUCTURAL**
20	OF 148	12939445	S-001	GENERAL NOTES
21	OF 148	12939446	S-002	STRUCTURAL NOTES
22	OF 148	12939447	S-003	STRUCTURAL NOTES CONT.
23	OF 148	12939448	S-101	FOUNDATION PLAN
24	OF 148	12939449	S-102	ROOF FRAMING PLAN
25	OF 148	12939450	S-201	SECTIONS
26	OF 148	12939451	S-501	TYPICAL CONSTRUCTION DETAILS
27	OF 148	12939452	S-502	TYPICAL CONSTRUCTION DETAILS
			A	**ARCHITECTURAL**
28	OF 148	12939453	A-001	SYMBOL LEGEND AND ABBREVIATIONS
29	OF 148	12939454	AD101	FLOOR PLAN - EXISTING/DEMOLITION
30	OF 148	12939455	AD102	REFLECTED CEILING PLAN - EXISTING/DEMOLITION
31	OF 148	12939456	AD103	ROOF PLAN - EXISTING/DEMOLITION
32	OF 148	12939457	AD201	EXTERIOR ELEVATIONS - EXISTING/DEMOLITION
33	OF 148	12939458	A-101	FLOOR PLAN - CONSTRUCTION
34	OF 148	12939459	A-102	REFLECTED CEILING PLAN - CONSTRUCTION
35	OF 148	12939460	A-103	ROOF PLAN - CONSTRUCTION
36	OF 148	12939461	A-201	EXTERIOR ELEVATIONS - CONSTRUCTION
37	OF 148	12939462	A-202	EXTERIOR ELEVATIONS - CONSTRUCTION
38	OF 148	12939463	A-301	BUILDING SECTIONS
39	OF 148	12939464	A-302	WALL SECTIONS
40	OF 148	12939465	A-401	ENLARGED FLOOR PLANS
41	OF 148	12939466	A-402	ENLARGED TOILET ELEVATIONS
42	OF 148	12939467	A-403	ENLARGED TOILET ELEVATIONS
43	OF 148	12939468	A-501	WALL TYPES
44	OF 148	12939469	A-502	MASONRY DETAILS
45	OF 148	12939470	A-503	MISCELLANEOUS DETAILS
46	OF 148	12939471	A-504	MISCELLANEOUS DETAILS
47	OF 148	12939472	A-505	ROOFING DETAILS
48	OF 148	12939473	A-506	ROOFING DETAILS
49	OF 148	12939474	A-601	DOOR AND FRAME SCHEDULE AND DETAILS
50	OF 148	12939475	A-602	DOOR DETAILS
51	OF 148	12939476	A-603	DOOR DETAILS
52	OF 148	12939477	A-604	WINDOW SCHEDULE AND DETAILS
			QF	**FOOD SERVICE**
53	OF 148	12939478	QF101	KITCHEN EQUIPMENT PLAN
			I	**INTERIOR DESIGN**
54	OF 148	12939479	I-101	FURNITURE PLAN
55	OF 148	12939480	I-102	FINISH PLAN
56	OF 148	12939481	I-103	SIGNAGE PLAN
57	OF 148	12939482	I-201	INTERIOR ELEVATIONS
58	OF 148	12939483	I-301	CASEWORK SECTIONS
59	OF 148	12939484	I-501	SIGNAGE DETAILS
60	OF 148	12939485	I-502	INTERIOR DETAILS
61	OF 148	12939486	I-601	SCHEDULES & LEGENDS
			F	**FIRE PROTECTION**
62	OF 148	12939487	FA001	FIRE ALARM GENERAL NOTES AND LEGEND
63	OF 148	12939488	FD101	FIRE ALARM DEMOLITION FLOOR PLAN
64	OF 148	12939489	FA101	FIRE ALARM FLOOR PLAN
65	OF 148	12939490	FA501	FIRE ALARM DETAILS
66	OF 148	12939491	FA502	FIRE ALARM DETAILS
67	OF 148	12939492	FA503	FIRE ALARM DETAILS
68	OF 148	12939493	FX001	FIRE SUPPRESSION GENERAL NOTES AND LEGEND
69	OF 148	12939494	FX101	FIRE SUPPRESSION FLOOR PLAN
70	OF 148	12939495	FX401	FIRE SUPPRESSION ENLARGED PLANS
71	OF 148	12939496	FX501	FIRE SUPPRESSION DETAILS
			P	**PLUMBING**
72	OF 148	12939497	P-001	PLUMBING COVER SHEET
73	OF 148	12939498	PD101	FIRST FLOOR PLAN - EXISTING/DEMOLITION - PLUMBING
74	OF 148	12939499	P-101	FIRST FLOOR PLAN - WASTE AND VENT
75	OF 148	12939500	P-102	FIRST FLOOR PLAN - WATER
76	OF 148	12939501	P-401	ENLARGED PLANS - WASTE AND VENT
77	OF 148	12939502	P-402	ENLARGED PLANS - WATER
78	OF 148	12939503	P-501	PLUMBING DETAILS
79	OF 148	12939504	P-502	PLUMBING DETAILS
80	OF 148	12939505	P-601	PLUMBING SCHEDULES
81	OF 148	12939506	P-701	RISER DIAGRAMS - WASTE AND VENT (WEST)
82	OF 148	12939507	P-702	RISER DIAGRAMS - WASTE AND VENT (EAST)
83	OF 148	12939508	P-703	RISER DIAGRAMS - WATER (WEST)
84	OF 148	12939509	P-704	RISER DIAGRAMS - WATER (EAST)
			M	**MECHANICAL**
85	OF 148	12939510	M-001	MECHANICAL NOTES, LEGEND, AND ABBREVIATIONS
86	OF 148	12939511	MD101	OVERALL FIRST FLOOR PLAN - MECHANICAL DEMOLITION
87	OF 148	12939512	MD102	OVERALL ROOF PLAN - MECHANICAL DEMOLITION
88	OF 148	12939513	MD103	OVERALL FIRST FLOOR PLAN - MECHANICAL PIPING DEMOLITION
89	OF 148	12939514	M-101	OVERALL FIRST FLOOR PLAN - MECHANICAL HVAC
90	OF 148	12939515	M-102	OVERALL FIRST FLOOR PLAN - MECHANICAL PIPING
91	OF 148	12939516	M-103	OVERALL ROOF PLAN - MECHANICAL HVAC
92	OF 148	12939517	M-104	OVERALL SITE PLAN - MECHANICAL
93	OF 148	12939518	M-105	OVERALL SITE PLAN - MECHANICAL
94	OF 148	12939519	M-301	MECHANICAL SECTIONS VIEWS
95	OF 148	12939520	M-302	MECHANICAL SECTIONS VIEWS
96	OF 148	12939521	M-401	ENLARGED FLOOR PLAN - MECHANICAL ROOM
97	OF 148	12939522	M-501	MECHANICAL DETAILS
98	OF 148	12939523	M-502	MECHANICAL DETAILS
99	OF 148	12939524	M-503	MECHANICAL DETAILS
100	OF 148	12939525	M-504	MECHANICAL DETAILS
101	OF 148	12939526	M-505	MECHANICAL DETAILS
102	OF 148	12939527	M-506	MECHANICAL DETAILS
103	OF 148	12939528	M-507	MECHANICAL DETAILS
104	OF 148	12939529	M-508	MECHANICAL DETAILS
105	OF 148	12939530	M-509	MECHANICAL DETAILS
106	OF 148	12939531	M-510	MECHANICAL DETAILS
107	OF 148	12939532	M-511	MECHANICAL DETAILS
108	OF 148	12939533	M-512	MECHANICAL DETAILS
109	OF 148	12939534	M-513	MECHANICAL DETAILS
110	OF 148	12939535	M-514	MECHANICAL DETAILS
111	OF 148	12939536	M-515	MECHANICAL DETAILS
112	OF 148	12939537	M-601	MECHANICAL SCHEDULES
113	OF 148	12939538	M-602	MECHANICAL SCHEDULES
114	OF 148	12939539	M-603	MECHANICAL SCHEDULES
115	OF 148	12939540	M-604	MECHANICAL SCHEDULES
116	OF 148	12939541	M-605	MECHANICAL SCHEDULES
117	OF 148	12939542	M-701	MECHANICAL CONTROLS
118	OF 148	12939543	M-702	MECHANICAL CONTROLS
119	OF 148	12939544	M-703	MECHANICAL CONTROLS
120	OF 148	12939545	M-704	MECHANICAL CONTROLS
121	OF 148	12939546	M-801	PIPING DIAGRAMS
122	OF 148	12939547	M-901	3D ISOMETRIC VIEW - MECHANICAL
			E	**ELECTRICAL**
123	OF 148	12939548	ES001	SITE ELECTRICAL LEGEND
124	OF 148	12939549	ES101	SITE PLAN - ELECTRICAL
125	OF 148	12939550	ES501	SITE ELECTRICAL DETAILS
126	OF 148	12939551	ES502	SITE ELECTRICAL DETAILS
127	OF 148	12939552	E-001	ELECTRICAL NOTES AND LEGENDS
128	OF 148	12939553	ED101	FLOOR PLAN - POWER DEMOLITION
129	OF 148	12939554	ED102	ROOF PLAN - EQUIPMENT DEMOLITION
130	OF 148	12939555	ED103	FLOOR PLAN - LIGHTING DEMOLITION
131	OF 148	12939556	E-101	FLOOR PLAN - POWER
132	OF 148	12939557	E-102	FLOOR PLAN - EQUIPMENT CONNECTIONS
133	OF 148	12939558	E-103	FLOOR PLAN - LIGHTING
134	OF 148	12939559	E-104	ROOF PLAN - LIGHTNING PROTECTION
135	OF 148	12939560	E-401	ENLARGED PLANS - POWER
136	OF 148	12939561	E-501	ELECTRICAL DETAILS
137	OF 148	12939562	E-502	ELECTRICAL DETAILS
138	OF 148	12939563	E-503	ELECTRICAL DETAILS
139	OF 148	12939564	E-601	ELECTRICAL SCHEDULES
140	OF 148	12939565	E-602	ELECTRICAL SCHEDULES
141	OF 148	12939566	E-603	ELECTRICAL SCHEDULES
142	OF 148	12939567	E-604	ELECTRICAL SCHEDULES
143	OF 148	12939568	E-701	ELECTRICAL RISER DIAGRAM
			T	**TELECOMMUNICATIONS**
144	OF 148	12939569	T-001	TELECOMMUNICATIONS NOTES AND LEGENDS
145	OF 148	12939570	T-101	FLOOR PLAN - TELECOMMUNICATIONS
146	OF 148	12939571	T-401	ENLARGED PLAN - TELECOMMUNICATIONS
147	OF 148	12939572	T-501	TELECOMMUNICATIONS DETAILS
148	OF 148	12939573	T-502	TELECOMMUNICATIONS DETAILS

MBF ARCHITECTS P.A. REGISTERED ARCHITECTURAL CORPORATION CERT. NO. 50679 NORTH CAROLINA NEW BERN NC

APPR | DATE | DESCRIPTION | SYM

NAVFAC

DARDEN J. EURE III REGISTERED ARCHITECT 8840 NORTH CAROLINA NEW BERN NC

01 JUL 2026 SEAL

mbf architects pa
317-C Pollock Street | New Bern, NC 28560
252.637.4373 | mbfarchitects.com
A/E INFO

APPROVED

FOR COMMANDER NAVFAC

ACTIVITY

SATISFACTORY TO

DES	REL	DRW	REL	CHK	DJE,III

PM/DM	L. PEED
BRANCH MANAGER	H. PERRY
CHIEF ENG/ARCH	P. FAULKNER
FIRE PROTECTION	D. CHASTAIN

DEPARTMENT OF THE NAVY
NAVAL FACILITIES ENGINEERING COMMAND
IPT MARINE
NAVAL FACILITIES ENGINEERING COMMAND - MIDATLANTIC
NAVAL STATION - NORFOLK, VA.
MARINE CORPS AIR STATION CHERRY POINT, NC

MCOLF ATLANTIC
BUILDING 7019 RENOVATIONS

INDEX OF DRAWINGS

SCALE:	AS INDICATED
STATION DESIGN WON:	7406712
STATION CONSTRUCTION WON:	7406712
NAVFAC DRAWING NO.	12939427
SHEET	2 OF 148

G-002

DRAWFORM REVISION: 25 AUGUST 2020

7/1/2026 8:49:01 PM
C:\Users\sigmon\Documents\2509 ARCH 2023_sigmonP9CRM.rvt
G-002

APPLICABLE BUILDING CODES

1.	IBC	INTERNATIONAL BUILDING CODE, 2024
2.	UFC 1-200-01	DOD BUILDING CODE, CHANGE 4, 17 DECEMBER 2024
3.	UFC 3-600-01	FIRE PROTECTION ENGINEERING FOR FACILITIES,CHANGE 6, 6 MAY 2021
4.	UFC 4-021-01	DESIGN AND O&M: MASS NOTIFICATION,CHANGE 1, 1 JANUARY 2010
5.	FC 4-721-10N	NAVY AND MARINE CORPS UNACCOMPANIED HOUSING, CHANGE 1, 24 APRIL 2025
6.	NFPA 13	INSTALLATION OF SPRINKLER SYSTEMS, 2025
7.	NFPA 13R	INSTALLATION OF SPRINKLER SYSTEMS IN LOW-RISE RESIDENTIAL OCCUPANCIES, 2025
8.	NFP 20	INSTALLATION OF STATIONARY FIRE PUMPS FOR FIRE PROTECTION, 2025
9.	NFPA 22	WATER TANKS FOR PRIVATE FIRE PROTECTION, 2023
10.	NFPA 70	NATIONAL ELECTRICAL CODE, 2026
11.	NFPA 72	NATIONAL FIRE ALARM AND SIGNALING CODE, 2025
12.	NFPA 90A	INSTALLATION OF AIR-CONDITIONING AND VENTILATING SYSTEMS, 2024
13.	NFPA 101	LIFE SAFETY CODE, 2024 (LSC)

USE GROUP/OCCUPANCY

BUILDING 7019
R-2 (IBC 310.4) / DORMITORY (LSC 6.1.8.1.4) - ORDINARY HAZARD (LSC 28.1.5.1)

FIRE PROTECTION SYSTEMS

BUILDING 7019
NFPA 13R WET PIPE SPRINKLER SYSTEM
EMERGENCY VOICE FIRE ALARM & MASS NOTIFICATION SYSTEM

CONSTRUCTION TYPE

BUILDING 7019 — TYPE II-B

ALLOWABLE AREA & HEIGHT

BUILDING 7019
BASED ON R-2 USE GROUP
ALLOWABLE FLOOR AREA (IBC TABLE 506.2): 16,000-SF

BASIC ALLOWABLE STORIES/HEIGHT (IBC TABLE 504.3 & 504.4): 4-STORIES/60-FT

ACTUAL AREA & HEIGHT

BUILDING 7019
TOTAL FOOTPRINT FLOOR AREA: 10,983-SF
TOTAL BUILDING HEIGHT: 1-STORY/21-FT

FIRE RESISTANCE RATING FOR BUILDING ELEMENTS

(IBC TABLE 601)	TYPE II-B
STRUCTURAL FRAME, INCL. COLUMNS, GIRDERS & TRUSSES	0-HR
BEARING WALLS, EXTERIOR	0-HR
BEARING WALLS, INTERIOR	0-HR
NON-BEARING WALLS, INTERIOR & EXTERIOR	0-HR
FLOOR CONSTRUCTION	0-HR
ROOF CONSTRUCTION	0-HR

EXTERIOR WALLS

EXTERIOR FIRE-RESISTANCE RATING BASED ON FIRE SEPARATION DISTANCE

FIRE SEPARATION DISTANCE (FSD)	GROUP R-2 (TYPE II-B)
FSD < 10-FT	1-HR
FSD ≥ 10-FT	0-HR

THE DISTANCE BETWEEN BUILDINGS 7019 AND THE NEAREST ADJACENT BUILDING IS GREATER THAN 40-FT. THIS PROVIDES A FIRE SEPARATION DISTANCE FROM THE NEAREST ADJACENT BUILDING TO THE IMAGINARY PROPERTY LINE OF 30-FT AND A FIRE SEPARATION DISTANCE FROM BUILDING 7019 TO THE IMAGINARY PROPERTY OF AT LEAST 10-FT. THERE IS NO FIRE RESISTANCE RATING REQUIRED FOR THE EXTERIOR WALLS OF BUILDING 7019 BASED ON THE FIRE SEPARATION DISTANCE.

INTERIOR FIRE RESISTANCE REQUIREMENTS

ROOM	REQUIRED SEPARATION
FUEL-FIRED HEATER ROOMS	1-HOUR (LSC TABLE 28.3.2.2.2)
LAUNDRY ROOMS > 100-SF	1-HOUR (LSC TABLE 28.3.2.2.2)
TRASH COLLECTION ROOMS	1-HOUR (LSC TABLE 28.3.2.2.2)
SLEEPING ROOM WALLS AND FLOORS	1/2-HOUR (LSC 28.3.7.2)
STORAGE ROOMS	SMOKE PARTITION (LSC TABLE 28.3.2.2.2)

INTERIOR FINISH CLASSIFICATION

LIMITS (BASED ON DORMITORY OCCUPANCY WITH PERMITTED REDUCTION FOR SPRINKLERS):
EXITS (TABLE A.10.2.2): MINIMUM CLASS B
EXIT ACCESS CORRIDORS (TABLE A.10.2.2): MINIMUM CLASS C
OTHER SPACES (TABLE A.10.2.2): MINIMUM CLASS C

MEANS OF EGRESS

OCCUPANT LOADS (LSC TABLE 7.3.1.2)

SLEEPING ROOMS (BUNKS)	50-SF/PERSON OR 8 PERSONS PER ROOM
RESIDENTIAL	200-SF/PERSON
ASSEMBLY	15-SF/PERSON
EXERCISE ROOM WITH EQUIPMENT	50-SF/PERSON
KITCHEN	100-SF/PERSON
BUSINESS	150-SF/PERSON
MEP SPACE	500-SF/PERSON
STORAGE	500-SF/PERSON

AREA	OCCUPANCY USE	APPROX. AREA (SF)	NO. OF SLEEPING ROOMS	OCCUPANT LOAD FACTOR (SF/PERSON)	OCCUPANT LOAD (PERSONS)
FIRST FLOOR					
SLEEPING ROOMS 122-127	RESIDENTIAL - BUNK	270	6	8 PER ROOM	48
SLEEPING ROOMS 128-136	RESIDENTIAL - BUNK	252	9	5 PER ROOM	45
DINING/TRAINING 103	ASSEMBLY	614	-	15	41
KITCHEN 111	KITCHEN	612	-	100	6
GYM 114	EXERCISE	555	-	50	11
LOUNGE 116	ASSEMBLY	457	-	15	30
DUTY/OFFICE ROOMS	BUSINESS	331	-	150	2
MECH/ELEC/COMM/FIRE PUMP ROOMS	MEP	832	-	500	1
STORAGE ROOMS	STORAGE	372	-	500	1
REMAINING RESIDENTIAL AREAS	RESIDENTIAL	3,574	-	200	18
	TOTAL	10,983	15	-	203

TRAVEL DISTANCES

COMMON PATH OF TRAVEL (LSC TABLE A.7.6):	50-FT
COMMON PATH OF TRAVEL - MECH ROOM (LSC 7.13.1(1)(a))	100-FT
DEAD END CORRIDOR (LSC TABLE A.7.6):	50-FT
TRAVEL DISTANCE WITHIN ROOM (LSC TABLE A.7.6):	125-FT
TRAVEL DISTANCE FROM ROOM DOOR (LSC TABLE A.7.6):	200-FT

CAPACITY OF EXITS

CAPACITY OF EXITS (LSC TABLE 7.3.3.1):

LEVEL COMPONENTS (WIDTH/PERSON)	0.2-IN/PERSON
STAIRWAYS (WIDTH/PERSON)	0.3-IN/PERSON

NUMBER OF EXITS (LSC 7.4)
2 EXITS FOR AREAS WITH AN OCCUPANT LOAD LESS THAN 500
1 EXIT FOR AREAS WITH THE EXIT ACCESS LESS THAN THE ALLOWABLE COMMON PATH OF TRAVEL (28.2.4.2)

FLOOR LEVEL	REQUIRED EXIT CAPACITY	AVAILABLE EXIT CAPACITY	NUMBER OF EXITS REQUIRED	NUMBER OF EXITS PROVIDED
FIRST FLOOR	190	1,700	2	7

ADDITIONAL LIFE SAFETY CRITERIA

MEANS OF EGRESS MUST BE ILLUMINATED IN ACCORDANCE WITH LSC 7.8 (LSC 28.2.8). ARTIFICIAL LIGHTING IS REQUIRED AT LOCATIONS AND TIMES NECESSARY TO MAINTAIN ADEQUATE ILLUMINATION (LSC 7.8.1.2.1).

EMERGENCY LIGHTING SYSTEMS MUST PROVIDE IN ACCORDANCE WITH LSC 7.9.2.1 & 7.9.2.2 (LSC 28.2.8).

MEANS OF EGRESS MUST BE PROVIDED WITH SIGNS IN ACCORDANCE WITH LSC 7.10 AND UFC 3-600-01 10-2 (LSC 28.2.10). SIGNS MUST HAVE LETTERING ON AN OPAQUE BACKGROUND. INTERNALLY ILLUMINATED SIGNS MUST BE LIGHT EMITTING DIODE (LED) TYPE, ELECTROLUMINESCENCE (LEC), OR COLD CATHODE TYPE. INCANDESCENT FIXTURES ARE NOT PERMITTED (UFC 3-600-01 10-2.1.1). RADIOLUMINOUS EXIT SIGNS ARE NOT PERMITTED (UFC 3-600-01 10-2.2).

FIRE EXTINGUISHERS MUST BE PROVIDED THROUGHOUT THE BUILDING IN ACCORDANCE WITH NFPA 10.

LIFE SAFETY LEGEND

- FIRE EXTINGUISHER CABINET (4-A:80-B:C)
- FIRE EXTINGUISHER WALL BRACKET (AS INDICATED)
- X = REQUIRED EGRESS CAPACITY (PERSONS); Y = PROVIDED EGRESS CAPACITY (PERSONS)
- XX — NUMBER OF OCCUPANTS (PERSONS)
- S S — SMOKE BARRIER
- 1/2-HR FIRE BARRIER
- 1-HR FIRE BARRIER
- RT = XX-FT — ROOM TRAVEL DISTANCE
- TD = XX-FT — TRAVEL DISTANCE FROM ROOM
- CP = XX-FT — COMMON PATH OF TRAVEL
- FMCP — FIRE ALARM/MASS NOTIFICATION CONTROL PANEL
- K — KNOX BOX

APPR | DATE | DESCRIPTION | SYM

NAVFAC

COMMONWEALTH OF VIRGINIA
AARON P FREID
Lic. No. 044409
1 JUL 2026
PROFESSIONAL ENGINEER
SEAL

JENSEN HUGHES

A/E INFO

APPROVED
FOR COMMANDER NAVFAC
ACTIVITY
SATISFACTORY TO

DES	TKL	DRW	TKL	CHK	APF
PM/DM					L. PEED
BRANCH MANAGER					H. PERRY
CHIEF ENG/ARCH					P. FAULKNER
FIRE PROTECTION					D. CHASTAIN

DEPARTMENT OF THE NAVY
NAVAL FACILITIES ENGINEERING COMMAND ~ MIDATLANTIC
IPT MARINE
MARINE CORPS AIR STATION
NAVAL FACILITIES ENGINEERING COMMAND ~ MIDATLANTIC
NAVAL STATION - NORFOLK, VA
CHERRY POINT, NC
MCOLF ATLANTIC
BUILDING 7019 RENOVATIONS
LIFE SAFETY GENERAL NOTES AND LEGEND

SCALE: AS INDICATED
STATION DESIGN WON: 7406712
STATION CONSTRUCTION WON: 7406712
NAVFAC DRAWING NO.: 12939428
SHEET 3 OF 148
GI001

FINAL
DRAWFORM REVISION: 25 AUGUST 2020

7/1/2026 10:33:09 AM GI001
C:\Users\afreid\OneDrive - Jensen Hughes\Documents\2509 FIRE 2023_afreid.rvt

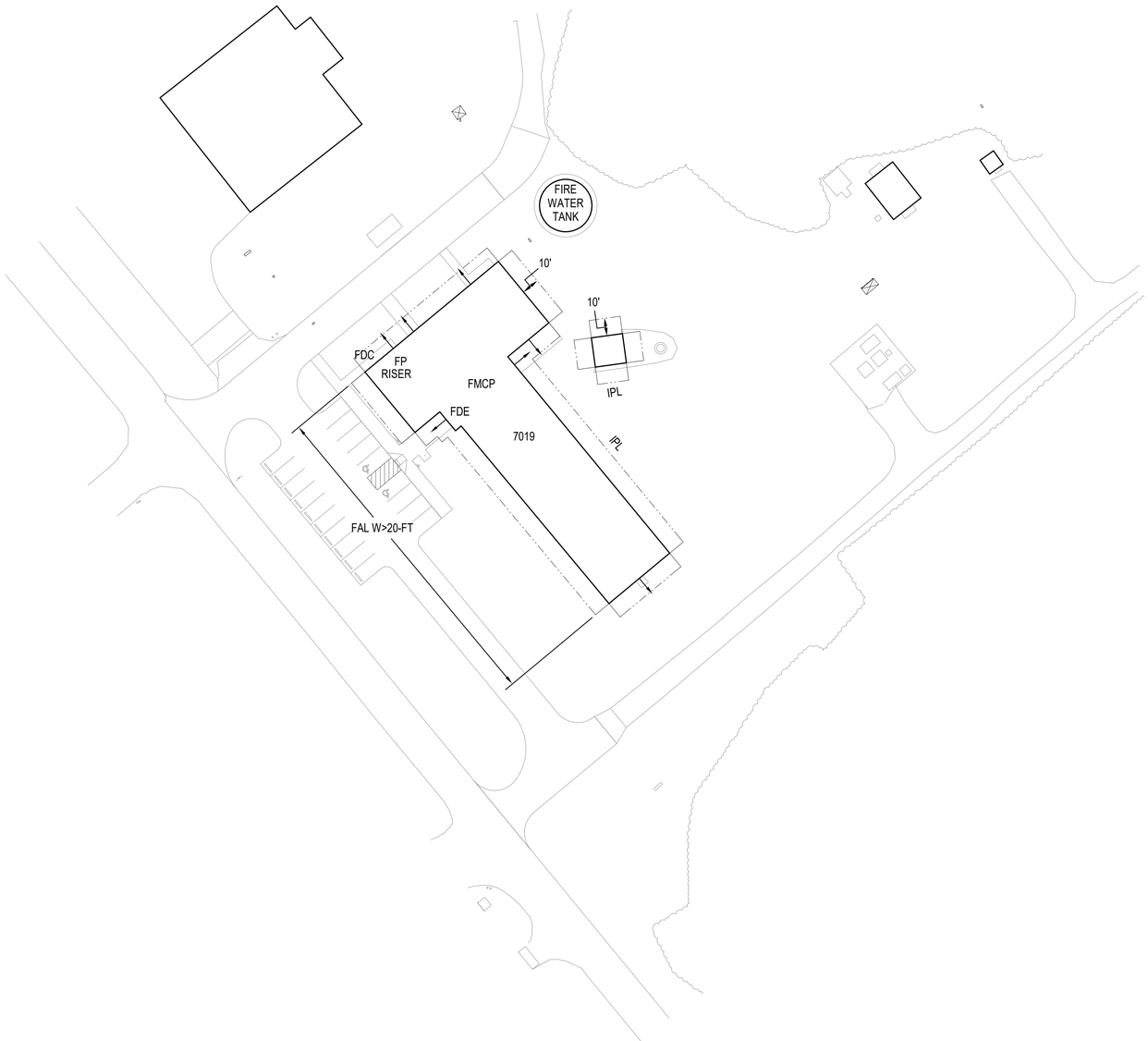

NOTES:
FAL - FIRE ACCESS LANE (W - WIDTH)
FDC - FIRE DEPARTMENT CONNECTION
FDE - FIRE DEPARTMENT ENTRANCE
FP - FIRE PUMP
FMCP - FIRE ALARM/MASS NOTIFICATION CONTROL PANEL
IPL - IMAGINARY PROPERTY LINE
RISER - SPRINKLER RISER

EGRESS DISCHARGE PATH →

A3 CODE COMPLIANCE SITE PLAN
SCALE: 1" = 40'-0"

APPR | DATE | DESCRIPTION | SYM

NAVFAC

COMMONWEALTH OF VIRGINIA
Aaron P Freid
AARON P FREID
Lic. No. 044409
1 JUL 2026
PROFESSIONAL ENGINEER
SEAL

JENSEN HUGHES

A/E INFO

APPROVED

FOR COMMANDER NAVFAC

ACTIVITY

SATISFACTORY TO

DES	TKL	DRW	TKL	CHK	APF
PM/DM					L. PEED
BRANCH MANAGER					H. PERRY
CHIEF ENG/ARCH					P. FAULKNER
FIRE PROTECTION					D. CHASTAIN

DEPARTMENT OF THE NAVY
NAVAL FACILITIES ENGINEERING COMMAND ~ MIDATLANTIC
IPT MARINE:
MARINE CORPS AIR STATION
NAVAL FACILITIES ENGINEERING COMMAND
NAVAL STATION - NORFOLK, VA
CHERRY POINT, NC
MCOLF ATLANTIC
BUILDING 7019 RENOVATIONS
CODE COMPLIANCE SITE PLAN

SCALE:	AS INDICATED
STATION DESIGN WON:	7406712
STATION CONSTRUCTION WON:	7406712
NAVFAC DRAWING NO.	12939429
SHEET	4 OF 148

GI002

FINAL

DRAWFORM REVISION: 25 AUGUST 2020

7/1/2026 10:33:10 AM GI002
C:\Users\afreid\OneDrive - Jensen Hughes\Documents\2609 FIRE 2023_afreid.rvt

KEY NOTES

1. FIRE EXTINGUISHER MUST BE CLASS K.
2. FIRE EXTINGUISHER MUST BE CLASS ABC (4-A:80-B:C).
3. PROVIDE KNOX BOX KEYED TO MATCH DOWNEAST FIRE DEPARTMENT. COORDINATE LOCATION WITH DOWNEAST FIRE DEPARTMENT FIRE CHIEF - WAYNE PITTMAN (252-725-3579).
4. THIS IS AN UNPROTECTED OPENING IN ACCORDANCE WITH LSC 28.3.6.2.

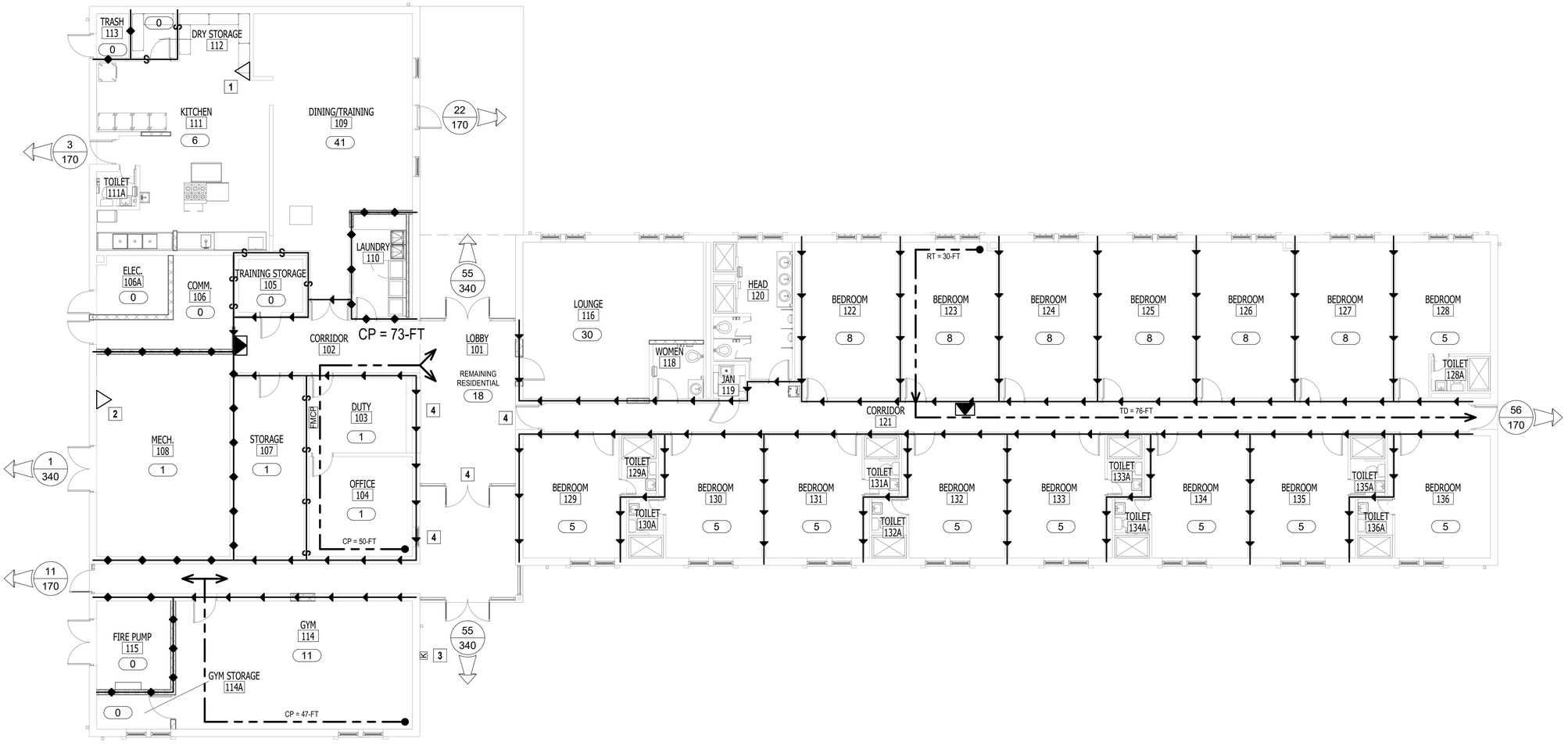

A1 LIFE SAFETY FLOOR PLAN

SCALE: 1/8" = 1'-0"

GRAPHIC SCALE: 1/8"=1'-0"

8' 0 4' 8' 16'

SYM	DESCRIPTION	DATE	APPR

NAVFAC

COMMONWEALTH OF VIRGINIA
AARON P FREID
Lic. No. 044409
1 JUL 2026
PROFESSIONAL ENGINEER
SEAL

JENSEN HUGHES

A/E INFO

APPROVED

FOR COMMANDER NAVFAC

ACTIVITY

SATISFACTORY TO

DES	TKL	DRW	TKL	CHK	APF

PM/DM L. PEED
BRANCH MANAGER H. PERRY
CHIEF ENG/ARCH P. FAULKNER
FIRE PROTECTION D. CHASTAIN

DEPARTMENT OF THE NAVY
NAVAL FACILITIES ENGINEERING COMMAND
NAVAL FACILITIES ENGINEERING COMMAND – MIDATLANTIC
NAVAL STATION - NORFOLK, VA
CHERRY POINT, NC
1ST MARINE
MARINE CORPS AIR STATION
MCOLF ATLANTIC
BUILDING 7019 RENOVATIONS
LIFE SAFETY FLOOR PLAN

SCALE:	AS INDICATED
STATION DESIGN WON:	7406712
STATION CONSTRUCTION WON:	7406712
NAVFAC DRAWING NO:	12939430
SHEET	5 OF 148

GI101

FINAL

DRAWFORM REVISION: 25 AUGUST 2020

7/1/2026 10:33:15 AM GI101
C:\Users\afreid\OneDrive - Jensen Hughes\Documents\2509 FIRE 2023_afreid.rvt

CIVIL LEGEND

DESCRIPTION	EXISTING / DEMO	NEW
WATER VALVE/POST INDICATOR VALVE	PIV	
TELECOMMUNICATIONS MANHOLE	C	
SANITARY SEWER MANHOLE	S	
STORM DRAIN MANHOLE	D	
CLEANOUT	CO	CO
STORM DRAIN INLET		
FIRE HYDRANT		
TELECOMMUNICATIONS PEDESTAL	TPED	
UTILITY POLE/POLE WITH LIGHT		
GUY WIRE		
DITCH/SWALE CENTERLINE		
SANITARY SEWER (GRAVITY)	S	S
SANITARY SEWER (FORCE MAIN)	FM	
STORM SEWER	D	
DOMESTIC/FIRE WATER	W FW	W FW
FIRE DEPARTMENT CONNECTION (LINE)	FDC	
UNDERGROUND GAS	G	G
UNDERGROUND NATURAL GAS	NG	
UNDERGROUND FUEL PIPING	UGF	
OVERHEAD ELECTRICAL	OHE	
UNDERGROUND ELECTRICAL	UGE	UGE
UNDERGROUND FIBER OPTIC	FO	FO
UNDERGROUND STEAM	ST/UGS	
OVERHEAD STEAM	OHS	
DUAL TEMPERATURE THERMAL	HCW	
UNDERGROUND COMMUNICATIONS	UGC	UGC
OVERHEAD COMMUNICATIONS	OHC	
FENCE	X	
CONCRETE		
ASPHALT		
GRAVEL		
SURVEY CONTROL POINT		
SPOT ELEVATIONS	× 5.00	XX.XX
CONTOUR LINES	25	25
TREE		
SOURCE/DESTINATION UNKNOWN		
SIGN		
DEMOLITION ITEMS		

CIVIL ABBREVIATIONS

AC, A/C	AIR CONDITIONING EQUIPMENT
APPROX.	APPROXIMATE/APPROXIMATELY
AST	ABOVE-GROUND STORAGE TANK
AT	ANTI-TERRORISM
BLDG	BUILDING
BOL	BOLLARD
CI	CAST IRON (PIPE)
CJ	CONTRACTION JOINT
CMH	COMMUNICATIONS MANHOLE
CMP	CORRUGATED METAL PIPE
CMU	CONCRETE MASONRY UNIT
CO	CLEANOUT
CONC	CONCRETE
DIA, ø	DIAMETER
DI	(STORM DRAIN) DROP INLET
DI	DUCTILE IRON (PIPE)
DMH	DRAINAGE MANHOLE
EJ	EXPANSION JOINT
EL/ELEV	ELEVATION
EMH	ELECTRIC MANHOLE
EOP	EDGE OF PAVEMENT
EX, EXIST	EXISTING
FDC	FIRE DEPARTMENT CONNECTION
FES	FLARED END SECTION
FFE	FINISH FLOOR ELEVATION
FH	FIRE HYDRANT
FM	SANITARY SEWER FORCE MAIN
FO	FIBER OPTIC
GV	GATE VALVE
HOR	HORIZONTAL
HVAC	HEATING, VENTILATION AND AIR CONDITIONING
INV	INVERT
JBOX	ELECTRIC JUNCTION BOX
LF	LINEAR FOOT/FEET
MAG	MAG NAIL (SURVEY CONTROL)
MAX	MAXIMUM
MH	MANHOLE
MIN	MINIMUM
NTS	NOT TO SCALE
OHE	OVERHEAD ELECTRIC
OC	ON CENTER
OD	OUTSIDE DIAMETER
OWS	OIL/WATER SEPARATOR
PIV	POST INDICATOR VALVE
R	RADIUS
RCP	REINFORCED CONCRETE PIPE
STA	STATION
SMH	SANITARY SEWER MANHOLE
TBM	TEMPORARY SITE BENCHMARK
TC	TOP OF CURB
TEMP	TEMPORARY
TMH	TELEPHONE MANHOLE
TOB	TOP OF BANK
TON	TOP OF (VALVE) NUT
TYP	TYPICAL
UGC	UNDERGROUND COMMUNICATIONS
UGE	UNDERGROUND ELECTRIC
UON	UNLESS OTHERWISE NOTED
WV	WATER VALVE
XFMR	PAD-MOUNTED ELECTRIC TRANSFORMER
YH	YARD HYDRANT

GENERAL CONSTRUCTION NOTES

1. COMPLETE CONSTRUCTION OPERATIONS IN COMPLIANCE WITH ALL STATE AND FEDERAL REGULATIONS AND AS SPECIFIED.
2. THE PLANS DEPICT THE GENERAL INTENT OF CONSTRUCTION. THE CONTRACTOR MUST PROTECT ALL EXISTING FEATURES THAT ARE NOT SLATED FOR DEMOLITION. ANY ITEM DAMAGED AS A RESULT OF THE CONTRACTOR'S OPERATIONS MUST BE RESTORED TO ITS ORIGINAL CONDITION OR REPLACED WITH NEW.
3. DIMENSIONS AND CONDITIONS SHOWN ARE APPROXIMATE AND ARE ACCURATE AS OF THE TIME OF SITE INSPECTION. THE CONTRACTOR MUST CONFIRM TO HIS OWN SATISFACTION SITE CONDITIONS INCLUDING A VERIFICATION OF CONDITIONS SHOWN AND NOT SHOWN.
4. ADJACENT STRUCTURES AND UTILITIES MUST REMAIN IN OPERATION DURING CONSTRUCTION ACTIVITIES. EXISTING ROADS MUST REMAIN OPEN AND ACCESSIBLE BY VEHICULAR AND PEDESTRIAN TRAFFIC. IF ROADWAY CLOSURE IS REQUIRED, APPROVAL MUST BE SECURED FROM THE CONTRACTING OFFICER. THE CONTRACTOR MUST PROVIDE BARRICADES, LIGHTS, SIGNAGE AND OTHER PROTECTIVE DEVICES IN ACCORDANCE WITH THE MANUAL OF UNIFORM TRAFFIC CONTROL DEVICES (MUTCD).
5. THE CONTRACTOR MUST PROVIDE FENCING, BARRICADES OR OTHER PROTECTIVE DEVICES TO MAINTAIN A SECURED WORK AREA AT ALL TIMES.
6. PRIOR TO STARTING CONSTRUCTION ON ANY STRUCTURES OR UTILITIES, THE CONTRACTOR MUST FAMILIARIZE HIMSELF WITH THE EXISTING CONDITIONS OF ANY STRUCTURES AND UTILITIES. THE CONTRACTOR MUST DEVELOP A PLAN OF CONSTRUCTION THAT ENSURES ALL ACTIVITIES ARE COMPLETED IN A SAFE MANNER. PROVIDE ANY TEMPORARY SHORING, SHEETING OR SUPPORT REQUIRED TO COMPLETE WORK IN A SAFE MANNER.
7. COMPLETELY REMOVE ALL STRUCTURE AND UTILITIES INDICATED, BOTH ABOVE GROUND AND BELOW GROUND.
8. ALL EXCAVATIONS CREATED BY CONSTRUCTION OR DEMOLITION ACTIVITIES, INCLUDING PAVEMENT AND STONE BASE REMOVAL, THAT WILL NOT BE REPLACED WITH NEW PAVEMENT OR CONSTRUCTED SURFACES MUST BE BACKFILLED WITH COMMON FILL, MUST BE GRADED TO CREATE POSITIVE DRAINAGE, AND MUST BE VEGETATED IN ACCORDANCE WITH THE PROJECT VEGETATION PLAN, UNLESS DEPICTED OTHERWISE. GRAVEL AND PAVED SURFACES MUST BE RESTORED TO THEIR ORIGINAL CONDITION. SEE PROJECT SPECIFICATION FOR SPECIFIC COMPACTION REQUIREMENTS.
9. ALL EROSION CONTROL FEATURES SHOWN MUST BE INSTALLED PRIOR TO CONSTRUCTION ACTIVITIES STARTING.
10. THE CONTRACTOR MUST MINIMIZE DUST GENERATED FROM CONSTRUCTION ACTIVITIES BY WET METHODS OR OTHER APPROVED METHODS.
11. WHERE ROADS, SIDEWALKS, ETC ARE INDICATED TO BE CUT AND PATCHED, EACH MUST BE REMOVED AND REPLACED ALONG NEAT SAW CUT LINES, AND TO THE NEAREST JOINT WHERE IT EXISTS.
12. CERTAIN AREAS OF WORK ARE LOCATED WITHIN RESTRICTED AREAS. ACCESS TO THESE AREAS MUST BE COORDINATED WITH THE CONTRACTING OFFICER.
13. ANY FILL MATERIAL REQUIRED TO ESTABLISH THE FINISH GRADES SHOWN MUST BE OBTAINED FROM A PROPERLY PERMITTED BORROW PIT. ANY EXCESS SOIL MATERIAL GENERATED FROM DEMOLITION ACTIVITIES MUST BE DISPOSED OF OFF OF THE GOVERNMENT PROPERTY.
14. IF DURING DEMOLITION, ANY SOILS ARE ENCOUNTERED THAT ARE SUSPECTED OF BEING CONTAMINATED, WORK MUST CEASE AND THE CONTRACTING OFFICER MUST BE CONTACTED FOR RESOLUTION.

HAZARDOUS AND OTHER MATERIAL SPECIAL HANDLING NOTES:

1. THE CONTRACTOR MUST REMOVE AND LEGALLY DISPOSE OF ALL CONSTRUCTION WASTE AND EXCESS MATERIAL OFF OF THE BASE PROPERTY. THE CONTRACTOR MUST COMPLY WITH ALL STATE, LOCAL AND FEDERAL HAULING AND DISPOSAL REGULATIONS.
2. BURNING ON THE BASE PROPERTY IS NOT PERMITTED.
3. IF SUSPECT HAZARDOUS MATERIALS ARE ENCOUNTERED DURING CONSTRUCTION, WORK IN THE AFFECTED AREA MUST STOP AND THE CONTRACTING OFFICER MUST BE NOTIFIED IMMEDIATELY TO CONFIRM SITE CONDITIONS.
4. IF SUSPECTED AREAS OF SOIL OR GROUNDWATER CONTAMINATION ARE ENCOUNTERED DURING CONSTRUCTION ACTIVITIES, WORK IN THE AFFECTED AREA MUST STOP AND THE CONTRACTING OFFICER MUST BE NOTIFIED IMMEDIATELY TO CONFIRM SITE CONDITIONS.

UTILITY NOTES

1. THE LOCATION AND DEPTHS OF EXISTING UTILITIES SHOWN ARE APPROXIMATE. THE CONTRACTOR MUST SECURE THE SERVICES OF A PROFESSIONAL UTILITY LOCATE CONTRACTOR TO MARK ALL EXISTING UTILITIES IN THE AREA OF WORK. UTILITY MARKINGS MUST BE MAINTAINED FOR THE DURATION OF DEMOLITION ACTIVITIES. THE CONTRACTOR MUST NOTIFY 811 SERVICE TO LOCATE ALL PRIVATE UTILITIES IN THE WORK AREA PRIOR TO STARTING DEMOLITION.
2. ALL UTILITY LINES TO REMAIN MUST REMAIN ACTIVE AND MUST BE PROTECTED DURING DEMOLITION ACTIVITIES.
3. EXISTING UTILITIES MUST NOT BE INTERRUPTED WITHOUT THE APPROVAL OF THE CONTRACTING OFFICER.
4. THE CONTRACTOR MUST BE RESPONSIBLE TO REPAIR OR REPLACE, TO ORIGINAL CONDITION, ANY UTILITIES DAMAGED DURING DEMOLITION ACTIVITIES FROM THE CONTRACTOR'S OPERATIONS.
5. ALL COSTS ASSOCIATED WITH LOCATING, DISCONNECTING ABANDONING AND CAPPING OF UTILITY LINES MUST BE THE RESPONSIBILITY OF THE CONTRACTOR.
6. THE CONTRACTOR MUST BE RESPONSIBLE TO COORDINATE THE REMOVAL OF ALL UTILITIES INDICATED WITH THEIR RESPECTIVE UTILITY PURVEYORS.
7. ALL PIPES AND CONDUITS THAT ARE TO BE ABANDONED IN PLACE, MUST BE CAPPED OR PLUGGED TO SECURE ALL OPEN ENDS TO FORM A WATERTIGHT SEAL.
8. ALL ELECTRICAL WORK MUST BE COMPLETED IN ACCORDANCE WITH THE NATIONAL ELECTRIC CODE.
9. ALL COMMUNICATION SYSTEM WORK MUST BE COORDINATED WITH BASE TELEPHONE THROUGH THE CONTRACTING OFFICER.

NOTE:
THE PROJECT DRAINS TO CORE SOUND, TAR-PAMLICO RIVER BASIN
SURFACE WATER CLASSIFICATION: SA; ORW, NSW
STREAM INDEX: 27-149

APPR	DATE	DESCRIPTION	SYM

NAVFAC

Digitally signed by John K Avolis
SEAL
NORTH CAROLINA PROFESSIONAL ENGINEER SEAL 15798 01 JUL 2026 JOHN K. AVOLIS

DESIGNED & ENGINEERED BY:
A·E Engineering P.A.
LICENSE NO. C-0706
AVOLIS ENGINEERING, P.A.
P.O. BOX 15564
NEW BERN, NC 28561
PH.(252) 633-0068
A/E INFO

APPROVED
FOR COMMANDER NAVFAC
ACTIVITY
SATISFACTORY TO

DES	JKA	DRN	MSP	CHK	JKA
PM/DM					L. PEED
BRANCH MANAGER					H. PERRY
CHIEF ENGR/CH					P. FAULKNER
FIRE PROTECTION					D. CHASTAIN

DEPARTMENT OF THE NAVY
3RD MARINE CORPS
MARINE CORPS AIR STATION CHERRY POINT, NC
NAVAL FACILITIES ENGINEERING COMMAND ~ MIDATLANTIC
NAVAL STATION - NORFOLK, VA

MCOLF ATLANTIC
BUILDING 7019 RENOVATIONS

CIVIL NOTES, LEGEND AND ABBREVIATIONS

SCALE:	AS NOTED
STATION DESIGN WON:	7406712
STATION CONSTRUCTION WON:	7406712
NAVFAC DRAWING NO.	12939431
SHEET	6 OF 148

C-001

DRAWFORM REVISION: 25 AUGUST 2020

File Path: D:\00_PROJECTS\25603 BUILDING 7019 RENOVATIONS OLF ATLANTIC (MBF)\DWG\100.DWG
Print Date: 7/1/2026 2:11 PM

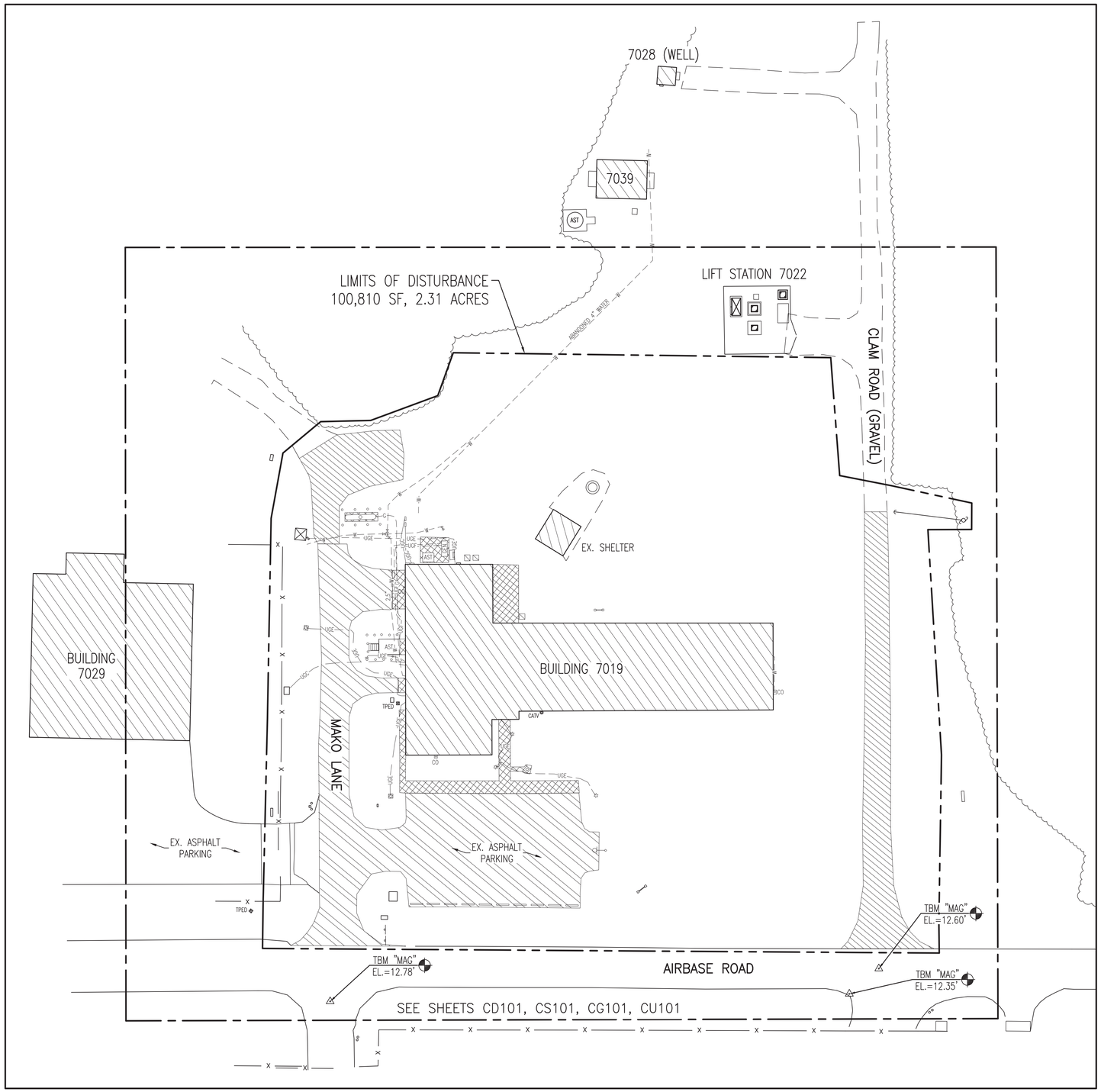

OVERALL SITE PLAN

SCALE: 1" = 30'

TN PN

GRAPHIC SCALE: 1" = 30'

30 0 15 30 60

SYM	DESCRIPTION	DATE	APPR

NAVFAC

Digitally signed by John K Avolis
NORTH CAROLINA PROFESSIONAL SEAL 15798 ENGINEER JOHN K. AVOLIS
01 JUL 2026

SEAL

DESIGNED & ENGINEERED BY:

A·E Engineering P.A.

LICENSE NO. C-0706

AVOLIS ENGINEERING, P.A.
P.O. BOX 15564
NEW BERN, NC 28561
PH.(252) 633-0068

A/E INFO

APPROVED

FOR COMMANDER NAVFAC

ACTIVITY

SATISFACTORY TO

DES	JKA	DRW	MSP	CHK	JKA

PMDM	L. PEED
BRANCH MANAGER	H. PERRY
CHIEF ENGINEER	P. FAULKNER
FIRE PROTECTION	D. CHASTAIN

DEPARTMENT OF THE NAVY
NAVAL FACILITIES ENGINEERING COMMAND
NAVAL FACILITIES ENGINEERING COMMAND ~ MIDATLANTIC
NAVAL STATION ~ NORFOLK, VA.
2ST MARINE CORPS
MARINE CORPS AIR STATION
CHERRY POINT, NC

MCOLF ATLANTIC
BUILDING 7019 RENOVATIONS

OVERALL SITE PLAN

SCALE:	AS NOTED
STATION DESIGN WON:	7406712
STATION CONSTRUCTION WON:	7406712
NAVFAC DRAWING NO.	12939432
SHEET	7 OF 148

C-100

DRAWFORM REVISION: 25 AUGUST 2020

File Path: D:\00_PROJECTS\25303 BUILDING 7019 RENOVATIONS OLF ATLANTIC (MBP)\DWG\100.DWG
Print Date: 7/1/2026 2:11 PM

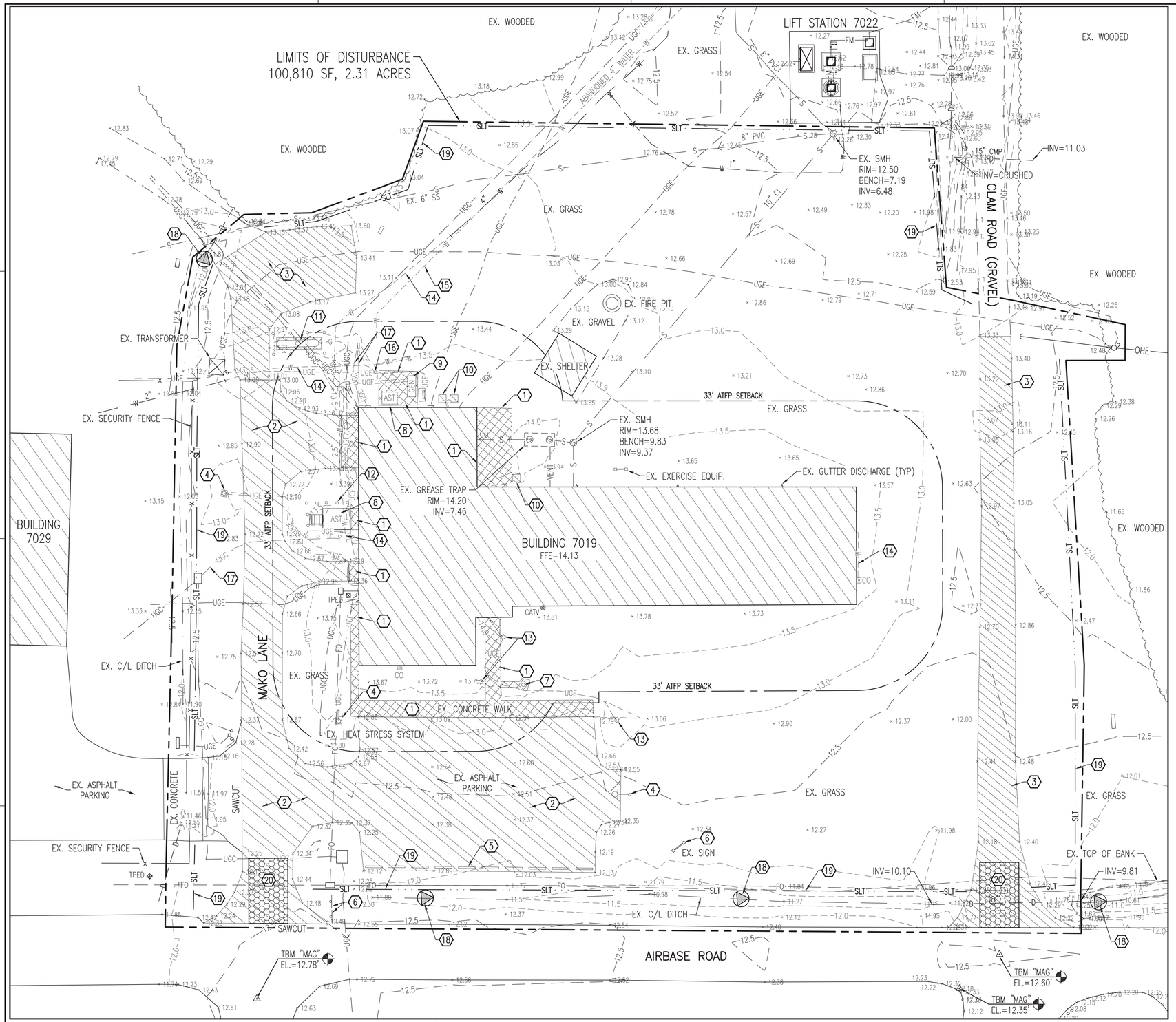

ENLARGED SITE PLAN-EXISTING CONDITIONS AND DEMOLITION

SCALE: 1" = 20'

GRAPHIC SCALE: 1" = 20'

GENERAL CONSTRUCTION NOTES:

1. THE LOCATION AND DEPTHS OF EXISTING UTILITIES SHOWN ARE APPROXIMATE. THE CONTRACTOR MUST BE RESPONSIBLE FOR SCANNING THE AREA OF WORK TO IDENTIFY TO HIS OWN SATISFACTION THE EXTENT OF UTILITIES PRESENT INCLUDING THE UTILITIES INDICATED TO BE PRESENT, THOSE NOT SHOWN, AND THOSE SHOWN TO BE IN A DIFFERENT LOCATION.
2. PHYSICAL SITE FEATURES OUTSIDE THE AREA OF WORK OR THOSE FEATURES NOT RELEVANT TO THE WORK BEING PERFORMED ARE NOT SHOWN FOR CLARITY.
3. THE CONTRACTOR MUST BE RESPONSIBLE FOR MAINTAINING TRAFFIC FLOW DURING THE COURSE OF CONSTRUCTION. THE CONTRACTOR MUST DEVELOP A TRAFFIC CONTROL PLAN TO BE SUBMITTED TO THE CONTRACTING OFFICER FOR APPROVAL PRIOR TO STARTING CONSTRUCTION.
4. ALL EXISTING VEGETATED AREAS DISTURBED DURING CONSTRUCTION MUST BE REVEGETATED IN ACCORDANCE WITH THE PROJECT VEGETATION PLAN, SEE DETAIL C3, SHEET CC501.
5. COMPLETE ALL TRENCH SECTION IN ACCORDANCE WITH DETAIL A3, SHEET CU501.
6. GRADE EVENLY BETWEEN ALL SPOT ELEVATIONS SHOWN.

WORK ITEMS (THIS SHEET):

1. REMOVE CONCRETE TO EXTENTS SHOWN.
2. REMOVE ASPHALT AND STONE BASE TO EXTENTS SHOWN.
3. REMOVE GRAVEL TO EXTENTS SHOWN.
4. REMOVE BASKETBALL GOAL.
5. REMOVE WHEEL STOPS (TYPICAL OF ALL IN PARKING AREA).
6. REMOVE SIGN.
7. REMOVE FLAG POLE.
8. REMOVE FUEL TANK AND ALL SERVICE PIPING.
9. REMOVE GENERATOR.
10. REMOVE HVAC.
11. REMOVE PROPANE TANK, FOUNDATION, BOLLARDS, AND SERVICE PIPING. RELOCATE TANK TO NEW FOUNDATION. SEE SHEET CS101. COORDINATE WITH UTILITY PURVEYOR.
12. REMOVE BOLLARDS (TYPICAL).
13. REMOVE LIGHT AND UNDERGROUND SERVICE.
14. REMOVE WATER SERVICE TO EXTENT SHOWN.
15. REMOVE ABANDONED WATER SERVICE TO LIMITS OF DISTURBANCE.
16. REMOVE UNDERGROUND ELECTRIC SERVICE. COORDINATE WITH ELECTRICAL PLANS.
17. REMOVE UNDERGROUND COMMUNICATIONS SERVICE. COORDINATE WITH ELECTRICAL PLANS.
18. CHECK DAM – SEE DETAIL A1, SHEET CG503.
19. SILT FENCE – SEE DETAIL C1, SHEET CG503.
20. GRAVEL CONTROL ENTRANCE – SEE DETAIL B1, SHEET CG503.

EROSION CONTROL SYMBOL LEGEND:

—SLT— · · · —SLT— = SILT FENCE, SEE DETAIL C1, SHEET CG503.

= GRAVEL CONTROL ENTRANCE, SEE DETAIL B1, SHEET CG503.

= CHECK DAM, SEE DETAIL A1, SHEET CG503.

APPR	DATE	DESCRIPTION	SYM

NAVFAC

Digitally signed by John K Avolis
NORTH CAROLINA PROFESSIONAL ENGINEER SEAL 15798
01 JUL 2026
JOHN K. AVOLIS
SEAL

DESIGNED & ENGINEERED BY:

LICENSE NO. C-0706

AVOLIS ENGINEERING, P.A.
P.O. BOX 15564
NEW BERN, NC 28561
PH.(252) 633-0068
A/E INFO

APPROVED

FOR COMMANDER NAVFAC

ACTIVITY

SATISFACTORY TO

DES	JKA	DRN	MSP	CHK	JKA
PM/DM					L. PEED
BRANCH MANAGER					H. PERRY
CHIEF ENGR/CH					P. FAULKNER
FIRE PROTECTION					D. CHASTAIN

DEPARTMENT OF THE NAVY
NAVAL FACILITIES ENGINEERING COMMAND
3RD MARINE CORPS

NAVAL FACILITIES ENGINEERING COMMAND ~ MIDATLANTIC
NAVAL STATION - NORFOLK, VA.

MARINE CORPS AIR STATION CHERRY POINT, NC

MCOLF ATLANTIC
BUILDING 7019 RENOVATIONS

ENLARGED SITE PLAN-EXISTING CONDITIONS AND DEMOLITION

SCALE:	AS NOTED
STATION DESIGN WORK:	7406712
STATION CONSTRUCTION WORK:	7406712
NAVFAC DRAWING NO.	12939433
SHEET	8 OF 148
	CD101

DRAWFORM REVISION: 25 AUGUST 2020

File Path: D:\00_PROJECTS\25003 BUILDING 7019 RENOVATIONS OLF ATLANTIC (MBF)\DWG\100.DWG
Print Date: 7/1/2026 2:11 PM

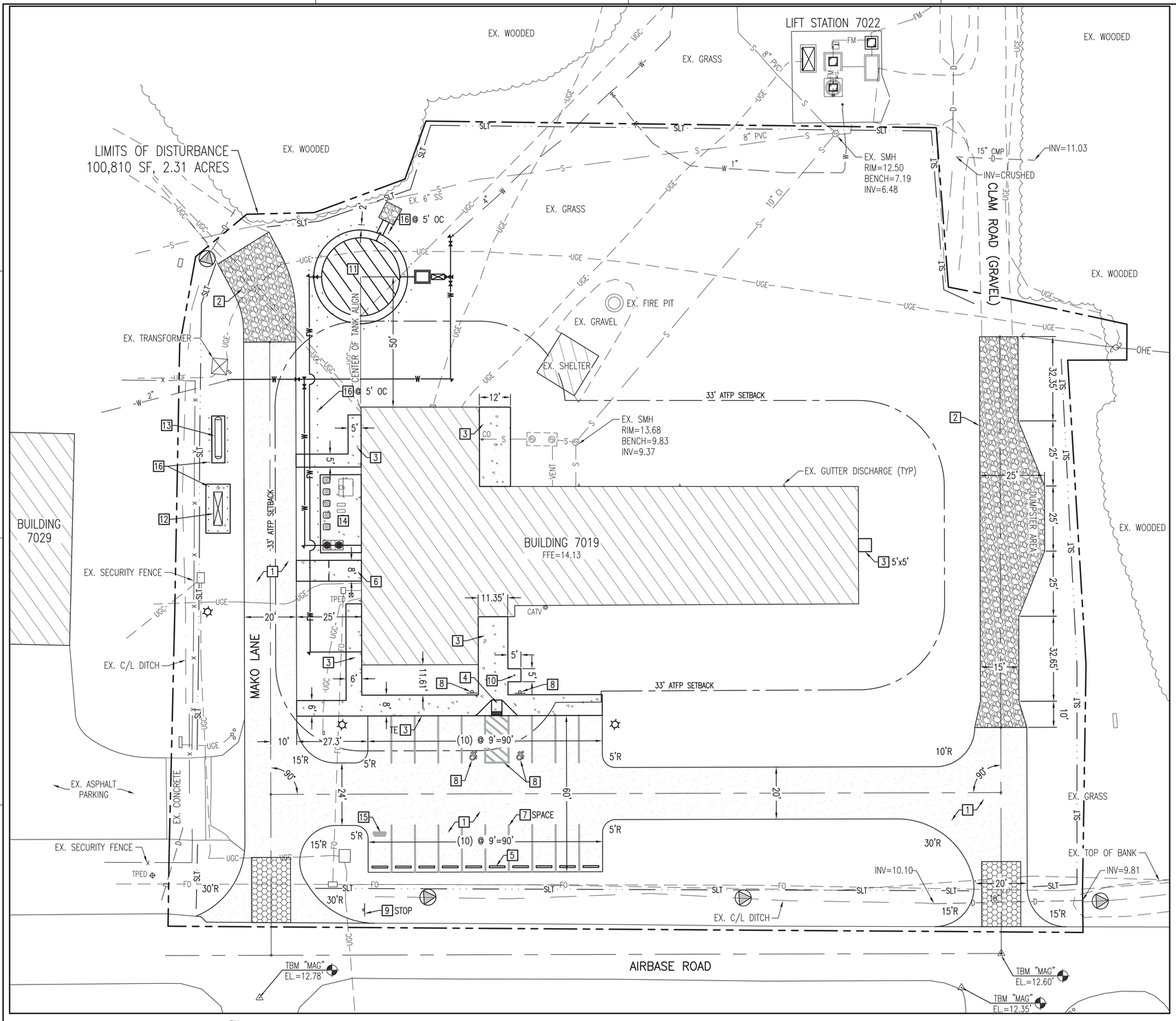

SITE PLAN LAYOUT

SCALE: 1" = 20'

GRAPHIC SCALE: 1" = 20'

GENERAL CONSTRUCTION NOTES:

1. THE LOCATION AND DEPTHS OF EXISTING UTILITIES SHOWN ARE APPROXIMATE. THE CONTRACTOR MUST BE RESPONSIBLE FOR SCANNING THE AREA OF WORK TO IDENTIFY TO HIS OWN SATISFACTION THE EXTENT OF UTILITIES PRESENT INCLUDING THE UTILITIES INDICATED TO BE PRESENT, THOSE NOT SHOWN, AND THOSE SHOWN TO BE IN A DIFFERENT LOCATION.
2. PHYSICAL SITE FEATURES OUTSIDE THE AREA OF WORK OR THOSE FEATURES NOT RELEVANT TO THE WORK BEING PERFORMED ARE NOT SHOWN FOR CLARITY.
3. THE CONTRACTOR MUST BE RESPONSIBLE FOR MAINTAINING TRAFFIC FLOW DURING THE COURSE OF CONSTRUCTION. THE CONTRACTOR MUST DEVELOP A TRAFFIC CONTROL PLAN TO BE SUBMITTED TO THE CONTRACTING OFFICER FOR APPROVAL PRIOR TO STARTING CONSTRUCTION.
4. ALL EXISTING VEGETATED AREAS DISTURBED DURING CONSTRUCTION MUST BE REVEGETATED IN ACCORDANCE WITH THE PROJECT VEGETATION PLAN, SEE DETAIL A1, SHEET CG501.
5. COMPLETE ALL TRENCH SECTION IN ACCORDANCE WITH DETAIL A3, SHEET CU501.
6. GRADE EVENLY BETWEEN ALL SPOT ELEVATIONS SHOWN.

WORK ITEMS (THIS SHEET):

1. ASPHALT PAVEMENT – SEE DETAIL D1, SHEET CS501.
2. GRAVEL SURFACING – SEE DETAIL C1, SHEET CS501.
3. CONCRETE SIDEWALK – SEE DETAIL A1, SHEET CS501.
4. CURB RAMP – SEE DETAIL C3, SHEET CS501.
5. CONCRETE WHEEL STOP (TYPICAL AS SHOWN) – SEE DETAIL A3, SHEET CS501.
6. CONCRETE APRON – SEE DETAIL C5, SHEET CS501.
7. PAVEMENT MARKNG (TYPE AS INDICATED) – SEE DETAIL C1, SHEET CS502.
8. ACCESSIBLE MARKINGS AND SIGNAGE – SEE DETAIL A1, SHEET CS502.
9. SIGN – SEE DETAIL C3, SHEET CS502.
10. 30' HIGH FLAGPOLE AND FOUNDATION – SEE DETAIL A1, SHEET CS503.
11. NON-POTABLE 56,000 U.S. GALLON FIRE WATER RESERVOIR – SEE DETAIL A1, SHEET CU502 AND SPECIFICATIONS.
12. GENERATOR ON CONCRETE FOUNDATION – SEE ELECTRICAL AND STRUCTURAL DRAWINGS.
13. RELOCATED PROPANE TANK ON NEW CONCRETE FOUNDATION. PROVIDE 18'x5'x6" THICK CONCRETE FOUNDATION.
14. HVAC EQUIPMENT ON CONCRETE FOUNDATION – SEE MECHANICAL PLANS.
15. PAINTED 6" HIGH BLACK, BLOCK LETTERING SPACE DESIGNATION, "GOVERNEMENT VEHICLE PARKING ONLY".
16. STEEL BOLLARD (NUMBER AS SHOWN) – SEE DETAIL B3, SHEET CS502.

APPR | DATE | DESCRIPTION | SYM

NAVFAC

Digitally signed by John K Avolis
SEAL
SEAL 15758
01 JUL 2026
REGISTERED PROFESSIONAL ENGINEER
JOHN K. AVOLIS

DESIGNED & ENGINEERED BY:

A-E Engineering P.A.
LICENSE NO. C-0706

AVOLIS ENGINEERING, P.A.
P.O. BOX 15564
NEW BERN, NC 28561
PH.(252) 633-0068

A/E INFO

APPROVED
FOR COMMANDER NAVFAC
ACTIVITY
SATISFACTORY TO

DES	JKA	DRW	MSP	CHK	JKA
PM/DM	L. PEED				
BRANCH MANAGER	H. PERRY				
CHIEF ENGR/ARCH	P. FAULKNER				
FIRE PROTECTION	D. CHASTAIN				

DEPARTMENT OF THE NAVY
NAVAL FACILITIES ENGINEERING COMMAND
1PT MARINE CORPS

NAVAL FACILITIES ENGINEERING COMMAND ~ MIDATLANTIC
NAVAL STATION ~ NORFOLK, VA.

MARINE CORPS AIR STATION CHERRY POINT, NC

MCOLF ATLANTIC
BUILDING 7019 RENOVATIONS

SITE PLAN LAYOUT

SCALE: AS NOTED
STATION DESIGN WON: 7406712
STATION CONSTRUCTION WON: 7406712
NAVFAC DRAWING NO.: 12939434
SHEET: 9 OF 148

CS101

DRAWFORM REVISION: 25 AUGUST 2020

File Path: D:\00_PROJECTS\25033 BUILDING 7019 RENOVATIONS OLF ATLANTIC (NBF)\DWG\100.DWG
Print Date: 7/1/2026 2:11 PM

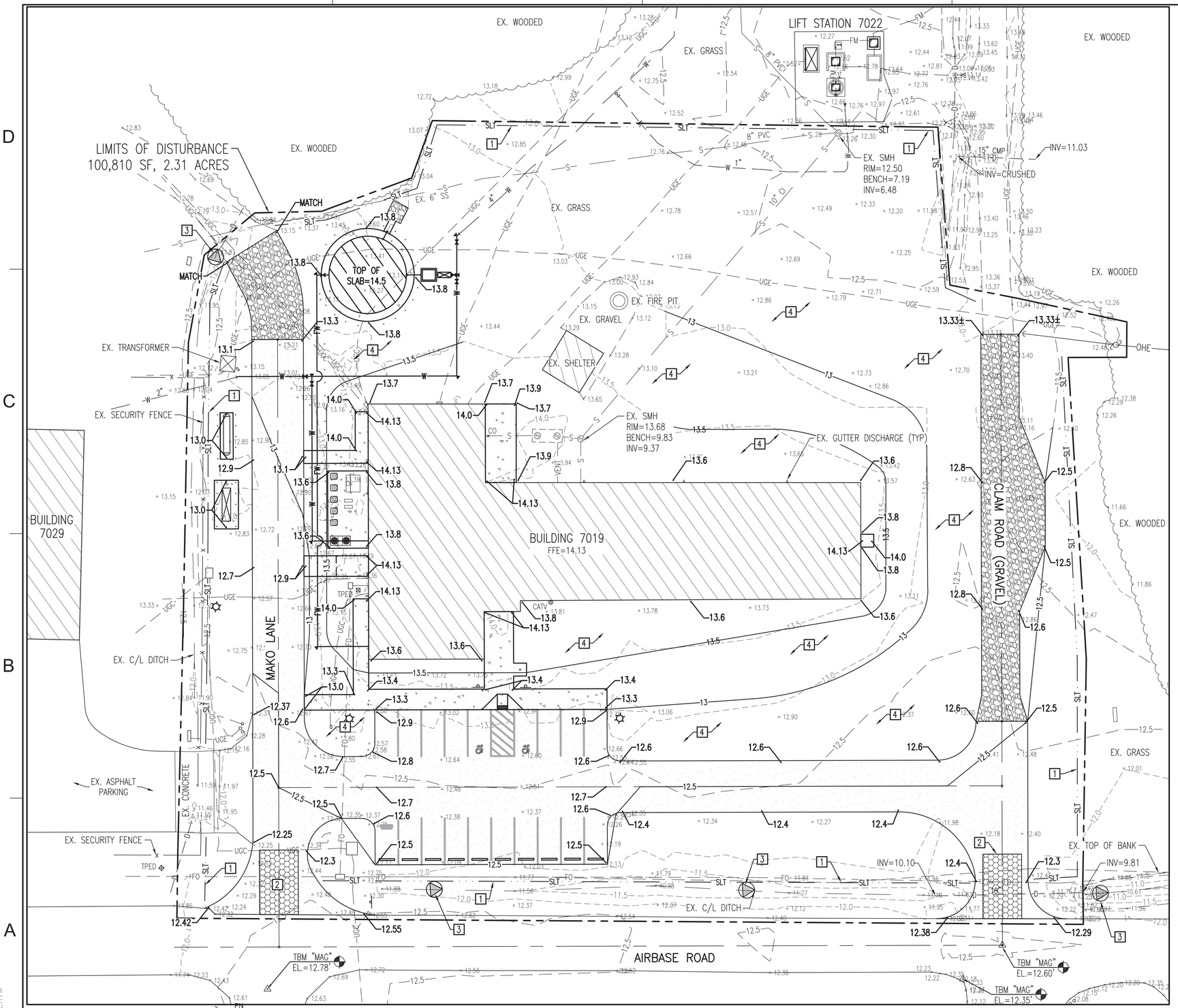

SITE GRADING PLAN

SCALE: 1" = 20'

GRAPHIC SCALE: 1" = 20'

GENERAL CONSTRUCTION NOTES:

1. THE LOCATION AND DEPTHS OF EXISTING UTILITIES SHOWN ARE APPROXIMATE. THE CONTRACTOR MUST BE RESPONSIBLE FOR SCANNING THE AREA OF WORK TO IDENTIFY TO HIS OWN SATISFACTION THE EXTENT OF UTILITIES PRESENT INCLUDING THE UTILITIES INDICATED TO BE PRESENT, THOSE NOT SHOWN, AND THOSE SHOWN TO BE IN A DIFFERENT LOCATION.
2. PHYSICAL SITE FEATURES OUTSIDE THE AREA OF WORK OR THOSE FEATURES NOT RELEVANT TO THE WORK BEING PERFORMED ARE NOT SHOWN FOR CLARITY.
3. THE CONTRACTOR MUST BE RESPONSIBLE FOR MAINTAINING TRAFFIC FLOW DURING THE COURSE OF CONSTRUCTION. THE CONTRACTOR MUST DEVELOP A TRAFFIC CONTROL PLAN TO BE SUBMITTED TO THE CONTRACTING OFFICER FOR APPROVAL PRIOR TO STARTING CONSTRUCTION.
4. ALL EXISTING VEGETATED AREAS DISTURBED DURING CONSTRUCTION MUST BE REVEGETATED IN ACCORDANCE WITH THE PROJECT VEGETATION PLAN, SEE DETAIL A1, SHEET CG501.
5. COMPLETE ALL TRENCH SECTION IN ACCORDANCE WITH DETAIL A3, SHEET CU501.
6. GRADE EVENLY BETWEEN ALL SPOT ELEVATIONS SHOWN.

WORK ITEMS (THIS SHEET):

1 SILT FENCE – SEE DETAIL C1, SHEET CG503.

2 GRAVEL CONTROL ENTRANCE – SEE DETAIL B1, SHEET CG503.

3 CHECK DAM – SEE DETAIL A1, SHEET CG503.

4 FILL AND GRADE AREA BETWEEN SPOT ELEVATIONS AND CONTOURS SHOWN TO CREATE POSITIVE DRAINAGE.

EROSION CONTROL SYMBOL LEGEND:

—SLT— · · · —SLT— = SILT FENCE, SEE DETAIL C1, SHEET CG503.

= GRAVEL CONTROL ENTRANCE, SEE DETAIL B1, SHEET CG503.

= CHECK DAM, SEE DETAIL A1, SHEET CG503.

SYM	DESCRIPTION	DATE	APPR

NAVFAC

Digitally signed by John K Avolis
SEAL 15798 01 JUL 2026

DESIGNED & ENGINEERED BY:

LICENSE NO. C-0706

AVOLIS ENGINEERING, P.A.
P.O. BOX 15564
NEW BERN, NC 28561
PH.(252) 633-0068

A/E INFO

APPROVED

FOR COMMANDER NAVFAC

ACTIVITY

SATISFACTORY TO

DES	JKA	DRN	MSP	CHK	JKA
PM/DM					L. PEED
BRANCH MANAGER					H. PERRY
CHIEF ENGR/ACH					P. FAULKNER
FIRE PROTECTION					D. CHASTAIN

DEPARTMENT OF THE NAVY
NAVAL FACILITIES ENGINEERING COMMAND
3RD MARINE CORPS
MARINE CORPS AIR STATION

NAVAL FACILITIES ENGINEERING COMMAND ~ MIDATLANTIC
NAVAL STATION - NORFOLK, VA.

CHERRY POINT, NC

MCOLF ATLANTIC
BUILDING 7019 RENOVATIONS

SITE GRADING PLAN

SCALE:	AS NOTED
STATION DESIGN WON:	7406712
STATION CONSTRUCTION WON:	7406712
NAVFAC DRAWING NO.:	12939435
SHEET	10 OF 148

CG101

DRAWFORM REVISION: 25 AUGUST 2020

File Path: D:\00_PROJECTS\25033 BUILDING 7019 RENOVATIONS OLF ATLANTIC (MBF)\DWG\100.DWG
Print Date: 7/1/2026 2:11 PM

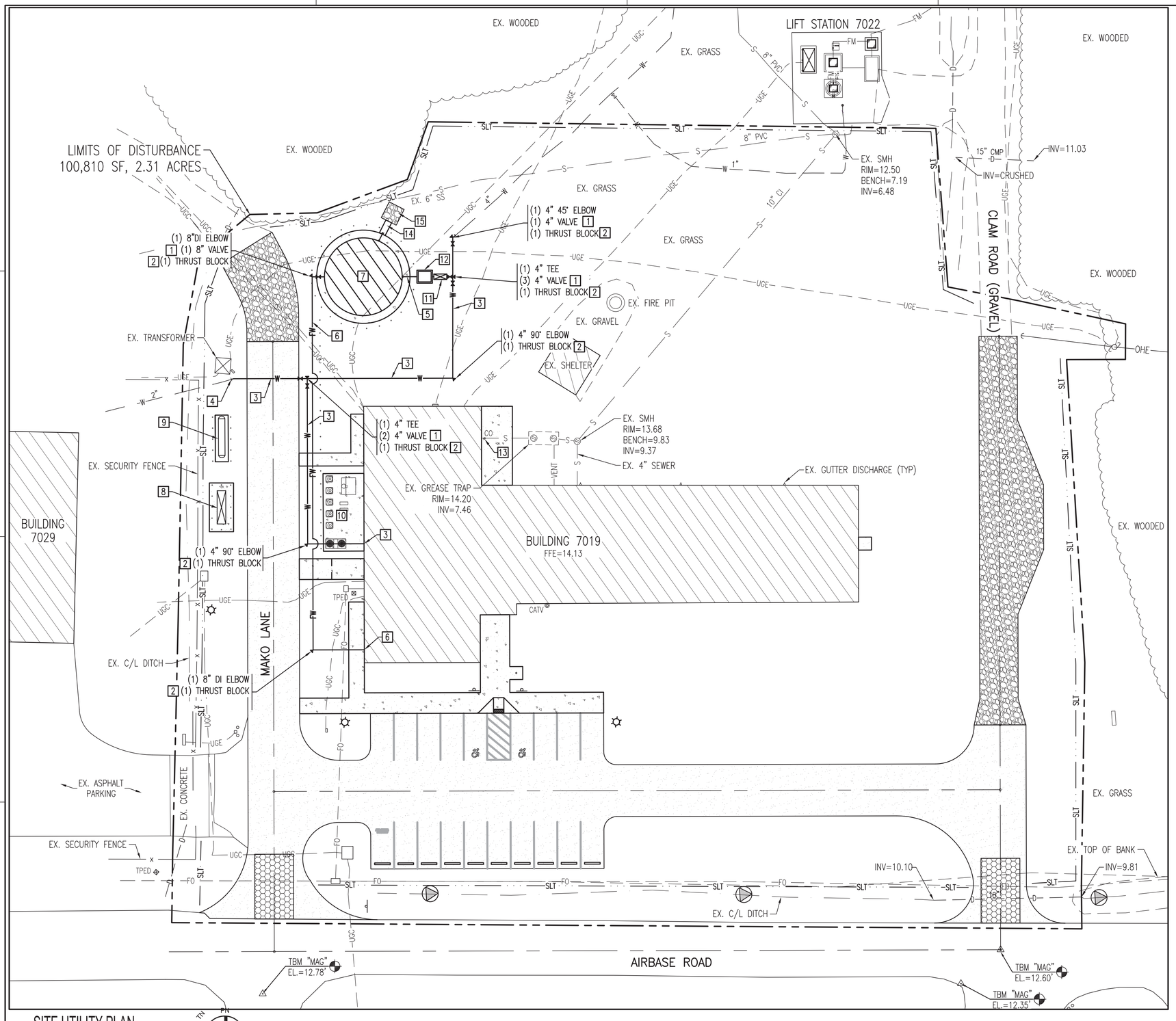

SITE UTILITY PLAN

SCALE: 1" = 20'

GRAPHIC SCALE: 1" = 20'

GENERAL CONSTRUCTION NOTES:

1. THE LOCATION AND DEPTHS OF EXISTING UTILITIES SHOWN ARE APPROXIMATE. THE CONTRACTOR MUST BE RESPONSIBLE FOR SCANNING THE AREA OF WORK TO IDENTIFY TO HIS OWN SATISFACTION THE EXTENT OF UTILITIES PRESENT INCLUDING THE UTILITIES INDICATED TO BE PRESENT, THOSE NOT SHOWN, AND THOSE SHOWN TO BE IN A DIFFERENT LOCATION.
2. PHYSICAL SITE FEATURES OUTSIDE THE AREA OF WORK OR THOSE FEATURES NOT RELEVANT TO THE WORK BEING PERFORMED ARE NOT SHOWN FOR CLARITY.
3. THE CONTRACTOR MUST BE RESPONSIBLE FOR MAINTAINING TRAFFIC FLOW DURING THE COURSE OF CONSTRUCTION. THE CONTRACTOR MUST DEVELOP A TRAFFIC CONTROL PLAN TO BE SUBMITTED TO THE CONTRACTING OFFICER FOR APPROVAL PRIOR TO STARTING CONSTRUCTION.
4. ALL EXISTING VEGETATED AREAS DISTURBED DURING CONSTRUCTION MUST BE REVEGETATED IN ACCORDANCE WITH THE PROJECT VEGETATION PLAN, SEE DETAIL A1, SHEET CC501.
5. COMPLETE ALL TRENCH SECTION IN ACCORDANCE WITH DETAIL A3, SHEET CU501.
6. GRADE EVENLY BETWEEN ALL SPOT ELEVATIONS SHOWN.

WORK ITEMS (THIS SHEET):

1. VALVE AND VALVE BOX – SEE DETAIL C1, SHEET CU501.
2. THRUST BLOCK – SEE DETAIL A1, SHEET CU501.
3. 4" PVC DOMESTIC WATER SERVICE, PROVIDE MINIMUM 36" CLEAR COVER. SEE PLUMBING DRAWINGS FOR CONTINUATION.
4. PROVIDE 4'x2" REDUCER AND CONNECT TO EXISTING 2" WATER SERVICE.
5. 4" DI WATER FILL TO STORAGE TANK. PROVIDE MINIMUM 36" CLEAR COVER. SEE FIRE PROTECTION DRAWINGS. SEE SPECIAL NOTE 1, BELOW.
6. 8" DI FIRE SUPPLY LINE FROM STORAGE TANK TO FIRE PUMP ROOM. PROVIDE MINIMUM 36" BURY. SEE FIRE PROTECTION DRAWINGS FOR CONTINUATION.
7. NON-POTABLE 56,000 U.S. GALLON FIRE WATER RESERVOIR – SEE DETAIL A1, SHEET CU502 AND SPECIFICATIONS.
8. GENERATOR ON CONCRETE FOUNDATION – SEE ELECTRICAL AND STRUCTURAL DRAWINGS.
9. RELOCATED PROPANE TANK ON NEW CONCRETE FOUNDATION.
10. HVAC EQUIPMENT ON CONCRETE FOUNDATION – SEE MECHANICAL PLANS.
11. 4" REDUCED-PRESSURE BACKFLOW ASSEMBLY AND ENCLOSURE – SEE DETAIL C4, SHEET CU501.
12. CONCRETE VALVE VAULT AND ACCESS DOOR – SEE SPECIFICATIONS.
13. CLEANOUT – SEE DETAIL C3, SHEET CU501.
14. CONCRETE SPILLWAY – SEE SHEET CU502.
15. 6' WIDE x 10' LONG x 18" RIP RAP ON FILTER FABRIC SET FLUSH WITH FINISH GRADE.

SPECIAL NOTES:

1. NON-POTABLE STORAGE TANKS MUST HAVE A PHYSICAL BREAK FOR BACKFLOW PREVENTION. THE CONTRACTOR MUST PROVIDE A MINIMUM 8" AIR GAP BETWEEN THE SUPPLY LINE OUTLET INVERT AND THE MAXIMUM FILL LEVEL LINE OF THE STORAGE TANK.

SYM	DESCRIPTION	DATE	APPR

NAVFAC

Digitally signed by John K Avolis
SEAL 15798 01 JUL 2026

DESIGNED & ENGINEERED BY:

A-E Engineering P.A.
LICENSE NO. C-0706

AVOLIS ENGINEERING, P.A.
P.O. BOX 15564
NEW BERN, NC 28561
PH.(252) 633-0068

A/E INFO

APPROVED

FOR COMMANDER NAVFAC

ACTIVITY

SATISFACTORY TO

DES	JKA	DRW	MSP	CHK	JKA

PWDM L. PEED
BRANCH MANAGER H. PERRY
CHIEF ENGR/ACH P. FAULKNER
FIRE PROTECTION D. CHASTAIN

DEPARTMENT OF THE NAVY
NAVAL FACILITIES ENGINEERING COMMAND
NAVAL FACILITIES ENGINEERING COMMAND – MIDATLANTIC
NAVAL STATION - NORFOLK, VA
IPT MARINE CORPS
MARINE CORPS AIR STATION CHERRY POINT, NC

MCOLF ATLANTIC
BUILDING 7019 RENOVATIONS

SITE UTILITY PLAN

SCALE: AS NOTED
STATION DESIGN WON: 7406712
STATION CONSTRUCTION WON: 7406712
NAVFAC DRAWING NO. 12939436
SHEET 11 OF 148

CU101

DRAWFORM REVISION: 25 AUGUST 2020

File Path: D:\00_PROJECTS\25033 BUILDING 7019 RENOVATIONS OLF ATLANTIC (NBFI)\DWG\100.DWG
Print Date: 7/11/2026 2:12 PM

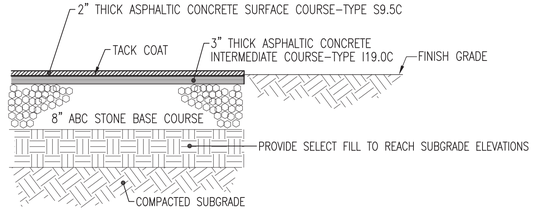

D1 ASPHALT PAVEMENT

NOT TO SCALE

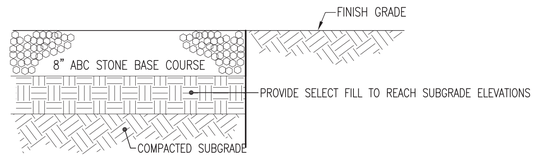

C1 GRAVEL SURFACING

NOT TO SCALE

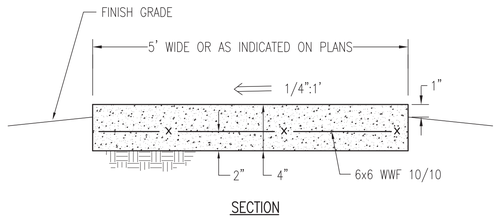

SECTION

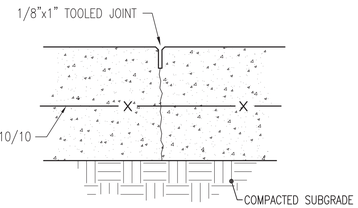

CONTRACTION JOINT (CJ)

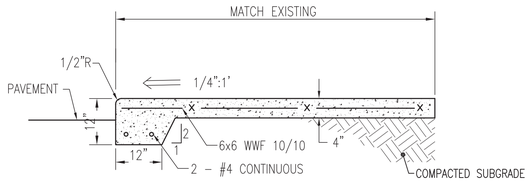

THICKENED EDGE (TE)

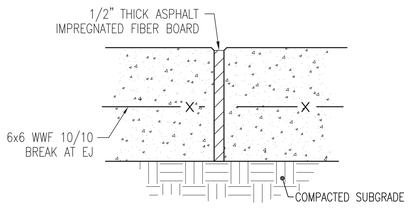

EXPANSION JOINT (EJ)

NOTES:

1. PROVIDE EXPANSION JOINTS ALONG ALL EXISTING STRUCTURES AND WALKS AND AT 20' INTERVALS ALONG STRAIGHT SECTIONS OF WALK.
2. PROVIDE TOOLED CONTRACTION JOINTS AT 6'–0" INTERVALS AND AT ALL CHANGES IN DIRECTION OF WALK. TOOLED CONTRACTION JOINTS MUST BE 1/8" WIDE X 1" DEEP.
3. SUBGRADE MUST BE WETTED IMMEDIATELY PRIOR TO PLACING CONCRETE, OR PROVIDE POLYETHYLENE SHEETING ON GROUND SURFACE BELOW CONCRETE.
4. PROVIDE FLOATED SURFACE WITH LIGHT BROOM FINISH.
5. PROTECT WORK IN PLACE FROM VANDALISM, GRAFFITI, ETC... UNTIL CONCRETE IS SUFFICIENTLY DRY.

LEGEND:
CJ=CONTRACTION JOINT
EJ=EXPANSION JOINT
TE=THICKENED EDGE

A1 CONCRETE SIDEWALK

NOT TO SCALE

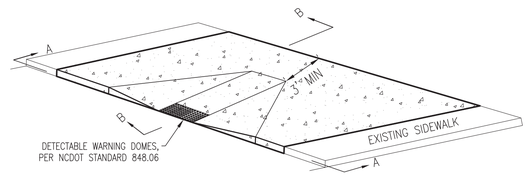

ISOMETRIC VIEW

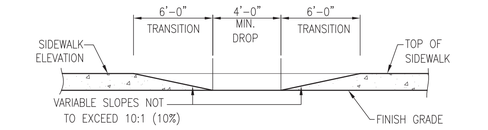

SECTION A–A

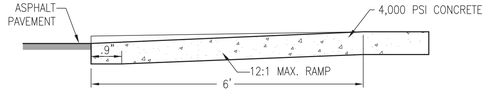

SECTION B–B

C3 CURB RAMP

NOT TO SCALE

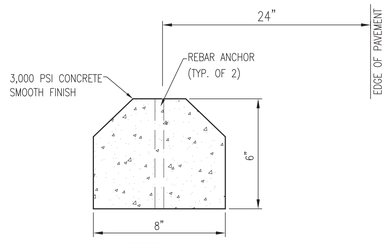

SECTION A–A

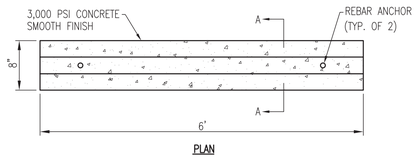

PLAN

A3 CONCRETE WHEEL STOP

NOT TO SCALE

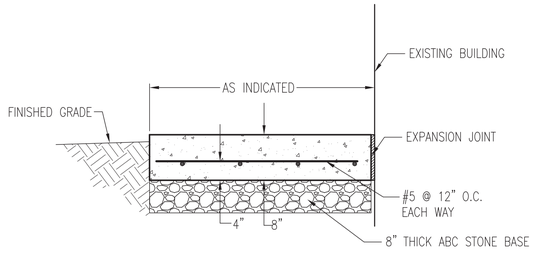

CJ = CONTRACTION JOINT, SEE DETAIL A5, THIS SHEET.
EJ = EXPANSION JOINT, SEE DETAIL A5, THIS SHEET.

C5 CONCRETE APRON

NOT TO SCALE

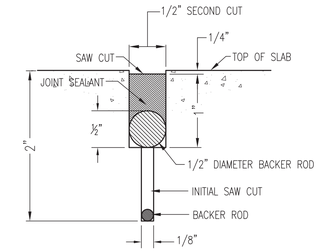

TYPICAL SLAB–ON–GRADE JOINT (CJ)

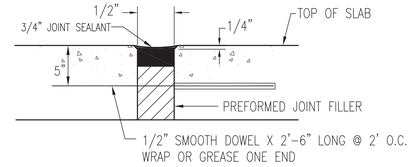

EXPANSION JOINT (EJ)

LEGEND:
CJ=CONTRACTION JOINT
EJ=EXPANSION JOINT

A5 CONCRETE APRON SLAB-ON-GRADE JOINTS

NOT TO SCALE

SYM	DESCRIPTION	DATE	APPR

NAVFAC

Digitally signed by John K Avolis
NORTH CAROLINA PROFESSIONAL SEAL 15738 ENGINEER JOHN K. AVOLIS
01 JUL 2026

SEAL

DESIGNED & ENGINEERED BY:

A·E Engineering P.A.
LICENSE NO. C-0706

AVOLIS ENGINEERING, P.A.
P.O. BOX 15564
NEW BERN, NC 28561
PH.(252) 633-0068

A/E INFO

APPROVED

FOR COMMANDER NAVFAC

ACTIVITY

SATISFACTORY TO

DES	JKA	DRW	MSP	CHK	JKA

PWDM L. PEED
BRANCH MANAGER H. PERRY
CHIEF ENGR/CH P. FAULKNER
FIRE PROTECTION D. CHASTAIN

DEPARTMENT OF THE NAVY
NAVAL FACILITIES ENGINEERING COMMAND
NAVAL FACILITIES ENGINEERING COMMAND – MIDATLANTIC
NAVAL STATION – NORFOLK, VA.
1ST MARINE CORPS
MARINE CORPS AIR STATION CHERRY POINT, NC
MCOLF ATLANTIC
BUILDING 7019 RENOVATIONS
DETAILS

SCALE	AS NOTED
STATION DESIGN WON	7406712
STATION CONSTRUCTION WON	7406712
NAVFAC DRAWING NO	12939437
SHEET	12 OF 148

CS501

DRAWFORM REVISION: 25 AUGUST 2020

File Path: D:\00_PROJECTS\25033 BUILDING 7019 RENOVATIONS OLF ATLANTIC (MBF)\DWG\100.DWG
Print Date: 7/1/2026 2:12 PM

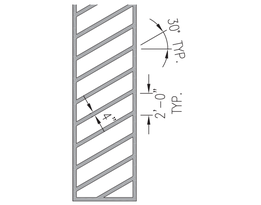

GORE STRIPNG–WHITE

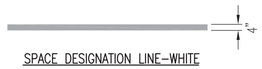

SPACE DESIGNATION LINE–WHITE

C1 PAVEMENT MARKINGS

NOT TO SCALE

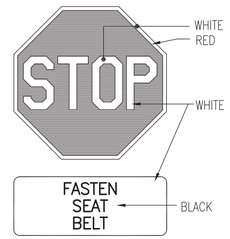

STOP

C3 SIGN

NOT TO SCALE

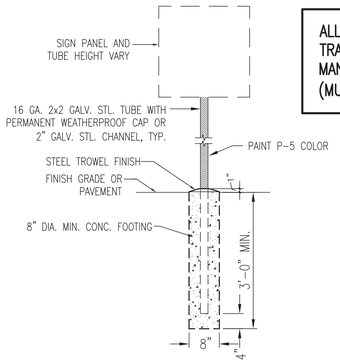

SIGN MOUNTING

ALL SIGNAGE TO CONFORM TO US DEPARTMENT OF TRANSPORTATION FEDERAL HIGHWAY ADMINISTRATION MANUAL ON UNIFORM TRAFFIC CONTROL DEVICES (MUTCD), 2009 EDITION (OR CURRENT IF NEWER).

PAVEMENT MARKING

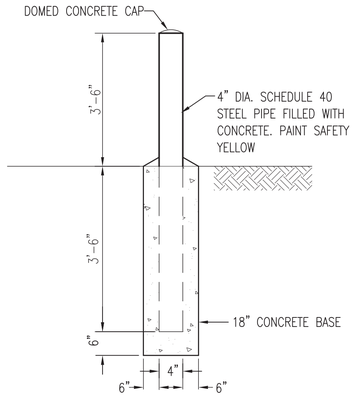

B3 STEEL BOLLARD

NOT TO SCALE

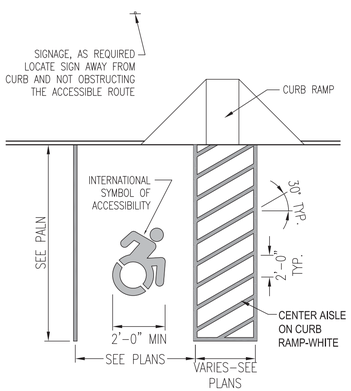

HANDICAP SPACE DESIGNATION

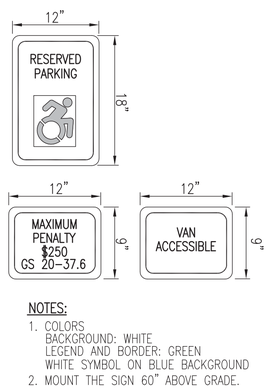

NOTES:

1. COLORS
   BACKGROUND: WHITE
   LEGEND AND BORDER: GREEN
   WHITE SYMBOL ON BLUE BACKGROUND
2. MOUNT THE SIGN 60" ABOVE GRADE.

TYPE A – HANDICAP PARKING SIGNAGE

A1 ACCESSIBLE MARKINGS AND SIGNAGE

NOT TO SCALE

SYM	DESCRIPTION	DATE	APPR

NAVFAC

Digitally signed by John K Avolis
NORTH CAROLINA PROFESSIONAL SEAL 15738 ENGINEER JOHN K. AVOLIS
01 JUL 2026
SEAL

DESIGNED & ENGINEERED BY:

A·E Engineering P.A.
LICENSE NO. C-0706

AVOLIS ENGINEERING, P.A.
P.O. BOX 15564
NEW BERN, NC 28561
PH.(252) 633-0068

A/E INFO

APPROVED

FOR COMMANDER NAVFAC

ACTIVITY

SATISFACTORY TO

DES	JKA	DRW	MSP	CHK	JKA

PWDM	L. PEED
BRANCH MANAGER	H. PERRY
CHIEF ENGINEER	P. FAULKNER
FIRE PROTECTION	D. CHASTAIN

DEPARTMENT OF THE NAVY
NAVAL FACILITIES ENGINEERING COMMAND
1ST MARINE CORPS
NAVAL FACILITIES ENGINEERING COMMAND ~ MIDATLANTIC
NAVAL STATION - NORFOLK, VA
MARINE CORPS AIR STATION CHERRY POINT, NC
MCOLF ATLANTIC
BUILDING 7019 RENOVATIONS
DETAILS

SCALE:	AS NOTED
STATION DESIGN WON:	7406712
STATION CONSTRUCTION WON:	7406712
NAVFAC DRAWING NO.	12939438
SHEET	13 OF 148

CS502

DRAWFORM REVISION: 25 AUGUST 2020

File Path: D:\00_PROJECTS\26303 BUILDING 7019 RENOVATIONS OLF ATLANTIC (MBP)\DWG\100.DWG
Print Date: 7/1/2026 2:12 PM

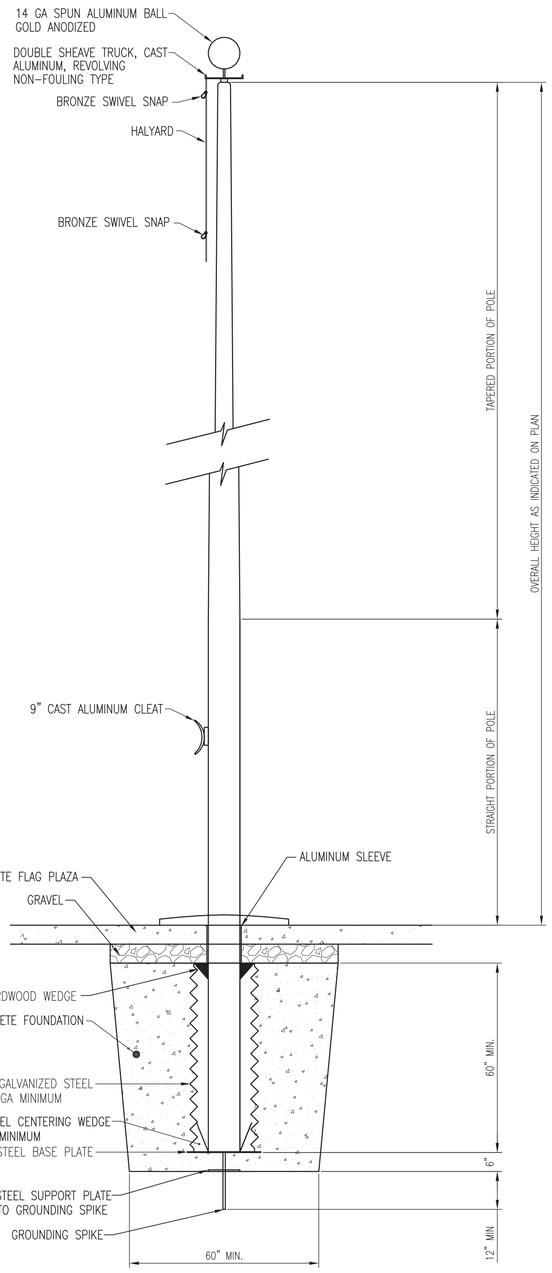

A1 FLAGPOLE AND FLAGPOLE FOUNDATION

NOT TO SCALE

NOTES:

1. THE FOUNDATION INFORMATION PROVIDED ON THIS DETAIL REPRESENTS THE MINIMUM FOUNDATION REQUIREMENTS. THE CONTRACTOR MUST PROVIDE A FOUNDATION DESIGN AND FOUNDATION CONSTRUCTION FOR EACH FLAGPOLE IN ACCORDANCE WITH THE REQUIREMENTS SPECIFIED IN SPECIFICATION SECTION 10 75 00 "FLAGPOLES."

SYM	DESCRIPTION	DATE	APPR

NAVFAC

Digitally signed by John K Avolis
NORTH CAROLINA PROFESSIONAL SEAL 15738 ENGINEER JOHN K. AVOLIS
01 JUL 2026

SEAL

DESIGNED & ENGINEERED BY:

A·E Engineering P.A.
LICENSE NO. C-0706

AVOLIS ENGINEERING, P.A.
P.O. BOX 15564
NEW BERN, NC 28561
PH.(252) 633-0068

A/E INFO

APPROVED

FOR COMMANDER NAVFAC

ACTIVITY

SATISFACTORY TO

DES	JKA	DRW	MSP	CHK	JKA

PMDM	L. PEED
BRANCH MANAGER	H. PERRY
CHIEF ENGINEER	P. FAULKNER
FIRE PROTECTION	D. CHASTAIN

DEPARTMENT OF THE NAVY
NAVAL FACILITIES ENGINEERING COMMAND ~ MIDATLANTIC
NAVAL STATION - NORFOLK, VA
3RD MARINE CORPS
MARINE CORPS AIR STATION CHERRY POINT, NC

MCOLF ATLANTIC BUILDING 7019 RENOVATIONS

DETAILS

SCALE:	AS NOTED
STATION DESIGN WON:	7406712
STATION CONSTRUCTION WON:	7406712
NAVFAC DRAWING NO.	12939439
SHEET	14 OF 148

CS503

DRAWFORM REVISION: 25 AUGUST 2020

File Path: D:\00_PROJECTS\26303 BUILDING 7019 RENOVATIONS OLF ATLANTIC (MBP)\DWG\100.DWG
Print Date: 7/1/2026 2:12 PM

EROSION AND SEDIMENT CONTROL NOTES

1. UNLESS OTHERWISE INDICATED, ALL VEGETATIVE AND STRUCTURAL EROSION AND SEDIMENT CONTROL PRACTICES WILL BE CONSTRUCTED AND MAINTAINED ACCORDING TO MINIMUM STANDARDS AND SPECIFICATIONS OF THE NORTH CAROLINA EROSION AND SEDIMENT CONTROL PLANNING DESIGN MANUAL (REVISED JUNE 2006).
2. THE CONTRACTOR MUST APPLY PERMANENT OR TEMPORARY SOIL STABILIZATION TO ALL DENUDED OR DISTURBED AREAS WITHIN 7 DAYS AFTER FINAL GRADE IS REACHED ON ANY PORTION OF THE SITE. SOIL STABILIZATION MUST ALSO BE APPLIED TO DENUDED OR DISTURBED AREAS WHICH MAY NOT BE AT FINAL GRADE BUT WHICH WILL REMAIN UNDISTURBED FOR LONGER THAN 30 DAYS. SOIL STABILIZATION MEASURES INCLUDE VEGETATIVE ESTABLISHMENT, MULCHING AND THE EARLY APPLICATION OF GRAVEL BASE MATERIAL ON AREAS TO BE PAVED.
3. ALL EROSION AND SEDIMENT CONTROL MEASURES ARE TO BE INSTALLED PRIOR TO OR AS THE FIRST STEP IN CONSTRUCTION.
4. THE NPDES CONSTRUCTION PERMIT REQUIRES EROSION CONTROL DEVICES AND STORM OUTFALLS BE INSPECTED WEEKLY (EVERY 7 CALENDAR DAYS) AND WITHIN 24 HOURS OF A 0.5 INCH RAIN EVENT. IT WILL BE THE RESPONSIBILITY OF THE CONTRACTOR TO CONDUCT THESE INSPECTIONS AND MAINTAIN RECORDS UNTIL THE AREA HAS STABILIZATION, EVIDENT BY 95% VEGETATIVE GROWTH FOR AREAS PROVIDED SEEDING. TO FACILITATE RAINFALL MONITORING A RAIN GAUGE IS REQUIRED TO BE ON SITE. ONCE STABILIZATION HAS BEEN ACCOMPLISHED INSPECTION RECORDS ARE TO BE FORWARDED TO THE GOVERNMENT AND ALL TEMPORARY EROSION/SEDIMENTATION CONTROL DEVICES REMOVED. THE CONTRACTOR IS RESPONSIBLE FOR MAINTAINING COMPLIANCE WITH ALL PERMITS AND PLANS, ANY CHANGES MUST BE APPROVED BY THE STATE PRIOR TO EXECUTION. A COPY OF THE EROSION AND SEDIMENTATION CONTROL PLAN, LETTER OF APPROVAL, AND NPDES CONSTRUCTION PERMIT MUST BE MAINTAINED BY THE CONTRACTOR AT THE ONSITE OFFICE.
5. THE CONTRACTOR MUST LIMIT SITE ACCESS BY CONSTRUCTION VEHICLES TO ENTRANCES PROTECTED BY A STONE CONSTRUCTION ENTRANCE. SEDIMENT MUST BE REMOVED FROM PAVED AREAS ON A DAILY BASIS.
6. STOCKPILES OF SOIL AND OTHER ERODIBLE MATERIALS MUST BE STABILIZED OR PROTECTED WITH SEDIMENT TRAPPING MEASURES. THE CONTRACTOR IS RESPONSIBLE FOR THE TEMPORARY PROTECTION AND PERMANENT STABILIZATION FOR STOCKPILES ON SITE AS WELL AS FOR MATERIALS TRANSPORTED FROM THE PROJECT SITE.
7. THE CONTRACTOR MUST MONITOR AND TAKE PRECAUTIONS TO CONTROL DUST INCLUDING (BUT NOT LIMITED TO) USE OF WATER, MULCH, OR CHEMICAL DUST ADHESIVES AND CONTROL OF CONSTRUCTION SITE TRAFFIC.
8. FILTER EFFLUENT FROM DE-WATERING OPERATIONS THROUGH AN APPROVED SEDIMENT TRAPPING DEVICE. IF DEWATERING IS REQUIRED, DISPOSE DEWATERING EFFLUENT WITHOUT DISCHARGE TO WATERS OF THE STATE OF NORTH CAROLINA (E.G. STORM DRAIN SYSTEMS, DRAINAGE SWALES, ETC). THE DEWATERING EFFLUENT WILL NOT BE ALLOWED TO POND, EXCEPT IN AREAS APPROVED BY THE CONSTRUCTION MANAGER. THE DEWATERING EFFLUENT MUST NOT CONTAIN RAW SEWAGE FROM THE SEWAGE SYSTEM, DISCHARGE OF DEWATERING EFFLUENT INTO THE SANITARY SEWER SYSTEM IS NOT ALLOWED.
9. THE CONTRACTOR IS RESPONSIBLE FOR INSTALLATION AND MAINTENANCE OF ANY ADDITIONAL CONTROL MEASURES NECESSARY TO PREVENT EROSION AND SEDIMENTATION AS DETERMINED NECESSARY BY THE PLAN APPROVING AUTHORITY.
10. TEMPORARY EROSION AND SEDIMENT CONTROL MEASURES ARE NOT TO BE REMOVED UNTIL ALL DISTURBED AREAS ARE STABILIZED. AFTER STABILIZATION IS COMPLETE. ALL MEASURES MUST BE REMOVED WITHIN 30 DAYS. TRAPPED SEDIMENT MUST BE SPREAD AND SEEDED.
11. ANY SEDIMENT THAT HAS BEEN TRANSPORTED BEYOND THE PROJECT LIMITS MUST BE REMOVED. RESPONSIBLE MAINTENANCE CONTACT: DEPUTY PUBLIC WORKS OFFICER
12. OBTAIN BORROW MATERIALS REQUIRED IN EXCESS OF THOSE FURNISHED FROM EXCAVATIONS FROM SOURCES OUTSIDE OF GOVERNMENT PROPERTY. NO SOIL FROM CONSTRUCTION SITES MUST LEAVE MARINE CORPS BASE CAMP LEJEUNE WITH THE EXCEPTION OF ENVIRONMENTAL REMEDIAL ACTIVITIES. SEE SOIL REMOVAL NOTE.

EROSION CONTROL SEQUENCE OF CONSTRUCTION

1. INSTALL TEMPORARY CONSTRUCTION ENTRANCE.
2. INSTALL CHECK DAMS IN ALL EXISTING DITCHES AND SWALES AS INDICATED.
3. INSTALL TEMPORARY SILT FENCE AROUND THE PERIMETER OF THE SITE AS INDICATED ON THE PROJECT PLANS.
4. INSTALL DROP INLET PROTECTION.
5. COMPLETE SITE IMPROVEMENTS AS SHOWN.
6. COMPLETE FINAL GRADING FOR PARKING AREAS AND DRIVES AND STABILIZE WITH GRAVEL.
7. COMPLETE FINAL GRADING OF THE GROUNDS, TOPSOIL CRITICAL AREAS AND INSTALL PERMANENT VEGETATION.
8. INSPECT ALL EROSION AND SEDIMENT CONTROL PRACTICES WEEKLY AND WITHIN 24 HOURS OF A 0.5 INCH-MEASURED RAINFALL EVENT. A RAIN GAUGE MUST BE INSTALLED TO MEASURE RAINFALL EVENTS. REPAIR ANY DAMAGE IMMEDIATELY TO EROSION AND SEDIMENT CONTROL MEASURES.
9. INSPECT AND INSTALL ALL EROSION AND SEDIMENT CONTROL MEASURES IN ACCORDANCE WITH NCDEQ'S NEW SELF INSPECTION PROGRAM FOR EROSION AND SEDIMENTATION CONTROL. COPIES OF THE SELF INSPECTION REPORTS MUST BE PROVIDED TO THE ROICC'S OFFICE.
10. AFTER SITE IS STABILIZED, REMOVE ALL TEMPORARY MEASURES AND INSTALL SOD ON DISTURBED AREAS.

TEMPORARY SEEDING SCHEDULE

NOTE:
TEMPORARY SEED MIX MUST BE USED FOR ALL AREAS EXPOSED GREATER THAN 15 WORKING DAYS AND SUBJECT TO FURTHER DISTURBANCE. AN ADEQUATE COVER MUST HAVE 50 SPRIGS OF BERMUDA OR SERICEA LESPEDEZA PER ONE SQUARE FOOT.

TEMPORARY SEEDING AND MULCHING:
THE KINDS OF SEED AND FERTILIZER, AND THE RATES OF APPLICATION OF SEED, FERTILIZER, AND LIMESTONE, MUST BE AS STATED BELOW. DURING PERIODS OF OVERLAPPING DATES, THE KINDS OF SEED TO BE USED MUST BE DETERMINED BY THE ENGINEER. ALL ARE IN POUNDS PER ACRE (KILOGRAMS PER HECTARE).

TEMPORARY SUMMER SEED MIX

	SPECIES	RATE (LB. /ACRE)
MARCH 1 – SEPT. 1	GERMAN MILLET	120

TEMPORARY WINTER SEED MIX

	SPECIES	RATE (LB. /ACRE)
SEPT. 1 – MARCH 1	WINTER RYE (GRAIN)	200
	KOBE LESPEDEZA	120

APPROVED TALL FESCUE CULTIVARS:

ADVENTURE	ADVENTURE II	AMIGO	ANTHEM
APACHE	APACHE II	ARID	AUSTIN
BROOKSTONE	BONANZA	BONANZA II	CHAPEL HILL
CHESAPEAKE	CHIEFTAIN	CORONADO	CROSSFIRE II
DEBUTANTE	DUSTER	FALCON	FALCON II
FINELAWN PETITE	FINELAWN	FINELAWN I	GENESIS
GRANDE	GUARDIAN	HOUNDOG	JAGUAR
JAGUAR III	KENTUCKY 31	KITTY HAWK	MONARCH
MONTAUK	MUSTANG	OLYMPIC	PACER
PHOENIX	PIXIE	PYRAMID	REBEL
REBEL JR.	REBEL II	RENEGADE	SAFARI
SHENANDOAH	TEMPO	TITAN	TOMAHAWK
TRAILBLAZER	TRIBUTE	VEGAS	WOLFPACK
WRANGLER			

FERTILIZER MUST BE 10-20-20 ANALYSIS. UPON WRITTEN APPROVAL OF THE ENGINEER, A DIFFERENT ANALYSIS OF FERTILIZER MAY BE USED PROVIDED THE 1-2-2 RATIO IS MAINTAINED AND THE RATE OF APPLICATION ADJUSTED TO PROVIDE THE SAME AMOUNT OF PLANT FOOD AS 10-20-20 ANALYSIS.

TEMPORARY SEEDING:
FERTILIZER MUST BE THE SAME ANALYSIS AS SPECIFIED FOR "SEEDING AND MULCHING" AND APPLIED AT THE RATE OF 400 POUNDS (450 KILOGRAMS) AND SEEDED AT THE RATE OF 50 POUNDS (55 kg) PER HECTARE. SWEET SUDAN GRASS, GERMAN MILLET OR BROWNTOP MILLET MUST BE USED IN SUMMER MONTHS AND RYE GRAIN DURING THE REMAINDER OF THE YEAR. THE ENGINEER WILL DETERMINE THE EXACT DATES FOR USING EACH KIND OF SEED.

TEMPORARY SEEDING SCHEDULE (CONT.)

FERTILIZER TOPDRESSING:
FERTILIZER USED FOR TOPDRESSING ON ALL ROADWAY AREAS EXCEPT SLOPES 2:1 AND STEEPER MUST BE 10-20-20. UPON WRITTEN APPROVAL OF THE ENGINEER, A DIFFERENT ANALYSIS OF FERTILIZER MAY BE USED PROVIDED GRADE AND MUST BE APPLIED AT THE RATE OF APPLICATION ADJUSTED TO PROVIDE THE SAME AMOUNT OF PLANT FOOD AS 10-20-20 ANALYSIS.

FERTILIZER USED FOR TOPDRESSING ON SLOPES 2:1 AND STEEPER AND WASTE AND BORROW AREAS MUST BE 16-8-8 GRADE AND MUST BE APPLIED AT THE RATE OF 500 POUNDS PER ACRE (560 KG PER HECTARE). UPON WRITTEN APPROVAL OF THE ENGINEER, A DIFFERENT ANALYSIS OF FERTILIZER MAY BE USED PROVIDED THE 2-1-1 RATIO IS MAINTAINED AND THE RATE OF APPLICATION ADJUSTED TO PROVIDE THE SAME AMOUNT OF PLANT FOOD AS 16-8-8 ANALYSIS.

THE KINDS OF SEED AND PROPORTIONS MUST BE THE SAME AS SPECIFIED FOR "TEMPORARY SEEDING AND MULCHING", WITH THE EXCEPTION THAT NO CENTIPEDE SEED WILL BE USED IN THE SEED MIX FOR SUPPLEMENTAL SEEDING. THE RATE OF APPLICATION FOR SUPPLEMENTAL SEEDING MAY VARY FROM 25# TO 75# PER ACRE (28KG TO 85KG PER HECTARE). THE ACTUAL RATE PER ACRE (HECTARE) WILL BE DETERMINED BY THE ENGINEER PRIOR TO THE TIME OF TOPDRESSING AND THE CONTRACTOR WILL BE NOTIFIED IN WRITING OF THE RATE PER ACRE (HECTARE), TOTAL QUANTITY NEEDED, AND AREAS ON WHICH TO APPLY THE SUPPLEMENTAL SEED. MINIMUM TILLAGE EQUIPMENT, CONSISTING OF SOD SEEDER MUST BE USED FOR INCORPORATING SEED INTO THE SOIL AS TO PREVENT DISTURBANCE OF EXISTING VEGETATION. A CLODBUSTER (BALL AND CHAIN) MAY BE USED WHERE DEGREE OF SLOPE PREVENTS THE USE OF A SOD SEEDER.

MOWING:
THE MINIMUM MOWING HEIGHT ON THIS PROJECT MUST BE 4 INCHES (100 MM).

CRIMPING STRAW MULCH:
CRIMPING MUST BE REQUIRED ON THIS PROJECT FOR ALL SEEDING OPERATIONS PER NCDENR.

STRAW MULCH TO BE OF SUFFICIENT LENGTH AND QUALITY TO WITHSTAND THE CRIMPING OPERATION AND PROVIDE ADEQUATE GROUND COVER.

CRIMPING EQUIPMENT INCLUDING POWER SOURCE MUST BE SUBJECT TO THE APPROVAL OF THE ENGINEER PROVIDING THAT MAXIMUM SPACING OF CRIMPER BLADES MUST NOT EXCEED 8 INCHES (200 MM).

SOIL AMENDMENTS:
TO BE INCORPORATED INTO THE TOP 3 INCHES OF SOIL IN AREAS WITH SLOPES 2:1 OR FLATTER
- APPLY FERTILIZER (10-10-10) AT A RATE OF 1000 LB/ACRE
- APPLY LIME (GROUND AGRICULTURAL LIMESTONE) AT A RATE OF 4000 LB/ACRE
- APPLY SUPERPHOSPHATE (0-49-0) AT A RATE OF 200 LB/ACRE

MULCH:
APPLY 4,000 LB/ACRE GRAIN STRAW OR EQUIVALENT COVER. ANCHOR MULCH WITH ROVING, NETTING OR BY TACKING WITH ASPHALT EMULSION AT A RATE OF 400 GAL./ACRE

WATER:
MINIMUM OF 1" OF RAINFALL A WEEK (IF NOT SUPPLIED NATURALLY, CONTRACTOR MUST SUPPLY THE REMAINING AMOUNT UNTIL GROUND COVER HAS BEEN ESTABLISHED).

MAINTENANCE:
REFERTILIZE IN THE SECOND YEAR UNLESS THE GROWTH IS FULLY ADEQUATE. MOW WHEN THE AVERAGE PLANT HEIGHT EXCEEDS 6 INCHES. RESEED, FERTILIZE AND MULCH DAMAGED AREAS IMMEDIATELY.

TEMPORARY SEED BED PREPARATION

1. RIP THE ENTIRE AREA TO 6" DEPTH.
2. REMOVE ALL LOOSE ROCK, ROOTS, AND OTHER OBSTRUCTIONS LEAVING SURFACE REASONABLY SMOOTH AND UNIFORM.
3. APPLY AGRICULTURAL LIME, FERTILIZER, AND SUPERPHOSPHATE IN ACCORDANCE WITH "SEEDING SCHEDULE" AND MIX WITH SOIL.
4. CONTINUE TILLAGE UNTIL A WELL -PULVERIZED, FIRM, REASONABLY UNIFORM SEEDBED IS PREPARED 4 TO 6 INCHES DEEP.
5. SEED ON A FRESHLY PREPARED SEEDBED AND COVER SEED LIGHTLY WITH SEEDING EQUIPMENT OR CULTIPACK AFTER SEEDING. SEED ACCORDING TO "SEEDING SCHEDULE."
6. MULCH IN ACCORDANCE WITH "SEEDING SCHEDULE" IMMEDIATELY AFTER SEEDING.
7. INSPECT ALL SEEDING FOR COMPLIANCE WITH THE REQUIREMENTS OF THE "SEEDING SCHEDULE". MAKE NECESSARY REPAIRS AND RESEED WITHIN THE PLANTING SEASON, IF POSSIBLE, OR THE DAMAGED AREA MUST BE REESTABLISHED FOLLOWING THE ORIGINAL LIME, FERTILIZER, AND SEEDING REQUIREMENTS.

PERMANENT GROUND COVER

PROVIDE CENTIPEDE SOD FOR ALL DENUDED AREAS.

GROUND COVER NOTE

PURSUANT TO G.S. 133-A57(2), THE ANGLE FOR GRADED SLOPES AND FILLS MUST BE NO GREATER THAN THE ANGLE THAT CAN BE RETAINED BY VEGETATIVE COVER OR OTHER ADEQUATE EROSION-CONTROL DEVICES OR STRUCTURES. IN ANY EVENT, SLOPES LEFT EXPOSED WILL BE PLANTED OR OTHERWISE PROVIDED WITH TEMPORARY OR PERMANENT GROUND COVER, DEVICES, OR STRUCTURES SUFFICIENT TO RESTRAIN EROSION.
PURSUANT TO G.S. 113A-57(3), PROVISIONS FOR PERMANENT GROUNDCOVER SUFFICIENT TO RESTRAIN EROSION MUST BE ACCOMPLISHED FOR ALL DISTURBED AREAS (AS SHOWN BELOW) FOLLOWING COMPLETION OF CONSTRUCTION OR DEVELOPMENT.

GROUND STABILIZATION

THE NPDES PERMIT (SECTION II. 8.2) HAS RECENTLY REVISED THE REQUIREMENTS FOR GROUND STABILIZATION. STABILIZATION MUST BE ACCOMPLISHED AS FOLLOWS:

PERIMETER DIKES, SWALES, DITCHES AND SLOPES	WITHIN 7 DAYS
HIGH QUALITY WATER (HQW) ZONES	WITHIN 7 DAYS
SLOPES STEEPER THAN 3:1	WITHIN 7 DAYS
SLOPES 3:1 OR FLATTER	WITHIN 14 DAYS
ALL OTHER AREAS W/ SLOPES FLATTER THAN 4:1	WITHIN 14 DAYS

NOTE:
ALL FILL MATERIAL NEEDED TO EXECUTE THIS PROJECT MUST BE OBTAINED FROM AN NCDEQ NCDEMLR PERMITTED BORROW PIT.

NOTE:
NO WETLANDS OR SURFACE WATERS EXIST WITHIN THE LIMITS OF CONSTRUCTION.

NOTE:
THE PROJECT DRAINS TO CORE SOUND, TAR-PAMLICO RIVER BASIN
SURFACE WATER CLASSIFICATION: SA; ORW, NSW
STREAM INDEX: 27-149

A1 EROSION CONTROL NOTES
NOT TO SCALE

File Path: D:\00_PROJECTS\25603 BUILDING 7019 RENOVATIONS OLF ATLANTIC (MBP)\DWG\100.DWG
Print Date: 7/1/2026 2:12 PM

APPR	DATE	DESCRIPTION	SYM

NAVFAC

Digitally signed by John K Avolis
NORTH CAROLINA PROFESSIONAL SEAL 15738 ENGINEER JOHN K. AVOLIS
01 JUL 2026
SEAL

DESIGNED & ENGINEERED BY:
A·E Engineering P.A.
LICENSE NO. C-0706
AVOLIS ENGINEERING, P.A.
P.O. BOX 15564
NEW BERN, NC 28561
PH.(252) 633-0068
A/E INFO

APPROVED
FOR COMMANDER NAVFAC
ACTIVITY
SATISFACTORY TO

DES	JKA	DRW	MSP	CHK	JKA
PM/DM					L. PEED
BRANCH MANAGER					H. PERRY
CHIEF ENGR/CH					P. FAULKNER
FIRE PROTECTION					D. CHASTAIN

DEPARTMENT OF THE NAVY
NAVAL FACILITIES ENGINEERING COMMAND
NAVAL FACILITIES ENGINEERING COMMAND ~ MIDATLANTIC
NAVAL STATION ~ NORFOLK, VA.
MARINE CORPS AIR STATION
CHERRY POINT, NC
MCOLF ATLANTIC
BUILDING 7019 RENOVATIONS
DETAILS

SCALE:	AS NOTED
STATION DESIGN WON:	7406712
STATION CONSTRUCTION WON:	7406712
NAVFAC DRAWING NO.	12939440
SHEET	15 OF 148
	CG501

DRAWFORM REVISION: 25 AUGUST 2020

GROUND STABILIZATION AND MATERIALS HANDLING PRACTICES FOR COMPLIANCE WITH THE NCG01 CONSTRUCTION GENERAL PERMIT

Implementing the details and specifications on this plan sheet will result in the construction activity being considered compliant with the Ground Stabilization and Materials Handling sections of the NCG01 Construction General Permit (Sections E and F, respectively). The permittee MUST comply with the Erosion and Sediment Control plan approved by the delegated authority having jurisdiction. All details and specifications shown on this sheet may not apply depending on site conditions and the delegated authority having jurisdiction.

SECTION E: GROUND STABILIZATION

Required Ground Stabilization Timeframes		
Site Area Description	**Stabilize within this many calendar days after ceasing land disturbance**	**Timeframe variations**
(a) Perimeter dikes, swales, ditches, and perimeter slopes	7	None
(b) High Quality Water (HQW) Zones	7	None
(c) Slopes steeper than 3:1	7	If slopes are 10' or less in length and are not steeper than 2:1, 14 days are allowed
(d) Slopes 3:1 to 4:1	14	-7 days for slopes greater than 50' in length and with slopes steeper than 4:1 -7 days for perimeter dikes, swales, ditches, perimeter slopes and HQW Zones -10 days for Falls Lake Watershed
(e) Areas with slopes flatter than 4:1	14	-7 days for perimeter dikes, swales, ditches, perimeter slopes and HQW Zones -10 days for Falls Lake Watershed unless there is zero slope

Note: After the permanent cessation of construction activities, any areas with temporary ground stabilization MUST be converted to permanent ground stabilization as soon as practicable but in no case longer than 90 calendar days after the last land disturbing activity. Temporary ground stabilization MUST be maintained in a manner to render the surface stable against accelerated erosion until permanent ground stabilization is achieved.

GROUND STABILIZATION SPECIFICATION

Stabilize the ground sufficiently so that rain will not dislodge the soil. Use one of the techniques in the table below:

Temporary Stabilization	Perrnanent Stabilization
• Temporary grass seed covered with straw or other mulches and tackifiers • Hydroseeding • Rolled erosion control products with or without temporary grass seed • Appropriately applied straw or other mulch • Plastic sheeting	• Permanent grass seed covered with straw or other mulches and tackifiers • Geotextile fabrics such as permanent soil reinforcement matting • Hydroseeding • Shrubs or other permanent plantings covered with mulch • Uniform and evenly distributed ground cover sufficient to resrain erosion • Structural methods such as concrete, asphalt or retaining walls • Rolled erosion control products with grass seed

POLYACRYLAMIDES (PAMS) AND FLOCCULANTS

1. Select flocculants that are appropriate for the soils being exposed during construction, selecting from the *NC DWR List of Approved PAMS/Flocculants*.
2. Apply flocculants at or before the inlets to Erosion and Sediment Control Measures.
3. Apply flocculants at the concentrations specified in the *NC DWR List of Approved PAMS/Flocculants* and in accordance with the manufacturer's instructions.
4. Provide ponding area for containment of treated Stormwater before discharging offsite.
5. Store flocculants in leak-proof containers that are kept under storm-resistant cover or surrounded by secondary containment structures.

EQUIPMENT AND VEHICLE MAINTENANCE

1. Maintain vehicles and equipment to prevent discharge of fluids.
2. Provide drip pans under any stored equipment.
3. Identify leaks and repair as soon as feasible, or remove leaking equipment from the project.
4. Collect all spent fluids, store in separate containers and properly dispose as hazardous waste (recycle when possible).
5. Remove leaking vehicles and construction equipment from service until the problem has been corrected.
6. Bring used fuels, lubricants, coolants, hydraulic fluids and other petroleum products to a recycling or disposal center that handles these materials.

LITTER, BUILDING MATERIAL AND LAND CLEARING WASTE

1. Never bury or burn waste. Place litter and debris in approved waste containers.
2. Provide a sufficient number and size of waste containers (e.g dumpster, trash receptacle) on site to contain construction and domestic wastes.
3. Locate waste containers at least 50 feet away from storm drain inlets and surface waters unless no other alternatives are reasonably available.
4. Locate waste containers on areas that do not receive substantial amounts of runoff from upland areas and does not drain directly to a storm drain, stream or wetland.
5. Cover waste containers at the end of each workday and before storm events or provide secondary containment. Repair or replace damaged waste containers.
6. Anchor all lightweight items in waste containers during times of high winds.
7. Empty waste containers as needed to prevent overflow. Clean up immediately if containers overflow.
8. Dispose waste off-site at an approved disposal facility.
9. On business days, clean up and dispose of waste in designated waste containers.

PAINT AND OTHER LIQUID WASTE

1. Do not dump paint and other liquid waste into storm drains, streams or wetlands.
2. Locate paint washouts at least 50 feet away from storm drain inlets and surface waters unless no other alternatives are reasonably available.
3. Contain liquid wastes in a controlled area.
4. Containment must be labeled, sized and placed appropriately for the needs of site.
5. Prevent the discharge of soaps, solvents, detergents and other liquid wastes from construction sites.

PORTABLE TOILETS

1. Install portable toilets on level ground, at least 50 feet away from storm drains, streams or wetlands unless there is no alternative reasonably available. If 50 foot offset is not attainable, provide relocation of portable toilet behind silt fence or place on a gravel pad and surround with sand bags.
2. Provide staking or anchoring of portable toilets during periods of high winds or in high foot traffic areas.
3. Monitor portable toilets for leaking and properly dispose of any leaked material. Utilize a licensed sanitary waste hauler to remove leaking portable toilets and replace with properly operating unit.

EARTHEN STOCKPILE MANAGEMENT

1. Show stockpile locations on plans. Locate earthen-material stockpile areas at least 50 feet away from storm drain inlets, sediment basins, perimeter sediment controls and surface waters unless it can be shown no other alternatives are reasonably available.
2. Protect stockpile with silt fence installed along toe of slope with a minimum offset of five feet from the toe of stockpile.
3. Provide stable stone access point when feasible.
4. Stabilize stockpile within the timeframes provided on this sheet and in accordance with the approved plan and any additional requirements. Soil stabilization is defined as vegetative, physical or chemical coverage techniques that will restrain accelerated erosion on disturbed soils for temporary or permanent control needs.

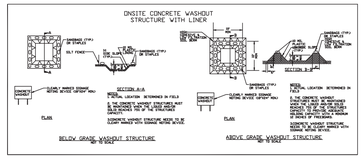

CONCRETE WASHOUTS

1. Do not discharge concrete or cement slurry from the site.
2. Dispose of, or recycle settled, hardened concrete residue in accordance with local and state solid waste regulations and at an approved facility.
3. Manage washout from mortar mixers in accordance with the above item and in addition place the mixer and associated materials on impervious barrier and within lot perimeter silt fence.
4. Install temporary concrete washouts per local requirements, where applicable. If an alternate method or product is to be used, contact your approval authority for review and approval. If local standard details are not available, use one of the two types of temporary concrete washouts provided on this detail.
5. Do not use concrete washouts for dewatering or storing defective curb or sidewalk sections. Stormwater accumulated within the washout may not be pumped into or discharged to the storm drain system or receiving surface waters. Liquid waste must be pumped out and removed from project.
6. Locate washouts at least 50 feet from storm drain inlets and surface waters unless it can be shown that no other alternatives are reasonably available. At a minimum, install protection of storm drain inlet(s) closest to the washout which could receive spills or overflow.
7. Locate washouts in an easily accessible area, on level ground and install a stone entrance pad in front of the washout. Additional controls may be required by the approving authority.
8. Install at least one sign directing concrete trucks to the washout within the project limits. Post signage on the washout itself to identify this location.
9. Remove leavings from the washout when at approximately 75% capacity to limit overflow events. Replace the tarp, sand bags or other temporary structural components when no longer functional. When utilizing alternative or proprietary products, follow manufacturer's instructions.
10. At the completion of the concrete work, remove remaining leavings and dispose of in an approved disposal facility. Fill pit, if applicable, and stabilize any disturbance caused by removal of washout.

HERBICIDES, PESTICIDES AND RODENTICIDES

1. Store and apply herbicides, pesticides and rodenticides in accordance with label restrictions.
2. Store herbicides, pesticides and rodenticides in their original containers with the label, which lists directions for use, ingredients and first aid steps in case of accidental poisoning.
3. Do not store herbicides, pesticides and rodenticides in areas where flooding is possible or where they may spill or leak into wells, stormwater drains, ground water or surface water. If a spill occurs, clean area immediately.
4. Do not stockpile these materials onsite.

HAZARDOUS AND TOXIC WASTE

1. Create designated hazardous waste collection areas on-site.
2. Place hazardous waste containers under cover or in secondary containment.
3. Do not store hazardous chemicals, drums or bagged materials directly on the ground.

NCG01 GROUND STABILIZATION AND MATERIALS HANDLING | EFFECTIVE: 04/01/19

PART III
SELF-INSPECTION, RECORDKEEPING AND REPORTING

SECTION A: SELF-INSPECTION

Self-inspections are required during normal business hours in accordance with the table below. When adverse weather or site conditions would cause the safety of the inspection personnel to be in jeopardy, the inspection may be delayed until the next business day on which it is safe to perform the inspection. In addition, when a storm event of equal to or greater than 1.0 inch occurs outside of normal business hours, the self-inspection MUST be performed upon the commencement of the next business day. Any time when

Inspect	**Frequency (during normal business hours)**	**Inspection records must include:**
(1) Rain gauge maintained in good working order	Daily	Daily rainfall amounts. If no daily rain gauge observations are made during weekend or holiday periods, and no individual-day rainfall information is available, record the cumulative rain measurement for those un-attended days (and this will determine if a site inspection is needed). Days on which no rainfall occurred shall be recorded as "zero." The permittee may use another rain-monitoring device approved by the Division.
(2) E&SC Measures	At least once per 7 calendar days and within 24 hours of a rain event ≥ 1.0 inch in 24 hours	1. Identification of the measures inspected, 2. Date and time of the inspection, 3. Name of the person performing the inspection, 4. Indication of whether the measures were operating properly, 5. Description of maintenance needs for the measure, 6. Description, evidence, and date of corrective actions taken.
(3) Stormwater discharge outfalls (SDOs)	At least once per 7 calendar days and within 24 hours of a rain event ≥ 1.0 inch in 24 hours	1. Identification of the discharge outfalls inspected, 2. Date and time of the inspection, 3. Name of the person performing the inspection, 4. Evidence of indicators of stormwater pollution such as oil sheen, floating or suspended solids or discoloration, 5. Indication of visible sediment leaving the site, 6. Description, evidence, and date of corrective actions taken.
(4) Perimeter of site	At least once per 7 calendar days and within 24 hours of a rain event ≥ 1.0 inch in 24 hours	If visible sedimentation is found outside site limits, then a record of the following shall be made: 1. Actions taken to clean up or stabilize the sediment that has left the site limits, 2. Description, evidence, and date of corrective actions taken, and 3. An explanation as to the actions taken to control future releases.
(5) Streams or wetlands onsite or offsite (where accesible)	At least once per 7 calendar days and within 24 hours of a rain event ≥ 1.0 inch in 24 hours	If the stream or wetland has increased visible sedimentation or a streams has visible increased turbidity from the construction activity, then a record of the following shall be made: 1. Description, evidence and date of corrective actions taken, and 2. Records of the required reports to the appropriate Division Regional Office per Part III, Section C, Item (2)(a) of this permit.
(6) Ground stabilization measures	After each phase of grading	1. The phase of grading (installation of perimeter E&SC measures, clearing and grubbing, installation of storm drainage facilities, completion of all land-disturbing activity, construction or redevelopment, permanent ground cover). 2. Documentation that the required ground stabilization measures have been provided within the required timeframe or an assurance that they will be provided as soon as possible.

NOTE: The rain inspection resets the required 7 calendar day inspection requirement.

PART III
SELF-INSPECTION, RECORDKEEPING AND REPORTING

SECTION B: RECORDKEEPING

1. E&SC Plan Documentation

The approved E&SC plan as well as any approved deviation MUST be kept on the site. The approved E&SC plan must be kept up-to-date throughout the coverage under this permit. The following items pertaining to the E&SC plan MUST be kept on site and available for

Item to Document	**Documentation Requirements**
(a) Each E&SC measure has been installed and does not significantly deviate from the locations, dimensions and relative elevations shown on the approved E&SC plan.	Initial and date each E&SC measure on a copy of the approved E&SC plan or complete, date and sign an inspection report that lists each E&SC measure shown on the approved E&SC plan. This documentation is required upon the initial installation of the E&SC measures or if the E&SC measures are modified after initial installation.
(b) A phase of grading has been completed.	Initial and date a copy of the approved E&SC plan or complete, date and sign an inspection report to indicate completion of the construction phase.
(c) Ground cover is located and installed in accordance with the approved E&SC plan.	Initial and date a copy of the approved E&SC plan or complete, date and sign an inspection report to indicate compliance with approved ground cover specifications.
(d) The maintenance and repair requirements for all E&SC measures have been performed.	Complete, date and sign an inspection report.
(e) Corrective actions have been taken to E&SC measures.	Initial and date a copy of the approved E&SC plan or complete, date and sign an inspection report to indicate the completion of the corrective action.

In addition to the E&SC plan documents above, the following items MUST be kept on the site and available for inspectors at all times during normal business hours, unless the Division provides a site-specific exemption based on unique site conditions that make this requirement not practical:

(a) This General Permit as well as the Certificate of Coverage, after it is received.

(b) Records of inspections made during the previous twelve months. The permittee MUST record the required observations on the Inspection Record Form provided by the Division or a similar inspection form that includes all the required elements. Use of electronically-available records in lieu of the required paper copies will be allowed if shown to provide equal access and utility as the hard-copy records.

3. Documentation to be Retained for Three Years

All data used to complete the e-NOI and all inspection records MUST be maintained for a period of three years after project completion and made available upon request. [40 CFR 122.41]

PART III
SELF-INSPECTION, RECORDKEEPING AND REPORTING

SECTION C: REPORTING

1. Occurrences that Must be Reported

Permittees MUST report the following occurrences:

(a) Visible sediment deposition in a stream or wetland.

(b) Oil spills if:
- They are 25 gallons or more,
- They are less than 25 gallons but cannot be cleaned up within 24 hours,
- They cause sheen on surface waters (regardless of volume), or
- They are within 100 feet of surface waters (regardless of volume).

(c) Releases of hazardous substances in excess of reportable quantities under Section 311 of the Clean Water Act (Ref: 40 CFR 110.3 and 40 CFR 117.3) or Section 102 of CERCLA (Ref: 40 CFR 302.4) or G.S. 143-215.85.

(d) Anticipated bypasses and unanticipated bypasses.

(e) Noncompliance with the conditions of this permit that may endanger health or the environment.

2. Reporting Timeframes and Other Requirements

After a permittee becomes aware of an occurrence that must be reported, he MUST contact the appropriate Division regional office within the timeframes and in accordance with the other requirements listed below. Occurrences outside normal business hours may also be reported to the Department's Environmental Emergency Center personnel at (800) 858-0368.

Occurrence	**Reporting Timeframes (After Discovery) and Other Requirements**
(a) Visible sediment deposition in a stream or wetland	• ***Within 24 hours***, an oral or electronic notification. • ***Within 7 calendar days,*** a report that contains a description of the sediment and actions taken to address the cause of the deposition. Division staff may waive the requirement for a written report on a case-by-case basis. • If the stream is named on the NC 303(d) list as impaired for sediment-related causes, the permittee may be required to perform additional monitoring, inspections or apply more stringent practices if staff determine that additional requirements are needed to assure compliance with the federal or state impaired-waters conditions.
(b) Oil spills and release of hazardous substances per Item 1(b)-(c) above	• ***Within 24 hours***, an oral or electronic notification. The notification shall include information about the date, time, nature, volume and location of the spill or release.
(c) Anticipated bypasses [40 CFR 122.41(m)(3)]	• ***A report at least ten days before the date of the bypass, if possible***. The report shall include an evaluation of the anticipated quality and effect of the bypass.
(d) Unanticipated bypasses [40 CFR 122.41(m)(3)]	• ***Within 24 hours,*** an oral or electronic notification. • ***Within 7 calendar days,*** a report that includes an evaluation of the quality and effect of the bypass.
(e) Noncompliance with the conditions of this permit that may endanger health or the environment[40 CFR 122.41(l)(7)]	• ***Within 24 hours***, an oral or electronic notification. • ***Within 7 calendar days,*** a report that contains a description of the noncompliance, and its causes; the period of noncompliance, including exact dates and times, and if the noncompliance has not been corrected, the anticipated time noncompliance is expected to continue; and steps taken or planned to reduce, eliminate, and prevent reoccurrence of the noncompliance. [40 CFR 122.41(l)(6). • Division staff may waive the requirement for a written report on a case-by-case basis.

PART II, SECTION G, ITEM (4)
DRAW DOWN OF SEDIMENT BASINS FOR MAINTENANCE OR CLOSE OUT

Sediment basins and traps that receive runoff from drainage areas of one acre or more MUST use outlet structures that withdraw water from the surface when these devices need to be drawn down for maintenance or close out unless this is infeasible. The circumstances in which it is not feasible to withdraw water from the surface MUST be rare (for example, times with extended cold weather). Non-surface withdrawals from sediment basins MUST be allowed only when all of the following criteria have been met:

(a) The E&SC plan authority has been provided with documentation of the non-surface withdrawal and the specific time periods or conditions in which it will occur. The non-surface withdrawal MUST not commence until the E&SC plan authority has approved these items,
(b) The non-surface withdrawal has been reported as an anticipated bypass in accordance with Part III, Section C, Item (2)(c) and (d) of this permit,
(c) Dewatering discharges are treated with controls to minimize discharges of pollutants from stormwater that is removed from the sediment basin. Examples of appropriate controls include properly sited, designed and maintained dewatering tanks, weir tanks, and filtration systems,
(d) Vegetated, upland areas of the sites or a properly designed stone pad is used to the extent feasible at the outlet of the dewatering treatment devices described in Item (c) above,
(e) Velocity dissipation devices such as check dams, sediment traps, and riprap are provided at the discharge points of all dewatering devices, and
(f) Sediment removed from the dewatering treatment devices described in Item (c) above is disposed of in a manner that does not cause deposition of sediment into waters of the United States.

NCG01 SELF-INSPECTION, RECORDKEEPING AND REPORTING | EFFECTIVE: 04/01/19

APPR	DATE	DESCRIPTION	SYM

NAVFAC

Digitally signed by John K Avolis
NORTH CAROLINA PROFESSIONAL ENGINEER JOHN K. AVOLIS
SEAL 15758
01 JUL 2026
SEAL

DESIGNED & ENGINEERED BY:

A·E Engineering P.C.
LICENSE NO. C-0706

AVOLIS ENGINEERING, P.A.
P.O. BOX 15564
NEW BERN, NC 28561
PH.(252) 633-0068
A/E INFO

APPROVED

FOR COMMANDER NAVFAC

ACTIVITY

SATISFACTORY TO

DES	JKA	DRW	MSP	CHK	JKA
PM/IM					L. PEED
BRANCH MANAGER					H. PERRY
CHIEF ENGR/CH					P. FAULKNER
FIRE PROTECTION					D. CHASTAIN

DEPARTMENT OF THE NAVY
NAVAL FACILITIES ENGINEERING COMMAND
MARINE CORPS AIR STATION
BFF MARINE CORPS

NAVAL FACILITIES ENGINEERING COMMAND ~ MIDATLANTIC
NAVAL STATION - NORFOLK, VA.

CHERRY POINT, NC

MCOLF ATLANTIC
BUILDING 7019 RENOVATIONS

DETAILS

SCALE: AS NOTED
STATION DESIGN WON: 7406712
STATION CONSTRUCTION WON: 7406712
NAVFAC DRAWING NO: 12939441
SHEET 16 OF 148

CG502

DRAWFORM REVISION: 25 AUGUST 2020

File Path: D:\00_PROJECTS\25033 BUILDING 7019 RENOVATIONS OLF ATLANTIC (MBF)\DWG\100.DWG
Print Date: 7/1/2026 2:12 PM

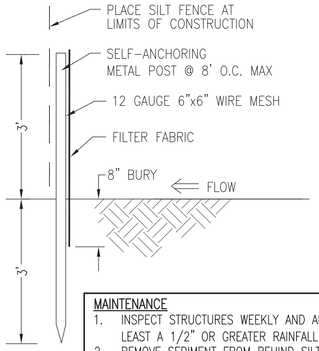

MAINTENANCE

1. INSPECT STRUCTURES WEEKLY AND AFTER AT LEAST A 1/2" OR GREATER RAINFALL EVENT.
2. REMOVE SEDIMENT FROM BEHIND SILT FENCE PRIOR TO IT REACHING A MAXIMUM DEPTH OF SIX (6) INCHES.

C1 SILT FENCE

NOT TO SCALE

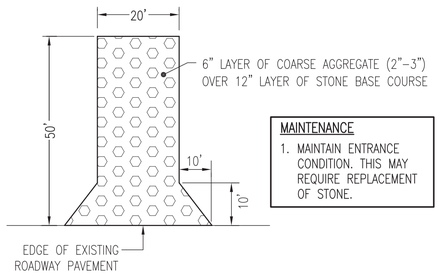

MAINTENANCE

1. MAINTAIN ENTRANCE CONDITION. THIS MAY REQUIRE REPLACEMENT OF STONE.

B1 GRAVEL CONTROL ENTRANCE

NOT TO SCALE

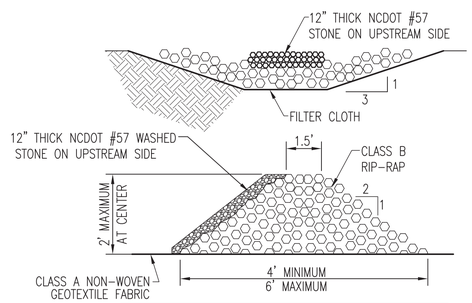

MAINTENANCE

1. CONSTRUCT CHECK DAM OF RIP-RAP STONE PLACED IN ACCORDANCE WITH DETAIL.
2. SEDIMENT BEHIND THE CHECK DAM MUST BE REMOVED PRIOR TO THE LEVEL REACHING WITHIN 6" OF THE CENTERLINE CREST OF THE DAM.
3. SHOULD SCOUR DEVELOP AT THE DOWNSTREAM END, IT MUST BE REPAIRED IMMEDIATELY.

A1 CHECK DAM

NOT TO SCALE

File Path: D:\00_PROJECTS\26033 BUILDING 7019 RENOVATIONS OLF ATLANTIC (MBF)\DWG\100.DWG
Print Date: 7/17/2026 2:12 PM

SYM	DESCRIPTION	DATE	APPR

NAVFAC

Digitally signed by John K Avolis
NORTH CAROLINA PROFESSIONAL SEAL 15738 ENGINEER JOHN K. AVOLIS
01 JUL 2026

SEAL

DESIGNED & ENGINEERED BY:

A-E Engineering P.A.
LICENSE NO. C-0706

AVOLIS ENGINEERING, P.A.
P.O. BOX 15564
NEW BERN, NC 28561
PH.(252) 633-0068

A/E INFO

APPROVED

FOR COMMANDER NAVFAC

ACTIVITY

SATISFACTORY TO

DES	JKA	DRW	MSP	CHK	JKA

PM/DM	L. PEED
BRANCH MANAGER	H. PERRY
CHIEF ENGR/ARCH	P. FAULKNER
FIRE PROTECTION	D. CHASTAIN

DEPARTMENT OF THE NAVY
NAVAL FACILITIES ENGINEERING COMMAND
1ST MARINE CORPS
MARINE CORPS AIR STATION

NAVAL FACILITIES ENGINEERING COMMAND ~ MIDATLANTIC
NAVAL STATION, NORFOLK, VA.

CHERRY POINT, NC

MCOLF ATLANTIC
BUILDING 7019 RENOVATIONS

DETAILS

SCALE:	AS NOTED
STATION DESIGN WON:	7406712
STATION CONSTRUCTION WON:	7406712
NAVFAC DRAWING NO.	12939442
SHEET	17 OF 148

CG503

DRAWFORM REVISION: 25 AUGUST 2020

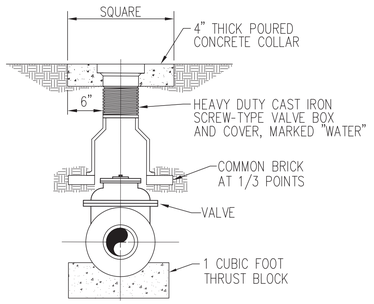

C1 VALVE AND VALVE BOX

NOT TO SCALE

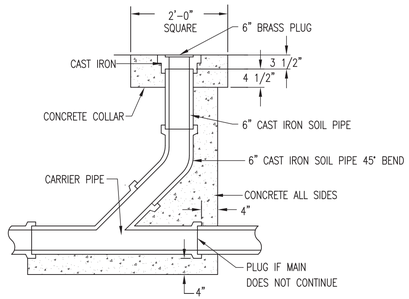

C3 CLEANOUT

NOT TO SCALE

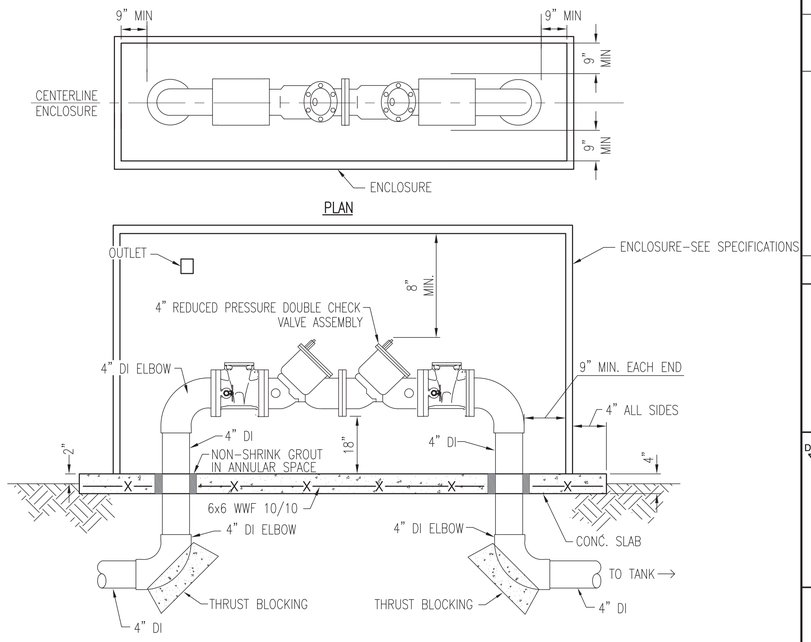

C4 BACKFLOW ASSEMBLY AND ENCLOSURE

NOT TO SCALE

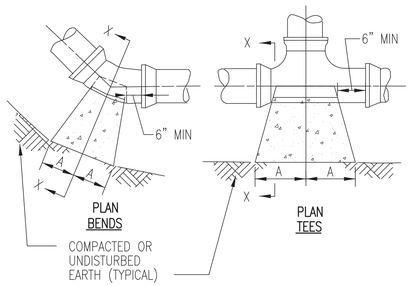

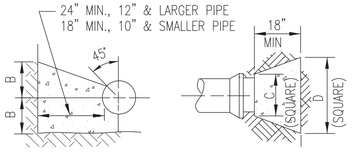

SIZE	1/4 BENDS		1/8 BENDS		1/16 BENDS		TEES		PLUGS	
	A	B	A	B	A	B	A	B	C	D
6"	16"	10"	9"	10"	6"	8"	10"	12"	10"	21"
8"	22"	13"	12"	13"	8"	10"	13"	16"	12"	29"
10"	26"	17"	14"	17"	10"	13"	16"	20"	14"	36"
12"	29"	21"	16"	21"	11"	16"	18"	24"	16"	41"
14"	35"	24"	19"	24"	12"	20"	22"	27"	18"	48"
16"	38"	27"	21"	27"	12"	24"	24"	30"	20"	54"

A1 THRUST BLOCKING

NOT TO SCALE

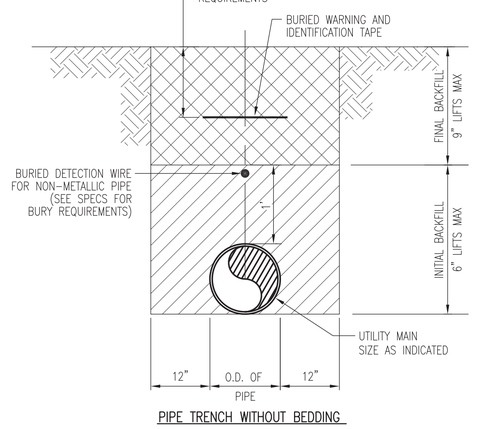

A3 PIPE TRENCH SECTION

NOT TO SCALE

SYM	DESCRIPTION	DATE	APPR

NAVFAC

Digitally signed by John K Avolis
NORTH CAROLINA PROFESSIONAL SEAL 15738 ENGINEER JOHN K. AVOLIS
01 JUL 2026
SEAL

DESIGNED & ENGINEERED BY:

A·E Engineering P.A.
LICENSE NO. C-0706

AVOLIS ENGINEERING, P.A.
P.O. BOX 15564
NEW BERN, NC 28561
PH.(252) 633-0068

A/E INFO

APPROVED

FOR COMMANDER NAVFAC

ACTIVITY

SATISFACTORY TO

DES	JKA	DRW	MSP	CHK	JKA
PM/CM					L. PEED
BRANCH MANAGER					H. PERRY
CHIEF ENGR/ACH					P. FAULKNER
FIRE PROTECTION					D. CHASTAIN

DEPARTMENT OF THE NAVY
NAVAL FACILITIES ENGINEERING COMMAND
2ST MARINE CORPS
MARINE CORPS AIR STATION

NAVAL FACILITIES ENGINEERING COMMAND ~ MIDATLANTIC
NAVAL STATION ~ NORFOLK, VA

CHERRY POINT, NC

MCOLF ATLANTIC
BUILDING 7019 RENOVATIONS

DETAILS

SCALE:	AS NOTED
STATION DESIGN WON:	7406712
STATION CONSTRUCTION WON:	7406712
NAVFAC DRAWING NO.	12939443
SHEET	18 OF 148

CU501

DRAWFORM REVISION: 25 AUGUST 2020

File Path: D:\00_PROJECTS\25033 BUILDING 7019 RENOVATIONS OLF ATLANTIC (NBF)\DWG\100.DWG
Print Date:: 7/1/2026 2:12 PM

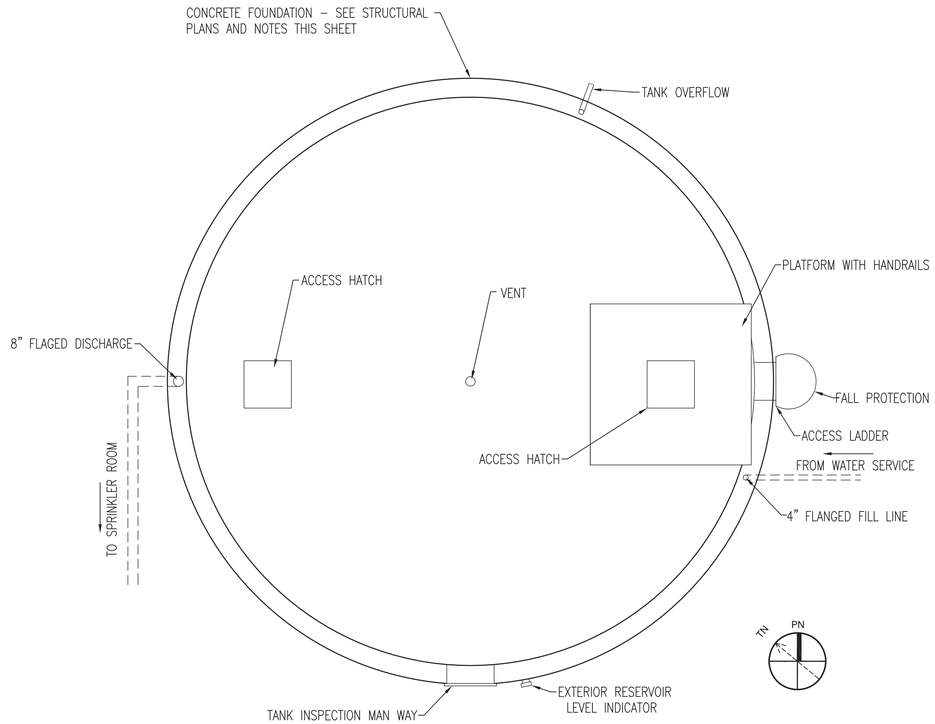

PLAN

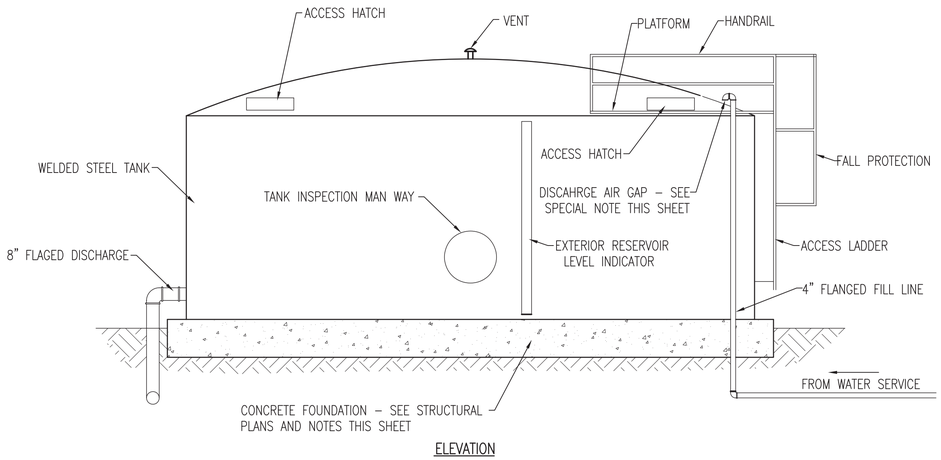

ELEVATION

A1 NON-POTABLE 56,000 U.S. GALLON RESERVOIR

NOT TO SCALE

DESIGN CRITERIA:

RESERVOIR CAPACITY AND DIMENSIONS:

MINIMUM RESERVOIR CAPACITY – 56,000 US GALLONS
MINIMUM USABLE RESERVOIR CAPACITY – 52,200 US GALLONS
TANK DIAMETER – 30 FEET (APPROXIMATE)
TANK HEIGHT – 14 FEET (APPROXIMATE)

SEISMIC:

SITE CATEGORY B
SITE CLASS D
IMPORTANCE FACTOR 1.0

DESIGN WIND LOADING:

ULTIMATE WIND SPEED: 139 MPH
NOMINAL WIND SPEED: 107 MPH
WIND EXPOSURE CATEGORY: D

ROOF LIVE LOAD: 20 PSF
GROUND SNOW LOAD: 31 PSF

NOTES:

1. THE CONTRACTOR MUST PROVIDE A COMPLETE FIRE RESERVOIR STRUCTURE IN STRICT ACCORDANCE WITH AWWA D100 AND NFPA 22 CONNECTED TO THE FIRE SUPPRESSION SYSTEM IN BUILDING 7019 AS SHOWN ON THE CONTRACT DOCUMENTS, COMPLETE AND READY FOR USE. SEE SPECIFICATION SECTION 33 16 15 "WATER STORAGE STEEL RESERVOIR" FOR ADDITIONAL REQUIREMENTS.
2. THE CONTRACTOR MUST PROVIDE A COMPLETE WATER RESERVOIR INCLUDING DESIGN IN STRICT COMPLIANCE WITH AWWA D100, ASCE 7-16 AND NFPA 22.
3. THE RESERVOIR DESIGN AND FINAL PRODUCT MUST INCLUDE, BUT IS NOT LIMITED TO, THE FOLLOWING MAJOR ELEMENTS:
   A. WELDED STEEL TANK WITH INTERIOR AND EXTERIOR COATING SYSTEMS.
   B. CONCRETE FOUNDATION
   C. CATHODIC PROTECTION SYSTEM
   D. LIGHTENING PROTECTION SYSTEM
   E. AUTOMATIC FILL/LEVEL CONTROL SYSTEM
   F. HEATING SYSTEM
   G. EXTERIOR RESERVOIR LEVEL INDICATING SYSTEM
   H. FULL INTEGRATION OF TANK LEVEL AND ALARM SYSTEMS WITH FIRE SUPPRESSION SYSTEM
   I. ROOF ACCESS HATCHES (2 MINIMUM) AND TANK INSPECTION MAN WAY.
   J. ACCESS LADDER WITH FALL PROTECTION.
   K. PLATFORM AND HANDRAILS FOR TANK ACCESS.
4. THE RESERVOIR FOUNDATION DESIGN DEPICTED ON THE STRUCTURAL PLANS MUST BE CONSIDERED TO REPRESENT MINIMUM FOUNDATION REQUIREMENTS. THE CONTRACTOR MUST ENGAGE A NORTH CAROLINA REGISTERED ENGINEER TO DESIGN THE RESERVOIR FOUNDATION TO PROPERLY SUPPORT THE TANK DESIGN SELECTED.

SPECIAL NOTES:

1. NON-POTABLE STORAGE TANKS MUST HAVE A PHYSICAL BREAK FOR BACKFLOW PREVENTION. THE CONTRACTOR MUST PROVIDE A MINIMUM 8" AIR GAP BETWEEN THE SUPPLY LINE OUTLET INVERT AND THE MAXIMUM FILL LEVEL LINE OF THE STORAGE TANK.

SYM	DESCRIPTION	DATE	APPR

NAVFAC

Digitally signed by John K Avolis
NORTH CAROLINA PROFESSIONAL SEAL 15738 ENGINEER JOHN K. AVOLIS
01 JUL 2026
SEAL

DESIGNED & ENGINEERED BY:

A·E Engineering P.A.
LICENSE NO. C-0706

AVOLIS ENGINEERING, P.A.
P.O. BOX 15564
NEW BERN, NC 28561
PH.(252) 633-0068

A/E INFO

APPROVED

FOR COMMANDER NAVFAC

ACTIVITY

SATISFACTORY TO

DES	JKA	DRW	MSP	CHK	JKA
PM/DM					L. PEED
BRANCH MANAGER					H. PERRY
CHIEF ENGR/CH					P. FAULKNER
FIRE PROTECTION					D. CHASTAIN

DEPARTMENT OF THE NAVY
DT MARINE CORPS
MARINE CORPS AIR STATION
NAVAL FACILITIES ENGINEERING COMMAND
NAVAL FACILITIES ENGINEERING COMMAND – MIDATLANTIC
NAVAL STATION - NORFOLK, VA
CHERRY POINT, NC

MCOLF ATLANTIC
BUILDING 7019 RENOVATIONS

DETAILS

SCALE:	AS NOTED
STATION DESIGN WON:	7406712
STATION CONSTRUCTION WON:	7406712
NAVFAC DRAWING NO.	12939444
SHEET	19 OF 148

CU502

DRAWFORM REVISION: 25 AUGUST 2020

File Path: D:\00_PROJECTS\25033 BUILDING 7019 RENOVATIONS OLF ATLANTIC (NBF)\DWG\100.DWG
Print Date: 7/1/2026 2:12 PM

DESIGN BASIS:

DESIGN CRITERIA

1. BUILDING CODES.....2024 IBC "INTERNATIONAL BUILDING CODE"
UFC 1-200-01, CHANGE 4, 17 DEC 2024 "DOD BUILDING CODE"
UFC 3-301-01, CHANGE 3, 03 FEB 2025 "STRUCTURAL ENGINEERING"
UFC 4-010-01, CHANGE 3, 24 MAY 2024 "MINIMUM ANTI-TERRORISM STANDARDS FOR BUILDINGS"
2. BUILDING RISK CATEGORY..... II
3. SUPERIMPOSED DEAD LOADS:
   a) ROOF..... 15 PSF
4. DESIGN LIVE LOADS:
   a) ROOF..... 20 PSF
   b) MECHANICAL/ELECTRICAL ROOM .....125 PSF
   c) STORAGE ..... 125 PSF
   d) LOBBIES AND FIRST FLOOR CORRIDORS ..... 100 PSF
   e) PRIVATE ROOMS..... 40 PSF
   f) PUBLIC ROOMS..... 100 PSF
5. SNOW:
   a) GROUND SNOW LOAD ..... 31 PSF
   b) FLAT ROOF SNOW LOAD..... 22 PSF
   c) SNOW EXPOSURE FACTOR, Ce 1.0
   d) IMPORTANCE FACTOR, Is 1.0
   e) THERMAL FACTOR, Ct 1.0
6. WIND
   a) ULTIMATE WIND SPEED ..... 139 MPH
   b) NOMINAL WIND SPEED..... 107 MPH
   c) WIND EXPOSURE CATEGORY..... B
   d) INTERNAL PRESSURE COEFFICIENT 0.18
   e) ROOF COMPONENTS AND CLADDING ..... SEE TABLE ON SHEET S001
   f) WALL COMPONENTS AND CLADDING ..... SEE TABLE ON SHEET S001
7. SEISMIC:
   a) SITE CLASS ..... D
   b) IMPORTANCE FACTOR, Ie 1.0
   c) MAPPED SPECTRAL RESPONSE ACCELERATION, Ss ..... 0.140 G
   d) ONE SECOND PERIOD SPECTRAL RESPONSE COEFF., S1..... 0.052 G
   e) SHORT PERIOD SPECTRAL RESPONSE COEFFICIENT, SDS ..... 0.120 G
   f) ONE SEC PERIOD SPECTRAL RESPONSE COEFFICIENT, SD1..... 0.073 G
   g) SEISMIC RESPONSE COEFFICIENT, Cs 0.047
   h) RESPONSE MODIFICATION FACTOR, R.....EXISTING BUILDING
   i) SEISMIC DESIGN CATEGORY ..... B
   j) BASIC SEISMIC FORCE RESISTING SYSTEM ..... EXISTING BUILDING
   k) ANALYSIS PROCEDURE ..... EQUIVALENT LATERAL FORCE
   l) SEISMIC BASE SHEAR ..... $V_X = V_Y =$ EXISTING BUILDING
8. RAIN:
   a) RAIN INTENSITY, i ..... 4.25 IN/HR

ABBREVIATIONS:

A.B.	Anchor Bolt	F.O.S.	Face of Steel (Studs)	P.C.F.	Pounds per Cubic Foot
A.C.I.	American Concrete Institute	F.S.	Far Side	PENT.	Penetration
ADJ.	Adjacent	FT.	Feet	PEMB.	Pre-Engineered Metal Building
A.F.F.	Above Finished Floor	FTG	Footing	PL.	Plate, Property Line
AL.	Aluminum	FUT.	Future	P L	Plate
ALT.	Alternate	GA	Gauge	PLY.	Plywood
A.P.A.	American Plywood Institute	GAL	Galvanized	PNL.	Panel
ARCH.	Architect	G.B.	Grade Beam	P.S.F.	Pounds per Square Foot
A.S.T.M.	American Society for Testing Materials	GB	Grade Beam	P.S.I.	Pounds per Square Inch
		GD	Grade, Grading	R.,RAD.	Radius
BLW.	Below	GLB	Glued Laminated	REF.	Reference
BETWN.	Between	G.T.	Girder Truss	REINF.	Reinforcement
BLK.	Block	GUSS.	Gusset	REQ.	Required
BLKG	Blocking	HD	Hold Down	RET.	Return
BM	Beam	HDR	Header	REV.	Revision, Revised
B.O.F.	Bottom of Footing	HGR	Hanger	RF.	Roof
BOTT	Bottom	HORIZ	Horizontal	RFT.	Rafters
C	Channel	H.P.	High Point	RM.	Room
C.I.P.	Cast-in-Place	HT	Height	R.O.	Rough Opening
C.J.	Control Joint / Ceiling Joist	H.V.A.C	Heating/Ventilation/ Air Conditioning	R.S.	Rough Sawn
CLG	Ceiling			R.T.	Roof Truss
CLR	Clear	IBC	International Building Code	S.	South
CMU	Concrete Masonry Unit	I.D.	Inside Diameter	SCHED.	Schedule
COL	Column	IN	Inch	SEC.	Section
CONC	Concrete	INCL	Include	SEP.	Separation
CONN	Connection	INFO	Information	SHT.	Sheet
CONST	Construction	INS	Insulated	SIM.	Similar
CONT	Continuous	INT.	Interior	SLRS	Seismic Lateral Resisting System
DBL	Double	JST	Joist	SPEC.	Specification(s)
DEG	Degree	JT.	Joint	SQ.	Square
DEM	Demolish, Demolition	L	Length, Angle	S.S.	Stainless Steel
DEP	Depressed	LAM	Laminated	STD.	Standard
DIA	Diameter	LB	Pound	STIFF.	Stiffener
DIAG	Diagonal	LG	Long	STL.	Steel
DIM	Dimension	L.L.	Live Load	STRUCT	Structural
DO	Ditto	L.L.H.	Long Leg Horizontal	SUSP.	Suspended
D.T.	Drag Truss	L.L.V.	Long Leg Vertical	SYM	Symmetrical
DWG	Drawing	L.P.	Low Point	T&B	Top & Bottom
DWL	Dowel	LVR	Louver	T&G	Tongue & Groove
(E)	Existing	MAS	Masonry	THK	Thick, Thickness
EA.	Each	MAX	Maximum	T.O.B.	Top of Beam
E.F.	Each Face	MCJ	Masonry Control Joint	T.O.C.	Top of Concrete
E.J.	Expansion Joint	MECH	Mechanical	T.O.F.	Top of Footing
ELEC	Electric, Electrical	MED	Medium	T.O.P.	Top of Parapet
ELEV	Elevation	MEZZ	Mezzanine	T.O.S.	Top of Steel
EQ.	Equal	MFR	Manufacture, Manufacturer	T.O.W	Top of Wall
EQPT.	Equipment	MIN	Minimum	T.S.	Tube Steel
E.S.	Each Side	MISC	Miscellaneous	TYP.	Typical
E.W.	Each Way	M.O.	Masonry Opening	U.N.O.	Unless Noted Otherwise
EXIST.	Existing	MTL	Metal	U.O.N.	Unless Otherwise Noted
EXP.	Expansion	N.	North	V.B.	Vapor Barrier
EXT.	Exterior	N.I.C.	Not In Contract	VERT.	Vertical
F.F.	Finished Floor	NO.	Number	W/	With
F.G.	Finish Grade	NOM	Nominal	W.	West
FIN	Finish, Finished	N.S.	Near Side	WD.	Wood
F.J.	Floor Joist	N.T.S.	Not To Scale	W/O	Without
FLR	Floor, Flooring	O.C.	On Center	W.P.	Water Proof
F.N.	Field Nail	O.D.	Outside Diameter	W.PT.	Working Point
FND	Foundation	O.H.	Opposite Hand, Overhead	WT.	Weight
F.O.	Face Of	OPNG	Opening	W.W.F.	Welded Wire Fabric
F.O.C	Face of Concrete	P.A.F.	Powder Acuated Fasteners	W.W.M	Welded Wire Mesh
F.O.M.	Face of Masonry	PAR.	Parallel		

SHOP DRAWINGS/SUBMITTALS:

1. SEE SPECIFICATIONS AND DEFERRED SUBMITTAL REQUIREMENTS ON SHEET S-002 FOR REQUIRED SHOP DRAWING AND SUBMITTAL REQUIRMENTS TO BE PROVIDED TO THE CONTRACTING OFFICER FOR REVIEW AND COMMENT.
2. STEEL REINFORCING LISTS AND QUANTITIES AND LENGTH OF ALL MATERIALS ARE THE RESPONSIBILITY OF THE CONTRACTOR TO ASSURE COMPLIANCE WITH THE PLANS. THE ENGINEER WILL NOT REVIEW THESE ITEMS.
3. REVIEW OF SHOP DRAWINGS IS FOR THE PURPOSE OF GENERAL COMPLIANCE WITH THE CONTRACT DOCUMENTS. ALL ERRORS IN DETAILING, FABRICATION, AND CORRECT FITTING OF ALL STRUCTURAL MEMBERS INCLUDING COORDINATION WITH OTHER TRADES ARE THE RESPONSIBILITY OF THE CONTRACTOR. SHOP DRAWING SUBMITTAL REVIEW DOES NOT CONSTITUTE CHANGE ORDERS. ANY PROPOSED CHANGES MUST BE SUBMITTED IN A LETTER OR DETAIL FOR APPROVAL.
4. SHOP DRAWINGS MUST BE SUBMITTED AT LEAST TWO WEEKS PRIOR TO THE SCHEDULED FABRICATION DATE.
5. REPRODUCTION OF THESE STRUCTURAL DRAWINGS IS PROHIBITED FOR THE PURPOSE OF PREPARING SHOP DRAWINGS. SUBCONTRACTOR/FABRICATOR MUST PROVIDE INDEPENDENTLY CREATED DRAWINGS BASED ON THE INFORMATION SHOWN IN THE CONTRACT DOCUMENTS.

SYMBOLS:

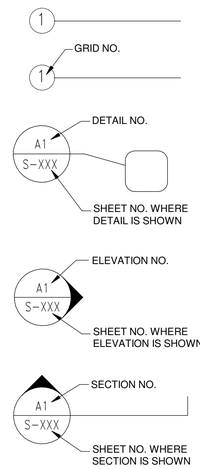

GRID LINES - CENTER LINE

GRID LINES - F.O. STUD/WALL

DETAIL BUBBLE

ELEVATION

SECTION

SHEET INDEX	
SHEET NO	SHEET TITLE
S-001	GENERAL NOTES
S-002	STRUCTURAL NOTES
S-003	STRUCTURAL NOTES CONT.
S-101	FOUNDATION PLAN
S-102	ROOF FRAMING PLAN
S-201	SECTIONS
S-501	TYPICAL CONSTRUCTION DETAILS
S-502	TYPICAL CONSTRUCTION DETAILS

COMPONENTS & CLADDING NEW DESIGN WIND PRESSURE (ULTIMATE)

	ZONE	EFFECTIVE WIND AREA	(+) PRESSURE (PSF)	(-) PRESSURE (PSF)
ROOF	1	10	36	-64
	1	20	31	-57
	1	50	25	-47
	1	100	20	-40
	2	10	36	-88
	2	20	31	-79
	2	50	25	-66
	2	100	20	-57
	3	10	36	-88
	3	20	31	-79
	3	50	25	-66
	3	100	20	-57
WALLS	4	10	48	-52
	4	20	46	-50
	4	50	48	-47
	4	100	41	-45
	4	500	36	-40
	5	10	48	-64
	5	20	46	-60
	5	50	48	-54
	5	100	41	-50
	5	500	36	-40

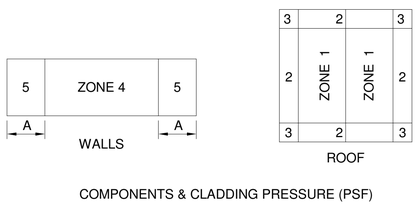

COMPONENTS & CLADDING PRESSURE (PSF)

APPR
DATE
DESCRIPTION
SYM

NAVFAC

NORTH CAROLINA PROFESSIONAL ENGINEER SEAL 032586 LUCAS G. A GELO
01 JUL 2026 SEAL

k-ce kaydos-daniels engineers, plc
718 w lane st raleigh nc 27603
T 919 828 4966 kaydos-daniels.com

A/E INFO
APPROVED
FOR COMMANDER NAVFAC
ACTIVITY
SATISFACTORY TO
DES LGG | DRW HON | CHK LGG
PM/DM L. PEED
BRANCH MANAGER H. PERRY
CHIEF ENG/ARCH P. FAULKNER
FIRE PROTECTION D. CHASTAIN

DEPARTMENT OF THE NAVY
NAVAL FACILITIES ENGINEERING COMMAND ~ MIDATLANTIC
NAVAL STATION - NORFOLK, VA
CHERRY POINT, NC
[PT MARINE]
MARINE CORPS AIR STATION
MCOLF ATLANTIC
BUILDING 7019 RENOVATIONS
GENERAL NOTES

SCALE: AS INDICATED
STATION DESIGN WON: 7406712
STATION CONSTRUTION WON: 7406712
NAVFAC DRAWING NO. 12939445
SHEET 20 OF 148
S-001

DRAWFORM REVISION: 25 AUGUST 2020

7/1/2026 12:06:14 PM S-001
C:\Users\lucas.KAYDOS-DANIELS\Documents\2509 B7019 STRUCT 2023_lgpk023.rvt

STRUCTURAL NOTES

1. GENERAL NOTES:

1. THE PROJECT SPECIFICATIONS (A BOOK OF SPECIFICATIONS WHEN PROVIDED) ARE A PART OF THE CONTRACT DOCUMENTS. IF THERE IS A DISCREPANCY FOUND BETWEEN THE SPECIFICATIONS AND THE DRAWINGS, SPECIFICATIONS TAKE PRECEDENCE, HOWEVER THE MATTER MUST BE PROMPTLY SUBMITTED TO THE CONTRACTING OFFICER FOR CLARIFICATION. WORK PERFORMED BY THE CONTRACTOR WITHOUT SUCH A CLARIFICATION MUST BE AT CONTRACTOR'S OWN RISK AND EXPENSE.
2. EXAMINE THE STRUCTURAL DRAWINGS AND THE SPECIFICATIONS AND NOTIFY THE ENGINEER & CONTRACTING OFFICER OF DISCREPANCIES IN ELEVATIONS, DIMENSIONS, AND SITE CONDITIONS INCLUDING ERRORS BEFORE PROCEEDING WITH WORK. OMISSIONS AND CONFLICTS BETWEEN THE VARIOUS ELEMENTS OF THE DRAWINGS (AND SPECIFICATIONS) MUST BE RESOLVED IN WRITING WITH THE ENGINEER/ARCHITECT & CONTRACTING OFFICER PRIOR TO START OF WORK.
3. THE DRAWINGS (AND SPECIFICATIONS) REPRESENT THE COMPLETED STRUCTURE. THEY DO NOT INDICATE THE METHOD OF CONSTRUCTION. PROVIDE ALL MEASURES AND MEANS NECESSARY TO PROTECT PERSONS AND THE STRUCTURE DURING CONSTRUCTION. SUCH MEASURES MUST INCLUDE, BUT NOT BE LIMITED TO BRACING, SHORING, ETC. OBSERVATION VISITS BY THE ARCHITECT OR ENGINEER DOES NOT INCLUDE REVIEW OF THESE MEASURES.
4. TYPICAL DETAILS MUST BE USED WHENEVER APPLICABLE WHETHER SPECIFICALLY REFERENCED OR NOT.
5. DRAWINGS MUST NOT BE SCALED FOR CONSTRUCTION PURPOSES.
6. PIPES OR DUCTS MUST NOT BE PLACED IN STRUCTURAL MEMBERS UNLESS SPECIFICALLY DETAILED OR APPROVED BY THE ENGINEER & CONTRACTING OFFICER.
7. REFER TO ARCHITECTURAL DRAWINGS FOR THE FOLLOWING:
   A. SIZE AND LOCATION OF DOOR AND WINDOW OPENINGS, UNLESS OTHERWISE NOTED.
   B. SIZE AND LOCATION OF INTERIOR AND EXTERIOR NON-BEARING PARTITIONS.
   C. SIZE AND LOCATION OF CURBS, FLOOR DRAINS, SLOPES, DEPRESSED AREAS, CHANGES IN LEVEL, RAMPS, CHAMFERS, GROOVES, INSERTS, ETC., EXCEPT AS SHOWN.
   D. SIZE AND LOCATION OF FLOOR AND ROOF OPENINGS, EXCEPT AS SHOWN.
   E. FLOOR AND ROOF FINISHES.
   F. STAIR FRAMING AND DETAILS, EXCEPT AS SHOWN.
   G. DIMENSIONS NOT SHOWN ON STRUCTURAL DRAWINGS.
8. REFER TO MECHANICAL, PLUMBING, AND ELECTRICAL DRAWINGS FOR THE FOLLOWING:
   A. PIPE RUNS, SLEEVES, HANGERS, TRENCHES, SLAB OPENINGS, ETC., EXCEPT AS SHOWN OR NOTED.
   B. ELECTRICAL CONDUITS, BOXES, OUTLETS.
   C. CONCRETE INSERTS FOR ELECTRICAL, MECHANICAL AND PLUMBING FIXTURES.
   D. SIZE AND LOCATION OF MACHINE AND EQUIPMENT BASES, ANCHOR BOLTS, ETC.
9. ASTM REFERENCES ARE FROM THE LATEST ISSUE AND LATEST REVISION, UNLESS OTHERWISE NOTED.
10. INVESTIGATE THE SITE DURING CLEARING AND EXCAVATION FOR UNSUITABLE CONDITIONS, UNCONSOLIDATED AND UNDOCUMENTED FILLS, BURIED STRUCTURES, UTILITIES, ETC., AND IMMEDIATELY NOTIFY THE ARCHITECT/ENGINEER & CONTRACTING OFFICER OF SITE CONDITIONS NOT REFLECTED ON THE DRAWINGS OR DIFFERENT FROM MAXIMUM OR MINIMUM DIMENSIONS INDICATED, INCLUDING CONFLICT IN GRADES, ADVERSE SOIL CONDITIONS, GROUNDWATER PRESENT, DEEPENED FOOTINGS, UNCOVERED AND UNEXPECTED UTILITY LINES, ETC.
11. CONSTRUCTION MATERIALS, IF PLACED ON STRUCTURAL MEMBERS, MUST BE SPREAD OUT SUCH THAT THE LOADING DOES NOT EXCEED THE DESIGN LIVE LOADS. PROVIDE SHORING AND BRACING WHERE CONSTRUCTION LOADING EXCEEDS THE DESIGN STRENGTH OF THE STRUCTURAL MEMBERS OR THE STRUCTURAL STRENGTH HAS NOT BEEN ATTAINED OR THE STRUCTURE IS NOT COMPLETE.
12. DETERMINE THE LOCATION OF UTILITY SERVICES IN AREAS TO BE EXCAVATED BEFORE BEGINNING EXCAVATION. EXERCISE EXTREME CAUTION IN EXCAVATING AND TRENCHING. DAMAGE CAUSED AS A RESULT OF FAILING TO EXACTLY LOCATE AND PRESERVE EXISTING UNDERGROUND UTILITIES IS THE RESPONSIBILITY OF THE CONTRACTOR.
13. STRUCTURAL DRAWINGS TO BE USED IN CONJUNCTION WITH ARCHITECTURAL DRAWINGS BY: MBF ARCHITECTS

DEFERRED SUBMITTALS:

1. THE DEFERRED SUBMITTAL ITEMS SHALL NOT BE INSTALLED UNTIL THEIR DESIGN AND SUBMITTAL DOCUMENTS HAVE BEEN REVIEWED BY THE ARCHITECT OR ENGINEER OF RECORD AND THAT THEY HAVE BEEN FOUND TO BE IN GENERAL CONFORMANCE WITH THE DESIGN OF THE BUILDING.
   A. LADDERS, GUARDRAILS, HANDRAILS AND THEIR COMPONENTS
   B. SUPPORT ANCHORAGE OF MECHANICAL, ELECTRICAL AND PLUMBING EQUIPMENT AND COMPONENTS
   C. COLD-FORMED FRAMING AND LIGHT-GAUGE METAL TRUSSES, CALCULATIONS AND SHOP DRAWINGS INCLUDING LAYOUT, TYPICAL CONSTRUCTION DETAILS, AND CONNECTIONS (ITEMS SHOWN IN PLANS ARE MINIMUM SIZES REQUIRED)
   D. SLAB ON GRADE CONTROL JOINT PLAN (PE SEAL NOT REQUIRED FOR THIS ITEM)
2. THE ABOVE LISTED SUBMITTAL DOCUMENTS SHALL BE STAMPED AND SIGNED BY A REGISTERED PROFESSIONAL ENGINEER.

2. FOUNDATION:

1. FOUNDATION DESIGN IN BASED ON A PRESUMPTIVE ALLOWABLE SOIL BEARING PRESSURE OF 1500 PSF.
2. FOOTING DEPTHS SHOWN ARE A MINIMUM AND MAY REQUIRE DEEPENING BASED ON SITE CONDITIONS.
3. FOOTINGS MUST BEAR ON FIRM UNDISTURBED OR COMPACTED SOIL. MINIMUM FOOTING DIMENSIONS AND EMBEDMENTS MUST BE AS FOLLOWS:

	MIN. FOOTING SIZES		
	MIN. FTG. WIDTH	MIN. FTG. THICKNESS	MIN. EMBEDMENT
CONT. EXT. FTG.	2'-0"	12"	18"
CONT. INT. FTG.	2'-0"	12"	18"
PAD (SPREAD) FTG.	3'-0"	12"	18"

4. SUBMIT COMPACTION TEST REPORTS FOR FILL BY A QUALIFIED TESTING LAB TO ARCHITECT/ENGINEER & CONTRACTING OFFICER BEFORE FOUNDATION PLACEMENT. LOOSE SOIL AND FILL DIRT MUST BE COMPACTEDTO A MINIMUM OF 95% MAXIMUM DENSITY.
5. THE FOOTING EXCAVATIONS MUST BE KEPT FREE FROM LOOSE MATERIAL AND STANDING WATER AND MUST BE NEAT AND TRUE TO LINE BEFORE CONCRETE IS PLACED.
6. ABANDONED FOOTINGS, UTILITIES, ETC. THAT INTERFERE WITH NEW CONSTRUCTION MUST BE REMOVED.
7. WALL FOOTINGS ARE CONTINUOUS POURED CONCRETE WITH CONTINUOUS REINFORCING PLACED 3" CLEAR OF BOTTOM AND SIDES.
8. UNLESS OTHERWISE NOTED, WALL FOOTINGS ARE CENTERED UNDER WALLS AND COLUMN FOOTINGS UNDER COLUMNS.
9. PROVIDE FOR DESIGN AND INSTALLATION OF CRIBBING, SHEATHING AND SHORING REQUIRED TO SAFELY RETAIN GRADES.
10. PROVIDE FOR DE-WATERING OF EXCAVATIONS FROM SURFACE, GROUND, AND OR SEEPAGE WATER.

3. CONCRETE:

1. CEMENT MUST CONFORM TO ASTM C150, TYPE II / V
2. AGGREGATES FOR NORMAL WEIGHT CONCRETE MUST CONFORM TO ASTM C33, 1 1/2" MAXIMUM SIZE.
3. ADMIXTURES MUST NOT BE USED WITHOUT PRIOR APPROVAL OF THE ENGINEER & CONTRACTING OFFICER. ADMIXTURES USED TO INCREASE THE WORKABILITY OF THE CONCRETE MUST NOT REDUCE THE STRENGTH OF CONCRETE. FLY ASH (POZZOLAN) IF PERMITED BY SPECIFICATIONS MUST NOT EXCEED 25% FOR SLAB ON GRADE AND 25% FOR OTHER CONCRETE.
4. THE MIX DESIGN, INCLUDING PROPORTIONS OF MATERIALS FOR A ONE YARD BATCH, MUST BE SUBMITTED TO THE ENGINEER OF RECORD & CONTRACTING OFFICER FOR REVIEW PRIOR TO ORDERING CONCRETE.
5. READY-MIX CONCRETE MUST BE MIXED AND DELIVERED IN ACCORDANCE WITH ASTM C94.
6. REINFORCING BARS AND INSERTS MUST BE SECURED IN PLACE PRIOR TO PLACING CONCRETE.
7. CONDUITS EMBEDDED HORIZONTALLY IN THE SLAB MUST HAVE AN OUTSIDE DIAMETER NO GREATER THAN 1/3 THE THICKNESS OF THE SLAB. CONDUIT MUST NOT BE EMBEDDED IN A SLAB THAT IS LESS THAN 3 1/2" THICK. EXCEPT FOR LOCAL OFFSETS, MIN. CLEAR DISTANCE BETWEEN CONDUITS MUST BE 6".
8. NON-STRUCTURAL STEEL MEMBERS EMBEDDED IN CONCRETE MUST BE GALVANIZED OR PAINTED. DAMAGED GALVANIZED AREAS MUST BE REPAIRED PRIOR TO EMBEDMENT.
9. CONCRETE MUST HAVE A MAXIMUM DRY DENSITY OF 150 pcf.
10. MINIMUM CONCRETE COMPRESSIVE STRENGTHS AT 28 DAYS.

	MIN. f'c
SLAB ON GRADE	4,000 psi
FOOTINGS & ALL OTHER CONCRETE	4,000 psi

11. PROVIDE CONSTRUCTION OR CONTROL JOINTS IN SLAB ON GRADE AS SHOWN ON PLANS UNLESS SPECIFIED OTHERWISE. LOCATION OF JOINTS NOT SPECIFICALLY INDICATED MUST BE REVIEWED BY THE STRUCTURAL ENGINEER & CONTRACTING OFFICER PRIOR TO PLACING REINFORCING STEEL.
12. DRY PACK MUST BE ONE PART CEMENT AND 2 3/4 PARTS SAND WITH JUST ENOUGH WATER TO HYDRATE CEMENT AND FORM A BALL SHOWING MOISTURE ON THE SURFACE WHEN SQUEEZED. IT must BE RAMMED IN TIGHT TO MAXIMUM DENSITY ATTAINABLE, AND MUST BE FROM A PRODUCT THAT SPECIFIES A MINIMUM STRENGTH AT 28 DAYS OF 5000 psi.
13. NON-SHRINK GROUT MUST BE FROM A PRODUCT THAT SPECIFIES A MINIMUM COMPRESSIVE STRENGTH AT 28 DAYS OF 7,000 psi PER ASTM C109. GROUTING OF BASE PLATES PRIOR TO PLUMBING OF COLUMN IS NOT PERMITTED.
14. PROJECTING CORNERS OF SLABS, BEAMS, WALLS, COLUMNS, ETC., MUST BE FORMED WITH A 3/4" CHAMFER OR TOOLED EDGE, UNLESS OTHERWISE NOTED.
15. CONCRETE WHICH DURING THE LIFE OF THE STRUCTURE must BE SUBJECT TO FREEZING TEMPERATURES WHILE WET, MUST HAVE A WATER CEMENT RATIO NOT EXCEEDING 0.45 BY WEIGHT AND MUST CONTAIN ENTRAINED AIR PER ACI 613. SUCH CONCRETE MUST INCLUDE EXTERIOR SLABS, PERIMETER FOUNDATIONS, EXTERIOR CURBS, ETC.

4. REINFORCING STEEL:

1. DETAILING, FABRICATION AND ERECTION OF REINFORCING BARS MUST BE IN ACCORDANCE WITH ACI MANUAL OF STANDARD PRACTICE FOR DETAILING REINFORCED CONCRETE STRUCTURES, ACI 315-LATEST ADOPTED EDITION.
2. REINFORCING MUST BE ADEQUATELY SUPPORTED TO PREVENT DISPLACEMENT BY CONCRETE PLACEMENT OR WORKERS.
3. REINFORCING BARS EXCEPT BARS TO BE WELDED MUST CONFORM TO THE "STANDARD SPECIFICATION FOR DEFORMED BILLET STEEL BARS FOR CONCRETE REINFORCEMENT", ASTM A615 GRADE 60. BARS TO BE WELDED MUST CONFORM TO ASTM A706.
4. WELDING OF REINFORCING BARS TO BE IN ACCORDANCE WITH "STRUCTURAL WELDING CODE-REINFORCING STEEL", AWS D1.4. REINFORCING STEEL TO BE WELDED MUST HAVE A MAXIMUM CARBON EQUIVALENT (CE) OF 0.75. SPECIAL INSPECTION IS REQUIRED. TESTING IS REQUIRED FOR WELDS THICKER THAN 5/16".
5. WHERE CONTINUOUS BARS ARE CALLED OUT IN FOOTINGS, SPLICES MAY BE USED. WHERE BARS ARE SHOWN SPLICED, THEY MAY RUN CONTINUOUS AT CONTRACTOR'S OPTION.
6. REINFORCING BAR BENDS MUST BE MADE COLD.
7. UNLESS OTHERWISE SHOWN, WALL VERTICAL REINFORCING MUST BE POSITIONED AT THE CENTER OF THE WALL.
8. DOWELS BETWEEN FOOTINGS AND WALLS MUST BE THE SAME GRADE, SIZE, AND SPACING AS VERTICAL REINFORCING.
9. REINFORCING BARS MUST BE PROVIDED WITH THE FOLLOWING CONCRETE COVER:

   CONCRETE CAST AGAINST AND PERMANENTLY EXPOSED TO EARTH:.....3"

   CONCRETE EXPOSED TO EARTH OR WEATHER:
   NO.6 THROUGH NO.18 BAR ..... 2"
   NO.5 BAR, W31 OR D31 WIRE, AND SMALLER ..... 1 1/2"

   CONCRETE NOT EXPOSED TO WEATHER OR IN CONTACT WITH GROUND:
   SLABS, WALLS, JOISTS:
   NO.14 AND NO.18 BAR ..... 1 1/2"
   NO.11 BAR AND SMALLER ..... 3/4"
10. SLAB ON GRADE REINFORCEMENT MUST BE POSITIONED AT MID-DEPTH., UNLESS NOTED OTHERWISE.
11. SHOP DRAWINGS FOR SIZE AND LAYOUT OF REINFORCING REBARS ARE REQUIRED WHEN NOTED IN THE LIST OF REQUIRED SHOP DRAWINGS.

5. ADHESIVE, ANCHOR RODS AND REBAR IN HARDENED CONCRETE (EPOXY) ANCHORS):

1. ADHESIVE ANCHOR INSTALLATIONS MUST COMPLY WITH MANUFACTURER'S WRITTEN INSTRUCTIONS AND SPECIFICATIONS, INLCUDING ICC-ES REPORTS
2. DUST MUST BE BLOWN FROM THE HOLE WITH COMPRESSED AIR TO ENSURESURFACE. ADDITIONALLY, THE HOLE MUST BE BRUSHED WITH A NYLON BRUSH THEN BLOWN AGAIN WITH COMPRESSED AIR.
3. ADHESIVE MUST ONLY BE APPLIED TO DRY SURFACES.
4. BASE MATERIAL TEMPERATURE MUST BE 40°F OR ABOVE AT TIME OF INSTALLATION. FOR BEST RESULTS, MATERIAL SHOULD BE 70°F-80°F.
5. WHEN INSTALLING EPOXY ANCHORS INTO MASONRY, ANCHORS MUST BE INSTALLED IN SOLID GROUTED CELLS ONLY.
6. CHEMICAL ANCHOR SYSTEMS:
   A. CONCRETE: USE ONLY ADHESIVE ANCHOR SYSTEMS THAT HAVE BEEN ISSUED AN ICC-ES REPORT IN ACCORDANCE WITH PROVISIONS OF OF ICC-ES AC308. ANCHOR SYSTEM SHOULD BE APPROVED FOR USE IN CRACKED CONCRETE AND SEISMIC DESIGN CATEGORIES A-F PER SECTION 2.0 OF THE ICC-ES EVALUATION SERVICES REPORT. ANCHOR SYSTEM MUST BE INSTALLED PER REQUIREMENTS OF THE ICC-ES EVALUATION SERVICES REPORT FOR THE SPECIFIC ANCHOR, AND AS REQUIRED BY THE MANUFACTURER.
   B. GROUT-FILLED MASONRY UNITS: USE ONLY ADHESIVE ANCHORSYSTEMS THAT HAVE BEEN ISSUED AN ICC-ES REPORT INACCORDANCE WITH PROVISIONS OF ISS-ES AC58. ANCHORSYSTEMS MUST BE INSTALLED PER REQUIREMENTS OF ICC-ESEVALUATION SERVICES REPORT FOR THE SPECIFIC ANCHOR,AND AS REQUIRED BY THE MANUFACTURER.
7. ANCHOR RODS:
   RODS MUST BE ASTM A36 THREADED RODS WITH ASTM A563 GRADE A NUTS AND ANSI B18.22.1 TYPE A WASHERS, UNLESS OTHERWISE NOTED. ANCHORS DESIGNATED AS ASTM A193 GRADE B7 THREADED RODS MUST USE ASTM A563 GRADE DH HEAVY HEX NUTS AND ASTM F436 WASHERS.
8. REINFORCEMENT BARS: ASTM A615 GRADE 60 STEEL.
9. REMOVE GREASE, OIL, RUST AND OTHER LAITANCE FROM RODS AND DOWELS PRIOR TO INSTALLATION.
10. SPECIAL INSPECTION REQUIREMENTS MUST BE DICTATED BY SECTION 4.0 OF THE ICC-ES EVALUATION SERVICES REPORT. SPECIAL INSPECTION MUST VERIFY ANCHOR TYPE, ANCHOR DIMENSIONS, CONCRETE TYPE, CONCRETE COMPRESSIVE STRENGTH, HOLE DIMENSIONS, ANCHOR SPACINGS, EDGE DISTANCES, SLAB THICKNESS, ANCHOR EMBEDMENT, AND TIGHTENING TORQUE.
11. CONTRACTOR'S OPTION TO USE OTHER MANUFACTURER'S PRODUCTS ONLY WITH PRIOR APPROVAL OF THE ENGINEER & CONTRACTING OFFICER. SUBMIT MANUFACTURER'S LITERATURE AND PRODUCT INSTALLATION FOR REVIEW.

6. MECHANICAL ANCHORS IN HARDENED CONCRETE AND MASONRY (EXPANSION ANCHORS):

1. ANCHORS TO BE INSTALLED IN HOLES DRILLED WITH CARBIDE-TIPPED DRILL BITS. ANCHORS TO BE INSTALLED PER MANUFACTURER'S WRITTEN INSTRUCTIONS.
2. WHEN INSTALLING DRILLED EXPANSION ANCHORS IN EXISTING REINFORCED CONCRETE, USE CARE AND CAUTION TO AVOID CUTTING OR DAMAGING THE EXISTING REINFORCEMENT.
3. MAINTAIN A MINIMUM CLEARANCE OF 25 mm[1"] BETWEEN THE REINFORCEMENT AND THE DRILLED EXPANSION ANCHORS. EXPANSION ANCHORS MUST NOT BE USED AT CONCRETE CURBS.
4. EXPANSION ANCHOR SYSTEMS:
   A. CONCRETE: USE ONLY EXPANSION ANCHOR SYSTEMS THAT HAVE BEEN ISSUED AN ICC-ES REPORT IN ACCORDANCE WITH THE PROVISIONS OF ICC-ES AC193. ANCHOR SYSTEMS SHOULD BE APPROVED FOR USE WITH CRACKED CONCRETE AND SEISMIC DESIGN CATEGORIES A-F PER SECTION 2.0 OF THE ICC EVALUATIONS SERVICES REPORT. ANCHOR SYSTEM MUST BE INSTALLED PER THE REQUIREMENTS OF THE ICC-ES EVALUATION SERVICES REPORT FOR THE SPECIFIC ANCHOR, AND AS REQUIRED BY THE MANUFACTURER.
   B. MASONRY: USE ONLY EXPANSION ANCHOR SYSTEMS THAT HAVE BEEN ISSUED AN ICC-ES REPORT IN ACCORDANCE WITH THE PROVISIONS OF ICC-ES AC01. ANCHOR SYSTEMS SHOULD BE APPROVED FOR SEISMIC USE DETAILED IN THE CONDITIONS OF USE LISTED IN THE ICC-ES EVALUATION SERVICES REPORT. ANCHOR SYSTEM MUST BE INSTALLED PER THE REQUIREMENTS OF THE ICC-ES EVALUATION SERVICES REPORT FOR THE SPECIFIC ANCHOR, AND AS REQUIRED BY THE MANUFACTURER.
5. UNDERCUT ANCHOR SYSTEMS:
   CONCRETE: USE ONLY UNDERCUT ANCHOR SYSTEMS THAT HAVE BEEN ISSUED AN ICC-ES REPORT IN ACCORDANCE WITH THE PROVISIONS OF ICC-ES AC193. ANCHOR SYSTEMS SHOULD BE APPROVED FOR USE IN CRACKED CONCRETE AND SEISMIC DESIGN CATEGORIES A-F PER SECTION 2.0 OF THE ICC EVALUATIONS SERVICES REPORT. ANCHOR SYSTEM MUST BE INSTALLED PER THE REQUIREMENTS OF THE ICC-ES EVALUATION SERVICES REPORT FOR SPECIFIC ANCHOR, AND AS REQUIRED BY THE MANUFACTURER.
6. HERE THE MANUFACTURER'S INSTALLATION INSTRUCTIONS OR APPLICABLE ICC-ES EVALUATION SERVICES REPORT CALL FOR THE APPLICATION OF AN INSTALLATION TORQUE, THE SPECIFIED TORQUE MUST BE APPLIED WITH CALIBRATED TORQUE WRENCH. THE SPECIFIED INSTALLATION TORQUE MUST NOT BE EXCEEDED.
7. ANCHORS ARE TYPICALLY AVAILABLE IN ELECTRO-GALVANIZED CARBON STEEL, HOT DIPPED GALVANIZED CARBON STEEL, AND STAINLESS STEEL. USE OF ELECTRO-GALVANIZED CARBON STEEL ANCHORS IS TYPICALLY LIMITED TO DRY, INTERIOR LOCATIONS, UNLESS OTHERWISE NOTED. STAINLESS STEEL OR HOT-DIPPED GALVANIZED ANCHORS ARE GENERALLY SUITABLE FOR APPLICATIONS EXPOSED TO EXTERIOR WEATHER CONDITIONS. FINAL AUTHORITY ON TYPE OF ANCHOR COATING UTILIZED RESTS WITH THE STRUCTURAL ENGINEER OF RECORD & CONTRACTING OFFICER AND MUST BE APPROVED BY SUCH.
8. EXPANSION ANCHORS FOR NON-VIBRATION ISOLATED MECHANICAL EQUIPMENT RATED OVER 10HP ARE NOT PERMITTED BY ASCE 7-10 SECTION 13.6.5.5. ANCHORS INSTALLED IN OVERHEAD CONDITIONS FOR NON- VIBRATION ISOLATED EQUIPMENT WITH RECIPROCATING OR ROTATING MECHANISMS MUST BE UNDERCUT ANCHORS.
9. THE SPECIAL INSPECTOR MUST BE ON THE JOBSITE CONTINUOUSLY DURING ANCHOR INSTALLATIONS, UNLESS OTHERWISE NOTED IN ICC-ES ESR, TO VERIFY ANCHOR TYPE, ANCHOR DIMENSIONS, CONCRETE TYPE, CONCRETE COMPRESSIVE STRENGTH, HOLE DIMENSIONS ANCHOR SPACINGS, EDGE DISTANCES, SLAB THICKNESS, ANCHOR EMBEDMENT, AND TIGHTENING TORQUE.

7. STRUCTURAL METAL STUDS:

1. STRUCTURAL METAL STUDS MUST BE COLD-FORMED, AND MUST BE OF MINIMUM SIZE AND GAGE AS SHOWN ON PLANS - FINAL DESIGN PER DELEGATED DESIGN ENGINEER. ANY SIZES SHOWN ARE FOR BUDGET PRICING PURPOSES ONLY.
2. TRUSS SUPPLIER TO SUBMIT SEALED TRUSS SHOP DRAWINGS AND CALCULATIONS.
3. TRUSS SUPPLIER TO PROVIDE ALL ACCESSORIES REQUIRED TO SUPPORT AND ANCHOR TRUSSES, INCLUDING, BUT NOT LIMITED TO, CLIPS, BRACES, HANGERS, FASTENERS, ETC.
4. TRUSS FRAMING SYSTEM IS A PERFORMANCE SPECIFICATION. TRUSS FRAMING SHOWN ON PLANS IS SCHEMATIC ONLY. TRUSS SUPPLIER TO PROVIDE FINAL ROOF SYSTEM LAYOUTS WHICH MEET THE INTENT OF THE SCHEMATIC LAYOUT. RUSS LANS THAT CHANGE THE INTENDED LOAD PATH TO THE FOUNDATIONS WILL NOT BE ACCEPTED. THE USE OF OVERBUILD AREAS IS ALLOWED WHERE REQUIRED.
5. ALL METAL STUDS MUST HAVE MINIMUM 1 5/8" FLANGES AND 50 KSI YIELD STRESS, UNLESS NOTED OTHERWISE.
6. METAL STUDS FOR ROOF OVER-BUILD AREAS SHALL BE 3 5/8", 20 GAGE, UNLESS NOTED OTHERWISE
7. METAL STUD MEMBERS MUST NOT BE CUT FOR PLUMBING OR WIRING UNLESS DETAILED ON THE APPROVED SHOP DRAWINGS.

APPR	DATE	DESCRIPTION	SYM

NAVFAC

NORTH CAROLINA PROFESSIONAL ENGINEER SEAL 032586 LUCAS A. GELD
01 JUL 2026 SEAL

k-e kaydos-daniels engineers, pllc
718 w lame st raleigh nc 27603
T 919 828 4966 kaydos-daniels.com

A/E INFO

APPROVED

FOR COMMANDER NAVFAC

ACTIVITY

SATISFACTORY TO

DES	LGG	DRW	HON	CHK	LGG

PM/DM L. PEED
BRANCH MANAGER H. PERRY
CHIEF ENG/ARCH P. FAULKNER
FIRE PROTECTION D. CHASTAIN

DEPARTMENT OF THE NAVY
NAVAL FACILITIES ENGINEERING COMMAND - MIDATLANTIC
NAVAL STATION - NORFOLK, VA
[PT MARINE] MARINE CORPS AIR STATION CHERRY POINT, NC
MCOLF ATLANTIC
BUILDING 7019 RENOVATIONS
STRUCTURAL NOTES

SCALE: AS INDICATED
STATION DESIGN WON: 7406712
STATION CONSTRUTION WON: 7406712
NAVFAC DRAWING NO. 12939446
SHEET 21 OF 148
S-002

DRAWFORM REVISION: 25 AUGUST 2020

7/1/2026 12:06:14 PM S-002
C:\Users\lucas.KAYDOS-DANIELS\Documents\2509 B7019 STRUCT 2023_lgeld23.rvt

STRUCTURAL NOTES

8. POWDER ACTUATED FASTENERS IN HARDENED CONCRETE, MASONRY, AND STEEL (SHOT PINS):

1. POWDER ACTUATED FASTENING SYSTEMS:
   A. CONCRETE: FOR GENERAL CONCRETE AND LIGHTWEIGHT CONCRETE: POWDER ACTUATED FASTENING SYSTEMS MUST BE INSTALLED PER REQUIREMENTS OF THE ICC-ES EVALUATION SERVICES REPORT FOR THE SPECIFIC FASTENER, AND AS REQUIRED BY THE MANUFACTURER.
   B. MASONRY: POWDER ACTUATED FASTENING SYSTEMS MUST BE INSTALLED PER THE REQUIREMENTS OF THE ICC-ES EVALUATION SERVICES REPORT FOR SPECIFIC FASTENER, AND AS REQUIRED BY THE MANUFACTURER.
   C. STEEL: POWDER ACTUATED FASTENING SYSTEMS MUST BE INSTALLED PER THE REQUIREMENTS OF THE ICC-ES EVALUATION SERVICES REPORT FOR THE SPECIFIC FASTENER, AND AS REQUIRED BY THE MANUFACTURER.
2. WHEN INSTALLING POWDER ACTUATED FASTENERS IN EXISTING NON-PRESTRESSED REINFORCED CONCRETE, USE CARE AND CAUTION TO AVOID HITTING OR DAMAGE TO THE EXISTING REINFORCING BARS. MAINTAIN A MINIMUM CLEARANCE OF 1" BETWEEN THE REINFORCEMENT AND THE FASTENER.
3. POWDER ACTUATED FASTENERS ARE NOT PERMITTED BY ASCE 7-16 SECTION 13.4.5 FOR SEISMIC TENSION LOAD APPLICATIONS. POWDER ACTUATED FASTENERS MUST NOT BE USED TO CARRY SEISMIC TENSION LOADS (EXCEPT FOR VERTICAL SEISMIC LOAD PRODUCED BY SELF-WEIGHT OF THE COMPONENTS SUPPORTED) OR IN CRACKED CONCRETE UNLESS PRE-APPROVED FOR SUCH LOADING BY THE ENFORCEMENT AGENCY.
4. THE USE OF POWDER DRIVEN FASTENERS FOR TENSION LOADS IS LIMITED TO SUPPORT OF MINOR LOADS LIKE ACOUSTICAL CEILINGS, DUCTWORK CONDUITS, ETC.
5. ALLOWABLE TENSION LOADS MUST BE LIMITED TO LESS THAN 100 POUNDS.
6. POWDER ACTUATED FASTENERS MAY BE USED FOR SEISMIC SHEAR, WHEN THEY ARE SPECIFICALLY LISTED FOR SERVICE IN RESISTING LATERAL LOADS IN AREAS SUBJECT TO EARTHQUAKE.
7. MINIMUM EDGE DISTANCE FOR ACTUATED FASTENERS MUST BE THE LARGER OF THE VALUES GIVEN IN ASTM E 1190 OR THE APPLICABLE ICC-ES EVALUATION SERVICES REPORT.

9. MASONRY:

DESIGN STRENGTH: f'm = 2000 psi	
MASONRY COMPONENTS	STRENGTH @ 28 DAYS
CONCRETE MASONRY UNITS	2000 psi
GROUT	3000 psi
MORTAR (TYPE S)	1800 psi

1. MASONRY WORK MUST CONFORM TO INTERNATIONAL BUILDING CODE (IBC), LATEST ADOPTED EDITION AS LISTED HEREIN.
2. CONCRETE MASONRY UNITS MUST BE MEDIUM WEIGHT UNITS IN ACCORDANCE WITH ASTM C90 WITH MAXIMUM LINEAR SHRINKAGE OF 0.065%.
3. CEMENT MUST BE AS SPECIFIED FOR CONCRETE.
4. MORTAR MUST CONFORM TO ASTM C270
   EXCERPTS FROM ASTM C270:

TABLE 1 PROPORTION SPECIFICATION REQUIREMENTS

MORTAR	TYPE	PROPORTIONS BY VOLUME (CEMENTITIOUS MATERIALS) PORTLAND CEMENT OR BLENDED CEMENT	MORTAR CEMENT M	MORTAR CEMENT S	MORTAR CEMENT N	MASONRY CEMENT M	MASONRY CEMENT S	MASONRY CEMENT N	HYDRATED LIME OR LIME PUTTY	AGGREGATE RATIO (MEASURED IN DAMP, LOOSE CONDITIONS)
CEMENT-LIME	M	1	-	-	-	-	-	-	1/4	
	S	1	-	-	-	-	-	-	OVER 1/4 TO 1/2	
	N	1	-	-	-	-	-	-	OVER 1/2 TO 1 1/4	
	O	1	-	-	-	-	-	-	OVER 1 1/4 TO 2 1/2	
MORTAR CEMENT	M	1	-	-	1	-	-	-	-	NOT LESS THAN 2 1/4 AND NOT MORE THAN 3 1/2 THE SUM OF SEPARATE VOLUMES OF CEMENTITIOUS MATERIALS
	M	-	1	-	-	-	-	-	-	
	S	1/2	-	-	1	-	-	-	-	
	S	-	-	1	-	-	-	-	-	
	N	-	-	-	1	-	-	-	-	
	O	-	-	-	1	-	-	-	-	
	M	1	-	-	-	-	-	1	-	
	M	-	-	-	-	1	-	-	-	
	S	1/2	-	-	-	-	-	1	-	
	S	-	-	-	-	-	1	-	-	
	N	-	-	-	-	-	-	1	-	
	O	-	-	-	-	-	-	1	-	

TABLE 2 PROPERTY SPECIFICATION REQUIREMENTS[A]

MORTAR	TYPE	AVG. COMPRESSIVE STRENGTH AT 28 DAYS, MIN.	WATER RETENTION, MIN. %	AIR CONTENT, MAX. %[B]	AGGREGATE RATIO (MEASURED IN DAMP, LOOSE CONDITIONS)
CEMENT-LIME	M	2500 psi	75	12	
	S	1800 psi	75	12	
	N	750 psi	75	14[C]	
	O	350 psi	75	14[C]	
MORTAR CEMENT	M	2500 psi	75	12	NOT LESS THAN 2 1/4 AND NOT MORE THAN 3 1/2 THE SUM OF SEPARATE VOLUMES OF CEMENTITIOUS MATERIALS
	S	1800 psi	75	12	
	N	750 psi	75	14[C]	
	O	350 psi	75	14[C]	
MASONRY CEMENT	M	2500 psi	75	18	
	S	1800 psi	75	18	
	N	750 psi	75	20[D]	
	O	350 psi	75	20[D]	

[A] LABORATORY PREPARED MORTAR ONLY
[B] SEE NOTE:
[C] WHEN STRUCTURAL REINFORCEMENT IS INCORPORATED IN CEMENT LINE OR CEMENT MORTAR, THE MAX. AIR CONTENT MUST BE 12%.
[D] WHEN STRUCTURAL REINFORCEMENT IS INCORPORATED IN MASONRY OR CEMENT MORTAR, THE MAX. AIR CONTENT MUST BE 18%.

5. MORTAR JOINTS MUST BE STRAIGHT, CLEAN AND UNIFORM IN THICKNESS, AND MUST BE TOOLED AS SHOWN ON THE PLANS OR AS SPECIFIED (FLUSH JOINTS IF NO SPECIAL TREATMENT SPECIFIED). UNLESS OTHERWISE SPECIFIED OR DETAILED ON THE PLANS, HORIZONTAL AND VERTICAL MORTAR JOINTS MUST BE 3/8" THINK WITH FULL MORTAR COVERAGE ON THE FACE SHELL.
6. OVERHANGING MORTAR DROPPINGS AND DEBRIS MUST BE REMOVED FROM CELLS RECEIVING GROUT. FAILURE TO REMOVE DEBRIS MUST BE CAUSE FOR REJECTION OF WALL AND REPAIR OR REWORK NECESSARY MUST BE ENTIRELY AT CONTRACTORS EXPENSE.
7. VERTICAL HEAD JOINTS MUST BE BUTTERED WELL FOR A THICKNESS EQUAL TO THE FACE SHELL OF THE BLOCK AND THESE JOINTS MUST BE SHOVED TIGHTLY SO THAT THE MORTAR BONDS WELL TO BOTH BLOCKS. IF IT IS NECESSARY TO MOVE A BLOCK SO AS TO OPEN A JOINT, THE BLOCK MUST BE REMOVED FROM THE WALL, CLEANED AND SET IN FRESH MORTAR.
8. GROUT MUST CONFORM TO ASTM C476.
   EXCERPTS FROM ASTM C476:

TABLE 2103.12
GROUT PROPORTIONS BY VOLUME FOR MASONRY CONSTRUCTION

TYPE	PARTS BY VOLUME OF PORTLAND CEMENT OR BLENDED CEMENT	PARTS BY VOLUME OF HYDRATED LIME OR LIME PUTTY	AGGREGATE, MEASURED IN A DAMP, LOOSE CONDITION FINE	AGGREGATE, MEASURED IN A DAMP, LOOSE CONDITION COARSE
FINE GROUT	1	0-1/10	2 1/4-3 TIMES THE SUM OF THE VOLUMES OF THE CEMENTITIOUS MATERIALS	-
COARSE GROUT	1	0-1/10	2 1/4-3 TIMES THE SUM OF THE VOLUMES OF THE CEMENTITIOUS MATERIALS	1-2 TIMES THE SUM OF THE VOLUMES OF THE CEMENTITIOUS MATERIALS

9. SPECIFIED COMPRESSIVE STRENGTH- PROPORTIONS ESTABLISHED BY 28-DAY COMPRESSIVE STRENGTH TESTS IN ACCORDANCE WITH TEST METHOD C 1019 THAT OBTAIN THE SPECIFIED COMPRESSIVE STRENGTH. THE GROUT MUST BE MIXED TO A SLUMP OF 8 in. TO 11in. AS DETERMNINED BY TEST METHOD C 143/C 143M AND MUST HAVE A MINIMUM COMPRESSIVE STRENGTH OF 3000 psi AT 28 DAYS.
10. CELLS BELOW GRADE MUST BE FULLY GROUTED UNLESS OTHERWISE NOTED. ADDITIONALLY, CELLS WITH REINFORCING MUST BE FILLED SOLID WITH GROUTED UNLESS OTHERWISE NOTED WITHIN THE SECTIONS AND TYPICAL DETAILS.
11. GROUT MUST BE CONSOLIDATED WITH A MECHANICAL VIBRATOR. MINIMUM 4000 rpm, 3/4" MAXIMUM HEAD. PROVIDE INSPECTION AND CLEANOUT HOLES AT THE BASE OF GROUTED CELLS FOR LIFTS GREATER THAN 5'-0".
12. WHEN GROUTING IS STOPPED FOR ONE HOUR OR LONGER, HORIZONTAL CONSTRUCTION JOINTS MUST BE FORMED BY STOPPING THE GROUT POUR 1 1/2" BELOW TOP OF THE UPPERMOST UNIT.
13. UNLESS OTHERWISE NOTED, MASONRY MUST BE CONSTRUCTED WITH A RUNNING BOND PATTERN.
14. ELECTRIC CONDUIT BOXES AND/OR OTHER OBSTRUCTIONS ARE NOT PERMITTED IN CELLS CONTAINING REINFORCING, UNLESS APPROVED BY THE ENGINEER & CONTRACTING OFFICER.
15. UNLESS OTHERWISE SHOWN ON THE PLANS, LAP SPLICES OF REINFORCING STEEL IN MASONRY MUST BE PER SCHEDULE.
16. HORIZONTAL REINFORCEMENT BARS MUST BE PLACED IN BOND BEAM MASONRY UNITS.
17. LINTEL REINFORCEMENT BARS MUST BE PLACED IN LINTEL BEAM BLOCK.
18. VERTICAL REINFORCEMENT BARS MUST BE PLACED AT THE CENTER OFTHE WALL UNLESS OTHERWISE SHOWN. VERTICAL BARS ARE TO BE TIED OR OTHERWISE FIXED IN POSITION AT INTERVALS OF NOT MORE THAN 200 BAR DIAMETERS AND AT TOP AND BOTTOM.
19. ANCHOR BOLTS MUST BE SET WITH TEMPLATES AND HELD IN PLACE PRIOR TO GROUTING.
20. PROVIDE A MINIMUM OF ONE BAR DIAMETER OF GROUT BETWEEN MAIN REINFORCING AND MASONRY UNITS. PROVIDE A MINIMUM OF 1" GROUT AROUND BOLTS EMBEDDED IN MASONRY.
21. FOR MASONRY WORK INSPECTIONS SEE INSPECTION AND TESTING SPECIFICATIONS.
22. REFER TO MASONRY CONSTRUCTION DETAILS ON SHEET S-501 AND S-502.

10. STRUCTURAL STEEL:

1. THE DESIGN, FABRICATION AND ERECTION OF STRUCTURAL STEEL MUST BE IN ACCORDANCE WITH "AISC SPECIFICATION FOR STRUCTURAL STEEL BUILDINGS" AND STEEL CONSTRUCTION MANUAL AISC 360, LATEST ADOPTED EDITION. EXCEPT AS AMENDED IN IBC CHAPTER 22.
2. CONNECTIONS MUST BE DETAILED IN ACCORDANCE WITH LATEST EDITION OF AISC "DETAILING FOR STEEL CONSTRUCTION".
3. STEEL FURNISHED FOR STRUCTURAL LOAD-CARRYING PURPOSES MUST BE PROPERLY IDENTIFIED FOR CONFORMITY TO THE SPECIFIED GRADES SHOWN BELOW AND IN ACCORDANCE WITH ASTM STANDARDS AND PROVISIONS OF IBC CHAPTER 22. STEEL THAT IS NOT READILY IDENTIFIABLE AS TO GRADE FROM MARKING AND TEST RECORDS MUST BE TESTED TO DETERMINE CONFORMITY TO:

   A. WIDE FLANGE — ASTM A992 (Fy=50 ksi)
   B. ANGLES AND CHANNELS — ASTM A36 (Fy=36 ksi)
   C. PLATES — ASTM A36 (Fy=36 ksi)
   D. HSS (RECTANGULAR) — ASTM A500 GRADE C (Fy=50 ksi)
   E. ANCHOR BOLTS — ASTM F1554 GRADE 55

4. COLUMN ENDS MUST BE MILLED.
5. EXTERIOR STRUCTURAL STEEL PERMANENTLY EXPOSED TO THE WEATHER MUST BE HOT-DIPPED GALVANIZED AFTER FABRICATION. ZINC COATING MUST CONFORM TO ASTM A123 (G-60 U.O.N.).
6. WELDING DONE AFTER GALVANIZING MUST BE PROTECTED WITH TWO COATS OF GALVANIZING PROTECTANT METALLIC BARRIER. CONTRACTOR MUST USE VENTILATION WHILE PERFORMING THIS WORK AS REQUIRED BY OSHA.
7. STEEL FABRICATION MUST BE PERFORMED IN AN APPROVED FABRICATION SHOP.
8. STEEL FABRICATOR MUST VERIFY DIMENSIONS WITH ARCHITECTURAL AND STRUCTURAL DRAWINGS.
9. METAL ITEMS, INCLUDING CONNECTORS, EXPOSED TO THE WEATHER MUST BE HOT-DIPPED GALVANIZED AFTER FABRICATION.
10. STRUCTURAL STEEL MUST BE DELIVERED TO THE JOB SITE FREE OF EXCESSIVE RUST, MILL SCALE, GREASE, ETC.
11. SUBMIT SHOP DRAWINGS TO THE STRUCTURAL ENGINEER & CONTRACTING OFFICER FOR REVIEW PRIOR TO FABRICATION FOR STRUCTURAL STEEL MEMBERS AND ACCESSORIES.

11. STEEL DECK:

1. METAL DECKING MUST BE DESIGNED, FABRICATED AND ERECTED IN ACCORDANCE WITH THE LATEST EDITION OF THE STEEL DECK INSTITUTE SPECIFICATIONS.
2. WELDING OF METAL DECKING MSUT CONFORM TO AWS D1.3, "STRUCTURAL WELDING CODE-SHEET STEEL"
3. METAL DECK MUST BE GALVANIZED AND SHOP-PRIMED STEEL SHEET: ASTM A653, STRUCTURAL STEEL (55) GRADE 33 or 50, G60 ZINC COATING; CLEAN, PRETREATED, AND PRIMED WITH MANUFACTURER'S STANDARD BAKED-ON, RUST-INHIBITIVE PRIMER. COLOR MUST BE THE MANUFACTURER'S STANDARD UNLESS OTHERWISE NOTED ON THE ARCHITECTURAL PLANS
4. METAL DECK MUST HAVE A 3-SPAN CONDITION UNLESS NOTED OTHERWISE AND HAVE HAVE INTERLOCKING SEAM SIDELAPS.
5. FASTEN ROOF DECK PANELS TO STEEL SUPPORTING MEMBERS WITH #12 SCREWS AS INDICATED ON THE ROOF DECK DETAIL ON THESE DRAWINGS. FASTEN SIDELAPS OF PANELS BETWEEN SUPPORTS WITH No. 10 SELF-DRILLING CARBON STEEL SCREWS AS INDICATED ON THE ROOF DECK DETAIL ON THESE DRAWINGS. INSTALL DECK ENDS OVER SUPPORTING FRAMING WITH A 1-1/2" MINIMUM END BEARING AND LAP JOINTS 2". FASTEN ROOF DECK PANELS TO DIAPHRAGM PERIMETER, i.e. EDGE ANGLES, WITH #12 SCREWS AT 6" O.C. TYPICAL UNLESS NOTED OTHERWISE.
6. FASTEN FLOOR DECK PANEL TO SUPPORT WITH 5/8" PUDDLE WELDS AT 12" O.C. EXCEPT FOR END SPANS OR LAPS, WHICH SHOULD HAVE PUDDLE WELDS AT 6" O.C. PROVIDE MINIMUM (4) #10 SELF TAPPING HEX HEAD SCREWS EQUALLY SPACED BETWEEN SUPPORTS (OR A MAXIMUM OF 18" O.C.)
7. PROVIDE MISCELLANEOUS DECK ACCESSORIES NOT SPECIFICALLY NOTED ON THESE DRAWINGS AS REQUIRED TO SUBSTRATE A COMPLETE DECK INSTALLATION. THESE ACCESSORIES MUST INCLUDE RIDGE AND VALLEY PLATES, FINISH STRIPS, END CLOSURES, REINFORCING CHANNELS, AND WELD COVER PLATES AT CHANGES IN DIRECTION OF DECK PANELS ACCORDING TO DECK MANUFACTURER'S WRITTEN INSTRUCTIONS.
8. ACCESSORIES ACCORDING TO APPLICABLE SPECIFICATIONS AND COMMENTARY IN SDI PUBLICATION No. 30, MANUFACTURER'S WRITTEN INSTRUCTIONS AND REQUIREMENTS IN THESE DOCUMENTS.
9. INSTALL TEMPORARY SHORING BEFORE PLACING DECK PANELS, IF REQUIRED TO MEET DEFLECTION LIMITATIONS.
10. PLACE DECK PANELS ON SUPPORTING FRAME AND ADJUST TO FINAL POSITION WITH ENDS ACCURATELY ALIGNED AND BEARING ON SUPPORTING FRAME BEFORE BEING PERMANENTLY FASTENED. DO NOT STRETCH OR CONTRACT SIDELAP INTERLOCKS.

APPR	DATE	DESCRIPTION	SYM

NAVFAC

NORTH CAROLINA PROFESSIONAL ENGINEER SEAL 032586 LUCAS G. A GELD
01 JUL 2026 SEAL

k-ce kaydos-daniels engineers, plc
718 w lane st raleigh nc 27603
T 919 828 4966 kaydos-daniels.com

A/E INFO

APPROVED

FOR COMMANDER NAVFAC

ACTIVITY

SATISFACTORY TO

DES	LGG	DRW	HON	CHK	LGG

PM/DM	L. PEED
BRANCH MANAGER	H. PERRY
CHIEF ENG/ARCH	P. FAULKNER
FIRE PROTECTION	D. CHASTAIN

DEPARTMENT OF THE NAVY
NAVAL FACILITIES ENGINEERING COMMAND - MIDATLANTIC
NAVAL FACILITIES ENGINEERING COMMAND
NAVAL STATION - NORFOLK, VA
CHERRY POINT, NC
[PT MARINE]
MARINE CORPS AIR STATION
MCOLF ATLANTIC
BUILDING 7019 RENOVATIONS
STRUCTURAL NOTES CONT.

SCALE:	AS INDICATED
STATION DESIGN WON:	7406712
STATION CONSTRUTION WON:	7406712
NAVFAC DRAWING NO.	12939447
SHEET	22 OF 148

S-003

DRAWFORM REVISION: 25 AUGUST 2020

7/1/2026 12:06:14 PM S-003
C:\Users\lucas.KAYDOS-DANIELS\Documents\2509 B7019 STRUCT 2023_lgeld23.rvt

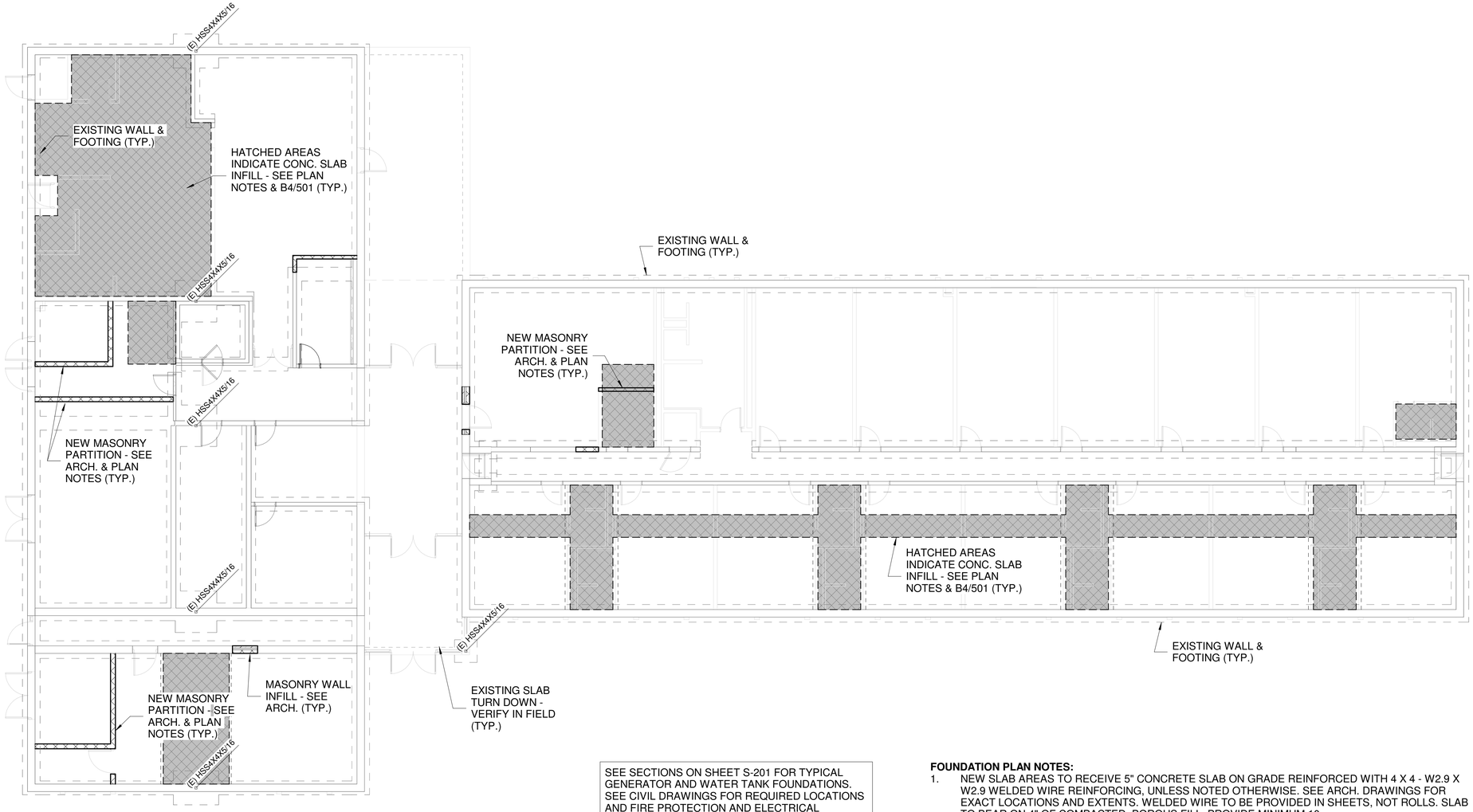

SEE SECTIONS ON SHEET S-201 FOR TYPICAL GENERATOR AND WATER TANK FOUNDATIONS. SEE CIVIL DRAWINGS FOR REQUIRED LOCATIONS AND FIRE PROTECTION AND ELECTRICAL DRAWINGS FOR ADDITIONAL INFORMATION (TYP.)

FOUNDATION PLAN NOTES:

1. NEW SLAB AREAS TO RECEIVE 5" CONCRETE SLAB ON GRADE REINFORCED WITH 4 X 4 - W2.9 X W2.9 WELDED WIRE REINFORCING, UNLESS NOTED OTHERWISE. SEE ARCH. DRAWINGS FOR EXACT LOCATIONS AND EXTENTS. WELDED WIRE TO BE PROVIDED IN SHEETS, NOT ROLLS. SLAB TO BEAR ON 4" OF COMPACTED, POROUS FILL. PROVIDE MINIMUM 10 MIL REINFORCED VAPOR BARRIER BETWEEN SLAB AND POROUS FILL.
2. ALL DIMENSIONS AND EXISTING CONDITIONS TO BE FIELD VERIFIED PRIOR TO FABRICATION OR INSTALLATION OF NEW STRUCTURE.
3. PROVIDE #4 VERT. @ 4'-0" O.C. AT NEW MASONRY PARTITIONS. DRILL & EPOXY BARS INTO EXISTING SLAB W/ 3" EMBEDMENT AND FILL CELLS AT REINF. W/ 3000 PSI GROUT. SEE TYPICAL DETAIL FOR PARTITION BRACING AT TOP.
4. CJ (CONSTRUCTION OR CONTROL JOINTS - CONTRACTOR'S OPTION) TO BE PLACED AT 10'-0" O.C. MAX EA. WAY. SEE TYPICAL DETAIL.
5. REFERENCE FINISH SLAB ELEVATION TO BE 0'-0", UNLESS NOTED THUS (-__'-__") ON PLAN. SEE CIVIL DRAWINGS FOR ACTUAL FINISHED FLOOR ELEVATION.
6. SEE TYPICAL CONSTRUCTION DETAILS ON SHEETS S-501 & S-501.
7. SEE GENERAL NOTES ON SHEETS S-002 & S-003.

A1 FOUNDATION PLAN

SCALE: 1/8" = 1'-0"

SYM	DESCRIPTION	DATE	APPR

NAVFAC

NORTH CAROLINA PROFESSIONAL SEAL 032586 ENGINEER LUCAS G. A GELD
01 JUL 2026 SEAL

k-ce kaydos-daniels engineers, plic
718 w lane st raleigh nc 27603
T 919 828 4966 kaydos-daniels.com

A/E INFO

APPROVED

FOR COMMANDER NAVFAC

ACTIVITY

SATISFACTORY TO

DES	LGG	DRW	HON	CHK	LGG

PM/DM	L. PEED
BRANCH MANAGER	H. PERRY
CHIEF ENG/ARCH	P. FAULKNER
FIRE PROTECTION	D. CHASTAIN

DEPARTMENT OF THE NAVY
NAVAL FACILITIES ENGINEERING COMMAND
NAVAL FACILITIES ENGINEERING COMMAND ~ MIDATLANTIC
NAVAL STATION - NORFOLK, VA
1PT MARINE
MARINE CORPS AIR STATION CHERRY POINT, NC

MCOLF ATLANTIC
BUILDING 7019 RENOVATIONS

FOUNDATION PLAN

SCALE:	AS INDICATED
STATION DESIGN WON:	7406712
STATION CONSTRUTION WON:	7406712
NAVFAC DRAWING NO.	12939448
SHEET	23 OF 148

S-101

DRAWFORM REVISION: 25 AUGUST 2020

7/1/2026 12:06:14 PM S-101
C:\Users\lucas.KAYDOS-DANIELS\Documents\2509 B7019 STRUCT 2023_lggedit23.rvt

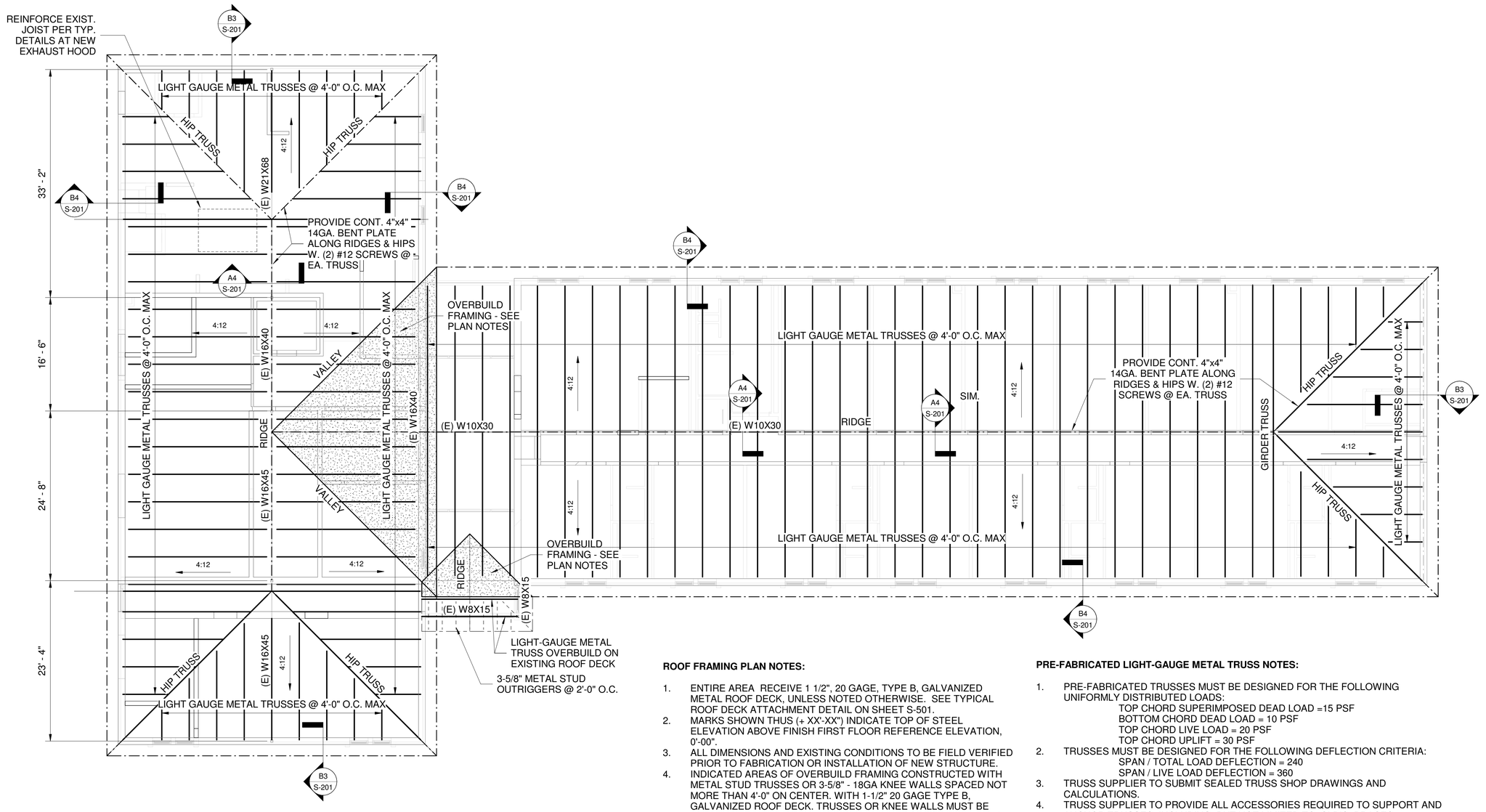

ROOF FRAMING PLAN NOTES:

1. ENTIRE AREA RECEIVE 1 1/2", 20 GAGE, TYPE B, GALVANIZED METAL ROOF DECK, UNLESS NOTED OTHERWISE. SEE TYPICAL ROOF DECK ATTACHMENT DETAIL ON SHEET S-501.
2. MARKS SHOWN THUS (+ XX'-XX") INDICATE TOP OF STEEL ELEVATION ABOVE FINISH FIRST FLOOR REFERENCE ELEVATION, 0'-00".
3. ALL DIMENSIONS AND EXISTING CONDITIONS TO BE FIELD VERIFIED PRIOR TO FABRICATION OR INSTALLATION OF NEW STRUCTURE.
4. INDICATED AREAS OF OVERBUILD FRAMING CONSTRUCTED WITH METAL STUD TRUSSES OR 3-5/8" - 18GA KNEE WALLS SPACED NOT MORE THAN 4'-0" ON CENTER. WITH 1-1/2" 20 GAGE TYPE B, GALVANIZED ROOF DECK. TRUSSES OR KNEE WALLS MUST BE ATTACHED TO SUBSTRUCTURE WITH (2) #10 SCREWS AT 1'-4" O.C. MAIN ROOF METAL DECK MUST REMAIN CONTINUOUS UNDER OVERBUILD AREAS. FINAL DESIGN PER DELEGATED DESIGN REQUIREMENTS.
5. SEE TYPICAL CONSTRUCTION DETAILS ON SHEETS S-501 & S-502.
6. SEE GENERAL NOTES ON SHEETS S-002 & S-003.

PRE-FABRICATED LIGHT-GAUGE METAL TRUSS NOTES:

1. PRE-FABRICATED TRUSSES MUST BE DESIGNED FOR THE FOLLOWING UNIFORMLY DISTRIBUTED LOADS:
   TOP CHORD SUPERIMPOSED DEAD LOAD =15 PSF
   BOTTOM CHORD DEAD LOAD = 10 PSF
   TOP CHORD LIVE LOAD = 20 PSF
   TOP CHORD UPLIFT = 30 PSF
2. TRUSSES MUST BE DESIGNED FOR THE FOLLOWING DEFLECTION CRITERIA:
   SPAN / TOTAL LOAD DEFLECTION = 240
   SPAN / LIVE LOAD DEFLECTION = 360
3. TRUSS SUPPLIER TO SUBMIT SEALED TRUSS SHOP DRAWINGS AND CALCULATIONS.
4. TRUSS SUPPLIER TO PROVIDE ALL ACCESSORIES REQUIRED TO SUPPORT AND ANCHOR TRUSSES, INCLUDING, BUT NOT LIMITED TO, CLPIS, BRACES, HANGERS, FASTENERS, ETC.
5. TRUSS FRAMING SYSTEM IS A PERFORMANCE SPECIFICATION. TRUSS FRAMING SHOWN ON PLANS IS SCHEMATIC ONLY. TRUSS SUPPLIER TO PROVIDE FINAL ROOF SYSTEM LAYOUTS WHICH MEET THE INTENT OF THE SCHEMATIC LAYOUT. TRUSS PLANS THAT CHANGE THE INTENDED LOAD PATH TO THE FOUNDATIONS WILL NOT BE ACCEPTED. THE USE OF OVERBUILD AREAS IS ALLOWED WHERE REQUIRED.
6. TRUSS INSTALLER AND SUPPLIER ARE RESPONSIBLE FOR ALL TEMPORARY BRIDGING AND BRACING
7. TRUSS MANUFACTURER MUST COORDINATE WITH ALL DRAWINGS AND ADVISE STRUCTURAL ENGINEER AND ARCHITECT OF ANY DISCREPANCIES PRIOR TO PREPARATION OF TRUSS SHOP DRAWINGS.
8. SEE GENERAL NOTES ON SHEETS S-002 & S-003.

APPR	DATE	DESCRIPTION	SYM

NAVFAC

NORTH CAROLINA PROFESSIONAL ENGINEER SEAL 032586 LUCAS G. A GELD
01 JUL 2026 SEAL

k-ce kaydos-daniels engineers, plc
718 w lane st raleigh nc 27603
T 919 828 4966 kaydos-daniels.com

A/E INFO

APPROVED

FOR COMMANDER NAVFAC

ACTIVITY

SATISFACTORY TO

DES	LGG	DRW	HON	CHK	LGG

PM/DM	L. PEED
BRANCH MANAGER	H. PERRY
CHIEF ENG/ARCH	P. FAULKNER
FIRE PROTECTION	D. CHASTAIN

DEPARTMENT OF THE NAVY
NAVAL FACILITIES ENGINEERING COMMAND - MIDATLANTIC
[PT MARINE] MARINE CORPS AIR STATION
NAVAL FACILITIES ENGINEERING COMMAND
NAVAL STATION - NORFOLK, VA
CHERRY POINT, NC

MCOLF ATLANTIC BUILDING 7019 RENOVATIONS

ROOF FRAMING PLAN

SCALE:	AS INDICATED
STATION DESIGN WON:	7406712
STATION CONSTRUTION WON:	7406712
NAVFAC DRAWING NO.	12939449
SHEET	24 OF 148

S-102

DRAWFORM REVISION: 25 AUGUST 2020

7/1/2026 12:06:15 PM S-102
C:\Users\kcate.KAYDOS-DANIELS\Documents\2509 B7019 STRUCT 2023_lggeki23.rvt

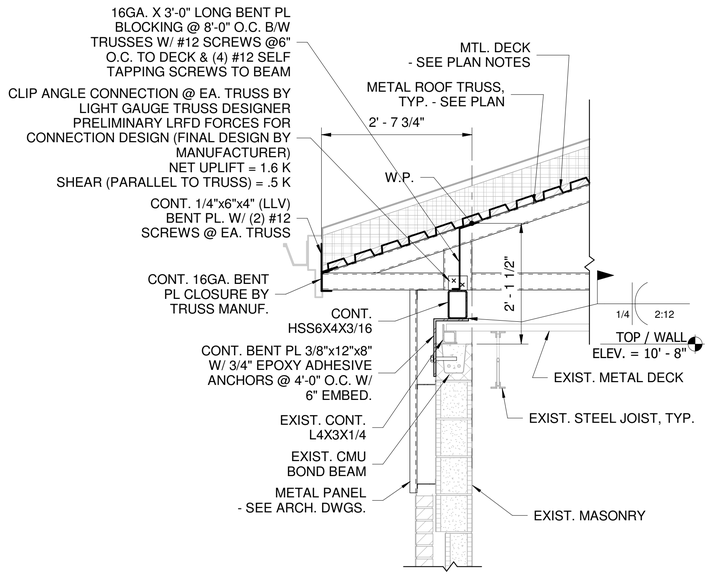

B3 SECTION

SCALE: 3/4" = 1'-0"

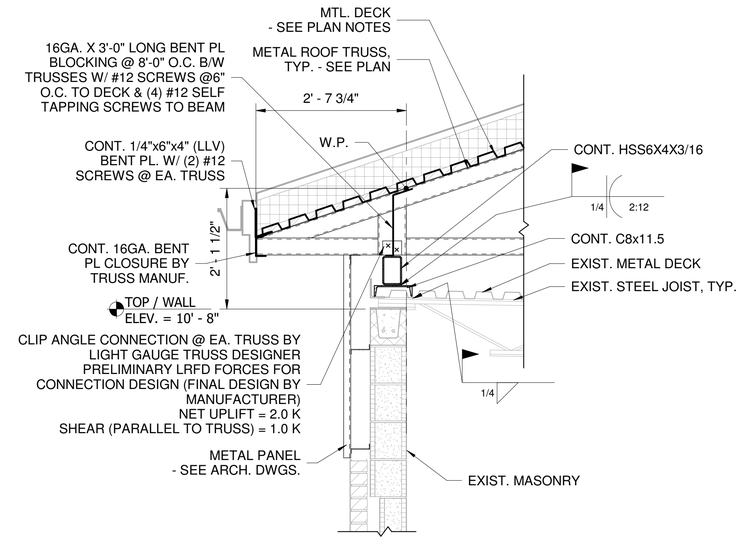

B4 SECTION

SCALE: 3/4" = 1'-0"

GENERATOR FOUNDATION DETAILS ARE PRELIMINARY FOR PRICING, BASED ON GENERATOR AS INDICATED ON THE ELECTRICAL DRAWINGS AND WILL NEED TO BE CONFIRMED UPON FINAL SELECTION BY THE CONTRACTOR

20'x10'x1'-6" FOUNDATION AT GENERATOR

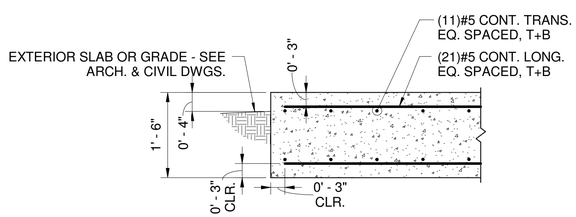

A1 TYPICAL GENERATOR FOUNDATION

SCALE: 3/4" = 1'-0"

PRELIMINARY FOR PRICING BASED ON A 30FT DIAMETER, 56,000 GALLON STEEL TANK AS INDICATED ON THE FIRE PROTECTION DRAWINGS AND WILL NEED TO BE CONFIRMED UPON FINAL SELECTION BY THE CONTRACTOR

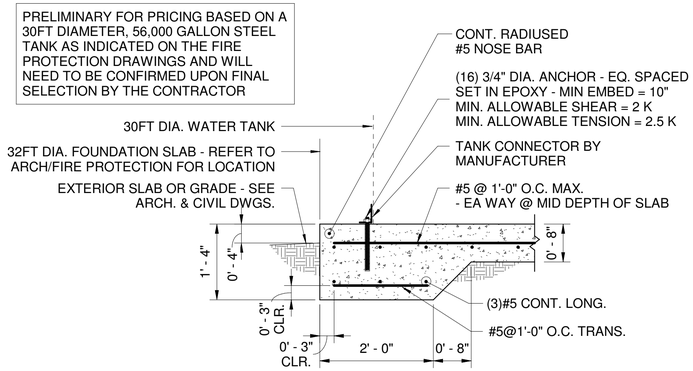

A2 TYPICAL WATER TANK FOUNDATION

SCALE: 3/4" = 1'-0"

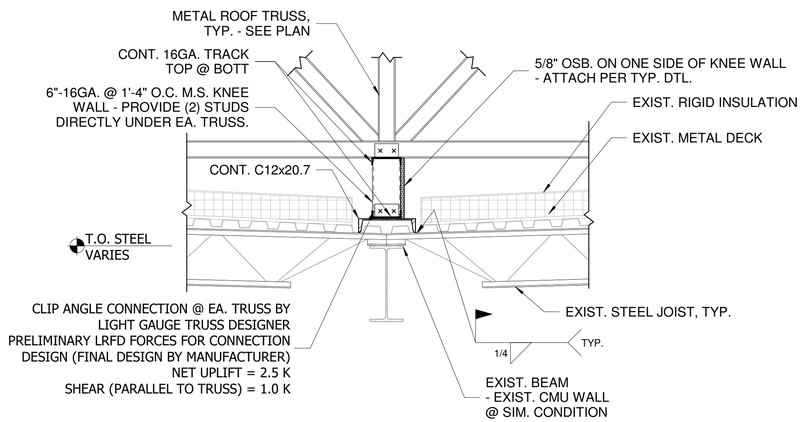

A4 SECTION

SCALE: 3/4" = 1'-0"

GRAPHIC SCALE: 3/4"=1'-0"

1' 0 1' 2' 3'

SYM	DESCRIPTION	DATE	APPR

NAVFAC

NORTH CAROLINA PROFESSIONAL ENGINEER SEAL 032586 LUCAS G. A GELO

01 JUL 2026 SEAL

k-ce kaydos-daniels engineers, plc

718 w lane st raleigh nc 27603

T 919 828 4966 kaydos-daniels.com

A/E INFO

APPROVED

FOR COMMANDER NAVFAC

ACTIVITY

SATISFACTORY TO

DES	LGG	DRW	HON	CHK	LGG
PM/DM			L. PEED		
BRANCH MANAGER			H. PERRY		
CHIEF ENG/ARCH			P. FAULKNER		
FIRE PROTECTION			D. CHASTAIN		

DEPARTMENT OF THE NAVY
NAVAL FACILITIES ENGINEERING COMMAND
[PT MARINE]
MARINE CORPS AIR STATION

NAVAL FACILITIES ENGINEERING COMMAND ~ MIDATLANTIC
NAVAL STATION - NORFOLK, VA.
CHERRY POINT, NC

MCOLF ATLANTIC
BUILDING 7019 RENOVATIONS

SECTIONS

SCALE:	AS INDICATED
STATION DESIGN WON:	7406712
STATION CONSTRUTION WON:	7406712
NAVFAC DRAWING NO.	12939450
SHEET	25 OF 148

S-201

DRAWFORM REVISION: 25 AUGUST 2020

7/1/2025 12:06:15 PM S-201
C:\Users\lucas.KAYDOS-DANIELS\Documents\2509 B7019 STRUCT 2023_lggeki23.rvt

MASONRY LINTEL SCHEDULE

WALL TYPE	MASONRY OPENING (M.O.)	TYPE	SIZE	REMARKS
4" BRICK OR 4" CMU	M.O. ≤ 8'-0"	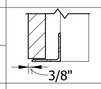	L6x6x3/8	NOTE 5
	8'-0" < M.O. ≤ 12'-0"		L8x6x5/8 LLV	
8" CMU	M.O. ≤ 6'-0"		8" X 8" W/ (2)#5	
	6'-0" < M.O. ≤ 12'-0"		8" X 16" W/ (2)#6	
4" BRICK AND 8" OR 12" CMU	6'-0" < M.O. ≤ 12'-0"		W8x18 + PL 3/8 x W-1" X M.O.-1"	NOTE 4

NOTES:
1. PROVIDE LINTELS AS SHOWN UNLESS NOTED OTHERWISE ON PLANS, SECTIONS, OR DETAILS FOR ALL OPENINGS WIDER THAN 1'-0".
2. SEE ARCHITECTURAL DRAWINGS FOR LOCATIONS OF REQUIRED LINTELS.
3. BEAR MASONRY LINTELS MINIMUM 8" EACH END.
4. FOR OPENINGS 6'-0" TO 12'-0", THE W8 BEAM BEARS ON MAONRY MINIMUM 8" EACH END. REFER TO STEEL BEAM BEARING ON MASONRY WALL DETAIL FOR BEARING PLATES & ANCHOR BOLTS REQUIRED EACH END.
5. CMU OR METAL STUD BACK-UP WALL.

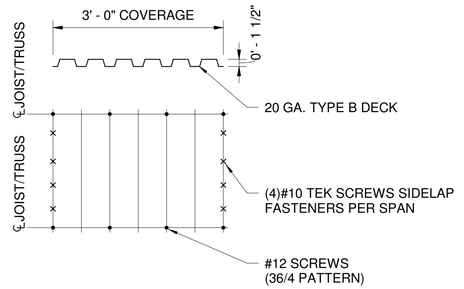

D3 1 1/2" ROOF DECK FASTENER LAYOUT

SCALE: 3/4" = 1'-0"

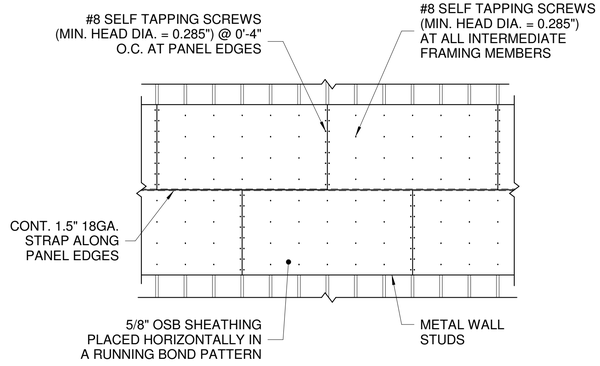

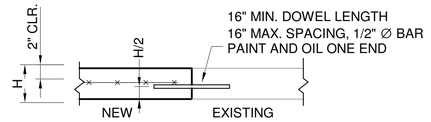

SLAB INFILL @ EXISTING 5" SLAB

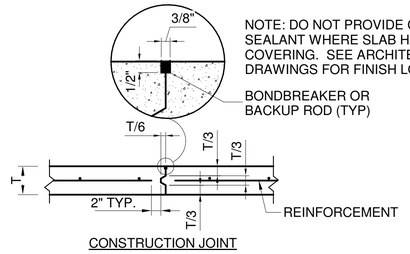

CONSTRUCTION JOINT

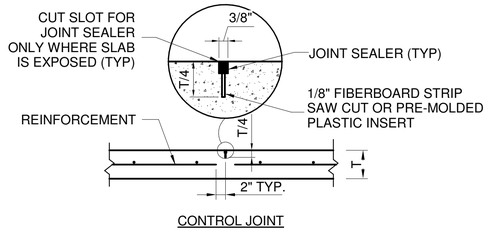

CONTROL JOINT

B1 NON-LOAD BEARING MASONRY LINTELS

SCALE: 3/4" = 1'-0"

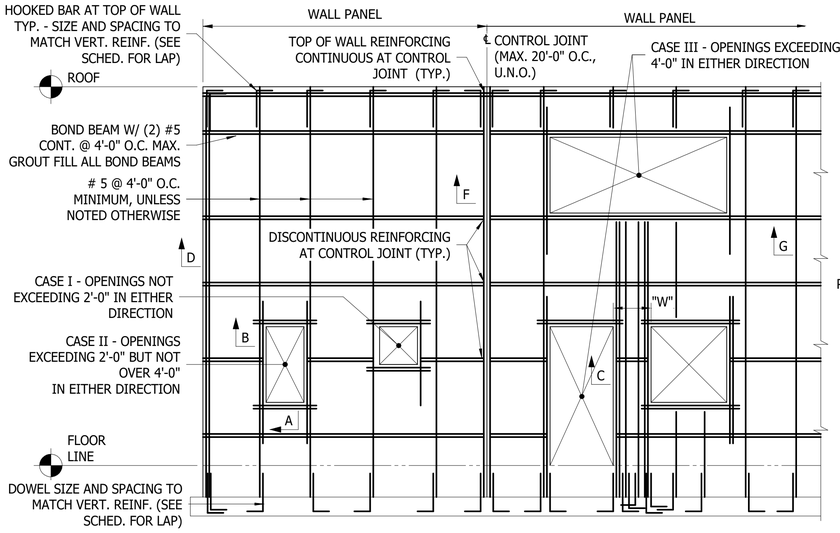

A1 REINFORCED CMU WALL ELEVATION & REINFORCING DETAILS

SCALE: 1/4" = 1'-0"

B3 SHEAR PANEL FASTENING - NEW OSB SHEATHING

SCALE: 3/4" = 1'-0"

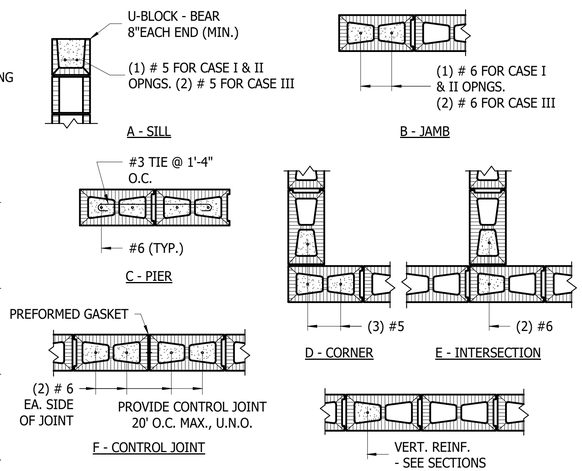

PIER REINFORCING

CMU THICKNESS	W	REINFORCING
8"	LESS THAN 48"	GROUT SOLID - DETAIL C
	GREATER THAN 48"	TYPICAL WALL REINF.
12"	LESS THAN 48"	GROUT SOLID - DETAIL C
	GREATER THAN 48"	TYPICAL WALL REINF.

B4 SLAB ON GRADE JOINTS

SCALE: 3/4" = 1'-0"

CMU NOTES

1. PROVIDE MINIMUM REINFORCING AS SHOWN FOR ALL REINFORCED CMU WALLS.
2. PROVIDE LADDER TYPE, 9 GAGE, SINGLE WYTHE HORIZONTAL JOINT REINFORCEMENT @ 1'-4" O.C. AND IN FIRST AND SECOND HORIZONTAL JOINTS ABOVE AND BELOW OPENINGS. EXTEND 1'-4" MINIMUM EACH SIDE OF OPENING.
3. FOR REINFORCING AROUND OPENINGS, EXTEND REINFORCING 48 BAR DIAMETERS PAST THE EDGE OF OPENINGS.
4. HORIZONTAL BOND BEAMS MUST BE CONTINUOUS WITH VERTICAL REINFORCING EXTENDING THROUGH THE BOND BEAM OR 6" INTO BOND BEAM AT TOP OF WALL W/ STD. 90 DEGREE HOOK .
5. REFER TO LINTEL SCHEDULE FOR HEAD CONDITION OF OPENINGS.
6. ALL GROUT WITHIN CMU WALLS MUST BE 3000 PSI PEA GRAVEL GROUT PLACED IN 4'-0" MAX. VERTICAL LIFTS.
7. SEE GENERAL NOTES ON SHEET S001.

LAP SPLICE SCHEDULE

BAR SIZE	LAP (in.)				
	4" CMU	6" CMU	8" CMU	10" CMU	12" CMU
#3	21	19	19	19	19
#4	40	25	25	25	25
#5	n/a	39	31	31	31
#6	n/a	80	57	52	52
#7	n/a	n/a	79	61	61
#8	n/a	n/a	112	86	74

NOTE: THESE DETAILS APPLY TO ALL REINFORCED CMU WALLS. REFER TO SECTIONS & PLANS FOR EXTENT OF REINFORCED CMU.

CMU GROUTING PROCEDURE

GENERAL:

1. THE GROUTING PROCEDURE PROVIDED BELOW MUST BE STRICTLY ADHERED TO BY THE CONTRACTOR. CONTACT CONTRACTOR'S QUALITY CONTROL MANAGER 24 HOURS BEFORE PLACING GROUT FOR AN INSPECTION OF THE WORK.
2. CONTRACTOR MUST PROVIDE MATERIALS AND PERFORM ALL GROUTING WORK IN ACCORDANCE WITH ACI 530.1 - MASONRY STRUCTURES SPECIFICATIONS.

PREPARATION:

1. THOROUGHLY CLEAN EACH CORE TO BE GROUTED BY RODDING TO REMOVE ALL DELETERIOUS MATERIAL AND DEBRIS.
2. PROVIDE CLEANOUTS AT THE BASE OF WALL BY REMOVING THE FACE SHELL OF UNITS AT EACH CORE TO BE GROUTED. REMOVE DEBRIS THROUGH THE CLEANOUT. CLEANOUTS MUST BE NO SMALLER THE 5" X 5". WHERE CORES ARE TO BE GROUTED AT 8" ON CENTER, PROVIDE CLEANOUTS AT 1'-4" O.C.
3. AFTER CLEANING, CLOSE CLEANOUTS WITH CLOSURES BRACED TO RESIST GROUT PRESSURE.
4. PLACE REINFORCEMENT PRIOR TO GROUTING.

PLACEMENT:

1. GROUT MAY BE PLACED BY PUMPING, OR POURING FROM LARGE OR SMALL BUCKETS.
2. PLACE GROUT IN LIFTS NOT EXCEEDING 4'-0" HIGH.
3. THE NEXT LIFT MAY BE PLACED AFTER WATER FROM THE GROUT BELOW IS ABSORBED BY MASONRY UNITS.
4. CONSOLIDATE EACH 4'-0". LIFT WITH A LOW VELOCITY VIBRATOR WITH A 3/4" HEAD. THE VIBRATOR MUST BE PLACE AT MID HEIGHT OF THE LIFT IN EACH GROUTED CORE AND MUST BE ACTIVATED FOR ONE OR TWO SECONDS ONLY.

APPR			
DATE			
DESCRIPTION			
SYM			

NAVFAC

NORTH CAROLINA PROFESSIONAL ENGINEER SEAL 032586 LUCAS G. A GELD 01 JUL 2026

k-e kaydos-daniels engineers, plc
718 w lane st raleigh nc 27603
T 919 828 4966 kaydos-daniels.com

A/E INFO

APPROVED

FOR COMMANDER NAVFAC

ACTIVITY

SATISFACTORY TO

DES	LGG	DRW	HON	CHK	LGG

PM/DM L. PEED

BRANCH MANAGER H. PERRY

CHIEF ENG/ARCH P. FAULKNER

FIRE PROTECTION D. CHASTAIN

DEPARTMENT OF THE NAVY
NAVAL FACILITIES ENGINEERING COMMAND - MIDATLANTIC
[DT MARINE]
NAVAL FACILITIES ENGINEERING COMMAND
NAVAL STATION - NORFOLK, VA
MARINE CORPS AIR STATION
CHERRY POINT, NC

MCOLF ATLANTIC
BUILDING 7019 RENOVATIONS

TYPICAL CONSTRUCTION DETAILS

SCALE: AS INDICATED

STATION DESIGN WON: 7406712

STATION CONSTRUTION WON: 7406712

NAVFAC DRAWING NO. 12939451

SHEET 26 OF 148

S-501

DRAWFORM REVISION: 25 AUGUST 2020

7/1/2026 12:06:15 PM S-501
C:\Users\lucas\KAYDOS-DANIELS\Documents\2509 B7019 STRUCT 2023_lgpeik23.rvt

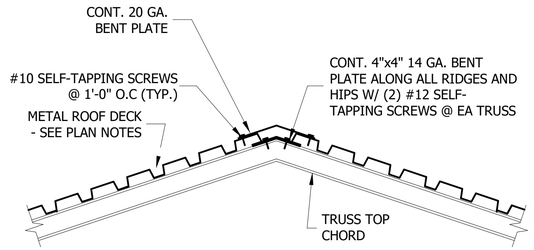

C4 BENT PLATE @ HIPS, VALLEYS & RIDGES

SCALE: 1" = 1'-0"

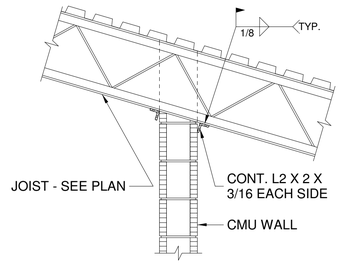

CMU EXTENDING TO BOTTOM OF DECK - WALL
PERPENDICULAR TO STEEL JOISTS

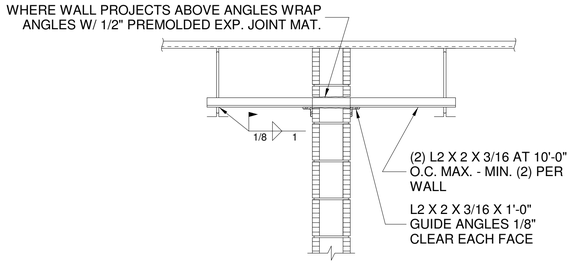

CMU EXTENDING TO BOTTOM OF DECK - WALL
PARALLEL TO STEEL JOISTS

A2 INTERIOR CMU PARTITION BRACING AT ROOF

SCALE: 3/4" = 1'-0"

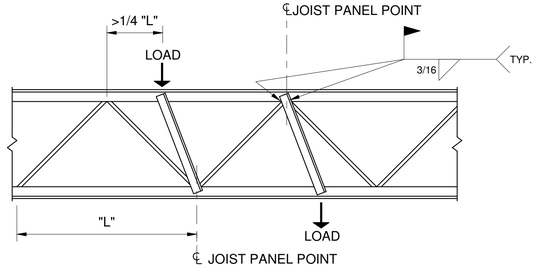

NOTES:

1. IF A CONCENTRATED LOAD OF 100 LB. OR MORE IS LOCATED 1/4 "L" OR GREATER FROM A PANEL POINT, A BRACE MADE OF L2x2x3/8 SHALL BE FIELD WELDED TO EACH SIDE OF THE TOP AND BOTTOM CHORDS.
2. THE TRADE CONTRACTOR REQUIRING SUPPORT FOR THE HUNG OR SUPER-IMPOSED LOAD SHALL BE RESPONSBILE FOR FURNISHING AND INSTALLING THE REQUIRED ANGLES AT THE DIRECTION OF THE GENERAL CONTRACTOR.

A4 TYPICAL BAR JOIST REINFORCING

SCALE: 3/4" = 1'-0"

SYM	DESCRIPTION	DATE	APPR

NAVFAC

NORTH CAROLINA PROFESSIONAL ENGINEER SEAL 032586 LUCAS G. A GELO
01 JUL 2026 SEAL

k-ce kaydos-daniels engineers, plic
718 w lane st raleigh nc 27603
T 919 828 4966 kaydos-daniels.com

A/E INFO

APPROVED

FOR COMMANDER NAVFAC

ACTIVITY

SATISFACTORY TO

DES	LGG	DRW	HON	CHK	LGG

PM/DM	L. PEED
BRANCH MANAGER	H. PERRY
CHIEF ENG/ARCH	P. FAULKNER
FIRE PROTECTION	D. CHASTAIN

DEPARTMENT OF THE NAVY
NAVAL FACILITIES ENGINEERING COMMAND - MIDATLANTIC
NAVAL STATION - NORFOLK, VA.
CHERRY POINT, NC
MARINE CORPS AIR STATION
IPT MARINE
MCOLF ATLANTIC
BUILDING 7019 RENOVATIONS
TYPICAL CONSTRUCTION DETAILS

SCALE:	AS INDICATED
STATION DESIGN WON:	7406712
STATION CONSTRUTION WON:	7406712
NAVFAC DRAWING NO.	12939452
SHEET	27 OF 148

S-502

DRAWFORM REVISION: 25 AUGUST 2020

7/1/2026 12:06:16 PM S-502
C:\Users\lucas.KAYDOS-DANIELS\Documents\2509 B7019 STRUCT 2023_lggelo23.rvt

SYMBOL LEGEND

DRAWING TAG

NORTH ARROW

EXTERIOR ELEVATION TAG

INTERIOR ELEVATION TAG

SECTION TAG

BUILDING SECTION TAG
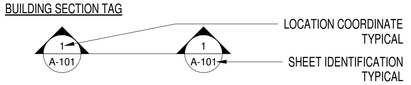

DETAIL TAG
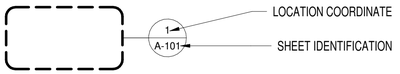

COLUMN GRID
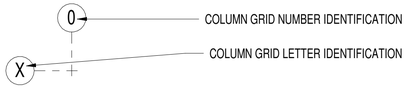

DEMOLITION KEYNOTE TAG

CONSTRUCTION KEYNOTE TAG

ELEVATION BENCHMARK

WALL TYPE TAG

WINDOW TAG

DOOR TAG

ROOM NAME TAG

ROOF AREA TAG

DIMENSIONS
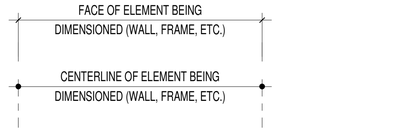

ABBREVIATIONS

ACAIR	CONDITIONING
AB	ANCHOR BOLT
ADA	AMERICANS WITH DISABILITIES ACT
ABA	ARCHITECTURAL BARRIERS ACT
AFF	ABOVE FINISH FLOOR
AHJ	AUTHORITY HAVING JURISDICTION
AHU	AIR HANDLING UNIT
ALUM	ALUMINUM
ALT	ALTERNATE
ATC	ACOUSTICAL TILE CEILING
AUX	AUXILIARY
BD	BOARD
BLDG	BUILDING
BL	BUILDING LINE
BRG	BEARING
CFM	CUBIC FEET PER MINUTE
CI	CURB INLET / CAST IRON
CJ	CONTROL JOINT
CL	CENTER LINE
CLG	CEILING
CLR	CLEAR
CM	CENTIMETER
COL	COLUMN
CONC	CONCRETE
CPT	CARPET
CY	CUBIC YARD
DF	DRINKING FOUNTAIN
DIA	DIAMETER
DIAG	DIAGONAL
DL	DEAD LOAD
DN	DOWN
DS	DOWNSPOUT
DWG	DRAWING
EA	EACH / EXHAUST AIR
EJ	EXPANSION JOINT
EJ/CJ	EXPANSION JOINT & CONTROL JOINT
ELEV	ELEVATION, ELEVATOR
ELEC	ELECTRIC(AL)
EQ	EQUAL
EQUP	EQUIPMENT
ERD	EMERGENCY OVERFLOW ROOF DRAIN
EP	EQUIPMENT POST
EW	EACH WAY
EX	EXHAUST
EXTG	EXISTING
EXT	EXTERIOR
FA	FIRE ALARM
FACP	FIRE ALARM CONTROL PANEL
FAAP	FIRE ALARM ANNUNCIATOR PANEL
FCU	FAN COIL UNIT
FD	FLOOR DRAIN
FE	FIRE EXTINGUISHER
FEC	FIRE EXTINGUISHER CABINET
FFE	FINISHED FLOOR ELEVATION
FG	FINISHED GRADE
FIN	FINISH
FIXT	FIXTURE
FLR	FLOOR
FHB	FREEZE-PROOF HOSE BIBB
FT	FEET
GA	GAGE
GALV	GALVANIZED
GPM	GALLONS PER MINUTE
GWB	GYPSUM WALLBOARD
GYP	GYPSUM
HB	HOSE BIBB
HM	HOLLOW METAL
HS	HOT STACK
ID	INSIDE DIAMETER
IN	INCH
INSUL	INSULATION
INT	INTERIOR
JT	JOINT
LAV	LAVATORY
LF	LINEAR FEET
LL	LIVE LOAD
LVT	LUXURY VINYL TILE
MAX	MAXIMUM
MECH	MECHANICAL
MFR	MANUFACTURER
MIN	MINIMUM
MO	MASONRY OPENING
NEC	NATIONAL ELECTRICAL CODE
NIC	NOT IN CONTRACT
NO	NUMBER
NTS	NOT TO SCALE
OC	ON CENTER
OPG	OPENING
PWD	PLYWOOD
PP	PITCH POCKET
PR	PAIR
PS	PIPE STAND
PSF	POUNDS PER SQUARE FOOT
PSI	POUNDS PER SQUARE INCH
PV	ROOFTOP POWER EXHAUST FAN
QT	QUARRY TILE
RB	RESILIENT BASE
RC	ROOFTOP EXHAUST/INTAKE CAP
RD	ROOF DRAIN
REQ	REQUIRED
REV READ	REVERSE READ
RM	ROOM
RO	ROUGH OPENING
ROW SC	RIGHT OF WAY SCUPPER
SD	SMOKE DETECTOR
SECT	BUILDING SECTION
SHT	SHEET
SIM	SIMILAR
SQ	SQUARE
SS	STAINLESS STEEL
STD	STANDARD
T&B	TOP AND BOTTOM
T&G	TONGUE AND GROOVE
TLT	TOILET
TOS	TOP OF STEEL
TYP	TYPICAL
UH	UNIT HEATER
UNO	UNLESS NOTED OTHERWISE
V	VENT THROUGH ROOF
VAV	VARIABLE AIR VOLUME
VCT	VINYL COMPOSITION TILE
W/	WITH
WD	WOOD
WH	WATER HEATER

MBF ARCHITECTS P.A. REGISTERED ARCHITECTURAL CORPORATION NORTH CAROLINA CERT. NO. 50679 NEW BERN NC

APPR | DATE | DESCRIPTION | SYM

NAVFAC

DARDEN J. EURE III REGISTERED ARCHITECT 8440 NORTH CAROLINA NEW BERN NC

01 JUL 2026 SEAL

mbf architects pa
317-C Pollock Street | New Bern, NC 28560
252.637.6373 | mbfarchitects.com
A/E INFO

APPROVED

FOR COMMANDER NAVFAC

ACTIVITY

SATISFACTORY TO

DES	REL	DRW	REL	CHK	DJE,III
PM/DM					L. PEED
BRANCH MANAGER					H. PERRY
CHIEF ENG/ARCH					P. FAULKNER
FIRE PROTECTION					D. CHASTAIN

DEPARTMENT OF THE NAVY
NAVAL FACILITIES ENGINEERING COMMAND
IPT MARINE
NAVAL FACILITIES ENGINEERING COMMAND - MIDATLANTIC
NAVAL STATION - NORFOLK, VA.
MARINE CORPS AIR STATION
CHERRY POINT, NC

MCOLF ATLANTIC
BUILDING 7019 RENOVATIONS

SYMBOL LEGEND AND ABBREVIATIONS

SCALE:	AS INDICATED
STATION DESIGN WON:	7406712
STATION CONSTRUCTION WON:	7406712
NAVFAC DRAWING NO.	12939453
SHEET	28 OF 148

A-001

DRAWFORM REVISION: 25 AUGUST 2020

7/22/2026 11:05:28 AM A-001
C:\Users\sigmon\Documents\2509 ARCH 2023_sigmonP9CRM.rvt

DEMOLITION KEYNOTES

1. REMOVE ALUMINUM WINDOW, GLAZING, HARDWARE, TRIM AND SILL
2. REMOVE EXTERIOR STEEL DOOR, STEEL FRAME AND HARDWARE
3. REMOVE INTERIOR STEEL DOOR, STEEL FRAME AND HARDWARE
4. DEMOLISH CASEWORK INCLUDING COUNTERTOPS AND HARDWARE
5. SAW CUT AND REMOVE PORTION OF EXTERIOR CMU AND BRICK VENEER WALL TO ACCOMMODATE NEW DOOR OPENING. COORDINATE WITH DOOR SCHEDULE TO DETERMINE EXACT DIMENSIONS OF WALL REMOVAL.
6. SAW CUT AND REMOVE SECTIONS OF FLOOR SLAB TO ACCOMMODATE NEW WASTEWATER DISTRIBUTION. DIMENSIONS OF SLAB DEMOLITION SHOWN ARE APPROXIMATE
7. DEMOLISH A PORTION OF WALL TO ACCOMMODATE NEW DOOR AND FRAME
8. DEMOLISH TOILET PARTITIONS INCLUDING HARDWARE, ETC.
9. DEMOLISH PLUMBING FIXTURES AND TOILET ACCESSORIES
10. DEMOLISH SHOWERS INCLUDING CERAMIC TILE FLOOR, PAN, FIXTURES AND ACCESSORIES
11. DEMOLISH ALUMINUM STOREFRONT FRAME, DOOR, AND HARDWARE
12. DEMOLISH WOOD FRAMED INSECT SCREEN ENCLOSURE, INCLUDING DOOR AND DOOR HARDWARE
13. REMOVE PTAC UNIT AND PREPARE EXISTING MASONRY OPENING TO RECEIVE NEW PTAC UNIT
14. REMOVE VINYL TILE FLOORING AND 6" RUBBER WALL BASE. MECHANICALLY ABRADE SLAB TO RECEIVE NEW FLOOR FINISH APPLICATION
15. REMOVE RUBBER MAT FLOORING
16. DEMOLISH CERAMIC TILE FLOORING. DEMOLISH CERAMIC WALL TILE IN GANG TOILET. CLEAN AND PREPARE GLAZED CONCRETE MASONRY UNIT WAINCOTTING TO RECEIVE CERAMIC TILE IN SLEEPING ROOM TOILETS
17. DEMOLISH CERAMIC TILE FLOORING IN KITCHEN, INCLUDING RAISED CONTAINMENT CURB. CLEAN AND PREPARE PAINTED GLAZED CONCRETE MASONRY UNIT WALLS TO RECIEVE ADDITIONAL COAT OF PAINT
18. CLEAN AND MECHANICALLY ABRADE SLAB TO RECEIVE NEW FLOOR APPLICATION
19. DEMOLISH AND REMOVE SCULLERY EQUIPMENT AND ACCESSORIES, INCLUDING VENTILATION HOOD AND WALL MOUNTED DEVICES
20. DEMOLISH STAINLESS STEEL SERVING COUNTER
21. REMOVE INTERIOR FRAME AND PREPARE WALL TO RECEIVE INFILL
22. DEMOLISH WATER COOLER AND PREPARE TO RECEIVE NEW

GENERAL DEMOLITION NOTES

1. REFERENCE SHEET G-002 FOR SYMBOL LEGEND
2. WHERE EXISTING LOAD BEARING ELEMENTS ARE TO BE REMOVED CONTRACTOR MUST PROVIDE TEMPORARY SHORING AND BRACING OF EXISTING STRUCTURE UNTIL NEW LOAD BEARING ELEMENT IS IN PLACE
3. EXISTING FURNITURE AND EQUIPMENT WITHIN WORK AREAS WILL BE REMOVED BY THE GOVERNMENT
4. REFERENCE THE LIFE SAFETY DRAWINGS FOR LOCATIONS OF RATED WALLS AND SMOKE PARTITIONS

DEMOLITION LEGEND

- EXISTING WALLS, DOORS, FRAMES, MILLWORK AND EQUIPMENT TO REMAIN
- WALLS, DOORS, FRAMES, MILLWORK AND EQUIPMENT TO BE REMOVED
- LIMITS OF FLOOR SLAB DEMOLITION

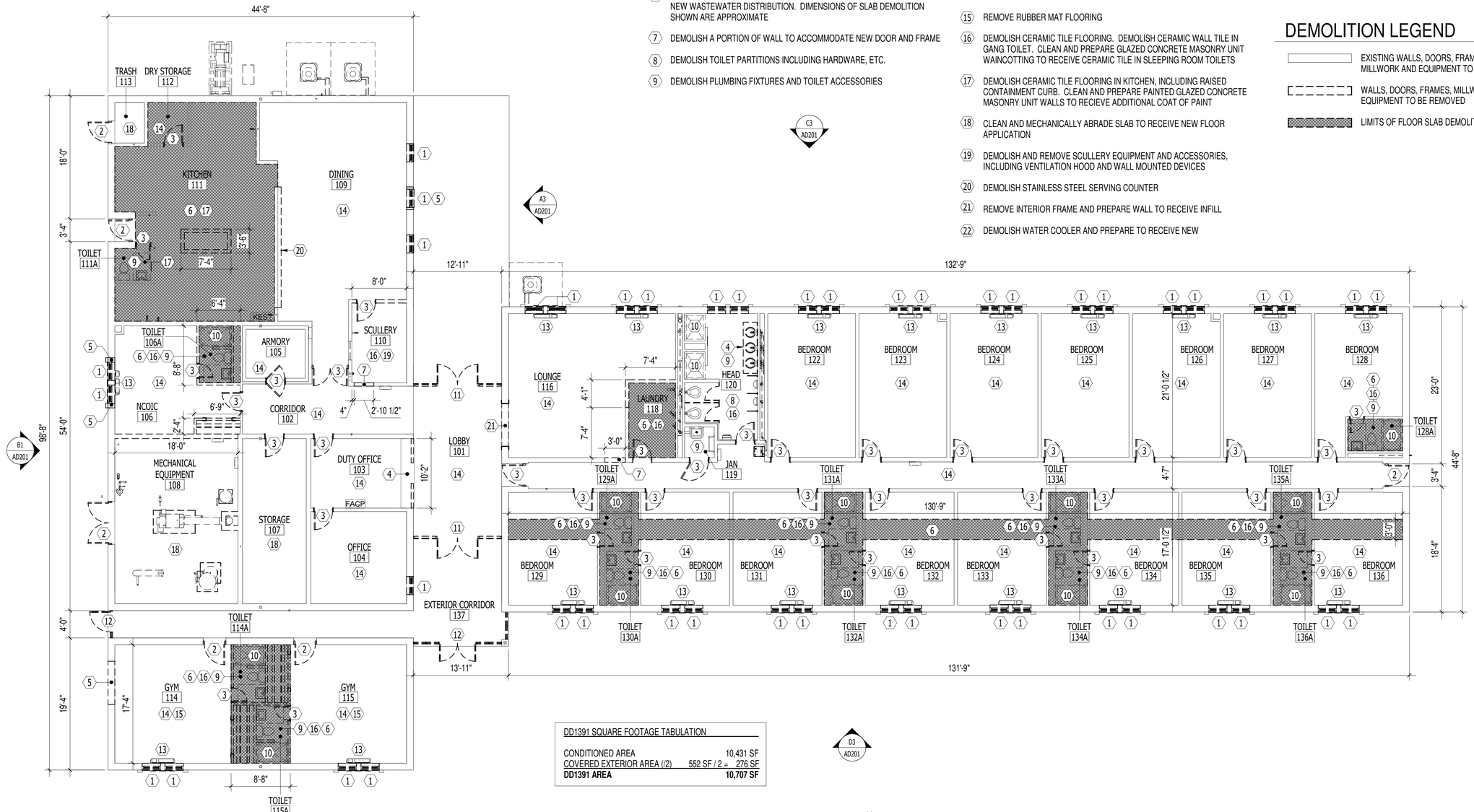

DD1391 SQUARE FOOTAGE TABULATION

CONDITIONED AREA	10,431 SF
COVERED EXTERIOR AREA (/2) 552 SF / 2 =	276 SF
DD1391 AREA	**10,707 SF**

A3 FLOOR PLAN - EXISTING/DEMOLITION

SCALE: 1/8" = 1'-0"

GRAPHIC SCALE: 1/8"=1'-0"
8" 0 4' 8' 16'

MBF ARCHITECTS PA REGISTERED ARCHITECTURAL CORPORATION CERT. NO. 50679 NORTH CAROLINA NEW BERN NC

APPR | DATE | DESCRIPTION | SYM

NAVFAC

DARDEN J. EURE III REGISTERED ARCHITECT NORTH CAROLINA NEW BERN NC 8440 01 JUL 2026 SEAL

mbf architects pa
317-C Pollock Street | New Bern, NC 28560
252.637.6373 | mbfarchitects.com
A/E INFO

APPROVED
FOR COMMANDER NAVFAC
ACTIVITY
SATISFACTORY TO

DES	REL	DRW	REL	CHK	DJE,III
PM/DM					L. PEED
BRANCH MANAGER					H. PERRY
CHIEF ENG/ARCH					P. FAULKNER
FIRE PROTECTION					D. CHASTAIN

DEPARTMENT OF THE NAVY
NAVAL FACILITIES ENGINEERING COMMAND
NAVAL FACILITIES ENGINEERING COMMAND ~ MIDATLANTIC
NAVAL STATION - NORFOLK, VA
IPT MARINE
MARINE CORPS AIR STATION CHERRY POINT, NC
MCOLF ATLANTIC
BUILDING 7019 RENOVATIONS
FLOOR PLAN - EXISTING/DEMOLITION

SCALE:	AS INDICATED
STATION DESIGN WON:	7406712
STATION CONSTRUCTION WON:	7406712
NAVFAC DRAWING NO.	12939454
SHEET	29 OF 148

AD101

DRAWFORM REVISION: 25 AUGUST 2020

7/2/2026 11:05:29 AM AD101
C:\Users\sigmon\Documents\2509 ARCH 2023_sigmonP9CRM.rvt

REFLECTED CEILING PLAN LEGEND

- 2'x2' ACOUSTICAL TILE CEILING SYSTEM
- 2'x4' LIGHTING FIXTURE
- 1'x4' LIGHTING FIXTURE
- UTILITY 4' LIGHTING FIXTURE
- DOWNLIGHT OR PENDANT LIGHTING
- EXIT LIGHT
- COMBINATION EMERGENCY LIGHTING UNIT AND EXIT SIGN
- WALL-MOUNTED LIGHTING FIXTURE
- CEILING SUPPLY DIFFUSER
- CEILING RETURN GRILLE
- CEILING EXHAUST GRILLE
- EMERGENCY LIGHTING UNIT
- SPRINKLER HEAD
- (S) SMOKE DETECTOR

DEMOLITION KEYNOTES

1. DEMOLISH EXISTING ACOUSTICAL TILE CEILING SYSTEM INCLUDING METAL GRID, TILES, HANGARS, LIGHTING FIXTURES, AND DIFFUSERS
2. DEMOLISH EXISTING SUSPENDED GYPSUM BOARD CEILING INCLUDING HANGERS, SUPPORTS, LIGHTING FIXTURES, AND DIFFUSERS
3. CLEAN AND PREPARE CONCRETE CEILING TO RECEIVE NEW COAT OF PAINT
4. OPEN TO STRUCTURE ABOVE
5. DEMOLISH SUSPENDED PLASTER CEILING

GENERAL DEMOLITION NOTES

1. REFERENCE SHEET G-002 FOR SYMBOL LEGEND
2. WHERE EXISTING LOAD BEARING ELEMENTS ARE TO BE REMOVED CONTRACTOR MUST PROVIDE TEMPORARY SHORING AND BRACING OF EXISTING STRUCTURE UNTIL NEW LOAD BEARING ELEMENT IS IN PLACE
3. EXISTING FURNITURE AND EQUIPMENT WITHIN WORK AREAS WILL BE REMOVED BY THE GOVERNMENT
4. REFERENCE THE LIFE SAFETY DRAWINGS FOR LOCATIONS OF RATED WALLS AND SMOKE PARTITIONS

DEMOLITION LEGEND

- EXISTING WALLS, DOORS, FRAMES, MILLWORK AND EQUIPMENT TO REMAIN
- WALLS, DOORS, FRAMES, MILLWORK AND EQUIPMENT TO BE REMOVED
- LIMITS OF FLOOR SLAB DEMOLITION

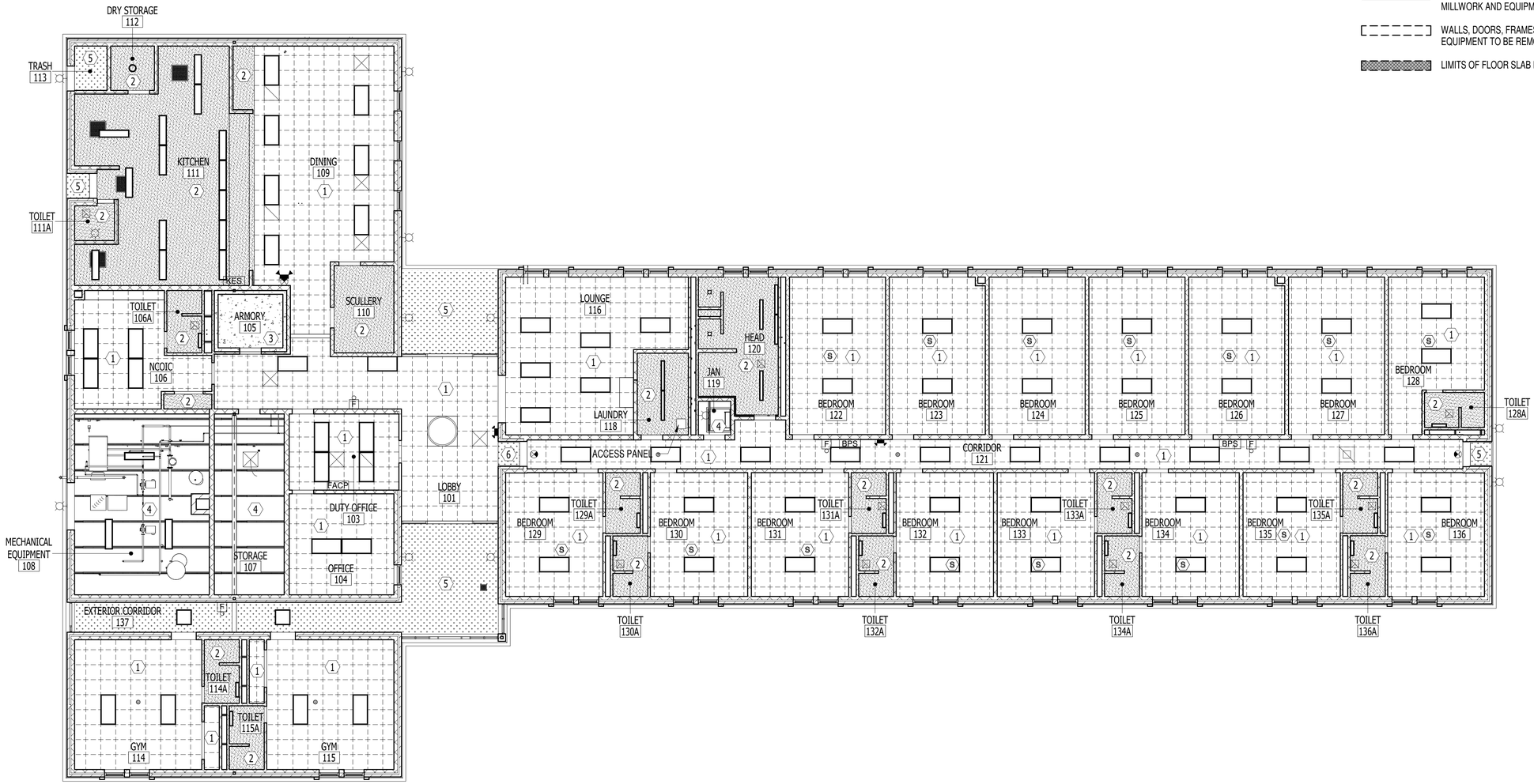

A3 REFLECTED CEILING PLAN - EXISTING/DEMOLITION

SCALE: 1/8" = 1'-0"

N

GRAPHIC SCALE: 1/8"=1'-0"

8' 0 4' 8' 16'

MBF ARCHITECTS PA REGISTERED ARCHITECTURAL CORPORATION NORTH CAROLINA NEW BERN NC CERT. NO. 50679

APPR | DATE | DESCRIPTION | SYM

NAVFAC

DARDEN J. EURE, III REGISTERED ARCHITECT NORTH CAROLINA NEW BERN NC 8440

01 JUL 2026 SEAL

mbf architects pa
317-C Pollock Street | New Bern, NC 28560
252.637.6373 | mbfarchitects.com
A/E INFO

APPROVED

FOR COMMANDER NAVFAC

ACTIVITY

SATISFACTORY TO

DES	REL	DRW	REL	CHK	DJE,III
PM/DM					L. PEED
BRANCH MANAGER					H. PERRY
CHIEF ENG/ARCH					P. FAULKNER
FIRE PROTECTION					D. CHASTAIN

DEPARTMENT OF THE NAVY
NAVAL FACILITIES ENGINEERING COMMAND
IPT MARINE
NAVAL FACILITIES ENGINEERING COMMAND ~ MIDATLANTIC
NAVAL STATION - NORFOLK, VA.
MARINE CORPS AIR STATION
CHERRY POINT, NC

MCOLF ATLANTIC
BUILDING 7019 RENOVATIONS

REFLECTED CEILING PLAN - EXISTING/DEMOLITION

SCALE:	AS INDICATED
STATION DESIGN WON:	7406712
STATION CONSTRUTION WON:	7406712
NAVFAC DRAWING NO.	12939455
SHEET	30 OF 148

AD102

DRAWFORM REVISION: 25 AUGUST 2020

7/2/2026 11:05:30 AM AD102
C:\Users\sigmon\Documents\2509 ARCH 2023_sigmonP9CRM.rvt

DEMOLITION KEYNOTES

1. REMOVE MODIFIED BITUMEN ROOF CONSTRUCTION DOWN TO STRUCTURAL METAL ROOF DECK
2. REMOVE METAL WALL PANEL, COPING AND BLOCKING ON EXISTING PARAPET WALL
3. DEMOLISH EXISTING CHIMNEY IN ITS ENTIRETY
4. REMOVE ROOF HATCH AND PREPARE OPENING TO RECEIVE ATTIC ACCESS HATCH

GENERAL DEMOLITION NOTES

1. REFERENCE SHEET G-002 FOR SYMBOL LEGEND
2. WHERE EXISTING LOAD BEARING ELEMENTS ARE TO BE REMOVED CONTRACTOR MUST PROVIDE TEMPORARY SHORING AND BRACING OF EXISTING STRUCTURE UNTIL NEW LOAD BEARING ELEMENT IS IN PLACE
3. EXISTING FURNITURE AND EQUIPMENT WITHIN WORK AREAS WILL BE REMOVED BY THE GOVERNMENT
4. REFERENCE THE LIFE SAFETY DRAWINGS FOR LOCATIONS OF RATED WALLS AND SMOKE PARTITIONS

DEMOLITION LEGEND

- EXISTING WALLS, DOORS, FRAMES, MILLWORK AND EQUIPMENT TO REMAIN
- WALLS, DOORS, FRAMES, MILLWORK AND EQUIPMENT TO BE REMOVED
- LIMITS OF FLOOR SLAB DEMOLITION

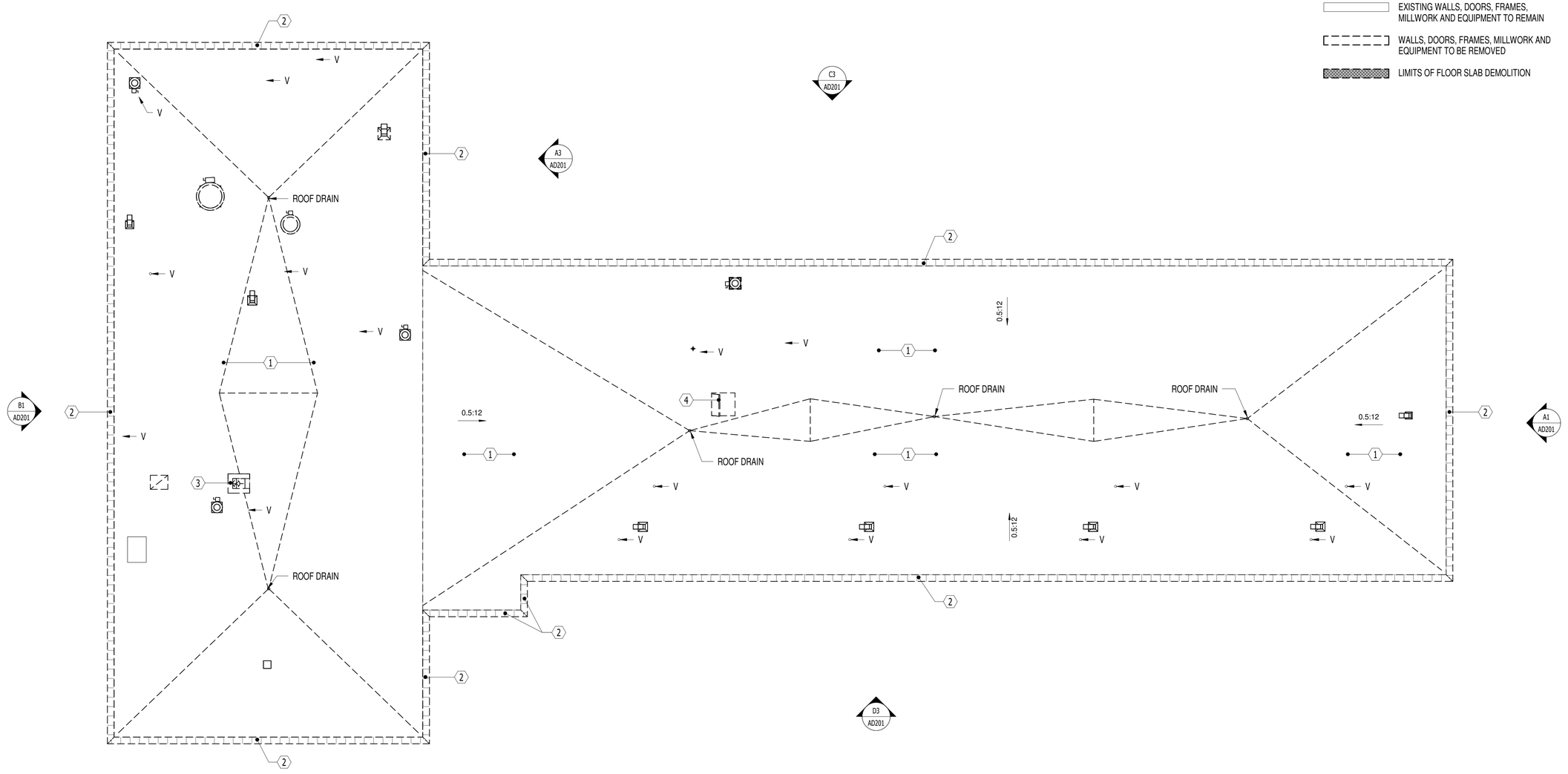

A3 ROOF PLAN - EXISTING/DEMOLITION
SCALE: 1/8" = 1'-0"

GRAPHIC SCALE: 1/8"=1'-0"
8' 0 4' 8' 16'

MBF ARCHITECTS P.A. REGISTERED ARCHITECTURAL CORPORATION CERT. NO. 50679 NORTH CAROLINA NEW BERN NC.

	APPR	DATE	DESCRIPTION	SYM

NAVFAC

DARDEN J. EURE III REGISTERED ARCHITECT 8440 NORTH CAROLINA NEW BERN NC
01 JUL 2026 SEAL

mbf architects pa
317-C Pollock Street | New Bern, NC 28560
252.637.6373 | mbfarchitects.com
A/E INFO

APPROVED

FOR COMMANDER NAVFAC
ACTIVITY

SATISFACTORY TO

DES	REL	DRW	REL	CHK DJE,III
PM/DM				L. PEED
BRANCH MANAGER				H. PERRY
CHIEF ENG/ARCH				P. FAULKNER
FIRE PROTECTION				D. CHASTAIN

NAVAL FACILITIES ENGINEERING COMMAND
DEPARTMENT OF THE NAVY
NAVAL FACILITIES ENGINEERING COMMAND ~ MIDATLANTIC
NAVAL STATION - NORFOLK, VA
IPT MARINE
MARINE CORPS AIR STATION CHERRY POINT, NC
MCOLF ATLANTIC
BUILDING 7019 RENOVATIONS
ROOF PLAN - EXISTING/DEMOLITION

SCALE:	AS INDICATED
STATION DESIGN WON:	7406712
STATION CONSTRUTION WON:	7406712
NAVFAC DRAWING NO.	12939456
SHEET	31 OF 148

AD103

DRAWFORM REVISION: 25 AUGUST 2020

AD103
7/2/2026 11:05:31 AM
C:\Users\sigmon\Documents\2509 ARCH 2023_sigmonPRCRM.rvt

ELEVATION LEGEND

- FACE BRICK
- STUCCO
- VERTICAL METAL WALL PANELS
- STANDING SEAM METAL ROOF

CONSTRUCTION KEYNOTES

1. STANDING SEAM METAL ROOF
2. FLUSH METAL WALL PANEL
3. STANDING SEAM METAL ROOF RIDGE
4. STANDING SEAM METAL ROOF VALLEY
5. SHEET METAL FASCIA
6. DOWNSPOUT
7. GUTTER
8. PTAC MECHANICAL UNIT
9. ALUMINUM STOREFRONT
10. FINISH GRADE
11. INFILL MASONRY WALL CONSTRUCTION
12. GUTTER EXPANSION JOINT

REFLECTED CEILING PLAN NOTES

1. REFERENCE SHEET A-001 FOR SYMBOL LEGEND
2. REFERENCE INTERIOR DESIGN DRAWINGS FOR FINISH SCHEDULE
3. PROVIDE WET AREA ACOUSTICAL TILE CEILING SYSTEM AT TOILETS, JANITOR CLOSETS AND SIMILAR HIGH HUMIDITY SPACES
4. REFERENCE THE ELECTRICAL DRAWINGS FOR LIGHTING FIXTURE INFORMATION
5. REFERENCE THE MECHANICAL DRAWINGS FOR GRILLE AND DIFFUSER INFORMATION
6. REFERENCE THE LIFE SAFETY DRAWINGS FOR LOCATIONS OF RATED WALLS AND SMOKE PARTITIONS

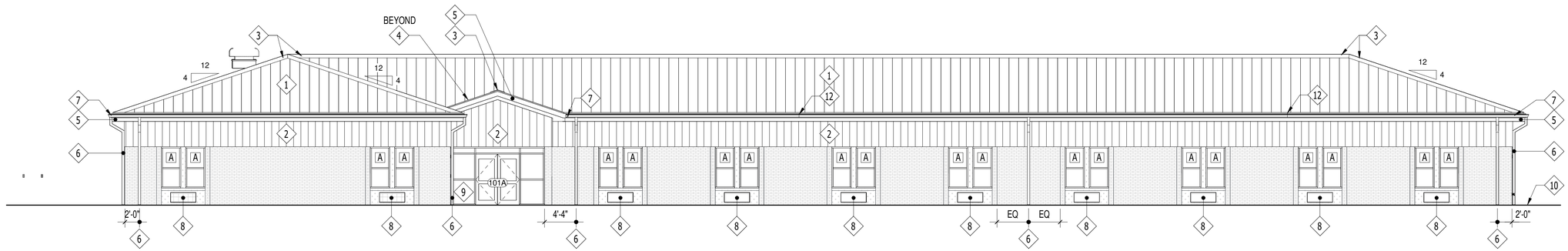

D3 SOUTH ELEVATION - CONSTRUCTION

SCALE: 1/8" = 1'-0"

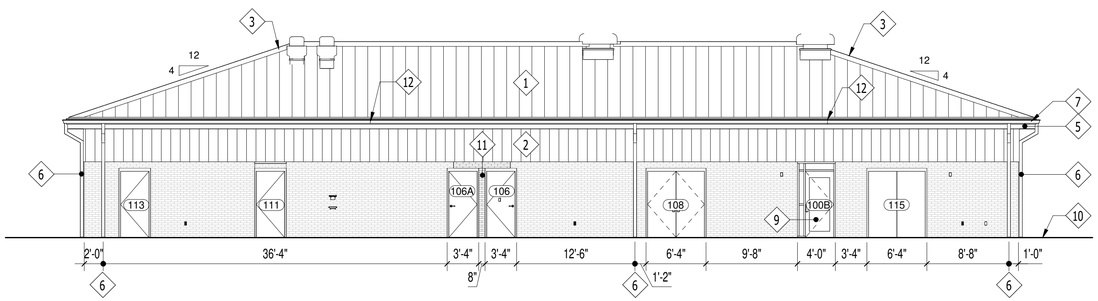

B2 WEST ELEVATION - CONSTRUCTION

SCALE: 1/8" = 1'-0"

GRAPHIC SCALE: 1/8"=1'-0"

8' 0 4' 8' 16'

MBF ARCHITECTS P.A. REGISTERED ARCHITECTURAL CORPORATION CERT. NO. 50679 NORTH CAROLINA NEW BERN NC

SYM	DESCRIPTION	DATE	APPR

NAVFAC

DARDEN J. EURE, III REGISTERED ARCHITECT 8640 NORTH CAROLINA NEW BERN NC

01 JUL 2026 SEAL

mbf architects pa

317-C Pollock Street | New Bern, NC 28560
252.637.6373 | mbfarchitects.com

A/E INFO

APPROVED

FOR COMMANDER NAVFAC

ACTIVITY

SATISFACTORY TO

DES	REL	DRW	REL	CHK	DJE,III

PM/DM	L. PEED
BRANCH MANAGER	H. PERRY
CHIEF ENG/ARCH	P. FAULKNER
FIRE PROTECTION	D. CHASTAIN

DEPARTMENT OF THE NAVY
NAVAL FACILITIES ENGINEERING COMMAND
NAVAL FACILITIES ENGINEERING COMMAND ~ MIDATLANTIC
NAVAL STATION - NORFOLK, VA
IPT MARINE
MARINE CORPS AIR STATION
CHERRY POINT, NC

MCOLF ATLANTIC
BUILDING 7019 RENOVATIONS

EXTERIOR ELEVATIONS - CONSTRUCTION

SCALE:	AS INDICATED
STATION DESIGN WON:	7406712
STATION CONSTRUTION WON:	7406712
NAVFAC DRAWING NO.	12939461
SHEET	32 OF 148

A-201

DRAWFORM REVISION: 25 AUGUST 2020

7/2/2026 11:21:26 AM A-201
C:\Users\sigmon\Documents\2509 ARCH 2023_sigmonP9CRM.rvt

CONSTRUCTION KEYNOTES

1. PROVIDE ELECTRIC WATER COOLER AND BOTTLE FILLER
2. PROVIDE PTAC MECHANICAL UNIT IN EXISTING MASONRY OPENING
3. PROVIDE NEW PLUMBING FIXTURES AND TOILET ACCESSORIES
4. CLEAN CONCRETE WALKS
5. PROVIDE SURFACE MOUNTED FIRE EXTINGUISHER CABINET
6. PROVIDE HOOK MOUNTED FIRE EXTINGUISHER
7. PROVIDE CEMENTITOUS BACKER BOARD ON EXISTING WALL CONSTRUCTION PRIOR TO WALL TILE INSTALLATION

GENERAL CONSTRUCTION NOTES

1. REFERENCE SHEET A-001 FOR SYMBOL LEGEND
2. REFERENCE SHEET A-501 FOR WALL TYPES
3. REFERENCE SHEET A-601 FOR DOOR AND FRAME SCHEDULE
4. REFERENCE SHEET A-603 FOR WINDOW SCHEDULE
5. REFERENCE INTERIOR DESIGN DRAWINGS FOR FINISH SCHEDULE
6. REFERENCE INTERIORS DRAWINGS FOR CASEWORK DIMENSIONS AND DETAILS
7. REFERENCE THE LIFE SAFETY DRAWINGS FOR LOCATIONS OF RATED WALLS AND SMOKE PARTITIONS
8. INTERIOR CONCRETE MASONRY WALLS ARE TO BE PAINTED IN ALL LOCATIONS

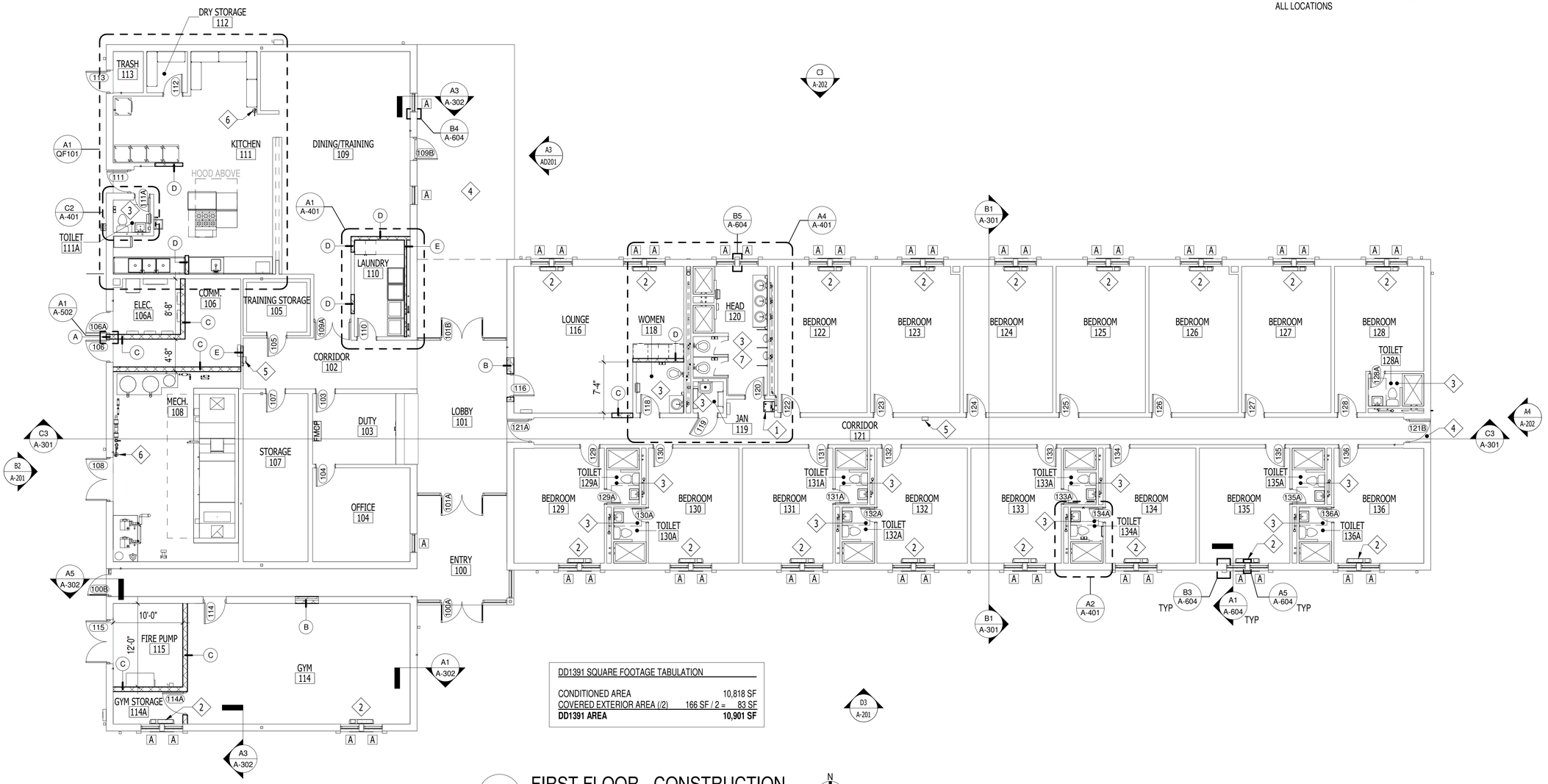

DD1391 SQUARE FOOTAGE TABULATION

CONDITIONED AREA	10,818 SF
COVERED EXTERIOR AREA (/2) 166 SF / 2 =	83 SF
DD1391 AREA	**10,901 SF**

A3 FIRST FLOOR - CONSTRUCTION

SCALE: 1/8" = 1'-0"

GRAPHIC SCALE: 1/8"=1'-0"
8' 0 4' 8' 16'

MBF ARCHITECTS P.A. REGISTERED ARCHITECTURAL CORPORATION CERT. NO. 50679 NEW BERN, NC

DARDEN J. EURE, III REGISTERED ARCHITECT 8440 NORTH CAROLINA NEW BERN NC
01 JUL 2026 SEAL

mbf architects pa
317-C Pollock Street | New Bern, NC 28560
252.637.6373 | mbfarchitects.com
A/E INFO

APPROVED

FOR COMMANDER NAVFAC
ACTIVITY

SATISFACTORY TO

DES	REL	DRW	REL	CHK	DJE,III
PM/DM					L. PEED
BRANCH MANAGER					H. PERRY
CHIEF ENG/ARCH					P. FAULKNER
FIRE PROTECTION					D. CHASTAIN

DEPARTMENT OF THE NAVY
NAVAL FACILITIES ENGINEERING COMMAND - MIDATLANTIC
IPT MARINE
MARINE CORPS AIR STATION
NAVAL FACILITIES ENGINEERING COMMAND
NAVAL STATION - NORFOLK, VA.
CHERRY POINT, NC
MCOLF ATLANTIC
BUILDING 7019 RENOVATIONS
FLOOR PLAN - CONSTRUCTION

SCALE:	AS INDICATED
STATION DESIGN WON:	7406712
STATION CONSTRUTION WON:	7406712
NAVFAC DRAWING NO.	12939548
SHEET	33 OF 148

A-101

DRAWFORM REVISION: 25 AUGUST 2020

APPR | DATE | DESCRIPTION | SYM

7/2/2026 11:05:34 AM A-101
C:\Users\sigmon\Documents\2509 ARCH 2023_sigmonPROPM.rvt

REFLECTED CEILING PLAN LEGEND

- 2'x2' ACOUSTICAL TILE CEILING SYSTEM
- 2'x4' LIGHTING FIXTURE
- 1'x4' LIGHTING FIXTURE
- UTILITY 4' LIGHTING FIXTURE
- DOWNLIGHT OR PENDANT LIGHTING
- EXIT LIGHT
- COMBINATION EMERGENCY LIGHTING UNIT AND EXIT SIGN
- WALL-MOUNTED LIGHTING FIXTURE
- CEILING SUPPLY DIFFUSER
- CEILING RETURN GRILLE
- CEILING EXHAUST GRILLE
- EMERGENCY LIGHTING UNIT
- SPRINKLER HEAD
- (S) SMOKE DETECTOR

CONSTRUCTION KEYNOTES

1. ACOUSTICAL TILE CEILING AT 7'-4" ABOVE FINISHED FLOOR
2. ACOUSTICAL TILE CEILING AT 8'-0" ABOVE FINISHED FLOOR
3. ACOUSTICAL TILE CEILING AT 8'-10" ABOVE FINISHED FLOOR
4. GYPSUM BOARD CEILING AT 6'-8" ABOVE FINISHED FLOOR
5. GYPSUM BOARD CEILING AT 8'-0" ABOVE FINISHED FLOOR
6. GYPSUM BOARD CEILING AT 8'-4" ABOVE FINISHED FLOOR
7. OPEN TO STRUCTURE ABOVE
8. FLUSH METAL PANEL SOFFIT AT 7'-10"
9. FLUSH METAL PANEL SOFFIT AT 9'-0"
10. PREPARE AND PAINT CONCRETE CEILING
11. PROVIDE ATTIC ACCESS HATCH IN EXISTING ROOF HATCH OPENING

GENERAL CONSTRUCTION NOTES

1. REFERENCE SHEET A-001 FOR SYMBOL LEGEND
2. REFERENCE SHEET A-501 FOR WALL TYPES
3. REFERENCE SHEET A-601 FOR DOOR AND FRAME SCHEDULE
4. REFERENCE SHEET A-603 FOR WINDOW SCHEDULE
5. REFERENCE INTERIOR DESIGN DRAWINGS FOR FINISH SCHEDULE
6. REFERENCE INTERIORS DRAWINGS FOR CASEWORK DIMENSIONS AND DETAILS
7. REFERENCE THE LIFE SAFETY DRAWINGS FOR LOCATIONS OF RATED WALLS AND SMOKE PARTITIONS
8. INTERIOR CONCRETE MASONRY WALLS ARE TO BE PAINTED IN ALL LOCATIONS

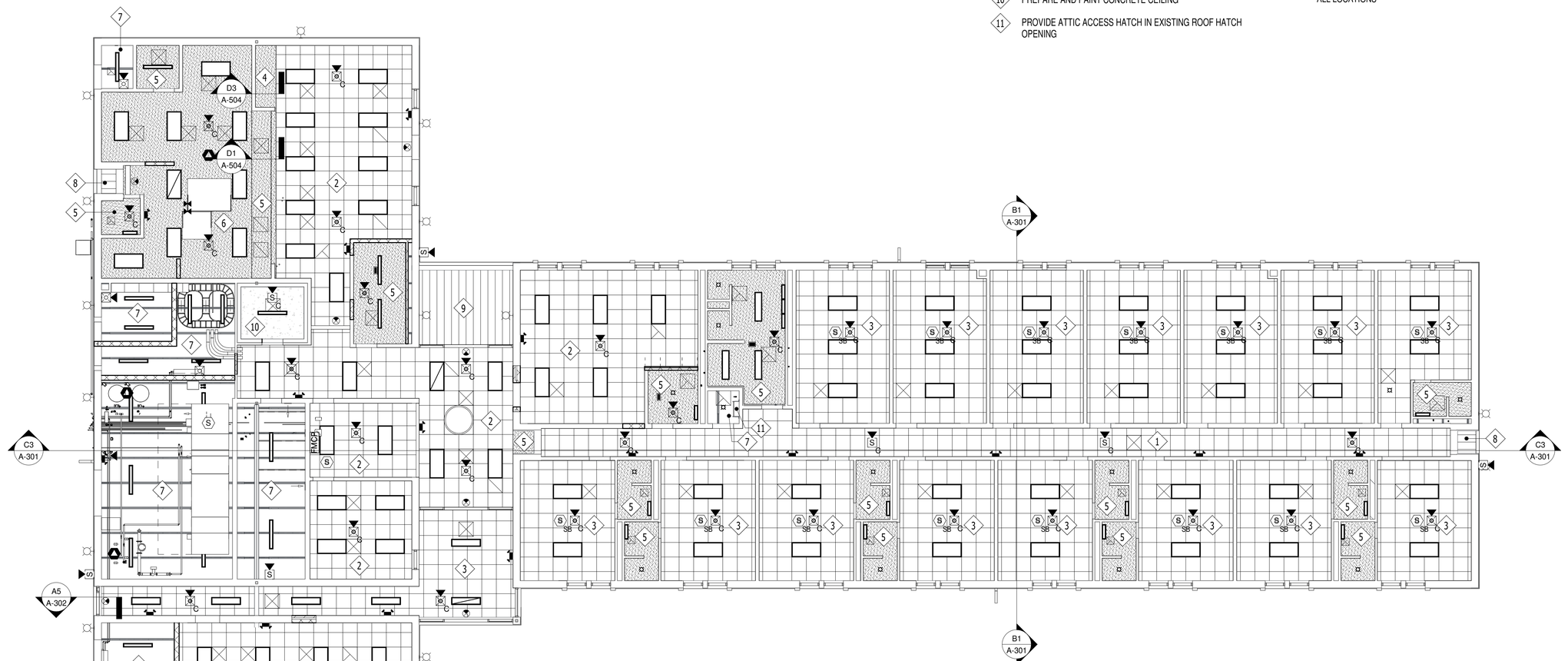

A3 REFLECTED CEILING PLAN - CONSTRUCTION

SCALE: 1/8" = 1'-0"

GRAPHIC SCALE: 1/8"=1'-0"
8' 0 4' 8' 16'

MBF ARCHITECTS P.A. REGISTERED ARCHITECTURAL CORPORATION CERT. NO. 50679 NEW BERN, NC. NORTH CAROLINA

APPR | DATE | DESCRIPTION | SYM

DARDEN J. EURE, III REGISTERED ARCHITECT 8840 NORTH CAROLINA NEW BERN NC
01 JUL 2026 SEAL

mbf architects pa
317-C Pollock Street | New Bern, NC 28560
252.637.6373 | mbfarchitects.com
A/E INFO

APPROVED

FOR COMMANDER NAVFAC

ACTIVITY

SATISFACTORY TO

DES	REL	DRW	REL	CHK	DJE,III
PM/DM					L. PEED
BRANCH MANAGER					H. PERRY
CHIEF ENG/ARCH					P. FAULKNER
FIRE PROTECTION					D. CHASTAIN

DEPARTMENT OF THE NAVY
NAVAL FACILITIES ENGINEERING COMMAND ~ MIDATLANTIC
1ST MARINE
MARINE CORPS AIR STATION
NAVAL FACILITIES ENGINEERING COMMAND
NAVAL STATION - NORFOLK, VA
CHERRY POINT, NC

MCOLF ATLANTIC BUILDING 7019 RENOVATIONS

REFLECTED CEILING PLAN - CONSTRUCTION

SCALE:	AS INDICATED
STATION DESIGN WON:	7406712
STATION CONSTRUCTION WON:	7406712
NAVFAC DRAWING NO.	12939459
SHEET	34 OF 148

A-102

DRAWFORM REVISION: 25 AUGUST 2020

7/22/2026 11:05:35 AM
C:\Users\sigmon\Documents\2509 ARCH 2023_sigmonPRCRM.rvt
A-102

ROOF PLAN LEGEND

	STANDING SEAM METAL ROOF
EJ	GUTTER EXPANSION JOINT
V	PLUMBING VENT THOUGH ROOF
DS	DOWNSPOUT

CONSTRUCTION KEYNOTES

1. STANDING SEAM METAL ROOF. SEE DETAIL D2 / A-505
2. SHEET METAL GUTTER
3. STANDING SEAM METAL ROOF RIDGE. SEE DETAIL A2 / A-505
4. STANDING SEAM METAL ROOF VALLEY. SEE DETAIL B2 / A-505
5. STANDING SEAM METAL ROOF CRICKET
6. GUTTER EXPANSION JOINT. SEE DETAIL D3 / A-506
7. INSULATED MECHANICAL CURB AND CRICKET. SEE MECHANICAL
8. PLUMBING VENT THROUGH ROOF. SEE DETAIL A1 / A-506

GENERAL CONSTRUCTION NOTES

1. REFERENCE SHEET A-001 FOR SYMBOL LEGEND
2. REFERENCE SHEET A-501 FOR WALL TYPES
3. REFERENCE SHEET A-601 FOR DOOR AND FRAME SCHEDULE
4. REFERENCE SHEET A-603 FOR WINDOW SCHEDULE
5. REFERENCE INTERIOR DESIGN DRAWINGS FOR FINISH SCHEDULE
6. REFERENCE INTERIORS DRAWINGS FOR CASEWORK DIMENSIONS AND DETAILS
7. REFERENCE THE LIFE SAFETY DRAWINGS FOR LOCATIONS OF RATED WALLS AND SMOKE PARTITIONS
8. INTERIOR CONCRETE MASONRY WALLS ARE TO BE PAINTED IN ALL LOCATIONS

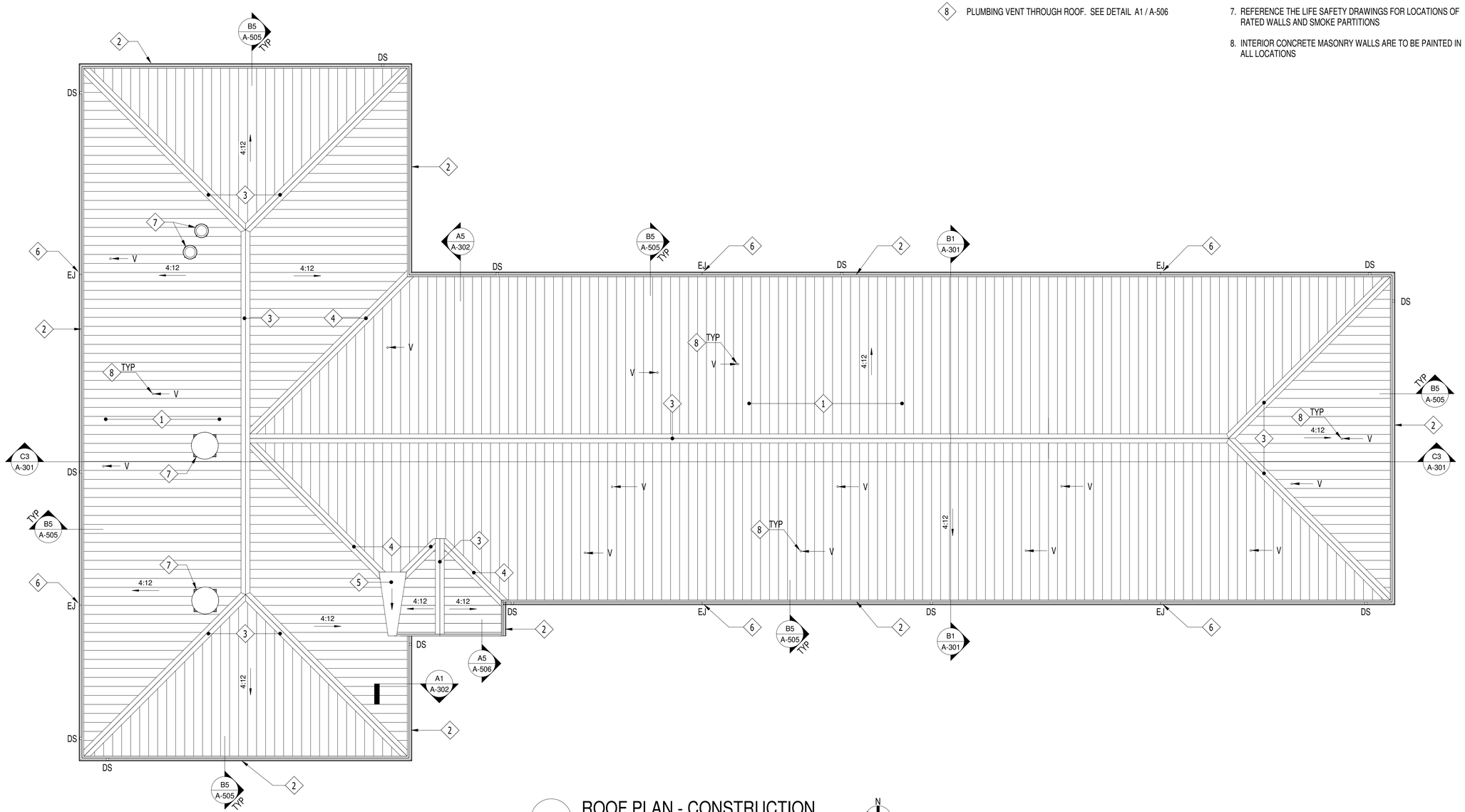

A3 ROOF PLAN - CONSTRUCTION

SCALE: 1/8" = 1'-0"

GRAPHIC SCALE: 1/8"=1'-0"

8' 0 4' 8' 16'

MBF ARCHITECTS, P.A. REGISTERED ARCHITECTURAL CORPORATION NORTH CAROLINA CERT. NO. 50679 NEW BERN, N.C.

APPR	DATE	DESCRIPTION	SYM

DARDEN J. EURE III REGISTERED ARCHITECT NORTH CAROLINA 8840 NEW BERN NC

01 JUL 2026 SEAL

mbf architects pa
317-C Pollock Street | New Bern, NC 28560
252.637.6373 | mbfarchitects.com
A/E INFO

APPROVED

FOR COMMANDER NAVFAC

ACTIVITY

SATISFACTORY TO

DES	REL	DRW	REL	CHK	DJE,III
PM/DM					L. PEED
BRANCH MANAGER					H. PERRY
CHIEF ENG/ARCH					P. FAULKNER
FIRE PROTECTION					D. CHASTAIN

DEPARTMENT OF THE NAVY
NAVAL FACILITIES ENGINEERING COMMAND
IPT MARINE
MARINE CORPS AIR STATION

NAVAL FACILITIES ENGINEERING COMMAND ~ MIDATLANTIC
NAVAL STATION - NORFOLK, VA.

CHERRY POINT, NC

MCOLF ATLANTIC
BUILDING 7019 RENOVATIONS

ROOF PLAN - CONSTRUCTION

SCALE:	AS INDICATED
STATION DESIGN WON:	7406712
STATION CONSTRUTION WON:	7406712
NAVFAC DRAWING NO.	12939460
SHEET	35 OF 148

A-103

DRAWFORM REVISION: 25 AUGUST 2020

7/20/2026 11:05:36 AM A-103
C:\Users\sigmon\Documents\2509 ARCH 2022_sigmonP9CRM.rvt

ELEVATION LEGEND

- FACE BRICK
- STUCCO
- VERTICAL METAL WALL PANELS
- STANDING SEAM METAL ROOF

CONSTRUCTION KEYNOTES

1. STANDING SEAM METAL ROOF
2. FLUSH METAL WALL PANEL
3. STANDING SEAM METAL ROOF RIDGE
4. STANDING SEAM METAL ROOF VALLEY
5. SHEET METAL FASCIA
6. DOWNSPOUT
7. GUTTER
8. PTAC MECHANICAL UNIT
9. ALUMINUM STOREFRONT
10. FINISH GRADE
11. INFILL MASONRY WALL CONSTRUCTION
12. GUTTER EXPANSION JOINT

REFLECTED CEILING PLAN NOTES

1. REFERENCE SHEET A-001 FOR SYMBOL LEGEND
2. REFERENCE INTERIOR DESIGN DRAWINGS FOR FINISH SCHEDULE
3. PROVIDE WET AREA ACOUSTICAL TILE CEILING SYSTEM AT TOILETS, JANITOR CLOSETS AND SIMILAR HIGH HUMIDITY SPACES
4. REFERENCE THE ELECTRICAL DRAWINGS FOR LIGHTING FIXTURE INFORMATION
5. REFERENCE THE MECHANICAL DRAWINGS FOR GRILLE AND DIFFUSER INFORMATION
6. REFERENCE THE LIFE SAFETY DRAWINGS FOR LOCATIONS OF RATED WALLS AND SMOKE PARTITIONS

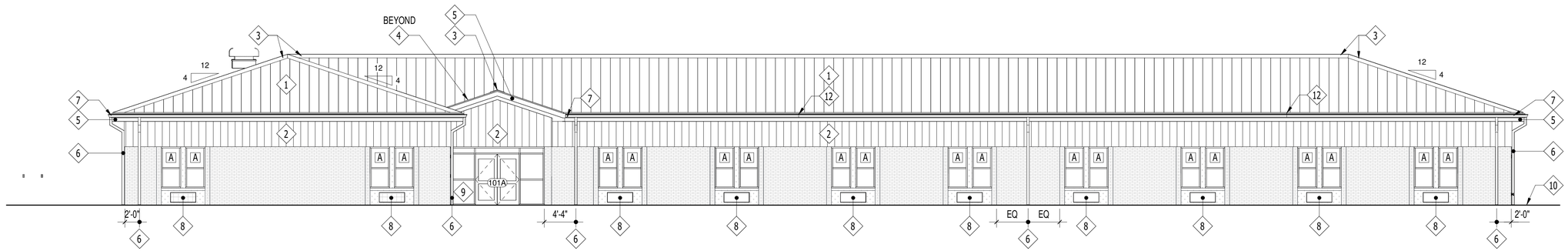

D3 SOUTH ELEVATION - CONSTRUCTION

SCALE: 1/8" = 1'-0"

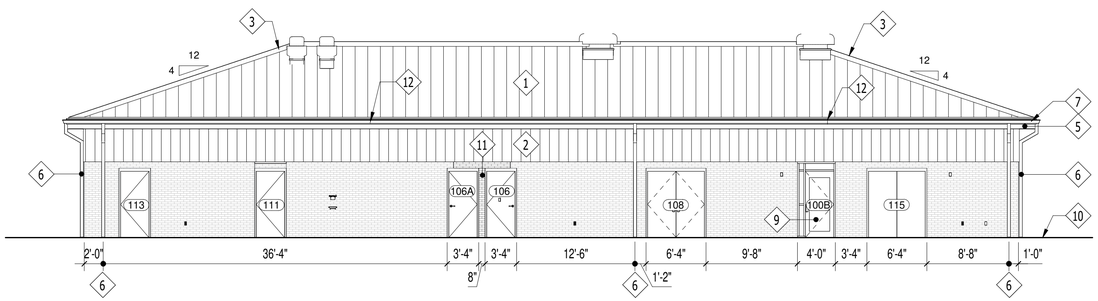

B2 WEST ELEVATION - CONSTRUCTION

SCALE: 1/8" = 1'-0"

GRAPHIC SCALE: 1/8"=1'-0"

8' 0 4' 8' 16'

MBF ARCHITECTS P.A. REGISTERED ARCHITECTURAL CORPORATION CERT. NO. 50679 NORTH CAROLINA NEW BERN NC

SYM	DESCRIPTION	DATE	APPR

NAVFAC

DARDEN J. EURE, III REGISTERED ARCHITECT 8640 NORTH CAROLINA NEW BERN NC

01 JUL 2026 SEAL

mbf architects pa

317-C Pollock Street | New Bern, NC 28560
252.637.6373 | mbfarchitects.com

A/E INFO

APPROVED

FOR COMMANDER NAVFAC

ACTIVITY

SATISFACTORY TO

DES	REL	DRW	REL	CHK	DJE,III

PM/DM	L. PEED
BRANCH MANAGER	H. PERRY
CHIEF ENG/ARCH	P. FAULKNER
FIRE PROTECTION	D. CHASTAIN

DEPARTMENT OF THE NAVY
NAVAL FACILITIES ENGINEERING COMMAND
NAVAL FACILITIES ENGINEERING COMMAND ~ MIDATLANTIC
NAVAL STATION - NORFOLK, VA
IPT MARINE
MARINE CORPS AIR STATION
CHERRY POINT, NC

MCOLF ATLANTIC
BUILDING 7019 RENOVATIONS

EXTERIOR ELEVATIONS - CONSTRUCTION

SCALE:	AS INDICATED
STATION DESIGN WON:	7406712
STATION CONSTRUTION WON:	7406712
NAVFAC DRAWING NO.	12939461
SHEET	36 OF 148

A-201

DRAWFORM REVISION: 25 AUGUST 2020

7/2/2026 11:05:37 AM A-201
C:\Users\sigmon\Documents\2509 ARCH 2023_sigmonP9CRM.rvt

ELEVATION LEGEND

- FACE BRICK
- STUCCO
- VERTICAL METAL WALL PANELS
- STANDING SEAM METAL ROOF

CONSTRUCTION KEYNOTES

1. STANDING SEAM METAL ROOF
2. FLUSH METAL WALL PANEL
3. STANDING SEAM METAL ROOF RIDGE
4. STANDING SEAM METAL ROOF VALLEY
5. SHEET METAL FASCIA
6. DOWNSPOUT
7. GUTTER
8. PTAC MECHANICAL UNIT
9. ALUMINUM STOREFRONT
10. FINISH GRADE
11. INFILL EXISTING MASONRY WALL CONSTRUCTION WHERE DOOR/WINDOW WAS DEMOLISHED
12. GUTTER EXPANSION JOINT

REFLECTED CEILING PLAN NOTES

1. REFERENCE SHEET A-001 FOR SYMBOL LEGEND
2. REFERENCE INTERIOR DESIGN DRAWINGS FOR FINISH SCHEDULE
3. PROVIDE WET AREA ACOUSTICAL TILE CEILING SYSTEM AT TOILETS, JANITOR CLOSETS AND SIMILAR HIGH HUMIDITY SPACES
4. REFERENCE THE ELECTRICAL DRAWINGS FOR LIGHTING FIXTURE INFORMATION
5. REFERENCE THE MECHANICAL DRAWINGS FOR GRILLE AND DIFFUSER INFORMATION
6. REFERENCE THE LIFE SAFETY DRAWINGS FOR LOCATIONS OF RATED WALLS AND SMOKE PARTITIONS

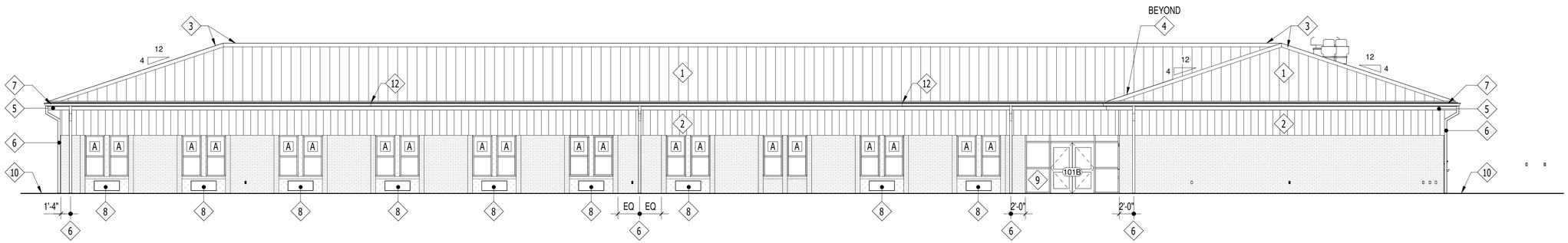

C3 NORTH ELEVATION - CONSTRUCTION

SCALE: 1/8" = 1'-0"

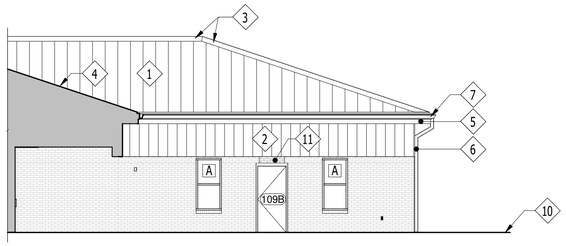

A2 PARTIAL EAST ELEVATION - CONSTRUCTION

SCALE: 1/8" = 1'-0"

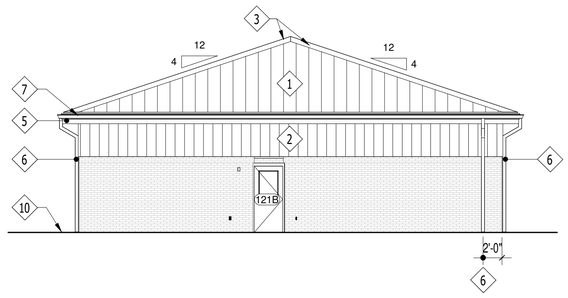

A4 EAST ELEVATION - CONSTRUCTION

SCALE: 1/8" = 1'-0"

GRAPHIC SCALE: 1/8"=1'-0"

8' 0 4' 8' 16'

MBF ARCHITECTS, P.A. — CERT. NO. 50679 — NEW BERN, NC

APPR | DATE | DESCRIPTION | SYM

NAVFAC

DARDEN J. EURE III — REGISTERED ARCHITECT — NORTH CAROLINA — NEW BERN NC — 8640

01 JUL 2026 SEAL

mbf architects pa
317-C Pollock Street | New Bern, NC 28560
252.637.8373 | mbfarchitects.com
A/E INFO

APPROVED

FOR COMMANDER NAVFAC

ACTIVITY

SATISFACTORY TO

DES	REL	DRW	REL	CHK	DJE,III
PM/DM					L. PEED
BRANCH MANAGER					H. PERRY
CHIEF ENG/ARCH					P. FAULKNER
FIRE PROTECTION					D. CHASTAIN

DEPARTMENT OF THE NAVY
NAVAL FACILITIES ENGINEERING COMMAND ~ MIDATLANTIC
NAVAL FACILITIES ENGINEERING COMMAND
1PT MARINE
MARINE CORPS AIR STATION
NAVAL STATION - NORFOLK, VA.
CHERRY POINT, NC

MCOLF ATLANTIC
BUILDING 7019 RENOVATIONS

EXTERIOR ELEVATIONS - CONSTRUCTION

SCALE:	AS INDICATED
STATION DESIGN WON:	7406712
STATION CONSTRUCTION WON:	7406712
NAVFAC DRAWING NO.	12939462
SHEET	37 OF 148

A-202

DRAWFORM REVISION: 25 AUGUST 2020

7/2/2026 11:05:39 AM
A-202
C:\Users\sigmon\Documents\2509 ARCH 2023_sigmonP9CRM.rvt

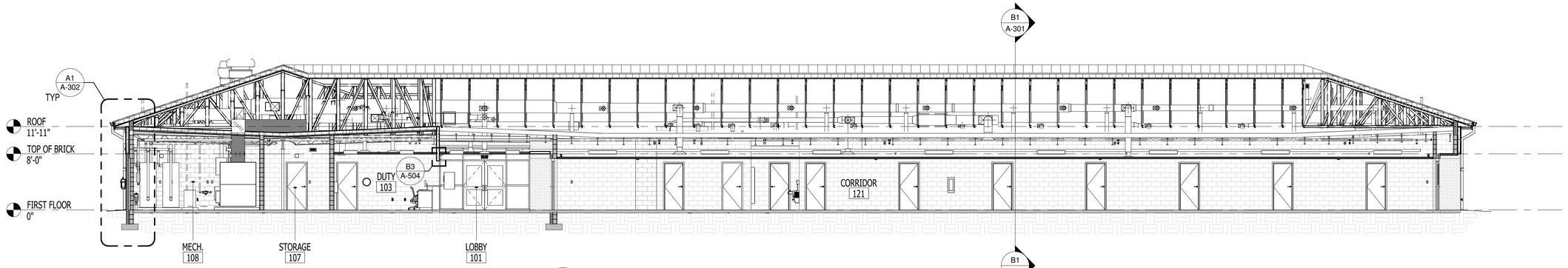

C3 OVERALL BUILDING SECTION - CONSTRUCTION

SCALE: 1/8" = 1'-0"

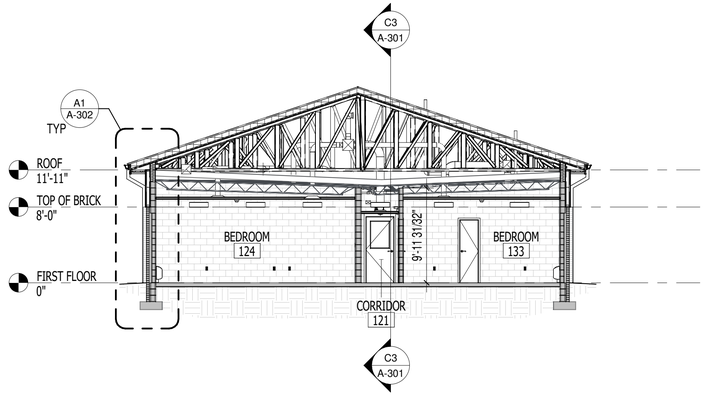

B1 OVERALL BUILDING SECTION - CONSTRUCTION

SCALE: 1/8" = 1'-0"

GRAPHIC SCALE: 1/8"=1'-0"

8" 0 4' 8' 16'

MBF ARCHITECTS P.A. REGISTERED ARCHITECTURAL CORPORATION NORTH CAROLINA CERT. NO. 50679 NEW BERN NC

APPR	DATE	DESCRIPTION	SYM

DARDEN J. EURE, III REGISTERED ARCHITECT 8840 NORTH CAROLINA NEW BERN NC

01 JUL 2026 SEAL

mbf architects pa
317-C Pollock Street | New Bern, NC 28560
252.637.6373 | mbfarchitects.com
A/E INFO

APPROVED

FOR COMMANDER NAVFAC

ACTIVITY

SATISFACTORY TO

DES	REL	DRW	REL	CHK	DJE,III

PM/DM	L. PEED
BRANCH MANAGER	H. PERRY
CHIEF ENG/ARCH	P. FAULKNER
FIRE PROTECTION	D. CHASTAIN

DEPARTMENT OF THE NAVY
NAVAL FACILITIES ENGINEERING COMMAND
NAVAL FACILITIES ENGINEERING COMMAND - MIDATLANTIC
NAVAL STATION - NORFOLK, VA.
IPT MARINE
MARINE CORPS AIR STATION
CHERRY POINT, NC

MCOLF ATLANTIC
BUILDING 7019 RENOVATIONS

BUILDING SECTIONS

SCALE:	AS INDICATED
STATION DESIGN WON:	7406712
STATION CONSTRUTION WON:	7406712
NAVFAC DRAWING NO.	12939463
SHEET	38 OF 148

A-301

DRAWFORM REVISION: 25 AUGUST 2020

7/22/2026 11:05:47 AM A-301
C:\Users\sigmon\Documents\2509 ARCH 2023_sigmonP9CRM.rvt

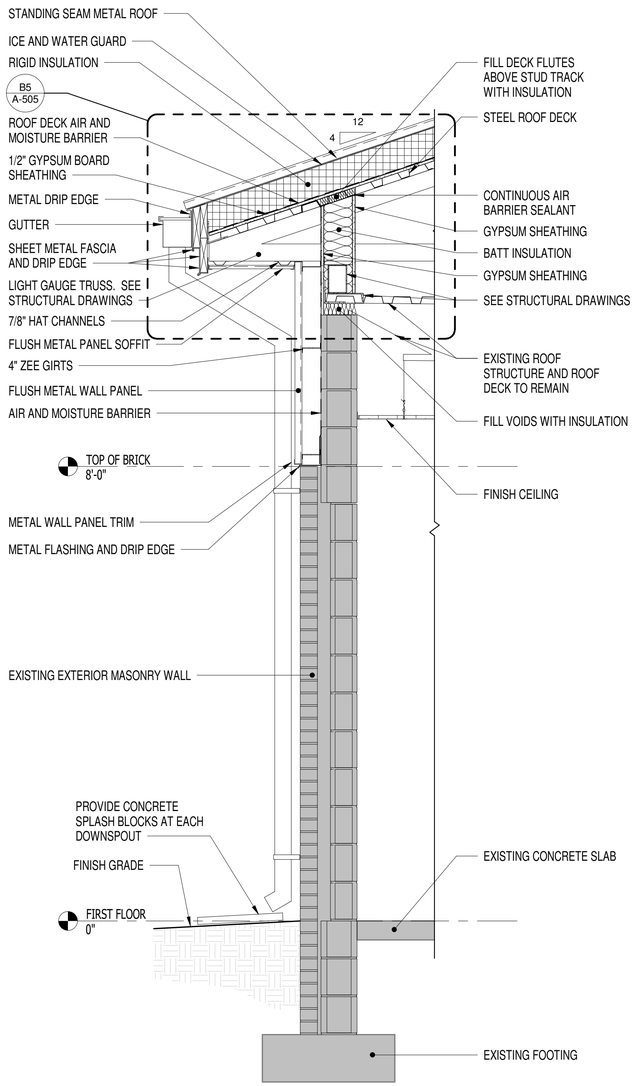

A1 TYPICAL WALL SECTION PARALLEL TO BAR JOISTS

SCALE: 3/4" = 1'-0"

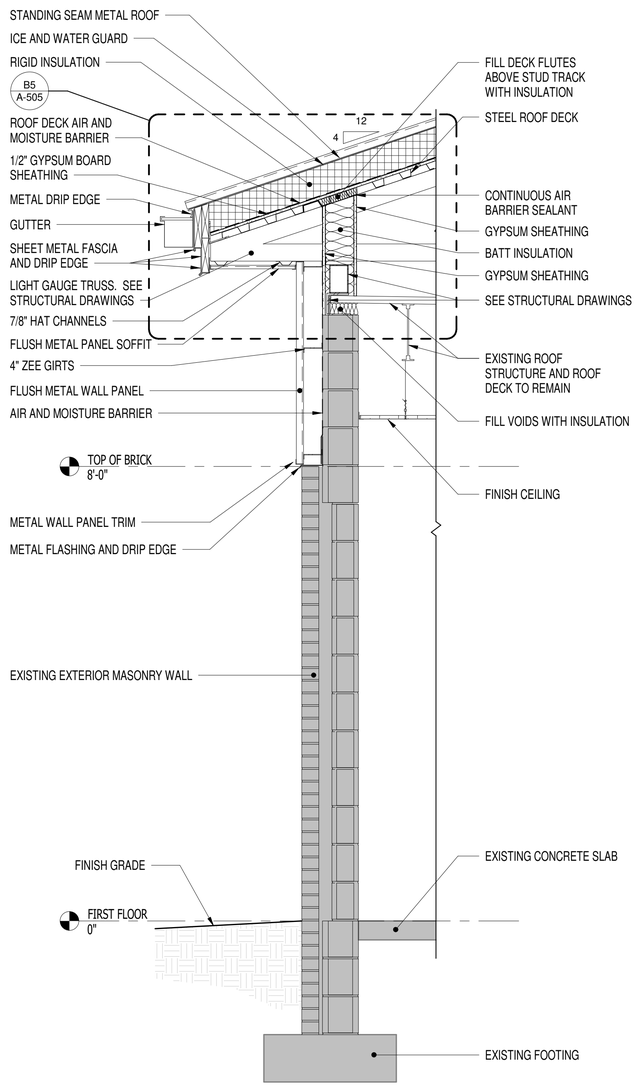

A3 TYPICAL WALL SECTION PERPENDICULAR TO BAR JOISTS

SCALE: 3/4" = 1'-0"

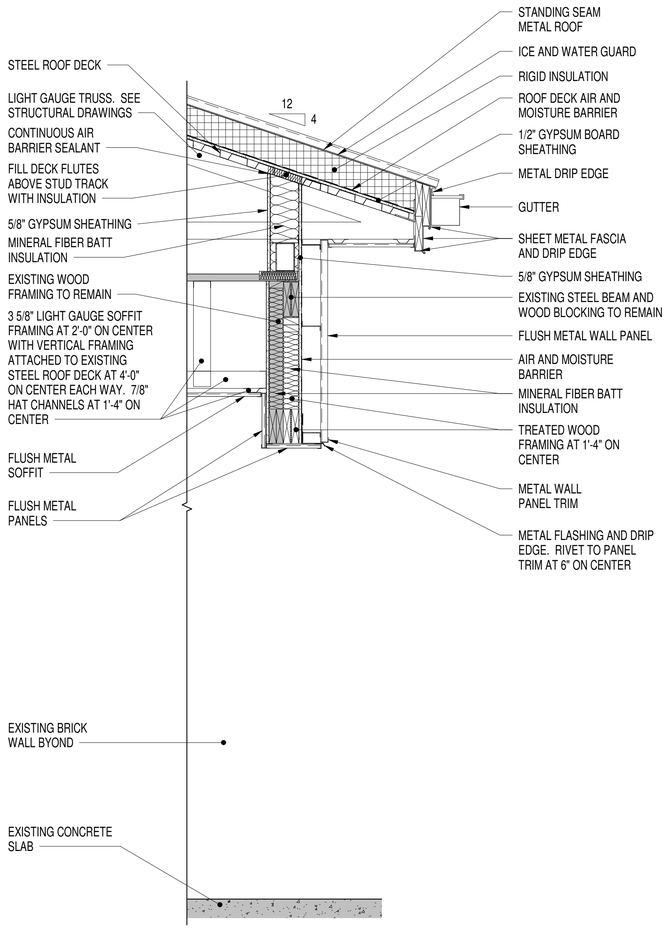

A5 COVERED ENTRY SECTION

SCALE: 3/4" = 1'-0"

GRAPHIC SCALE: 3/4"=1'-0"

1' 0 1' 2' 3'

MBF ARCHITECTS PA
REGISTERED ARCHITECTURAL CORPORATION
CERT. NO. 50679
NORTH CAROLINA
NEW BERN NC

APPR	DATE	DESCRIPTION	SYM

NAVFAC

DARDEN J. EURE III
REGISTERED ARCHITECT
8840
NORTH CAROLINA
NEW BERN NC

01 JUL 2026 SEAL

mbf architects pa
317-C Pollock Street | New Bern, NC 28560
252.637.6373 | mbfarchitects.com
A/E INFO

APPROVED

FOR COMMANDER NAVFAC

ACTIVITY

SATISFACTORY TO

DES	REL	DRW	REL	CHK	DJE,III
PM/DM					L. PEED
BRANCH MANAGER					H. PERRY
CHIEF ENG/ARCH					P. FAULKNER
FIRE PROTECTION					D. CHASTAIN

DEPARTMENT OF THE NAVY
NAVAL FACILITIES ENGINEERING COMMAND
IPT MARINE
NAVAL FACILITIES ENGINEERING COMMAND ~ MIDATLANTIC
MARINE CORPS AIR STATION
NAVAL STATION - NORFOLK, VA.
CHERRY POINT, NC

MCOLF ATLANTIC
BUILDING 7019 RENOVATIONS

WALL SECTIONS

SCALE:	AS INDICATED
STATION DESIGN WON:	7406712
STATION CONSTRUTION WON:	7406712
NAVFAC DRAWING NO.	12939464
SHEET	39 OF 148

A-302

DRAWFORM REVISION: 25 AUGUST 2020

7/2/2026 11:05:47 AM
C:\Users\sigmon\Documents\2509 ARCH 2023_sigmonPRCRM.rvt
A-302

TOILET ACCESSORIES LEGEND

MARK	DESCRIPTION	MARK	DESCRIPTION	MARK	DESCRIPTION
TTD	TOILET TISSUE DISPENSER	PTD	PAPER TOWEL DISPENSER	RSS	RECESSED SOLID SURFACE SHOWER SHELF
GB42	GRAB BAR: 42"	ITDW	INTEGRAL TOWEL DISPENSER & WASTE RECEPTACLE	SS	SOLID SURFACE SHOWER SHELF
GB36	GRAB BAR: 36"	PTDC	PAPER TOWEL DISPENSER: "C" FOLD TYPE	DCS	DIAPER CHANGING STATION
GB18	GRAB BAR: 18"	PTDR	PAPER TOWEL DISPENSER: ROLL TYPE	MHS	MOP HOLDER WITH SHELF
GBL	GRAB BAR: L-SHAPED 24" x 18"	EHD	ELECTRIC HAND DRYER	MH	MOP HOLDER
SND	SANITARY NAPKIN DISPOSAL	SD	SOAP DISPENSER	TB	TOWEL BAR: 18"
SNV	SANITARY NAPKIN VENDOR	CSD	COUNTERTOP MOUNTED SOAP DISPENSER	SCR	SHOWER CURTAIN ROD
TCD	TOILET SEAT COVER DISPENSER	WM	WALL MIRROR: 18" x 36"	RH	ROBE HOOK
FSS	FOLDING SHOWER SEAT	WM1	WALL MIRROR (CUSTOM): SEE ELEVATION	RHA	ROBE HOOK: ACCESSIBLE MOUNTING HEIGHT

NOTES:
1. CLEARANCES AND HEIGHTS OF FIXTURES AND ACCESSORIES MUST BE IN COMPLIANCE WITH ABA
2. CLEARANCES AND HEIGHTS OF FIXTURES AND ACCESSORIES MUST BE IN COMPLIANCE WITH THE ARCHITECTURAL BARRIERS ACT (ABA) ACCESSIBILITY STANDARDS FOR DEPARTMENT OF DEFENSE FACILITIES AS ADOPTED BY DOD POLICY MEMORANDUM
3. ACCESSORIES SPECIFIED APPEAR ON DESIGNATED PLANS, HOWEVER NOT ALL ACCESSORIES SHOWN HERE MAY BE SPECIFIED. COORDINATE WITH PLAN DESIGNATIONS
4. REFERENCE THE SPECIFICATIONS FOR DETAILED PRODUCT INFORMATION INCLUDING ACCEPTABLE MANUFACTURERS, FINISHES, ETC.
5. MOUNT ACCESSORIES SUCH THAT DISPENSER OR OPERATING MECHANISM IS WITHIN ACCESSIBLE FORWARD REACH RANGES DEFINED BY THE ACCESSIBILITY STANDARDS IDENTIFIED ABOVE

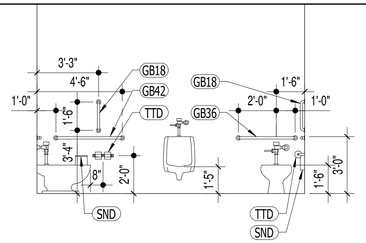

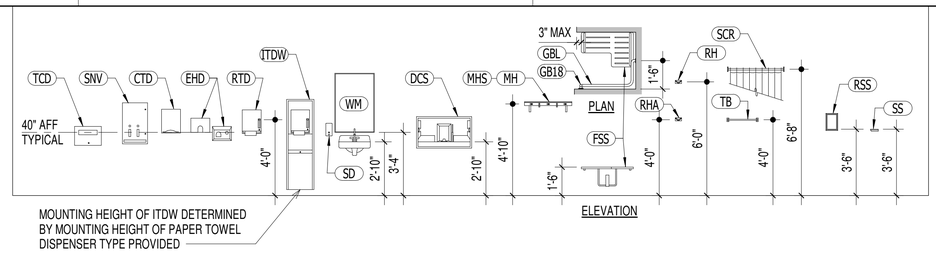

D4 TOILET ACCESSORY MOUNTING HEIGHTS

SCALE: 1/4" = 1'-0"

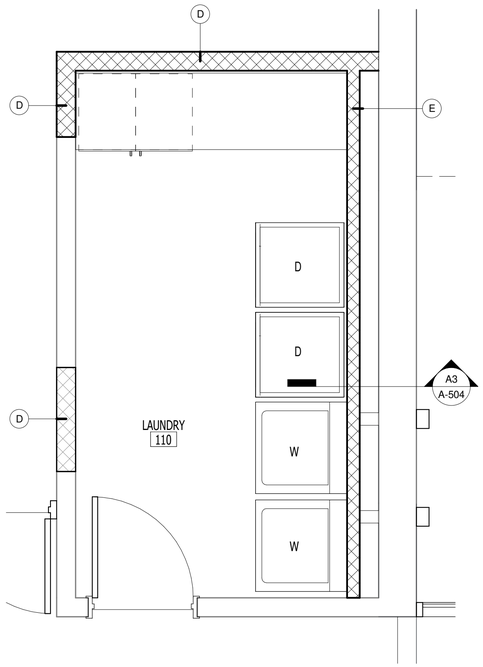

A1 ENLARGED LAUNDRY PLAN

SCALE: 1/2" = 1'-0"

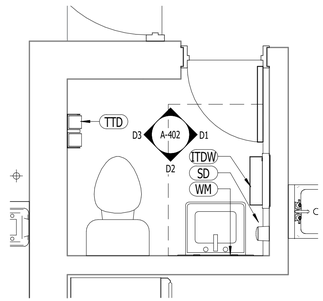

C2 ENLARGED TOILET PLAN - KITCHEN

SCALE: 1/2" = 1'-0"

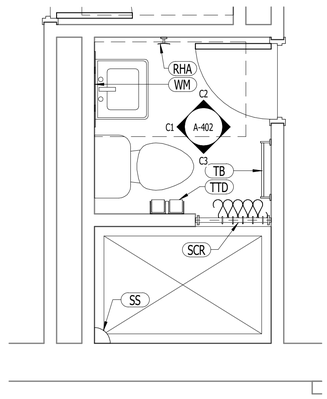

A2 ENLARGED TOILET PLAN - TYPICAL SLEEPING ROOM

SCALE: 1/2" = 1'-0"

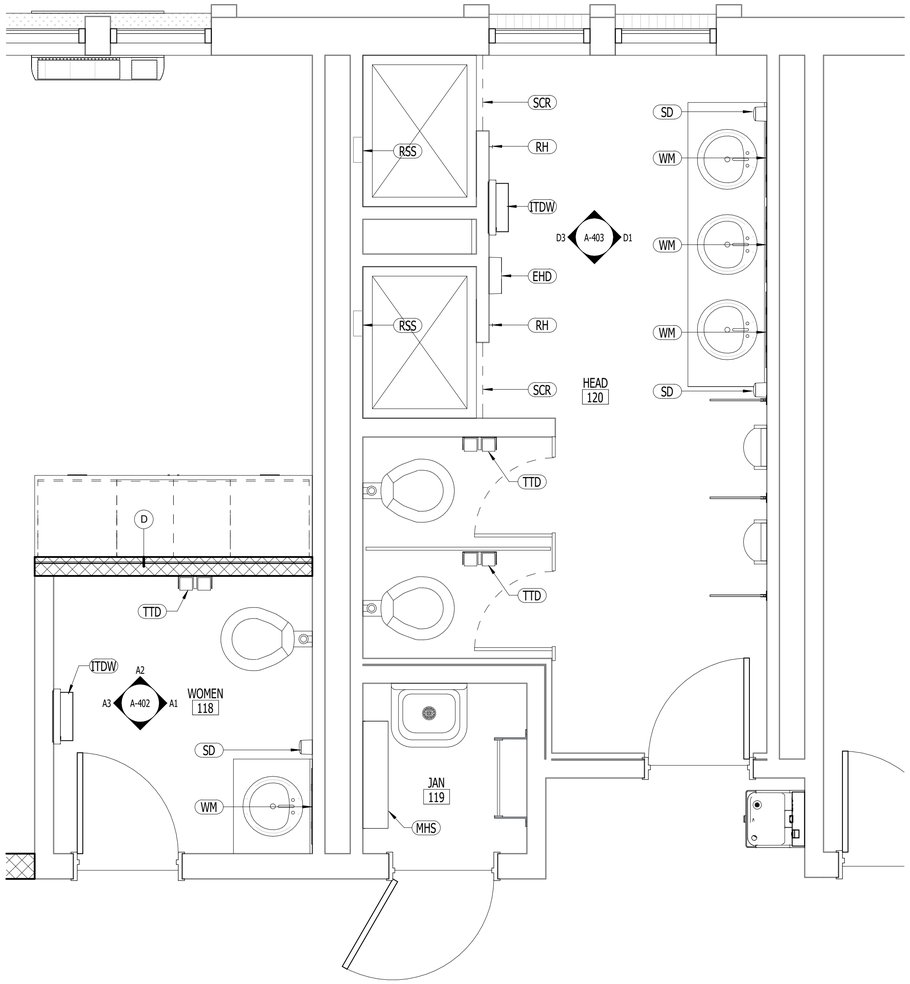

A4 ENLARGED TOILET PLAN

SCALE: 1/2" = 1'-0"

GRAPHIC SCALE: 1/4"=1'-0"
4' 0 2' 4' 8'

GRAPHIC SCALE: 1/2"=1'-0"
2' 0 1' 2' 4'

MBF ARCHITECTS P.A. REGISTERED ARCHITECTURAL CORPORATION CERT. NO. 50679 NORTH CAROLINA NEW BERN NC.

APPR | DATE | DESCRIPTION | SYM

NAVFAC

DARDEN J. EURE, III REGISTERED ARCHITECT 8840 NORTH CAROLINA NEW BERN NC

01 JUL 2026 SEAL

mbf architects pa
317-C Pollock Street | New Bern, NC 28560
252.637.6373 | mbfarchitects.com
A/E INFO

APPROVED

FOR COMMANDER NAVFAC
ACTIVITY

SATISFACTORY TO

DES	REL	DRW	REL	CHK	DJE,III
PM/DM					L. PEED
BRANCH MANAGER					H. PERRY
CHIEF ENG/ARCH					P. FAULKNER
FIRE PROTECTION					D. CHASTAIN

DEPARTMENT OF THE NAVY
NAVAL FACILITIES ENGINEERING COMMAND ~ MIDATLANTIC
IPT MARINE
MARINE CORPS AIR STATION
NAVAL FACILITIES ENGINEERING COMMAND ~ MIDATLANTIC
NAVAL STATION - NORFOLK, VA
CHERRY POINT, NC
MCOLF ATLANTIC
BUILDING 7019 RENOVATIONS
ENLARGED FLOOR PLANS

SCALE:	AS INDICATED
STATION DESIGN WON:	7406712
STATION CONSTRUCTION WON:	7406712
NAVFAC DRAWING NO.	12939465
SHEET	40 OF 148

A-401

DRAWFORM REVISION: 25 AUGUST 2020

7/2/2026 11:05:48 AM A-401
C:\Users\sigmon\Documents\2509 ARCH 2023_sigmonPWCRM.rvt

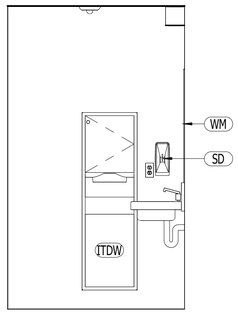

D1 ENLARGED TOILET ELEVATION

SCALE: 1/2" = 1'-0"

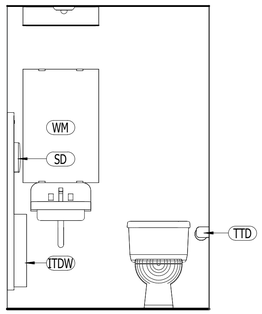

D2 ENLARGED TOILET ELEVATION

SCALE: 1/2" = 1'-0"

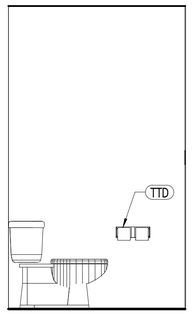

D3 ENLARGED TOILET ELEVATION

SCALE: 1/2" = 1'-0"

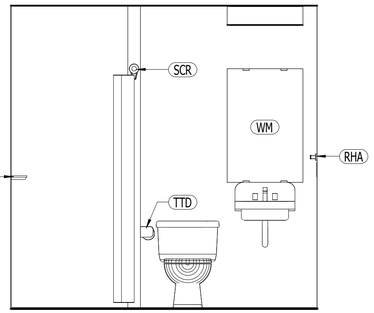

C1 ENLARGED TOILET ELEVATION

SCALE: 1/2" = 1'-0"

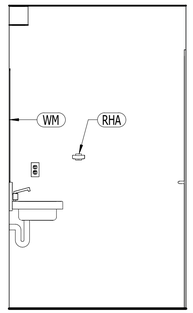

C2 ENLARGED TOILET ELEVATION

SCALE: 1/2" = 1'-0"

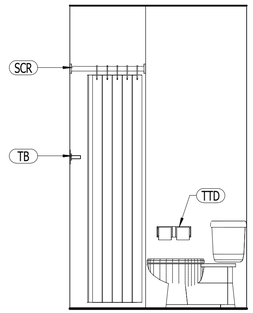

C3 ENLARGED TOILET ELEVATION

SCALE: 1/2" = 1'-0"

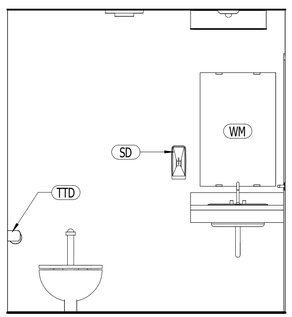

A1 ENLARGED TOILET ELEVATION

SCALE: 1/2" = 1'-0"

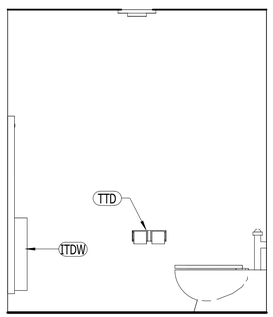

A2 ENLARGED TOILET ELEVATION

SCALE: 1/2" = 1'-0"

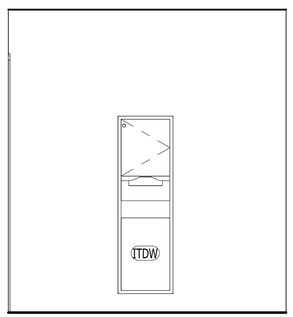

A3 ENLARGED TOILET ELEVATION

SCALE: 1/2" = 1'-0"

GRAPHIC SCALE: 1/2"=1'-0"

2' 0 1' 2' 4'

MBF ARCHITECTS P.A. REGISTERED ARCHITECTURAL CORPORATION CERT. NO. 50679 NORTH CAROLINA NEW BERN INC.

APPR | DATE | DESCRIPTION | SYM

NAVFAC

DARDEN J. EURE, III REGISTERED ARCHITECT 8840 NORTH CAROLINA NEW BERN NC

01 JUL 2026 SEAL

mbf architects pa

317-C Pollock Street | New Bern, NC 28560
252.637.6373 | mbfarchitects.com

A/E INFO

APPROVED

FOR COMMANDER NAVFAC

ACTIVITY

SATISFACTORY TO

DES	REL	DRW	REL	CHK	DJE,III
PM/DM					L. PEED
BRANCH MANAGER					H. PERRY
CHIEF ENG/ARCH					P. FAULKNER
FIRE PROTECTION					D. CHASTAIN

DEPARTMENT OF THE NAVY
NAVAL FACILITIES ENGINEERING COMMAND
IPT MARINE
MARINE CORPS AIR STATION

NAVAL FACILITIES ENGINEERING COMMAND ~ MIDATLANTIC
NAVAL STATION - NORFOLK, VA
CHERRY POINT, NC

MCOLF ATLANTIC
BUILDING 7019 RENOVATIONS

ENLARGED TOILET ELEVATIONS

SCALE:	AS INDICATED
STATION DESIGN WON:	7406712
STATION CONSTRUTION WON:	7406712
NAVFAC DRAWING NO.	12939466
SHEET	41 OF 148

A-402

DRAWFORM REVISION: 25 AUGUST 2020

7/2/2026 11:05:48 AM A-402
C:\Users\sigmon\Documents\2509 ARCH 2023_sigmonP9CRM.rvt

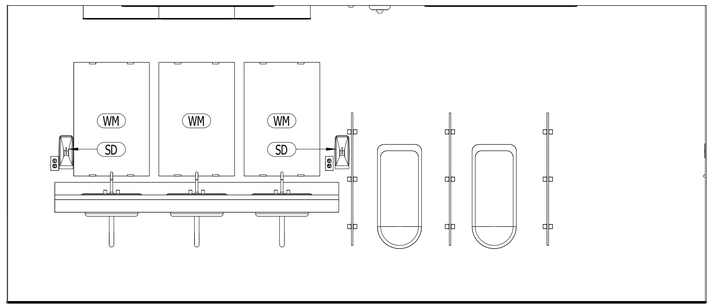

D1 ENLARGED TOILET ELEVATION

SCALE: 1/2" = 1'-0"

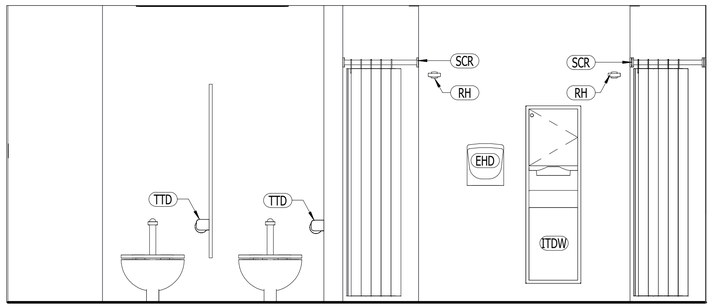

D3 ENLARGED TOILET ELEVATION

SCALE: 1/2" = 1'-0"

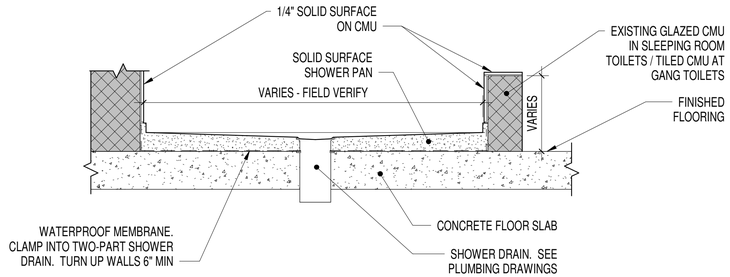

B1 SHOWER PAN DETAIL

SCALE: 1 1/2" = 1'-0"

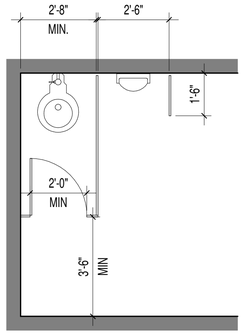

NOTES:
1. EQUALLY SPACE NON-ACCESSIBLE TOILET COMPARTMENTS WHERE NOT INDIVIDUALLY DIMENSIONED

B3 TYPICAL TOILET COMPARTMENT DETAIL

SCALE: 3/8" = 1'-0"

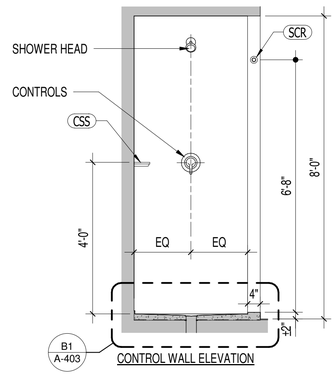

B4 SHOWER DETAIL

SCALE: 1/2" = 1'-0"

GRAPHIC SCALE: 3/8"=1'-0"
3' 0 2' 6'

GRAPHIC SCALE: 1/2"=1'-0"
2' 0 1' 2' 4'

GRAPHIC SCALE: 1 1/2"=1'-0"
1' 6" 3" 0 1'

MBF ARCHITECTS P.A. REGISTERED ARCHITECTURE CORPORATION CERT. NO. 50679 NEW BERN, NC. NORTH CAROLINA

APPR	DATE	DESCRIPTION	SYM

NAVFAC

DARDEN J. EURE, III REGISTERED ARCHITECT 8640 NORTH CAROLINA NEW BERN NC

01 JUL 2026 SEAL

mbf architects pa
317-C Pollock Street | New Bern, NC 28560
252.637.6373 | mbfarchitects.com
A/E INFO

APPROVED

FOR COMMANDER NAVFAC

ACTIVITY

SATISFACTORY TO

DES	REL	DRW	REL	CHK	DJE,III
PM/DM			L. PEED		
BRANCH MANAGER			H. PERRY		
CHIEF ENG/ARCH			P. FAULKNER		
FIRE PROTECTION			D. CHASTAIN		

DEPARTMENT OF THE NAVY
NAVAL FACILITIES ENGINEERING COMMAND - MIDATLANTIC
1PT MARINE
MARINE CORPS AIR STATION
NAVAL STATION - NORFOLK, VA.
CHERRY POINT, NC

MCOLF ATLANTIC
BUILDING 7019 RENOVATIONS

ENLARGED TOILET ELEVATIONS

SCALE:	AS INDICATED
STATION DESIGN WON:	7406712
STATION CONSTRUTION WON:	7406712
NAVFAC DRAWING NO.	12939467
SHEET	42 OF 148

A-403

DRAWFORM REVISION: 25 AUGUST 2020

7/2/2026 11:05:49 AM A-403
C:\Users\sigmon\Documents\2509 ARCH 2023_sigmonP9CRM.rvt

WALL TYPE NOTES

1. WALL TYPES AS INDICATED ON FLOOR PLANS
2. GYPSUM BOARD IS 5/8",TYPE X, MOISTURE RESISTANT, ABUSE RESISTENT UNLESS SPECIFICALLY NOTED OTHERWISE
3. GYPSUM SHEATHING BOARD IS 5/8",TYPE X, GLASS MAT COVERED UNLESS SPECIFICALLY NOTED OTHERWISE
4. SMOKE PARTITIONS AND RATED WALLS MUST BE PROPERLY SEALED TO THE UNDERSIDE OF THE DECK ABOVE. PROVIDE SCHEDULE 40 SLEEVES AT PIPE PENETRATIONS IN RATED PARTITIONS AND SEAL ANNULAR SPACE WITH RATED SEALANT. REFERENCE MECHANICAL DRAWINGS FOR MECHANICAL DUCT DAMPER LOCATIONS. REFERENCE THE LIFE SAFETY DRAWINGS FOR RATED WALL AND SMOKE PARTITION LOCATIONS
5. CMU PARTITIONS MUST BE EXTENDED TO THE UNDERSIDE OF THE DECK ABOVE AT ALL LOCATIONS. SEAL PENETRATIONS
6. WALLS AND GYPSUM BOARD AT MECHANICAL ROOMS, ELECTRICAL ROOMS, EQUIPMENT ROOMS, JANITOR CLOSETS AND TOILETS MUST BE EXTENDED TO THE UNDERSIDE OF THE DECK ABOVE UNLESS NOTED OTHERWISE. INSTALL AIR BARRIER SEALANT AT PERIMETER OF WALL

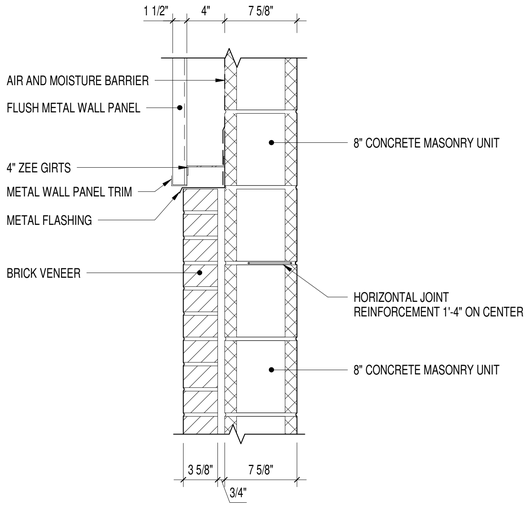

A WALL TYPE
SCALE: 1 1/2" = 1'-0"

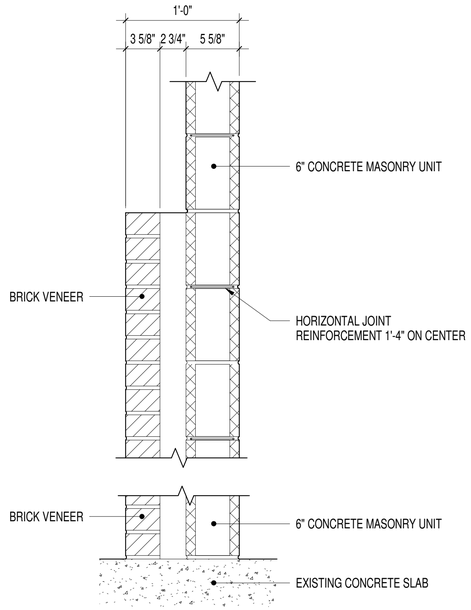

B WALL TYPE
SCALE: 1 1/2" = 1'-0"

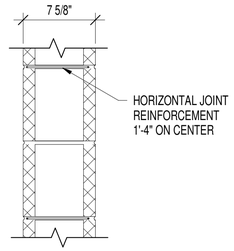

NOTES:
1. UTILIZE UL ASSEMBLY U905 FOR 1 AND 2 HOUR RATED WALLS
2. REFERENCE NCSBC TABLE 721.1(2), 3-1.2

C WALL TYPE
SCALE: 1 1/2" = 1'-0"

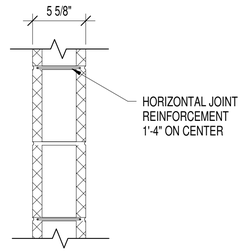

NOTES:
1. UTILIZE UL ASSEMBLY U905 FOR 1 AND 2 HOUR RATED WALLS
2. REFERENCE NCSBC TABLE 721.1(2), 3-1.2

D WALL TYPE
SCALE: 1 1/2" = 1'-0"

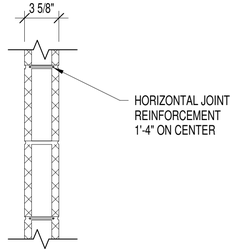

E WALL TYPE
SCALE: 1 1/2" = 1'-0"

GRAPHIC SCALE: 1 1/2"=1'-0"
1' 6" 3" 0 1'

MBF ARCHITECTS P.A. REGISTERED ARCHITECTURAL CORPORATION CERT. NO. 50679 NORTH CAROLINA NEW BERN NC

SYM	DESCRIPTION	DATE	APPR

NAVFAC

DARDEN J. EURE, III REGISTERED ARCHITECT 8640 NORTH CAROLINA NEW BERN NC
01 JUL 2026 SEAL

mbf architects pa
317-C Pollock Street | New Bern, NC 28560
252.637.6373 | mbfarchitects.com
A/E INFO

APPROVED

FOR COMMANDER NAVFAC
ACTIVITY

SATISFACTORY TO

DES	REL	DRW	REL	CHK	DJE,III

PM/DM	L. PEED
BRANCH MANAGER	H. PERRY
CHIEF ENG/ARCH	P. FAULKNER
FIRE PROTECTION	D. CHASTAIN

DEPARTMENT OF THE NAVY
NAVAL FACILITIES ENGINEERING COMMAND
NAVAL FACILITIES ENGINEERING COMMAND ~ MIDATLANTIC
NAVAL STATION - NORFOLK, VA
IPT MARINE
MARINE CORPS AIR STATION
CHERRY POINT, NC

MCOLF ATLANTIC
BUILDING 7019 RENOVATIONS

WALL TYPES

SCALE:	AS INDICATED
STATION DESIGN WON:	7406712
STATION CONSTRUTION WON:	7406712
NAVFAC DRAWING NO.	12939468
SHEET	43 OF 148

A-501

DRAWFORM REVISION: 25 AUGUST 2020

7/2/2026 11:05:49 AM
C:\Users\sigmon\Documents\2509 ARCH 2023_sigmonPBCRM.rvt
A-501

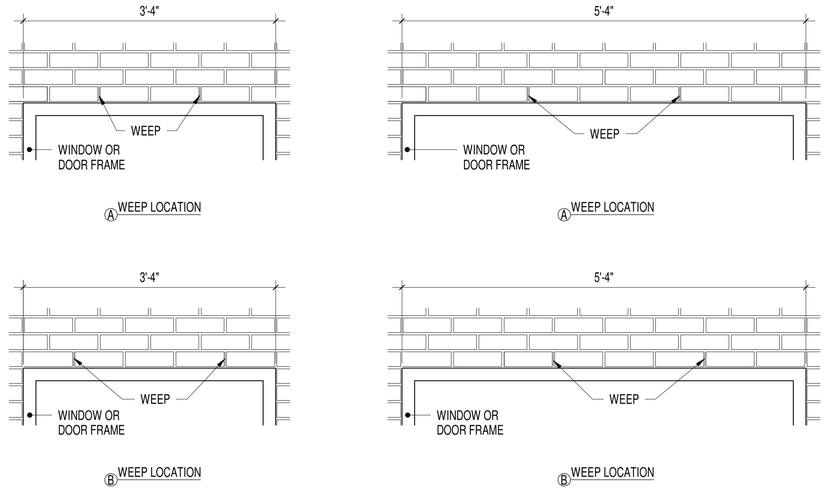

C1 HEAD JOINT COURSING DETAIL

SCALE: 1" = 1'-0"

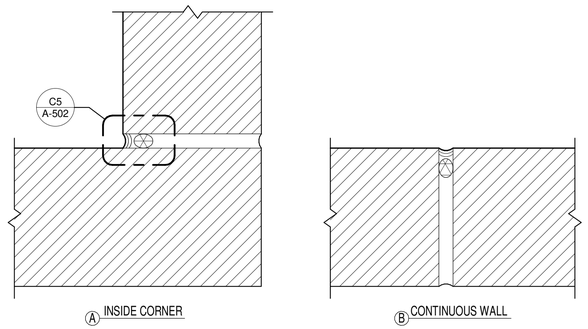

C3 CONTROL JOINTS DETAILS

SCALE: 6" = 1'-0"

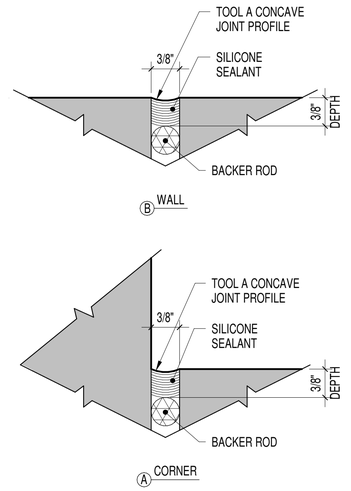

C5 SEALANT POCKET DETAILS

SCALE: 1" = 1"

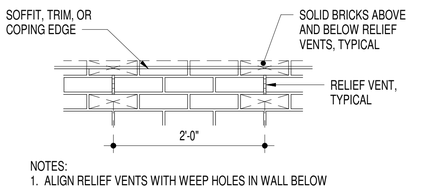

NOTES:
1. ALIGN RELIEF VENTS WITH WEEP HOLES IN WALL BELOW

B1 HEAD JOINT RELIEF VENT DETAIL

SCALE: 1" = 1'-0"

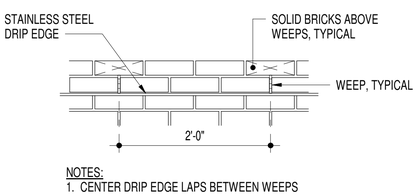

NOTES:
1. CENTER DRIP EDGE LAPS BETWEEN WEEPS

B2 WEEP VENT DETAIL

SCALE: 1" = 1'-0"

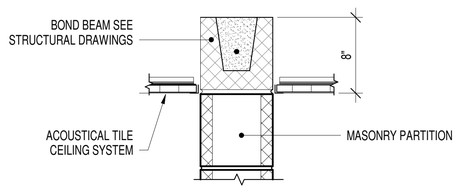

B3 INT CMU WALL AT CEILING

SCALE: 1 1/2" = 1'-0"

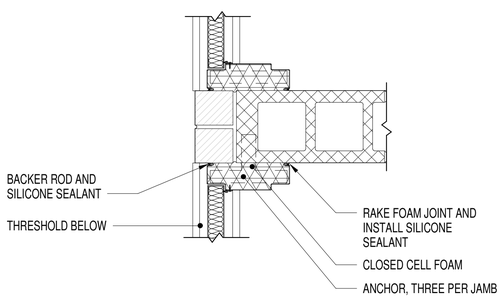

A1 WALL INFILL AT DOORS

SCALE: 1 1/2" = 1'-0"

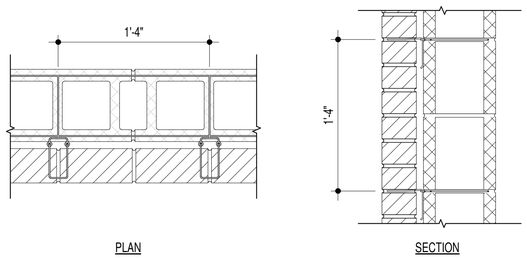

A2 VENEER ANCHOR DETAIL CMU WALL

SCALE: 1 1/2" = 1'-0"

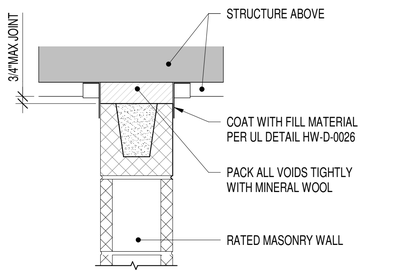

A3 RATED WALL HEAD JOINT DETAIL

SCALE: 1 1/2" = 1'-0"

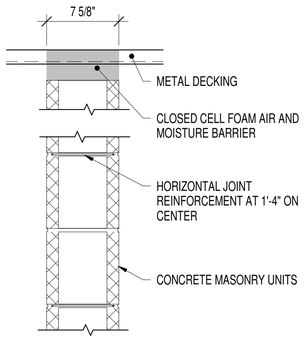

NOTES:
1. UTILIZE UL ASSEMBLY U905 FOR 1 HOUR RATED WALLS, INDICATED AS [1].
2. MASONRY PARTITION WALL WITH REINFORCED AND GROUTED CONCRETE MASONRY UNITS, INDICATED AS [2].

A5 MASONRY PARTITION DETAIL

SCALE: 1 1/2" = 1'-0"

GRAPHIC SCALE: 1"=1'-0" (1' 0 1' 2')

GRAPHIC SCALE: 1 1/2"=1'-0" (1' 6" 3" 0 1')

GRAPHIC SCALE: 6"=1'-0" (0 3" 6")

GRAPHIC SCALE: 1"=1" (0 1" 2")

MBF ARCHITECTS, P.A. — ARCHITECTURE · INTERIORS · PLANNING — CERT. NO. 50679 — NORTH CAROLINA — NEW BERN, N.C.

APPR | DATE | DESCRIPTION | SYM

NAVFAC

DARDEN J. EURE III — REGISTERED ARCHITECT — 8840 — NORTH CAROLINA — NEW BERN NC

01 JUL 2026 SEAL

mbf architects pa
317-C Pollock Street | New Bern, NC 28560
252.637.6373 | mbfarchitects.com
A/E INFO

APPROVED

FOR COMMANDER NAVFAC

ACTIVITY

SATISFACTORY TO

DES	REL	DRW	REL	CHK	DJE,III
PM/DM					L. PEED
BRANCH MANAGER					H. PERRY
CHIEF ENG/ARCH					P. FAULKNER
FIRE PROTECTION					D. CHASTAIN

DEPARTMENT OF THE NAVY
NAVAL FACILITIES ENGINEERING COMMAND ~ MIDATLANTIC
NAVAL FACILITIES ENGINEERING COMMAND
NAVAL STATION - NORFOLK, VA.
1ST MARINE
MARINE CORPS AIR STATION
CHERRY POINT, NC
MCOLF ATLANTIC
BUILDING 7019 RENOVATIONS
MASONRY DETAILS

SCALE: AS INDICATED
STATION DESIGN WON: 7406712
STATION CONSTRUTION WON: 7406712
NAVFAC DRAWING NO. 12939469
SHEET 44 OF 148

A-502

DRAWFORM REVISION: 25 AUGUST 2020

7/2/2026 11:05:49 AM
C:\Users\sigmon\Documents\2509 ARCH 2022_sigmonPKCRM.rvt
A-502

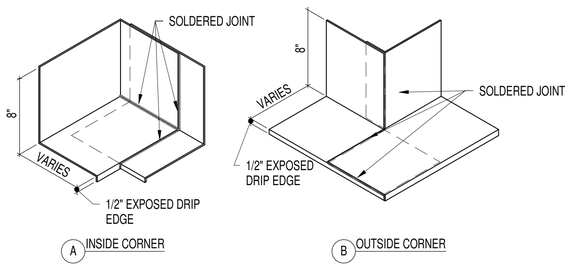

NOTES:
1. COPPER FABRIC FLASHING CORNERS ARE TO BE SIMILAR AND SEALED WITH THE RECOMMENDED ADHESIVE OF THE MANUFACTURER
2. COPPER FABRIC FLASHING JOINTS SHALL OVERLAP 6" AND BE SEALED WITH RECOMMENDED ADHESIVE OF THE MANUFACTURER
3. EXTEND FLASHING 8" BEYOND OPENINGS
4. PROVIDE A TOOLED BEAD OF SYSTEM SEALANT AT MEMBRANE LAPS AND SPLICES

C1 METAL FLASHING DETAIL

SCALE: 1 1/2" = 1'-0"

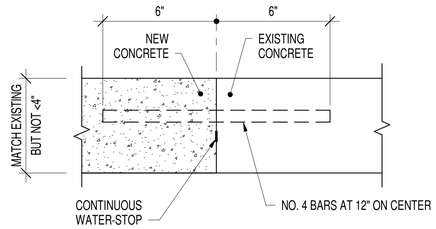

D3 SLAB PATCH DETAIL

SCALE: 3" = 1'-0"

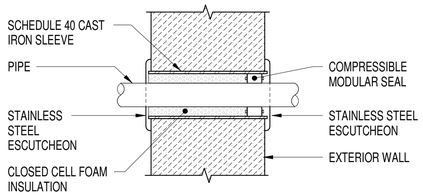

NOTES:
1. PIPE INSULATION, WHERE REQUIRED, SHALL PASS AT FULL COVERAGE AND THICKNESS THROUGH SLEEVES.
2. COMPRESSIBLE MODULAR SEAL SHALL BE INSTALLED AT THE CENTERLINE OF THE WALL FOR PIPE PENETRATIONS AT INTERIOR WALLS

C3 PIPE PENETRATION DETAIL

SCALE: 1 1/2" = 1'-0"

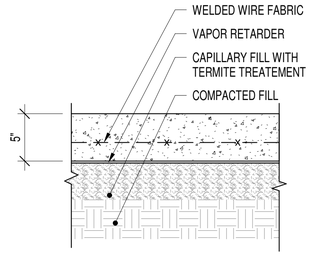

NOTES:
1. OMIT THE INSTALLATION OF WELDED WIRE FABRIC WHERE FIBERGLASS REINFORCED CONCRETE IS SCHEDULED

D4 SLAB DETAIL 5"

SCALE: 1 1/2" = 1'-0"

GRAPHIC SCALE: 1"=1'-0"
1' 0 1' 2'

GRAPHIC SCALE: 1 1/2"=1'-0"
1' 6" 3" 0 1'

GRAPHIC SCALE: 3"=1'-0"
0 3" 6" 1"

MBF ARCHITECTS, P.A. REGISTERED ARCHITECTURE CORPORATION CERT. NO. 50679 NORTH CAROLINA NEW BERN NC

APPR	
DATE	
DESCRIPTION	
SYM	

DARDEN J. EURE III REGISTERED ARCHITECT 8840 NORTH CAROLINA NEW BERN NC
01 JUL 2026 SEAL

mbf architects pa
317-C Pollock Street | New Bern, NC 28560
252.637.6373 | mbfarchitects.com
A/E INFO

APPROVED

FOR COMMANDER NAVFAC

ACTIVITY

SATISFACTORY TO

DES	REL	DRW REL	CHK DJE,III
PM/DM			L. PEED
BRANCH MANAGER			H. PERRY
CHIEF ENG/ARCH			P. FAULKNER
FIRE PROTECTION			D. CHASTAIN

DEPARTMENT OF THE NAVY
NAVAL FACILITIES ENGINEERING COMMAND
NAVAL FACILITIES ENGINEERING COMMAND ~ MIDATLANTIC
NAVAL STATION - NORFOLK, VA.
IPT MARINE
MARINE CORPS AIR STATION CHERRY POINT, NC
MCOLF ATLANTIC
BUILDING 7019 RENOVATIONS
MISCELLANEOUS DETAILS

SCALE:	AS INDICATED
STATION DESIGN WON:	7406712
STATION CONSTRUTION WON:	7406712
NAVFAC DRAWING NO.	12939470
SHEET	45 OF 148

A-503

DRAWFORM REVISION: 25 AUGUST 2020

7/2/2026 11:05:49 AM A-503
C:\Users\sigmon\Documents\2509 ARCH 2023_sigmonPWORM.rvt

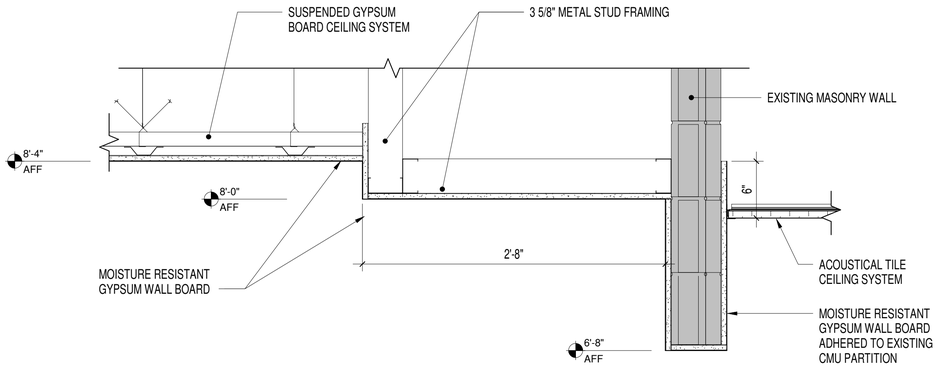

D1 BULKHEAD DETAIL AT KITCHEN

SCALE: 1 1/2" = 1'-0"

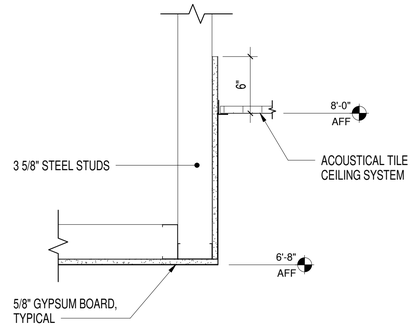

D3 TYPICAL BULKHEAD DETAIL

SCALE: 1 1/2" = 1'-0"

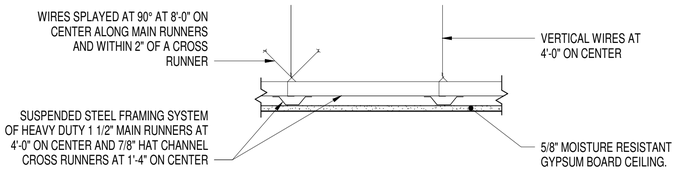

D5 SUSPENDED GYPSUM BOARD CEILING DETAIL

SCALE: 1 1/2" = 1'-0"

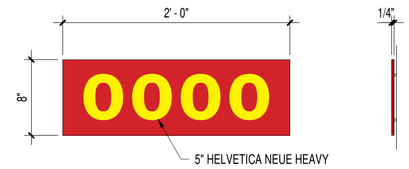

NOTES:
1. 1/4" PAINTED ALUMINUM PLATE WITH VINYL NUMBERS, STUD MOUNTED TO BUILD FACADE WITH 3/8" SPACERS AND SILICONE. SEE ELEVATIONS FOR SPECIFIC PLACEMENT.

C2 BUILDING NUMBER SIGN

SCALE: 1 1/2" = 1'-0"

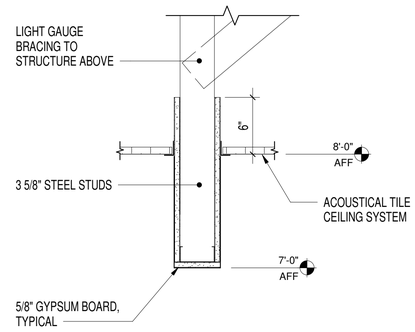

B3 TYPICAL BULKHEAD DETAIL AT DUTY

SCALE: 1 1/2" = 1'-0"

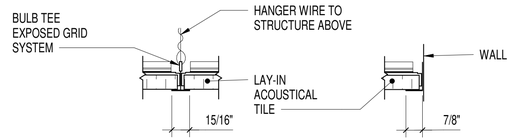

C5 SUSPENDED ATC CEILING - 15/16" GRID

SCALE: 3" = 1'-0"

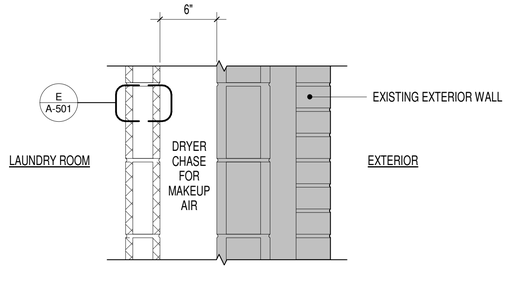

A3 DRYER CHASE DETAIL

SCALE: 1 1/2" = 1'-0"

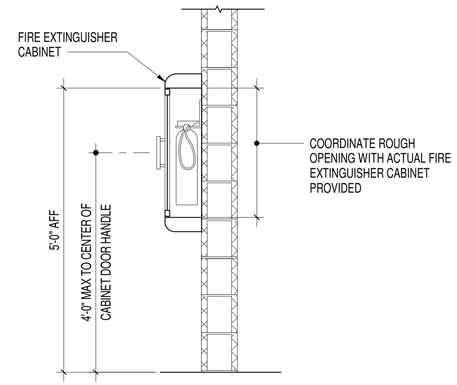

NOTES:
1. 1'-3" MIN, 4'-0" MAX TO OPERATING MECHANISM OF FIRE EXTINGUISHER CABINET

A5 FIRE EXTINGUISHER CABINET DETAIL

SCALE: 3/4" = 1'-0"

GRAPHIC SCALE: 3/4"=1'-0"
1' 0 1' 2' 3'

GRAPHIC SCALE: 1 1/2"=1'-0"
1' 6" 3" 0 1'

GRAPHIC SCALE: 3"=1'-0"
0 3" 6" 1"

MBF ARCHITECTS, P.A. REGISTERED ARCHITECTURAL CORPORATION CERT. NO. 50679 NORTH CAROLINA NEW BERN N.C.

APPR | DATE | DESCRIPTION | SYM

DARDEN J. EURE III REGISTERED ARCHITECT 8440 NORTH CAROLINA NEW BERN NC
01 JUL 2026 SEAL

mbf architects pa
317-C Pollock Street | New Bern, NC 28560
252.637.6373 | mbfarchitects.com
A/E INFO

APPROVED
FOR COMMANDER NAVFAC
ACTIVITY
SATISFACTORY TO

DES	REL	DRW	REL	CHK	DJE,III
PM/DM					L. PEED
BRANCH MANAGER					H. PERRY
CHIEF ENG/ARCH					P. FAULKNER
FIRE PROTECTION					D. CHASTAIN

DEPARTMENT OF THE NAVY
NAVAL FACILITIES ENGINEERING COMMAND
IPT MARINE
MAPINE CORPS AIR STATION

NAVAL FACILITIES ENGINEERING COMMAND ~ MIDATLANTIC
NAVAL STATION - NORFOLK, VA.
CHERRY POINT, NC
MCOLF ATLANTIC
BUILDING 7019 RENOVATIONS
MISCELLANEOUS DETAILS

SCALE: AS INDICATED
STATION DESIGN WON: 7406712
STATION CONSTRUTION WON: 7406712
NAVFAC DRAWING NO. 12939471
SHEET 46 OF 148
A-504

DRAWFORM REVISION: 25 AUGUST 2020

7/20/26 11:05:50 AM A-504
C:\Users\sigmon\Documents\2509 ARCH 2022_sigmonP9CRM.rvt

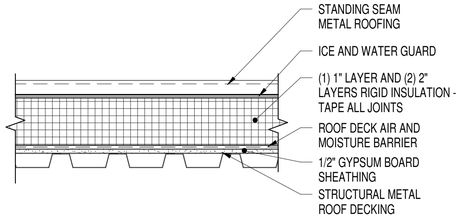

D2 ROOF ASSEMBLY

SCALE: 1 1/2" = 1'-0"

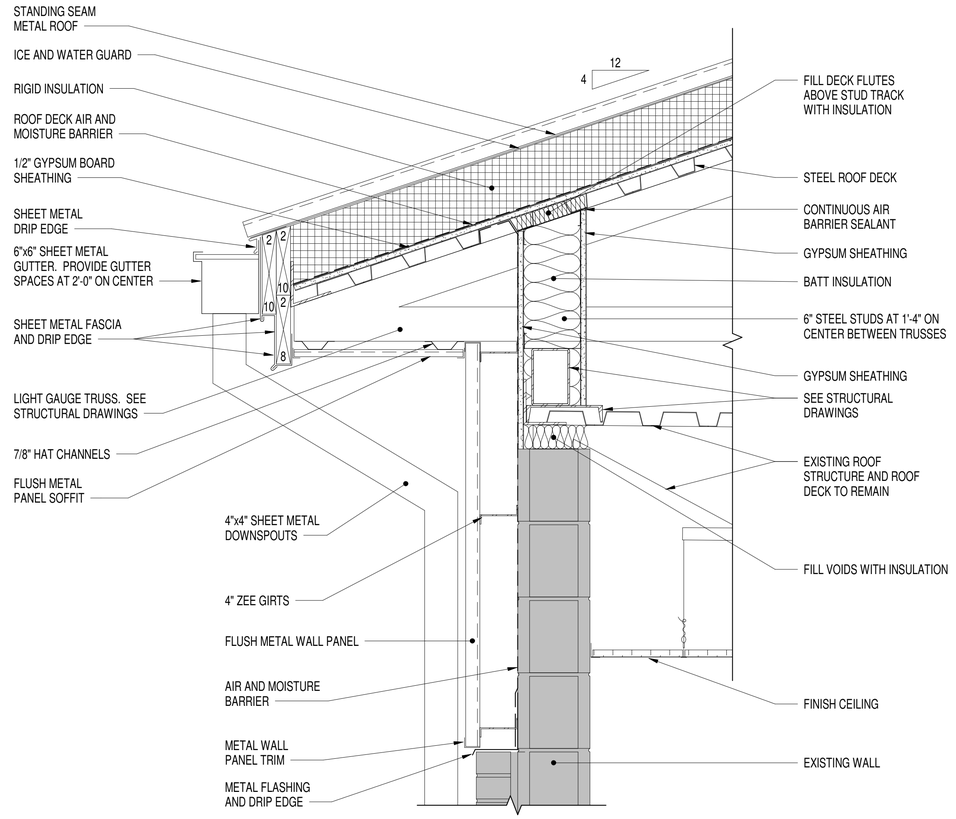

B5 TYPICAL EAVE DETAIL

SCALE: 1 1/2" = 1'-0"

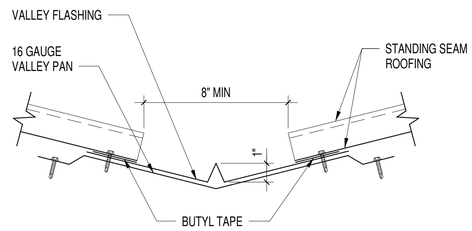

B2 VALLEY DETAIL

SCALE: 3" = 1'-0"

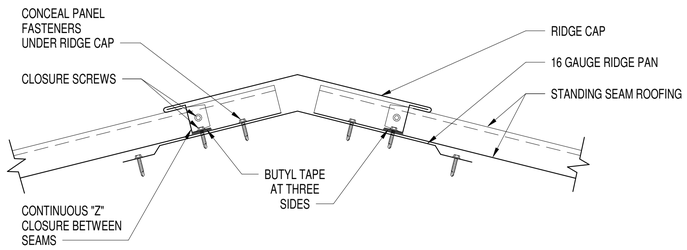

A2 RIDGE DETAIL

SCALE: 3" = 1'-0"

GRAPHIC SCALE: 1 1/2"=1'-0"

1' 6" 3" 0 1'

GRAPHIC SCALE: 3"=1'-0"

0 3" 6" 1"

MBF ARCHITECTS, P.A. BUILDING ARCHITECTURAL SERVICES CERT. NO. 50679 NORTH CAROLINA NEW BERN, N.C.

APPR | DATE | DESCRIPTION | SYM

NAVFAC

DARDEN J. EURE III REGISTERED ARCHITECT 8440 NORTH CAROLINA NEW BERN NC

01 JUL 2026 SEAL

mbf architects pa
317-C Pollock Street | New Bern, NC 28560
252.637.6373 | mbfarchitects.com
A/E INFO

APPROVED

FOR COMMANDER NAVFAC

ACTIVITY

SATISFACTORY TO

DES	REL	DRW	REL	CHK	DJE,III
PM/DM					L. PEED
BRANCH MANAGER					H. PERRY
CHIEF ENG/ARCH					P. FAULKNER
FIRE PROTECTION					D. CHASTAIN

DEPARTMENT OF THE NAVY
NAVAL FACILITIES ENGINEERING COMMAND
1PT MARINE
MARINE CORPS AIR STATION

NAVAL FACILITIES ENGINEERING COMMAND ~ MIDATLANTIC
NAVAL STATION - NORFOLK, VA.

CHERRY POINT, NC

MCOLF ATLANTIC
BUILDING 7019 RENOVATIONS

ROOFING DETAILS

SCALE:	AS INDICATED
STATION DESIGN WON:	7406712
STATION CONSTRUCTION WON:	7406712
NAVFAC DRAWING NO.	12939472
SHEET	47 OF 148

A-505

DRAWFORM REVISION: 25 AUGUST 2020

7/2/2026 11:05:50 AM A-505
C:\Users\sgimon\Documents\2509 ARCH 2023_sgimonP9CRM.rvt

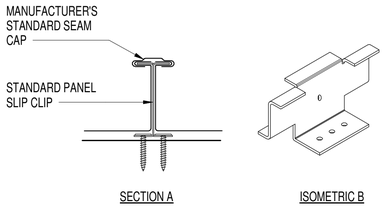

D1 STANDING SEAM SLIP CLIP

SCALE: NOT TO SCALE

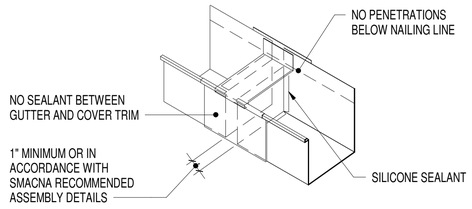

NOTES:
1. PROVIDE GUTTER EXPANSION JOINTS AT 35'-0" ON CENTER MAX

D3 GUTTER EXPANSION JOINT DETAIL

SCALE: 1 1/2" = 1'-0"

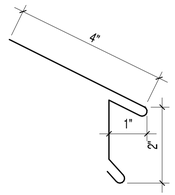

C3 DRIP EDGE DETAIL

SCALE: 6" = 1'-0"

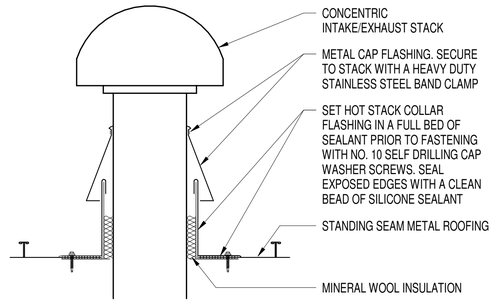

B1 ROOF PENETRATION DETAIL

SCALE: 1 1/2" = 1'-0"

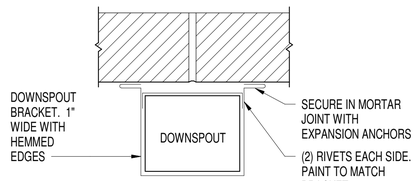

B3 DOWNSPOUT BRACKET DETAIL

SCALE: 3" = 1'-0"

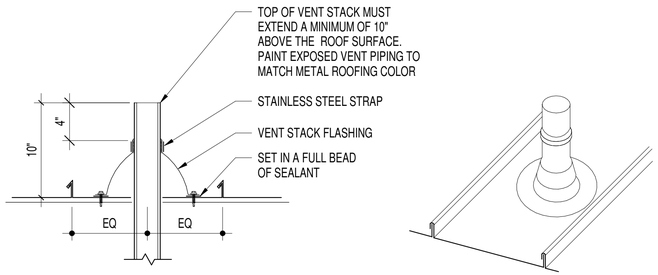

NOTES:
1. INSTALL VENT STACK FLASHING IN ACCORDANCE WITH THE ROOF MANUFACTURER'S RECOMMENDATIONS

A1 VENT THROUGH STANDING SEAM ROOF

SCALE: 1 1/2" = 1'-0"

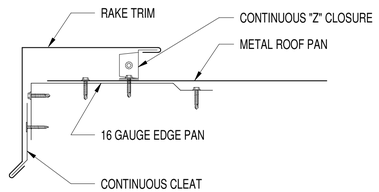

NOTES:
1. PROVIDE FASTENERS AND SEALANTS AS RECOMMENDED BY THE MANUFACTURER

A3 STANDING SEAM METAL ROOF RAKE

SCALE: 3" = 1'-0"

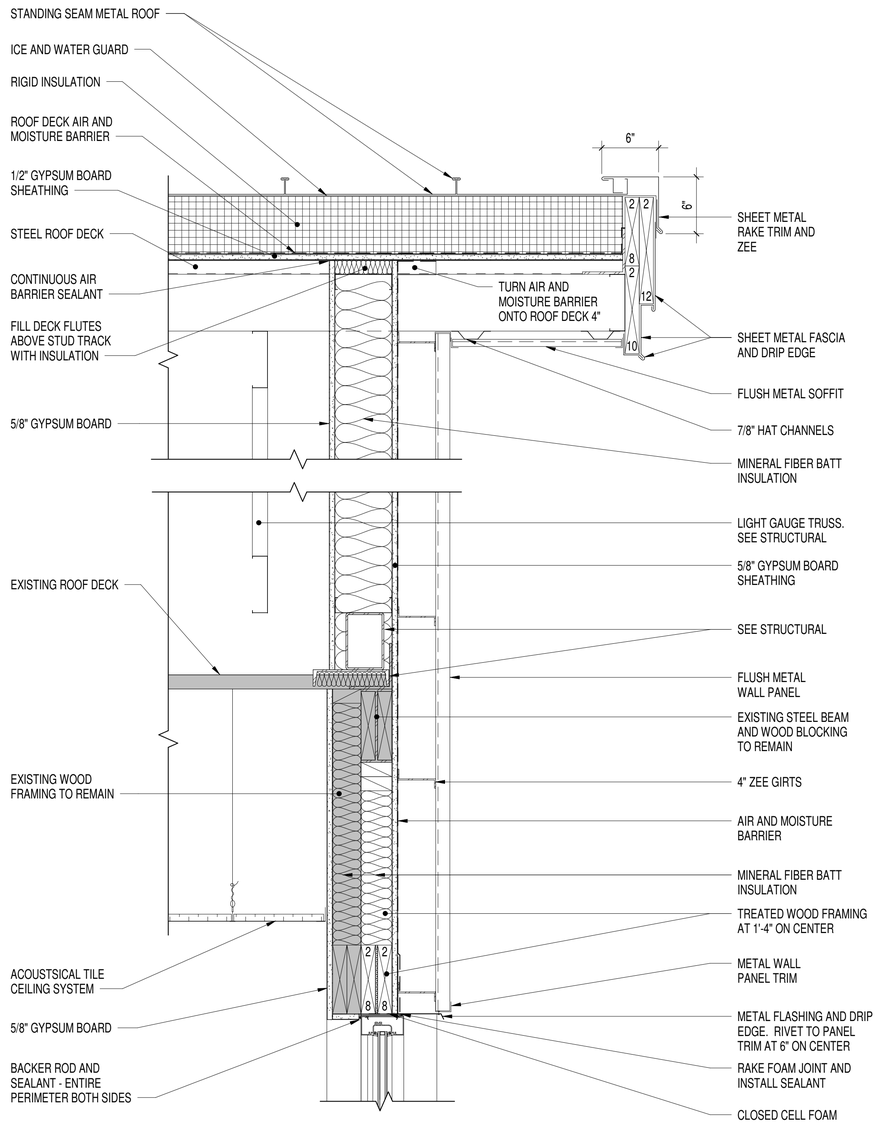

A5 RAKE SECTION AT ENTRY

SCALE: 1 1/2" = 1'-0"

GRAPHIC SCALE: 1 1/2"=1'-0"
1' 6" 3" 0 1'

GRAPHIC SCALE: 3"=1'-0"
0 3" 6" 1"

GRAPHIC SCALE: 6"=1'-0"
0 3" 6"

MBF ARCHITECTS, P.A. REGISTERED ARCHITECTURAL CORPORATION NORTH CAROLINA CERT. NO. 50679 NEW BERN, N.C.

APPR	DATE	DESCRIPTION	SYM

NAVFAC

DARDEN J. EURE III REGISTERED ARCHITECT 8840 NORTH CAROLINA NEW BERN NC

01 JUL 2026 SEAL

mbf architects pa
317-C Pollock Street | New Bern, NC 28560
252.637.6373 | mbfarchitects.com
A/E INFO

APPROVED

FOR COMMANDER NAVFAC

ACTIVITY

SATISFACTORY TO

DES	REL	DRW	REL	CHK	DJE,III
PM/DM					L. PEED
BRANCH MANAGER					H. PERRY
CHIEF ENG/ARCH					P. FAULKNER
FIRE PROTECTION					D. CHASTAIN

DEPARTMENT OF THE NAVY
NAVAL FACILITIES ENGINEERING COMMAND
NAVAL FACILITIES ENGINEERING COMMAND ~ MIDATLANTIC
1ST MARINE
MARINE CORPS AIR STATION
NAVAL STATION - NORFOLK, VA.
CHERRY POINT, NC
MCOLF ATLANTIC
BUILDING 7019 RENOVATIONS
ROOFING DETAILS

SCALE:	AS INDICATED
STATION DESIGN WON:	7406712
STATION CONSTRUTION WON:	7406712
NAVFAC DRAWING NO.	12939473
SHEET	48 OF 148

A-506

DRAWFORM REVISION: 25 AUGUST 2020

7/2/2026 11:05:50 AM A-506
C:\Users\sgimon\Documents\2509 ARCH 2023_sgimonPKORM.rvt

DOOR AND FRAME SCHEDULE

MARK	DOOR						FRAME					FIRE RATING	STC	REMARKS
	TYPE	WIDTH	HT.	THK.	MATERIAL	GLAZING	TYPE	MATERIAL	HEAD	JAMB	SILL			
100A	FG2	6'-0"	7'-0"	1 3/4"	ALUMINUM	1" INSULATED	S-2	ALUMINUM	A5A/A-603	A5B/A-603	A5C/A-603			LAMINTAED GLAZING
100B	FG2	3'-0"	7'-0"	1 3/4"	ALUMINUM	1" INSULATED	S-3	ALUMINUM	A5A/A-603	A5B/A-603	A5C/A-603			LAMINTAED GLAZING
101A	FG2	6'-0"	7'-0"	1 3/4"	ALUMINUM	1" INSULATED	S-1	ALUMINUM	A3A/A-602	A3B/A-602	A3C/A-602			LAMINTAED GLAZING
101B	FG2	6'-0"	7'-0"	1 3/4"	ALUMINUM	1" INSULATED	S-1	ALUMINUM	A3A/A-602	A3B/A-602	A3C/A-602			
103	F	2'-8"	6'-8"	1 3/4"	STEEL	-	A	STEEL	C5A/A-602	C5B/A-602		20 MIN		
104	F	2'-8"	6'-8"	1 3/4"	STEEL	-	A	STEEL	C5A/A-602	C5B/A-602				
105	F	2'-8"	7'-0"	1 3/4"	STEEL	-	B	STEEL	C1A/A-603	C1B/A-603		20 MIN		
106	F	3'-0"	7'-0"	1 3/4"	STEEL	-	B	STEEL	A1A/A-602	A1B/A-602	A1C/A-602			LEVEL 4 DOOR AND FRAME
106A	F	3'-0"	7'-0"	1 3/4"	STEEL	-	B	STEEL	A1A/A-602	A1B/A-602	A1C/A-602			LEVEL 4 DOOR AND FRAME
107	F	2'-8"	6'-8"	1 3/4"	STEEL	-	A	STEEL	C5A/A-602	C5B/A-602		20 MIN		
108	F	6'-0"	7'-0"	1 3/4"	STEEL	-	B	STEEL	A1A/A-602	A1B/A-602	A1C/A-602			LEVEL 4 DOOR AND FRAME
109A	F	5'-0"	7'-0"	1 3/4"	STEEL	-	A	STEEL	C5A/A-602	C5B/A-602		20 MIN		
109B	F	3'-0"	7'-0"	1 3/4"	STEEL	-	B	STEEL	A1A/A-602	A1B/A-602	A1C/A-602			LEVEL 4 DOOR AND FRAME
110	F	2'-8"	6'-8"	1 3/4"	STEEL	-	A	STEEL	C5A/A-602	C5B/A-602		45 MIN		
111	F	3'-0"	7'-0"	1 3/4"	STEEL	-	B	STEEL	A2A/A-602	A2B/A-602	A2C/A-602			LEVEL 4 DOOR AND FRAME
111A	F	2'-0"	6'-8"	1 3/4"	STEEL	-	A	STEEL	C5A/A-602	C5B/A-602				
112	F	2'-8"	6'-8"	1 3/4"	STEEL	-	A	STEEL	C5A/A-602	C5B/A-602				
113	F	3'-0"	7'-0"	1 3/4"	STEEL	-	B	STEEL	A1A/A-602	A1B/A-602	A1C/A-602			LEVEL 4 DOOR AND FRAME
114	F	3'-0"	7'-0"	1 3/4"	STEEL	-	B	STEEL	A1A/A-602	A1B/A-602	A1C/A-602			
114A	F	3'-0"	7'-0"	1 3/4"	STEEL	-	B	STEEL	A5A/A-602	A5B/A-602				
115	F	6'-0"	7'-0"	1 3/4"	STEEL	-	B	STEEL	A1A/A-602	A1B/A-602	A1C/A-602			LEVEL 4 DOOR AND FRAME
116	F	3'-0"	7'-0"	1 3/4"	STEEL	-	B	STEEL	A5A/A-602	A5B/A-602		20 MIN		
118	F	2'-8"	6'-8"	1 3/4"	STEEL	-	A	STEEL	C5A/A-602	C5B/A-602		20 MIN		
119	F	2'-8"	6'-8"	1 3/4"	STEEL	-	A	STEEL	C5A/A-602	C5B/A-602		20 MIN		
120	F	2'-8"	6'-8"	1 3/4"	STEEL	-	A	STEEL	C5A/A-602	C5B/A-602		20 MIN		
121A	F	3'-0"	7'-0"	1 3/4"	STEEL	-	B	STEEL	A2A/A-602	A2B/A-602	A2C/A-602			
121B	G	3'-0"	7'-0"	1 3/4"	STEEL	-	B	STEEL	A2A/A-602	A2B/A-602	A2C/A-602			LEVEL 4 DOOR AND FRAME
122	F	2'-8"	6'-8"	1 3/4"	STEEL	-	A	STEEL	C5A/A-602	C5B/A-602		20 MIN		
123	F	2'-8"	6'-8"	1 3/4"	STEEL	-	A	STEEL	C5A/A-602	C5B/A-602		20 MIN		
124	F	2'-8"	6'-8"	1 3/4"	STEEL	-	A	STEEL	C5A/A-602	C5B/A-602		20 MIN		
125	F	2'-8"	6'-8"	1 3/4"	STEEL	-	A	STEEL	C5A/A-602	C5B/A-602		20 MIN		
126	F	2'-8"	6'-8"	1 3/4"	STEEL	-	A	STEEL	C5A/A-602	C5B/A-602		20 MIN		
127	F	2'-8"	6'-8"	1 3/4"	STEEL	-	A	STEEL	C5A/A-602	C5B/A-602		20 MIN		
128	F	2'-8"	6'-8"	1 3/4"	STEEL	-	A	STEEL	C5A/A-602	C5B/A-602		20 MIN		
128A	F	2'-0"	6'-8"	1 3/4"	STEEL	-	A	STEEL	C5A/A-602	C5B/A-602				
129	F	2'-8"	6'-8"	1 3/4"	STEEL	-	A	STEEL	C5A/A-602	C5B/A-602		20 MIN		
129A	F	2'-0"	6'-8"	1 3/4"	STEEL	-	A	STEEL	C5A/A-602	C5B/A-602				
130	F	2'-8"	6'-8"	1 3/4"	STEEL	-	A	STEEL	C5A/A-602	C5B/A-602		20 MIN		
130A	F	2'-0"	6'-8"	1 3/4"	STEEL	-	A	STEEL	C5A/A-602	C5B/A-602				
131	F	2'-8"	6'-8"	1 3/4"	STEEL	-	A	STEEL	C5A/A-602	C5B/A-602		20 MIN		
131A	F	2'-0"	6'-8"	1 3/4"	STEEL	-	A	STEEL	C5A/A-602	C5B/A-602				
132	F	2'-8"	6'-8"	1 3/4"	STEEL	-	A	STEEL	C5A/A-602	C5B/A-602		20 MIN		
132A	F	2'-0"	6'-8"	1 3/4"	STEEL	-	A	STEEL	C5A/A-602	C5B/A-602				
133	F	2'-8"	6'-8"	1 3/4"	STEEL	-	A	STEEL	C5A/A-602	C5B/A-602		20 MIN		
133A	F	2'-0"	6'-8"	1 3/4"	STEEL	-	A	STEEL	C5A/A-602	C5B/A-602				
134	F	2'-8"	6'-8"	1 3/4"	STEEL	-	A	STEEL	C5A/A-602	C5B/A-602		20 MIN		
134A	F	2'-0"	6'-8"	1 3/4"	STEEL	-	A	STEEL	C5A/A-602	C5B/A-602				
135	F	2'-8"	6'-8"	1 3/4"	STEEL	-	A	STEEL	C5A/A-602	C5B/A-602		20 MIN		
135A	F	2'-0"	6'-8"	1 3/4"	STEEL	-	A	STEEL	C5A/A-602	C5B/A-602				
136	F	2'-8"	6'-8"	1 3/4"	STEEL	-	A	STEEL	C5A/A-602	C5B/A-602		20 MIN		
136A	F	2'-0"	6'-8"	1 3/4"	STEEL	-	A	STEEL	C5A/A-602	C5B/A-602				

DOOR AND FRAME SCHEDULE NOTES:
1. STEEL DOORS AND FRAMES ARE LEVEL 2 UNLESS NOTED OTHERWISE

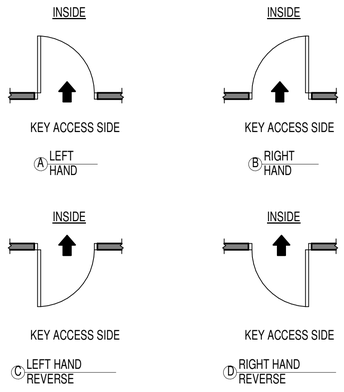

A1 DOOR SWING AND HANDING DETAIL
SCALE: 1/4" = 1'-0"

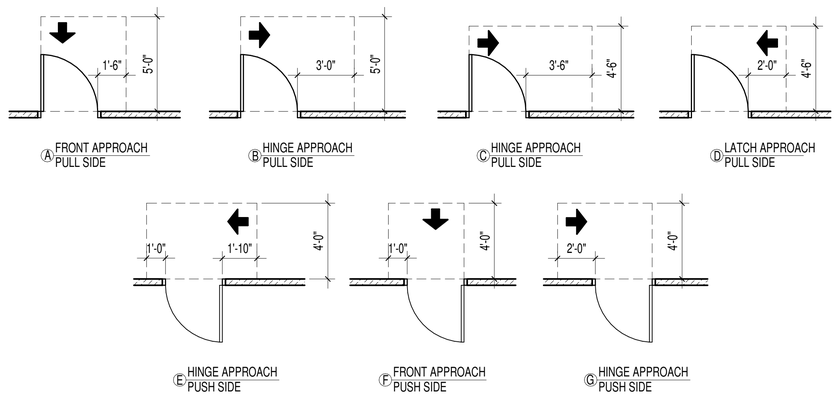

NOTES:
1. REFERENCE SECTION 404.2.3.2, ANSI A117.1

A3 MANEUVERING CLEARANCE AT DOORS
SCALE: 1/4" = 1'-0"

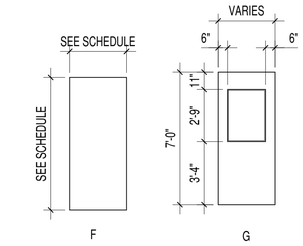

NOTES:
1. REFERENCE SECTION 404.2.10, ANSI A117 FOR VISION LITES

D4 HOLLOW METAL DOOR DIMENSIONS
SCALE: 1/4" = 1'-0"

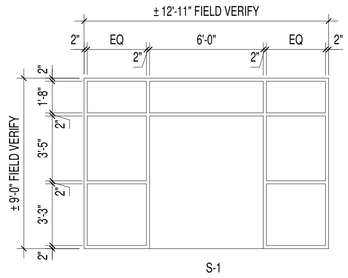

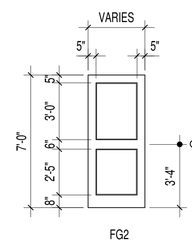

NOTES:
1. REFERENCE 404.2.9, ABA FOR BOTTOM RAIL HEIGHT

D5 ALUMINUM DOOR DIMENSIONS
SCALE: 1/4" = 1'-0"

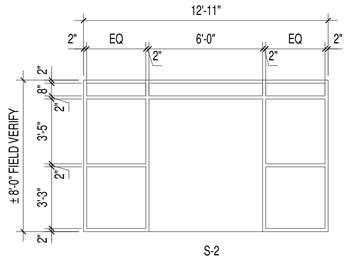

C4 ALUMINUM STOREFRONT DIMENSIONS
SCALE: 1/4" = 1'-0"

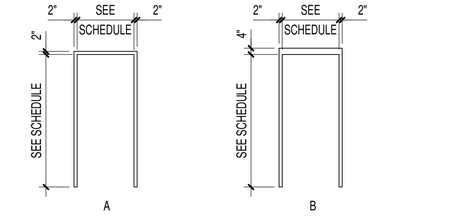

A5 HOLLOW METAL FRAME DIMENSIONS
SCALE: 1/4" = 1'-0"

GRAPHIC SCALE: 1/2"=1'-0"
2' 0 1' 2' 4'

GRAPHIC SCALE: 1/4"=1'-0"
4' 0 2' 4' 8'

MBF ARCHITECTS, P.A. PROFESSIONAL ARCHITECTURAL CORPORATION CERT. NO. 50679 NORTH CAROLINA NEW BERN N.C.

APPR | DATE | DESCRIPTION | SYM

NAVFAC

DARDEN J. EURE, III REGISTERED ARCHITECT 8440 NORTH CAROLINA NEW BERN NC
01 JUL 2026 SEAL

mbf architects pa
317-C Pollock Street | New Bern, NC 28560
252.637.6373 | mbfarchitects.com
A/E INFO

APPROVED

FOR COMMANDER NAVFAC
ACTIVITY

SATISFACTORY TO

DES	REL	DRW	REL	CHK	DJE,III
PM/DM					L. PEED
BRANCH MANAGER					H. PERRY
CHIEF ENG/ARCH					P. FAULKNER
FIRE PROTECTION					D. CHASTAIN

DEPARTMENT OF THE NAVY
NAVAL FACILITIES ENGINEERING COMMAND ~ MIDATLANTIC
IPT MARINE
MARINE CORPS AIR STATION
NAVAL FACILITIES ENGINEERING COMMAND ~ MIDATLANTIC
NAVAL STATION ~ NORFOLK, VA.
CHERRY POINT, NC
MCOLF ATLANTIC
BUILDING 7019 RENOVATIONS
DOOR AND FRAME SCHEDULE AND DETAILS

SCALE:	AS INDICATED
STATION DESIGN WON:	7406712
STATION CONSTRUTION WON:	7406712
NAVFAC DRAWING NO.	12939474
SHEET	49 OF 148

A-601

DRAWFORM REVISION: 25 AUGUST 2020

7/2/2026 11:05:51 AM
C:\Users\sigmon\Documents\2509 ARCH 2022_sigmonPSCRM.rvt
A-601

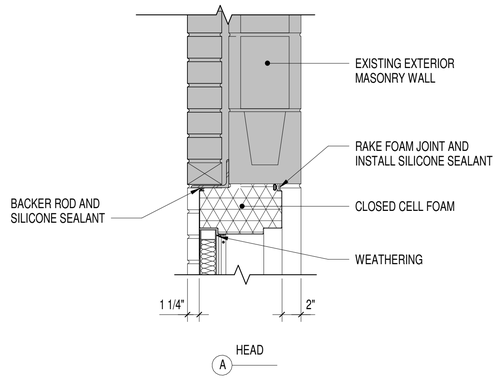

A HEAD

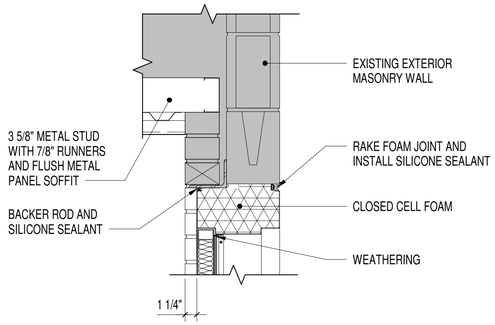

A HEAD

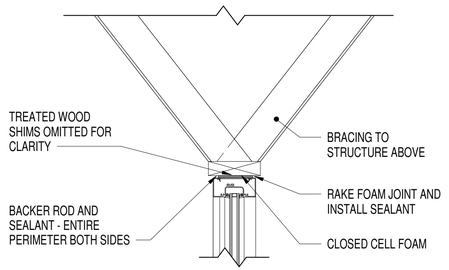

A HEAD AND MEETING RAIL

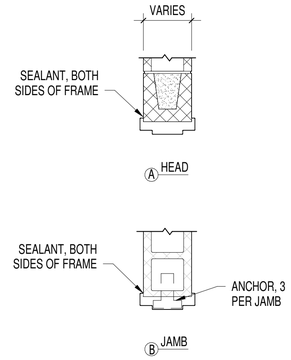

A HEAD

B JAMB

C5 INTERIOR STEEL FRAME - WRAP AROUND

SCALE: 1" = 1'-0"

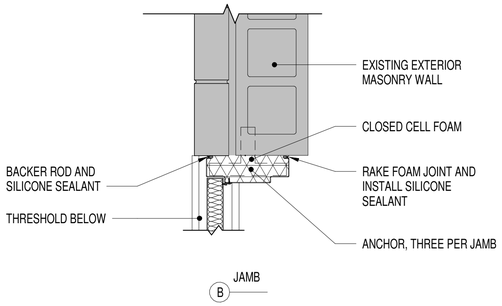

B JAMB

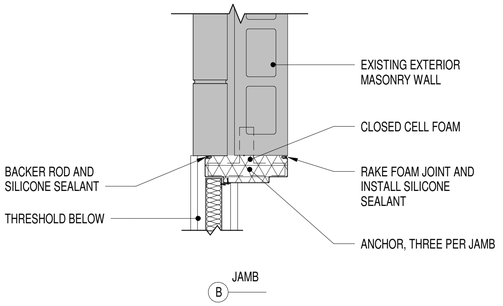

B JAMB

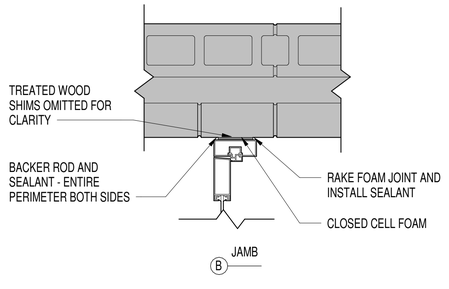

B JAMB

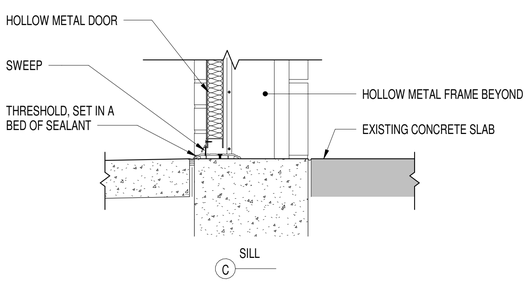

C SILL

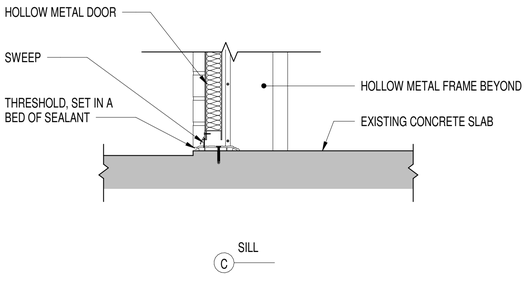

C SILL

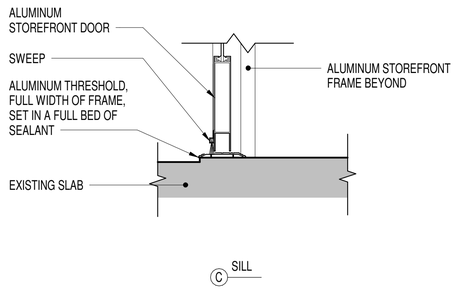

C SILL

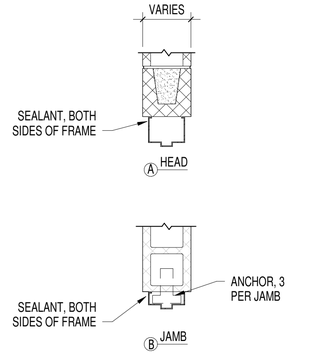

A HEAD

B JAMB

A1 EXTERIOR DOOR DETAIL

SCALE: 1 1/2" = 1'-0"

A2 EXTERIOR DOOR DETAIL

SCALE: 1 1/2" = 1'-0"

A3 ALUMINUM STOREFRONT ENTRY

SCALE: 1 1/2" = 1'-0"

A5 INTERIOR STEEL FRAME - 4" HEAD

SCALE: 1" = 1'-0"

GRAPHIC SCALE: 1"=1'-0"
1' 0 1' 2'

GRAPHIC SCALE: 1 1/2"=1'-0"
1' 6" 3" 0 1'

MBF ARCHITECTS, P.A. REGISTERED ARCHITECTURE CORPORATION CERT. NO. 50679 NORTH CAROLINA NEW BERN NC

DARDEN J. EURE III REGISTERED ARCHITECT NORTH CAROLINA NEW BERN NC 8840 01 JUL 2026 SEAL

mbf architects pa
317-C Pollock Street | New Bern, NC 28560
252.637.8373 | mbfarchitects.com
A/E INFO

APPROVED

FOR COMMANDER NAVFAC

ACTIVITY

SATISFACTORY TO

DES	REL	DRW	REL	CHK	DJE,III
PM/DM					L. PEED
BRANCH MANAGER					H. PERRY
CHIEF ENG/ARCH					P. FAULKNER
FIRE PROTECTION					D. CHASTAIN

NAVAL FACILITIES ENGINEERING COMMAND
DEPARTMENT OF THE NAVY
NAVAL FACILITIES ENGINEERING COMMAND ~ MIDATLANTIC
IPT MARINE
MARINE CORPS AIR STATION
NAVAL STATION - NORFOLK, VA.
CHERRY POINT, NC
MCOLF ATLANTIC
BUILDING 7019 RENOVATIONS
DOOR DETAILS

SCALE:	AS INDICATED
STATION DESIGN WON:	7406712
STATION CONSTRUTION WON:	7406712
NAVFAC DRAWING NO.	12939475
SHEET	50 OF 148

A-602

DRAWFORM REVISION: 25 AUGUST 2020

APPR | DATE | DESCRIPTION | SYM

7/2/2026 11:55:51 AM A-602
C:\Users\sgimon\Documents\2509 ARCH 2023_sgimonPSCRM.rvt

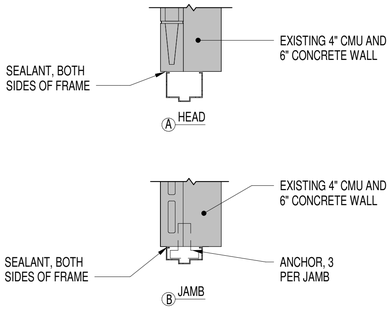

C1 INTERIOR STEEL FRAME - 4" HEAD

SCALE: 1" = 1'-0"

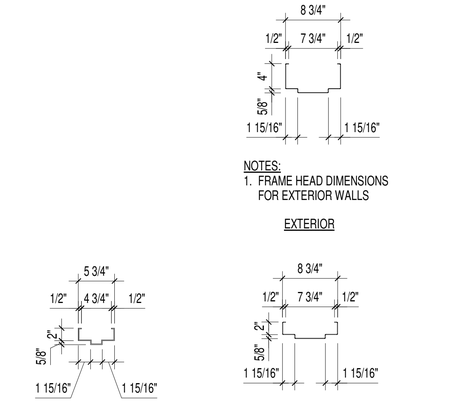

C2 STEEL FRAME DIMENSION

SCALE: 1" = 1'-0"

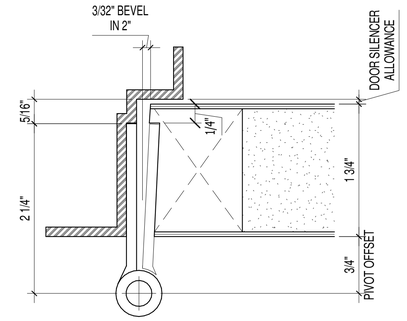

C3 HINGE DETAIL - STEEL FRAME

SCALE: 12" = 1'-0"

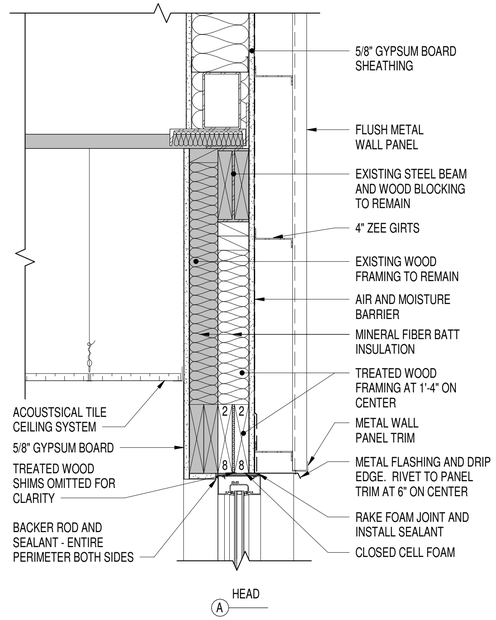

MARK	DESCRIPTION
A	4 1/2"x4 1/2" BUTT HINGE
B	NOT USED
C	NOT USED
D	TRIM, 2 3/4" BACKSET
E	KICK OR MOP PLATE, 2'-10"x8" OR 2'-10"x4"
F	PANIC BAR EXIT DEVICE

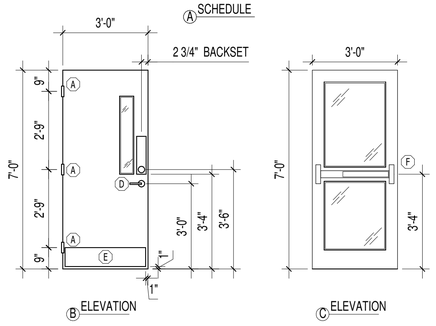

A1 HARDWARE MOUNTING DIMENSIONS

SCALE: 3/8" = 1'-0"

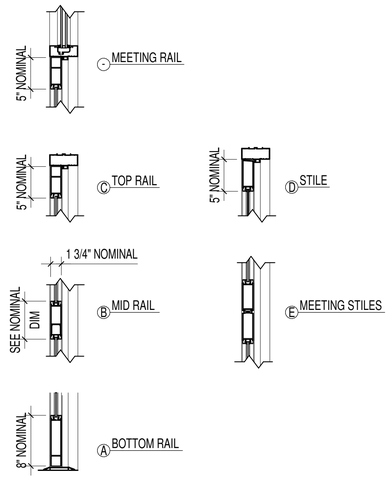

A2 ALUMINUM DOOR STILE AND RAIL DETAILS

SCALE: 1" = 1'-0"

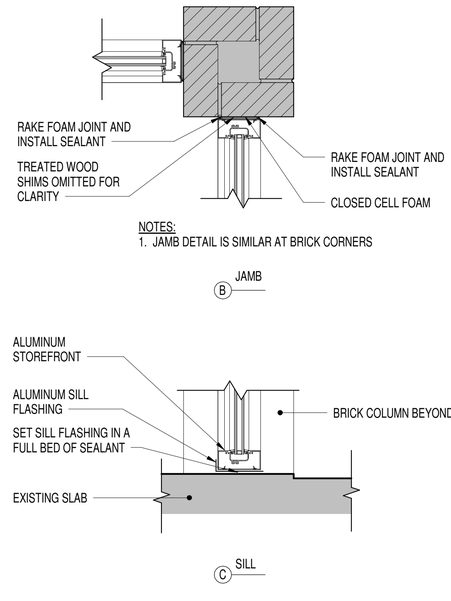

A5 EXTERIOR ALUMINUM STOREFRONT DETAILS

SCALE: 1 1/2" = 1'-0"

GRAPHIC SCALE: 3/8"=1'-0"
3' 0 2' 6'

GRAPHIC SCALE: 1"=1'-0"
1' 0 1' 2'

GRAPHIC SCALE: 1 1/2"=1'-0"
1' 6" 3" 0 1'

GRAPHIC SCALE: 12"=1'-0"
0 1/2" 1" 3"

MBF ARCHITECTS P.A. REGISTERED ARCHITECTURAL CORPORATION NORTH CAROLINA CERT. NO. 50679 NEW BERN, NC

	APPR	DATE	DESCRIPTION	SYM

NAVFAC

DARDEN J. EURE III REGISTERED ARCHITECT 8440 NORTH CAROLINA NEW BERN NC

01 JUL 2026 SEAL

mbf architects pa
317-C Pollock Street | New Bern, NC 28560
252.637.6373 | mbfarchitects.com
A/E INFO

APPROVED

FOR COMMANDER NAVFAC

ACTIVITY

SATISFACTORY TO

DES	REL	DRW	REL	CHK	DJE,III
PM/DM					L. PEED
BRANCH MANAGER					H. PERRY
CHIEF ENG/ARCH					P. FAULKNER
FIRE PROTECTION					D. CHASTAIN

NAVAL FACILITIES ENGINEERING COMMAND
DEPARTMENT OF THE NAVY
NAVAL FACILITIES ENGINEERING COMMAND - MIDATLANTIC
IPT MARINE
NAVAL STATION - NORFOLK, VA.
MARINE CORPS AIR STATION
CHERRY POINT, NC
MCOLF ATLANTIC
BUILDING 7019 RENOVATIONS
DOOR DETAILS

SCALE:	AS INDICATED
STATION DESIGN WON:	7406712
STATION CONSTRUCTION WON:	7406712
NAVFAC DRAWING NO.	12939476
SHEET	51 OF 148

A-603

DRAWFORM REVISION: 25 AUGUST 2020

7/22/2026 11:05:52 AM
C:\Users\sigmon\Documents\2509 ARCH 2023_sigmonPRCRM.rvt
A-603

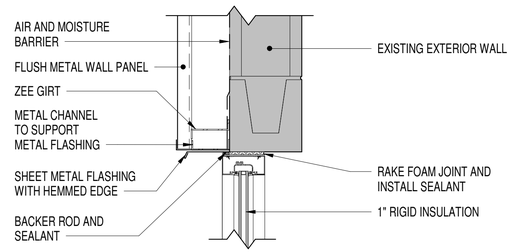

D3 TYPICAL WINDOW HEAD

SCALE: 1 1/2" = 1'-0"

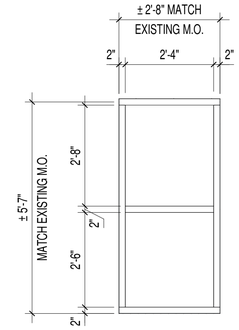

A WINDOW TYPE A

SCALE: 1/2" = 1'-0"

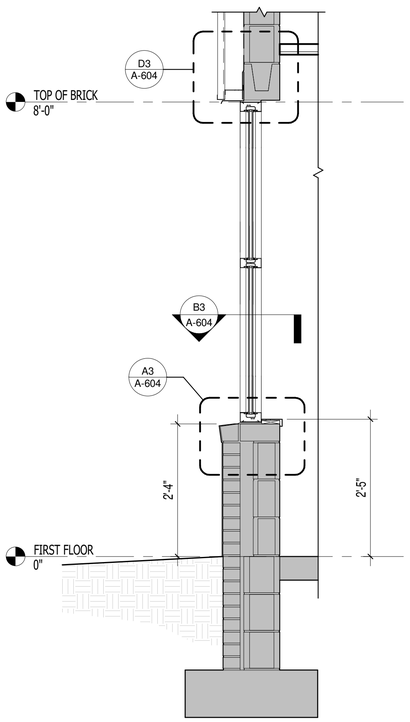

A1 TYPICAL WINDOW SECTION

SCALE: 3/4" = 1'-0"

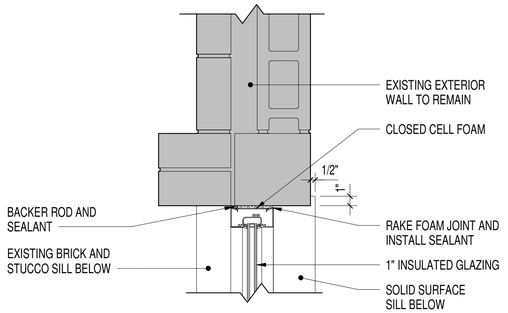

B3 TYPICAL WINDOW JAMB - AT BRICK PROJECTION

SCALE: 1 1/2" = 1'-0"

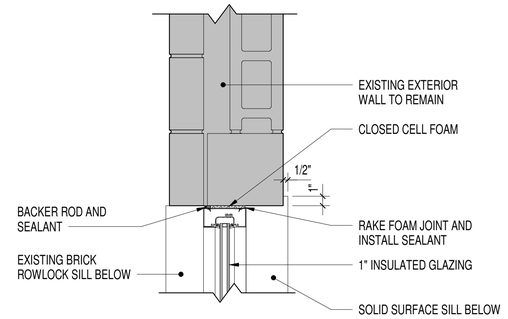

B4 TYPICAL WINDOW JAMB - FLUSH

SCALE: 1 1/2" = 1'-0"

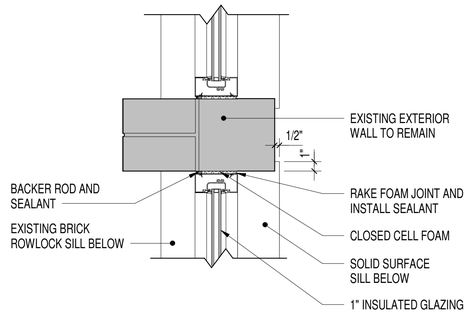

B5 TYPICAL WINDOW JAMB

SCALE: 1 1/2" = 1'-0"

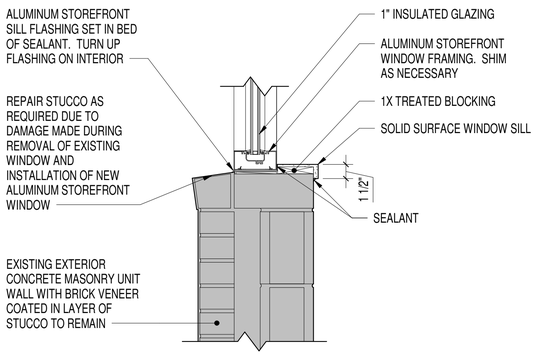

A3 TYPICAL WINDOW SILL - STUCCO

SCALE: 1 1/2" = 1'-0"

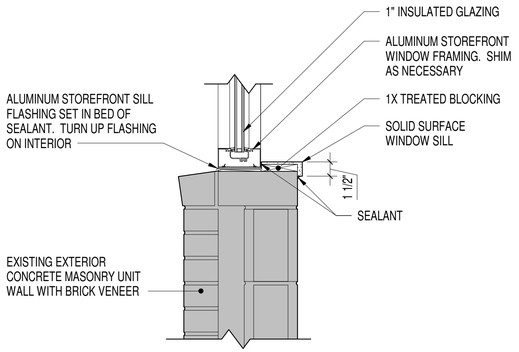

A4 TYPICAL WINDOW SILL - BRICK ROWLOCK

SCALE: 1 1/2" = 1'-0"

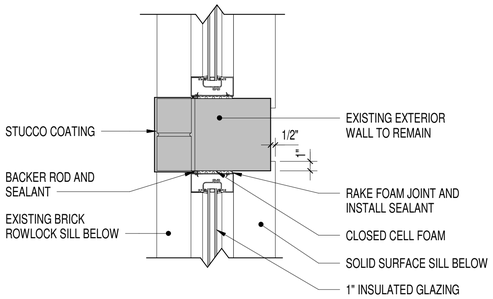

A5 TYPICAL WINDOW JAMB

SCALE: 1 1/2" = 1'-0"

GRAPHIC SCALE: 3/4"=1'-0"

1' 0 1' 2' 3'

GRAPHIC SCALE: 1 1/2"=1'-0"

1' 6" 3" 0 1'

MBF ARCHITECTS P.A. PROFESSIONAL ARCHITECTURAL CORPORATION CERT. NO. 50679 NORTH CAROLINA NEW BERN NC

APPR	DATE	DESCRIPTION	SYM

NAVFAC

DARDEN J. EURE III REGISTERED ARCHITECT 8640 NORTH CAROLINA NEW BERN NC

01 JUL 2026 SEAL

mbf architects pa
317-C Pollock Street | New Bern, NC 28560
252.637.6373 | mbfarchitects.com
A/E INFO

APPROVED

FOR COMMANDER NAVFAC

ACTIVITY

SATISFACTORY TO					
DES	REL	DRW	REL	CHK	DJE,III
PM/DM					L. PEED
BRANCH MANAGER					H. PERRY
CHIEF ENG/ARCH					P. FAULKNER
FIRE PROTECTION					D. CHASTAIN

DEPARTMENT OF THE NAVY
NAVAL FACILITIES ENGINEERING COMMAND ~ MIDATLANTIC
NAVAL STATION - NORFOLK, VA
IPT MARINE
MARINE CORPS AIR STATION CHERRY POINT, NC
MCOLF ATLANTIC
BUILDING 7019 RENOVATIONS
WINDOW SCHEDULE AND DETAILS

SCALE:	AS INDICATED
STATION DESIGN WON:	7406712
STATION CONSTRUCTION WON:	7406712
NAVFAC DRAWING NO.	12939477
SHEET	52 OF 148

A-604

DRAWFORM REVISION: 25 AUGUST 2020

7/2/2026 11:05:53 AM A-604
C:\Users\sigmon\Documents\2509 ARCH 2022_sigmonPRCRM.rvt

FOOD SERVICE EQUIPMENT SCHEDULE														
					ELECTRICAL						PLUMBING			
Mark	GROUP	DESCRIPTION	MANUFACTURER	MODEL	AFF	KW	HP	AMP	VOLT	PH	HW / AFF	CW / AFF	W / AFF	REMARKS
01	A	REFRIGERATOR	TRUE MANUFACTURING	TS-23-HC	5"	-	1/4	2.2	115	1	-	-	-	
02	A	FREEZER	TRUE MANUFACTURING	T-23F-HC	5"	-	1/2	3.7	115	1	-	-	-	
03	A	UTILITY DISH CART	EAGLE GROUP	UC-322	-	-	-	-	-	-	-	-	-	
04	A	3-BASIN SINK	JOHN BOOS	43PB244-2D24	-	-	-	-	-	-	39 1/16"	39 1/16"	22 5/16"	
05	A	PREP TABLE WITH SERVICE SINK	JOHN BOOS	EPT6R5-GSK	-	-	-	-	-	-	35 3/4"	35 3/4"	23 3/4"	
06	A	96" WORK TABLE	JOHN BOOS	ST4R5-3084SBK	-	-	-	-	-	-	-	-	-	
07	A	RANGE	VULCAN	36S-6BP	-	-	-	-	-	-	-	-	-	215,000 BTU/HR; CONNECTION AT 30 1/2" AFF
08	A	30" WORK TABLE	JOHN BOOS	ST4R5-3036SBK	-	-	-	-	-	-	-	-	-	
09	A	GRIDDLE	VULCAN	VCRG48-T	-	-	-	-	-	-	-	-	-	100,000 BTU/HR; CONNECTION AT 5" ABOVE WORK SURFACE
10	A	GRIDDLE STAND	VULCAN	STAND-C-48	-	-	-	-	-	-	-	-	-	
11	A	60" WIRE SHELVING	EAGLE GROUP	S4-74-1860	-	-	-	-	-	-	-	-	-	
12	A	48" WIRE SHELVING	EAGLE GROUP	S4-74-1848	-	-	-	-	-	-	-	-	-	
13	A	WALL MOUNTED HANDWASH SINK	JOHN BOOS	PBHS-14-PD	-	-	-	-	-	-	36"	36"	31"	
14	A	ICE MAKER	TRUE MANUFACTURING	TCIM-430	70 5/8"	4	-	-	120	1	-	70 1/8"	51"	TIB-530 ICE BASIN
15	A	MICROWAVE	AMANA COMMERCIAL	RCS10TS	-	1	-	-	120	1	-	-	-	

EQUIPMENT SCHEDULE NOTES:

1. MANUFACTURER AND MODEL INFORMATION PROVIDED REPRESENT THE APPROVED BASIS OF DESIGN ONLY. THE LISTING OF MANUFACTURER INFORMATION IS NOT INTENDED TO LIMIT SELECTION OF EQUIPMENT PROVIDED BY ALTERNATE MANUFACTURERS. PRODUCTS MEETING THE LISTED CRITERIA MAY BE SUBMITTED FOR CONSIDERATION BY THE DESIGNER OF RECORD (DOR) AND THE GOVERNMENT
2. PLUMBING PIPING SIZES AND HEIGHTS ARE BASED ON MANUFACTURER'S INFORMATION. SEE PLUMBING DRAWINGS FOR COLD WATER, HOT WATER AND WASTE DISTRIBUTION AND CONNECTIONS. PIPING SIZES, HEIGHTS AND CONNECTIONS MUST BE COORDINATED WITH EQUIPMENT PROVIDED
3. SEE MECHANICAL DRAWINGS FOR EXHAUST HOOD EQUIPMENT AND REQUIREMENTS
4. ELECTRICAL LOADS ARE BASED ON MANUFACTURER'S INFORMATION. SEE ELECTRICAL DRAWINGS FOR MINIMUM CIRCUIT AMPACITY AND OVERCURRENT PROTECTION. ELECTRICAL LOADS MUST BE COORDINATED WITH EQUIPMENT PROVIDED

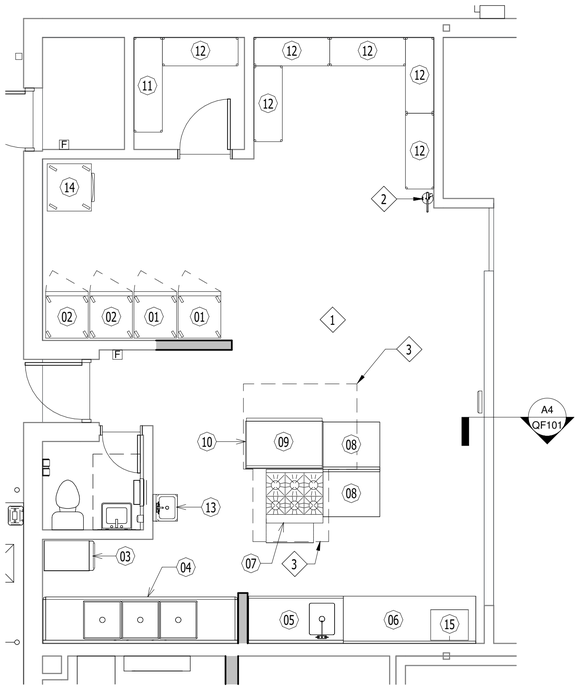

A1 KITCHEN EQUIPMENT PLAN

SCALE: 1/4" = 1'-0"

CONSTRUCTION KEYNOTES

1. COORDINATE EXACT LOCATION AND HEIGHT OF UTILITY CONNECTIONS FOR FOOD SERVICE EQUIPMENT PRIOR TO ROUGH-IN
2. HOOK MOUNTED FIRE EXTINGUISHER
3. EXHAUST HOOD ABOVE. COORDINATE EXACT LOCATION AND DIMENSIONS WITH MECHANICAL

EQUIPMENT GROUP LEGEND

GROUP A: CONTRACTOR FURNISHED / CONTRACTOR INSTALLED

GROUP B: GOVERNMENT FURNISHED / CONTRACTOR INSTALLED

GROUP C: GOVERNMENT FURNISHED / GOVERNMENT INSTALLED

GROUP L: GOVERNMENT LEASED EQUIPMENT / INSTALLED BY OTHERS

FF&E: PURCHASED THROUGH THE FURNITURE, FIXTURES AND EQUIPMENT CONTRACT / CONTRACTOR INSTALLED

EQUIPMENT ABBREVIATIONS

AFF	ABOVE FINISHED FLOOR
CW	COLD WATER
FD	FLOOR DRAIN
FS	FLOOR SINK
HW	HOT WATER
W	WASTE
KW	KILOWATT
HP	HORSEPOWER
AMP	AMPERAGE
VOLT	VOLTAGE
PH	PHASE

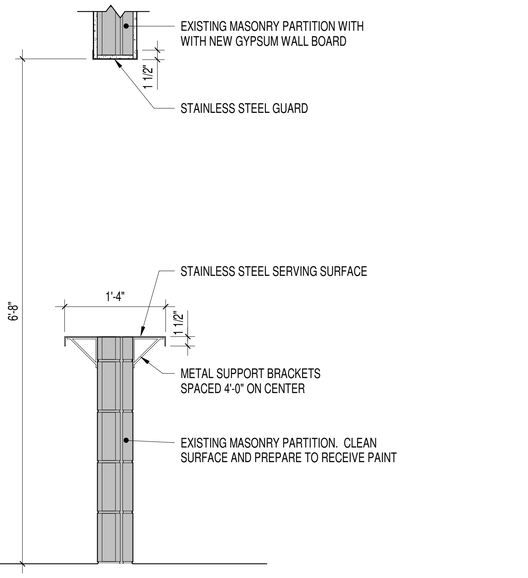

A4 SERVING COUNTER SECTION

SCALE: 1" = 1'-0"

GRAPHIC SCALE: 1/4"=1'-0"

4' 0 2' 4' 8'

GRAPHIC SCALE: 1"=1'-0"

1' 0 1' 2'

MBF ARCHITECTS, P.A. BRIDGING ARCHITECTURAL GENERATIONS CERT. NO. 50679 NORTH CAROLINA NEW BERN N.C.

APPR | DATE | DESCRIPTION | SYM

DARDEN J. EURE, III REGISTERED ARCHITECT 8840 NORTH CAROLINA NEW BERN NC

01 JUL 2026 SEAL

mbf architects pa
317-C Pollock Street | New Bern, NC 28560
252.637.6373 | mbfarchitects.com
A/E INFO

APPROVED

FOR COMMANDER NAVFAC

ACTIVITY

SATISFACTORY TO

DES	REL	DRW	REL	CHK	DJE,III
PM/DM					L. PEED
BRANCH MANAGER					H. PERRY
CHIEF ENG/ARCH					P. FAULKNER
FIRE PROTECTION					D. CHASTAIN

DEPARTMENT OF THE NAVY
NAVAL FACILITIES ENGINEERING COMMAND ~ MIDATLANTIC
IPT: MARINE
MARINE CORPS AIR STATION CHERRY POINT, NC
NAVAL FACILITIES ENGINEERING COMMAND
NAVAL STATION - NORFOLK, VA.
MCOLF ATLANTIC
BUILDING 7019 RENOVATIONS
KITCHEN EQUIPMENT PLAN

SCALE:	AS INDICATED
STATION DESIGN WON:	7406712
STATION CONSTRUCTION WON:	7406712
NAVFAC DRAWING NO.	12939478
SHEET	53 OF 148

QF101

DRAWFORM REVISION: 25 AUGUST 2020

7/2/2026 11:05:53 AM QF101
C:\Users\sigmon\Documents\2509 ARCH 2023_sigmonPSCRM.rvt

FURNITURE NOTES

A. FF&E ITEMS ARE NOT INCLUDED ON THE CONSTRUCTION CONTRACT AND MAY BE FUNDED SEPARATELY THROUGH A CONTRACT MODIFICATION.

B. QUANTITIES ON FURNITURE SCHEDULE ARE TOTALS FOR ENTIRE PROJECT AND NOT INDICATIVE OF EACH SHEET.

C. REFER TO ARCHITECTURAL FLOOR PLANS FOR BUILDING LAYOUT, DIMENSIONS, AND COORDINATION TO BUILDING SYSTEMS AND STRUCTURE.

D. REFER TO ELECTRICAL DRAWINGS FOR COORDINATION OF LIGHTING, POWER, DATA, COMMUNICATIONS, AND LOCATIONS OF OTHER WALL AND FLOOR MOUNTED ELECTRICAL DEVICES AND EQUIPMENT FOR COORDINATION TO FURNITURE LAYOUTS. CONTRACTOR MUST IDENTIFY ANY CONFLICTS WITH FURNITURE LAYOUTS.

E. CONTRACTOR IS RESPONSIBLE FOR ENSURING TO PROVIDE POWER, DATA AND/OR A/V OUTLETS FOR ALL ITEMS OF FURNISHINGS AND EQUIPMENT INCLUDING FF&E, GOVERNMENT FURNISHED, CONTRACTOR INSTALLED (GFCI), AND GOVERNMENT FURNISHED, GOVERNMENT INSTALLED (GFGI), REQUIRING CABLING AND CONNECTIONS.

FURNITURE NOTES

F. FF&E CONTRACTOR/INSTALLER MUST COORDINATE POWER/DATA/COMM CONNECTIONS & LOCATIONS WITH GC'S ELECTRICAL CONTRACTOR AND/OR DATA CONTRACTOR PRIOR TO INSTALLATION OF ELECTRIFIED FURNISHINGS. ELECTRICAL CONTRACTOR IS RESPONSIBLE FOR HARDWIRING FURNITURE SYSTEMS PRE-WIRED ELECTRICAL SYSTEM TO JUNCTION BOXES/BUILDING POWER ONCE FURNITURE IS INSTALLED.

G. INSTALLATION OF DATA ON FURNITURE ITEMS MUST BE COVERED BY THE GENERAL CONTRACTOR. GC'S DATA CONTRACTOR WILL RUN DATA CABLING WITHIN THE SYSTEMS FURNITURE. FF&E CONTRACTOR AND DATA CONTRACTOR WILL COORDINATE OPTIMAL INSTALLATION TIME AND SPECIFICS.

H. FF&E CONTRACTOR TO FIELD VERIFY ALL MEASUREMENTS AND SITE CONDITIONS TO ENSURE PROPER FIT OF ALL FF&E. FURNISHINGS MUST NOT OVERLAP OR OBSTRUCT DOOR FRAMES, WALL SWITCHES, THERMOSTATS, OR OTHER WALL MOUNTED ITEMS.

FURNITURE NOTES

I. MODIFICATIONS TO FURNISHINGS LAYOUTS REQUIRED TO MEET BUILDING CONDITIONS AT THE TIME OF INSTALLATION MUST BE THE RESPONSIBILITY OF THE FF&E CONTRACTOR. ALL MODIFICATIONS MUST BE APPROVED IN WRITING BY A GOVERNMENT APPROVED REPRESENTATIVE PRIOR TO INSTALLATION OF THE FURNISHINGS.

J. INSTALL MARKERBOARDS AND BULLETIN BOARDS AT 3'-0" TO THE BOTTOM OF THE UNIT UNLESS NOTED OTHERWISE.

K. INSTALL WALL CLOCKS AT 8'-0" AFF TO CENTER OF CLOCK UNLESS NOTED OTHERWISE.

FURNITURE SCHEDULE

NO.	ITEM	QTY
A1	WALL CLOCK	6
A2	DESK WASTEBASKET	2
A3	SHOWER CURTAIN	11
A4	COMMAND BOARD	1
A5	GLASS MARKER BOARD	1
C1	OPEN OFFICE TASK CHAIR	2
C2	PRIVATE OFFICE TASK CHAIR	2
D1	L-SHAPED DESK	2

A1 FURNITURE PLAN

SCALE: 1/8" = 1'-0"

GRAPHIC SCALE:

1/8" =1'-0" 0' 4' 8' 16'

FINAL SUBMITTAL

File Path: W:\2509 B7019 Barracks Renovations\Revit\2509 B7019 WID R23.rvt
Print Date: 7/1/2026 2:58:56 PM

APPR.	DATE	DESCRIPTION	SYM

NAVFAC

COMMONWEALTH OF VIRGINIA
JAMIE D. KISSEL
Cert. No. 001152
01 JUL 2026
CERTIFIED INTERIOR DESIGNER
SEAL

within
INTERIOR DESIGN
1008 GRANBY STREET
NORFOLK, VA 23510
757.224.0489

A/E INFO

APPROVED

FOR COMMANDER NAVFAC

ACTIVITY

SATISFACTORY TO

DES	JDK	DRW	APG	CHK	JDK

PM/DM	L. PEED
BRANCH MANAGER	H. PERRY
CHIEF ENG/ARCH	P. FAULKNER
FIRE PROTECTION	D. CHASTAIN

DEPARTMENT OF THE NAVY
NAVAL FACILITIES ENGINEERING COMMAND
NAVAL FACILITIES ENGINEERING COMMAND ~ MIDATLANTIC
NAVAL STATION · NORFOLK, VA
1ST MARINE
MARINE CORPS AIR STATION
CHERRY POINT, NC

MCOLF ATLANTIC
BUILDING 7019 RENOVATIONS
FURNITURE PLAN

SCALE:	1/8" = 1'-0"
STATION DESIGN WON:	7406712
STATION CONSTRUCTION WON:	7406712
NAVFAC DRAWING NO.	12939479
SHEET	54 OF 148

I-101

DRAWFORM REVISION: 25 AUGUST 2020

FINISH NOTES

A. FINISHES INDICATED ARE THE APPROVED BASIS OF DESIGN TO CONVEY COLOR, PATTERN, TEXTURE AND SALIENT CHARACTERISTICS ONLY. THE LISTING OF MANUFACTURER INFORMATION IS NOT INTENDED TO LIMIT THE SELECTION OF PRODUCTS PROVIDED BY OTHER MANUFACTURERS. PRODUCTS MEETING THESE CRITERIA WILL BE CONSIDERED AND MUST BE REVIEWED BY THE INTERIOR DESIGNER OF RECORD (IDOR) AND THE NAVFAC INTERIOR DESIGNER AND APPROVED BY THE CONTRACTING OFFICER.

B. FINISH ITEMS ARE NOT TO BE SUBSTITUTED DUE TO ORDERING LEAD TIMES. IT IS THE CONTRACTOR'S RESPONSIBILITY TO ORDER ALL MATERIALS IN TIME TO AVOID DELAYS.

C. COORDINATE THERMOSTAT LOCATIONS WITH MECHANICAL DRAWINGS AND CONSTRUCTION MANAGER. INSTALL THERMOSTATS NEAR A CORNER OF THE ROOM OR BY LIGHT SWITCHES. DO NOT INSTALL THERMOSTATS IN THE CENTER OF A WALL.

FINISH NOTES

D. ALL INTERIOR FINISHES IN VERTICAL EXIT WAYS, EXIT LOBBIES, AND EXIT CORRIDORS MUST MEET MINIMUM CLASS A RATING.

E. ALL MATERIALS/PRODUCTS ARE TO BE INSTALLED PER MANUFACTURER'S INSTALLATION REQUIREMENTS

F. SPRAY PAINT ELECTRICAL PANELS, ACCESS PANELS, AND EXPANSION JOINTS TO MATCH THE ADJACENT WALL COLOR. PANELS PAINTED BY BRUSH ARE NOT ACCEPTABLE

G. ALL FLOORING TRANSITIONS MUST MEET ABA GUIDELINES. FLOORING TRANSITIONS OCCURRING UNDER DOORS MUST BE CENTERED UNDER DOOR.

H. ROOMS IDENTIFIED TO RECEIVE TILE ON WALLS MUST INCLUDE METAL TRANSITIONS ON ALL OUTSIDE AND INSIDE CORNERS AS WELL AS THE INTERSECTION BETWEEN FLOOR AND WALL TILE WHERE APPLICABLE FOR A COMPLETE INSTALLATION.

I. ALL AREAS TO RECEIVE RESILIENT BASE (RB-1) WITH THE EXCEPTION OF AREAS RECEIVING FLOOR TILE OR EPOXY RESINOUS FLOORING.

FINISH NOTES

J. ALL WINDOW SILLS TO BE SOLID SURFACE (SS-2).

K. ALL WALLS TO BE PAINTED (PNT-1) UNLESS OTHERWISE INDICATED. ALL HOLLOW METAL DOOR SLABS TO BE PAINTED PNT-4. HOLLOW METAL DOOR FRAMES TO BE PAINTED (PNT-5). ALL GWB & EXPOSED CEILINGS TO BE PAINTED (PNT-6).

L. ALL SHOWER FLOORS AND SHOWER WALLS TO BE SOLID SURFACE (SS-3).

M. ALL INTERIOR WOOD DOORS TO BE (WD-1).

N. SEE I-601 FOR FINISH LEGEND.

FLOOR FINISH KEY

- RES-1
- RF-1
- SC-1
- T-1
- T-4

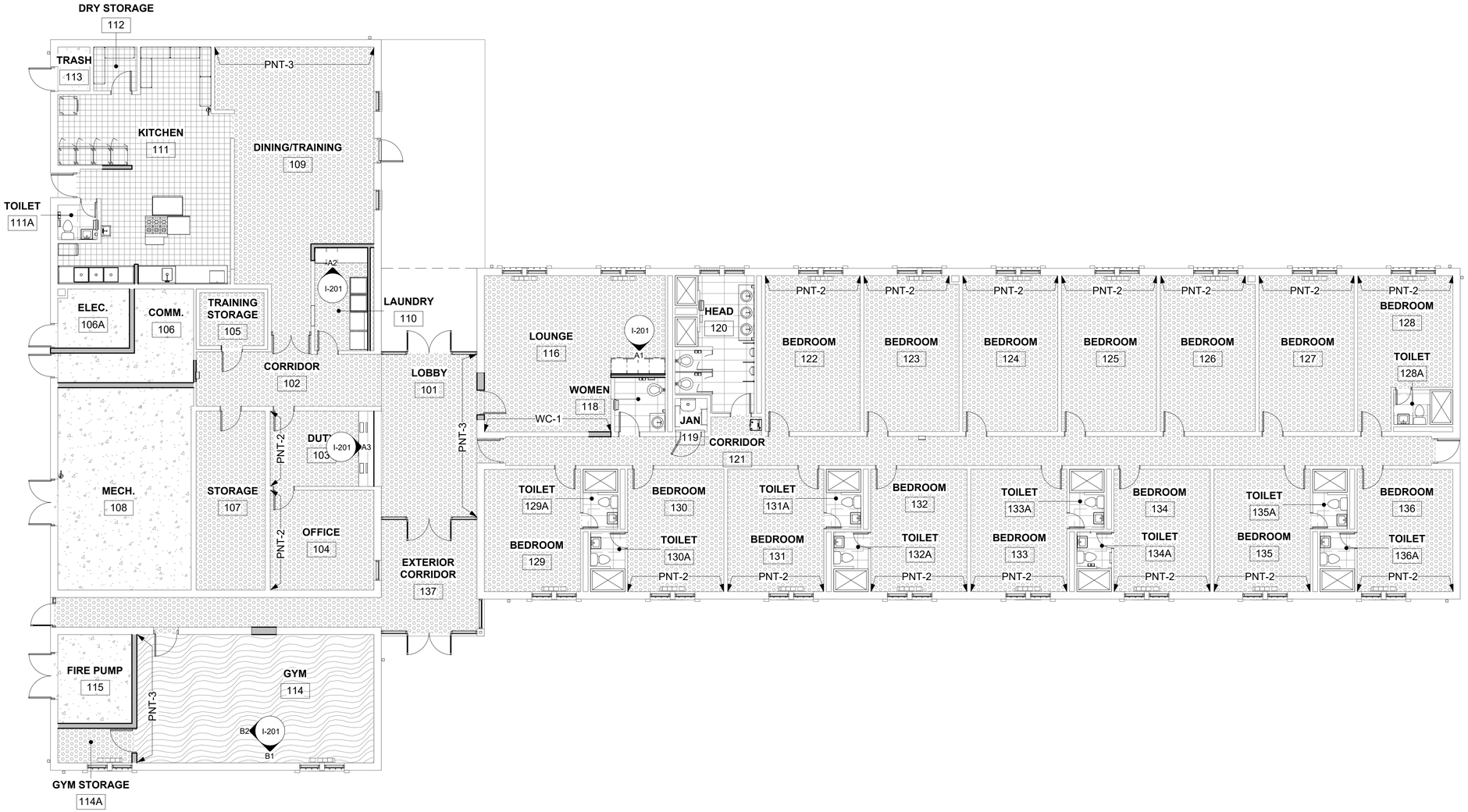

A1 FINISH PLAN

SCALE: 1/8" = 1'-0"

GRAPHIC SCALE:

1/8" =1'-0" 0' 4' 8' 16'

FINAL SUBMITTAL

File Path: W:\2509 B7019 Barracks Renovations\Revit\2509 B7019 WID R23.rvt
Print Date: 7/1/2026 2:58:57 PM

APPR	DATE	DESCRIPTION	SYM

NAVFAC

COMMONWEALTH OF VIRGINIA
JAMIE D. KISSEL
Cert. No. 001152
01 JUL 2026
CERTIFIED INTERIOR DESIGNER
SEAL

within
INTERIOR DESIGN
1008 GRANBY STREET
NORFOLK, VA 23510
757.224.0489
A/E INFO

APPROVED

FOR COMMANDER NAVFAC

ACTIVITY

SATISFACTORY TO

DES	JDK	DRW	APG	CHK	JDK
PM/DM			L. PEED		
BRANCH MANAGER			H. PERRY		
CHIEF ENG/ARCH			P. FAULKNER		
FIRE PROTECTION			D. CHASTAIN		

DEPARTMENT OF THE NAVY
NAVAL FACILITIES ENGINEERING COMMAND ~ MIDATLANTIC
1ST MARINE
MARINE CORPS AIR STATION
NAVAL FACILITIES ENGINEERING COMMAND
NAVAL STATION · NORFOLK, VA.
CHERRY POINT, NC

MCOLF ATLANTIC
BUILDING 7019 RENOVATIONS
FINISH PLAN

SCALE:	1/8" = 1'-0"
STATION DESIGN WON:	7406712
STATION CONSTRUCTION WON:	7406712
NAVFAC DRAWING NO.	12939480
SHEET	55 OF 148

I-102

DRAWFORM REVISION: 25 AUGUST 2020

SIGNAGE NOTES

A. ALL SIGNAGE TO COMPLY WITH UFC 3 120 01.
B. ALL SIGN TYPES, TEXT WORDING, AND ROOM NUMBERS TO BE VERIFIED WITH END USER AND REVIEWED BY NAVFAC INTERIOR DESIGNER PRIOR TO FABRICATION.
C. ALL GRADE 2 BRAILLE TO BE TACTILE RAISED 0.8 MM FROM THE SURFACE.
D. MOUNTING OF SIGNAGE SYSTEM SHALL INCLUDE SURFACE MOUNTING WITH SCREW-ON APPLICATION FOR INTERIOR WALLS.
E. SIGNS THAT MOUNT TO GLASS SHALL INCLUDE AN EQUALLY SIZED BLANK SIGN PANEL ALIGNED TO OPPOSITE SIDE OF THE GLASS.
F. REFER TO SHEET I-501 FOR SIGNAGE DETAILS.
G. SEE ELEVATION A3/I-501 FOR MOUNTING HEIGHT OF ACRYLIC SIGNAGE.
H. REFER TO SHEET I-601 FINISH LEGEND FOR SIGNAGE FINISHES.

SIGNAGE SCHEDULE

TYPE	DESCRIPTION	QTY
S1	ROOM IDENTIFICATION SIGN	1
S2	PERMANENT ROOM IDENTIFICATION SIGN	10
S3	SLEEPING QUARTERS IDENTIFICATION SIGN	15
S4M	MENS RESTROOM IDENTIFICATION SIGN	1
S4W	WOMENS RESTROOM IDENTIFICATION SIGN	1
S5	UNISEX RESTROOM IDENTIFICATION SIGN	1
S7	EXTERIOR ROOM IDENTIFICATION SIGN	7
S8	MEDIUM DIRECTIONAL SIGN	1

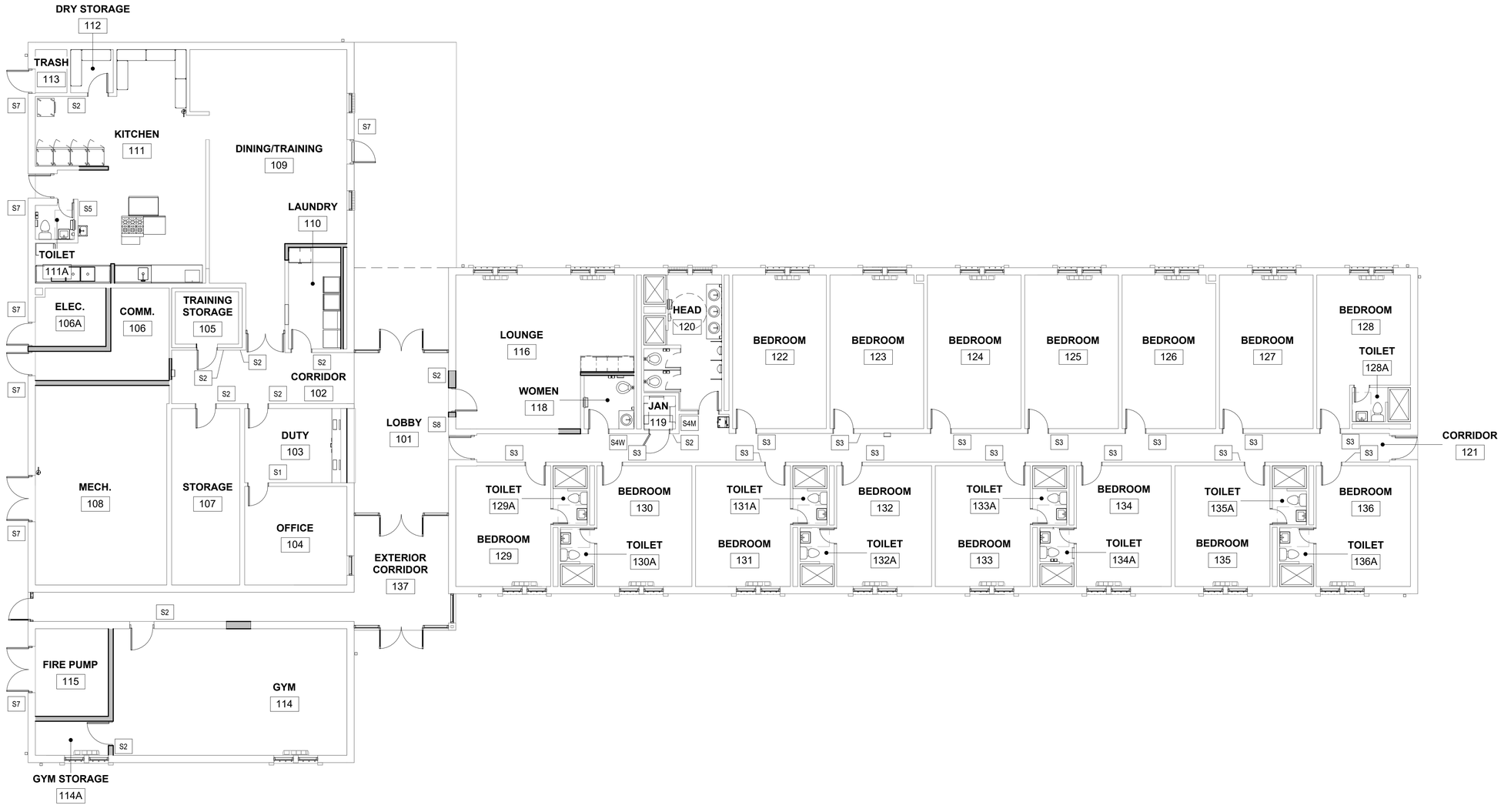

A1 SIGNAGE PLAN

SCALE: 1/8" = 1'-0"

GRAPHIC SCALE:

1/8" =1'-0" 0' 4' 8' 16'

FINAL SUBMITTAL

DRAWFORM REVISION: 25 AUGUST 2020

File Path: W:\2509 B7019 Barracks Renovations\Revit\2509 B7019 WID R23.rvt
Print Date: 7/1/2026 2:58:58 PM

APPR.	DATE	DESCRIPTION	SYM

NAVFAC

COMMONWEALTH OF VIRGINIA
JAMIE D. KISSEL
Cert. No. 001152
01 JUL 2026
CERTIFIED INTERIOR DESIGNER
SEAL

within
INTERIOR DESIGN
1008 GRANBY STREET
NORFOLK, VA 23510
757.224.0489
A/E INFO

APPROVED

FOR COMMANDER NAVFAC
ACTIVITY

SATISFACTORY TO

DES	JDK	DRW	APG	CHK	JDK

PM/DM L. PEED
BRANCH MANAGER H. PERRY
CHIEF ENG/ARCH P. FAULKNER
FIRE PROTECTION D. CHASTAIN

DEPARTMENT OF THE NAVY
NAVAL FACILITIES ENGINEERING COMMAND
1ST MARINE
MARINE CORPS AIR STATION
NAVAL FACILITIES ENGINEERING COMMAND ~ MIDATLANTIC
NAVAL STATION - NORFOLK, VA.
CHERRY POINT, NC
MCOLF ATLANTIC
BUILDING 7019 RENOVATIONS
SIGNAGE PLAN

SCALE: 1/8" = 1'-0"
STATION DESIGN WON: 7406712
STATION CONSTRUCTION WON: 7406712
NAVFAC DRAWING NO. 12939481
SHEET 56 OF 148

I-103

FINISH NOTES

A. FINISHES INDICATED ARE THE APPROVED BASIS OF DESIGN TO CONVEY COLOR, PATTERN, TEXTURE AND SALIENT CHARACTERISTICS ONLY. THE LISTING OF MANUFACTURER INFORMATION IS NOT INTENDED TO LIMIT THE SELECTION OF PRODUCTS PROVIDED BY OTHER MANUFACTURERS. PRODUCTS MEETING THESE CRITERIA WILL BE CONSIDERED AND MUST BE REVIEWED BY THE INTERIOR DESIGNER OF RECORD (IDOR) AND THE NAVFAC INTERIOR DESIGNER AND APPROVED BY THE CONTRACTING OFFICER.

B. FINISH ITEMS ARE NOT TO BE SUBSTITUTED DUE TO ORDERING LEAD TIMES. IT IS THE CONTRACTOR'S RESPONSIBILITY TO ORDER ALL MATERIALS IN TIME TO AVOID DELAYS.

C. COORDINATE THERMOSTAT LOCATIONS WITH MECHANICAL DRAWINGS AND CONSTRUCTION MANAGER. INSTALL THERMOSTATS NEAR A CORNER OF THE ROOM OR BY LIGHT SWITCHES. DO NOT INSTALL THERMOSTATS IN THE CENTER OF A WALL.

FINISH NOTES

D. ALL INTERIOR FINISHES IN VERTICAL EXIT WAYS, EXIT LOBBIES, AND EXIT CORRIDORS MUST MEET MINIMUM CLASS A RATING.

E. ALL MATERIALS/PRODUCTS ARE TO BE INSTALLED PER MANUFACTURER'S INSTALLATION REQUIREMENTS

F. SPRAY PAINT ELECTRICAL PANELS, ACCESS PANELS, AND EXPANSION JOINTS TO MATCH THE ADJACENT WALL COLOR. PANELS PAINTED BY BRUSH ARE NOT ACCEPTABLE

G. ALL FLOORING TRANSITIONS MUST MEET ABA GUIDELINES. FLOORING TRANSITIONS OCCURRING UNDER DOORS MUST BE CENTERED UNDER DOOR.

H. ROOMS IDENTIFIED TO RECEIVE TILE ON WALLS MUST INCLUDE METAL TRANSITIONS ON ALL OUTSIDE AND INSIDE CORNERS AS WELL AS THE INTERSECTION BETWEEN FLOOR AND WALL TILE WHERE APPLICABLE FOR A COMPLETE INSTALLATION.

I. ALL AREAS TO RECEIVE RESILIENT BASE (RB-1) WITH THE EXCEPTION OF AREAS RECEIVING FLOOR TILE OR EPOXY RESINOUS FLOORING.

FINISH NOTES

J. ALL WINDOW SILLS TO BE SOLID SURFACE (SS-2).

K. ALL WALLS TO BE PAINTED (PNT-1) UNLESS OTHERWISE INDICATED. ALL HOLLOW METAL DOOR SLABS TO BE PAINTED PNT-4. HOLLOW METAL DOOR FRAMES TO BE PAINTED (PNT-5). ALL GWB & EXPOSED CEILINGS TO BE PAINTED (PNT-6).

L. ALL SHOWER FLOORS AND SHOWER WALLS TO BE SOLID SURFACE (SS-3).

M. ALL INTERIOR WOOD DOORS TO BE (WD-1).

N. SEE I-601 FOR FINISH LEGEND.

CASEWORK NOTES

1. CASEWORK CONSTRUCTION AS INDICATED IN THE DOCUMENTS MUST BE IN ACCORDANCE WITH A.W.I. QUALITY STANDARDS FOR FLUSH OVERLAY CONSTRUCTION. SEMI-EXPOSED SURFACES TO BE CONSTRUCTED USING CUSTOM GRADE STANDARDS
2. ALL CASEWORK MUST BE IN COMPLIANCE WITH UFGS SECTION 06 41 16.0 AND SECTION 06 61 1.
3. ALL COUNTERTOP AND BACK/SIDE SPLASHES TO BE SOLID SURFACE (SS-1). BACK/SIDE SPLASHES ARE ONLY TO BE APPLIED AT WALLS WITHOUT FULL HEIGHT SPLASH OR TILE.
4. ALL BASE CABINETS, WALL CABINETS, APRONS AND SHROUDS WILL BE PLASTIC LAMINATE (PLAM-1).
5. ALL BASE CABINET TOE KICKS WILL BE RUBBER BASE (RB-1).
6. SEE SHEET I-601 FOR FINISH LEGEND.

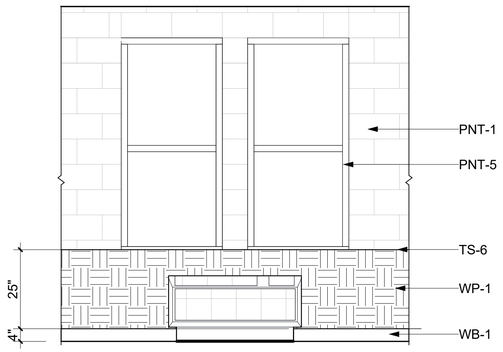

B1 GYM SOUTH ELEVATION
SCALE: 1/2" = 1'-0"

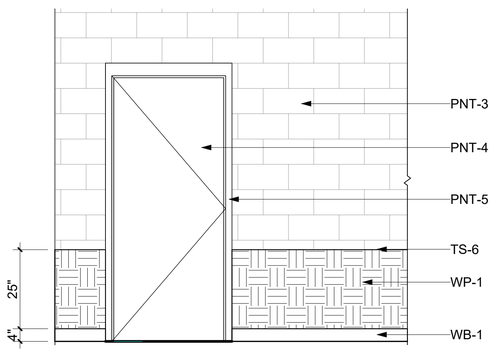

B2 GYM WEST ELEVATION
SCALE: 1/2" = 1'-0"

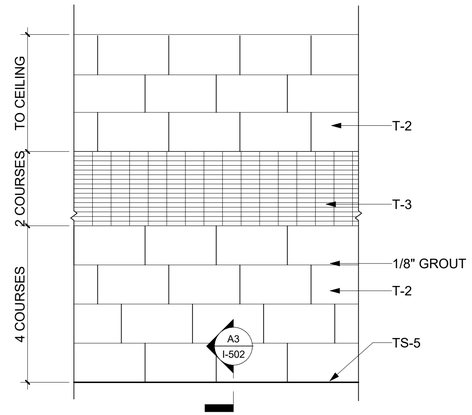

B3 TYP. RESTROOM TILE ELEVATION
SCALE: 1/2" = 1'-0"

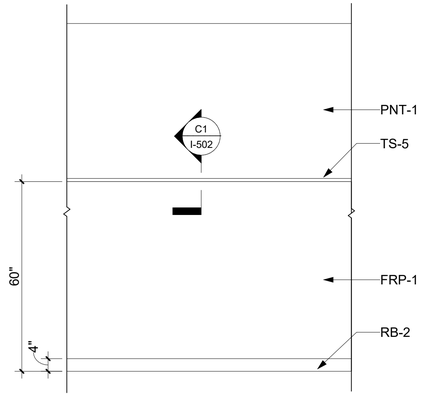

B4 TYP. JANITOR WALL ELEVATION
SCALE: 1/2" = 1'-0"

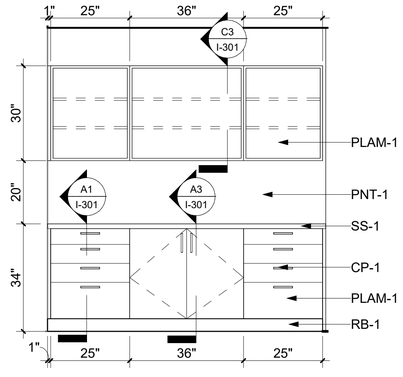

A1 LOUNGE CASEWORK ELEVATION
SCALE: 1/2" = 1'-0"

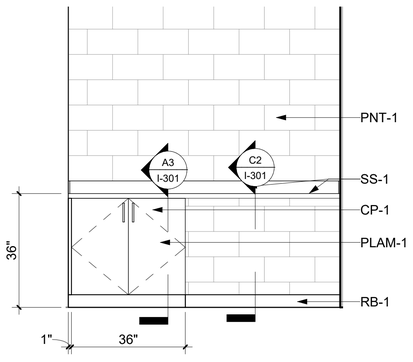

A2 LAUNDRY CASEWORK ELEVATION
SCALE: 1/2" = 1'-0"

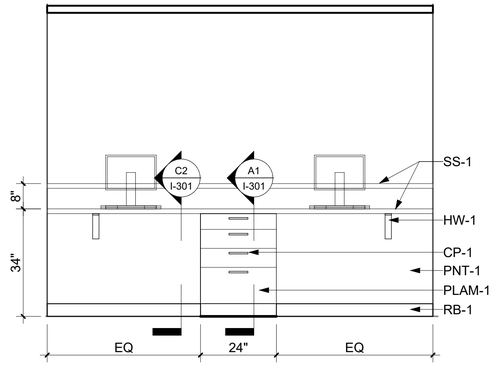

A3 DUTY DESK INTERIOR ELEVATION
SCALE: 1/2" = 1'-0"

GRAPHIC SCALE:
1/8" =1'-0"
0' 4' 8' 16'

FINAL SUBMITTAL

DRAWFORM REVISION: 25 AUGUST 2020

SYM	DESCRIPTION	DATE	APPR

NAVFAC

COMMONWEALTH OF VIRGINIA
JAMIE D. KISSEL
Cert. No. 001152
01 JUL 2026
CERTIFIED INTERIOR DESIGNER
SEAL

within
INTERIOR DESIGN
1008 GRANBY STREET
NORFOLK, VA 23510
757.224.0489
A/E INFO

APPROVED
FOR COMMANDER NAVFAC
ACTIVITY

SATISFACTORY TO

DES	JDK	DRW	APG	CHK	JDK
PM/DM					L. PEED
BRANCH MANAGER					H. PERRY
CHIEF ENG/ARCH					P. FAULKNER
FIRE PROTECTION					D. CHASTAIN

DEPARTMENT OF THE NAVY
NAVAL FACILITIES ENGINEERING COMMAND
1ST MARINE
MARINE CORPS AIR STATION

NAVAL FACILITIES ENGINEERING COMMAND ~ MIDATLANTIC
NAVAL STATION - NORFOLK, VA
CHERRY POINT, NC

MCOLF ATLANTIC
BUILDING 7019 RENOVATIONS
INTERIOR ELEVATIONS

SCALE:	1/2" = 1'-0"
STATION DESIGN WON:	7406712
STATION CONSTRUCTION WON:	7406712
NAVFAC DRAWING NO.	12939482
SHEET	57 OF 148

I-201

File Path: W:\2509 B7019 Barracks Renovations\Revit\2509 B7019 WID R23.rvt
Print Date: 7/1/2026 2:58:59 PM

CASEWORK NOTES

1. CASEWORK CONSTRUCTION AS INDICATED IN THE DOCUMENTS MUST BE IN ACCORDANCE WITH A.W.I. QUALITY STANDARDS FOR FLUSH OVERLAY CONSTRUCTION. SEMI-EXPOSED SURFACES TO BE CONSTRUCTED USING CUSTOM GRADE STANDARDS
2. ALL CASEWORK MUST BE IN COMPLIANCE WITH UFGS SECTION 06 41 16.0 AND SECTION 06 61 1.
3. ALL COUNTERTOP AND BACK/SIDE SPLASHES TO BE SOLID SURFACE (SS-1). BACK/SIDE SPLASHES ARE ONLY TO BE APPLIED AT WALLS WITHOUT FULL HEIGHT SPLASH OR TILE.
4. ALL BASE CABINETS, WALL CABINETS, APRONS AND SHROUDS WILL BE PLASTIC LAMINATE (PLAM-1).
5. ALL BASE CABINET TOE KICKS WILL BE RUBBER BASE (RB-1).
6. SEE SHEET I-601 FOR FINISH LEGEND.

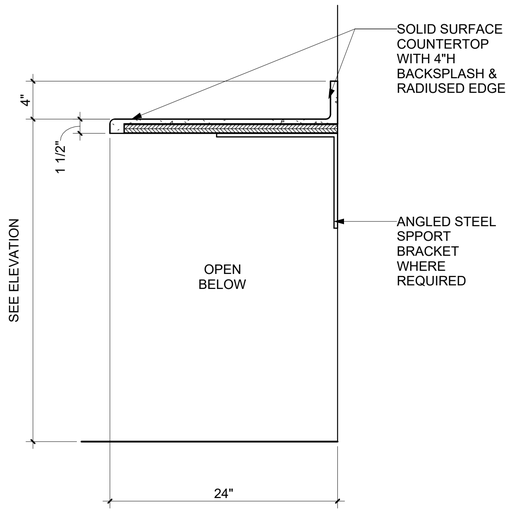

C2 SECTION - OPEN BASE

SCALE: 1 1/2" = 1'-0"

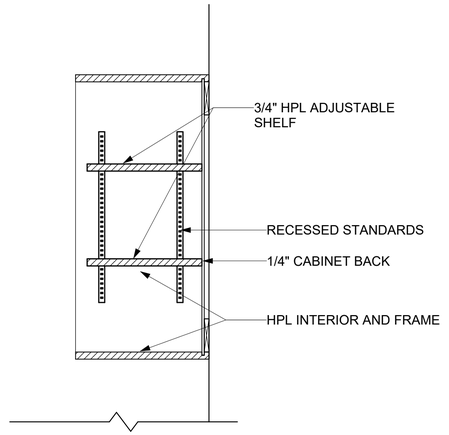

C3 SECTION - UPPER CABINET 30"H

SCALE: 1 1/2" = 1'-0"

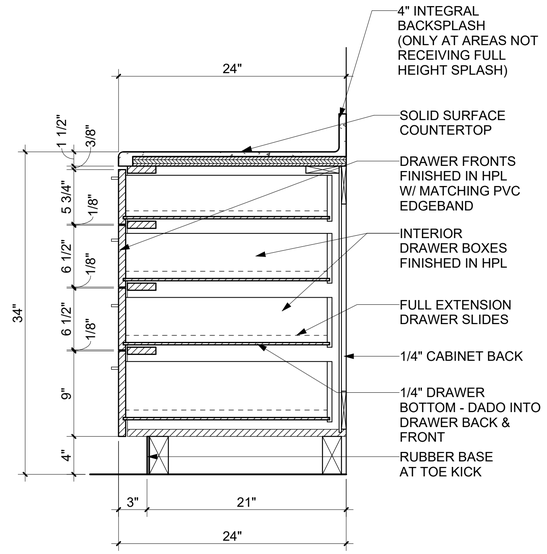

A1 SECTION - 4 DRAWER BASE CAB.

SCALE: 1 1/2" = 1'-0"

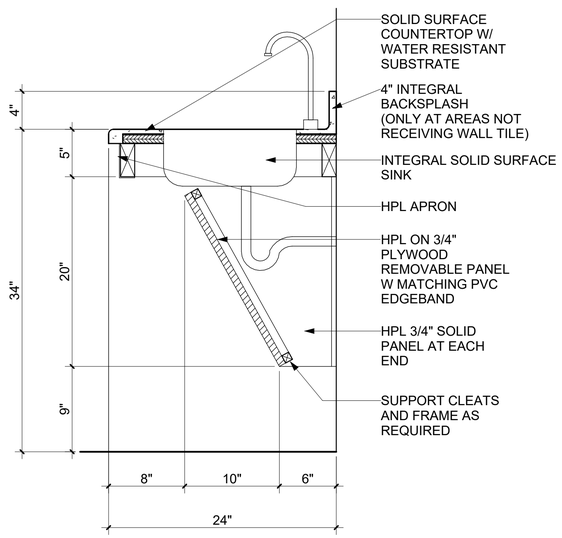

A2 SECTION - ADA LAVATORY

SCALE: 1 1/2" = 1'-0"

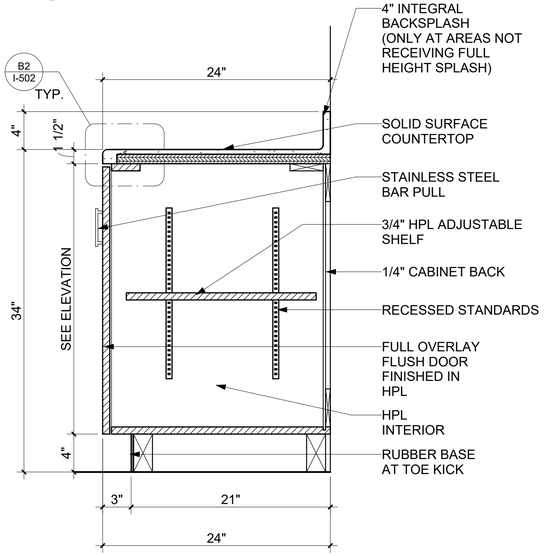

A3 SECTION - BASE CABINET

SCALE: 1 1/2" = 1'-0"

GRAPHIC SCALE:

1 1/2" =1'-0" 0' 4" 8" 1'-4"

FINAL SUBMITTAL

SYM	DESCRIPTION	DATE	APPR

NAVFAC

COMMONWEALTH OF VIRGINIA
JAMIE D. KISSEL
Cert. No. 001152
01 JUL 2026
CERTIFIED INTERIOR DESIGNER
SEAL

within
INTERIOR DESIGN
1008 GRANBY STREET
NORFOLK, VA 23510
757.224.0489

A/E INFO

APPROVED

FOR COMMANDER NAVFAC

ACTIVITY

SATISFACTORY TO

DES	JDK	DRW	APG	CHK	JDK
PM/DM			L. PEED		
BRANCH MANAGER			H. PERRY		
CHIEF ENG/ARCH			P. FAULKNER		
FIRE PROTECTION			D. CHASTAIN		

DEPARTMENT OF THE NAVY
NAVAL FACILITIES ENGINEERING COMMAND
1ST MARINE
MARINE CORPS AIR STATION

NAVAL FACILITIES ENGINEERING COMMAND ~ MIDATLANTIC
NAVAL STATION - NORFOLK, VA.
CHERRY POINT, NC

MCOLF ATLANTIC
BUILDING 7019 RENOVATIONS
CASEWORK SECTIONS

SCALE:	1 1/2" = 1'-0"
STATION DESIGN WON:	7406712
STATION CONSTRUCTION WON:	7406712
NAVFAC DRAWING NO.	12939483
SHEET	58 OF 148

I-301

DRAWFORM REVISION: 25 AUGUST 2020

File Path: W:\2509 B7019 Barracks Renovations\Revit\2509 B7019 WID R23.rvt
Print Date: 7/1/2026 2:59:00 PM

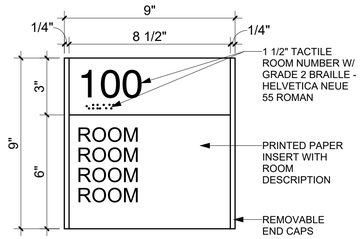

S1

ROOM IDENTIFICATION SIGN

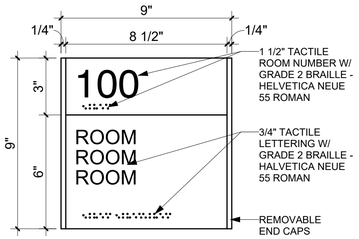

S2

PERMANENT ROOM IDENTIFICATION SIGN

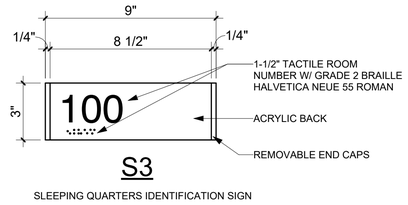

S3

SLEEPING QUARTERS IDENTIFICATION SIGN

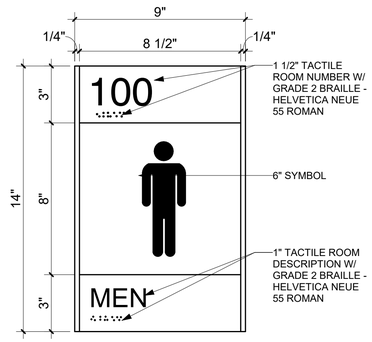

S4M

MENS RESTROOM IDENTIFICATION SIGN

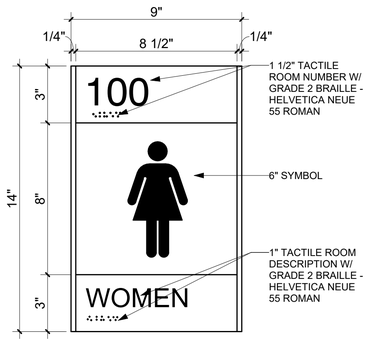

S4W

WOMENS RESTROOM IDENTIFICATION SIGN

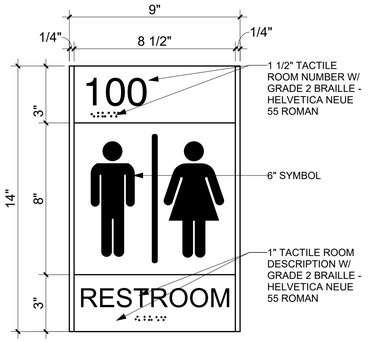

S5

UNISEX RESTROOM IDENTIFICATION SIGN

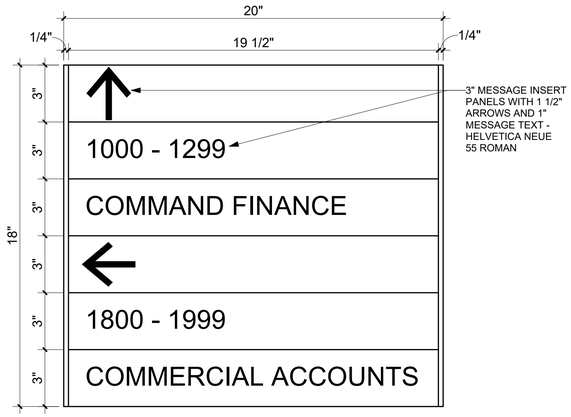

S8

MEDIUM DIRECTIONAL SIGN

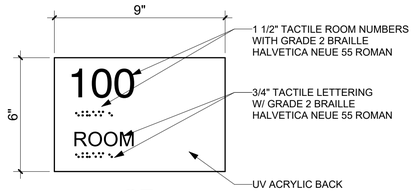

S7

EXTERIOR ROOM SIGN

A1 SIGNAGE TYPICALS

SCALE: 3" = 1'-0"

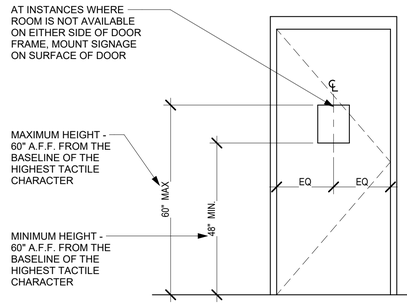

B3 TYP. DOOR MOUNTED SIGNAGE LOCATION

SCALE: 1/2" = 1'-0"

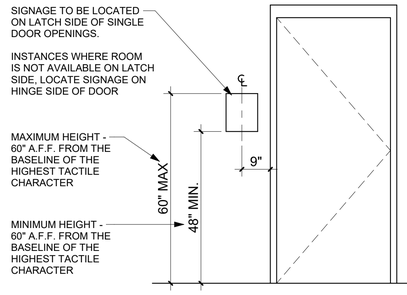

A3 TYP. WALL MOUNTED SIGNAGE LOCATION

SCALE: 1/2" = 1'-0"

SIGNAGE SCHEDULE

TYPE	DESCRIPTION	QTY
S1	ROOM IDENTIFICATION SIGN	1
S2	PERMANENT ROOM IDENTIFICATION SIGN	10
S3	SLEEPING QUARTERS IDENTIFICATION SIGN	15
S4M	MENS RESTROOM IDENTIFICATION SIGN	1
S4W	WOMENS RESTROOM IDENTIFICATION SIGN	1
S5	UNISEX RESTROOM IDENTIFICATION SIGN	1
S7	EXTERIOR ROOM IDENTIFICATION SIGN	7
S8	MEDIUM DIRECTIONAL SIGN	1

SIGNAGE NOTES

A. ALL SIGNAGE TO COMPLY WITH UFC 3 120 01.
B. ALL SIGN TYPES, TEXT WORDING, AND ROOM NUMBERS TO BE VERIFIED WITH END USER AND REVIEWED BY NAVFAC INTERIOR DESIGNER PRIOR TO FABRICATION.
C. ALL GRADE 2 BRAILLE TO BE TACTILE RAISED 0.8 MM FROM THE SURFACE.
D. MOUNTING OF SIGNAGE SYSTEM SHALL INCLUDE SURFACE MOUNTING WITH SCREW-ON APPLICATION FOR INTERIOR WALLS.
E. SIGNS THAT MOUNT TO GLASS SHALL INCLUDE AN EQUALLY SIZED BLANK SIGN PANEL ALIGNED TO OPPOSITE SIDE OF THE GLASS.
F. REFER TO SHEET I-501 FOR SIGNAGE DETAILS.
G. SEE ELEVATION A3/I-501 FOR MOUNTING HEIGHT OF ACRYLIC SIGNAGE.
H. REFER TO SHEET I-601 FINISH LEGEND FOR SIGNAGE FINISHES.

GRAPHIC SCALE:

3" =1'-0" 0' 3" 6" 9"

1/2" =1'-0" 0' 1' 2' 4'

FINAL SUBMITTAL

APPR. | DATE | DESCRIPTION | SYM

NAVFAC

COMMONWEALTH OF VIRGINIA
JAMIE D. KISSEL
Cert. No. 001152
01 JUL 2026
CERTIFIED INTERIOR DESIGNER
SEAL

within
INTERIOR DESIGN
1008 GRANBY STREET
NORFOLK, VA 23510
757.224.0489
A/E INFO

APPROVED

FOR COMMANDER NAVFAC

ACTIVITY

SATISFACTORY TO

DES	JDK	DRW	APG	CHK	JDK

PM/DM	L. PEED
BRANCH MANAGER	H. PERRY
CHIEF ENG/ARCH	P. FAULKNER
FIRE PROTECTION	D. CHASTAIN

DEPARTMENT OF THE NAVY
NAVAL FACILITIES ENGINEERING COMMAND
IPT MAKING:
MARINE CORPS AIR STATION
NAVAL FACILITIES ENGINEERING COMMAND - MIDATLANTIC
NAVAL STATION - NORFOLK, VA
CHERRY POINT, NC

MCOLF ATLANTIC
BUILDING 7019 RENOVATIONS
SIGNAGE DETAILS

SCALE:	As indicated
STATION DESIGN WON:	7406712
STATION CONSTRUCTION WON:	7406712
NAVFAC DRAWING NO.	12939484
SHEET	59 OF 148

I-501

DRAWFORM REVISION: 25 AUGUST 2020

File Path: W:\2509 B7019 Barracks Renovations\Revit\2509 B7019 WID R23.rvt
Print Date: 7/1/2026 2:58:59 PM

FINISH NOTES

A. FINISHES INDICATED ARE THE APPROVED BASIS OF DESIGN TO CONVEY COLOR, PATTERN, TEXTURE AND SALIENT CHARACTERISTICS ONLY. THE LISTING OF MANUFACTURER INFORMATION IS NOT INTENDED TO LIMIT THE SELECTION OF PRODUCTS PROVIDED BY OTHER MANUFACTURERS. PRODUCTS MEETING THESE CRITERIA WILL BE CONSIDERED AND MUST BE REVIEWED BY THE INTERIOR DESIGNER OF RECORD (IDOR) AND THE NAVFAC INTERIOR DESIGNER AND APPROVED BY THE CONTRACTING OFFICER.

B. FINISH ITEMS ARE NOT TO BE SUBSTITUTED DUE TO ORDERING LEAD TIMES. IT IS THE CONTRACTOR'S RESPONSIBILITY TO ORDER ALL MATERIALS IN TIME TO AVOID DELAYS.

C. COORDINATE THERMOSTAT LOCATIONS WITH MECHANICAL DRAWINGS AND CONSTRUCTION MANAGER. INSTALL THERMOSTATS NEAR A CORNER OF THE ROOM OR BY LIGHT SWITCHES. DO NOT INSTALL THERMOSTATS IN THE CENTER OF A WALL.

FINISH NOTES

D. ALL INTERIOR FINISHES IN VERTICAL EXIT WAYS, EXIT LOBBIES, AND EXIT CORRIDORS MUST MEET MINIMUM CLASS A RATING.

E. ALL MATERIALS/PRODUCTS ARE TO BE INSTALLED PER MANUFACTURER'S INSTALLATION REQUIREMENTS

F. SPRAY PAINT ELECTRICAL PANELS, ACCESS PANELS, AND EXPANSION JOINTS TO MATCH THE ADJACENT WALL COLOR. PANELS PAINTED BY BRUSH ARE NOT ACCEPTABLE

G. ALL FLOORING TRANSITIONS MUST MEET ABA GUIDELINES. FLOORING TRANSITIONS OCCURRING UNDER DOORS MUST BE CENTERED UNDER DOOR.

H. ROOMS IDENTIFIED TO RECEIVE TILE ON WALLS MUST INCLUDE METAL TRANSITIONS ON ALL OUTSIDE AND INSIDE CORNERS AS WELL AS THE INTERSECTION BETWEEN FLOOR AND WALL TILE WHERE APPLICABLE FOR A COMPLETE INSTALLATION.

I. ALL AREAS TO RECEIVE RESILIENT BASE (RB-1) WITH THE EXCEPTION OF AREAS RECEIVING FLOOR TILE OR EPOXY RESINOUS FLOORING.

FINISH NOTES

J. ALL WINDOW SILLS TO BE SOLID SURFACE (SS-2).

K. ALL WALLS TO BE PAINTED (PNT-1) UNLESS OTHERWISE INDICATED. ALL HOLLOW METAL DOOR SLABS TO BE PAINTED PNT-4. HOLLOW METAL DOOR FRAMES TO BE PAINTED (PNT-5). ALL GWB & EXPOSED CEILINGS TO BE PAINTED (PNT-6).

L. ALL SHOWER FLOORS AND SHOWER WALLS TO BE SOLID SURFACE (SS-3).

M. ALL INTERIOR WOOD DOORS TO BE (WD-1).

N. SEE I-601 FOR FINISH LEGEND.

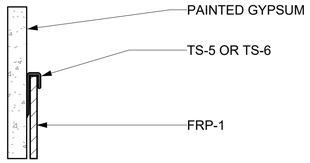

C1 FRP OR WP TO GWB
SCALE: 12" = 1'-0"

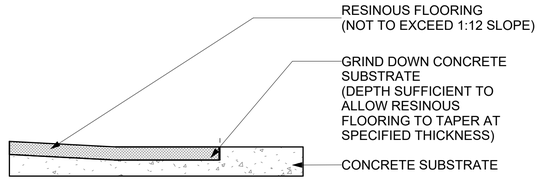

C2 EPOXY FLOOR TO CONCRETE DETAIL
SCALE: 12" = 1'-0"

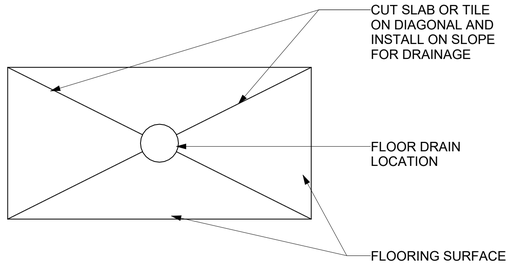

B1 FLOOR DRAIN DETAIL
SCALE: 3" = 1'-0"

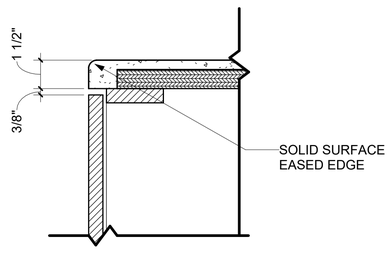

B2 COUNTER EDGE DETAIL
SCALE: 3" = 1'-0"

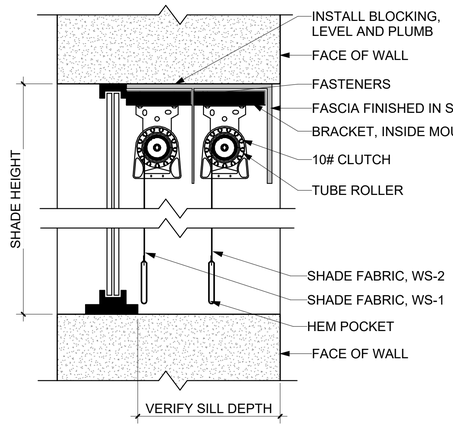

B3 DOUBLE ROLLER SHADE DETAIL
SCALE: 3" = 1'-0"

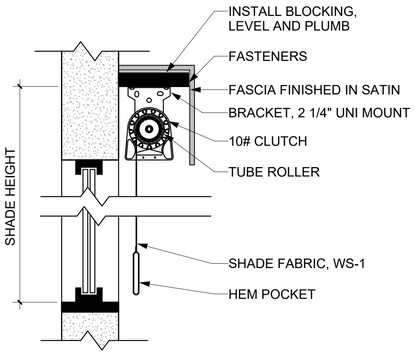

B4 SINGLE ROLLER SHADE DETAIL
SCALE: 3" = 1'-0"

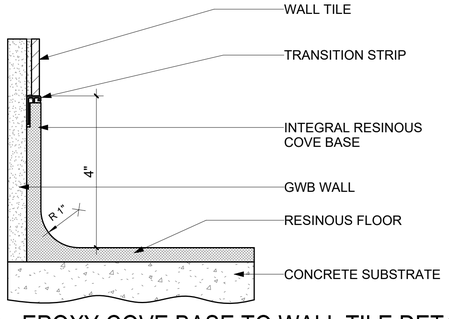

A1 EPOXY COVE BASE TO WALL TILE DETAIL
SCALE: 6" = 1'-0"

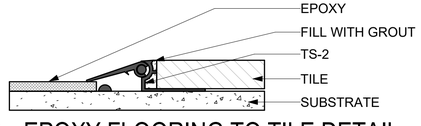

A2 EPOXY FLOORING TO TILE DETAIL
SCALE: 12" = 1'-0"

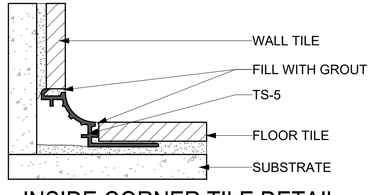

A3 INSIDE CORNER TILE DETAIL
SCALE: 12" = 1'-0"

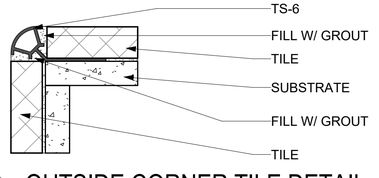

A4 OUTSIDE CORNER TILE DETAIL
SCALE: 12" = 1'-0"

GRAPHIC SCALE:
1/8" =1'-0"
0' 4' 8' 16'

FINAL SUBMITTAL

			APPR.
			DATE
		DESCRIPTION	
			SYM

NAVFAC

COMMONWEALTH OF VIRGINIA
JAMIE D. KISSEL
Cert. No. 001152
CERTIFIED INTERIOR DESIGNER
01 JUL 2026
SEAL

within
INTERIOR DESIGN
1008 GRANBY STREET
NORFOLK, VA 23510
757.224.0489
A/E INFO

APPROVED
FOR COMMANDER NAVFAC
ACTIVITY
SATISFACTORY TO

DES	JDK	DRW APG	CHK JDK
PM/DM			L. PEED
BRANCH MANAGER			H. PERRY
CHIEF ENG/ARCH			P. FAULKNER
FIRE PROTECTION			D. CHASTAIN

DEPARTMENT OF THE NAVY
NAVAL FACILITIES ENGINEERING COMMAND
1ST MARINE
MARINE CORPS AIR STATION
NAVAL FACILITIES ENGINEERING COMMAND ~ MIDATLANTIC
NAVAL STATION - NORFOLK, VA.
CHERRY POINT, NC
MCOLF ATLANTIC
BUILDING 7019 RENOVATIONS
INTERIOR DETAILS

SCALE:	As indicated
STATION DESIGN WON:	7406712
STATION CONSTRUCTION WON:	7406712
NAVFAC DRAWING NO.	12939485
SHEET	60 OF 148

I-502

DRAWFORM REVISION: 25 AUGUST 2020

File Path: W:\2509 B7019 Barracks Renovations\Revit\2509 B7019 WID R23.rvt
Print Date: 7/1/2026 2:59:00 PM

ROOM FINISH SCHEDULE

ROOM NO.	ROOM NAME	FLOOR FINISH	BASE FINISH	WALL FINISH	CEILING FINISH	NOTES
101	LOBBY	RES-1	RES-1	PNT-1, PNT-3	PNT-6	
102	CORRIDOR	RES-1	RES-1	PNT-1	PNT-6	
103	DUTY	RES-1	RES-1	PNT-1, PNT-2	PNT-6	
104	OFFICE	RES-1	RES-1	PNT-1, PNT-2	PNT-6	4
105	TRAINING STORAGE	RES-1	RES-1	PNT-1	PNT-6	
106	SICK BAY	RES-1	RES-1	PNT-1	PNT-6	
106	COMM.	SC-1	RB-1	PNT-1	PNT-6	
106A	ELEC.	SC-1	RB-1	PNT-1	PNT-6	
107	STORAGE	RES-1	RES-1	PNT-1	PNT-6	
108	MECH.	SC-1	RB-1	PNT-1	PNT-6	
109	DINING/TRAINING	RES-1	RES-1	PNT-1, PNT-3	PNT-6	5
110	LAUNDRY	RES-1	RES-1	PNT-1	PNT-6	
111	KITCHEN	T-4	TB-1	PNT-1	ACT-1	
112	DRY STORAGE	T-4	TB-1	PNT-1	ACT-1	
113	TRASH	SC-1	RB-1	PNT-1	PNT-6	
114	GYM	RF-1	WB-1	PNT-1, WP-1,(PNT-3 WEST WALL ONLY)	PNT-6	4
114A	GYM STORAGE	RES-1	RES-1	PNT-1	PNT-6	4
115	FIRE PUMP	SC-1	RB-1	PNT-1	PNT-6	
116	LOUNGE	RES-1	RES-1	PNT-1, WC-1	PNT-6	5
118	WOMEN	T-1	-	T-2, T-3	PNT-6	1, 3
119	JAN	SC-1	RB-2	PNT-1, FRP-1	PNT-6	2
120	HEAD	T-1	-	T-2, T-3	PNT-6	1, 3, 4, 6
121	CORRIDOR	RES-1	RES-1	PNT-1	PNT-6	
137	EXTERIOR CORRIDOR	RES-1	RES-1	PNT-1	PNT-6	
TYP.	TYPICAL TOILET	T-1	-	T-2, T-3	PNT-6	1, 3, 6
TYP.	TYPICAL BEDROOM	RES-1	RES-1	PNT-1, PNT-2	PNT-6	5

FINISH LEGEND

NO.	NAME	LOCATION	MANUFACTURER	MODEL	COLOR	SIZE
42						
ACG-1	ACOUSTICAL CEILING GRID	SUSPENDED CEILINGS (ACT-1)	ARMSTRONG	PRELUDE PLUS XL ALUMINUM	WHITE	15/16"
ACT-1	ACOUSTICAL CEILING TILE	NON-GWB OR EXPOSED CEILINGS	ARMSTRONG	KITCHEN ZONE	WHITE	24"x24"
CP-1	CABINET PULL	CASEWORK DOORS & DRAWERS	HAFELE	101.20.744	STAINLESS STEEL	3" CENTER TO CENTER
FRP-1	FIBERGLASS REINFORCED PLASTIC	JANITOR CLOSET WALLS	MARLITE	PEBBLED	LIGHT GRAY	-
GR-1	GROUT	FLOOR TILE & WALL TILE - RESTROOMS	CUSTOM BUILDING PRODUCTS	EPOXY GROUT	#165 DELOREAN GRAY	1/8" GROUT THICKNESS
GR-2	GROUT	FLOOR TILE - KITCHEN	CUSTOM BUILDING PRODUCTS	EPOXY GROUT	#647 BROWN VELVET	3/8" GROUT THICKNESS
HDP-1	HIGH DENSITY POLYETHYLENE	TOILET PARTITIONS & LOCKERS	SCRANTON PRODUCTS	HINEY HIDERS - ORANGE PEEL	SHALE	-
HW-1	COUNTERTOP SUPPORT BRACKET	SOLID SURFACE COUNTERTOPS	HAFELE	287.75.333	BLACK	12" X 10"
PLAM-1	PLASTIC LAMINATE	CASEWORK	WILSONART	TIMBERGRAIN FINISH	WALNUT PB COGNAC	-
PNT-1	PAINT	PRIMARY WALLS	BENJAMIN MOORE	-	CC-80 GRAY MIST	-
PNT-2	ACCENT PAINT	SLEEPING QUARTERS & PRIVATE OFFICE	BENJAMIN MOORE	-	CSP-195 PORCINI	-
PNT-3	ACCENT PAINT	CORRIDORS & GYM	BENJAMIN MOORE	-	CC-64 BONAPARTE	-
PNT-4	PAINT	DOOR SLAB	BENJAMIN MOORE	HIGH GLOSS	CSP-195 PORCINI	-
PNT-5	PAINT	DOOR FRAME/TRIM	BENJAMIN MOORE	HIGH GLOSS	CSP-240 BROWNSTONE	-
PNT-6	PAINT	GWB & EXPOSED CEILINGS	BENJAMIN MOORE	-	OC-17 WHITE DOVE	-
RB-1	RUBBER BASE	INTERIOR WALLS	JOHNSONITE	BASEWORKS	47 BROWN	4"
RB-2	RUBBER BASE	JAN	MARLITE	M612	BLACK	4"
RES-1	EPOXY RESINOUS FLOORING	CORRIDORS AND SLEEPING QUARTERS	STONHARD	STONBLEND GSI	SHALE	-
RF-1	RUBBER TILE FLOORING	GYM	MANNINGTON COMMERCIAL	RESET	RED TONES 821	24"x24"
S-1	SIGNAGE FINISH	FONT	2/90 SIGN SYSTEMS	709	CEMENT	-
S-2	SIGNAGE FINISH	BACKGROUND	2/90 SIGN SYSTEMS	204	BLACK	-
S-3	SIGNAGE FINISH	END CAPS	2/90 SIGN SYSTEMS	-	SATIN ANODIZED	-
SC-1	SEALED CONCRETE	UTILITY SPACES	SCOFIELD	SELECT SEAL PLUS	CLEAR	-
SS-1	SOLID SURFACE	COUNTERTOPS	CORIAN	-	ARTISTA CANVAS	-
SS-2	SOLID SURFACE	WINDOW SILLS	CORIAN	-	DEEP MINK	-
SS-3	SOLID SURFACE	SHOWER SURROUNDS	CORIAN	-	TRAVERTINE FIRENZE	-
T-1	FLOOR TILE	BATHROOM & JANITOR FLOORS	BEST TILE	IKONITE / ECWIKOGRY01	GREY	12" x 24"
T-2	WALL TILE	BATHROOM WALLS	MOSAIC TILE	PORTIFINO / 45PORMIS1224	MIST	12" x 24"
T-3	ACCENT TILE	BATHROOM WALLS	MOSAIC TILE	PLAYFUL / 04PLYCR1324GSAM	CRIMSON	3" x 24"
T-4	QUARRY TILE	KITCHEN	METROPOLITAN CERAMICS	QUARRY BASICS CLEAR TONES	710 RAVEN	8" x 8"
TS-1	TRANSITION STRIP	RUBBER TILE TO CONCRETE	MANNINGTON COMMERCIAL	146 REDUCER	BLACK	3/8" REDUCER
TS-2	TRANSITION STRIP	RESINOUS EPOXY TO TILE	SCHLUTER	RENO-U	SATIN ALUMINUM	-
TS-3	TRANSITION STRIP	TILE INSIDE CORNER	SCHLUTER	DILEX AHK	SATIN ALUMINUM	-
TS-4	TRANSITION STRIP	TILE OUTSIDE CORNER	SCHLUTER	QUADEC	SATIN ALUMINUM	-
TS-5	TRANSITION STRIP	FRP TO PAINT	MARLITE	A570	ANODIZED ALUMINUM	-
TS-6	TRANSITION STRIP	WP TO PAINT	DIAMOND LIFE	J CAP	HE82	3/32" OPENING, 17GA
WB-1	WALL BASE	GYM	DIAMOND LIFE	BASE MOLDING MX	DIAMOND PLATE	4"H, 17GA
WC-1	WALLCOVERING	GYM & LOUNGE	FIND YOUR LEVEL / NATIONAL	L50607 LINDSEY	METRO	-
WP-1	WALL PANEL	GYM WALLS	DIAMOND LIFE	DIAMOND PLATE	ANODIZED PLATINUM	3/64", 17GA
WS-1	WINDOW SHADE	EXTERIOR WINDOWS	DRAPER	SW270--V66 - 3%	CHARCOAL/BROWN	-
WS-2	BLACKOUT WINDOW SHADE	SLEEPING QUARTERS	DRAPER	SPARTA TWILIGHT BLACKOUT	PEWTER WHITE	-

FINISH NOTES

A. FINISHES INDICATED ARE THE APPROVED BASIS OF DESIGN TO CONVEY COLOR, PATTERN, TEXTURE AND SALIENT CHARACTERISTICS ONLY. THE LISTING OF MANUFACTURER INFORMATION IS NOT INTENDED TO LIMIT THE SELECTION OF PRODUCTS PROVIDED BY OTHER MANUFACTURERS. PRODUCTS MEETING THESE CRITERIA WILL BE CONSIDERED AND MUST BE REVIEWED BY THE INTERIOR DESIGNER OF RECORD (IDOR) AND THE NAVFAC INTERIOR DESIGNER AND APPROVED BY THE CONTRACTING OFFICER.

B. FINISH ITEMS ARE NOT TO BE SUBSTITUTED DUE TO ORDERING LEAD TIMES. IT IS THE CONTRACTOR'S RESPONSIBILITY TO ORDER ALL MATERIALS IN TIME TO AVOID DELAYS.

C. COORDINATE THERMOSTAT LOCATIONS WITH MECHANICAL DRAWINGS AND CONSTRUCTION MANAGER. INSTALL THERMOSTATS NEAR A CORNER OF THE ROOM OR BY LIGHT SWITCHES. DO NOT INSTALL THERMOSTATS IN THE CENTER OF A WALL.

D. ALL INTERIOR FINISHES IN VERTICAL EXIT WAYS, EXIT LOBBIES, AND EXIT CORRIDORS MUST MEET MINIMUM CLASS A RATING.

E. ALL MATERIALS/PRODUCTS ARE TO BE INSTALLED PER MANUFACTURER'S INSTALLATION REQUIREMENTS

F. SPRAY PAINT ELECTRICAL PANELS, ACCESS PANELS, AND EXPANSION JOINTS TO MATCH THE ADJACENT WALL COLOR. PANELS PAINTED BY BRUSH ARE NOT ACCEPTABLE

G. ALL FLOORING TRANSITIONS MUST MEET ABA GUIDELINES. FLOORING TRANSITIONS OCCURRING UNDER DOORS MUST BE CENTERED UNDER DOOR.

H. ROOMS IDENTIFIED TO RECEIVE TILE ON WALLS MUST INCLUDE METAL TRANSITIONS ON ALL OUTSIDE AND INSIDE CORNERS AS WELL AS THE INTERSECTION BETWEEN FLOOR AND WALL TILE WHERE APPLICABLE FOR A COMPLETE INSTALLATION.

I. ALL AREAS TO RECEIVE RESILIENT BASE (RB-1) WITH THE EXCEPTION OF AREAS RECEIVING FLOOR TILE OR EPOXY RESINOUS FLOORING.

J. ALL WINDOW SILLS TO BE SOLID SURFACE (SS-2).

K. ALL WALLS TO BE PAINTED (PNT-1) UNLESS OTHERWISE INDICATED. ALL HOLLOW METAL DOOR SLABS TO BE PAINTED PNT-4. HOLLOW METAL DOOR FRAMES TO BE PAINTED (PNT-5). ALL GWB & EXPOSED CEILINGS TO BE PAINTED (PNT-6).

L. ALL SHOWER FLOORS AND SHOWER WALLS TO BE SOLID SURFACE (SS-3).

M. ALL INTERIOR WOOD DOORS TO BE (WD-1).

N. SEE I-601 FOR FINISH LEGEND.

FINISH SCHEDULE NOTES

1. SEE B3/I-201FOR TYPICAL RESTROOM WALL TILE ELEVATION.
2. SEE B4/I-201 FOR TYPICAL JANITOR WALL ELEVATION.
3. FLOOR TILE INSTALLATION TO BE 1/3 OFFSET.
4. WINDOWS TO RECEIVE SINGLE LAYER ROLLER SHADE (WS-1). SEE DETAIL D4/I-502.
5. WINDOWS TO RECEIVE DOUBLE LAYER ROLLER SHADE (WS-1 & WS-2). SEE DETAIL B4/I-502.
6. INSTALL SOLID SURFACE SHOWER PANELS VERTICALLY SO THAT VEINING RUNS NORTH TO SOUTH.

within
INTERIOR DESIGN
1008 GRANBY STREET
NORFOLK, VA 23510
757.224.0489

JAMIE D. KISSEL
Cert. No. 001152
01 JUL 2026
SEAL

APPROVED
FOR COMMANDER NAVFAC
ACTIVITY
SATISFACTORY TO

DES	JDK	DRW	APG	CHK	JDK
PM/DM					L. PEED
BRANCH MANAGER					H. PERRY
CHIEF ENG/ARCH					P. FAULKNER
FIRE PROTECTION					D. CHASTAIN

DEPARTMENT OF THE NAVY
NAVAL FACILITIES ENGINEERING COMMAND ~ MIDATLANTIC
1ST MARINE
MARINE CORPS AIR STATION
NAVAL FACILITIES ENGINEERING COMMAND
NAVAL STATION NORFOLK, VA
CHERRY POINT, NC

MCOLF ATLANTIC
BUILDING 7019 RENOVATIONS
SCHEDULES & LEGENDS

SCALE:
STATION DESIGN WON: 7406712
STATION CONSTRUCTION WON: 7406712
NAVFAC DRAWING NO. 12939486
SHEET 61 OF 148
I-601

FINAL SUBMITTAL
DRAWFORM REVISION: 25 AUGUST 2020

APPR. | DATE | DESCRIPTION | SYM

File Path: W:\2509 B7019 Barracks Renovations\Revit\2509 B7019 WID R23.rvt
Print Date: 7/1/2026 2:58:58 PM

FIRE ALARM GENERAL NOTES:

1. GENERAL SCOPE - INSTALL A COMBINED FIRE ALARM AND MASS NOTIFICATION SYSTEM FOR BUILDING 7019.

2. APPLICABLE CODES:

UFC 3-600-01	FIRE PROTECTION ENGINEERING FOR FACILITIES, CHANGE 6, 6 MAY 2021
UFC 3-520-01	INTERIOR ELECTRICAL SYSTEMS, 16 JANUARY 2025
UFC 4-021-01	DESIGN AND O&M; MASS NOTIFICATION SYSTEMS, CHANGE 1, 1 JANUARY 2010
NFPA 72	NATIONAL FIRE ALARM AND SIGNALING CODE, 2025
NFPA 90A	INSTALLATION OF AIR-CONDITIONING AND VENTILATING SYSTEMS, 2024

3. DEVICES MUST BE UL LISTED.

4. SIGNALING LINE CIRCUITS, NOTIFICATION APPLIANCE CIRCUITS, AND INITIATING DEVICE CIRCUITS MUST BE CLASS A.

5. CONDUIT AND BACK BOXES MUST BE CONCEALED TO THE MAXIMUM EXTENT POSSIBLE. JUNCTION BOXES AND COVERS MUST BE PAINTED RED IN UNFINISHED AREAS. IN FINISHED AREAS, CONDUIT AND JUNCTION BOXES MUST BE PAINTED TO MATCH THE ROOM FINISH. FIRE ALARM CONDUITS IN FINISHED AREAS MUST BE MARKED WITH 3/4-IN RED BANDS EVERY 10-FT AND AT EACH SIDE OF A FLOOR, WALL, OR CEILING PENETRATION. JUNCTION BOXES MUST HAVE A PERMANENT, MACHINE PRINTED LABEL READING "FIRE ALARM CIRCUIT" ON THE INSIDE COVER.

6. PROVIDE DUCT SEAL INSIDE OF CONDUITS THAT PENETRATE FROM THE INTERIOR OF THE BUILDING TO THE EXTERIOR IN ACCORDANCE WITH NFPA 70 300.7.

7. SYSTEM POWER AND GROUND CIRCUITS MUST BE TYPE "THNN" SOLID OR STRANDED COPPER SIZED ACCORDING TO THE MANUFACTURER'S RECOMMENDATIONS AND THE APPLICABLE CODES AND BE INSTALLED IN EMT TYPE CONDUIT.

8. WIRING, CABLES, BOXES, TROUGHS AND OTHER RELATED EQUIPMENT MUST BE INSTALLED IN STRICT COMPLIANCE WITH THE NATIONAL ELECTRICAL CODE (NEC).

9. PENETRATIONS OF FIRE RESISTANCE RATED BARRIERS, WALLS, AND SHAFTS MUST BE DRILLED AND THEN SEALED WITH AN APPROVED UL FIRE-RATED THROUGH-PENETRATIONS ASSEMBLY.

10. UL CLASSIFICATIONS AND MATERIAL PRODUCT DATA SHEETS FOR FIRESTOPPING SYSYTEMS MUST BE SUBMITTED AND APPROVED BEFORE ANY FIRESTOPPING IS INSTALLED.

11. MANUAL FIRE ALARM STATION MUST BE DOUBLE-ACTION TYPE AND SEMI-FLUSH MOUNTED IN FINISHED SPACES.

12. WALL-MOUNTED VISIBLE AND COMBINATION AUDIBLE/VISIBLE ALARM NOTIFICATION APPLIANCES MUST BE MOUNTED SUCH THAT THE ENTIRE LENS IS BETWEEN 80 AND 96-INCHES ABOVE THE FINISHED FLOOR. WHERE LOW CEILING HEIGHTS DO NOT PERMIT DEVICES AT A MINIMUM OF 80-INCHES, DEVICES MUST BE MOUNTED WITHIN 6-INCHES OF THE CEILING.

13. VISIBLE DEVICES AND VISIBLE/AUDIBLE DEVICES MUST UTILIZE A CLEAR STROBE AND BE MARKED "ALERT" FOR FIRE ALARM USE. SEE MASS NOTIFICATION SYSTEM GENERAL NOTES FOR ADDITIONAL REQUIREMENTS.

14. SOUND PRESSURE LEVEL FROM AUDIBLE ALARM APPLIANCES MUST NOT EXCEED 110 DBA IN ANY OCCUPIED AREA.

15. AREAS MUST BE INTELLIGIBLE WITH A COMMON INTELLIGIBILITY SCALE (CIS) RATING GREATER THAN 0.7. A SPEECH TRANSMISSION INDEX (STI) RATING OF 0.5 IS CONSIDERED EQUIVALENT TO A CIS RATING OF 0.7. CIS RATINGS LESS THAN 0.7 IS PERMITTED IN AREAS WITH EXCESSIVE HARD SURFACES PROVIDED A CIS RATING GREATER THAN 0.7 IS ACHIEVED WITHIN A 33-FT TRAVEL DISTANCE. NORMALLY UNOCCUPIED AREAS ARE PERMITTED TO HAVE A CIS SCORE LESS THAN 0.7 PROVIDED ACCEPTABLE CIS SCORE CAN BE REACHED WITHIN 50-FT TRAVEL DISTANCE.

16. 25% SPARE CAPACITY MUST BE PROVIDED ON POWER SUPPLIES, AMPLIFIERS, AND INDIVIDUAL CIRCUITS.

17. SECONDARY POWER SUPPLY MUST BE VIA BATTERIES CAPABLE OF OPERATING THE FIRE ALARM SYSTEM ON STANDBY FOR 48 HOURS FOLLOWED BY 15 MINUTES IN ALARM OR OPERATING THE MASS NOTIFICATION SYSTEM IN ALARM FOR 60 MINUTES WHICHEVER IS GREATER. CHARGING AND METERING MUST BE PROVIDED IN ACCORDANCE WITH NFPA 72.

18. THE FIRE ALARM SYSTEM MUST MONITOR THE SPRINKLER SYSTEM FLOW AND TAMPER SWITCHES.

19. DEDICATED BATTERY CABINETS MUST BE MOUNTED NO MORE THAN 3-FT FROM THE FINISHED FLOOR.

20. LABEL FIRE ALARM APPLIANCES AND DEVICES WITH THE ASSIGNED ADDRESS. FOR DEVICES LOCATED ABOVE A CEILING. PROVIDE A LEGIBLE TYPED LABEL ON THE CEILING GRID TO IDENTIFY ITS PURPOSE AND LOCATION.

21. PROVIDE A DOCUMENT CABINET ADJACENT TO THE FMCP. CABINET MUST BE STEEL, LOCKABLE, WITH A HINGE-MOUNTED DOOR KEYED THE SAME AS THE FMCP. LABEL THE EXTERIOR OF THE CABINET "SYSTEM RECORD DOCUMENTS".

22. DRAWINGS ARE CONCEPTUAL IN NATURE. THEY DO NOT SHOW THE EXACT LOCATIONS OF COMPONENTS OR ALL SYSTEM COMPONENTS. CONTRACTOR MUST PROVIDE ADDITIONAL COMPONENTS FOR A PROPERLY INSTALLED AND FUNCTIONAL SYSTEM IN ACCORDANCE WITH APPLICABLE CODES.

MASS NOTIFICATION GENERAL NOTES:

1. MASS NOTIFICATION TO BE PROVIDED VIA COMBINED FIRE ALARM AND MASS NOTIFICATION SYSTEM. THE SYSTEM MUST BE DESIGNED UNDER THE SUPERVISION OF A NICET LEVEL IV FIRE ALARM TECHNICIAN.

2. A CLEAR STROBE MUST BE UTILIZED FOR FIRE ALARM AND MASS NOTIFICATION. STROBES MUST BE MARKED "ALERT". STROBE LOCATIONS SHOWN ON DRAWING INDICATE APPROXIMATE LOCATION OF REQUIRED VISUAL NOTIFICATION FOR THE FIRE ALARM/MASS NOTIFICATION SYSTEM.

3. SPEAKERS MUST BE PROVIDED OUTSIDE OF THE BUILDING NEAR THE FACILITY ENTRANCES. THESE DEVICES MUST BE MULTI-TAP WITH NO MORE THAN A 15-W MAXIMUM SETTING AND ARE INTENDED TO SERVE AREAS COMMONLY USED BY BUILDING OCCUPANTS FOR AREAS AT A DISTANCE UP TO 16-FT FROM THE BUILDING.

FIRE ALARM DEMOLITION GENERAL NOTES:

1. GENERAL SCOPE - DEMOLISH THE EXISTING FIRE ALARM SYSTEM THROUGHOUT BUILDING 7019.

2. REPAIR SURFACES DAMAGED BY THE FIRE ALARM DEMOLITION.

FIRE ALARM DEMOLITION LEGEND

FACP	FIRE ALARM CONTROL PANEL TO BE DEMOLISHED
BPS	BOOSTER POWER SUPPLY TO BE DEMOLISHED
KES	KITCHEN EXTINGUISHING SYSTEM PANEL TO BE DEMOLISHED
C	CEILING-MOUNTED HORN/STROBE TO BE DEMOLISHED
F	WALL-MOUNTED BELL TO BE DEMOLISHED
F	MANUAL PULL STATION TO BE DEMOLISHED
H	KITCHEN HOOD RELEASE TO BE DEMOLISHED
S	SMOKE DETECTOR TO BE DEMOLISHED

FIRE ALARM LEGEND

FMCP	FIRE ALARM MASS NOTIFICATION CONTROL PANEL
AMP	AMPLIFIER PANEL
BPS	BOOSTER POWER SUPPLY PANEL
CD C	CEILING MOUNTED COMBINATION SPEAKER/STROBE (SUPERSCRIPT INDICATES CANDELA RATING)
CD	WALL MOUNTED COMBINATION SPEAKER/STROBE (SUPERSCRIPT INDICATES CANDELA RATING)
S C	CEILING-MOUNTED SPEAKER
S	WALL MOUNTED SPEAKER
F	SPRINKLER BELL
F	ADDRESSABLE MANUAL PULL STATION
S	ADDRESSABLE SMOKE DETECTOR
S	ADDRESSABLE DUCT SMOKE DETECTOR
	ADDRESSABLE CARBON MONOXIDE DETECTOR
AIM	ADDRESSABLE MONITOR MODULE
VS	TAMPER SWITCH
WF	WATERFLOW SWITCH
SS	SURGE SUPPRESSOR
SB	SOUNDER BASE
WP	WEATHERPROOF

APPR | DATE | DESCRIPTION | SYM

NAVFAC

COMMONWEALTH OF VIRGINIA
Aaron P Freid
AARON P FREID
Lic. No. 044409
1 JUL 2026
PROFESSIONAL ENGINEER
SEAL

JENSEN HUGHES

A/E INFO

APPROVED

FOR COMMANDER NAVFAC

ACTIVITY

SATISFACTORY TO

DES	TKL	DRW	TKL	CHK	APF
PM/DM					L. PEED
BRANCH MANAGER					H. PERRY
CHIEF ENG/ARCH					P. FAULKNER
FIRE PROTECTION					D. CHASTAIN

DEPARTMENT OF THE NAVY
NAVAL FACILITIES ENGINEERING COMMAND
NAVFAC MIDLANTIC
NAVAL STATION - NORFOLK, VA
[PT MARINE]
MARINE CORPS AIR STATION
CHERRY POINT, NC

MCOLF ATLANTIC
BUILDING 7019 RENOVATIONS

FIRE ALARM GENERAL NOTES AND LEGEND

SCALE:	AS INDICATED
STATION DESIGN WON:	7406712
STATION CONSTRUCTION WON:	7406712
NAVFAC DRAWING NO.	12939487
SHEET	62 OF 148

FA001

FINAL DRAWFORM REVISION: 25 AUGUST 2020

7/1/2026 10:33:16 AM FA001
C:\Users\tfield\OneDrive - Jensen Hughes\Documents\2509 FIRE 2023_afield.rvt

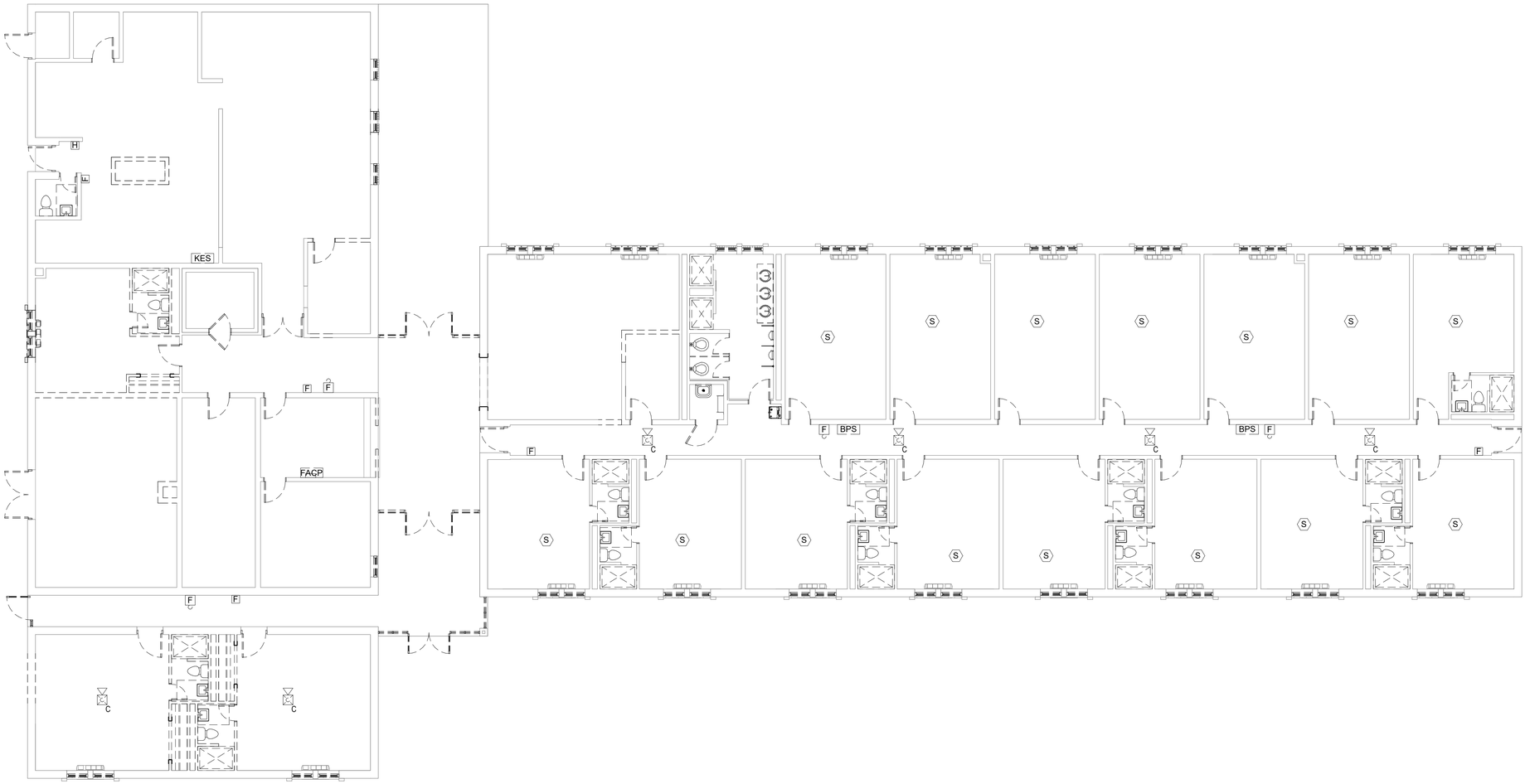

A1 FIRE ALARM DEMOLITION FLOOR PLAN

SCALE: 1/8" = 1'-0"

GRAPHIC SCALE: 1/8"=1'-0"

8' 0 4' 8' 16'

SYM	DESCRIPTION	DATE	APPR

NAVFAC

COMMONWEALTH OF VIRGINIA
AARON P FREID
Lic. No. 044409
1 JUL 2026
PROFESSIONAL ENGINEER
SEAL

JENSEN HUGHES

A/E INFO

APPROVED

FOR COMMANDER NAVFAC

ACTIVITY

SATISFACTORY TO

DES	TKL	DRW	TKL	CHK	APF
PM/DM	L. PEED				
BRANCH MANAGER	H. PERRY				
CHIEF ENG/ARCH	P. FAULKNER				
FIRE PROTECTION	D. CHASTAIN				

DEPARTMENT OF THE NAVY
NAVAL FACILITIES ENGINEERING COMMAND
IPT MARINE
MARINE CORPS AIR STATION

NAVAL FACILITIES ENGINEERING COMMAND ~ MIDATLANTIC
NAVAL STATION - NORFOLK, VA.
CHERRY POINT, NC

MCOLF ATLANTIC
BUILDING 7019 RENOVATIONS

FIRE ALARM DEMOLITION FLOOR PLAN

SCALE:	AS INDICATED
STATION DESIGN WON:	7406712
STATION CONSTRUCTION WON:	7406712
NAVFAC DRAWING NO:	12939488
SHEET	63 OF 148

FD101

FINAL

DRAWFORM REVISION: 25 AUGUST 2020

7/1/2025 10:33:17 AM FD101
C:\Users\afreid\OneDrive - Jensen Hughes\Documents\2509 FIRE 2023_afreid.rvt

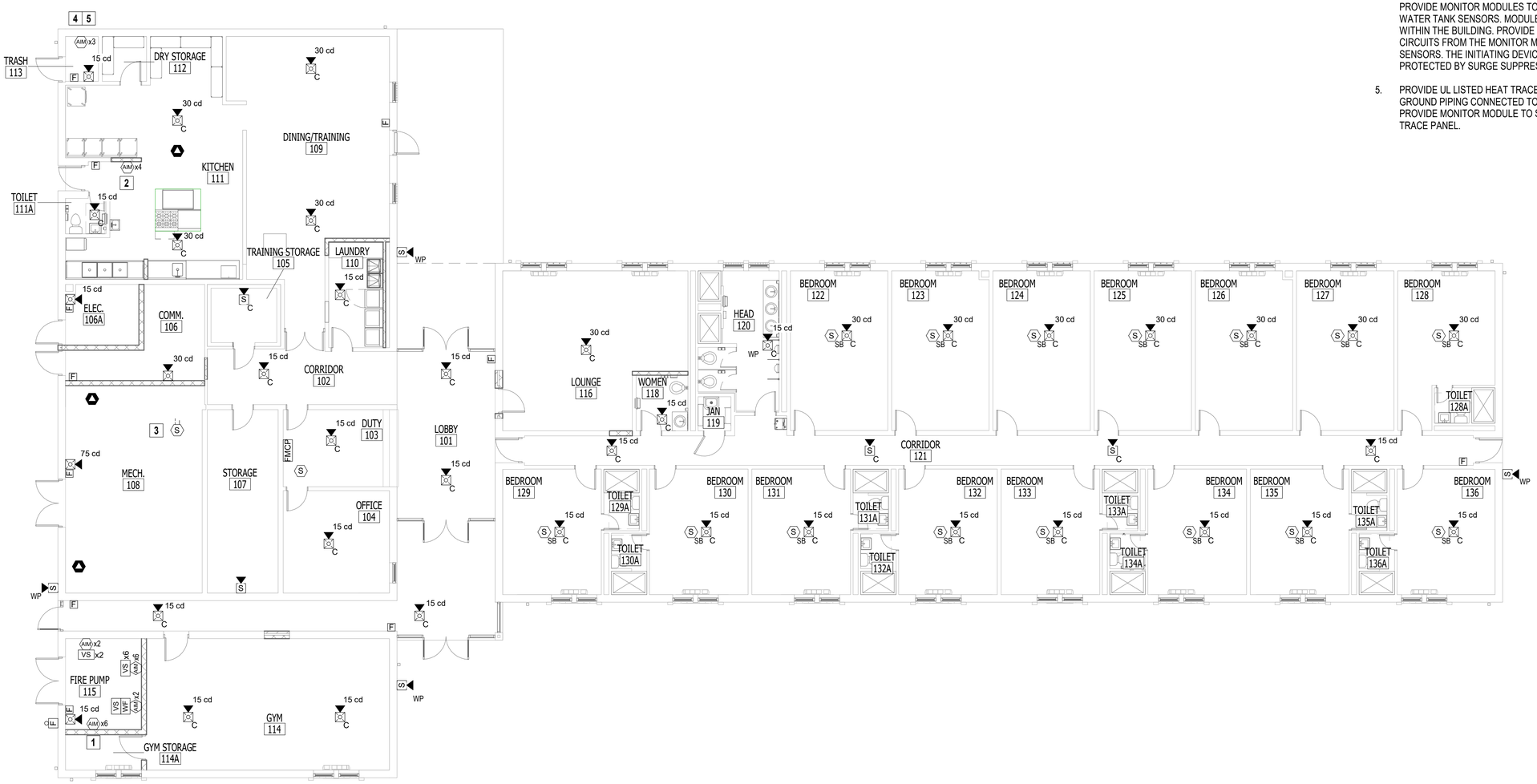

A1 FIRE ALARM FLOOR PLAN

SCALE: 1/8" = 1'-0"

GRAPHIC SCALE: 1/8"=1'-0"

8' 0 4' 8' 16'

KEY NOTES

1. PROVIDE MONITOR MODULES TO SUPERVISE FIRE PUMP CONTROLLER. COORDINATE EXACT LOCATION WITH FIRE SUPPRESSION CONTRACTOR.
2. PROVIDE MONITOR MODULES TO SUPERVISE KITCHEN HOOD FIRE EXTINGUISHING SYSTEMS. COORDINATE EXACT LOCATION WITH KITCHEN HOOD INSTALLER.
3. PROVIDE DUCT SMOKE DETECTOR ON SUPPLY SIDE OF DOAS-1. COORDINATE EXACT LOCATION WITH MECHANICAL CONTRACTOR.
4. PROVIDE TANK TEMPERATURE AND WATER LEVEL SENSORS. WATER TEMPERATURE MUST BE SUPERVISED FOR TEMPERATURES BELOW 40°F. WATER LEVEL MUST BE SUPERVISED FOR LEVELS 12-IN BELOW NORMAL LEVEL. PROVIDE MONITOR MODULES TO SUPERVISE THE FIRE WATER TANK SENSORS. MODULES MUST BE LOCATED WITHIN THE BUILDING. PROVIDE INITIATING DEVICE CIRCUITS FROM THE MONITOR MODULES TO TANK SENSORS. THE INITIATING DEVICE CIRCUITS MUST BE PROTECTED BY SURGE SUPPRESSION.
5. PROVIDE UL LISTED HEAT TRACE SYSTEMS FOR ABOVE GROUND PIPING CONNECTED TO THE FIRE WATER TANK. PROVIDE MONITOR MODULE TO SUPERVISE THE HEAT TRACE PANEL.

APPR	DATE	DESCRIPTION	SYM

NAVFAC

COMMONWEALTH OF VIRGINIA
AARON P FREID
Lic. No. 044409
1 JUL 2026
PROFESSIONAL ENGINEER
SEAL

JENSEN HUGHES

A/E INFO

APPROVED

FOR COMMANDER NAVFAC

ACTIVITY

SATISFACTORY TO

DES	TKL	DRW	TKL	CHK	APF
PM/DM					L. PEED
BRANCH MANAGER					H. PERRY
CHIEF ENG/ARCH					P. FAULKNER
FIRE PROTECTION					D. CHASTAIN

DEPARTMENT OF THE NAVY
NAVAL FACILITIES ENGINEERING COMMAND
NAVAL FACILITIES ENGINEERING COMMAND ~ MIDATLANTIC
IPT: MARINE
NAVAL STATION - NORFOLK, VA.
MARINE CORPS AIR STATION
CHERRY POINT, NC
MCOLF ATLANTIC
BUILDING 7019 RENOVATIONS
FIRE ALARM FLOOR PLAN

SCALE:	AS INDICATED
STATION DESIGN WON:	7406712
STATION CONSTRUCTION WON:	7406712
NAVFAC DRAWING NO.	12939489
SHEET	64 OF 148

FA101

FINAL

DRAWFORM REVISION: 25 AUGUST 2020

7/1/2026 10:33:21 AM
C:\Users\afreid\OneDrive - Jensen Hughes\Documents\2509 FIRE 2023_afreid.rvt
FA101

DO NOT INSTALL WITHIN 3' OF ANY HVAC SUPPLY/RETURN DIFFUSER OR TIP OF CEILING FAN BLADE.

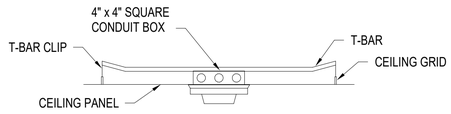

C2 TYPICAL SMOKE DETECTOR MOUNTING DETAIL

SCALE: NOT TO SCALE

ALL STROBES AND SPEAKER/STROBES MUST BE INSTALLED WHERE INDICATED ON THE FIRE PROTECTION PLANS. THE ELECTRICAL CONTRACTOR MUST PROVIDE THE NECESSARY MOUNTING HARDWARE TO ACHIEVE THIS PURPOSE.

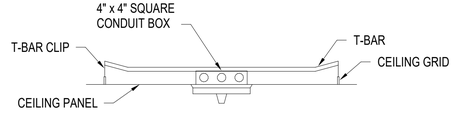

C4 TYPICAL SPEAKER/STROBE MOUNTING DETAIL

SCALE: NOT TO SCALE

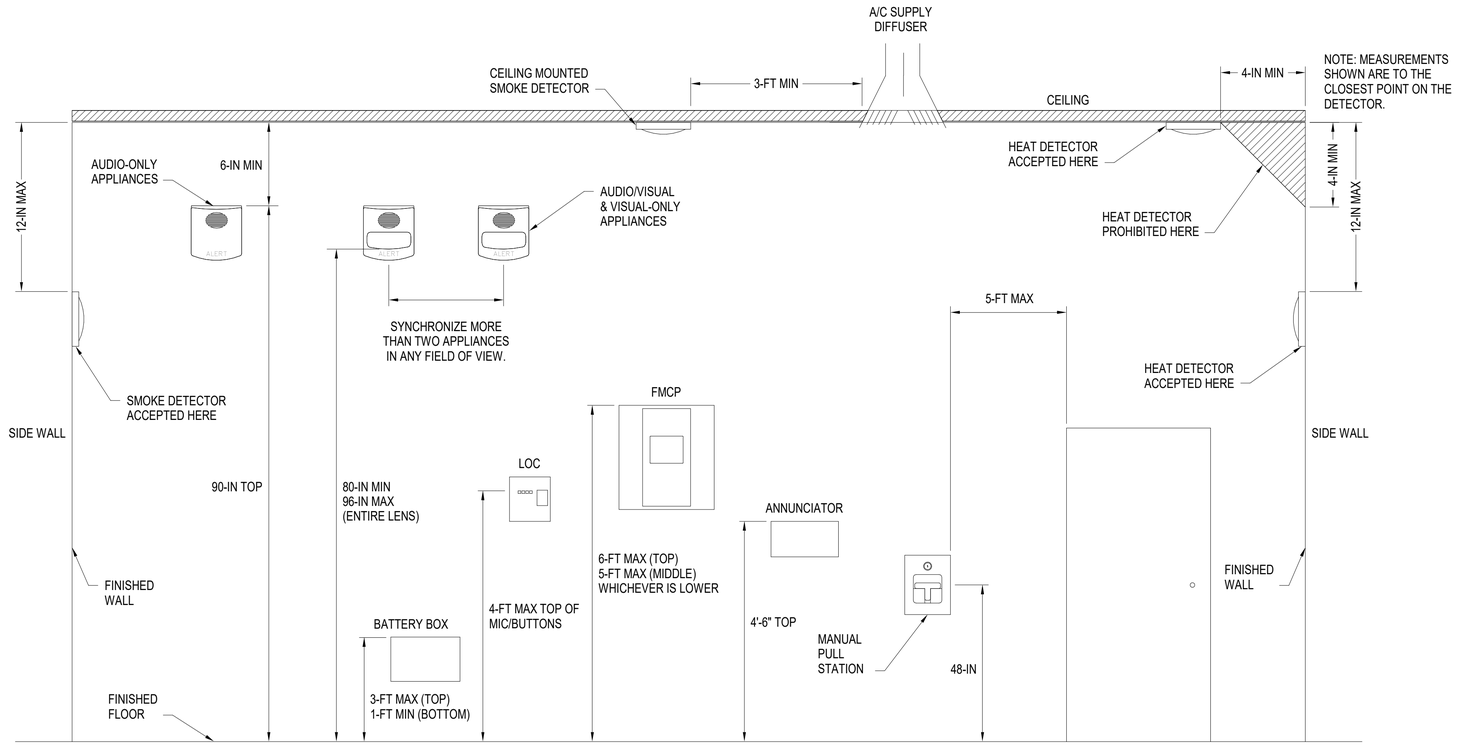

A2 TYPICAL DEVICE MOUNTING HEIGHTS

SCALE: NOT TO SCALE

SYM	DESCRIPTION	DATE	APPR

NAVFAC

COMMONWEALTH OF VIRGINIA
AARON P FREID
Lic. No. 044409
1 JUL 2026
PROFESSIONAL ENGINEER
SEAL

JENSEN HUGHES

A/E INFO

APPROVED

FOR COMMANDER NAVFAC

ACTIVITY

SATISFACTORY TO

DES	TKL	DRW	TKL	CHK	APF

PM/DM	L. PEED
BRANCH MANAGER	H. PERRY
CHIEF ENG/ARCH	P. FAULKNER
FIRE PROTECTION	D. CHASTAIN

DEPARTMENT OF THE NAVY
NAVAL FACILITIES ENGINEERING COMMAND
NAVAL FACILITIES ENGINEERING COMMAND ~ MIDATLANTIC
NAVAL STATION - NORFOLK, VA.
IPT MARINE
MARINE CORPS AIR STATION
CHERRY POINT, NC

MCOLF ATLANTIC
BUILDING 7019 RENOVATIONS

FIRE ALARM DETAILS

SCALE:	AS INDICATED
STATION DESIGN WON:	7406712
STATION CONSTRUCTION WON:	7406712
NAVFAC DRAWING NO.	12939490
SHEET	65 OF 148

FA501

FINAL

DRAWFORM REVISION: 25 AUGUST 2020

7/1/2026 10:33:21 AM FA501
C:\Users\afreid\OneDrive - Jensen Hughes\Documents\2509 FIRE 2023_afreid.rvt

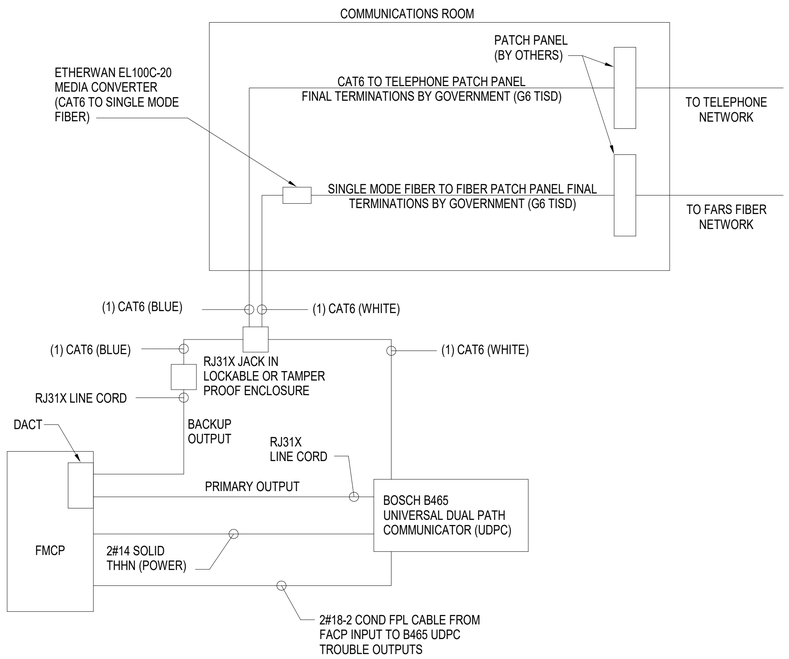

GENERAL NOTES:

1. FIRE ALARM SYSTEM TO BE IN COMPLIANCE WITH UFC 3-600-01, NFPA 72, AND ALL APPLICABLE CODES.
2. MAIN FIRE ALARM CONTROL PANEL TO BE INSTALLED IN CONDITIONED SPACE.
3. FMCP MUST BE IDENTIFIED BY BOSCH SECURITY SYSTEM INC. AS COMPATABLE W/ BOSCH B465 UNIVERSAL DUAL PATH COMMUNICATOR (UDPC).
4. PROVIDE SUFFICIENT BATTERY CAPACITY IN THE FMCP TO BACKUP THE BOSCH B465 UDPC.

B1 FIRE ALARM SYSTEM REPORTING INTERFACE

SCALE: NOT TO SCALE

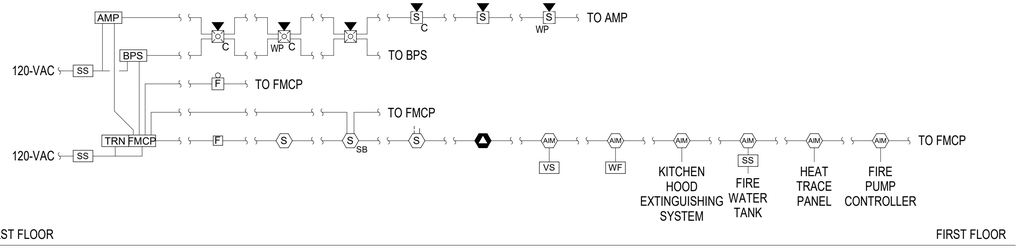

C3 FIRE ALARM/MASS NOTIFICATION SYSTEM RISER DIAGRAM

SCALE: NOT TO SCALE

FIRE ALARM VOICE EVACUATION MESSAGES			
SCENARIO	RECORDED VOICE	ALERT TONE	RECORDED MESSAGE
FIRE ALARM	FEMALE	TEMPORAL THREE - 520 HZ	MAY I HAVE YOUR ATTENTION, PLEASE. MAY I HAVE YOUR ATTENTION, PLEASE. A FIRE EMERGENCY HAS BEEN REPORTED IN THE BUILDING. PLEASE LEAVE THE BUILDING BY THE NEAREST EXIT.
CARBON MONOXIDE	FEMALE	TEMPORAL FOUR - 520 HZ	MAY I HAVE YOUR ATTENTION, PLEASE. MAY I HAVE YOUR ATTENTION, PLEASE. CARBON MONOXIDE HAS BEEN DETECTED IN THE BUILDING. PLEASE WALK TO THE NEAREST EXIT AND LEAVE THE BUILDING.

A1 FIRE ALARM VOICE EVACUATION MESSAGES

SCALE: NOT TO SCALE

FIRE ALARM INPUT	OPERATION	ACTIVATE VISUAL "ALERT" STROBES	ACTIVATE AUDIO CIRCUITS AND BROADCAST FIRE ALARM MESSAGE	ACTIVATE AUDIO CIRCUITS AND BROADCAST CARBON MONOXIDE MESSAGE	ACTIVATE AUDIO CIRCUITS AND BROADCAST MASS NOTIFICATION MESSAGE	ACTIVATE SOUNDER BASE [3]	SHUTDOWN ASSOCIATED AIR HANDLING UNIT	ALARM CONDITION AT FMCP	SUPERVISORY CONDITION AT FMCP	TROUBLE CONDITION AT FMCP	TRANSMIT ALARM SIGNAL TO FIRE DEPARTMENT	TRANSMIT SUPERVISORY SIGNAL TO FIRE DEPARTMENT	TRANSMIT TROUBLE SIGNAL TO FIRE DEPARTMENT
MANUAL PULL STATION		●	●				●			●			
AUTOMATIC SPRINKLER FLOW SWITCH		●	●				●			●			
AUTOMATIC SPRINKLER SYSTEM TAMPER SWITCH								●			●		
AREA SMOKE DETECTOR ACTIVATION		●	●				●			●			
SLEEPING ROOM SMOKE DETECTOR ACTIVATION						●		●			●		
DUCT SMOKE DETECTOR ACTIVATION							●	●			●		
CARBON MONOXIDE DETECTOR ACTIVATION		●		●			●			●			
KITCHEN HOOD EXTINGUISHING SYSTEM ALARM		●	●				●			●			
KITCHEN HOOD EXTINGUISHING SYSTEM TROUBLE								●			●		
FIRE PUMP RUNNING							●			●			
FIRE PUMP LOSS OF POWER								●			●		
FIRE PUMP PHASE REVERSAL								●			●		
AUTOMATIC TRANSFER SWITCH DISABLED								●			●		
FIRE PUMP POWERED BY ALTERNATE SOURCE								●			●		
FIRE PUMP ROOM LOW TEMPERATURE								●			●		
FIRE WATER TANK LOW TEMPERATURE								●			●		
FIRE WATER TANK LOW WATER LEVEL								●			●		
FMCP CIRCUIT FAULT (OPEN, GROUND, SHORT)									●			●	
OTHER TROUBLE CONDITION									●			●	
MASS NOTIFICATION INPUT													
FMCP EMERGENCY LIVE PAGING [1,2]		●			●								

1. EMERGENCY MASS NOTIFICATION MESSAGES (LIVE) MUST TEMPORARILY OVERRIDE FIRE ALARM AUDIBLE EVACUATION.
2. STROBES MUST CONTINUE TO OPERATE FOR AT LEAST 15-SECONDS AFTER THE END OF THE MESSAGE.
3. SLEEPING ROOM SMOKE DETECTOR ACTIVATES SOUNDER BASE IN ROOM OF ORIGIN ONLY.

A3 FIRE ALARM/MASS NOTIFICATION SYSTEM SEQUENCE OF OPERATIONS

SCALE: NOT TO SCALE

APPR | DATE | DESCRIPTION | SYM

NAVFAC

COMMONWEALTH OF VIRGINIA
AARON P FREID
Lic. No. 044409
1 JUL 2026
PROFESSIONAL ENGINEER
SEAL

JENSEN HUGHES

A/E INFO

APPROVED

FOR COMMANDER NAVFAC

ACTIVITY

SATISFACTORY TO

DES	TKL	DRW	TKL	CHK	APF
PM/DM			L. PEED		
BRANCH MANAGER			H. PERRY		
CHIEF ENG/ARCH			P. FAULKNER		
FIRE PROTECTION			D. CHASTAIN		

DEPARTMENT OF THE NAVY
NAVAL FACILITIES ENGINEERING COMMAND ~ MIDATLANTIC
IPT MARINE
MARINE CORPS AIR STATION
NAVAL FACILITIES ENGINEERING COMMAND
NAVAL STATION - NORFOLK, VA
CHERRY POINT, NC
MCOLF ATLANTIC
BUILDING 7019 RENOVATIONS
FIRE ALARM DETAILS

SCALE:	AS INDICATED
STATION DESIGN WON:	7406712
STATION CONSTRUCTION WON:	7406712
NAVFAC DRAWING NO.	12939491
SHEET	66 OF 148

FA502

FINAL DRAWFORM REVISION: 25 AUGUST 2020

7/1/2026 10:33:23 AM FA502
C:\Users\afreid\OneDrive - Jensen Hughes\Documents\2509 FIRE 2022_afreid.rvt

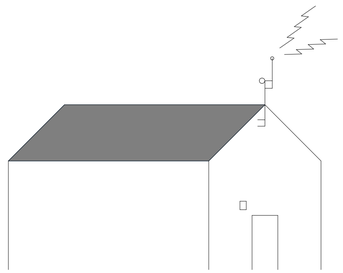

PROVIDE 8"X8"X8" PULL BOX ABOVE/ADJACENT TO THE MNS EQUIPMENT AREA. PROVIDE 1.50" RMC FROM MNS ENCLOSURE TO THE PULL BOX AND 1.50" RMC FROM THE PULL BOX TO A POINT 4 FEET ABOVE THE APEX OF THE ROOFLINE. GROUND THE RMC MAST TO THE BUILDING GROUND. PROVIDE THE RMC IN THE MOST DIRECT VERTICAL ROUTE POSSIBLE, IF SHARP BENDS ARE REQUIRED THEN UTILIZE ADDITIONAL PULL BOXES APPROPRIATELY. TERMINATE THE TOP OF THE EXTERIOR RMC WITH A U.L. LISTED WEATHER HEAD. GROUND THE RMC TO THE ROOF GROUNDING GRID OR THE BUILDING GROUND SYSTEM. INSTALL A PULLSTRING IN THE RMC AND CLEARLY LABEL THE MNS MOUNTING AREA AND ASSOCIATED CONDUIT FOR "BASE MNS" USE. DIRECTIONAL ANTENNAE MAY BE MOUNTED ON FACILITIES BELOW ROOFLINE IF PLACEMENT OF ANTENNA LOCATION IS PRE-APPROVED BY NIWC OR PHYSICAL SECURITY PERSONNEL DURING THE DESIGN STAGES. REFER ANY QUESTIONS TO PMO PHYSICAL SECURITY OFFICE OR NIWC MNS SME. (843) 718-4759.

TYPICAL BASE-WIDE MNS-NEW CONSTRUCTION REQUIREMENTS

* MNS MOUNTING AREA, ENCLOSURE, CONDUIT ROUTING, CONDUIT CONNECTIONS AND GENERAL ORIENTATION WILL VARY BASED ON BUILDING AND FACP DESIGN

PROVIDE TWO (2) 3/4-INCH ELECTRICAL METAL TUBING WITH 18 AWG SHIELDED AUDIO WIRE FROM THE NEMA-4 ENCLOSURE TO FOUR (4) SPEAKER LOCATIONS. COORDINATE TWO INTERIOR LOCATIONS AND TWO EXTERIOR LOCATIONS WITH BASE PHYSICAL SECURITY OFFICE AND NIWC PROJECT ENGINEERS. INDICATE APPROVED LOCATIONS ON FIRE ALARM SHOP DRAWING SUBMITTALS. SPEAKER LOCATIONS MUST BE REMOTE FROM EACH OTHER. INTERIOR LOCATIONS MUST BE WHERE MOST LIKELY TO BE HEARD (I.E., DUTY ROOM ADMINISTRATION AREA OR CENTRAL HALLWAY). EXTERIOR LOCATIONS MUST BE AT MEANS OF EGRESS MOST LIKELY TO BE OUTDOOR AREAS OF CONGREGATION. AT INTERIOR LOCATIONS, TERMINATE EMT IN A FLUSH MOUNTED 4"X4"X2" EMT BOX. CONTINUE EMT/WIRING TO THE MEANS OF EGRESS AND PENETRATE THE EXTERIOR WALL TWO FEET ABOVE THE LEFT SIDE OF THE DOOR FRAME. TERMINATE THE EXTERIOR CONDUIT IN A FLUSH MOUNTED, WEATHERPROOF 4"X4"X2" RIGID BOX. ENSURE THE EMT AND BOXES ARE LABELED FOR "BASE MNS USE". THE GOVERNMENT WILL PROVIDE/INSTALL SPEAKERS AT THE FOUR DEDICATED LOCATIONS.

1-1/2" RMC

MAXIMUM CONDUIT LENGTH TO ROOF TERMINATION = 130'

MAY BE COMBINED INTO ONE CONDUIT FOR ROUTING PURPOSES

PROVIDE 4"X4"X2" EMT BOX TO HOUSE ADDRESSABLE MONITOR MODULE AS REQUIRED BY FACP DESIGN

(SHOULD BE LOCATED IN DUTY ROOM OR ADMINISTRATION AREA)

REMOTE MIC

8"X8"X8" PULL BOX

1-1/4" EMT

USMC MNS MOUNTING AREA AND ENCLOSURE

3/4" EMT

3/4" EMT

USMC MNS MOUNTING AREA AND ENCLOSURE

3/4" RMC

3/4" RMC

FACP EXTERNAL MNS AUDIO INPUT AND CONTACT CLOSURE

TO COMMUNICATIONS ROOM EQUIPMENT RACK

1" EMT

REMOTE MIC EXTENDER PANEL (AS REQUIRED)

PROVIDE USMC MASS NOTIFICATION SYSTEM MOUNTING BOARD. PROVIDE DEDICATED WALL SPACE FOR TWO (2) 24"X24"X1" MOUNTING BOARDS ADJACENT TO THE FACP. ENSURE THE MOUNTING BOARD IS CLEARLY MARKED FOR "BASE MNS". ENSURE MNS EQUIPMENT AREA IS ADJACENT TO THE FACP. DISTANCE FROM FACP MUST NOT EXCEED 15 CONDUIT FEET (SECOND ENCLOSURE TO BE MOUNTED IN THE SAME ROOM). CLEARLY MARK FOR "BASE MNS".

PROVIDE A NON-METALLIC 18"HX16"WX10"D NEMA 4X ENCLOSURE WITH RAISED COVER AND PAD LOCKABLE LATCHES W/ INTERIOR MOUNTING PLATE (INTEGRA 181610HLL OR EQUAL), CENTERED ON THE MNS MOUNTING AREA BOARD. PROVIDE 3/4" EMT BETWEEN EACH ENCLOSURE.

PROVIDE A NON-METALLIC 18"HX16"WX10"D NEMA 4X ENCLOSURE WITH RAISED COVER AND PAD LOCKABLE LATCHES W/ INTERIOR MOUNTING PLATE (INTEGRA 181610HLL OR EQUAL), CENTERED ON THE MNS MOUNTING AREA BOARD. PROVIDE 3/4" EMT WITH 3 CONDUCTORS, 12 GAUGE ELECTRICAL WIRE FROM THE ENCLOSURE TO A DEDICATED 120VAC/15A ELECTRICAL CIRCUIT. PROVIDE A DEDICATED LOCKABLE BREAKER FROM THE SAME POWER PANEL UTILIZED BY THE FACP. INSTALL AC SURGE PROTECTION DEVICE (120V, 15A MAX, ISLATROL HSP-121BT1RU OR EQUAL) IN LINE WITH POWER CIRCUIT INSIDE THE LOWER LEFT CORNER OF THE ENCLOSURE. THE AC SURGE DEVICE MUST BE WIRED IN SERIES WITH A DUAL AC ELECTRICAL OUTLET MOUNTED INSIDE THE MNS ENCLOSURE LOCATED ABOVE THE SURGE DEVICE ON THE BOTTOM RIGHT SIDE OF THE MNS ENCLOSURE. PROVIDE AND CONNECT BUILDING EARTH GROUND TO THE BOTTOM LEFT CORNER OF THE BACKPLATE INSIDE THE ENCLOSURE. SEE BREAKOUT.

* BASE PHYSICAL SECURITY OFFICE AND NIWC ATLANTIC MCESS PROGRAM OFFICE ARE THE POINTS OF CONTACT FOR THE MASS NOTIFICATION SYSTEM REQUIREMENTS. NIWC ATLANTIC CONTRACTORS WILL INSTALL THE USMC MNS EQUIPMENT IN THE INFRASTRUCTURE PROVIDED BY THE MILCON AS PER THIS DIAGRAM.

REFER TO THE FIRE ALARM SECTION OF THE ARCHITECTURE AND ENGINEERING PACKAGE FOR FIRE ALARM DESIGN REQUIREMENTS

FIRE ALARM DETECTORS AND NOTIFICATION DEVICES

FIRE ALARM REPORTING (SEE DETAIL B1 ON SHEET FA502)

PRIMARY

SECONDARY

COMBINED FACP/MNS

MIC

ADDITIONAL SUPERVISED POWER SUPPLY FOR PANEL OPERATION, AUDIO AMPLIFIERS, AND STROBE ACTIVATION AS REQUIRED, BASED ON BUILDING DESIGN AND OVERALL LOAD REQUIREMENTS

ALARM PRIORITY

1. LOCAL MICROPHONE
2. MASS NOTIFICATION SYSTEM
3. FIRE ALARM

MNS AND MONITORING NOTES:

1. THE FIRE ALARM AND DETECTION SYSTEM IS TO BE FULLY COMPLIANT WITH THE CURRENT EDITION OF NFPA 72 FOR AN EMERGENCY VOICE ALARM COMMUNICATION SYSTEM. THE SYSTEM MUST INTEGRATE WITH THE INSTALLATION BASE-WIDE MASS NOTIFICATION SYSTEM (SIRCOM SMART ALERT [SISA] AND LEGACY WAVES).
2. THE FACP MUST BE CAPABLE OF ACCEPTING AN AUXILLARY LINE LEVEL AUDIO INPUT OF 1 VOLT PK-PK OR .707 VRMS.
3. FACP MUST BE CONFIGURED TO ACCEPT DRY CONTACT INPUT FROM THE USMC MNS INTERFACE TO ALERT THE FIRE ALARM PANEL THAT A MNS MESSAGE IS FORTHCOMING. THE FIRE ALARM PANEL MUST BE CONFIGURED SO THAT WHILE THIS INPUT IS ACTIVE (CONTACT CLOSED) THE FIRE ALARM PANEL MUST ROUTE AUDIO PROVIDED BY THE MNS INTERFACE DIRECTLY TO ALL CONNECTED FIRE ALARM SPEAKERS. THE SYSTEM MUST BE PROGRAMMED SO THIS EXTERNAL AUDIO INPUT WILL RECEIVE PRIORITY AND OVERRIDE ALL FIRE ALARM NOTIFICATION SO LONG AS THE INPUT IS ACTIVE. WHEN THE INPUT GOES INACTIVE (CONTACT OPEN) THE EXTERNAL AUDIO ROUTING WILL CEASE AND THE FIRE ALARM PANEL MUST AUTOMATICALLY RETURN TO THE PRIOR NOTIFICATION PROGRAM THAT WAS ACTIVE BEFORE THE MNS MESSAGE. FACP LOCAL MIC HAS PRIORITY OVER ALL ANNOUNCEMENTS. A FACP SUPERVISORY ALARM IS NOT REQUIRED WHEN THE MNS IS ACTIVATED.
4. UTILIZE COMBINATION SPEAKER/STROBE NOTIFICATION DEVICES WHENEVER POSSIBLE. ALL NOTIFICATION DEVICES MUST BE LABELED "ALERT." FIRE MARKINGS ARE NOT USED SINCE THIS IS A COMBINATION FIRE AND VOICE EVACUATION SYSTEM. ALL STROBES UTILIZED MUST BE WHITE/CLEAR (THE USE OF DISPLAY SIGNS ARE NOT AUTHORIZED FOR INSTALLATION/USE AT EGRESS POINTS OF FACILITY).
5. THE FIRE SYSTEM CONTRACTOR IS RESPONSIBLE FOR PROVIDING SPEAKERS FOR EACH FACILITY TO MEET ALL MASS NOTIFICATION SYSTEM INTELLIGIBILITY REQUIREMENTS IN ACCORDANCE WITH UFC 4-021-01 AND 3-600-01. ALL SPEAKERS/STROBES MUST BE LABELED "ALERT". ALL STROBES UTILIZED MUST BE WHITE.
6. PROVIDE GROUNDING FOR THE ANTENNA MAST PER NEC.
7. PROVIDE 1 EMT FROM USMC MNS MOUNTING AREA TO COMMUNICATIONS ROOM. CONDUIT MUST INCLUDE PULLSTRING.
8. PROVIDE A SINGLE REMOTE MICROPHONE PANEL LOCATED IN THE DUTY ROOM OR MAIN ADMINISTRATIVE OFFICE AS REQUIRED BY BUILDING SIZE AND DESIGN. IF A REMOTE MICROPHONE IS UTILIZED THEN A REMOTE MICROPHONE EXTENDER PANEL MAY BE REQUIRED TO ALLOW FOR AN ADDITIONAL MNS AUXILLARY AUDIO INPUT TO THE FACP. THIS IS DEPENDANT ON FACP MODEL.
9. ALL KNOWN BUILDING STRUCTURAL FIRE BARRIER PENETRATIONS MUST BE SEALED WITH FIRE CAULK. IF UNCONFIRMED THEN SEAL STRUCTURAL PENETRATIONS WITH FIRE CAULK. DRESS AND SECURE ALL WIRE, CABLES, AND EQUIPMENT IN A NEAT AND PROFESSIONAL MANNER. ENSURE THE ENCLOSURE AND INSTALLATION AREA IS CLEAN AND FREE OF ANY DEBRIS. CONNECT ALL NEWLY INSTALLED EQUIPMENT/MATERIALS AND TEST FOR PROPER OPERATION. CONDUCT LOCAL/REMOTE DIAGNOSTICS AND LOCAL/REMOTE AUDIO ACTIVATION. INSTALLED COMPONENTS MUST BE PERFORMANCE TESTED BY PHYSICAL SECURITY, NIWC MCESS, BASE FIRE DEPARTMENT, ROICC, AND CONTRACTOR PERSONNEL.
10. REFER QUESTIONS TO NIWC ATLANTIC MNS SME'S, BASE PHYSICAL SECURITY PERSONNEL, MCO 5530.14B-PHYSICAL SECURITY PROGRAM GUIDE, AND UFC 04-021-01 MASS NOTIFICATION SYSTEMS FOR ADDITIONAL MARINE CORPS SPECIFIC GUIDANCE.
11. R.K. BIFF BROWN (843) 218-6292 / (843) 718-4759 ROBERT.K.BROWN1.CTR@US.NAVY.MIL

A1 FIRE ALARM/MASS NOTIFICATION SYSTEM BASE-WIDE INTERFACE

SCALE: NOT TO SCALE

APPR | DATE | DESCRIPTION | SYM

NAVFAC

COMMONWEALTH OF VIRGINIA
AARON P FREID
Lic. No. 044409
1 JUL 2026
PROFESSIONAL ENGINEER
SEAL

JENSEN HUGHES

A/E INFO

APPROVED

FOR COMMANDER NAVFAC

ACTIVITY

SATISFACTORY TO

DES	TKL	DRW	TKL	CHK	APF
PM/DM					L. PEED
BRANCH MANAGER					H. PERRY
CHIEF ENG/ARCH					P. FAULKNER
FIRE PROTECTION					D. CHASTAIN

DEPARTMENT OF THE NAVY
NAVAL FACILITIES ENGINEERING COMMAND - MIDATLANTIC
NAVAL FACILITIES ENGINEERING COMMAND
NAVAL STATION - NORFOLK, VA.
IPT MARINE
MARINE CORPS AIR STATION
CHERRY POINT, NC
MCOLF ATLANTIC
BUILDING 7019 RENOVATIONS
FIRE ALARM DETAILS

SCALE: AS INDICATED
STATION DESIGN WON: 7406712
STATION CONSTRUCTION WON: 7406712
NAVFAC DRAWING NO. 12939492
SHEET 67 OF 148
FA503

FINAL DRAWFORM REVISION: 25 AUGUST 2020

FA503
7/1/2026 10:33:24 AM
C:\Users\afreid\OneDrive - Jensen Hughes\Documents\2509 FIRE 2023_afreid.rvt

FIRE SUPPRESSION GENERAL NOTES:

1. GENERAL SCOPE - PROVIDE AN NFPA 13R WET-PIPE SPRINKLER SYSTEM THROUGHOUT BUILDING 7019.

2. APPLICABLE CODES:

UFC 3-600-01	FIRE PROTECTION ENGINEERING FOR FACILITIES, CHANGE 6, 6 MAY 2021
NFPA 13R	INSTALLATION OF SPRINKLER SYSTEMS IN LOW-RISE RESIDENTIAL OCCUPANCIES, 2025
NFPA 13	INSTALLATION OF SPRINKLER SYSTEMS, 2025 (AS REFERENCED BY NFPA 13R)

3. THE SYSTEM MUST BE DESIGNED UNDER THE SUPERVISION OF A NICET LEVEL III WATER-BASED SYSTEMS LAYOUT TECHNICIAN.

4. SPRINKLER PIPE MUST BE UL LISTED BLACK STEEL, MINIMUM SCHEDULE 40 FOR PIPE DIAMETERS 2-IN AND SMALLER AND A MINIMUM SCHEDULE 10 FOR PIPE DIAMETERS LARGER THAN 2-IN.

5. SPRINKLERS PROVIDED IN DWELLING UNITS MUST BE CONCEALED PENDANT RESIDENTIAL SPRINKLERS.

6. SPRINKLERS PROVIDED IN THE REMAINING FINISHED AREAS MUST BE ORDINARY TEMPERATURE RECESSED PENDANT.

7. SPRINKLERS PROVIDED IN AREAS WITH EXPOSED CEILINGS MUST BE ORDINARY TEMPERATURE UPRIGHT.

8. PROVIDE QUICK-REPONSE SPRINKLERS.

9. PROVIDE A MINIMUM OF SIX SPARE SPRINKLERS WITH AT LEAST TWO SPARE SPRINKLERS OF EACH TYPE AND TEMPERATURE CLASSIFICATION. PROVIDE SPARE SPRINKLER CABINET, WRENCHES, AND POSTED LIST OF ITEMS WITHIN THE CABINET. PROVIDE WITHIN 4-FT OF THE FIRE SPRINKLER RISER.

10. SPRINKLER COVERAGE MUST BE HYDRAULICALLY DESIGNED.

11. PIPE PENETRATIONS THROUGH FIRE RATED BARRIERS MUST BE PROVIDED WITH UL LISTED FIRESTOP SYSTEMS. THIS INCLUDES BUT IS NOT LIMITED TO STAIRS, FLOORS, CEILINGS, AND SHAFTS.

12. UL CLASSIFICATIONS AND MATERIAL PRODUCT DATA SHEETS FOR FIRESTOPPING SYSTEMS MUST BE SUBMITTED AND APPROVED BEFORE FIRESTOPPING IS PROVIDED.

13. THESE DRAWINGS DEMONSTRATE THE CONFIGURATION OF MAJOR SYSTEM COMPONENTS. THE ARE DIAGRAMMATIC IN NATURE AND ARE NOT INTENDED TO SHOW EXACT LOCATIONS. PIPE LENGTHS AND ELEVATIONS INDICATED ON THE DRAWINGS (IF SHOWN) ARE APPROXIMATE. COORDINATE FINIAL INSTALLTION WITH ACTUAL FIELD CONDITIONS AND OTHER CONSTRUCTION TRADES. DESIGN THE SPRINKLER SYSTEM TO PROVIDE COMPLETE PROTECTION THROUGHOUT IN ACCORDANCE WITH NFPA 13.

FIRE SUPPRESSION LEGEND

	SPRINKLER PIPE
	WALL MOUNT TEST HEADER
	FIRE DEPARTMENT CONNECTION
⊗	WET RISER
(XX)	HAZARD CLASSIFICATION

SPRINKLER HAZARD LEGEND

(RES)	RESIDENTIAL OCCUPANCY. A MINIMUM DENSITY OF 0.05-GPM/SF A DESIGN AREA OF ALL SPRINKLERS IN THE COMPARTMENT UP TO A MAXIMUM OF FOUR MUST BE USED (NFPA 13R 7.1.1.1 & 7.1.1.3.1). SPRINKLER LAYOUT MUST COMPLY WITH RESIDENTIAL SPRINKLER LISTING.
(LH)	LIGHT HAZARD OCCUPANCY. A MINIMUM DENSITY OF 0.10-GPM/SF WITH A DESIGN AREA OF 1,500-SF MUST BE USED. SPRINKLER LAYOUT MUST COMPLY WITH NFPA 13 LIGHT HAZARD SPACING. SPRINKLERS MUST HAVE A MINIMUM K-FACTOR OF 5.6.
(OH)	ORDINARY HAZARD OCCUPANCY. A MINIMUM DENSITY OF 0.20-GPM/SF WITH A DESIGN AREA OF 2,500-SF MUST BE USED. SPRINKLER LAYOUT MUST COMPLY WITH NFPA 13 ORDINARY HAZARD SPACING. SPRINKLERS MUST HAVE A MINIMUM K-FACTOR OF 8.0.

NOTE: NFPA 13 DESIGN AREA REDUCTION FOR QUICK RESPONSE SPRINKLERS IS NOT PERMITTED.

FIRE WATER TANK SCHEDULE

DESCRIPTION	LOCATION	USABLE VOLUME
FIRE WATER TANK	ABOVEGROUND	52,200-GAL

APPR | DATE | DESCRIPTION | SYM

NAVFAC

COMMONWEALTH OF VIRGINIA
Aaron P Freid
AARON P FREID
Lic. No. 044409
1 JUL 2026
PROFESSIONAL ENGINEER
SEAL

JENSEN HUGHES

A/E INFO

APPROVED

FOR COMMANDER NAVFAC

ACTIVITY

SATISFACTORY TO

DES	TKL	DRW	TKL	CHK	APF

PM/DM L. PEED
BRANCH MANAGER H. PERRY
CHIEF ENG/ARCH P. FAULKNER
FIRE PROTECTION D. CHASTAIN

DEPARTMENT OF THE NAVY
NAVAL FACILITIES ENGINEERING COMMAND
IPT MARINE
MARINE CORPS AIR STATION
NAVAL FACILITIES ENGINEERING COMMAND – MIDATLANTIC
NAVAL STATION - NORFOLK, VA.
CHERRY POINT, NC
MCOLF ATLANTIC
BUILDING 7019 RENOVATIONS
FIRE SUPPRESSION GENERAL NOTES AND LEGEND

SCALE: AS INDICATED
STATION DESIGN WON: 7406712
STATION CONSTRUCTION WON: 7406712
NAVFAC DRAWING NO.: 12939493
SHEET 68 OF 148
FX001

FINAL DRAWFORM REVISION: 25 AUGUST 2020

7/1/2026 10:33:25 AM FX001
C:\Users\afreid\OneDrive - Jensen Hughes\Documents\2509 FIRE 2023_afreid.rvt

A1 FIRE SUPPRESSION FLOOR PLAN

SCALE: 1/8" = 1'-0"

GRAPHIC SCALE: 1/8"=1'-0"

8' 0 4' 8' 16'

APPR	DATE	DESCRIPTION	SYM

NAVFAC

COMMONWEALTH OF VIRGINIA
AARON P FREID
Lic. No. 044409
1 JUL 2026
PROFESSIONAL ENGINEER
SEAL

JENSEN HUGHES

A/E INFO

APPROVED

FOR COMMANDER NAVFAC

ACTIVITY

SATISFACTORY TO

DES	TKL	DRW TKL	CHK APF
PM/DM			L. PEED
BRANCH MANAGER			H. PERRY
CHIEF ENG/ARCH			P. FAULKNER
FIRE PROTECTION			D. CHASTAIN

DEPARTMENT OF THE NAVY
NAVAL FACILITIES ENGINEERING COMMAND ~ MIDATLANTIC
NAVAL STATION - NORFOLK, VA
CHERRY POINT, NC
1PT MARINE
MARINE CORPS AIR STATION
MCOLF ATLANTIC
BUILDING 7019 RENOVATIONS
FIRE SUPPRESSION FLOOR PLAN

SCALE:	AS INDICATED
STATION DESIGN WON:	7406712
STATION CONSTRUCTION WON:	7406712
NAVFAC DRAWING NO.	12939494
SHEET	69 OF 148

FX101

FINAL

DRAWFORM REVISION: 25 AUGUST 2020

7/1/2026 10:33:28 AM FX101
C:\Users\afreid\OneDrive - Jensen Hughes\Documents\2509 FIRE 2023_afreid.rvt

FIRE PUMP/JOCKEY PUMP SCHEDULE					
DESCRIPTION	FLOW RATE	PRESSURE BOOST	START PRESSURE	STOP PRESSURE	HORSEPOWER
FIRE PUMP	750-GPM	50-PSI	42-PSI	57-PSI	40-HP
JOCKEY PUMP	10-GPM	60-PSI	47-PSI	57-PSI	1-HP

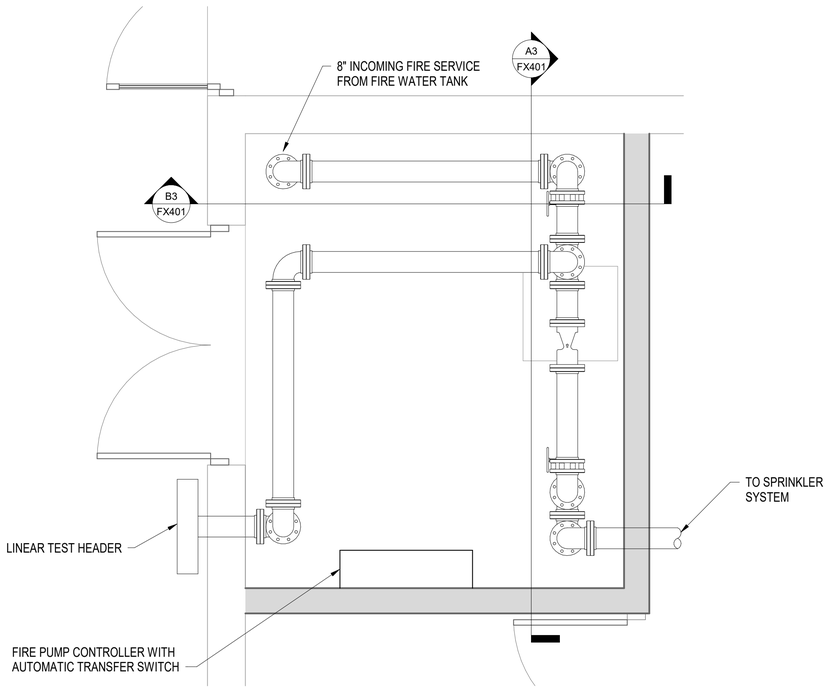

A1 FIRE PUMP ROOM ENLARGED PLAN

SCALE: 1/2" = 1'-0"

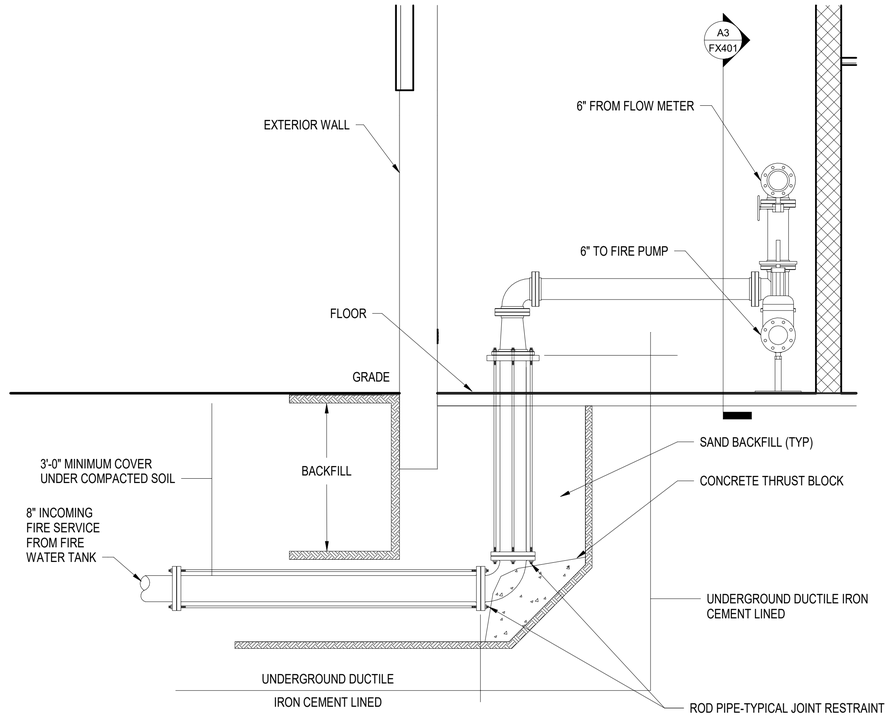

B3 INCOMING FIRE SERVICE SECTION

SCALE: 1/2" = 1'-0"

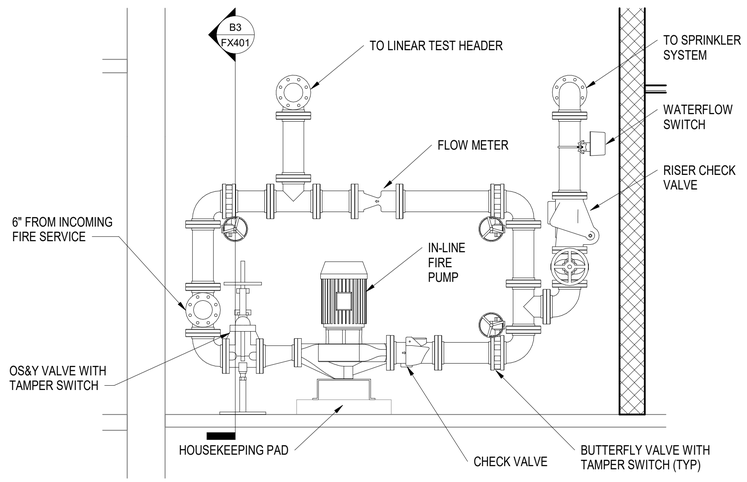

A3 FIRE PUMP SECTION

SCALE: 1/2" = 1'-0"

APPR | DATE | DESCRIPTION | SYM

NAVFAC

COMMONWEALTH OF VIRGINIA
AARON P FREID
Lic. No. 044409
1 JUL 2026
PROFESSIONAL ENGINEER
SEAL

JENSEN HUGHES

A/E INFO

APPROVED

FOR COMMANDER NAVFAC

ACTIVITY

SATISFACTORY TO

DES	TKL	DRW	TKL	CHK	APF
PM/DM					L. PEED
BRANCH MANAGER					H. PERRY
CHIEF ENG/ARCH					P. FAULKNER
FIRE PROTECTION					D. CHASTAIN

DEPARTMENT OF THE NAVY
NAVAL FACILITIES ENGINEERING COMMAND ~ MIDATLANTIC
1PT MARINE
MARINE CORPS AIR STATION
NAVAL FACILITIES ENGINEERING COMMAND
NAVAL STATION - NORFOLK, VA
CHERRY POINT, NC
MCOLF ATLANTIC
BUILDING 7019 RENOVATIONS
FIRE SUPPRESSION ENLARGED PLANS

SCALE: AS INDICATED
STATION DESIGN WON: 7406712
STATION CONSTRUCTION WON: 7406712
NAVFAC DRAWING NO.: 12939495
SHEET 70 OF 148

FX401

FINAL

DRAWFORM REVISION: 25 AUGUST 2020

7/1/2026 10:33:30 AM FX401
C:\Users\afreid\OneDrive - Jensen Hughes\Documents\2509 FIRE 2023_afreid.rvt

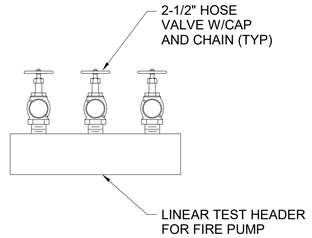

B4 LINEAR TEST HEADER DETAIL

SCALE: NOT TO SCALE

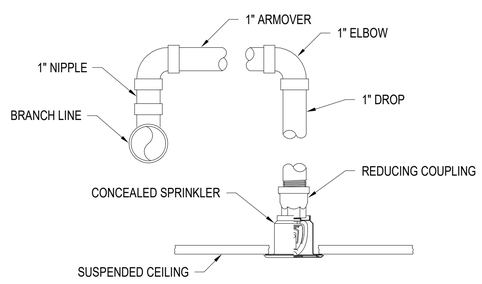

A1 TYPICAL CONCEALED SPRINKLER DETAIL

SCALE: NOT TO SCALE

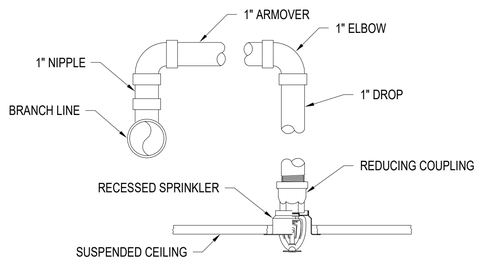

A3 TYPICAL RECESSED SPRINKLER DETAIL

SCALE: NOT TO SCALE

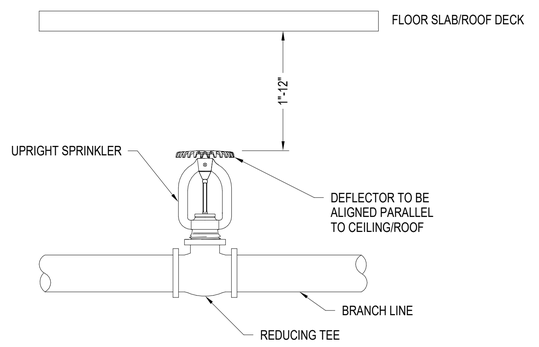

A4 TYPICAL UPRIGHT SPRINKLER DETAIL

SCALE: 1/8" = 1'-0"

APPR | DATE | DESCRIPTION | SYM

NAVFAC

COMMONWEALTH OF VIRGINIA
Aaron P Freid
AARON P FREID
Lic. No. 044409
1 JUL 2026
PROFESSIONAL ENGINEER
SEAL

JENSEN HUGHES

A/E INFO

APPROVED

FOR COMMANDER NAVFAC

ACTIVITY

SATISFACTORY TO

DES	TKL	DRW	TKL	CHK	APF
PM/DM					L. PEED
BRANCH MANAGER					H. PERRY
CHIEF ENG/ARCH					P. FAULKNER
FIRE PROTECTION					D. CHASTAIN

DEPARTMENT OF THE NAVY
NAVAL FACILITIES ENGINEERING COMMAND
NAVAL FACILITIES ENGINEERING COMMAND ~ MIDATLANTIC
IPT: MARINE
MARINE CORPS AIR STATION
NAVAL STATION - NORFOLK, VA
CHERRY POINT, NC
MCOLF ATLANTIC
BUILDING 7019 RENOVATIONS
FIRE SUPPRESSION DETAILS

SCALE:	AS INDICATED
STATION DESIGN WON:	7406712
STATION CONSTRUCTION WON:	7406712
NAVFAC DRAWING NO.	12939496
SHEET	71 OF 148

FX501

FINAL

DRAWFORM REVISION: 25 AUGUST 2020

7/1/2026 10:33:31 AM FX501
C:\Users\afreid\OneDrive - Jensen Hughes\Documents\2509 FIRE 2023_afreid.rvt

PLUMBING LEGEND AND ABBREVIATIONS

———————	SANITARY SEWER PIPING (W)
- - - - - - - - - - - - - - - - - - -	VENT PIPING (V)
———————	GREASE WASTE PIPING (GW)
———————	DOMESTIC COLD WATER PIPING (DCW)
—— - - —— - - ——	DOMESTIC HOT WATER PIPING (DHW)
— - - — - - — - - —	DOMESTIC HOT WATER RECIRCULATION PIPING (DHWR)
	TEE TURNS UP
	ELL TURNS UP
	ELL TURNS DOWN
	TEE FROM BELOW
	CHECK VALVE
	BALL VALVE
	CLEANOUT IN GROUND (GCO)
	CLEANOUT IN FLOOR OR SLAB (FCO)
	CLEANOUT IN WALL (WCO)
A.F.F.	ABOVE FINISH FLOOR
B.F.F.	BELOW FINISH FLOOR
FD - X	FLOOR DRAIN - TYPE (SEE SCHEDULE)
HB	HOSE BIBB
P.C.	PLUMBING CONTRACTOR
V.T.R.	VENT THROUGH ROOF
CV	COMMON VENT
BOCV	BEGINNING OF CIRCUIT VENT
WH	WALL HYDRANT
SA	SHOCK ABSORBER
TP	TRAP PRIMER

PROJECT NOTES

1. COORDINATE WITH THE ARCHITECTURAL DRAWINGS FOR EXACT LOCATION OF PLUMBING FIXTURES AND DRAINS.

2. HOSE BIBBS MUST BE PROTECTED WITH AN APPROVED NON-REMOVABLE TYPE BACKFLOW PROTECTION DEVICE. HOSE BIBBS MUST BE MOUNTED AT 18" ABOVE FINISH FLOOR UNLESS OTHERWISE NOTED.

3. COORDINATE AND VERIFY SIZES, LOCATIONS, DEPTHS AND PIPING PRESSURES OF ALL BUILDING UTILITIES WITH CIVIL.

4. COORDINATE AND SCHEDULE TIMING FOR UTILITY SERVICE CONNECTION.

5. ALL LINES BELOW SLAB OR GRADE TO BE LOCATED AWAY FROM ALL LOAD BEARING FOOTINGS.

6. ALL VENTS THRU ROOF MUST BE A MINIMUM OF 18" VERTICAL AND TEN FEET HORIZONTAL AWAY FROM ALL AIR CONDITIONING FRESH AIR INTAKES AND PROVIDED WITH VANDAL PROOF HOODS.

7. COORDINATE ALL EQUIPMENT LOCATIONS, PIPE PENETRATIONS AND EQUIPMENT PAD LOCATIONS WITH STRUCTURAL DRAWINGS PRIOR TO WORK.

8. COORDINATE INSTALLATION OF ALL EQUIPMENT AND PIPING WITH OTHER TRADES PRIOR TO INSTALLATION. ENSURE THAT ALL CONTROL DEVICES, SHUT-OFF VALVES, ETC. ARE ACCESSIBLE FOR MAINTENANCE. WHERE ACCESS PANELS ARE REQUIRED IN FINISHED SPACES, OTHER THAN THAT SHOWN, CONTRACTOR SHALL PROVIDE AND COORDINATE EXACT LOCATION OF PANELS WITH ARCHITECT PRIOR TO INSTALLATION.

9. PERFORM ALL WORK IN ACCORDANCE WITH UFC 3-420-01 PLUMBING SYSTEMS.

10. THE CONTRACTOR IS RESPONSIBLE TO PROVIDE ALL MATERIALS NECESSARY TO COMPLETE SCOPE OF WORK UNLESS OTHERWISE SPECIFIED.

11. INSTALLATION OF PLUMBING PIPING MUST BE COORDINATED WITH OTHER TRADES TO AVOID CONFLICTS.

12. CONTRACTOR MUST NOT ORDER EQUIPMENT OR BEGIN FABRICATION OF PARTS PRIOR TO SHOP DRAWING APPROVAL.

13. TEST, BALANCE, STERILIZE AND FLUSH PIPING SYSTEMS. CLEAN ALL EQUIPMENT AND FIXTURES AT THE COMPLETION OF THE PROJECT. KEEP PREMISES CLEAN DURING CONSTRUCTION.

14. PROVIDE ACCESS DOORS/PANELS AT LOCATION OF VALVES AND OTHER COMPONENTS WHERE LOCATED ABOVE HARD CEILINGS OR INSIDE WALLS.

15. ALL SLOPES AND INVERT ELEVATIONS MUST BE VERIFIED BEFORE ANY PIPING IS INSTALLED IN ORDER TO ENSURE THAT PROPER SLOPES ARE MAINTAINED.

16. ALL WATER LINES MUST HAVE SHUT-OFF VALVES AT CONNECTIONS OF FIXTURES AND EQUIPMENT. PROVIDE DRAIN VALVES AT PIPING LOW POINTS.

17. PIPE PENETRATIONS THROUGH FIRE OR SMOKE PARTITIONS, WALLS, AND/OR FLOORS MUST BE MADE FIRE AND SMOKE TIGHT. MAINTAIN FIRE RATING OF FLOOR AND WALL ASSEMBLIES IN ACCORDANCE WITH UL SYSTEMS. INSTALL PIPE PENETRATION ASSEMBLIES IN ACCORDANCE WITH UL LISTED MANUFACTURER'S RECOMMENDATIONS. PENETRATIONS MUST BE IN ACCORDANCE WITH IAW UL THROUGH-WALL DIRECTORY.

18. FIELD VERIFY CONDITIONS BEFORE STARTING CONSTRUCTION AND NOTIFY THE ARCHITECT/ENGINEER OF DISCREPANCIES WITH THE CONSTRUCTION DOCUMENTS AND/OR POTENTIAL PROBLEMS OBSERVED BEFORE COMMENCING WORK IN AFFECTED AREAS.

19. PROVIDE ALL NECESSARY HANGERS FOR SUPPORT OF HORIZONTAL AND VERTICAL PIPING IN ACCORDANCE WITH GOOD PRACTICE AND MANUFACTURER'S RECOMMENDATIONS. PROVIDE SLEEVES AND ESCUTCHEONS FOR ALL PIPING PASSING THROUGH WALLS AND FLOORS.

20. IN GENERAL, ALL PIPING MUST BE RUN CONCEALED IN SUSPENDED CEILING AND PIPE SPACES PROVIDED UNLESS NOTED OR INDICATED OTHERWISE.

21. DEAD ENDS MUST BE PROHIBITED IN THE INSTALLATION OF ANY PART OF THE DRAINAGE SYSTEM (EXCEPT FUTURE PROVISIONS).

22. PENETRATIONS FOR SHOWER HEAD ROUGH-INS MUST BE MADE WATERTIGHT BY CAULKING THE SHOWER HEAD ESCUTCHEON PLATES TO FINISHED SURFACE.

PLUMBING SUMMARY

SYSTEM & MATERIAL	FIXTURE UNITS	MAIN SIZE
WASTE AND VENT SYSTEM		
BELOW SLAB: PVC DWV SCHEDULE 40 IPS (SOLID) CONFORMING TO ASTM D-2665 ABOVE SLAB: PVC DWV SCHEDULE 40 IPS (SOLID) CONFORMING TO ASTM D-2665	120.50	4"
DOMESTIC WATER SYSTEM		
BELOW SLAB: TYPE "K" SOFT COPPER WITH NO JOINTS BELOW SLAB ABOVE SLAB: TYPE "L" ANNEALED COPPER WITH 95/5 SOLDER JOINTS.	196.25	2-1/2" 90 GPM

APPR | DATE | DESCRIPTION | SYM

NAVFAC

NORTH CAROLINA
SEAL
28374
ENGINEER
JONATHAN D. LEHMAN
7-1-26
SEAL

CRENSHAW CONSULTING Engineers
NC LICENSE #C-1168
3916 Rush Street, Suite 200
Raleigh, North Carolina 27609
919-871-1070 Fax 871-0409

A/E INFO

APPROVED

FOR COMMANDER NAVFAC

ACTIVITY

SATISFACTORY TO

DES	PRC	DRW	DJG
CHK	JDL		
PM/DM	L. PEED		
BRANCH MANAGER	H. PERRY		
CHIEF ENG/ARCH	P. FAULKNER		
FIRE PROTECTION	D. CHASTAIN		

DEPARTMENT OF THE NAVY
NAVAL FACILITIES ENGINEERING COMMAND
IPT MARINE CORPS
MARINE CORPS AIR STATION
NAVAL FACILITIES ENGINEERING COMMAND - MIDATLANTIC
NAVAL STATION - NORFOLK, VA.
CHERRY POINT, NC

MCOLF ATLANTIC
BUILDING 7019 RENOVATIONS

PLUMBING COVER SHEET

SCALE:	AS INDICATED
STATION DESIGN WON:	7406712
STATION CONSTRUCTION WON:	7406712
NAVFAC DRAWING NO.	12939497
SHEET	72 OF 148

P-001

DRAWFORM REVISION: 25 AUGUST 2020

#	PD101 - DEMO PLAN NOTES
1	DEMO ALL EXISTING SANITARY SEWER PIPING TO BUILDING SEWER CONNECTION 5FT OUTSIDE OF BUILDING. DEMO ALL EXISTING SANITARY VENT PIPING IN THE BUILDING.
2	REMOVE ALL PLUMBING FIXTURES IN THE LIVING SPACES AND RESTROOMS OF THE BUILDING.
3	DEMO ALL EXISTING PLUMBING EQUIPMENT AND PIPING IN MECHANICAL ROOM.
4	DEMO ALL EXISTING DOMESTIC WATER PIPING TO 5FT OUTSIDE OF BUILDING.
5	DEMO ALL EXISTING PLUMBING EQUIPMENT AND ASSOCIATED PIPING IN KITCHEN SPACES.
6	DEMO ALL EXISTING GREASE WASTE PIPING FROM KITCHEN SPACES TO 5FT OUTSIDE OF BUILDING. GREASE INTERCEPTOR IS EXISTING TO REMAIN.
7	DEMO ALL EXISTING WASTE PIPING IN GYM SPACES DOWN TO BELOW SLAB AND PERMANENTLY CAP. PATCH AND REPAIR EXISTING SLAB TO MATCH EXISTING CONDITIONS.

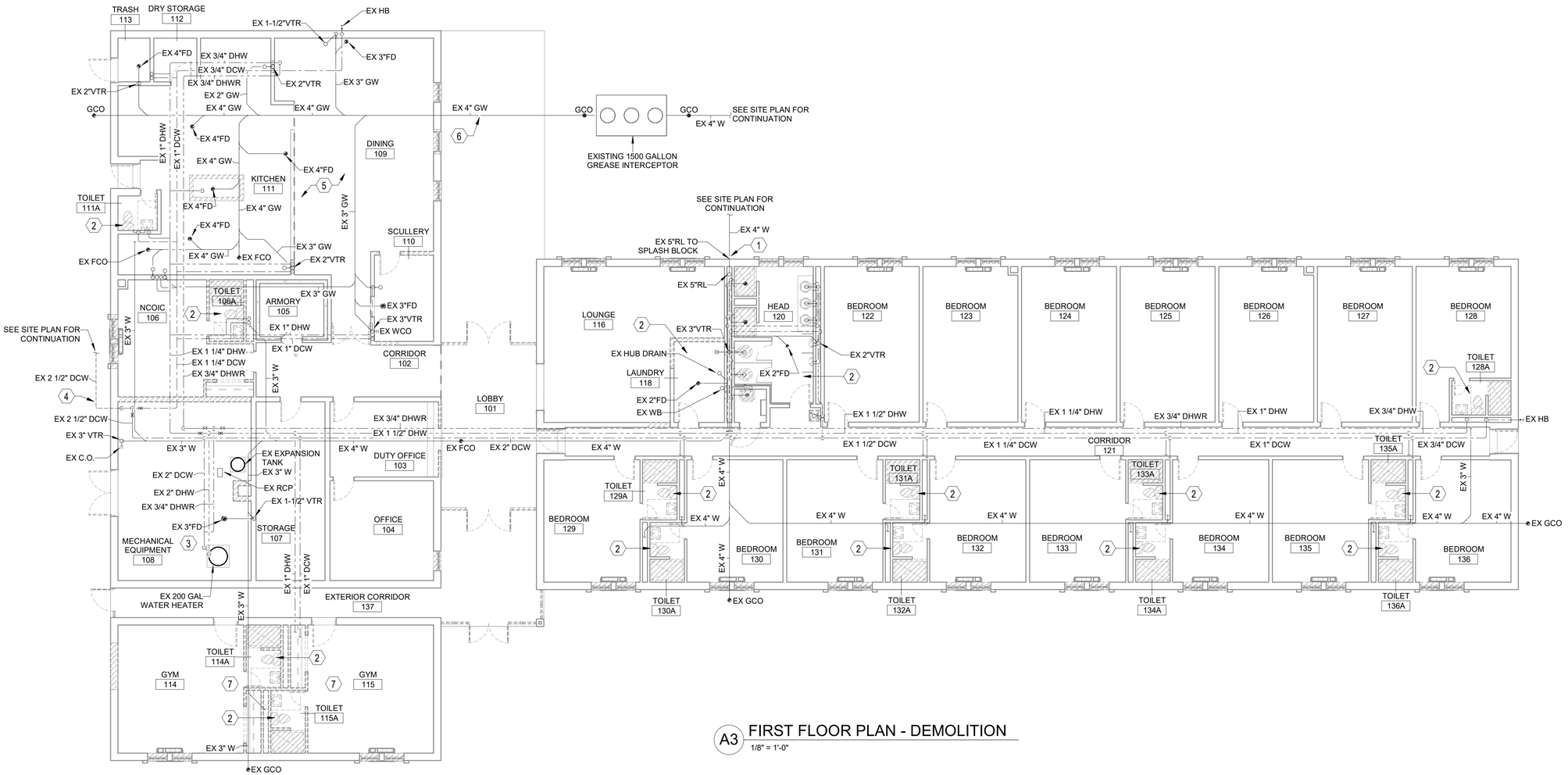

A3 FIRST FLOOR PLAN - DEMOLITION
1/8" = 1'-0"

GRAPHIC SCALE: 1/8"=1'-0"
8' 0 4' 8' 16'

SYM	DESCRIPTION	DATE	APPR

NAVFAC

NORTH CAROLINA
SEAL
28374
ENGINEER
JONATHAN D. LEHMAN
7-1-26
SEAL

CRENSHAW CONSULTING Engineers
www.crenshawconsulting.com
NC LICENSE #C-1168
3816 Bush Street, Suite 200
Raleigh, North Carolina 27609
919-571-1070 Fax 571-0429

A/E INFO

APPROVED

FOR COMMANDER NAVFAC

ACTIVITY

SATISFACTORY TO

DES	PRC	DRW	DJG	CHK	JDL

PM/DM	L. PEED
BRANCH MANAGER	H. PERRY
CHIEF ENG/ARCH	P. FAULKNER
FIRE PROTECTION	D. CHASTAIN

DEPARTMENT OF THE NAVY
NAVAL FACILITIES ENGINEERING COMMAND ~ MIDATLANTIC
1PT MARINE CORPS
MARINE CORPS AIR STATION
NAVAL FACILITIES ENGINEERING COMMAND ~ MIDATLANTIC
NAVAL STATION - NORFOLK, VA
CHERRY POINT, NC

MCOLF ATLANTIC BUILDING 7019 RENOVATIONS

FIRST FLOOR PLAN - EXISTING/DEMOLITION - PLUMBING

SCALE:	AS INDICATED
STATION DESIGN WON:	7406712
STATION CONSTRUCTION WON:	7406712
NAVFAC DRAWING NO.	12939498
SHEET	73 OF 148

PD101

DRAWFORM REVISION: 25 AUGUST 2020

#	P-101 - PLAN NOTES
1	EXTEND AND CONNECT NEW 4"W PIPING TO EXISTING BUILDING SANITARY SEWER CONNECTION 5FT OUTSIDE OF BUILDING.
2	EXTEND AND CONNECT NEW 4"GW PIPING TO EXISTING BUILDING GREASE WASTE CONNECTION 5FT OUTSIDE OF BUILDING.
3	P.C. TO WATER JET EXISTING GREASE LINE UPSTREAM OF GREASE INTERCEPTOR TO ENSURE PROPER FLOW PRIOR TO BEGINNING NEW WORK.

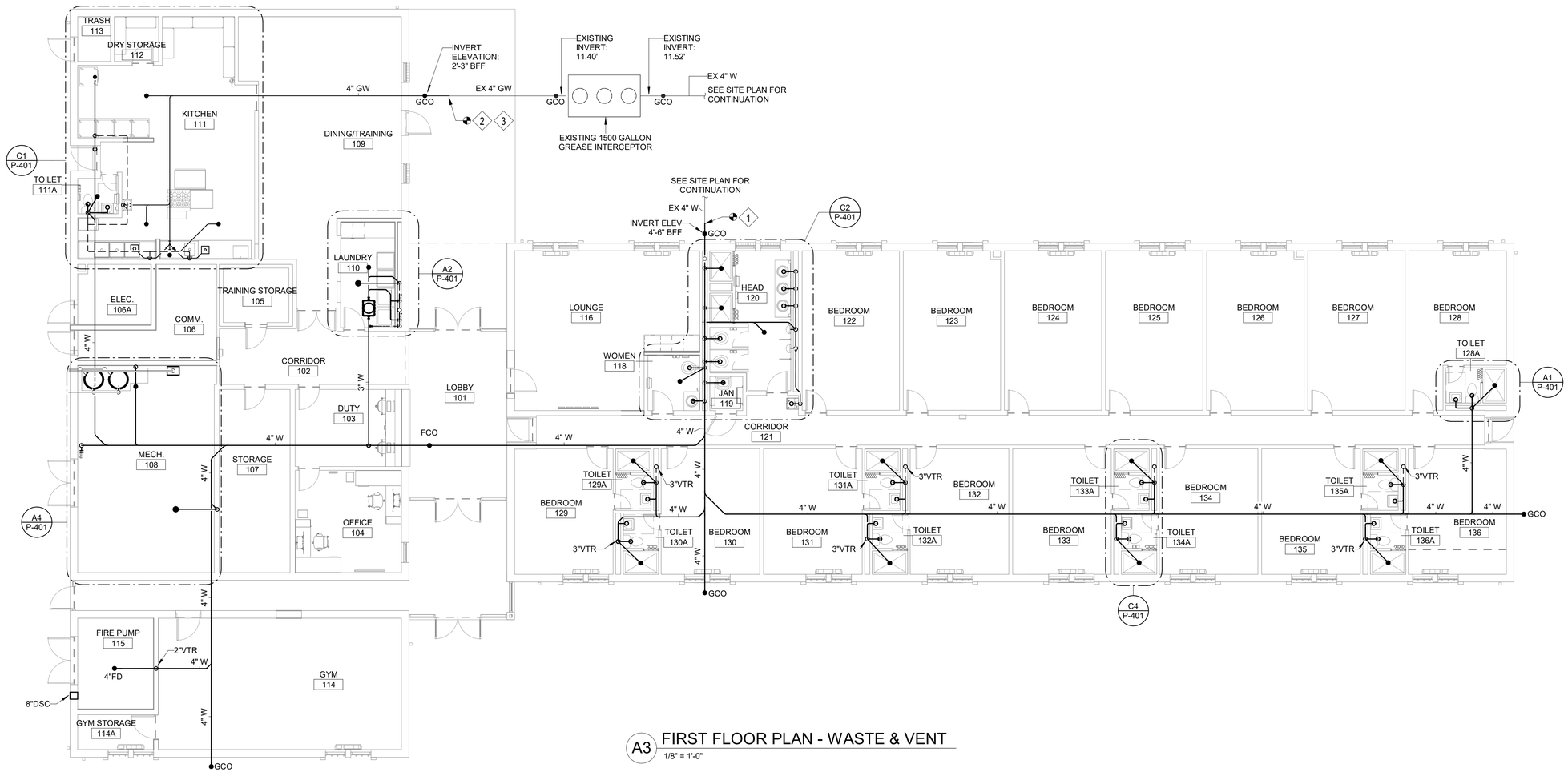

A3 FIRST FLOOR PLAN - WASTE & VENT
1/8" = 1'-0"

GRAPHIC SCALE: 1/8"=1'-0"
8' 0 4' 8' 16'

SYM	DESCRIPTION	DATE	APPR

NAVFAC

NORTH CAROLINA PROFESSIONAL SEAL 28374 ENGINEER JONATHAN D. LEHMAN
7-1-26
SEAL

CRENSHAW CONSULTING engineers
NC LICENSE #C-1156
www.crenshawconsulting.com
3516 Bush Street, Suite 200
Raleigh, North Carolina 27609
919-871-9370 Fax 871-5620

A/E INFO

APPROVED

FOR COMMANDER NAVFAC
ACTIVITY

SATISFACTORY TO

DES	PRC	DRW	DJG	CHK	JDL
PM/DM	L. PEED				
BRANCH MANAGER	H. PERRY				
CHIEF ENG/ARCH	P. FAULKNER				
FIRE PROTECTION	D. CHASTAIN				

DEPARTMENT OF THE NAVY
NAVAL FACILITIES ENGINEERING COMMAND
NAVAL FACILITIES ENGINEERING COMMAND ~ MIDATLANTIC
NAVAL STATION - NORFOLK, VA
IPT MARINE CORPS
MARINE CORPS AIR STATION
CHERRY POINT, NC

MCOLF ATLANTIC
BUILDING 7019 RENOVATIONS

FIRST FLOOR PLAN - WASTE AND VENT

SCALE: AS INDICATED
STATION DESIGN WON: 7406712
STATION CONSTRUCTION WON: 7406712
NAVFAC DRAWING NO. 12939499
SHEET 74 OF 148
P-101

DRAWFORM REVISION: 25 AUGUST 2020

#	P-102 - PLAN NOTES
1	4"DCW MAIN TO SITE UTILITY. SEE SITE PLAN FOR CONTINUATION OF DOMESTIC WATER PIPING.

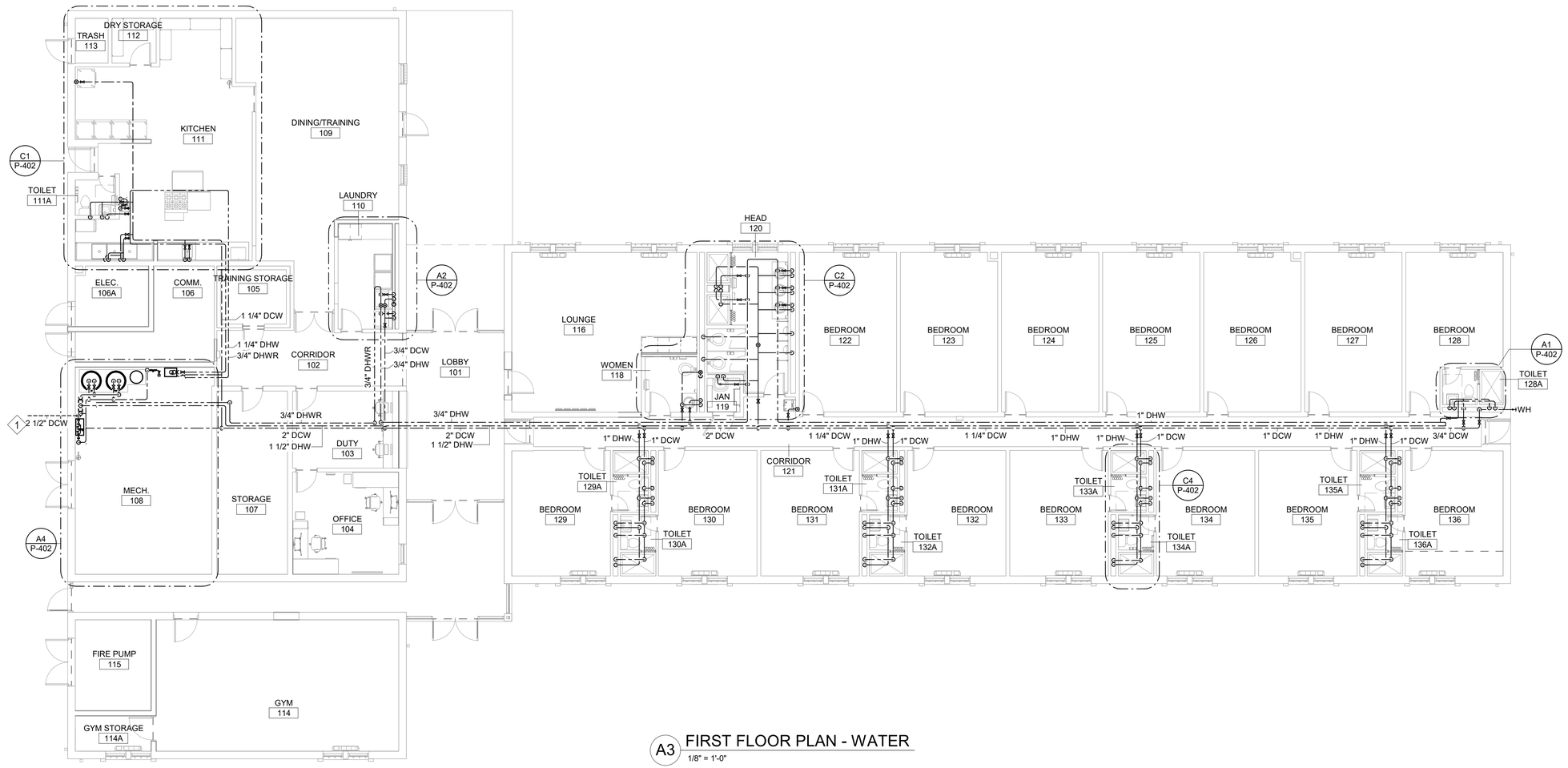

A3 FIRST FLOOR PLAN - WATER
1/8" = 1'-0"

GRAPHIC SCALE: 1/8"=1'-0"
8' 0 4' 8' 16'

SYM	DESCRIPTION	DATE	APPR

NAVFAC

NORTH CAROLINA
28374
JONATHAN D. LEHMAN
ENGINEER
7-1-26
SEAL

CRENSHAW CONSULTING Engineers
www.crenshawconsulting.com
NC LICENSE #C-1158
3916 Bush Street, Suite 200
Raleigh, North Carolina 27609
919-871-1070 Fax 871-0429

A/E INFO

APPROVED

FOR COMMANDER NAVFAC

ACTIVITY

SATISFACTORY TO

DES	PRC	DRW	DJG	CHK	JDL

PM/DM	L. PEED
BRANCH MANAGER	H. PERRY
CHIEF ENG/ARCH	P. FAULKNER
FIRE PROTECTION	D. CHASTAIN

DEPARTMENT OF THE NAVY
NAVAL FACILITIES ENGINEERING COMMAND
IPT MARINE CORPS
NAVAL FACILITIES ENGINEERING COMMAND - MIDATLANTIC
NAVAL STATION - NORFOLK, VA
MARINE CORPS AIR STATION CHERRY POINT, NC
MCOLF ATLANTIC
BUILDING 7019 RENOVATIONS
FIRST FLOOR PLAN - WATER

SCALE:	AS INDICATED
STATION DESIGN WON:	7406712
STATION CONSTRUCTION WON:	7406712
NAVFAC DRAWING NO.	12939500
SHEET	75 OF 148

P-102

DRAWFORM REVISION: 25 AUGUST 2020

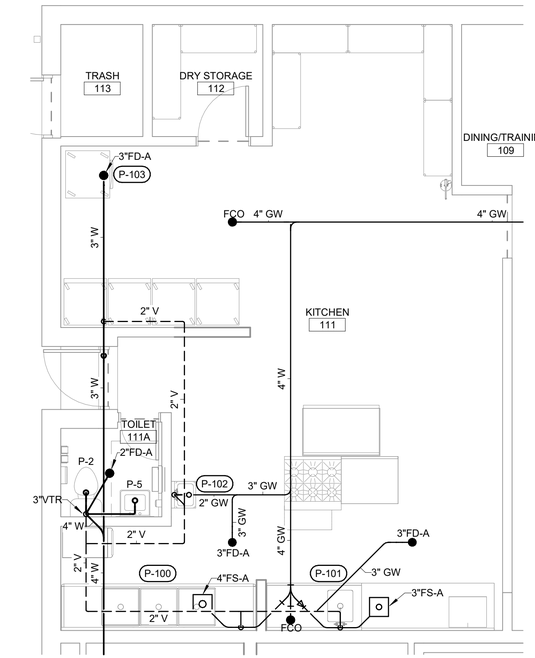

C1 ENLARGED PLAN - KITCHEN - WASTE AND VENT
1/4" = 1'-0"

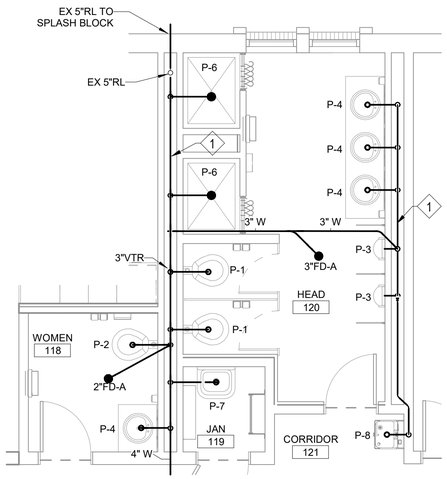

C2 ENLARGED PLAN - CORE RESTROOMS - WASTE & VENT
1/4" = 1'-0"

#	P-401 - PLAN NOTES
1	VENT PIPING ROUTED DIRECTLY ABOVE SANITARY PIPING IN CHASE. SEE RISER DIAGRAM FOR CLARITY.
2	LINT INTERCEPTOR BELOW FLOOR. SEE LINT INTERCEPTOR DETAIL FOR MORE INFORMATION.
3	LINT INTERCEPTOR VENT PIPING ROUTED BELOW FLOOR.
4	TERMINATE STORAGE TYPE GAS WATER HEATER'S EXHAUST AND INTAKE AIR THROUGH SIDEWALL IN THIS AREA.
5	TERMINATE TANKLESS TYPE GAS WATER HEATER'S DIRECT VENT THROUGH SIDEWALL IN THIS AREA.

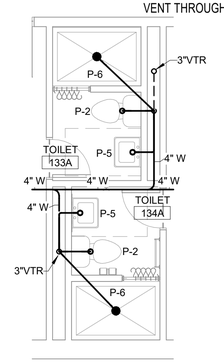

C4 ENLARGED PLAN - TYPICAL RESTROOMS - WASTE AND VENT
1/4" = 1'-0"

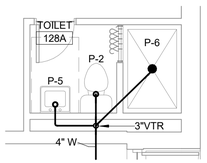

A1 ENLARGED PLAN - SINGLE RESTROOM - WASTE AND VENT
1/4" = 1'-0"

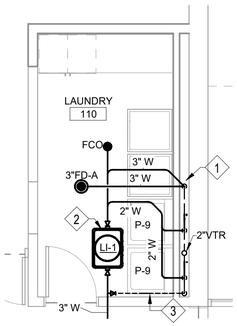

A2 ENLARGED PLAN - LAUNDRY - WASTE & VENT
1/4" = 1'-0"

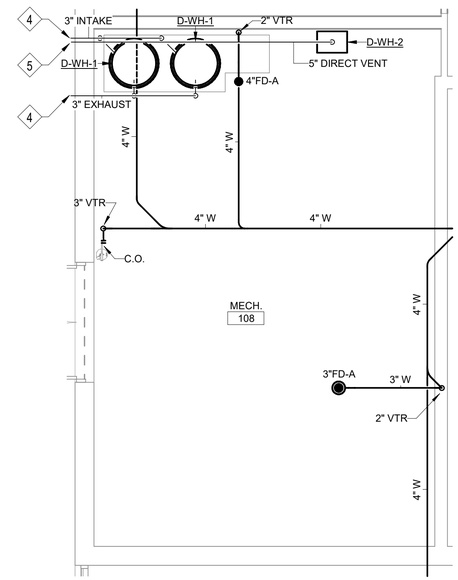

A4 ENLARGED PLAN - MECHANICAL ROOM - WASTE & VENT
1/4" = 1'-0"

SYM	DESCRIPTION	DATE	APPR

NAVFAC

NORTH CAROLINA
SEAL
28374
ENGINEER
JONATHAN D. LEHMAN
7-1-26
SEAL

CRENSHAW CONSULTING engineers
NC LICENSE #C-1156
3016 Bush Street, Suite 200
Raleigh, North Carolina 27609
919-871-1070 Fax 871-5620

A/E INFO

APPROVED

FOR COMMANDER NAVFAC
ACTIVITY

SATISFACTORY TO

DES	PRC	DRW	DJG	CHK	JDL
PM/DM	L. PEED				
BRANCH MANAGER	H. PERRY				
CHIEF ENG/ARCH	P. FAULKNER				
FIRE PROTECTION	D. CHASTAIN				

DEPARTMENT OF THE NAVY
NAVAL FACILITIES ENGINEERING COMMAND
NAVAL FACILITIES ENGINEERING COMMAND ~ MIDATLANTIC
NAVAL STATION - NORFOLK, VA
IPT MARINE CORPS
MARINE CORPS AIR STATION
CHERRY POINT, NC

MCOLF ATLANTIC
BUILDING 7019 RENOVATIONS

ENLARGED PLANS - WASTE AND VENT

SCALE: AS INDICATED
STATION DESIGN WON: 7406712
STATION CONSTRUCTION WON: 7406712
NAVFAC DRAWING NO. 12939501
SHEET 76 OF 148
P-401

DRAWFORM REVISION: 25 AUGUST 2020

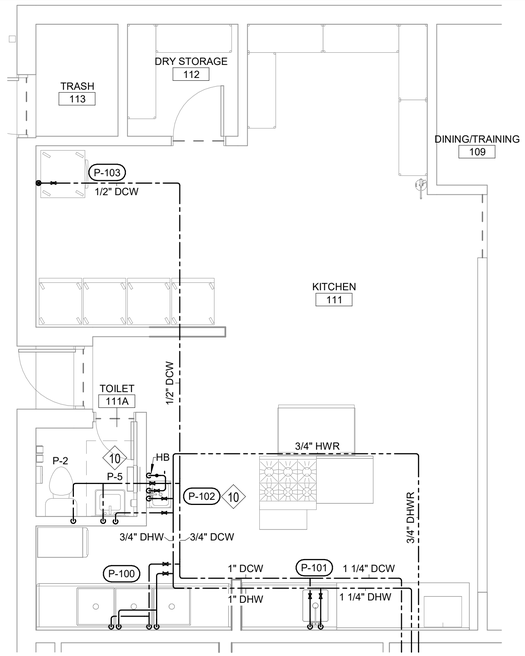

C1 ENLARGED PLAN - KITCHEN - WATER
1/4" = 1'-0"

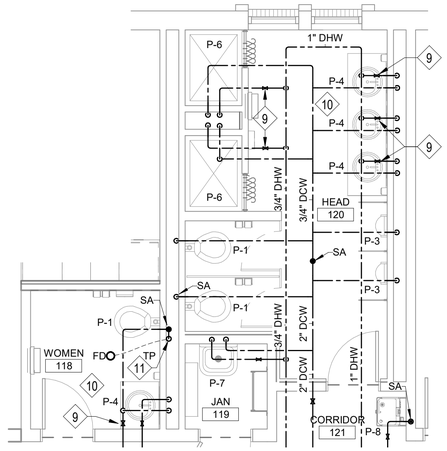

C2 ENLARGED PLAN - CORE RESTROOMS - WATER
1/4" = 1'-0"

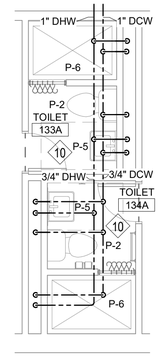

C4 ENLARGED PLAN - TYPICAL RESTROOMS - WATER
1/4" = 1'-0"

#	P-402 - PLAN NOTES
1	NEW 2-1/2" RPZ TYPE BACKFLOW PREVENTER. SEE BACKFLOW PREVENTER DETAIL FOR MORE INFORMATION.
2	(2) 100 GALLON GAS WATER HEATERS IN DRAIN PANS ON HOUSEKEEPING PAD. ROUTE 1" PIPE FROM DRAIN PAN TO FLOOR DRAIN (INDIRECT). SEE WATER HEATER DETAIL FOR MORE INFORMATION.
3	SEE WATER HEATER DETAIL FOR CONTINUATION OF HOT WATER RECIRCULATION PIPING.
4	THERMOSTATIC MIXING VALVE MOUNTED ON WALL. SEE WATER HEATER DETAIL ON SHEET P-501 FOR MORE INFORMATION.
5	TURN NEW 2-1/2"DCW MAIN UP ABOVE SLAB AT THIS LOCATION. PROVIDE MAIN SHUTOFF VALVE IN ACCESSIBLE LOCATION.
6	NEW 3/4" RPZ TYPE BACKFLOW PREVENTER FOR HOT WATER MECHANICAL MAKEUP WATER. SEE BACKFLOW PREVENTER DETAIL FOR MORE INFORMATION.
7	SEE MECHANICAL PLANS FOR CONTINUATION OF HW MECHANICAL MAKEUP WATER.
8	TANKLESS GAS WATER HEATER MOUNTED ON WALL. SEE WATER HEATER DETAIL FOR MORE INFORMATION.
9	PROVIDE ACCESS PANEL FOR SHUT OFF VALVES.
10	PROVIDE ASSE 1070 APPROVED THERMOSTATIC MIXING FOR EACH HANDWASHING SINK'S FAUCET.
11	DROP 1/2"DCW DOWN TO TRAP PRIMER VALVE. ROUTE 1/2"DCW BELOW FLOOR TO FLOOR DRAIN'S TRAP PRIMER CONNECTION.

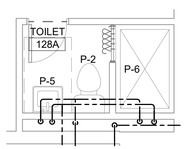

A1 ENLARGED PLAN - SINGLE RESTROOM - WATER
1/4" = 1'-0"

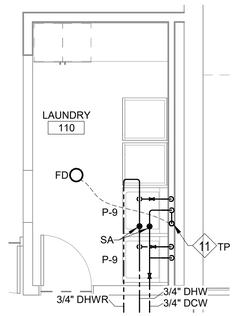

A2 ENLARGED PLAN - LAUNDRY - WATER
1/4" = 1'-0"

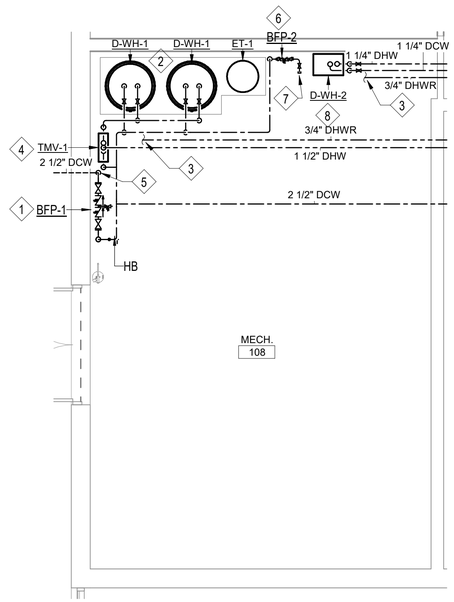

A4 ENLARGED PLAN - MECHANICAL ROOM - WATER
1/4" = 1'-0"

APPR | DATE | DESCRIPTION | SYM

NAVFAC

NORTH CAROLINA
28374
ENGINEER
JONATHAN D. LEHMAN
7-1-26
SEAL

CRENSHAW CONSULTING Engineers
NC LICENSE #C-1168
www.crenshawconsulting.com
3816 Bush Street, Suite 200
Raleigh, North Carolina 27609
919-871-1070 Fax 871-0429

A/E INFO

APPROVED
FOR COMMANDER NAVFAC
ACTIVITY
SATISFACTORY TO

DES	PRC	DRW	DJG
CHK	JDL		
PM/DM	L. PEED		
BRANCH MANAGER	H. PERRY		
CHIEF ENG/ARCH	P. FAULKNER		
FIRE PROTECTION	D. CHASTAIN		

DEPARTMENT OF THE NAVY
NAVAL FACILITIES ENGINEERING COMMAND ~ MIDATLANTIC
1PT MARINE CORPS
MARINE CORPS AIR STATION
NAVAL FACILITIES ENGINEERING COMMAND
NAVAL STATION - NORFOLK, VA
CHERRY POINT, NC
MCOLF ATLANTIC
BUILDING 7019 RENOVATIONS
ENLARGED PLANS - WATER

SCALE:	AS INDICATED
STATION DESIGN WON:	7406712
STATION CONSTRUCTION WON:	7406712
NAVFAC DRAWING NO.	12939502
SHEET	77 OF 148

P-402

DRAWFORM REVISION: 25 AUGUST 2020

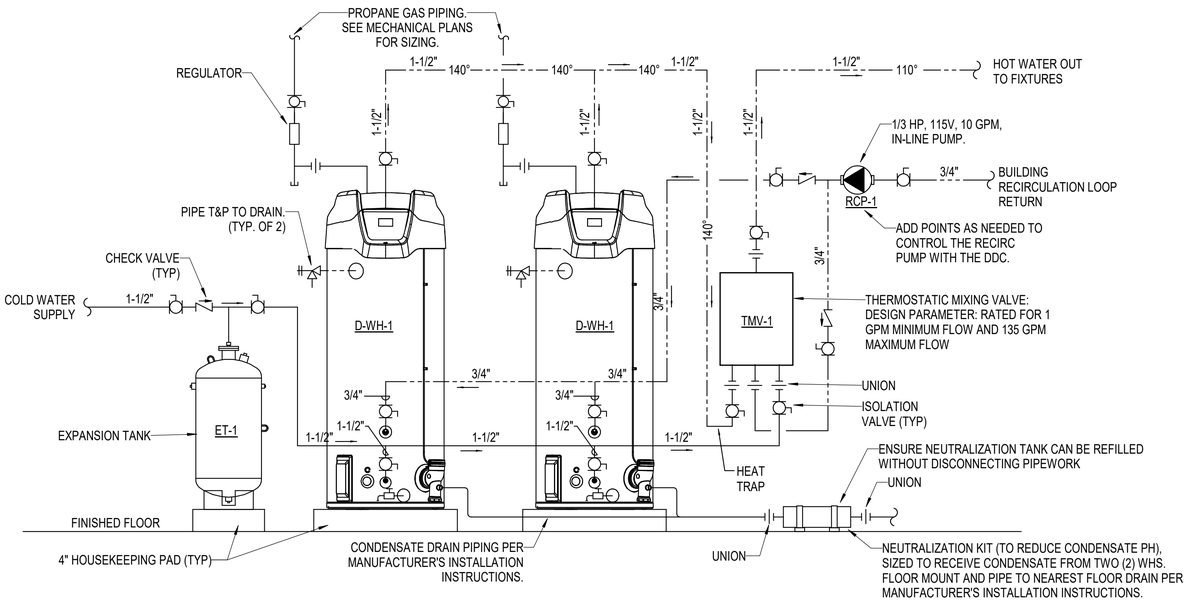

C1 WATER HEATER DETAIL (D-WH-1)
NTS

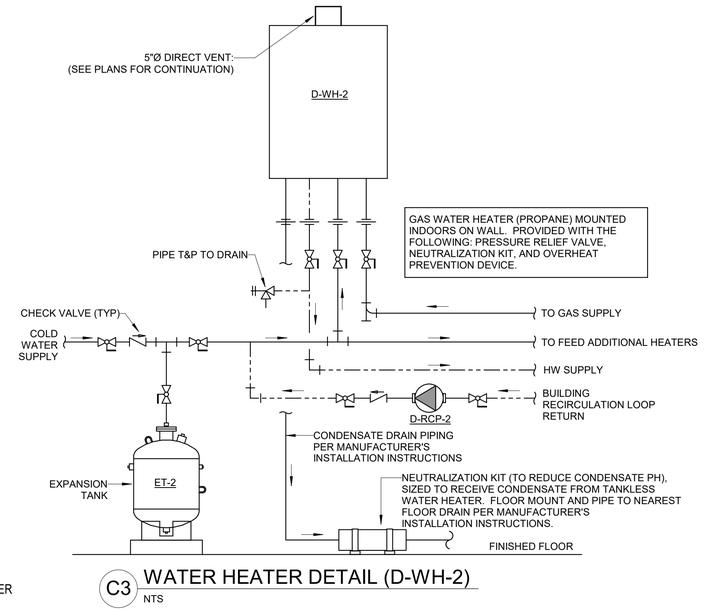

C3 WATER HEATER DETAIL (D-WH-2)
NTS

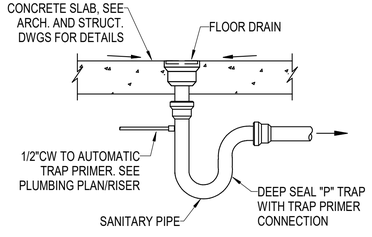

B1 FLOOR DRAIN DETAIL
NTS

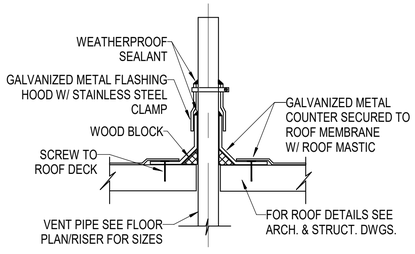

B2 VENT THRU ROOF DETAIL
NTS

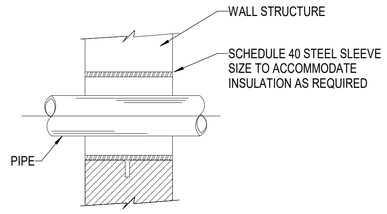

B3 PIPE THRU NON-RATED WALL DETAIL
NTS

LABEL TEXT AND COLOR LEGEND		
PIPE SYSTEM DESCRIPTION	LETTER COLOR	BACKGROUND COLOR
COMPRESSED AIR	BLUE	WHITE
COLD WATER SUPPLY	GREEN	WHITE
HOT WATER SUPPLY	GREEN	WHITE
HOT WATER RETURN	GREEN	WHITE

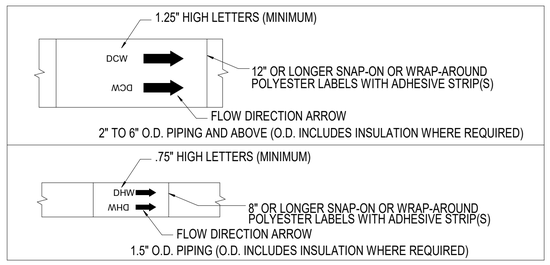

A1 PIPE DESIGNATOR DETAIL
NTS

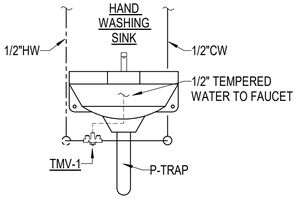

A2 THERMOSTATIC MIXING VALVE DETAIL
NTS

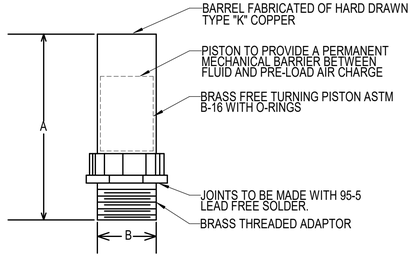

NPT SIZE	P.D.I. SYMBOL	FIXTURE UNIT RATINGS	A SIZE	B SIZE
1/2"	A	1 - 11	5"	1/2"
3/4"	B	12 - 32	5"	3/4"
1"	C	33 - 60	7"	1"
1-1/4"	D	60 - 113	7"	1-1/4"
1-1/2"	E	114 - 154	9"	1-1/2"
2"	F	155 - 330	9"	2"

A3 SHOCK ABSORBER DETAIL
NTS

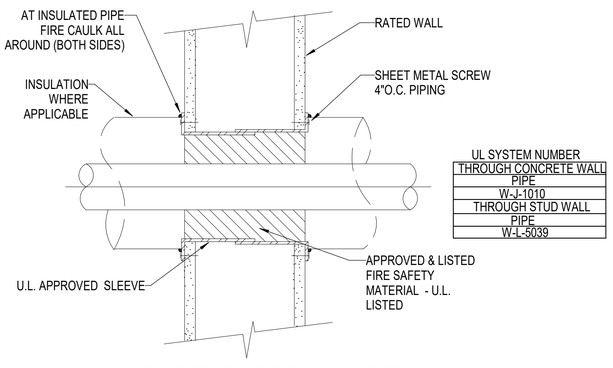

UL SYSTEM NUMBER
THROUGH CONCRETE WALL
PIPE
W-J-1010
THROUGH STUD WALL
PIPE
W-L-5039

A4 PIPE THRU FIRE WALL DETAIL
NTS

APPR	DATE	DESCRIPTION	SYM

NAVFAC

NORTH CAROLINA SEAL 28374 ENGINEER JONATHAN D. LEHMAN
7-1-26
SEAL

CRENSHAW CONSULTING Engineers
NC LICENSE #C-1168
www.crenshawconsulting.com
3816 Bush Street, Suite 200
Raleigh, North Carolina 27609
919-571-1570 Fax 571-5029

A/E INFO

APPROVED

FOR COMMANDER NAVFAC

ACTIVITY

SATISFACTORY TO

DES	PRC	DRW	DJG	CHK	JDL

PM/DM	L. PEED
BRANCH MANAGER	H. PERRY
CHIEF ENG/ARCH	P. FAULKNER
FIRE PROTECTION	D. CHASTAIN

DEPARTMENT OF THE NAVY
NAVAL FACILITIES ENGINEERING COMMAND ~ MIDLANTIC
NAVAL STATION - NORFOLK, VA.
IPT MARINE CORPS
MARINE CORPS AIR STATION CHERRY POINT, NC

MCOLF ATLANTIC
BUILDING 7019 RENOVATIONS

PLUMBING DETAILS

SCALE:	AS INDICATED
STATION DESIGN WON:	7406712
STATION CONSTRUCTION WON:	7406712
NAVFAC DRAWING NO.	12939503
SHEET	78 OF 148

P-501

DRAWFORM REVISION: 25 AUGUST 2020

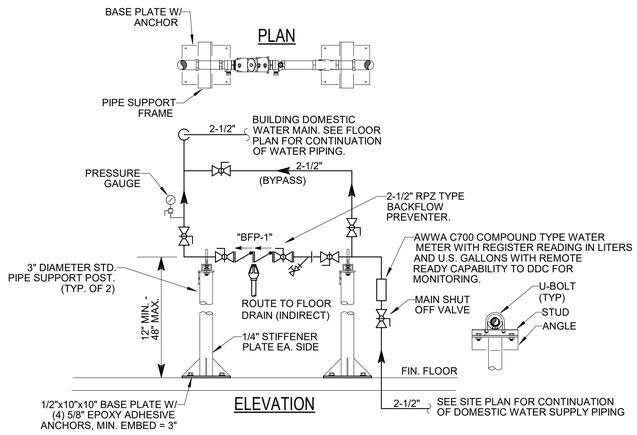

C1 BACKFLOW PREVENTER DETAIL (BFP-1)
NTS

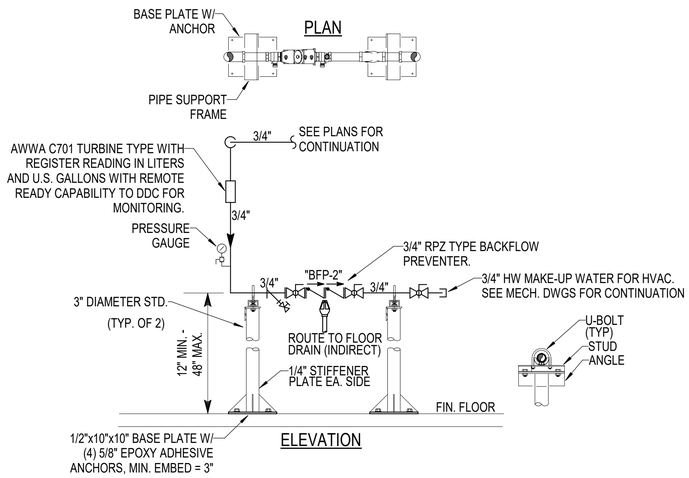

C2 BACKFLOW PREVENTER DETAIL (BPF-2)
NTS

SYM	DESCRIPTION	DATE	APPR

NAVFAC

NORTH CAROLINA
SEAL
28374
ENGINEER
JONATHAN D. LEHMAN
7-1-26
SEAL

CRENSHAW CONSULTING engineers
NC LICENSE #C-1156
www.crenshawconsulting.com
3816 Bush Street, Suite 200
Raleigh, North Carolina 27609
919-871-9370 Fax 871-9820

A/E INFO

APPROVED

FOR COMMANDER NAVFAC
ACTIVITY

SATISFACTORY TO

DES	PRC	DRW	DJG	CHK	JDL

PM/DM	L. PEED
BRANCH MANAGER	H. PERRY
CHIEF ENG/ARCH	P. FAULKNER
FIRE PROTECTION	D. CHASTAIN

DEPARTMENT OF THE NAVY
NAVAL FACILITIES ENGINEERING COMMAND
NAVAL FACILITIES ENGINEERING COMMAND ~ MIDATLANTIC
NAVAL STATION - NORFOLK, VA
IPT MARINE CORPS
MARINE CORPS AIR STATION
CHERRY POINT, NC

MCOLF ATLANTIC
BUILDING 7019 RENOVATIONS

PLUMBING DETAILS

SCALE:	AS INDICATED
STATION DESIGN WON:	7406712
STATION CONSTRUCTION WON:	7406712
NAVFAC DRAWING NO.	12939504
SHEET	79 OF 148

P-502

DRAWFORM REVISION: 25 AUGUST 2020

PLUMBING FIXTURE SCHEDULE

MARK	DESCRIPTION	PIPE SERVICE AND CONN. SIZE				REMARKS
		CW	HW	WASTE	VENT	
P-1	WATER CLOSET FLR. MTD. (FLUSH VALVE)	1"	-	4"	2"	SEE SPECIFICATIONS
P-2	WATER CLOSET FLR. MTD. (FLUSH TANK)	1/2"	-	4"	2"	SEE SPECIFICATIONS
P-3	URINAL	3/4"	-	2"	2"	SEE SPECIFICATIONS
P-4	LAVATORY UNDERMOUNT	1/2"	1/2"	1-1/4"	2"	SEE SPECIFICATIONS
P-5	LAVATORY WALL MTD.	1/2"	1/2"	1-1/4"	2"	SEE SPECIFICATIONS
P-6	SHOWER	1/2"	1/2"	2"	2"	SEE SPECIFICATIONS
P-7	SERVICE SINK WALL MTD.	1/2"	1/2"	3"	2"	SEE SPECIFICATIONS
P-8	ELECTRIC WATER COOLER (SINGLE LEVEL)	1/2"	-	1-1/2"	2"	SEE SPECIFICATIONS
P-9	WASHER BOX	1/2"	1/2"	3"	2"	SEE SPECIFICATIONS

PLUMBING ACCESSORIES SCHEDULE

MARK	DESCRIPTION	BASIS OF DESIGN FIXTURE SPECIFICATIONS
FCO	FLOOR CLEAN OUT	ADJUSTABLE FLOOR CLEANOUT, CAST IRON BODY WITH GAS AND WATERTIGHT ABS TAPERED THREAD PLUG AND ROUND POLISHED NICKEL BRONZE TOP ADJUSTABLE TO FINISHED FLOOR.
GCO	GRADE CLEAN OUT	ADJUSTABLE GROUND CLEANOUT, CAST IRON BODY WITH GAS AND WATERTIGHT ABS TAPERED THREAD PLUG AND ROUND POLISHED NICKEL BRONZE TOP ADJUSTABLE TO FINISHED GRADE.
WCO	WALL CLEAN OUT	WALL CLEANOUT, COATED CAST IRON BODY WITH GAS AND WATERTIGHT ABS TAPERED THREAD PLUG AND ROUND SMOOTH STAINLESS STEEL ACCESS COVER WITH SECURING SCREW.
SA	SHOCK ABSORBER	WATER HAMMER ARRESTOR TO MEET ALL REQUIREMENTS OF ASSE 1010 AS REQUIRED BY 2018 IPC, PLUMBING CODE, SECTION 604.9.
TP	TRAP PRIMER	PRESSURE DROP ACTIVATED TRAP PRIMER VALVE.
VB	VACUUM BREAKER	VACUUM BREAKER TO MEET ALL REQUIREMENTS OF ASSE 1022
WH	WALL HYDRANT - KEYED	WALL HYDRANT WITH ANTI-SIPHON VACUUM BREAKER, AND LOOSE TEE KEY OPERATION.
HB	HOSE BIBB	EXPOSED ANTI-SIPHON AUTOMATIC DRAINING WALL HYDRANT COMPLETE WITH INTEGRAL BACKFLOW PREVENTER, ALL BRONZE INTERIOR PARTS, AND POLISHED CHROME FACE WITH OPERATING KEY.
IM	ICE MAKER	1/4 TURN BRASS BALL HAMMER BALL VALVE, COPPER SWEAT, WALL MOUNTED AT 36" AFF. PROVIDE TUBING AND NECESSARY FITTINGS FOR FINAL CONNECTION.

PLUMBING EQUIPMENT SCHEDULE

TAG	TYPE	DESCRIPTION	LOCATION
D-WH-1 (x2)	DOMESTIC WATER HEATER (GAS)	INDOOR, PROPANE SUPPLIED, MOUNTED IN DRAIN PAN ON HOUSEKEEPING PAD, FULLY CONDENSING, MODULATING, 100 GALLON STORAGE TYPE GAS WATER HEATER, MIN. 96% THERMAL EFFICIENCY, 250 MBH INPUT, 323 GPH RECOVERY @ 90° F RISE, 2,430 LBS OPERATING WEIGHT.	MECH 108
D-WH-2	DOMESTIC WATER HEATER (GAS)	INDOOR, PROPANE SUPPLIED, MOUNTED ON WALL, FULLY CONDENSING, MODULATING, TANKLESS TYPE GAS WATER HEATER, 84% THERMAL EFFICIENCY, 380 MBH INPUT, 6.2 GPM RECOVERY @ 100° F RISE.	MECH 108
D-RCP-1	RECIRCULATION PUMP	STAINLESS STEEL. 1/6 HP, 115 VOLT, 2 GPM @ 13 FT/HD, IN-LINE SINGLE STAGE WET ROTOR TYPE, WITH BOTH TIMER AND THERMOSTATIC CONTROLLERS.	MECH 108
D-RCP-2	RECIRCULATION PUMP	STAINLESS STEEL. 1/25 HP, 115 VOLT, 2 GPM @ 7FT/HD, IN-LINE SINGLE STAGE WET ROTOR TYPE, WITH BOTH TIMER AND THERMOSTATIC CONTROLLERS.	MECH 108
ET-1	EXPANSION TANK	10 GALLON CAPACITY, FIELD-ADJUSTABLE 4-PSI AIR CHARGE, MAXIMUM WORKING PRESSURE OF 150 PSI AND MAXIMUM TEMPERATURE OF 180° F.	MECH 108
ET-2	EXPANSION TANK	2 GALLON CAPACITY, FIELD-ADJUSTABLE 4-PSI AIR CHARGE, MAXIMUM WORKING PRESSURE OF 150 PSI AND MAXIMUM TEMPERATURE OF 180° F.	MECH 108
BFP-1 (2-1/2")	BACKFLOW PREVENTER (MAIN RPZ)	THE ASSEMBLY SHALL MEET THE REQUIREMENTS OF ASSE 1013 AND BE PROVIDED TO PREVENT BACKFLOW DUE TO BACKSIPHONAGE AND/OR BACKPRESSURE. THIS DEVICE WILL BE A REDUCED PRESSURE ZONE (RPZ) TYPE.	MECH 108
BFP-2 (3/4")	BACKFLOW PREVENTER (FOR HW MAKEUP)	THE ASSEMBLY SHALL MEET THE REQUIREMENTS OF ASSE 1013 AND BE PROVIDED TO PREVENT BACKFLOW DUE TO BACKSIPHONAGE AND/OR BACKPRESSURE. THIS DEVICE WILL BE A REDUCED PRESSURE ZONE (RPZ) TYPE.	MECH 108
TMV-1	THERMOSTATIC MIXING VALVE	RATED FOR 1 GPM MINIMUM FLOW AND 96 GPM MAXIMUM FLOW, WITH MAXIMUM 10 PSI PRESSURE DROP.	MECH 108
TMV-2	THERMOSTATIC MIXING VALVE	RATED FOR 0.25 GPM MINIMUM FLOW AND 10 GPM MAXIMUM FLOW WITH MAX 15 PSI DROP.	RESTROOMS
LI-1	LINT INTERCEPTOR	BASKET STYLE SOLIDS INTERCEPTOR, MAX FLOW 35 GPM, 3 INCH INLET AND OUTLET, REMOVEABLE COVER.	LAUNDRY 110
FD-A	FLOOR DRAIN	FLOOR DRAIN W/ 7" DIAMETER RECESSED STRAINER.	(SEE PLANS)

KITCHEN EQUIPMENT SCHEDULE

EQP #	EQUIPMENT	FURNISHED BY	HW	CW	FW	DRAIN	COMMENTS
P-100	THREE COMPARTMENT SINK	EQUIPMENT SUPPLIER	1/2"	1/2"	--	1-1/2" TO F.S.	(x2) 1/2"DCW & (x2) 1/2"DHW @ 36" AFF. (x3) 1-1/2" DRAINS INDIRECT TO FLOOR SINK.
P-101	WORK TABLE W/ SINK	EQUIPMENT SUPPLIER	1/2"	1/2"	--	1-1/2"	PREP SINK: 1/2"DCW & DHW @ 36" AFF, 1-1/2" DRAINS INDIRECT TO FLOOR SINK.
P-102	HAND SINK	EQUIPMENT SUPPLIER	1/2"	1/2"	--	1-1/2"	1/2"DCW & DHW @ 38" AFF, 1-1/2" DIRECT DRAIN @ 18" AFF. MOUNT RIM AT 34" AFF.
P-103	ICE MAKER W/ BIN	EQUIPMENT SUPPLIER	--	1/2"	--	3/4" TO F.S.	1/2"DCW @ 23" AFF. 3/4" DRAIN INDIRECT TO FLOOR SINK.

APPR | DATE | DESCRIPTION | SYM

NAVFAC

NORTH CAROLINA 28374 ENGINEER JONATHAN D. LEHMAN 7-1-26 SEAL

CRENSHAW CONSULTING Engineers
NC LICENSE #C-1168
www.crenshawconsulting.com
3441 Bush Street, Suite 200
Raleigh, North Carolina 27609
919-571-1070 Fax 571-0409

A/E INFO

APPROVED

FOR COMMANDER NAVFAC

ACTIVITY

SATISFACTORY TO

DES PRC | DRW DJG | CHK JDL

PM/DM L. PEED

BRANCH MANAGER H. PERRY

CHIEF ENG/ARCH P. FAULKNER

FIRE PROTECTION D. CHASTAIN

DEPARTMENT OF THE NAVY
NAVAL FACILITIES ENGINEERING COMMAND - MIDATLANTIC
1PT MARINE CORPS
MARINE CORPS AIR STATION
NAVAL STATION - NORFOLK, VA.
CHERRY POINT, NC

MCOLF ATLANTIC
BUILDING 7019 RENOVATIONS

PLUMBING SCHEDULES

SCALE: AS INDICATED

STATION DESIGN WON: 7406712

STATION CONSTRUCTION WON: 7406712

NAVFAC DRAWING NO. 12939505

SHEET 80 OF 148

P-601

DRAWFORM REVISION: 25 AUGUST 2020

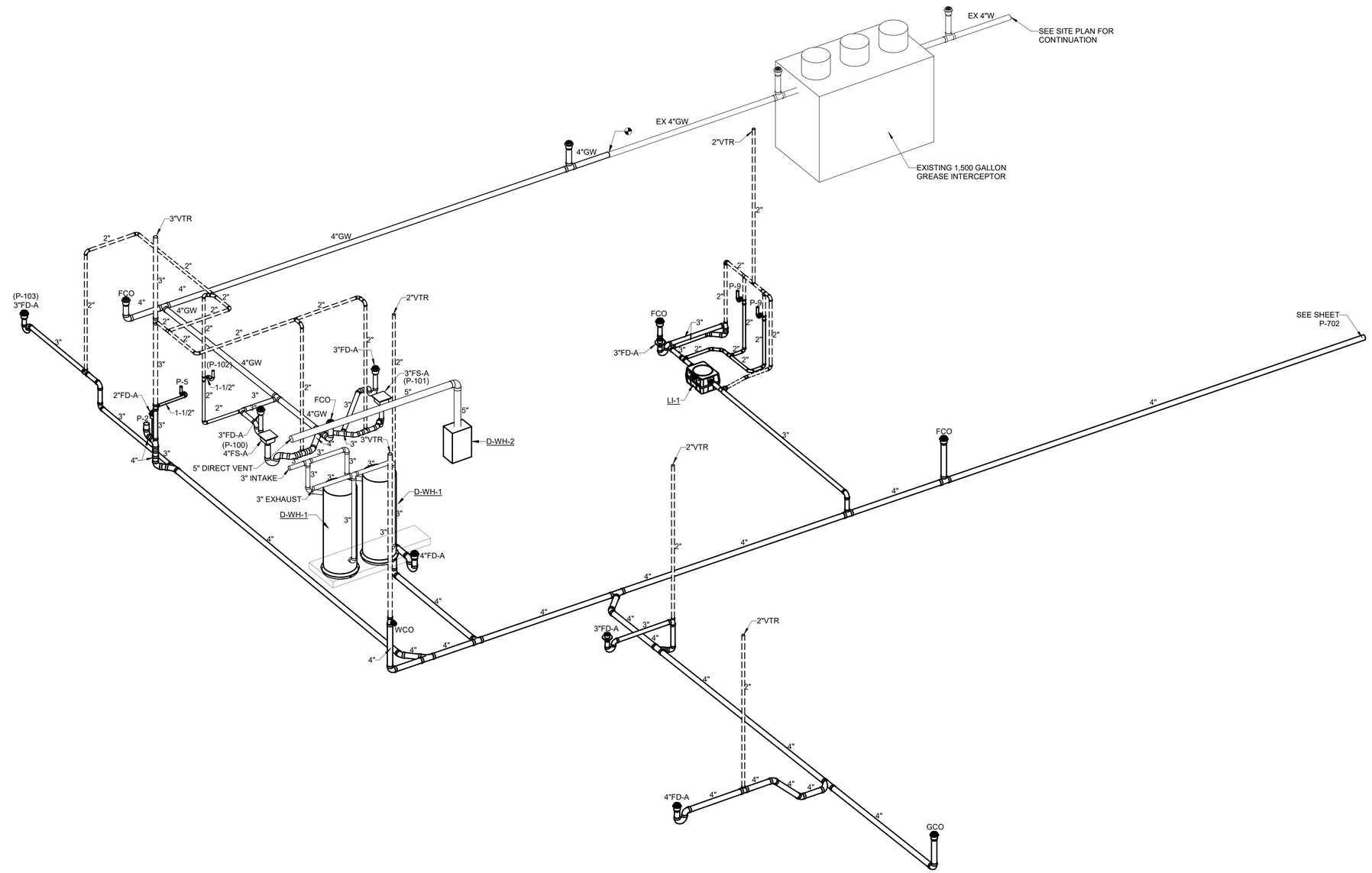

A3 RISER DIAGRAM - WASTE AND VENT (WEST)
NTS

SYM	DESCRIPTION	DATE	APPR

NAVFAC

NORTH CAROLINA PROFESSIONAL SEAL 28374 ENGINEER JONATHAN D. LEHMAN
7-1-26
SEAL

CRENSHAW CONSULTING engineers
www.crenshawconsulting.com
NC LICENSE #C-1156
3816 Bush Street, Suite 200
Raleigh, North Carolina 27609
919-871-9370 Fax 871-5620

A/E INFO

APPROVED

FOR COMMANDER NAVFAC

ACTIVITY

SATISFACTORY TO

DES	PRC	DRW	DJG	CHK	JDL

PM/DM	L. PEED
BRANCH MANAGER	H. PERRY
CHIEF ENG/ARCH	P. FAULKNER
FIRE PROTECTION	D. CHASTAIN

DEPARTMENT OF THE NAVY
NAVAL FACILITIES ENGINEERING COMMAND
NAVAL FACILITIES ENGINEERING COMMAND ~ MIDATLANTIC
NAVAL STATION - NORFOLK, VA
IPT MARINE CORPS
MARINE CORPS AIR STATION
CHERRY POINT, NC

MCOLF ATLANTIC
BUILDING 7019 RENOVATIONS

RISER DIAGRAMS - WASTE AND VENT (WEST)

SCALE:	AS INDICATED
STATION DESIGN WON:	7406712
STATION CONSTRUCTION WON:	7406712
NAVFAC DRAWING NO.	12939506
SHEET	81 OF 148

P-701

DRAWFORM REVISION: 25 AUGUST 2020

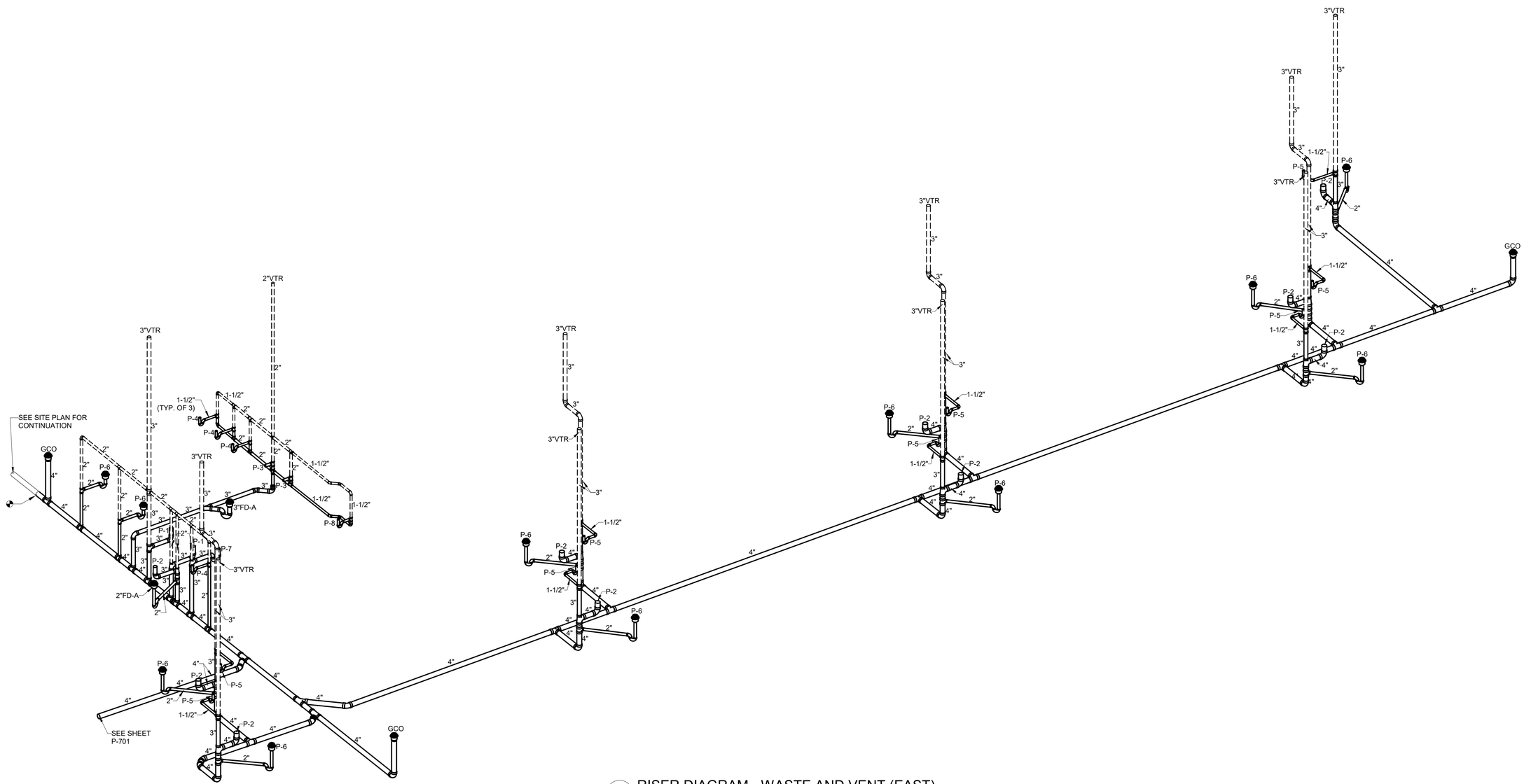

A3 RISER DIAGRAM - WASTE AND VENT (EAST)
NTS

SYM	DESCRIPTION	DATE	APPR

NAVFAC

NORTH CAROLINA
SEAL
28374
ENGINEER
JONATHAN D. LEHMAN
7-1-26
SEAL

CRENSHAW CONSULTING Engineers
www.crenshawconsulting.com
NC LICENSE #C-1168
3816 Bush Street, Suite 200
Raleigh, North Carolina 27609
919-871-1070 Fax 871-0420

A/E INFO

APPROVED

FOR COMMANDER NAVFAC

ACTIVITY

SATISFACTORY TO

DES	PRC	DRW	DJG	CHK	JDL

PM/DM	L. PEED
BRANCH MANAGER	H. PERRY
CHIEF ENG/ARCH	P. FAULKNER
FIRE PROTECTION	D. CHASTAIN

DEPARTMENT OF THE NAVY
NAVAL FACILITIES ENGINEERING COMMAND
1PT MARINE CORPS
MARINE CORPS AIR STATION

NAVAL FACILITIES ENGINEERING COMMAND ~ MIDATLANTIC
NAVAL STATION - NORFOLK, VA

CHERRY POINT, NC

MCOLF ATLANTIC
BUILDING 7019 RENOVATIONS

RISER DIAGRAMS - WASTE AND VENT (EAST)

SCALE:	AS INDICATED
STATION DESIGN WON:	7406712
STATION CONSTRUCTION WON:	7406712
NAVFAC DRAWING NO.	12939507
SHEET	82 OF 148

P-702

DRAWFORM REVISION: 25 AUGUST 2020

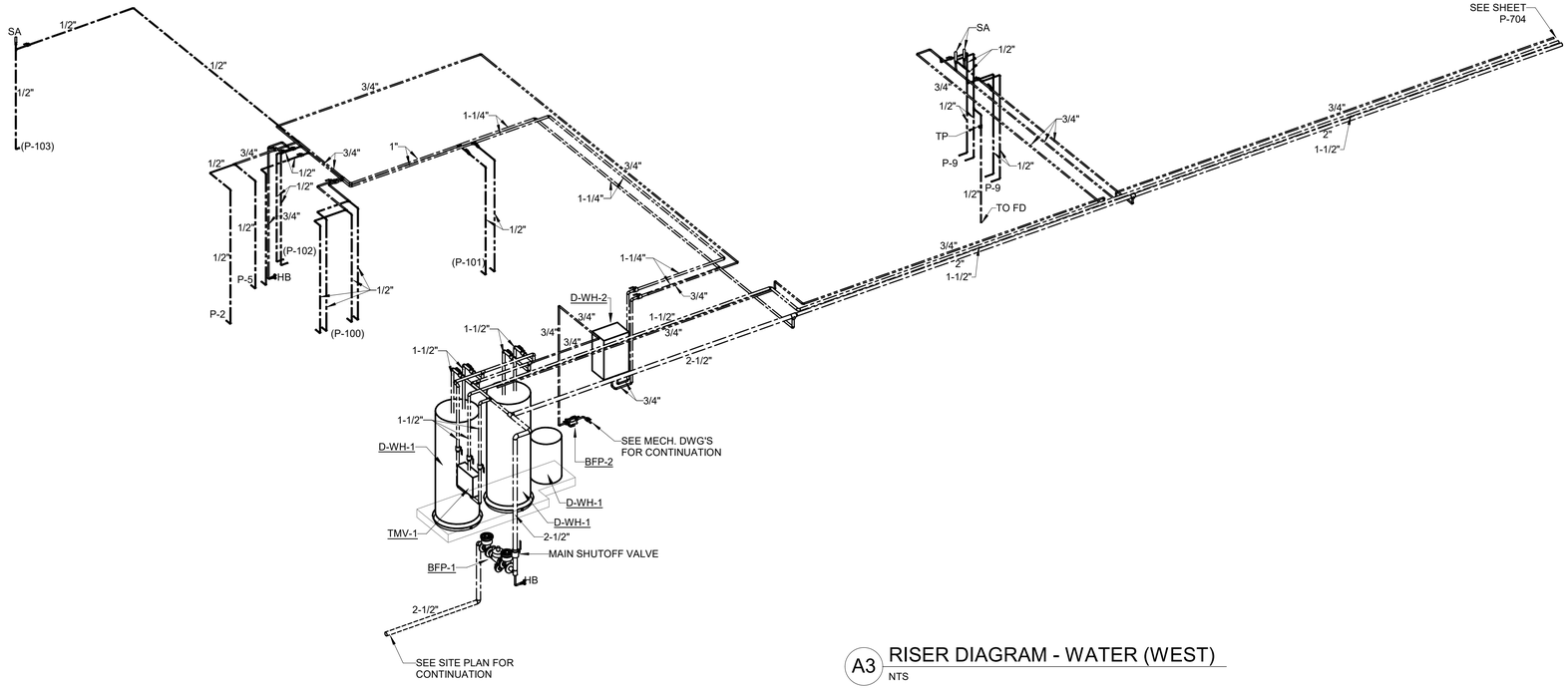

A3 RISER DIAGRAM - WATER (WEST)
NTS

SYM	DESCRIPTION	DATE	APPR

NAVFAC

NORTH CAROLINA
SEAL
28374
JONATHAN D. LEHMAN
ENGINEER
7-1-26
SEAL

CRENSHAW CONSULTING Engineers
www.crenshawconsulting.com
NC LICENSE #C-1168
3816 Bush Street, Suite 200
Raleigh, North Carolina 27609
919-571-1070 Fax 571-0429

A/E INFO

APPROVED

FOR COMMANDER NAVFAC

ACTIVITY

SATISFACTORY TO

DES	PRC	DRW	DJG	CHK	JDL

PM/DM	L. PEED
BRANCH MANAGER	H. PERRY
CHIEF ENG/ARCH	P. FAULKNER
FIRE PROTECTION	D. CHASTAIN

DEPARTMENT OF THE NAVY
NAVAL FACILITIES ENGINEERING COMMAND
1PT MARINE CORPS
MARINE CORPS AIR STATION

NAVAL FACILITIES ENGINEERING COMMAND ~ MIDATLANTIC
NAVAL STATION - NORFOLK, VA.

MCOLF ATLANTIC
BUILDING 7019 RENOVATIONS

CHERRY POINT, NC

RISER DIAGRAMS - WATER (WEST)

SCALE:	AS INDICATED
STATION DESIGN WON:	7406712
STATION CONSTRUCTION WON:	7406712
NAVFAC DRAWING NO.	12939508
SHEET	83 OF 148

P-703

DRAWFORM REVISION: 25 AUGUST 2020

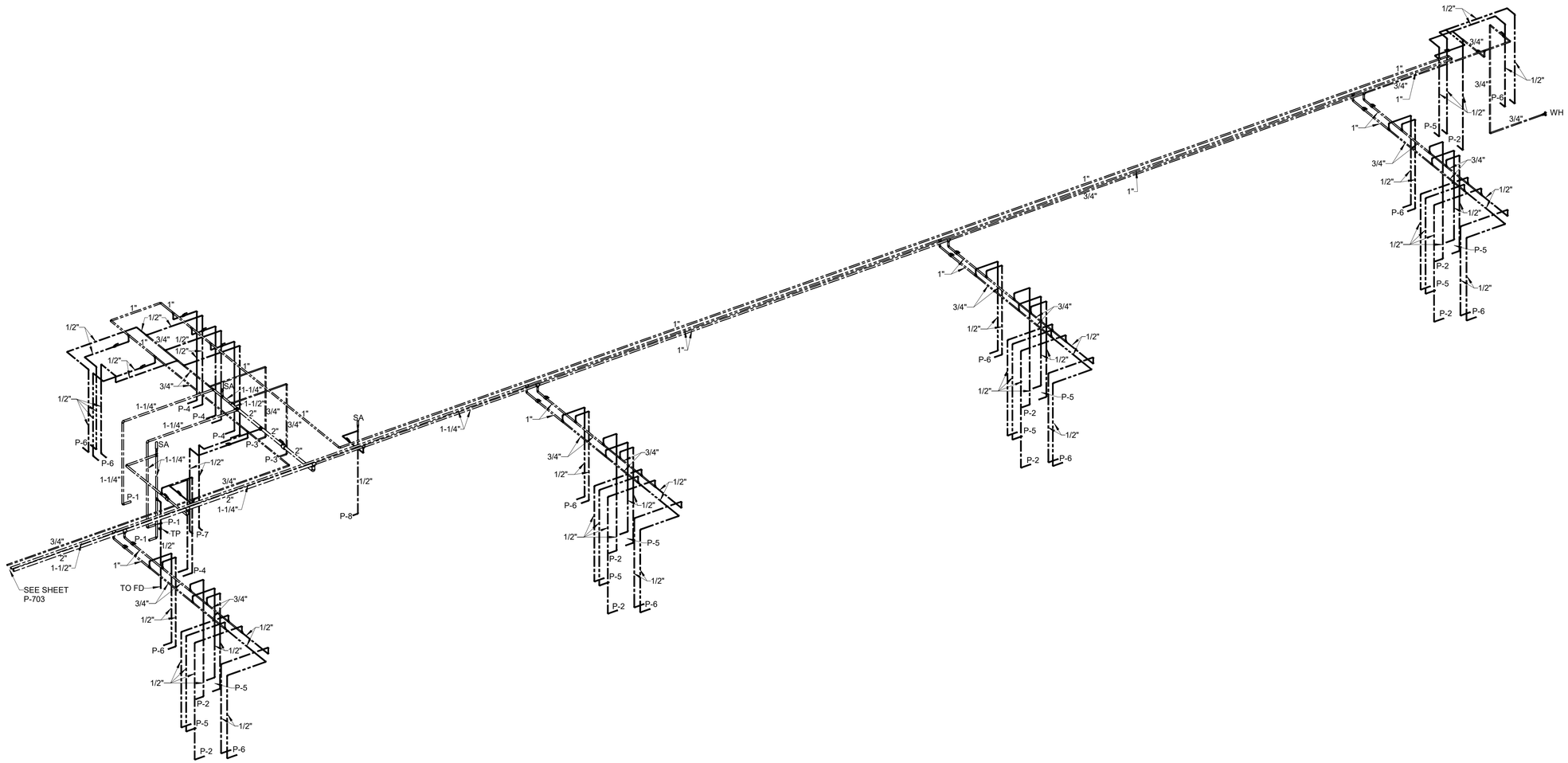

A3 RISER DIAGRAM - WATER (EAST)
NTS

SYM	DESCRIPTION	DATE	APPR

NAVFAC

NORTH CAROLINA PROFESSIONAL SEAL 28374 ENGINEER JONATHAN D. LEHMAN
7-1-26
SEAL

CRENSHAW CONSULTING engineers
www.crenshawconsulting.com
NC LICENSE #C-1156
3816 Bush Street, Suite 200
Raleigh, North Carolina 27609
919-871-1070 Fax 871-5620

A/E INFO

APPROVED

FOR COMMANDER NAVFAC

ACTIVITY

SATISFACTORY TO

DES	PRC	DRW	DJG	CHK	JDL

PM/DM	L. PEED
BRANCH MANAGER	H. PERRY
CHIEF ENG/ARCH	P. FAULKNER
FIRE PROTECTION	D. CHASTAIN

DEPARTMENT OF THE NAVY
NAVAL FACILITIES ENGINEERING COMMAND
NAVAL FACILITIES ENGINEERING COMMAND ~ MIDATLANTIC
IPT MARINE CORPS
NAVAL STATION - NORFOLK, VA
MARINE CORPS AIR STATION
CHERRY POINT, NC

MCOLF ATLANTIC
BUILDING 7019 RENOVATIONS

RISER DIAGRAMS - WATER (EAST)

SCALE:	AS INDICATED
STATION DESIGN WON:	7406712
STATION CONSTRUCTION WON:	7406712
NAVFAC DRAWING NO.	12939509
SHEET	84 OF 148

P-704

DRAWFORM REVISION: 25 AUGUST 2020

DRAWING LEGEND

	CEILING SUPPLY DIFFUSER
	SIDEWALL SUPPLY DIFFUSER
	CEILING RETURN GRILLE
	CEILING EXHAUST GRILLE
	LOUVER
	SIDEWALL RETURN/EXHAUST GRILLE
WXH	RECTANGULAR DUCT (W = WIDTH, H = HEIGHT)
D"□	ROUND DUCT (D = DIAMETER)
	EXISTING DUCT, DIFFUSER OR EQUIPMENT
	EXISTING DUCT, DIFFUSER OR EQUIPMENT TO BE DEMOLISHED
	SPIN-IN TAP WITH TRANSITION FROM HARD TO FLEXIBLE DUCT
	MANUAL VOLUME DAMPER
	RECTANGULAR DUCT TURNS DOWN
	RECTANGULAR DUCT TURNS UP
	ROUND DUCT TURNS DOWN
	ROUND DUCT TURNS UP
FD	FIRE DAMPER
M	MOTORIZED DAMPER
E	HVAC SYSTEM EMERGENCY SHUTDOWN SWITCH
SD	DUCT MOUNTED SMOKE DETECTOR
A / 150	DIFFUSER TAG — DIFFUSER TYPE / CFM

DRAWING LEGEND

	SUPPLY/RETURN PIPING
	UNDERGROUND PIPING
	GATE VALVE
	BUTTERFLY VALVE
	BALL VALVE
	SWING CHECK VALVE
	BALANCING VALVE
	TWO WAY CONTROL VALVE
	THREE WAY CONTROL VALVE
	STRAINER WITH BLOW OFF VALVE
FS	FLOW SWITCH
TT	TEMPERATURE TRANSMITTER
PT/PS	PRESSURE TRANSMITTER OR PRESSURE SWITCH
TH	THERMOMETER
PI	PRESSURE INDICATOR
	AUTOMATIC AIR VENT
	DIRECTION OF FLOW
	UNION - SCREWED OR FLANGED
	CONCENTRIC REDUCER
T	WALL MOUNTED THERMOSTAT

ABBREVIATIONS

AFC	ABOVE FINISHED CEILING
AFF	ABOVE FINISHED FLOOR
AFMS	AIR FLOW MONITORING STATION
BAS	BUILDING AUTOMATION SYSTEM
B-BC	BACNET-BUILDING CONTROLLER
BFP	BACKFLOW PREVENTER
BTUH	BRITISH THERMAL UNIT PER HOUR
COND	CONDENSATE
CFM	CUBIC FEET PER MINUTE
CHWS	CHILLED WATER SUPPLY
CHWR	CHILLED WATER RETURN
CU. FT.	CUBIC FEET
DB	DRY BULB
DDC	DIRECT DIGITAL CONTROL
DR	FLOOR DRAIN
EA, E/A	EXHAUST AIR FLOW
EAT	ENTERING AIR TEMPERATURE
ESP	EXTERNAL STATIC PRESSURE
EX	EXISTING
W.G.	INCHES OF WATER GAUGE
EWT	ENTERING WATER TEMPERATURE
F	FAHRENHEIT
FD	FIRE DAMPER
FOT	FLAT ON TOP
HP	HORSEPOWER
HPC	HIGH PRESSURE CONDENSATE
HPS	HIGH PRESSURE STEAM (ABOVE 15 PSI)
HWS	HOT WATER SUPPLY
HWR	HOT WATER RETURN
HZ	HERTZ
IN. WC	INCHES OF WATER COLUMN
KW	TOTAL POWER INPUT, KILOWATTS
LAT	LEAVING AIR TEMPERATURE
LBS	POUNDS
LPC	LOW PRESSURE CONDENSATE
LPS	LOW PRESSURE STEAM (15 PSI AND LESS)
LRA	LOCKED ROTOR AMPS
LWT	LEAVING WATER TEMPERATURE
MC	MECHANICAL CONTRACTOR
MFG	MANUFACTURER
MCA	MINIMUM CIRCUIT AMPS
MOCP	MAXIMUM OVER CURRENT PROTECTION
MVD	MANUAL VOLUME DAMPER

ABBREVIATIONS

OA, O/A	OUTSIDE AIR FLOW
PC	PUMPED CONDENSATE
PH	PHASE
PSI	POUNDS PER SQUARE INCH
RLA	RATED LOAD AMPS
RA, R/A	RETURN AIR FLOW
RPM	REVOLUTIONS PER MINUTE
SA, S/A	SUPPLY AIR FLOW
SP	STATIC PRESSURE
STM	STEAM
TA, T/A	TRANSFER AIR FLOW
TEMP	TEMPERATURE
TON	12,000 BTUH OF COOLING CAPACITY
TYP	TYPICAL
VFD	VARIABLE FREQUENCY DRIVE
WB	WET BULB TEMPERATURE

MARKS

AD	AIR DOOR / AIR CURTAIN
AHU	AIR HANDLING UNIT
AS	AIR SEPARATOR
B	BOILER
CU	CONDENSING UNIT
DAC	DUCTLESS SPLIT AIR CONDITIONING UNIT
DCU	DUCTLESS SPLIT CONDENSING UNIT
DH	DEHUMIDIFIER
DOCU	DOAS CONDENSING UNIT
DOAS	DEDICATED OUTSIDE AIR SYSTEM
KEF	KITCHEN EXHAUST FAN
ET	EXPANSION TANK
H	KITCHEN EXHAUST HOOD
L	LOUVER
MAU	MAKE-UP AIR UNIT
PHWP	PRIMARY HOT WATER INLINE PUMP
PTHP	PACKAGED TERMINAL HEAT PUMP
UH	HOT WATER UNIT HEATER
RV	ROOF VENTILATOR
SHWP	SECONDARY HOT WATER INLINE PUMP

GENERAL NOTES

1. CONTRACTOR MUST COORDINATE THE INSTALLATION OF ALL EQUIPMENT, PIPING, AND DUCTWORK UNDER THIS CONTRACT WITH THE BUILDING STRUCTURE. CONTRACTOR MUST MAKE ADJUSTMENTS WHERE NECESSARY WITHOUT ADDITIONAL COST TO GOVERNMENT.
2. COORDINATE ALL SUPPLY, RETURN AND EXHAUST GRILLE LOCATIONS WITH ARCHITECTURAL REFLECTED CEILING PLAN.
3. INSTALL FIRE DAMPERS FOR ALL DUCTS PENETRATING RATED PARTITIONS.
4. VERIFY PIPE SIZES AND LOCATIONS OF NEW PIPE ROUTING.
5. ALL NEW BULDING CONTROLS MUST TIE INTO THE EXISTING BASEWIDE EMCS WITH ONE OF THE THREE ATO APPROVED BMS (FX, DISTECH, OR METASYS). ALL NEW WATER AND ELECTRIC METERS MUST BE BACNET COMPATIBLE AND MUST COMMUNICATE WITH THE BAS HEADEND. COORDINATE WITH THE INSTALLATION ENERGY MANAGER ON THE TIE-IN OF THE UTILITY METERS TO THE ECMS.
6. UNLESS OTHERWISE INDICATED, ALL MECHANICAL PIPING MUST BE RUN IN THE DESIGNATED OR MAIN SERVICE CHASES. PIPING MUST NOT BE RUN OVERHEAD IN THE SLEEPING AREAS OF THE ROOM, BUT MAY BE RUN IN SOFFITS OVER BATHROOMS, SINK AND CLOSET AREAS.
7. WHERE NEW SMALLER DUCTS ARE INSTALLED REUSING EXISTING LARGER WALL/FLOOR OPENINGS, THE EXISTING OPENINGS MUST BE FILLED TO MATCH EXISTING ADJACENT CONSTRUCTION AND BE FIRE PROOFED AS REQUIRED TO MEET ALL APPLICABLE CODES AND REGULATIONS.
8. THE CONTRACTOR MUST DEMOLISH ALL MATERIALS AS SHOWN AND NOTED ON THE DEMOLITION PLANS FOR THIS BUILDING. ALL SUBSTANCES FOUND IN, ON OR AROUND THESE DEMOLISHED MATERIALS MUST BE SAFELY HANDLED AND DISPOSED OF TO SATISFY ALL ENVIRONMENTAL REGULATIONS.
9. ALL EXPOSED DUCTWORK MUST BE INSULATED WITH RIGID DUCT BOARD INSULATION PER SPECIFICATIONS.

APPR | DATE | DESCRIPTION | SYM

NAVFAC

NORTH CAROLINA PROFESSIONAL SEAL 035500 ENGINEER KEVIN L. W. MERRITT
01-01-20
SEAL

CRENSHAW CONSULTING Engineers
www.crenshawconsulting.com
NC LICENSE #C-1158
3816 Bush Street, Suite 200
Raleigh, North Carolina 27609
919-871-1070 Fax 871-0409

A/E INFO

APPROVED

FOR COMMANDER NAVFAC

ACTIVITY
Approved by Erik A. Lewis,
Infrastructure Engineering Branch Head,
FRCE Cherry Point via Electronic Signature

SATISFACTORY TO

DES	LWM	DRW	MWF	CHK	JDL

PM/DM	L. PEED
BRANCH MANAGER	H. PERRY
CHIEF ENG/ARCH	P. FAULKNER
FIRE PROTECTION	D. CHASTAIN

DEPARTMENT OF THE NAVY
NAVAL FACILITIES ENGINEERING SYSTEMS COMMAND
DESIGN AND CONSTRUCTION (DC) CORE
MARINE CORPS AIR STATION
NAVAL FACILITIES ENGINEERING SYSTEMS COMMAND - MIDATLANTIC
NAVAL STATION - NORFOLK, VA.
CHERRY POINT, NC

MCOLF ATLANTIC
BUILDING 7019 RENOVATIONS

MECHANICAL NOTES, LEGEND & ABBREVIATIONS

SCALE:	AS INDICATED
EPROJECT NO.:	7406712
STA. PROJ. NO.:	7406712
NAVFAC DRAWING NO.	12939510
SHEET	85 OF 148

M-001

DRAWFORM REVISION: 25 AUGUST 2020

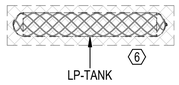

GENERAL NOTES:

1. SEE SHEET M-001 FOR GENERAL NOTES, LEGEND & ABBREVIATIONS
2. PRIOR TO DEMOLITION, PROVIDE GOVERNMENT WITH LIST AND CONDITION OF ALL MECHANICAL EQUIPMENT AND DDC CONTROLS TO BE DEMOLISHED FOR REVIEW. EQUIPMENT DESIGNATED AS SALVAGABLE WILL BE REMOVED BY CONTRACTOR AND TURNED OVER TO THE GOVERNMENT.

(#) DEMO NOTES

1 REMOVE EXISTING THROUGH WALL PACKAGED TERMINAL UNIT AND ALL ASSOCIATED CONDENSATE PIPING, WIRING AND CONTROLS. EXISTING EXTERIOR PENETRATION TO BE REUSED. (TYP)

2 REMOVE EXISTING ROOF MOUNTED EXHAUST FANS AND ALL ASSOCIATED DUCTWORK, CONTROLS AND WIRING. (TYP)

3 REMOVE EXISTING CEILING AIR HANDLER AND ALL ASSOCIATED DUCTWORK, GRILLES, PIPING, CONTROLS AND WIRING. (TYP)

4 REMOVE EXISTING GROUND MOUNTED HEAT PUMP AND ALL ASSOCIATED PIPING, CONTROLS, AND WIRING. (TYP)

5 REMOVE EXISTING LAUNDRY EXHAUST DUCTWORK UP TO ROOF MOUNTED EXHAUST FAN. (TYP)

6 REMOVE EXISTING LP GAS TANK AND PIPING FROM TANK TO BOILERS. REMOVE EXISTING HOT WATER SYSTEM ROUTED ABOVE CEILING TO DUCT MOUNTED COIL SECTIONS AS SHOWN.

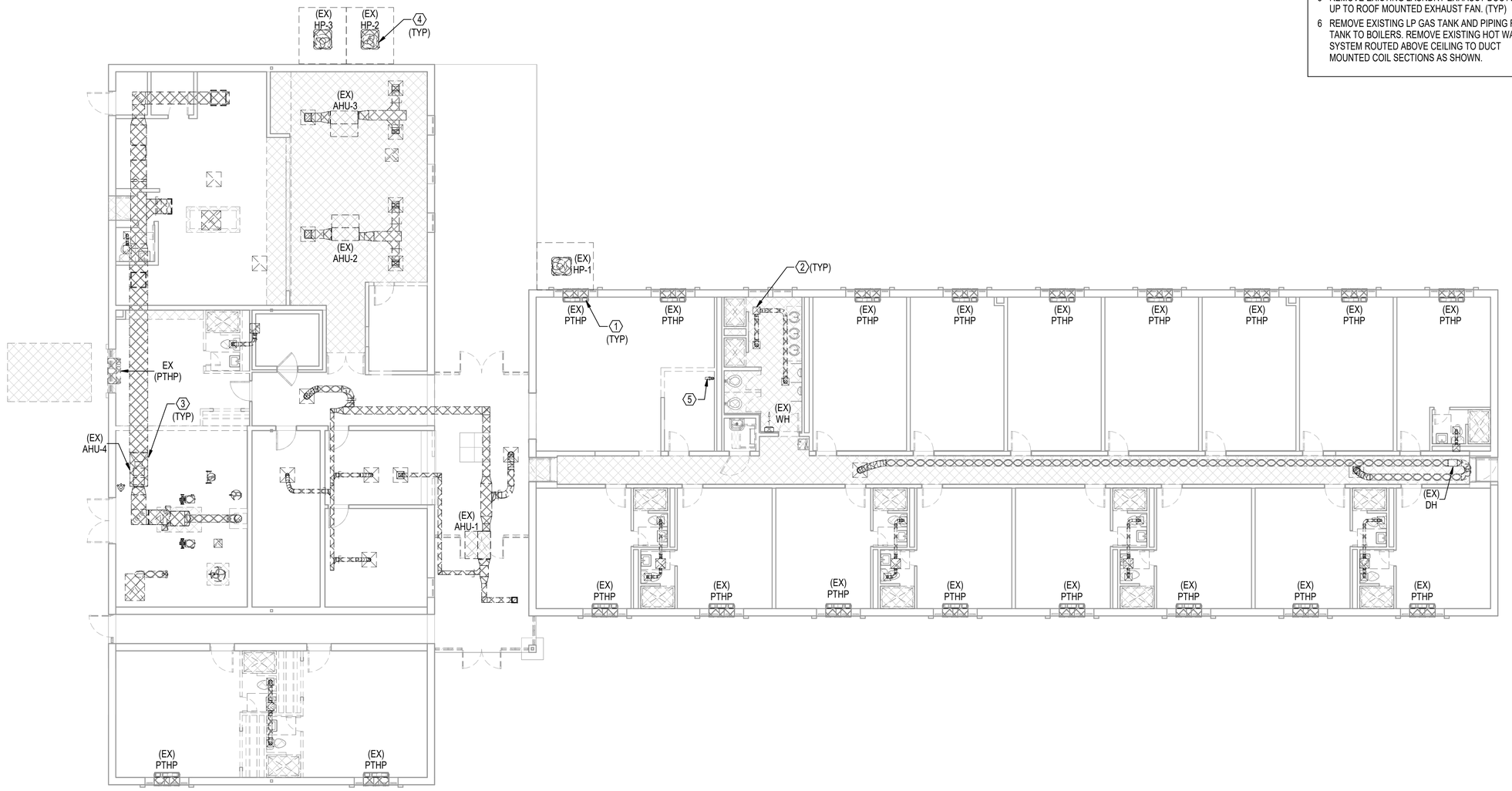

A1 OVERALL FIRST FLOOR PLAN - MECHANICAL DEMOLITION

1/8" = 1'-0"

GRAPHIC SCALE: 1/8"=1'-0"

8' 0 4' 8' 16'

	APPR	DATE	DESCRIPTION	SYM

NAVFAC

NORTH CAROLINA PROFESSIONAL SEAL 035500 ENGINEER LUCAS W MERRITT

01-01-20

SEAL

CRENSHAW CONSULTING Engineers
www.crenshawconsulting.com
NC LICENSE #C-1156
3816 Bath Street, Suite 200
Raleigh, North Carolina 27609
919-871-1070 Fax 871-0420

A/E INFO

APPROVED

FOR COMMANDER NAVFAC

ACTIVITY
Approved by Erik A. Lewis,
Infrastructure Engineering Branch Head,
FRCE Cherry Point via Electronic Signature

SATISFACTORY TO

DES	LWM	DRW	MWF	CHK	JDL

PM/DM	L. PEED
BRANCH MANAGER	H. PERRY
CHIEF ENG/ARCH	P. FAULKNER
FIRE PROTECTION	D. CHASTAIN

DEPARTMENT OF THE NAVY
NAVAL FACILITIES ENGINEERING SYSTEMS COMMAND
DESIGN AND CONSTRUCTION (DC) CORE
MARINE CORPS AIR STATION

NAVAL FACILITIES ENGINEERING SYSTEMS COMMAND ~ MIDATLANTIC
NAVAL STATION - NORFOLK, VA

CHERRY POINT, NC

MCOLF ATLANTIC
BUILDING 7019 RENOVATIONS

OVERALL FIRST FLOOR PLAN - MECHANICAL DEMOLITION

SCALE:	AS INDICATED
EPROJECT NO.:	7406712
STA. PROJ. NO.:	7406712
NAVFAC DRAWING NO.	12939511
SHEET	86 OF 148

MD101

DRAWFORM REVISION: 25 AUGUST 2020

GENERAL NOTES:

1. SEE SHEET M-001 FOR GENERAL NOTES, LEGEND & ABBREVIATIONS
2. PRIOR TO DEMOLITION, PROVIDE GOVERNMENT WITH LIST AND CONDITION OF ALL MECHANICAL EQUIPMENT AND DDC CONTROLS TO BE DEMOLISHED FOR REVIEW. EQUIPMENT DESIGNATED AS SALVAGABLE WILL BE REMOVED BY CONTRACTOR AND TURNED OVER TO THE GOVERNMENT.

(#) DEMO NOTES

1 REMOVE EXISTING ROOF MOUNTED EXHAUST FANS AND ALL ASSOCIATED DUCTWORK, CONTROLS AND WIRING. (TYP)

2 REMOVE EXISTING ROOF GOOSE NECK EXHAUST CAP. (TYP)

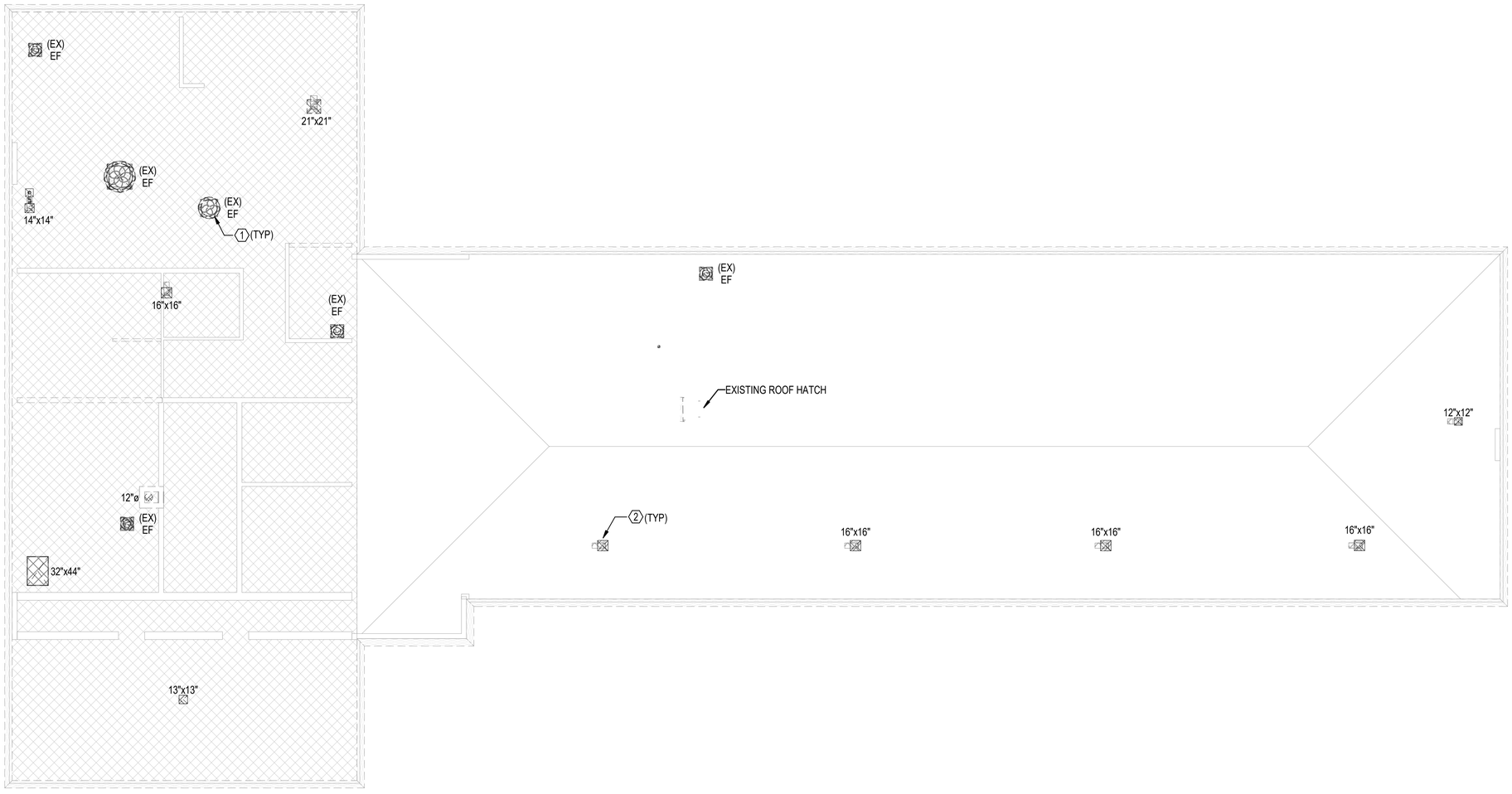

A1 OVERALL ROOF PLAN - MECHANICAL DEMOLITION
1/8" = 1'-0"

GRAPHIC SCALE: 1/8"=1'-0"
8' 0 4' 8' 16'

SYM	DESCRIPTION	DATE	APPR

NAVFAC

NORTH CAROLINA PROFESSIONAL SEAL 035500 ENGINEER LUCAS W MERRITT
01-01-20
SEAL

CRENSHAW CONSULTING engineers
NC LICENSE #C-1156
3816 Bush Street, Suite 200
Raleigh, North Carolina 27609
919-871-1070 Fax 871-0420

A/E INFO

APPROVED

FOR COMMANDER NAVFAC

ACTIVITY
Approved by Erik A. Lewis,
Infrastructure Engineering Branch Head,
FRCE Cherry Point via Electronic Signature

SATISFACTORY TO

DES	LWM	DRW	MWF	CHK	JDL

PM/DM	L. PEED
BRANCH MANAGER	H. PERRY
CHIEF ENG/ARCH	P. FAULKNER
FIRE PROTECTION	D. CHASTAIN

DEPARTMENT OF THE NAVY
NAVAL FACILITIES ENGINEERING SYSTEMS COMMAND
DESIGN AND CONSTRUCTION (DC) CORE
MARINE CORPS AIR STATION
NAVAL FACILITIES ENGINEERING SYSTEMS COMMAND ~ MIDATLANTIC
NAVAL STATION - NORFOLK, VA
CHERRY POINT, NC

MCOLF ATLANTIC
BUILDING 7019 RENOVATIONS

OVERALL ROOF PLAN - MECHANICAL DEMOLITION

SCALE:	AS INDICATED
EPROJECT NO.:	7406712
STA. PROJ. NO.:	7406712
NAVFAC DRAWING NO.	12939512
SHEET	87 OF 148

MD102

DRAWFORM REVISION: 25 AUGUST 2020

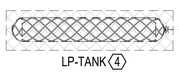

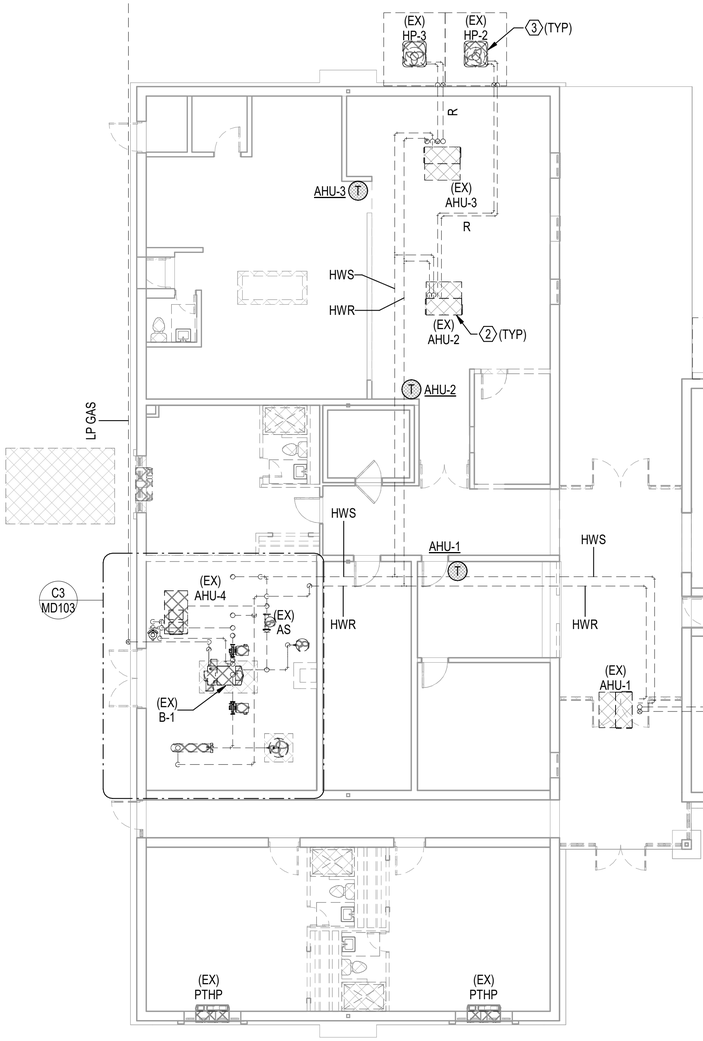

A1 OVERALL FIRST FLOOR PLAN - MECHANICAL PIPING DEMOLITION
1/8" = 1'-0"

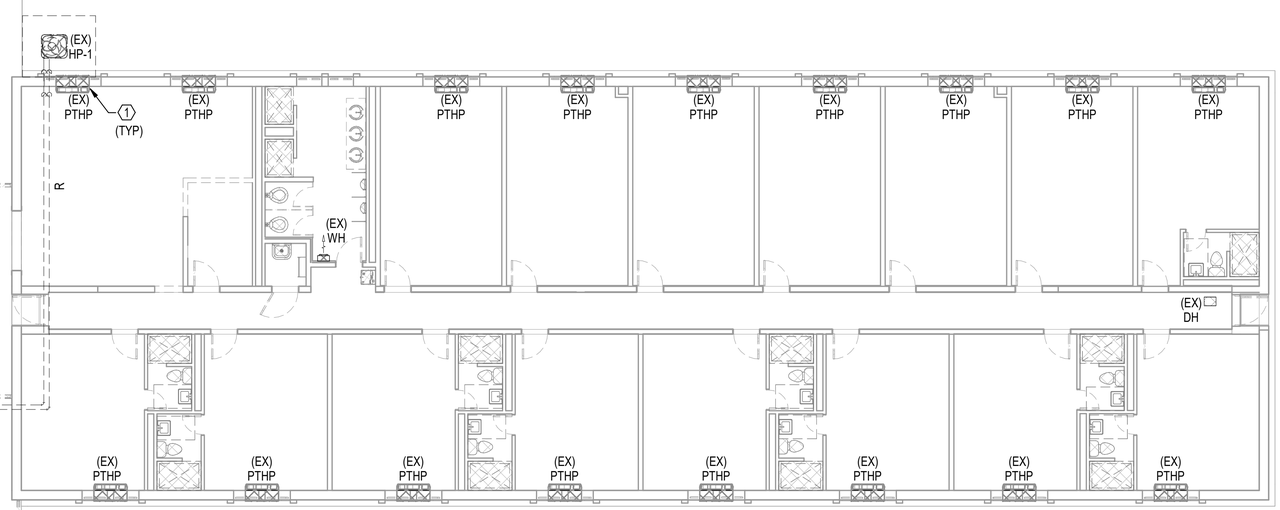

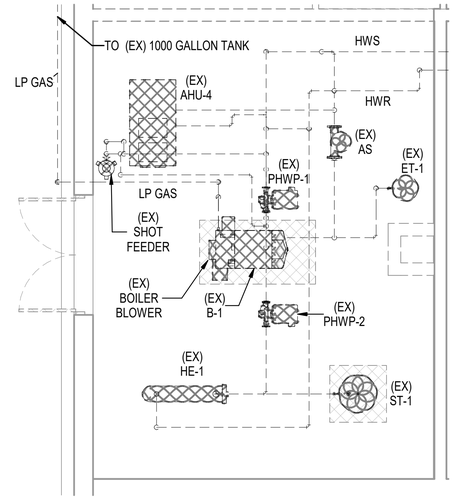

C3 ENLARGED FIRST FLOOR PLAN - MECHANICAL ROOM DEMOLITION
1/4" = 1'-0"

GENERAL NOTES:

1. SEE SHEET M-001 FOR GENERAL NOTES, LEGEND & ABBREVIATIONS
2. PRIOR TO DEMOLITION, PROVIDE GOVERNMENT WITH LIST AND CONDITION OF ALL MECHANICAL EQUIPMENT AND DDC CONTROLS TO BE DEMOLISHED FOR REVIEW. EQUIPMENT DESIGNATED AS SALVAGABLE WILL BE REMOVED BY CONTRACTOR AND TURNED OVER TO THE GOVERNMENT.

DEMO NOTES

1. REMOVE EXISTING THROUGH WALL PACKAGED TERMINAL UNIT AND ALL ASSOCIATED CONDENSATE PIPING, WIRING AND CONTROLS. EXISTING EXTERIOR PENETRATION TO BE REUSED. (TYP)
2. REMOVE EXISTING CEILING AIR HANDLER AND ALL ASSOCIATED DUCTWORK, GRILLES, PIPING, CONTROLS AND WIRING. (TYP)
3. REMOVE EXISTING GROUND MOUNTED HEAT PUMP AND ALL ASSOCIATED PIPING, CONTROLS, AND WIRING. (TYP)
4. REMOVE EXISTING LP GAS TANK AND PIPING FROM TANK TO BOILERS. REMOVE EXISTING HOT WATER SYSTEM ROUTED ABOVE CEILING TO DUCT MOUNTED COIL SECTIONS AS SHOWN.

GRAPHIC SCALE: 1/4"=1'-0"
4' 0 2' 4' 8'

GRAPHIC SCALE: 1/8"=1'-0"
8' 0 4' 8' 16'

SYM	DESCRIPTION	DATE	APPR

NAVFAC

NORTH CAROLINA PROFESSIONAL ENGINEER SEAL 055500 LUCAS W. MERANDA
07-01-26
SEAL

CRENSHAW CONSULTING engineers
www.crenshawconsulting.com
NC LICENSE #C-1156
3516 Bush Street, Suite 200
Raleigh, North Carolina 27609
919-871-1070 Fax 871-5620

A/E INFO

APPROVED

FOR COMMANDER NAVFAC

ACTIVITY
Approved by Erik A. Lewis,
Infrastructure Engineering Branch Head,
FRCE Cherry Point via Electronic Signature

SATISFACTORY TO

DES	LWM	DRW	MWF	CHK	JDL

PM/DM	L. PEED
BRANCH MANAGER	H. PERRY
CHIEF ENG/ARCH	P. FAULKNER
FIRE PROTECTION	D. CHASTAIN

DEPARTMENT OF THE NAVY
NAVAL FACILITIES ENGINEERING SYSTEMS COMMAND
NAVAL FACILITIES ENGINEERING SYSTEMS COMMAND ~ MIDATLANTIC
DESIGN AND CONSTRUCTION (DC) CORE
NAVAL STATION - NORFOLK, VA
MARINE CORPS AIR STATION
CHERRY POINT, NC

MCOLF ATLANTIC
BUILDING 7019 RENOVATIONS

OVERALL FIRST FLOOR PLAN - MECHANICAL PIPING DEMOLITION

SCALE:	AS INDICATED
EPROJECT NO.:	7406712
STA. PROJ. NO.:	7406712
NAVFAC DRAWING NO.	12939513
SHEET	88 OF 148

MD103

DRAWFORM REVISION: 25 AUGUST 2020

GENERAL NOTES:

1. SEE SHEET M-001 FOR GENERAL NOTES, LEGEND & ABBREVIATIONS
2. PLAN DRAWINGS ARE DIAGRAMMATIC IN NATURE AND DO NOT ILLUSTRATE ALL SPECIFIC DUCT TAKE-OFF CONFIGURATIONS, TAPS, ETC. PROVIDE FLEXIBLE DUCTWORK RUNOUTS TO ALL SUPPLY AND RETURN GRILLES WITH A MAXIMUM LENGTH OF 5 FEET AND SINLGE BENDS NO GREATER THAN 45 DEGREES. REFER TO PROJECT SPECIFICATION AND DUCTWORK DETAILS FOR SPECIFIC REQUIREMENTS.

◇# NEW WORK NOTES

1 PROVIDE PTHP UNIT WITH LIGATURE PROOF PROTECTIVE COVER, CORROSION RESISTANT CHASSIS, AND 3/4" CONDENSATE DRAIN WITH EXTERIOR CLEANOUT. PAINT DDC CONDUIT EXPOSED IN OCCUPIED AREAS TO MATCH INTERIOR. COORDINATE WITH ARCHITECTURAL AND INTERIOR PLANS. (TYP)

2 PROVIDE 4" ROUND LAUNDRY EXHAUST TO EXTERIOR WALL CAP.

3 PROVIDE FLOOR MOUNTED DOAS UNIT WITH DX COOLING COIL SECTION AND HW COIL SECTION IN THE REHEAT POSITION. ROUTE VENTILATION AND EXHAUST DUCTWORK AS SHOWN.

4 PROVIDE SUSPENDED, ABOVE CEILING AIR HANDLING UNIT WITH DX COOLING COIL AND HW REHEAT COIL. ROUTE SUPPLY AND RETURN DUCTWORK TO LAY DIFFUSERS AND GRILLES AS SHOWN.

5 PROVIDE WALL MOUNTED DUCTLESS SPLIT AIR HANDLER MOUNTED AS SHOWN. COORDINATE EXACT LOCATION AND HEIGHT WITH ALL OTHER EQUIPMENT IN SPACE.

6 PROVIDE AIR CURTAIN ABOVE EXTERIOR DOOR. OPERATION MUST BE TIED TO DOOR SWITCH.

7 PROVIDE KITCHEN EXHAUST HOOD, FAN, CONTROLS AND DUCTWORK AS SHOWN. SEE DETAIL SHEETS FOR MORE INFORMATION.

8 PROVIDE EXTERIOR CONDENSING UNIT MOUNTED ON EQUIPMENT SUPPORT PAD AS SHOWN.

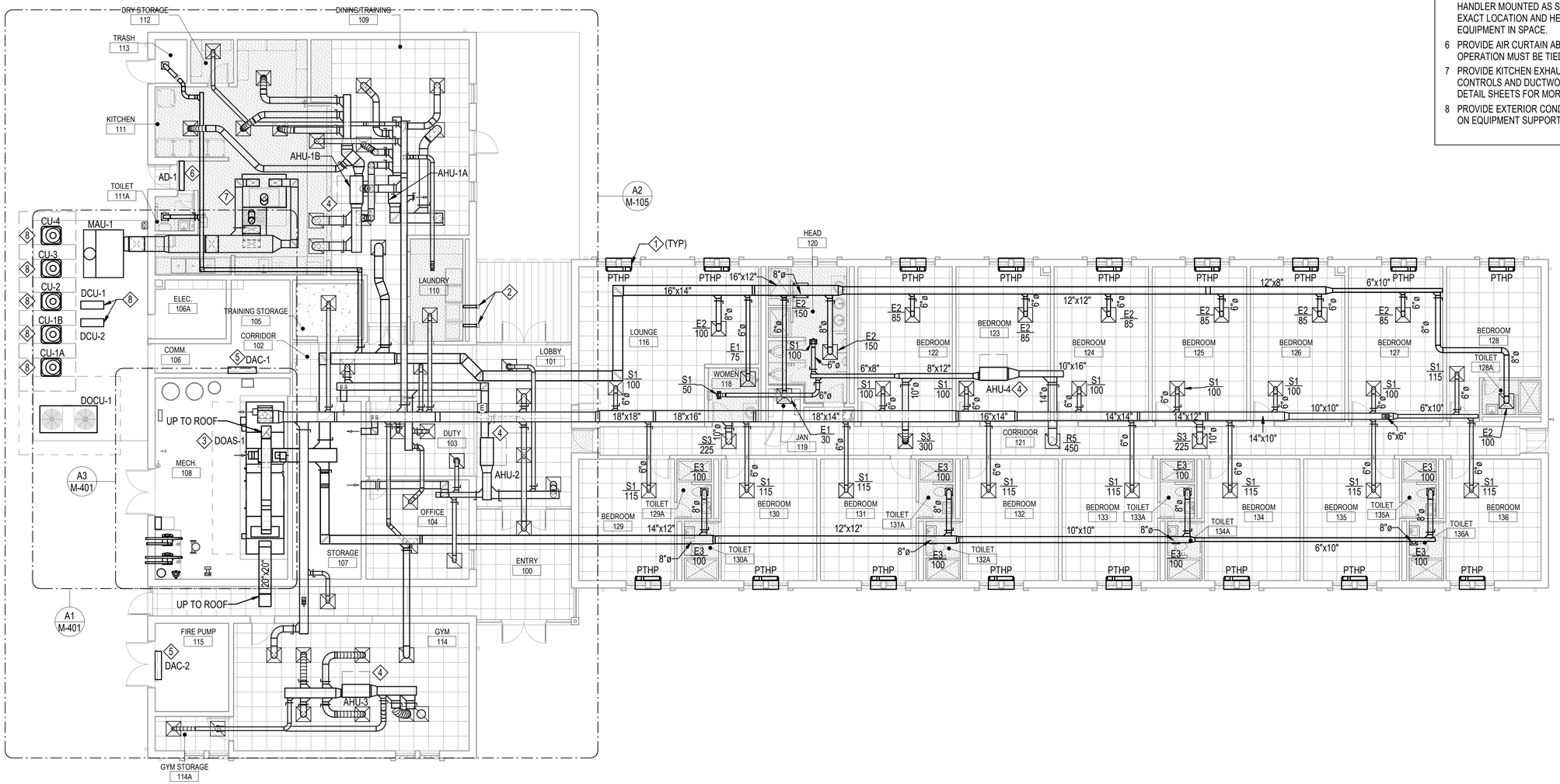

A1 OVERALL FIRST FLOOR PLAN - MECHANICAL HVAC
1/8" = 1'-0"

GRAPHIC SCALE: 1/8"=1'-0"
8' 0 4' 8' 16'

N

SYM	DESCRIPTION	DATE	APPR

NAVFAC

NORTH CAROLINA PROFESSIONAL ENGINEER SEAL 035500 LEWIS W. MEYERS
01-01-20
SEAL

CRENSHAW CONSULTING Engineers
www.crenshawconsulting.com
NC LICENSE #C-1156
3816 Bush Street, Suite 200
Raleigh, North Carolina 27609
919-871-1070 Fax 871-0409

A/E INFO

APPROVED

FOR COMMANDER NAVFAC

ACTIVITY
Approved by Erik A. Lewis,
Infrastructure Engineering Branch Head,
FRCE Cherry Point via Electronic Signature

SATISFACTORY TO

DES	LWM	DRW	MWF
CHK	JDL		
PM/DM	L. PEED		
BRANCH MANAGER	H. PERRY		
CHIEF ENG/ARCH	P. FAULKNER		
FIRE PROTECTION	D. CHASTAIN		

DEPARTMENT OF THE NAVY
NAVAL FACILITIES ENGINEERING SYSTEMS COMMAND
NAVAL FACILITIES ENGINEERING SYSTEMS COMMAND ~ MIDATLANTIC
DESIGN AND CONSTRUCTION (DC) CORE
NAVAL STATION - NORFOLK, VA
MARINE CORPS AIR STATION
CHERRY POINT, NC

MCOLF ATLANTIC
BUILDING 7019 RENOVATIONS

OVERALL FIRST FLOOR PLAN - MECHANICAL HVAC

SCALE:	AS INDICATED
EPROJECT NO.:	7406712
STA. PROJ. NO.:	7406712
NAVFAC DRAWING NO.	12939514
SHEET	89 OF 148

M-101

DRAWFORM REVISION: 25 AUGUST 2020

GENERAL NOTES:

1. SEE SHEET M-001 FOR GENERAL NOTES, LEGEND & ABBREVIATIONS
2. PLAN DRAWINGS ARE DIAGRAMMATIC IN NATURE AND DO NOT ILLUSTRATE ALL SPECIFIC DUCT TAKE-OFF CONFIGURATIONS, TAPS, ETC. PROVIDE FLEXIBLE DUCTWORK RUNOUTS TO ALL SUPPLY AND RETURN GRILLES WITH A MAXIMUM LENGTH OF 5 FEET AND SINLGE BENDS NO GREATER THAN 45 DEGREES. REFER TO PROJECT SPECIFICATION AND DUCTWORK DETAILS FOR SPECIFIC REQUIREMENTS.
3. REFER TO PIPING DIAGRAMS FOR ALL PIPE SIZING. PIPING SHOWN ON PLANS VIEWS IS DIAGRAMMATIC AND MAY NOT INDICATE EXACT ROUTING OR ELEVATION. CONTRACTOR MUST COORDINATE PIPE SIZES, OFFSETS, AND CONNECTIONS WITH PIPING DIAGRAMS, EQUIPMENT SUBMITTALS, AND FILED CONDITIONS.

◇# NEW WORK NOTES

1 PROVIDE SUSPENDED, ABOVE CEILING AIR HANDLING UNIT WITH DX COOLING COIL AND HW REHEAT COIL. ROUTE REFRIGERANT LINES TO EXTERIOR CONDENSING UNIT AS SHOWN.

2 PROVIDE WALL MOUNTED DUCTLESS SPLIT AIR HANDLER MOUNTED AS SHOWN. COORDINATE EXACT LOCATION AND HEIGHT WITH ALL OTHER EQUIPMENT IN SPACE. ROUTE REFRIGERANT AND CONDENSATE LINES TO EXTERIOR AS SHOWN.

3 PROVIDE ABOVE CEILING HOT WATER PIPING FROM MECHANICAL ROOM TO EQUIPMENT AS SHOWN.

4 PROVIDE WALL MOUNTED EMERGENCY HVAC SHUTDOWN SWITCH. SWITCH MUST BE PROVIDED WITH A DIFFERENT COLOR THAN FIRE ALARM PULL STATIONS.

5 PROVIDE FLOOR MOUNTED DOAS UNIT WITH DX COOLING COIL SECTION AND HW COIL SECTION IN THE REHEAT POSITION. ROUTE VENTILATION AND EXHAUST DUCTWORK AS SHOWN.

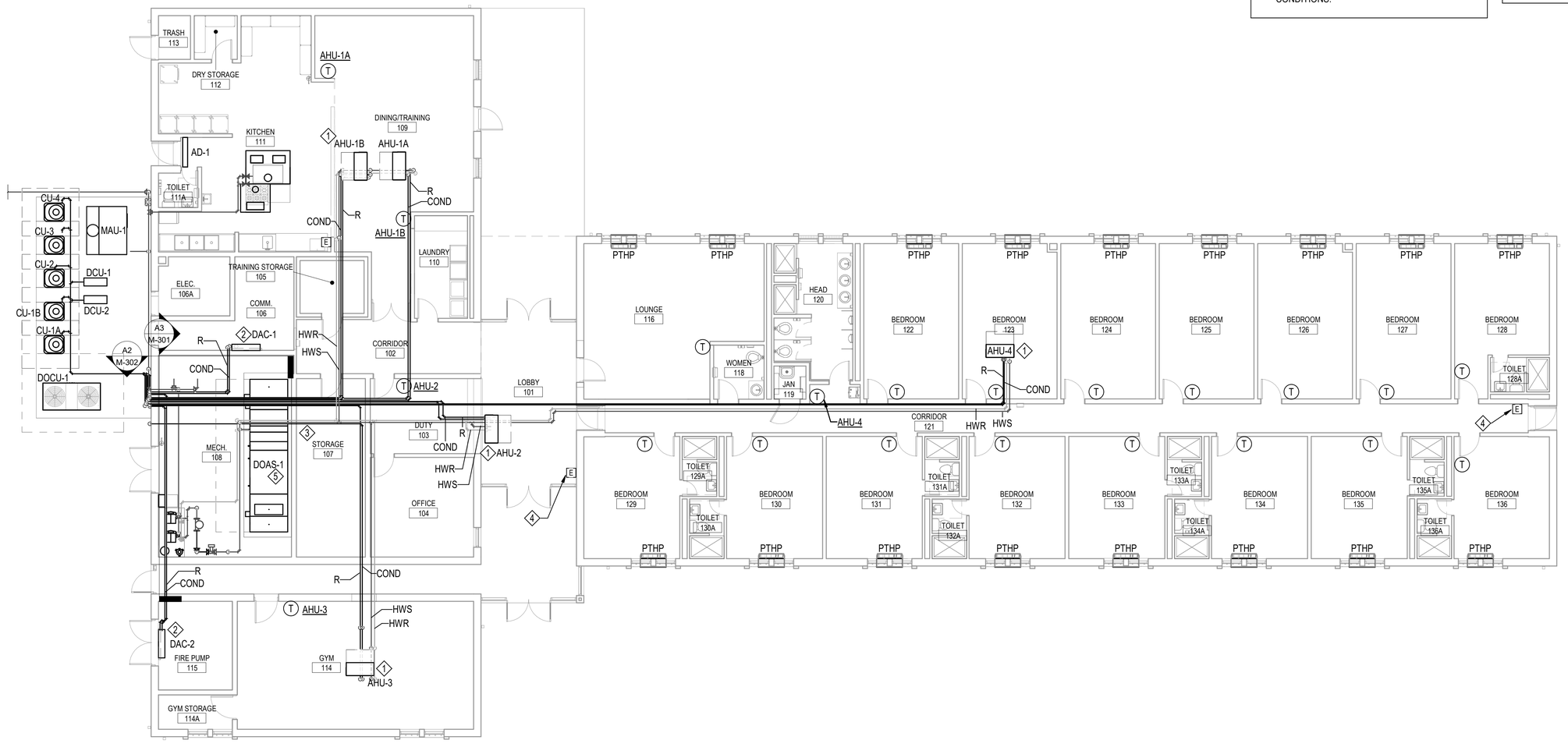

A1 OVERALL FIRST FLOOR PLAN - MECHANICAL PIPING
1/8" = 1'-0"

GRAPHIC SCALE: 1/8"=1'-0"
8' 0 4' 8' 16'

SYM	DESCRIPTION	DATE	APPR

NAVFAC

NORTH CAROLINA PROFESSIONAL SEAL 035500 ENGINEER LUCAS W. PERRY
01-01-20
SEAL

CRENSHAW CONSULTING engineers
www.crenshawconsulting.com
NC LICENSE #C-1168
3816 Bush Street, Suite 200
Raleigh, North Carolina 27609
919-871-1070 Fax 871-0409

A/E INFO

APPROVED

FOR COMMANDER NAVFAC

ACTIVITY
Approved by Erik A. Lewis,
Infrastructure Engineering Branch Head,
FRCE Cherry Point via Electronic Signature

SATISFACTORY TO

DES	LWM	DRW	MWF	CHK	JDL
PM/DM			L. PEED		
BRANCH MANAGER			H. PERRY		
CHIEF ENG/ARCH			P. FAULKNER		
FIRE PROTECTION			D. CHASTAIN		

DEPARTMENT OF THE NAVY
NAVAL FACILITIES ENGINEERING SYSTEMS COMMAND
DESIGN AND CONSTRUCTION (DC) CORE
MARINE CORPS AIR STATION

NAVAL FACILITIES ENGINEERING SYSTEMS COMMAND - MIDATLANTIC
NAVAL STATION - NORFOLK, VA.
CHERRY POINT, NC

MCOLF ATLANTIC
BUILDING 7019 RENOVATIONS

OVERALL FIRST FLOOR PLAN - MECHANICAL PIPING

SCALE:	AS INDICATED
EPROJECT NO.:	7406712
STA. PROJ. NO.:	7406712
NAVFAC DRAWING NO.	12939515
SHEET	90 OF 148

M-102

DRAWFORM REVISION: 25 AUGUST 2020

GENERAL NOTES:

1. SEE SHEET M-001 FOR GENERAL NOTES, LEGEND & ABBREVIATIONS
2. PLAN DRAWINGS ARE DIAGRAMMATIC IN NATURE AND DO NOT ILLUSTRATE ALL SPECIFIC DUCT TAKE-OFF CONFIGURATIONS, TAPS, ETC. PROVIDE FLEXIBLE DUCTWORK RUNOUTS TO ALL SUPPLY AND RETURN GRILLES WITH A MAXIMUM LENGTH OF 5 FEET AND SINLGE BENDS NO GREATER THAN 45 DEGREES. REFER TO PROJECT SPECIFICATION AND DUCTWORK DETAILS FOR SPECIFIC REQUIREMENTS.

NEW WORK NOTES

1 PROVIDE ROOF MOUNTED EXHAUST FAN FOR KITCHEN HOOD EXHAUST.
2 PROVIDE ROOF MOUNTED VENTILATOR FOR DOAS UNIT.
3 PROVIDE DUCT MOUNTED GRILLE AS SHOWN FOR EXHAUST/VENTILATION AIR IN ATTIC SPACE.

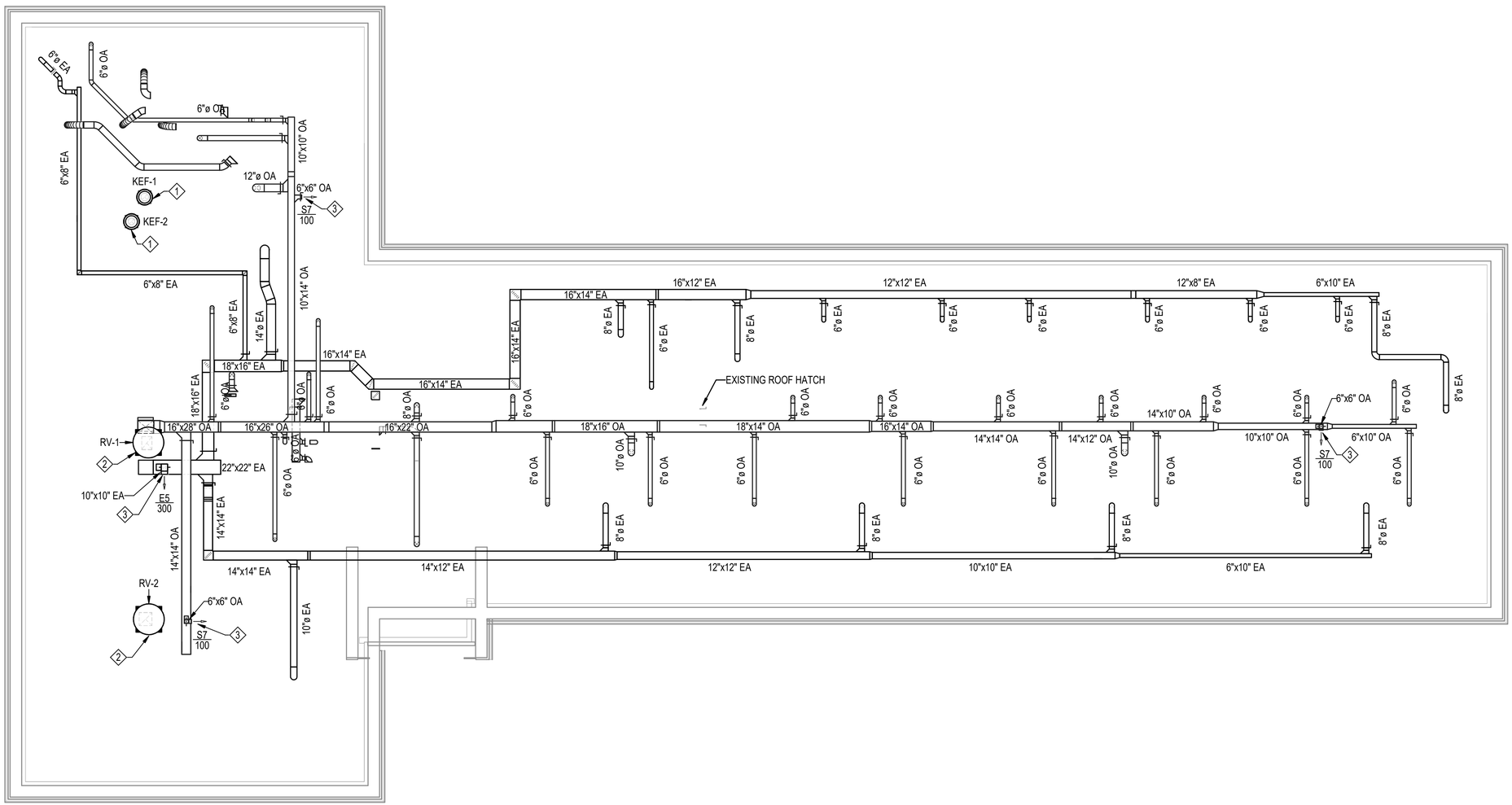

A1 OVERALL ATTIC PLAN - MECHANICAL
1/8" = 1'-0"

GRAPHIC SCALE: 1/8"=1'-0"
8' 0 4' 8' 16'

N

APPR | DATE | DESCRIPTION | SYM

NAVFAC

NORTH CAROLINA PROFESSIONAL ENGINEER SEAL 035500 WILLIAM L. MERRELL
01-01-20
SEAL

CRENSHAW CONSULTING Engineers
www.crenshawconsulting.com
NC LICENSE #C-1156
3816 Bush Street, Suite 200
Raleigh, North Carolina 27609
919-871-1070 Fax 871-0609

A/E INFO

APPROVED

FOR COMMANDER NAVFAC

ACTIVITY
Approved by Erik A. Lewis,
Infrastructure Engineering Branch Head,
FRCE Cherry Point via Electronic Signature

SATISFACTORY TO

DES	LWM	DRW	MWF	CHK	JDL

PM/DM	L. PEED
BRANCH MANAGER	H. PERRY
CHIEF ENG/ARCH	P. FAULKNER
FIRE PROTECTION	D. CHASTAIN

DEPARTMENT OF THE NAVY
NAVAL FACILITIES ENGINEERING SYSTEMS COMMAND
DESIGN AND CONSTRUCTION (DC) CORE
MARINE CORPS AIR STATION

NAVAL FACILITIES ENGINEERING SYSTEMS COMMAND ~ MIDATLANTIC
NAVAL STATION - NORFOLK, VA

CHERRY POINT, NC

MCOLF ATLANTIC
BUILDING 7019 RENOVATIONS

OVERALL ATTIC PLAN - MECHANICAL HVAC

SCALE:	AS INDICATED
EPROJECT NO.:	7406712
STA. PROJ. NO.:	7406712
NAVFAC DRAWING NO.	12939516
SHEET	91 OF 148

M-103

DRAWFORM REVISION: 25 AUGUST 2020

GENERAL NOTES:

1. SEE SHEET M-001 FOR GENERAL NOTES, LEGEND & ABBREVIATIONS
2. PLAN DRAWINGS ARE DIAGRAMMATIC IN NATURE AND DO NOT ILLUSTRATE ALL SPECIFIC DUCT TAKE-OFF CONFIGURATIONS, TAPS, ETC. PROVIDE FLEXIBLE DUCTWORK RUNOUTS TO ALL SUPPLY AND RETURN GRILLES WITH A MAXIMUM LENGTH OF 5 FEET AND SINLGE BENDS NO GREATER THAN 45 DEGREES. REFER TO PROJECT SPECIFICATION AND DUCTWORK DETAILS FOR SPECIFIC REQUIREMENTS.

◇# NEW WORK NOTES

1 RELOCATED EXISTING 1000 GALLON LP TANK. PROVIDE NEW LP GAS PIPING FROM TANK, UNDERGROUND TO NEW METER ON EXTERIOR OF BUILDING. LP GAS PIPING TO BE ROUTED INTO BUILDING AS SHOWN. SEE SHEET M-603 FOR MORE INFORMATION.

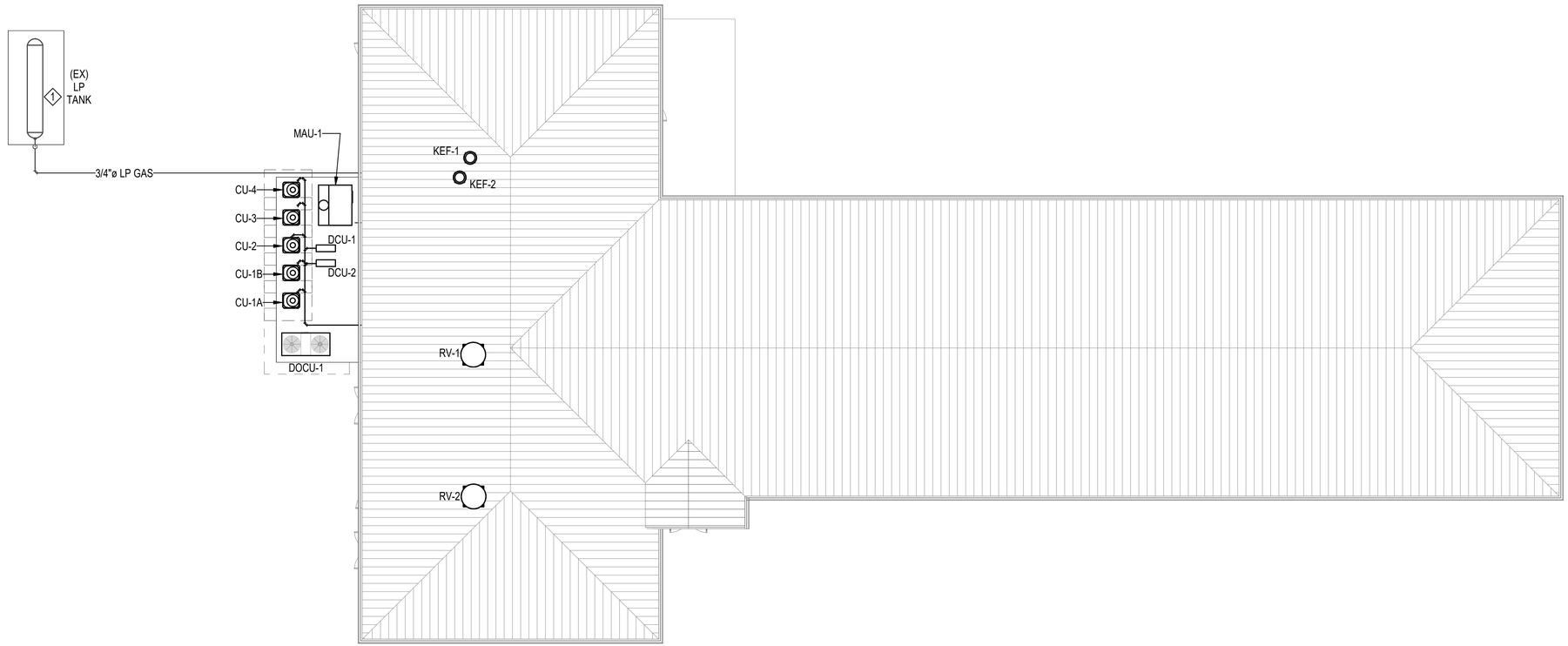

A1 OVERALL SITE PLAN - MECHANICAL PIPING
3/32" = 1'-0"

GRAPHIC SCALE: 3/32"=1'-0"
8' 0 8' 16' 24'

SYM	DESCRIPTION	DATE	APPR

NAVFAC

NORTH CAROLINA PROFESSIONAL SEAL 035500 ENGINEER LUCAS W MERRITT
01-01-20
SEAL

CRENSHAW CONSULTING Engineers
www.crenshawconsulting.com
NC LICENSE #C-1158
3816 Bush Street, Suite 200
Raleigh, North Carolina 27609
919-871-1070 Fax 871-0409

A/E INFO

APPROVED

FOR COMMANDER NAVFAC

ACTIVITY
Approved by Erik A. Lewis,
Infrastructure Engineering Branch Head,
FRCE Cherry Point via Electronic Signature

SATISFACTORY TO

DES	LWM	DRW	MWF	CHK	JDL
PM/DM	L. PEED				
BRANCH MANAGER	H. PERRY				
CHIEF ENG/ARCH	P. FAULKNER				
FIRE PROTECTION	D. CHASTAIN				

DEPARTMENT OF THE NAVY
NAVAL FACILITIES ENGINEERING SYSTEMS COMMAND
DESIGN AND CONSTRUCTION (DC) CORE:
MARINE CORPS AIR STATION

NAVAL FACILITIES ENGINEERING SYSTEMS COMMAND ~ MIDATLANTIC
NAVAL STATION - NORFOLK, VA

CHERRY POINT, NC

MCOLF ATLANTIC
BUILDING 7019 RENOVATIONS

OVERALL SITE PLAN - MECHANICAL

SCALE:	AS INDICATED
EPROJECT NO.:	7406712
STA. PROJ. NO.:	7406712
NAVFAC DRAWING NO.	12939517
SHEET	92 OF 148

M-104

DRAWFORM REVISION: 25 AUGUST 2020

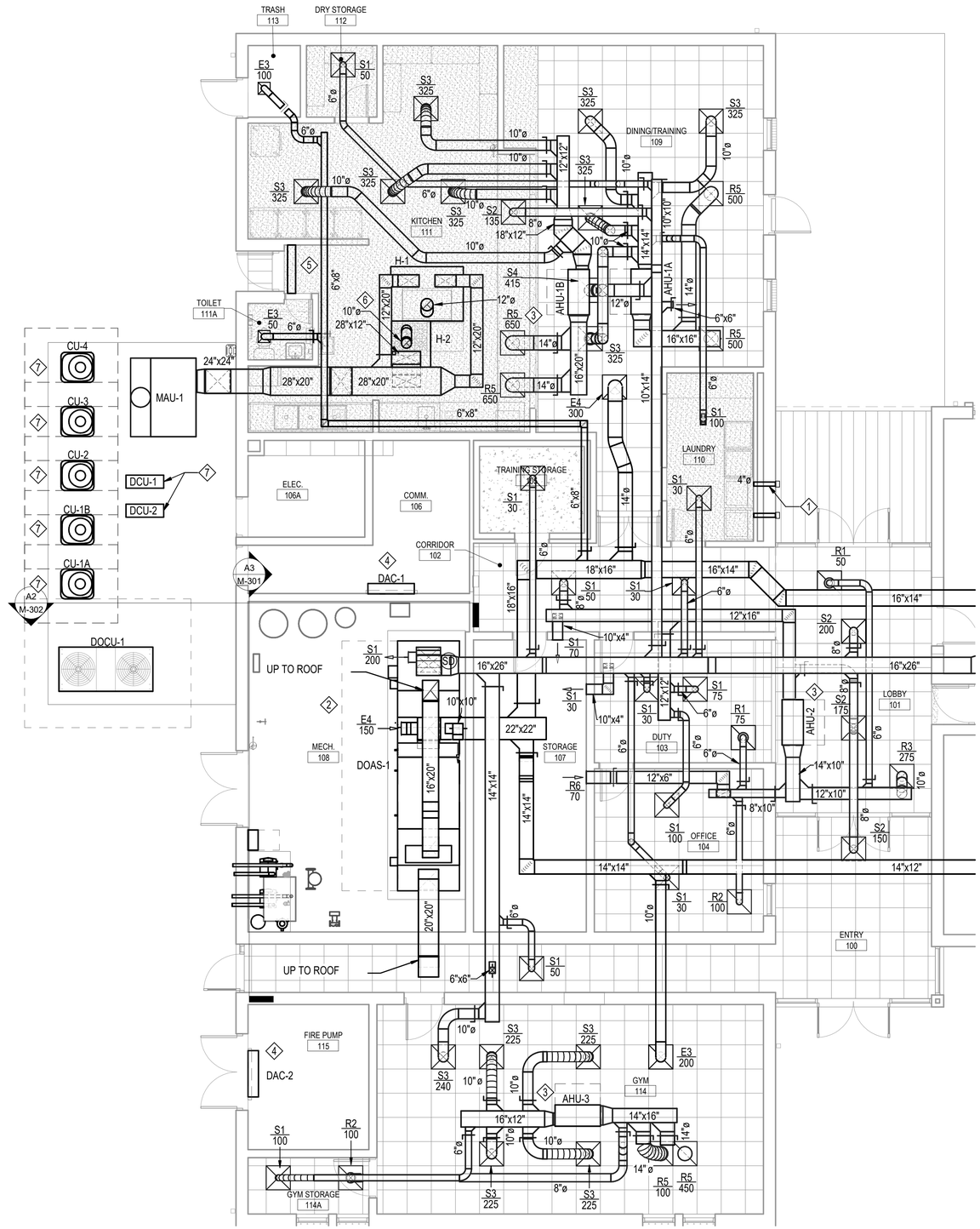

A2 ENLARGED FIRST FLOOR PLAN - MECHANICAL HVAC
NTS

GRAPHIC SCALE: 1/8"=1'-0"
8' 0 4' 8' 16'

GENERAL NOTES:

1. SEE SHEET M-001 FOR GENERAL NOTES, LEGEND & ABBREVIATIONS
2. PLAN DRAWINGS ARE DIAGRAMMATIC IN NATURE AND DO NOT ILLUSTRATE ALL SPECIFIC DUCT TAKE-OFF CONFIGURATIONS, TAPS, ETC. PROVIDE FLEXIBLE DUCTWORK RUNOUTS TO ALL SUPPLY AND RETURN GRILLES WITH A MAXIMUM LENGTH OF 5 FEET AND SINLGE BENDS NO GREATER THAN 45 DEGREES. REFER TO PROJECT SPECIFICATION AND DUCTWORK DETAILS FOR SPECIFIC REQUIREMENTS.

NEW WORK NOTES

1. PROVIDE 4" ROUND LAUNDRY EXHAUST TO EXTERIOR WALL CAP.
2. PROVIDE FLOOR MOUNTED DOAS UNIT WITH DX COOLING COIL SECTION AND HW COIL SECTION IN THE REHEAT POSITION. ROUTE VENTILATION AND EXHAUST DUCTWORK AS SHOWN.
3. PROVIDE SUSPENDED, ABOVE CEILING AIR HANDLING UNIT WITH DX COOLING COIL AND HW REHEAT COIL. ROUTE SUPPLY AND RETURN DUCTWORK TO LAY DIFFUSERS AND GRILLES AS SHOWN.
4. PROVIDE WALL MOUNTED DUCTLESS SPLIT AIR HANDLER MOUNTED AS SHOWN. COORDINATE EXACT LOCATION AND HEIGHT WITH ALL OTHER EQUIPMENT IN SPACE.
5. PROVIDE AIR CURTAIN ABOVE EXTERIOR DOOR. OPERATION MUST BE TIED TO DOOR SWITCH.
6. PROVIDE KITCHEN EXHAUST HOOD, FAN, CONTROLS AND DUCTWORK AS SHOWN. SEE DETAIL SHEETS FOR MORE INFORMATION.
7. PROVIDE EXTERIOR CONDENSING UNIT MOUNTED ON EQUIPMENT SUPPORT PAD AS SHOWN.

#	DESCRIPTION	DATE	APPR

NAVFAC

NORTH CAROLINA PROFESSIONAL SEAL 035500 ENGINEER ERIK A. LEWIS
01-01-20
SEAL

CRENSHAW CONSULTING Engineers
NC LICENSE #C-1158
www.crenshawconsulting.com
3908 Bush Street, Suite 200
Raleigh, North Carolina 27609
919-871-1070 Fax 871-0409

A/E INFO

APPROVED

FOR COMMANDER NAVFAC

ACTIVITY
Approved by Erik A. Lewis,
Infrastructure Engineering Branch Head,
FRCE Cherry Point via Electronic Signature

SATISFACTORY TO

DES	LWM	DRW	MWF	CHK	JDL

PM/DM	L. PEED
BRANCH MANAGER	H. PERRY
CHIEF ENG/ARCH	P. FAULKNER
FIRE PROTECTION	D. CHASTAIN

DEPARTMENT OF THE NAVY
NAVAL FACILITIES ENGINEERING SYSTEMS COMMAND
DESIGN AND CONSTRUCTION (DC) CORE
MARINE CORPS AIR STATION

NAVAL FACILITIES ENGINEERING SYSTEMS COMMAND ~ MIDATLANTIC
NAVAL STATION - NORFOLK, VA.
CHERRY POINT, NC

MCOLF ATLANTIC
BUILDING 7019 RENOVATIONS

ENLARGED FIRST FLOOR PLAN - MECHANICAL HVAC

SCALE:	AS INDICATED
EPROJECT NO.:	7406712
STA. PROJ. NO.:	7406712
NAVFAC DRAWING NO.	12939518
SHEET	93 OF 148

M-105

DRAWFORM REVISION: 25 AUGUST 2020

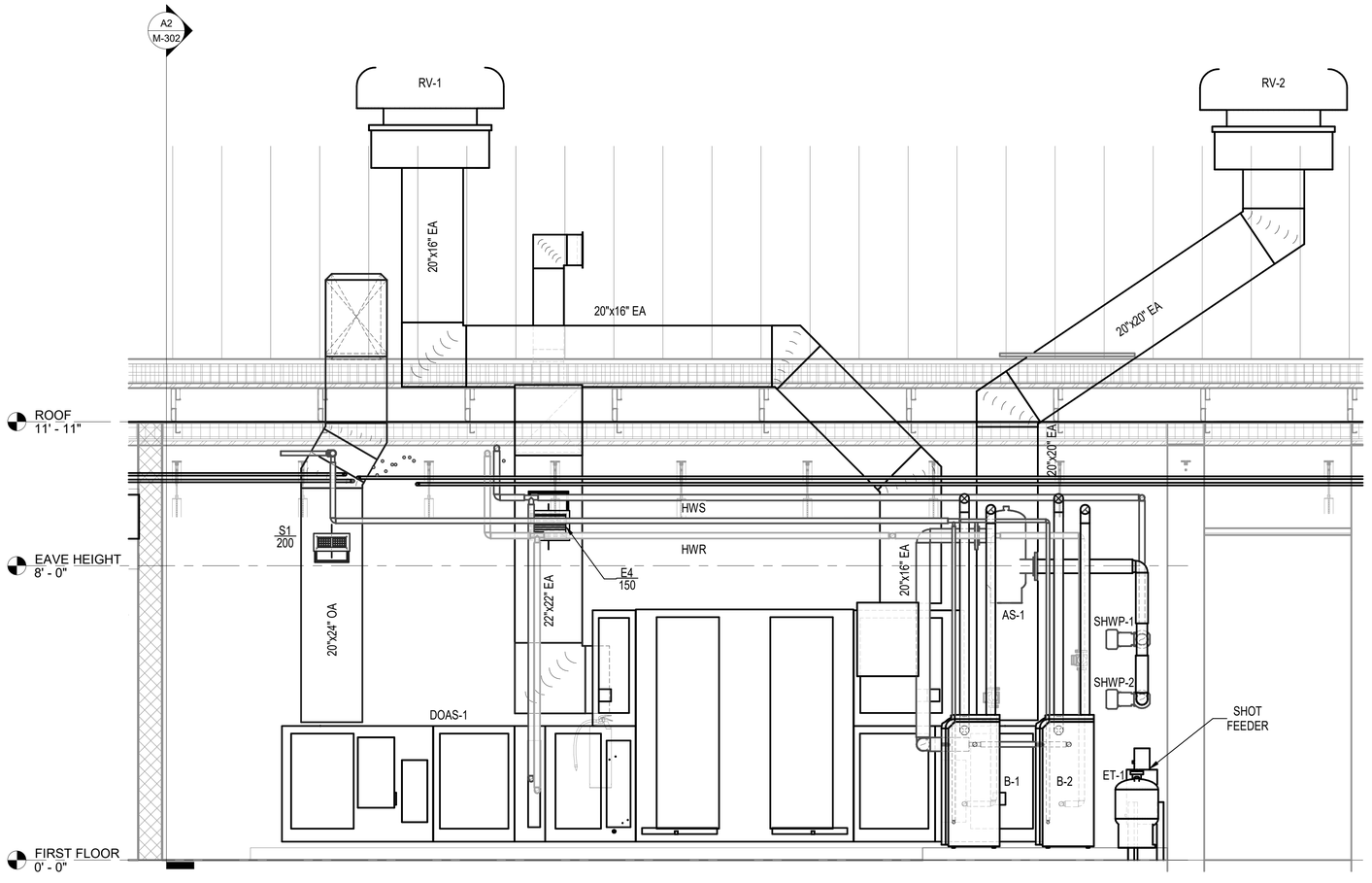

A3 EAST SECTION VIEW AT MECHANICAL ROOM

1/2" = 1'-0"

SYM	DESCRIPTION	DATE	APPR

NAVFAC

NORTH CAROLINA PROFESSIONAL SEAL 055500 ENGINEER LUCAS W. MERANDA

07-01-20

SEAL

CRENSHAW CONSULTING engineers
www.crenshawconsulting.com
NC LICENSE #C-1156
3916 Sixth Street, Suite 200
Raleigh, North Carolina 27609
919-871-0170 Fax 871-5620

A/E INFO

APPROVED

FOR COMMANDER NAVFAC

ACTIVITY
Approved by Erik A. Lewis,
Infrastructure Engineering Branch Head,
FRCE Cherry Point via Electronic Signature

SATISFACTORY TO

DES	LWM	DRW	MWF	CHK	JDL

PM/DM	L. PEED
BRANCH MANAGER	H. PERRY
CHIEF ENG/ARCH	P. FAULKNER
FIRE PROTECTION	D. CHASTAIN

DEPARTMENT OF THE NAVY
NAVAL FACILITIES ENGINEERING SYSTEMS COMMAND
NAVAL FACILITIES ENGINEERING SYSTEMS COMMAND ~ MIDATLANTIC
DESIGN AND CONSTRUCTION (DC) CORE
NAVAL STATION - NORFOLK, VA
MARINE CORPS AIR STATION
CHERRY POINT, NC

MCOLF ATLANTIC
BUILDING 7019 RENOVATIONS

MECHANICAL SECTIONS VIEWS

SCALE:	AS INDICATED
EPROJECT NO.:	7406712
STA. PROJ. NO.:	7406712
NAVFAC DRAWING NO.	12939519
SHEET	94 OF 148

M-301

DRAWFORM REVISION: 25 AUGUST 2020

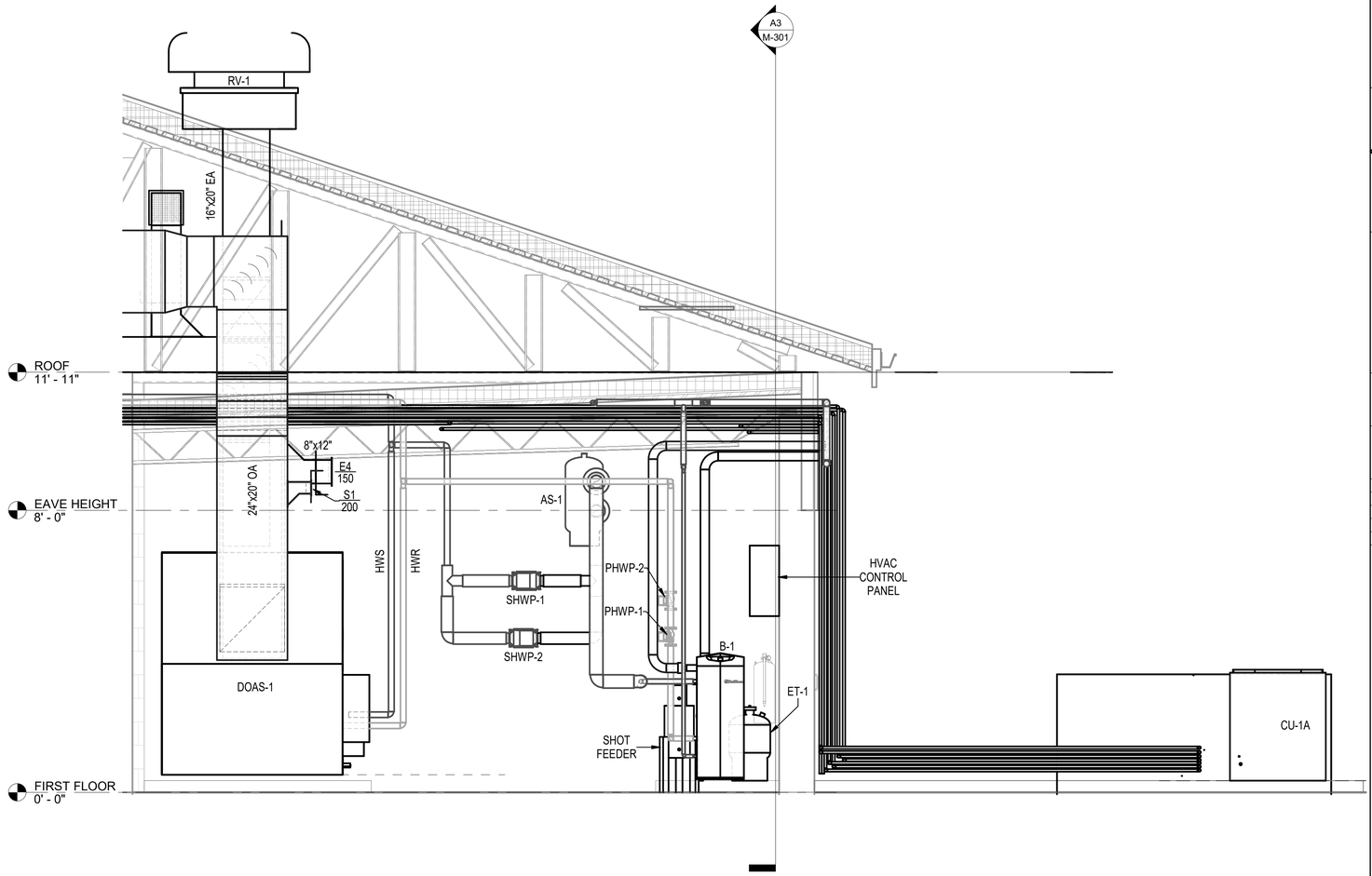

A2 SOUTH SECTION VIEW AT MECHANICAL ROOM

1/2" = 1'-0"

SYM	DESCRIPTION	DATE	APPR

NAVFAC

NORTH CAROLINA PROFESSIONAL SEAL 055500 ENGINEER LUCAS W. MERANDA

07-01-26

SEAL

CRENSHAW CONSULTING engineers
www.crenshawconsulting.com
NC LICENSE #C-1156
3816 Bush Street, Suite 200
Raleigh, North Carolina 27609
919-871-9370 Fax 871-5620

A/E INFO

APPROVED

FOR COMMANDER NAVFAC

ACTIVITY

Approved by Erik A. Lewis,
Infrastructure Engineering Branch Head,
FRCE Cherry Point via Electronic Signature

SATISFACTORY TO

DES	LWM	DRW	MWF	CHK	JDL

PM/DM	L. PEED
BRANCH MANAGER	H. PERRY
CHIEF ENG/ARCH	P. FAULKNER
FIRE PROTECTION	D. CHASTAIN

DEPARTMENT OF THE NAVY
NAVAL FACILITIES ENGINEERING SYSTEMS COMMAND
NAVAL FACILITIES ENGINEERING SYSTEMS COMMAND ~ MIDATLANTIC
DESIGN AND CONSTRUCTION (DC) CORE
NAVAL STATION - NORFOLK, VA
MARINE CORPS AIR STATION
CHERRY POINT, NC

MCOLF ATLANTIC
BUILDING 7019 RENOVATIONS

MECHANICAL SECTIONS VIEWS

SCALE:	AS INDICATED
EPROJECT NO.:	7406712
STA. PROJ. NO.:	7406712
NAVFAC DRAWING NO.	12939520
SHEET	95 OF 148

M-302

DRAWFORM REVISION: 25 AUGUST 2020

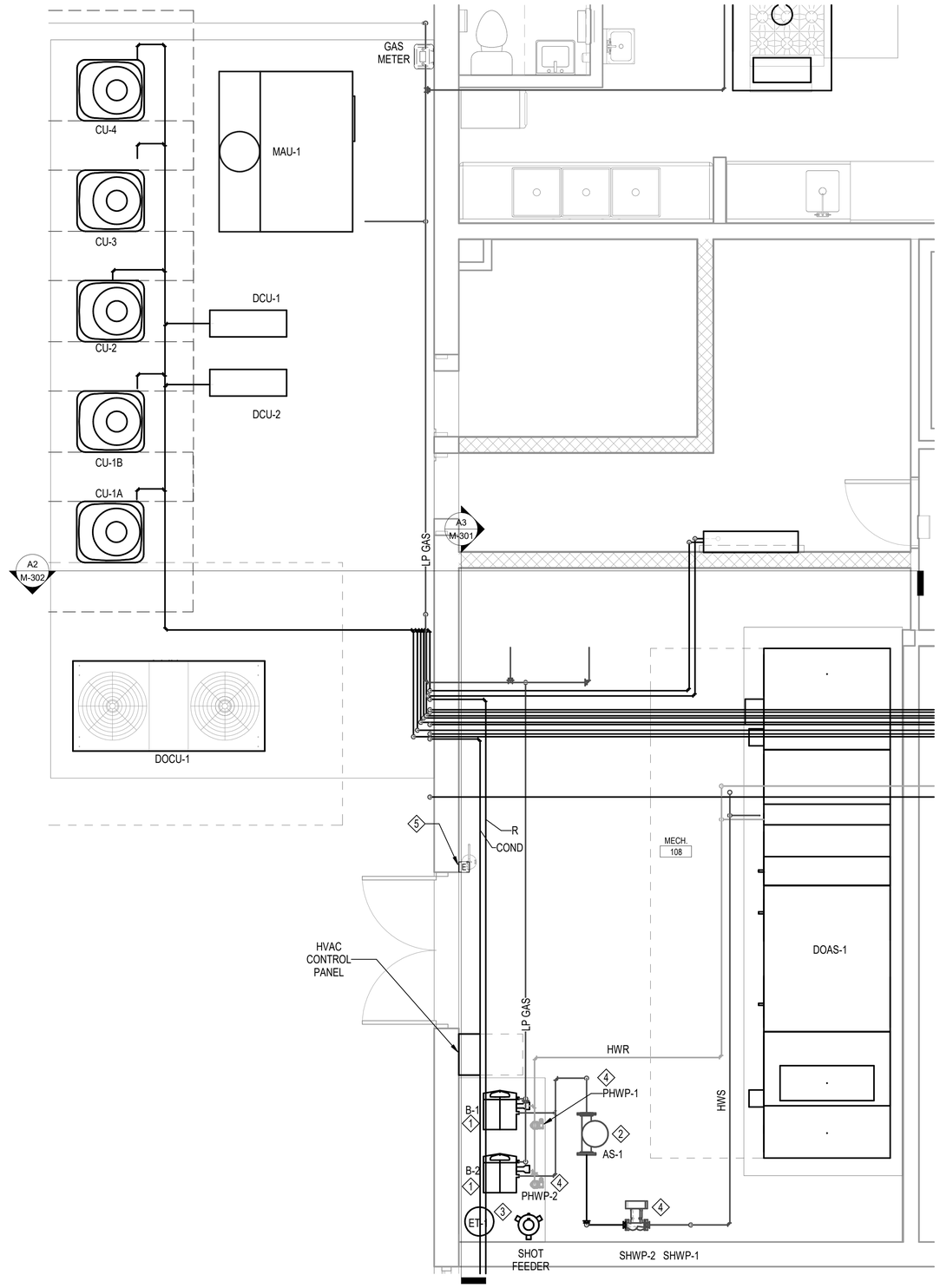

A1 ENLARGED MECHANICAL ROOM - MECHANICAL NEW WORK PIPING
3/8" = 1'-0"

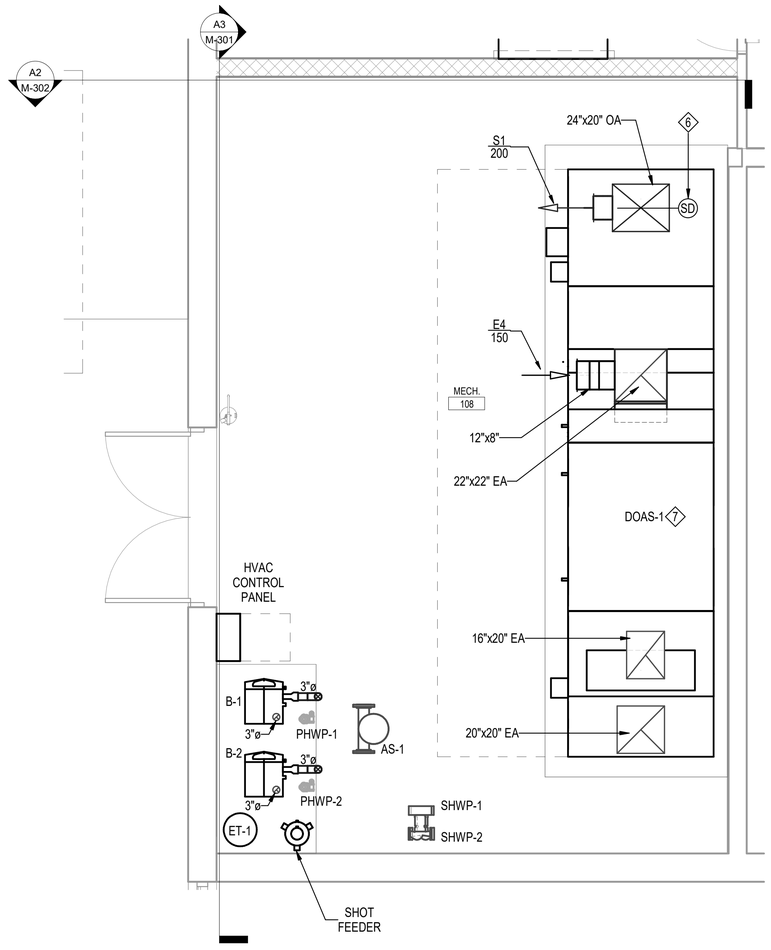

A3 ENLARGED MECHANICAL ROOM - MECHANICAL NEW WORK DUCT
3/8" = 1'-0"

GRAPHIC SCALE: 3/8"=1'-0"
3' 0 2' 6'

GENERAL NOTES:

1. SEE SHEET M-001 FOR GENERAL NOTES, LEGEND & ABBREVIATIONS
2. PLAN DRAWINGS ARE DIAGRAMMATIC IN NATURE AND DO NOT ILLUSTRATE ALL SPECIFIC DUCT TAKE-OFF CONFIGURATIONS, TAPS, ETC. PROVIDE FLEXIBLE DUCTWORK RUNOUTS TO ALL SUPPLY AND RETURN GRILLES WITH A MAXIMUM LENGTH OF 5 FEET AND SINLGE BENDS NO GREATER THAN 45 DEGREES. REFER TO PROJECT SPECIFICATION AND DUCTWORK DETAILS FOR SPECIFIC REQUIREMENTS.

NEW WORK NOTES

1 PROVIDE BOILER MOUNTED ON CONCRETE PAD. PROVIDE WITH INLINE BOILER FEED PUMP ON INLET OF BOILER. ROUTE CONDENSATE TO NEAREST FLOOR DRAIN. ROUTE FLUE TO EXTERIOR WALL AS SHOWN.
2 PROVIDE HOT WATER AIR SEPARATOR.
3 PROVIDE HOT WATER EXPANSION TANK
4 PROVIDE INLINE HOT WATER PUMP SUPPORTED FROM STRUCTURE.
5 PROVIDE WALL MOUNTED EMERGENCY SHUTOFF SWITCH TIED TO GAS SOLENOID SHUTOFF VALVE. SEE MECHANICAL CONTROLS SHEETS FOR MORE INFORMATION.
6 PROVIDE SMOKE DETECTOR ON SUPPLY SIDE OF DOAS. REFER TO MECHANICAL CONTROLS SHEETS FOR MORE INFORMATION.
7 PROVIDE FLOOR MOUNTED DOAS UNIT WITH DX COOLING COIL SECTION AND HW COIL SECTION IN THE REHEAT POSITION. ROUTE VENTILATION AND EXHAUST DUCTWORK AS SHOWN.

SYM	DESCRIPTION	DATE	APPR

NAVFAC

NORTH CAROLINA PROFESSIONAL ENGINEER SEAL 055500 LUCAS W. MERANDA
07-01-26
SEAL

CRENSHAW CONSULTING engineers
NC LICENSE #C-1156
www.crenshawconsulting.com
3816 Bush Street, Suite 200
Raleigh, North Carolina 27609
919-871-9370 Fax 871-5620

A/E INFO

APPROVED

FOR COMMANDER NAVFAC

ACTIVITY
Approved by Erik A. Lewis,
Infrastructure Engineering Branch Head,
FRCE Cherry Point via Electronic Signature

SATISFACTORY TO

DES	LWM	DRW	MWF	CHK	JDL

PM/DM	L. PEED
BRANCH MANAGER	H. PERRY
CHIEF ENG/ARCH	P. FAULKNER
FIRE PROTECTION	D. CHASTAIN

DEPARTMENT OF THE NAVY
NAVAL FACILITIES ENGINEERING SYSTEMS COMMAND
NAVAL FACILITIES ENGINEERING SYSTEMS COMMAND ~ MIDATLANTIC
DESIGN AND CONSTRUCTION (DC) CORE
NAVAL STATION - NORFOLK, VA
MARINE CORPS AIR STATION
CHERRY POINT, NC

MCOLF ATLANTIC
BUILDING 7019 RENOVATIONS

ENLARGED FLOOR PLAN - MECHANICAL ROOM

SCALE:	AS INDICATED
EPROJECT NO.:	7406712
STA. PROJ. NO.:	7406712
NAVFAC DRAWING NO.	12939521
SHEET	96 OF 148

M-401

DRAWFORM REVISION: 25 AUGUST 2020

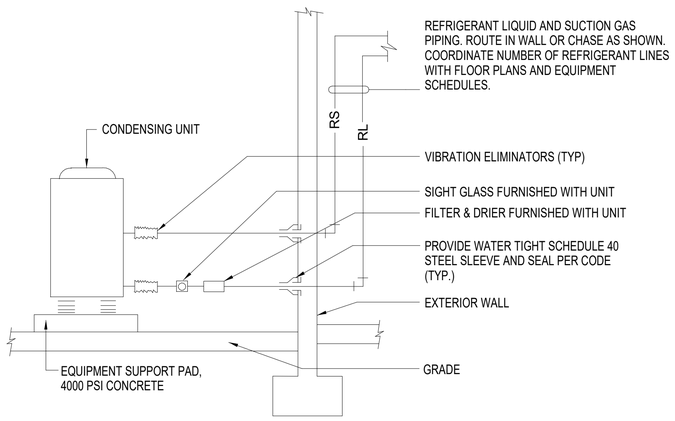

B2 REFRIGERANT PIPING DETAIL
NTS

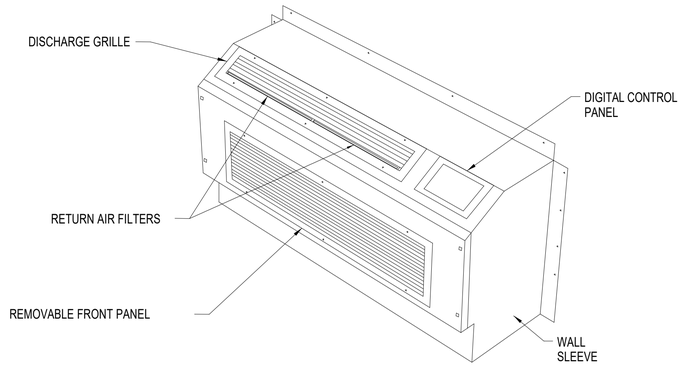

NOTE:

PROTECTIVE, TAMPER PROOF COVER TO BE CUSTOM BUILT TO ACCOMMODATE PACKAGE TERMINAL HEAT PUMP INSTALLED. ENSURE COVER DOES NOT PREVENT UNIT FROM OPERATING AS INTENDED AND PROVIDES MANUFACTURER'S REQUIRED INTAKE AND SUPPLY FREE AREA. KICKPLATE TO BE EXTENDED TO FLOOR TO PROVIDE 8 INCHES BETWEEN BOTTOM OF WALL SLEEVE FOR UNIT AND FLOOR.

B4 PTHP INSTALLATION DETAIL
NTS

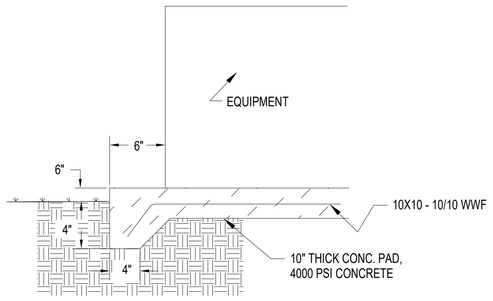

A1 EQUIPMENT SUPPORT PAD DETAIL
NTS

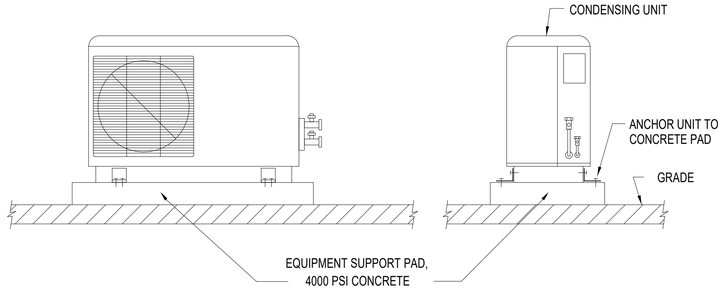

A2 SPLIT SYSTEM CONDENSING UNIT MOUNTING DETAIL
NTS

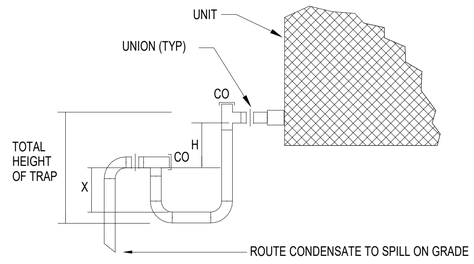

TOTAL HEIGHT OF TRAP = X+H+(1-1/2 x PIPE DIAMETER) (WITHOUT INSULATION)

BLOW THROUGH	DRAW THROUGH
X = MIN. 1" PLUS CASING STATIC PRESSURE	X = 1/2 "H"
H = MIN. 1"	H = MIN. 1" PLUS CASING STATIC PRESSURE

A4 COIL DRAIN PIPING DETAIL
NTS

SYM	DESCRIPTION	DATE	APPR

NAVFAC

NORTH CAROLINA PROFESSIONAL SEAL 035500 ENGINEER MICHAEL W. MERRITT
01-01-20
SEAL

CRENSHAW CONSULTING Engineers
NC LICENSE #C-1158
www.crenshawconsulting.com
3908 Bush Street, Suite 200
Raleigh, North Carolina 27609
919-571-1570 Fax 571-0409

A/E INFO

APPROVED

FOR COMMANDER NAVFAC
ACTIVITY
Approved by Erik A. Lewis,
Infrastructure Engineering Branch Head,
FRCE Cherry Point via Electronic Signature

SATISFACTORY TO

DES	LWM	DRW	MWF	CHK	JDL
PM/DM			L. PEED		
BRANCH MANAGER			H. PERRY		
CHIEF ENG/ARCH			P. FAULKNER		
FIRE PROTECTION			D. CHASTAIN		

DEPARTMENT OF THE NAVY
NAVAL FACILITIES ENGINEERING SYSTEMS COMMAND
DESIGN AND CONSTRUCTION (DC) CORE:
MARINE CORPS AIR STATION
NAVAL FACILITIES ENGINEERING SYSTEMS COMMAND ~ MIDATLANTIC
NAVAL STATION - NORFOLK, VA.
CHERRY POINT, NC
MCOLF ATLANTIC
BUILDING 7019 RENOVATIONS
MECHANICAL DETAILS

SCALE:	AS INDICATED
EPROJECT NO.:	7406712
STA. PROJ. NO.:	7406712
NAVFAC DRAWING NO.	12939522
SHEET	97 OF 148

M-501

DRAWFORM REVISION: 25 AUGUST 2020

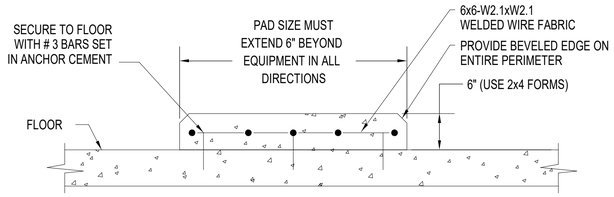

NOTES

1. CONTRACTOR MUST PROVIDE PADS FOR AIR HANDLERS, PUMPS AND OTHER FLOOR MOUNTED EQUIPMENT.

C1 HOUSEKEEPING PAD DETAIL
NTS

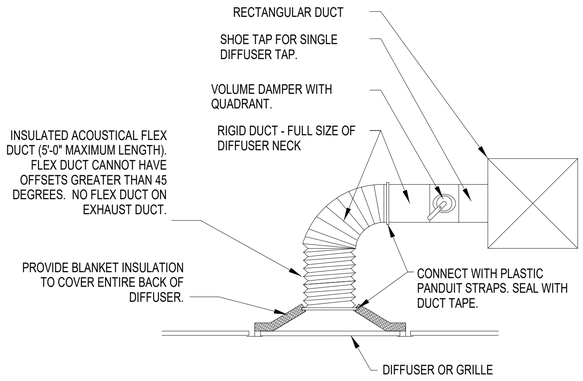

NOTE:

1. PROVIDE VOLUME DAMPERS ON RUN OUTS TO ALL DIFFUSERS AND GRILLES EXCEPT DO NOT INSTALL A VOLUME DAMPER ON A SUPPLY WHEN THERE IS ONLY ONE SUPPLY OUTLET ON TERMINAL BOX.
2. LOCATE DAMPER WHERE ACCESSIBLE.
3. STANDOFF REQUIRED FOR DAMPER HANDLE ON ALL INSULATED DUCT.
4. NO FLEXIBLE DUCT CAN BE USED IN EXHAUST SYSTEM. USE SNAPLOCK TYPE ROUND DUCT FOR ALL GRILLE RUN-OUTS.
5. SUPPLY CAN BE WIRE HELIX NON-METALLIC TYPE FLEXIBLE DUCT. RETURN MUST BE ALUMINUM METALLIC TYPE FLEXIBLE DUCT.
6. DETAIL SIMILAR FOR EXHAUST DUCT, ALL EXHAUST DUCT MUST BE RIGID METAL.

C2 DIFFUSER ASSEMBLY DETAIL
NTS

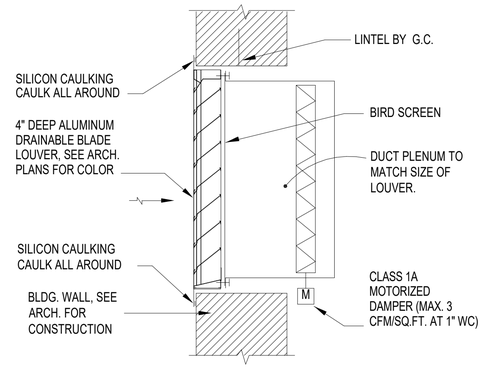

NOTE: COORDINATE LOCATIONS & SIZES WITH GEN. CONTR.

C4 LOUVER DETAIL
NTS

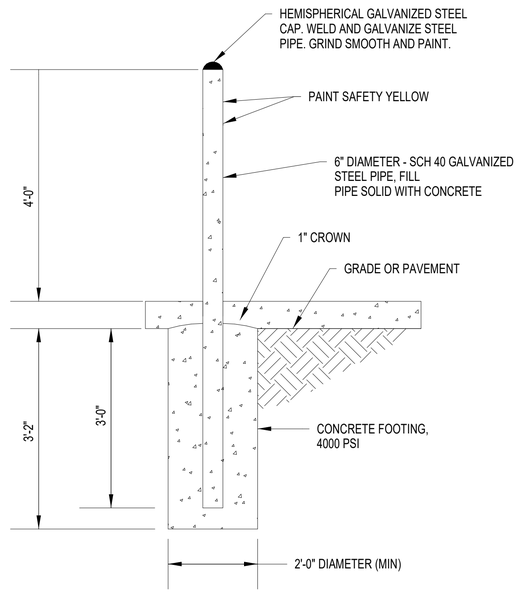

A1 BOLLARD DETAIL
NTS

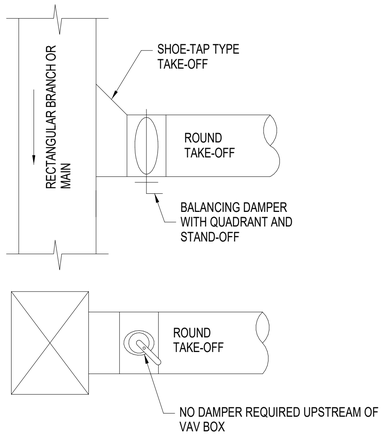

NOTE:

1. USE 90° SHOE TAP TYPE CONNECTIONS.
2. STRAIGHT IN FACTORY BUILT CONNECTIONS ARE PERMITTED FOR:
   A. SINGLE DIFFUSER, GRILLE OR REGISTER RUNOUTS FOR EXHAUST OR RETURN AIR APPLICATIONS.
   B. SINGLE DIFFUSER, GRILLE OR REGISTER RUNOUTS ON THE LOW PRESSURE SIDE OF TERMINAL BOXES.
3. STANDOFF REQUIRED FOR DAMPER HANDLE ON ALL INSULATED DUCT.

A2 DUCT TAKE-OFF DETAIL
NTS

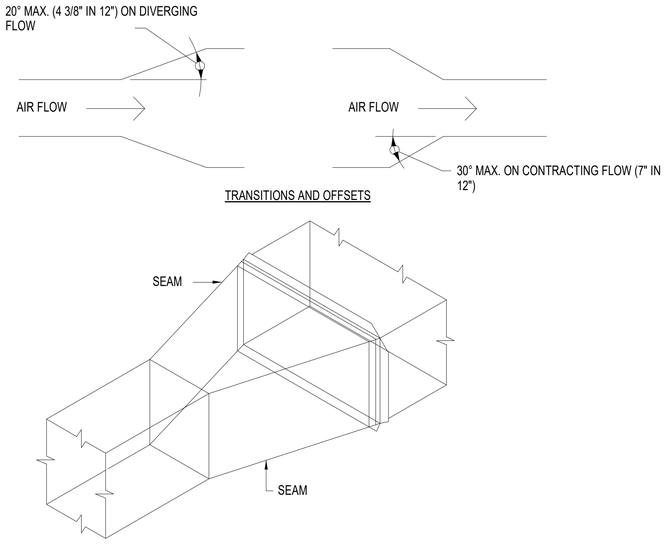

LARGEST DIMENSION GOVERNS CONSTRUCTION

CROSS BREAK OR BEAD FOR DUCT PAGE 1-36 (SMACNA LOW PRESSURE STAND. 5th ED.)

A4 DUCT TRANSITION DETAIL
NTS

SYM	DESCRIPTION	DATE	APPR

NAVFAC

NORTH CAROLINA PROFESSIONAL SEAL 035500 ENGINEER MICHAEL W. MERRITT
01-01-20
SEAL

CRENSHAW CONSULTING Engineers
www.crenshawconsulting.com
NC LICENSE #C-1158
2000 Bush Street, Suite 200
Raleigh, North Carolina 27608
919-571-1070 Fax 571-0409

A/E INFO

APPROVED

FOR COMMANDER NAVFAC

ACTIVITY
Approved by Erik A. Lewis, Infrastructure Engineering Branch Head, FRCE Cherry Point via Electronic Signature

SATISFACTORY TO

DES	LWM	DRW	MWF	CHK	JDL

PM/DM	L. PEED
BRANCH MANAGER	H. PERRY
CHIEF ENG/ARCH	P. FAULKNER
FIRE PROTECTION	D. CHASTAIN

DEPARTMENT OF THE NAVY
NAVAL FACILITIES ENGINEERING SYSTEMS COMMAND
DESIGN AND CONSTRUCTION (DC) CORE
NAVAL FACILITIES ENGINEERING SYSTEMS COMMAND – MIDATLANTIC
NAVAL STATION - NORFOLK, VA.
MARINE CORPS AIR STATION CHERRY POINT, NC

MCOLF ATLANTIC
BUILDING 7019 RENOVATIONS

MECHANICAL DETAILS

SCALE:	AS INDICATED
EPROJECT NO.:	7406712
STA. PROJ. NO.:	7406712
NAVFAC DRAWING NO.	12939523
SHEET	98 OF 148

M-502

DRAWFORM REVISION: 25 AUGUST 2020

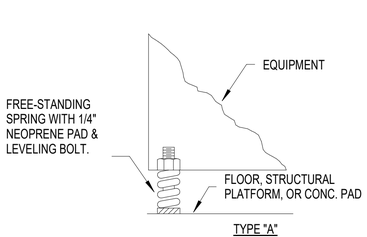

TYPE "A"

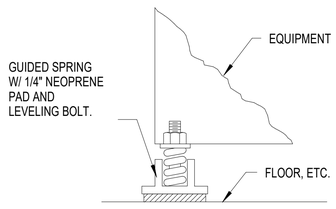

TYPE "B"

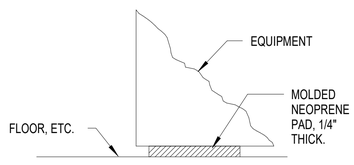

TYPE "C"

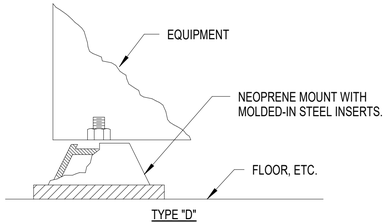

TYPE "D"

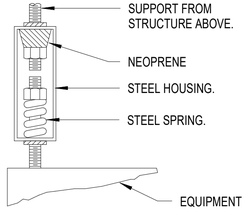

TYPE "E"

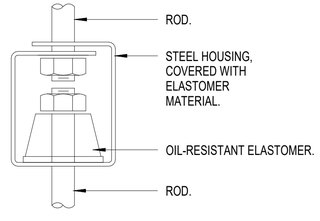

TYPE "F"

A1 VIBRATION ISOLATION DETAIL

NTS

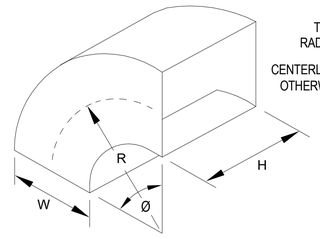

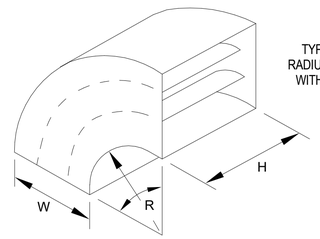

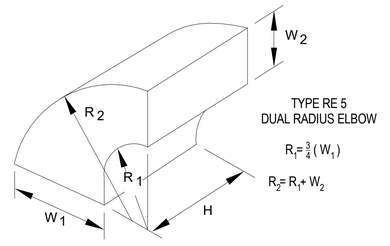

$R_1 = \frac{3}{4}(W_1)$

$R_2 = R_1 + W_2$

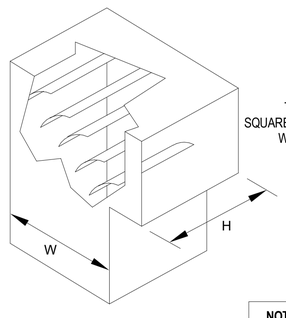

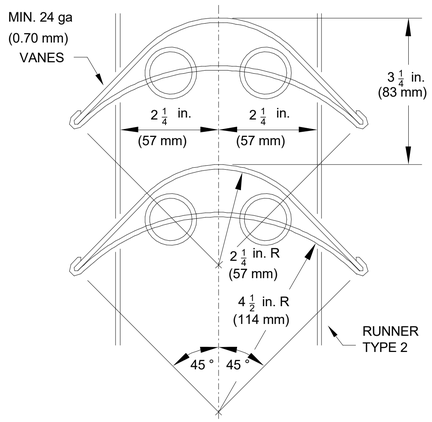

DOUBLE VANE SCHEDULE						
	W	H	R1	R2	SP	GA
LARGE	>18"	>18"	4-1/2"	2-1/4"	3-1/4"	24

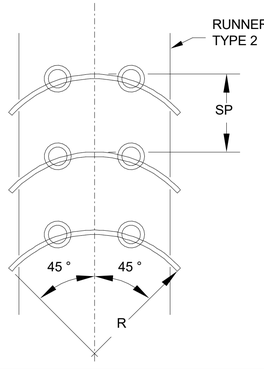

SINGLE VANE SCHEDULE					
	W	H	R	SP	GA
SMALL	≤18"	≤18"	2"	1-1/2"	24

MAXIMUM UNSUPPORTED VANE LENGTH LARGE DOUBLE VANE 72"

NOTE:

1. PROVIDE RADIUS TYPE ELBOW WITH CENTERLINE RADIUS OF 1.5 TIMES THE WIDTH OR DIAMETER OF THE DUCT WHERE SPACE PERMITS.

A3 DUCT RADIUS AND MITERED 90 ELBOW DETAIL

NTS

SYM	DESCRIPTION	DATE	APPR

NAVFAC

NORTH CAROLINA PROFESSIONAL SEAL 035500 ENGINEER LEWIS W. MERRITT

01-01-20

SEAL

CRENSHAW CONSULTING Engineers
www.crenshawconsulting.com
NC LICENSE #C-1158
3816 Bush Street, Suite 200
Raleigh, North Carolina 27609
919-571-1570 Fax 571-0429

A/E INFO

APPROVED

FOR COMMANDER NAVFAC

ACTIVITY
Approved by Erik A. Lewis,
Infrastructure Engineering Branch Head,
FRCE Cherry Point via Electronic Signature

SATISFACTORY TO

DES	LWM	DRW	MWF	CHK	JDL

PM/DM L. PEED

BRANCH MANAGER H. PERRY

CHIEF ENG/ARCH P. FAULKNER

FIRE PROTECTION D. CHASTAIN

DEPARTMENT OF THE NAVY
NAVAL FACILITIES ENGINEERING SYSTEMS COMMAND
DESIGN AND CONSTRUCTION (DC) CORE
MARINE CORPS AIR STATION
NAVAL FACILITIES ENGINEERING SYSTEMS COMMAND - MIDATLANTIC
NAVAL STATION - NORFOLK, VA
CHERRY POINT, NC

MCOLF ATLANTIC
BUILDING 7019 RENOVATIONS

MECHANICAL DETAILS

SCALE: AS INDICATED

EPROJECT NO.: 7406712

STA. PROJ. NO.: 7406712

NAVFAC DRAWING NO.
12939524

SHEET 99 OF 148

M-503

DRAWFORM REVISION: 25 AUGUST 2020

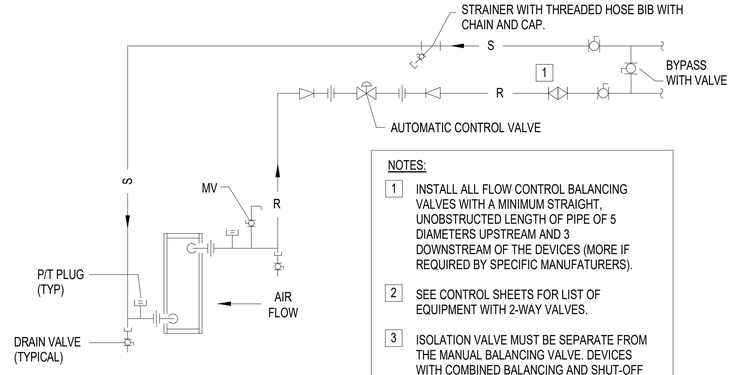

C4 HW COIL 2-WAY VALVE PIPING DETAIL
NTS

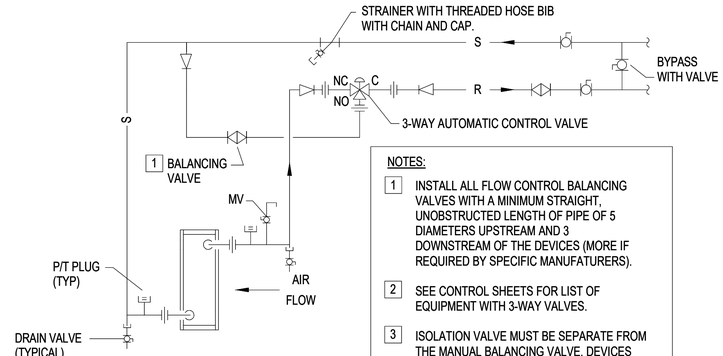

B4 HW COIL 3-WAY VALVE PIPING DETAIL
NTS

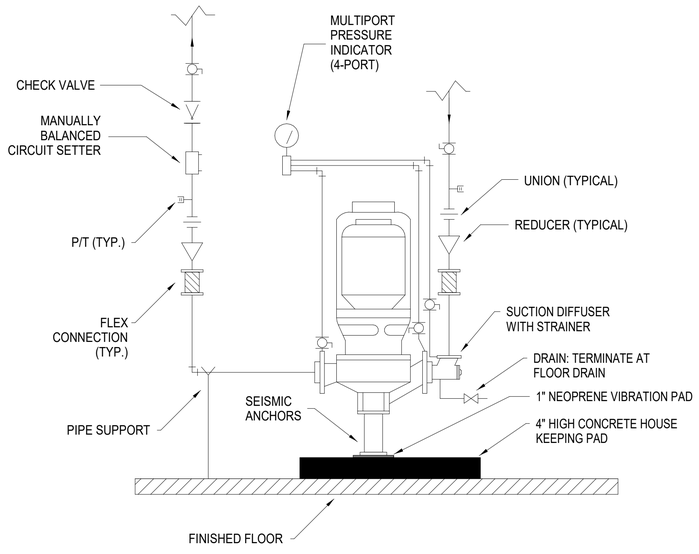

NOTES:
INSTALL ALL FLOW CONTROL BALANCING VALVES WITH A MINIMUM STRAIGHT, UNOBSTRUCTED LENGTH OF PIPE OF 5 DIAMETERS UPSTREAM AND 3 DOWNSTREAM OF THE DEVICES (MORE IF REQUIRED BY SPECIFIC MANUFACTURERS).

A2 INLINE PUMP INSTALLATION DETAIL
NTS

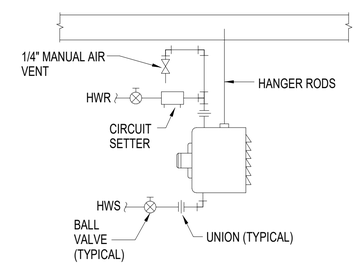

A4 HOT WATER UNIT HEATER DETAIL
NTS

APPR | DATE | DESCRIPTION | SYM

NAVFAC

NORTH CAROLINA PROFESSIONAL SEAL 035500 ENGINEER MICHAEL W. MERRITT
01-01-20
SEAL

CRENSHAW CONSULTING Engineers
www.crenshawconsulting.com
NC LICENSE #C-1158
3816 Bush Street, Suite 200
Raleigh, North Carolina 27609
919-871-1070 Fax 871-0409

A/E INFO

APPROVED

FOR COMMANDER NAVFAC

ACTIVITY
Approved by Erik A. Lewis,
Infrastructure Engineering Branch Head,
FRCE Cherry Point via Electronic Signature

SATISFACTORY TO

DES	LWM	DRW	MWF	CHK	JDL

PM/DM	L. PEED
BRANCH MANAGER	H. PERRY
CHIEF ENG/ARCH	P. FAULKNER
FIRE PROTECTION	D. CHASTAIN

DEPARTMENT OF THE NAVY
NAVAL FACILITIES ENGINEERING SYSTEMS COMMAND
DESIGN AND CONSTRUCTION (DC) CORE
NAVAL FACILITIES ENGINEERING SYSTEMS COMMAND - MIDATLANTIC
NAVAL STATION - NORFOLK, VA
MARINE CORPS AIR STATION CHERRY POINT, NC
MCOLF ATLANTIC
BUILDING 7019 RENOVATIONS
MECHANICAL DETAILS

SCALE:	AS INDICATED
EPROJECT NO.:	7406712
STA. PROJ. NO.:	7406712
NAVFAC DRAWING NO.	12939525
SHEET	100 OF 148

M-504

DRAWFORM REVISION: 25 AUGUST 2020

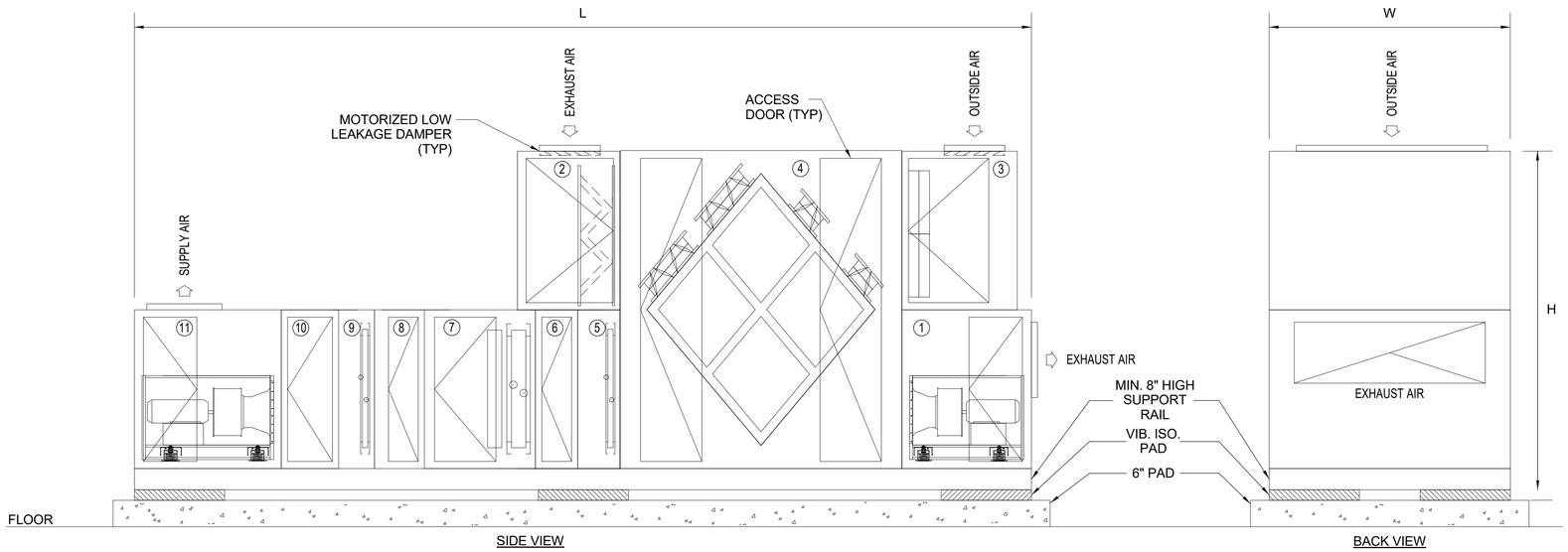

MARK	W	L	H
DOAS-1	≈ 70"	≈ 290"	≈ 90"

NOTE:
AHU DIMENSIONS ARE GENERIC IN NATURE AND ARE MEANT TO CONVEY A GENERAL SENSE OF UNIT SIZING, AND NOT LIMIT COMPETITION. COORDINATE ACTUAL PURCHASED EQUIPMENT WITH AVAILABLE SPACE.

1. EXHAUST FAN SECTION
2. EXHAUST AIR INTAKE SECTION WITH MERV-8 FILTER
3. OUTSIDE AIR INTAKE SECTION WITH MERV-8 PREFILTER AND MERV-13 FINAL FILTER
4. AIR TO AIR PLATE FRAME HEAT EXCHANGER WITH BYPASS
5. HOT WATER PREHEAT COIL SECTION
6. ACCESS SECTION
7. CHILLED WATER COOLING COIL SECTION
8. ACCESS SECTION
9. HOT WATER REHEAT COIL SECTION
10. ACCESS SECTION
11. SUPPLY FAN SECTION

B1 DEDICATED OUTDOOR AIR SYSTEM DETAIL
NTS

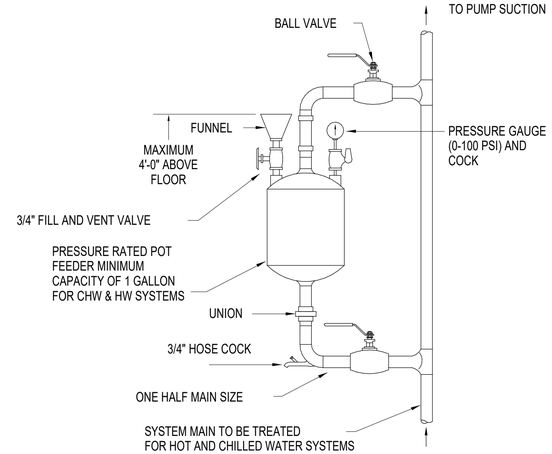

C4 SHOT FEEDER DETAIL
NTS

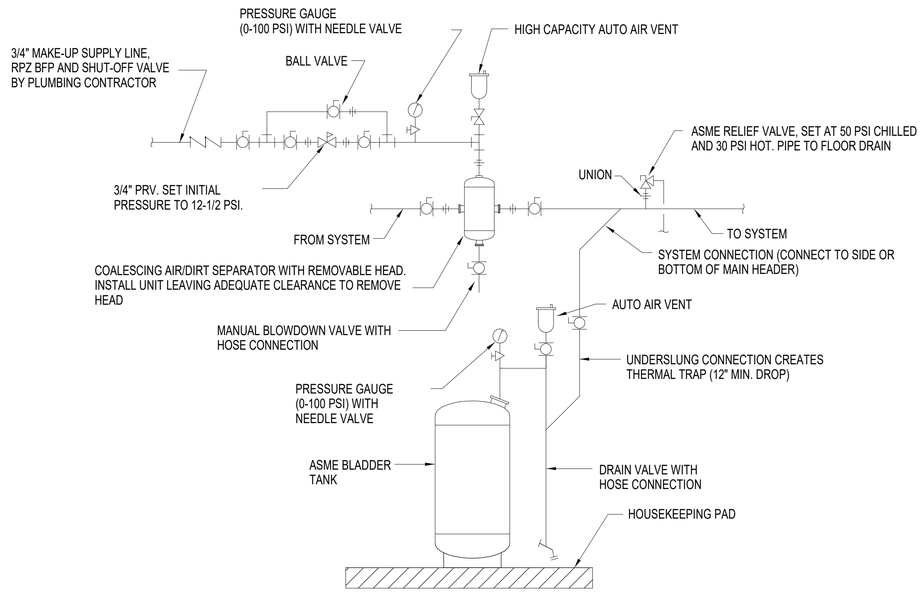

A2 HW AIR CONTROL PIPING DETAIL
NTS

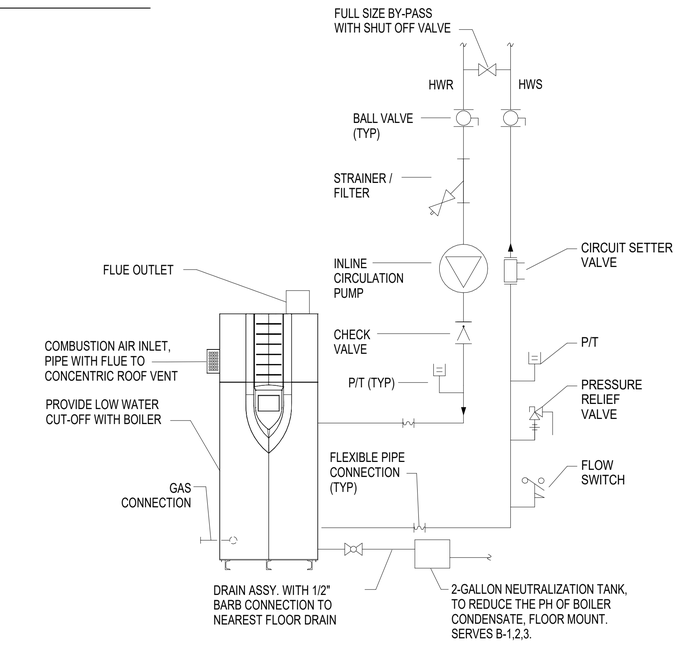

A4 HOT WATER BOILER DETAIL
NTS

SYM	DESCRIPTION	DATE	APPR

NAVFAC

NORTH CAROLINA PROFESSIONAL SEAL 035500 ENGINEER LEWIS W. MERRITT
01-01-20
SEAL

CRENSHAW CONSULTING Engineers
www.crenshawconsulting.com
RC LICENSE #C-1158
3916 Bush Street, Suite 200
Raleigh, North Carolina 27609
919-871-1070 Fax 871-0409

A/E INFO

APPROVED

FOR COMMANDER NAVFAC

ACTIVITY
Approved by Erik A. Lewis,
Infrastructure Engineering Branch Head,
FRCE Cherry Point via Electronic Signature

SATISFACTORY TO

DES	LWM	DRW	MWF	CHK	JDL

PM/DM	L. PEED
BRANCH MANAGER	H. PERRY
CHIEF ENG/ARCH	P. FAULKNER
FIRE PROTECTION	D. CHASTAIN

DEPARTMENT OF THE NAVY
NAVAL FACILITIES ENGINEERING SYSTEMS COMMAND
DESIGN AND CONSTRUCTION (DC) CORE
MARINE CORPS AIR STATION

NAVAL FACILITIES ENGINEERING SYSTEMS COMMAND ~ MIDATLANTIC
NAVAL STATION - NORFOLK, VA
CHERRY POINT, NC

MCOLF ATLANTIC
BUILDING 7019 RENOVATIONS

MECHANICAL DETAILS

SCALE:	AS INDICATED
EPROJECT NO.:	7406712
STA. PROJ. NO.:	7406712

NAVFAC DRAWING NO.
12939526

SHEET 101 OF 148

M-505

DRAWFORM REVISION: 25 AUGUST 2020

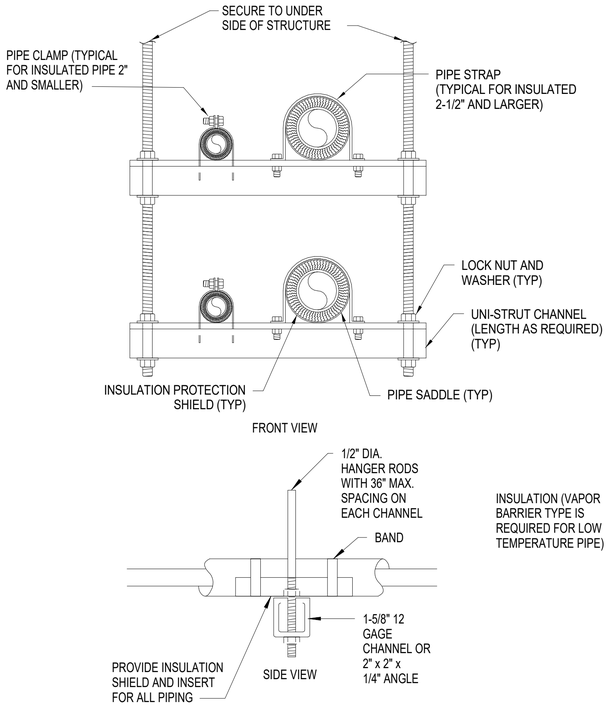

A1 TYPICAL PIPE HANGERS

12" = 1'-0"

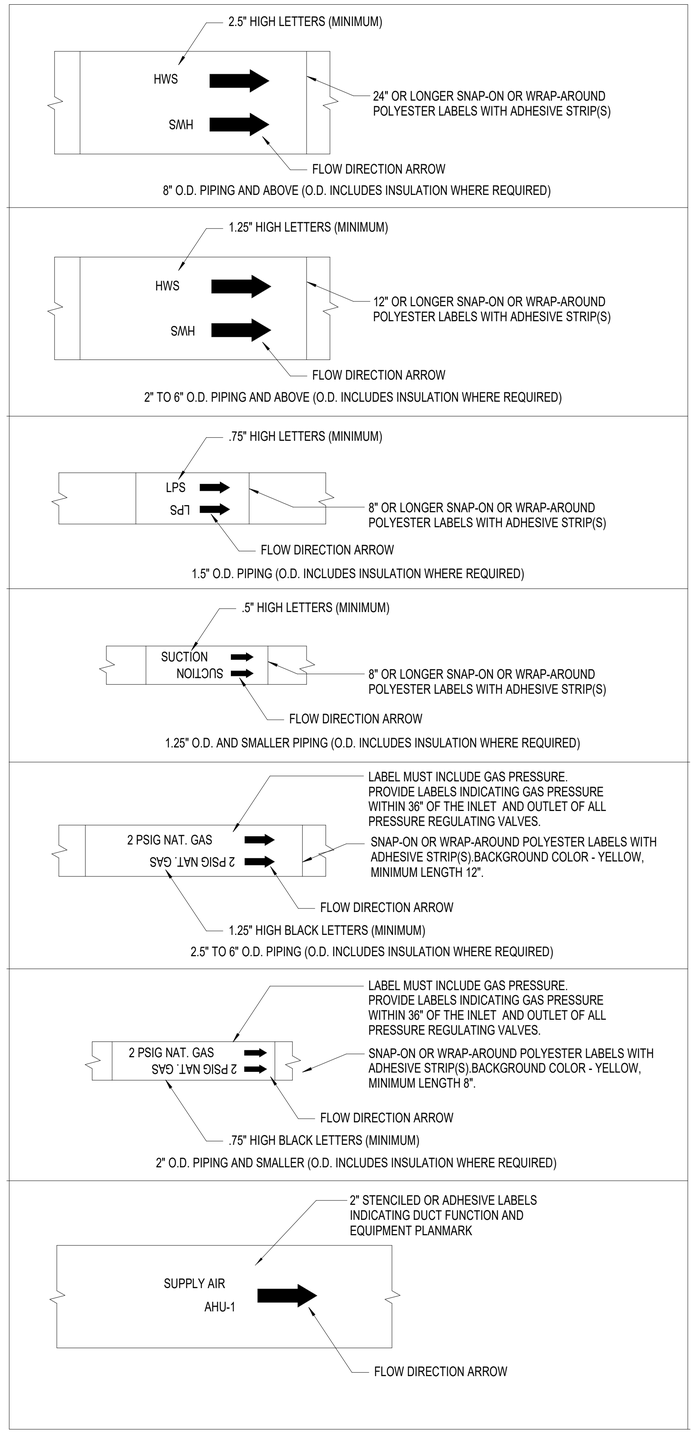

A3 PIPE AND DUCT IDENTIFICATION

NTS

LABEL TEXT AND COLOR LEGEND

PIPE SYSTEM DESCRIPTION	LETTER COLOR	BACKGROUND COLOR
HOT WATER SUPPLY	BLACK	YELLOW
HOT WATER RETURN	BLACK	YELLOW
CHILLED WATER SUPPLY	WHITE	GREEN
CHILLED WATER RETURN	WHITE	GREEN
NATURAL OR LP GAS	BLACK	YELLOW
REFRIGERANT SUCTION	WHITE	ORANGE
REFRIGERANT LIQUID	WHITE	ORANGE
MAKE-UP WATER	WHITE	GREEN
CHEMICAL SHOT FEEDER	BLACK	YELLOW

NOTES:

1. STENCIL OR LABEL COLORS MUST CONTRAST WITH THE DUCT SYSTEM COLOR. USE BLACK FOIL FACED DUCT INSULATION.

2. LABEL ALL ACCESSIBLE DUCT SYSTEMS AFTER EXITING A MECHANICAL ROOM OR CHASE AND BEFORE ENTERING A MECHANICAL ROOM OR CHASE.

3. LABEL DUCT SYSTEMS WHERE MULTIPLE DUCT SYSTEMS OCCUR IN A CONCENTRATED AREA OR CROSS PATHS. STENCIL PAINT MUST BE AN ALKYD BASED GLOSS OR SEMI-GLOSS.

4. CLEAN DUCTWORK PRIOR TO STENCILING OR APPLYING ADHESIVE LABELS.

APPR | DATE | DESCRIPTION | SYM

NAVFAC

NORTH CAROLINA PROFESSIONAL SEAL 035500 ENGINEER JOHN A. W. MEWBORN
01-01-20
SEAL

CRENSHAW CONSULTING Engineers
www.crenshawconsulting.com
NC LICENSE #C-1158
3908 Bush Street, Suite 200
Raleigh, North Carolina 27609
919-871-1070 Fax 871-0409

A/E INFO

APPROVED

FOR COMMANDER NAVFAC

ACTIVITY
Approved by Erik A. Lewis,
Infrastructure Engineering Branch Head,
FRCE Cherry Point via Electronic Signature

SATISFACTORY TO

DES	LWM	DRW	MWF	CHK	JDL

PM/DM L. PEED

BRANCH MANAGER H. PERRY

CHIEF ENG/ARCH P. FAULKNER

FIRE PROTECTION D. CHASTAIN

DEPARTMENT OF THE NAVY
NAVAL FACILITIES ENGINEERING SYSTEMS COMMAND
DESIGN AND CONSTRUCTION (DC) CORE
MARINE CORPS AIR STATION
NAVAL FACILITIES ENGINEERING SYSTEMS COMMAND ~ MIDATLANTIC
NAVAL STATION - NORFOLK, VA.
CHERRY POINT, NC

MCOLF ATLANTIC
BUILDING 7019 RENOVATIONS

MECHANICAL DETAILS

SCALE: AS INDICATED

EPROJECT NO.: 7406712

STA. PROJ. NO.: 7406712

NAVFAC DRAWING NO.
12939527

SHEET 102 OF 148

M-506

DRAWFORM REVISION: 25 AUGUST 2020

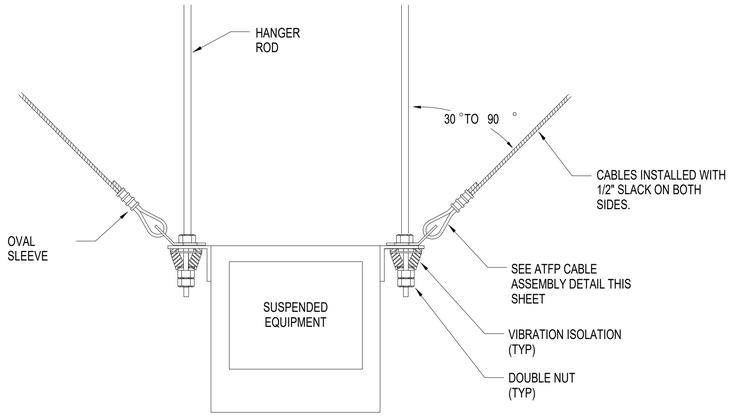

C1 ANTITERRORISM (AT) ELEVATION
NTS

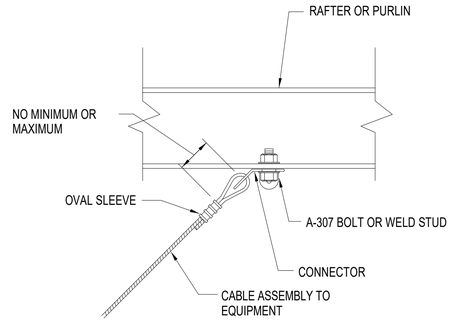

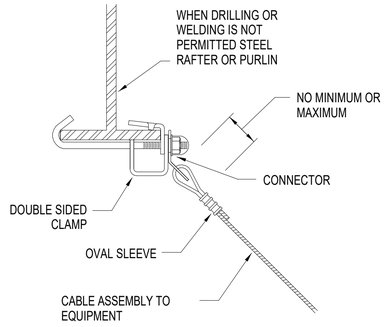

C2 ANTITERRORISM (AT) CABLE BRACING ATTACHMENT TO STRUCTURE DETAIL
NTS

SUSPENDED EQUIPMENT:

1. ALL SUSPENDED EQUIPMENT WEIGHING OVER 31 POUNDS MUST BE INSTALLED TO RESIST FORCES OF 0.5 TIMES THE EQUIPMENT WEIGHT IN ANY DIRECTION AND 1.5 TIMES THE EQUIPMENT WEIGHT IN THE DOWNWARD DIRECTION.
2. THESE DETAILS ARE PROVIDED AS GUIDANCE FOR THE SUPPORT OF SUSPENDED EQUIPMENT WEIGHING OVER 31 POUNDS.
3. EQUIPMENT INSTALLED IN EQUIPMENT ROOMS DOES NOT HAVE TO MEET THE ATFP STANDARDS FOR SUSPENDED EQUIPMENT.
4. CONTRACTOR MUST PROVIDE ON THE CONTRACT DRAWINGS AN ATFP BRACING FOR EQUIPMENT SCHEDULE AS SHOWN BELOW FOR ALL SUSPENDED EQUIPMENT WEIGHING 31 POUNDS AND OVER.

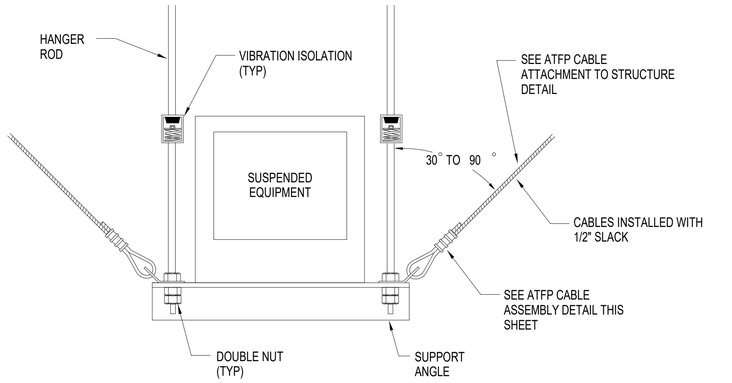

B1 ANTITERRORISM (AT) ELEVATION 2
NTS

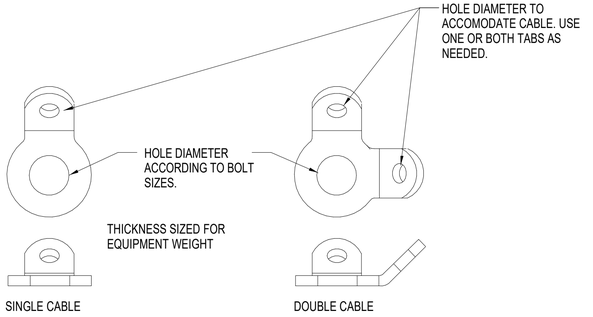

B2 ANTITERRORISM (AT) BRACING CONNECTOR DETAIL
NTS

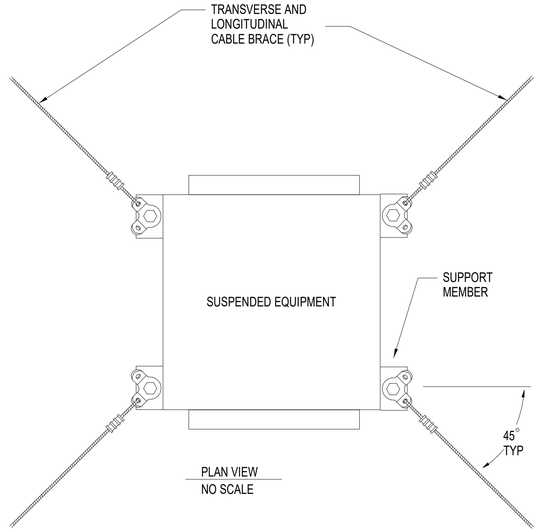

ANTITERRORISM (AT) BRACING DETAILS FOR SUSPENDED EQUIPMENT WITH INTERNAL VIBRATION ISOLATORS OR NO REQUIREMENT FOR VIBRATION ISOLATION
A4 NTS

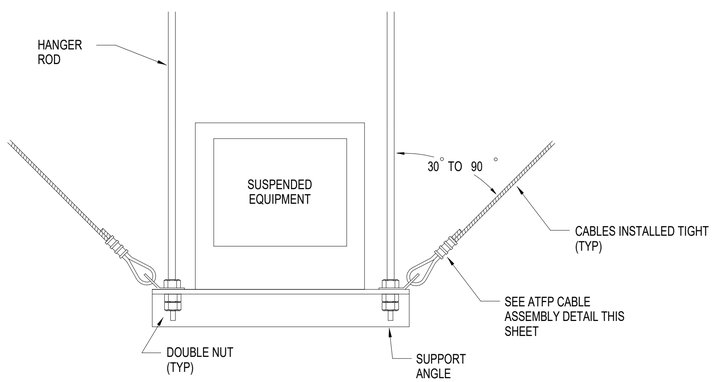

A1 ANTITERRORISM (AT) ELEVATION 3
NTS

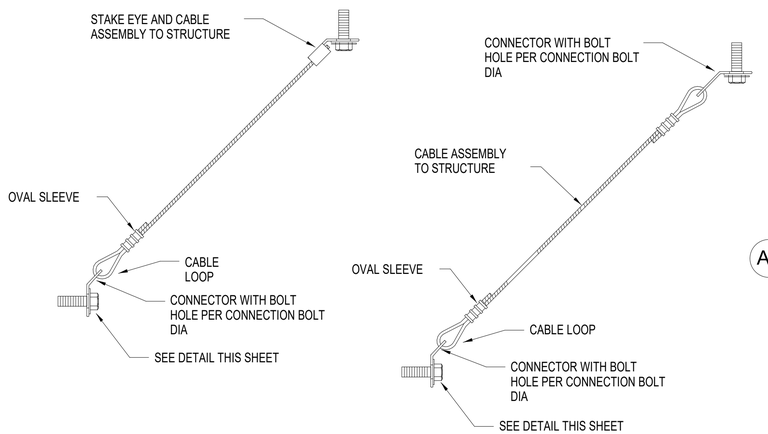

A2 ANTITERRORISM (AT) CABLE BRACING ASSEMBLY DETAILS
NTS

APPR	
DATE	
DESCRIPTION	
SYM	

NAVFAC

NORTH CAROLINA PROFESSIONAL SEAL 035500 ENGINEER ERIK A. W. NEWMAN
01-01-20
SEAL

CRENSHAW CONSULTING Engineers
www.crenshawconsulting.com
RC LICENSE #C-1168
3908 Bush Street, Suite 200
Raleigh, North Carolina 27609
919-871-1070 Fax 871-0409

A/E INFO

APPROVED

FOR COMMANDER NAVFAC

ACTIVITY
Approved by Erik A. Lewis,
Infrastructure Engineering Branch Head,
FRCE Cherry Point via Electronic Signature

SATISFACTORY TO

DES	LWM	DRW	MWF	CHK	JDL

PM/DM	L. PEED
BRANCH MANAGER	H. PERRY
CHIEF ENG/ARCH	P. FAULKNER
FIRE PROTECTION	D. CHASTAIN

DEPARTMENT OF THE NAVY
NAVAL FACILITIES ENGINEERING SYSTEMS COMMAND
DESIGN AND CONSTRUCTION (DC) CORE
NAVAL FACILITIES ENGINEERING SYSTEMS COMMAND ~ MIDATLANTIC
NAVAL STATION - NORFOLK, VA
CHERRY POINT, NC
MARINE CORPS AIR STATION
MCOLF ATLANTIC
BUILDING 7019 RENOVATIONS
MECHANICAL DETAILS

SCALE:	AS INDICATED
EPROJECT NO.:	7406712
STA. PROJ. NO.:	7406712
NAVFAC DRAWING NO.	12939528
SHEET	103 OF 148

M-507

DRAWFORM REVISION: 25 AUGUST 2020

System No. C-AJ-5061

F Rating -- 3 Hr
T Rating -- 1/2 Hr

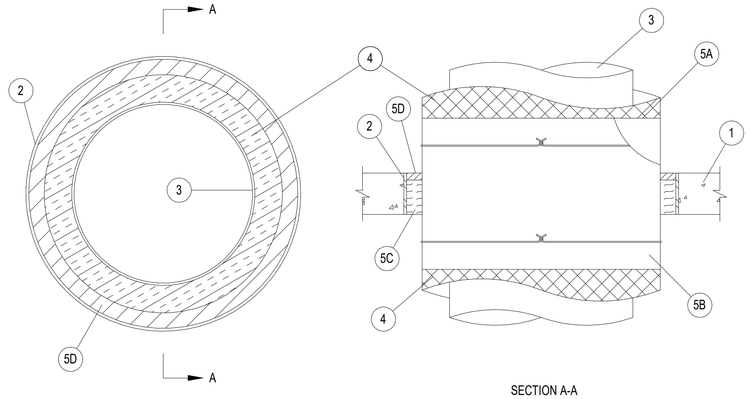

SECTION A-A

1. Floor or Wall Assembly — Min 4-1/2 in. thick reinforced lightweight or normal weight (100-150 pcf) concrete. Wall may also be constructed of UL Classified Concrete Blocks*. Max diam of opening is 36-3/4 in.
   See Concrete Blocks (CAZT) category in the Fire Resistance Directory for names of manufacturers.
2. Metallic Sleeve — (Optional) — Nom 30 in. diam (or smaller) Schedule 10 (or heavier) steel pipe, conduit or EMT cast or grouted into floor or wall assembly, flush with floor or wall surfaces.
3. Through Penetrants — One metallic pipe or tubing must be located either concentrically or eccentrically within the firestop system. Pipe or tube must be rigidly supported on both sides of floor or wall assembly. The following types and sizes of metallic pipes or tubing may be used:
   A. Steel Pipe — Nom 20 in. diam (or smaller) Schedule 10 (or heavier) steel pipe.
   B. Iron Pipe — Nom 20 in. diam (or smaller) cast or ductile iron pipe.
   C. Copper Tubing — Nom 6 in. diam (or smaller) L (or heavier) copper tubing.
   D. Copper Pipe — Nom 6 in. diam (or smaller) Regular (or heavier) copper pipe.
4. Pipe Covering — Max 3 in. thick hollow cylindrical heavy density (min 3.5 pcf) glass fiber units jacketed on the outside with an all service jacket. Longitudinal joints sealed with metal fasteners or factory-applied self-sealing lap tape. Transverse joints secured with metal fasteners or with butt tape supplied with the product. Pipe covering to terminate 6 in. from each side of floor or wall assembly.
   See Pipe and Equipment Covering — Materials (BRGU) category in the Building Materials Directory for names of manufacturers. Pipe covering material meeting the above specifications and bearing the UL Classification Marking with a Flame Spread Index of 25 or less and a Smoke Developed Index of 50 or less may be used.
5. Firestop System — The firestop system must consist of the following:
   A. Pipe Covering Materials* — Nom 3 in. thick unfaced mineral fiber pipe insulation having a nom density of 5.0 pcf (or heavier) sized to the outside diam of pipe or tube and extending min 6 in. beyond each surface of floor or wall. Pipe insulation secured with min 18 AWG steel wire 3 in. beyond each surface of floor or wall. The annular space must be min 1/4 in. to max of 3 in., or when steel sleeve is used, min 1 in. to max 2-1/4 in.
   See Pipe and Equipment Covering — Materials (BRGU) category in the Building Materials Directory for names of manufacturers. Pipe covering material meeting the above specification and bearing the UL Classification Marking with a Flame Spread Index of 25 or less and a Smoke Developed Index of 50 or less may be used.
   B. Sheathing Material* — All service jacket material must be wrapped around the outer circumference of the pipe covering material (Item 5A) with kraft facing exposed. Longitudinal joints sealed with metal fasteners.
   See Sheathing Material (BVDV) category in the Building Materials Directory for names of manufacturers. Sheathing material meeting the above specifications and bearing the UL Classification Marking with a Flame Spread Index of 25 or less and a Smoke Developed Index of 50 or less may be used.
   C. Packing Material — Min 3 in. thickness of min 4.0 pcf mineral wool batt insulation firmly packed into opening as a permanent form. Packing material must be recessed from top surface of floor or from both surfaces of wall to accommodate the required thickness of fill material.
   D. Fill, Void or Cavity Material* — Sealant — Min 3/4 in. thickness of fill material applied within the annulus, flush with top surface of floor or with both surfaces of wall.
   HILTI CONSTRUCTION CHEMICALS, DIV OF HILTI INC — FS-One Sealant

*Bearing the UL Classification Mark

A2 INSULATED PIPE THRU CONCRETE ASSEMBLY
NTS

System No. W-L-5047

F Ratings - 1 & 2 Hr (See Item 1)
T Rating - 0 & 1-1/2 Hr (See Item 1)

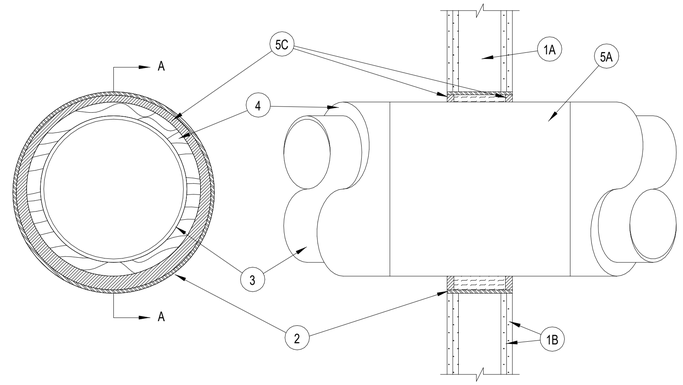

SECTION A-A

1. Wall Assembly - The fire-rated gypsum wallboard/stud wall assembly must be constructed of the materials and in the manner specified in the individual U300 or U400 Series Wall and Partition Designs in the UL Fire Resistance Directory and must include the following construction features:
   A. Studs Wall framing may consist of either wood studs or steel channel studs. Wood studs to consist of nom 2 by 4 in. lumber spaced 16 in. OC. Steel studs must be min 2-1/2 in. wide and spaced max 24 in. OC. When steel studs are used and the diam of opening exceeds the width of the stud cavity, the opening must be framed on every side using lengths of studs installed between the vertical studs and attached to the studs at each end. The framed opening in the wall must be 4 to 6 in. wider and 4 to 6 in. higher than the diam of the metallic sleeve (Item 2) such that a clearance of 2 to 3 in. is present between the sleeve and the framing on four sides.
   B. Gypsum Board* Two layers of nom 5/8 in. thick gypsum wallboard, as specified in the individual Wall and Partition Design. Max diam of opening is 14-1/2 in. for wood stud walls and 30 in. for steel stud walls.
   The hourly F Rating of the firestop system is the same as the hourly fire rating of the wall assembly in which it is installed.
   The T Rating is 0 hr when installed in 1 hr wall assembly or when optional metallic sleeve (Item 2) is used.
   The T Rating is 1-1/2 hr when installed in 2 hr wall assembly and optional sleeve is not used.
2. Metallic Sleeve - (Optional) Nom 30 in. diam (or smaller) Schedule 40 (or thinner) steel pipe cast into wall assembly with joint compound and installed flush with wall surfaces.
3. Through Penetrants - One metallic pipe or tubing must be positioned within the firestop system. Pipe or tubing must be rigidly supported on both sides of floor or wall assembly. The following types and sizes of metallic pipes or tubing may be used:
   A. Steel Pipe Nom 20 in. diam (or smaller) Schedule 10 (or heavier) steel pipe.
   B. Copper Tubing Nom 6 in. diam (or smaller) L (or heavier) copper tubing.
   C. Copper Pipe Nom 6 in. diam (or smaller) Regular (or heavier) copper pipe.
4. Pipe Covering* - 1 to 3 in. thick hollow cylindrical heavy density (min 3.5 pcf) glass fiber units jacketed on the outside with an all service jacket. Longitudinal joints sealed with metal fasteners of factory-applied self-sealing lap tape. Transverse joints secured with metal fasteners or with butt tape supplied with the product. Pipe covering to terminate 6 in. from each side of the assembly.
5. Firestop System - The firestop system must consist of the following:
   A. Pipe Covering Materials* Nom 1 to 3 in. thick unfaced mineral fiber pipe insulation having a nom density of 5.0 pcf (or heavier), sized to the outside diam of pipe or tube and extending 6 in. beyond each surface of the wall surface. Pipe insulation secured with min 18 AWG steel wire 3 in. beyond each surface of the wall assembly. When steel sleeve is not used, the annular space must be min 1/4 in. to max 3 in., or when sleeve is used, min 1 in. to max 2-1/4 in.
   OWENS CORNING HT INC, DIV OF OWENS CORNING - High Temperature Pipe Insulation 1200, High Temperature Pipe Insulation BWT or High Temperature Pipe Insulation Thermaloc
   B. Sheathing Material* All service jacket material must be wrapped around the outer circumference of the pipe covering material (Item 4A) with kraft side exposed. Longitudinal joints sealed with metal fasteners or self-sealing lap tape.
   See Sheathing Material (BVDV) category in the Building Materials Directory for names of manufacturers. Sheathing material meeting the above specifications and bearing the UL Classification Marking with a Flame Spread Index of 25 or less and a Smoke Developed Index of 50 or less may be used.
   C. Fill, Void or Cavity Material* - Sealant Min 5/8 in. or 1-1/4 in. thickness of fill material applied within the annulus flush with both surfaces of wall, for 1 or 2 hr walls, respectively.
   HILTI CONSTRUCTION CHEMICALS, DIV OF HILTI INC - FS-ONE Sealant

*Bearing the UL Classification Marking

A4 INSULATED PIPE THRU GYPSUM BOARD WALL
NTS

APPR	DATE	DESCRIPTION	SYM

NAVFAC

NORTH CAROLINA PROFESSIONAL ENGINEER SEAL 035500 JAMES W. MERRITT
01-01-20
SEAL

CRENSHAW CONSULTING Engineers
www.crenshawconsulting.com
NC LICENSE #C-1158
3816 Bush Street, Suite 200
Raleigh, North Carolina 27609
919-571-1570 Fax 571-0409

A/E INFO

APPROVED

FOR COMMANDER NAVFAC

ACTIVITY
Approved by Erik A. Lewis,
Infrastructure Engineering Branch Head,
FRCE Cherry Point via Electronic Signature

SATISFACTORY TO

DES	LWM	DRW	MWF	CHK	JDL

PM/DM	L. PEED
BRANCH MANAGER	H. PERRY
CHIEF ENG/ARCH	P. FAULKNER
FIRE PROTECTION	D. CHASTAIN

DEPARTMENT OF THE NAVY
NAVAL FACILITIES ENGINEERING SYSTEMS COMMAND
DESIGN AND CONSTRUCTION (DC) CORE
NAVAL FACILITIES ENGINEERING SYSTEMS COMMAND – MIDATLANTIC
NAVAL STATION - NORFOLK, VA.
MARINE CORPS AIR STATION CHERRY POINT, NC

MCOLF ATLANTIC
BUILDING 7019 RENOVATIONS

MECHANICAL DETAILS

SCALE:	AS INDICATED
EPROJECT NO.:	7406712
STA. PROJ. NO.:	7406712
NAVFAC DRAWING NO.	12939529
SHEET	104 OF 148

M-508

DRAWFORM REVISION: 25 AUGUST 2020

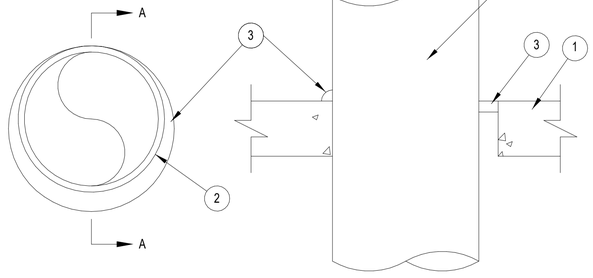

SECTION A-A

1. Floor or Wall Assembly -- Min 2-1/2 in. thick reinforced lightweight or normal weight (100-150 pcf) concrete. Wall may also be constructed of UL Classified Concrete Blocks*. Max diam of opening is 30-7/8 in.
   See Concrete Blocks (CAZT) category in the Fire Resistance Directory for names of manufacturers.
2. Through-Penetrant -- One metallic pipe or conduit must be installed either concentrically or eccentrically within the firestop system. The annular space between pipe or conduit and periphery of opening must be min 0 in. to max 7/8 in. Pipe or conduit must be rigidly supported on both sides of floor or wall assembly. The following types and sizes of metallic pipes or conduits may be used:
   A. Steel Pipe -- Nom 30 in. diam (or smaller) Schedule 10 (or heavier) steel pipe.
   B. Iron Pipe -- Nom 30 in. diam (or smaller) cast or ductile iron pipe.
   C. Copper Pipe -- Nom 6 in. diam (or smaller) Regular (or heavier) copper pipe.
   D. Copper Tubing -- Nom 6 in. diam (or smaller) L (or heavier) copper tubing.
   E. Conduit -- Nom 6 in. diam (or smaller) steel conduit.
   F. Conduit -- Nom 4 in. diam (or smaller) steel electrical metallic tubing (EMT).
3. Fill, Void or Cavity Material* -- Sealant -- Min 1/2 in. thickness of fill material applied within the annulus, flush with top surface of floor or with both surfaces of wall. At the point contact location between pipe and concrete, a min 1/4 in. diam bead of fill material must be applied at the concrete/pipe interface on the top surface of floor and on both surfaces of wall.
   HILTI CONSTRUCTION CHEMICALS, DIV OF HILTI INC -- FS -- ONE Sealant

*Bearing the UL Classification Mark

A2 NON-INSULATED PIPE THRU CONCRETE ASSEMBLY
NTS

System No. W-L-1290

F Rating -- 1 and 2 Hr (See Item 1)
T Rating -- 0 Hr
L Rating at Ambient -- Less than 1 CFM/Sq Ft
L Rating at 400° F -- Less than 1 CFM/Sq Ft

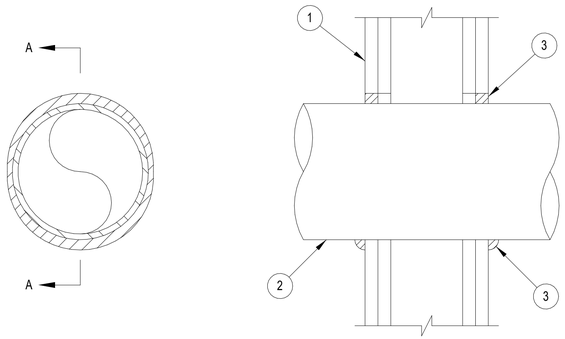

SECTION A-A

1. Wall Assembly -- The 1 or 2 hr fire rated gypsum board/stud wall assembly must be constructed of the materials and in the manner specified in the individual U300 or U400 Series Wall and Partition Designs in the UL Fire Resistance Directory and must include the following construction features.
   A. Studs -- The 1 or 2 hr fire rated gypsum board/stud wall assembly must be constructed of the materials and in the manner specified in the individual U300 or U400 Series Wall and Partition Designs in the UL Fire Resistance Directory and must include the following construction features.
   B. Gypsum Board*- -- Nom 5/8 in. thick, 4 ft wide with square or tapered edges. The gypsum board, thickness, number of layers, fastener and sheet orientation must be as specified in the individual U300 or U400 Series Design in the Fire Resistance Directory. Max diam of opening is 5 in.
   The hourly F and T Ratings of the firestop system are the same as the hourly fire rating of the wall assembly in which they are installed.
2. Through Penetrant -- One metallic pipe, conduit or tubing installed concentrically or eccentrically within the firestop system. Pipe, conduit or tubing may be installed at an angle not greater than 45 degrees from perpendicular. Pipe, conduit or tube must be rigidly supported on both sides of wall assembly. The annular space between the pipe or tube and periphery of the opening must be min 0 in (point contact) to max 1/2 in. The following types and sizes of metallic pipes, conduit or tube may be used:
   A. Steel Pipe -- Nom 4 in. diam (or smaller) Schedule 40 (or heavier) steel pipe.
   B. Iron Pipe -- Nom 4 in. diam (or smaller) cast or ductile iron pipe.
   C. Conduit -- Nom 4 in. diam (or smaller) steel electrical metallic tubing (EMT) or steel conduit.
   D. Copper Tube -- Nom 4 in. diam (or smaller) L (or heavier) copper tube.
   E. Copper Pipe -- Nom 4 in. diam (or smaller) Regular (or heavier) copper pipe.
3. Fill, Void or Cavity Material*-Sealant -- Min 5/8 in. thickness of fill material applied within the annulus, flush with both surfaces of wall. At the point contact location between pipe and wall, a min ½ in diam bead of fill material must be applied at the pipe/wall interface.
   HILTI CONSTRUCTION CHEMCIALS, DIV OF HILTI INC -- CP606 Flexible Firestop Sealant

*Bearing the UL Classification Mark

A4 NON-INSULATED PIPE THRU GYPSUM BOARD WALL
NTS

APPR | DATE | DESCRIPTION | SYM

NAVFAC

NORTH CAROLINA PROFESSIONAL SEAL 035500 ENGINEER JACOB W MERRELL
01-01-20
SEAL

CRENSHAW CONSULTING Engineers
www.crenshawconsulting.com
NC LICENSE #C-1168
3816 Bush Street, Suite 200
Raleigh, North Carolina 27609
919-871-1070 Fax 871-0609

A/E INFO

APPROVED

FOR COMMANDER NAVFAC

ACTIVITY
Approved by Erik A. Lewis,
Infrastructure Engineering Branch Head,
FRCE Cherry Point via Electronic Signature

SATISFACTORY TO

DES	LWM	DRW	MWF	CHK	JDL

PM/DM	L. PEED
BRANCH MANAGER	H. PERRY
CHIEF ENG/ARCH	P. FAULKNER
FIRE PROTECTION	D. CHASTAIN

DEPARTMENT OF THE NAVY
NAVAL FACILITIES ENGINEERING SYSTEMS COMMAND
DESIGN AND CONSTRUCTION (DC) CORE
MARINE CORPS AIR STATION
NAVAL FACILITIES ENGINEERING SYSTEMS COMMAND - MIDATLANTIC
NAVAL STATION - NORFOLK, VA.
CHERRY POINT, NC
MCOLF ATLANTIC
BUILDING 7019 RENOVATIONS
MECHANICAL DETAILS

SCALE:	AS INDICATED
EPROJECT NO.:	7406712
STA. PROJ. NO.:	7406712
NAVFAC DRAWING NO.	12939530
SHEET	105 OF 148

M-509

DRAWFORM REVISION: 25 AUGUST 2020

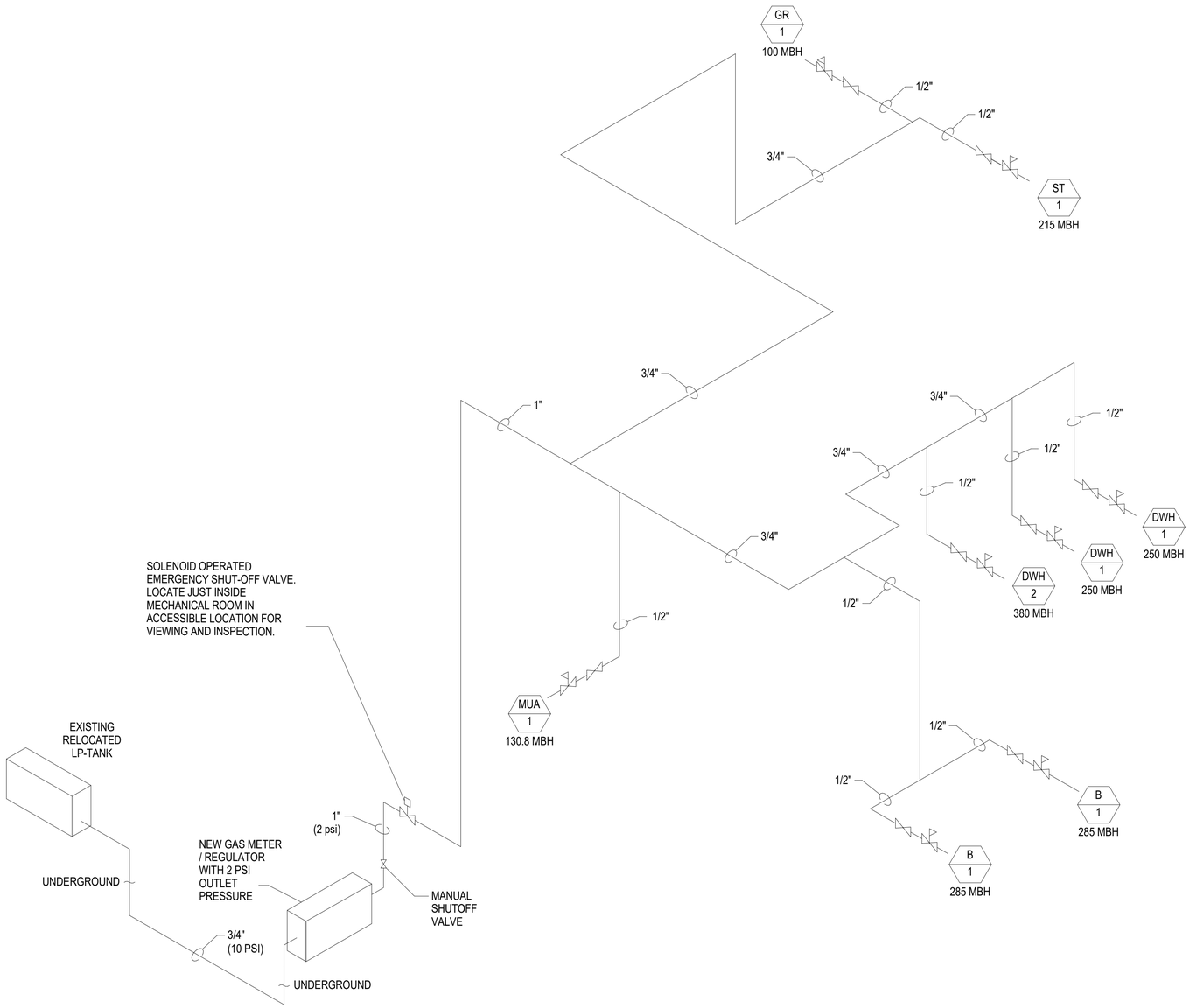

GAS PIPING SIZES UPSTREAM OF MP REGULATORS BASED ON AN INITIAL PRESSURE OF 2 PSI, A PRESSURE DROP OF 1 PSI, 0.6 SPECIFIC GRAVITY GAS AND SCHEDULE 40 PIPE. SIZES BASED ON TABLE 6.3(c) OF 2015 NFPA 54. GAS PIPING SIZES DOWNSTREAM OF MP REGULATORS ARE BASED ON A LOW PRESSURE SYSTEM (< 2 PSI), A PRESSURE DROP OF 0.5" WATER COLUMN, 0.6 SPECIFIC GRAVITY GAS AND SCHEDULE 40 PIPE. SIZES BASED ON TABLE 6.3(d) OF 2015 NFPA 54.

GAS RISER NOTES:

1. PROVIDE MANUAL SHUTOFF VALVE FOR EACH PIECE OF GAS EQUIPMENT.
2. CONTRACTOR MUST VERIFY GAS REQUIREMENTS FOR EACH PIECE OF EQUIPMENT PRIOR TO INSTALLING GAS PIPING. CONFIRM EQUIPMENT WITH OWNER.
3. GAS PIPING MUST BE SCHEDULE 40 ASTM A53 OR A120, T&C. WHERE EXPOSED TO WEATHER, PAINT TO PREVENT CORROSION. INSTALL PER NFPA 54.
4. MECHANICAL CONTRACTOR TO VERIFY METER LOCATION AND MAXIMUM LINE LENGTHS PRIOR TO INSTALLATION. IF CONDITIONS VARY FROM THOSE SHOWN ON THE DRAWINGS, CONTACT ENGINEER FOR LINE SIZING.
5. A LISTED SHUTOFF VALVE MUST BE INSTALLED IMMEDIATELY AHEAD OF EACH MP REGULATOR.
6. MP REGULATORS MUST BE INSTALLED AND VENTED IN ACCORDANCE WITH CHAPTER 5 OF 2015 NFPA 54. USE VENTLESS REGULATORS TO AVOID INSTALLING VENT PIPING.
7. A TEST TEE FITTING MUST BE INSTALLED BETWEEN THE MP REGULATOR AND ITS UPSTREAM SHUTOFF VALVE. A SEPARATE TEST TEE FITTING MUST BE INSTALLED NOT LESS THAN 10 PIPE DIAMETERS DOWN STREAM OF THE MP REGULATOR OUTLET. PROVIDE TEST TEE FITTINGS FOR ANY NEW OR EXISTING MP REGULATORS.
8. THE MECHANICAL CONTRACTOR TO COORDINATE ALL EQUIPMENT AND ALL REGULATORS WITH THE GAS COMPANY.
9. ALL EXTERIOR ABOVE GROUND GAS PIPING, AFTER THE GAS UTILITY METER, MUST BE STEEL. ALL GAS PIPING INSIDE THE BUILDING MUST BE STEEL. ALL EXTERIOR BELOW GROUND GAS PIPING MUST BE PLASTIC. PROVIDE STEEL-TO- PLASTIC PIPING RISERS WHERE EXTERIOR PLASTIC PIPE RISES OUT THE THE GROUND. SEE SPEC SECTION 23 11 20 FOR FURTHER INFO.

GAS CONNECTED LOAD

MARK	EQUIPMENT	BTUH INPUT
B-1	CONDENSING BOILER	285,000
B-2	CONDENSING BOILER	285,000
D-WH-1	GAS DOMESTIC WATER HEATER	250,000
D-WH-1	GAS DOMESTIC WATER HEATER	250,000
D-WH-2	INSTANTANEOUS WATER HEATER	380,000
MUA-1	MAKE-UP AIR UNIT	130,846
ST-1	STOVE	215,000
GR-1	GRIDDLE	100,000
	TOTAL	1,895,846

MAXIMUM EQUIVALENT LENGTH FROM GAS REGULATOR/METER TO MOST REMOTE REGULATOR = 75'

MAXIMUM EQUIVALENT LENGTH FROM REGULATOR TO MOST REMOTE APPLIANCE = 75'

A1 GAS RISER
NTS

APPR | DATE | DESCRIPTION | SYM

NAVFAC

NORTH CAROLINA PROFESSIONAL SEAL 035500 ENGINEER ERIK A. LEWIS
01-01-20
SEAL

CRENSHAW CONSULTING Engineers
www.crenshawconsulting.com
NC LICENSE #C-1158
2609 Bush Street, Suite 200
Raleigh, North Carolina 27609
919-571-1070 Fax 571-0409

A/E INFO

APPROVED

FOR COMMANDER NAVFAC

ACTIVITY
Approved by Erik A. Lewis,
Infrastructure Engineering Branch Head,
FRCE Cherry Point via Electronic Signature

SATISFACTORY TO

DES	LWM	DRW	MWF	CHK	JDL

PM/DM L. PEED
BRANCH MANAGER H. PERRY
CHIEF ENG/ARCH P. FAULKNER
FIRE PROTECTION D. CHASTAIN

DEPARTMENT OF THE NAVY
NAVAL FACILITIES ENGINEERING SYSTEMS COMMAND ~ MIDATLANTIC
DESIGN AND CONSTRUCTION (DC) CORE
NAVAL STATION - NORFOLK, VA.
MARINE CORPS AIR STATION CHERRY POINT, NC
MCOLF ATLANTIC
BUILDING 7019 RENOVATIONS
MECHANICAL DETAILS

SCALE: AS INDICATED
EPROJECT NO.: 7406712
STA. PROJ. NO.: 7406712
NAVFAC DRAWING NO. 12939531
SHEET 106 OF 148

M-510

DRAWFORM REVISION: 25 AUGUST 2020

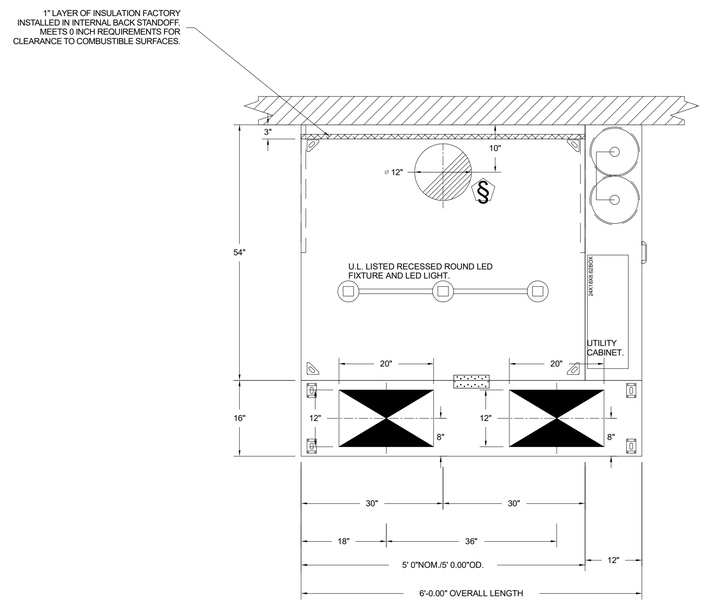

PLAN VIEW – HOOD #1
(Griddle)

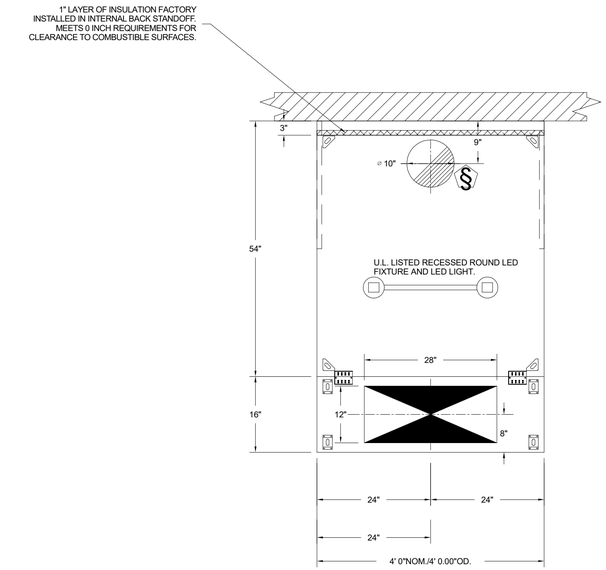

PLAN VIEW – HOOD #2
(Range)

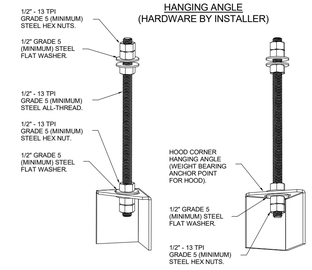

ASSEMBLY INSTRUCTIONS

HANGING ANGLE MUST BE SUPPORTED WITH 1/2" - 13 TPI GRADE 5 (MINIMUM) ALL-THREAD. SANDWICH HANGING ANGLES AND CEILING ANCHOR POINTS WITH 1/2" GRADE 5 (MINIMUM) STEEL FLAT WASHERS AND 1/2" - 13 TPI GRADE 5 (MINIMUM) HEX NUTS AS SHOWN. MUST USE DOUBLED HEX NUT CONFIGURATION BENEATH HOOD HANGING ANGLES AND ABOVE CEILING ANCHORS. MAINTAIN 1/4" OF EXPOSED THREADS BENEATH BOTTOM HEX NUT. TORQUE ALL HEX NUTS TO 57 FT-LBS.

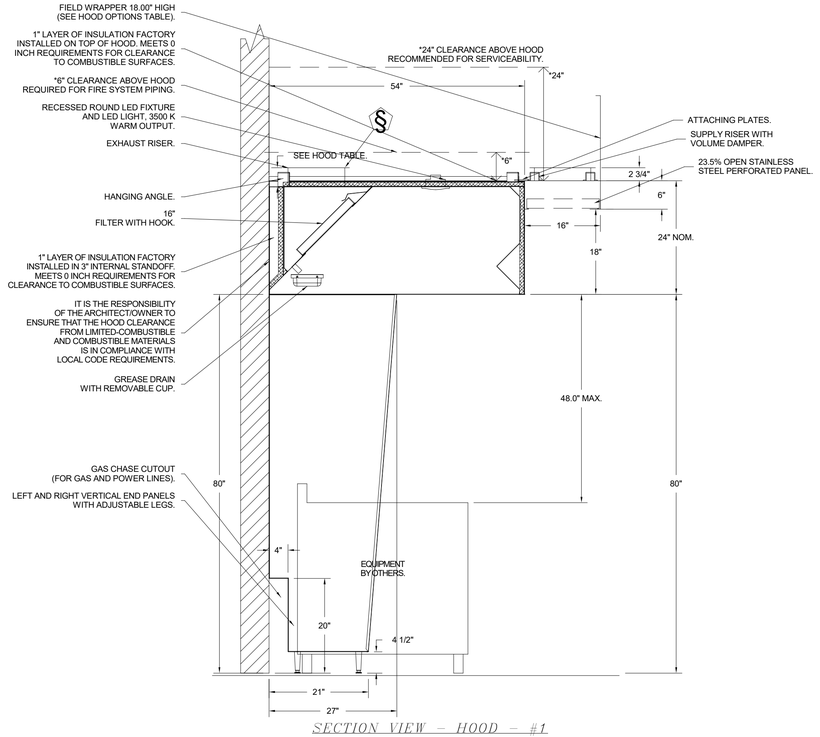

SECTION VIEW – HOOD – #1
(Griddle)

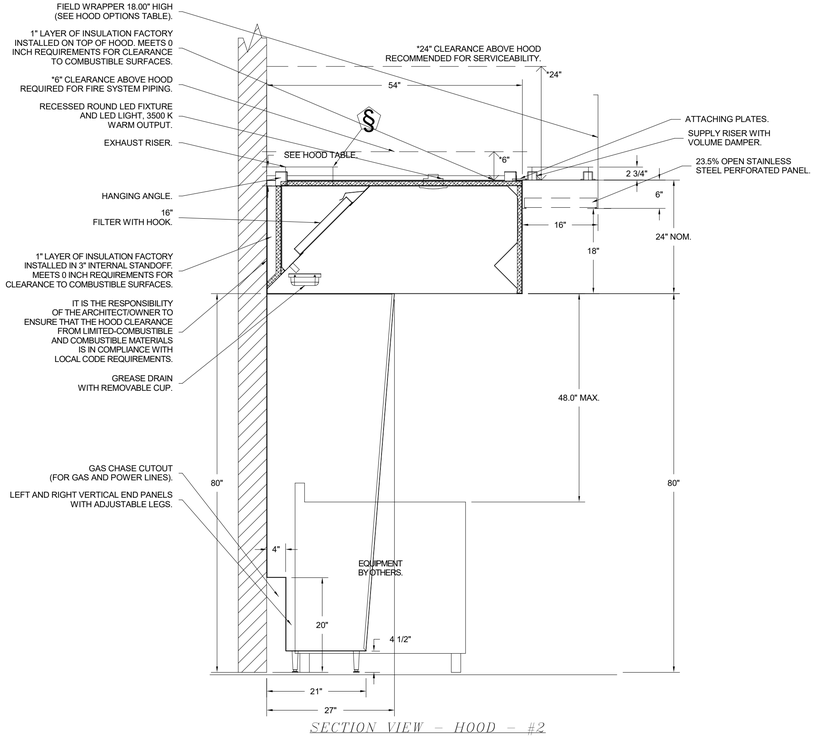

SECTION VIEW – HOOD – #2
(Range)

NO.	DESCRIPTION	DATE	APPR

NAVFAC

NORTH CAROLINA PROFESSIONAL SEAL 035500 ENGINEER ERIK A. W. LEWIS
01-01-20
SEAL

CRENSHAW CONSULTING Engineers
www.crenshawconsulting.com
NC LICENSE #C-1158
3816 Bush Street, Suite 200
Raleigh, North Carolina 27609
919-871-1070 Fax 871-0409

A/E INFO

APPROVED

FOR COMMANDER NAVFAC

ACTIVITY
Approved by Erik A. Lewis,
Infrastructure Engineering Branch Head,
FRCE Cherry Point via Electronic Signature

SATISFACTORY TO

DES	LWM	DRW	MWF	CHK	JDL

PM/DM	L. PEED
BRANCH MANAGER	H. PERRY
CHIEF ENG/ARCH	P. FAULKNER
FIRE PROTECTION	D. CHASTAIN

DEPARTMENT OF THE NAVY
NAVAL FACILITIES ENGINEERING SYSTEMS COMMAND
NAVAL FACILITIES ENGINEERING SYSTEMS COMMAND – MIDATLANTIC
DESIGN AND CONSTRUCTION (DC) CORE
NAVAL STATION - NORFOLK, VA.
MARINE CORPS AIR STATION CHERRY POINT, NC

MCOLF ATLANTIC
BUILDING 7019 RENOVATIONS

MECHANICAL DETAILS

SCALE:	AS INDICATED
EPROJECT NO.:	7406712
STA. PROJ. NO.:	7406712
NAVFAC DRAWING NO.	12939532
SHEET	107 OF 148

M-511

DRAWFORM REVISION: 25 AUGUST 2020

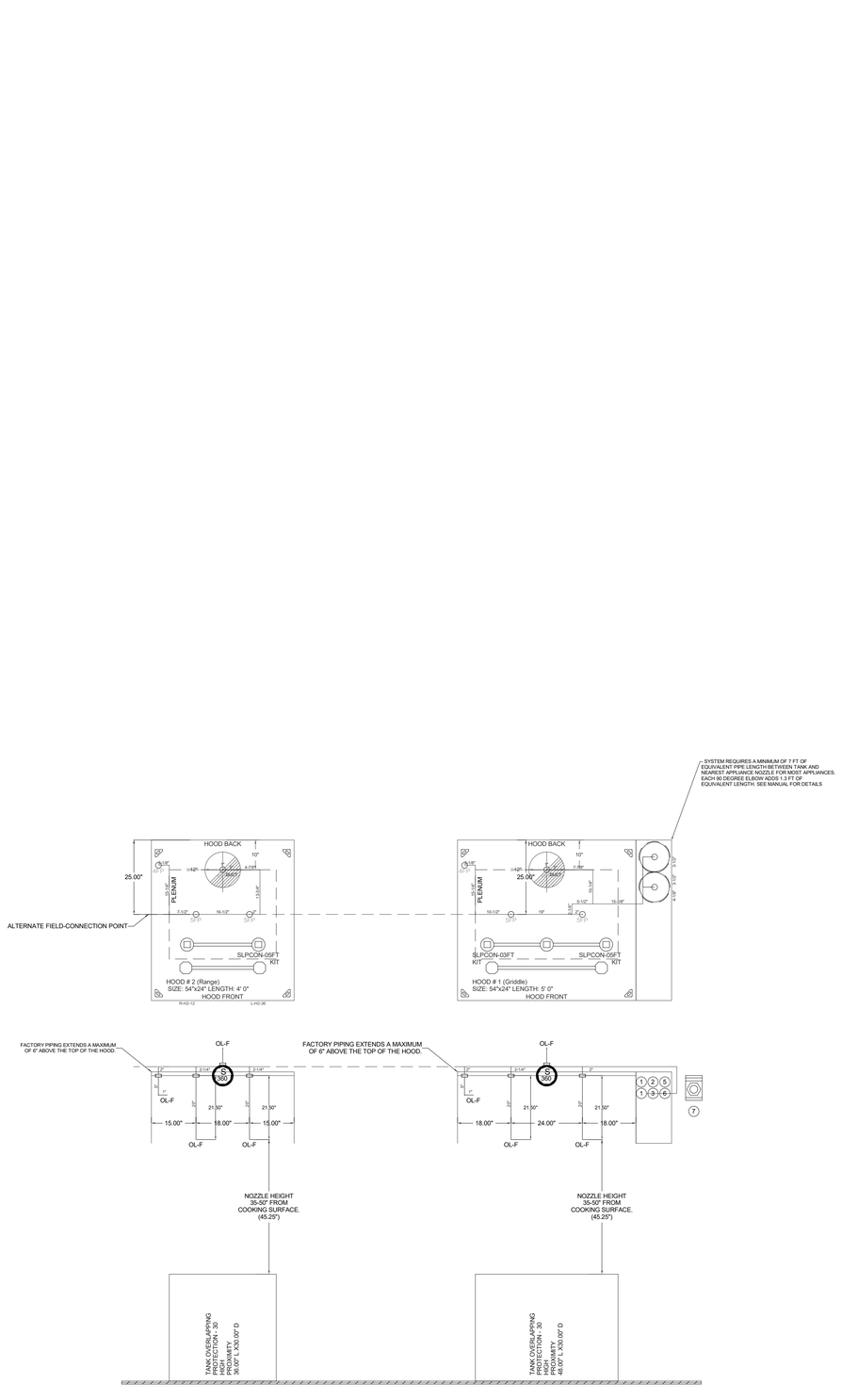

NOTES
- FIELD PIPE DROPS AS SHOWN
  PIPING, ELBOWS, TEES, AND NOZZLES SUPPLIED BY CAS.
- FIELD INSTALLED DROP: FACTORY WILL PROVIDE QTY 2 60IN LONG PIECES OF CHROME PLATED PIPING SHIPPED LOOSE TO BE FIELD-INSTALLED.
- SHIP LOOSE DROP: FACTORY WILL PROVIDE THE EXACT CHROME PIPE LENGTH NEEDED SHIPPED LOOSE TO BE FIELD-INSTALLED.
- RELOCATE NOZZLES IF FLOW PATTERN IS BLOCKED BY SHELVING, SALAMANDERS, ETC.
- OVERLAPPING COVERAGE SHALL NOT BE USED ON ANY APPLIANCE WITH AN OBSTRUCTION.
- IF APPLICABLE, EXTENDED PRE-PIPED DROPS ARE SHIPPED LOOSE.
- FACTORY PIPING EXTENDS A MAXIMUM OF 6" ABOVE THE TOP OF THE HOOD.

- APPLIANCE DIMENSIONS LISTED REPRESENT THE COOKING SURFACE SIZE, NOT THE OVERALL APPLIANCE SIZE.

- THIS PRE-ENGINEERED FIRE SYSTEM COMPLIES WITH U.L. 300 REQUIREMENTS.

JOB NAME: CHERRY POINT - B7019 - KITCHEN HOOD.

SYSTEM SIZE: TANK-SP-2 DESIGN FP: 36. MAXIMUM FP: 40.
HOOD # 1 5' 0.00" LONG x 54" WIDE x 24" HIGH.
RISER # 1 SIZE: 12" DIA.
HOOD # 1 METAL BLOW-OFF CAPS INCLUDED.
HOOD # 2 4' 0.00" LONG x 54" WIDE x 24" HIGH.
RISER # 1 SIZE: 12" DIA.
HOOD # 2 METAL BLOW-OFF CAPS INCLUDED.

- HEAVY-DUTY APPLIANCES (RATED 600°F) WILL REQUIRE AN ADDITIONAL DOWNSTREAM FIRESTAT IN THE EVENT THAT THE DUCTWORK CONTAINS ANY HORIZONTAL RUNS OVER 25 FT IN LENGTH.
- MEDIUM TO LIGHT-DUTY APPLIANCES (RATED 450°F) WILL NOT REQUIRE ANY ADDITIONAL DOWNSTREAM DETECTION.

AGENT DISTRIBUTION PIPING LIMITATIONS	
PIPE SECTION	MAX PIPE LENGTH (FT)
MAX SUPPLY LINE TO FIRST OVERLAPPING NOZZLE	42
OVERLAPPING NOZZLE APPLIANCE BRANCH	10
DEDICATED NOZZLE APPLIANCE BRANCH	10

LEGEND – FIRE CABINET TANK SYSTEM

1 4 GALLON TANK.
2 PRIMARY ACTUATOR RELEASE.
3 SECONDARY ACTUATOR RELEASE.
4 PRESSURE SUPERVISION SWITCH.
5 PRIMARY HOSE ASSEMBLY.
6 SECONDARY HOSE ASSEMBLY.
7 REMOTE MANUAL ACTUATION DEVICE.

TANK MANUAL ACTIVATION DEVICE DETAIL

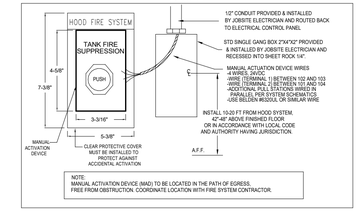

APPR | DATE | DESCRIPTION | SYM

NAVFAC

NORTH CAROLINA PROFESSIONAL SEAL 036500 ENGINEER JACOB W WEBB
01-01-20
SEAL

CRENSHAW CONSULTING engineers
www.crenshawconsulting.com
NC LICENSE #C-1168
3916 Bush Street, Suite 200
Raleigh, North Carolina 27609
919-571-1070 Fax 571-0429

A/E INFO

APPROVED

FOR COMMANDER NAVFAC

ACTIVITY
Approved by Erik A. Lewis,
Infrastructure Engineering Branch Head,
FRCE Cherry Point via Electronic Signature

SATISFACTORY TO

DES	LWM	DRW	MWF	CHK	JDL

PM/DM L. PEED
BRANCH MANAGER H. PERRY
CHIEF ENG/ARCH P. FAULKNER
FIRE PROTECTION D. CHASTAIN

DEPARTMENT OF THE NAVY
NAVAL FACILITIES ENGINEERING SYSTEMS COMMAND
DESIGN AND CONSTRUCTION (DC) CORE
MARINE CORPS AIR STATION
NAVAL FACILITIES ENGINEERING SYSTEMS COMMAND – MIDATLANTIC
NAVAL STATION - NORFOLK, VA
CHERRY POINT, NC

MCOLF ATLANTIC
BUILDING 7019 RENOVATIONS

MECHANICAL DETAILS

SCALE: AS INDICATED
EPROJECT NO.: 7406712
STA. PROJ. NO.: 7406712
NAVFAC DRAWING NO. 12939533
SHEET 108 OF 148

M-512

DRAWFORM REVISION: 25 AUGUST 2020

FAN OPTIONS

FAN UNIT NO	TAG	QTY	DESCRIPTION
1	KEF-1	1	GREASE BOX
		1	FAN BASE CERAMIC SEAL - INSTALLED AT PLANT - FOR GREASE DUCTS
		1	ECM WIRING PACKAGE - MANUAL OR 0-10VDC REFERENCE SPEED CONTROL -RTC- (TELCO MOTOR), CCW ROTATION
		1	2 YEAR PARTS WARRANTY
2	KEF-2	1	GREASE BOX
		1	FAN BASE CERAMIC SEAL - INSTALLED AT PLANT - FOR GREASE DUCTS
		1	ECM WIRING PACKAGE - MANUAL OR 0-10VDC REFERENCE SPEED CONTROL -RTC- (TELCO MOTOR), CCW ROTATION
		1	2 YEAR PARTS WARRANTY
3	KMUA -1	1	INLET PRESSURE GAUGE, 0-35"
		1	MANIFOLD PRESSURE GAUGE, 0 TO 10" WC, 1 FURNACE
		1	COOLING OVERRIDE
		1	SINGLE POINT ELECTRICAL CONNECTION FOR RTU. 750VA TRANSFORMER USED. IF A NON-DCV PREWIRE CONTROLS THIS UNIT, THE #28, #47, "MA", OR "E2" PREWIRE OPTION MUST BE SELECTED. DOES NOT PROVIDE SUPPLY STARTER IN PREWIRE
		1	RTU BLOWER DOOR SWITCH
		1	2" MERV 13 FILTERS FOR RTU1 (QTY. 4)
		1	2" MERV 8 FILTERS FOR RTU1 (QTY. 4)
		1	TOTAL CFM MONITORING
		1	VFD FACTORY MOUNTED AND WIRED IN RTU COMMERCIAL CONTROL VESTIBULE
		1	RTU1 DOWN DISCHARGE
		1	RTU FIXED 100% OA INTAKE CONTROL
		1	DISCHARGE FIRESTAT SET TO 240°F
		1	INTAKE FIRESTAT SET TO 135°F
		1	RTU1 NO RETURN - 100% OA - MPU
		1	2" METAL MESH FILTERS FOR RTU1 OUTDOOR INTAKE
		1	CASLINK BUILDING MONITORING SYSTEM - INTERNET OR CELLULAR CONNECTION REQUIRED
		1	RTU1 CURB DUCT HANGER
		1	COMMERCIAL SMOKE DETECTOR/ALARM INTERLOCK - ALARM SUPPLIED BY OTHERS
		1	5 TON MODULATING COOLING OPTION, 208/230V. R454B REFRIGERANT, VARIABLE SPEED COMPRESSOR, DL ECM CONDENSING FAN
		1	R454B LEAK DETECTOR OPTION FOR RTUS
		1	LOW AMBIENT COOLING OPERATION - DOWN TO 0F AMBIENT
		1	NO REHEAT
		1	VAV PACKAGE W/ MANUAL/DDC CONTROL (571 VFD INCLUDED)
		1	5 YEAR ENTIRE UNIT PARTS WARRANTY, 10 YEAR ENTIRE UNIT PARTS WARRANTY WITH REMOTE MONITORING AND CAPTIVEAIRE SERVICE CONTRACT, 25 YEAR STAINLESS STEEL FURNACE PARTS WARRANTY (SEE ADDITIONAL DETAILS)
		1	EXTERIOR GAS CONNECTION PROVIDED BY FACTORY WITH QUICK SEAL AND ANTI-ROTATION BRACKET

FANS #1 (KEF-1), #2 (KEF-2)

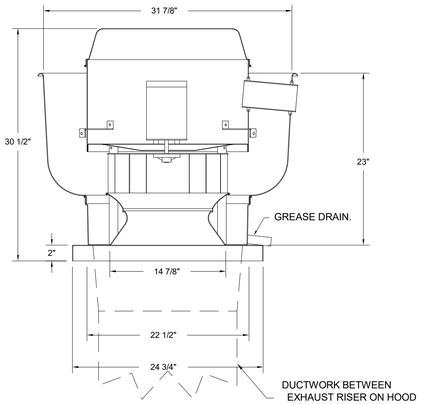

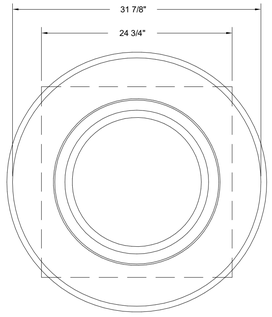

TOP VIEW

FEATURES:

- DIRECT DRIVE CONSTRUCTION (NO BELTS/PULLEYS).
- ROOF MOUNTED FANS.
- RESTAURANT MODEL.
- UL705 AND UL762 AND ULC-S645
- VARIABLE SPEED CONTROL.
- INTERNAL WIRING.
- THERMAL OVERLOAD PROTECTION (SINGLE PHASE).
- HIGH HEAT OPERATION 300°F (149°C).
- GREASE CLASSIFICATION TESTING.
- NEMA 3R SAFETY DISCONNECT SWITCH.

NORMAL TEMPERATURE TEST
EXHAUST FAN MUST OPERATE CONTINUOUSLY WHILE EXHAUSTING AIR AT 300°F (149°C) UNTIL ALL FAN PARTS HAVE REACHED THERMAL EQUILIBRIUM, AND WITHOUT ANY DETERIORATING EFFECTS TO THE FAN WHICH WOULD CAUSE UNSAFE OPERATION.

ABNORMAL FLARE-UP TEST
EXHAUST FAN MUST OPERATE CONTINUOUSLY WHILE EXHAUSTING BURNING GREASE VAPORS AT 600°F (316°C) FOR A PERIOD OF 15 MINUTES WITHOUT THE FAN BECOMING DAMAGED TO ANY EXTENT THAT COULD CAUSE AN UNSAFE CONDITION.

OPTIONS

- GREASE BOX.
- FAN BASE CERAMIC SEAL - DU/DR85HFA - INSTALLED AT PLANT - FOR GREASE DUCTS.
- ECM WIRING PACKAGE - MANUAL OR 0-10VDC REFERENCE SPEED CONTROL -RTC- (TELCO MOTOR), CCW ROTATION.
- 2 YEAR PARTS WARRANTY.

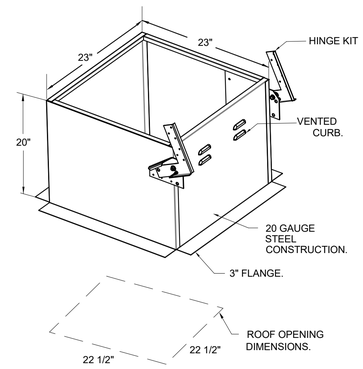

	DESCRIPTION	DATE	APPR
SYM			

NAVFAC

NORTH CAROLINA PROFESSIONAL SEAL 035500 ENGINEER LEWIS W. MERRITT
01-01-20
SEAL

CRENSHAW CONSULTING Engineers
www.crenshawconsulting.com
NC LICENSE #C-1168
3908 Bush Street, Suite 200
Raleigh, North Carolina 27609
919-871-1070 Fax 871-0420

A/E INFO

APPROVED

FOR COMMANDER NAVFAC

ACTIVITY
Approved by Erik A. Lewis,
Infrastructure Engineering Branch Head,
FRCE Cherry Point via Electronic Signature

SATISFACTORY TO

DES	LWM	DRW	MWF	CHK	JDL
PM/DM			L. PEED		
BRANCH MANAGER			H. PERRY		
CHIEF ENG/ARCH			P. FAULKNER		
FIRE PROTECTION			D. CHASTAIN		

DEPARTMENT OF THE NAVY
NAVAL FACILITIES ENGINEERING SYSTEMS COMMAND
DESIGN AND CONSTRUCTION (DC) CORE
MARINE CORPS AIR STATION

NAVAL FACILITIES ENGINEERING SYSTEMS COMMAND ~ MIDATLANTIC
NAVAL STATION ~ NORFOLK, VA

CHERRY POINT, NC

MCOLF ATLANTIC
BUILDING 7019 RENOVATIONS

MECHANICAL DETAILS

SCALE:	AS INDICATED
EPROJECT NO.:	7406712
STA. PROJ. NO.:	7406712

NAVFAC DRAWING NO.
12939534

SHEET 109 OF 148

M-513

DRAWFORM REVISION: 25 AUGUST 2020

FAN #3 - HEATER (KMUA-1)

NOTES:
1. DO NOT OBSTRUCT OUTSIDE AIR INLET, OUTSIDE AIR COIL OR OUTSIDE AIR FAN.
2. ( ) DENOTES CORNER WEIGHT.
3. ROOF OPENING MUST BE 2" SMALLER THAN CURB DIMENSIONS IN BOTH DIRECTIONS.
4. CONNECTION FROM BREAKER TO UNITS SAFETY DISCONNECT SWITCH TO BE COPPER WIRE ONLY.
5. EXTERIOR GAS CONNECTION PROVIDED BY FACTORY WITH QUICK SEAL AND ANTI-ROTATION BRACKET.

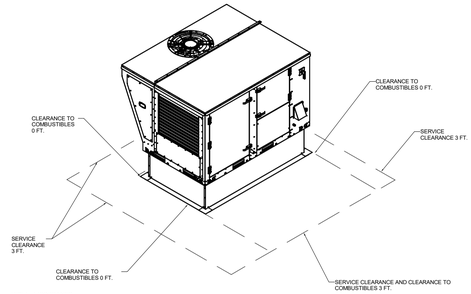

SIZE 1 - 1 CONDENSER

*NOTE: SUPPLY DUCT MUST BE INSTALLED TO MEET SMACNA STANDARDS. A MINIMUM STRAIGHT DUCT LENGTH MUST BE MAINTAINED DOWNSTREAM OF UNIT DISCHARGE AS OUTLINED IN AMCA PUBLICATION 201. WHEN USING RECTANGULAR DUCTWORK, ELBOWS MUST BE RADIUS THROAT, RADIUS BACK WITH TURNING VANES. FLEXIBLE DUCTWORK AND SQUARE THROAT/SQUARE BACK ELBOWS SHOULD NOT BE USED. ANY TRANSITION AND/OR TURNS IN THE DUCTWORK WILL CAUSE SYSTEM EFFECT. SYSTEM EFFECT WILL DRASTICALLY INCREASE STATIC PRESSURE AND REDUCE AIRFLOW. DO NOT RELY ON UNIT TO SUPPORT DUCT IN ANY WAY. FAILURE TO PROPERLY SIZE DUCTWORK MAY CAUSE SYSTEM EFFECTS AND REDUCE PERFORMANCE OF THE EQUIPMENT.
SUGGESTED SUPPLY STRAIGHT DUCT SIZE IS 20-3/4" x 21-1/2".

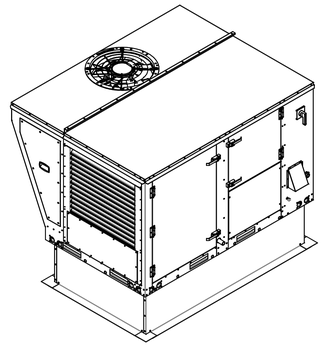

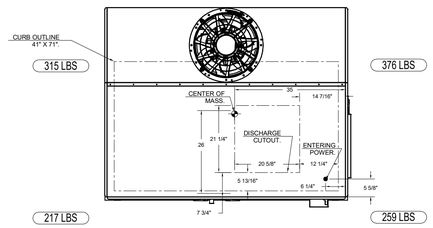

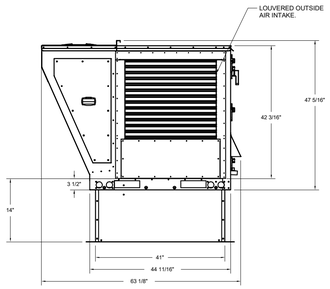

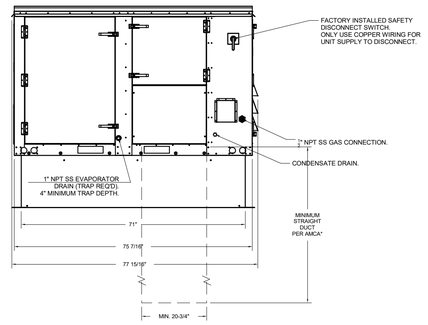

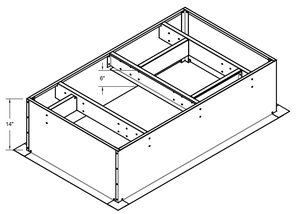

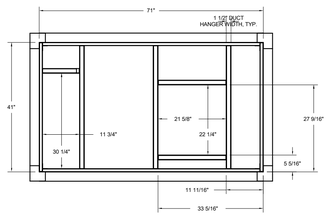

SYM	
DESCRIPTION	
DATE	
APPR	

NAVFAC

NORTH CAROLINA PROFESSIONAL SEAL 035500 ENGINEER ERIK A. W. NEWMAN
01-01-20
SEAL

CRENSHAW CONSULTING engineers
www.crenshawconsulting.com
NC LICENSE #C-1168
3916 Bush Street, Suite 200
Raleigh, North Carolina 27609
919-871-1070 Fax 871-0420

A/E INFO

APPROVED

FOR COMMANDER NAVFAC

ACTIVITY
Approved by Erik A. Lewis,
Infrastructure Engineering Branch Head,
FRCE Cherry Point via Electronic Signature

SATISFACTORY TO

DES	LWM	DRW	MWF
CHK	JDL		

PM/DM	L. PEED
BRANCH MANAGER	H. PERRY
CHIEF ENG/ARCH	P. FAULKNER
FIRE PROTECTION	D. CHASTAIN

DEPARTMENT OF THE NAVY
NAVAL FACILITIES ENGINEERING SYSTEMS COMMAND
DESIGN AND CONSTRUCTION (DC) CORE:
MARINE CORPS AIR STATION

NAVAL FACILITIES ENGINEERING SYSTEMS COMMAND ~ MIDATLANTIC
NAVAL STATION - NORFOLK, VA
CHERRY POINT, NC

MCOLF ATLANTIC
BUILDING 7019 RENOVATIONS

MECHANICAL DETAILS

SCALE:	AS INDICATED
EPROJECT NO.:	7406712
STA. PROJ. NO.:	7406712

NAVFAC DRAWING NO.
12939535

SHEET 110 OF 148

M-514

DRAWFORM REVISION: 25 AUGUST 2020

TANK PROTECTION ELECTRICAL DETAIL

ELECTRICIAN:
1. WIRE MAIN CONTROL PANEL PER INCLUDED SCHEMATIC
2. WIRE ALL FANS PER INCLUDED SCHEMATIC
3. WIRE SHUNT TRIP BREAKER (OPTIONAL)
4. WIRE UDS APPLIANCE KILL SWITCH, IF EQUIPPED (OPTIONAL)
5. WIRE GAS VALVE

FS-1: MASTER

ELECTRICAL CONTRACTOR REQUIREMENT					
ITEM	CONNECTION IN PANEL	CONNECTION IN DEVICE	VOLTAGE	AMPERAGE	COMMENTS
SHUNT TRIP BREAKER (OPTIONAL)	ST & N1	BREAKER COIL (A1 & A2)	120 VAC	< 4 AMPS	ST TO A1 ON SHUNT BREAKER COIL, AND NEUTRAL TO A2 ON SHUNT TRIP BREAKER COIL
CONTROL PANEL POWER	H1 & N1 + GROUND	CIRCUIT BREAKER	120 VAC	15 AMPS	CONTROL PANEL POWER MUST NOT BE RUN THROUGH SHUNT TRIP BREAKER
UDS APPLIANCE KILL SWITCH (OPTIONAL)	KTS & N1	KTS & N1	120 VAC	< 4 AMPS	KILL SWITCH TERMINALS MUST BE IN SERIES WITH OTHER KILL SWITCHES
REMOTE 120VAC ANSUL AUTOMAN (OPTIONAL)	AU1, AU2	SOLENOID	120 VAC	< 6 AMPS	120V TO AU1, AU2 TO ANSUL ELECTRIC AUTOMAN, ANSUL SOLENOID TO NEUTRAL
GAS VALVE	LGV & N1D (IF 24 VDC) GAS & N1 (IF 120 VAC)	RED/RED/GREEN	24 VDC OR 120 VAC	< 1.0 AMPS	IF 24 VDC - 2 WIRES & GROUND, N1D TO RED, LGV TO RED, AND GREEN TO GROUND IF 120 VAC - 2 WIRES & GROUND GAS TO RED, N1 TO RED, AND GREEN TO GROUND

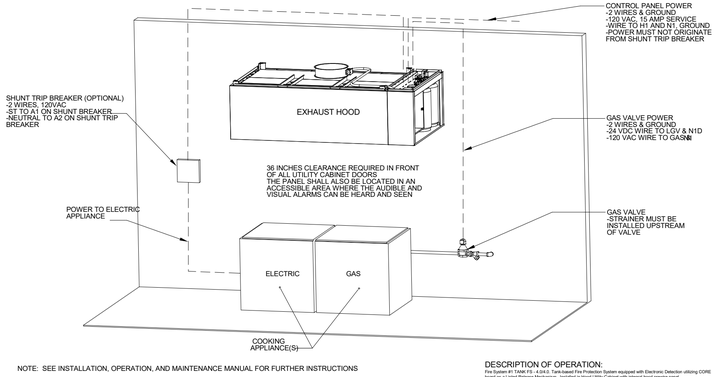

NOTE: SEE INSTALLATION, OPERATION, AND MAINTENANCE MANUAL FOR FURTHER INSTRUCTIONS

DESCRIPTION OF OPERATION:
Fire System #1 TANK FS - 4 DHLT. Tank-based Fire Protection System equipped with Electronic Detection utilizing CORE board as a Listed Release Mechanism. Installed in Hood Utility Cabinet with integral hood prewire panel.

TANK PROTECTION LOW-VOLTAGE DETAIL

ALARM CONTRACTOR:
1. WIRE MANUAL ACTUATION DEVICE(S), *REMOTE FIRESTAT(S), CORE INTERLOCK(S), FIRE SENSOR(S) AND FIRE ALARM CONTACTS
2. COMPLETE FINAL HOOKUP OF SYSTEM
3. VERIFY FINAL FIRE SYSTEM TEST
*REMOTE FIRESTAT(S) MAYBE BE REQUIRED DEPENDING ON THE DUCT LAYOUT AND HOOD TEMPERATURE RATING. REFERENCE MANUAL FOR LOCATION AND GUIDELINES.

FS-1: MASTER

ALARM CONTRACTOR REQUIREMENT					
ITEM	CONNECTION IN PANEL	CONNECTION ON DEVICE	VOLTAGE	AMPERAGE	COMMENTS
MANUAL ACTUATION DEVICE(S)	101 AND 104 102 AND 103	1 & 2	24 VDC	< 1.0 AMPS	WIRE MANUAL ACTUATION DEVICE TERMINAL 1 BETWEEN CORE PANEL TERMINALS 102 AND 103 WIRE MANUAL ACTUATION DEVICE TERMINAL 2 BETWEEN CORE PANEL TERMINALS 101 AND 104 JUMPER 101 TO 104 AND 102 TO 103 IF NO MANUAL ACTUATION DEVICE IS INSTALLED
MANUAL ACTUATION DEVICE COVER	N/A	N/A	N/A	N/A	MANUAL ACTUATION DEVICE COVER MUST BE INSTALLED IF SURFACE MOUNTED, USE COVER EXTENSION ST-403318
REMOTE FIRESTAT SENSOR(S)	21 AND 24 22 AND 23	BLACK AND WHITE	24 VDC	< 1.0 AMPS	WIRE FIRE SENSOR WHITE WIRES BETWEEN HOOD CORE PANEL TERMINALS 22 AND 23 WIRE FIRE SENSOR BLACK WIRE BETWEEN HOOD CORE PANEL TERMINALS 21 AND 24 HIGH TEMP (842°F) #441601O6.FE9 (WHT) & #441601O6.FE0 (BLK/WIRE OR SIMILAR ONLY IF RAN OF HOOD, OTHERWISE BELDEN #8320UL OR SIMILAR PLENUM RATED WIRE. SEE FIGURE 1
FIRE ALARM CONTACT	AL1, AL2	VARIES	50V MAX (AC/DC)	UP TO 1 AMP	FIRE ALARM RELAY CONTACTS FOR BUILDING FIRE ALARM LOCATED IN THE CORE ELECTRICAL CONTROL PANEL
CORE INTERLOCK(S)	CA, CB, CC	CA, CB, CC	RS-485 COMMUNICATIONS SIGNAL		CORE SYSTEM (1) CA, TO CORE SYSTEM (2) CA. CORE SYSTEM (1) CB, TO CORE SYSTEM (2) CB. CORE SYSTEM (1) CC, TO CORE SYSTEM (2) CC. USE BELDEN# 88760 OR SIMILAR WIRE
TROUBLE CONTACT	TBC, TBL, TOK	VARIES	MAX 120 VAC	UP TO 6 AMPS	WIRE TO TBL & TBC NORMALLY OPEN CONTACT, CLOSES IN TROUBLE CONDITION
CORE COMMUNICATIONS CABLE	RJ-45 Jack	INTERNET CONNECTION	SIGNAL	<1.0 AMPS	TYPICAL CONNECTION CAT5 CABLE TO LOCAL AREA NETWORK VIA ETHERNET SWITCH OR WIRELESS ROUTER WITH VALID INTERNET CONNECTION

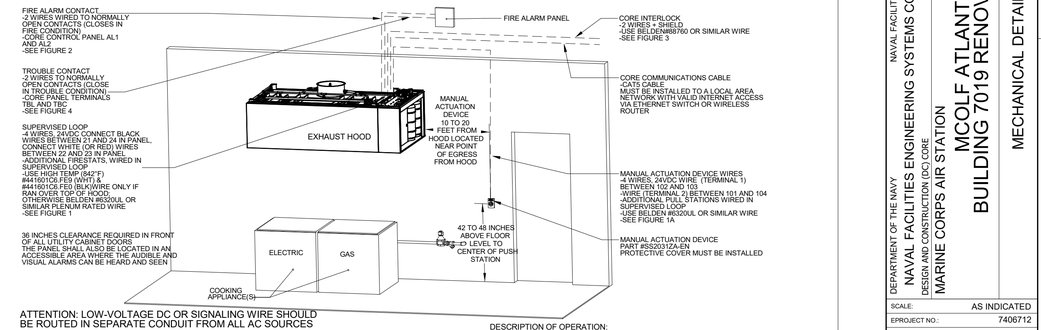

ATTENTION: LOW-VOLTAGE DC OR SIGNALING WIRE SHOULD BE ROUTED IN SEPARATE CONDUIT FROM ALL AC SOURCES

NOTE: SEE INSTALLATION, OPERATION, AND MAINTENANCE MANUAL FOR FURTHER INSTRUCTIONS

DESCRIPTION OF OPERATION:
Fire System #1 TANK FS - 4 DHLT. Tank-based Fire Protection System equipped with Electronic Detection utilizing CORE board as a Listed Release Mechanism. Installed in Hood Utility Cabinet with integral hood prewire panel.

		DESCRIPTION	DATE	APPR

NAVFAC

NORTH CAROLINA PROFESSIONAL SEAL 038500 ENGINEER JACOB W MERRITT
01-01-20
SEAL

CRENSHAW CONSULTING engineers
www.crenshawconsulting.com
NC LICENSE #C-1168
3916 Bush Street, Suite 200
Raleigh, North Carolina 27609
919-571-1570 Fax 571-0429

A/E INFO

APPROVED

FOR COMMANDER NAVFAC

ACTIVITY
Approved by Erik A. Lewis,
Infrastructure Engineering Branch Head,
FRCE Cherry Point via Electronic Signature

SATISFACTORY TO

DES	LWM	DRW	MWF	CHK	JDL

PM/DM	L. PEED
BRANCH MANAGER	H. PERRY
CHIEF ENG/ARCH	P. FAULKNER
FIRE PROTECTION	D. CHASTAIN

DEPARTMENT OF THE NAVY
NAVAL FACILITIES ENGINEERING SYSTEMS COMMAND
DESIGN AND CONSTRUCTION (DC) CORE
MARINE CORPS AIR STATION

NAVAL FACILITIES ENGINEERING SYSTEMS COMMAND – MIDATLANTIC
NAVAL STATION - NORFOLK, VA
CHERRY POINT, NC

MCOLF ATLANTIC
BUILDING 7019 RENOVATIONS

MECHANICAL DETAILS

SCALE:	AS INDICATED
EPROJECT NO.:	7406712
STA. PROJ. NO.:	7406712
NAVFAC DRAWING NO.	12939536
SHEET	111 OF 148

M-515

DRAWFORM REVISION: 25 AUGUST 2020

AIR DOOR (AD) SCHEDULE

MARK	AREA SERVED	MANUFACTURER	MODEL NO.	LENGTH	CFM	MOTOR HP	FLA	MOCP	VOLT/PH	WEIGHT	REMARKS
AD-1	KITCHEN DOOR ENTRY	MARS	STD242	42"	1418	0.5	5.1	15	120/1	70	1,2

REMARKS:

1. PROVIDE WITH MOTOR CONTROL PANEL AND WALL MOUNTING BRACKET.

2. PROVIDE WITH DOOR POSITION SWITCH OR MAGNETIC REED SWITCH, INTERLOCKED TO OPERATE IF DOOR IS OPEN.

ROOF VENTILATOR SCHEDULE

MARK	THROAT SIZE	SERVICE	HOOD SIZE	CFM	MAX. P.D. (IN H2O)	DAMPER TYPE	WEIGHT (LBS)	REMARKS
RV-1	20X20	DOAS OA	30"	4055	0.10	PARALLEL	115	1
RV-2	20X20	DOAS EA	30"	3015	0.10	PARALLEL	115	1

REMARKS:
1. VENTILATOR SHALL BE SPUN ALUMINUM. PROVIDE VENTILATOR WITH MINIMUM 12" HIGH INSULATED ROOF CURB FOR METAL ROOF AND ALUMINUM BIRDSCREEN.

DESIGN CONDITIONS

OUTDOOR DESIGN CONDITIONS	
SEASON	**DB/WB (°F)**
SUMMER	90.0 / 77.0 (1% ASHRAE)
WINTER	27.0 (99.0% ASHRAE)
DEHUMIDIFICATION CONDITIONS	
MCDB (°F)	**W (grains H2O/lbm dry air)**
84	141

SEISMIC

BUILDING RISK CATEGORY	-
WIND EXPOSURE CATEGORY	-
SEISMIC DESIGN CATEGORY	-
SEE STRUCTURAL PLANS FOR FURTHER INFORMATION	

AIR DISTRIBUTION SCHEDULE

MARK	DESCRIPTION	THROW	TYPE	FACE SIZE	NECK SIZE	MOUNT	MINIMUM CFM	MAXIMUM CFM	MAX. NC	REMARKS
S1	SQUARE PLAQUE FACE	4 WAY	DIFFUSER	24x24	6"ø	SEE PLANS	0 CFM	100 CFM	30	1,2,3,4
S2	SQUARE PLAQUE FACE	4 WAY	DIFFUSER	24x24	8"ø	SEE PLANS	125 CFM	200 CFM	30	1,2,3,4
S3	SQUARE PLAQUE FACE	4 WAY	DIFFUSER	24x24	10"ø	SEE PLANS	225 CFM	375 CFM	30	1,2,3,4
S4	SQUARE PLAQUE FACE	4 WAY	DIFFUSER	24x24	12"ø	SEE PLANS	350 CFM	625 CFM	30	1,2,3,4
S5	SQUARE PLAQUE FACE	4 WAY	DIFFUSER	24x24	14"ø	SEE PLANS	650 CFM	750 CFM	30	1,2,3,4
S7	ALUMINUM LOUVERED	1 WAY	GRILLE	8X8	6X6	DUCT	100 CFM	100 CRM	30	1,2,3,4
E1	PERFORATED EXHAUST	NA	DIFFUSER	24x24	6"ø	LAY-IN	0 CFM	75 CFM	30	1,2,3,4
E2	PERFORATED EXHAUST	NA	DIFFUSER	24x24	8"ø	LAY-IN	100 CFM	175 CFM	30	1,2,3,4
E3	PERFORATED EXHAUST	NA	DIFFUSER	24x24	10"ø	LAY-IN	200 CFM	275 CFM	30	1,2,3,4
E4	PERFORATED EXHAUST	NA	DIFFUSER	24x24	12"ø	LAY-IN	300 CFM	475 CFM	30	1,2,3,4
E5	LOUVERED, 3/4" SPACING	NA	GRILLE	12X12	10X10	DUCT	300 CFM	300 CFM	30	1,2,3,4
R1	PERFORATED RETURN	NA	DIFFUSER	24X24	6"ø	LAY-IN	0 CFM	75 CFM	30	1,2,3,4
R2	PERFORATED RETURN	NA	DIFFUSER	24X24	8"ø	LAY-IN	100 CFM	175 CFM	30	1,2,3,4
R3	PERFORATED RETURN	NA	DIFFUSER	24X24	10"ø	LAY-IN	200 CFM	275 CFM	30	1,2,3,4
R4	PERFORATED RETURN	NA	DIFFUSER	24X24	12"ø	LAY-IN	300 CFM	400 CFM	30	1,2,3,4
R5	PERFORATED RETURN	NA	DIFFUSER	24X24	14"ø	LAY-IN	425 CFM	700 CFM	30	1,2,3,4

REMARKS
1. VERIFY ALL CONSTRUCTION TYPES WITH ARCHITECTURAL PLANS TO DETERMINE MOUNTING DETAILS AND ACCESSORIES REQUIRED. COORDINATE COLOR WITH ARCHITECT.
2. PROVIDE WITH SQUARE TO ROUND TRANSITION AS NECESSARY.
3. ALL AIR DISTRIBUTION MUST BE 100% ALUMINUM CONSTRUCTION.
4. PROVIDE BLANKET INSULATION ON THE BACK OF ALL DIFFUSERS.
5. PROVIDE MOUNTING ACCESSORIES REQUIRED FOR LAY-IN/T-BAR INSTALLATION.

DUCT CONSTRUCTION AND LEAKAGE TESTING TABLE

LOCATION	DUCT PRESSURE CLASS				EA/SA (2-3 IN. W.C.)				EA/SA (<= 1 IN. W.C.)				RA DUCT		RA DUCT		OA DUCT		OA DUCT		DUCT TEST PRESSURE INCHES OF WATER COLUMN	REMARKS
	INCHES OF WATER				ROUND / OVAL		RECT.		ROUND / OVAL		RECT.		ROUND / OVAL		RECT.		ROUND / OVAL		RECT.			
	SA DUCT	RA DUCT	EA DUCT	OA DUCT	DUCT SEAL CLASS	DUCT LEAK CLASS	DUCT SEAL CLASS	DUCT LEAK CLASS	DUCT SEAL CLASS	DUCT LEAK CLASS	DUCT SEAL CLASS	DUCT LEAK CLASS	DUCT SEAL CLASS	DUCT LEAK CLASS	DUCT SEAL CLASS	DUCT LEAK CLASS	DUCT SEAL CLASS	DUCT LEAK CLASS	DUCT SEAL CLASS	DUCT LEAK CLASS		
DOAS-1	4	-	-	-	A	8	A	16	-	-	-	-	-	-	-	-	-	-	-	-	4	1,2
	-	-	-	-4	A	8	A	16	-	-	-	-	-	-	-	-	-	-	-	-	4	1,2
AHU	2	-	-	-	A	8	A	16	-	-	-	-	-	-	-	-	-	-	-	-	2	1,2
EXHAUST FAN	-	-	-1	-	-	-	-	-	A	8	A	16	-	-	-	-	-	-	-	-	1	1,2,3

REMARKS:
1. TEST IN ACCORDANCE WITH SPECIFICATION SECTION 23 05 93 TESTING, ADJUSTING, AND BALANCING FOR HVAC, AND WITH THE PROCEDURES IN SMACNA 016 HVAC AIR DUCT LEAKAGE TEST MANUAL.
2. UTILIZE DUCT LEAK CLASSES INDICATED IN THIS TABLE FOR THE LISTED DUCT PRESSURE CLASSES AND DUCT SEAL CLASS.
3. TESTING MAY BE DONE AT POSITIVE PRESSURE FOR NEGATIVE SYSTEMS.

APPR | DATE | DESCRIPTION | SYM

NAVFAC

NORTH CAROLINA PROFESSIONAL SEAL 035500 ENGINEER LANCE W. MERRIMAN 01-01-20

SEAL

CRENSHAW CONSULTING Engineers
www.crenshawconsulting.com
NC LICENSE #C-1158
3816 Bush Street, Suite 200
Raleigh, North Carolina 27609
919-571-1570 Fax 571-0429

A/E INFO

APPROVED

FOR COMMANDER NAVFAC

ACTIVITY
Approved by Erik A. Lewis,
Infrastructure Engineering Branch Head,
FRCE Cherry Point via Electronic Signature

SATISFACTORY TO

DES	LWM	DRW	MWF	CHK	JDL

PM/DM	L. PEED
BRANCH MANAGER	H. PERRY
CHIEF ENG/ARCH	P. FAULKNER
FIRE PROTECTION	D. CHASTAIN

DEPARTMENT OF THE NAVY
NAVAL FACILITIES ENGINEERING SYSTEMS COMMAND
DESIGN AND CONSTRUCTION (DC) CORE
MARINE CORPS AIR STATION

NAVAL FACILITIES ENGINEERING SYSTEMS COMMAND ~ MIDLANTIC
NAVAL STATION - NORFOLK, VA.
CHERRY POINT, NC

MCOLF ATLANTIC
BUILDING 7019 RENOVATIONS

MECHANICAL SCHEDULES

SCALE:	AS INDICATED
EPROJECT NO.:	7406712
STA. PROJ. NO.:	7406712
NAVFAC DRAWING NO.	12939537
SHEET	112 OF 148

M-601

DRAWFORM REVISION: 25 AUGUST 2020

DEDICATED OUTSIDE AIR SYSTEM (DOAS) SCHEDULE

INDOOR AIR HANDLER UNIT

MARK	SUPPLY FAN SA CFM	SUPPLY FAN ESP (IN.WG)	SUPPLY FAN TSP (IN. WG)	EXHAUST FAN EA CFM	EXHAUST FAN ESP (IN. WG)	EXHAUST FAN TSP (IN. WG)
DOAS-1	4055	2.00	5.29	3015	2.00	4.39

MARK	COOLING COIL SECTION (DX) TOTAL CAP. (MBH)	SENS. CAP. (MBH)	SHR	EAT DB (°F)	EAT WB (°F)	EAH BTU/LBM	LAT DB (°F)	LAT WB (°F)	LAH BTU/LBM	FACE VEL. (FPM)	AIR PD MAX (FT. WG)	MIN. NUM. OF ROWS
DOAS-1	251.8	138.8	0.6	84.7	72.3	35.8	53.0	53.0	22.0	500	1.04	6

MARK	REHEAT HEATING COIL SECTION (HOT WATER) TOTAL CAP. (MBH)	EAT (°F)	LAT (°F)	FACE VEL. (FPM)	AIR PD MAX (FT. WG)	EWT (°F)	LWT (°F)	WATER PD MAX (FT. WG)	FOULING FACTOR (°F FT2 H/BTU)	GPM
DOAS-1	157.7	40.0	76.0	500	0.13	140.0	110.0	1.5	0.00025	10.5

MARK	ELECTRICAL V/PH	CKT #1: SUPPLY FAN, CONTROLS & LIGHTS QTY	BHP	FLA	MCA	MOCP	CKT #2: EXHAUST FAN QTY	BHP	FLA	MCA	MOCP	UNIT WEIGHT (LBS)
DOAS-1	208/3	2.0	4.0	21.6	23.9	30.0	1.0	6.0	13.7	17.1	30.0	3250

OUTDOOR CONDENSING UNIT

MARK	NOMINAL TONS	# COMPR / STAGES	EER	ELECTRICAL V/PH	MCA	MOCP	UNIT WEIGHT (LBS)	REMARKS
DOCU-1	25.0	1 / 1		208/3	109.0	150.0	1000.0	1-13

REMARKS
1. PROVIDE WITH 2" MERV 8 FILTERS ON THE EXHAUST AND 2" MERV 8 PREFILTERS & 2" MERV 13 FINAL FILTERS ON THE RETURN AND OUTSIDE AIR INTAKE, STATIC PRESSURE INCREASE FROM CLEAN FILTERS IS INCLUDED IN THE SCHEDULED TOTAL STATIC PRESSURE VALUE.
2. PROVIDE PREMIUM EFFICIENCY MOTORS FOR SUPPLY AND EXHAUST FANS, COMPATIBLE WITH VARIABLE SPEED OPERATION.
3. PROVIDE WITH CLASS 1A LOW LEAKAGE DAMPERS ON THE EXHAUST DISCHARGE AND OUTSIDE AIR INTAKE UNIT CONNECTIONS.
4. PROVIDE UNIT WITH VERTICAL SUPPLY DISCHARGE, EXHAUST INLET AND OUTSIDE AIR INLET DUCT CONNECTION AND HORIZONTAL EXHAUST DISCHARGE DUCT CONNECTIONS. UNIT MUST HAVE 2" DOUBLE WALL CONSTRUCTION.
5. CONTRACTOR MUST VERIFY THAT UNIT CAN BE INSTALLED IN LOCATION SHOWN ON DRAWINGS PRIOR TO SUBMITTING FOR APPROVAL.
6. PROVIDE 6000 HR SALT SPRAY PROTECTIVE COATING ON THE COOLING AND REHEAT COILS.
7. UNIT SHALL HAVE CROSSFLOW FIXED PLATE TOTAL ENERGY HEAT EXCHANGER, PLENUM-TYPE SUPPLY/EXHAUST FANS, COOLING COIL, REHEAT COIL AND MARINE LIGHTS IN EACH FAN & ACCESS SECTIONS.
8. PROVIDE UNIT WITH SEPARATE POWER CONNECTIONS FOR THE SUPPLY FAN, THE EXHAUST FAN AND THE MARINE LIGHTS.
9. EQUIPMENT COOLING CAPACITY MUST BE SUFFICIENT TO MEET THE SUMMER OUTDOOR DESIGN CONDITION OF 141.79 GRAINS/LB WITH 83.5 MCDB.
10. MAXIUMUM ALLOWABLE DISCHARGE OR RADIATED NOISE CRITERIA (NC) = 30.
11. AIR HANDLER DESIGNED WITH A FOULING FACTOR OF 0.00025 FT^2-HR-°F/BTU FOR ALL COILS.
12. EQUIPMENT SUPPORTS TO HAVE VIBRATION ISOLATION. SEE VIBRATION ISOLATION DETAIL FOR MORE INFORMATION.
13. PROVIDE DUCT MOUNTED SMOKE DETECTOR IN SUPPLY DUCTWORK.

TOTAL ENERGY HEAT EXCHANGER

SUMMER OA DB	SUMMER OA WB	SUMMER RA DB	SUMMER RA %RH	SUMMER SA DB	SUMMER SA WB	WINTER OA DB	WINTER OA WB	WINTER RA DB	WINTER RA %RH	WINTER SA DB	WINTER SA WB	HX EFF. SUMMER/ WINTER %
90.1	77.1	76.0	50.0	84.7	72.3	27.5	23.1	70.0	50.0	43.8	37.0	48.4/48.4

ASHRAE STANDARD 15 REFRIGERANT COMPLIANCE CALCULATION

CONDENSING UNIT	REFRIGERANT NUMBER	RCL (lb/1000 ft³)	LFL (lb/1000 ft³)	CF	FOCC	ROOM	ROOM AREA ft2	ROOM HEIGHT ft	WITHOUT AIR CIRCULATION (SECTION 7.6.1.2) Mdef (TABLE 7.1) (lb)	FLFL	EFFECTIVE DISPERSAL VOLUME CHARGE (EDVC) (sect 7.6.1.2) (lb)	SYSTEM CHARGE (Ms) (lb)	RELEASABLE CHARGE (Mrel) (lb)	RELEASABLE CHARGE ≤ EDVC?	REMARKS
DAC-1	R-454B	3.2	22.0	0.5	1.0					0.9	0.0		0.00	YES	1,2
	R-32	4.8	19.1	0.5	1.0					1.0	0.0			YES	1,2
DAC-2	R-454B	3.2	22.0	0.5	1.0					0.9	0.0		0.00	YES	1,2
	R-32	4.8	19.1	0.5	1.0					1.0	0.0			YES	1,2

REMARKS:
1. ASHRAE 34-2024, TABLE 4-1 & 4-2: REFRIGERANT IS CLASSIFIED AS NEITHER TOXIC OR HIGHLY TOXIC, WITH A REFRIGERANT CONCENTRATION LIMIT (RCL), LOWER FLAMMABILITY LIMIT (LFL) PER SCHEDULED VALUES.
2. EFFECTIVE DISPERSAL VOLUME CHARGE (EDVC) IS CALCULATED PER ASHRAE 15-2024, SECTION 7.6 (R-454B & R-32). Mdef VALUE INTERPOLATED USING VALUES FROM TABLE 7-1.

DUCTLESS SPLIT SYSTEM SCHEDULE

MARK	SERVES	TYPE		INDOOR UNIT MINIMUM AIRFLOW (CFM)	MAXIMUM AIRFLOW (CFM)	COOLING CAPACITY TOTAL (MBH @ 95°F)	COOLING CAPACITY SENSIBLE (MBH @ 95°F)	SHR	HEATING CAPACITY (MBH @ 17°F)	HEATING CAPACITY (MBH @ 47°F)	WEIGHT (LBS)	OUTDOOR UNIT MARK	NOMINAL TONS	SEER	EER	VOLT/PH	MCA	MOCP	WEIGHT (LBS)	REMARKS
DAC-01	COMM	AC	WALL MOUNTED	635	775	21.4	16.0	0.75	-	-	30	DCU-1	2.0	19.5	11.0	208/1	22	37	100	1,2,3,4,5,7
DAC-07	FIRE PUMP	HP	WALL MOUNTED	265	385	11.0	7.9	0.72	10.7	17.0	30	DCU-2	1.0	21.1	14.8	208/1	16	27	100	1,2,3,4,5,6

REMARKS
1. PROVIDE UNIT WITH WIRED WALL MOUNTED THERMOSTAT AND CONTROLLER WITH BACNET MS/TP COMPATIBLE INTERFACE AND CLEANABLE TYPE FILTERS.
2. PROVIDE UNIT WITH WALL MOUNTED CONDENSATE PUMP, WIRED TO MOTOR RATED SWITCH, CAPABALE OF 10 GPH AT 20' HEAD, 1/30 HP, 120/1, 1.5 FLA..
3. INDOOR AIR HANDLING UNIT IS POWERED FROM OUTDOOR CONDENSING UNIT.
4. DUCTLESS SPLIT SYSTEM MUST BE CAPABLE OF HANDLING 95 FEET OF REFRIGERANT LINE BETWEEN DAC AND DCU.
5. PROVIDE ALL ACCESSORIES REQUIRED FOR LOW AMBIENT OPERATION TO 0ºF. PROVIDE COIL GUARDS AND 3,000 SALT-HOUR SEACOAST CONSTRUCTION. COATINGS MUST NOT REDUCE UNIT PERFORMANCE.
6. COOLING CAPACITY IS CALCULATED AT AN INDOOR DESIGN TEMPERATURE OF 80°F DB AND 67°F WB. HEATING CAPACITY (IF APPLICABLE) IS CALCULATED AT AN INDOOR DESIGN TEMPERATURE OF 60°F DB.
7. COOLING CAPACITY IS CALCULATED AT AN INDOOR DESIGN TEMPERATURE OF 72°F DB AND RELEATIVE HUMIDITY OF 50%.

SPLIT SYSTEM AIR HANDLING UNIT SCHEDULE

INDOOR UNIT

MARK	DESCRIPTION	MOTOR SUPPLY (CFM)	MOTOR E.S.P. ("WC)	MOTOR DRIVE	DX COIL COOLING TTL CAP (MBH)	SENS. CAP (MBH)	AMB. (°F)	EAT DB (°F)	EAT WB (°F)	LAT DB (°F)	LAT WB (°F)
AHU-1A	HORIZONTAL AHU	1300	1.00	DIRECT	48.6	31.4	95.0	78.0	67.2	56.0	55.0
AHU-1B	HORIZONTAL AHU	1300	1.00	DIRECT	48.6	31.4	95.0	78.0	67.2	56.0	55.0
AHU-2	HORIZONTAL AHU	620	1.00	DIRECT	23.2	15.0	95.0	78.0	67.2	56.0	55.0
AHU-3	HORIZONTAL AHU	1000	1.00	DIRECT	37.4	24.2	95.0	78.0	67.2	56.0	55.0
AHU-4	HORIZONTAL AHU	450	1.00	DIRECT	16.8	10.9	95.0	78.0	67.2	56.0	55.0

MARK	REHEAT HEATING COIL SECTION (HOT WATER) TOTAL CAP. (MBH)	EAT (°F)	LAT (°F)	FACE VEL. (FPM)	AIR PD MAX (FT. WG)	EWT (°F)	LWT (°F)	WATER PD MAX (FT. WG)	FOULING FACTOR (°F FT2 H/BTU)	GPM
AHU-1A	56.2	55.0	95.0	500.0	3.0	140.0	110.0	2.0	0.00001	3.7
AHU-1B	56.2	55.0	95.0	500.0	3.0	140.0	110.0	2.0	0.00001	3.7
AHU-2	26.8	55.0	95.0	500.0	3.0	140.0	110.0	2.0	0.00001	1.8
AHU-3	43.2	55.0	95.0	500.0	3.0	140.0	110.0	2.0	0.00001	2.9
AHU-4	19.4	55.0	95.0	500.0	3.0	140.0	110.0	2.0	0.00001	1.3
	201.7									13.4

MARK	V/PH	FLA	MCA	MOCP	FILTERS EFFIC.	FILTERS THCK. (IN)	WEIGHT (LBS)	OUTDOOR UNIT MARK	ELECTRICAL DATA V/PH	MCA	MOCP	WEIGHT (LBS)	REMARKS
AHU-1A	208/1	7.7	9.7	15.0	MERV-8	2"	250	CU-1A	208/3	16.3	25.0	315	1,2,3,4,5
AHU-1B	208/1	7.7	9.7	15.0	MERV-8	2"	250	CU-1B	208/3	16.3	25.0	315	1,2,3,4,5
AHU-2	208/1	4.6	5.7	15.0	MERV-8	2"	150	CU-2	208/3	9.0	20.0	275	1,2,3,4,5
AHU-3	208/1	4.6	5.7	15.0	MERV-8	2"	250	CU-3	208/3	16.3	25.0	315	1,2,3,4,5
AHU-4	208/1	4.6	5.7	15.0	MERV-8	2"	150	CU-4	208/3	9.0	20.0	275	1,2,3,4,5

REMARKS:
1. PROVIDE WITH TXV VALVE AND SINGLE ZONE VARIABLE FREQUENCY DRIVE SUPPLY FAN.
2. DISCHARGE CONDENSATE TO GRADE.
3. PROVIDE WITH FACTORY MOUNTED WATER COIL HEATER FOR EMERGENCY BACKUP AND DEHUMIDIFICATION SEQUENCE.
4. ALL FAN MOTORS MUST BE PREMIUM EFFICIENCY AND NON-OVERLOADING.
5. PROVIDE WITH SINGLE POINT ELECTRICAL CONNECTION.

SYM | DESCRIPTION | DATE | APPR

NAVFAC

SEAL

CRENSHAW CONSULTING engineers
www.crenshawconsulting.com
NC LICENSE #C-1156
3516 Bush Street, Suite 200
Raleigh, North Carolina 27609
919-871-1070 Fax 871-5620
A/E INFO

APPROVED
FOR COMMANDER NAVFAC
ACTIVITY
Approved by Erik A. Lewis, Infrastructure Engineering Branch Head, FRCE Cherry Point via Electronic Signature
SATISFACTORY TO
DES LWM DRW MWF CHK JDL
PM/DM L. PEED
BRANCH MANAGER H. PERRY
CHIEF ENG/ARCH P. FAULKNER
FIRE PROTECTION D. CHASTAIN

DEPARTMENT OF THE NAVY
NAVAL FACILITIES ENGINEERING SYSTEMS COMMAND
NAVAL FACILITIES ENGINEERING SYSTEMS COMMAND ~ MIDATLANTIC
DESIGN AND CONSTRUCTION (DC) CORE
NAVAL STATION - NORFOLK, VA
MARINE CORPS AIR STATION
CHERRY POINT, NC
MCOLF ATLANTIC
BUILDING 7019 RENOVATIONS
MECHANICAL SCHEDULES

SCALE: AS INDICATED
EPROJECT NO.: 7406712
STA. PROJ. NO.: 7406712
NAVFAC DRAWING NO. 12939538
SHEET 113 OF 148
M-602
DRAWFORM REVISION: 25 AUGUST 2020

CHEMICAL SHOT FEEDER SCHEDULE

MARK	TANK VOLUME (GAL)	SERVICE	WEIGHT (LB)		REMARKS
			EMPTY	FULL	
CF-1	2	HOT WATER	25	45	1

REMARKS:
1. PROVIDE 200 PSIG PRESSURE RATED POT FEEDER.

AIR AND DIRT SEPERATOR (AS) SCHEDULE

MARK	CONNECTION SIZE (IN)	SERVICE	REMARKS
AS-1	2	HOT WATER	1,2

REMARKS
1. PROVIDE WITH REMOVABLE HEAD AND AUTOMATIC AIR RELIEF VALVE.
2. SEPARATOR MUST BE COALESCING AIR/DIRT TYPE.

BOILER (B) SCHEDULE

MARK	LOCATION	TYPE	MAX INPUT (MBH)	MAX OUTPUT (MBH)	TURNDOWN	AFUE MIN EFF %	EWT (°F)	LWT (°F)	FLOW (GPM)	PD (FT. HD)	FLUE SIZE (IN)	INTAKE SIZE (IN)	ELECTRICAL			WEIGHT (LBS)	REMARKS
													VOLT/PH	FLA	MCA		
B-1	MECH ROOM	CONDENSING FLOOR MOUNTED	285	264	10:1	95.0	110	140	20	1.3	3	3	120/1	3.6	4.5	250	1,2,3,4,5,6
B-2	MECH ROOM	CONDENSING FLOOR MOUNTED	285	264	10:1	95.0	110	140	20	1.3	3	3	120/1	3.6	4.5	250	1,2,3,4,5,6

REMARKS:
1. PROVIDE LP GAS, LOW NOx BOILER, LOW CO MODULATING BOILER.
2. HOT WATER TEMPERATURES: 110°F EWT/140°F LWT.
3. PROVIDE SINGLE NEUTRALIZATION TANK FOR ALL BOILERS CONDENSATE, PIPED TO FLOOR DRAIN.
4. PROVIDE BOILER MANAGEMENT PANEL, TO CONTROL ALL INTERNAL BOILER FUNCTIONS. PROVIDE BACNET MS/TP CARD FOR EXTERNAL BACNET CONNECTION.
5. PROVIDE WITH 3" INTAKE AND 3" EXHAUST KITS, CPVC, PER MANUFACTUER'S RECOMMENDATIONS FOR SIDEWALL INSTALLATION.

PUMP SCHEDULE

MARK	SERVICE	TYPE	FLOW (GPM)	HEAD (FT. WG)	MOTOR TYPE	MAX POWER (watts)	MAX LOAD (A)	MOCP	VOLT/PH	REMARKS
PHWP-1	B-1	INLINE	20	10	ECM	0.16	7.0	15.0	120/1	2,3,4
PHWP-2	B-2	INLINE	20	10	ECM	0.16	7.0	15.0	120/1	2,3,4
SHWP-1	HW DISTRIBUTION	INLINE	24	35	ECM	0.60	4.2	15.0	120/1	1,3,4
SHWP-2	HW DISTRIBUTION	INLINE	24	35	ECM	0.60	4.2	15.0	120/1	1,3,4

REMARKS:
1. PROVIDE WITH VFD AND BACNET MS/TP CARD.
2. PROVIDE WITH BACNET COMMUNICATION CAPABILITY.
3. PROVIDE PUMPS EQUALLY SIZED FOR PRIMARY/STANDBY OPERATION FOR N+1 REDUNDANCY, WITH LEAD/LAG CONTROLS.
4. EQUIPMENT SUPPORTS TO HAVE VIBRATION ISOLATION. SEE VIBRATION ISOLATION DETAIL FOR MORE INFORMATION.

EXPANSION TANK SCHEDULE

MARK	FLUID	PIPING MATERIAL	MIN. OPERATING TEMP. (F)	MAX. DESIGN TEMP. (F)	MAX. SYSTEM HEIGHT (FT.)	PRECHARGE PRESS. (PSI)	ASME PRESSURE RATING (PSI)	TANK VOLUME (GAL)	ACCEPTANCE VOLUME (GAL)	SERVICE	WEIGHT (LB)		REMARKS
											EMPTY	FULL	
ET-1	WATER	COPPER	50	140	15	14	125	10	10	HOT WATER	120	315	1

REMARKS:
1. PROVIDE PRE-CHARGED FULL ACCEPTANCE BLADDER TANK AS WELL AS SIGHT GLASS, ANCHOR CLIPS, AND STAINLESS STEEL CONNECTOR.

BUILDING VENTILATION SCHEDULE AND AIR BALANCE (ASHRAE 62.1-2019)

ZONE	CFM			ZONE FLOOR AREA	ZONE POPULATION	PEOPLE OUTDOOR AIR RATE	AREA OUTDOOR AIR RATE	BREATHING ZONE OUTDOOR AIRFLOW	BREATHING ZONE OUTDOOR AIRFLOW	BREATHING ZONE OUTDOOR AIRFLOW	ZONE AIRE DISTRIBUTION EFFECTIVENESS	ZONE OUTDOOR AIRFLOW REQUIRED	OA CFM	EA CFM	SA CFM	RA CFM	MAKE-UP AIR CFM	TOTAL Δ CFM
				Az	*Pz*	*Rp*	*Ra*	(Rp * Pz)	(Ra * Az)	*Vbz*	*Ez*	*Voz*						
				(sq ft)	(people)	(cfm per person)	(cfm per sq ft)	(cfm)	(cfm)	(cfm)		(cfm)	(cfm)					
AHU-2	620	100	ENTRY	378	2.0	5.0	0.06	10.0	22.7	32.7	1.0	32.7	150		50	50		150
		101	LOBBY	298	5.0	5.0	0.06	25.0	17.9	42.9	1.0	42.9	200		175	275		100
		102	CORRIDOR	192	0.0	0.0	0.06	0.0	11.5	11.5	1.0	11.5	30		50	50		30
		103	DUTY	142	2.0	5.0	0.06	10.0	8.5	18.5	1.0	18.5	30		75	75		30
		104	OFFICE	189	2.0	5.0	0.06	10.0	11.3	21.3	1.0	21.3	30		100	100		30
		105	TRAINING STORAGE	64	0.0	5.0	0.06	0.0	3.8	3.8	1.0	3.8	30		0	0		30
		107	STORAGE	226	1.0	5.0	0.06	5.0	13.6	18.6	1.0	18.6	30		70	70		30
		110	LAUNDRY	100	2.0	5.0	0.12	10.0	12.0	22.0	1.0	22.0	30		100			130
DAC-1		106	COMM.	143				0.0	0.0	0.0	1.0	0.0	0		0	0		0
		106A	ELEC.	76				0.0	0.0	0.0	1.0	0.0	0		0	0		0
		108	MECH.	493				0.0	0.0	0.0	1.0	0.0	200	150	0	0		50
AHU-1A	1300	109	DINING/TRAINING	614	40.0	7.5	0.18	300.0	110.5	410.5	1.0	410.5	415	300	1300	1300		115
AHU-1B	1300	111	KITCHEN	608	8.0	7.5	0.12	60.0	73.0	133.0	1.0	133.0	135	2250	1300	1300	2250	135
		111A	TOILET	26				0.0	0.0	0.0	1.0	0.0	0	50	0	0		-50
		112	DRY STORAGE	35		5.0	0.06	0.0	2.1	2.1	1.0	2.1	50		0	0		50
		113	TRASH	26				0.0	0.0	0.0	1.0	0.0	0	100	0	0		-100
AHU-3	1000	114	GYM	555	10.0	20.0	0.06	200.0	33.3	233.3	1.0	233.3	235	200	900	900		35
		114A	GYM STORAGE	47		5.0	0.06	0.0	2.8	2.8	1.0	2.8	5		100	100		5
DAC-2		115	FIRE PUMP	120				0.0	0.0	0.0	1.0	0.0	0		0	0		0
2 PTHP		116	LOUNGE	457	10.0	5.0	0.06	50.0	27.4	77.4	1.0	77.4	100	100	0	0		0
AHU-4	450	118	WOMEN	50				0.0	0.0	0.0	1.0	0.0	0	75	50	0		-25
		119	JAN	20				0.0	0.0	0.0	1.0	0.0	0	30	0	0		-30
		120	HEAD	175				0.0	0.0	0.0	1.0	0.0	0	300	100	0		-200
		121	CORRIDOR	506		0.0	0.06	0.0	30.4	30.4	1.0	30.4	450		300	450		300

APPR | DATE | DESCRIPTION | SYM

NAVFAC

NORTH CAROLINA PROFESSIONAL SEAL 035500 ENGINEER LUCAS W MERRITT
07-01-20
SEAL

CRENSHAW CONSULTING Engineers
NC LICENSE #C-1168 | www.crenshawconsulting.com | 3241 Bush Street, Suite 205, Raleigh, North Carolina 27609 | 919-571-1570 Fax 571-5609

A/E INFO

APPROVED

FOR COMMANDER NAVFAC

ACTIVITY: Approved by Erik A. Lewis, Infrastructure Engineering Branch Head, FRCE Cherry Point via Electronic Signature

SATISFACTORY TO

DES	LWM	DRW	MWF	CHK	JDL

PM/DM: L. PEED
BRANCH MANAGER: H. PERRY
CHIEF ENG/ARCH: P. FAULKNER
FIRE PROTECTION: D. CHASTAIN

DEPARTMENT OF THE NAVY
NAVAL FACILITIES ENGINEERING SYSTEMS COMMAND
NAVAL FACILITIES ENGINEERING SYSTEMS COMMAND ~ MIDATLANTIC
NAVAL STATION - NORFOLK, VA.
DESIGN AND CONSTRUCTION (DC) CORE:
MARINE CORPS AIR STATION
CHERRY POINT, NC
MCOLF ATLANTIC
BUILDING 7019 RENOVATIONS
MECHANICAL SCHEDULES

SCALE: AS INDICATED
EPROJECT NO.: 7406712
STA. PROJ. NO.: 7406712
NAVFAC DRAWING NO. 12939539
SHEET 114 OF 148

M-603

DRAWFORM REVISION: 25 AUGUST 2020

GAS PIPING SIZES UPSTREAM OF MP REGULATORS BASED ON AN INITIAL PRESSURE OF 11" w.c., A PRESSURE DROP OF 0.5" w.c., 1.5 SPECIFIC GRAVITY GAS AND SCHEDULE 40 PIPE. SIZES BASED ON TABLE 6.3(d) OF 2015 NFPA 54. GAS PIPING SIZES DOWNSTREAM OF MP REGULATORS ARE BASED ON A LOW PRESSURE SYSTEM (< 10" w.c.), A PRESSURE DROP OF 0.5" WATER COLUMN, 1.5 SPECIFIC GRAVITY GAS AND SCHEDULE 40 PIPE. SIZES BASED ON TABLE 6.2(b) OF 2015 NFPA 54.

GAS RISER NOTES:

1. PROVIDE MANUAL SHUTOFF VALVE FOR EACH PIECE OF GAS EQUIPMENT.
2. CONTRACTOR MUST VERIFY GAS REQUIREMENTS FOR EACH PIECE OF EQUIPMENT PRIOR TO INSTALLING GAS PIPING. CONFIRM EQUIPMENT WITH OWNER.
3. GAS PIPING MUST BE SCHEDULE 40 ASTM A53 OR A120, T&C. WHERE EXPOSED TO WEATHER, PAINT TO PREVENT CORROSION. INSTALL PER NFPA 54.
4. MECHANICAL CONTRACTOR MUST VERIFY METER LOCATION AND MAXIMUM LINE LENGTHS PRIOR TO INSTALLATION. IF CONDITIONS VARY FROM THOSE SHOWN ON THE DRAWINGS, CONTACT ENGINEER FOR LINE SIZING.
5. A LISTED SHUTOFF VALVE MUST BE INSTALLED IMMEDIATELY AHEAD OF EACH MP REGULATOR.
6. MP REGULATORS MUST BE INSTALLED AND VENTED IN ACCORDANCE WITH CHAPTER 5 OF 2015 NFPA 54. USE VENTLESS REGULATORS TO AVOID INSTALLING VENT PIPING.
7. A TEST TEE FITTING MUST BE INSTALLED BETWEEN THE MP REGULATOR AND ITS UPSTREAM SHUTOFF VALVE. A SEPARATE TEST TEE FITTING MUST BE INSTALLED NOT LESS THAN 10 PIPE DIAMETERS DOWN STREAM OF THE MP REGULATOR OUTLET. PROVIDE TEST TEE FITTINGS FOR ANY NEW OR EXISTING MP REGULATORS.
8. THE MECHANICAL CONTRACTOR TO COORDINATE ALL EQUIPMENT AND ALL REGULATORS WITH THE GAS COMPANY.
9. ALL EXTERIOR ABOVE GROUND GAS PIPING, AFTER THE GAS UTILITY METER, MUST BE STEEL. ALL GAS PIPING INSIDE THE BUILDING MUST BE STEEL. ALL EXTERIOR BELOW GROUND GAS PIPING MUST BE PLASTIC. PROVIDE STEEL-TO- PLASTIC PIPING RISERS WHERE EXTERIOR PLASTIC PIPE RISES OUT THE THE GROUND. SEE SPEC SECTION 23 11 20 FOR FURTHER INFO.

GAS CONNECTED LOAD

MARK	EQUIPMENT	LOCATION	BTU/HR (INPUT)
B-1	CONDENSING BOILER	108 MECH	285,000
B-2	CONDENSING BOILER	108 MECH	285,000
		SUBTOTAL:	570,000
DWH-1	GAS DOMESTIC WATER HEATER	108 MECH	250,000
DWH-1	GAS DOMESTIC WATER HEATER	108 MECH	250,000
DWH-2	INSTANTANEOUS WATER HEATER	108 MECH	380,000
		SUBTOTAL:	880,000
MAU-1	MAKE-UP AIR UNIT	EXTERIOR	130,846
	GAS RANGE	111 KITCHEN	215,000
	GAS GRIDDLE	111 KITCHEN	100,000
		SUBTOTAL:	445,846
		TOTAL (BTU/HR):	**1,895,846**
		TOTAL (CFH):	**1,859**

MAXIMUM EQUIVALENT LENGTH FROM GAS REGULATOR/METER TO MOST REMOTE REGULATOR = 75'

MAXIMUM EQUIVALENT LENGTH FROM GAS REGULATOR/METER TO MOST REMOTE APPLIANCE = 75'

BUILDING VENTILATION SCHEDULE AND AIR BALANCE (ASHRAE 62.1-2019)

ZONE	CFM			ZONE FLOOR AREA	ZONE POPULATION	PEOPLE OUTDOOR AIR RATE	AREA OUTDOOR AIR RATE	BREATHING ZONE OUTDOOR AIRFLOW	BREATHING ZONE OUTDOOR AIRFLOW	BREATHING ZONE OUTDOOR AIRFLOW	ZONE AIRE DISTRIBUTION EFFECTIVENESS	ZONE OUTDOOR AIRFLOW REQUIRED	OA CFM	EA CFM	SA CFM	RA CFM	MAKE-UP AIR CFM	TOTAL Δ CFM
				Az	*Pz*	*Rp*	*Ra*	(Rp * Pz)	(Ra * Az)	*Vbz*	*Ez*	*Voz*						
				(sq ft)	(people)	(cfm per person)	(cfm per sq ft)	(cfm)	(cfm)	(cfm)		(cfm)	(cfm)					
PTHP		122	BEDROOM	270	8.0	5.0	0.06	40.0	16.2	56.2	1.0	56.2	100	85		0		15
PTHP		123	BEDROOM	268	8.0	5.0	0.06	40.0	16.1	56.1	1.0	56.1	100	85		0		15
PTHP		124	BEDROOM	270	8.0	5.0	0.06	40.0	16.2	56.2	1.0	56.2	100	85		0		15
PTHP		125	BEDROOM	270	8.0	5.0	0.06	40.0	16.2	56.2	1.0	56.2	100	85		0		15
PTHP		126	BEDROOM	268	8.0	5.0	0.06	40.0	16.1	56.1	1.0	56.1	100	85		0		15
PTHP		127	BEDROOM	270	8.0	5.0	0.06	40.0	16.2	56.2	1.0	56.2	100	85		0		15
PTHP		128	BEDROOM	220	6.0	5.0	0.06	30.0	13.2	43.2	1.0	43.2	115			0		115
		128A	TOILET	36				0.0	0.0	0.0	1.0	0.0	0	100		0		-100
PTHP		129	BEDROOM	215	4.0	5.0	0.06	20.0	12.9	32.9	1.0	32.9	115			0		115
		129A	TOILET	37				0.0	0.0	0.0	1.0	0.0	0	100		0		-100
PTHP		130	BEDROOM	215	4.0	5.0	0.06	20.0	12.9	32.9	1.0	32.9	115			0		115
		130A	TOILET	37				0.0	0.0	0.0	1.0	0.0	0	100		0		-100
PTHP		131	BEDROOM	215	4.0	5.0	0.06	20.0	12.9	32.9	1.0	32.9	115			0		115
		131A	TOILET	37				0.0	0.0	0.0	1.0	0.0	0	100		0		-100
PTHP		132	BEDROOM	215	4.0	5.0	0.06	20.0	12.9	32.9	1.0	32.9	115			0		115
		132A	TOILET	37				0.0	0.0	0.0	1.0	0.0	0	100		0		-100
PTHP		133	BEDROOM	215	4.0	5.0	0.06	20.0	12.9	32.9	1.0	32.9	115			0		115
		133A	TOILET	37				0.0	0.0	0.0	1.0	0.0	0	100		0		-100
PTHP		134	BEDROOM	215	4.0	5.0	0.06	20.0	12.9	32.9	1.0	32.9	115			0		115
		134A	TOILET	37				0.0	0.0	0.0	1.0	0.0	0	100		0		-100
PTHP		135	BEDROOM	215	4.0	5.0	0.06	20.0	12.9	32.9	1.0	32.9	115			0		115
		135A	TOILET	37				0.0	0.0	0.0	1.0	0.0	0	100		0		-100
PTHP		136	BEDROOM	214	4.0	5.0	0.06	20.0	12.8	32.8	1.0	32.8	115			0		115
		136A	TOILET	37				0.0	0.0	0.0	1.0	0.0	0	100		0		-100
			ATTIC										300	300				0
											DOAS TOTALS:	**1704.1**	**4055**	**3015**	**3370**	**3370**	
											MAU TOTALS:		**2250**	**2250**	**1300**	**1300**	
											TOTALS:		**6305**	**5265**	**4670**	**4670**	**1040**

APPR | DATE | DESCRIPTION | SYM

NAVFAC

NORTH CAROLINA PROFESSIONAL SEAL 035500 ENGINEER LEIGH W. MERRITT

01-01-20

SEAL

CRENSHAW CONSULTING Engineers
www.crenshawconsulting.com
RC LICENSE #C-1168
3916 Bush Street, Suite 200
Raleigh, North Carolina 27609
919-571-1070 Fax 571-0409

A/E INFO

APPROVED

FOR COMMANDER NAVFAC

ACTIVITY
Approved by Erik A. Lewis,
Infrastructure Engineering Branch Head,
FRCE Cherry Point via Electronic Signature

SATISFACTORY TO

DES	LWM	DRW	MWF	CHK	JDL

PM/DM L. PEED
BRANCH MANAGER H. PERRY
CHIEF ENG/ARCH P. FAULKNER
FIRE PROTECTION D. CHASTAIN

DEPARTMENT OF THE NAVY
NAVAL FACILITIES ENGINEERING SYSTEMS COMMAND
NAVAL FACILITIES ENGINEERING SYSTEMS COMMAND ~ MIDATLANTIC
DESIGN AND CONSTRUCTION (DC) CORE
NAVAL STATION - NORFOLK, VA.
MARINE CORPS AIR STATION CHERRY POINT, NC

MCOLF ATLANTIC
BUILDING 7019 RENOVATIONS

MECHANICAL SCHEDULES

SCALE: AS INDICATED
EPROJECT NO.: 7406712
STA. PROJ. NO.: 7406712
NAVFAC DRAWING NO. 12939540
SHEET 115 OF 148

M-604

DRAWFORM REVISION: 25 AUGUST 2020

KMUA/RTU FAN SCHEDULE

FAN INFORMATION								ELECTRICAL INFORMATION					COOLING INFORMATION										GAS HEAT INFORMATION					A2L MINIMUM ROOM VOLUME			
FAN UNIT NO	TAG	QTY	TOTAL CFM	MAX OUTSIDE AIR CFM	RETURN AIR CFM	WEIGHT (LBS)	ESP	HP	PHASE	VOLT	MCA	MOCP	OUTSIDE AIR		MIXED AIR		LEAVING AIR			CAPACITY		IEER	ISMRE2	GAS TYPE	INPUT BTUs	OUTPUT BTUs	TEMP RISE	REQUIRED INPUT GAS PRESSURE	ROOM AREA (FT2)	AIRFLOW (CFM)	HEIGHT (FT)	NOTES
													DB	WB	DB	WB	DB	WB	DP	TOTAL	SENS.										
3	KMUA-1	1	1800	1800	0	1167	0.500	2.00	3	208	29A	35A	87.9°F	80.8°F	87.9°F	80.8°F	74.8°F	72.4°F	71.4°F	64.0 MBH	25.2 MBH	17.9	6.4	NATURAL	130846	105985	50°F	7 IN. W.C. - 14 IN. W.C.	168.9	304	7.2	1,2,3,4,5,6,7,8,9,10,11,12,13,14,15,16

NOTES:

1. INVERTER SCROLL COMPRESSOR WITH INTEGRATED OIL SENSOR. DIGITAL OR STAGED SCROLL NOT AN APPROVED EQUAL
2. DIRECT DRIVE PLENUM BLOWER. BELT DRIVEN BLOWERS ARE NOT ACCEPTABLE
3. INTEGRATED MONITORING VIA CELLULAR CONNECTION BY MANUFACTURER
4. REFRIGERATION PRESSURE MONITORING ON HIGH AND LOW PRESSURE SIDE OF SYSTEM INCLUDED THROUGH DIGITAL INTERFACE
5. EC MOTOR CONDENSING FANS
6. ELECTRONIC EXPANSION VALVE. TXV NOT ACCEPTABLE
7. SUCTION LINE ACCUMULATOR
8. FACTORY COMMISSIONING WITH 5 YEAR PARTS WARRANTY, 25 YEAR WARRANTY ON STAINLESS STEEL HEAT EXCHANGER
9. AVERAGING INTAKE, EVAP AND DISCHARGE TEMPERATURE SENSORS (DISCHARGE SENSOR TO BE FACTORY MOUNTED WITHIN UNIT)
10. 81% EFFICIENT FURNACE, WITH MODULATING INDUCER TO MAINTAIN CONSTANT COMBUSTION EFFICIENCY ACROSS FIRING RANGE. 6:1 TURNDOWN WITH NG AND 5:1 TURNDOWN WITH LP
11. SUPPLY CFM MONITORING INTEGRAL TO UNIT WITH CFM MEASUREMENT INCLUDED THROUGH DIGITAL INTERFACE
12. LOW AMBIENT COOLING OPERATION DOWN TO 0°F
13. 1" EXTERIOR DUAL-WALL CONSTRUCTION W/ R-4.3 INSULATION-MINIMUM 24GA EXTERIOR W/ 18GA BASE
14. DOWN DISCHARGE/NO RETURN
15. MINIMUM ROOM AREA ASSUMED 7.2' SUPPLY DIFFUSER HEIGHT AND IS CALCULATED PER UL60335-2-40 4TH ED. VALUES BASED ON FACTORY CHARGE. ACTUAL SITE CHARGE MAY DIFFER.
16. SCCR RATING OF 10kAMP

HOOD INFORMATION

HOOD NO	TAG	FILTER(S)				LIGHT(S)			UTILITY CABINET(S)					FIRE SYSTEM PIPING	HOOD HANGING WEIGHT
		QTY	HEIGHT	LENGTH	EFFICIENCY @ 7 MICRONS	QTY	TYPE	WIRE GUARD	LOCATION	SIZE	FIRE SYSTEM		ELECTRICAL	SWITCHES	
											TYPE	SIZE	MODEL #	QUANTITY	
1	Griddle	3	16"	16"	85% SEE FILTER SPEC	3	RECESSED ROUND	NO	RIGHT	12"x54"x24"	TANK FS	4.0/4.0	SC-E012011MA	1 LIGHT 1 FAN	YES	836 LBS
2	Range	2	16"	20"	85% SEE FILTER SPEC	2	RECESSED ROUND	NO							YES	458 LBS

HOOD INFORMATION

HOOD NO	TAG	LENGTH	MAX COOKING TEMP	TYPE	APPLIANCE DUTY	DESIGN CFM/FT	TOTAL EXH CFM	EXHAUST PLENUM RISER(S)							TOTAL SUPPLY CFM	HOOD CONSTRUCTION	HOOD CONFIG	
								WIDTH	LENG	HEIGHT	DIA	CFM	VEL	SP			END TO END	ROW
1	Griddle	5' 0"	600 DEG	I	HEAVY	250	1250			4"	12"	1250	1592	-0.852"	1000	430 SS WHERE EXPOSED	ALONE	ALONE
2	Range	4' 0"	600 DEG	I	HEAVY	250	1000			4"	10"	1000	1833	-0.906"	800	430 SS WHERE EXPOSED	ALONE	ALONE

EXHAUST FAN INFORMATION

FAN UNIT NO	TAG	QTY	CFM	ESP	RPM	MOTOR ENCL	HP	BHP	PHASE	VOLT	FLA	DISCHARGE VELOCITY	WEIGHT (LBS)	SONES
1	KEF-1	1	1250	1.000	1266	TEAO-ECM	1.000	0.4360	1	115	11.6	396 FPM	94	10
2	KEF-2	1	1000	1.000	1220	TEAO-ECM	1.000	0.3690	1	115	11.6	316 FPM	94	9.2

FAN ACCESSORIES

FAN UNIT NO	TAG	EXHAUST			SUPPLY			
		GREASE CUP	GRAVITY DAMPER	WALL MOUNT	SIDE DISCHARGE	GRAVITY DAMPER	MOTORIZED DAMPER	WALL MOUNT
1	KEF-1	YES						
2	KEF-2	YES						

HOOD OPTIONS

HOOD NO	TAG	OPTION
1	Griddle	FIELD WRAPPER 18.00" HIGH FRONT, LEFT, RIGHT.
		INSULATION FOR TOP OF HOOD.
		INSULATION FOR BACK OF HOOD.
		FINISHED BACK- ISL/REV INSTALL 60.00" LONG, (FILTERS TO THE BACK).
		RISER SENSOR INSTALL 6IN PLEN.
		RIGHT VERTICAL END PANEL 27" TOP WIDTH, 21" BOTTOM WIDTH, 80" HIGH INSULATED 430 SS.
		LEFT VERTICAL END PANEL 27" TOP WIDTH, 21" BOTTOM WIDTH, 80" HIGH INSULATED 430 SS.
2	Range	FIELD WRAPPER 18.00" HIGH FRONT, LEFT, RIGHT.
		INSULATION FOR TOP OF HOOD.
		INSULATION FOR BACK OF HOOD.
		FINISHED BACK- ISL/REV INSTALL 48.00" LONG, (FILTERS TO THE BACK).
		RISER SENSOR INSTALL 6IN PLEN.
		RIGHT VERTICAL END PANEL 27" TOP WIDTH, 21" BOTTOM WIDTH, 80" HIGH INSULATED 430 SS.
		LEFT VERTICAL END PANEL 27" TOP WIDTH, 21" BOTTOM WIDTH, 80" HIGH INSULATED 430 SS.

PERFORATED SUPPLY PLENUM(S)

HOOD NO	TAG	POS	LENGTH	WIDTH	HEIGHT	TYPE	RISER(S)				
							WIDTH	LENG	DIA	CFM	SP
1	Griddle	Front	72"	16"	6"	MUA	12"	20"		500	0.138"
						MUA	12"	20"		500	0.138"
2	Range	Front	48"	16"	6"	MUA	12"	28"		800	0.238"

SPECIFICATION: GREASE-STOP

FILTER IS STAINLESS STEEL CONSTRUCTION, AND SIZED TO FIT INTO STANDARD 2-INCH DEEP HOOD CHANNEL(S).

UNITS SHALL INCLUDE STAINLESS STEEL HANDLES AND A FASTENING DEVICE TO SECURE THE TWO COMPONENTS WHEN ASSEMBLED.

GREASE EXTRACTION EFFICIENCY PERFORMANCE SHALL REMOVE AT LEAST 75% OF GREASE PARTICLES FIVE MICRONS IN SIZE, AND 85% GREASE PARTICLES SEVEN MICRONS IN SIZE AND LARGER, WITH A CORRESPONDING PRESSURE DROP NOT TO EXCEED 1.0 INCHES OF WATER GAUGE.

EFFICIENCY VS. PARTICLE DIAMETER

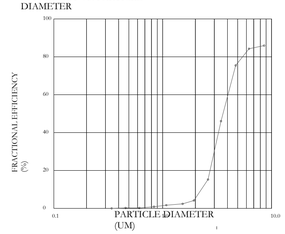

PRESSURE DROP VS. FLOW RATE

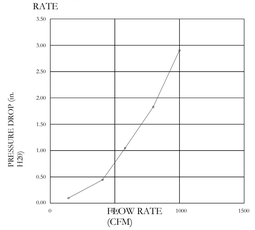

CURB ASSEMBLIES

NO	ON FAN	TAG	R-VALUE	WEIGHT	ITEM	SIZE
1	# 1	KEF-1		36 LBS	CURB	23.000"W X 23.000"L X 20.000"H VENTED HINGED.
2	# 2	KEF-2		36 LBS	CURB	23.000"W X 23.000"L X 20.000"H VENTED HINGED.
3	# 3	KMUA-1	4.3	83 LBS	CURB	41.000"W X 71.000"L X 14.000"H INSULATED.

1" R4.3 FOIL FACED FIBERGLASS INSULATION. COMPLIES WITH UL/ULC,ASTM, & ASHRAE STANDARDS.

§ GREASE DUCT & CHIMNEY SPECIFICATIONS:

PROVIDE GREASE DUCT EQUAL TO K CAPTIVEAIRE SYSTEMS MODEL "DW" ROUND 20 GAUGE 430 STAINLESS STEEL DUCTWORK. KMODEL "DW" IS LISTED TO UL-1978 AND IS INSTALLED USING "V" CLAMP LOCKING CONNECTIONS SEALED WITH 3M FIRE BARRIER 2000 PLUS. MODEL "DW" DOES NOT REQUIRE WELDING PROVIDING IT HAS BEEN INSTALLED PER THE MANUFACTURES INSTALLATION GUIDE.
PROVIDE RATED ACCESS DOORS AT EVERY CHANGE IN DIRECTION AND EVERY 12' ON CENTER.
PER MANUFACTURES LISTING MODEL "DW" HORIZONTAL RUNS LESS THAN 75 FT. CAN BE SLOPED 1/16" PER 12", HORIZONTAL RUNS MORE THAN 75 FT. CAN BE SLOPED 3/16" PER 12".
DUCT SHOULD BE SLOPED AS MUCH AS POSSIBLE TO REDUCE THE CHANCE OF GREASE ACCUMULATION IN HORIZONTAL RUNS.

IF THE DUCT OR CHIMNEY IS WITHIN 18 INCHES OF COMBUSTIBLE MATERIAL, PROVIDE UL-2221 OR UL-103 HT LISTED DOUBLE WALL GREASE DUCT OR DOUBLE WALL CHIMNEY EQUAL TO CAPTIVEAIRE SYSTEMS MODEL "DW- 2R, 2R TYPE HT, 3R, OR 3Z" ROUND 20 GAUGE 430 STAINLESS INNER DUCT INSULATED WITH A 24 GAUGE 430 STAINLESS OUTER SHELL.

RECOMMEND THE USE OF LISTED, PRE-FABRICATED ROUND GREASE EXHAUST DUCT TO REDUCE STATIC PRESSURE IN THE SYSTEM, MINIMIZE INSTALLATION AND INSPECTION TIMES, AND ENSURE DUCT IS LIQUID TIGHT

HVAC DISTRIBUTION NOTE

HIGH VELOCITY DIFFUSERS OR HVAC RETURNS SHOULD NOT BE PLACED WITHIN TEN (10) FEET OF THE EXHAUST HOOD. PERFORATED DIFFUSERS ARE RECOMMENDED.

APPR | DATE | DESCRIPTION | SYM

NAVFAC

NORTH CAROLINA PROFESSIONAL ENGINEER SEAL 035500 LEE W. MERRITT
01-01-20
SEAL

CRENSHAW CONSULTING Engineers
NC LICENSE #C-1168
www.crenshawconsulting.com
3816 Bush Street, Suite 200
Raleigh, North Carolina 27609
919-871-9370 Fax 871-0409

A/E INFO

APPROVED

FOR COMMANDER NAVFAC

ACTIVITY
Approved by Erik A. Lewis,
Infrastructure Engineering Branch Head,
FRCE Cherry Point via Electronic Signature

SATISFACTORY TO

DES	LWM	DRW	MWF	CHK	JDL

PM/DM	L. PEED
BRANCH MANAGER	H. PERRY
CHIEF ENG/ARCH	P. FAULKNER
FIRE PROTECTION	D. CHASTAIN

DEPARTMENT OF THE NAVY
NAVAL FACILITIES ENGINEERING SYSTEMS COMMAND
NAVAL FACILITIES ENGINEERING SYSTEMS COMMAND - MIDATLANTIC
DESIGN AND CONSTRUCTION (DC) CORE
NAVAL STATION - NORFOLK, VA.
MARINE CORPS AIR STATION CHERRY POINT, NC
MCOLF ATLANTIC
BUILDING 7019 RENOVATIONS
MECHANICAL SCHEDULES

SCALE:	AS INDICATED
EPROJECT NO.:	7406712
STA. PROJ. NO.:	7406712
NAVFAC DRAWING NO.	12939541
SHEET	116 OF 148

M-605

DRAWFORM REVISION: 25 AUGUST 2020

NOTES:

1. EMERGENCY NATURAL GAS SHUTOFF. LOCATE IN MECHANICAL BUILDING NEAR EXIT DOOR.
2. UPON ACTIVATION OF EMERGENCY PUSHBUTTON, A SIGNAL MUST BE SENT TO THE FACP AND THE NATURAL GAS SOLENOID VALVE MUST CLOSE. THE SOLENOID VALVE MUST REMAIN CLOSED UNTIL A MANUAL RESET HAS OCCURRED.
3. SHUTOFF SWITCH MUST BE MUSHROOM BUTTON, PULL TO RESET, LABELED "EMERGENCY GAS SHUTOFF".

C1 EMERGENCY GAS SHUTDOWN SWITCH
NTS

PROVIDE WITH CLEAR COVER

NOTES:

1. EMERGENCY AIR DISTRIBUTION SHUTDOWN, LOCATED AT AN EXIT DOOR.
2. UPON ACTIVATION OF EMERGENCY PUSHBUTTONS, ALL AIR HANDING UNITS AND EXHAUST FANS MUST BE DISABLED AND REMAIN OFF UNTIL A MANUAL RESET HAS OCCURRED.
3. UPON ACTIVATION OF THE EMERGENCY PUSHBUTTON, ALL OUTSIDE AND EXHAUST AIR INTAKE DAMPERS MUST CLOSE FULLY.
4. MAINTAINED MUSHROOM BUTTON WITH CLEAR HINGED COVER, PULL TO RESET, LABELED "EMERGENCY HVAC SHUTDOWN".

C2 EMERGENCY HVAC SHUTDOWN SWITCH
NTS

CONTROLS LEGEND

SYMBOL	DESCRIPTION	SYMBOL	DESCRIPTION
AI	DDC ANALOG INPUT POINT W/ ADJUSTABLE PID GAIN CONTROL	BAS	BUILDING AUTOMATION SYSTEM
		KW	KILOWATTS, ELECTRIC HEATER
AO	DDC ANALOG OUTPUT POINT W/ ADJUSTABLE PID GAIN CONTROL	DDC	DIRECT DIGITAL CONTROL
		ATFP	ANTI-TERRORISM / FORCE PROTECTION
BI	DDC BINARY DIGITAL INPUT POINT W/ INDICATING LIGHT ON DDC PANEL	DP	DIFFERENTIAL PRESSURE
BO	DDC BINARY DIGITAL OUTPUT POINT W/ MANUAL OVERRIDE AND INDICATING LIGHT ON DDC PANEL	SP	STATIC PRESSURE SENSOR
AV	DDC ANALOG VALUE	VFD	VARIABLE FREQUENCY DRIVE
BV	DDC BINARY DIGITAL VALUE	CFM	CUBIC FEET PER MINUTE, AIRFLOW MEASURING STATION
	CURRENT SENSOR	F	FREEZESTAT
M	MOTOR, PROPORTIONAL ELECTRIC	TS	THERMOSTAT / HUMIDISTAT
SD	DUCT SMOKE DETECTOR - COORDINATE WITH ELECTRICAL CONTRACTOR FOR POWER SUPPLY	T	TEMPERATURE SENSOR
	MOTORIZED DAMPER	RH	RELATIVE HUMIDITY SENSOR
	FLOW METER		

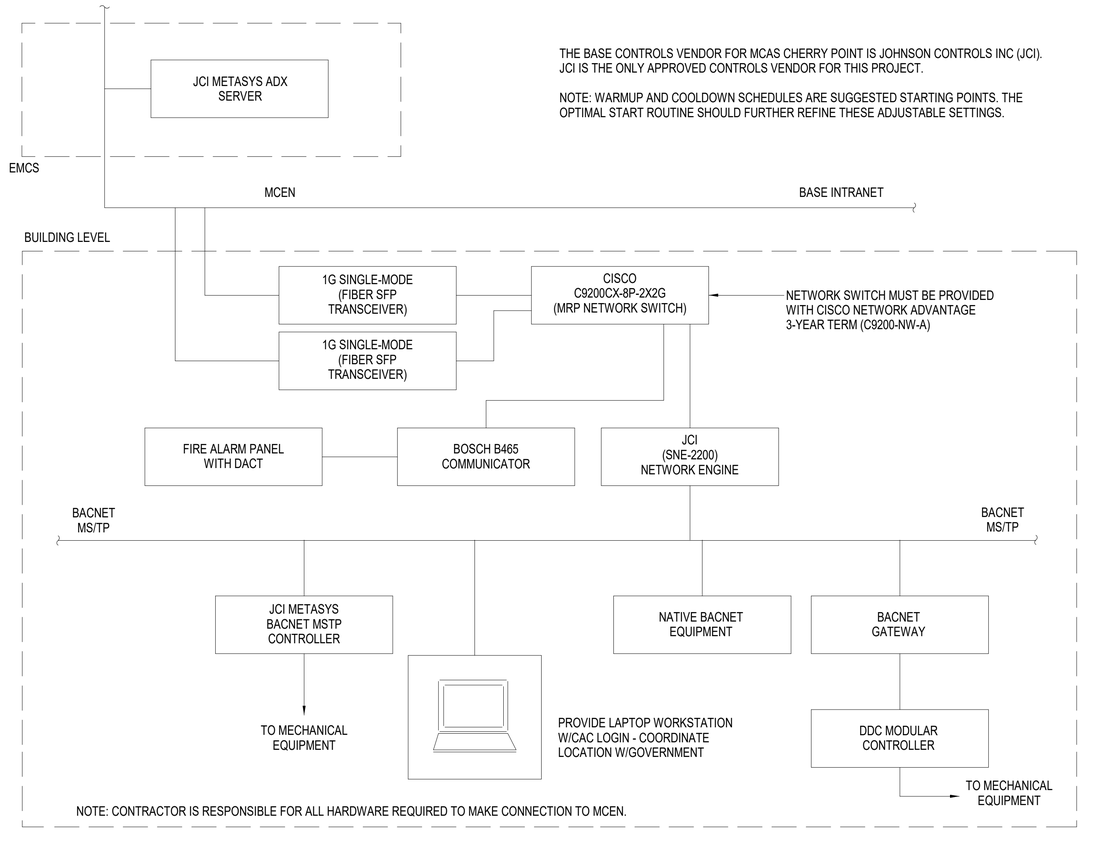

A3 DDC SYSTEM ARCHITECTURE
NTS

THE BASE CONTROLS VENDOR FOR MCAS CHERRY POINT IS JOHNSON CONTROLS INC (JCI). JCI IS THE ONLY APPROVED CONTROLS VENDOR FOR THIS PROJECT.

NOTE: WARMUP AND COOLDOWN SCHEDULES ARE SUGGESTED STARTING POINTS. THE OPTIMAL START ROUTINE SHOULD FURTHER REFINE THESE ADJUSTABLE SETTINGS.

APPR	DATE	DESCRIPTION	SYM

NAVFAC

NORTH CAROLINA PROFESSIONAL SEAL 035500 ENGINEER LUCAS W NEWMAN
01-01-20
SEAL

CRENSHAW CONSULTING Engineers
www.crenshawconsulting.com
NC LICENSE #C-1158
3816 Bush Street, Suite 200
Raleigh, North Carolina 27609
919-871-1070 Fax 871-0409

A/E INFO

APPROVED

FOR COMMANDER NAVFAC

ACTIVITY
Approved by Erik A. Lewis,
Infrastructure Engineering Branch Head,
FRCE Cherry Point via Electronic Signature

SATISFACTORY TO

DES	LWM	DRW	MWF	CHK	JDL

PM/DM	L. PEED
BRANCH MANAGER	H. PERRY
CHIEF ENG/ARCH	P. FAULKNER
FIRE PROTECTION	D. CHASTAIN

DEPARTMENT OF THE NAVY
NAVAL FACILITIES ENGINEERING SYSTEMS COMMAND
DESIGN AND CONSTRUCTION (DC) CORE
MARINE CORPS AIR STATION
NAVAL FACILITIES ENGINEERING SYSTEMS COMMAND ~ MIDATLANTIC
NAVAL STATION - NORFOLK, VA.
CHERRY POINT, NC

MCOLF ATLANTIC
BUILDING 7019 RENOVATIONS

MECHANICAL CONTROLS

SCALE:	AS INDICATED
EPROJECT NO.:	7406712
STA. PROJ. NO.:	7406712
NAVFAC DRAWING NO.	12939542
SHEET	117 OF 148

M-701

DRAWFORM REVISION: 25 AUGUST 2020

SEQUENCE OF OPERATION

HEATING HOT WATER (HHW) SYSTEM (BOILERS B-1,2 AND PUMPS SHWP-1, SHWP-2, PHWP-1,2) SEQUENCE OF OPERATION (SEE HEATING HOT WATER SYSTEM DIAGRAM):
THE FOLLOWING CONTROL SEQUENCE IS PROVIDED FOR THE BUILDING VARIABLE PRIMARY-SECONDARY HOT WATER SYSTEM.

GENERAL: THE HHW SYSTEM CONSISTS OF SEVEN (7) NATURAL GAS, FIRE-TUBE, CONDENSING BOILERS WITH ASSOCIATED CONSTANT SPEED PRIMARY/STANDBY PUMPS, AND TWO (2) 100% REDUNDANT VARIABLE SPEED SECONDARY PUMPS. THE BOILER MASTER MUST CONTROL THE BOILERS AND PRIMARY HHW PUMPS. THE BOILER MASTER MUST INTERFACE WITH THE DDC SYSTEM FOR MONITORING HARDWARE INPUTS, SUPPORT FEATURES, AND STRATEGIES DESCRIBED BELOW. THE BOILER MASTER MUST BE ABLE TO RESET THE HOT WATER LEAVING TEMPERATURE AND IS TO MAINTAIN THE SECONDARY HOT WATER SUPPLY TEMPERATURE. BOILER MANUFACTURER SUPPLY WATER AND OUTDOOR TEMPERATURE SENSORS MUST BE HARDWIRED TO BOILER CONTROL PANEL. THE SECONDARY HHW PUMPS MUST BE CONTROLLED BY THE HHW SYSTEM CONTROLLER.

SCHEDULE: BOILER AND HOT WATER PUMPS MUST BE IN OPERATION YEAR-ROUND AS NEEDED.

THE FOLLOWING SEQUENCE OF OPERATION IS A GUIDELINE FOR SEQUENCING AND CONTROL POINTS REQUIRED FOR OVERALL DESIGN AND DEPENDING UPON BOILER MANUFACTURER, MAY OR MAY NOT BE ALL ENCOMPASSING.

BOILER STAGING: THE BOILER PLANT MUST BE CONFIGURED IN A CASCADE ARRANGEMENT. THE BOILER MASTER MUST PROVIDE INTERNALLY GENERATED STAGING COMMANDS COORDINATED TO MAINTAIN A SUPPLY HOT WATER TEMPERATURE PER THE BOILER TEMPERATURE RESET CURVE. BOILER(S) MUST NOT OPERATE UNTIL SYSTEM FLOW IS PROVEN VIA FLOW SWITCH COMMUNICATION. ALL BOILERS ARE TO BE PROVIDED WITH BACNET COMMUNICATION BOARD AND CONNECTED TO BAS FOR MONITORING PURPOSES ONLY. IN THE EVENT OF LEAD BOILER FAILURE, THE NEXT BOILER IN CASCADE SEQUENCE MUST BE CONFIGURED TO LEAD BOILER AND CONTROL STAGING OF REMAINING BOILERS.

TEMPERATURE RESET CONTROL: THE PLANT HOT WATER SUPPLY TEMPERATURE SETPOINT MUST BE RESET USING TRIM AND RESPOND LOGIC, BASED ON OUTSIDE AIR TEMPERATURE. AS OUTSIDE AIR TEMPERATURE RISES FROM 30°F (ADJ.) TO 60°F (ADJ.), THE HOT WATER SUPPLY TEMPERATURE SETPOINT SHALL BE RESET LINEARLY FROM 140°F (ADJ.) TO 120°F (ADJ.) . PROVIDE ADDITIONAL RESET OPTIONS BASED ON BUILDING ZONE DEMANDS OR FIXED USER DEFINED SETPOINT.

PRIMARY PUMPS: PROVIDE HOT WATER PUMPS WITH CONSTANT SPEED CONTROLLERS. EACH BOILER MUST BE PROVIDED WITH A PRIMARY PUMP CONTROLLED BY THE BOILERS STAND-ALONE CONTROLLER. BOILER PUMPS MUST BE CONTROLLED TO MAINTAIN A CONSTANT WATER FLOW OF 30 GPM (ADJ.) THROUGH BOILERS.

SECONDARY PUMPS: PROVIDE HOT WATER PUMPS WITH VARIABLE FREQUENCY DRIVE (VFD) CONTROLLERS. VFD CONTROLLERS MUST PROVIDE PUMPS WITH SOFT-START AND VARIABLE SPEED OPERATION. REDUNDANT PUMPS SHWP-1/SHWP-2 MUST OPERATE ON A LEAD/STANDBY SEQUENCE BASED ON A TWO WEEK ROTATION (PUMPS MUST BE SCHEDULED TO ROTATE ON THE 1ST AND 15TH OF EACH MONTH TO PROMOTE EVEN WEAR/USAGE). IN THE "REMOTE" SETTING, THE PUMPS MUST BE CONTROLLED BY THE DDC CONTROLLER. IN THE "KEYPAD" POSITION, THE PUMPS MUST RUN AND PUMP SPEED WILL BE CONTROLLED THROUGH A MANUAL SPEED ADJUSTMENT INTEGRAL TO THE VFD. EACH PUMP MOTOR MUST BE INDIVIDUALLY WIRED TO ITS PRIMARY VFD. THE FOLLOWING VARIABLE SPEED LIMIT MUST BE INCORPORATED: (A) PUMP FLOW CONTROL MUST BE LIMITED TO THE VFD MANUFACTURERS RECOMMENDED OPERATING RANGE. IF THE LEAD PUMP FAILS TO START, THE STANDBY PUMP MUST BECOME THE LEAD PUMP.

SECONDARY PUMP CAPACITY CONTROL:

1. GENERAL: THE PUMP SPEED MUST BE MODULATED TO MAINTAIN THE DIFFERENTIAL PRESSURE SETPOINT.
2. PUMP SPEED CONTROL VIA DIFFERENTIAL PRESSURE CONTROL: THE CONTROLLER MUST MEASURE REMOTE CIRCUIT DIFFERENTIAL PRESSURE AND CALCULATE THE CIRCUIT ROLLING AVERAGE DIFFERENTIAL PRESSURE AND MODULATE THE PUMP VFD SPEED TO MAINTAIN AN OPTIMIZED DIFFERENTIAL PRESSURE SETPOINT.
   A. THE INITIAL DIFFERENTIAL PRESSURE SETPOINT MUST BE 10 PSIG (ADJ. AS FIELD CONDITIONS PERMIT.)
   B. VFD SPEED OUTPUT MUST BE MAPPED FROM MINIMUM SPEED AT 0% TO MAXIMUM PUMP SPEED AT 100%

HHW START-UP: SYSTEM START-UP MUST BE INITIATED BY THE DDC SYSTEM. THE LEAD PUMP MUST SOFT-START AND THE ASSOCIATED VFD CONTROLLER MUST VARY THE PUMP SPEED AS SET BY THE DDC SYSTEM. THE BOILER MASTER MUST START THE BOILERS AS DESCRIBED IN THE BOILER STAGING SECTION.

HHW SHUTDOWN: SYSTEM SHUTDOWN MUST BE INITIATED BY THE DDC SYSTEM OR EMERGENCY GAS SHUTOFF SWITCH. THE BOILERS MUST SHUTDOWN FIRST AND THEN THE LEAD PUMP MUST BE SET TO MINIMUM FLOW AND THEN DE-ENERGIZED.

FREEZE PROTECTION: THE BOILER HHW SYSTEM MUST ALSO RUN WHENEVER THE OUTSIDE AIR TEMPERATURE IS LESS THAN 38°F (ADJ).

SENSORS: SENSORS MUST BE PROVIDED AS REQUIRED BY THIS SEQUENCE OF OPERATION, THE CONTROL DIAGRAM, AND THE ASSOCIATED POINTS LIST.

SAFETY SHUTDOWN AND ALARMS: ALL ALARMS MUST BE DISPLAYED AND REQUIRE MANUAL RESET AT THE LOCAL DDC PANEL.

1. EMERGENCY SHUTDOWN: IF THE EMERGENCY GAS SHUTOFF SIGNAL IS RECEIVED, THE HHW SYSTEM MUST SHUTDOWN USING A SOFTWARE COMMAND AND AN ALARM MUST BE SENT TO THE DDC SYSTEM.
2. HIGH/LOW HHW SUPPLY TEMPERATURE ALARM: HWS TEMPERATURE SENSOR MUST BE INSTALLED AFTER THE BOILERS AND IN A LOCATION TO PROVIDE AN ACCURATE SUPPLY WATER TEMPERATURE. IF THE HWS TEMPERATURE IS NOT WITHIN +/- 10°F OF SETPOINT FOR 5 MINUTES (ADJ.) OR LONGER, AN ALARM MUST BE SENT TO THE DDC SYSTEM. IF THE HWS TEMPERATURE IS GREATER THAN 150°F (ADJ.) FOR 5 MINUTES (ADJ.) OR LONGER, THE BOILERS MUST BE DE-ENERGIZED AND REQUIRE MANUAL RESET.
3. BOILER CIRCULATION PUMPS (PHWP-1,2): IF ANY OF THE FOLLOWING OCCUR, AN ALARM MUST BE SENT TO THE DDC SYSTEM.
   A. CIRCULATION PUMP FAILURE: COMMANDED ON, BUT THE STATUS IS OFF.
   B. CIRCULATION PUMP RUNNING IN HAND: COMMANDED OFF, BUT THE STATUS IS ON.
   C. CIRCULATION PUMP RUNTIME EXCEEDED: STATUS RUNTIME EXCEEDS A USER-DEFINED (ADJ) LIMIT.
5. HOT WATER DISTRIBUTION PUMPS (SHWP-1,2): IF ANY OF THE FOLLOWING OCCUR, AN ALARM MUST BE SENT TO THE DDC SYSTEM.
   A. SECONDARY PUMP FAILURE: COMMANDED ON, BUT THE STATUS IS OFF.
   B. SECONDARY PUMP RUNNING IN HAND: COMMANDED OFF, BUT THE STATUS IS ON.
   C. SECONDARY PUMP RUNTIME EXCEEDED: STATUS RUNTIME EXCEEDS A USER-DEFINED (ADJ) LIMIT.
6. BOILERS (B-1,2): IF ANY OF THE FOLLOWING OCCUR, AN ALARM MUST BE SENT TO THE DDC SYSTEM.
   A. BOILER FAILURE: COMMANDED ON, BUT THE STATUS IS OFF.
   B. BOILER RUNNING IN HAND: COMMANDED OFF, BUT THE STATUS IS ON.
   C. BOILER RUNTIME EXCEEDED: STATUS RUNTIME EXCEEDS A USER-DEFINED (ADJ) LIMIT.
   D. LEAD BOILER FAILURE: THE LEAD BOILER IS IN FAILURE AND FIRST LAG BOILER HAS BEEN DESIGNATED LEAD.

HOT WATER SYSTEM POINTS LIST

POINT NAME	HARDWARE				SOFTWARE				ALARM SETPOINT	SHOW ON GRAPHICS
	AI	AO	BI	BO	AV	BV	TREND	ALARM		
B-1,2*: ENABLE				●			●			●
B-1,2*: STATUS			●				●	●	PUMP OFF	●
B-1,2*: ALARM			●				●	●		●
B-1,2*: HW TEMP RESET	●						●			●
B-1,2*: BOILER SUPPLY TEMP	●						●			●
B-1,2*: BOILER SUPPLY TEMP SET.					●		●			●
B-1,2*: FLOW SWITCH			●				●			●
PHWP-1,2*: BOILER PUMP STATUS			●				●	●	PUMP OFF	●
SHWP-1: START/STOP				●			●			●
SHWP-1: STATUS			●				●	●	PUMP OFF	●
SHWP-1: VFD FAULTS			●				●	●		●
SHWP-1: SPEED SETPOINT					●		●			●
SHWP-1: BACNET						●	●			●
SHWP-1: PRESSURE DIFFERENTIAL	●						●			●
SHWP-2: START/STOP				●			●			●
SHWP-2: STATUS			●				●	●	PUMP OFF	●
SHWP-2: VFD FAULTS			●				●	●		●
SHWP-2: SPEED SETPOINT					●		●			●
SHWP-2: BACNET						●	●			●
SHWP-2: PRESSURE DIFFERENTIAL	●						●			●
SECONDARY CIRCUIT FLOWRATE	●						●			●
SECONDARY CIRCUIT FLOWRATE AVG.					●		●			●
SECONDARY CIRCUIT SUPPLY TEMP.	●						●			●
SECONDARY CIRCUIT RETURN TEMP.	●						●			●
PRIMARY COMMON SUPPLY TEMP.	●						●			●
PRIMARY COMMON RETURN TEMP.	●						●			●
SECONDARY CIRCUIT DP	●						●			●
SECONDARY CIRCUIT DP SETPOINT					●		●			●
SECONDARY CIRCUIT DP AVG.					●		●			●
OUTSIDE AIR TEMPERATURE	●						●			●
EMERGENCY GAS SHUTOFF				●			●	●		●

* CONTROL POINTS SHOWN MUST BE PROVIDED FOR EACH BOILER AND ASSOCIATED PRIMARY HOT WATER PUMP.

A1 HOT WATER SYSTEM CONTROL DETAIL
NTS

SYM	DESCRIPTION	DATE	APPR

NAVFAC

SEAL

CRENSHAW CONSULTING engineers
NC LICENSE #C-1156
www.crenshawconsulting.com
3516 Bush Street, Suite 200
Raleigh, North Carolina 27609
919-871-1070 Fax 871-5620
A/E INFO

APPROVED

FOR COMMANDER NAVFAC

ACTIVITY
Approved by Erik A. Lewis, Infrastructure Engineering Branch Head, FRCE Cherry Point via Electronic Signature

SATISFACTORY TO

DES LWM DRW MWF CHK JDL	
PM/DM	L. PEED
BRANCH MANAGER	H. PERRY
CHIEF ENG/ARCH	P. FAULKNER
FIRE PROTECTION	D. CHASTAIN

DEPARTMENT OF THE NAVY
NAVAL FACILITIES ENGINEERING SYSTEMS COMMAND
NAVAL FACILITIES ENGINEERING SYSTEMS COMMAND ~ MIDATLANTIC
DESIGN AND CONSTRUCTION (DC) CORE
NAVAL STATION - NORFOLK, VA
MARINE CORPS AIR STATION
CHERRY POINT, NC

MCOLF ATLANTIC
BUILDING 7019 RENOVATIONS

MECHANICAL CONTROLS

SCALE:	AS INDICATED
EPROJECT NO.:	7406712
STA. PROJ. NO.:	7406712
NAVFAC DRAWING NO.	12939543
SHEET	118 OF 148

M-702

DRAWFORM REVISION: 25 AUGUST 2020

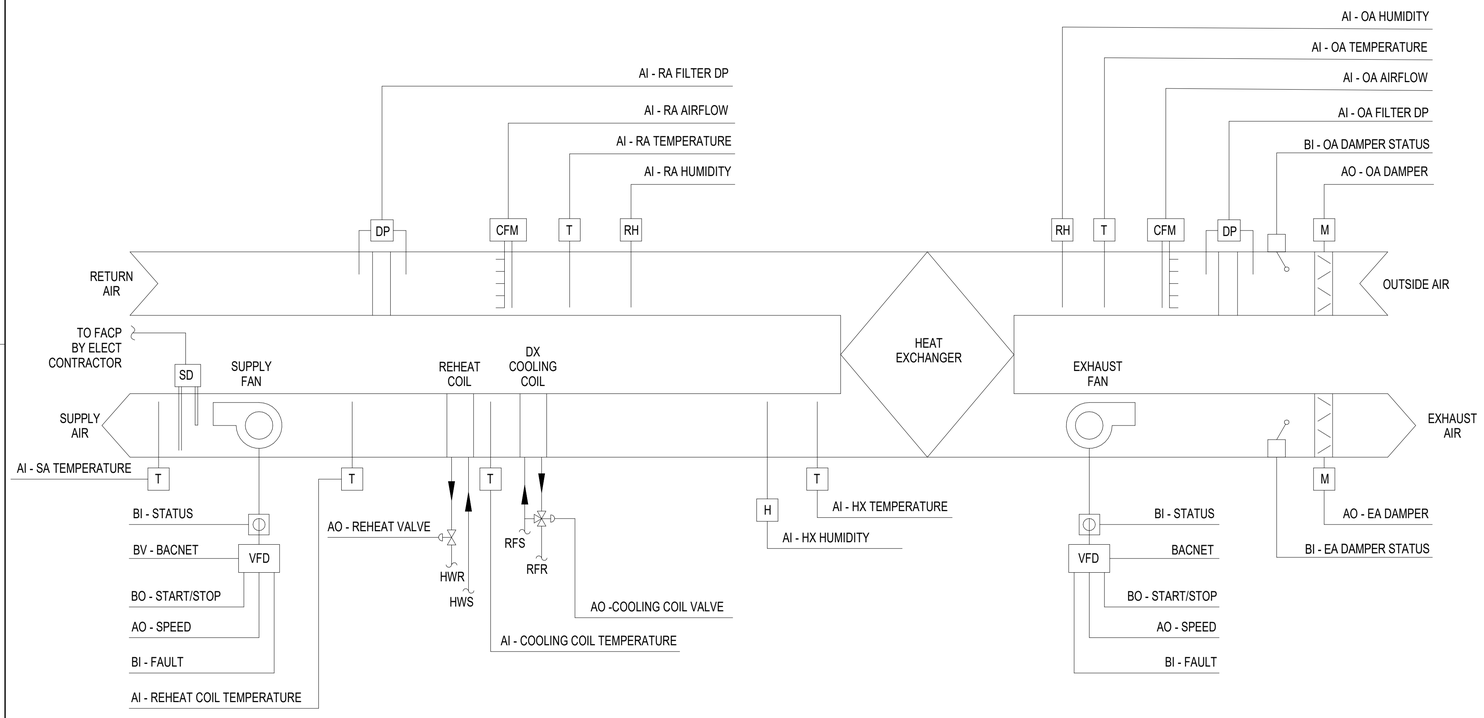

NOTE:

1. HARDWIRE OUTDOOR AND EXHAUST AIR DAMPER STATUS WITH THE DOAS SAFEFTY CIRCUIT TO PREVENT THE SUPPLY AND EXHAUST FANS FROM RUNNING WHILE THE DAMPERS ARE NOT PROVEN IN THE OPEN POSITION.
2. SEE CONTROL VALVE SCHEDULE FOR 2-WAY AND 3-WAY VALVE REQUIREMENTS.

DEDICATED OUTSIDE AIR SYSTEM POINTS LIST

POINT NAME	HARDWARE				SOFTWARE				FAILURE MODE / ALARM SETPOINT	SHOW ON GRAPHICS
	AI	AO	BI	BO	AV	BV	TREND	ALARM		
OUTSIDE AIR DAMPER		●					●	●		●
OUTSIDE AIR DAMPER STATUS			●				●	●		●
OUTSIDE AIR FILTER DP	●						●			●
OUTSIDE AIR AIRFLOW	●						●			●
OUTSIDE AIR TEMPERATURE	●						●			●
OUTSIDE AIR RELATIVE HUMIDITY	●						●			●
HEAT EXCHANGER LEAVING HUMIDITY	●						●			●
HEAT EXCHANGER LEAVING TEMPERATURE	●						●			●
DX COOLING COIL VALVE		●					●			●
DX COOLING COIL LAT	●						●			●
REHEAT COIL VALVE		●					●			●
REHEAT COIL LAT	●						●			●
SUPPLY FAN START/STOP				●			●			●
SUPPLY FAN STATUS			●				●	●	FAN OFF	●
SUPPLY FAN VFD FAULTS			●				●	●	FAN OFF	●
SUPPLY FAN SPEED SETPOINT		●					●			●
SUPPLY FAN BACNET						●	●			●
RETURN AIR FILTER DP	●						●			●
RETURN AIR AIRFLOW	●						●			●
RETURN AIR TEMPERATURE	●						●			●
RETURN AIR RELATIVE HUMIDITY	●						●			●
EXHAUST FAN START/STOP				●			●			●
EXHAUST FAN STATUS			●				●	●	FAN OFF	●
EXHAUST FAN VFD FAULTS			●				●	●	FAN OFF	●
EXHAUST FAN SPEED SETPOINT		●					●			●
EXHAUST FAN BACNET						●	●			●
EXHAUST AIR DAMPER		●					●	●		●
EXHAUST AIR DAMPER STATUS			●				●	●		●
DUCT SMOKE DETECTOR			●				●	●		●

SEQUENCE OF OPERATION

DEDICATED OUTSIDE AIR SYSTEM CONTROL (DOAS-1,2,3,4,5,6)

GENERAL:
THE DOAS WILL HAVE CHILLED WATER COOLING COIL, PREHEAT AND REHEAT HOT WATER HEATING COILS. THE DOAS WILL HAVE CONSTANT-VOLUME EXHAUST AIR AND CONSTANT VOLUME SUPPLY AIR EQUIPPED WITH A DIRECT DRIVE FAN MOTOR WITH A VFD FOR BOTH FANS. THE DOAS WILL UTILIZE A FIXED PLATE & FRAME HEAT EXCHANGER CAPABLE OF TOTAL ENTHALPY RECOVERY.

THE OCCUPANCY SCHEDULE AS INDICATED BY THE SEQUENCE OF OPERATIONS MUST BE DEFINED AS 0600 TO 1800 MONDAY THROUGH FRIDAY FOR OCCUPIED HOURS OR AS REQUESTED BY OWNER. UNOCCUPIED HOURS MUST BE 1800 TO 0600 MONDAY THROUGH FRIDAY AND 0000 TO 0000 SATURDAY AND SUNDAY. OCCUPANCY SCHEDULE MUST BE ADJUSTABLE THROUGH THE BAS.

START-UP MODE:

UPON STARTUP, THE OUTSIDE AIR AND EXHAUST DAMPERS ARE COMMANDED OPENED AND UPON PROOF OF DAMPERS OPEN POSITION, THE SUPPLY AND EXHAUST FAN WILL BE COMMANDED TO RUN.
OCCUPIED MODE:

DURING OCCUPIED MODE, THE DOAS MUST RUN CONTINUOUSLY.

FAN CONTROL:

DURING OPERATION, THE DOAS DDC MUST CONTINUOUSLY MONITOR THE EXHAUST AND OUTSIDE AIR FLOW RATE (CFM) AND THE DOAS DDC MUST SIGNAL THE EXHAUST AND SUPPLY FANS TO ADJUST SPEED TO MAINTAIN CONSTANT EXHAUST AND SUPPLY AIR FLOW RATES PER THE SCHEDULED RATES. PROVIDE AFMS WITH ALL REQUIRED STRAIGHT DUCT LENGTHS PER INSTALLATION INSTRUCTIONS.

TEMPERATURE CONTROL:

THE DOAS DDC MUST MONITOR THE SUPPLY AIR DISCHARGE TEMPERATURE AND MODULATE THE PREHEAT, COOLING AND REHEAT COIL VALVES TO MAINTAIN THE REQUIRED SETPOINT.

A. COOLING COIL MUST BE ENABLED TO MAINTAIN COOLING SETPOINT OF 55° (ADJ) AS FOLLOWS:
- SUPPLY FAN STATUS IS ON.
- OUTSIDE AIR TEMPERATURE IS GREATER THAN 55°F (ADJ).

B. REHEAT COIL MUST BE ENABLED TO MAINTAIN A UNIT DISCHARGE AIR TEMPERATURE SETPOINT AS FOLLOWS:
- IF SUPPLY FAN STATUS IS ON AND COOLING COIL VALVE IS OPEN, SETPOINT SHALL BE 76°F (ADJ.)
- IF SUPPLY FAN STATUS IS ON AND OA TEMPERATURE IS BELOW 55°F (ADJ), SETPOINT SHALL BE 68°F (ADJ.)

EMERGENCY MODE:
ATFP EMERGENCY ACTUATION: IF THE HVAC ATFP SHUTDOWN SIGNAL IS RECEIVED, THE DOAS DDC SHALL IMMEDIATELY DE-ENERGIZE BOTH FANS AND ALL DAMPERS SHALL CLOSE.

ATFP SHUTDOWN SHALL BE ACCOMPLISHED BY BOTH A HARDWIRED SHUTDOWN WIRED IN SERIES WITH OTHER SAFETIES AND AN DOAS DDC SHUTDOWN REQUIRING A MANUAL RESET.

SAFETY SHUTDOWN AND ALARMS: ALL ALARMS IN THE POINTS SCHEDULE SHALL BE SENT TO THE DOAS DDC SYSTEM AND AT THE SBC IF AN ALARM CONDITION OCCURS.

FIRE ALARM SHUTDOWN: IF THE BUILDING FIRE ALARM CONTROL PANEL SIGNALS AN ALARM, ALL FANS SHALL DE-ENERGIZE AND BOTH DAMPERS SHALL CLOSE.

SMOKE DETECTION SHUTDOWN/ALARM: UPON A SUPPLY AIR SMOKE DETECTOR ACTIVATION, THE DOAS SHUTDOWN SHALL BE ACCOMPLISHED VIA HARDWIRE INTERLOCK AND AN DOAS DDC COMMAND. WHEN THE SENSOR SENSES SMOKE, THE FANS SHALL BE DE-ENERGIZED, BOTH DAMPERS CLOSED AND AN ALARM SHALL BE SENT TO THE BEQ SBC AND BUILDING FIRE ALARM CONTROL PANEL. MANUAL RESET OF SMOKE DETECTOR IS REQUIRED.

OUTSIDE AIR DAMPER AND EXHAUST AIR DAMPER FAILURE: IF THE EITHER DAMPER IS COMMANDED OPEN BUT THE STATUS IS CLOSED, THE DOAS DDC SHALL SIGNAL AN ALARM AT THE BEQ SBC.

SUPPLY AND EXHAUST FAN FAILURE ALARMS: IF ANY OF THE FOLLOWING OCCUR, THE DOAS DDC SHALL SIGNAL AN ALARM AT THE BEQ SBC. SUPPLY/EXHAUST FAN COMMAND IS ON AND STATUS IS OFF SUPPLY/EXHAUST FAN VFD FAULT

FILTER DIFFERENTIAL PRESSURE: IF ANY OF THE FOLLOWING OCCUR, AN ALARM MUST BE SENT TO THE DDC SYSTEM. FILTER CHANGE REQUIRED: FILTER DIFFERENTIAL PRESSURE EXCEEDS A USER DEFINED LIMIT (ADJ).

A1 DEDICATED OUTSIDE AIR SYSTEM CONTROL DETAIL
NTS

APPR	DATE	DESCRIPTION	SYM

NAVFAC

NORTH CAROLINA PROFESSIONAL SEAL 035500 ENGINEER WILLIAM L. MERRITT 07-01-20
SEAL

CRENSHAW CONSULTING Engineers
NC LICENSE #C-1158
www.crenshawconsulting.com
3916 Bush Street, Suite 200
Raleigh, North Carolina 27609
919-571-1070 Fax 571-0409

A/E INFO

APPROVED

FOR COMMANDER NAVFAC

ACTIVITY
Approved by Erik A. Lewis,
Infrastructure Engineering Branch Head,
FRCE Cherry Point via Electronic Signature

SATISFACTORY TO

DES	LWM	DRW	MWF	CHK	JDL

PM/DM L. PEED
BRANCH MANAGER H. PERRY
CHIEF ENG/ARCH P. FAULKNER
FIRE PROTECTION D. CHASTAIN

DEPARTMENT OF THE NAVY
NAVAL FACILITIES ENGINEERING SYSTEMS COMMAND
DESIGN AND CONSTRUCTION (DC) CORE
MARINE CORPS AIR STATION
NAVAL FACILITIES ENGINEERING SYSTEMS COMMAND ~ MIDATLANTIC
NAVAL STATION - NORFOLK, VA
CHERRY POINT, NC

MCOLF ATLANTIC
BUILDING 7019 RENOVATIONS

MECHANICAL CONTROLS

SCALE:	AS INDICATED
EPROJECT NO.:	7406712
STA. PROJ. NO.:	7406712
NAVFAC DRAWING NO.	12939544
SHEET	119 OF 148

M-703

DRAWFORM REVISION: 25 AUGUST 2020

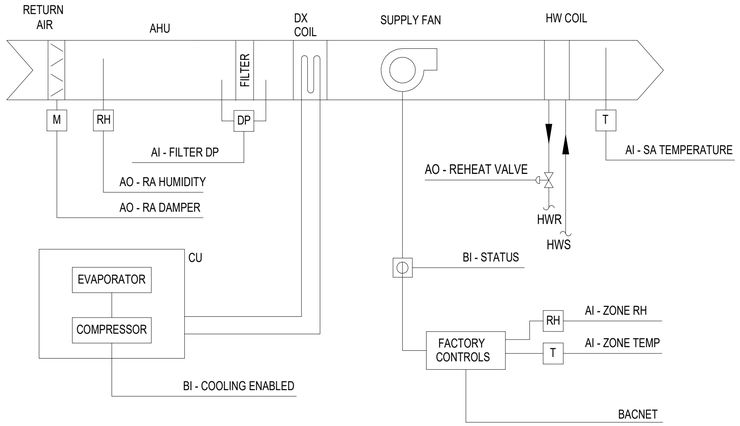

AHU POINTS LIST

POINT NAME	HARDWARE				SOFTWARE				FAILURE MODE / ALARM SETPOINT	SHOW ON GRAPHICS
	AI	AO	BI	BO	AV	BV	TREND	ALARM		
SUPPLY AIR TEMPERATURE	●						●		> 3 DEG FROM SETPOINT	●
SUPPLY FAN STATUS			●				●			●
RETURN AIR RELATIVE HUMIDITY	●						●			●
FILTER DP	●						●	●		●
ZONE TEMP	●						●		> 3 DEG FROM SETPOINT	●
ZONE RELATIVE HUMIDITY	●						●		> 3 DEG FROM SETPOINT	●
COOLING SETPOINT					●		●			●
HEATING SETPOINT					●		●			●
COOLING ENABLE			●				●			●
HW REHEAT COIL VALVE		●					●			●
HIGH ZONE TEMP								●		●
LOW ZONE TEMP								●		●

SEQUENCE OF OPERATION

SPLIT SYSTEM (AHU-1,2,3):
THE OCCUPANCY SCHEDULE AS INDICATED BY THE SEQUENCE OF OPERATIONS MUST BE DEFINED AS 6AM TO 6PM MONDAY THROUGH FRIDAY FOR OCCUPIED HOURS OR AS REQUESTED BY THE OWNER. UNOCCUPIED HOURS MUST BE 6PM TO 6AM MONDAY THROUGH FRIDAY AND 12AM TO 12AM SATURDAY AND SUNDAY. THE OCCUPANCY SCHEDULE/MODE WILL BE CONTROLLED VIA A NETWORK INPUT. THE OCCUPANCY MODE CAN ALSO BE OVERRIDDEN BY A NETWORK INPUT.

THE SPLIT SYSTEM AIR HANDLER MUST BE PROVIDED WITH ITS OWN INTERNAL CONTROLLER AND ALL REQUIRED SENSORS FOR FULL UNIT CONTROL. THE INTERNAL CONTROLLER MUST PROVIDE FULL 2-WAY COMMUNICATION TO THE BUILDING BAS THROUGH A BACNET MS/TP INTERFACE.

RUN CONDITIONS: THE FAN MUST RUN ANYTIME THE UNIT IS COMMANDED TO RUN UNLESS SHUTDOWN ON SAFETIES. THE UNIT WILL RUN WITH AUTOMATIC SWITCHOVER BETWEEN HEATING AND COOLING MODES TO MAINTAIN THE FOLLOWING:

OCCUPIED MODE:
- COOLING SETPOINT: 76° F (ADJ)
- HEATING SETPOINT: 70° F (ADJ)

UNOCCUPIED MODE:
- COOLING SETPOINT: 85° F (ADJ)
- HEATING SETPOINT: 65° F (ADJ)

UNOCCUPIED MODE: THE UNIT WILL CYCLE TO MAINTAIN UNOCCUPIED ZONE SETPOINTS DURING UNOCCUPIED PERIODS.

DEHUMIDIFICATION MODE: IF A SPACE HUMIDISTAT INDICATES A HUMIDITY LEVEL OF 60% OR HIGHER, THE UNIT SHALL ENTER DEHUMIDIFICATION MODE AND SUPPLY FAN WILL BE ENGAGED, SETTING THE SUPPLY AIR TEMPERATURE TO 55° F AND THE HOT WATER COIL VALVE WILL MODULATE TO MAINTAIN SPACE TEMPERATURE. DISENGAGE DEHUMIDIFICATION MODE WHEN THE SPACE HUMIDITY SENSOR ARE AT 55% RH OR LESS.

SAFETY SHUTDOWN AND ALARMS: ALL ALARMS MUST BE DISPLAYED AND REQUIRE MANUAL RESET AT THE LOCAL DDC PANEL.
1. EMERGENCY / ATFP SHUTDOWN: IF THE HVAC EMERGENCY SHUTDOWN SIGNAL IS RECEIVED, THE HVAC SYSTEM MUST SHUTDOWN WITHIN 30 SECONDS USING A SOFTWARE COMMAND AND AN ALARM MUST BE SENT TO THE DDC SYSTEM. DAMPERS LEADING TO THE OUTSIDE MUST CLOSE WITHIN 30 SECONDS REGARDLESS OF HAND/OFF/AUTO (HOA) POSITION OF EQUIPMENT.
2. ZONE TEMPERATURE: ALARMS TO BE PROVIDED FOR THE FOLLOWING:
   A. HIGH ZONE TEMPERATURE: IF THE ZONE TEMPERATURE IS GREATER THAN THE COOLING SETPOINT BY A USER DEFINABLE AMOUNT. (ADJ).
   B. LOW ZONE TEMPERATURE: IF THE ZONE TEMPERATURE IS LESS THAN THE HEATING SETPOINT BY A USER DEFINABLE AMOUNT. (ADJ).

A1 AHU CONTROL DETAIL
NTS

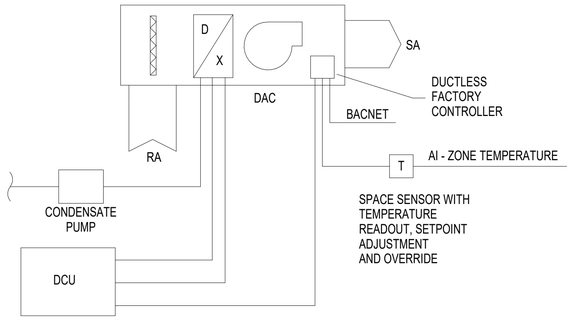

SEQUENCE OF OPERATION

DAC/ DCU:

NORMAL MODE (DAC):
THE UNIT IS TO OPERATE ON ITS OWN INTERNAL FACTORY CONTROLS AND WILL RUN TO MAINTAIN ROOM STAT SETPOINT 68°F (ADJ).

SETPOINT ADJUST:
THE OCCUPANT MUST BE ABLE TO ADJUST THE UNIT TEMPERATURE HEATING AND COOLING SETPOINTS AT THE UNIT THERMOSTAT.

MONITORING:
THE FACTORY CONTROLLER MUST REPORT THE FOLLOWING TO THE BAS:
- ZONE TEMPERAURE
- ZONE SETPOINT ADJUST
- COOLING ENABLE
- HEATING ENABLE

ALARMS ARE TO BE PROVIDED AS FOLLOWS:
- HIGH ZONE TEMP (DAC-1): IF THE ZONE TEMPERATURE IS GREATER THAN THE COOLING SETPOINT BY A USER DEFINED AMOUNT (ADJ).
- CONDENSATE ALARM: IF THE CONDENSATE OVERFLOR SENSOR CONNECTED TO CONDENSATE PUMP SIGNALS A FAULT. UPON ALARM, DUCTLESS SPLIT SYSTEM MUST SHUTDOWN.

DAC UNIT POINTS LIST

POINT NAME	HARDWARE				SOFTWARE				SHOW ON GRAPHICS
	AI	AO	BI	BO	AV	BV	TREND	ALARM	
ZONE HIGH TEMP ALARM	●						●	●	
ZONE SETPOINT ADJUST	●						●		●
ZONE TEMP	●						●		●
COOLING ENABLE			●				●		●
CONDENSATE ALARM	●						●	●	
DUCTLESS SPLIT BACNET						●	●		●

A2 DUCTLESS SPLIT UNIT CONTROL DETAIL
NTS

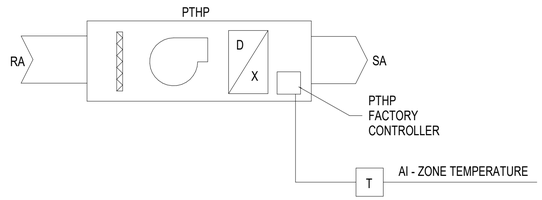

SEQUENCE OF OPERATION

PACKAGED TERMINAL AIR CONDITIONER (PTHP) SEQUENCE OF OPERATION (TYPICAL ALL PTHP'S):

NORMAL MODES:
COOLING MODE: IF THE ROOM STAT CALLS FOR COOLING, THE PTHP DDC SHALL ACTIVATE COOLING MODE TO MAINTAIN ROOM STAT SETPOINT 76°F (ADJ.) +/- 2°F.

HEATING MODE: IF THE ROOM STAT CALLS FOR HEATING, THE PTHP DDC SHALL ACTIVATE HEATING MODE TO MAINTAIN ROOM STAT SETPOINT 70°F (ADJ.) +/- 2°F.

OVERRIDE MODES:
UNOCCUPIED MODE: UNOCCUPIED MODE SHALL BE AVAILABLE AS AN OVERRIDE AT THE BEQ B-BC ONLY. UPON ENTERING BUILDING UNOCCUPIED MODE, THE ROOM STAT SHALL COMMAND THE PTHP DDC TO STOP THE PTHP FAN, THE ROOM STAT SHALL CONTINUE TO MONITOR SPACE TEMPERATURE AND PROVIDE CONTROL SIGNALS TO THE PTHP.

FIRE ALARM SHUTSOWN: IF THE BUILDING FIRE ALARM CONTROL PANEL SIGNALS AN ALARM, THE FAN SHALL BE DE-ENERGIZED, AND THE PTHP DDC SHALL SIGNAL AN ALARM AT THE DDC SYSTEM.

PTHP POINTS LIST

POINT NAME	HARDWARE				SOFTWARE				SHOW ON GRAPHICS
	AI	AO	BI	BO	AV	BV	TREND	ALARM	
ZONE HIGH TEMP ALARM	●						●	●	
ZONE SETPOINT ADJUST	●						●		●
ZONE TEMP	●						●		●

A4 PTHP UNIT CONTROL DETAIL
NTS

APPR	
DATE	
DESCRIPTION	
SYM	

NAVFAC

NORTH CAROLINA PROFESSIONAL SEAL 035500 ENGINEER LEVI W. MERRITT
01-01-20
SEAL

CRENSHAW CONSULTING Engineers
www.crenshawconsulting.com
RC LICENSE #C-1168
3816 Bush Street, Suite 200
Raleigh, North Carolina 27609
919-571-1570 Fax 571-0409

A/E INFO

APPROVED

FOR COMMANDER NAVFAC

ACTIVITY
Approved by Erik A. Lewis,
Infrastructure Engineering Branch Head,
FRCE Cherry Point via Electronic Signature

SATISFACTORY TO

DES	LWM	DRW	MWF	CHK	JDL
PM/DM			L. PEED		
BRANCH MANAGER			H. PERRY		
CHIEF ENG/ARCH			P. FAULKNER		
FIRE PROTECTION			D. CHASTAIN		

DEPARTMENT OF THE NAVY
NAVAL FACILITIES ENGINEERING SYSTEMS COMMAND
DESIGN AND CONSTRUCTION (DC) CORE
MARINE CORPS AIR STATION

NAVAL FACILITIES ENGINEERING SYSTEMS COMMAND ~ MIDATLANTIC
NAVAL STATION - NORFOLK, VA.

CHERRY POINT, NC

MCOLF ATLANTIC
BUILDING 7019 RENOVATIONS

MECHANICAL CONTROLS

SCALE:	AS INDICATED
EPROJECT NO.:	7406712
STA. PROJ. NO.:	7406712
NAVFAC DRAWING NO.	12939545
SHEET	120 OF 148

M-704

DRAWFORM REVISION: 25 AUGUST 2020

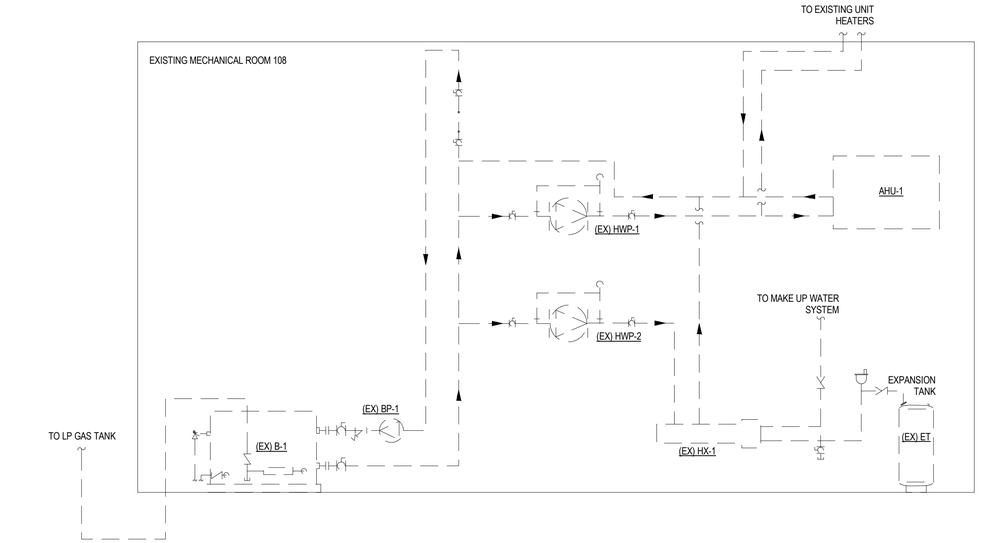

C3 EXISTING AND DEMO PIPING SYSTEM DIAGRAM
NTS

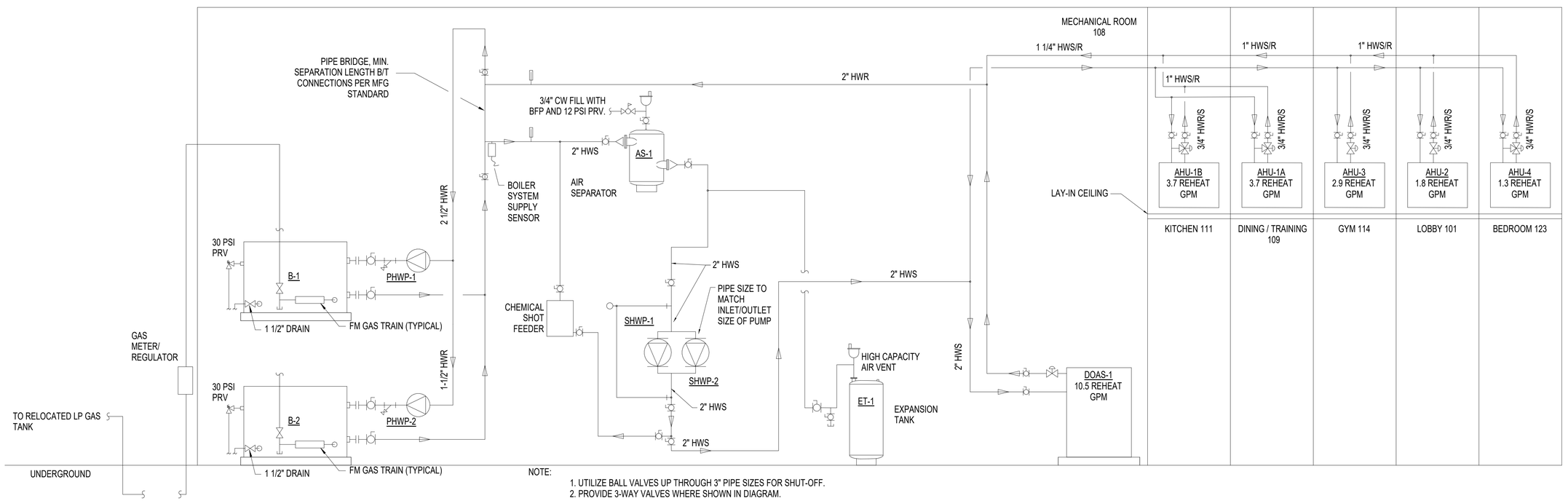

NOTE:
1. UTILIZE BALL VALVES UP THROUGH 3" PIPE SIZES FOR SHUT-OFF.
2. PROVIDE 3-WAY VALVES WHERE SHOWN IN DIAGRAM.

A1 HOT WATER PIPING SYSTEM DIAGRAM
NTS

SYM	DESCRIPTION	DATE	APPR

NAVFAC

NORTH CAROLINA PROFESSIONAL SEAL 055500 ENGINEER LUCAS W. MERANDA
07-01-20
SEAL

CRENSHAW CONSULTING engineers
NC LICENSE #C-1156
www.crenshawconsulting.com
3516 Bush Street, Suite 200
Raleigh, North Carolina 27609
919-871-1070 Fax 871-5620

A/E INFO

APPROVED

FOR COMMANDER NAVFAC

ACTIVITY
Approved by Erik A. Lewis, Infrastructure Engineering Branch Head, FRCE Cherry Point via Electronic Signature

SATISFACTORY TO

DES	LWM	DRW	MWF	CHK	JDL
PM/DM	L. PEED				
BRANCH MANAGER	H. PERRY				
CHIEF ENG/ARCH	P. FAULKNER				
FIRE PROTECTION	D. CHASTAIN				

DEPARTMENT OF THE NAVY
NAVAL FACILITIES ENGINEERING SYSTEMS COMMAND
NAVAL FACILITIES ENGINEERING SYSTEMS COMMAND ~ MIDATLANTIC
DESIGN AND CONSTRUCTION (DC) CORE
NAVAL STATION - NORFOLK, VA
MARINE CORPS AIR STATION
CHERRY POINT, NC

MCOLF ATLANTIC
BUILDING 7019 RENOVATIONS

PIPING DIAGRAMS

SCALE:	AS INDICATED
EPROJECT NO.:	7406712
STA. PROJ. NO.:	7406712
NAVFAC DRAWING NO.	12939546
SHEET	121 OF 148

M-801

DRAWFORM REVISION: 25 AUGUST 2020

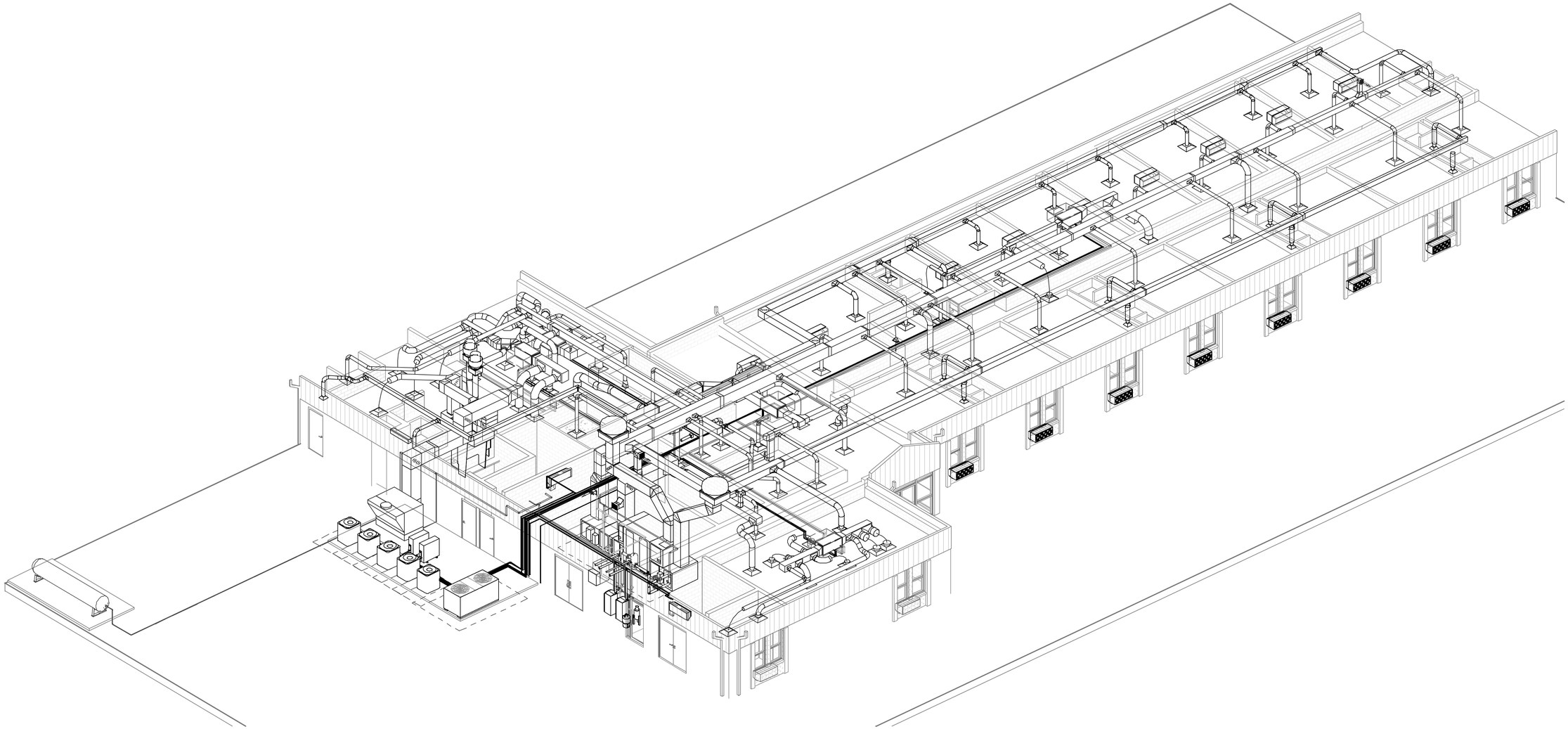

A1 3D ISOMETRIC VIEW - MECHANICAL

SYM	DESCRIPTION	DATE	APPR

NAVFAC

NORTH CAROLINA PROFESSIONAL SEAL 055500 ENGINEER LUCAS W. MERANDA
07-01-26
SEAL

CRENSHAW CONSULTING Engineers
NC LICENSE #C-1154
3016 Bush Street, Suite 200
Raleigh, North Carolina 27609
919-871-0170 Fax 871-5620

AE INFO

APPROVED

FOR COMMANDER NAVFAC

ACTIVITY
Approved by Erik A. Lewis,
Infrastructure Engineering Branch Head,
FRCE Cherry Point via Electronic Signature

SATISFACTORY TO

DES	LWM	DRW	MWF	CHK	JDL

PM/DM	L. PEED
BRANCH MANAGER	H. PERRY
CHIEF ENG/ARCH	P. FAULKNER
FIRE PROTECTION	D. CHASTAIN

DEPARTMENT OF THE NAVY
NAVAL FACILITIES ENGINEERING SYSTEMS COMMAND
NAVAL FACILITIES ENGINEERING SYSTEMS COMMAND ~ MIDATLANTIC
DESIGN AND CONSTRUCTION (DC) CORE
NAVAL STATION - NORFOLK, VA
MARINE CORPS AIR STATION
CHERRY POINT, NC

MCOLF ATLANTIC
BUILDING 7019 RENOVATIONS

3D ISOMETRIC VIEW - MECHANICAL

SCALE:	AS INDICATED
EPROJECT NO.:	7406712
STA. PROJ. NO.:	7406712
NAVFAC DRAWING NO.	12939547
SHEET	122 OF 148

M-901

DRAWFORM REVISION: 25 AUGUST 2020

VOLTAGE DROP SCHEDULE		
120 VOLT BRANCH CIRCUITS UP TO 8 AMPS (<1.0 KVA)		
RUN DISTANCE IN FEET		WIRE SIZE AWG
1' - 120'		#12
121' - 190'		#10
191' - 300'		#8
301' - 470'		#6
120 VOLT BRANCH CIRCUITS 9 AMPS TO 14 AMPS (1-1.7 KVA)		
RUN DISTANCE IN FEET		WIRE SIZE AWG
1' - 65'		#12
66' - 110'		#10
111' - 170'		#8
171' - 270'		#6
277 VOLT BRANCH CIRCUITS UP TO 14 AMPS (<3.9 KVA)		
RUN DISTANCE IN FEET		WIRE SIZE AWG
1' - 160'		#12
161' - 250'		#10
251' - 390'		#8
391' - 620'		#6
WIRE SIZES INDICATED IN GENERAL NOTES AND CONNECTIONS SCHEDULES ARE MINIMUM WIRE SIZES. CONTRACTOR MUST UPSIZE WIRES BASED ON LOAD AND LENGTH OF RUN AS INDICATED IN SCHEDULE ABOVE.		

ELECTRICAL ABBREVIATIONS	
A	INDICATES A DEVICE IS MOUNTED WITH BOTTOM OF BOX 1 1/2" ABOVE BACKSPLASH UNLESS NOTED OTHERWISE.
AFF	ABOVE FINISHED FLOOR
AG	COMBINATION OF 'A' AND 'G'
ARCH	ARCHITECT
C	INDICATES A DEVICE IS FLUSH MOUNTED IN CEILING TILE.
EX.	EXISTING
EXT.	EXTERIOR
FAH	FAHRENHEIT
FURN	FURNITURE
G	INDICATES A DEVICE WITH INTEGRAL GROUND FAULT INTERRUPTER (GFI) PROTECTION.
GFI	SAME AS 'G'
IG	DEVICE MUST HAVE ISOLATED GROUND AND WILL REQUIRE ISOLATED GROUND CIRCUITRY.
J.B.	JUNCTION BOX
NTS	NOT TO SCALE
OC	ON CENTER
PROV	PROVIDED BY
S	INDICATES DEVICE IS SURFACE MOUNTED.
W/	WITH
WP	INDICATES A DEVICE THAT IS WEATHER-PROOF AND RATED FOR EXTERIOR TEMPERATURES.
MDP	MAIN DISTRIBUTION PANEL

ELECTRICAL LEGEND

PLANS

SYMBOLS SHOWN BELOW ARE TO INDICATE NEW DEVICES OR NEW LOCATIONS OF EXISTING DEVICES. SEE LINETYPE LEGEND FOR DISTINCTION OF EXISTING DEVICES TO REMAIN AND DEMOLITION DEVICES.

- HOME RUN TO PANEL INCLUDING GROUND
- BRANCH CIRCUIT — MINIMUM SIZE PER CKT BKR
- $S — SINGLE POLE WALL SWITCH
- $3 — 3-WAY WALL SWITCH
- $4 — 4-WAY WALL SWITCH
- $D — SLIDE TYPE DIMMER SWITCH APPROPRIATE FOR LOAD SERVED

(44" A.F.F. TO BOTTOM UNLESS OTHERWISE NOTED)

ALL DUPLEX AND QUAD RECEPTACLES MUST BE NEMA 5-20R UNO.

- DUPLEX RECEPTACLE
- POWER RECEPTACLE
- QUAD RECEPTACLE

(16" A.F.F. TO BOTTOM UNLESS OTHERWISE NOTED)

- F — DISCONNECT SWITCH - FUSIBLE
- $M — MOTOR SWITCH
- (J) — JUNCTION BOX
- ELECTRICAL TRANSFORMER
- ELECTRICAL PANEL
- T — PAD-MOUNTED TRANSFORMER
- J — ABOVE-GROUND JUNCTION BOX
- G — GENERATOR
- SITE POLE LIGHT FIXTURE. SEE FIXTURE SCHEDULE

- A — ELECTRICAL PANEL OR AS NOTED
- C.T. — C.T. CABINET
- (M) — METER BASE AND METER
- 200/3 / 200A — FRAME SIZE / FUSE SIZE — FUSIBLE DISCONNECT, FRAME AND FUSE SIZE AS INDICATED.
- T — DESIGNATION; 112.5 — KVA RATING — TRANSFORMER, SIZE AND DESIGNATION AS NOTED. PRIMARY VOLTAGE AS NOTED FOR PRIMARY FEED. SECONDARY VOLTAGE AS NOTED FOR LOAD SUPPLIED.
- 20/4 — CONTACTOR, AMPACITY / POLES AS INDICATED
- T.C. — TIMECLOCK
- SPD — SURGE PROTECTIVE DEVICE
- SERVICE GROUND

LINETYPES

- NEW DEVICE OR RELOCATED EXISTING DEVICE.
- EXISTING DEVICE TO REMAIN.
- NEW UNDERGROUND ELECTRICAL
- NEW UNDERGROUND TELECOMMUNICATIONS

APPR			
DATE			
DESCRIPTION			
SYM			

NAVFAC

NORTH CAROLINA PROFESSIONAL SEAL 045329 ENGINEER MICHAEL K WILSON JR. 7/1/26 SEAL

CRENSHAW CONSULTING Engineers
NC LICENSE #C-1158
3016 Bush Street, Suite 205
Raleigh, North Carolina 27609
919-571-1570 Fax 571-0405

A/E INFO

APPROVED

FOR COMMANDER NAVFAC

ACTIVITY

SATISFACTORY TO

DES	JTR	DRW	MKW	CHK	JTR
PM/DM	L. PEED				
BRANCH MANAGER	H. PERRY				
CHIEF ENG/ARCH	P. FAULKNER				
FIRE PROTECTION	D. CHASTAIN				

DEPARTMENT OF THE NAVY
NAVAL FACILITIES ENGINEERING COMMAND
1PT MARINE CORPS
MARINE CORPS AIR STATION
NAVAL FACILITIES ENGINEERING COMMAND ~ MIDATLANTIC
NAVAL STATION - NORFOLK, VA
CHERRY POINT, NC

MCOLF ATLANTIC
BUILDING 7019 RENOVATIONS

SITE ELECTRICAL LEGEND

SCALE:	AS INDICATED
STATION DESIGN WON:	7406712
STATION CONSTRUCTION WON:	7406712
NAVFAC DRAWING NO.	12939548
SHEET	123 OF 148

ES001

DRAWFORM REVISION: 25 AUGUST 2020

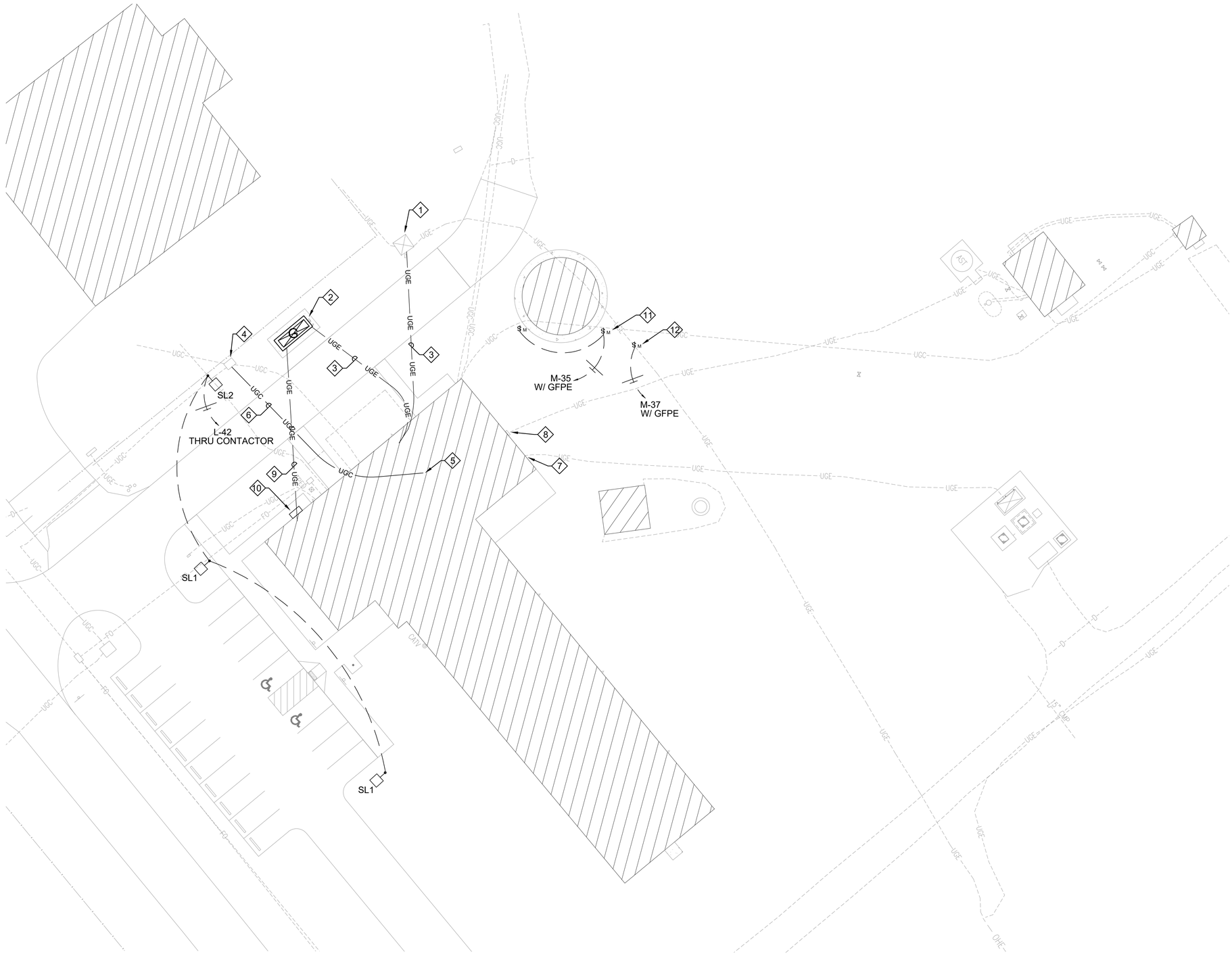

A2 SITE PLAN - ELECTRICAL

SCALE: 1" = 20'

PLAN NORTH

PLAN NOTES:

1. CONNECT TO PAD-MOUNTED TRANSFORMER BY LOCAL POWER COMPANY.
2. 300 KW DIESEL EMERGENCY GENERATOR. SEE BUILDING RISER DIAGRAM FOR MORE INFORMATION.
3. SECONDARY ELECTRICAL SERVICE CONDUCTORS FOR BUILDING. SEE DUCT BANK DETAILS AND ELECTRICAL RISER DIAGRAM.
4. EXISTING MANHOLE FOR DUCT BANK AND OSP CABLING POINT OF CONNECTION. GOVERNMENT WILL PERFORM SPLICE AT MANHOLE. CONTRACTOR RESPONSIBLE FOR ALL OTHER CONNECTIONS.
5. APPROXIMATE LOCATION OF SERVICE ENTRANCE. PROVIDE 50 PAIR OSP COPPER AND 24 STRAND SINGLE MODE FIBER. SEE TELECOMMUNICATIONS PLANS FOR MORE INFORMATION.
6. NEW 3-WAY, 4" CONCRETE-ENCASED COMM DUCTBANK FOR OSP TELECOMMUNICATIONS SERVICE. PROVIDE 3X3 FABRIC MESH INNERDUCT IN FIBER CONDUIT. SEE DETAILS AND BUILDING PLANS FOR MORE INFORMATION.
7. INTERCEPT AND EXTEND EXISTING FEEDER TO NEW 'MDP' PANEL TO RECONNECT LIFT STATION PANEL. SEE BUILDING RISER DIAGRAM FOR MORE INFORMATION.
8. INTERCEPT AND EXTEND EXISTING FEEDER TO NEW 'MDP' PANEL TO RECONNECT WATER TREATMENT PANEL. SEE BUILDING RISER DIAGRAM FOR MORE INFORMATION.
9. SECONDARY ELECTRICAL SERVICE CONDUCTORS FOR FIRE PUMP. SEE DUCT BANK DETAILS AND ELECTRICAL RISER DIAGRAM.
10. PROVIDE GENERATOR DOCKING STATION. SEE ELECTRICAL RISER DIAGRAM FOR DETAILS.
11. CONNECT HEAT TRACE FOR STORAGE TANK FILL LINE PIPING AND DISCHARGE PIPING. PROVIDE DISCONNECTS, WIRING, AND CONDUIT COMPLETE. CONNECT TO GFPE BREAKER. COORDINATE WITH FIRE PROTECTION.
12. CONNECT HEAT TRACE FOR HOT BOX. PROVIDE DISCONNECT, WIRING, AND CONDUIT COMPLETE. CONNECT TO GFPE BREAKER. COORDINATE WITH CIVIL.

SCOPE NOTE:

SEWER LIFT STATION AND WATER TREATMENT STATION MUST REMAIN IN OPERATION THROUGHOUT CONSTRUCTION. PAD MOUNTED TRANSFORMER IS BY POWER COMPANY. COORDINATE ALL REQUIRED OUTAGES WITH POWER COMPANY.

GRAPHIC SCALE: 1"=20'

20' 0 20' 40'

APPR | DATE | DESCRIPTION | SYM

NAVFAC

NORTH CAROLINA PROFESSIONAL SEAL 045329 ENGINEER MICHAEL K WILSON JR. 7/17/26 SEAL

CRENSHAW CONSULTING Engineers
NC LICENSE #C-1168
www.crenshawconsulting.com
3016 Bush Street, Suite 205
Raleigh, North Carolina 27609
919-871-1570 Fax 871-0420

A/E INFO

APPROVED

FOR COMMANDER NAVFAC

ACTIVITY

SATISFACTORY TO

DES	JTR	DRW	MKW	CHK	JTR
PM/DM			L. PEED		
BRANCH MANAGER			H. PERRY		
CHIEF ENG/ARCH			P. FAULKNER		
FIRE PROTECTION			D. CHASTAIN		

DEPARTMENT OF THE NAVY
NAVAL FACILITIES ENGINEERING COMMAND
1ST MARINE CORPS
MARINE CORPS AIR STATION

NAVAL FACILITIES ENGINEERING COMMAND ~ MIDATLANTIC
NAVAL STATION - NORFOLK, VA

CHERRY POINT, NC

MCOLF ATLANTIC
BUILDING 7019 RENOVATIONS

SITE PLAN - ELECTRICAL

SCALE:	AS INDICATED
STATION DESIGN WON:	7406712
STATION CONSTRUCTION WON:	7406712
NAVFAC DRAWING NO.	12939549
SHEET	124 OF 148

ES101

DRAWFORM REVISION: 25 AUGUST 2020

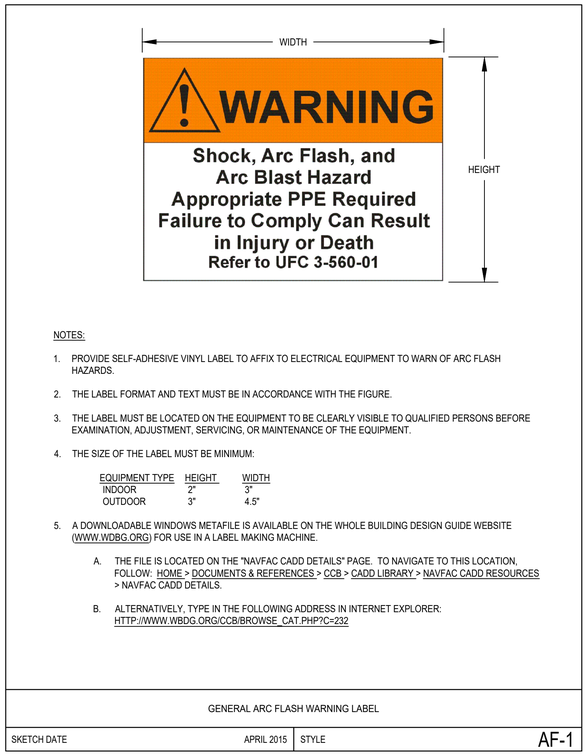

NOTES:

1. PROVIDE SELF-ADHESIVE VINYL LABEL TO AFFIX TO ELECTRICAL EQUIPMENT TO WARN OF ARC FLASH HAZARDS.
2. THE LABEL FORMAT AND TEXT MUST BE IN ACCORDANCE WITH THE FIGURE.
3. THE LABEL MUST BE LOCATED ON THE EQUIPMENT TO BE CLEARLY VISIBLE TO QUALIFIED PERSONS BEFORE EXAMINATION, ADJUSTMENT, SERVICING, OR MAINTENANCE OF THE EQUIPMENT.
4. THE SIZE OF THE LABEL MUST BE MINIMUM:

EQUIPMENT TYPE	HEIGHT	WIDTH
INDOOR	2"	3"
OUTDOOR	3"	4.5"

5. A DOWNLOADABLE WINDOWS METAFILE IS AVAILABLE ON THE WHOLE BUILDING DESIGN GUIDE WEBSITE (WWW.WBDG.ORG) FOR USE IN A LABEL MAKING MACHINE.
   A. THE FILE IS LOCATED ON THE "NAVFAC CADD DETAILS" PAGE. TO NAVIGATE TO THIS LOCATION, FOLLOW: HOME > DOCUMENTS & REFERENCES > CCB > CADD LIBRARY > NAVFAC CADD RESOURCES > NAVFAC CADD DETAILS.
   B. ALTERNATIVELY, TYPE IN THE FOLLOWING ADDRESS IN INTERNET EXPLORER: HTTP://WWW.WBDG.ORG/CCB/BROWSE_CAT.PHP?C=232

GENERAL ARC FLASH WARNING LABEL

SKETCH DATE	APRIL 2015	STYLE	AF-1

NOTE:
THIS DETAIL IS INTENDED AS AN AID ONLY, THE CONTRACTOR IS RESPONSIBLE FOR COMPLYING WITH ALL PROVISIONS AND REQUIREMENTS OF NEC 250 SECTION III INCLUDING THOSE NOT SPECIFICALLY REFERENCED HERE.

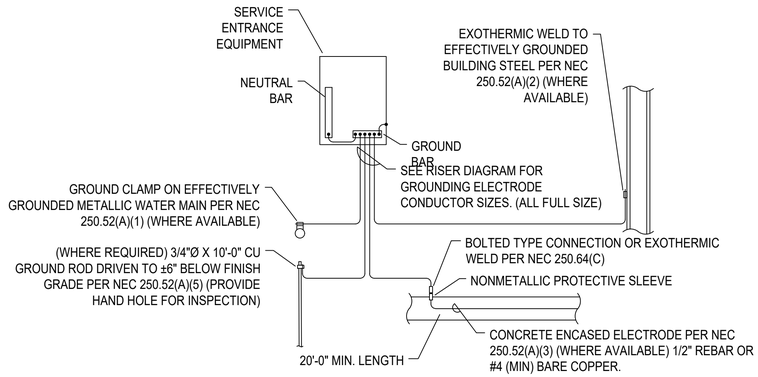

B3 SERVICE GROUNDING DETAIL
SCALE: NTS

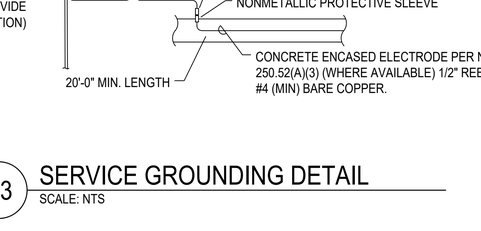

PLACARD MUST BE HARD PLASTIC WITH BLACK LETTERING ENGRAVED ON A WHITE BACKGROUND AND ATTACHED WITH RIVETS TO THE ENCLOSURE COVER IN PLAIN VIEW

A3 EQUIPMENT IDENTIFICATION PLACARD
SCALE: NTS

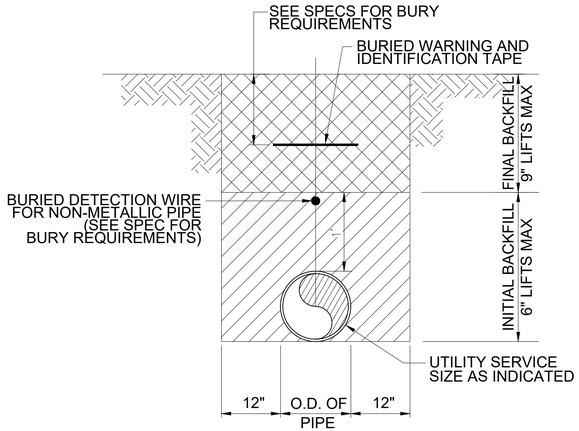

PIPE TRENCH WITHOUT BEDDING

C4 TRENCH DETAIL
SCALE: NTS

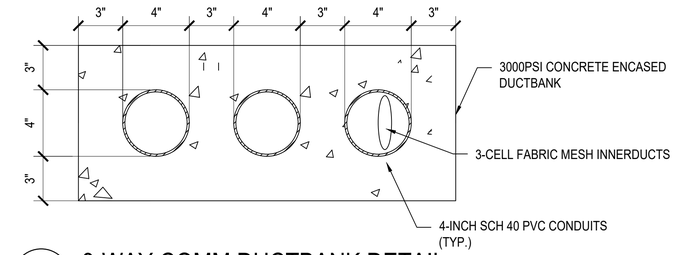

B4 3-WAY COMM DUCTBANK DETAIL
SCALE: NTS

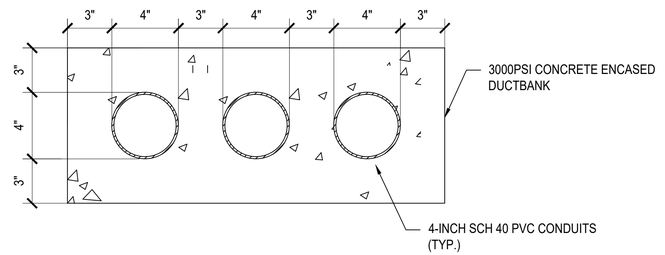

C1 SECONDARY DUCT BANK DETAIL
SCALE: NTS

APPR | DATE | DESCRIPTION | SYM

NAVFAC

NORTH CAROLINA PROFESSIONAL SEAL 045329 ENGINEER MICHAEL K WILSON JR. 7/1/26 SEAL

CRENSHAW CONSULTING Engineers
NC LICENSE #C-1158
www.crenshawconsulting.com
3535 Bush Street, Suite 205
Raleigh, North Carolina 27609
919-571-1570 Fax 571-0420

A/E INFO

APPROVED
FOR COMMANDER NAVFAC
ACTIVITY
SATISFACTORY TO

DES	JTR	DRW	MKW	CHK	JTR
PM/DM	L. PEED				
BRANCH MANAGER	H. PERRY				
CHIEF ENG/ARCH	P. FAULKNER				
FIRE PROTECTION	D. CHASTAIN				

DEPARTMENT OF THE NAVY
NAVAL FACILITIES ENGINEERING COMMAND ~ MIDATLANTIC
1ST MARINE CORPS
MARINE CORPS AIR STATION
NAVAL FACILITIES ENGINEERING COMMAND
NAVAL STATION • NORFOLK, VA.
CHERRY POINT, NC
MCOLF ATLANTIC
BUILDING 7019 RENOVATIONS
SITE ELECTRICAL DETAILS

SCALE:	AS INDICATED
STATION DESIGN WON:	7406712
STATION CONSTRUCTION WON:	7406712
NAVFAC DRAWING NO.	12939550
SHEET	125 OF 148

ES501

DRAWFORM REVISION: 25 AUGUST 2020

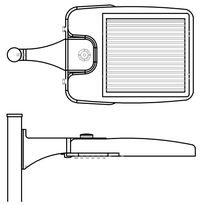

NOTE: THIS SKETCH IS A NON-PROPRIETARY GRAPHIC REPRESENTATION OF A LUMINAIRE THAT MAY MEET THE SPECIFICATION REQUIREMENTS. IT IS NOT INTENDED TO INDICATE A CERTAIN MANUFACTURER OR PREFERENCE.

LUMINAIRE REQUIREMENTS:

1. HOUSING - DIE-CAST ALUMINUM HOUSING WITH POWDER COAT FINISH.
2. OPTICS - INJECTION MOLDED OPTICS WITH TYPE I, II, III, IV, OR V DISTRIBUTIONS. BUG UPLIGHT RATING OF U0, WITH GLARE RATING AS DETERMINED BY LIGHTING ZONE INSTALLED.
3. LIGHT SOURCE - SOLID STATE LEDS, 4000K CCT UON, MINIMUM 70 CRI UON, AND MINIMUM EFFICACY OF 100 LUMENS/WATT UON. INITIAL LUMEN OUTPUT AS INDICATED IN LUMINAIRE SCHEDULE.
4. DRIVER - REPLACEABLE, INTEGRAL, HIGH-EFFICIENCY DIMMABLE DRIVER WITH MINIMUM 0.9 PF, OPERATING VOLTAGE OF 120-277V, THERMAL MANAGEMENT, AND < 20% THD. ON-OFF CONTROL AND FULLY DIMMABLE DOWN TO 10% MINIMUM OR AS INDICATED IN LUMINAIRE SCHEDULE. MEETS ELEVATED 10KV/10KA REQUIREMENTS PER IEEE.
5. CERTIFICATION - UL LISTED FOR WET LOCATION, ROHS COMPLIANT. COMPLIES WITH IES LM79, LM80 AND TM21 TESTING STANDARDS.
6. MOUNTING - ARM-MOUNTED ON POLE.
7. OPTIONS - MOUNTING ARM LENGTH, LIGHT DISTRIBUTION, HOUSE-SIDE SHIELD, PHOTOCELL, INTEGRAL MOTION SENSOR, AND ANSI 7-PIN RECEPTACLE.

LED AREA LUMINAIRE

REVISED: NOVEMBER 2020 | LUMINAIRE PLATE: XL-2

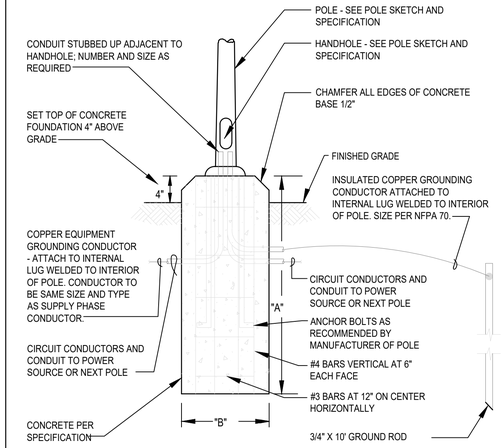

POLE HEIGHT	A	B
8'-12'	36"	12"
13'-20'	42"	16"
21'-30'	72"	24"
31'-40'	78"	30"

ANCHOR BASE POLE FOUNDATION

REVISED: NOVEMBER 2020 | LUMINAIRE PLATE: XL-21

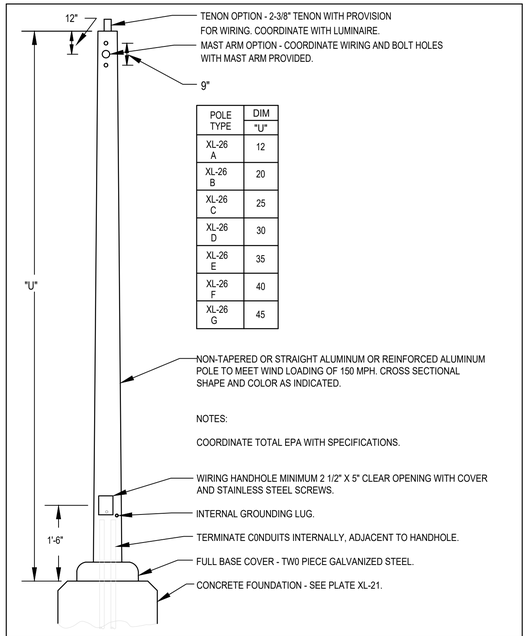

POLE TYPE	DIM "U"
XL-26 A	12
XL-26 B	20
XL-26 C	25
XL-26 D	30
XL-26 E	35
XL-26 F	40
XL-26 G	45

ANCHOR BASE STEEL/ALUMINUM POLE

REVISED: NOVEMBER 2020 | LUMINAIRE PLATE: XL-19

LIGHT FIXTURE SCHEDULE

DESIGNATION	TEMPLATE	DESCRIPTION	VOLTAGE	BALLAST TYPE/ QUANTITY	NUMBER/TYPE LAMPS	TOTAL WATTS
SL1	XL-2 (SINGLE HEAD)	LED SITE POLE FIXTURE	MVOLT	1-LED DIMMABLE (10%)	LED (9,900 LUM)	76
	MOUNTED ON 25 FOOT, SQUARE ALUMINUM POLE	DISTRIBUTION TYPE III			4000 K	
SL2	XL-2 (SINGLE HEAD)	LED SITE POLE FIXTURE	MVOLT	1-LED DIMMABLE (10%)	LED (9,900 LUM)	76
	MOUNTED ON 25 FOOT, SQUARE ALUMINUM POLE	DISTRIBUTION TYPE IV			4000 K	

NOTE:
1. PROVIDE FIXTURES WITH INTEGRAL PHOTOCELL AND MOTION SENSOR PER BASE STANDARDS.
2. EPA RATINGS FOR POLES SHALL BE MINIMUM 150 MPH.
3. FIXTURE AND POLE FINISH COLORS MUST BE BLACK.

APPR | DATE | DESCRIPTION | SYM

NAVFAC

NORTH CAROLINA PROFESSIONAL SEAL 045329 ENGINEER MICHAEL K. WILSON JR. 7/7/26 SEAL

CRENSHAW CONSULTING Engineers
NC LICENSE #C-1168
www.crenshawconsulting.com
3535 Bush Street, Suite 205
Raleigh, North Carolina 27609
919-571-1570 Fax 571-0420

A/E INFO

APPROVED

FOR COMMANDER NAVFAC

ACTIVITY

SATISFACTORY TO

DES JTR | DRW MKW | CHK JTR

PM/DM L. PEED

BRANCH MANAGER H. PERRY

CHIEF ENG/ARCH P. FAULKNER

FIRE PROTECTION D. CHASTAIN

DEPARTMENT OF THE NAVY
NAVAL FACILITIES ENGINEERING COMMAND
1FT MARINE CORPS
MARINE CORPS AIR STATION
NAVAL FACILITIES ENGINEERING COMMAND ~ MIDATLANTIC
NAVAL STATION - NORFOLK, VA
CHERRY POINT, NC

MCOLF ATLANTIC
BUILDING 7019 RENOVATIONS

SITE ELECTRICAL DETAILS

SCALE: AS INDICATED

STATION DESIGN WON: 7406712

STATION CONSTRUCTION WON: 7406712

NAVFAC DRAWING NO. 12939551

SHEET 126 OF 148

ES502

DRAWFORM REVISION: 25 AUGUST 2020

GENERAL NOTES AND REQUIREMENTS

1. WORKMANSHIP MUST CONFORM TO NECA INSTALLATION STANDARDS INCLUDING NECA 1.
2. INSTALLATION MUST COMPLY WITH NATIONAL ELECTRICAL CODE, INTERNATIONAL BUILDING CODE, APPLICABLE UFCS AND ALL REQUIREMENTS OF THE LOCAL AUTHORITY HAVING JURISDICTION (AHJ). ALL WORK MUST BE BY LICENSED CONTRACTOR.
3. THE CONTRACTOR MUST REFER TO THE ARCHITECTURAL PLANS FOR FLOOR PLAN DIMENSIONS. DO NOT SCALE THESE DRAWINGS. THE LOCATION OF ALL WALL MOUNTED DEVICES, INCLUDING MOUNTING HEIGHTS, MUST BE COORDINATED WITH ARCHITECTURAL DRAWINGS PRIOR TO INSTALLATION. COORDINATE LOCATIONS OF ALL LIGHT FIXTURES WITH THE REFLECTED CEILING PLANS. LIGHT FIXTURES INSTALLED IN MECHANICAL AREAS MUST AVOID MECHANICAL PIPING, EQUIPMENT, DUCTWORK, ETC.
4. THE CONTRACTOR MUST COORDINATE ANY AND ALL WORK WITH OTHER TRADES INVOLVED IN THE PROJECT, PRIOR TO INSTALLATION OF ELEC. EQUIPMENT, SO AS TO AVOID CONFLICTS DURING CONSTRUCTION AND TO ALLOW FOR OPTIMUM MAINTENANCE AND WORKING SPACE.
5. CONDUITS AND CABLES MUST BE CONCEALED WHEREVER POSSIBLE BY EITHER ROUTING ABOVE CEILING, IN INTERSTITIAL SPACES OR RUNNING EXPOSED IN UNFINISHED SPACES AS MUCH AS FEASIBLE. CONDUITS MAY BE RUN EXPOSED IN MECHANICAL AREAS OR OTHER AREAS NOT SUBJECT TO PUBLIC VIEW WHERE APPROVED BY THE OWNER. WHEREVER CONDUITS OR CABLES ARE APPROVED TO BE EXPOSED, CONDUITS AND CABLES MUST BE RUN PARALLEL OR PERPENDICULAR TO STRUCTURAL ELEMENTS AND MUST BE RUN AND BUNDLED IN GROUPS, AND THE INSTALLATION MUST BE NEAT AND ORDERLY. EVEN WHEN EXPOSED, CONDUITS AND CABLES MUST BE ROUTED TO MINIMIZE VIEW FROM PERSONNEL. SEAL ALL PENETRATIONS AIR TIGHT AROUND ALL CONDUITS PASSING THROUGH WALLS OR FLOORS USING APPROPRIATE PENETRATION PROTECTION WHEN PASSING INTO OR THROUGH RATED ASSEMBLIES.
6. ALL LIGHT FIXTURES MUST BE SUPPORTED INDEPENDENTLY OF THE SUSPENDED CEILING SYSTEM.
7. WHERE BRANCH CIRCUIT TOTAL LENGTH IS GREATER THAN FIFTY (50) FEET FROM THE PANELBOARD, SEE VOLTAGE DROP SCHEDULE.
8. ALL MOUNTING HEIGHTS ARE GIVEN TO THE BOTTOM OF THE DEVICE UNLESS NOTED OTHERWISE.
9. ALL FUSES, DISCONNECT SWITCHES, AND BREAKER SIZES, SHOWN FOR MECHANICAL EQUIPMENT, MUST BE VERIFIED BEFORE THE PURCHASE OR INSTALLATION OF SAID EQUIPMENT, WITH THE EQUIPMENT SUPPLIER AND THE MECHANICAL CONTRACTOR.
10. ALL DISCONNECT SWITCHES ARE TO BE HEAVY-DUTY TYPE. THE CONTRACTOR MUST COORDINATE ALL DISCONNECT AND BREAKER SIZES WITH ACTUAL INSTALLED EQUIPMENT NAMEPLATE INFORMATION PRIOR TO PURCHASING OR INSTALLING DISCONNECTS AND BREAKERS. WHERE THE NAMEPLATE INFORMATION DOES NOT INDICATE AN OVERCURRENT PROTECTION SIZE OR MAXIMUM AMPACITY RATING, DISCONNECTS AND BREAKERS MUST BE INSTALLED AS INDICATED ON THE ELECTRICAL PLANS WHERE IN AGREEMENT WITH NAMEPLATE DATA.
11. THE CONTRACTOR MUST PROVIDE ALL NECESSARY DISCONNECTS, SWITCHES, AND RECEPTACLES UNDER THE BID AND MUST INCLUDE ALL NECESSARY CIRCUITS TO AND FINAL CONNECTIONS TO THE EQUIPMENT PROVIDED BY ALL SUPPLIERS, UNLESS NOTED OTHERWISE BY OTHER DISCIPLINES. COORDINATE CLOSELY.
12. ALL ELECTRICAL EQUIPMENT MUST BE INSTALLED SO THAT ALL CODE-REQUIRED AND MANUFACTURER-RECOMMENDED SERVICING CLEARANCES ARE MAINTAINED. INSTALLATIONS MUST FULLY COMPLY WITH NEC 110.26 AND NEC 408.18 FOR CLEARANCE REQUIREMENTS.
13. PROVIDE GROUNDING CONDUCTOR FOR ALL CIRCUITS PER N.E.C. GROUNDING SYSTEMS MUST MEET ALL REQUIREMENTS OF NEC 250.
14. THE CONTRACTOR MUST PATCH ANY WALL, CEILING, OR FLOOR OPENINGS AND PENETRATIONS RESULTING FROM DEMOLITION OR NEW WORK IN EXISTING AREAS. PATCH MUST MEET OR EXCEED THE STRUCTURE'S INTEGRITY AND FIRE RATING. FINISH MUST MATCH STRUCTURE'S FINISH.
15. ALL CIRCUITS MUST BE TESTED WITH 600 VOLT TESTER PRIOR TO ENERGIZING.
16. ALL WALL OUTLET BOXES, RECEPTACLES, SWITCHES, COVERPLATES, ETC. MUST BE COMMERCIAL SPECIFICATION GRADE, STANDARD OR HEAVY DUTY. SEE BOOK SPECIFICATIONS FOR ADDITIONAL DETAILS. VERIFY COLOR / MATERIALS FOR ALL DEVICES AND COVERPLATES PRIOR TO PURCHASE. PROVIDE LABEL FOR EACH DEVICE IDENTIFYING THE CIRCUIT SERVING THE DEVICE. VERIFY IF LABEL SHOULD BE ON INSIDE OR OUTSIDE FACE OF COVERPLATE WITH OWNER/TENANT.
17. IT IS THE SOLE RESPONSIBILITY OF THE CONTRACTOR TO COORDINATE W/ ALL OTHER TRADES REGARDING VOLTAGES, LOADS, CIRCUIT BREAKERS, ETC. PRIOR TO BEGINNING ANY WORK.
18. AS USED ON THESE DOCUMENTS, THE WORD "PROVIDE" MEANS TO FURNISH AND INSTALL THE ITEM OR EQUIPMENT AND MAKE THE FINAL CONNECTION AS REQUIRED.
19. ALL PANELS MUST BE STANDARD COMMERCIAL GRADE FROM A REPUTABLE NATIONAL MANUFACTURER AS SPECIFIED IN BOOK SPECIFICATIONS OR ON PLANS. PANELS MUST BE RATED AS INDICATED ON PANEL SCHEDULES.
20. CONTRACTOR IS RESPONSIBLE TO COMPLY WITH ALL REQUIREMENTS OF THE INTERNATIONAL BUILDING CODE, ABA, AND UFCS WHICH ARE APPLICABLE TO THIS PROJECT REGARDLESS OF WHETHER ALL DETAILS ARE INDICATED ON PLANS.
21. CONTRACTOR MUST VERIFY ALL AREAS THAT ARE USED AS A RETURN PLENUM WITH MECHANICAL CONTRACTOR AND PROVIDE PLENUM RATED CABLE FOR ALL CABLES NOT RUN IN METAL CONDUIT. THIS INCLUDES ALL TELECOMMUNICATIONS, FIRE ALARM, OR CONTROL WIRING ABOVE CEILING.
22. CONTRACTOR MUST COMPLY WITH ALL APPLICABLE SEISMIC REQUIREMENTS.
23. ELECTRICAL BOXES AND WIRING MUST NOT BE RECESSED INTO OR PENETRATE STRUCTURAL COLUMNS. BOXES/CONDUITS MUST BE SURFACE MOUNTED TO COLUMN AND/OR RECESSED IN STUD WALL WHERE POSSIBLE. COORDINATE WITH ARCHITECT.
24. ALL RECEPTACLES, SWITCHES, AND ELECTRICAL DEVICES REQUIRED TO BE ABA ACCESSIBLE MUST BE MOUNTED PER ANSI 117.1 SECTIONS 308 AND 309.
25. ALL EQUIPMENT CONNECTED TO OR ASSOCIATED WITH THE ELECTRICAL, FIRE ALARM OR TELECOM SYSTEMS OR OTHERWISE INCLUDED IN THE SCOPE OF WORK MUST BE LISTED AND LABELED BY A THIRD PARTY ACCEPTABLE TO THE AUTHORITY HAVING JURISDICTION.
26. CONTRACTOR MUST PROVIDE ROUGH-INS FOR ALL CONTRACTOR PROVIDED EQUIPMENT (INCLUDING SUB-CONTRACTED EQUIPMENT AS APPLICABLE) AND DEVICES LOCATED ON THESE PLANS IN ACCORDANCE WITH NEC, NFPA, AND MANUFACTURER REQUIREMENTS. UNLESS OTHERWISE NOTED, BOX PROVIDED MUST BE SUITABLE FOR AND SIZED FOR THE PURPOSE, WITH A MINIMUM 3/4" CONDUIT TO ACCESSIBLE LOCATION ABOVE CEILING OR CONDUIT SIZED AS APPROPRIATE FOR THE DEVICE IN QUESTION.

ELECTRICAL ABBREVIATIONS

AFF	ABOVE FINISHED FLOOR
A	AMPERES
ARCH	ARCHITECT
C	CONDUIT
EX	EXISTING
EXT	EXTERIOR
FA	FIRE ALARM
FURN	FURNITURE
GFI	GROUND-FAULT CIRCUIT INTERRUPTER
GFCI	GROUND-FAULT CIRCUIT INTERRUPTER
GND	GROUND
IG	ISOLATED GROUND
JB	JUNCTION BOX
MECH	MECHANICAL
NTS	NOT TO SCALE
OC	ON-CENTER
PLMB	PLUMBING
PROV	PROVIDED BY
SFC	SURFACE MOUNTED
TP	TAMPER PROOF
V	VOLTS
W/	WITH
WP	WEATHERPROOF RECEPTACLE AND ENCLOSURE RATED FOR EXTERIOR TEMPERATURES
WR	WEATHER RESISTANT RECEPTACLE

POWER SYMBOL LEGEND

SYMBOL	TYPICAL HEIGHT	DESCRIPTION
	---	HOMERUN TO PANEL/BRANCH CIRCUIT CONNECTION. SHORT TICKS REPRESENT PHASE CONDUCTORS. LONG TICKS REPRESENT GROUNDED CONDUCTORS. EQUIPMENT GROUNDING CONDUCTOR IS NOT SHOWN BUT ALWAYS REQUIRED. MINIMUM SIZE PER NEC BASED ON CIRCUIT BREAKER, SCHEDULE, AND VOLTAGE DROP TABLE.
	---	CIRCUIT WIRE. CONDUCTORS MUST MATCH THAT OF THE ASSOCIATED HOMERUN.
	---	CIRCUIT WIRE. FUNCTION AS INDICATED ON PLANS.
	18"	NEMA 5-20R DUPLEX RECEPTACLE
	18"	NEMA 5-20R DUPLEX RECEPTACLE, SPLIT-CIRCUIT: BOTTOM RECEPTACLE SWITCHED, TOP UNSWITCHED.
	18"	NEMA 5-20R QUADRAPLEX RECEPTACLE
	18"	POWER RECEPTACLE, NEMA CONFIGURATION AS NOTED
		RECEPTACLE MODIFIERS (CAN APPLY TO ANY RECEPTACLE TYPE): • G: GROUND-FAULT CURRENT INTERRUPTER • A: 3" ABOVE COUNTER OR BACKSPLASH • WP: WEATHERPROOF IN-USE ENCLOSURE • WR: WEATHER RESISTANT • C: FLUSH IN CEILING TILE • U: INTEGRAL USB TYPE A CHARGER • TV: MOUNTED AT 72" UON. NOTE: MODIFIERS MAY BE COMBINED (E.G. 'AG' IS A COMBINATION OF 'A' AND 'G'.)
J	18"	JUNCTION BOX, WALL-MOUNTED, PURPOSE AS NOTED
J	--	JUNCTION BOX, ABOVE OR ON CEILING, PURPOSE AS NOTED
P	18"	JUNCTION BOX IN WALL FOR POWER CONNECTION TO MODULAR FURNITURE VIA WALL WHIP. COORDINATE EXACT LOCATIONS AND REQUIREMENTS WITH EQUIPMENT SUPPLIER.
	---	POWER TRANSFORMER, WITH HOUSEKEEPING PAD
	---	PANELBOARD OR OTHER ELECTRICAL EQUIPMENT
	---	DISCONNECT SWITCH, FUSED
$	44" BOTTOM	TOGGLE SWITCH
		SWITCH MODIFIERS: • M: MOTOR-RATED

HEIGHTS ARE TO THE BOTTOM OF THE DEVICE UNLESS NOTED OTHERWISE.
TOP: HEIGHT TO THE TOP OF THE DEVICE
BOTTOM: HEIGHT TO THE BOTTOM OF THE DEVICE.
HEIGHTS ARE TYPICAL AND MAY BE SUPERCEDED BY PLANS.

LINETYPES

(heavy solid line)	NEW DEVICE
(light solid line)	EXISTING DEVICE TO REMAIN
(dashed line)	EXISTING DEVICE TO BE DEMOLISHED
(dashed line)	NEW LIGHTING CIRCUITRY TO INDICATE UNSWITCHED PORTIONS OF CIRCUITS.

ELECTRICAL RISER SYMBOL LEGEND

SYMBOL	DESCRIPTION
P	ELECTRICAL PANEL
480Δ-208Y/120V	DRY TYPE ELECTRICAL TRANSFORMER
	FUSIBLE DISCONNECT. FRAME AND FUSE AS INDICATED.
M	ELECTRICAL METER W/ METER BASE AS APPROPRIATE.
##/#	CONTACTOR. AMPACITY AND POLES AS NOTED.
SPD	SURGE PROTECTIVE DEVICE.
	GROUNDING ELECTRODE

VOLTAGE DROP SCHEDULE

120 VOLT BRANCH CIRCUITS UP TO 8 AMPS (<0.96 KVA)

RUN DISTANCE IN FEET			CONDUCTOR SIZE (AWG)
1'	-	110'	#12
111'	-	180'	#10
181'	-	285'	#8
286'	-	450'	#6

120 VOLT BRANCH CIRCUITS 9 AMPS TO 14 AMPS (1- 1.68 KVA)

RUN DISTANCE IN FEET			CONDUCTOR SIZE (AWG)
1'	-	65'	#12
66'	-	100'	#10
101'	-	165'	#8
166'	-	260'	#6

277 VOLT BRANCH CIRCUITS UP TO 14 AMPS (<3.9 KVA)

RUN DISTANCE IN FEET			CONDUCTOR SIZE (AWG)
1'	-	150'	#12
151'	-	235'	#10
236'	-	380'	#8
381'	-	600'	#6

NOTE:
THIS SCHEDULE APPLIES TO 15 AND 20 AMP BRANCH CIRCUITS AT THE VOLTAGES INDICATED. CONDUCTOR SIZES INDICATED IN GENERAL NOTES AND CONNECTIONS SCHEDULES ARE MINIMUM SIZES. CONTRACTOR MUST UPSIZE CONDUCTORS (LINE, NEUTRAL, AND GROUND) BASED ON LOAD AND LENGTH OF RUN AS INDICATED IN SCHEDULE ABOVE.

LIGHTING SYMBOL LEGEND

SYMBOL	TYPICAL HEIGHT	DESCRIPTION
$	44"	TOGGLE SWITCH SWITCH MODIFIERS: • 2: DOUBLE-POLE SWITCH • 3: THREE-WAY • 4: FOUR-WAY • S: OCCUPANCY SENSOR (AUTO ON/AUTO OFF) • V: VACANCY SENSOR (MANUAL ON/AUTO OFF) • L: LOW VOLTAGE SWITCH. PROVIDE COMPATIBLE POWER PACK AS REQUIRED. • D: DIMMING (SUITABLE FOR DIMMING TECHNOLOGY) • T: DIGITAL TIMER, ADJUSTABLE TO 12 HOURS • WP: IN WEATHERPROOF ENCLOSURE • MODIFIERS MAY BE COMBINED. (E.G. "LVD" IS A LOW VOLTAGE, DIMMING SWITCH WITH VACANCY SENSOR.)
S2	---	CEILING/WALL SENSOR. PROVIDE POWER PACKS AND OTHER ACCESSORIES AS REQUIRED BY LIGHTING CONTROL TECHNOLOGY. 'S' TYPE SENSORS MUST BE CONFIGURED FOR AUTO ON/AUTO OFF CONTROL. 'V' TYPE SENSORS MUST BE CONFIGURED FOR MANUAL ON/AUTO OFF CONTROL. CEILING SENSOR TYPES: • S1: LOW-VOLTAGE DUAL TECHNOLOGY MOTION SENSOR FOR CORRIDOR APPLICATIONS. AUTO OFF CONTROL SETTING MUST DIM TO 25%-50%. • S2/V2: LOW-VOLTAGE 360° DUAL TECHNOLOGY MOTION SENSOR FOR STANDARD COVERAGE. • S3/V3: LOW-VOLTAGE 360° DUAL TECHNOLOGY MOTION SENSOR FOR EXTENDED COVERAGE. • S4/V4: LOW-VOLTAGE DUAL TECHNOLOGY MOTION SENSOR, CORNER MOUNTED COVERAGE.
	---	OVERHEAD LIGHTING FIXTURE (VARIOUS SYMBOLS). TAG INDICATES FIXTURE TYPE ACCORDING TO LIGHT FIXTURE SCHEDULE.
	---	DOWNLIGHT OR PENDANT LIGHTING FIXTURE (VARIOUS SYMBOLS). TAG INDICATES FIXTURE TYPE ACCORDING TO LIGHT FIXTURE SCHEDULE.
	AS INDICATED	WALL-MOUNTED LIGHTING FIXTURE (VARIOUS SYMBOLS). TAG INDICATES FIXTURE TYPE ACCORDING TO LIGHT FIXTURE SCHEDULE.
	AS INDICATED	DIRECTIONAL LIGHT SUCH AS FLOOD OR TRACK HEAD. TAG INDICATES FIXTURE TYPE ACCORDING TO LIGHT FIXTURE SCHEDULE.
	AS INDICATED	POLE OR AREA LIGHT (VARIOUS SYMBOLS). TAG INDICATES FIXTURE TYPE ACCORDING TO LIGHT FIXTURE SCHEDULE.
	---	EXIT LIGHT. WALL- OR CEILING- MOUNT AS SUITABLE FOR THE APPLICATION. FACES AND CHEVRONS AS INDICATED. FIXTURE TYPE ACCORDING TO LIGHT FIXTURE SCHEDULE.
	---	COMBINATION EMERGENCY LIGHTING UNIT AND EXIT SIGN. WALL- OR CEILING-MOUNT AS SUITABLE FOR THE APPLICATION. FACES AND CHEVRONS AS INDICATED. FIXTURE TYPE ACCORDING TO LIGHT FIXTURE SCHEDULE.
	---	EMERGENCY LIGHTING UNIT. WALL- OR CEILING-MOUNT AS SUITABLE FOR THE APPLICATION. FIXTURE TYPE ACCORDING TO LIGHT FIXTURE SCHEDULE.
	---	SLASHES OR HALF-SHADING INDICATES THE FIXTURE MUST BE CONNECTED AS A NIGHT LIGHT, AHEAD OF ALL SWITCHING AND OTHER CONTROL DEVICES (24-HOUR OPERATION). TYPICAL OF VARIOUS LIGHT FIXTURE SYMBOLS.

HEIGHTS ARE TO THE BOTTOM OF THE DEVICE UNLESS NOTED OTHERWISE.
TOP: HEIGHT TO THE TOP OF THE DEVICE
BOTTOM: HEIGHT TO THE BOTTOM OF THE DEVICE.
HEIGHTS ARE TYPICAL AND MAY BE SUPERCEDED BY PLANS.

SYM | DESCRIPTION | DATE | APPR

NAVFAC

Michael K. Wilson
NORTH CAROLINA PROFESSIONAL ENGINEER SEAL 045329 MICHAEL K. WILSON, J.R.
7/1/26
SEAL

CRENSHAW CONSULTING engineers
www.crenshawconsulting.com
NC LICENSE #C-1156
3516 Bush Street, Suite 200
Raleigh, North Carolina 27609
919-871-1070 Fax 871-5620

A/E INFO

APPROVED

FOR COMMANDER NAVFAC

ACTIVITY

SATISFACTORY TO

DES MKW	DRW JDC / CHK JTR
PM/DM	L. PEED
BRANCH MANAGER	H. PERRY
CHIEF ENG/ARCH	P. FAULKNER
FIRE PROTECTION	D. CHASTAIN

DEPARTMENT OF THE NAVY
NAVAL FACILITIES ENGINEERING COMMAND
NAVAL FACILITIES ENGINEERING COMMAND ~ MIDATLANTIC
IPT MARINE CORPS
NAVAL STATION - NORFOLK, VA
MARINE CORPS AIR STATION
CHERRY POINT, NC

MCOLF ATLANTIC
BUILDING 7019 RENOVATIONS

ELECTRICAL NOTES AND LEGENDS

SCALE:	AS INDICATED
STATION DESIGN WON:	7406712
STATION CONSTRUCTION WON:	7406712
NAVFAC DRAWING NO.	12939552
SHEET	127 OF 148

E-001

DRAWFORM REVISION: 25 AUGUST 2020

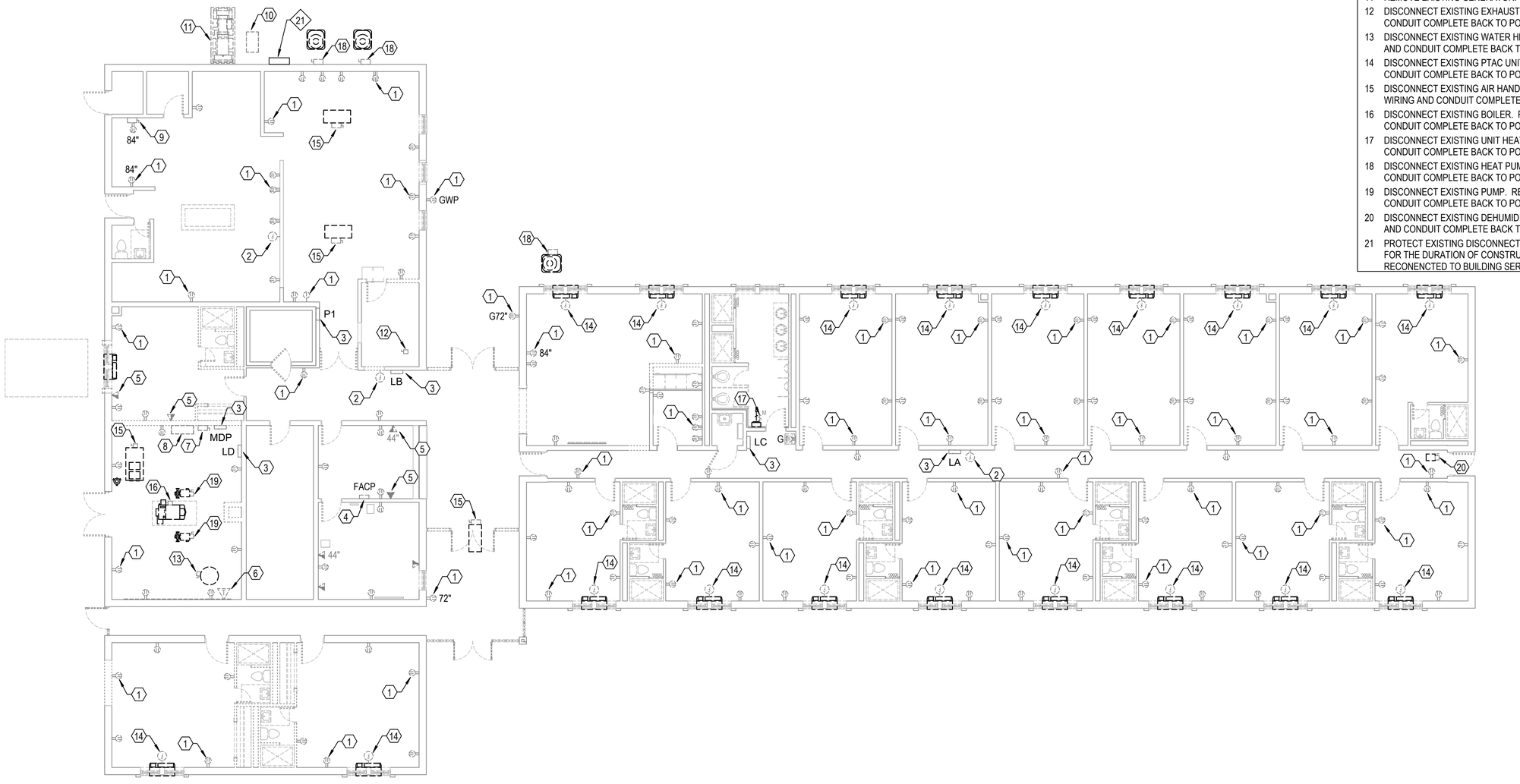

A1 FLOOR PLAN - POWER DEMOLITION
1/8" = 1'-0"

GRAPHIC SCALE: 1/8"=1'-0"
8' 0 4' 8' 16'

DEMO NOTES

1. REMOVE EXISTING RECEPTACLE, PLATE, WIRING AND CONDUIT COMPLETE BACK TO POWER SOURCE. TYPICAL.
2. REMOVE EXISTING JUNCTION BOX, WIRING, AND CONDUIT COMPLETE BACK TO POWER SOURCE.
3. REMOVE EXISTING ELECTRICAL PANEL(S), CONDUCTORS AND CONDUIT COMPLETE BACK TO POWER SOURCE.
4. REMOVE EXISTING FIRE ALARM CONTROL PANEL, CONDUCTORS AND CONDUIT COMPLETE BACK TO POWER SOURCE.
5. REMOVE EXISTING DATA OUTLET, CABLING, AND CONDUIT COMPLETE BACK TO SOURCE.
6. REMOVE EXISTING TELECOMMUNICATIONS BACKBOARD.
7. REMOVE EXISTING DISCONNECT FOR FIRE ALARM CONTROL PANEL AND ALL ASSOCIATED WIRING AND CONDUIT COMPLETE BACK TO POWER SOURCE.
8. REMOVE EXISTING COMMUNICATIONS CABINET AND ALL CABLES.
9. REMOVE EXISTING DISCONNECT, WIRING, AND CONDUIT COMPLETE BACK TO POWER SOURCE.
10. REMOVE EXISTING AUTOMATIC TRANSFER SWITCH.
11. REMOVE EXISTING GENERATOR.
12. DISCONNECT EXISTING EXHAUST FAN. REMOVE DISCONNECT, WIRING AND CONDUIT COMPLETE BACK TO POWER SOURCE.
13. DISCONNECT EXISTING WATER HEATER. REMOVE DISCONNECT, WIRING AND CONDUIT COMPLETE BACK TO POWER SOURCE.
14. DISCONNECT EXISTING PTAC UNIT. REMOVE DISCONNECT, WIRING AND CONDUIT COMPLETE BACK TO POWER SOURCE.
15. DISCONNECT EXISTING AIR HANDLING UNIT. REMOVE DISCONNECT, WIRING AND CONDUIT COMPLETE BACK TO POWER SOURCE.
16. DISCONNECT EXISTING BOILER. REMOVE DISCONNECT, WIRING AND CONDUIT COMPLETE BACK TO POWER SOURCE.
17. DISCONNECT EXISTING UNIT HEATER. REMOVE DISCONNECT, WIRING AND CONDUIT COMPLETE BACK TO POWER SOURCE.
18. DISCONNECT EXISTING HEAT PUMP. REMOVE DISCONNECT, WIRING AND CONDUIT COMPLETE BACK TO POWER SOURCE.
19. DISCONNECT EXISTING PUMP. REMOVE DISCONNECT, WIRING AND CONDUIT COMPLETE BACK TO POWER SOURCE.
20. DISCONNECT EXISTING DEHUMIDIFIER. REMOVE DISCONNECT, WIRING AND CONDUIT COMPLETE BACK TO POWER SOURCE.
21. PROTECT EXISTING DISCONNECT SERVING WATER TREATMENT BUILDING FOR THE DURATION OF CONSTRUCTION. DISCONNECT WILL BE RECONENCTED TO BUILDING SERVICE.

SYM	DESCRIPTION	DATE	APPR

NAVFAC

NORTH CAROLINA PROFESSIONAL SEAL 045329 ENGINEER MICHAEL K. WILSON, J.R.
7/1/26
SEAL

CRENSHAW CONSULTING engineers
www.crenshawconsulting.com
NC LICENSE #C-1156
3516 Bush Street, Suite 200
Raleigh, North Carolina 27609
919-871-1070 Fax: 871-5620

A/E INFO

APPROVED

FOR COMMANDER NAVFAC

ACTIVITY

SATISFACTORY TO

DES	MKW	DRW	JDC	CHK	JTR

PM/DM	L. PEED
BRANCH MANAGER	H. PERRY
CHIEF ENG/ARCH	P. FAULKNER
FIRE PROTECTION	D. CHASTAIN

DEPARTMENT OF THE NAVY
NAVAL FACILITIES ENGINEERING COMMAND
NAVAL FACILITIES ENGINEERING COMMAND ~ MIDATLANTIC
NAVAL STATION - NORFOLK, VA
IPT MARINE CORPS
MARINE CORPS AIR STATION
CHERRY POINT, NC

MCOLF ATLANTIC
BUILDING 7019 RENOVATIONS

FLOOR PLAN - POWER DEMOLITION

SCALE:	AS INDICATED
STATION DESIGN WON:	7406712
STATION CONSTRUCTION WON:	7406712
NAVFAC DRAWING NO.	12939553
SHEET	128 OF 148

ED101

DRAWFORM REVISION: 25 AUGUST 2020

DEMO NOTES

1 DISCONNECT EXISTING EXHAUST FAN. REMOVE DISCONNECT, WIRING AND CONDUIT COMPLETE BACK TO POWER SOURCE.

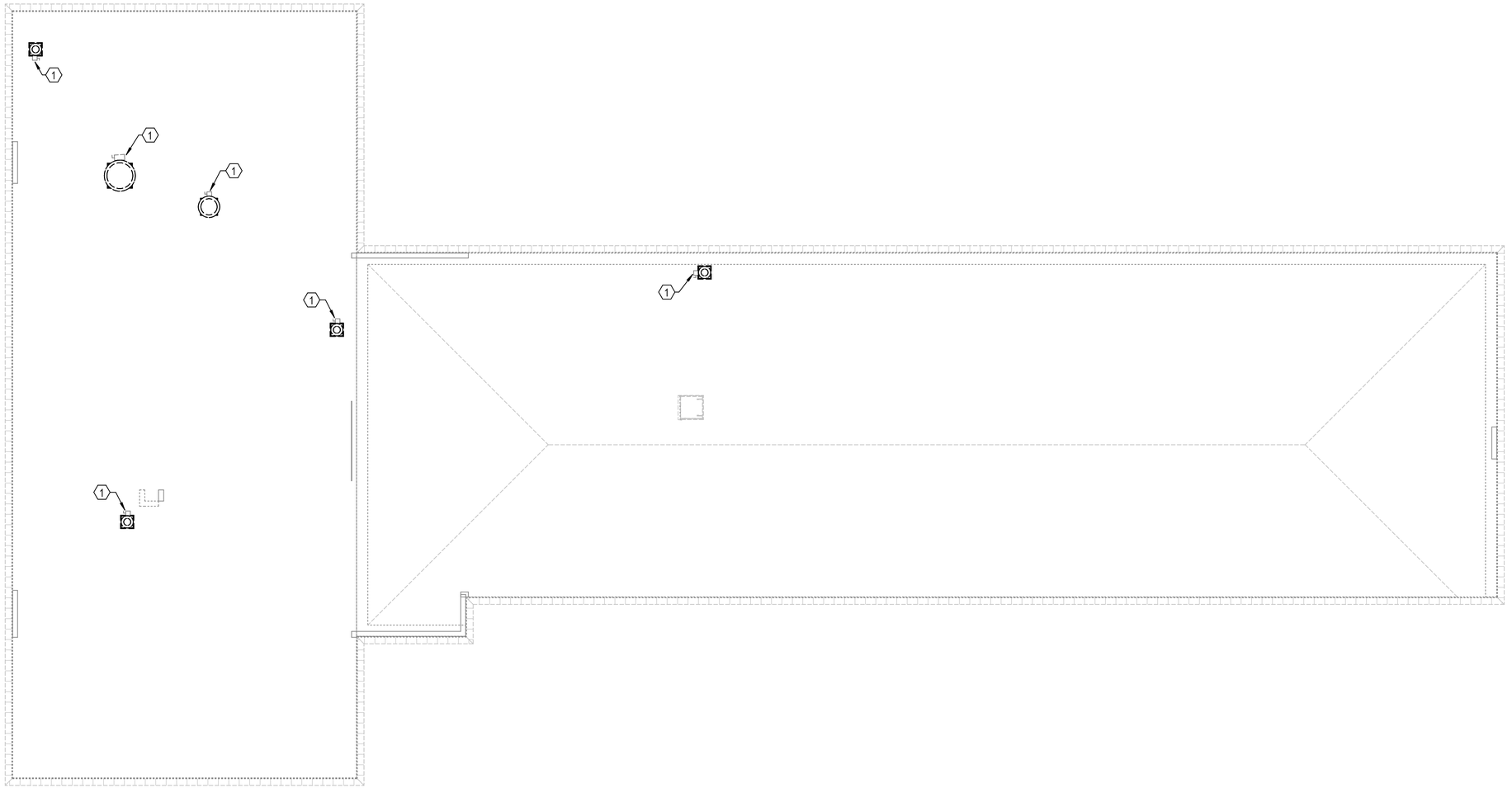

A1 ROOF PLAN - EQUIPMENT DEMOLITION
1/8" = 1'-0"

GRAPHIC SCALE: 1/8"=1'-0"
8' 0 4' 8' 16'

SYM	DESCRIPTION	DATE	APPR

NAVFAC

NORTH CAROLINA PROFESSIONAL SEAL 045329 ENGINEER MICHAEL K. WILSON, J.R.
7/1/26
SEAL

CRENSHAW CONSULTING Engineers
NC LICENSE #C-1156
www.crenshawconsulting.com
3518 Bush Street, Suite 200
Raleigh, North Carolina 27609
919-871-1070 Fax 871-5620
A/E INFO

APPROVED

FOR COMMANDER NAVFAC

ACTIVITY

SATISFACTORY TO

DES	MKW	DRW	JDC	CHK	JTR
PM/DM					L. PEED
BRANCH MANAGER					H. PERRY
CHIEF ENG/ARCH					P. FAULKNER
FIRE PROTECTION					D. CHASTAIN

DEPARTMENT OF THE NAVY
NAVAL FACILITIES ENGINEERING COMMAND
NAVAL FACILITIES ENGINEERING COMMAND ~ MIDATLANTIC
NAVAL STATION - NORFOLK, VA
IPT MARINE CORPS
MARINE CORPS AIR STATION
CHERRY POINT, NC

MCOLF ATLANTIC
BUILDING 7019 RENOVATIONS

ROOF PLAN - EQUIPMENT DEMOLITION

SCALE:	AS INDICATED
STATION DESIGN WON:	7406712
STATION CONSTRUCTION WON:	7406712
NAVFAC DRAWING NO.	12939554
SHEET	129 OF 148

ED102

DRAWFORM REVISION: 25 AUGUST 2020

DEMO NOTES

1. REMOVE EXISTING LIGHT FIXTURE, WIRING AND CONDUIT COMPLETE BACK TO POWER SOURCE. TYPICAL.
2. REMOVE EXISTING LIGHT SWITCH, WIRING, AND CONDUIT COMPLETE BACK TO POWER SOURCE. TYPICAL.
3. REMOVE EXISTING MOTION SENSOR, WIRING, AND CONDUIT COMPLETE BACK TO POWER SOURCE. TYPICAL.

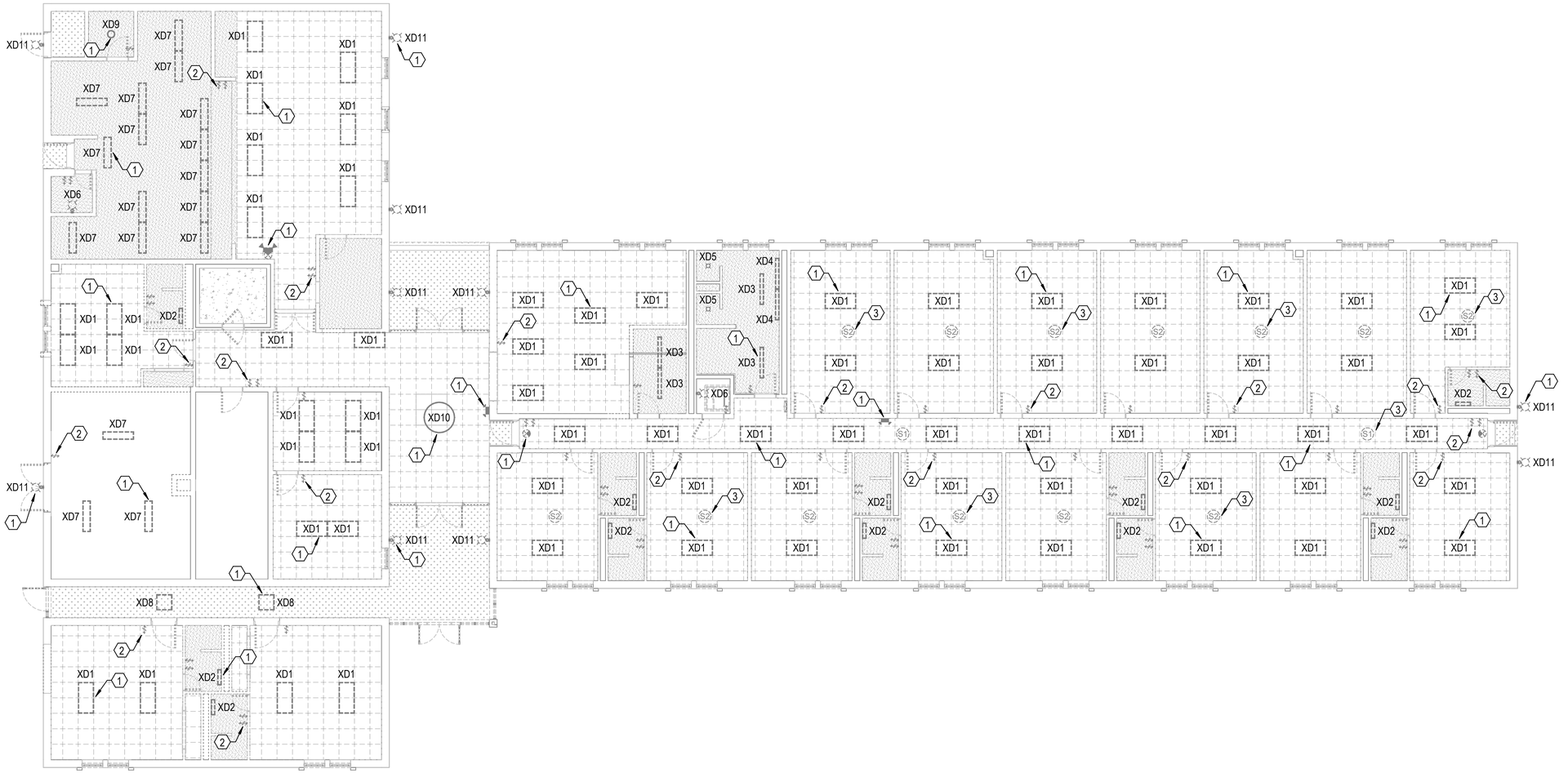

A1 FLOOR PLAN - LIGHTING DEMOLITION
1/8" = 1'-0"

GRAPHIC SCALE: 1/8"=1'-0"
8' 0 4' 8' 16'

SYM	DESCRIPTION	DATE	APPR

NAVFAC

NORTH CAROLINA PROFESSIONAL SEAL 045329 ENGINEER MICHAEL K. WILSON, JR.
7/1/26
SEAL

CRENSHAW CONSULTING engineers
NC LICENSE #C-1156
www.crenshawconsulting.com
3519 Bush Street, Suite 200
Raleigh, North Carolina 27609
919-871-1070 Fax 871-5620

A/E INFO

APPROVED

FOR COMMANDER NAVFAC

ACTIVITY

SATISFACTORY TO

DES	MKW	DRW	JDC	CHK	JTR

PM/DM	L. PEED
BRANCH MANAGER	H. PERRY
CHIEF ENG/ARCH	P. FAULKNER
FIRE PROTECTION	D. CHASTAIN

DEPARTMENT OF THE NAVY
NAVAL FACILITIES ENGINEERING COMMAND
NAVAL FACILITIES ENGINEERING COMMAND ~ MIDATLANTIC
NAVAL STATION - NORFOLK, VA
IPT MARINE CORPS
MARINE CORPS AIR STATION
CHERRY POINT, NC

MCOLF ATLANTIC
BUILDING 7019 RENOVATIONS

FLOOR PLAN - LIGHTING DEMOLITION

SCALE:	AS INDICATED
STATION DESIGN WON:	7406712
STATION CONSTRUCTION WON:	7406712
NAVFAC DRAWING NO.	12939555
SHEET	130 OF 148

ED103

DRAWFORM REVISION: 25 AUGUST 2020

SLEEPING UNIT NOTE:
ALL RECEPTACLES IN SLEEPING ROOMS MUST BE LISTED AS TAMPER RESISTANT. ALL BREAKERS SERVING SLEEPING ROOM RECEPTACLES AND LIGHTS MUST BE AFCI RATED.

POWER NOTES

1. SEE VOLTAGE DROP SCHEDULE FOR WIRE SIZING INFORMATION FOR ALL BRANCH CIRCUITS OVER 65' IN LENGTH.
2. ALL RECEPTACLES WITHIN 6 FEET FROM THE OUTSIDE EDGE OF ANY SINK MUST BE GFI PER NEC 210.8(B)(5).
3. LOCATE ALL DEVICES, EQUIPMENT, AND/OR JUNCTION BOXES REQUIRING ACCESS IN ACCESSIBLE LOCATIONS. AT HARD CEILING AREAS, COORDINATE ANY ACCESS HATCHES WITH ARCHITECT PRIOR TO INSTALLATION AND ROUGH-IN. TYPICALLY, ELECTRICAL DEVICES, ETC REQUIRING ACCESS MUST AVOID HARD CEILING AREAS OR MUST SHARE ACCESS POINTS WITH SUPPLIED MECHANICAL/PLUMBING EQUIPMENT (DISCONNECTS, ETC).
4. SEE ARCHITECTURAL SHEETS FOR INDICATIONS OF RATED WALLS.
5. PROVIDE LABEL PRINTER TYPE LABELING FOR ALL RECEPTACLES INDICATING SOURCE FEED WITH PANEL AND CIRCUIT NUMBER.
6. PROVIDE MACHINE ENGRAVED PLACARD LABELING ATTACHED WITH RIVETS TO ALL DISCONNECTS, PANELS, AND MOTOR-DISCONNECT SWITCHES INDICATING EQUIPMENT NAME, VOLTAGE AND PHASE, AMPERAGE, HERTZ AND SOURCE FEED.
7. ALL DISCONNECT SWITCHES ARE TO BE HEAVY DUTY TYPE.
8. CONTRACTOR MUST LOCATE JUNCTION BOXES, CONDUIT BODIES OR OTHER EQUIPMENT OR FITTINGS ABOVE INACCESSIBLE CEILING SUCH THAT THEY HAVE ACCESS PER NEC REQUIREMENTS.

NEW WORK NOTES

1. PROVIDE 30 AMP RECEPTACLE FOR DRYER. VERIFY NEMA CONFIGURATION WITH EQUIPMENT. PROVIDE 3-#10, #10 G, 3/4" C. TYPICAL ALL DRYER LOCATIONS.
2. 300 KW DIESEL GENERATOR. SEE SITE PLAN FOR LOCATION.
3. PROVIDE GENERATOR TEMPORARY DOCKING STATION. SEE RISER DIAGRAM FOR DETAILS.
4. CONNECT EXISTING DISCONNECT SERVING WATER TREATMENT BUILDING TO CIRCUIT AS SHOWN.
5. PROVIDE JUNCTION BOX FOR ICE MAKER. COORDINATE REQUIREMENTS WITH EQUIPMENT SUPPLIER.
6. PROVIDE CONNECTIONS FOR GENERATOR BATTERY CHARGER AND BATTERY CHARGER. COORDINATE WITH GENERATOR SUPPLIER.

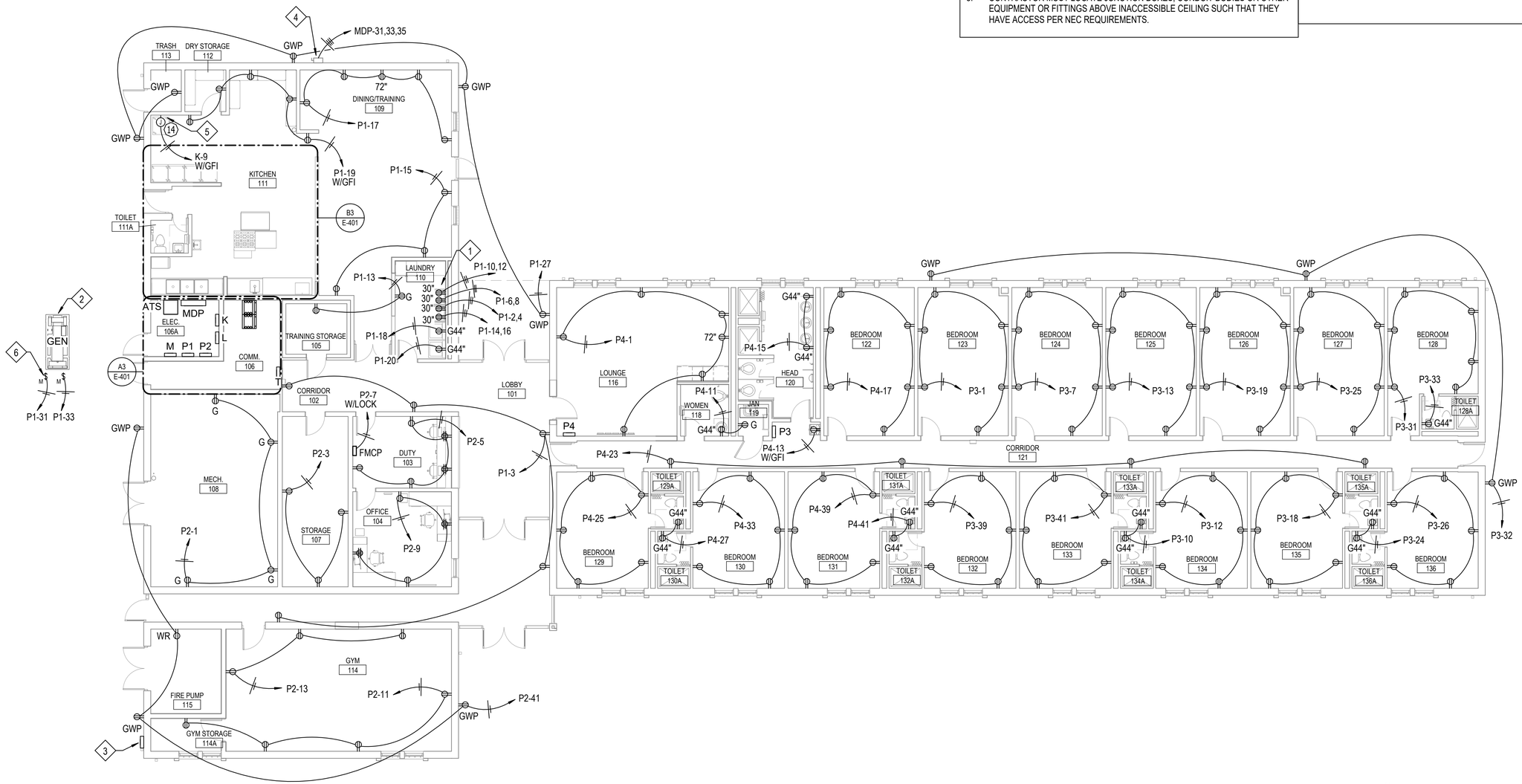

A1 FLOOR PLAN - POWER
1/8" = 1'-0"

GRAPHIC SCALE: 1/8"=1'-0"
8' 0 4' 8' 16'

SYM	DESCRIPTION	DATE	APPR

NAVFAC

NORTH CAROLINA PROFESSIONAL SEAL 045329 ENGINEER MICHAEL K. WILSON, JR.
7/1/26
SEAL

CRENSHAW CONSULTING Engineers
www.crenshawconsulting.com
NC LICENSE #C-1168
359 Bush Street, Suite 200
Raleigh, North Carolina 27609
919-871-1073 Fax 871-0820

A/E INFO

APPROVED

FOR COMMANDER NAVFAC

ACTIVITY

SATISFACTORY TO

DES	MKW	DRW	JDC	CHK	JTR

PM/DM L. PEED
BRANCH MANAGER H. PERRY
CHIEF ENG/ARCH P. FAULKNER
FIRE PROTECTION D. CHASTAIN

DEPARTMENT OF THE NAVY
NAVAL FACILITIES ENGINEERING COMMAND
1ST MARINE CORPS
MARINE CORPS AIR STATION

NAVAL FACILITIES ENGINEERING COMMAND – MIDATLANTIC
NAVAL STATION NORFOLK, VA.
CHERRY POINT, NC

MCOLF ATLANTIC
BUILDING 7019 RENOVATIONS

FLOOR PLAN - POWER

SCALE: AS INDICATED
STATION DESIGN WON: 7406712
STATION CONSTRUCTION WON: 7406712
NAVFAC DRAWING NO. 12939556
SHEET 131 OF 148

E-101

DRAWFORM REVISION: 25 AUGUST 2020

POWER NOTES

1. SEE VOLTAGE DROP SCHEDULE FOR WIRE SIZING INFORMATION FOR ALL BRANCH CIRCUITS OVER 65' IN LENGTH.
2. ALL RECEPTACLES WITHIN 6 FEET FROM THE OUTSIDE EDGE OF ANY SINK MUST BE GFI PER NEC 210.8(B)(5).
3. LOCATE ALL DEVICES, EQUIPMENT, AND/OR JUNCTION BOXES REQUIRING ACCESS IN ACCESSIBLE LOCATIONS. AT HARD CEILING AREAS, COORDINATE ANY ACCESS HATCHES WITH ARCHITECT PRIOR TO INSTALLATION AND ROUGH-IN. TYPICALLY, ELECTRICAL DEVICES, ETC REQUIRING ACCESS MUST AVOID HARD CEILING AREAS OR MUST SHARE ACCESS POINTS WITH SUPPLIED MECHANICAL/PLUMBING EQUIPMENT (DISCONNECTS, ETC).
4. SEE ARCHITECTURAL SHEETS FOR INDICATIONS OF RATED WALLS.
5. PROVIDE LABEL PRINTER TYPE LABELING FOR ALL RECEPTACLES INDICATING SOURCE FEED WITH PANEL AND CIRCUIT NUMBER.
6. PROVIDE MACHINE ENGRAVED PLACARD LABELING ATTACHED WITH RIVETS TO ALL DISCONNECTS, PANELS, AND MOTOR-DISCONNECT SWITCHES INDICATING EQUIPMENT NAME, VOLTAGE AND PHASE, AMPERAGE, HERTZ AND SOURCE FEED.
7. ALL DISCONNECT SWITCHES ARE TO BE HEAVY DUTY TYPE.
8. CONTRACTOR MUST LOCATE JUNCTION BOXES, CONDUIT BODIES OR OTHER EQUIPMENT OR FITTINGS ABOVE INACCESSIBLE CEILING SUCH THAT THEY HAVE ACCESS PER NEC REQUIREMENTS.

(E) NEW WORK NOTES

1. POWER RECEPTACLE FOR PTAC UNIT. PROVIDE RECEPTACLE, WIRING, AND CONDUIT COMPLETE. VERIFY EXACT NEMA CONFIGURATION WITH EQUIPMENT SUPPLIER. CLOSELY COORDINATE EXACT LOCATION OF RECEPTACLE WITH MECHANICAL SUCH THAT RECEPTACLE IS APPROPRIATELY PLACED FOR PTAC UNIT AND UNIT SHROUD.
2. CONNECT MAKE-UP AIR UNIT. PROVIDE DISCONNECT, WIRING, AND CONDUIT COMPLETE. COORDINATE WITH EQUIPMENT SUPPLIER.
3. CONNECT DEDICATED OUTSIDE CONDENSING UNIT. PROVIDE DISCONNECT, WIRING, AND CONDUIT COMPLETE. COORDINATE WITH MECHANICAL.
4. CONNECT CONDENSING UNIT. PROVIDE DISCONNECT, WIRING, AND CONDUIT COMPLETE. COORDINATE WITH MECHANICAL.
5. CONNECT DUCTLESS SPLIT CONDENSING UNIT. INDOOR UNIT IS POWERED BY OUTDOOR UNIT. PROVIDE DISCONNECT, WIRING, AND CONDUIT COMPLETE. COORDINATE WITH MECHANICAL.
6. CONNECT AIR HANDLING UNIT. PROVIDE DISCONNECT, WIRING, AND CONDUIT COMPLETE. COORDINATE WITH MECHANICAL.
7. CONNECT DUCTLESS SPLIT AIR HANDLING UNIT. INDOOR UNIT IS POWERED BY OUTDOOR UNIT. PROVIDE DISCONNECT, WIRING, AND CONDUIT COMPLETE. COORDINATE WITH MECHANICAL.
8. CONNECT CONDENSATE PUMP. PROVIDE DISCONNECT, WIRING, AND CONDUIT COMPLETE. COORDINATE WITH MECHANICAL.
9. CONNECT AIR DOOR. PROVIDE DISCONNECT, WIRING, AND CONDUIT COMPLETE. COORDINATE WITH MECHANICAL.
10. CONNECT KITCHEN EXHAUST FAN ON ROOF. PROVIDE DISCONNECT, WIRING, AND CONDUIT COMPLETE. COORDINATE WITH EQUIPMENT SUPPLIER.
11. CONNECT FIRE PUMP CONTROLLER. SEE ELECTRICAL RISER DIAGRAM. COORDINATE WITH FIRE PROTECTION.
12. CONNECT JOCKEY PUMP. PROVIDE DISCONNECT, WIRING, AND CONDUIT COMPLETE. COORDINATE WITH FIRE PROTECTION.
13. PROVIDE MAINTENANCE RECEPTACLE ON ROOF.

A1 FLOOR PLAN - EQUIPMENT CONNECTIONS
1/8" = 1'-0"

GRAPHIC SCALE: 1/8"=1'-0"
8' 0 4' 8' 16'

APPR	DATE	DESCRIPTION	SYM

NAVFAC

NORTH CAROLINA PROFESSIONAL SEAL 045329 ENGINEER MICHAEL K. WILSON, JR. 7/1/26 SEAL

CRENSHAW CONSULTING Engineers
NC LICENSE #C-1168
www.crenshawconsulting.com
3816 Bush Street, Suite 200
Raleigh, North Carolina 27609
919-871-1073 Fax 871-0409

A/E INFO

APPROVED

FOR COMMANDER NAVFAC

ACTIVITY

SATISFACTORY TO

DES	MKW	DRW	JDC	CHK	JTR

PM/DM	L. PEED
BRANCH MANAGER	H. PERRY
CHIEF ENG/ARCH	P. FAULKNER
FIRE PROTECTION	D. CHASTAIN

DEPARTMENT OF THE NAVY
NAVAL FACILITIES ENGINEERING COMMAND
NAVFAC LANT
NAVAL FACILITIES ENGINEERING COMMAND ~ MIDATLANTIC
NAVAL STATION - NORFOLK, VA.
1ST MARINE CORPS
MARINE CORPS AIR STATION
CHERRY POINT, NC

MCOLF ATLANTIC
BUILDING 7019 RENOVATIONS

FLOOR PLAN - EQUIPMENT CONNECTIONS

SCALE:	AS INDICATED
STATION DESIGN WON:	7406712
STATION CONSTRUCTION WON:	7406712
NAVFAC DRAWING NO.	12939557
SHEET	132 OF 148

E-102

DRAWFORM REVISION: 25 AUGUST 2020

NEW WORK NOTES

1. CONNECT FIXTURE TO FUNCTION AS A NIGHT LIGHT AHEAD OF LOCAL SWITCH. (TOTAL FIXTURE UNSWITCHED).
2. CONNECT BATTERY IN LIGHT FIXTURE AHEAD OF CONTACTOR SO THAT EMERGENCY BATTERY COMES ON ONLY IN THE EVENT OF POWER LOSS. FIXTURE IS NORMALLY CONTROLLED BY EXTERIOR LIGHTING TIMECLOCK.
3. CONNECT ALL EMERGENCY LIGHTS AND EXIT SIGNS SHOWN IN THIS AREA TO CIRCUIT #L-2 ON LOCKED BREAKER.
4. CONNECT ALL EMERGENCY LIGHTS AND EXIT SIGNS SHOWN IN THIS AREA TO CIRCUIT #P4-2 ON LOCKED BREAKER.

LIGHTING NOTES

1. SEE VOLTAGE DROP SCHEDULE FOR WIRE SIZING INFORMATION FOR ALL BRANCH CIRCUITS OVER 65' IN LENGTH.
2. LOCATE ALL DEVICES, EQUIPMENT, AND/OR JUNCTION BOXES REQUIRING ACCESS IN ACCESSIBLE LOCATIONS. AT HARD CEILING AREAS, COORDINATE ANY ACCESS HATCHES WITH ARCHITECT PRIOR TO INSTALLATION AND ROUGH-IN. TYPICALLY, ELECTRICAL DEVICES, ETC REQUIRING ACCESS MUST AVOID HARD CEILING AREAS OR MUST SHARE ACCESS POINTS WITH SUPPLIED MECHANICAL/PLUMBING EQUIPMENT (DISCONNECTS, ETC).
3. SEE ARCHITECTURAL SHEETS FOR INDICATIONS OF RATED WALLS.
4. PROVIDE LABEL PRINTER TYPE LABELING FOR ALL SWITCHES INDICATING SOURCE FEED WITH PANEL AND CIRCUIT NUMBER.

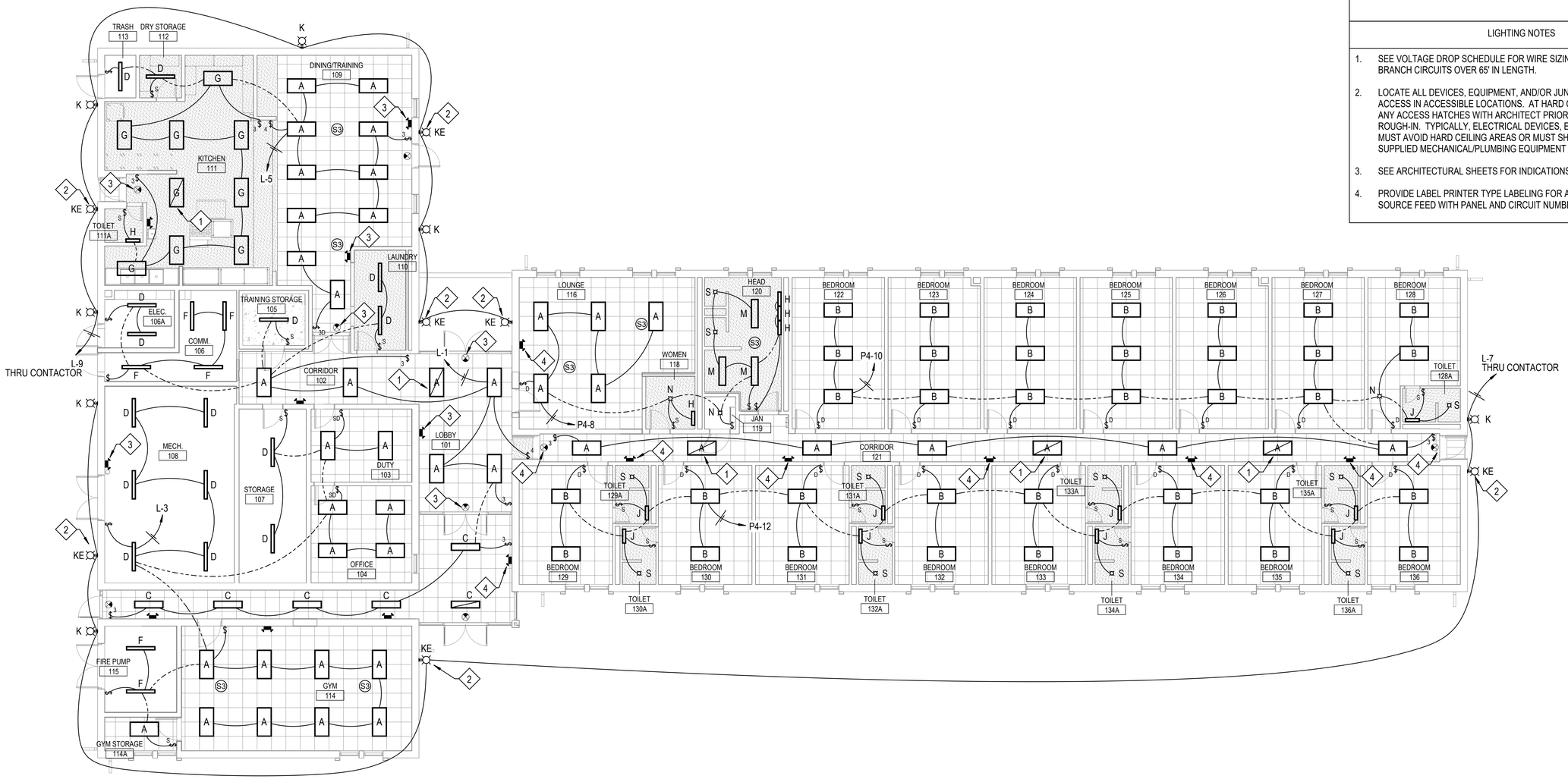

A1 FLOOR PLAN - LIGHTING
1/8" = 1'-0"

GRAPHIC SCALE: 1/8"=1'-0"
8' 0 4' 8' 16'

SYM	DESCRIPTION	DATE	APPR

NAVFAC

NORTH CAROLINA PROFESSIONAL SEAL 045329 ENGINEER MICHAEL K. WILSON, J.R.
7/11/26
SEAL

CRENSHAW CONSULTING engineers
www.crenshawconsulting.com
NC LICENSE #C-1156
3519 South Street, Suite 200
Raleigh, North Carolina 27609
919-871-1070 Fax 871-5620

A/E INFO

APPROVED

FOR COMMANDER NAVFAC

ACTIVITY

SATISFACTORY TO

DES	MKW	DRW	JDC	CHK	JTR

PM/DM	L. PEED
BRANCH MANAGER	H. PERRY
CHIEF ENG/ARCH	P. FAULKNER
FIRE PROTECTION	D. CHASTAIN

DEPARTMENT OF THE NAVY
NAVAL FACILITIES ENGINEERING COMMAND
NAVAL FACILITIES ENGINEERING COMMAND ~ MIDATLANTIC
NAVAL STATION - NORFOLK, VA
IPT MARINE CORPS
MARINE CORPS AIR STATION
CHERRY POINT, NC

MCOLF ATLANTIC
BUILDING 7019 RENOVATIONS

FLOOR PLAN - LIGHTING

SCALE:	AS INDICATED
STATION DESIGN WON:	7406712
STATION CONSTRUCTION WON:	7406712
NAVFAC DRAWING NO.	12939558
SHEET	133 OF 148

E-103

DRAWFORM REVISION: 25 AUGUST 2020

COMPATIBLE MATERIALS

THE MATERIALS SECTION OF U.L. 96A (SECTION 5) REQUIRES THAT METALS MUST BE USED IN COMBINATIONS THAT ARE GALVANICALLY COMPATIBLE. THEREFORE, ALUMINUM COMPONENTS MUST NOT BE INSTALLED IN DIRECT CONTACT WITH BARE COPPER ROOFING MATERIALS/SURFACES, AND COPPER COMPONENTS MUST NOT BE INSTALLED IN DIRECT CONTACT WITH BARE ALUMINUM ROOFING MATERIALS/SURFACES. METALS ACCEPTABLE FOR USE WITH COPPER AND ALUMINUM ARE AS FOLLOWS:

METALS ACCEPTABLE FOR USE WITH COPPER:
NICKEL, BRASS, TIN, LEAD, STAINLESS STEEL, AND MONEL.

METALS ACCEPTABLE FOR USE WITH ALUMINUM:
MAGNESIUM, ZINC, GALVANIZED STEEL, STAINLESS STEEL, LEAD, AND WROUGHT IRON.

PAINT IS NOT CONSIDERED ACCETABLE BETWEEN GALVANICALLY INCOMPATIBLE ROOFING, FLASHING, AND OTHER MATERIALS AND SURFACES.

GENERAL NOTES

1. SEE SHEET E-001 FOR GENERAL NOTES AND LEGEND.
2. JOB CONDITIONS MAY NECESSITATE SLIGHT VARIATION IN LOCATION OF DOWN LEADS AND AIR TERMINALS.
3. INSTALLATION MUST BE IN ACCORDANCE WITH U.L. REQUIREMENTS AND RECIEVE THE U.L. LIGHTNING PROTECTION INSPECTION CERTIFICATE.
4. BOND ALL BODIES OF CONDUCTANCE AND BODIES OF INDUCTANCE LOCATED WITHIN 6 FEET OF MAIN CONDUCTOR AS REQURIED.
5. CONDUCTOR MUST BE FASTENED A MAXIMUM OF 3 FEET ON CENTER.
6. ALL CONDUCTOR BENDS MUST BE A MINIMUM OF 90 DEGREES WITH A MINIMUM 8 INCH RADIUS.
7. INSTALLATION TO BE PERFORMED IN A NEAT AND ORDERLY MANNER, AND MUST BE DONE AS INCONSPICUOUSLY AS POSSIBLE.
8. VERIFY ELECTRICAL GROUND, WATER LINE, AND OTHER UNDERGROUND PIPING IS COMMON WITH THE LIGHTNING PROTECTION GROUDNING.
9. A SURGE PROTECTIVE DEVICE OR UNIT MUST BE PROVIDED ON EACH ELECTRICAL AND TELECOMMUNICATIONS SERVICE ENTRANCE, ALONG WITH EACH RADIO AND TELEVISION LEAD-IN BY THE ELECTRICAL CONTRACTOR OR RESPECTIVE SYSTEM INSTALLER.
10. ALL MATERIALS MUST BE U.L. LISTED.
11. INSTALLATION IS BASED UPON ALL ROOF-MOUNTED LIGHTNING PROTECTION COMPONENTS BEING MECHANICALLY FASTENED TO ROOF SURFACE. ANY VARIANCE OR SPECIAL PROVISIONS MUST BE RESPONSIBILITY OF THE ROOFING OR GENERAL CONTRACTOR.
12. ALUMINUM MATERIALS MUST BE USED ON ALUMINUM SURFACES.
13. THE LIGHTNING PROTECTION SYSTEM IS DESIGNED AND DETAILED PER THE CURRENT NFPA 780 AND U.L. 96A CODES.
14. CONTRACTOR MUST ENSURE THAT THE BASE PWD IS PRESENT FOR FINAL TESTING OF GROUNDING SYSTEM.

NEW WORK NOTES

1 CLASS I AIR TERMINAL, 15 INCHES IN HEIGHT/LENGTH. USE 3/8 INCH DIAMETER FOR COPPER OR 1/2 INCH DIAMETER FOR ALUMINUM. AIR TERMINAL MATERIAL MUST MATCH AND BE COMPATIBLE WITH MATERIAL USED FOR CONDUCTORS. TYPICAL.

2 CLASS I CONDUCTORS MUST BE #17 AWG, 29 STRAND COPPER OR #14 AWG, 14 STRAND ALUMINUM. TYPICAL.

3 DOWN LEAD CONDUCTOR TO GROUND ROD. PROVIDE PVC SCHEDULE 40 TO PROTECT CONDUCTOR FROM PHYSICAL DAMAGE. CONNECT DOWN LEAD CONDUCTOR TO 3/4 INCH BY 10 FOOT COPPERCLAD GROUND ROD BY EXOTHERMIC CONNECTION. SEE GROUNDING DETAIL.

4 PROVIDE TEST WELL AT DOWNLEAD GROUND ROD LOCATION FOR FUTURE TESTING AND MAINTENANCE.

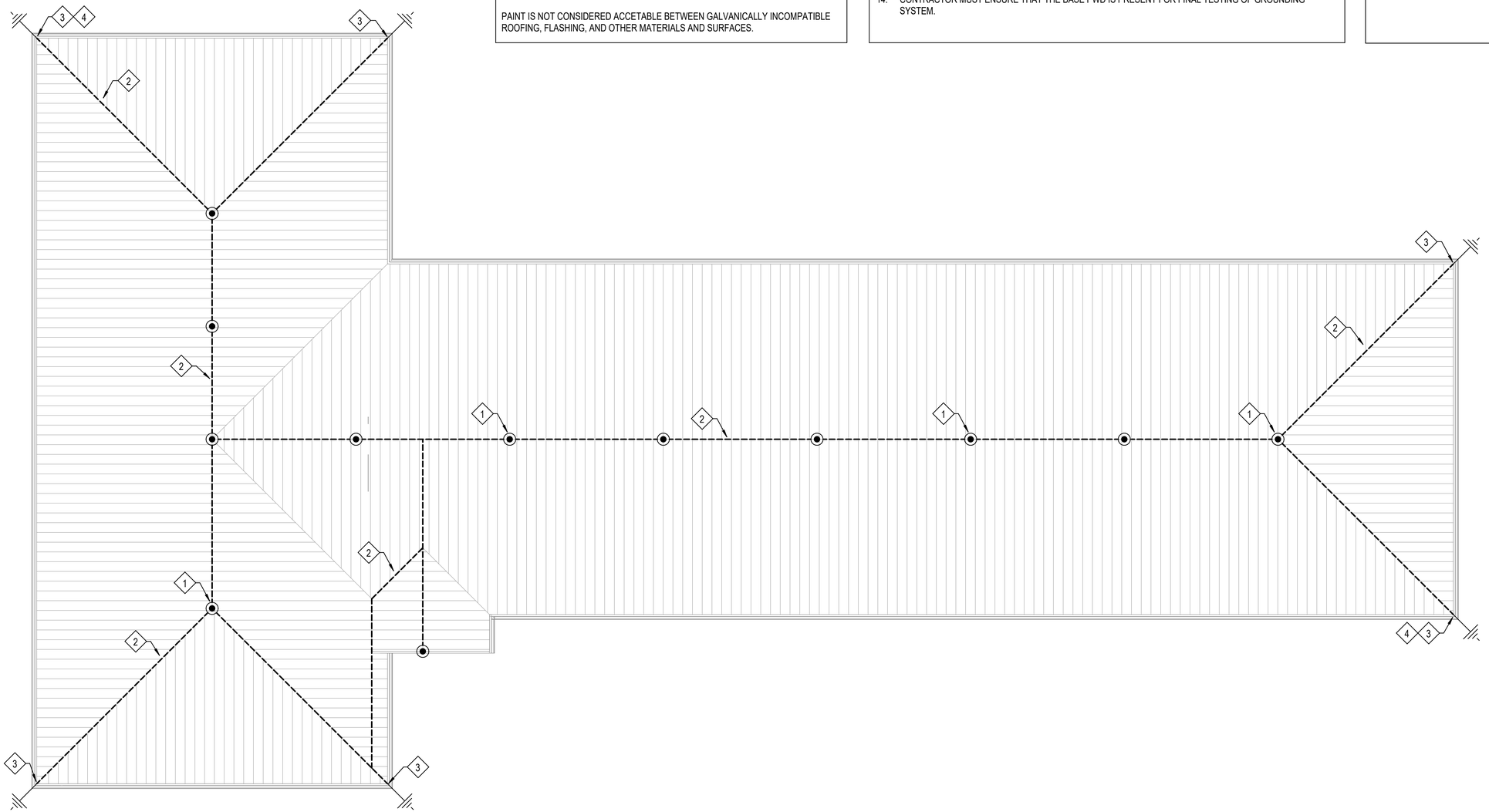

A1 ROOF PLAN - LIGHTNING PROTECTION
1/8" = 1'-0"

N

GRAPHIC SCALE: 1/8"=1'-0"
8' 0 4' 8' 16'

APPR	
DATE	
DESCRIPTION	
SYM	

NAVFAC

NORTH CAROLINA PROFESSIONAL SEAL 045329 ENGINEER MICHAEL K. WILSON, JR.
7/17/26
SEAL

CRENSHAW CONSULTING Engineers
www.crenshawconsulting.com
NC LICENSE #C-1158
3518 Bush Street, Suite 200
Raleigh, North Carolina 27609
919-871-1070 Fax 871-0820

A/E INFO

APPROVED

FOR COMMANDER NAVFAC

ACTIVITY

SATISFACTORY TO

DES	MKW	DRW	JDC	CHK	JTR

PM/DM	L. PEED
BRANCH MANAGER	H. PERRY
CHIEF ENG/ARCH	P. FAULKNER
FIRE PROTECTION	D. CHASTAIN

DEPARTMENT OF THE NAVY
NAVAL FACILITIES ENGINEERING COMMAND
DEPT. MARINE CORPS:
MARINE CORPS AIR STATION
NAVAL FACILITIES ENGINEERING COMMAND - MIDATLANTIC
NAVAL STATION - NORFOLK, VA.
CHERRY POINT, NC

MCOLF ATLANTIC
BUILDING 7019 RENOVATIONS

ROOF PLAN - LIGHTNING PROTECTION

SCALE:	AS INDICATED
STATION DESIGN WON:	7406712
STATION CONSTRUCTION WON:	7406712
NAVFAC DRAWING NO.	12939559
SHEET	134 OF 148

E-104

DRAWFORM REVISION: 25 AUGUST 2020

SHUNT TRIP NOTES

1. ALL EQUIPMENT LOCATED UNDER THE FIRE SUPPRESSION HOOD MUST BE ON A SHUNT TRIP BREAKER. VERIFY PROPER OPERATION OF EXISTING SHUNT TRIP CONNECTIONS SERVING EXISTING EQUIPMENT BEING RELOCATED. PROVIDE NEW SHUNT TRIP BREAKERS AS NEEDED TO ENSURE PROPER SHUNT TRIP OPERATION.
2. CONNECT HOOD FIRE SUPPRESSION TO SHUNT TRIP BREAKERS IN PANELS. COORDINATE EXACT LOCATION AND REQUIREMENTS W/ HOOD SUPPLIER PRIOR TO ROUGH-IN.

KITCHEN NOTES

1. VERIFY ALL KITCHEN EQUIPMENT REQUIREMENTS, CONNECTION TYPES, AND LOCATIONS WITH KITCHEN EQUIPMENT SUPPLIER AND NAMEPLATES
2. CONNECT FIRE SUPPRESSION SYSTEM TO SHUNT TRIP CIRCUIT BREAKERS AND GAS SOLENOID VALVES AS INDICATED TO REMOVE POWER FROM ELECTRIC EQUIPMENT WHEN FIRE SUPPRESSION SYSTEM IS ACTIVATED.
3. ALL FINAL CONNECTIONS FROM JUNCTION BOX OR DISCONNECT SWITCH TO KITCHEN EQUIPMENT MUST BE MADE WITH NEW LIQUID-TIGHT FLEXIBLE CONDUIT. CONDUIT AND WIRE SIZE TO BE AS SHOWN ON PLANS.
4. ALL SINGLE-PHASE RECEPTACLES RATED 150V TO GROUND OR LESS, 50 AMPS OR LESS AND THREE-PHASE RECEPTACLES RATED 150V TO GROUND OR LESS, 100 AMPS OR LESS IN KITCHEN OR SERVING AREAS MUST HAVE GFI PROTECTION.
5. ALL LIGHT FIXTURES OVER FOOD SERVICE AND PREPARATION MUST HAVE AN APPROVED LENS.
6. PROVIDE WATER PROOF COVERS FOR ALL RECEPTACLES IN THE KITCHEN.

NEW WORK NOTES

1. NEW TELECOMMUNICATION RACK(S). COORDINATE EXACT PLACEMENT WITH BASE TELEPHONE.
2. PROVIDE (1) NEMA 5-20R RECEPTACLE AND (1) NEMA 6-30R 30 AMP, 208 VOLT TWIST-LOCK RECEPTACLE FOR EACH COMMUNICATIONS RACK. PROVIDE 3-#10, #10 GND, IN 3/4" C FOR THE 30 AMP RECEPTACLE. VERIFY EXACT NEMA CONFIGURATIONS WITH BASE TELEPHONE. PROVIDE CONNECTIONS NEAR THE TOP PORTION OF VERTICAL MANAGEMENT SIDE OF RACK.
3. PROVIDE UNISTRUT LOCATED 6" BEHIND AND 6" ABOVE TELECOMM RACK. MOUNT UNISTRUT SUPPORTS ON 10' CENTERS FROM THE CEILING AND AT EACH WALL.
4. CONNECT DOAS SUPPLY FAN AND EXHAUST FAN THRU VFD. PROVIDE DISCONNECTS, WIRING, AND CONDUIT COMPLETE. COORDINATE WITH MECHANICAL.
5. CONNECT BOILER. PROVIDE DISCONNECT, WIRING, AND CONDUIT COMPLETE. COORDINATE WITH MECHANICAL.
6. CONNECT GAS WATER HEATER. PROVIDE DISCONNECT, WIRING, AND CONDUIT COMPLETE. COORDINATE WITH PLUMBING.
7. CONNECT RECIRCULATION PUMP. PROVIDE DISCONNECT, WIRING, AND CONDUIT COMPLETE. COORDINATE WITH PLUMBING.
8. CONNECT PUMP. PROVIDE DISCONNECT, WIRING, AND CONDUIT COMPLETE. COORDINATE WITH MECHANICAL.
9. CONNECT HVAC CONTROL PANEL. PROVIDE DISCONNECT, WIRING, AND CONDUIT COMPLETE. COORDINATE WITH MECHANICAL.
10. PROVIDE JUNCTION BOX FOR ANSUL PULL BOX. COORDINATE LOCATION AND REQUIREMENTS W/ EQUIPMENT SUPPLIER.
11. PROVIDE JUNCTION BOX FOR GAS SOLENOID VALVE. COORDINATE LOCATION AND REQUIREMENTS W/ EQUIPMENT SUPPLIER. CONNECT TO FIRE SUPPRESSION SYSTEM AS REQUIRED.
12. PROVIDE JUNCTION BOX FOR HOOD CONTROL POWER. COORDINATE LOCATION AND REQUIREMENTS W/ EQUIPMENT SUPPLIER.
13. ROUTE ALL CONDUITS SERVING THE COOKING ISLAND FROM ABOVE.

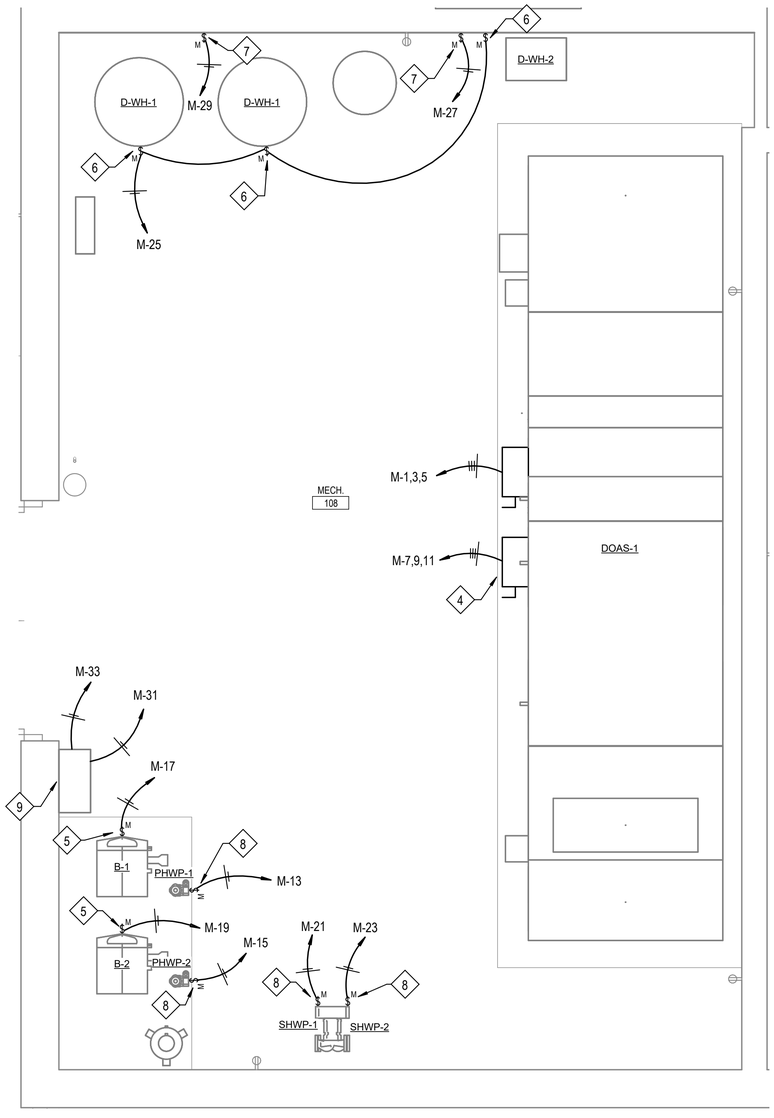

A1 ENLARGED PLAN - 108 MECH - EQUIPMENT CONNECTIONS
1/2" = 1'-0"

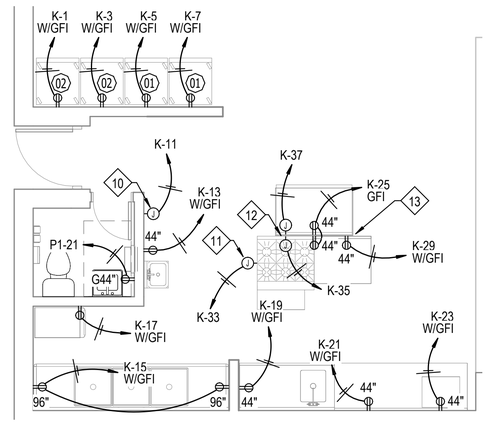

B3 ENLARGED PLAN - 111 KITCHEN - POWER
1/4" = 1'-0"

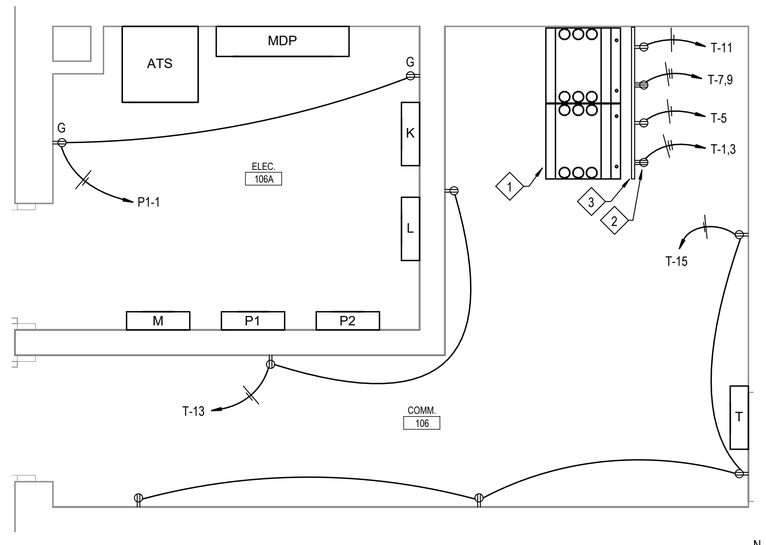

A3 ENLARGED PLAN - 106 COMM, 106A ELEC - POWER
1/2" = 1'-0"

POWER NOTES

1. SEE VOLTAGE DROP SCHEDULE FOR WIRE SIZING INFORMATION FOR ALL BRANCH CIRCUITS OVER 65' IN LENGTH.
2. ALL RECEPTACLES WITHIN 6 FEET FROM THE OUTSIDE EDGE OF ANY SINK MUST BE GFI PER NEC 210.8(B)(5).
3. LOCATE ALL DEVICES, EQUIPMENT, AND/OR JUNCTION BOXES REQUIRING ACCESS IN ACCESSIBLE LOCATIONS. AT HARD CEILING AREAS, COORDINATE ANY ACCESS HATCHES WITH ARCHITECT PRIOR TO INSTALLATION AND ROUGH-IN. TYPICALLY, ELECTRICAL DEVICES, ETC REQUIRING ACCESS MUST AVOID HARD CEILING AREAS OR MUST SHARE ACCESS POINTS WITH SUPPLIED MECHANICAL/PLUMBING EQUIPMENT (DISCONNECTS, ETC).
4. SEE ARCHITECTURAL SHEETS FOR INDICATIONS OF RATED WALLS.
5. PROVIDE LABEL PRINTER TYPE LABELING FOR ALL RECEPTACLES INDICATING SOURCE FEED WITH PANEL AND CIRCUIT NUMBER.
6. PROVIDE MACHINE ENGRAVED PLACARD LABELING ATTACHED WITH RIVETS TO ALL DISCONNECTS, PANELS, AND MOTOR-DISCONNECT SWITCHES INDICATING EQUIPMENT NAME, VOLTAGE AND PHASE, AMPERAGE, HERTZ AND SOURCE FEED.
7. ALL DISCONNECT SWITCHES ARE TO BE HEAVY DUTY TYPE.
8. CONTRACTOR MUST LOCATE JUNCTION BOXES, CONDUIT BODIES OR OTHER EQUIPMENT OR FITTINGS ABOVE INACCESSIBLE CEILING SUCH THAT THEY HAVE ACCESS PER NEC REQUIREMENTS.

GRAPHIC SCALE: 1/4"=1'-0"
4' 0 2' 4' 8'

GRAPHIC SCALE: 1/2"=1'-0"
2' 0 1' 2' 4'

APPR	DATE	DESCRIPTION	SYM

NAVFAC

NORTH CAROLINA PROFESSIONAL SEAL 045329 ENGINEER MICHAEL K. WILSON, JR. 7/1/26 SEAL

CRENSHAW CONSULTING Engineers
NC LICENSE #C-1168
www.crenshawconsulting.com
3816 Bush Street, Suite 200
Raleigh, North Carolina 27609
919-871-1073 Fax 871-0409

A/E INFO

APPROVED

FOR COMMANDER NAVFAC

ACTIVITY

SATISFACTORY TO

DES	MKW	DRW	JDC	CHK	JTR

PM/DM	L. PEED
BRANCH MANAGER	H. PERRY
CHIEF ENG/ARCH	P. FAULKNER
FIRE PROTECTION	D. CHASTAIN

DEPARTMENT OF THE NAVY
NAVAL FACILITIES ENGINEERING COMMAND - MIDATLANTIC
1PT. MARINE CORPS
MARINE CORPS AIR STATION
NAVAL FACILITIES ENGINEERING COMMAND - MIDATLANTIC
NAVAL STATION - NORFOLK, VA.
CHERRY POINT, NC

MCOLF ATLANTIC BUILDING 7019 RENOVATIONS

ENLARGED PLANS - POWER

SCALE:	AS INDICATED
STATION DESIGN WON:	7406712
STATION CONSTRUCTION WON:	7406712
NAVFAC DRAWING NO.	12939560
SHEET	135 OF 148

E-401

DRAWFORM REVISION: 25 AUGUST 2020

NOTE: THIS SKETCH IS A NON-PROPRIETARY GRAPHIC REPRESENTATION OF A LUMINAIRE THAT MAY MEET THE SPECIFICATION REQUIREMENTS. IT IS NOT INTENDED TO INDICATE A CERTAIN MANUFACTURER OR PREFERENCE.

LUMINAIRE REQUIREMENTS:

1. HOUSING - HEAVY GAUGE COLD ROLLED STEEL OR DIE CAST ALUMINUM. SIZE SHOWN AS INDICATED IN LUMINAIRE SCHEDULE.
2. OPTICS - FROSTED ACRYLIC OR POLYCARBONATE LENS WITH DIE FORMED COLD ROLLED SHEET STEEL REFLECTORS.
3. LIGHT SOURCE - SOLID STATE LEDS, 3500K CCT UON, MINIMUM 80 CRI UON, AND MINIMUM EFFICACY OF 100 LUMENS/WATT UON. INITIAL LUMEN OUTPUT AS INDICATED IN LUMINAIRE SCHEDULE.
4. DRIVER - REPLACEABLE, INTEGRAL, HIGH-EFFICIENCY DIMMABLE DRIVER WITH MINIMUM 0.9 PF, OPERATING VOLTAGE OF 120-277V, THERMAL MANAGEMENT, AND < 20% THD. ON/OFF CONTROL AND FULLY DIMMABLE DOWN TO 10% MINIMUM OR AS INDICATED IN LUMINAIRE SCHEDULE.
5. CERTIFICATION - UL LISTED FOR DRY OR DAMP LOCATION, ROHS COMPLIANT. DLC QUALIFIED. COMPLIES WITH IES LM79, LM80 AND TM21 TESTING STANDARDS.
6. MOUNTING - RECESSED IN HARD OR ACOUSTICAL TILE CEILING.
7. OPTIONS - EMERGENCY BATTERY BACK-UP, INTEGRAL OCCUPANCY/VACANCY SENSOR, VARIOUS SIZE AND OUTPUT OPTIONS, SURFACE-MOUNTING KIT.

DIRECT/INDIRECT LED LUMINAIRE

REVISED: NOVEMBER 2020 | LIGHTING PLATE: NL-1

NOTE: THIS SKETCH IS A NON-PROPRIETARY GRAPHIC REPRESENTATION OF A LUMINAIRE THAT MAY MEET THE SPECIFICATION REQUIREMENTS. IT IS NOT INTENDED TO INDICATE A CERTAIN MANUFACTURER OR PREFERENCE.

LUMINAIRE REQUIREMENTS:

1. HOUSING - DIE-FORMED, COLD ROLLED STEEL. SIZE AS INDICATED IN LUMINAIRE SCHEDULE.
2. OPTICS - ACRYLIC OR POLYCARBONATE LENS AS INDICATED IN LUMINAIRE SCHEDULE.
3. LIGHT SOURCE - SOLID STATE LEDS, 3500K CCT UON, MINIMUM 80 CRI UON, AND MINIMUM EFFICACY OF 100 LUMENS/WATT UON. INITIAL LUMEN OUTPUT AS INDICATED IN LUMINAIRE SCHEDULE.
4. DRIVER - REPLACEABLE, INTEGRAL, HIGH-EFFICIENCY DRIVER WITH MINIMUM 0.9 PF, OPERATING VOLTAGE OF 120-277V, THERMAL MANAGEMENT, AND < 20% THD. ON/OFF CONTROL AND FULLY DIMMABLE DOWN TO 10% MINIMUM OR AS INDICATED IN LUMINAIRE SCHEDULE.
5. CERTIFICATION - UL LISTED FOR DRY OR DAMP LOCATION, ROHS COMPLIANT, DLC QUALIFIED. COMPLIES WITH IES LM79, LM80 AND TM21 TESTING STANDARDS.
6. MOUNTING - RECESSED IN HARD OR ACOUSTICAL TILE CEILING.
7. OPTIONS - EDGE-LIT LENS, PRISMATIC LENS. EMERGENCY BATTERY BACK-UP, INTEGRAL OCCUPANCY/VACANCY SENSOR, VARIOUS SIZE AND OUTPUT OPTIONS, SURFACE-MOUNTING KIT.

FLAT LENS LED LUMINAIRE

REVISED: NOVEMBER 2020 | LIGHTING PLATE: NL-2

NOTE: THIS SKETCH IS A NON-PROPRIETARY GRAPHIC REPRESENTATION OF A LUMINAIRE THAT MAY MEET THE SPECIFICATION REQUIREMENTS. IT IS NOT INTENDED TO INDICATE A CERTAIN MANUFACTURER OR PREFERENCE.

LUMINAIRE REQUIREMENTS:

1. HOUSING - DIE-FORMED, COLD ROLLED STEEL, WITH REINFORCEMENT RIBS FOR RIGIDITY; ENDCAPS SAME MATERIAL AS HOUSING, SECURED TABS, SCREWS, OR RIVETS. SIZE AS INDICATED IN LUMINAIRE SCHEDULE.
2. OPTICS - ACRYLIC OR POLYCARBONATE LENS AS INDICATED IN LUMINAIRE SCHEDULE.
3. LIGHT SOURCE - SOLID STATE LEDS, 3500K CCT UON, MINIMUM 80 CRI UON, AND MINIMUM EFFICACY OF 110 LUMENS/WATT UON. INITIAL LUMEN OUTPUT AS INDICATED IN LUMINAIRE SCHEDULE.
4. DRIVER - REPLACEABLE, INTEGRAL, HIGH-EFFICIENCY DRIVER WITH MINIMUM 0.9 PF, OPERATING VOLTAGE OF 120-277V, THERMAL MANAGEMENT, AND < 20% THD. ON/OFF CONTROL AND FULLY DIMMABLE DOWN TO 10% MINIMUM OR AS INDICATED IN LUMINAIRE SCHEDULE.
5. CERTIFICATION - UL LISTED FOR DRY OR DAMP LOCATION, ROHS COMPLIANT, DLC QUALIFIED. COMPLIES WITH IES LM79, LM80 AND TM21 TESTING STANDARDS.
6. MOUNTING - SURFACE MOUNTED.
7. OPTIONS - EMERGENCY BATTERY BACK-UP, INTEGRAL OCCUPANCY/VACANCY SENSOR, VARIOUS SIZE AND OUTPUT OPTIONS.

SURFACE LED WRAPAROUND

REVISED: NOVEMBER 2020 | LIGHTING PLATE: NL-3

NOTE: THIS SKETCH IS A NON-PROPRIETARY GRAPHIC REPRESENTATION OF A LUMINAIRE THAT MAY MEET THE SPECIFICATION REQUIREMENTS. IT IS NOT INTENDED TO INDICATE A CERTAIN MANUFACTURER OR PREFERENCE.

LUMINAIRE REQUIREMENTS:

1. HOUSING - COLD-ROLLED STEEL OR DIE CAST ALUMINUM, WITH HEAT SINK. APERTURE SIZE AND SHAPE AS INDICATED IN LUMINAIRE SCHEDULE.
2. LIGHT SOURCE - SOLID STATE LEDS, 3500K CCT UON, MINIMUM 80 CRI UON, AND MINIMUM EFFICACY OF 70 LUMENS/WATT UON. INITIAL LUMEN OUTPUT AS INDICATED IN LUMINAIRE SCHEDULE.
3. DRIVER - REPLACEABLE, INTEGRAL, HIGH-EFFICIENCY DIMMABLE DRIVER WITH MINIMUM 0.9 PF, OPERATING VOLTAGE OF 120-277V, THERMAL MANAGEMENT, AND < 20% THD. ON/OFF CONTROL AND FULLY DIMMABLE DOWN TO 10% MINIMUM OR AS INDICATED IN LUMINAIRE SCHEDULE.
4. CERTIFICATION - UL LISTED FOR DRY OR DAMP LOCATION, ROHS COMPLIANT. COMPLIES WITH IES LM79, LM80 AND TM21 TESTING STANDARDS.
5. MOUNTING - RECESSED IN HARD OR ACOUSTICAL TILE CEILING. PROVIDE T-BAR HANGERS FOR INSTALLATION IN ACOUSTICAL TILE CEILINGS OR TABS WHEN MOUNTING IN HARD CEILINGS.
6. OPTIONS - EMERGENCY BATTERY BACK-UP, VARIOUS ACRYLIC OR POLYCARBONATE LENSES, REFLECTORS, LOUVERS AND TRIMS. VARIOUS BEAM ANGLES. IC RATED HOUSING.

FIXED RECESSED DOWNLIGHT

REVISED: NOVEMBER 2020 | LIGHTING PLATE: NL-12

NOTE: THIS SKETCH IS A NON-PROPRIETARY GRAPHIC REPRESENTATION OF A LUMINAIRE THAT MAY MEET THE SPECIFICATION REQUIREMENTS. IT IS NOT INTENDED TO INDICATE A CERTAIN MANUFACTURER OR PREFERENCE.

LUMINAIRE REQUIREMENTS:

1. HOUSING - EXTRUDED ALUMINUM OR WELDED STEEL HOUSING WITH SNAP-ON END CAPS. SIZE AS INDICATED IN LUMINAIRE SCHEDULE.
2. OPTICS - DIFFUSE ACRYLIC LENS.
3. LIGHT SOURCE - SOLID STATE LEDS, 3500K CCT UON, MINIMUM 80 CRI UON, AND MINIMUM EFFICACY OF 90 LUMENS/WATT UON. INITIAL LUMEN OUTPUT AS INDICATED IN LUMINAIRE SCHEDULE.
4. DRIVER - REPLACEABLE, INTEGRAL, HIGH-EFFICIENCY DIMMABLE DRIVER WITH MINIMUM 0.9 PF, OPERATING VOLTAGE OF 120-277V, THERMAL MANAGEMENT, AND < 20% THD. ON/OFF CONTROL AND FULLY DIMMABLE DOWN TO 10% MINIMUM OR AS INDICATED IN LUMINAIRE SCHEDULE.
5. CERTIFICATION - UL LISTED FOR DAMP OR WET LOCATION, ROHS COMPLIANT. DLC QUALIFIED. COMPLIES WITH IES LM79, LM80 AND TM21 TESTING STANDARDS.
6. MOUNTING - PENDANT, STEM, OR SURFACE MOUNTED WITH STAINLESS STEEL MOUNTING HARDWARE.
7. OPTIONS - INTEGRAL OCCUPANCY SENSOR, EMERGENCY BATTERY BACK-UP, VARIOUS PROFILE DIMENSIONS AND RUN LENGTHS, AND VARIOUS CLEAR OR FROSTED POLYCARBONATE LENSES.

LED INDUSTRIAL LIGHT

REVISED: NOVEMBER 2020 | LIGHTING PLATE: NL-23

NOTE: THIS SKETCH IS A NON-PROPRIETARY GRAPHIC REPRESENTATION OF A LUMINAIRE THAT MAY MEET THE SPECIFICATION REQUIREMENTS. IT IS NOT INTENDED TO INDICATE A CERTAIN MANUFACTURER OR PREFERENCE.

LUMINAIRE REQUIREMENTS:

1. HOUSING - HIGH-IMPACT, UV-STABILIZED, INJECTION-MOLDED THERMOPLASTIC HOUSING.
2. LIGHT SOURCE - SOLID STATE LEDS.
3. DRIVER - INTEGRAL, HIGH-EFFICIENCY DRIVER WITH MINIMUM 0.9 PF, OPERATING VOLTAGE OF 120-277V, THERMAL MANAGEMENT, AND < 20% THD. ON/OFF CONTROL AND BATTERY BACKUP INTEGRAL TO UNIT.
4. CERTIFICATION - NFPA 101. UL LISTED FOR DAMP OR WET LOCATION, ROHS COMPLIANT. COMPLIES WITH IES LM79, LM80 AND TM21 TESTING STANDARDS.
5. MOUNTING - WALL SURFACE MOUNTED.
6. OPTIONS - WHITE OR BLACK FINISH.

LED EMERGENCY LIGHTING UNIT (ELU)

REVISED: NOVEMBER 2020 | LIGHTING PLATE: NL-26

NOTE: THIS SKETCH IS A NON-PROPRIETARY GRAPHIC REPRESENTATION OF A LUMINAIRE THAT MAY MEET THE SPECIFICATION REQUIREMENTS. IT IS NOT INTENDED TO INDICATE A CERTAIN MANUFACTURER OR PREFERENCE.

LUMINAIRE REQUIREMENTS:

1. HOUSING - DIE-CAST ALUMINUM OR HIGH-IMPACT, UV-STABILIZED, INJECTION-MOLDED THERMOPLASTIC.
2. LIGHT SOURCE - SOLID STATE LEDS.
3. DRIVER - INTEGRAL, HIGH-EFFICIENCY DRIVER WITH MINIMUM 0.9 PF, OPERATING VOLTAGE OF 120/277V, THERMAL MANAGEMENT, AND < 20% THD.
4. CERTIFICATION - NFPA 101, UL LISTED FOR DAMP OR WET LOCATION, AND ROHS COMPLIANT.
5. MOUNTING - SURFACE MOUNTED ON CEILING AND/OR WALL.
6. OPTIONS - RED OR GREEN LETTERING, ONE- OR TWO-SIDED. ELU REMOTE HEAD CAPABILITIES. BATTERY BACKUP.

EXIT SIGN

REVISED: NOVEMBER 2020 | LIGHTING PLATE: NL-28

NOTE: THIS SKETCH IS A NON-PROPRIETARY GRAPHIC REPRESENTATION OF A LUMINAIRE THAT MAY MEET THE SPECIFICATION REQUIREMENTS. IT IS NOT INTENDED TO INDICATE A CERTAIN MANUFACTURER OR PREFERENCE.

LUMINAIRE REQUIREMENTS:

1. HOUSING - DIE-CAST OR EXTRUDED ALUMINUM WITH INTEGRAL PASSIVE COOLING MECHANISM. HEAT SINK INCORPORATED DIRECTLY INTO HOUSING OR DRIVER COMPARTMENT.
2. OPTICS - PRECISION MOLDED ACRYLIC LENS WITH TYPE II, III, OR IV DISTRIBUTIONS. BUG UPLIGHT RATING OF U0, WITH GLARE RATING AS DETERMINED BY LIGHTING ZONE INSTALLED.
3. LIGHT SOURCE - SOLID STATE LEDS, 3000K CCT UON, MINIMUM 70 CRI UON, AND MINIMUM EFFICACY OF 80 LUMENS/WATT UON. INITIAL LUMEN OUTPUT AS INDICATED IN LUMINAIRE SCHEDULE.
4. DRIVER - REPLACEABLE, INTEGRAL, HIGH-EFFICIENCY DIMMABLE DRIVER WITH MINIMUM 0.9 PF, OPERATING VOLTAGE OF 120-277V, THERMAL MANAGEMENT, AND < 20% THD. ON-OFF CONTROL AND FULLY DIMMABLE DOWN TO 10% MINIMUM OR AS INDICATED IN LUMINAIRE SCHEDULE.
5. CERTIFICATION - UL LISTED FOR WET LOCATION, ROHS COMPLIANT. COMPLIES WITH IES LM79, LM80 AND TM21 TESTING STANDARDS.
6. MOUNTING - SURFACE MOUNTED WITH STAINLESS STEEL MOUNTING HARDWARE.
7. OPTIONS - VARIOUS LIGHT DISTRIBUTIONS. INTEGRAL MOTION SENSOR, PHOTOCELL, BATTERY BACK-UP.

LED WALL PACK

REVISED: NOVEMBER 2020 | LUMINAIRE PLATE: XL-10

SYM	DESCRIPTION	DATE	APPR

NAVFAC

NORTH CAROLINA PROFESSIONAL ENGINEER SEAL 045329 MICHAEL K. WILSON, J.R. 7/1/26

SEAL

CRENSHAW CONSULTING engineers
NC LICENSE #C-1156
www.crenshawconsulting.com
3516 Bush Street, Suite 200
Raleigh, North Carolina 27609
919-871-1070 Fax 871-5620

A/E INFO

APPROVED

FOR COMMANDER NAVFAC

ACTIVITY

SATISFACTORY TO

DES MKW	DRW JDC / CHK JTR
PM/DM	L. PEED
BRANCH MANAGER	H. PERRY
CHIEF ENG/ARCH	P. FAULKNER
FIRE PROTECTION	D. CHASTAIN

DEPARTMENT OF THE NAVY
NAVAL FACILITIES ENGINEERING COMMAND
NAVAL FACILITIES ENGINEERING COMMAND ~ MIDATLANTIC
IPT MARINE CORPS
NAVAL STATION - NORFOLK, VA
MARINE CORPS AIR STATION
CHERRY POINT, NC

MCOLF ATLANTIC
BUILDING 7019 RENOVATIONS

ELECTRICAL DETAILS

SCALE:	AS INDICATED
STATION DESIGN WON:	7406712
STATION CONSTRUCTION WON:	7406712
NAVFAC DRAWING NO.	12939561
SHEET	136 OF 148

E-501

DRAWFORM REVISION: 25 AUGUST 2020

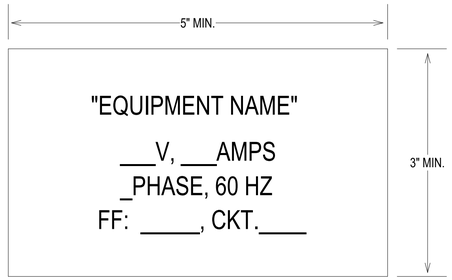

PLACARD MUST BE HARD PLASTIC WITH BLACK LETTERING ENGRAVED ON A WHITE BACKGROUND AND ATTACHED WITH RIVETS TO THE ENCLOSURE COVER IN PLAIN VIEW

C1 DISCONNECT IDENTIFICATION PLACARD
NTS

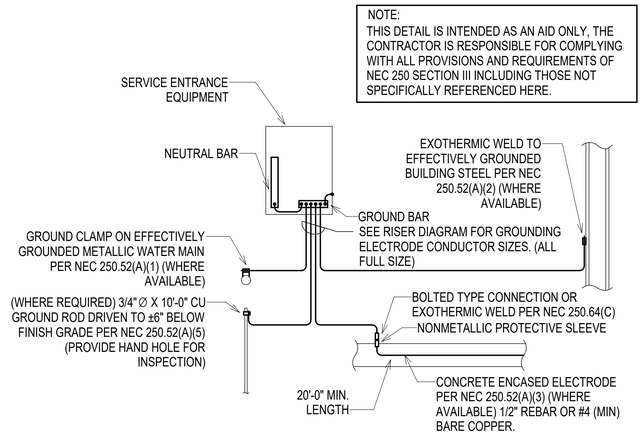

C2 SERVICE GROUND DETAIL
NTS

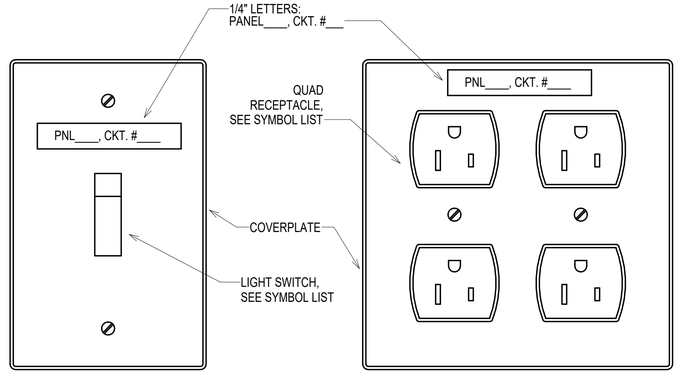

C4 COVERPLATE LABELING DETAIL
NTS

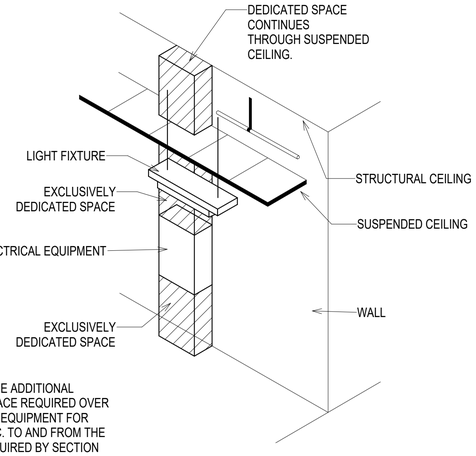

NOTE:
THIS FIGURE ILLUSTRATES THE ADDITIONAL EXCLUSIVELY DEDICATED SPACE REQUIRED OVER AND UNDER THE ELECTRICAL EQUIPMENT FOR THE CABLES, RACEWAYS, ETC. TO AND FROM THE ELECTRICAL EQUIPMENT REQUIRED BY SECTION 110.26 (F) OF THE NATIONAL ELECTRICAL CODE.

A1 NEC 110.26(F) DEDICATED SPACE DETAIL
NTS

TABLE A - WORKING CLEARANCES			
VOLTAGE TO GROUND NOMINAL	MINIMUM CLEAR DISTANCE (FEET) CONDITION: 1	2	3
0-150	3	3	3
151-800	3	3-1/2	4

WHERE THE "CONDITIONS" ARE AS FOLLOWS:

1. EXPOSED LIVE PARTS ON ONE SIDE AND NO LIVE OR EXPOSED GROUNDED PARTS ON THE OTHER SIDE OF THE WORKING SPACE, OR EXPOSED LIVE PARTS ON BOTH SIDES EFFECTIVELY GUARDED BY SUITABLE WOOD OR OTHER INSULATING MATERIALS.
   INSULATED WIRE OR INSULATED BUSBARS OPERATING AT NOT OVER 300V SHALL NOT BE CONSIDERED LIVE PARTS.
2. EXPOSED LIVE PARTS ON ONE SIDE AND GROUNDED PARTS ON THE OTHER SIDE.
3. EXPOSED LIVE PARTS ON BOTH SIDES OF THE WORK SPACE (NOT GUARDED AS PROVIDED IN CONDITION 1) WITH THE OPERATOR BETWEEN.

NOTE:
THIS FIGURE ILLUSTRATES THE WORKING SPACE IN FRONT OF THE ELECTRICAL EQUIPMENT REQUIRED BY SECTION 110.26 OF THE NATIONAL ELECTRICAL CODE.

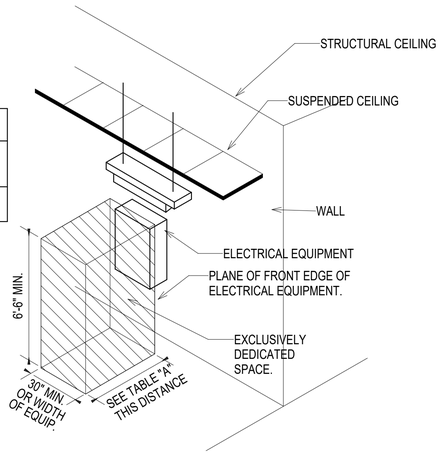

A2 NEC 110.26 WORKING CLEARANCE DETAIL
NTS

NOTES:

1. PROVIDE SELF-ADHESIVE VINYL LABEL TO AFFIX TO ELECTRICAL EQUIPMENT TO WARN OF ARC FLASH HAZARDS.
2. THE LABEL FORMAT AND TEXT MUST BE IN ACCORDANCE WITH THE FIGURE.
3. THE LABEL MUST BE LOCATED ON THE EQUIPMENT TO BE CLEARLY VISIBLE TO QUALIFIED PERSONS BEFORE EXAMINATION, ADJUSTMENT, SERVICING, OR MAINTENANCE OF THE EQUIPMENT.
4. THE SIZE OF THE LABEL MUST BE MINIMUM:

EQUIPMENT TYPE	HEIGHT	WIDTH
INDOOR	2"	3"
OUTDOOR	3"	4.5"

5. A DOWNLOADABLE WINDOWS METAFILE IS AVAILABLE ON THE WHOLE BUILDING DESIGN GUIDE WEBSITE (WWW.WBDG.ORG) FOR USE IN A LABEL MAKING MACHINE.

A. THE FILE IS LOCATED ON THE "NAVFAC CADD DETAILS" PAGE. TO NAVIGATE TO THIS LOCATION, FOLLOW: HOME > DOCUMENTS & REFERENCES > CCB > CADD LIBRARY > NAVFAC CADD RESOURCES > NAVFAC CADD DETAILS.

B. ALTERNATIVELY, TYPE IN THE FOLLOWING ADDRESS IN INTERNET EXPLORER: HTTP://WWW.WBDG.ORG/CCB/BROWSE_CAT.PHP?C=232

GENERAL ARC FLASH WARNING LABEL

SKETCH DATE	APRIL 2015	STYLE	AF-1

APPR.	DATE	DESCRIPTION	SYM

NAVFAC

NORTH CAROLINA PROFESSIONAL SEAL 045329 ENGINEER MICHAEL K. WILSON, JR. 7/1/26 SEAL

CRENSHAW CONSULTING Engineers
www.crenshawconsulting.com
NC LICENSE #C-1168 | 3816 Bush Street, Suite 200, Raleigh, North Carolina 27609 | 919-871-1073 | Fax 871-0409

A/E INFO

APPROVED

FOR COMMANDER NAVFAC

ACTIVITY

SATISFACTORY TO

DES	MKW	DRW	JDC	CHK	JTR
PM/DM					L. PEED
BRANCH MANAGER					H. PERRY
CHIEF ENG/ARCH					P. FAULKNER
FIRE PROTECTION					D. CHASTAIN

DEPARTMENT OF THE NAVY
NAVAL FACILITIES ENGINEERING COMMAND
1ST MARINE CORPS
MARINE CORPS AIR STATION
NAVAL FACILITIES ENGINEERING COMMAND ~ MIDATLANTIC
NAVAL STATION - NORFOLK, VA.
CHERRY POINT, NC

MCOLF ATLANTIC
BUILDING 7019 RENOVATIONS

ELECTRICAL DETAILS

SCALE:	AS INDICATED
STATION DESIGN WON:	7406712
STATION CONSTRUCTION WON:	7406712
NAVFAC DRAWING NO.	12939562
SHEET	137 OF 148

E-502

DRAWFORM REVISION: 25 AUGUST 2020

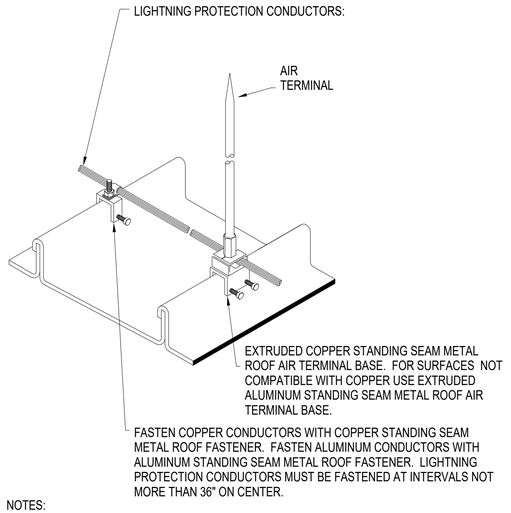

NOTES:

AIR TERMINAL SPACING MUST CONFORM TO NFPA 780 & UL 96A REQUIREMENTS.

MATERIAL COMPATIBILITY MUST CONFORM TO NFPA 780 & 96A REQUIREMENTS.

MATERIAL CLASS MUST CONFORM TO NFPA 780 & UL 96A REQUIREMENTS.

AIR TERMINALS MUST BE UL LISTED & CAL-OSHA APPROVED.

AIR TERMINAL DETAIL

NTS

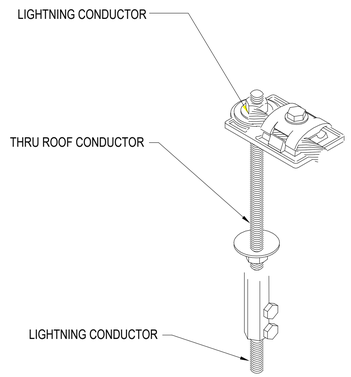

THRU WALL ASSEMBLY DETAIL

NTS LRODTWL1

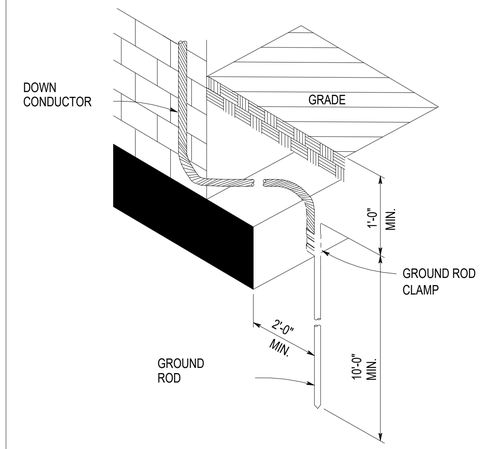

GROUNDING DETAIL

NTS BLDGSG

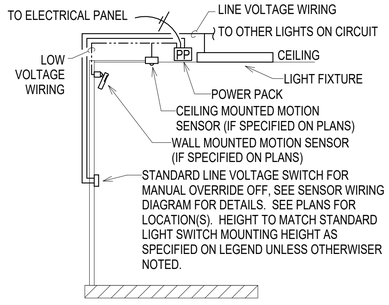

NOTES

1. THERE MUST BE A MAXIMUM OF 2 MOTION SENSORS PER POWER PACK.
2. CEILING MOUNTED MOTION SENSORS MUST BE MOUNTED AT LEAST 6' FROM A DIFFUSER.
3. MOTION SENSORS AND MOTION SENSOR SWITCHES MUST BE SET FOR 30 MINUTE TIME DELAY. CONTRACTOR MUST ADJUST SENSITIVITY ON SENSOR AS REQUIRED TO MEET ROOM CONDITIONS AND SIZE.
4. CONTRACTOR MUST PROVIDE THE PROPER QUANTITY OF POWER PACKS FOR THE DESIGN. IN ROOMS THAT UTILIZE 277 AND 120 VOLT LIGHTING, A MINIMUM OF 2 POWER PACKS WILL BE REQUIRED (1 FOR EACH VOLTAGE).
5. DUAL TECHNOLOGY SENSORS MUST BE PROGRAMMED SUCH THAT BOTH TECHNOLOGIES ARE NEEDED TO TURN ON THE LIGHTS INITIALLY, BUT ONLY ONE TECHNOLOGY IS REQUIRED TO KEEP THE LIGHTS ON.

A1 TYPICAL MOTION SENSOR W/ LINE VOLTAGE SWITCH DETAIL

NTS

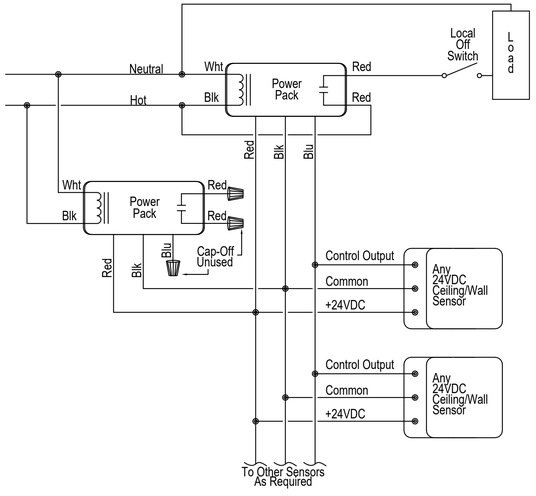

A2 LOW VOLTAGE MOTION SENSOR W/ MULTIPLE POWER PACKS WIRING DIAGRAM

NTS

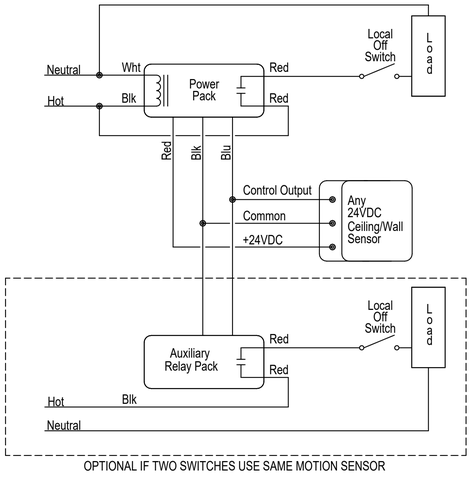

OPTIONAL IF TWO SWITCHES USE SAME MOTION SENSOR

A4 LOW VOLTAGE MOTION SENSOR WIRING DIAGRAM

NTS

APPR	DATE	DESCRIPTION	SYM

NAVFAC

NORTH CAROLINA PROFESSIONAL SEAL 045329 ENGINEER MICHAEL K. WILSON, JR. 7/1/26 SEAL

CRENSHAW CONSULTING Engineers
www.crenshawconsulting.com
NC LICENSE #C-1168
3816 Bush Street, Suite 200
Raleigh, North Carolina 27609
919-871-1073 Fax 871-0420

A/E INFO

APPROVED

FOR COMMANDER NAVFAC

ACTIVITY

SATISFACTORY TO

DES	MKW	DRW	JDC	CHK	JTR

PM/DM	L. PEED
BRANCH MANAGER	H. PERRY
CHIEF ENG/ARCH	P. FAULKNER
FIRE PROTECTION	D. CHASTAIN

DEPARTMENT OF THE NAVY
NAVAL FACILITIES ENGINEERING COMMAND
1ST MARINE CORPS
MARINE CORPS AIR STATION
NAVAL FACILITIES ENGINEERING COMMAND ~ MIDATLANTIC
NAVAL STATION - NORFOLK, VA.
CHERRY POINT, NC

MCOLF ATLANTIC BUILDING 7019 RENOVATIONS

ELECTRICAL DETAILS

SCALE:	AS INDICATED
STATION DESIGN WON:	7406712
STATION CONSTRUCTION WON:	7406712
NAVFAC DRAWING NO.	12939563
SHEET	138 OF 148

E-503

DRAWFORM REVISION: 25 AUGUST 2020

DEMOLITION LIGHT FIXTURE SCHEDULE

TYPE	DESCRIPTION	VOLTAGE	LIGHT SOURCE	LOAD	NOTES
XD1	EXISTING FIXTURE TO BE DEMOLISHED	120 V	LED	36 VA	
XD2	EXISTING FIXTURE TO BE DEMOLISHED	120 V	LED	36 VA	
XD3	EXISTING FIXTURE TO BE DEMOLISHED	120 V	LED	36 VA	
XD4	EXISTING FIXTURE TO BE DEMOLISHED	120 V	LED	36 VA	
XD5	EXISTING FIXTURE TO BE DEMOLISHED	120 V	LED	10 VA	
XD6	EXISTING FIXTURE TO BE DEMOLISHED	120 V	LED	36 VA	
XD7	EXISTING FIXTURE TO BE DEMOLISHED	120 V	LED	36 VA	
XD8	EXISTING FIXTURE TO BE DEMOLISHED	120 V	LED	30 VA	
XD9	EXISTING FIXTURE TO BE DEMOLISHED	120 V	LED	12 VA	
XD10	EXISTING FIXTURE TO BE DEMOLISHED	120 V	FLUORESCENT	80 VA	
XD11	EXISTING FIXTURE TO BE DEMOLISHED	120 V	LED	50 VA	

LIGHT FIXTURE SCHEDULE

TYPE	DESCRIPTION	LIGHTING PLATE	VOLTAGE	LIGHT SOURCE	LUMENS	CCT	DIMMING LEVEL	LOAD	NOTES
A	2'X4' RECESSED LED	NL-1	120 V	LED	4,000	3,500 K	10%	36 VA	
B	2'X4' RECESSED LED	NL-1	120 V	LED	3,000	3,500 K	10%	30 VA	
C	1'X4' SURFACE MOUNTED LED	NL-3	120 V	LED	4,000	3,500 K	NONE	36 VA	
D	4' LED STRIP	NL-23	120 V	LED	4,000	3,500 K	NONE	36 VA	
F	4' LED STRIP	NL-23	120 V	LED	7,000	3,500 K	NONE	50 VA	
G	2X4 RECESSED FLAT LENS LED	NL-2	120 V	LED	5,000	3,500 K	10%	42 VA	
H	2' VANITY LED	NL-23	120 V	LED	1,000	3,500 K	NONE	25 VA	
J	2' VANITY LED	NL-23	120 V	LED	1,000	3,500 K	NONE	25 VA	DAMP LISTED.
K	EXTERIOR WALL PACK	XL-10	120 V	LED	4,000	4,000 K	NONE	25 VA	WET LISTED.
KE	EXTERIOR WALL PACK W/ EMERGENCY BATTERY	XL-10	120 V	LED	4,000	4,000 K	NONE	25 VA	WET LISTED. PROVIDE ZERO DEGREE BATTERY.
M	1'X4' RECESSED LED	NL-3	120 V	LED	3,000	3,500 K	10%	25 VA	
N	RECESSED LED DOWNLIGHT	NL-12	120 V	LED	500	3,500 K	10%	12 VA	DAMP LISTED.
S	RECESSED LED DOWNLIGHT	NL-12	120 V	LED	500	3,500 K	NONE	12 VA	WET LISTED.
EMERGENCY									
	EMERGENCY LIGHTING UNIT	NL-26	120 V	LED	200	N/A	NONE	6 VA	--
	EXIT SIGN	NL-28	120 V	LED	N/A	N/A	NONE	1 VA	

LIGHT FIXTURE SCHEDULE NOTES

1. ALL FIXTURES, BALLASTS, AND DRIVERS MUST COMPLY WITH INTERNATIONAL BUILDING CODE, INTERNATIONAL ENERGY CONSERVATION CODE AND MUST BE UL LISTED. ALL LED DRIVERS MUST COMPLY WITH NEMA 410.
2. ALL FIXTURES NOTED AS EMERGENCY MUST HAVE EMERGENCY ILLUMINATION FUNCTIONALITY AS DESCRIBED BELOW. IN ALL CASES, BATTERIES MUST BE RATED FOR THE ENVIRONMENT IN WHICH THEY ARE INSTALLED.
   - INTERIOR LINEAR AND TROFFER LED FIXTURES MUST HAVE 1,100 LUMEN (MINIMUM) OUTPUT, 90 MINUTE BATTERY PACK. LED DOWNLIGHTS MUST HAVE A 500 LUMEN (MINIMUM) OUTPUT, 90 MINUTE BATTERY PACK OR MUST BE PROVIDED WITH A FULL OUTPUT INVERTER.
   - EXTERIOR EMERGENCY LIGHTS MUST HAVE AN INTEGRAL EXTERIOR RATED (0° F) OR REMOTE MOUNTED 1,100 LUMEN OUTPUT 90 MINUTE BATTERY.
   - TEST SWITCHES FOR EMERGENCY BATTERIES MUST BE INTEGRAL TO THE FIXTURE SERVED BY THE BATTERY.
   - EMERGENCY FIXTURES MUST OPERATE ONE LAMP WHERE MULTIPLE EMERGENCY FIXTURES ARE TO BE INSTALLED IN AN AREA, AND MUST OPERATE TWO LAMPS WHERE THE LOSS OF A SINGLE LAMP WOULD RENDER THE SPACE IN TOTAL DARKNESS DURING EMERGENCY OPERATION.
   - EMERGENCY LIGHTING DESIGN IS BASED ON EXISTING FIXTURES LUMEN OUTPUTS AS DESCRIBED ABOVE. CONTRACTOR MUST VERIFY ANY EXISTING EMERGENCY FIXTURE BATTERIES HAVE LUMEN OUTPUTS AS INDICATED AND MUST REPLACE ANY BATTERIES RATED LESS.
   - EMERGENCY LIGHTING UNITS WITH DEDICATED EMERGENCY HEADS MUST PROVIDE 1 F.C. FOR AT LEAST 25' FOR A MINIMUM OF 90 MINUTES.
3. FIXTURES INDICATED AS DIMMABLE MUST BE PROVIDED WITH ALL NECESSARY COMPONENTS (BALLAST, DRIVER, SWITCH ETC.) AS NECESSARY TO ACHIEVE 10% (OR LESS) MINIMUM DIMMING UNLESS A SPECIFIC MINIMUM DIMMING LEVEL IS INDICATED.
4. PROVIDE ALL LUMINAIRES WITH MULTI-VOLT CONNECTION FOR 120V AND 277V WHEN AVAILABLE.

APPR | DATE | DESCRIPTION | SYM

NAVFAC

NORTH CAROLINA PROFESSIONAL SEAL 045329 ENGINEER MICHAEL K. WILSON, JR. 7/1/26

SEAL

CRENSHAW CONSULTING Engineers
www.crenshawconsulting.com
NC LICENSE #C-1168
3816 Bush Street, Suite 200
Raleigh, North Carolina 27609
919-871-1070 Fax 871-5620

A/E INFO

APPROVED

FOR COMMANDER NAVFAC

ACTIVITY

SATISFACTORY TO

DES	MKW	DRW	JDC	CHK	JTR

PM/DM L. PEED

BRANCH MANAGER H. PERRY

CHIEF ENG/ARCH P. FAULKNER

FIRE PROTECTION D. CHASTAIN

DEPARTMENT OF THE NAVY
NAVAL FACILITIES ENGINEERING COMMAND
1PT MARINE CORPS
MARINE CORPS AIR STATION

NAVAL FACILITIES ENGINEERING COMMAND - MIDATLANTIC
NAVAL STATION - NORFOLK, VA.
CHERRY POINT, NC

MCOLF ATLANTIC
BUILDING 7019 RENOVATIONS

ELECTRICAL SCHEDULES

SCALE: AS INDICATED

STATION DESIGN WON: 7406712

STATION CONSTRUCTION WON: 7406712

NAVFAC DRAWING NO. 12939564

SHEET 139 OF 148

E-601

DRAWFORM REVISION: 25 AUGUST 2020

Branch Panel: K

Supply From: MDP **Volts:** 120/208 Wye **A.I.C. Rating:** 22,000
Mounting: SURFACE **Phases:** 3 **Mains Type:** MAIN LUGS ONLY
Enclosure: NEMA 1 **Wires:** 4 **Mains Rating:** 150 A
Accessory: **Poles:** 42

CKT	Circuit Description	Trip	Poles	Fn	A	B	C	A	B	C	Fn	Poles	Trip	Circuit Description	CKT
1	111 FREEZER	20 A	1	G	1.2			1.4				1	25 A	KEF-2	2
3	111 FREEZER	20 A	1	G		1.2			3.5						4
5	111 REFRIGERATOR	20 A	1	G			1.2			3.5		3	35 A	MAU-1	6
7	111 REFRIGERATOR	20 A	1	G	1.2			3.5							8
9	111 ICE MACHINE	20 A	1	G		1.2			0.0		--	1	20 A	SPARE	10
11	ANSUL PULL BOX	20 A	1				0.7			0.0	--	1	20 A	SPARE	12
13	111 KITCHEN REC	20 A	1	G	0.2			0.0			--	1	20 A	SPARE	14
15	111 KITCHEN COUNTER REC	20 A	1	G		0.4			0.0		--	1	20 A	SPARE	16
17	111 KITCHEN REC	20 A	1	G			0.2			0.0	--	1	20 A	SPARE	18
19	111 KITCHEN COUNTER REC	20 A	1	G	1.0			0.0			--	1	20 A	SPARE	20
21	111 KITCHEN COUNTER REC	20 A	1	G		1.5			0.0		--	1	20 A	SPARE	22
23	111 MICROWAVE	20 A	1	G			1.5			0.0	--	1	20 A	SPARE	24
25	111 GRIDDLE/RANGE CTRL RECS	20 A	1	G	0.4			0.0			--	1	20 A	SPARE	26
27	SPACE FOR SHUNT TRIP	--	1	--		--			0.0		--	1	20 A	SPARE	28
29	111 KITCHEN COUNTER REC	20 A	1	G			0.2			0.0	--	1	20 A	SPARE	30
31	SPACE FOR SHUNT TRIP	--	1	--	--			--			--	1	--	SPACE	32
33	111 GAS SOLENOID	20 A	1			0.1			--		--	1	--	SPACE	34
35	111 HOOD CONTROL PANEL	20 A	1				1.0			--	--	1	--	SPACE	36
37	111 HOOD CONTROL PANEL	20 A	1		1.0			--			--	1	--	SPACE	38
39	AD-1	15 A	1			0.6			--		--	1	--	SPACE	40
41	KEF-1	25 A	1				1.4			--	--	1	--	SPACE	42
				Connected Load:	9.8 kVA		8.4 kVA		9.6 kVA						
					83.3 A		70.4 A		81.9 A						

Load Classification	Connected Load	Demand Factor	Demand Load	Panel Totals	
Other	26.640 kVA	100.00%	26.640 kVA	Total Connected Load:	27.9 kVA
Receptacle	1.260 kVA	100.00%	1.260 kVA		77.4 A
				Total Demand Load:	27.9 kVA
					77.4 A

Notes:

Branch Panel: L

Supply From: MDP **Volts:** 120/208 Wye **A.I.C. Rating:** 22,000
Mounting: SURFACE **Phases:** 3 **Mains Type:** MAIN LUGS ONLY
Enclosure: NEMA 1 **Wires:** 4 **Mains Rating:** 100 A
Accessory: **Poles:** 30

CKT	Circuit Description	Trip	Poles	Fn	A	B	C	A	B	C	Fn	Poles	Trip	Circuit Description	CKT
1	101-102, 105, 106/A, 110, EXT LTS	20 A	1		0.8			0.0			L	1	20 A	EMERGENCY LTS	2
3	103-104, 107-108, 114, 114A, 115 LTS	20 A	1			0.9			0.0		--	1	20 A	SPARE	4
5	109, 111, 111A, 112, 113 LTS	20 A	1				0.8			0.0	--	1	20 A	SPARE	6
7	EXTERIOR/COVERED LTS	20 A	1		0.2			0.0			--	1	20 A	SPARE	8
9	EXTERIOR LTS	20 A	1			0.2			0.0		--	1	20 A	SPARE	10
11	SPARE	20 A	1	--			0.0			--	--	1	--	SPACE	12
13	SPARE	20 A	1	--	0.0			--			--	1	--	SPACE	14
15	SPARE	20 A	1	--		0.0			--		--	1	--	SPACE	16
17	SPARE	20 A	1	--			0.0			--	--	1	--	SPACE	18
19	SPARE	20 A	1	--	0.0			--			--	1	--	SPACE	20
21	SPARE	20 A	1	--		0.0			--		--	1	--	SPACE	22
23	SPARE	20 A	1	--			0.0			--	--	1	--	SPACE	24
25	SPARE	20 A	1	--	0.0			--			--	1	--	SPACE	26
27	SPARE	20 A	1	--		0.0			--		--	1	--	SPACE	28
29	SPARE	20 A	1	--			0.0			0.3		1	20 A	SITE LTS	30
				Connected Load:	1.0 kVA		1.1 kVA		1.1 kVA						
					8.1 A		9.5 A		9.0 A						

Load Classification	Connected Load	Demand Factor	Demand Load	Panel Totals	
Lighting	2.894 kVA	125.00%	3.618 kVA	Total Connected Load:	3.2 kVA
Other	0.268 kVA	100.00%	0.268 kVA		8.8 A
				Total Demand Load:	3.9 kVA
					10.8 A

Notes:

Branch Panel: M

Supply From: MDP **Volts:** 120/208 Wye **A.I.C. Rating:** 22,000
Mounting: SURFACE **Phases:** 3 **Mains Type:** MAIN LUGS ONLY
Enclosure: NEMA 1 **Wires:** 4 **Mains Rating:** 150 A
Accessory: **Poles:** 42

CKT	Circuit Description	Trip	Poles	Fn	A	B	C	A	B	C	Fn	Poles	Trip	Circuit Description	CKT
1					2.6			2.0							2
3	DOAS-1 SUPPLY FAN	30 A	3			2.6			2.0			3	25 A	CU-1A	4
5							2.6			2.0					6
7					1.6			2.0							8
9	DOAS-1 EXHAUST FAN	30 A	3			1.6			2.0			3	25 A	CU-1B	10
11							1.6			2.0					12
13	PHWP-1	15 A	1		0.8			1.1							14
15	PHWP-2	15 A	1			0.8			1.1			3	20 A	CU-2	16
17	B-1	20 A	1				0.5			1.1					18
19	B-2	20 A	1		0.5			2.0							20
21	SHWP-1	15 A	1			0.5			2.0			3	25 A	CU-3	22
23	SHWP-2	15 A	1				0.5			2.0					24
25	D-WH-1	20 A	1		1.5			1.1							26
27	RECIRCULATING PUMP	20 A	1			0.5			1.1			3	20 A	CU-4	28
29	RECIRCULATING PUMP	15 A	1				0.5			1.1					30
31	HVAC CONTROL PANEL	20 A	1		0.2			0.0			--	1	20 A	SPARE	32
33	HVAC CONTROL PANEL	20 A	1			0.2			0.0		--	1	20 A	SPARE	34
35	STORAGE TANK HEAT TRACE	20 A	1	G			0.0			0.0	--	1	20 A	SPARE	36
37	EXTERIOR HOT BOX	20 A	1	G	0.0			--			--	1	--	SPACE	38
39	SPARE	20 A	1	--		0.0			--		--	1	--	SPACE	40
41	SPARE	20 A	1	--			0.0			--	--	1	--	SPACE	42
				Connected Load:	15.3 kVA		14.3 kVA		13.8 kVA						
					128.2 A		119.9 A		114.7 A						

Load Classification	Connected Load	Demand Factor	Demand Load	Panel Totals	
Other	43.380 kVA	100.00%	43.380 kVA	Total Connected Load:	43.4 kVA
					120.4 A
				Total Demand Load:	43.4 kVA
					120.4 A

Notes:

Branch Panel: T

Supply From: MDP **Volts:** 120/208 Wye **A.I.C. Rating:** 22,000
Mounting: SURFACE **Phases:** 3 **Mains Type:** MAIN BREAKER
Enclosure: NEMA 1 **Wires:** 4 **Mains Rating:** 100 A
Accessory: **Poles:** 30

CKT	Circuit Description	Trip	Poles	Fn	A	B	C	A	B	C	Fn	Poles	Trip	Circuit Description	CKT
1	106 COMM RACK L6-30	30 A	2		2.0			0.0			--	1	20 A	SPARE	2
3						2.0			0.0		--	1	20 A	SPARE	4
5	106 COMM RACK REC	20 A	1				1.5			0.0	--	1	20 A	SPARE	6
7	106 COMM RACK L6-30	30 A	2		2.0			0.0			--	1	20 A	SPARE	8
9						2.0			0.0		--	1	20 A	SPARE	10
11	106 COMM RACK REC	20 A	1				1.5			0.0	--	1	20 A	SPARE	12
13	106 COMM RECS	20 A	1		0.4			0.0			--	1	20 A	SPARE	14
15	106 COMM RECS	20 A	1			0.7			--		--	1	--	SPACE	16
17	DCU-1	35 A	2				2.3			--	--	1	--	SPACE	18
19					2.3			--			--	1	--	SPACE	20
21	DAC-1 CONDENSATE PUMP	15 A	1			0.2			--		--	1	--	SPACE	22
23	SPARE	20 A	1	--			0.0			--	--	1	--	SPACE	24
25	SPARE	20 A	1	--	0.0			--			--	1	--	SPACE	26
27	SPARE	20 A	1	--		0.0			--		--	1	--	SPACE	28
29	SPARE	20 A	1	--			0.0			--	--	1	--	SPACE	30
				Connected Load:	6.7 kVA		4.9 kVA		5.3 kVA						
					56.0 A		41.0 A		44.7 A						

Load Classification	Connected Load	Demand Factor	Demand Load	Panel Totals	
Other	15.800 kVA	100.00%	15.800 kVA	Total Connected Load:	16.9 kVA
Receptacle	1.080 kVA	100.00%	1.080 kVA		46.9 A
				Total Demand Load:	16.9 kVA
					46.9 A

Notes:

PANEL SCHEDULE NOTES

1. VALUES FOR DEMAND LOADS INCLUDE ALL CODE FACTORS SUCH AS 125% FOR CONTINUOUS LOADS, 125% LARGEST MOTOR, ETC.
2. BREAKER SIZES SHOWN FOR NEW EQUIPMENT IN PANEL SCHEDULES ARE FOR REFERENCE ONLY, SEE EQUIPMENT CONNECTION SCHEDULE(S) FOR ADDITIONAL INFORMATION. WHERE BREAKER / FUSE SIZE BETWEEN SCHEDULES CONFLICT, THE EQUIPMENT CONNECTION SCHEDULE MUST TAKE PRECEDENCE.
3. CIRCUIT BREAKERS USED FOR HVAC EQUIPMENT MUST BE 'HACR' TYPE.
4. ALL PANEL DIRECTORIES MUST BE COMPLETED IN ACCORDANCE WITH NEC 408.4. LABELING FOR PANELBOARD DIRECTORIES MUST BE SPECIFIC.
5. CONTRACTOR MUST PROVIDE MULTI-POLE BREAKERS IN LIEU OF ALL SINGLE POLE BREAKERS SHOWN WHEN MULTI-WIRE BRANCH CIRCUITS ARE INSTALLED PER NEC 210.4(B).
6. CONTRACTOR MUST LABEL ALL BREAKERS FEEDING EMERGENCY AND EXIT LIGHTING PER NEC 700.12(F).
7. PROVIDE ARC FLASH HAZARD WARNING LABELS AS REQUIRED ON ALL PANELS AFFECTED BY THIS WORK PER NEC 110.16.
8. CONTRACTOR MUST PROVIDE IDENTIFICATION FOR NEW FEEDERS AND ANY NEW BRANCH CIRCUITS PER NEC 200.6, 210.5, AND 215.2.
9. ALL SHUNT TRIP TYPE BREAKERS MUST BE 120V SHUNT TRIP ACTUATED UNLESS OTHERWISE NOTED.
10. CIRCUIT BREAKERS USED FOR SWITCHING LIGHTS MUST BE LISTED FOR SWITCHING AND MARKED ACCORDING TO NEC 240.83(D).
11. THE FUNCTION (FN) COLUMN OF PANEL SCHEDULES INDICATES THAT BREAKER FOR RESPECTIVE CIRCUIT MUST BE PROVIDED WITH THE FOLLOWING FUNCTIONS:
    A: ARC-FAULT CIRCUIT INTERRUPTER (AFCI) PROTECTION
    G: GROUND-FAULT CIRCUIT INTERRUPTER (GFCI) PROTECTION
    H: BREAKER HASP TO PREVENT UNINTENTIONAL OPENING
    L: LOCKABLE ACCORDING TO NEC 110.25
12. PROVIDE LABELING ON ALL EQUIPMENT TO INDICATE MINIMUM CLEARANCE REQUIREMENTS.
13. FIRE ALARM EQUIPMENT MUST BE CONNECTED ON LOCKED BREAKERS. BREAKERS MUST BE RED IN COLOR AND LABELED FIRE PROTECTION/LIFE SAFETY.

SYM	DESCRIPTION	DATE	APPR

NAVFAC

NORTH CAROLINA PROFESSIONAL SEAL 045329 ENGINEER MICHAEL K. WILSON, J.R.
7/1/26
SEAL

CRENSHAW CONSULTING engineers
www.crenshawconsulting.com
NC LICENSE #C-1156
3516 Bush Street, Suite 200
Raleigh, North Carolina 27609
919-871-1070 Fax 871-5620
A/E INFO

APPROVED
FOR COMMANDER NAVFAC
ACTIVITY
SATISFACTORY TO

DES	MKW	DRW	JDC	CHK	JTR
PM/DM	L. PEED				
BRANCH MANAGER	H. PERRY				
CHIEF ENG/ARCH	P. FAULKNER				
FIRE PROTECTION	D. CHASTAIN				

DEPARTMENT OF THE NAVY
NAVAL FACILITIES ENGINEERING COMMAND
NAVAL FACILITIES ENGINEERING COMMAND ~ MIDATLANTIC
IPT MARINE CORPS
NAVAL STATION - NORFOLK, VA
MARINE CORPS AIR STATION
CHERRY POINT, NC

MCOLF ATLANTIC
BUILDING 7019 RENOVATIONS

ELECTRICAL SCHEDULES

SCALE:	AS INDICATED
STATION DESIGN WON:	7406712
STATION CONSTRUCTION WON:	7406712
NAVFAC DRAWING NO.	12939565
SHEET	140 OF 148

E-602

Branch Panel: P1

Supply From: MDP | **Volts:** 120/208 Wye | **A.I.C. Rating:** 22,000
Mounting: SURFACE | **Phases:** 3 | **Mains Type:** MAIN LUGS ONLY
Enclosure: NEMA 1 | **Wires:** 4 | **Mains Rating:** 150 A
Accessory: | **Poles:** 42

CKT	Circuit Description	Trip	Poles	Fn	A	B	C	A	B	C	Fn	Poles	Trip	Circuit Description	CKT
1	106A ELEC RECS	20 A	1		0.4			2.5				2	30 A	110 DRYER	2
3	101 LOBBY, 102 CORRIDOR RECS	20 A	1			0.5			2.5						4
5	AHU-1B	15 A	2				0.8			2.5		2	30 A	110 DRYER	6
7					0.8			2.5							8
9	AHU-2	15 A	2			0.5			2.5			2	30 A	110 DRYER	10
11							0.5			2.5					12
13	106 TRAINING, 110 LAUNDRY REC	20 A	1		0.4			2.5				2	30 A	110 DRYER	14
15	109 DINING/TRAINING RECS	20 A	1			0.5			2.5						16
17	109 DINING/TRAINING RECS	20 A	1				0.9			1.5		1	20 A	110 WASHER	18
19	111, 112, 113 RECS	20 A	1	G	0.9			1.5				1	20 A	110 WASHER	20
21	111A TOILET REC	20 A	1			0.2			0.0		--	1	20 A	SPARE	22
23	AHU-1A	15 A	2				0.8			0.0	--	1	20 A	SPARE	24
25					0.8			0.0			--	1	20 A	SPARE	26
27	EXTERIOR RECS	20 A	1			0.7			0.0		--	1	20 A	SPARE	28
29	ROOFTOP RECEPTACLE	20 A	1				0.2			0.0	--	1	20 A	SPARE	30
31	GENERATOR JACKET HEATER	20 A	1		0.2			0.0			--	1	20 A	SPARE	32
33	GENERATOR BATTERY CHARGER	20 A	1			0.2			0.0		--	1	20 A	SPARE	34
35	SPARE	20 A	1	--			0.0			0.0	--	1	20 A	SPARE	36
37	SPARE	20 A	1	--	0.0			0.0			--	1	20 A	SPARE	38
39	SPARE	20 A	1	--		0.0			0.0		--	1	20 A	SPARE	40
41	SPARE	20 A	1	--			0.0			0.0	--	1	20 A	SPARE	42
				Connected Load:	12.4 kVA		10.2 kVA		9.7 kVA						
					104.1 A		85.5 A		80.7 A						

Load Classification	Connected Load	Demand Factor	Demand Load	Panel Totals	
Other	27.600 kVA	100.00%	27.600 kVA	**Total Connected Load:**	32.3 kVA
Receptacle	4.680 kVA	100.00%	4.680 kVA		89.6 A
				Total Demand Load:	32.3 kVA
					89.6 A

Notes:

Branch Panel: P2

Supply From: MDP | **Volts:** 120/208 Wye | **A.I.C. Rating:** 22,000
Mounting: SURFACE | **Phases:** 3 | **Mains Type:** MAIN LUGS ONLY
Enclosure: NEMA 1 | **Wires:** 4 | **Mains Rating:** 150 A
Accessory: | **Poles:** 42

CKT	Circuit Description	Trip	Poles	Fn	A	B	C	A	B	C	Fn	Poles	Trip	Circuit Description	CKT
1	108 MECH RECS	20 A	1		0.7			0.0			--	1	20 A	SPARE	2
3	107 STORAGE RECS	20 A	1			0.5			0.0		--	1	20 A	SPARE	4
5	103 DUTY RECS	20 A	1				1.3			0.0	--	1	20 A	SPARE	6
7	FMCP	20 A	1	L	0.5			0.0			--	1	20 A	SPARE	8
9	104 OFFICE RECS	20 A	1			0.9			0.0		--	1	20 A	SPARE	10
11	114 GYM, 114A GYM STG RECS	20 A	1				0.7			0.0	--	1	20 A	SPARE	12
13	114 GYM RECS	20 A	1		0.5			0.0			--	1	20 A	SPARE	14
15	DCU-2	25 A	2			1.7			0.0		--	1	20 A	SPARE	16
17							1.7			0.0	--	1	20 A	SPARE	18
19	DAC-2 CONDENSATE PUMP	15 A	1		0.2			0.0			--	1	20 A	SPARE	20
21	AHU-3	15 A	2			0.5			0.0		--	1	20 A	SPARE	22
23							0.5			0.0	--	1	20 A	SPARE	24
25	JOCKEY PUMP	15 A	3	L	0.5			0.0			--	1	20 A	SPARE	26
27						0.5			0.0		--	1	20 A	SPARE	28
29							0.5			0.0	--	1	20 A	SPARE	30
31	SPARE	20 A	1	--	0.0			0.0			--	1	20 A	SPARE	32
33	SPARE	20 A	1	--		0.0			0.0		--	1	20 A	SPARE	34
35	SPARE	20 A	1	--			0.0			0.0	--	1	20 A	SPARE	36
37	SPARE	20 A	1	--	0.0			0.0			--	1	20 A	SPARE	38
39	SPARE	20 A	1	--		0.0			0.0		--	1	20 A	SPARE	40
41	EXTERIOR RECS	20 A	1				0.7			0.0	--	1	20 A	SPARE	42
				Connected Load:	2.4 kVA		4.1 kVA		5.3 kVA						
					20.2 A		35.9 A		46.4 A						

Load Classification	Connected Load	Demand Factor	Demand Load	Panel Totals	
Other	6.400 kVA	100.00%	6.400 kVA	**Total Connected Load:**	11.8 kVA
Receptacle	5.400 kVA	100.00%	5.400 kVA		32.8 A
				Total Demand Load:	11.8 kVA
					32.8 A

Notes:

Branch Panel: P3

Supply From: MDP | **Volts:** 120/208 Wye | **A.I.C. Rating:** 10,000
Mounting: SURFACE | **Phases:** 3 | **Mains Type:** MAIN BREAKER
Enclosure: NEMA 1 | **Wires:** 4 | **Mains Rating:** 150 A
Accessory: | **Poles:** 42

CKT	Circuit Description	Trip	Poles	Fn	A	B	C	A	B	C	Fn	Poles	Trip	Circuit Description	CKT
1	123 BEDROOM RECS	20 A	1	A	1.1			1.5				2	20 A	132 BEDROOM PTAC	2
3	123 BEDROOM PTAC	20 A	2			1.5			1.5						4
5							1.5			1.5		2	20 A	133 BEDROOM PTAC	6
7	124 BEDROOM RECS	20 A	1	A	1.1			1.5							8
9	124 BEDROOM PTAC	20 A	2			1.5			0.4		A	1	20 A	133A, 134A TOILET RECS	10
11							1.5			0.9	A	1	20 A	134 BEDROOM RECS	12
13	125 BEDROOM RECS	20 A	1	A	1.1			1.5				2	20 A	134 BEDROOM PTAC	14
15	125 BEDROOM PTAC	20 A	2			1.5			1.5						16
17							1.5			0.9	A	1	20 A	135 BEDROOM RECS	18
19	126 BEDROOM RECS	20 A	1	A	1.1			1.5				2	20 A	135 BEDROOM PTAC	20
21	126 BEDROOM PTAC	20 A	2			1.5			1.5						22
23							1.5			0.4	A	1	20 A	135A, 136A TOILET RECS	24
25	127 BEDROOM RECS	20 A	1	A	1.1			0.9			A	1	20 A	136 BEDROOM RECS	26
27	127 BEDROOM PTAC	20 A	2			1.5			1.5			2	20 A	136 BEDROOM PTAC	28
29							1.5			1.5					30
31	128 BEDROOM RECS	20 A	1	A	1.1			0.2				1	20 A	EXTERIOR RECS	32
33	128A TOILET REC	20 A	1	A		0.2			0.0		--	1	20 A	SPARE	34
35	128 BEDROOM PTAC	20 A	2				1.5			0.0	--	1	20 A	SPARE	36
37					1.5			0.0			--	1	20 A	SPARE	38
39	132 BEDROOM RECS	20 A	1	A		0.9			0.0		--	1	20 A	SPARE	40
41	133 BEDROOM RECS	20 A	1	A			0.9			0.0	--	1	20 A	SPARE	42
				Connected Load:	15.1 kVA		14.9 kVA		15.1 kVA						
					125.7 A		124.5 A		125.7 A						

Load Classification	Connected Load	Demand Factor	Demand Load	Panel Totals	
Other	33.000 kVA	100.00%	33.000 kVA	**Total Connected Load:**	45.1 kVA
Receptacle	12.060 kVA	91.46%	11.030 kVA		125.1 A
				Total Demand Load:	44.0 kVA
					122.2 A

Notes:

Branch Panel: P4

Supply From: MDP | **Volts:** 120/208 Wye | **A.I.C. Rating:** 10,000
Mounting: SURFACE | **Phases:** 3 | **Mains Type:** MAIN BREAKER
Enclosure: NEMA 1 | **Wires:** 4 | **Mains Rating:** 150 A
Accessory: | **Poles:** 42

CKT	Circuit Description	Trip	Poles	Fn	A	B	C	A	B	C	Fn	Poles	Trip	Circuit Description	CKT
1	116 LOUNGE RECS	20 A	1		1.1			0.0			L	1	20 A	EMERGENCY LTS	2
3	116 LOUNGE PTAC	20 A	2			1.5			1.5			2	20 A	131 BEDROOM PTAC	4
5							1.5			1.5					6
7	116 LOUNGE PTAC	20 A	2		1.5			0.4				1	20 A	116, 118-120 LTS	8
9						1.5			0.8		A	1	20 A	121 CORR, 122-128 BEDROOM LTS	10
11	118 WOMEN, 119 JAN RECS	20 A	1				0.9			0.8	A	1	20 A	129-136 BEDROOM LTS	12
13	121 WATER COOLER	20 A	1	G	0.7			0.5				2	15 A	AHU-4	14
15	120 HEAD RECS	20 A	1			0.4			0.5						16
17	122 BEDROOM RECS	20 A	1	A			1.1			0.0	--	1	20 A	SPARE	18
19	122 BEDROOM PTAC	20 A	2		1.5			0.0			--	1	20 A	SPARE	20
21						1.5			0.0		--	1	20 A	SPARE	22
23	121 CORRIDOR RECS	20 A	1				0.7			0.0	--	1	20 A	SPARE	24
25	129 BEDROOM RECS	20 A	1	A	0.9			0.0			--	1	20 A	SPARE	26
27	129A, 130A TOILET RECS	20 A	1	A		0.4			0.0		--	1	20 A	SPARE	28
29	129 BEDROOM PTAC	20 A	2				1.5			0.0	--	1	20 A	SPARE	30
31					1.5			0.0			--	1	20 A	SPARE	32
33	130 BEDROOM RECS	20 A	1	A		0.9			0.0		--	1	20 A	SPARE	34
35	130 BEDROOM PTAC	20 A	2				1.5			0.0	--	1	20 A	SPARE	36
37					1.5			0.0			--	1	20 A	SPARE	38
39	131 BEDROOM RECS	20 A	1	A		0.9			0.0		--	1	20 A	SPARE	40
41	131A, 132A TOILET RECS	20 A	1	A			0.4			0.0	--	1	20 A	SPARE	42
				Connected Load:	9.6 kVA		9.8 kVA		9.8 kVA						
					80.2 A		82.3 A		82.1 A						

Load Classification	Connected Load	Demand Factor	Demand Load	Panel Totals	
Lighting	2.046 kVA	125.00%	2.558 kVA	**Total Connected Load:**	29.3 kVA
Other	20.400 kVA	100.00%	20.400 kVA		81.3 A
Receptacle	6.840 kVA	100.00%	6.840 kVA		
				Total Demand Load:	29.8 kVA
					82.7 A

Notes:

PANEL SCHEDULE NOTES

1. VALUES FOR DEMAND LOADS INCLUDE ALL CODE FACTORS SUCH AS 125% FOR CONTINUOUS LOADS, 125% LARGEST MOTOR, ETC.
2. BREAKER SIZES SHOWN FOR NEW EQUIPMENT IN PANEL SCHEDULES ARE FOR REFERENCE ONLY, SEE EQUIPMENT CONNECTION SCHEDULE(S) FOR ADDITIONAL INFORMATION. WHERE BREAKER / FUSE SIZE BETWEEN SCHEDULES CONFLICT, THE EQUIPMENT CONNECTION SCHEDULE MUST TAKE PRECEDENCE.
3. CIRCUIT BREAKERS USED FOR HVAC EQUIPMENT MUST BE 'HACR' TYPE.
4. ALL PANEL DIRECTORIES MUST BE COMPLETED IN ACCORDANCE WITH NEC 408.4. LABELING FOR PANELBOARD DIRECTORIES MUST BE SPECIFIC.
5. CONTRACTOR MUST PROVIDE MULTI-POLE BREAKERS IN LIEU OF ALL SINGLE POLE BREAKERS SHOWN WHEN MULTI-WIRE BRANCH CIRCUITS ARE INSTALLED PER NEC 210.4(B).
6. CONTRACTOR MUST LABEL ALL BREAKERS FEEDING EMERGENCY AND EXIT LIGHTING PER NEC 700.12(F).
7. PROVIDE ARC FLASH HAZARD WARNING LABELS AS REQUIRED ON ALL PANELS AFFECTED BY THIS WORK PER NEC 110.16.
8. CONTRACTOR MUST PROVIDE IDENTIFICATION FOR NEW FEEDERS AND ANY NEW BRANCH CIRCUITS PER NEC 200.6, 210.5, AND 215.2.
9. ALL SHUNT TRIP TYPE BREAKERS MUST BE 120V SHUNT TRIP ACTUATED UNLESS OTHERWISE NOTED.
10. CIRCUIT BREAKERS USED FOR SWITCHING LIGHTS MUST BE LISTED FOR SWITCHING AND MARKED ACCORDING TO NEC 240.83(D).
11. THE FUNCTION (FN) COLUMN OF PANEL SCHEDULES INDICATES THAT BREAKER FOR RESPECTIVE CIRCUIT MUST BE PROVIDED WITH THE FOLLOWING FUNCTIONS:
    A: ARC-FAULT CIRCUIT INTERRUPTER (AFCI) PROTECTION
    G: GROUND-FAULT CIRCUIT INTERRUPTER (GFCI) PROTECTION
    H: BREAKER HASP TO PREVENT UNINTENTIONAL OPENING
    L: LOCKABLE ACCORDING TO NEC 110.25
12. PROVIDE LABELING ON ALL EQUIPMENT TO INDICATE MINIMUM CLEARANCE REQUIREMENTS.
13. FIRE ALARM EQUIPMENT MUST BE CONNECTED ON LOCKED BREAKERS. BREAKERS MUST BE RED IN COLOR AND LABELED FIRE PROTECTION/LIFE SAFETY.

SYM	DESCRIPTION	DATE	APPR

NAVFAC

NORTH CAROLINA PROFESSIONAL ENGINEER SEAL 045329 MICHAEL K. WILSON, J.R. 7/1/26
SEAL

CRENSHAW CONSULTING engineers
www.crenshawconsulting.com
NC LICENSE #C-1156
3516 Bush Street, Suite 200
Raleigh, North Carolina 27609
919-871-1070 Fax 871-5620
A/E INFO

APPROVED

FOR COMMANDER NAVFAC

ACTIVITY

SATISFACTORY TO

DES MKW	DRW JDC / CHK JTR
PM/DM	L. PEED
BRANCH MANAGER	H. PERRY
CHIEF ENG/ARCH	P. FAULKNER
FIRE PROTECTION	D. CHASTAIN

DEPARTMENT OF THE NAVY
NAVAL FACILITIES ENGINEERING COMMAND
NAVAL FACILITIES ENGINEERING COMMAND ~ MIDATLANTIC
NAVAL STATION - NORFOLK, VA
IPT MARINE CORPS
MARINE CORPS AIR STATION
CHERRY POINT, NC

MCOLF ATLANTIC
BUILDING 7019 RENOVATIONS

ELECTRICAL SCHEDULES

SCALE:	AS INDICATED
STATION DESIGN WON:	7406712
STATION CONSTRUCTION WON:	7406712
NAVFAC DRAWING NO.	12939566
SHEET	141 OF 148

E-603

MECHANICAL EQUIPMENT CONNECTION SCHEDULE

MARK	DESCRIPTION	FURN BY	KVA	HP	VOLTAGE	PHASE	AMPERAGE	DISCONNECT SIZE	NEMA	BREAKER SIZE/FUSE SIZE	WIRE SIZE	GROUND SIZE	CONDUIT	NOTES
DOCU-1	DEDICATED OUTSIDE CONDENSING UNIT	MECH	39.3	-	208	3	109.0	200/3	4X	150/3	4-#1/0	#6	3"	
DOAS-1	DOAS SUPPLY FAN	MECH	7.8	-	208	3	21.6	30/3	1	30/3	4-#10	#10	3/4"	
DOAS-1	DOAS EXHAUST FAN	MECH	4.9	-	208	3	13.7	30/3	1	30/3	4-#10	#10	3/4"	
AHU-1A	AIR HANDLING UNIT	MECH	1.6	-	208	1	7.7	30/2	1	15/2	3-#12	#12	3/4"	
AHU-1B	AIR HANDLING UNIT	MECH	1.6	-	208	1	7.7	30/2	1	15/2	3-#12	#12	3/4"	
AHU-2	AIR HANDLING UNIT	MECH	1.0	-	208	1	4.6	30/2	1	15/2	3-#12	#12	3/4"	
AHU-3	AIR HANDLING UNIT	MECH	1.0	-	208	1	4.6	30/2	1	15/2	3-#12	#12	3/4"	
AHU-4	AIR HANDLING UNIT	MECH	1.0	-	208	1	4.6	30/2	1	15/2	3-#12	#12	3/4"	
CU-1A	CONDENSING UNIT	MECH	5.9	-	208	3	16.3	30/3	4X	25/3	4-#10	#10	3/4"	
CU-1B	CONDENSING UNIT	MECH	5.9	-	208	3	16.3	30/3	4X	25/3	4-#10	#10	3/4"	
CU-2	CONDENSING UNIT	MECH	3.2	-	208	3	9.0	30/3	4X	20/3	4-#12	#12	3/4"	
CU-3	CONDENSING UNIT	MECH	5.9	-	208	3	16.3	30/3	4X	25/3	4-#10	#10	3/4"	
CU-4	CONDENSING UNIT	MECH	3.2	-	208	3	9.0	30/3	4X	20/3	4-#12	#12	3/4"	
PHWP-1	PRIMARY HOT WATER PUMP	MECH	0.8	-	120	1	7.0	M	1	15/1	2-#12	#12	3/4"	
PHWP-1	PRIMARY HOT WATER PUMP	MECH	0.8	-	120	1	7.0	M	1	15/1	2-#12	#12	3/4"	
SHWP-1	SECONDARY HOT WATER PUMP	MECH	0.5	-	120	1	4.2	M	1	15/1	2-#12	#12	3/4"	
SHWP-2	SECONDARY HOT WATER PUMP	MECH	0.5	-	120	1	4.2	M	1	15/1	2-#12	#12	3/4"	
B-1	BOILER	MECH	0.5	-	120	1	4.5	M	1	20/1	2-#12	#12	3/4"	
B-2	BOILER	MECH	0.5	-	120	1	4.5	M	1	20/1	2-#12	#12	3/4"	
PTHP-1	PTAC UNIT (EACH SLEEPING ROOM)	MECH	3.0	-	208	1	11.8	NEMA 6-20R	1	20/2	3-#12	#12	3/4"	VERIFY NEMA CONFIGURATION
DAC-1	SPLIT SYSTEM AHU	MECH	0.1	-	208	1	1.0	30/2	1	15/2	3-#12	#12	3/4"	INDOOR UNIT POWERED BY OUTDOOR UNIT
DCU-1	SPLIT SYSTEM CONDENSER	MECH	4.6	-	208	1	22.0	30/2	4X	35/2	3-#8	#10	3/4"	
DAC-2	SPLIT SYSTEM AHU	MECH	0.1	-	208	1	1.0	30/2	1	15/2	3-#12	#12	3/4"	INDOOR UNIT POWERED BY OUTDOOR UNIT
DCU-2	SPLIT SYSTEM CONDENSER	MECH	3.3	-	208	1	16.0	30/2	4X	25/2	3-#10	#10	3/4"	
-	CONDENSATE PUMP	MECH	0.2	-	120	1	1.7	M	1	15/1	2-#12	#12	3/4"	
AD-1	AIR DOOR	MECH	1.1	0.5	120	1	9.2	30/1	1	15/1	2-#12	#12	3/4"	
D-WH-1	GAS WATER HEATER	PLMB	0.5	-	120	1	4.2	M	1	20/1	2-#12	#12	3/4"	
-	RECIRCULATION PUMP	PLMB	0.5	0.17	120	1	4.2	M	1	15/1	2-#12	#12	3/4"	
MAU-1	MAKE-UP AIR UNIT	CFCI	10.4	-	208	3	29.0	60/3	4X	35/3	4-#8	#10	2"	
KEF-1	KITCHEN EXHAUST FAN	CFCI	1.4	-	120	1	11.6	30/1	4X	25/1	2-#10	#10	3/4"	
KEF-2	KITCHEN EXHAUST FAN	CFCI	1.4	-	120	1	11.6	30/1	4X	25/1	2-#10	#10	3/4"	
-	JOCKEY PUMP	FIRE	1.4	1.0	208	3	4.0	30/3	1	15/3	4-#12	#12	3/4"	

KITCHEN EQUIPMENT SCHEDULE

MARK	DESCRIPTION	FURN BY	KVA	HP	VOLTAGE	PHASE	AMPERAGE	DISCONNECT SIZE	NEMA	BREAKER SIZE/FUSE SIZE	WIRE SIZE	GROUND SIZE	CONDUIT	CONNECTION TYPE
(01)	REFRIGERATOR	CFCI	1.2	-	120	1	10.0	-	1	20/1	2-#12	#12	3/4"	DUPLEX RECEPTACLE
(02)	FREEZER	CFCI	1.2	-	120	1	10.0	-	1	20/1	2-#12	#12	3/4"	DUPLEX RECEPTACLE
(14)	ICE MAKER	CFCI	1.2	-	120	1	10.0	-	1	20/1	2-#12	#12	3/4"	JUNCTION BOX
(PLAN NOTE)	HOOD CONTROLS	CFCI	1.0	-	120	1	8.3	-	1	20/1	2-#12	#12	3/4"	JUNCTION BOX
(PLAN NOTE)	GAS SOLENOID	CFCI	0.1	-	120	1	1.0	-	1	20/1	2-#12	#12	3/4"	JUNCTION BOX
(PLAN NOTE)	ANSUL PULL BOX	CFCI	0.7	-	120	1	6.0	-	1	20/1	2-#12	#12	3/4"	JUNCTION BOX

EQUIPMENT CONNECTIONS NOTES:

1. ALL DISCONNECTS FOR EQUIPMENT MUST BE OF HEAVY DUTY TYPE.
2. BREAKER SIZES FOR ALL EQUIPMENT SIZED AT MOCP WHERE APPLICABLE.
3. EVERY EFFORT HAS BEEN MADE TO MATCH BREAKER/FUSE SIZES LISTED IN THIS TABLE WITH BREAKER SIZES LISTED IN PANEL SCHEDULES. WHERE DISCREPANCIES EXIST, VALUES SHOWN IN THIS TABLE MUST BE USED. IN ALL CASES, CONTRACTOR MUST COORDINATE REQUIRED BREAKER/FUSE SIZES WITH EQUIPMENT PROVIDER (MECH/PLUMB/ETC) AND ACTUAL EQUIPMENT INSTALLED ON SITE.
4. AN 'M' IN THE DISCONNECT COLUMN INDICATES A MOTOR SWITCH FOR THE DISCONNECTING MEANS.

APPR. | DATE | DESCRIPTION | SYM

NAVFAC

NORTH CAROLINA PROFESSIONAL SEAL 045329 ENGINEER MICHAEL K. WILSON, JR. 7/1/26 SEAL

CRENSHAW CONSULTING Engineers
NC LICENSE #C-1168
www.crenshawconsulting.com
3816 Bush Street, Suite 200
Raleigh, North Carolina 27609
919-871-1073 Fax 871-0820

A/E INFO

APPROVED

FOR COMMANDER NAVFAC

ACTIVITY

SATISFACTORY TO

DES MKW | DRW JDC | CHK JTR

PM/DM L. PEED

BRANCH MANAGER H. PERRY

CHIEF ENG/ARCH P. FAULKNER

FIRE PROTECTION D. CHASTAIN

DEPARTMENT OF THE NAVY
NAVAL FACILITIES ENGINEERING COMMAND ~ MIDATLANTIC
1ST MARINE CORPS
MARINE CORPS AIR STATION
NAVAL STATION - NORFOLK, VA
CHERRY POINT, NC

MCOLF ATLANTIC
BUILDING 7019 RENOVATIONS

ELECTRICAL SCHEDULES

SCALE: AS INDICATED

STATION DESIGN WON: 7406712

STATION CONSTRUCTION WON: 7406712

NAVFAC DRAWING NO. 12939567

SHEET 142 OF 148

E-604

DRAWFORM REVISION: 25 AUGUST 2020

GENERATOR SPECIFICATIONS:

NEW GENERATOR MUST INCLUDE THE FOLLOWING:

- 208V, 3-PH, WYE
- 0.8 POWER FACTOR, 1800 RPM
- BRUSHLESS SYNCHRONOUS GENERATOR
- PERMANENT MAGNET EXCITED WITH REGULATOR AND SPACE HEATER
- 'NON-WALK-IN' TYPE WEATHER-PROOF ENCLOSURE (SOUND ATTENUATED) WITH HINGED LOCKABLE DOORS AND OIL/WATER DRAIN GROUP. ENCLOSURE MUST BE OF CORROSION RESISTANT MATERIAL AND SALT SPRAY RATED.
- LISTED TO MEET REQUIREMENTS OF U.L. 2200
- DUAL-RATE BATTERY CHARGER WITH ALARM CONTACTS
- RADIATOR WITH ENGINE DRIVEN FAN
- CRITICAL DEGREE EXHAUST SILENCER MOUNTED IN OUTSIDE ENCLOSURE FOR CORROSION PROTECTION PROVIDED WITH FLEXIBLE FITTING AND STAINLESS STEEL COMPONENTS
- ELECTRONIC ISOCHRONOUS SPEED CONTROL GOVERNOR
- CONTROL PANEL WITH AC METERING, ENGINE METERING, AUTO START-STOP LOGIC WITH INDICATORS ALARM MODULE
- (1) 800/3 AND (1) 300/3 AMP U.L. S.E. RATED, GENERATOR MOUNTED OUTPUT CIRCUIT BREAKERS
- STRUCTURAL STEEL BASE WITH VIBRATION MOUNTS
- LEAD ACID STARTING BATTERIES WITH BATTERY CHARGER, TRAY AND CABLES
- JACKET HEATER TANK-TYPE WITH ISOLATION VALVES AND ADJUSTABLE THERMOSTAT
- REMOTE ANNUNCIATOR AND ASSOCIATED CONTROL WIRING FOR A FULLY FUNCTIONAL SYSTEM. VERIFY LOCATION OF ANNUNCIATOR PANEL WITH CONTRACTING OFFICER PRIOR TO INSTALLATION.
- PROVIDE DOUBLE-WALLED SEAMLESS BELLOWS TYPE U.L. 142 LISTED SUB BASE FUEL TANK WITH LEAK DETECTION SIZED WITH ENOUGH USABLE FUEL TO RUN GENERATOR AT FULL LOAD FOR A MINIMUM OF 24 HOURS.
- GENERATOR TANK MUST HAVE EXTERNAL VENT PIPE, ALONG WITH EMERGENCY VENT
- GENERATOR TANK MUST HAVE FUEL LEVEL GAUGE
- PROVIDE LOCAL FUEL CUTOFF SWITCH
- PROVIDE 2-1" CONDUITS WITH PULL WIRE FOR CONTROLS FROM GENERATOR LOCATION TO AUTOMATIC TRANSFER SWITCH
- PROVIDE (2) 3/4" CONDUITS FROM GENERATOR TO ELECTRICAL AND COMM ROOM FOR BATTERY/HEATER POWER AND ANNUNCIATOR COMM CABLING. PROVIDE WIRING AND CABLING. COORDINATE WITH NAVFAC CM FOR REMOTE ANNUNCIATOR LOCATION.
- PROVIDE CONCRETE PAD PER MANUFACTURER'S RECOMMENDATIONS. COORDINATE WITH CIVIL.
- PROVIDE GROUNDING PER RISER DIAGRAM
- PROVIDE 24 HOURS OF BACKUP AT FULL LOAD (ON-SITE FUEL STORAGE)
- PROVIDE EXTERIOR RATED EMERGENCY POWER OFF BUTTON ON THE GENERATOR UNIT OR MOUNTED TO RACKING ADJACENT TO GENERATOR.

Branch Panel: MDP

Supply From:
Mounting: SURFACE
Enclosure: NEMA 1
Accessory:

Volts: 120/208 Wye
Phases: 3
Wires: 4
Poles: 42

A.I.C. Rating: 30,000
Mains Type: MAIN BREAKER
Mains Rating: 800 A

CKT	Circuit Description	Trip	Poles	Fn	A	B	C	A	B	C	Fn	Poles	Trip	Circuit Description	CKT
1					15.3			15.1							2
3	PANEL 'M'	150 A	3			14.3			14.9			3	150 A	PANEL 'P3'	4
5							13.8			15.1					6
7					12.4			9.6							8
9	PANEL 'P1'	150 A	3			10.2			9.8			3	150 A	PANEL 'P4'	10
11							9.7			9.8					12
13					2.4			9.8							14
15	PANEL 'P2'	150 A	3			4.1			8.4			3	150 A	PANEL 'K'	16
17							5.3			9.6					18
19					6.7			1.0							20
21	PANEL 'T'	100 A	3			4.9			1.1			3	100 A	PANEL 'L'	22
23							5.3			1.1					24
25					13.1			--			--	1	--	SPACE	26
27	DOCU-1	150 A	3			13.1			--		--	1	--	SPACE	28
29							13.1			--	--	1	--	SPACE	30
31					0.0			--			--	1	--	SPACE	32
33	WATER TREATMENT BUILDING	200 A	3			0.0			--		--	1	--	SPACE	34
35							0.0			--	--	1	--	SPACE	36
37					0.0			5.0							38
39	SPD	60 A	3			0.0			5.0			3	70 A	LIFT STATION	40
41							0.0			5.0					42
		Connected Load:			90.4 kVA		85.9 kVA			87.7 kVA					
					755.5 A		716.1 A			733.6 A					

Load Classification	Connected Load	Demand Factor	Demand Load	Panel Totals	
Lighting	4.940 kVA	125.00%	6.175 kVA	**Total Connected Load:**	264.0 kVA
Other	227.788 kVA	100.00%	227.788 kVA		732.9 A
Receptacle	31.320 kVA	65.96%	20.660 kVA		
				Total Demand Load:	254.6 kVA
					706.8 A

Notes:

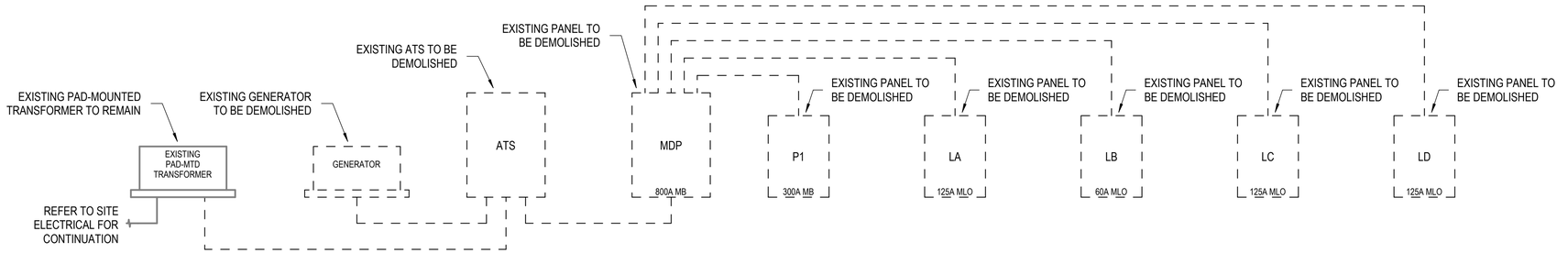

B1 DEMOLITION ELECTRICAL RISER DIAGRAM
NTS

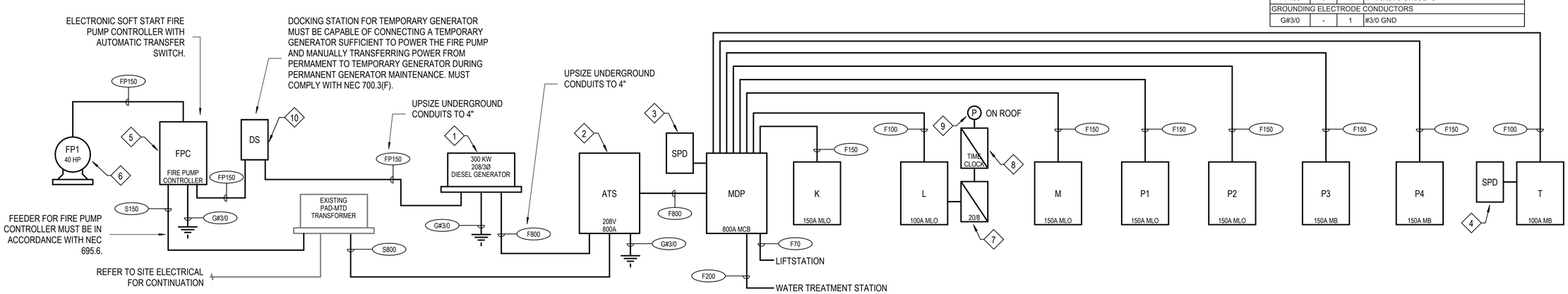

A1 ELECTRICAL RISER DIAGRAM
NTS

NEW WORK NOTES

1. 300 KW DIESEL GENERATOR. SEE GENERATOR SPECIFICATIONS FOR DETAILS.
2. UL S.E. RATED, 800 AMP, 3 POLE, 208V/3 PHASE, NEMA 1 OPEN TRANSITION AUTOMATIC TRANSFER SWITCH RATED AT 30,000 AIC. DO NOT BOND PANEL NEUTRAL TO GROUND ATS.
3. PROVIDE SERVICE-ENTRANCE RATED SURGE PROTECTIVE DEVICE (SPD). CONTRACTOR MUST INSTALL UNIT WITH SHORTEST POSSIBLE LEAD LENGTH FROM BREAKER AND MUST NOT EXCEED 5 FEET TO SPD UNIT. CONDUTORS MUST BE MINIMUM #6 CU WIRE AND AVOID SHARP BENDS.
4. PROVIDE SURGE PROTECTIVE DEVICE (SPD) WITH 240 KA RATING PER PHASE, UL 1449 3RD EDITION LISTED, AND RATED FOR SENSITIVE ELECTRONIC EQUIPMENT WITH SINEWAVE TRACKING TECHNOLOGY. CONTRACTOR MUST INSTALL UNIT WITH SHORTEST POSSIBLE LEAD LENGTH FROM BREAKER AND MUST NOT EXCEED 5 FEET TO SPD UNIT. PROVIDE 4-#6 WIRE AND 1-#10 GROUND IN 1" CONDUIT. CONDUCTORS MUST AVOID SHARP BENDS.
5. CONNECT FIRE PUMP CONTROLLER. COORDINATE WITH FIRE PROTECTION.
6. FIRE PUMP CONNECTED THROUGH CONTROLLER. COORDINATE WITH FIRE PROTECTION.
7. MECHANICALLY HELD 20/8, 8 POLE LIGHTING CONTACTOR WITH 120/1 COIL. CONNECT SPECIFIED CIRCUITS THROUGH CONTACTOR AS REQUIRED. SEE LIGHTING PLANS FOR CIRCUITS.
8. 7-DAY PROGRAMMABLE TIME CLOCK TO TURN LIGHTS OFF W/SEASONABLE DAYLIGHT SCHEDULE ADJUSTMENT AND 10 HOUR BATTERY BACKUP.
9. PHOTOCELL ON ROOF FACING NORTH TO TURN LIGHTS ON. ADJUST SENSITIVITY AS REQURIED FOR PROPER OPERATION.
10. GENERATOR DOCKING STATION.

FIRE PUMP NOTES:

1. ALL WIRING ASSOCIATED WITH THE FIRE PUMP IN PUMP ROOM MUST COMPLY WITH ALL REQUIREMENTS OF NEC 695.6.
2. ROUTE FIRE PUMP CONDUITS SUFFICIENTLY AWAY FROM CONDUIT FOR BUILDING SERVICE TO COMPLY WITH NEC 230.72(B).

FIRE PUMP VOLTAGE DROP CALCUATIONS (PER NEC 695.7):

INITIAL VOLTAGE: 208/3
FIRE PUMP HORSEPOWER: 40HP
CONDUCTOR LENGTH: 125 FEET
CONDUCTOR SIZE: #1/0 CU

	AMPS	VOLTAGE DROP
MOTOR STARTING CONDITIONS	641.0 AMPS	8.2% (17.0 V)
115% OF FULL LOAD CURRENT	131.1 AMPS	1.7% (3.5 V)

ELECTRICAL RISER FEEDER SCHEDULE

FEEDER ID	PHASE	# OF RUNS	FEEDER DESCRIPTION PER RUN
SERVICE LATERALS			
S150	3	1	4 - #3/0, 4" C
S800	3	3	4 - 300 KCM, 4" C (PROVIDE (1) ADDITIONAL 4" CONDUIT SPARE)
THREE-PHASE FEEDERS			
F70	3	1	4 - #4, #8 GND, 1 1/4" C
F100	3	1	4 - #3, #8 GND, 1 1/4" C
F150	3	1	4 - #1/0, #6 GND, 2" C
F200	3	1	4 - #3/0, #6 GND, 2" C
F800	3	3	4 - 300 KCM, #1/0 GND, 2 1/2" C
FP150	3	1	4 - #3/0, #6 GND, 2" C
GROUNDING ELECTRODE CONDUCTORS			
G#3/0	-	1	#3/0 GND

APPR | DATE | DESCRIPTION | SYM

NAVFAC

NORTH CAROLINA PROFESSIONAL SEAL 045329 ENGINEER MICHAEL K. WILSON, JR. 7/7/26 SEAL

CRENSHAW CONSULTING Engineers
www.crenshawconsulting.com
NC LICENSE #C-1168 | 3816 Bush Street, Suite 200, Raleigh, North Carolina 27609 | 919-871-1073 | Fax 871-0429

A/E INFO

APPROVED
FOR COMMANDER NAVFAC
ACTIVITY
SATISFACTORY TO

DES	MKW	DRW	JDC	CHK	JTR

PM/DM L. PEED
BRANCH MANAGER H. PERRY
CHIEF ENG/ARCH P. FAULKNER
FIRE PROTECTION D. CHASTAIN

DEPARTMENT OF THE NAVY
NAVAL FACILITIES ENGINEERING COMMAND ~ MIDATLANTIC
1ST MARINE CORPS
MARINE CORPS AIR STATION
NAVAL FACILITIES ENGINEERING COMMAND
NAVAL STATION NORFOLK, VA
CHERRY POINT, NC

MCOLF ATLANTIC
BUILDING 7019 RENOVATIONS

ELECTRICAL RISER DIAGRAM

SCALE: AS INDICATED
STATION DESIGN WON: 7406712
STATION CONSTRUCTION WON: 7406712
NAVFAC DRAWING NO. 12939568
SHEET 143 OF 148

E-701

DRAWFORM REVISION: 25 AUGUST 2020

TELECOMMUNICATIONS NOTES

1. PROVIDE ALL COMMUNICATIONS CABLING, RACKS, CONDUITS, TERMINATIONS AND MISC. HARDWARE FOR TELE/DATA, BACKBOARDS, AND PATHWAYS FOR COMPLETE AND OPERATIONAL COMMUNICATIONS SYSTEMS.
2. LABEL ALL OUTLETS / JACKS PER BASE STANDARDS. AT COMPLETION, PROVIDE TEST REPORTS AND INSTALLED LOCATION AND NUMBERING OF ALL PORTS.
3. REFER TO BASE TELECOMMUNICATIONS SPECIFICATION FOR ADDITIONAL INFORMATION AND REQUIREMENTS.
4. PROVIDE ALL LADDER RACKS, FITTINGS, BONDING JUMPERS, PATCH PANELS, WIRE MANAGEMENT DEVICES AND CABINETS AND FULLY CONNECT AND TEST ALL ELEMENTS. ALL CONDUITS TO BE SECURELY FASTENED AND FIRE STOPPED AND MUST OVERLAP THE BACKBOARD BY 3-6".
5. MAINTAIN 12" OF CLEARANCE ABOVE ALL CABLE TRAY SYSTEMS FOR MAINTENANCE. CABLE TRAY SYSTEMS MUST BE PROVIDED WITH ALL NECESSARY COMPONENTS AND ACCESSORIES FOR A COMPLETE SYSTEM.
6. TELECOMMUNICATIONS CABLING MUST NOT EXCEED 295 FEET IN LENGTH BETWEEN PATCH PANEL AND WORK AREA OUTLET.
7. MAINTAIN 6" OF SEPARATION BETWEEN TELECOMMUNICATIONS AND POWER CONDUITS.
8. ALL GROUNDING MUST COMPLY WITH TIA J-STD-607.
9. LADDER RACK FOR COMM ROOMS MUST BE A MINIMUM OF 12 INCHES WIDE BY 2 INCHES DEEP.
10. SURFACE-MOUNTED APPLICATIONS SHALL UTILIZE HOLOCOMM OR EQUAL TYPE PRODUCT FOR OUTLET BOXES AND RACEWAY.
11. REFER TO LIFE SAFETY PLANS FOR LOCATIONS OF RATED WALLS.
12. HEIGHTS ARE TO THE BOTTOM OF THE DEVICE UNLESS NOTED OTHERWISE.
13. MAINTAIN 6" OF SEPARATION BETWEEN ALL NETWORK CLASSIFICATIONS.

TELECOMMUNICATIONS LEGEND

◀	TELECOMMUNICATIONS OUTLET - 18" AFF, UON, 5" SQUARE X 3" DEEP BOX WITH 2" DEEP MUD RING FOR MASONRY WALLS OR PLASTER RING TO MATCH GWB THICKNESS WITH 1-1/4" CONDUIT STUBBED TO DATA CABLE TRAY. PROVIDE (4) CAT6 CABLES. RUN (2) GREEN CAT6 CABLES TO DATA PATCH PANEL AND (2) BLUE CAT6 CABLES TO VOICE PATCH PANEL. SEE TELECOMMUNICATIONS OUTLET DETAILS FOR ADDITIONAL INFORMATION.
◀ W	TELECOMMUNICATIONS WALL OUTLET - 54" AFF, UON, 5" SQUARE X 3" DEEP BOX WITH 2" DEEP MUD RING FOR MASONRY WALLS OR PLASTER RING TO MATCH GWB THICKNESS WITH 1" CONDUIT STUBBED TO DATA CABLE TRAY. PROVIDE (1) BLUE CAT6 CABLE. SEE TELECOMMUNICATIONS OUTLET DETAILS FOR ADDITIONAL INFORMATION.
◁	TELECOMMUNICATIONS DATA OUTLET - 18" AFF, UON, 5" SQUARE X 3" DEEP BOX WITH 2" DEEP MUD RING FOR MASONRY WALLS OR PLASTER RING TO MATCH GWB THICKNESS WITH 1-1/4" CONDUIT STUBBED TO DATA CABLE TRAY. PROVIDE (2) GREEN CAT6 CABLES TO DATA PATCH PANEL. SEE TELECOMMUNICATIONS OUTLET DETAILS FOR ADDITIONAL INFORMATION.
◁	TELEPHONE BACKBOARD - 4'W X 8'H X 3/4" FIRE-RATED PLYWOOD SHEETS IN QUANTITY AS REQUIRED TO COVER WALLS AS SHOWN ON PLANS (MINIMUM OF 2 SHEETS). PROVIDE #1/0 GROUND. SEE TELECOMM DETAILS FOR MORE INFORMATION.
(J) TV	CATV WALL BOX (COMMERCIAL) - 18" AFF, UON. BOX MUST BE 5" SQUARE X 3" DEEP BOX WITH 2" DEEP MUD RING FOR MASONRY WALLS OR PLASTER RING TO MATCH GWB THICKNESS. RUN (1) 1 1/4" CONDUIT TO DATA CABLE TRAY. PROVIDE PULL WIRE.
◀	TELECOMMUNICATIONS WALL OUTLET - HEIGHT AS INDICATED, 5" SQUARE X 2-7/8" DEEP BOX FOR GYPBOARD WALL OR 4-11/16" SQUARE X 2-7/8" DEEP BOX WITH MUD RING FOR CMU WALL. PROVIDE 1-1/4" CONDUIT STUBBED TO NIPRNET CABLE TRAY. PROVIDE (2) CAT6 CABLES TO NIPR PATCH PANEL. SEE TELECOMMUNICATIONS OUTLET DETAILS FOR ADDITIONAL INFORMATION.
(J) WAP	MOUNT IN VOID SPACE ABOVE ACCESSIBLE CEILING. PROVIDE 5" SQUARE X 2-7/8" BOX WITH 1-1/4" CONDUIT TO NEAREST CABLE TRAY OR COMM ROOM. PROVIDE (2) CAT6A UTP CABLES.

ABBREVIATIONS

A	ABOVE COUNTER
AFF	ABOVE FINISHED FLOOR
C	CONDUIT
FOC	FIBER OPTIC CABLING
IDC	INSULATION DISPLACEMENT CONNECTOR
ISP	INSIDE PLANT
NIC	NOT IN CONTRACT
OC	ON CENTER
OSP	OUTSIDE PLANT
PDS	PROTECTED DISTRIBUTION SYSTEM
PR	PAIR
S	SURFACE-MOUNTED
TGB	TELCOMM GROUND BUS BAR
TMGB	TELCOMM MAIN GROUND BUS BAR
UON	UNLESS OTHERWISE NOTED

APPR | DATE | DESCRIPTION | SYM

NAVFAC

NORTH CAROLINA PROFESSIONAL SEAL 045329 ENGINEER MICHAEL K. WILSON, JR.
7/1/26
SEAL

CRENSHAW CONSULTING Engineers
www.crenshawconsulting.com
NC LICENSE #C-1168
3816 Bush Street, Suite 200
Raleigh, North Carolina 27609
919-871-1073 Fax 871-0429

A/E INFO

APPROVED

FOR COMMANDER NAVFAC

ACTIVITY

SATISFACTORY TO

DES	MKW	DRW	JDC	CHK	JTR

PM/DM: L. PEED
BRANCH MANAGER: H. PERRY
CHIEF ENG/ARCH: P. FAULKNER
FIRE PROTECTION: D. CHASTAIN

DEPARTMENT OF THE NAVY
NAVAL FACILITIES ENGINEERING COMMAND
1ST MARINE CORPS
MARINE CORPS AIR STATION
NAVAL FACILITIES ENGINEERING COMMAND ~ MIDATLANTIC
NAVAL STATION - NORFOLK, VA.
CHERRY POINT, NC

MCOLF ATLANTIC
BUILDING 7019 RENOVATIONS

TELECOMMUNICATIONS NOTES AND LEGENDS

SCALE: AS INDICATED
STATION DESIGN WON: 7406712
STATION CONSTRUCTION WON: 7406712
NAVFAC DRAWING NO. 12939569
SHEET 144 OF 148

T-001

DRAWFORM REVISION: 25 AUGUST 2020

NEW WORK NOTES

1. 6"W X 4" D WIRE BASKET CABLE TRAY FOR TELECOMMUNICATIONS SYSTEM. MAINTAIN 12" CLEARANCE ABOVE AND TO ONE SIDE OF TRAY SYSTEM. SEE DETAILS SHEET T-502. CLOSELY COORDINATE WITH CEILINGS AND OTHER SYSTEMS.
2. PROVIDE (3) 4" CONDUIT SLEEVES WITH BUSHINGS THROUGH WALL FOR CABLING PATHWAY.
3. PROVIDE DATA CONNECTION FOR HVAC CONTROL PANEL.
4. PROVIDE DATA CONNECTION FOR FIRE ALARM AND MASS NOTIFICATION CONTROL PANEL. COORDINATE WITH FIRE PROTECTION.
5. PROVIDE DATA CONNECTION FOR FIRE PUMP CONTROLLER. EXACT OUTLET LOCATION MUST BE CLOSELY COORDINATED WITH FIRE ALARM.
6. PROVIDE EXTERIOR RATED JUNCTION BOX HIGH ON EXTERIOR WALL FOR WEATHER ANTENNA. PROVIDE 2" CONDUIT BACK TO COMM ROOM. PROVIDE PULL WIRE. COORDINATE EXACT LOCATION OF ANTENNA WITH CONTRACTING OFFICER.

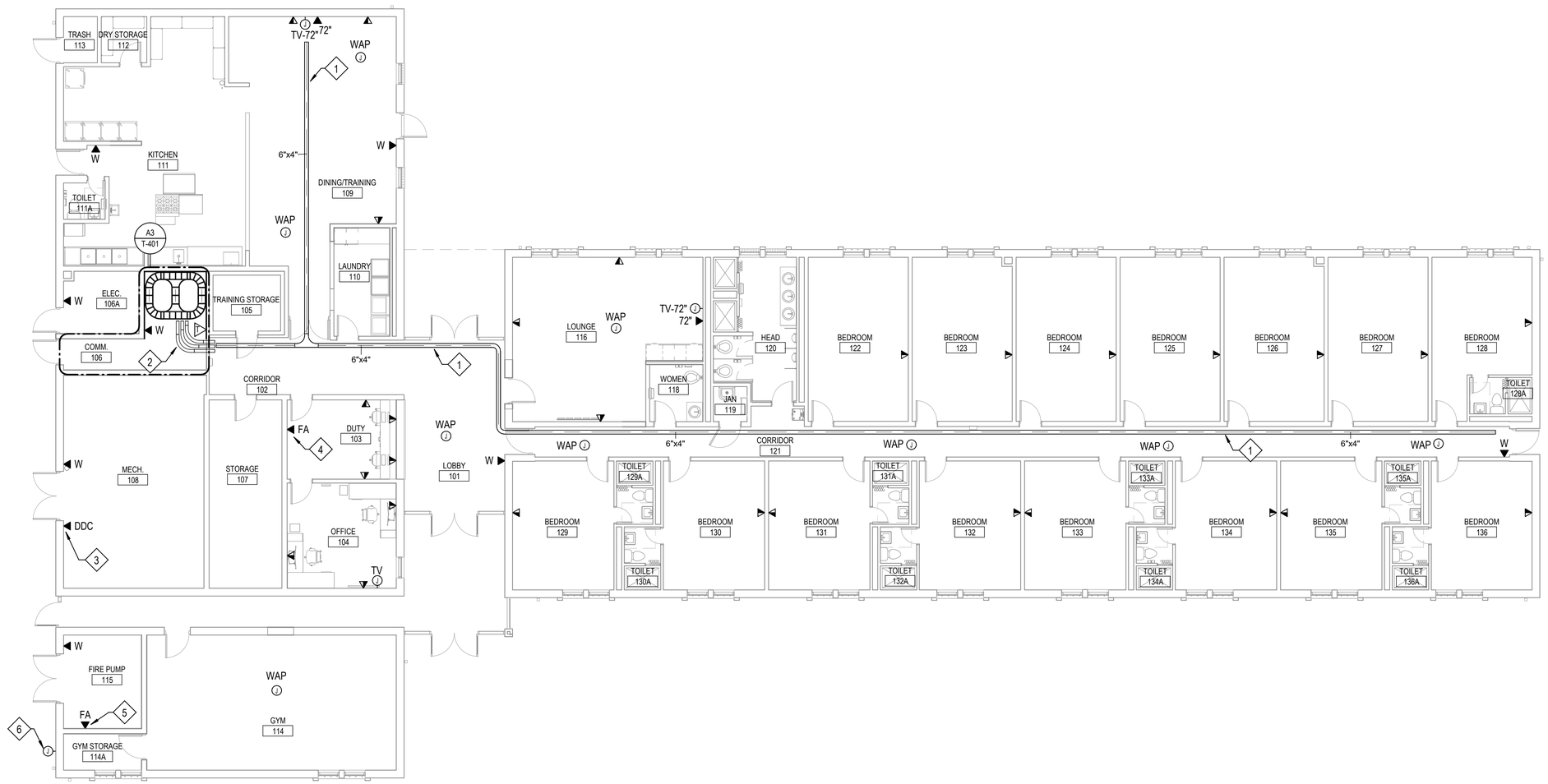

A1 FLOOR PLAN - TELECOMMUNICATIONS
1/8" = 1'-0"

GRAPHIC SCALE: 1/8"=1'-0"
8' 0 4' 8' 16'

SYM	DESCRIPTION	DATE	APPR

NAVFAC

NORTH CAROLINA PROFESSIONAL SEAL 045329 ENGINEER MICHAEL K. WILSON, JR.
7/1/26
SEAL

CRENSHAW CONSULTING engineers
NC LICENSE #C-1156
www.crenshawconsulting.com
3516 Bush Street, Suite 200
Raleigh, North Carolina 27609
919-871-1070 Fax 871-5620

A/E INFO

APPROVED

FOR COMMANDER NAVFAC

ACTIVITY

SATISFACTORY TO

DES	MKW	DRW	JDC	CHK	JTR

PM/DM	L. PEED
BRANCH MANAGER	H. PERRY
CHIEF ENG/ARCH	P. FAULKNER
FIRE PROTECTION	D. CHASTAIN

DEPARTMENT OF THE NAVY
NAVAL FACILITIES ENGINEERING COMMAND
NAVAL FACILITIES ENGINEERING COMMAND ~ MIDATLANTIC
NAVAL STATION - NORFOLK, VA
IPT MARINE CORPS
MARINE CORPS AIR STATION
CHERRY POINT, NC

MCOLF ATLANTIC
BUILDING 7019 RENOVATIONS

FLOOR PLAN - TELECOMMUNICATIONS

SCALE:	AS INDICATED
STATION DESIGN WON:	7406712
STATION CONSTRUCTION WON:	7406712
NAVFAC DRAWING NO.	12939570
SHEET	145 OF 148

T-101

DRAWFORM REVISION: 25 AUGUST 2020

NEW WORK NOTES

1. NEW TELECOMMUNICATIONS RACK(S). COORDINATE EXACT PLACEMENT WITH BASE TELEPHONE.
2. PROVIDE TELECOMM BACKBOARDS ON THREE WALLS AS INDICATED.
3. PROVIDE (3)-4" CONDUITS (WITH PULL WIRE) FROM HANDHOLE ON SITE ELECTRICAL PLANS TO SERVICE ENTRANCE. PROVIDE 50 PAIR OSP COPPER CABLING IN (1) 4" CONDUIT AND 24 STRAND SINGLE MODE FIBER OPTIC CABLING IN (1) 4" CONDUIT WITH 3X3 CELL MESH INNERDUCT. (1) 4" CONDUIT MUST REMAIN SPARE.

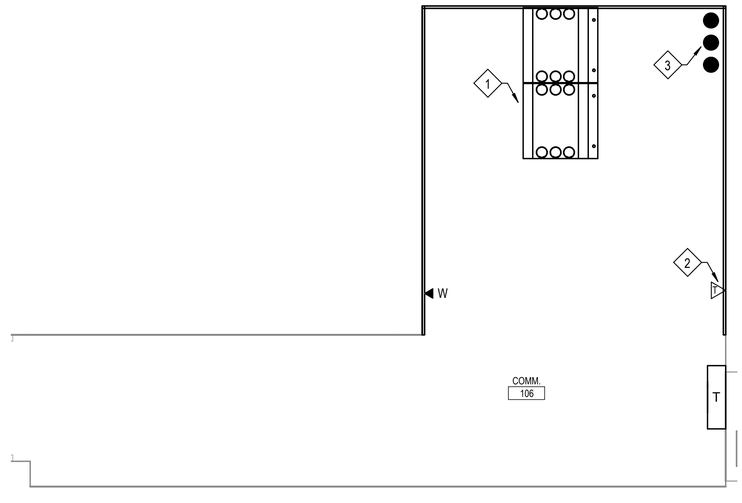

A3 ENLARGED PLAN - 106 COMM - TELECOMMUNICATIONS
1/2" = 1'-0"

N

GRAPHIC SCALE: 1/2"=1'-0"
2' 0 1' 2' 4'

SYM	DESCRIPTION	DATE	APPR

NAVFAC

NORTH CAROLINA PROFESSIONAL SEAL 045329 ENGINEER MICHAEL K. WILSON, JR.
7/1/26
SEAL

CRENSHAW CONSULTING Engineers
NC LICENSE #C-1156
www.crenshawconsulting.com
3818 Bush Street, Suite 200
Raleigh, North Carolina 27609
919-871-1070 Fax 871-5620

A/E INFO

APPROVED

FOR COMMANDER NAVFAC

ACTIVITY

SATISFACTORY TO

DES MKW	DRW JDC	CHK JTR	
PM/DM		L. PEED	
BRANCH MANAGER		H. PERRY	
CHIEF ENG/ARCH		P. FAULKNER	
FIRE PROTECTION		D. CHASTAIN	

DEPARTMENT OF THE NAVY
NAVAL FACILITIES ENGINEERING COMMAND
NAVAL FACILITIES ENGINEERING COMMAND ~ MIDATLANTIC
NAVAL STATION - NORFOLK, VA
IPT MARINE CORPS
MARINE CORPS AIR STATION
CHERRY POINT, NC

MCOLF ATLANTIC
BUILDING 7019 RENOVATIONS

ENLARGED PLAN - TELECOMMUNICATIONS

SCALE: AS INDICATED
STATION DESIGN WON: 7406712
STATION CONSTRUCTION WON: 7406712
NAVFAC DRAWING NO. 12939571
SHEET 146 OF 148
T-401

DRAWFORM REVISION: 25 AUGUST 2020

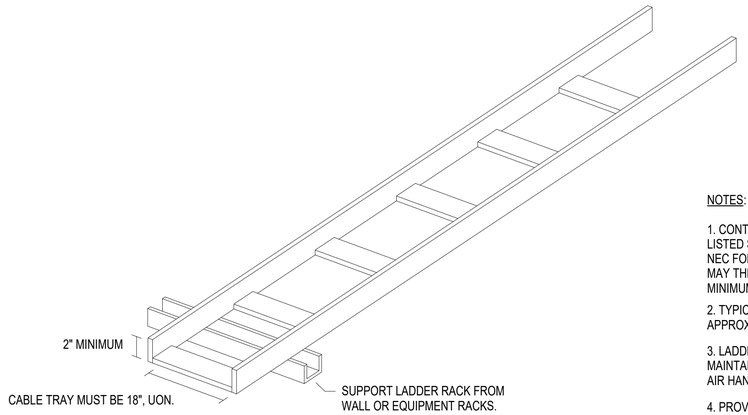

NOTES:

1. CONTRACTOR MUST PROVIDE PATHWAY FOR ALL LISTED SYSTEMS CABLING. TRAY MUST COMPLY WITH NEC FOR CABLE TRAY FILL REQUIREMENTS. IN NO CASE MAY THE CABLE TRAY BE LESS THAN THE STATED MINIMUM SIZE.
2. TYPICAL MOUNT OVER RACKS IN TELECOM ROOM AT APPROXIMATELY 7' AFF.
3. LADDER RACK MUST BE INSTALLED SUCH THAT IT MAINTAINS 3 FEET OF CLEARANCE FROM THE MINI SPLIT AIR HANDLER.
4. PROVIDE BONDING AND GROUNDING FOR ALL CONDUIT, CABLE TRAY, AND LADDER RACK.

B1 LADDER CABLE TRAY DETAIL
NTS

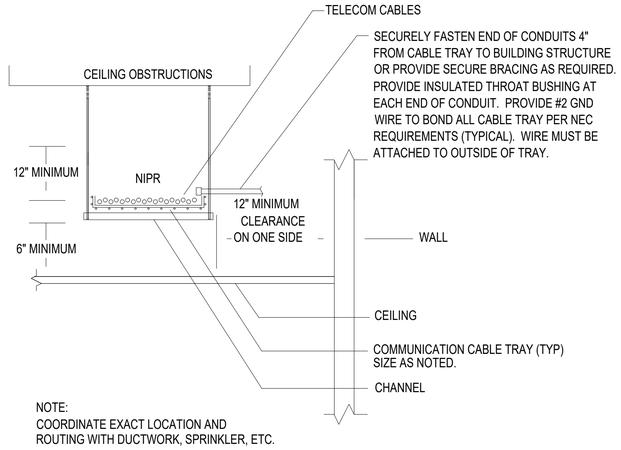

NOTE:
COORDINATE EXACT LOCATION AND ROUTING WITH DUCTWORK, SPRINKLER, ETC.

CROSS SECTIONAL VIEW: ABOVE CEILING INSTALLATION

B4 CABLE TRAY DETAIL
NTS

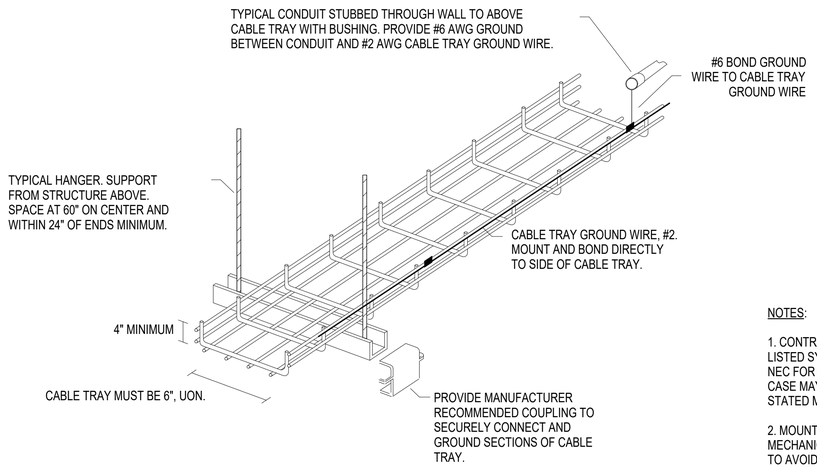

NOTES:

1. CONTRACTOR MUST PROVIDE PATHWAY FOR ALL LISTED SYSTEMS CABLING. TRAY MUST COMPLY WITH NEC FOR CABLE TRAY FILL REQUIREMENTS. IN NO CASE MAY THE CABLE TRAY BE LESS THAN THE STATED MINIMUM SIZE.
2. MOUNT CABLE TRAY AT A MINIMUM OF 12" BELOW MECHANICAL DUCT WORK BUT AS HIGH AS POSSIBLE TO AVOID TAMPERING.
3. TYPICAL MOUNTING METHOD.

A1 WIRE BASKET CABLE TRAY DETAIL
NTS

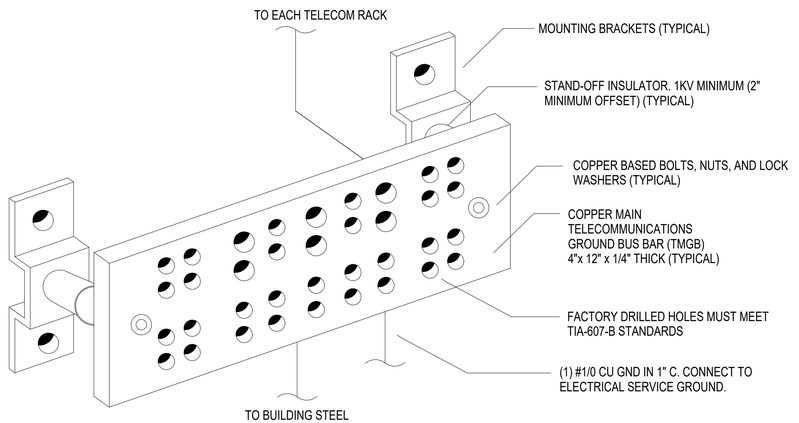

A4 TYPICAL GROUND BUS BAR DETAIL
NTS

SYM	DESCRIPTION	DATE	APPR

NAVFAC

NORTH CAROLINA PROFESSIONAL SEAL 045329 ENGINEER MICHAEL K. WILSON, JR.
7/1/26
SEAL

CRENSHAW CONSULTING Engineers
www.crenshawconsulting.com
NC LICENSE #C-1168
3816 Bush Street, Suite 200
Raleigh, North Carolina 27609
919-871-1073 Fax 871-0429

A/E INFO

APPROVED

FOR COMMANDER NAVFAC

ACTIVITY

SATISFACTORY TO

DES	MKW	DRW	JDC	CHK	JTR
PM/DM					L. PEED
BRANCH MANAGER					H. PERRY
CHIEF ENG/ARCH					P. FAULKNER
FIRE PROTECTION					D. CHASTAIN

DEPARTMENT OF THE NAVY
NAVAL FACILITIES ENGINEERING COMMAND
1ST MARINE CORPS
MARINE CORPS AIR STATION
NAVAL FACILITIES ENGINEERING COMMAND ~ MIDATLANTIC
NAVAL STATION NORFOLK, VA
CHERRY POINT, NC

MCOLF ATLANTIC
BUILDING 7019 RENOVATIONS

TELECOMMUNICATIONS DETAILS

SCALE:	AS INDICATED
STATION DESIGN WON:	7406712
STATION CONSTRUCTION WON:	7406712
NAVFAC DRAWING NO.	12939572
SHEET	147 OF 148

T-501

DRAWFORM REVISION: 25 AUGUST 2020

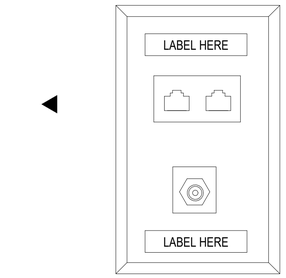

C2 TYPICAL DATA/TV OUTLET
NTS

COLOR DESIGNATIONS:
BLUE - VOICE
GREEN - DATA

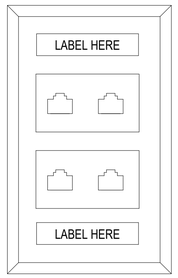

C3 TYPICAL WORKSTATION OUTLET
NTS

COLOR DESIGNATIONS:
BLUE - VOICE

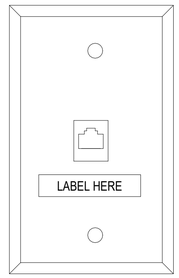

C5 TYPICAL WALL PHONE OUTLET
NTS

NOTES:

1. PROVIDE ONE 1" CONDUIT WITH TWO CAT6 CABLES FROM THE TELECOMMUNICATIONS RACK TO THE BUILDING FACP AND BMS MONITORING PANELS. PROVIDE DUAL LINES TO FACP AND BMS. COORDINATE WITH FINAL LOCATION OF FACP AND BMS MONITORING PANELS.
2. COMPLY WITH ALL APPLICABLE BASE STANDARDS.
3. PROVIDE ALL LADDER RACKS, FITTINGS, BONDING JUMPERS, PATCH PANELS, WIRE MANAGEMENT DEVICES AND CABINETS AND FULLY CONNECT AND TEST ALL ELEMENTS. ALL CONDUITS TO BE SECURELY FASTENED AND FIRE STOPPED AND MUST OVERLAP THE BACKBOARD BY 3-6".
4. ALL FIBER CONDUITS MUST BE PROVIDED WITH FABRIC MESH INNERDUCT.
5. PROVIDE REQUIRED SLACK IN COPPER AND FIBER CABLES.
6. OUTLET CONDUITS MUST EITHER HOME RUN TO RACK/CABINET OR RUN TO CABLE TRAY. BOND PER TIA-607. NO J-HOOKS ARE ALLOWED.
7. ALL HOME RUNS MUST BE GROUNDED IN COMM ROOM.

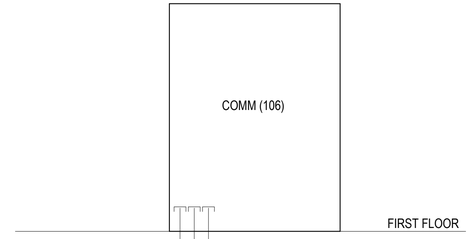

3-4" CONDUITS WITH PULL WIRE. PROVIDE 3X3 FABRIC INNERDUCT IN FIBER CONDUITS. PROVIDE 50 PAIR OSP COPPER AND 24 STRAND SINGLE MODE FIBER. SEE SITE PLAN FOR CONTINUATION.

A3 TELECOMMUNICATIONS RISER DIAGRAM
NTS

APPR	DATE	DESCRIPTION	SYM

NAVFAC

SEAL
NORTH CAROLINA
PROFESSIONAL
SEAL
045329
ENGINEER
MICHAEL K. WILSON, JR.
7/1/26

CRENSHAW CONSULTING Engineers
NC LICENSE #C-1168
www.crenshawconsulting.com
3816 Bush Street, Suite 200
Raleigh, North Carolina 27609
919-871-1073 Fax 871-0409

A/E INFO

APPROVED

FOR COMMANDER NAVFAC

ACTIVITY

SATISFACTORY TO

DES	MKW	DRW	JDC	CHK	JTR

PM/DM	L. PEED
BRANCH MANAGER	H. PERRY
CHIEF ENG/ARCH	P. FAULKNER
FIRE PROTECTION	D. CHASTAIN

DEPARTMENT OF THE NAVY
NAVAL FACILITIES ENGINEERING COMMAND
1ST MARINE CORPS
MARINE CORPS AIR STATION

NAVAL FACILITIES ENGINEERING COMMAND ~ MIDATLANTIC
NAVAL STATION - NORFOLK, VA.
CHERRY POINT, NC

MCOLF ATLANTIC
BUILDING 7019 RENOVATIONS

TELECOMMUNICATIONS DETAILS

SCALE:	AS INDICATED
STATION DESIGN WON:	7406712
STATION CONSTRUCTION WON:	7406712
NAVFAC DRAWING NO.	12939573
SHEET	148 OF 148

T-502

DRAWFORM REVISION: 25 AUGUST 2020