MAMMOTH CAVE NATIONAL PARK

RECONSTRUCT THE SAND CAVE BOARDWALK

MACA 217854

PROJECT SPECIFICATIONS

FINAL
CONSTRUCTION DOCUMENTS

STATE OF KENTUCKY
CRAIG JOUPPI
30092
LICENSED
PROFESSIONAL ENGINEER

1/31/2024

NATIONAL PARK SERVICE

JANUARY 2024

STATE OF KENTUCKY
TIMOTHY J.
HOGAN
26364
1/31/2024
LICENSED
PROFESSIONAL ENGINEER

TABLE OF CONTENTS

DIVISION 01 - GENERAL REQUIREMENTS

01 11 00 Summary of Work
01 26 01 Contract Modification Procedures
01 27 00 Definition of Contract Line Items
01 31 00 Project Management & Coordination
01 32 16 Construction Schedule
01 32 33 Photo Documentation
01 33 23 Submittal Procedures
Submittal Transmittal Form CM16
Submittal List
01 35 13 Archeological Protection
01 35 23 Safety Requirements
01 35 91 Historic Preservation Treatment Procedures
01 40 00 Quality Requirements
Contractor Quality Control (CQC) Daily Report
Accessibility Inspection Report Form
Statement of Structural Tests and Special Inspections
01 42 00 Reference Standards
01 50 00 Temporary Facilities and Controls
01 57 19 Noise & Acoustics Management
01 57 23 Under-An-Acre Pollution Prevention
01 67 00 Product Requirements
01 73 40 Execution
01 74 19 Construction Waste Management and Disposal
01 77 00 Closeout Procedures
01 78 23 Operation And Maintenance Data
Closeout Operation Maintenance Requirements
01 81 13.13 Sustainable Design Requirements for Non-LEED® Projects

DIVISION 02 – EXISTING CONDITIONS

02 41 13 Selective Site Demolition

DIVISION 03 - CONCRETE

03 30 00 Cast-In-Place Concrete

DIVISION 05 - METALS

05 50 00 Metal Fabrications
05 73 00 Metal Railings
05 73 10 Metal Mesh Infill

DIVISION 06 – WOOD, PLASTICS AND COMPOSITES

06 10 63 Exterior Carpentry
06 60 00 Fiberglass Reinforced Polymer (FRP) Products

DIVISION 07 – THERMAL AND MOISTURE PROTECTION

07 92 00 Joint Sealants

DIVISION 10 - SPECIALTIES

10 14 26 Regulatory Signage .....

DIVISION 31 - EARTHWORK

31 10 00 Site Clearing .....
31 20 00 Earth Moving.....
31 25 00 Erosion and Sediment Controls .....
31 50 00 Excavation Support and Protection .....

DIVISION 32 – EXTERIOR IMPROVEMENTS

32 12 16 Asphalt Paving .....
32 13 13 Concrete Paving .....
32 17 23 Pavement Markings.....
32 82 60 Wood Fencing .....
32 92 00 Seeding .....
32 93 00 Plants .....

APPENDICES

Appendix A Mammoth Cave – Heritage Trail and Sand Cave Trail Geotechnical Engineering Report.....

SECTION 01 11 00 - SUMMARY OF WORK

PART 1 - GENERAL

1.1 SUMMARY

A. Section includes the following:

1. Work Covered by Contract Documents
2. Work Phases
3. Work Under Other Contracts
4. Government-Furnished Materials
5. Contractor Use of Site
6. Public Use of Site
7. Occupancy Requirements for Buildings
8. Conduct of Operations
9. Work Restrictions
10. Special Construction Requirements
11. Soils Investigation Report
12. Additional Reports
13. Contractor's employee badges and vehicle identification

1.2 WORK COVERED BY CONTRACT DOCUMENTS

A. Project Location: The project is located Sand Cave Trail head and Mammoth Cave National Park entrance sign on Old Mammoth Cave Road. See Sheet G2 – Overall Layout Sheet for overall layout.

B. The Work consists of:

1. The demolition of the existing boardwalk and overlook trail, removal of the existing sidewalk and wayside pathway and photo post. Installation of new accessible curb ramp and sidewalk to Mammoth Cave entrance sign, new photo post, installation of a new at-grade concrete trail, new boardwalk and overlook with composite decking, secondary single-track aggregate base trail with connections to the main trail boardwalk, low profile footpath bridges, metal stair system down to base of sink hole with a wood and composite viewing platform of Sand Cave Entrance.

C. Project will be constructed under a single prime contract.

1.3 WORK UNDER OTHER CONTRACTS

A. General: Cooperate with separate contractors so work on those contracts may be carried out smoothly, without interfering with or delaying work under this Contract. Coordinate Work of this Contract with work performed under separate contracts.

1.4 CONTRACTOR USE OF SITE

A. General: Contractor shall have limited use of site for construction operations. Limit use of premises to **areas within the Contract limits** indicated on drawings. Do not disturb portions of Project site beyond areas in which the Work is indicated.

1. Limits: Confine constructions operations to fenced area indicated on drawings.
2. Limit site disturbance, including earthwork and clearing of vegetation, 10 feet beyond surface walkways, patios, surface parking, and utilities less than 12 inches in diameter; in order to limit compaction in the constructed area.

B. Storage of Materials: Confine storage of materials to the contractor staging area.

C. Contractor Cleaning of Equipment and Materials: There shall be no washing off of equipment or washing out of materials inside the building or by use of any exterior drains onsite, including but not limited to paint, plaster, mortar, caulk, etc.

D. Preservation of Natural Features:

1. Prevent damage to natural surroundings. Restore damaged areas, repairing or replacing damaged trees and plants, at no additional expense to the Government.
2. Provide temporary barriers to protect existing trees and plants and root zones.
3. Do not remove, injure, or destroy trees or other plants without prior approval. Consult with Contracting Officer (CO) and remove agreed-on roots and branches that interfere with construction.
4. Do not fasten ropes, cables, or guys to existing trees.
5. Carefully supervise excavating, grading, filling, and other construction operations near trees to prevent damage.

E. Driveways and Entrances: Keep driveways and entrances serving premises clear and available to Government employees, and emergency vehicles at all times. Do not use for parking or storage of materials.

1. Schedule deliveries to minimize use of driveways and entrances.
2. Schedule deliveries to minimize space and time requirements for storage of materials and equipment on-site.

F. Construction Camp: Establishment of a camp within park will not be permitted.

G. Hauling Restrictions: Comply with legal load restrictions in hauling of materials. Load restrictions on park roads are identical to state load restrictions with such additional regulations as may be imposed by the Park Superintendent. Information regarding rules and regulations for vehicular traffic on park roads may be obtained from the Office of the Park Superintendent. A special permit will not relieve Contractor of liability for damage which may result from moving of equipment.

1.5 PUBLIC USE OF SITE

A. Contractor shall at all times conduct his operations to ensure the least inconvenience to public. Road closures may be permitted, when required, upon specific approval of Contracting Officer. The duration and timing of road closures will be planned to minimize disturbance to park visitors.

1.6 CONDUCT OF OPERATIONS

A. Contractor shall conduct his operations in conformance with rules and regulations promulgated by the Secretary of the Interior for the National Park Service, and applicable park rules and regulations prescribed by Park Superintendent.

B. Work on Saturdays, Sundays, Federal holidays or at night may not be performed unless stated in the Work Restrictions below or without prior consent from the Contracting Officer. Submit requests at least 48 hours in advance of the work to the Contracting Officer for approval.

C. No signs or advertisements (except those specified herein) shall be displayed on the construction site or within the park unless approved by the Contracting Officer.

1.7 WORK RESTRICTIONS

A. On-Site Work Hours: Work shall be generally performed during normal business working hours of 8:00 a.m. to 5:00 p.m., Monday through Friday, except when otherwise indicated.

1. Weekend Hours: To be requested in writing to the CO and approved at least forty-eight (48) hours in advance to the work.
2. Early Morning Hours: None.
3. Hours for **noisy activity**: 8:00 a.m. to 5:00 p.m.

B. Existing Utilities

1. Existing Utilities: Notify Contracting Officer and utility companies of proposed locations and times for excavation.
2. Contractor shall be responsible for locating and preventing damage to known utilities. If damage occurs, repair utility at no additional expense to the Government.
3. If damage occurs to an unknown utility, repair utility. An equitable adjustment will be made in accordance with the Changes clause of the contract.

C. Existing Utility Interruptions: Do not interrupt utilities serving facilities occupied by Government or others unless permitted under the following conditions and then only after arranging to provide temporary utility services according to requirements indicated:

1. Notify Contracting Officer not less than two business days in advance of proposed utility interruptions.
2. Do not proceed with utility interruptions without Contracting Officer's written permission.
3. Hours and length of Utility Shutdowns: Will occur between the hours of 10:00 p.m. and 6:00 a.m., unless otherwise approved by the Contracting Officer.
4. Limit maximum outage time to two hours.

D. Nonsmoking Building/Tobacco Use/Vaping: Smoking is not permitted within building or within 25 feet of entrances, operable windows, or outdoor air intakes.

E. Contractor washing out of materials inside the existing building or by use of any drains onsite is restricted.

1.8 SPECIAL CONSTRUCTION REQUIREMENTS

A. Project Website: A project website administered by NPS will be used for purposes of managing communication and documents during construction stage.

1. See Section 01 31 00 "Project Management and Coordination" for requirements on using Project Website.

PART 2 - PRODUCTS (Not Used)

PART 3 - EXECUTION (Not Used)

END OF SECTION 01 11 00

SECTION 01 26 01 – CONTRACT MODIFICATION PROCEDURES

PART 1 - GENERAL

1.1 SUMMARY

A. Section consists of administrative and procedural requirements for contract modifications.

1.2 DEFINITIONS AND ALLOWANCES

A. Home Office Overhead: Costs incurred in support of all of a contractor's projects and not attributable to a specific job. The cost for home office overhead is only allowed as a percentage of all direct work excluding profit. The following items represent allowable home office overhead costs identified in Part 31 of the Federal Acquisition Regulation (FAR):

1. Rent
2. Utilities
3. Furnishings
4. Office equipment
5. Executive and management staff not exclusively assigned to the project
6. Support, accounting, and administrative staff
7. Preparation of cost proposals, estimating, and schedule analyses connected with Modifications
8. Estimating and preconstruction services
9. Mortgage costs
10. Real estate and corporate taxes
11. Automobile maintenance and travel costs for home office personnel
12. Home office insurances i.e. structure, automotive, umbrella, flood, etc.
13. Depreciation of equipment and other assets
14. Home office supplies (paper, staples, etc.)
15. Legal services
16. Accounting and data processing
17. Professional fees/registration

B. General Conditions (Field Office Overhead): Management and administrative costs incurred on site for the designated project. Costs associated with preparation of modifications will not be allowed. Costs for these items are to be included only in the general conditions of the modification estimate. Only in the case of a contract time extension are additional general conditions included in modifications. The following items, if applicable, are considered allowable costs for calculating General Conditions:

1. Project Manager (PM), Assistant Project Manager
2. Superintendent, Assistant Superintendent
3. Quality Control, Safety Officer, Environmental Manager, etc.
4. Engineers
5. Travel, lodging, and per diem (as established by Federal Travel Regulations)
6. Scheduling

7. Field Office Trailers and associated temporary utilities
8. Field office supplies

    a. Mailing and couriers
    b. Reproduction costs
    c. Storage
    d. Phones
    e. Computers
    f. Copiers

9. Personal vehicles i.e. Superintendent Pickup trucks

C. General Requirements: Costs directly associated with the project and are necessary to perform the actual work of the modification. These costs shall be shown as direct costs in the estimate. The following items, if applicable, are considered allowable costs for calculating General Requirements:

1. Hoisting
2. Material handling
3. Temporary fencing
4. Port-a-lets
5. Trash removal, dumpsters
6. Barricades
7. Small tools
8. Safety supplies
9. Scaffolding
10. Daily cleaning
11. Traffic control
12. Temporary signage
13. Temporary heating and power

D. Personnel Costs: Costs included in the modification must only be for General Conditions staff and workers actually present and working on project site. Modification costs for salaried workers are only allowed within the structure of a 40-hour week and no overtime or holiday pay will be allowed.

1. Worker Hourly Rates are costs directly associated with the individual worker and consist of the following:

    a. Base Rate: The hourly rate paid directly to the worker
    b. Labor Burden: Employer payments of all applicable burdens; includes insurance and taxes the business must pay on behalf of the worker to government entities and educational forums, such as:

        1) Social Security
        2) Medicare
        3) Workers Compensation – Policy and company calculation to be made available.
        4) Federal Unemployment Tax Act (FUTA) - Cap Rate and percentage to be proportionally allocated over one year.
        5) State Unemployment Tax Act (SUTA) - Cap Rate and percentage to be proportionally allocated over one year.

6) Union agreement costs - Other costs required under an enforceable collective bargaining agreement.

c. Fringe Benefits: Various non-wage compensations provided to employees such as:

1) Health Care Insurance Premiums
2) Cell Phone
3) Clothing
4) 401K and Pensions
5) Vehicle allowances
6) Gas allowance
7) Life insurance premiums
8) Disability insurance
9) Other Fringe Benefits required under an enforceable collective bargaining agreement

E. Bonuses or Deferred Compensation: No Bonus or Deferred Compensation will be allowed within any components of pricing including Home Office Overhead, General Conditions, General Requirements, Hourly Worker Rates, or the direct costs of work.

F. General Liability Insurance: An insurance policy that protects Contractor from claims resulting from bodily injury or property damage to a third party. Include as a separate line item within all modification proposals and provide a current insurance quote upon request.

G. Performance and Payment Bonds: A performance bond is a surety bond issued by an insurance company or bank to guarantee satisfactory completion of a project. The Payment Bond guarantees the Contractor will pay the labor and material costs incurred. Banks and Insurance companies charge a premium for individual project based on a sliding scale related to the size of the project. Include as a separate line item in modification proposals and provide current company bonding rates upon request.

H. Builder's Risk Insurance: Covers the contractor's loss due to fire, high winds, or other natural forces. Not reimbursed by the National Park Service (NPS) and shall not be included in modification proposals.

1.3 MODIFICATION PROPOSAL PRICING REQUIREMENTS

A. General:

1. Proposal be received in the format and within the time frame specified in the Request for Proposal (RFP) letter. Costs or delays resulting from failure of contractor to submit within the time frame specified will not be compensable.
2. Proposal shall be detailed with itemized lists of equipment, materials, labor, production rates, overhead, profit, and bond markup for each item. Labor costs must be itemized by craft and hourly rate, including Fringe Benefits and Labor Burden. If the costs of Fringe Benefits and Labor Burden are not itemized, it is assumed they are included in the hourly rate shown, or contractor is not requesting reimbursement. Contractor may utilize the government provided Contractor Estimate Form, or their own form, provided that it contains the same information and level of detail as the Government's form.

3. Requests for extensions of contract time as a result of change must be justified with a Time Impact Analysis (TIA). Refer to Section 01 32 16 "Construction Schedule", for time impact analysis requirements. TIA and associated costs shall be received with the proposal by the date shown within the Request for Proposal letter. Contractor's failure to submit within the specified time frame will be construed as the Contractor waiving right for additional time and no time extension will be allowed.
4. All supporting documentation used to justify the proposed modification will be made available to the Contracting Officer (CO) upon request.
5. Contractor shall review and approve all subcontractor/supplier pricing in detail for proper format, scope, production rates, and pricing prior to submission to NPS. All delay costs associated with not reviewing and approving subcontractor/supplier pricing will be borne by the Contractor.
6. All pricing and production rates within the estimate must be based on fair and reasonable pricing and cannot include built-in contingency.

B. Labor:

1. Contractor shall estimate cost of labor by itemizing each craft involved, indicating worker hourly rate (base rate + labor burden + fringe benefits) for each and itemizing hours required for each craft directly engaged in modification work. Any work proposed requiring overtime work or premium pay shall be itemized separately. Rates shall be in accordance with the Davis-Bacon Act as incorporated herein. Labor Burden may include payroll taxes, Social Security, unemployment insurances, workers compensation insurance, Federal Insurance Contributions Act (FICA), FUTA, and other direct costs resulting from Federal, State or local laws.
2. Itemize labor costs for equipment operators separate from equipment costs.
3. Labor cost for foremen shall only be costs for related work required for the modification.

C. Materials:

1. Estimated cost for materials shall include quotes from multiple sources. Material prices shall include applicable fees and credits, including but not limited to, sales tax, freight and delivery charges, and tax rebates.
2. No markup shall be applied to any material provided by NPS.

D. Equipment:

1. Equipment used for the project must be appropriately sized for work being performed.
2. Do not include costs for "miscellaneous tools and equipment", in your proposal for a replacement value of $500 or less. Costs shown in excess of $500 shall be broken out separately.
3. Regardless of ownership, rates to be used in determining equipment rental costs shall be the lowest cost from one of the following sources:

   a. United States (U.S.) Army Corps of Engineers, Ownership and Operating Expense Schedule (use latest edition and applicable region)
   b. Construction Blue Book
   c. Local equipment rental rates, documented by actual invoice charges, or itemized vendor quotes.

4. Estimated equipment rates shall include operating costs of all fuel, oil, lubrication, supplies, small tools, necessary attachments, ground engaging components, tires and tracks, routine repairs and maintenance (cost of major repair and overhaul is not allowed per Federal Acquisition Regulation (FAR) 31.105(d)(2)), depreciation, storage, insurance, and all incidentals. Mobilization, if applicable, may be included for equipment solely used on the modification work but must be listed separately.
5. Estimate full rate for equipment only for duration that equipment will be utilized to accomplish work of the modification.
6. Standby unit rates used in accordance with paragraph 1.3, D, 2, above. If the U.S. Army Corp of Engineers is utilized then their standby rates prevail. If Bluebook or local equipment pricing is accepted, then 1/2 of equipment costs minus any operating costs, major repair and overhaul will be accepted.
7. If equipment is in standby mode due solely to a documented NPS delay, established standby rate shall apply from the first day of the delay.
8. Equipment not used and on job site for up to five consecutive days may be classified at standby rates, provided the equipment is or has been used solely to perform work on the modification and will be necessary to complete additional modification work. Equipment still on the jobsite but not in use after five consecutive days will not be considered in the modification pricing.
9. Requests for compensation for equipment stand by time must be justified, documented and itemized separately.
10. The estimated timeframe (daily, weekly, monthly) for use of the equipment must reflect the lowest cost to the Government.

E. Establishment and Application of Overhead and Profit Percentages:

1. Home Office Overhead and Profit (OH&P) shall be applied to direct costs only. Profit shall not be applied to overhead amounts; and overhead shall not be applied to profit. Home office overhead shall contain only allowable, allocable, and reasonable costs per the contract documents and FAR Part 31. Profit percentages are based on risk factors found in FAR Part 31which have been applied to the specific type of work included in this project. ~~Negotiated rates shall not exceed the following percentages for OH&P for contractor self-performed work:~~

   ~~Overhead……10%~~
   ~~Profit……..…12%~~

2. ~~Total aggregate limit of markup (OH&P) for Contractor and Subcontractors on modification work shall not exceed 25%.~~ The NPS will not be responsible for allocation of percentages between contractor and subcontractors at any tier.
3. If Contractors form a partnership, partnership may only receive home office overhead and profit in same amount as an individual Contractor (refer to paragraph 1.3,E,1 above). It is the responsibility of the partners to decide on division of revenue.
4. Combined Increases and Decreases: On proposals involving both increases and decreases in the Contract Price, overhead and profit mark-ups are required on net increases and deducted on net decreases.
5. At no time can profit be calculated on Overhead or itself, it must be calculated on direct costs of work only.

PART 2 - PRODUCTS

PART 3 - EXECUTION

END OF SECTION 012601

SECTION 01 27 00 – DEFINITION OF CONTRACT LINE ITEMS

PART 1 - GENERAL

1.1 SUMMARY

A. Section explains in general, what is and is not included in a contract line item, and limits or cut-off points where one item ends and another begins.

B. If no contract line item exists for a portion of work, include costs in a related item.

PART 2 - PRODUCTS (Not Used)

PART 3 - EXECUTION

3.1 LIST OF CONTRACT LINE ITEMS

A. Contract Line Item Number **01 (Base Bid) – Mobilization & Demobilization**

1. This line item shall include all cost associated with mobilization and demobilization of the equipment necessary to complete the project.
2. ~~Measurement for payment will be lump sum price or percentage complete of line item per scheduled value.~~
3. ~~Payment will be made at the contract lump sum price.~~

B. Contract Line Item Number **02 (Base Bid) – Reconstruct Sand Cave Boardwalk.**

1. This item consists of all labor and materials required for demolition of existing site features as well as installation of the at grade concrete trail, boardwalks & overlooks and other associated site work in accordance with the drawings and specifications.
2. ~~Measurement for payment will be lump sum price or percentage complete of line item per scheduled value.~~
3. ~~Payment will be made at the contract lump sum price~~.

C. Contracting Line Item Number **03 (~~Bid~~ Option 1) – Secondary Sand Cave Trail.**

1. This item consists of all labor and materials required for installation of timber steps down from main trail, single-track style aggregate trail around the sink hole, metal stair structure leading down to the bottom of the sink hole, timber cave entrance viewing deck and other associated site work in accordance with the drawings and specifications.
2. ~~Measurement for payment will be lump sum price or percentage complete of line item per scheduled value.~~
3. ~~Payment will be made at the contract lump sum price.~~

END OF SECTION 01 27 00

SECTION 01 31 00 - PROJECT MANAGEMENT AND COORDINATION

PART 1 - GENERAL

1.1 SUMMARY

A. Section includes administrative provisions for coordinating construction operations on Project including, but not limited to, the following:

1. Definitions
2. Construction Coordination
3. Submittals
4. Coordination Drawings
5. Requests for Information (RFIs)
6. NPS/DSC Project Website
7. Project Meetings
8. Environmental Coordination
9. Permits

B. Related Requirements:

1. Section 01 32 16 "Construction Schedule" for preparing and submitting Contractor's construction schedule.
2. Section 01 73 40 "Execution" for procedures for coordinating general installation and field-engineering services, including establishment of benchmarks and control points.
3. Section 01 77 00 "Closeout Procedures" for coordinating closeout of the Contract.

1.2 DEFINITIONS

A. Agency with Jurisdiction
B. Construction Permits – Contractor Provided
C. Government Furnished Permits

1.3 CONSTRUCTION COORDINATION

A. Coordination: Coordinate construction operations included in different Sections of Specifications to ensure efficient and orderly installation of each part of the Work. Coordinate construction operations, included in different Sections, which depend on each other for proper installation, connection, and operation.

1. Schedule construction operations in sequence required to obtain best results where installation of one part of the Work depends on installation of other components, before or after its own installation.
2. Coordinate installation of different components with other Contractors to ensure maximum accessibility for required maintenance, service, and repair.
3. Make provisions to accommodate items scheduled for later installation.

4. Where availability of space is limited, coordinate installation of different components to ensure maximum performance and accessibility for required maintenance, service, and repair of components, including mechanical and electrical.
5. Properly plan construction operations to include permit requirements. Allow enough time to execute permit provisions to maintain work schedule, site visits, inspections, and reporting deadlines.

B. Prepare memoranda for distribution to each party involved, outlining special procedures required for coordination. Include such items as required notices, reports, and list of attendees at meetings.

C. Administrative Procedures: Coordinate scheduling and timing of required administrative procedures with other construction activities and activities of other contractors to avoid conflicts and to ensure orderly progress of the Work. Such administrative activities include, but are not limited to:

1. Preparation of Contractor's Construction Schedule
2. Preparation of the Schedule of Values
3. Installation and removal of temporary facilities and controls
4. Delivery and processing of submittals
5. Progress meetings
6. Permit requirements
7. Pre-installation conferences
8. Project closeout activities
9. Commissioning activities

1.4 SUBMITTALS

A. Coordination Drawings: Prepare Coordination Drawings if limited space availability necessitates maximum utilization of space for efficient installation of different components or if coordination is required for installation of products and materials fabricated by separate entities.

1. Content: Project-specific information, drawn accurately to scale. Do not base Coordination Drawings on reproductions of Contract Documents or standard printed data. Include following information, as applicable:

a. Indicate functional and spatial relationships of components of architectural, structural, civil, mechanical, and electrical systems.
b. Indicate dimensions shown on Contract Drawings and make specific note of dimensions that appear to be in conflict with submitted equipment and minimum clearance requirements. Provide alternate sketches to Contracting Officer (CO) for resolution of such conflicts.
c. Indicate space requirements for routine maintenance and anticipated replacement of components during the life of the installation.
d. Show location and size of access doors required for access to concealed dampers, valves, and controls.
e. Indicate required installation sequences.

2. Sheet Size: At least 8-1/2 by 11 inches (215 by 280 millimeters) but no larger than 30 by 40 inches (750 by 1000 millimeters).

3. Number of Copies: Submit two opaque copies of each submittal. Contracting Officer will return one copy.
4. Refer to individual Sections for Coordination Drawing requirements for Work in those Section

B. Coordination Drawing Organization: Organize coordination drawings as follows:

1. Floor Plans and Reflected Ceiling Plans: Show architectural, structural, mechanical, plumbing, fire-protection, fire-alarm, and electrical elements. Show locations of visible ceiling-mounted devices relative to acoustical ceiling grid. Supplement plan drawings with section drawings where required to adequately represent the Work.
2. Plenum Space: Indicate sub-framing for support of ceiling and wall systems, mechanical and electrical equipment, and related Work. Locate components within ceiling plenum to accommodate layout of light fixtures indicated on Drawings. Indicate areas of conflict between light fixtures and other components.
3. Mechanical Rooms: Provide coordination drawings for mechanical rooms showing plans and elevations of mechanical, plumbing, fire-protection, fire-alarm, and electrical equipment.
4. Structural Penetrations: Indicate penetrations and openings required for all disciplines.
5. Slab Edge and Embedded Items: Indicate slab edge locations and sizes and locations of embedded items for metal fabrications, sleeves, anchor bolts, bearing plates, angles, door floor closers, slab depressions for floor finishes, curbs and housekeeping pads, and similar items.
6. Review: Contracting Officer will review coordination drawings to confirm Work is being coordinated; details of coordination are Contractor's responsibility. If Contracting Officer determines coordination drawings are not prepared in scope or detail, or are otherwise deficient, Contracting Officer will inform Contractor, who shall make changes and resubmit.
7. Coordination Drawing Prints: Prepare coordination drawing prints according to requirements in Section 01 33 23 "Submittal Procedures."

C. Coordination Digital Data Files: Prepare coordination digital data files according to:

1. File Preparation Format: Same digital data software program, version, and operating system as original Drawings.
2. File Submittal Format: Submit or post coordination drawing files using Portable Document Format (PDF) file format.
3. Contracting Officer will furnish Contractor one set of digital data files (AutoCad.dwg) of Drawings for use in preparing coordination digital data files.

    a. Contracting Officer makes no representations as to accuracy or completeness of digital data files as they relate to Drawings.
    b. Digital Data Software Program: Drawings are available in AutoCad.dwg.

D. Division 1 documents: The following items shall be submitted a minimum of one week prior to Preconstruction Conference. Contracting Officer will notify Contractor of tentative date for Pre-Construction Conference.

1. Letter designating Project Superintendent
2. Construction Schedule
3. A Comprehensive Schedule of Values

4. Accident Prevention Plan
5. A List of Subcontractors for this project
6. Written statements from Subcontractors certifying compliance with applicable labor standard clauses.
7. Certificates of Insurance or SF1413 for Contactor and all Subcontractors
8. Waste Management Plan
9. Quality Control Plan
10. Temporary Storm Water Pollution Prevention Plan (UPPP)
11. Contractors Commissioning Plan
12. Historic Preservation Treatment Plan (HPTP)
13. List of Required Construction Permits. Include the following information for each permit:
    a. Name of Permit
    b. Agency(ies) with Jurisdiction issuing the permit
    c. Information required from Government to complete permit application

E. Provide items listed to Contracting Officer before Pre-Construction Conference. If all documents have not been received one week prior to scheduled Pre-Construction Conference date, conference may be cancelled, Notice to Proceed may not be issued, and Contracting Officer will consider other contractual remedies. Work shall not commence until written Notice to Proceed has been issued.

1.5 REQUESTS FOR INFORMATION (RFIs)

A. General: Immediately on discovery of the need for additional information or interpretation of Contract Documents, Contractor shall prepare and submit an RFI utilizing form created on NPS/DSC management software-website.

1. Contracting Officer will not respond to RFIs submitted by other entities controlled by Contractor.
2. Coordinate and submit RFIs in a prompt manner to avoid delays in the work.

B. Content of RFI: Include detailed, legible description of item needing information or interpretation and the following:

1. RFI number, numbered sequentially
2. Date
3. RFI subject
4. Specification Section number and title and related paragraphs, as appropriate.
5. Drawing number and detail references, as appropriate.
6. Field dimensions and conditions, as appropriate.
7. Contractor's suggested resolution: If Contractor's suggested resolution impacts Contract Time or Contract Sum, Contractor shall state impact in RFI.
8. Contractor's signature
9. Requested date for response
10. Attachments: Include sketches, descriptions, measurements, photos, Product Data, Shop Drawings, coordination drawings, and other information necessary to fully describe items needing interpretation.

    a. Include dimensions, thicknesses, structural grid references, and details of affected materials, assemblies, and attachments on attached sketches.

C. RFI Form: Complete RFI Form on NPS/DSC Project Website as follows:

1. Enter general information at the top of the form.
2. Under the "Action" section at the bottom of the form, select "Question" then select "CMR" in drop-down of "Send to" box.
3. Enter details of question and attach related documents.
4. Select "Submit Form" at bottom of page.

D. Contracting Officer's Action: Contracting Officer will review each RFI, determine action required, and respond. Contracting Officer will determine critical nature of each RFI and issue response accordingly.

1. The following are not considered to be RFIs and will receive no action:

a. Requests for approval of submittals.
b. Requests for approval of substitutions.
c. Requests for approval of Contractor's means and methods.
d. Requests for coordination information already indicated in Contract Documents.
e. Requests for adjustments in Contract Time or Contract Sum.
f. Requests for interpretation of Architect's actions on submittals.
g. Incomplete RFIs or inaccurately prepared RFIs.

2. Contracting Officer's action may include a request for additional information; time for response will date from time of receipt of additional information.
3. Contracting Officer's action on RFIs may result in need for a change to Contract Time or Contract Sum. All contract changes will be processed following terms and conditions of contract.

1.6 PROJECT WEB SITE

A. Use NPS/DSC management software website for communication throughout contract period on:

1. Project directory
2. Project correspondence
3. Meeting agendas and minutes
4. Contract modifications forms and logs
5. RFI form and processing
6. Task and issue management
7. Photo documentation
8. Baseline schedule, schedule updates and calendar management
9. Submittal form and processing
10. Payment coordination documentation
11. Drawing and specification document hosting, viewing, and updating
12. Online document collaboration
13. Reminder and tracking functions
14. Archiving functions
15. Notification of submittal and RFI statuses and current responsible party
16. Permits and addendums

B. Some documents are not suitable to be shared using the NPS/DSC management software website. Documents containing Personal Identifying Information (PII) (i.e. certified payrolls) shall not be shared using NPS/DSC management software website and shall be coordinated with Project team as appropriate.

C. Submit to Contracting Officer a list of employees who will need access to the website. Users will receive an invitation to register from Department of Interior (DOI). Once registered on DOI website, user will be given access to NPS/DSC management software website.

D. All users will be required to have the following software packages:

1. Internet Explorer version 7 or later.
2. Adobe Acrobat Professional (Pro) version 9 or later.

1.7 PROJECT MEETINGS

A. Preconstruction Conference: Before start of construction, Contracting Officer will arrange an on-site meeting with Contractor. Meeting agenda will include the following as a minimum:

1. Roles & Responsibilities / Lines of Authority
2. Park rules and regulations
3. Jobsite Safety
4. Resolution of comments on required Division 1 documents
5. Coordination of Subcontractors
6. Labor law application
7. Modifications
8. Payments to Contractor
9. Payroll reports
10. Contract time
11. Liquidated damages
12. Contractor Performance Evaluation
13. Display of Hotline posters
14. Notice to proceed
15. Correspondence procedures
16. NPS/DSC Project website
17. Acceptance/rejection of work
18. Progress meetings
19. Submittal procedures
20. NPS Final Accessibility Inspection
21. Environmental requirements
22. Permit requirements
23. As-constructed drawings/operation and maintenance (O&M) manuals.
24. Saturday, Sunday, holiday and night work.
25. Reference materials
26. Value engineering
27. Schedule of Values

B. Progress Meetings: Contracting Officer will schedule weekly meetings with Contractor.

1. Attendees: In addition to Government Representatives, each Contractor, Subcontractor, supplier, and other entity concerned with current progress or involved in planning, coordination, or performance of future activities shall be represented. Participants at meeting shall be familiar with Project and authorized to conclude matters relating to the Work.
2. Agenda: Review and correct or approve minutes of previous progress meeting. Review other items of significance that could affect progress. Meeting agenda will include:

    a. Approval of minutes of previous meetings
    b. Submittal status
    c. Review of off-site fabrication and delivery schedules.
    d. Requests for information (RFI) and other issues.
    e. Modifications
    f. Work in progress and projected.
        1) Status of required inspections (Special Inspections, Accessibility, etc.)
    g. Inspections of work in progress and projected (Special inspections, Accessibility, etc.)
    h. Construction Schedule update (provide updated Critical Path Method (CPM)).
    i. Status of Project Record Drawings and O&M manuals.
    j. Other business relating to work.
    k. Permit requirements

C. Preinstallation Conferences: Conduct at Project site before each construction activity that requires coordination with other construction.

1. Attendees: Installer and representatives of manufacturers and fabricators involved in or affected by installation and its coordination or integration with other materials and installations that have preceded or will follow, shall attend meeting. Advise Contracting Officer of scheduled meeting dates.
2. Agenda: Review progress of other construction activities and preparations for particular activity under consideration, including requirements for:

    a. Contract Documents
    b. Options
    c. Related RFIs
    d. Related Change Orders
    e. Purchases
    f. Deliveries
    g. Submittals
    h. Sustainable design requirements.
    i. Review of mockups
    j. Possible conflicts
    k. Compatibility requirements
    l. Time schedules
    m. Weather limitations
    n. Manufacturer's written instructions
    o. Warranty requirements
    p. Compatibility of materials
    q. Acceptability of substrates

r. Temporary facilities and controls
s. Space and access limitations
t. Regulations of agency(ies) with jurisdiction
u. Testing and inspecting requirements
v. Installation procedures
w. Coordination with other work
x. Required performance results
y. Protection of adjacent work
z. Protection of construction and personnel

3. Record significant conference discussions, agreements, and disagreements, including required corrective measures and actions.
4. Reporting: Distribute minutes of meeting to each party present and to other parties requiring information.
5. Do not proceed with installation if conference cannot be successfully concluded. Initiate whatever actions are necessary to resolve impediments to performance of Work and reconvene conference at earliest feasible date.

1.8 ENVIRONMENTAL COORDINATION

A. Contractor's Environmental Manager: Designate on-site party responsible for overseeing Contractor's conformance to environmental goals for project and implementing procedures for environmental protection.

1. Qualifications: Minimum 3 years Construction experience on projects of similar size and scope; with environmental procedures similar to this project; familiarity with Environmental Management Systems (EMSs) such as International Organization for Standardization (ISO) 14001; must be familiar with environmental regulations applicable to construction operations.
2. Responsibilities: Responsibilities shall include:

a. Compliance with applicable Federal, State, and local environmental regulations, including maintaining required documentation.
b. Implementation of Waste Management Plan (WMP).
c. Implementation of Indoor Air Quality (IAQ) Management Plan.
d. Implementation of Storm Water Pollution Prevention Plan (SWPPP).
e. Present overview of environmental issues and summarize site specific procedures relating to management plans at Preconstruction conference.
f. Training for Contractor personnel in accordance with position requirements.
g. Monitoring and documentation of environmental procedures.

B. Perform project quality control in accordance with requirements specified in Related Sections, including:

1. Quality Requirements
2. Regulatory Requirements
3. Indoor Air Quality (IAQ) Management
4. Noise and Acoustics Management
5. Temporary Storm Water Pollution Prevention Environmental Management
6. Construction Waste Management

C. Contractor's Environmental Training Program: Contractor shall provide environmental training for workers performing work on project site. Training shall include:

1. Overview of environmental issues related to building industry.
2. Overview of environmental issues related to Project.
3. Review of site-specific procedures and management plans:

    a. Construction Waste Management
    b. Indoor Air Quality (IAQ) Management
    c. Noise and Acoustics Management
    d. Temporary Storm Water Pollution Prevention

4. Pollution Prevention (P2) practices: Submit evidence of familiarity with P2 practices.
5. Compliance with environmental regulations: As specified in Regulatory Requirements. Submit Contractor 40 CFR (Code of Federal Regulations) employee training records upon request of Contracting Officer.

D. Provide documentation for environmental procedures as specified herein and in accordance with approved Waste Management Plan, IAQ Management Plan, and Storm Water Pollution Prevention Plan.

1.9 PERMITS

A. General:

1. Permits and Responsibilities: Contractor shall, without additional expense to the Government, be responsible for obtaining necessary licenses and permits, and for complying with Federal, State and municipal laws, codes, and regulations applicable to the performance of the work. Contractor shall also be responsible for damages to persons or property that occur as a result of Contractor's fault or negligence; and for materials delivered and work performed until completion and acceptance of the work.
2. For the purpose of this contract, Contractor will not be considered an agent of the Government. Contractor shall comply with appropriate Federal, State and local laws.

B. Government Furnished Permits: During development of the project's design, permits listed below were negotiated and agreed to by the Government. Terms and provisions of these permits shall be adhered to for the duration specified in each permit.

1. None

C. Potential Permits: Permits listed below were identified during the design process as likely to be required based on typical means and methods of construction. The list is provided to assist Contractor in determining which permits will be required for contract's chosen means and methods. The list shall not be considered complete; it is the Contractors' responsibility to determine means and methods and obtain required permits. Contractor shall obtain all permits required to legally conduct work.

1. Electrical Utility Hookup
2. Construction trailer, Utilities hookup permit
3. Street Closure

4. Stormwater Pollution Prevention Permit

D. Coordination with Agency(ies) with Jurisdiction Issuing Permits

1. Coordination: Contact the Agency(ies) with Jurisdiction as needed and sufficiently in advance to avoid delaying work: Coordinate meetings, reporting requirements, inspections, and other requirements.

E. Administrative Procedures:

1. Coordinate scheduling and timing of required administrative provisions of project permits with Agency(ies) with Jurisdiction, Construction Manager, and Park to avoid conflicts.
2. Supply needed information to Agency(ies) with Jurisdiction issuing permits, pay fees required and provide material needed to comply with permit's conditions and provisions.
3. Upload permits to NPS/DSC management software website when permits are obtained.

PART 2 - PRODUCTS (Not Used)

PART 3 - EXECUTION (Not Used)

END OF SECTION 01 31 00

SECTION 01 32 16 – CONSTRUCTION SCHEDULE

PART 1 - GENERAL

1.1 SUMMARY

A. Section consists of Construction Schedule requirements including:

1. Schedule of Values
2. Construction Schedule Requirements.
3. Construction Schedule Updates.
4. Time Impact Analysis.

B. Purpose: The Construction Schedule ensures adequate planning, coordination, scheduling, and reporting during execution of the work by the Contractor. It shall assist the Contractor and Contracting Officer (CO) in monitoring the progress of the work, evaluating proposed changes, and processing Contractor's monthly progress payments. It shall include the dates in the contract, phases, milestones, occupancies, holidays, weather consideration, a critical path, and the requirements of this section.

1.2 DEFINITIONS

A. Activity: A discrete part of a project identified for planning, scheduling, monitoring, and controlling the construction project. Activities included in a construction schedule consume time and resources.

1. Critical activities are activities on the critical path. They start and finish on the planned early start and finish times.
2. Predecessor Activity: An activity that precedes another activity in the network.
3. Successor Activity: An activity that follows another activity in the network.

B. Cost Loading: Allocation of the Schedule of Values for completion of an activity as scheduled. The sum of costs for all activities must equal the total Contract Sum, unless otherwise approved by the Contracting Officer.

C. Critical Path Method (CPM): Method of planning and scheduling a construction project where activities are arranged based on activity relationships. Network calculations determine when activities can be performed and the critical path of Project.

D. Critical Path: Longest connected chain of interdependent activities through the network schedule that establishes minimum overall Project duration and contains no float.

E. Float: Measure of leeway in starting and completing an activity.

1. Float: Not for the exclusive use or benefit of the Government or Contractor but is jointly owned.
2. Free Float: Amount of time an activity can be delayed without adversely affecting the early start of the successor activity.

3. Total Float: Measure of leeway in starting or completing an activity without adversely affecting planned Project completion date.

F. Resource Loading: Allocation of manpower and equipment necessary for completion of an activity as scheduled.

G. Fragnet: A partial or fragmentary network that breaks down activities into smaller activities for greater detail.

1.3 SUBMITTALS

A. Electronic Copies: Schedules and reports submitted shall be posted on the NPS/DSC management software website in native electronic file formats. The intent of the Government is to limit the number of printed reports to those determined by the project team as essential.

B. Schedule of Values: After contract award and before Pre-Construction conference, submit schedule of dollar values based on Contract Price Schedule.

C. Construction Baseline Schedule: After contract award and before Pre-Construction conference, submit two paper copies of baseline schedule, large enough to show entire schedule for entire construction period. Utilize Schedule of Values in preparation of Construction Baseline Schedule.

D. Critical Path Method (CPM) Reports: Concurrent with CPM schedule, submit three paper copies of the following computer-generated reports. For each activity, include activity number, activity description, cost and resource loading, original duration, remaining duration, early start date, early finish date, late start date, late finish date, and total float in calendar days.

1. Activity Report: List of activities sorted by activity number and then early start date, or actual start date if known.
2. Logic Report: List of predecessor and successor tasks for activities sorted in ascending order by activity number and then early start date, or actual start date if known.
3. Total Float Report: List of activities sorted in ascending order of total float.

E. Construction Schedule Updates: On or before 7th day preceding progress payment request date, submit estimates of percent completion of each schedule activity and necessary supporting data. Provide two paper copies.

F. Construction Schedule Revisions and Time Impact Analysis: For each Construction Schedule revision, submit two paper copies of a Time Impact Analysis. Incorporate a Fragmentary Network (Fragnet) into currently accepted Construction Schedule that demonstrating how Contractor proposes to incorporate a modification, change, delay, or Contractor request.

1.4 QUALITY ASSURANCE

A. Contractor shall meet with Contracting Officer on day of the preconstruction conference to go over:

1. Review software limitations, content and format for reports.
2. Verify availability of qualified personnel needed to develop and update schedule.

3. Discuss constraints, including work stages, area separations, interim milestones, and partial Government occupancy.
4. Review delivery dates for Government-furnished products.
5. Review schedule for work of separate Government contracts.
6. Review time required for review of submittals and re-submittals.
7. Review requirements for tests and inspections by independent testing and inspecting agencies.
8. Review time required for completion and startup procedures.
9. Review time required for obtaining and activating permits.
10. Review and finalize list of construction activities to be included in schedule.
11. Review baseline schedule comments, resolve issues and progress on incorporating them
12. Review procedures for updating schedule.
13. Discuss reporting requirements and establish protocol for naming and transmitting electronic schedules.

B. Contractor's Schedule Representative: Before the preconstruction conference, designate an authorized representative to be responsible for preparing and maintaining the Construction Schedule. Submit resume outlining qualifications of Scheduler to Contracting Officer for acceptance. Scheduler shall have prepared and maintained at least 5 previous schedules of similar size and complexity similar to this Contract, demonstrating proficiency of using scheduling software. Authorized representative will be responsible for preparing the Baseline Schedule, required updates, revisions, Time Impact Analyses, and reports.

1.5 COORDINATION

A. Coordinate preparation and processing of schedules and reports with performance of construction activities and with scheduling and reporting of separate Contractors.

B. Coordinate Construction Baseline Schedule with Schedule of Values, list of subcontracts, Submittals Schedule, progress reports, payment requests, and other required schedules and reports.

1. In developing Construction Baseline Schedule, ensure Subcontractor’s work at all tiers, and prime Contractor’s work, is included and coordinated.
2. Secure time commitments for performing critical elements of work from parties involved.
3. Coordinate each construction activity in network with other activities and schedule in proper sequence.

PART 2 - PRODUCTS

2.1 SCHEDULE OF VALUES

A. Breakdown each lump-sum item into component work activities used in the schedule for which progress payments may be requested. Work activities broken out within schedule of values shall be integrated into and made a logical part of the construction baseline schedule. Total costs for the component work activities shall equal contract price for that lump-sum item. Contracting Officer may request data to verify accuracy of dollar values. Include mobilization, general condition costs, overhead and profit in the total dollar value of unit price items and in the

component work activities for each lump-sum item. Do not include mobilization, general condition costs, overhead or profit as a separate item.

B. Do not break down unit price items. Use only the contract price for unit price items.

C. Total cost of all items shall equal the contract price. The Schedule of Values will form the basis for progress payments and the Construction Schedule.

2.2 CONSTRUCTION SCHEDULE REQUIREMENTS

A. Construction Baseline Schedule: Prepare Construction Baseline Schedule using a computerized, cost and resource-based**,** time-scaled Critical Path Method network analysis diagram for the Work.

1. Develop and finalize Construction Baseline Schedule so it can be accepted for use no later than 30 days after date established for the Notice of Award.

   a. Failure to include any work item required for performance of this Contract shall not excuse Contractor from completing work within applicable completion dates, regardless of Governments acceptance of schedule.

2. Establish procedures for monitoring and updating Construction Baseline Schedule and for reporting progress. Coordinate procedures with progress meeting and payment request dates.

B. Construction Baseline Schedule Preparation: Prepare a list of all activities required to complete the Work. Using preliminary Critical Path Method network diagram, prepare a skeleton network to identify probable critical paths.

1. Activities: Indicate estimated duration, sequence requirements, and relationship of each activity in relation to other activities.
2. Critical Path Activities: Identify critical path activities, including those for interim completion dates. Scheduled start and completion dates shall be consistent with Contract milestone dates.
3. Processing: Process data to produce output data on a computer-drawn, time-scaled network. Revise data, reorganize activity sequences, and reproduce as often as necessary to produce the Critical Path Method schedule within the limitations of the Contract Time.
4. Show sequence and interdependence of activities required for completion of work. Ensure work sequences are logical and Construction Baseline Schedule shows a coordinated plan of the work.
5. Resource loading of each activity shall include personnel by labor category and equipment type and capacity proposed to complete the activity in duration shown.
6. Consider seasonal weather conditions in planning and scheduling work influenced by high and low ambient temperatures, wind, or precipitation to ensure completion of work within contract time.
7. Time Frame: Proposed duration assigned to each activity shall be Contractor's best estimate of time required to complete activity considering the scope and resources planned for activity.

a. An early finish date may be shown but the late finish date shall be same date as last day of contract period. An early completion schedule shall contain:

1) Insert an activity titled "Project Float" as a successor to last activity in early project completion schedule network.
2) Add a milestone titled "Contract End Date" as a successor to the activity "Project Float".
3) Add duration to the activity "Project Float" as required so the milestone "Contract End Date" equals the last day of Contract Period.

b. Contract completion date shall not be changed by submission of a schedule that shows an early completion date.
c. Contractor shall limit use of lead or lag duration's between schedule activities.
d. Project Calendars: Develop and incorporate the following calendars:

1) Administrative Calendar: Include calendar based on a 7-day week to be used on activities based on calendar days. Apply this calendar to administrative tasks or other tasks not affected by non-working days (Federal Holidays, weather, etc.).
2) Project Calendar: Include calendar based on planned work week for the project. Include Federal Holidays, weekends, and non-workdays indicated in contract documents. Apply this calendar to activities not anticipated to be affected by weather. Be clear when identifying number of work days in work week.
3) Weather Calendar: Utilize Project Calendar and show anticipated normal downtime related to weather as non-working time. Weather days shall be based on data for local area from a reliable source like the National Oceanic and Atmospheric Administration (NOAA), National Park Service records, or source acceptable to Contracting Officer. Apply this calendar to activities anticipated to be affected by weather.

e. Activity Duration: Define so no activity is longer than 14 days, except for non-construction activities including mobilization, shop drawings and submittals, fabrication and delivery of materials and equipment.
f. Procurement Activities: Include procurement process activities for long lead items and major items, requiring a cycle of more than 60 calendar days, as separate activities in the schedule. Procurement cycle activities can include submittals, approvals, purchasing, fabrication, and delivery.
g. Submittal Review Time: Include review and re-submittal times indicated. Coordinate submittal review times in Construction Baseline Schedule.
h. Startup and Testing Time: Include not less than 7 days for startup and testing.
i. Substantial Completion: Allow time for Government administrative procedures necessary for certification of Substantial Completion. (For more information, refer to Specification 01 77 00 "Closeout Procedures.")

8. Constraints: Include constraints and work restrictions indicated in Contract Documents and as follows in schedule and show how the sequence of Work is affected.

a. Phasing: Arrange list of activities on schedule by phase.
b. Work under More Than One Contract: Include a separate activity for each contract.
c. Work Restrictions: Show effect of the following on the schedule:

1) Coordination with existing construction
2) Limitations of continued occupancies
3) Uninterruptible services
4) Partial occupancy before Substantial Completion
5) Use of premises restrictions
6) Provisions for future construction
7) Seasonal variations
8) Environmental control
9) Permit provisions

d. Work Stages: Indicate important stages of construction for each major portion of the Work.

1) Subcontract awards
2) Submittals
3) Purchases
4) Mockups
5) Fabrication
6) Sample testing
7) Deliveries
8) Installation
9) Tests and inspections
10) Adjusting
11) Curing
12) Building flush-out.
13) Building commissioning activities.

9. Milestones: Include milestones indicated in Contract Documents in schedule, including, but not limited to, Notice to Proceed, Substantial Completion.

C. Joint Review, Revision, and Acceptance:

1. Within seven calendar days of receiving Contractor's proposed Construction Baseline Schedule, Contracting Officer shall review initial Construction Baseline Schedule.
2. Within seven calendar days after review, Contractor shall revise and resubmit Construction Baseline Schedule in accordance with comments presented from review.
3. In the event the Contractor fails to define any element of work, activity, or logic, and the Contracting Officer review does not detect this omission or error, such omission or error, when discovered by Contractor or Contracting Officer, shall be corrected by Contractor within seven calendar days and shall not affect contract period.
4. Upon acceptance of the Construction Baseline Schedule, Contracting Officer saves schedule as a baseline and updates on a monthly basis. Construction schedule update will be used to evaluate Contractor's monthly applications for payment based upon information developed at monthly Construction Schedule update meeting.

D. Cost Correlation: In the heading of the schedule, provide a cost correlation line, indicating planned and actual costs. On the line, show dollar volume of Work performed as of dates used to prepare payment requests.

1. Contractor shall assign cost to construction activities on Construction Baseline Schedule. Costs shall not be assigned to submittal activities unless specified otherwise but may, with Contracting Officer's approval, be assigned to fabrication and delivery activities. Costs shall be included for testing and commissioning activities, operation and maintenance manuals, punch list activities, Project Record Documents, and demonstration and training (if applicable).
2. Each activity cost shall reflect an accurate value based on the Contract Price Schedule.
3. Total cost assigned to activities shall equal total Contract Price.

E. Recovery Schedule: When periodic schedule update indicates Work is 14 or more calendar days behind current accepted schedule, a separate recovery schedule indicating means by which Contractor intends to regain compliance with the schedule shall also be submitted. Indicate changes to working hours, working days, crew sizes, and equipment required to achieve compliance, and date by which recovery shall be accomplished.

F. Computer Software: Prepare schedules using a program developed specifically to manage construction schedules.

1. Use Microsoft Project or Primavera, for current Windows operating system.

PART 3 - EXECUTION

3.1 CONSTRUCTION SCHEDULE UPDATES

A. Progress Meeting Updates: Provide a 2-week look-ahead schedule, derived from the currently accepted schedule, before each weekly progress meeting. Utilize look-ahead schedule to facilitate and take notes on discussions held during progress meeting.

B. Monthly Schedule Updates:

1. General: Update Construction Schedule on monthly basis to reflect construction progress and activities throughout entire contract period and until project substantial completion. The status date of each schedule update shall be the 7th day preceding the progress payment request date.
2. Procedure: Contractor shall meet with Contracting Officer each month at Construction Schedule update meeting to review progress made through the status date of the Construction Schedule update, including dates activities were started or completed and percentage of work completed on each activity started or completed.
3. Reports: Concurrent schedule revisions, prepare tabulated reports showing:

   a. Identification of activities that have changed
   b. Changes in early and late start dates
   c. Changes in early and late finish dates
   d. Changes in activity durations in workdays
   e. Changes in the critical path
   f. Changes in total float or slack time
   g. Changes in the Contract Time

4. Narrative: Report shall include a brief description of actual progress made during update period; actual and potential delaying activities; impediments to progress; issues related to inclement weather; progress toward established milestones and project float. Report shall include a brief description of work anticipated to be performed in the next month. Minor revisions to the schedule should be identified for evaluation and acceptance or rejection.
5. As Work progresses, indicate Actual Completion percentage for each activity.
6. If schedule update shows a late finish date after contract completion date, include:

    a. Known delays
    b. Actions to get back on schedule
    c. Pending modifications
    d. Impediments or constraints affecting progress

7. Progress Payments: Monthly updating of the currently accepted Construction Schedule shall be an integral part of the process upon which progress payments will be made. If Contractor fails to provide schedule updates or revisions, a portion of the monthly payment may be retained until corrections have been made.

C. Distribution: Distribute copies of accepted schedule to Contracting Officer, Contracting Officers Representative, Construction Management Representative, Subcontractors, testing and inspecting agencies, and other parties identified by Contractor with a need-to-know schedule responsibility.

1. Post copies in Project meeting rooms and temporary field offices.
2. When revisions are made, distribute updated schedules to same parties and post in same locations. Delete parties from distribution when they have completed their assigned portion of the Work.

D. Construction Schedule Revisions:

1. Required Revisions: If, as a result of the monthly schedule update, it appears the currently accepted Construction Schedule no longer represents actual prosecution and progress of the work, Contracting Officer will request, and Contractor shall submit, a revision to the Construction Schedule. Contractor may also request reasonable revisions to currently accepted Construction Schedule in event the Contractor's planning for the work is revised. If Contractor desires to make changes, Contractor shall notify Contracting Officer in writing, stating reason for proposed revision. Accepted revisions shall be incorporated into currently accepted Construction Schedule for next monthly schedule update.
2. Procedure: If revision to currently accepted Construction Schedule is contemplated, Contractor or Contracting Officer shall advise the other in writing at least seven calendar days prior to next monthly schedule update meeting, describing revision and reasons for the revision. Government-requested revisions will be presented in writing to the Contractor, who shall respond in writing within seven calendar days.
3. Reports: Concurrent with making revisions to schedule, prepare tabulated reports showing:

    a. Identification of activities changed
    b. Changes in early and late start dates
    c. Changes in early and late finish dates
    d. Changes in activity durations in workdays
    e. Changes in critical path
    f. Changes in total float or slack time

3.2 TIME IMPACT ANALYSIS FOR CONTRACT MODIFICATIONS CHANGES DELAYS AND CONTRACTOR REQUESTS:

1. Requirements: When contract modifications or changes are initiated, delays experienced, or Contractor desires to revise currently accepted Construction Schedule, Contractor shall submit to Contracting Officer a written time impact analysis illustrating the influence of modification, change, delay, or Contractor request on contract time.
2. Time Extensions: Activity delays, resulting in a late completion date projection, shall not automatically mean an extension of contract time is warranted or due to Contractor. It is possible a modification, change, or delay will not affect existing critical path activities or cause non-critical activities to become critical. A modification, change, or delay may result in absorbing a part of available total float that may exist within an activity chain of the Schedule, not causing any effect on contract time. Time extensions will be granted in accordance with terms of contract.
3. Extension of contract time will be granted only to the extent the equitable time adjustments to activity or activities affected by modification, change, or delay exceeds total (positive or zero) float available on a particular activity.
4. Procedure: Each time impact analysis shall be submitted within time period stated in a request for proposal, or time period designated under the clauses entitled Changes or Default. In cases where Contractor does not submit a written request for extension of time and a time impact analysis within the designated time, it is mutually agreed that the particular modification, change, delay, or Contractor request does not require an extension of the contract time. Upon acceptance, time impact analysis shall be incorporated into currently accepted Construction Schedule at next monthly schedule update.
5. Contract Modifications: Prepare time-impact analysis using fragnets to demonstrate effect of proposed change on overall Construction Schedule for each proposed contract modification concurrent with submission.

END OF SECTION 01 32 16

SECTION 01 32 33 – PHOTO DOCUMENTATION

PART 1 - GENERAL

1.1 SUMMARY

A. Section includes administrative and procedural requirements for:

1. Existing condition images
2. Periodic construction images

B. See Section 01 77 00 "Closeout Procedures" for a complete listing of closeout documents.

1.2 SUBMITTALS

A. Construction Images: Submit images electronically within seven days of taking the image. Include:

1. Date, time and number (sequentially number all images) in filename.
2. Description of vantage point, indicating location, direction (by compass point), and elevation or story of construction.
3. Submit digital images exactly as originally recorded in digital camera, without alteration, or modifications using image-editing software.

B. Closeout: Submit complete set of digital image electronic files as a Project Record Document**.** Submit on Digital Video Disc (DVD).

1. Provide index as separate file on Disc. List each image as a file name with number, date, and time. Include description and or vantage point image was taken.
2. Submit images that have the same aspect ratio as the sensor, un-cropped.

PART 2 - PRODUCTS

2.1 FORMAT REQUIREMENTS

A. Images: Provide sRGB (standard Red Green Blue) color images in JPEG (Joint Photographic Experts Group) format. Minimum sensor size of 12 megapixels, and at image resolution of not less than 3200 by 2400 pixels.

PART 3 - EXECUTION

3.1 CONSTRUCTION IMAGES

A. General: Take digital images using the maximum range of depth of field, in-focus, to clearly show the Work. No blurry or out-of-focus areas accepted.

1. Maintain index with each set of Construction images and identify the number, date, time, and description for each.
2. Maintain one set of images accessible in field office at Project site available for reference.

B. Existing Condition Images: Before starting construction, take color digital images of Project site and surrounding properties, including existing items to remain during construction, from different vantage points.
1. Take a minimum 20 separate images to show existing conditions adjacent to property before starting Work.
2. Take a minimum of eight separate images of existing buildings either on or adjoining property to accurately record physical conditions at start of construction.

C. Periodic Construction Images: Take a minimum of 12 color, digital images weekly, with timing each month adjusted to coincide with the cutoff date associated with each Application for Payment. Select vantage points to show status of construction and progress since last images were taken.

D. Additional Images: Contracting Officer may issue requests for additional images.

1. Three days advance, where feasible.
2. In emergency situations, take additional images within 24 hours of request.
3. Additional images include, but are not limited to:

a. Immediate follow-up when on-site events result in construction damage or losses.
b. Fabrication locations away from Project site.
c. Substantial Completion of a major phase or component of Work.
d. Extra record images at time of final acceptance.

END OF SECTION 01 32 33

SECTION 01 33 23 - SUBMITTAL PROCEDURES

PART 1 - GENERAL

1.1 SUMMARY

A. Section includes administrative and procedural requirements for submitting Shop Drawings, Product Data, Samples, and other submittals.

1.2 DEFINITIONS

A. Action Submittals: Written, graphic information, and physical samples that require Government's responsive action.

B. Informational Submittals: Written information that does not require Government's responsive action. Submittals may be rejected for not complying with requirements.

C. File Transfer Protocol (FTP): Communications protocol that enables transfer of files to and from another computer over a network and that serves as the basis for standard Internet protocols. An FTP site is a portion of a network located outside of network firewalls within which internal and external users are able to access files.

D. Portable Document Format (PDF): An open standard file format licensed by Adobe Systems used for representing documents in a device-independent and display resolution-independent fixed-layout document format.

1.3 GENERAL SUBMITTAL PROCEDURES

A. General: Prepare and submit submittals required by individual Specification Sections and in some cases as requested in drawings. Types of submittals are indicated in individual specific sections.

1. Contracting Officer (CO) reserves right to require submittals in addition to those called for in individual sections.

B. Coordination: Coordinate preparation and processing of submittals with performance of construction activities. Review for legibility, accuracy, completeness, and compliance with Contract Documents.

1. Coordinate submittal with fabrication, purchasing, testing, delivery, other submittals, and related activities that require sequential activity.
2. Coordinate transmittal of different types of submittals for related parts of Work so processing will not be delayed because of need for concurrent review coordination.

a. Contracting Officer reserves right to withhold action on a submittal requiring coordination with other submittals until related submittals are received.

C. Submittal List: Submittal list is attached to the end of this Specification Section. The intent is to provide an overall summary of submittal requirements. The requirements of individual Specification Sections and terms and conditions of the Contract still apply regardless of what is shown on submittal list.

D. Processing Time: Allow time for submittal review, including time for re-submittals, as follows. Time for review shall commence when e-mail notification is received by Contracting Officer (or designee) indicating submittal has been posted on NPS management software website and is ready for review. When Contracting Officer has completed review, e-mail notification will be sent to Contractor indicating submittal has been processed. No extension of Contract Time will be authorized because of failure to transmit submittals in advance of Work to permit processing, including re-submittals.

1. Action Submittals

   a. Initial Review: Allow 30 days for initial review of each submittal. Allow additional time if coordination with subsequent submittals is required.
   b. Re-submittal Review: Allow 21 days for review of each re-submittal.

2. Informational submittals

   a. Review: Allow 10 days for review of each submittal.

E. Approved Equals:

1. For each item proposed as an "approved equal," submit supporting data, including:

   a. Drawings and samples as appropriate.
   b. Comparison of the characteristics of the proposed item with that specified.
   c. Changes required in other elements of the work because of the substitution.
   d. Name, address, and telephone number of vendor.
   e. Manufacturer’s literature regarding installation, operation, and maintenance, including schematics for electrical and hydraulic systems, lubrication requirements, and parts lists. Describe availability of maintenance service, and state source of replacement materials.

2. A request for approval constitutes a representation that Contractor:

   a. Has investigated the proposed item and determined that it is equal or superior in all respects to that specified.
   b. Will provide the same warranties for the proposed item as for the item specified.
   c. Has determined that the proposed item is compatible with interfacing items.
   d. Will coordinate installation of an approved item and make changes required in other elements of the work because of the substitution.
   e. Waives claims for additional expenses that may be incurred as a result of the substitution.

F. **Electronic Submittals:** Identify and incorporate information in each electronic submittal file as follows:

1. Transmittal Form (CM-16): All submittals shall be transmitted using National Park Service Transmittal Form (CM-16). The form can be downloaded from the DSC Workflows website's Submittal Review page and completed on the NPS/DSC management software website. No action will be taken on a submittal item unless accompanied by this Transmittal Form.

    a. Complete the general information at the top of form.
    b. Provide all required information based on submittal type
    c. Attach all related documents.
    d. Sign the Contractor section at bottom of the Transmittal Form (CM-16).

2. Physical samples: Complete Transmittal Form (CM-16) on the NPS/DSC management software website as described above. Deliver physical sample to the Contracting Officer (or designee) on site for processing. All comments and actions will be documented on the Transmittal Form (CM-16) on the NPS/DSC management software website.

G. Identification: Submittal number or other unique identifier, including revision identifier.

1. Submittal number shall use a sequential number (e.g. .001). Re-submittals shall include alphabetic suffix after another decimal point (e.g. .001.A).

H. Re-submittals: Make re-submittals using same process used with initial submittal.

1. Note date and content of previous submittal.
2. Note date and content of revision in the title block on the Transmittal Form (CM-16) and clearly indicate extent of revision.
3. Re-submit submittals until they are marked "Approved" or "Approved with notations".

I. Distribution: Furnish copies of final submittals to manufacturers, subcontractors, suppliers, fabricators, installers, and others as necessary for performance of construction activities.

J. Use for Construction: Use only final submittals with mark indicating "Approved" or "Approved with notations". Ensure notations have been incorporated and, at a minimum, keep one copy of final approved submittal on site for use during construction.

1.4 CONTRACTOR'S USE OF CAD/BIM FILES

A. General: At Contractor's written request, copies of CAD (Computer Aided Design)/BIM (Building Information Modeling) files will be provided to Contractor for Contractor's use in connection with Project, subject to:

1. Files provided as is; no format or other changes to files or changes to objects in the drawing will be done by the Government. CAD files are provided for the general information of the contractor only and are not considered part of the contract documents.

PART 2 - PRODUCTS

2.1 ACTION SUBMITTALS

A. Product Data: Collect information into a single submittal for each element of construction and type of product or equipment.

1. If information must be specially prepared for submittal because standard printed data are not suitable for use, submit as Shop Drawings, not as Product Data.
2. Mark each submittal to show which products and options are applicable.
3. As applicable, include:

a. Manufacturer's product specifications.
b. Manufacturer's installation instructions: When Contract Documents require compliance with manufacturer's printed instructions, provide one complete set of instructions to Contracting Officer and keep another complete set of instructions at the project site until substantial completion.
c. Manufacturer's catalog cuts: Submit only pertinent pages; mark each page of standard printed data to identify specific products proposed for use.
d. Wiring diagrams showing factory-installed wiring.
e. Printed performance curves.
f. Operational range diagrams.
g. Compliance with specified referenced standards.
h. Testing by recognized testing agency.

4. Submit product data in PDF (portable document format) file format before or concurrent with samples.

B. Shop Drawings: Prepare Project-specific information, drawn accurately to scale. Do not base Shop Drawings on reproductions of the Contract Documents or standard printed data.

1. Preparation: Fully illustrate requirements in Contract Documents. As applicable, include:

a. Dimensions
b. Identification of products
c. Fabrication and installation drawings
d. Roughing-in and setting diagrams
e. Wiring diagrams showing field-installed wiring, including power, signal, and control wiring
f. Shopwork manufacturing instructions
g. Templates and patterns
h. Schedules
i. Notation of coordination requirements
j. Notation of dimensions established by field measurement
k. Relationship to adjoining construction clearly indicated
l. Seal and signature of professional engineer if specified
m. Wiring Diagrams: Differentiate between manufacturer-installed and field-installed wiring

2. Submit shop drawings as PDF electronic file

C. Samples: Submit Samples for review of kind, color, pattern, and texture for a check of these characteristics with other elements and for a comparison of these characteristics between submittal and actual component as delivered and installed.

1. Transmit Samples that contain multiple, related components such as accessories together in one submittal package.
2. Complete and post the Transmittal Form (CM-16) on the NPS/DSC management software website for processing and documentation of action on submitted samples.
3. Identification: Attach label on unexposed side of Samples that includes:

    a. Generic description of Sample
    b. Product name and name of manufacturer
    c. Sample source
    d. Submittal Number and title of appropriate Specification Section

4. Disposition: Maintain sets of approved Samples at Project site, available for quality-control comparisons throughout course of construction activity. Sample sets may be used to determine final acceptance of construction associated with each set.
5. Samples for Initial Selection: Submit manufacturer's color charts consisting of units or sections of units showing full range of colors, textures, and patterns available.

    a. Number of Samples: Submit two full set(s) of available choices where color, pattern, texture, or similar characteristics are required to be selected from manufacturer's product line. Contracting Officer will return with options selected.

6. Samples for Verification: Submit full-size units or Samples of size indicated, prepared from same material to be used for the Work, cured and finished in manner specified, and physically identical with material or product proposed for use, and that show full range of color and texture variations expected. Samples include: partial sections of manufactured or fabricated components; small cuts or containers of materials; complete units of repetitively used materials; swatches showing color, texture, and pattern; color range sets; and components used for independent testing and inspection.

    a. Number of Samples: Submit four sets of Samples. Contracting Officer will retain three Sample sets; remainder will be returned. Retain Sample set as a Project Record Sample.

D. Construction Materials: Contractor is encouraged to submit products made out of recycled or environmentally responsible material. Every effort will be made by National Park Service to approve these materials.

2.2 INFORMATIONAL SUBMITTALS

A. General: Prepare and submit Informational Submittals required by individual Specification Sections.

1. Post informational submittals as PDF electronic files directly to the NPS management software website.

2. Certificates and Certifications: Provide a notarized statement with signature of entity responsible for preparing certification. Certificates and certifications shall be signed by officer or other individual authorized to sign documents on behalf of that entity.
3. Informational submittals that do not comply with requirements specified in Contract Documents will be rejected and one copy will be returned.

B. Coordination Drawings: Comply with requirements specified in Section 01 31 00 "Project Management and Coordination."

C. Contractors Construction Schedule: Comply with requirements specified in Section 01 32 16 "Construction Schedule."

D. Accident Prevention Plan: Comply with requirements specified in Section 01 35 23 "Safety Requirements."

E. Schedule of Values: Comply with requirements specified in Section 01 32 16 "Construction Schedule."

F. Waste Recycling Plan: Comply with requirements specified in Section 01 74 19 "Construction Waste Management and Disposal."

G. Quality Control Plan: Comply with requirements specified in Section 01 40 00 "Quality Requirements."

H. Storm Water Pollution Prevention Plan: Comply with requirements specified in Section 01 57 23 "Temporary Storm Water Pollution Prevention" and storm water permit requirements identified in Section 01 31 00 "Project Management and Coordination."

I. Indoor Air Quality Management Plan: Comply with requirements specified in Section 01 57 19.11 "Indoor Air Quality Management."

J. Leadership in Energy and Environmental Design (LEED™) Submittals: Comply with requirements specified in Section 01 81 13.13 "Sustainable Design Requirements - LEED for New Construction and Major Renovations."

K. Qualification Data: Prepare written information demonstrating capabilities and experience of firm or person. Include lists of completed projects with project names and addresses, names and addresses of architects and owners, and other information specified.

L. Welding Certificates: Prepare written certification that welding procedures and personnel comply with Contract Documents. Submit record of Welding Procedure Specification (WPS) and Procedure Qualification Record (PQR) on American Welding Society (AWS) forms. Include names of firms and personnel certified.

M. Installer Certificates: Prepare written statements on manufacturer's letterhead certifying Installer complies with Contract Documents and, where required, is authorized by manufacturer for this specific Project.

N. Manufacturer Certificates: Prepare written statements on manufacturer's letterhead certifying manufacturer complies with Contract Documents. Include evidence of manufacturing experience where required.

O. Product Certificates: Prepare written statements on manufacturer's letterhead certifying product complies with Contract Documents.

P. Material Certificates: Prepare written statements on manufacturer's letterhead certifying material complies with Contract Documents.

Q. Material Test Reports: Prepare reports written by a qualified testing agency, on testing agency's standard form, indicating and interpreting test results of material for compliance with requirements in Contract Documents.

R. Product Test Reports: Prepare written reports indicating current product produced by manufacturer complies with requirements in Contract Documents. Base reports on evaluation of tests performed by manufacturer and witnessed by a qualified testing agency, or on comprehensive tests performed by a qualified testing agency.

S. Research/Evaluation Reports: Prepare written evidence, from a model code organization acceptable to authorities having jurisdiction, that product complies with building code in effect for Project.

T. Preconstruction Test Reports: Prepare reports written by a qualified testing agency, on testing agency's standard form, indicating and interpreting results of tests performed before installation of product, for compliance with performance requirements in Contract Documents.

U. Compatibility Test Reports: Prepare reports written by a qualified testing agency, on testing agency's standard form, indicating and interpreting results of compatibility tests performed before installation of product. Include written recommendations for primers and substrate preparation needed for adhesion.

V. Field Test Reports: Prepare reports written by a qualified testing agency, on testing agency's standard form, indicating and interpreting results of field tests performed either during installation of product or after product is installed in its final location, for compliance with requirements in Contract Documents.

W. Maintenance Data: Prepare written and graphic instructions and procedures for operation and normal maintenance of products and equipment. Comply with requirements specified in Section 01 78 23 "Operation and Maintenance Data."

X. Design Data: Prepare written and graphic information, including: performance and design criteria, list of applicable codes and regulations, and calculations. Include list of assumptions and other performance and design criteria and a summary of loads. Include load diagrams if applicable. Provide name and version of software, if any, used for calculations. Include page numbers.

Y. Manufacturer's Instructions: Prepare written or published information documenting manufacturer's recommendations, guidelines, and procedures for installing or operating a product or equipment. Include name of product and name, address, and telephone number of manufacturer.

Z. Manufacturer's Field Reports: Prepare written information documenting factory-authorized service representative's tests and inspections. As applicable, include:

1. Statement on condition of substrates and their acceptability for installation of product.

2. Summary of installation procedures being followed, compliance with requirements and, if not, what corrective action was taken.
3. Results of operational and other tests and a statement of whether observed performance complies with the requirements.

AA. Permit Compliance Products: Prepare required information for compliance with permit provisions. Products include written notification of project startup, suspension, and completion of work; photo documentation of site conditions; reports; and drawings.

PART 3 - EXECUTION

3.1 CONTRACTOR'S REVIEW

A. Review each submittal and check for coordination with other Work of Contract and for compliance with Contract Documents. Note corrections and field dimensions.

3.2 CONTRACTING OFFICER'S ACTION

A. General: Submittals will be disapproved without technical review if identification information is missing, not filled in, or if placed on back of submittal; an incorrect format of submittals is provided; transmittal form is incorrectly filled out; submittals are not coordinated; or submittals do not show evidence of Contractor's approval.

1. Any work done or orders for materials or services placed before approval shall be at Contractor's own risk.

B. Action Submittals: Contracting Officer will review each submittal, generate comments on corrections or modifications required, and indicate appropriate action on the Transmittal Form (CM-16). Submittal will be marked as defined below:

1. APPROVED: Acceptable with no corrections.
2. APPROVED WITH NOTATIONS: Minor corrections or clarifications required. Comments are clear and no further review is required. Contractor shall address review comments when proceeding with the work.
3. DISAPPROVED - RESUBMIT: Rejected as not in accordance with the contract or as requiring major corrections or clarifications. Contracting Officer will identify reasons for disapproval. Contractor shall revise and resubmit with changes clearly identified.

C. Informational Submittals: Contracting Officer will review each submittal and will either accept or reject it.

D. Partial submittals are not acceptable, will be considered non-responsive, and will be returned without review.

END OF SECTION 01 33 23

Transmittal Form (CM-16) National Park Service (NPS) - Denver Service Center (DSC) | 10-7-20

*ACRONYMS: **A/E:** Architect/Engineer; **CMR**: Construction Management Representative; **FAR**: Federal Acquisition Regulation; **LEED**: Leadership in Energy & Environmental Design; **N/A:** Not Applicable; **PMIS**: Project Management Information System*

Submittal Number: PARK Acronym: PMIS Number: Project: Contract Number: Date: Sheet: 1 of 2

Transmittal Number:

Construction Contractor: Subcontractor / Supplier:

Action Submittal	Informational Submittal	Item Number	Specification Section Number	Paragraph Number	Description of Item (Size, Type, Name, Manufacturer, Use, etc.)	Alternate Materials Proposed	A/E ACTION Action Submittal: Approved	A/E ACTION Action Submittal: Approved with Notations	A/E ACTION Action Submittal: Disapproved - Resubmit	NPS ACTION Action Submittal: Approved	NPS ACTION Action Submittal: Approved with Notations	NPS ACTION Action Submittal: Disapproved - Resubmit	NPS ACTION Informational Submittal: Accept	NPS ACTION Informational Submittal: Reject
☐	☐						☐	☐	☐	☐	☐	☐	☐	☐
☐	☐						☐	☐	☐	☐	☐	☐	☐	☐
☐	☐						☐	☐	☐	☐	☐	☐	☐	☐
☐	☐						☐	☐	☐	☐	☐	☐	☐	☐
☐	☐						☐	☐	☐	☐	☐	☐	☐	☐
☐	☐						☐	☐	☐	☐	☐	☐	☐	☐
☐	☐						☐	☐	☐	☐	☐	☐	☐	☐
☐	☐						☐	☐	☐	☐	☐	☐	☐	☐
☐	☐						☐	☐	☐	☐	☐	☐	☐	☐
☐	☐						☐	☐	☐	☐	☐	☐	☐	☐
☐	☐						☐	☐	☐	☐	☐	☐	☐	☐
☐	☐						☐	☐	☐	☐	☐	☐	☐	☐
☐	☐						☐	☐	☐	☐	☐	☐	☐	☐
☐	☐						☐	☐	☐	☐	☐	☐	☐	☐
☐	☐						☐	☐	☐	☐	☐	☐	☐	☐
☐	☐						☐	☐	☐	☐	☐	☐	☐	☐
☐	☐						☐	☐	☐	☐	☐	☐	☐	☐
☐	☐						☐	☐	☐	☐	☐	☐	☐	☐
☐	☐						☐	☐	☐	☐	☐	☐	☐	☐
☐	☐						☐	☐	☐	☐	☐	☐	☐	☐
☐	☐						☐	☐	☐	☐	☐	☐	☐	☐
☐	☐						☐	☐	☐	☐	☐	☐	☐	☐
☐	☐						☐	☐	☐	☐	☐	☐	☐	☐
☐	☐						☐	☐	☐	☐	☐	☐	☐	☐
☐	☐						☐	☐	☐	☐	☐	☐	☐	☐

Construction Contractor - Name, Title, & Signature: Date:

I hereby certify this submittal has been reviewed for accuracy, completeness, and compliance with contract requirements. FAR 52-236-21

CMR - Name, Title, & Signature: Date:

A/E - Name, Title, & Signature: Date:

Review Comments - Name: Comment(s):

Recommended By - NPS COR or Alternate COR - Name, Title, & Signature: Date:

Action By - NPS Name, Title, & Signature: Date:

Approval of this submittal is subject to the provisions of the contract drawings and specifications.
This action is for general concurrence only and the Government is not responsible for errors or omissions.

Date Received: Date to Construction Contractor:

Distribute 1 copy each: CMR Interim, A/E, DSC, & Construction Contractor.

NPS Review Comments - Name: Comment(s):

Transmittal Form (CM-16) - Continuation

National Park Service (NPS) - Denver Service Center (DSC) | 10-7-20

*ACRONYMS: **A/E:** Architect/Engineer; **CMR**: Construction Management Representative; **FAR**: Federal Acquisition Regulation; **LEED**: Leadership in Energy & Environmental Design; **N/A:** Not Applicable; **PMIS**: Project Management Information System*

Submittal Number: PARK Acronym: PMIS Number: Project: Contract Number: Date: Sheet: 2 of 2

Transmittal Number:

Construction Contractor: Subcontractor / Supplier:

Action Submittal	Informational Submittal	Item Number	Specification Section Number	Paragraph Number	Description of Item (Size, Type, Name, Manufacturer, Use, etc.)	Alternate Materials Proposed	A/E ACTION Action Submittal: Approved	A/E ACTION Action Submittal: Approved with Notations	A/E ACTION Action Submittal: Disapproved - Resubmit	NPS ACTION Action Submittal: Approved	NPS ACTION Action Submittal: Approved with Notations	NPS ACTION Action Submittal: Disapproved - Resubmit	NPS ACTION Informational Submittal: Accept	NPS ACTION Informational Submittal: Reject
☐	☐						☐	☐	☐	☐	☐	☐	☐	☐
☐	☐						☐	☐	☐	☐	☐	☐	☐	☐
☐	☐						☐	☐	☐	☐	☐	☐	☐	☐
☐	☐						☐	☐	☐	☐	☐	☐	☐	☐
☐	☐						☐	☐	☐	☐	☐	☐	☐	☐
☐	☐						☐	☐	☐	☐	☐	☐	☐	☐
☐	☐						☐	☐	☐	☐	☐	☐	☐	☐
☐	☐						☐	☐	☐	☐	☐	☐	☐	☐
☐	☐						☐	☐	☐	☐	☐	☐	☐	☐
☐	☐						☐	☐	☐	☐	☐	☐	☐	☐
☐	☐						☐	☐	☐	☐	☐	☐	☐	☐
☐	☐						☐	☐	☐	☐	☐	☐	☐	☐
☐	☐						☐	☐	☐	☐	☐	☐	☐	☐
☐	☐						☐	☐	☐	☐	☐	☐	☐	☐
☐	☐						☐	☐	☐	☐	☐	☐	☐	☐
☐	☐						☐	☐	☐	☐	☐	☐	☐	☐
☐	☐						☐	☐	☐	☐	☐	☐	☐	☐
☐	☐						☐	☐	☐	☐	☐	☐	☐	☐
☐	☐						☐	☐	☐	☐	☐	☐	☐	☐
☐	☐						☐	☐	☐	☐	☐	☐	☐	☐

Review Comments - Name: Comment(s):

Submittal List with Review Estimate Template

National Park Service (NPS) - Denver Service Center (DSC) | 1-27-21

SUBMITTAL LIST

Park Acronym/Project Management Information System (PMIS) Number: **MACA 217854**

Project Title: **RECONSTRUCT THE SAND CAVE BOARDWALK**

SUBMITTAL			REQUIREMENTS (Indicate with **X**)							
			INFORMATIONAL				ACTION			
SPECIFICATION SECTION	PARAGRAPH NUMBER	DESCRIPTION	CERTIFICATIONS OR LABORATORY TESTS	REPORTS OR CALCULATIONS OR PLAN	MANUFACTURER DATA AND INSTRUCTIONS	OTHER	SAMPLES	SHOP DRAWINGS	MANUFACTURER DATA AND INSTRUCTIONS	OTHER
01 31 00		**Project Management and Coordination**								
	1.4A	Coordination Drawings				X				
	1.4B	Coordination Drawing Organization				X				
	1.4C	Coordination Digital Data Files				X				
	1.4D	Division 1 Documents				X				
	1.4E	Meeting				X				
01 32 16		**Construction Schedule**								
	1.3A	Electronic Copies				X				
	1.3B	Schedule of Values				X				
	1.3C	Construction Baseline Schedule				X				
	1.3D	CPM Reports		X						
	1.3E	Construction Schedule Updates				X				
	1.3F	Analysis				X				
	1.4B	Construction Contractor's Schedule Representative								X
01 32 33		**Photo Documentation**								
	1.2A	Construction Images				X				
	1.2B	Closeout Images				X				
01 35 13.		**Archeological Protection**								
	1.3A	Daily Work Schedule				X				
01 35 23		**Safety Requirements**								
	1.2	Accident Prevention Plan		X						
01 35 91		**Historic Preservation Treatment Procedures**								
	1.3A	Historic Preservation Treatment Plan		x						
	1.3B	Alternate Methods and Materials				X				
	1.3C	Photographs				x				

SUBMITTAL LIST

Park Acronym/Project Management Information System (PMIS) Number:	**MACA 217854**
Project Title:	**RECONSTRUCT THE SAND CAVE BOARDWALK**

SUBMITTAL			REQUIREMENTS (Indicate with **X**)							
			INFORMATIONAL				ACTION			
SPECIFICATION SECTION	PARAGRAPH NUMBER	DESCRIPTION	CERTIFICATIONS OR LABORATORY TESTS	REPORTS OR CALCULATIONS OR PLAN	MANUFACTURER DATA AND INSTRUCTIONS	OTHER	SAMPLES	SHOP DRAWINGS	MANUFACTURER DATA AND INSTRUCTIONS	OTHER
01 40 00		**Quality Requirements**								
	1.4A	Quality Control Plan		X						
	1.4B	Qualification Data				X				
	1.4C	Contractor's Quality Control (CQC) Daily Reports		X		X				
	1.4D	Test Reports		X		X				
	1.4E	Accessibility Inspection Report		X		X				
	1.4F	Off-Site Inspection Reports		X						
	1.4H	Permits, Licenses, and Certificates	X							
01 57 23		**Temporary Storm Water Pollution Prevention**								
	1.3A	Copy of SWPPP				X				
	1.3B	Pollution Prevention Inspection Schedule				X				
	1.3C	Storm Water Pollution Prevention Inspection				X				
	1.4D	Erosion Control Products			X					
01 67 00		**Product Requirements**								
	1.3A	Record Submittal				X				
	1.3B	Material Safety Data Sheets (MSDS)			X					
01 73 40		**Execution**								
	1.2A	Certificates	X							
	1.2B	Landfill Receipts				X				
	1.2C	Certified as-built survey				X				
	1.2D	Quantity Survey				X				
01 74 19		**Construction Waste Management and Disposal**								
	1.4A	Waste Management Plan		X						
	1.4B	Progress Documentation		X						
	1.4C	Waste Reduction Calculations		X						
	1.4D/E	Records of Donations & Sales				X				
	1.4F	Recycling and Processing Facility Records				X				
	1.4G	Landfill and Incinerator Disposal Records				X				
	1.4H	Qualification Data for Waste Management Coordinator				X				
	1.4I	Progress Payment Requirements				X				
	1.4J	Closeout Submittals				X				

SUBMITTAL LIST

Park Acronym/Project Management Information System (PMIS) Number:	**MACA 217854**
Project Title:	**RECONSTRUCT THE SAND CAVE BOARDWALK**

SUBMITTAL			REQUIREMENTS (Indicate with **X**)							
			INFORMATIONAL				ACTION			
SPECIFICATION SECTION	PARAGRAPH NUMBER	DESCRIPTION	CERTIFICATIONS OR LABORATORY TESTS	REPORTS OR CALCULATIONS OR PLAN	MANUFACTURER DATA AND INSTRUCTIONS	OTHER	SAMPLES	SHOP DRAWINGS	MANUFACTURER DATA AND INSTRUCTIONS	OTHER
01 77 00		**Closeout Procedures**								
	1.3	List of Closeout Requirements				X				
01 78 23		**Operation & Maintenance Data**								
	1.2	O&M Manuals			X					
01 81 13		**Sustainable Design Requirements for Non-LEED Pr**								
	1.3	Federal Sustainability Documentation Submittals				X				
		DIVISIONS 2-49								
02 41 13		**Selective Site Demolition**								
	1.5A	Proposed Protective Measures		X						
	1.5B	Schedule of Demolition Activities				X				
03 30 00		**Cast-In-Place Concrete**								
	1.4A	Product Data							X	
	1.4B	Design Mixtures							X	
	1.4C	Steel Reinforcement Shop Drawings						X		
	1.4D	Formwork Shop Drawings						X		
	1.4E	Construction Joint Layout								X
	1.5A	Qualification Data				X				
	1.5B	Welding Certificates	X							
	1.5C	Material Certificates	X							
	1.5D	Material Test Reports		X						
	1.5E	Field Quality-Control Reports		X						
	1.5F	Minutes of Preinstallation Conference				X				
05 50 00		**Metal Fabrications**								
	1.4A	Product Data							X	
	1.4B	Shop Drawings						X		
	1.4C	Delegated-Design Submittal								X
	1.5A	Qualification Data				X				
	1.5B	Mill Certificates	X							
	1.5C	Welding Certificates	X							
	1.5D	Paint Compatibility Certificates	X							

SUBMITTAL LIST

Park Acronym/Project Management Information System (PMIS) Number:	**MACA 217854**
Project Title:	**RECONSTRUCT THE SAND CAVE BOARDWALK**

SUBMITTAL			REQUIREMENTS (Indicate with **X**)							
			INFORMATIONAL				ACTION			
SPECIFICATION SECTION	PARAGRAPH NUMBER	DESCRIPTION	CERTIFICATIONS OR LABORATORY TESTS	REPORTS OR CALCULATIONS OR PLAN	MANUFACTURER DATA AND INSTRUCTIONS	OTHER	SAMPLES	SHOP DRAWINGS	MANUFACTURER DATA AND INSTRUCTIONS	OTHER
05 73 00		**Metal Railings**								
	1.4A	Product Data							X	
	1.4B	Shop Drawings						X		
	1.4C	Samples fort Initial Selection					X			
	1.4D	Delegated-Design Submittal								X
	1.5A	Qualification Data				X				
	1.5B	Qualifications of Stainless-Steel Products Certifying that Products Comply with Requirements			X					
	1.5C	Welding Certificates	X							
	1.5D	Product Test Reports		X						
	1.5E	Preconstruction Test Reports		X						
05 73 10		**Metal Mesh Infill**								
	1.5A	Product Data							X	
	1.5B	Samples for Initial Selection					X			
	1.5C	Samples for Verification					X			
06 10 63		**Exterior Carpentry**								
	1.5A	Product Data							X	
	1.5B	Samples					X			
	1.6A	Material Certificates	X							
	1.6B	Certificates of Inspection	X							
	1.6C	Evaluation Reports		X						
06 60 00		**Fiberglass Reinforced Polymer (FRP) Products**								
	1.7A/C	Shop Drawings						X		
	1.7B	Manufacturer's Catalog Data							X	
	1.7D	Samples					X			
07 92 00		**Joint Sealants**								
	1.3A	Product Data							X	
	1.3B	Samples for Initial Selection					X			
	1.3C	Samples fort Verification					X			
	1.3D	Joint-Sealant Schedule								X
	1.4A	Qualification Data				X				
	1.4B	Product Certificates	X							

SUBMITTAL LIST

Park Acronym/Project Management Information System (PMIS) Number:	**MACA 217854**
Project Title:	**RECONSTRUCT THE SAND CAVE BOARDWALK**

SUBMITTAL			REQUIREMENTS (Indicate with **X**)							
			INFORMATIONAL				ACTION			
SPECIFICATION SECTION	PARAGRAPH NUMBER	DESCRIPTION	CERTIFICATIONS OR LABORATORY TESTS	REPORTS OR CALCULATIONS OR PLAN	MANUFACTURER DATA AND INSTRUCTIONS	OTHER	SAMPLES	SHOP DRAWINGS	MANUFACTURER DATA AND INSTRUCTIONS	OTHER
10 14 26		**Regulatory Signage**								
	1.6A	Product Data							X	
	1.6B	Shop Drawings						X		
	1.6C	Samples for Verification					X			
	1.6D	Sign Schedule							X	
	1.7A	Sample Warranty		X						
31 10 00		**Site Clearing**								
	1.5A	Contractor Submit Permits and Notices								X
	1.6A	Record Drawings				X				
	1.6B	Copies of All Permits and Releases Prior to Disposal				X				
31 20 00		**Earth Moving**								
	1.4A	Product Data							X	
	1.4B	Samples for Verification					X			
	1.5A	Qualification Data				X				
	1.5B	Material Test Reports		X						
	1.5C	Pre-excavation Photographs or Videotapes				X				
31 25 00		**Erosion and Sedimentation Controls**								
	1.4A	Product Data							X	
	1.4B	Certificates of Purity and Content for all Seed Products								X
	1.4C	Soil Erosion Control Plan								X
	1.5A	Storm Water Operator Qualifications				X				
	1.5B	Certifications for Weed Free Straw Mulch	X							
31 50 00		**Excavation Support and Protection**								
	1.4A	Shop Drawings						X		
	1.4B	Delegated-Design Submittal								X
	1.5A	Qualification Data				X				
	1.5B	Other Informational Submittals				X				

SUBMITTAL LIST

Park Acronym/Project Management Information System (PMIS) Number:	**MACA 217854**
Project Title:	**RECONSTRUCT THE SAND CAVE BOARDWALK**

SUBMITTAL			REQUIREMENTS (Indicate with **X**)							
			INFORMATIONAL				ACTION			
SPECIFICATION SECTION	PARAGRAPH NUMBER	DESCRIPTION	CERTIFICATIONS OR LABORATORY TESTS	REPORTS OR CALCULATIONS OR PLAN	MANUFACTURER DATA AND INSTRUCTIONS	OTHER	SAMPLES	SHOP DRAWINGS	MANUFACTURER DATA AND INSTRUCTIONS	OTHER
32 12 16		**Asphalt Paving**								
	1.3A	Product Data							X	
	1.4A	Qualification Data			X					
	1.4B	Material Certificates	X							
	1.4C	Material Test Report		X						
	1.4D	Field Quality Control Reports		X						
32 13 13		**Concrete Paving**								
	1.4A	Product Data							X	
	1.4B	Manufacturer's Literature for ABAA Tactile Domes							X	
	1.4C	Shop Drawings						X		
	1.4D	Proposed Joint Layout Plan for Concrete Paving								X
	1.4E	Samples for Initial Selection					X			
	1.4F	Other Action Submittals								X
	1.5A	Qualification Data				X				
	1.5B	ABAAS Installer's Qualification				X				
	1.5C	Manufacturer's Product Data			X					
	1.5D	Material Certificates	X							
	1.5E	Material Test Reports		X						
	1.5F	Field Quality-Control Reports		X						
	1.5G	CQC Accessibility Inspection Report		X						
32 17 23		**Pavement Markings**								
	1.5A	Material Certificates							X	
	1.6A	Product Data			X					
	1.6B	Manufacturer's Certificate			X					
	1.6C	Manufacturer's Installation Instructions			X					
32 82 60		**Wood Fencing**								
	1.2A	Product Data			X					
	1.2B	Material Samples of Wood Fencing					X			

SUBMITTAL LIST

Park Acronym/Project Management Information System (PMIS) Number:	**MACA 217854**
Project Title:	**RECONSTRUCT THE SAND CAVE BOARDWALK**

SUBMITTAL			REQUIREMENTS (Indicate with **X**)							
			INFORMATIONAL				ACTION			
SPECIFICATION SECTION	PARAGRAPH NUMBER	DESCRIPTION	CERTIFICATIONS OR LABORATORY TESTS	REPORTS OR CALCULATIONS OR PLAN	MANUFACTURER DATA AND INSTRUCTIONS	OTHER	SAMPLES	SHOP DRAWINGS	MANUFACTURER DATA AND INSTRUCTIONS	OTHER
32 92 00		**Seeding**								
	1.4A	Soil Analysis Reports								X
	1.4B	Product Data							X	
	1.4C	Pesticides and Herbicides Information							X	
	1.5A	Certification of Grass Seed	X							
	1.5B	Certifications of Weed Free Straw Mulch	X							
	1.5C	Qualification Data			X					
	1.5D	Product Certificates	X							
	1.5E	Material Test Reports		X						
	1.5F	Maintenance Instructions			X					
32 93 00		**Plants**								
	1.4A	Product Data							X	
	1.4B	Samples for Verification					X			
	1.5A	Qualification Data			X					
	1.5B	Product Certificates	X							
	1.5C	Material Test Reports		X						
	1.5D	Maintenance Instructions			X					
	1.5E	Warranty				X				

SECTION 01 35 13.22 – ARCHEOLOGICAL PROTECTION

PART 1 - GENERAL

1.1 SUMMARY

A. Section consists of protecting archeological resources contained in soil deposits.

1.2 DEFINITIONS

A. Archeological Resources: Archeological resources are physical evidences of past human activity, including evidences of effects of that activity on the environment. Archeological resources represent both prehistoric and historic time periods, found above and below ground and under water.

B. Archeologically Sensitive Areas: Areas having potential to contain significant (National Register eligible) archeological resources. If National Register eligible or listed archeological resources could not be avoided, an appropriate mitigation strategy would be developed in consultation with state historic preservation officer and, if necessary, associated American Indian tribes.

C. Non-sensitive Areas: Areas with little potential of containing significant (National Register eligible) archeological resources.

D. Archeological Monitor: Representative of Government designated to oversee construction activities that could disturb archeological resources.

E. Archeological Resources Protection Act (ARPA) of 1979 (Public Law (P.L.) 96-95; 93 United States Statues at Large (Stat.) 712): defines archeological resources as any material remains of past human life or activities that are of archeological interest and at least 100 years old; Section 4 of the statute describes the requirements that must be met before Federal authorities can issue a permit to excavate or remove any archeological resource on Federal or Indian lands; the curatorial requirements of artifacts, and other materials excavated or removed.

1.3 SUBMITTALS

A. Daily Work Schedule: Detail construction work in archeologically sensitive areas. Submit to Contracting Officer (CO) 30 days before start of ground disturbing site work.

1.4 QUALITY ASSURANCE

A. At least one week before on-site work begins, Contractor shall meet with Contracting Officer and Archeological Monitor to discuss Daily Work Schedule, equipment, and special methods used in archeologically sensitive areas. Contractor shall ensure approved Daily Work Schedule is followed throughout construction.

PART 2 - PRODUCTS

2.1 DAILY WORK SCHEDULE

A. Daily Work Schedule is required for work occurring within archeologically sensitive areas. Include all work that is to occur within the area and key the schedule to the drawings to include:

1. Starting and ending dates of ground-disturbing construction.
2. Locations of temporary facilities, such as barriers, field offices, staging areas, sanitary facilities, borrow pits, and haul and access roads.
3. Types of construction, such as clearing, topsoil stripping, structure or trench excavation, landscaping, and post construction clean-up.
4. Methods and equipment used for each type of construction.
5. Plan for relocating work in the event of temporary work stoppages at each archeologically sensitive area

PART 3 - EXECUTION

3.1 BARRICADES

A. Comply with requirements specified in Section 01 50 00 "Temporary Facilities and Controls."

3.2 ARCHEOLOGICAL INVESTIGATION BY NON-NPS PERSONNEL

A. A permit is required for archeological investigations (e.g. excavation, shovel testing, coring, pedestrian survey, underwater archeology, rock art documentation, or other types of reconnaissance including archaeological monitoring of construction) carried out on parklands by non-National Park Service (NPS) personnel, unless carried out under a contract or a cooperative agreement specifically written for archeological investigations. Permits are issued under the Archaeological Resources Protection Act of 1979 (ARPA). The NPS does not issue a permit for archeological investigations carried out by NPS archeologists, or to archeologists working on NPS archeological projects under a contract or cooperative agreement.

B. Applicants should submit a Permit Application (DI Form 1926 (Revision September 2004) Office of Management and Budget (OMB) Number (No.) 1024-0037, approved through 1/31/2008. Permit Application form is available, in PDF (portable document file) format, to the manager of the park in which they propose to work; or to the regional director, with a copy to the park manager.

3.3 OBSERVATION

A. Archeological Monitor will observe ground-disturbing site work, including construction of temporary facilities, at archeologically sensitive areas, from a safe location mutually agreed on by Contractor and Monitor. As new ground is broken, Monitor will examine excavated materials, using construction layout centerline and perimeter staking as a reference point to record locations of findings.

3.4 DISCOVERY OF RESOURCES

A. If Archeological Monitor discovers resources, immediate relocation of work to a non-sensitive area may be required for Monitor to identify and document resources and, if necessary, develop appropriate mitigation plan. While Archeological Monitor is documenting resources in sensitive areas, Contractor shall relocate work to non-sensitive areas where monitoring is not normally required.

B. If resources are discovered while Archeological Monitor is absent, stop work immediately and report the discovery to the Contracting Officer.

3.5 WORK STOPPAGE

A. Contractor shall plan, schedule, and execute work to prevent stoppages at one area from stopping all work at construction site.

END OF SECTION 01 35 13.22

SECTION 01 35 23 - SAFETY REQUIREMENTS

PART 1 - GENERAL

1.1 SUMMARY

A. Section includes establishing an effective accident prevention program and providing a safe working environment for personnel and visitors.

1.2 CONDITIONS PRESENT FOR PROJECT

A. Portion of the project is around or over caves therefore precaution shall be taken with movement of equipment, especially large equipment to drive piles.

1.3 SUBMITTALS

A. Accident Prevention Plan (APP): Submit APP after contract award and before Pre-Construction conference. Contracting Officer (CO) will review proposed APP. If APP requires any revisions or corrections, Contractor shall resubmit Plan within 10 days. No progress payments will be made until the APP is accepted.

1.4 QUALITY ASSURANCE

A. Comply with contract clauses "Accident Prevention" and "Permits and Responsibilities." In case of conflicts between Federal, State, and local safety and health requirements, the most stringent shall apply. Onsite equipment shall meet 29 CFR 1926 (Code of Federal Regulations) (Occupational Safety and Health Administration (OSHA)) requirements. Failure to comply with requirements of this section and related sections may result in suspension of work.

B. Qualifications of Employees:

1. Physically and able to perform their assigned duties in a safe manner.
2. Do not allow employees whose ability or alertness is impaired because of prescription or illegal drug use, fatigue, illness, intoxication, or other conditions that may expose themselves or others to injury to perform work.
3. Provide operating instructions for equipment. Operators of vehicles, hoisting equipment, and hazardous plant equipment shall be able to understand signs, signals, operating instructions, and be fully capable of operating such equipment. Retain copies of operator licenses and certifications onsite.

1.5 ACCIDENT REPORTING

A. Reportable Accidents (per OSHA 29CFR 1904): A project reportable accident is defined as death, occupational disease, traumatic injury to employees or the public, fires, and property damage by accident in excess of $100. Notify Contracting Officer immediately in the event of a

reportable accident. Within 7 days of a reportable accident, fill out and forward to Contracting Officer an Accident/Property Damage Report (Form CM-22). Form may be obtained from the Contracting Officer.

PART 2 - PRODUCTS

2.1 ACCIDENT PREVENTION PLAN (APP)

A. APP shall be written to comply with OSHA and project requirements (generic plan is not acceptable) including but not limited to:

1. Name and qualifications of supervisor responsible to carry out program.
2. Weekly and monthly safety meetings shall be documented with topics and attendees.
3. First aid and rescue procedures.
4. Outline of each phase of the work, the hazards associated with each major phase, and the methods proposed to provide for property protection and safety of the public, National Park Service personnel, and Contractor's employees. Identify the work included under each phase, with a Job Hazard Analysis (JHA)/Job Safety Analysis (JSA), etc.
5. Training, both initial and continuing.
6. Planning for possible emergency situations, as detailed in Article 1.2. Such planning shall take nature of construction, site conditions, and degree of exposure of persons and property into consideration.
   a. The maximum utility outage time is two hours.

2.2 FIRST AID FACILITIES

A. Provide adequate facilities for number of employees and appropriate to construction hazards.

2.3 PERSONNEL PROTECTIVE EQUIPMENT (PPE)

A. Selection shall conform to OSHA Subpart E.

PART 3 - EXECUTION

3.1 DAILY SAFETY INSPECTIONS

A. Conduct daily safety inspections and maintain daily safety reports which include:
1. Area/operation inspected
2. Date of inspection
3. Identified hazards
4. Corrective actions taken

3.2 EMERGENCY INSTRUCTIONS

A. Post telephone numbers and reporting instructions for ambulance, physician, hospital, fire department, and police in conspicuous locations at work site.

3.3 FIRE AND LIFE SAFETY

A. Comply with requirements of National Fire Protection Association (NFPA) 241 (Standard for Safeguarding Construction, Alteration, and Demolition Operations).

3.4 HAZARDOUS MATERIALS

A. Hazardous materials: Explosive, flammable, poisonous, corrosive, oxidizing, irritating, or otherwise harmful substances that could cause death or injury.

B. Store hazardous materials in accordance with manufacturer's and OSHA Subpart D requirements. Maintain Safety Data Sheets (SDS) for each chemical readily available on site.

1. Immediately report spills of hazardous materials to the Park.
2. Maintain a spill emergency response kit.
3. Train employees how to respond to a spill and use emergency response kit.

3.5 PROTECTIVE EQUIPMENT

A. Inspect personal protective equipment daily and maintain in a serviceable condition. Clean, sanitize, and repair personal items as appropriate before issuing to another individual.

3.6 SAFETY MEETINGS

A. As a minimum, conduct one weekly 15-minute "toolbox" safety meeting conducted by a foreman or supervisor and attended by construction personnel at worksite. Topics shall coincide with work scheduled for following week. Document and submit meeting minutes to Contracting Officer within one day after meeting.

B. Conduct monthly safety meetings for personnel, contractors, and subcontractors performing work on the site. Notify Contracting Officer of meeting dates and times. Meetings shall be used to: review effectiveness of Contractor's safety effort; resolve current health and safety problems; provide a forum for planning safe construction activities, and for updating Accident Prevention Plan. Contracting Officers Representative will attend meetings and enter results of meetings into the daily log.

3.7 HARD HATS AND PROTECTIVE EQUIPMENT AREAS

A. A hard hat use area shall be designated by Contractor. Hard hat area shall be posted by Contractor in a manner satisfactory to Contracting Officer.

B. It is Contractor's responsibility to require persons working on or visiting site to wear hard hats and PPE in good repair at all times. As a minimum, maintain six hard hats and other APP required equipment.

3.8 TRAINING

A. First Aid: Provide training to personnel to ensure prompt and efficient first aid.

B. Hazardous Material: Train and instruct each employee exposed to hazardous material in safe and approved methods of handling and storage.

END OF SECTION 01 35 23

SECTION 01 35 91 - HISTORIC PRESERVATION TREATMENT PROCEDURES

PART 1 - GENERAL

1.1 SUMMARY

A. Section includes special procedures for historic treatment on Project including, but not limited to:

1. Definitions
2. Submittals
3. Quality Assurance
4. Storage and protection of existing historic materials
5. Project site conditions
6. Historic Preservation Treatment Plan
7. Protection, General
8. Protection during application of chemicals
9. Protection during use of heat-generating equipment
10. Historic preservation treatment procedures

1.2 DEFINITIONS

A. "Preservation" - To apply measures necessary to sustain existing form, integrity, and materials of historic property. Work may include preliminary measures to protect and stabilize the property.

B. "Rehabilitation" - To make possible a compatible use for property through repair, alterations, and additions while preserving those portions or features that convey its historical, cultural, or architectural values.

C. "Restoration" - To accurately return form, features, and character of a property to its appearance at a particular period of time by means of removal of features from other periods in its history and repair and reconstruction of missing and deteriorated features from the restoration period.

D. "Reconstruction" - To reproduce in exact form and detail, a building, structure, or artifact as it appeared at a specific period in time. Reconstructed elements do not possess historic integrity in their own right since they are-not original fabric.

E. "Stabilize" - To apply measures designed to reestablish a weather-resistant enclosure and structural reinforcement of an item or portion of the building while maintaining essential form as it exists at present. This level of intervention is aimed at retarding or arresting adverse impacts to structures.

F. "Protect and Maintain" - To remove deteriorating corrosion, reapply protective coatings, and install protective measures such as temporary guards; to provide the least degree of intervention.

G. "Repair" - To stabilize, consolidate, or conserve; to retain existing materials and features while employing as little new material as possible. Repair includes patching, piecing-in, splicing, consolidating, or otherwise reinforcing or upgrading materials. Within restoration, repair also includes limited replacement in kind, rehabilitation, and reconstruction, with compatible

substitute materials for deteriorated or missing parts of features when there are surviving prototypes.

H. "Replace" - To duplicate in its entirety, a historic element or feature by matching its historic pattern, detail and appearance. Replacement is justified when original or historic elements are damaged beyond repair or are missing. Replacement conditions and methods include:

1. Replacement with Original or Historic Fabric: Includes fabric salvaged from other locations or projects having identical architectural qualities. Duplication of appearance using identical material possessing historical significance.
2. Replacement with New Materials: Includes replacement with new material of like kind (custom fabricated of manufactured). Duplication of appearance using like material.
3. Replacement with Substitute Materials: Includes replacement with a compatible substitute that is frequently contemporary and unlike the historic fabric. Duplication of appearance using modern (non-traditional) material Use of substitute materials is not approved unless matching materials are not available.

I. "Remove" - To demolish or detach items from existing construction and legally dispose of them off-site unless indicated to be removed and salvaged or removed and reinstalled.

J. "Remove and Salvage" - To detach items from existing construction and deliver them ready for reuse to Contracting Officer (CO) or designee.

K. "Remove and Reinstall" - To detach items from existing construction, repair and prepare for reuse, and reinstall where indicated.

L. "Existing to Remain" or "Retain" - Existing items of construction not to be removed and not otherwise indicated to be removed and salvaged or removed and reinstalled.

M. "Material in Kind" - Material that closely matches existing materials through comparison of architectural qualities and salient characteristic such as species, cut, color, grain, dimension, profile, thickness, and finish.

1.3 SUBMITTALS

A. Historic Preservation Treatment Plan:

1. After contract award and before Pre-Construction conference, submit for approval a written Historic Preservation Treatment Plan (HPTP).
2. If the plan requires revisions or corrections, Contractor shall resubmit plan within 10 days.
3. No change in approved plan may be made without written concurrence by Contracting Officer.

B. Alternative Methods and Materials: If alternative methods and materials to those indicated are proposed for any phase of work, provide a written description including evidence of successful use on other, comparable projects, and program of testing to demonstrate effectiveness for use on this Project.

C. Photographs or Videotape: In accordance with Section 01 32 33 "Photographic Documentation," show existing conditions of adjoining construction and site improvements including finish

surfaces that might be misconstrued as damage caused by historic treatment operations. Submit before work begins.

1.4 QUALITY ASSURANCE

A. Historic Preservation Treatment Specialist Qualifications: Experienced firm with required certifications and training able to demonstrate through past performance they are qualified to perform this work.

1.5 STORAGE AND PROTECTION OF HISTORIC MATERIALS

A. Removed and Salvaged Historic Materials:

1. Clean salvaged historic items.
2. Pack or crate items after cleaning. Identify contents of containers.
3. Store items in secure area until delivery to Contracting Officer.
4. Transport items to storage area indicated on Drawings.
5. Protect items from damage during transport and storage.
6. Do not dispose of items removed from existing construction without prior written consent of Contracting Officer.

B. Removed and Reinstalled Historic Materials:

1. Clean and repair historic items to functional condition adequate for intended reuse.
2. Pack or crate items after cleaning and repairing. Identify contents of containers.
3. Protect items from damage during transport and storage.
4. Reinstall items in locations indicated. Comply with installation requirements for new materials and equipment. Provide connections, supports, and miscellaneous materials necessary to make item functional for use as designed.

C. Existing Historic Materials to Remain: Protect construction indicated to remain against damage and soiling during historic treatment. When permitted by Contracting Officer, items may be removed to suitable, protected storage location during historic treatment and cleaned and reinstalled in their original locations after historic treatment operations are complete.

D. Storage and Protection: When removed from existing location, store historic materials within weather-tight enclosure protected from wetting by rain, snow, or ground water, and temperature variations. Secure stored materials to protect from theft.

1. Identify removed items with an inconspicuous mark indicating original location.
2. Develop key plan when many similar items are scheduled for removal and reinstallation.

1.6 PROJECT-SITE CONDITIONS

A. Exterior Cleaning and Repairing:

1. Proceed with work only when forecasted weather conditions are favorable.

a. Wet Weather: Do not attempt repairs during rainy or foggy weather. Do not apply primer, paint, putty, or epoxy when relative humidity is above 80 percent. Do not remove exterior elements of structures when rain is forecast or in progress.
b. Do not perform exterior wet work when air temperature is below 40 degrees Fahrenheit (5 degrees Celsius).
c. Do not begin cleaning, patching, or repairing given likelihood of frost or freezing.
d. Do not begin cleaning when either air or surface temperature is below 45 degrees Fahrenheit (7 degrees Celsius) unless approved means are provided for maintaining 45 degrees Fahrenheit (7 degrees Celsius) temperature of air and materials during, and for 48 hours subsequent to, cleaning.

2. Perform cleaning and rinsing of the exterior only during daylight hours.

B. National Park Service will occupy portions of building immediately adjacent to historic treatment area. Conduct historic treatment so National Park Service operations will not be disrupted. Provide 72 hours' notice to Contracting Officer of activities that will affect National Park Service operations.

PART 2 - PRODUCTS (Not Used)

PART 3 - EXECUTION

3.1 HISTORIC PRESERVATION TREATMENT PLAN

A. Prepare written plan for preservation work covering preservation components of project. Plan shall verify construction strategy and intent is compatible with Department of the Interior's (DOI) standards for Treatment of Historic Properties, guidelines for Treatment of Cultural Landscapes, and National Park Service management policies for cultural resources. Plan shall satisfy both project scope and resource protection requirements. Plan shall include:

1. Organized list of preservation components of project, systems, and tasks
2. Staging and sequence of work
3. Disassembly and reassembly techniques and steps
4. Equipment and tools required
5. Supplies and materials with manufacturer or supplier identified including specific clean up/storage procedure including frequency and documentation of such.
6. Skilled trades and crafts required
7. Anticipated testing and analysis of fabric
8. Additional investigations for extents or magnitude of treatments needed
9. Protective measures
10. Seasonal limitations on work
11. Alternative means if primary treatment method is unfeasible
12. Work conducted off-site (Approval from Contracting Officer required prior to taking resources off-site).

3.2 PROTECTION, GENERAL

A. Comply with manufacturer's written instructions for precautions and effects of products and procedures on adjacent building materials, components, and vegetation.

B. Ensure supervisory personnel are present when work begins and during progress.

C. Temporary Protection of Historic Materials during Construction:

1. Protect existing materials during installation of temporary protections and construction. Do not deface or remove existing materials.
2. Attachments of temporary protection to existing construction shall be approved by Contracting Officer prior to installation.

D. Protect landscape work adjacent to or within work areas as follows:

1. Provide barriers to protect tree trunks.
2. Bind spreading shrubs.
3. Coverings shall allow plants to breathe. Remove coverings at end of day. Do not cover plant material with waterproof membrane more than 8 hours at a time.
4. Set scaffolding and ladder legs away from plants.

E. Existing Drains: Prior to start of work or cleaning operations, test drains and other water removal systems to ensure drains and systems function properly. Notify Contracting Officer immediately of stopped or blocked drains or systems. Do not begin Work of this Section until drains are in working order.

1. Provide method to prevent solids including stone or mortar residue from entering drains or drain lines. Clean out drains and drain lines blocked or filled because of work performed under this Contract.
2. Protect storm drains from pollutants. Block drains or filter out sediments, allowing only clean water to pass.

3.3 PROTECTION DURING APPLICATION OF CHEMICALS

A. Protect persons, motor vehicles, surrounding surfaces of building being restored, building site, plants, and surrounding buildings from harm or damage resulting from applications of chemical cleaners and paint removers.

B. Comply with requirements in Section 01 50 00 "Temporary Facilities and Controls."

C. Cover adjacent surfaces with materials proven to resist chemical cleaners selected for Project unless chemicals being used will not damage adjacent surfaces. Use covering materials containing only waterproof, UV (ultraviolet)-resistant adhesives. Apply masking agents to comply with manufacturer's written instructions. Do not apply liquid masking agent to painted or porous surfaces. Promptly remove masking to prevent adhesive staining on completion.

D. Do not clean surfaces during winds of sufficient force to spread cleaning solutions to unprotected surfaces.

E. Neutralize and collect alkaline and acid wastes and dispose of outside park boundaries.

F. Dispose of runoff from chemical operations by legal means and in a manner preventing soil erosion, undermining of paving and foundations, damage to landscaping, and water penetration into building interiors.

G. Document daily clean-up, proper storage, and disposition of any flammable/combustible materials with daily reports.

3.4 PROTECTION DURING USE OF HEAT-GENERATING EQUIPMENT

A. Comply with following procedures while performing work with heat-generating equipment, including welding, cutting, soldering, brazing, paint removal with heat, and other operations where open flames or implements utilizing heat are used:

1. Obtain Contracting Officer's approval for operations involving use of open-flame or welding equipment.

    a. Notification shall be given for each occurrence and location of work with heat-generating equipment.
    b. Obtain appropriate permit from the park as required.

2. As far as practical, use heat-generating equipment in shop areas or outside building.
3. Before work with heat-generating equipment commences, furnish fire watch (or watches) for location(s) where work is to be performed.
4. Do not perform work with heat-generating equipment in or near rooms or in areas where flammable liquids or explosive vapors are present or thought to be present. Use combustible gas indicator test to ensure area is safe.
5. Remove and keep area free of combustibles, including, rubbish, paper, waste, etc., within area of operations.

    a. If combustible material cannot be removed, provide fireproof blankets to cover such materials.

6. Where possible, furnish and use baffles of metal or gypsum board to prevent spraying of sparks or hot slag into surrounding combustible material.
7. Prevent extension of sparks and particles of hot metal through open windows, doors, holes, and cracks in floors, walls, ceilings, roofs, and other openings.
8. Inspect each location of day's work not sooner than 30 minutes after completion of operations to detect hidden or smoldering fires; ensure proper housekeeping is maintained.

B. Where sprinkler protection exists and is functional, maintain without interruption while operations are performed. If operations are performed near automatic sprinkler heads, shield individual heads temporarily with guards.

3.5 HISTORIC PRESERVATION TREATMENT PROCEDURES

A. The principal aim of preservation work is to halt the process of deterioration and stabilize the item's condition to sustain the integrity of the historic element, feature or structure being

preserved. Cyclic maintenance is often required as well as repair work. Repair is required where specifically indicated. The following procedures shall be followed:

1. Retain as much existing material as possible; repair and consolidate rather than replace.
2. Use additional material or structure to reinforce, strengthen, prop, tie, and support existing material or structure.
3. Use reversible processes wherever possible.
4. Use traditional replacement materials and techniques if possible. New work shall be distinguishable from old work and original materials and techniques.
5. Record repair work during construction with periodic construction photos and daily inspection reporting. Photo documentation is specified in Section 013233 "Photographic Documentation."

B. Prohibit smoking by personnel performing work on or near historic structures.

C. Notify Contracting Officer of visible changes in integrity of material or components due to environmental causes including biological attack, UV degradation, freezing, or thawing, or due to structural defects including cracks, movement, or distortion.

1. Do not proceed with work in question until directed by Contracting Officer.

D. Where Work requires existing features to be removed, cleaned, and reinstalled, perform operations without damage to material itself, to adjacent materials, or to substrate.

E. Identify new or replacement materials and features with inconspicuous, permanent marks to distinguish from original materials. Record legend of identification marks and locations of these marks on Record Drawings.

F. When cleaning, match samples of existing materials that have been cleaned and identified for acceptable cleaning levels. Avoid over-cleaning to prevent damage. Use gentlest methods available. Initiate cleaning using hand cleaning methods before introducing power cleaning methods and equipment.

END OF SECTION 01 35 91

SECTION 01 40 00 - QUALITY REQUIREMENTS

PART 1 - GENERAL

1.1 SUMMARY

A. Section includes administrative and procedural requirements for quality assurance and quality control.

B. Testing and inspecting services are required to verify compliance with requirements specified or indicated. These services do not relieve Contractor of responsibility for compliance with Contract Document requirements. Quality of work shall be responsibility of the Contractor.

1. Specified tests, inspections, and related actions do not limit Contractor's other quality assurance and control procedures that facilitate compliance with Contract Document requirements.

C. See Divisions 2 through 49 Sections for specific test and inspection requirements.

1.2 DEFINITIONS

A. Quality Assurance Services: Activities, actions, and procedures performed before and during execution of the work to guard against defects and deficiencies and substantiate that proposed construction will comply with requirements.

B. Quality Control Services: Tests, inspections, procedures, and related actions during and after execution of the work to evaluate actual products incorporated into the work and completed construction comply with requirements.

C. Mockups: Full-size physical assemblies constructed on-site. Mockups are constructed from selections made under Sample submittals; to demonstrate aesthetic effects and, where indicated, qualities of materials and execution; to review coordination, testing, or operation; to show interface between dissimilar materials; and to demonstrate compliance with specified installation tolerances. Mockups are not Samples. Approved mockups establish the standard by which the Work will be judged, unless otherwise indicated.

1. Laboratory Mockups: Full-size physical assemblies constructed at a testing facility to verify performance characteristics.
2. Integrated Exterior Mockups: Mockups of exterior envelope erected separately from building but on Project site, consisting of multiple products, assemblies, and subassemblies.
3. Room Mockups: Mockups of typical interior spaces complete with wall, floor, and ceiling finishes, doors, windows, millwork, casework, specialties, furnishings and equipment, and lighting.

D. Preconstruction Testing: Tests and inspections performed specifically for project before products and materials are incorporated into work to verify performance or compliance with specified criteria.

E. Product Testing: Tests and inspections performed by a Nationally Recognized Testing Laboratory (NRTL), a National Voluntary Laboratory Accreditation Program (NVLAP), or a testing agency qualified to conduct product testing, to establish product performance and compliance with industry standards.

F. Source Quality Control Testing: Tests and inspections performed at the source, i.e., plant, mill, factory, or shop.

G. Field Quality Control Testing: Tests and inspections performed on-site for installation of work and for completed work.

H. Testing Agency or Laboratory: Entity engaged to perform specific tests, inspections, or both. Testing laboratory shall mean the same as testing agency.

I. Installer/Applicator/Erector: Contractor or another entity engaged by Contractor as an employee, Subcontractor, or Sub-subcontractor, to perform a particular construction operation, including installation, erection, application, and similar operations.

1. Using a term such as "carpentry" does not imply certain construction activities must be performed by accredited or unionized individuals of a corresponding generic name, such as "carpenter." It also does not imply that requirements specified apply exclusively to trades people of corresponding generic name.

1.3 CONFLICTING REQUIREMENTS

A. Reference Standards: If compliance with two or more standards is specified and standards establish different or conflicting requirements for minimum quality levels, comply with most stringent requirement. Refer uncertainties and requirements that are different, but apparently equal, to Contracting Officer before proceeding.

B. Minimum Quality Levels: Quality level shown or specified shall be minimum provided or performed. Actual installation may comply exactly with minimum quality specified, or it may exceed minimum within reasonable limits. To comply with requirements, indicated numeric values are minimum or maximum, as appropriate, for the context of requirements. Refer uncertainties to Contracting Officer before proceeding.

1.4 SUBMITTALS

A. Quality Control Plan:

1. After contract award and before Pre-Construction conference, submit a written Contractor Quality Control (CQC) plan.
2. If plan requires revisions or corrections, Contractor shall resubmit plan within 10 days.
3. Government reserves the right to require changes in plan during contract period as necessary to obtain the quality specified.
4. No change in the approved plan may be made without written concurrence by Contracting Officer.

B. Qualification Data: For testing agencies specified in "Quality Assurance" Article to demonstrate their capabilities and experience. Include proof of qualifications in form of a recent report on inspection of testing agency by a recognized authority.

C. Contractor Quality Control (CQC) Daily Reports: Submit showing inspections and tests on first workday following date covered by report. Quality Control Supervisor shall utilize DSC Forms.

1. Review Construction Management Representative (CMR) Daily report if applicable and reconcile any differences prior to posting.

D. Test Reports

1. Test reports shall be completed by person performing test.
2. Submit Daily Test Information Sheets with Quality Control Daily Reports.
3. Submit failing test results and proposed remedial actions within four hours of noted deficiency.
4. Submit three copies of complete test results no later than one calendar day after test was performed.

E. Accessibility Inspection Report:

1. Fill out applicable sections of the Accessibility Inspection Report and attach to Contractor Quality Control Daily Report.
2. Utilize attached Accessibility Inspection form to document compliance with Architectural Barriers Act Accessibility Standards (ABAAS).
3. Inspect at various stages of construction as needed to ensure finished product meets standards.
4. Submit report no later than one calendar day after inspection was performed.

F. Off-Site Inspection Reports: Submit prior to shipment.

G. If Contractor Quality Control plan and Quality Control Daily Reports are not submitted as specified, Contracting Officer may retain payments until such time plan(s) is/are accepted and implemented, or may retain payments for work completed on days with no Quality Control Daily Reports.

H. Permits, Licenses, and Certificates: For National Park Service (NPS) records, submit copies of permits, licenses, certifications, inspection reports, releases, jurisdictional settlements, notices, receipts for fee payments, judgments, correspondence, records, and similar documents, established for compliance with standards and regulations bearing on performance of work.

1.5 QUALITY ASSURANCE

A. General: Qualifications paragraphs in this Article establish minimum qualification levels required; individual Specification Sections specify additional requirements.

B. Contractors Quality Control Staff:

1. Contractor's Quality Control Supervisor may also perform other duties.
2. Contractor's Quality Control Supervisor shall be assigned no other duties.

3. Contractor's designated Quality Control Supervisor shall be on the project site whenever contract work is in progress.
4. Contractor's job supervisory staff may be used to assist Quality Control Supervisor supplemented, as necessary, by additional certified testing technicians.

C. Installer Qualifications: Firm or individual experienced in installing, erecting, or assembling work similar in material, design, and extent indicated for Project, whose work has resulted in construction with a record of successful in-service performance.

D. Manufacturer Qualifications: Firm experienced in manufacturing products or systems similar to those indicated for Project and with a record of successful in-service performance, as well as sufficient production capacity to produce required units.

E. Fabricator Qualifications: Firm experienced in producing products similar to those indicated for Project and with a record of successful in-service performance, as well as sufficient production capacity to produce required units.

F. Professional Engineer Qualifications: Professional engineer legally qualified to practice in jurisdiction where Project is located and is experienced in providing engineering services of kind indicated (including Structural Tests and Special Inspections (STSI)). Engineering services are defined as those performed for installations of system, assembly, or products similar to those indicated for Project in material, design, and extent.

G. Specialists: Certain sections of the Specifications require that specific construction activities shall be performed by entities who are recognized experts in those operations. Specialists shall satisfy qualification requirements indicated and shall be engaged for activities indicated.

1. Requirement for specialists shall not supersede building codes and regulations governing Work.

H. Testing Agency Qualifications: A Nationally Recognized Testing Laboratory (NRTL), a National Voluntary Laboratory Accreditation Program (NVLAP), or an independent agency with experience and capability to conduct testing and inspecting indicated, according to ASTM E 329; and with additional qualifications specified in individual Sections; and where required by Contract, is acceptable to Contracting Officer.

1. Nationally Recognized Testing Laboratory (NRTL): Nationally recognized testing laboratory according to 29 CFR 1910.7 (Code of Federal Regulations).
2. National Voluntary Laboratory Accreditation Program (NVLAP): Testing agency accredited according to National Institute of Standards and Technology’s (NIST) National Voluntary Laboratory Accreditation Program.
3. Measuring devices, laboratory equipment, and instruments shall be calibrated at established intervals against certified standards in accordance with NIST requirements. Measuring and testing devices shall be made available for use by Government for verification tests.

I. Factory-Authorized Service Representative Qualifications: Authorized representative of manufacturer who is trained and approved by manufacturer to inspect installation of manufacturer's products similar in material, design, and extent to those indicated for Project.

J. Mockups: Before installing portions of work requiring mockups, build mockups for each form of construction and finish required to comply with following requirements, using materials indicated for completed work:

1. Build mockups in location and of size indicated; if not indicated, as directed by Contracting Officer.
2. Notify Contracting Officer seven days in advance of dates and times when mockups will be constructed.
3. Demonstrate proposed range of aesthetic effects and workmanship.
4. Obtain Contracting Officer's approval of mockups before starting work, fabrication, or construction.
5. Maintain mockups in an undisturbed condition as a standard for judging the completed work.
6. Demolish and remove mockups when directed, unless otherwise indicated.

1.6 QUALITY CONTROL

A. Contractor is responsible for testing and inspections, including Structural Tests and Special Inspections (STSI), as identified in attached STSI. Inspect and test work as needed to ensure quality of materials, workmanship, construction, finish, and functional performance are in compliance with applicable specifications, drawings, and those required by the Building Code.

1. Engage qualified testing agency to perform quality-control services.
2. Submit appropriate report for each quality-control service.
3. Testing and inspecting requested by Contractor and not required by Contract Documents are Contractor's responsibility.
4. Contracting Officer may designate test locations.

B. Manufacturer's Field Services: Where indicated, engage factory-authorized service representative to inspect field-assembled components and equipment installation, including service connections. Report results in writing.

C. Re-testing/Re-inspecting: Regardless of whether original tests or inspections were Contractor's responsibility, provide quality-control services, including retesting and re-inspecting, for construction of replaced work that failed to comply with Contract Documents.

D. Testing Agency Responsibilities: Cooperate with NPS and Contractor in performance of duties. Provide qualified personnel to perform required tests and inspections.

1. Notify Contracting Officer and Contractor promptly of irregularities or deficiencies observed in work during performance of services.
2. Determine location from which test samples will be taken and in which in-situ tests are conducted.
3. Conduct and interpret tests and inspections, State in each report whether tested and inspected work complies with or deviates from requirements.
4. Submit 3 copies of certified written report of each test, inspection, and similar quality-control service through Contractor.
5. Do not release, revoke, alter, or increase Contract Document requirements or approve or accept any portion of Work.

E. Associated Services: Cooperate with agencies performing required tests, inspections, and similar quality-control services, and provide reasonable auxiliary services as requested. Notify agency sufficiently in advance of operations to permit assignment of personnel. Provide:

1. Access to Work.
2. Incidental labor and facilities necessary to facilitate tests and inspections.
3. Adequate quantities of representative samples of materials that require testing and inspecting. Assist agency in obtaining samples.
4. Facilities for storage and field curing of test samples.
5. Delivery of samples to testing agencies.
6. Preliminary design mix proposed for material mixes that require control by testing agency.
7. Security and protection for samples and testing and inspecting equipment at Project site.

F. Coordination: Coordinate sequence of activities to accommodate required quality assurance and control services with minimum delay and to avoid removing and replacing construction to accommodate testing and inspecting.

1. Schedule times for tests, inspections, obtaining samples, and similar activities.

PART 2 - PRODUCTS

2.1 QUALITY CONTROL PLAN

A. Quality Control Plan shall include:

1. List of personnel responsible for quality control and assigned duties. Include each person's qualifications. Include alternate(s) and qualifications.
2. Copy of letter of direction to Contractor's Quality Control Supervisor(s) outlining assigned duties and authorities designated by principal or owner.
3. Names, qualifications / accreditations, and descriptions of laboratories to perform sampling and testing, and samples of proposed report forms from laboratories.
4. Methods of performing, documenting, and enforcing quality control of work including Contractor report forms and acknowledgment of NPS forms.
5. Methods of monitoring and controlling environmental pollution and contamination as required by regulations and laws.
6. Specific discussion regarding mockups, off-site visits, receiving inspections, manufacturers representation, startup requirements, and other aspects of performance specific to Project.
7. Provisions for substantial completion(s) and final inspection(s) per Contract.

PART 3 - EXECUTION

3.1 OFF-SITE CONTROL

A. Items fabricated or assembled off-site shall be inspected for quality control at place of fabrication.

3.2 ON-SITE CONTROL

A. Notification:

1. Notify Contracting Officer at least 48 hours in advance of preparatory phase meeting.
2. Notify Contracting Officer at least 24 hours in advance of initial and follow-up phases.

B. Preparatory Phase: Perform before beginning each feature of work.

1. Review control submittal requirements with personnel directly responsible for quality assurance and quantity control of the work. As a minimum, Contractor's Quality Control Supervisor and foreman responsible for feature of work shall be in attendance.
2. Review applicable specifications sections and drawings related to feature of work.
3. Ensure copies of referenced standards related to sampling, testing, and execution for feature of work are available on site.
4. Ensure provisions have been made for field control testing.
5. Examine work area to ensure preliminary work has been completed.
6. Verify field dimensions and advise Contracting Officer of discrepancies with contract documents.
7. Ensure necessary equipment and materials are at project site and they comply with approved shop drawings and submittals.
8. Document preparatory phase activities and discussions on Contractor's Quality Control Daily Report.

C. Initial Phase:

1. As soon as work begins, inspect and test representative portion of particular feature of work for quality of workmanship.
2. Review control testing procedures to ensure compliance with contract requirements.
3. Document initial phase activities and discussions on Contractor's Quality Control Daily Report. Exact location of initial phase shall be indicated for future reference and comparison with follow-up phases.

D. Follow-Up Phase: Inspect and test as work progresses to ensure compliance with contract requirements until completion of work.

E. Additional Preparatory and Initial Phases: Additional preparatory and initial phases may be required on same feature of work for following reasons:

1. Quality of on-going work is unacceptable.
2. Changes in quality control staff, on-site production supervision, or work crew.
3. Work on particular feature of work is resumed after substantial period of inactivity.

3.3 DOCUMENTATION

A. Maintain Quality Control Daily Reports, Daily Test Report Information Sheets, and Accessibility Inspection Reports of quality control activities and tests. (Download from DSC Workflows website > Forms/Templates/Samples/Guidelines page > Construction Forms section.)

B. Quality Control Daily Reports shall not be substituted for other written reports required under clauses of contract, such as Disputes, Differing Site Conditions, or Changes.

C. Quality Control Daily Reports shall accurately portray all work and materials. The materials shall match the materials as approved from the Construction Documents (CD) requirements. Combustible/flammable materials shall be documented as well.

3.4 ENFORCEMENT

A. Contractor shall stop work on any item or feature pending satisfactory correction of deficiency noted by quality control staff or Contracting Officer.

3.5 REPAIR AND PROTECTION

A. General: On completion of testing, inspecting, sample taking, and similar services, repair damaged construction and restore substrates and finishes.

1. Provide materials and comply with installation requirements specified in other Specification Sections. Restore patched areas and extend restoration into adjoining areas with durable seams as invisible as possible.
2. Comply with Contract Document requirements for Section 01 73 29 "Cutting and Patching."

B. Protect construction exposed by or for quality-control service activities.

C. Repair and protection are Contractor's responsibility, regardless of the assignment of responsibility for quality-control services.

END OF SECTION 01 40 00

Construction Management Representative (CMR) & Contractor Quality Control (CQC) Daily Report

National Park Service (NPS) - Denver Service Center (DSC) | 2-6-18

REPORT NUMBER		PROJECT MANAGEMENT INFORMATION SYSTEM NUMBER (PMIS No.):	

PROJECT	CONTRACT NUMBER	DATE
PARK	CONTRACTOR	CMR REPORTING

WEATHER (Rain, Snow, Cloudy, Windy)	MOISTURE AMOUNT (INCHES)	TEMPERATURE		WEATHER DELAY	DESCRIBE WEATHER DELAYED WORK	GROUND CONDITIONS (Dry, Damp, Wet, Frozen)
		MAXIMUM	MINIMUM	Yes ☐ No ☐		

PRIME CONTRACTOR:

EMPLOYEES BY JOB CATEGORIES	NUMBER	HOURS	EQUIPMENT ON JOB (Include model, manufacture, size, year.)	NUMBER OF UNITS	EQUIPMENT HOURS WORKING		
					YES	STANDBY	MOBILIZED/ DEMOBILIZED DATE
Project Manager (PM)							
Superintendent							
Quality Control Officer							
Safety Officer							
Laborers							

MATERIALS DELIVERED	QUANTITY	OFFICIAL VISITORS

WORK PERFORMED BY PRIME: **(Include detail description per each activity including location, quantities, and production.)**

SPECIFIC INSPECTIONS: **(Inspections performed, results, and corrective actions, and Primes and Subprimes.)**

TESTING:

Was any testing performed today YES / NO. (Complete and attach Test Report Information Sheets.)

Type and Location of Testing:

SUBCONTRACTOR(S):	PMIS Number:		Date:	

SUBCONTRACTOR NAME

EMPLOYEES BY JOB CATEGORIES	NUMBER	HOURS	EQUIPMENT ON JOB (Include model, manufacturer, size, and year.)	NUMBER OF UNITS	EQUIPMENT HOURS WORKING			
					YES	STANDBY	MOBILIZED/ DEMOBILIZED DATE	

MATERIALS DELIVERED	QUANTITY	EQUIPMENT MOBILIZIED/DEMOBILIZED

WORK PERFORMED BY SUBCONTRACTOR: Include detail description per each activity. Include location, quantity, and production.

SUBCONTRACTOR NAME

EMPLOYEES BY JOB CATEGORIES	NUMBER	HOURS	EQUIPMENT ON JOB (Include model, manufacturer, size, and year.)	NUMBER OF UNITS	EQUIPMENT HOURS WORKING			
					YES	STANDBY	MOBILIZED/ DEMOBILIZED DATE	

MATERIALS DELIVERED	QUANTITY	EQUIPMENT MOBILIZIED/DEMOBILIZED

WORK PERFORMED BY SUBCONTRACTOR: Include detail description per each activity. Include location, quantity, and production.

SUBCONTRACTOR NAME

EMPLOYEES BY JOB CATEGORIES	NUMBER	HOURS	EQUIPMENT ON JOB (Include model, manufacturer, size, and year.)	NUMBER OF UNITS	EQUIPMENT HOURS WORKING			
					YES	STANDBY	MOBILIZED/ DEMOBILIZED DATE	

MATERIALS DELIVERED	QUANTITY	EQUIPMENT MOBILIZIED/DEMOBILIZED

WORK PERFORMED BY SUBCONTRACTOR: Include detail description per each activity. Include location, quantity, and production.

SUBCONTRACTOR(S):	PMIS Number:		Date:	

SUBCONTRACTOR NAME

EMPLOYEES BY JOB CATEGORIES	NUMBER	HOURS	EQUIPMENT ON JOB (Include model, manufacturer, size, and year.)	NUMBER OF UNITS	EQUIPMENT HOURS WORKING			
					YES	STANDBY	MOBILIZED/ DEMOBILIZED DATE	

MATERIALS DELIVERED	QUANTITY	EQUIPMENT MOBILIZIED/DEMOBILIZED

WORK PERFORMED BY SUBCONTRACTOR: Include detail description per each activity. Include location, quantity, and production.

SUBCONTRACTOR NAME

EMPLOYEES BY JOB CATEGORIES	NUMBER	HOURS	EQUIPMENT ON JOB (Include model, manufacturer, size, and year.)	NUMBER OF UNITS	EQUIPMENT HOURS WORKING			
					YES	STANDBY	MOBILIZED/ DEMOBILIZED DATE	

MATERIALS DELIVERED	QUANTITY	EQUIPMENT MOBILIZIED/DEMOBILIZED

WORK PERFORMED BY SUBCONTRACTOR: Include detail description per each activity. Include location, quantity, and production.

SUBCONTRACTOR NAME

EMPLOYEES BY JOB CATEGORIES	NUMBER	HOURS	EQUIPMENT ON JOB (Include model, manufacturer, size, and year.)	NUMBER OF UNITS	EQUIPMENT HOURS WORKING			
					YES	STANDBY	MOBILIZED/ DEMOBILIZED DATE	

MATERIALS DELIVERED	QUANTITY	EQUIPMENT MOBILIZIED/DEMOBILIZED

WORK PERFORMED BY SUBCONTRACTOR: Include detail description per each activity. Include location, quantity, and production.

PMIS Number:		Date:	

CRITICAL POINT/MILESTONE OBSERVATIONS *(Describe item inspected, observations, problems, and action items.)*

DESCRIPTION OF WORK BEING MONITORED ON A TIME AND MATERIAL BASIS AND WHY

BREAKDOWN OF TIME AND MATERIAL WORK PERFORMED

Location:

Labor:

Equipment:

Material:

Production Rates:

STATUS OF GOVERNMENT FURNISHED SERVICES AND/OR SUPPLIES

SAFETY COMMENTS

Accidents / Lost Time:

Incidents:

First Aid Administered:

Other:

DIFFICULTIES WITH CONSTRUCTION CONTRACTOR

UNFORESEEN DEVELOPMENTS *(Describe conditions, action taken, person contacted, and recommended actions.)*

CONSTRUCTION DEFICIENCIES OR RE-TESTING REQUIRED

OTHER COMMENTS

CERTIFICATION

For Construction Management Representative (CMR): I certify the above report is complete and correct and that I, or my authorized representative, have inspected all work performed this day by the Prime Contractor and each Subcontractor and determined all materials, equipment, and workmanship are in strict compliance with plans and specifications except as may be noted above.

I certify that I or my authorized representative have reviewed and reconciled all differences between this daily report and the Construction Contractors. In the event a discrepancy is found, the Construction Contractor was notified and an acceptable revision was completed and resubmitted by either or both parties within this document. If unable to agree with the Construction Contractor, explain nature of disagreement in "Other Comments" above as needed.

For Contractor's Representative: I certify that the above report is complete and correct and that I, or my authorized representative, have inspected all work performed this day by the Prime Contractor and each Subcontractor and determined that all materials, equipment, and workmanship are in strict compliance with the plans and specifications except as may be noted above. I have reconciled all differences found when comparing this CQC daily diary with the CMR's daily diary. All unresolved issues are described under "Other Comments" above.

SIGNATURE	TITLE:

PMIS Number:		Date:	

ADDITIONAL COMMENTS OR INFORMATION (***Describe item inspected, observations, problems, and action items.)***

PMIS Number:		Date:	

IMAGES IN SUPPORT OF REPORT INFORMATION

Accessibility Inspection Report Form
Buildings and Facilities
(Contractor Quality Control (CQC) & Final)

National Park Service (NPS) - Denver Service Center (DSC) | 2-14-19

Park: **Mammoth Cave National Park (MACA)**

Project Management Information System (PMIS) Number: **217854**

Project: **Reconstruct Sand Cave Boradwalk**

Contract Number:

Report Number:

Date of Inspection:

Final Inspection: ☐Yes ☐No

Notes & Requirements

This report covers the most common accessibility requirements. Expand this form for elements not shown. Inspect for compliance with requirements of Architectural Barriers Act Accessibility Standards (ABAAS). Use applicable sections for each inspection. The inspection form is not comprehensive for all ABAAS requirements or all designs. *(Images shown on this report are screen captures from Access-Board.gov > Architectural Barriers Act (ABA) Standards.)*

Measuring Outdoor Improvements

A measuring device shall be capable of measuring to a precision of 1/16 inch. Angular or slope measuring devices shall be capable of measuring to a precision of 0.1 degree. Elevation measuring devices shall be capable of measuring to a precision of 0.01 feet. Measure slope/cross-slope by subtracting elevations and dividing by distance. Measure flatness using a 10 foot metal straightedge with not to exceed 1/4 inch space between hard surface and metal edge. **ABAAS requirements identified in this sample refer to post construction measurements which include construction tolerances.**

Upon completion of work, Construction Contractor shall complete a final accessibility inspection. List deficiencies in Section 10 and add to punch list. Correct deficiencies in a timely manner. ABAAS construction non-compliance will be replaced at Construction Contractor's expense unless authorized by Contracting Officer (CO). File this report with CQC Daily Report in official project files.

1. Parking Spaces & Passenger Loading Zones

*Access-Board.gov > ABA Standards > Chapter 4 Accessible Routes > **406 Curb Ramps** & Chapter 5 General Site and Building Elements > **502 Parking Spaces:***

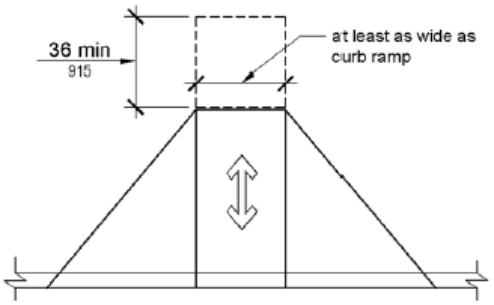

Figure 406.4 Landings at the Top of Curb Ramps

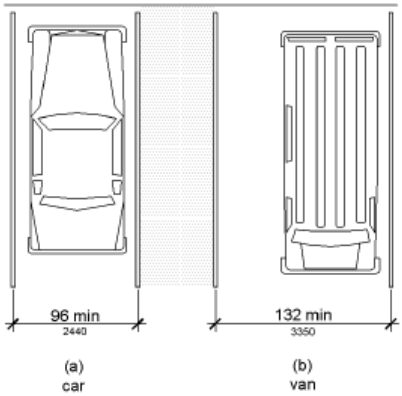

Figure 502.2 Vehicle Parking Spaces

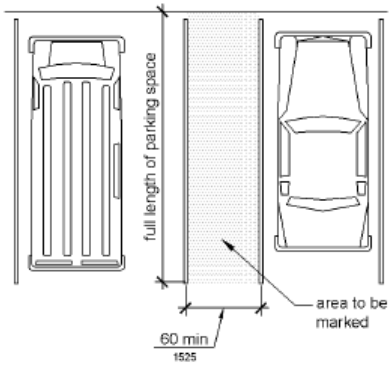

Figure 502.3 Parking Space Access Aisle

Procedure:

Attach copy of grading plan with each accessible parking space and passenger loading zone running and cross slope readings noted. Measure slopes and cross-slopes at 3 foot intervals.

Location/Notes:

A. ☐Yes ☐No ☐Not Applicable

Accessible spaces and access aisles running slope and cross slope is 1:48 (2%) or less. Measure at 3 foot intervals.

B. ☐Yes ☐No ☐Not Applicable
Car spaces are 96 inches wide minimum and van spaces 132 inches wide measured to striping centerline or face of curb.

C. ☐Yes ☐No ☐Not Applicable
Access aisles are 60 inches wide minimum measured to striping centerline and adjoin an accessible route.

D. ☐Yes ☐No ☐Not Applicable
Curb ramp running slope is 1:12 (8.33%) or less and cross slope is 1:48 (2%) or less. Measure at 3 foot intervals.

E. ☐Yes ☐No ☐Not Applicable
Curb ramp has a 36 inch minimum landing length at top and running slope and cross slope are 1:48 (2%) or less.

F. ☐Yes ☐No ☐Not Applicable
Curb ramp flared side slopes are 1:10 (10%) or less.

G. ☐Yes ☐No ☐Not Applicable
Passenger loading zone (drop-off area) running slope and cross slope are 1:48 (2%) or less. Area has flush curb.

Inspection Results:

2. Walking Surfaces & Accessible Routes

*Access Board ABA Standards > Chapter 3 Building Blocks > **302 Floor or Ground Surfaces** & **303 Changes in Level:***

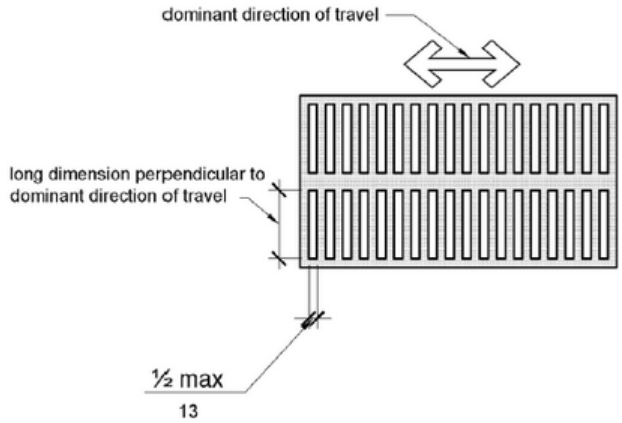

Figure 302.3 Elongated Openings in Floor or Ground Surfaces

Figure 303.2 Vertical Change in Level

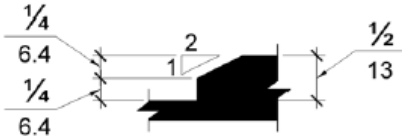

Figure 303.3 Beveled Change in Level

Procedure:

The accessible route is the pedestrian route from accessible parking and passenger loading zones to and between accessible facilities and features. Attach accessible route and/or grading plan with accessible route highlighted and running and cross slope readings noted.

Location/Notes:

A. ☐Yes ☐No ☐Not Applicable
Floor and ground surfaces are stable, firm, and slip resistant.
*Access Board ABA Standards > Chapter 3 Building Blocks > **302 Floor or Ground Surfaces***

B. ☐Yes ☐No ☐Not Applicable
Running slope of all walking surfaces on accessible route is 1:20 (5%) or less. Measure at 3 foot intervals.

C. ☐Yes ☐No ☐Not Applicable
Cross slope of walking surfaces is 1:48 (2%) or less. Measure at 3 foot intervals.

D. ☐Yes ☐No ☐Not Applicable
Clear widths of walking surfaces are 36 inches minimum.

E. ☐Yes ☐No ☐Not Applicable
Elongated openings in floor or ground surfaces are 1/2 inch wide or less.

F. ☐Yes ☐No ☐Not Applicable
Curb ramp flared side slopes are 1:10 (10%) or less.

G. ☐Yes ☐No ☐Not Applicable
Elongated openings are perpendicular to direction of travel.

H. ☐Yes ☐No ☐Not Applicable
Accessible route surface changes are 1/2 inch or less with 1/4 inch maximum vertical change.

I. ☐Yes ☐No ☐Not Applicable
Floor drains and grates on accessible route meet all above requirements.

Inspection Results:

3. Ramps

*Access Board ABA Standards > [Chapter 4 Accessible Routes](#) > **405 Ramps:***

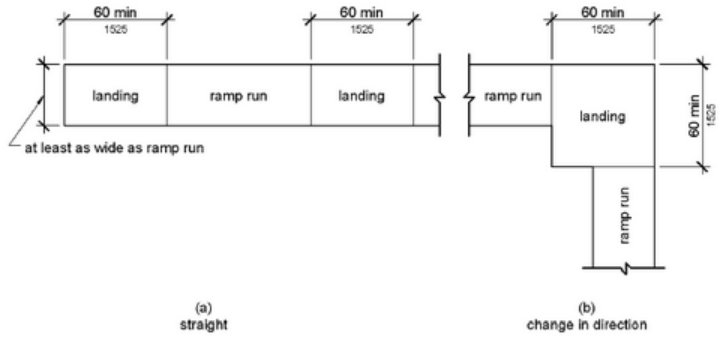

Figure 405.7 Ramp Landings

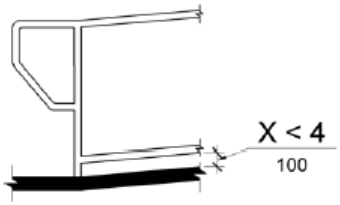

Figure 405.9.2 Curb or Barrier Edge Protection

Procedure:

Ramps are walking surfaces on accessible route steeper than 1:20 (5%) but less than 1:12 (8.33%). Attach grading plan with running and cross slope readings noted.

Location/Notes:

A. ☐Yes ☐No ☐Not Applicable
Running slope is 1:12 (8.33%) or less. Measure at 3 foot intervals.

B. ☐Yes ☐No ☐Not Applicable
Cross slope is 1:48 (2%) or less. Measure at 3 foot intervals.

C. ☐Yes ☐No ☐Not Applicable
Clear width is 36 inches minimum and clear width between handrails is 36 inches minimum.

D. ☐Yes ☐No ☐Not Applicable
Rise for ramp run is 30 inches maximum.

E. ☐Yes ☐No ☐Not Applicable
Ramps have landings at top and bottom of each ramp run.

F. ☐Yes ☐No ☐Not Applicable
Landing clear length is 60 inches minimum and running slope and cross slope of landing is 1:48 (2%) or less.

G. ☐Yes ☐No ☐Not Applicable
Ramps with a rise greater than 6 inches have handrails.

H. ☐Yes ☐No ☐Not Applicable
Ramps and landings have edge protection on both sides preventing passage of 4 inch diameter sphere.

Inspection Results:

4. Handrails

*Access Board ABA Standards > Chapter 5 General Site and Building Elements > **505 Handrails:***

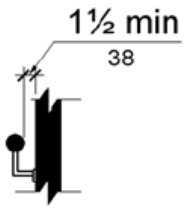

Figure 505.5 Handrail Clearance

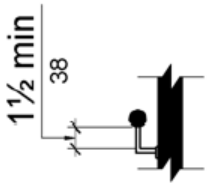

Figure 505.6 Horizontal Projections Below Gripping Surface

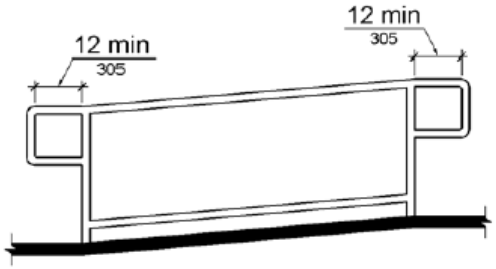

Figure 505.10.1 Top and Bottom Handrail Extension at Ramps

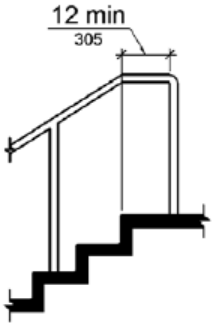

Figure 505.10.2 Top Handrail Extension at Stairs

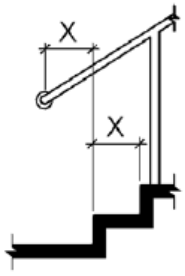

Note: X = tread depth

Figure 505.10.3 Bottom Handrail Extension at Stairs

Procedure:

Verify each handrail.

Location/Notes:

A. ☐Yes ☐No ☐Not Applicable
Top of handrail is 34 inches minimum and 38 inches maximum vertically above walking surfaces.

B. ☐Yes ☐No ☐Not Applicable
Handrails extend 12 inches minimum beyond top and bottom of ramp runs.

C. ☐Yes ☐No ☐Not Applicable
Free standing handrails have edge protection preventing passage of 4 inch diameter sphere.

D. ☐Yes ☐No ☐Not Applicable
Handrails extend horizontally 12 inches minimum at top of stairs.

E. ☐Yes ☐No ☐Not Applicable
Handrails extend at slope of stair flight at bottom of stairs minimum one tread depth beyond last riser.

F. ☐Yes ☐No ☐Not Applicable
Handrail clearance is 1-1/2 inches clear minimum to walls and above horizontal attachments.

Inspection Results:

5. Drinking Fountains

*Access Board ABA Standards > Chapter 3 Building Blocks > **307 Protruding Objects:***

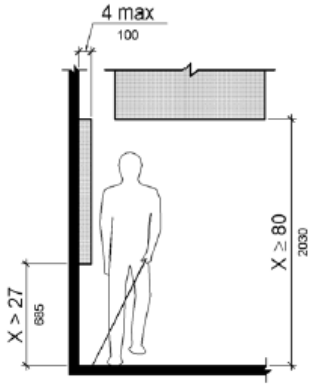

Figure 307.2 Limits of Protruding Objects

Procedure:

Verify drinking fountains do not create a protruding object. (Two spout heights required for each drinking fountain.)

Location/Notes:

A. ☐Yes ☐No ☐Not Applicable
Spout outlet is 36 inches maximum above finish floor or ground for wheelchair accessible spout.

B. ☐Yes ☐No ☐Not Applicable
Spout outlet for standing persons is 38 inches minimum and 43 inches maximum above finish floor.

C. ☐Yes ☐No ☐Not Applicable
Drinking fountain is recessed or has exactly 27 inches maximum space from floor to bottom of fountain. (Fountain must meet ABAAS requirements for knee room and requirements for persons with visual disabilities using a cane.)

Inspection Results:

6. Toilet Compartments

Access Board ABA Standards > Chapter 6 Plumbing Elements and Facilities > ***604 Water Closets and Toilet Compartments, 605 Urinals, & 609 Grab Bars:***

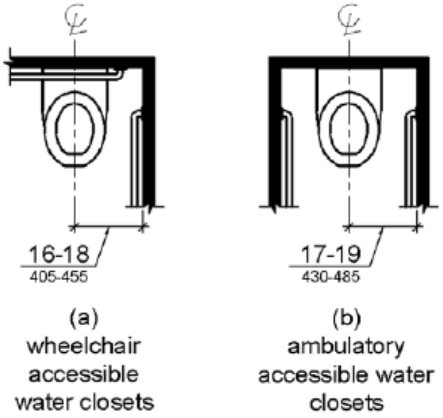

Figure 604.2 Water Closet Location

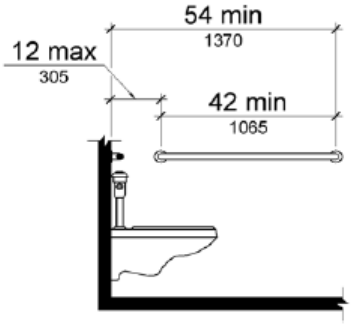

Figure 604.5.1 Side Wall Grab Bar at Water Closets

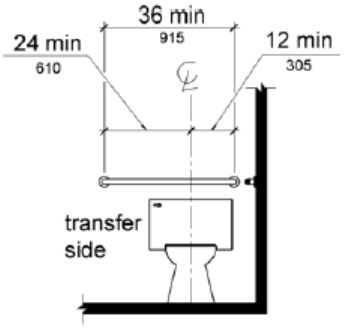

Figure 604.5.2 Rear Wall Grab Bar at Water Closets

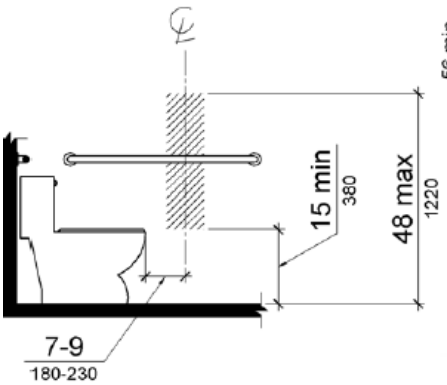

Figure 604.7 Dispenser Outlet Location

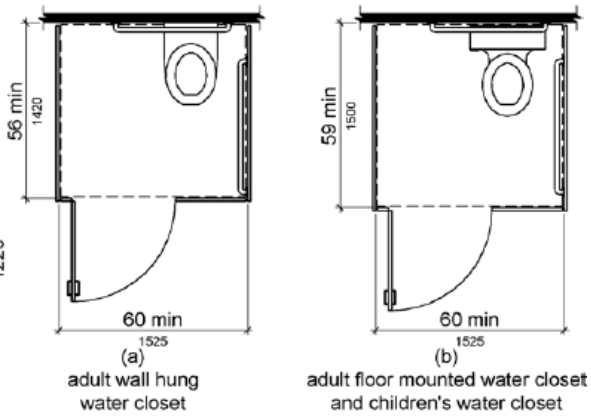

Figure 604.8.1.1 Size of Wheelchair Accessible Toilet Compartment

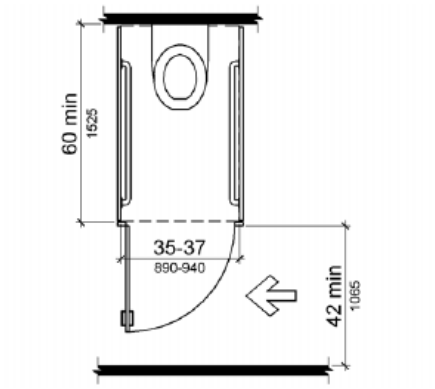

Figure 604.8.2 Ambulatory Accessible Toilet Compartment

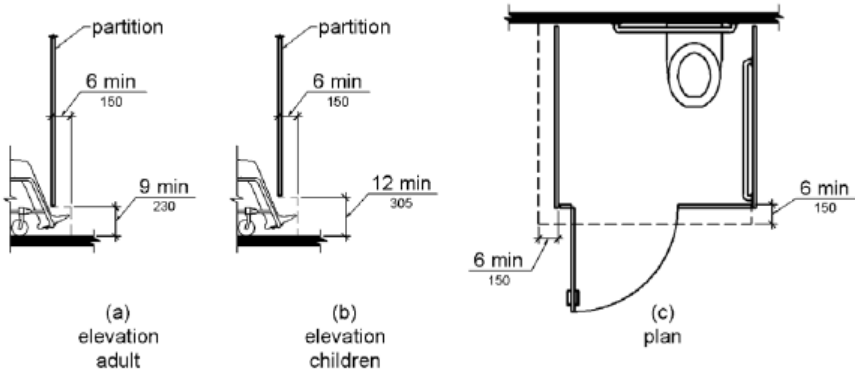

Figure 604.8.1.4 Wheelchair Accessible Toilet Compartment Toe Clearance

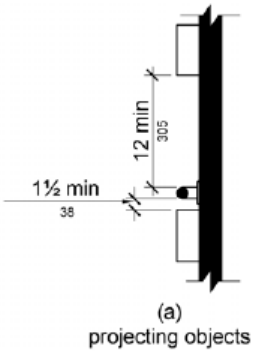

Figure 609.3 Spacing of Grab Bars

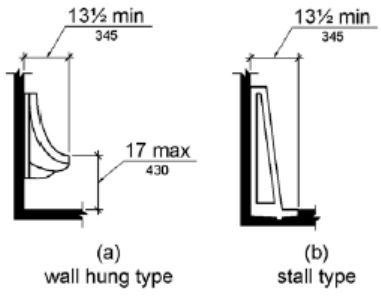

Figure 605.2 Height and Depth of Urinals

Procedure:

For toilet compartments, attach floor plan and note as-built dimensions on diagrams below. (Use additional sheet for each restroom.)

Location/Notes:

A. ☐Yes ☐No ☐Not Applicable
Wheelchair accessible compartment is 60 inches wide minimum and 59 inches deep minimum with wheelchair clear space adjacent to toilet.

B. ☐Yes ☐No ☐Not Applicable
Ambulatory stall is 60 inches deep minimum, width of 35 inches minimum and 37 inches maximum, and toilet is centered in stall.

C. ☐Yes ☐No ☐Not Applicable
Accessible compartment has 32 inch wide door opening minimum with door opening outward, or additional wheelchair clear space for door opening inward.

D. ☐Yes ☐No ☐Not Applicable
Seat height is 17 inches minimum and 19 inches maximum measured to top of seat.

E. ☐Yes ☐No ☐Not Applicable
Urinal rim is 17 inches maximum above finish floor and 13-1/2 inches deep minimum.

F. ☐Yes ☐No ☐Not Applicable
Urinal has a clear floor space of 30 inches wide by 48 inches long minimum for forward approach.

G. ☐Yes ☐No ☐Not Applicable
Side wall grab bar is 42 inches long minimum, located 12 inches maximum from rear wall.

H. ☐Yes ☐No ☐Not Applicable
Rear wall grab bar is 36 inches long minimum, extends from toilet centerline 12 inches minimum one side towards partition or wall and 24 inches minimum other side.

I. ☐Yes ☐No ☐Not Applicable
Grab bar height is 33 inches minimum and 36 inches maximum to top of gripping surface.

J. ☐Yes ☐No ☐Not Applicable
Toilet paper dispensers are 7 inches minimum and 9 inches maximum in front of toilet to centerline of dispenser.

K. ☐Yes ☐No ☐Not Applicable
Toilet paper dispenser outlet is 15 inches minimum and 48 inches maximum above finish floor.

L. ☐Yes ☐No ☐Not Applicable
Centerline of wheelchair stall toilet is 16 inches minimum to 18 inches maximum from side wall.

M. ☐Yes ☐No ☐Not Applicable
Sinks and counters are 34 inches maximum above floor with 27 inches minimum knee space. Drain pipes are insulated or concealed.

N. ☐Yes ☐No ☐Not Applicable
Space between grab bar and wall/partition and projecting objects below is 1-1/2 inches minimum. Space above is 12 inches minimum.

O. ☐Yes ☐No ☐Not Applicable
Wheelchair accessible compartment and ambulatory stall have door pulls on both sides of door near latch.

P. ☐Yes ☐No ☐Not Applicable
Hand dryers, towel and soap dispenser outlets are 15 inches minimum and 48 inches maximum above floor. Bottom edge of reflecting mirror surface above sink or countertops are 40 inches maximum above finished floor.

Inspection Results:

7. Service Counters and Dining and Work Surfaces

*Access Board ABA Standards > Chapter 9 Built-In Elements > **904 Check-Out Aisles and Sales and Service Counter & 902 Dining Surfaces and Work Surfaces:***

Procedure:

Service counters and dining and work surfaces are parallel or forward approach. NPS treats service counters as possible employee work areas which are required to be 34 inches maximum.

Location/Notes:

A. ☐Yes ☐No ☐Not Applicable
Parallel Approach. Counter is 36 inches long minimum and 36 inches high maximum.

B. ☐Yes ☐No ☐Not Applicable
Forward Approach. Counter surface is 30 inches long minimum and 36 inches high maximum with knee space under counter. See ABAAS 306 for adequate depth and toe clearance.

C. ☐Yes ☐No ☐Not Applicable
Tops of dining and work surfaces are 28 inches minimum and 34 inches maximum above finished floor with adequate knee and toe clearance.

Inspection Results:

8. Doors

*Access Board ABA Standards > Chapter 4 Accessible Routes > **404 Doors, Doorways, and Gates***

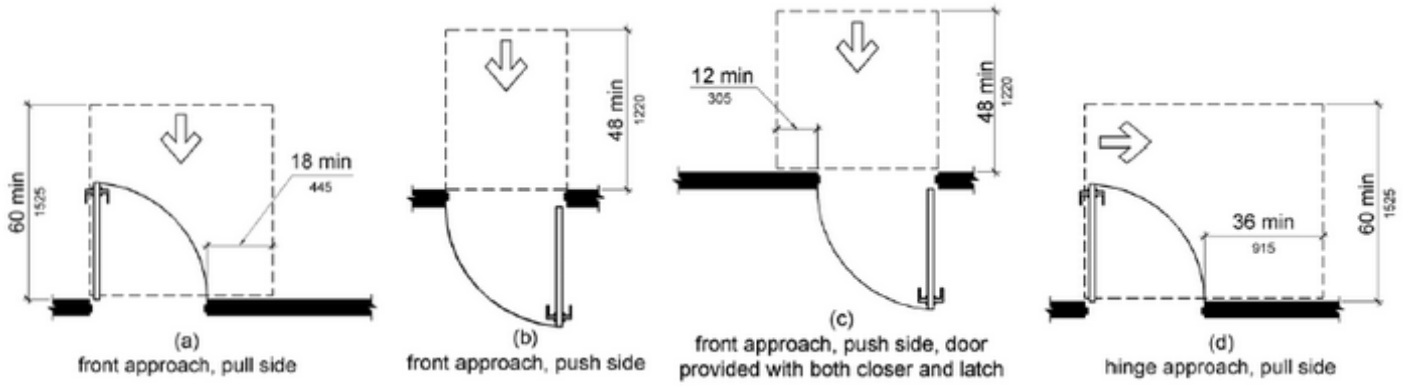

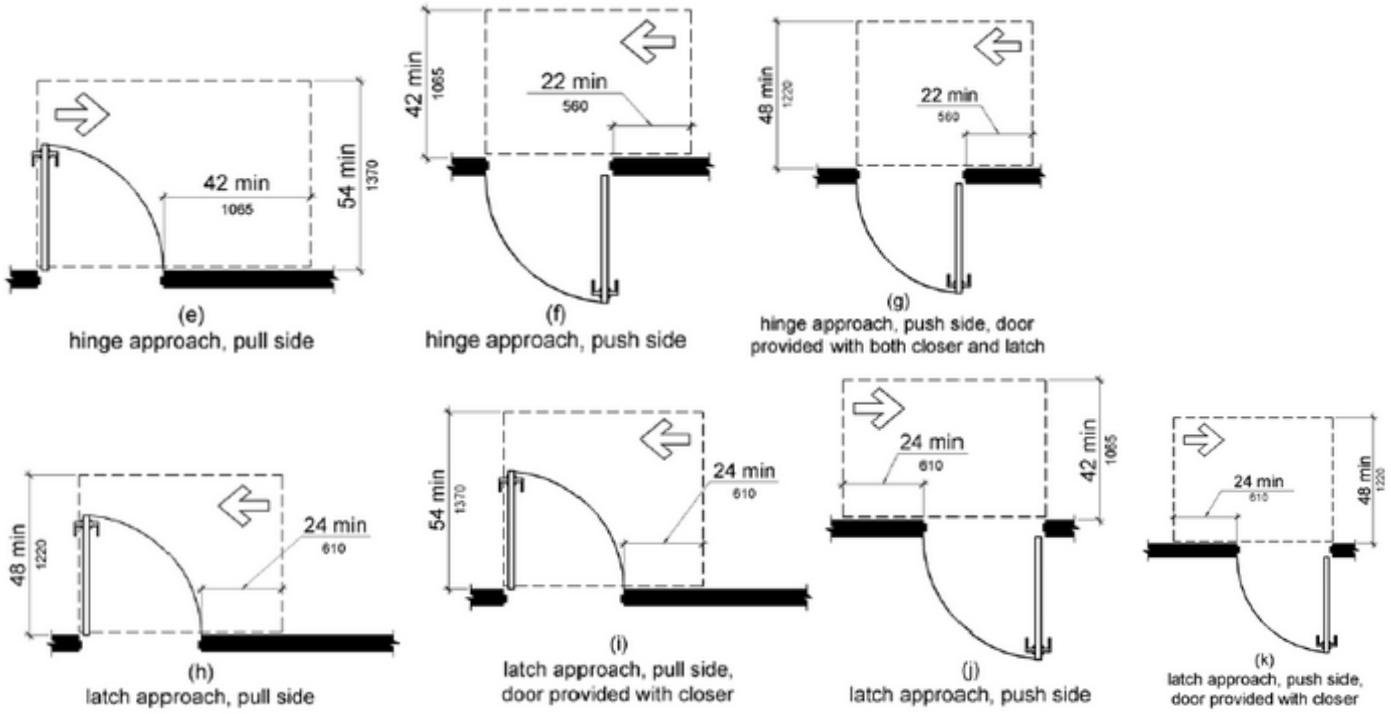

Figure 404.2.4.1 Maneuvering Clearances at Manual Swinging Doors and Gates

Procedure:

Attach accessible route plan with accessible door dimensions and threshold heights.

Location/Notes:

A. ☐Yes ☐No ☐Not Applicable
Door openings on accessible routes provide clear width of 32 inches minimum.

B. ☐Yes ☐No ☐Not Applicable
Door closers move door from open position of 90 degrees to 12 degrees from latch is 5 seconds minimum.

C. ☐Yes ☐No ☐Not Applicable
Spring hinge doors close from open position of 70 degrees to closed position in 1.5 seconds minimum.

D. ☐Yes ☐No ☐Not Applicable
Fire doors have minimum opening force allowable by appropriate administrative authority.

E. ☐Yes ☐No ☐Not Applicable
Interior door and gate hardware located 34 inches minimum and 48 inches maximum above finished floor and operable with hinged doors having opening force of 5 pounds maximum.

F. ☐Yes ☐No ☐Not Applicable
Thresholds at doors on accessible route are beveled 1/2 inch or less with 1/4 inch maximum vertical change.

G. ☐Yes ☐No ☐Not Applicable
Clear floor and wall space provide maneuvering clearances required (all doors on accessible route).

Inspection Results:

9. Signs

*Access Board ABA Standards > Chapter 7 Communication Elements and Features > **703 Signs:***

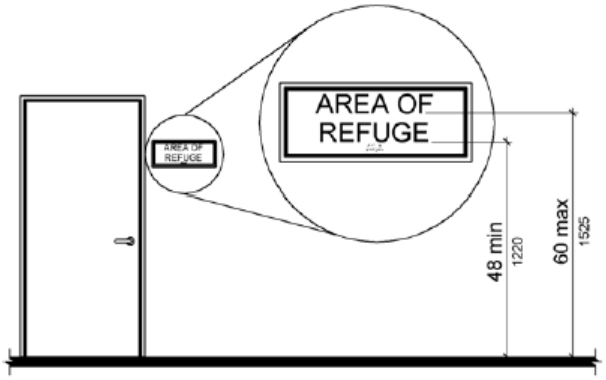

Figure 703.4.1 Height of Tactile Characters Above Finish Floor or Ground

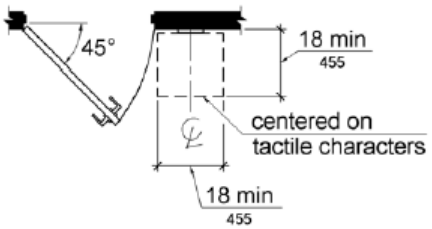

Figure 703.4.2 Location of Tactile Signs at Doors

Location/Notes:

A. ☐Yes ☐No ☐Not Applicable
Parking space signs are 60 inches minimum above finish ground surface measured to bottom of sign.

B. ☐Yes ☐No ☐Not Applicable
Van parking space sign includes designation "van accessible."

C. ☐Yes ☐No ☐Not Applicable
Tactile characters on signs are 48 inches minimum from lowest tactile character and 60 inches maximum above finished floor from baseline of hightest tactile character.

D. ☐Yes ☐No ☐Not Applicable
Visual characters are 40 inches minimum above finished floor.

E. ☐Yes ☐No ☐Not Applicable
Sign is located alongside door at latch side.

F. ☐Yes ☐No ☐Not Applicable
Sign is located with clear floor space of 18 inches by 18 inches minimum.

Inspection Results:

10. Other Accessible Features not Covered by Report

Procedure:
Inspect elevators, lifts, elements for children, etc. Inspect for compliance with ABAAS requirements.

Location/Notes:

Inspection Results:

11. Punch List Items - Summary of Non-Conforming Inspection Results
Add deficiencies. Correct deficiencies in timely manner.

1. Deficiency: _____

   Corrective Actions Needed/Taken: _____

2. Deficiency: _____

   Corrective Actions Needed/Taken: _____

3. Deficiency: _____

   Corrective Actions Needed/Taken: _____

   _____

4. Deficiency: _____

   Corrective Actions Needed/Taken: _____

   _____

5. Deficiency: _____

   Corrective Actions Needed/Taken: _____

   _____

6. Deficiency: _____

   Corrective Actions Needed/Taken: _____

   _____

7. Deficiency: _____

   Corrective Actions Needed/Taken: _____

   _____

8. Deficiency: _____

   Corrective Actions Needed/Taken: _____

   _____

9. Deficiency: _____

   Corrective Actions Needed/Taken: _____

   _____

10. Deficiency: _____

    Corrective Actions Needed/Taken: _____

    _____

12. Photographs & Sketches

Attach to report as needed. Identify location of photographs and sketches.

Certification

I certify this inspection report is complete and correct and is in compliance with contract documents.

_____

Inspector Name (Print) | Inspector Signature | Date

Statement of Structural Tests and Special Inspections

National Park Service (NPS) - Denver Service Center (DSC) | 6-29-21

Park: **Mammoth Cave**

Project Management Information System (PMIS) Number: **MACA 217854**

Project Name: **Reconstruct Sand Cave Trail**

Structural Engineering Firm: **AMI Consulting Engineers, PA**

This Statement of Structural Tests and Special Inspections is being submitted as required by Chapter 17 of the **2021 International Building Code** (IBC-21). It includes the following:

1. Seismic requirements
2. Wind requirements
3. Qualification Requirements for Inspectors and Testing Technicians
4. Listing of Required Structural Tests and Special Inspections

The Construction Contractor's Quality Control Supervisor will provide copies of all special inspection reports and associated documentation to the Contracting Officer (CO). The Construction Contractor will be required to correct all deficiencies discovered in the Special Inspection and Structural Testing program.

Prepared By: CRAIG JOUPPI
(Type or print name)

Signature: _____ Date: JAN 31, 2024

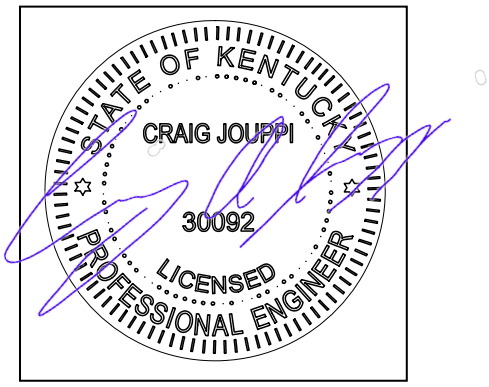

Stamped by Professional Engineer (PE) or Structural Engineer (SE)

Seismic and Wind Requirements

Seismic Requirements, IBC-21 Section 1704.3

Description of seismic-force-resisting system and designated seismic systems subject to special inspections:

None

Wind Requirements, IBC-21 Section 1704.3

Description of wind-force-resisting system and designated wind systems subject to special inspections:

None

Instructions:

1. Under Listing of Required Structural Tests and Special Inspections:
    a. **Required?** - Place an **X** for all Special Inspections and Tests required for this project.
    b. **Required Qualifications** - Provide qualifications for the special inspector, using the Qualification Requirements for Inspector and Testing Technicians list below, for all required Structural Tests and Special Inspections.
    c. **Continuous** - If marked with an **X**, continuous special inspection shall be as defined in Chapter 2, IBC-21.
    d. **Periodic** - If marked with an **X**, provide the minimum number of tests, i.e. 20% of all field welds, or the amount of work to be inspected (e.g. 10% of all wall surfaces).
2. Attach completed Statement of Structural Tests and Special Inspections to the end of NPS DSC Division 1 Specifications **Section 01 40 00 Quality Requirements**.

Qualification Requirements for Inspectors and Testing Technicians

PE/SE	Structural Engineer – licensed PE or SE specializing in the design of buildings and structures
PE/GE	Geotechnical Engineer – licensed PE specializing in soil mechanics and foundations
EIT	Engineer-In-Training – graduate engineer who has passed the Fundamentals of engineering examination

American Concrete Institute (ACI) Certification

ACI-CCSI	Concrete Construction Special Inspector
ACI-LTT	Concrete Laboratory Testing Technician Level 1 or 2
ACI-STT	Concrete Strength Testing Technician
ACI-FTT	Concrete Field Testing Technician – Grade I

American Society of Non-Destructive Testing (ASNT) Certification

Non-Destructive Testing Technician – Level II or III

American Welding Society (AWS) Certification

AWS-CWI	Certified Welding Inspector

Exterior Design Institute (EDI) Certification

EDI-EIFS	Certified EIFS inspector

International Code Council (ICC) Certification

ICC-PCSI	Prestressed Concrete Special Inspector
ICC-RCSI	Reinforced Concrete Special Inspector
ICC-SSI	Soils Special Inspector
ICC-SFSI	Spray-applied Fireproofing Special Inspector
ICC-SMSI	Structural Masonry Special Inspector
ICC-SSBSI	Structural Steel and Bolting Special Inspector
ICC-SWSI	Structural Welding Special Inspector

National Institute for Certification in Engineering Technologies (NICET) Certification

NICET-CT	Concrete Technician – Levels I, II, III and IV
NICET-GET	Geotechnical Engineering Technician - Levels I, II, III and IV
NICET-ST	Soils Technician - Levels I, II, III and IV

Other

Listing of Required Structural Tests and Special Inspections

Required?	Structural Test or Special Inspection	Required Qualifications	Continuous	Periodic	Frequency of Periodic Test or Inspection
	Steel Construction (IBC-21 Section 1705.2; American Institute of Steel Construction: AISC 360-16 Chapter N, AISC 341-16 Chapter J)				
	Prior to Welding (AISC 360-16 Table N5.4-1)				
	1. Welder qualification records and continuity records		X		
	2. Welding procedure specifications (WPS) available		X		
	3. Manufacturer certifications for welding consumables available		X		
	4. Material identification (type/grade)			X	
	5. Welder identification system			X	
	6. Fit-up of groove welds (including joint geometry)				
	a. Joint preparation			X	
	b. Dimensions (alignment, root opening, root face, bevel)			X	
	c. Cleanliness (condition of steel surfaces)			X	
	d. Tacking (tack weld quality and location)			X	
	e. Backing type and fit (if applicable)			X	
	7. Fit-up of CJP (complete joist penetration) groove welds of HSS (hollow structural sections) T-, Y- and K-joints without backing (including joint geometry)				
	a. Joint preparation				
	b. Dimensions (alignment, root opening, root face, bevel)				
	c. Cleanliness (condition of steel surfaces)				
	d. Tacking (tack weld quality and location)				

Required?	Structural Test or Special Inspection	Required Qualifications	Continuous	Periodic	Frequency of Periodic Test or Inspection
	8. Configuration and finish of access holes			X	
	9. Fit-up of fillet welds				
	a. Dimensions (alignment, gaps at root)			X	
	b. Cleanliness (condition of steel surfaces)			X	
	c. Tacking (tack weld quality and location)			X	
	10. Check welding equipment			X	
	During Welding (AISC 360-16 Table N5.4-2)				
	1. Control and handling of welding consumables				
	a. Packaging			X	
	b. Exposure control			X	
	2. No welding over cracked tack welds			X	
	3. Environmental conditions				
	a. Wind speed within limits			X	
	b. Precipitation and temperature			X	
	4. WPS followed				
	a. Settings on welding equipment			X	
	b. Travel speed			X	
	c. Selected welding materials			X	
	d. Shielding gas type/flow rate			X	
	e. Preheat applied			X	
	f. Interpass temperature maintained (minimum/maximum)			X	
	g. Proper position (F, V, H, OH)			X	

Required?	Structural Test or Special Inspection	Required Qualifications	Continuous	Periodic	Frequency of Periodic Test or Inspection
	h. Intermix of filler metals avoided unless approved (reference: AISC 341-10 Table J6.2)			X	
	5. Use of qualified welders		X		
	6. Welding techniques				
	a. Interpass and final cleaning			X	
	b. Each pass within profile limitations			X	
	c. Each pass meets quality requirements			X	
	7. Placement and installation of headed stud anchors		X		
	After Welding (AISC 360-16 Table N5.4-3)				
	1. Welds cleaned			X	
	2. Size, length and location of welds		X		
	3. Welds meet visual acceptance criteria				
	a. Crack prohibition		X		
	b. Weld/base-metal fusion		X		
	c. Crater cross section		X		
	d. Weld profiles		X		
	e. Weld size		X		
	f. Undercut		X		
	g. Porosity		X		
	4. Arc strikes		X		
	5. k-area		X		
	6. Weld access holes in rolled heavy shapes and built-up heavy shapes		X		
	7. Backing removed and weld tabs removed (if required)		X		

Required?	Structural Test or Special Inspection	Required Qualifications	Continuous	Periodic	Frequency of Periodic Test or Inspection
	8. Repair activities		X		
	9. Document acceptance or rejection of welded joint or member		X		
	10. No prohibited welds have been added without the approval of the EOR (Engineer of Record)		X		
	11. Placement of reinforcing or contouring fillet welds (if required) (reference: AISC 341-16)		X		
	Nondestructive Testing (AISC 360-16 Section N5 and AISC 341-16 Section J6)				
	1. Risk Category II Structures - Perform Ultrasonic Testing on 10% of CJP groove welds in butt, T- and corner joints subject to transversely applied tension loading, in materials 5/16 inch thick or greater.			X	
	2. Risk Category III or IV Structures - Perform Ultrasonic Testing on all CJP groove welds subject to transversely applied tension loading in butt, T- and corner joints, in materials 5/16 inch thick or greater.		X		
	3. Access Holes – Perform Magnetic Particle Testing or Liquid Penetrant Testing when the flange thickness exceeds 2 inches for rolled shapes, or when the web thickness exceeds 2 inches for built-up shapes.		X		
	4. Welded Joints Subject to Fatigue		X		
	Nondestructive Testing (AISC 341-16 Section J6)				
	Column Splice and Column to Base Plate PJP Groove Weld (AISC 341-16 Section J6 2b)				
	1. Perform Ultrasonic Testing on 100% of PJP (partial-joint-penetration) groove welds in column splices and column to base plate welds		X		
	2. CJP Groove weld		X		
	3. Lamellar tearing		X		
	4. Beam cope and access hole		X		
	5. Reduced beam section repair		X		

Required?	Structural Test or Special Inspection	Required Qualifications	Continuous	Periodic	Frequency of Periodic Test or Inspection
	6. Weld tab removal		X		
	Prior to Bolting (AISC 360-16 Table N5.6-1)				
	These inspections are not required for snug-tight joints.				
	1. Manufacturer's certifications available for fastener materials		X		
	2. Fasteners marked in accordance with ASTM requirements			X	
	3. Correct fasteners selected for the joint detail (grade, type, bolt length if threads are to be excluded from shear plane)			X	
	4. Correct bolting procedure selected for joint detail			X	
	5. Connecting elements, including the appropriate faying surface condition and hole preparation, if specified, meet applicable requirements			X	
	6. Pre-installation verification testing by installation personnel observed and documented for fastener assemblies and methods used			X	
	7. Protected storage provided for bolts, nuts, washers and other fastener components			X	
	During Bolting (AISC 360-16 Table N5.6-2)				
	These inspections are not required for snug-tight joints.				
	These inspections are not required for pretensioned joints and slip-critical joints, when the installer is using the turn-of-nut method with matchmarking techniques, the direct-tension-indicator method, or the twist-off-type tension control bolt method.				
	1. Fastener assemblies, of suitable condition, placed in all holes and washers (if required) are positioned as required			X	
	2. Joint brought to the snug-tight condition prior to the pretensioning operation			X	
	3. Fastener component not turned by the wrench prevented from rotating			X	

Required?	Structural Test or Special Inspection	Required Qualifications	Continuous	Periodic	Frequency of Periodic Test or Inspection
	4. Fasteners are pretensioned in accordance with the RCSC (Resource Council on Structural Connections) Specification, progressing systematically from the most rigid point toward the free edges			X	
	After Bolting (AISC 360-16 Table N5.6-2)				
	Document acceptance or rejection of bolted connections.		X		
	Other Inspection Tasks (AISC 360-16 Section N5.7)				
	1. Verify compliance of fabricated steel with the details shown on the approved shop drawings.			X	
	2. Verify compliance of the erected steel frame with the details shown on the approved erection drawings, including braces, stiffeners, member locations and joint details.			X	
	3. Anchor rods and other embedments support structural steel				
	a. Verify the diameter, grade, type and length of the anchor rod or embedded item.			X	
	b. Verify the extent or depth of embedment into the concrete.			X	
	4. RBS (reduce beam section) requirements, if applicable (AISC 341-16)				
	a. Contour and finish			X	
	b. Dimensional tolerances			X	
	5. Protected zone - no holes and unapproved attachments made by fabricator or erector, as applicable. (AISC 341-16)			X	
	6. H-piles - Protected zone - no holes and unapproved attachments made by the responsible contractor, as applicable. (AISC 341-16)			X	
	Cold-formed Steel Deck (IBC-21 1705.2.2)				
	1. Special inspections in accordance with QA/QC-2017 Standard for Quality control (QC) and				

Required?	Structural Test or Special Inspection	Required Qualifications	Continuous	Periodic	Frequency of Periodic Test or Inspection
	Quality assurance (QA) for Installation of Steel Deck				
	Open-Web steel Joists and Joist Girders (IBC-21 Table 1705.2.3)				
	1. Installation of open-web steel joists and joist girders.				
	a. End connections - welding or bolted			X	
	b. Bridging - horizontal or diagonal				
	1. Standard bridging			X	
	2. Bridging that differs from the SJI (Steel Joist Institute) specifications listed in Section 2207.1.			X	
	Inspection of Composite Structures Prior to Concrete Placement (AISC 341-16 Table J9.1)				
	1. Material identification of reinforcing steel (Type/Grade)			X	
	2. Determination of carbon equivalent for reinforcing steel other than ASTM A706			X	
	3. Proper reinforcing steel size, spacing and orientation			X	
	4. Reinforcing steel has not been rebent in the field			X	
	5. Reinforcing steel has been tied and supported as required			X	
	6. Required reinforcing steel clearances have been provided			X	
	7. Composite member has required size			X	
	Inspection of Composite Structures During Concrete Placement (AISC 341-16 Table J9.2)				
	1. Concrete: Material identification (mix design, compressive strength, maximum large aggregate size, maximum slump)			X	
	2. Limits on water added at the truck or pump			X	
	3. Proper placement techniques to limit segregation			X	

Required?	Structural Test or Special Inspection	Required Qualifications	Continuous	Periodic	Frequency of Periodic Test or Inspection
	Inspection of Composite Structures During Concrete Placement (AISC 341-16 Table J9.2)				
	1. Achievement of minimum specified concrete compressive			X	
	Cold-formed Steel Trusses Spanning 60-feet or Greater (IBC-21 Section 1705.2.4)				
	1. Verify temporary installation restraint/bracing installed in accordance with the approved shop drawings.			X	
	2. Verify permanent individual truss member restraint/bracing installed in accordance with the approved shop drawings.			X	
	Concrete Construction (IBC-21 Section 1705.3)				
X	1. Inspect reinforcing steel, including prestressing tendons, and placement.	QCI		X	
	2. Inspection of reinforcing steel welding				
	a. Verify weldability of reinforcing bars other than ASTM A706.		X		
	b. Inspect single pass fillet welds, maximum 5/16 inch.			X	
	c. Inspect all other welds.			X	
X	3. Inspection of anchors cast in concrete.	QCI		X	
X	4. Inspection of anchors post-installed in hardened concrete members.	QCI			
X	a. Adhesive anchors installed in horizontally or upwardly inclined orientations to resist sustained tension load	QCI	X		
	b. Mechanical anchors and adhesive anchors not defined in 4 a			X	
X	5. Verify use of approved design mix.	QCI		X	
X	6. Prior to placement fabricate specimens for strength tests, perform slump and air content tests, and determine the temperature of the concrete.	QCI	X		

Required?	Structural Test or Special Inspection	Required Qualifications	Continuous	Periodic	Frequency of Periodic Test or Inspection
X	7. Inspect concrete and shotcrete placement for proper application techniques.	QCI	X		
	8. Inspect for maintenance of specified curing temperature and techniques.			X	
	9. Inspection of prestressed concrete:				
	a. Application of prestressing forces		X		
	b. Grouting of bonded prestressing tendons in the seismic-force-resisting system.		X		
	10. Erection of precast structural members			X	
	11. For precast concrete diaphragm connections or reinforcement at joints classified as moderate or high deformability elements (MDE or HDE) in structures assigned to Seismic Design Category C, D, E, or F, inspect such connections and reinforcement in the field for:				
	a. Installation of the embedded parts		X		
	b. Completion of the continuity of reinforcement across joints		X		
	c. Completion of connections in the field		X		
	12. Inspect installation tolerances of precast concrete diaphragm connections for compliance with ACI 550.5 (American Concrete Institute).			X	
	13. Verification of in-situ concrete strength, prior to stressing of tendons in post-tensioned concrete and prior to removal of shores and forms from beams and structural slabs.			X	
	14. Inspection formwork for shape, location and dimensions of the concrete member being formed.			X	
	Masonry Construction (IBC-21 Section 1705.4)				
	1. Inspect masonry construction in accordance with IBC-21 Section 1705.4 and TMS 602-13 (The Masonry Society)/ACI 530.1-13 Article 1.6.				
	Level A Quality Assurance				

Required?	Structural Test or Special Inspection	Required Qualifications	Continuous	Periodic	Frequency of Periodic Test or Inspection
	Tests: None.				
X	**Inspection:** Verify compliance with the approved submittal and project specifications.	QCI		X	
	Level B Quality Assurance				
	Tests:				
	1. Verify slump flow and Visual Stability Index (VSI) as delivered to the project site in accordance with TMS 602-13/ACI 530.1-13 Specification Article 1.5B.1.b.3 for self-consolidating grout.				
	2. Verify f'm and f'aac in accordance with TMS 602-13/ACI 530.1-13 Specification Article 1.4B prior to construction, except where specifically exempted.				
	Inspection:				
	1. Verify compliance with the approved submittals and project specifications.			X	
	2. At the start of masonry construction, verify:				
	a. Proportions of site-prepared mortar.			X	
	b. Construction of mortar joints.			X	
	c. Grade and size of prestressing tendons and anchorages.				
	d. Location of reinforcement, connectors, prestressing tendons and anchorages.			X	
	e. Prestressing technique.			X	
	f. Properties of thin-bed mortar for AAC (autoclaved aerated concrete) masonry. (Continuous inspection is required for the first 5000 square feet of AAC masonry. Periodic inspection is required after the first 5000 square feet of AAC masonry.)		X	X	
	3. Prior to grouting, verify:				
	a. Grout space is clean.			X	

Required?	Structural Test or Special Inspection	Required Qualifications	Continuous	Periodic	Frequency of Periodic Test or Inspection
	b. Grade, type and size of reinforcement and anchor bolts, and prestressing tendons and anchorages.			X	
	c. Placement of reinforcing and connectors, and prestressing tendons and anchorages.			X	
	d. Proportions of site-prepared grout and prestressing grout for bonded tendons.			X	
	e. Construction of mortar joints.			X	
	4. During masonry construction, verify:				
	a. Size and location of structural members.			X	
	b. Type, size and location of anchors, including other details of anchorage of masonry to structural members, frames, or other construction.			X	
	c. Welding of reinforcement.		X		
	d. Preparation, construction and protection of masonry during cold weather (temperature below 40 degrees Fahrenheit) or hot weather (temperature above 90 degrees Fahrenheit).			X	
	e. Application and measurement of prestressing force.		X		
	f. Placement of grout and prestressing grout for bonded tendons is in compliance.		X		
	g. Placement of AAC masonry units and construction of thin-bed mortar joints. (Continuous inspection is required for the first 5000 square feet of AAC masonry. Periodic inspection is required after the first 5000 square feet of AAC masonry.)		X	X	
	5. Observe preparation of grout specimens, mortar specimens and/or prisms.			X	
	Level C Quality Assurance				
	Tests:				
	1. Verify f'm and f'aac in accordance with TMS 602-13/ACI 530.1-13/ASCE 6-13 Specification				

Required?	Structural Test or Special Inspection	Required Qualifications	Continuous	Periodic	Frequency of Periodic Test or Inspection
	Article 1.4B prior to construction, and for every 5000 square feet during construction.				
	2. Verify proportions of materials in premixed or pre-blended mortar, prestressing grout, and grout other than self-consolidating grout as delivered to the project site.				
	3. Verify slump flow and Visual Stability Index (VSI) as delivered to the project site in accordance with TMS 602-13/ACI 530.1-13/ASCE 6-13 Specification Article 1.5B.1.b.3 for self-consolidating grout.				
	Inspection:				
	1. Verify compliance with the approved submittals and project specifications.			X	
	2. Verify:				
	a. Proportions of site-prepared mortar, grout and prestressing grout for bonded tendons.			X	
	b. Grade, type and size of reinforcement and anchor bolts, and prestressing tendons and anchorages.			X	
	c. Placement of masonry units and construction of mortar joints.			X	
	d. Placement of reinforcement, connectors and prestressing tendons and anchorages.		X		
	e. Grout space prior to grouting.		X		
	f. Placement of grout and prestressing grout for bonded tendons.		X		
	g. Size and location of structural elements.			X	
	h. Type, size and location of anchors, including other details of anchorage of masonry to structural members, frames or other construction.		X		
	i. Welding of reinforcement.		X		
	j. Preparation, construction and protection of masonry during cold weather (temperature below 40 degrees Fahrenheit) or hot			X	

Required?	Structural Test or Special Inspection	Required Qualifications	Continuous	Periodic	Frequency of Periodic Test or Inspection
	weather (temperature above 90 degrees Fahrenheit).				
	k. Application and measurement of prestressing force.		X		
	l. Placement of AAC masonry units and construction of thin-bed mortar joints.		X		
	m. Properties of thin-bed mortar for AAC masonry.		X		
	3. Observe preparation of grout specimens, mortar specimens and/or prisms.		X		
	Wood Construction (IBC-21 Section 1705.5)				
	1. Inspect prefabricated wood structural elements in accordance with Section 1704.2.5.			X	
	2. High load diaphragms:				
	a. Verify sheathing grade and thickness.			X	
	b. Verify nominal size of framing members at adjoining panel edges.			X	
	c. Verify nail or staple diameter and length.			X	
	d. Verify number of fastener lines.			X	
	e. Verify spacing between fasteners in each line and at panel edges.			X	
	3. Shearwalls:				
	a. Verify sheathing grade and thickness.			X	
	b. Verify nominal size of framing members at adjoining panel edges.			X	
	c. Verify nail or staple diameter and length.			X	
	d. Verify number of fastener lines.			X	
	e. Verify spacing between fasteners in each line and at panel edges.			X	
	f. Location and size of holdowns.			X	

Required?	Structural Test or Special Inspection	Required Qualifications	Continuous	Periodic	Frequency of Periodic Test or Inspection
	4. Verify nailing, bolting, anchoring and fastening of:				
	a. Drag struts and collectors.			X	
	b. Braces.			X	
X	c. Member Connectors.	**QCI**		X	**50% OF CONNECTORS**
	5. Metal-plate-connected wood trusses spanning 60 feet or greater:				
	a. Verify temporary installation restraint/bracing installed in accordance with the approved shop drawings.			X	
	b. Verify permanent individual truss member restraint/bracing installed in accordance with the approved shop drawings.			X	
	Soils (IBC-21 Section 1705.6)				
X	1. Verify materials below shallow foundations are adequate to achieve the required bearing capacity.	PE/GE		X	AT EACH SITE
X	2. Verify excavations are extended to proper depth and have reached proper material.	NICET-GET		X	AT EACH SITE
X	3. Perform classification and testing of compacted fill materials.	NICET-GET		X	AT EACH SITE
X	4. During fill placement, verify use of proper materials and procedure in accordance with the provisions of the approved geotechnical report. Verify densities and lift thicknesses during placement and compaction of compacted fill.	NICET-GET	X		AT EACH SITE
X	5. Prior to placement of compacted fill, inspect subgrade and verify that site has been prepared properly.	NICET-GET		X	AT EACH SITE
	Driven Deep Foundation Elements (IBC-21 Section 1705.7)				
	1. Verify element materials, sizes and lengths.		X		

Required?	Structural Test or Special Inspection	Required Qualifications	Continuous	Periodic	Frequency of Periodic Test or Inspection
	2. Determine capacities of test elements and conduct additional load tests when required. Refer to project specifications.		X		
	3. Inspect driving operations and maintain complete and accurate records for each element.		X		
	4. Verify element locations and plumbness.		X		
	a. Verify type and size of hammer.		X		
	b. Record number of blows per foot of penetration.		X		
	c. Determine required penetration to achieve specified capacity.		X		
	d. Record pile tip and butt elevations.		X		
	e. Document any damage to any foundation element.		X		
	5. For steel piling, perform additional inspection in accordance with Section 1705.2 and AISC 341-16, Table J10.1.				
	6. For concrete elements and concrete-filled elements, perform additional inspections in accordance with Section 1705.3.				
	7. For specialty elements, perform additional inspections as required in the project specifications.				
	Cast-in-Place Deep Foundation (IBC-21 Section 1705.8)				
	1. Inspect drilling operations and maintain complete and accurate records for each element.		X		
	2. Verify element locations and plumbness.		X		
	a. Verify element diameter.		X		
	b. Verify bell diameter (if applicable).		X		
	c. Verify element lengths.		X		

Required?	Structural Test or Special Inspection	Required Qualifications	Continuous	Periodic	Frequency of Periodic Test or Inspection
	d. Verify embedment depth into bedrock (if applicable).		X		
	e. Verify adequate end-bearing strata capacity.		X		
	f. Record concrete or grout volumes.		X		
	3. For concrete elements, perform additional inspections in accordance with Section 1705.3.				
	Helical Piles (IBC-21 Section 1705.10)				
	1. Verify pile locations.		X		
	a. Verify installation equipment used.		X		
	b. Verify pile dimensions.		X		
	c. Verify tip elevations.		X		
	d. Verify final depth.		X		
	e. Verify final installation torque.		X		
	f. Other data as required by the project specifications.		X		
	Fabricated Items (IBC-21 Section 1705.11)				
	1. Inspect fabricated items in accordance with Section 1704.2.5.		X		
	Wind Resistance (IBC-21 Section 1705.12)				
	1. Provide inspections when required by Section 1705.12.				
	Seismic Resistance (IBC-21 Section 1705.13)				
	1. Provide inspections when required by Section 1705.13.				
	Testing and Qualification for Seismic Resistance (IBC-21 Section 1705.14)				

Required?	Structural Test or Special Inspection	Required Qualifications	Continuous	Periodic	Frequency of Periodic Test or Inspection
	1. Test and qualify seismic resistance in accordance with IBC-21 Section 1705.14 and the project specifications.				
	Sprayed Fire-Resistant Materials (IBC-21 Section 1705.15)				
	1. Inspect sprayed fire-resistant materials in accordance with IBC-21 Section 1705.15 and the project specifications.				
	Mastic and Intumescent Fire-Resistant Coatings (IBC-21 Section 1705.16)				
	1. Perform inspections in accordance with AWCI 12-B (Association of the Wall and Ceiling Industry) and IBC-21 Section 1705.16.			X	
	Exterior Insulation and Finish Systems (EIFS) (IBC-21 Section 1705.17)				
	1. Perform inspections in accordance with project specifications and IBC-21 Section 1705.17.			X	
	Fire-Resistant Penetrations and Joints (IBC-21 Section 1705.18)				
	1. Perform inspections in accordance with project specifications and IBC-21 Section 1705.18.			X	
	Smoke Control (IBC-21 Section 1705.19)				
	1. Perform testing in accordance with project specifications and IBC-21 Section 1705.19.				
	Sealing of Mass Timber (IBC-21 Section 1705.20)				
	1. Perform testing in accordance with project specifications and IBC-21 Section 1705.20.				

SECTION 01 42 00 – REFERENCE STANDARDS

PART 1 - GENERAL

1.1 ENVIRONMENTAL DEFINITIONS

A. Definitions pertaining to sustainable development: As defined in ASTM E2114 and as specified herein.

B. Biobased Materials: As defined in the Farm Security and Rural Investment Act, for purposes of Federal procurement of biobased products, "biobased" means a "commercial or industrial product (other than food or feed) that is composed, in whole or in significant part, of biological products or renewable domestic agricultural materials (including plant, animal, and marine materials) or forestry materials." Biobased materials also include fuels, chemicals, building materials, or electric power or heat produced from biomass as defined by The Biomass Research and Development Act of 2000.

1. Biobased content: Amount of biobased carbon in the material or product as a percentage of weight (mass) of total organic carbon in the material or product.

C. Chain-of-Custody: Process whereby a product or material is maintained under physical possession or control during its entire life cycle.

D. Deconstruction: Disassembly of buildings for purpose of recovering materials.

E. DFE (Design for the Environment): A technique that includes elements of resource conservation and pollution prevention as applied in various product sectors. A technique that incorporates approaches which are part of product (or assembly) concept, need and design. Considerations involve material selection, material and energy efficiency, reuse, maintainability and design for disassembly and recyclability. Refer to International Organization for Standardization (ISO) Guide 64 for additional clarification.

F. Environmentally preferable products: Products and services that have a lesser or reduced effect on the environment in comparison to conventional products and services. Refer to EPA's Final Guidance on Environmentally Preferable Purchasing Program.

G. Non-Renewable Resource: A resource that exists in a fixed amount that cannot be replenished on a human time scale. Non-renewable resources have potential for renewal only by geological, physical, and chemical processes taking place over of millions of years. Examples include iron ore, coal, and oil.

H. Perpetual Resource: A resource that is virtually inexhaustible on a human time scale. Examples include solar energy, tidal energy, and wind energy.

I. Recycled Content Materials: Products that contain pre-consumer or post-consumer materials as all or part of their feedstock. Recycled content claim shall be consistent Federal Trade Commission (FTC) Guide for Use of Environmental Marketing Claims.

J. Renewable Resource: A resource that is grown, naturally replenished, or cleansed, at a rate which exceeds depletion of the usable supply of that resource. A renewable resource can be exhausted if improperly managed. However, a renewable resource can last indefinitely with proper stewardship. Examples include trees in forests, grasses in grasslands, and fertile soil.

1.2 QUALITY ASSURANCE

A. Applicability of Standards: Unless the Contract Documents include more stringent requirements, applicable construction industry standards have the same force and effect as if bound or copied directly into Contract Documents to the extent referenced. Such standards are made a part of Contract Documents by reference.

B. Publication Dates: Comply with standards in effect as of date of Contract Documents, unless otherwise indicated.

C. Conflicting Requirements: Where compliance with two or more standards is specified, and standards may establish different or conflicting requirements for minimum quantities or quality levels, comply with most stringent requirement. Refer uncertainties and requirements that are different, but apparently equal, to Contracting Officer (CO) for decision before proceeding.

1.3 INDUSTRY STANDARDS

A. Applicability of Standards: Unless Contract Documents include more stringent requirements, applicable construction industry standards have same force and effect as if bound or copied directly into Contract Documents to the extent referenced. Such standards are made a part of Contract Documents by reference.

B. Publication Dates: Comply with standards in effect as of date of Contract Documents unless otherwise indicated.

C. Copies of Standards: Each entity engaged in construction on Project should be familiar with industry standards applicable to its construction activity. Copies of applicable standards are not bound with Contract Documents.

1. Where copies of standards are needed to perform a required construction activity, obtain copies directly from publication source.

1.4 ABBREVIATIONS AND ACRONYMS

A. Industry Organizations: Where abbreviations and acronyms are used in Specifications or other Contract Documents, they shall mean the recognized name of the entities found in Section 01 42 00 Sources for Reference Publications, Unified Facilities Guide Specifications (UFGS) (accessible via Masters website > Downloads section > click on UFGS Master (WBDG Website). Names, telephone numbers, and websites are subject to change and are believed to be accurate and up-to-date as of date of Contract Documents.

XX EXAMPLE Association (The)
www.EXAMPLE.org

B. Code Agencies: Where abbreviations and acronyms are used in Specifications or other Contract Documents, they shall mean the recognized name of the entities in following list. Names, telephone numbers, and websites are subject to change and are believed to be accurate and up-to-date as of date of Contract Documents.

DIN	Deutsches Institut fur Normung e.V. www.din.de	49 30 2601-3003
IAPMO	International Association of Plumbing and Mechanical Officials www.iapmo.org	(909) 472-4100
ICC	International Code Council www.iccsafe.org	(888) 422-7233
ICC-ES	ICC Evaluation Service, Inc. icc-es.org	(800) 423-6587 (562) 699-0543

C. Federal Government Agencies: Where abbreviations and acronyms are used in Specifications or other Contract Documents, they shall mean the recognized name of the entities in following list. Names, and websites are subject to change and are believed to be accurate and up-to-date as of date of Contract Documents.

ABA & ABAAS United States Access Board	Architectural Barriers Act (ABA) Architectural Barriers Act Accessibility Standards (ABAAS) www.access-board.gov
CoE	Army Corps of Engineers www.usace.army.mil
CPSC	Consumer Product Safety Commission www.cpsc.gov
DOC	Department of Commerce www.commerce.gov
DOD	Department of Defense www.defense.gov
DOJ	Department of Justice www.justice.gov
DOE	Department of Energy www.energy.gov
EPA	Environmental Protection Agency www.epa.gov

FAA	Federal Aviation Administration www.faa.gov
FCC	Federal Communications Commission www.fcc.gov
FDA	Food and Drug Administration www.fda.gov
GSA	General Services Administration www.gsa.gov
HUD	Department of Housing and Urban Development www.hud.gov
LBL	Lawrence Berkeley National Laboratory www.lbl.gov
NCHRP	National Cooperative Highway Research Program (See TRB (Transportation Resource Board))
NIST	National Institute of Standards and Technology www.nist.gov
OSHA	Occupational Safety & Health Administration www.osha.gov
PHS	U.S. Department of Health and Human Services www.hhs.gov
RUS	Rural Utilities Service (See USDA (Department of Agriculture))
SD	State Department www.state.gov
TRB	Transportation Research Board www.nationalacademies.org/trb/transportation-research-board
USDA	Department of Agriculture www.usda.gov
USP	U.S. Pharmacopeia www.usp.org
USPS	Postal Service www.usps.com

D. Standards and Regulations: Where abbreviations and acronyms are used in Specifications or other Contract Documents, they shall mean the recognized name of the standards and regulations in

following list. Names, telephone numbers, and websites are subject to change and are believed to be accurate and up-to-date as of date of Contract Documents.

ABAAS	Architectural Barriers Act Accessibility Standards www.access-board.gov
CFR	Code of Federal Regulations Available from Government Printing Office www.govinfo.gov/app/collection/cfr
DOD	Department of Defense Military Specifications and Standards Available from Department of Defense Single Stock Point www.dsp.dla.mil/Specs-Standards/
DSCC	Defense Supply Center Columbus (See FS (Federal Specification))
FED-STD	Federal Standard (See FS (Federal Specification))
FS	Federal Specification Available from Department of Defense Single Stock Point www.dsp.dla.mil/Specs-Standards/ Available from General Services Administration www.gsa.gov Available from National Institute of Building Sciences www.nibs.org
FTMS	Federal Test Method Standard (See FS (Federal Specification))
MIL	(See MILSPEC (Military Specification and Standards))
MIL-STD	(See MILSPEC (Military Specification and Standards))
MILSPEC	Military Specification and Standards Available from Department of Defense Single Stock Point www.dsp.dla.mil/Specs-Standards/
UFAS	Uniform Federal Accessibility Standards Available from Access Board www.access-board.gov/guidelines-and-standards/buildings-and-sites/about-the-aba-standards/ufas *(UFAS is **only** for housing projects per Fair Housing Act. See also the Fair Housing Act Design Manual, www.huduser.gov/portal/publications/destech/fairhousing)*

1.5 ENVIRONMENTAL REFERENCE STANDARDS

A. American Forest and Paper Association:

1. Sustainable Forestry Initiative

B. American Society of Heating Refrigerating and Air Conditioning Engineers (ASHRAE):
- **ASHRAE 52.2,** *Method of Testing General Ventilation Air Cleaning Devices for Removal Efficiency by Particle Size*
- **ASHRAE 55,** *Thermal Environmental Conditions for Human Occupancy*
- **ASHRAE 62.1,** *Ventilation for Acceptable Indoor Air Quality*
- **ASHRAE 62.2,** *Ventilation and Acceptable Indoor Air Quality in Low-Rise Residential Buildings*
- **ASHRAE/IESNA 90.1,** *Energy Standard for Buildings, Except Low-Rise Residential Buildings*
- **ASHRAE 90.2,** *Energy Efficient Design of Low-Rise Residential Buildings*

C. American Association of State Highway and Transportation Officials (AASHTO):
- M288 Geotextile Specification for Highway Applications
- **MP009-06 Standard Specification for Compost for Erosion/Sediment Control (Filter Berms and Filter Socks)**
- **MP010-03 Standard Specification for Compost for Erosion/Sediment Control (Compost Blankets)**

D. American Society for Testing and Materials International (ASTM):
- A478 Standard Specification for Chromium-Nickel Stainless Steel Weaving and Knitting Wire
- A580/A580M Standard Specification for Stainless Steel Wire
- A653/A653M Standard Specification for Steel Sheet, Zinc-Coated (Galvanized) or Zinc-Iron Alloy-Coated (Galvannealed) by the Hot-Dip Process
- B813 Standard Specification for Liquid and Paste Fluxes for Soldering of Copper and Copper Alloy Tube
- C1240 Standard Specification for Silica Fume Used in Cementitious Mixtures
- C128 Standard Test Method for Density, Relative Density (Specific Gravity), and Absorption of Fine Aggregate
- C131 Standard Test Method for Resistance to Degradation of Small-Size Coarse Aggregate by Abrasion and Impact in the Los Angeles Machine
- C1319 Standard Specification for Concrete Grid Paving Units
- C1338 Standard Test Method for Determining Fungi Resistance of Insulation Materials and Facings
- C136 Standard Test Method for Sieve Analysis of Fine and Coarse Aggregates
- C1371 Standard Test Method for Determination of Emittance of Materials Near Room Temperature Using Portable Emissometers
- C1386 Standard Specification for Precast Autoclaved AERATED Concrete (PAAC) Wall Construction Units
- C1483 Standard Specification for Exterior Solar Radiation Control Coatings on Buildings
- C1549 Standard Test Method for Determination of Solar Reflectance Near Ambient Temperature Using a Portable Solar Reflectometer
- C1601 Standard Test Method for Field Determination of Water Penetration of Masonry Wall Surfaces
- C289 Standard Test Method for Potential Alkali-Silica Reactivity of Aggregates (Chemical Method)

- C311 Test Methods for Sampling and Testing Fly Ash or Natural Pozzolans for Use as a Mineral Admixture in Portland-Cement Concrete
- C33 Standard Specification for Concrete Aggregates
- C593 Standard Specification for Fly Ash and Other Pozzolans for Use With Lime
- C595 Standard Specification for Blended Hydraulic Cements
- C618 Standard Specification for Coal Fly Ash and Raw or Calcined Natural Pozzolan for Use as a Mineral Admixture in Concrete
- C67 Standard Test Methods for Sampling and Testing Brick and Structural Clay Tile
- C739 Standard Specification for Cellulosic Fiber (Wood-Base) Loose-Fill Thermal Insulation
- C936 Standard Specification for Interlocking Concrete Paver Units
- C989 Standard Specification for Ground Granulated Blast-Furnace Slag for Use in Concrete and Mortars
- D1435 Standard Practice for Outdoor Weathering of Plastics
- D1557 Standard Test Methods for Laboratory Compaction Characteristics of Soil Using Modified Effort (56,000 foot pound force per cubic foot (ft-lbf/ft3) (2,700 kilonewton meter per cubic meter (kN-m/m3))
- D1972 Standard Practice for Generic Marking of Plastic Products
- D198 Standard Test Methods of Static Tests of Lumber in Structural Sizes
- D2103 Standard Specification for Polyethylene Film and Sheeting
- D217 Standard Test Methods for Cone Penetration of Lubricating Grease
- D2369 Standard Test Method for Volatile Content of Coatings
- D3273 Standard Test Method for Resistance to Growth of Mold on the Surface of Interior Coatings in an Environmental Chamber
- D3786 Standard Test Method for Hydraulic Bursting Strength of Textile Fabrics-Diaphragm Bursting Strength Tester Method
- D3792 Standard Test Method for Water Content of Coatings by Direct Injection Into a Gas Chromatograph
- D3864 Standard Guide for Continual On-Line Monitoring Systems for Water Analysis
- D3960 Standard Practice for Determining Volatile Organic Compound (VOC) Content of Paints and Related Coatings
- D4017 Standard Test Method for Water in Paints and Paint Materials by Karl Fischer Method
- D4263 Standard Test Method for Indicating Moisture in Concrete by the Plastic Sheet Method
- D4444 Standard Test Methods for Use and Calibration of Hand-Held Moisture Meters
- D4491 Standard Test Methods for Water Permeability of Geotextiles by Permittivity
- D4552 Standard Practice for Classifying Hot-Mix Recycling Agents
- D4632 Standard Test Method for Grab Breaking Load and Elongation of Geotextiles
- D4716 Test Method for Determining the (In-plane) Flow Rate per Unit Width and Hydraulic Transmissivity of a Geosynthetic Using a Constant Head
- D4833 Standard Test Method for Index Puncture Resistance of Geotextiles, Geomembranes, and Related Product
- D4840 Standard Guide for Sampling Chain-of-Custody Procedures
- D4887 Standard Test Method for Preparation of Viscosity Blends for Hot Recycled Bituminous Materials
- D5106 Standard Specification for Steel Slag Aggregates for Bituminous Paving Mixtures
- D5116 Standard Guide for Small-Scale Environmental Chamber Determinations of Organic Emissions from Indoor Materials/Products

- D5199 Standard Test Method for Measuring the Nominal Thickness of Geosynthetics
- D5261 Standard Test Method for Measuring Mass per Unit Area of Geotextiles
- D5268 Standard Specification for Topsoil Used for Landscaping Purposes
- D5359 Standard Specification for Glass Cullet Recovered from Waste for Use in Manufacture of Glass Fiber
- D5505 Standard Practice for Classifying Emulsified Recycling Agents
- D5509 Standard Practice for Exposing Plastics to a Simulated Compost Environment
- D5512 Standard Practice for Exposing Plastics to a Simulated Compost Environment Using an Externally Heated Reactor
- D5539 Standard Specification for Seed Starter Mix
- D5957 Standard Guide for Flood Testing Horizontal Waterproofing Installations
- D5603 Standard Classification for Rubber Compounding Materials—Recycled Vulcanizate Particulate Rubber
- D5663 Standard Guide for Validating Recycled Content in Packaging Paper and Paperboard
- D5759 Standard Guide for Characterization of Coal Fly Ash and Clean Coal Combustion Fly Ash for Potential Uses
- D5792 Standard Practice for Generation of Environmental Data Related to Waste Management Activities: Development of Data Quality Objectives
- D5834 Standard Guide for Source Reduction Reuse, Recycling, and Disposal of Solid and Corrugated Fiberboard (Cardboard)
- D5851 Standard Guide for Planning and Implementing a Water Monitoring Program
- D5852 Standard Test Method for Erodibility Determination of Soil in the Field or in the Laboratory by the Jet Index Method
- D6002 Standard Guide for Assessing the Compostability of Environmentally Degradable Plastics
- D6006 Standard Guide for Assessing Biodegradability of Hydraulic Fluid
- D6007 Standard Test Method for Determining Formaldehyde Concentration in Air from Wood Products Using a Small Scale Chamber
- D6046 Standard Classification of Hydraulic Fluids for Environmental Impact
- D6081 Standard Practice for Aquatic Toxicity Testing of Lubricants: Sample Preparation and Results Interpretation
- D6108 Standard Test Method for Compressive Properties of Plastic Lumber and Shapes
- D6109 Standard Test Methods for Flexural Properties of Unreinforced and Reinforced Plastic Lumber
- D6112 Standard Test Methods for Compressive and Flexural creep and Creep-Rupture of Plastic Lumber and Shapes
- D6117 Standard Test Methods for Mechanical Fasteners In Plastic Lumber and Shapes
- D6155 Standard Specification for Nontraditional Coarse Aggregates for Bituminous Paving Mixtures
- D6245 Standard Guide for Using Indoor Carbon Dioxide Concentrations to Evaluate Indoor Air Quality and Ventilation
- D6261 Standard Specification for Extruded and Compression Molded Basic Shapes Made from Thermoplastic Polyester (TPES)
- D6262 Standard Specification for Extruded, Compression Molded, and Injection Molded Basic Shapes of Poly(aryl ether ketone) (PAEK)
- D6270 Standard Practice for Use of Scrap Tires in Civil Engineering Applications
- D6329 Standard Guide for Developing Methodology for Evaluating the Ability of Indoor Materials to Support Microbial Growth Using Static Environmental Chambers

- D6330 Standard Practice for Determination of Volatile Organic Compounds (Excluding Formaldehyde) Emissions from Wood-Based Panels Using Small Environmental Chambers Under Defined Test Conditions
- D6345 Standard Guide for Selection of Methods for Active, Integrative Sampling of Volatile Organic Compounds in Air
- D6400 Standard Specification for Compostable Plastics
- D6435 Standard Test Method for Shear Properties of Plastic Lumber and Plastic Lumber Shapes
- D6629 Standard Guide for Selection of Methods for Estimating Soil Loss by Erosion
- D6662 Standard Specification for Polyolefin-Based Plastic Lumber Decking Boards
- D6712 Standard Specification for Ultra-High-Molecular-Weight Polyethylene (UHMW-PE) Solid Plastic Shapes
- D6886 Standard Test Method for Speciation of the Volatile Organic Compounds (VOCs) in Low VOC Content Waterborne Air-Dry Coatings by Gas Chromatography
- D692 Standard Specification for Coarse Aggregate for Bituminous Paving Mixtures
- D696 Standard Test Method for Coefficient of Linear Thermal Expansion of Plastics Between -30°C and 30°C With a Vitreous Silica Dilatometer
- D698 Standard Test Methods for Laboratory Compaction Characteristics of Soil Using Standard Effort (12,400 ft-lbf/ft3 (600 kN-m/m3))
- D7186 Standard Practice for Quality Assurance Observation of Roof Construction and Repair
- E1021 Standard Test Methods for Measuring Spectral Response of Photovoltaic Cells
- E1038 Standard Test Method for Determining Resistance of Photovoltaic Modules to Hail by Impact with Propelled Ice Balls
- E1039 Standard Test Method for Calibration of Silicon Non-Concentrator Photovoltaic Primary Reference Cells Under Global Irradiation
- E1040 Standard Specification for Physical Characteristics of Nonconcentrator Terrestrial Photovoltaic Reference Cells
- E1105 Standard Test Method for Field Determination of Water Penetration of Installed Exterior Windows, Skylights, Doors, and Curtain Walls by Uniform or Cyclic Static Air Pressure Difference
- E1171 Standard Test Method for Photovoltaic Modules in Cyclic Temperature and Humidity Environments
- E1333 Standard Test Method for Determining Formaldehyde Concentrations in Air and Emission Rates from Wood Products Under Defined Test Conditions Using a Large Chamber
- E1362 Standard Test Method for Calibration of Non-Concentrator Photovoltaic Secondary Reference Cells
- E1433 Standard Guide for Selection of Standards on Environmental Acoustics
- E1462 Standard Test Methods for Insulation Integrity and Ground Path Continuity of Photovoltaic Modules
- E1596 Standard Test Methods for Solar Radiation Weathering of Photovoltaic Modules
- E1597 Standard Test Method for Saltwater Pressure Immersion and Temperature Testing of Photovoltaic Modules for Marine Environments
- E1609 Standard Guide for Development and Implementation of a Pollution Prevention Program
- E1686 Standard Guide for Selection of Environmental Noise Measurements and Criteria
- E1690 Standard Test Method for Determination of Ethanol Extractives in Biomass
- E1721 Standard Test Method for Determination of Acid-Insoluble Residue in Biomass

- E1755 Standard Test Method for Ash in Biomass
- E1758 Standard Test Method for Determination of Carbohydrates in Biomass by High Performance Liquid Chromatography
- E1780 Standard Guide for Measuring Outdoor Sound Received from a Nearby Fixed Source
- E1799 Standard Practice for Visual Inspections of Photovoltaic Modules
- E1802 Standard Test Methods for Wet Insulation Integrity Testing of Photovoltaic Modules
- E1821 Standard Test Method for Determination of Carbohydrates in Biomass by Gas Chromatography
- E1827 Standard Test Methods for Determining Airtightness of Buildings Using an Orifice Blower Door
- E1830 Standard Test Methods for Determining Mechanical Integrity of Photovoltaic Modules
- E1861 Standard Guide for Use of Coal Combustion By-Products in Structural Fills
- E1918 Standard Test Method for Measuring Solar Reflectance of Horizontal and Low-Sloped Surfaces in the Field
- E1971 Standard Guide for Stewardship for the Cleaning of Commercial and Institutional Buildings
- E1980 Standard Practice for Calculating Solar Reflectance Index of Horizontal and Low-Sloped Opaque Surfaces
- E1991 Standard Guide for Environmental Life Cycle Assessment of Building Materials/Products
- E2047 Standard Test Method for Wet Insulation Integrity Testing of Photovoltaic Arrays
- E2114 Standard Terminology for Sustainability Relative to the Performance of Buildings
- E2128 Standard Guide for Evaluating Water Leakage of Building Walls
- E2129 Standard Practice for Data Collection for Sustainability Assessment of Building Products
- E2397 Standard Practice for Determination of Dead Loads and Live Loads associated with Green Roof Systems
- E2398 Standard Test Method for Water Capture and Media Retention of Geocomposite Drain Layers for Green Roof Systems
- E2399 Standard Test Method for Maximum Media Density for Dead Load Analysis of Green Roof Systems
- E2400 Standard Guide for Selection, Installation, and Maintenance of Plants for Green Roof Systems
- E241 Standard Guide for Limiting Water-Induced Damage to Buildings
- E2432 Standard Guide for General Principles of Sustainability Relative to Buildings
- E408 Standard Test Methods for Total Normal Emittance of Surfaces Using Inspection-Meter Techniques
- E413 Standard Classification for Rating Sound Insulation
- E477 Standard Test Method for Measuring Acoustical and Airflow Performance of Duct Liner Materials and Prefabricated Silencers
- E648 Standard Test Method for Critical Radiant Flux of Floor-Covering Systems Using a Radiant Heat Energy Source
- E683 Standard Practice for Installation and Service of Solar Space Heating Systems for One- and Two-Family Dwellings
- E779 Standard Test Method for Determining Air Leakage Rate by Fan Pressurization

- E781 Standard Practice for Evaluating Absorptive Solar Receiver Materials When Exposed to Conditions Simulating Stagnation in Solar Collectors With Cover Plates
- E782 Standard Practice for Exposure of Cover Materials for Solar Collectors to Natural Weathering Under Conditions Simulating Operational Mode
- E823 Standard Practice for Nonoperational Exposure and Inspection of a Solar Collector
- E881 Standard Practice for Exposure of Solar Collector Cover Materials to Natural Weathering Under Conditions Simulating Stagnation Mode
- E90 Standard Test Method for Laboratory Measurement of Airborne Sound Transmission Loss of Building Partitions and Elements
- E903 Standard Test Method for Solar Absorptance, Reflectance, and Transmittance of Materials Using Integrating Spheres
- E948 Standard Test Method for Electrical Performance of Photovoltaic Cells Using Reference Cells Under Simulated Sunlight
- F1869 Standard Test Method for Measuring Moisture Vapor Emission Rate of Concrete Subfloor Using Anhydrous Calcium Chloride
- F2034 Standard Specification for Sheet Linoleum Floor Covering
- F2170 Standard Test Method for Determining Relative Humidity in Concrete Floor Slabs Using in situ Probes

E. Bat Conservation International:
- Bat Approved Bat Houses

F. Carpet and Rug Institute
- Green Label & Green Label Plus Testing Programs, carpet-rug.org/testing/green-label-plus

G. Center for Resource Solutions
- Green-e program

H. Environmental Protection Agency (EPA):
- Comprehensive Procurement Guidelines
- ENERGY STAR
- Environmentally Preferable Purchasing Program Final Guidance
- GreenScapes program
- Heat Island Initiative
- Indoor Air Quality Building Education and Assessment Model (I-BEAM)
- National Environmental Performance Track
- Pollution Prevention (P2)
- Product Stewardship Program
- Significant New Alternatives Policy (SNAP) Program

I. Federal Trade Commission:
- Guide for the Use of Environmental Marketing Claims

J. Forest Stewardship Council:
- Chain-Of-Custody
- Forest Management

K. Green Building Initiative (GBI):

- Green Globes - US

L. Green Seal:
- GC-03 Anti-Corrosive Paints
- GC-12 Occupancy Sensors
- GC-13 Split-Ductless Air-Source Heat Pumps
- GS-05 Compact Fluorescent Lamps
- GS-11 Paints
- GS-13 Windows
- GS-14 Window Films
- GS-31 Electric Chillers
- GS-32 Photovoltaic Modules
- GS-36 Commercial Adhesives
- GS-37 Industrial & Institutional Cleaners

M. International Iron and Steel Institute:
- CO2 Breakthrough Program

N. International Organization of Standardization:
- Guide 64; Guide for Inclusion of Environmental Aspects in Product Standards
- 9660 Information processing -- Volume and file structure of CD-ROM for information interchange
- 14001 Environmental management systems – Specification with guidance for use
- 14004 Environmental Management Systems – General Guidelines on Principles, Systems and Supporting Techniques
- 14020 Environmental labels and declarations – General principles
- 14024 Environmental labels and declarations – Type I environmental labelling - Principles and procedures
- 14040 Environmental management – Life cycle assessment – Principles and framework

O. National Association of Home Builders:
- Advanced Framing Techniques: Optimum Value Engineering

P. National Institute of Building Sciences:
- MOIST program for transfer of heat and moisture
- Whole Building Design Guide

Q. National Institute of Standards and Technology:
- BEES (Building for Environmental and Economic Sustainability) Lifecycle Decision Support Tool

R. Sheet Metal and Air Conditioning Contractors' National Association (SMACNA):
- IAQ Guidelines for Occupied Buildings Under Construction

S. Southcoast Air Quality Management District:
- 1168 Adhesive And Sealant Applications

T. US Composting Council:

- Seal of Testing Assurance Program

U. US Department of Agriculture:
- Biobased Products – Definitions and Descriptions

V. US Green Building Council:
- LEED™ 2009 Green Building Rating System

PART 2 - PRODUCTS (Not Used)

PART 3 - EXECUTION (Not Used)

END OF SECTION 01 42 00

SECTION 01 50 00 - TEMPORARY FACILITIES AND CONTROLS

PART 1 - GENERAL

1.1 SUMMARY

A. Section includes requirements for temporary utilities, support facilities, and security and protection facilities.

1.2 DEFINITIONS

A. Permanent Enclosure: As determined by Contracting Officer (CO), permanent or temporary roofing is complete, insulated, and weathertight; exterior walls are insulated and weathertight; and openings are closed with permanent construction or substantial temporary closures.

1.3 USE CHARGES

A. General: Cost or use charges for temporary facilities shall be included in Contract Sum as required.

B. Water Service: Potable and Nonpotable Water for construction from existing water system is not available for use

C. Electric Power Service: Electric power from existing system is not available for use

1.4 QUALITY ASSURANCE

A. Electric Service: Comply with National Electrical Contractors Association (NECA), National Electrical Manufacturers Association (NEMA), and Underwriter Laboratories (UL) standards and regulations for temporary electric service. Install service to comply with National Fire Protection Association (NFPA) 70.

B. Environmental Protection: Provide environmental protection as required by agency(ies) with jurisdiction and as indicated in Contract Documents. Coordinate with requirements of the following:

1. Regulatory Requirements
2. Noise and Acoustics Management
3. Environmental Management
4. Construction Waste Management

C. Accessible Temporary Egress: Comply with applicable provisions in the United States (U.S.) Architectural & Transportation Barriers Compliance Board's Architectural Barriers Act Accessibility Standard (ABAAS) Accessibility Guidelines.

1.5 PROJECT CONDITIONS

A. Temporary Use of Permanent Facilities: Installer of each permanent service shall assume responsibility for operation, maintenance, and protection of each permanent service during its use as a construction facility before NPS acceptance, regardless of previously assigned responsibilities.

PART 2 - PRODUCTS

2.1 MATERIALS

A. Temporary materials may be new or used, but must be adequate in capacity for required usage, must not create unsafe conditions, and must not violate requirements of applicable codes and standards.

B. Pavement: Comply with Division 32 Section "Concrete Paving."

C. Portable Chain-Link Fencing: Minimum 2 inch (50 millimeters), 9-gage, galvanized steel, chain-link fabric fencing; minimum 6 feet (1.8 millimeters) high with galvanized steel pipe posts; minimum 2-3/8 inch (60 millimeters) OD line posts and 2-7/8 inch (73 millimeters) OD corner and pull posts, with 1-5/8 inch (42 millimeters) OD top and bottom rails. Provide concrete or galvanized steel bases for supporting posts.

D. Safety Barrier Fence: Orange plastic fence, minimum height, 4 feet.

E. Barrier Tape: Yellow tape Imprinted with "CAUTION: CONSTRUCTION AREA," manufactured by Reef Industries, Inc., Houston, Texas, or approved equal.

F. Dust-Control Adhesive-Surface Walk-off Mats: Provide mats minimum 36 by 60 inches (914 by 1624 millimeters).

2.2 TEMPORARY FACILITIES

A. Field Offices, General: Prefabricated or mobile units with serviceable finishes, temperature controls, and foundations adequate for normal loading.

B. Contracting Officers Field Office: Not required for this project.

C. Storage and Fabrication Sheds: Temporary weather tight sheds or other covered facilities for storage of materials subject to weather damage. Number and size of structures shall be subject to Contracting Officer's approval.

D. Toilets: Sufficiently lighted and ventilated toilet facilities in weatherproof, sight proof, handicap accessible, sturdy enclosures with privacy locks.

1. Provide separate toilet facilities for men and women.

2.3 EQUIPMENT

A. Fire Extinguishers: Portable, UL rated; with class and extinguishing agent as required by locations and classes of fire exposures.

B. Heating, Ventilation, and Air Conditioning (HVAC) Equipment: Unless Contracting Officer authorizes use of permanent HVAC system, provide vented, self-contained, liquid-propane-gas or fuel-oil heaters with individual space thermostatic control.

1. Use of gasoline-burning space heaters, open-flame heaters, or salamander-type heating units is prohibited.
2. Heating Units: Listed and labeled for type of fuel being consumed, by a testing agency acceptable to agency(ies) with jurisdiction, and marked for intended use.

C. Direct Digital Control (DDC) Internet Connection: Furnish, install and maintain a high-speed connection (Digital Subscriber Line (DSL) or similar) between the project's DDC system and the internet through a Contractor furnished internet service provider. Contractor is responsible for maintenance of this connection and costs associated with internet service provider through warranty period of this contract. Upon completion of warranty period, service shall be transferable to the Government at which time future costs for connection will no longer be the responsibility of Contractor.

D. Contracting Officers Field Office: Not required for this project.

PART 3 - EXECUTION

3.1 INSTALLATION, GENERAL

A. Locate facilities where they will serve Project adequately and result in minimum interference with performance of the Work. Relocate and modify facilities as required by progress of the Work.

1. Locate facilities to limit site disturbance and as directed by the Contracting Officer.

B. Provide each facility ready for use when needed to avoid delay. Do not remove until facilities are no longer needed or are replaced by authorized use of completed permanent facilities.

3.2 TEMPORARY UTILITY INSTALLATION

A. General: Install temporary service or connect to existing service.

1. Arrange with utility company, NPS, and existing users for time when service can be interrupted, if necessary, to make connections for temporary services. Acquire necessary permits.

B. Storm Sewers and Drainage: Provide temporary utilities to remove effluent lawfully.

C. Non-potable water for construction is not available within the park boundaries. Contractor shall furnish non-potable water from a source outside park boundary.

D. Potable water is not available on site. Furnish cool, potable water for construction personnel in locations convenient to work stations.

E. Sanitary Facilities: Provide temporary toilets, and wash facilities for use by construction personnel.

1. Place in approved locations secluded from public observation and convenient to work stations. Relocate as work progress requires.
2. Maintain and clean toilet facilities at least weekly.
3. Completely remove sanitary facilities on completion of work.
4. Toilets: Use of existing toilet facilities will be permitted, as long as facilities are cleaned and maintained in a condition acceptable to NPS. At Substantial Completion, restore facilities to condition existing before initial use.

F. Heating and Cooling: Provide temporary heating and cooling required by construction activities for curing or drying of completed installations or for protecting installed construction from adverse effects of low temperatures or high humidity. Select equipment that will not have a harmful effect on completed installations or elements being installed.

G. Ventilation and Humidity Control: Provide temporary ventilation required by construction activities for curing or drying of completed installations or for protecting installed construction from adverse effects of high humidity. Select equipment that will not have a harmful effect on completed installations or elements being installed. Coordinate ventilation requirements to produce ambient condition required and minimize energy consumption.

H. Electric Power Service: Provide electric power service and distribution system of sufficient size, capacity, and power characteristics required for construction operations.

1. Install electric power service overhead, unless otherwise indicated.

I. Lighting: Provide temporary lighting with local switching that provides adequate illumination for construction operations, observations, inspections, and traffic conditions.

1. Install and operate temporary lighting that fulfills security and protection requirements without operating entire system.

J. Telephone Service: No telephone service is available on site for Contractor's use. Make arrangements with Telephone Company and pay costs.

3.3 SUPPORT FACILITIES INSTALLATION

A. General: Comply with the following:

1. Provide incombustible construction for offices, shops, and sheds located within construction area or within 50 feet of building lines. Comply with NFPA 241.
2. Maintain support facilities until near Substantial Completion. Remove structures, equipment, and furnishings, and terminate services after punch list is 100 percent completed or when directed by Contracting Officer. Personnel remaining after Substantial

Completion will be permitted to use permanent facilities, under conditions acceptable to Contracting Officer.

B. Contracting Officers Field Office: Not required for this project.

C. Temporary Roads and Paved Areas: Construct and maintain temporary roads and paved areas adequate for construction operations. Locate temporary roads and paved areas within construction limits indicated on Drawings.

1. Provide dust-control treatment that is nonpolluting and non-tracking. Reapply treatment as required to minimize dust.

D. Traffic Controls: Erect and maintain barricades, lights, danger signals, and warning signs in accordance with Manual on Uniform Traffic Control Devices (MUTCD), Part IV, latest edition.

1. Protect existing site improvements to remain including curbs, pavement, and utilities.
2. Maintain access for fire-fighting equipment and access to fire hydrants.
3. Illuminate barricades and obstructions at night; keep safety lights burning from sunset to sunrise.
4. Adequately barricade and post open cuts in or adjacent to thoroughfares.
5. Protect pedestrian traffic by guardrails or fences.
6. When pedestrian traffic is detoured onto a roadway, provide temporary walkways with protection as required at ends and overhead. For walkways, use lumber running parallel to direction of traffic movement and provide ramps at changes of elevation.
7. Cover pipes, hoses, and power lines crossing sidewalks and walkways with troughs using beveled edge boards.
8. Install Barrier Tape where directed by Contracting Officer. Keep a minimum of two rolls on site.

E. Parking: Use designated areas of existing shown on drawings parking areas for construction personnel.

F. Dewatering Facilities and Drains: Comply with requirements of the agency(ies) with jurisdiction. Maintain Project site, excavations, and construction free of water.

1. Dispose of rainwater in lawful manner that will not result in flooding Project or adjoining properties nor endanger permanent Work or temporary facilities.
2. Remove snow and ice as required to minimize accumulations.

G. Project Identification and Temporary Signs: Provide Project identification and other signs. Fence, barricade, or otherwise block off the immediate work area to prevent unauthorized entry.

1. Provide temporary, directional signs for construction personnel and visitors.
2. Maintain and touchup signs so they are legible at all times.
3. Erect and maintain sufficient detour signs at road closures and along detour routes.

H. Waste Disposal Facilities: Provide waste-collection containers in sizes adequate to handle waste from construction operations. Comply with requirements of agency(ies) with jurisdiction.

3.4 SECURITY AND PROTECTION FACILITIES INSTALLATION

A. Environmental Protection: Provide protection, operate temporary facilities, and conduct construction in ways and by methods that comply with environmental regulations and minimize possible air, waterway, and subsoil contamination or pollution or other undesirable effects.

B. Cleaning of Equipment: Contractor shall ensure prior to moving on to Project Area, equipment, is free of soil, seeds, vegetative matter, or other debris that could contain or hold seeds. Ensure equipment has been pressure washed and is free of exotic species. Equipment shall be considered free of soil, seeds, and other debris when visual inspection does not disclose such material. Disassembly of equipment components or specialized inspection tools are not required.

C. Temporary Erosion and Sedimentation Control: Refer to Section 01 57 23 "Temporary Storm Water Pollution Prevention".

D. Tree and Plant Protection: Refer to Section 01 11 00 "Summary of Work".

E. Pest Control: Follow NPS requirements to minimize attraction and harboring of rodents, roaches, and other pests and perform extermination and control procedures at regular intervals so Project will be free of pests and residues at Substantial Completion. Perform control operations lawfully, using environmentally safe materials.

F. Site Enclosure Fence: Before construction operations begin, furnish and install temporary chain link fencing to prevent people and animals from easily entering site except by entrance gates.

1. Extent of Fence: As required to enclose entire Project site or portion determined sufficient to accommodate construction operations.
2. Locate vehicular gates to avoid interference with traffic on public thoroughfares.
3. Locate pedestrian entrance gates as required to provide controlled personnel entry.
4. Maintain security by limiting number of keys and restricting distribution to authorized personnel. Provide Contracting Officer with one set of keys.

G. Security Enclosure and Lockup: Install substantial temporary enclosure around partially completed areas of construction. Provide lockable entrances to prevent unauthorized entrance, vandalism, theft, and similar violations of security.

H. Barricades, Warning Signs, and Lights: Comply with requirements of Manual on Uniform Traffic Control Devices (MUTCD), part IV, 2003 edition for erecting structurally adequate barricades, including warning signs and lighting.

I. Temporary Enclosures: Provide temporary enclosures for protection of construction, in progress and completed, from exposure, foul weather, other construction operations, and similar activities. Provide temporary weathertight enclosure for building exterior.

1. Where heating or cooling is needed and permanent enclosure is not complete, insulate temporary enclosures.

3.5 OPERATION, TERMINATION, AND REMOVAL

A. Supervision: Enforce strict discipline in use of temporary facilities. Minimize waste and abuse, limit availability of temporary facilities to essential and intended uses.

B. Maintenance: Maintain facilities in good operating condition until removal.

1. Maintain operation of temporary enclosures, heating, cooling, humidity control, ventilation, and similar facilities on 24-hour basis where required to achieve indicated results and avoid possibility of damage.

C. Temporary Facility Changeover: Do not change over from using temporary security and protection facilities to permanent facilities until Substantial Completion.

D. Termination and Removal: Remove each temporary facility when need for its service has ended, when it has been replaced by authorized use of a permanent facility, or no later than Substantial Completion. Complete or, if necessary, restore permanent construction that may have been delayed because of interference with temporary facility. Repair damaged Work, clean exposed surfaces, and replace construction that cannot be satisfactorily repaired.

1. Materials and facilities that constitute temporary facilities are property of Contractor. NPS reserves right to take possession of Project identification signs.
2. At Substantial Completion, clean and renovate permanent facilities used during construction period.

END OF SECTION 01 50 00

SECTION 01 57 19.12 – NOISE AND ACCOUSTICS MANAGEMENT

PART 1 - GENERAL

1.1 SUMMARY

A. Section includes:

1. Special requirements for noise and acoustics management during deconstruction and construction operations.

1.2 DEFINITIONS

A. Ambient noise level: The total noise associated with a given environment, being usually a composite of normal or existing sounds from all sources near and far, excluding the noise source at issue.

B. Daytime: The hours from 7 A.M. to 5 P.M. on weekdays and 9 A.M. to 5 P.M. on weekends and holidays.

C. Nighttime: All non-daytime hours.

D. Property line: The real or imaginary line along the ground surface and its vertical extension, which separates real property owned or controlled by one person from contiguous real property owned or controlled by another person or from any public right-of-way or from any public space.

E. Receiving noise area: Any real property where people live or work and where noise is heard, excluding the project or source area.

PART 2 - PRODUCTS (Not Used)

PART 3 - EXECUTION

3.1 NOISE MANGEMENT

A. Noise Control: Perform deconstruction and construction operations to minimize noise. Perform noise-producing work in less sensitive hours of the day or week as directed by the Contracting Officer CO).

B. Repetitive and/or intermittent, high-level noise: Permitted only during Daytime.

1. Do not exceed the following dB(A) limitations at 50 feet:

Sound Level in dB(A)	Time Duration of Impact Noise
70	More than 12 minutes in any hour
80	More than 3 minutes in any hour

2. Maximum permissible construction equipment noise levels at 50 feet:

EARTHMOVING	dB(A)	MATERIALS HANDLING	dB(A)
Front Loaders	75	Concrete Mixers	75
Backhoes	75	Concrete Pumps	75
Dozers	75	Cranes	75
Tractors	75	Derricks Impact	75
Scrapers	80	Pile Drivers	95
Graders	75	Jack Hammers	75
Trucks	75	Rock Drills	80
Pavers, Stationary	80	Pneumatic Tools	80
Pumps	75	Saws	75
Generators	75	Vibrators	75
Compressors	75		

C. Ambient Noise:

1. Maximum noise levels (dB (decibel)) for receiving noise area at property line shall be as follows:

a. Residential receiving area
Daytime: 65 dB
Nighttime: 45 dB

b. Commercial/Industrial receiving area
Daytime: 67 dB
Nighttime: 65 dB

c. In the event the existing local ambient noise level exceeds the maximum allowable receiving noise level (dB), the receiving noise level maximum for construction operations shall be adjusted as follows:

d. Residential receiving area: Maximum 3 additional dB above the local ambient as measured at property line.

e. Commercial/Industrial receiving area: Maximum 5 additional dB above the local ambient as measured at the property line.

3.2 FIELD QUALITY CONTROL

A. Monitor noise produced from construction operations in accordance with ASTM E1780.

END OF SECTION 01 57 19.12

SECTION 01 57 23 - UNDER-AN-ACRE POLLUTION PREVENTION

PART 1 - GENERAL

1.1 SUMMARY

A. Federal Regulations for controlling discharges of pollutants (including chemicals, erodible material, and trash) from municipal separate storm sewer systems, construction sites, and industrial activities, were brought under the National Pollution Discharge Elimination System (NPDES) permit process by amendments to the Clean Water Act (CWA), and promulgation of federal stormwater regulations issued by the United States Environmental Protection Agency (USEPA). The USEPA uses amount of ground disturbance as a measure of a project potential to generate pollution from erosion. NPDES Phase I regulates discharges from construction sites that disturb 5 acres or more. NPDES Phase II regulations expand existing General Permit requirements under Phase I to include/regulated discharges from construction sites that disturb land equal to or greater than one (1) acre and less than 5 acres, known as Small Construction Activity. Construction disturbances 1 acre and above typically require a formal NPDES permit and a formal Stormwater Pollution Prevention Plan (SWPPP) must be submitted to Agency(ies) with Jurisdiction for review and approval.

B. National Park Service (NPS) Standards and Guidelines require water quality be protected to ensure compliance with Organic Act. Contractor shall prepare an Under-An-Acre Pollution Prevention Plan (UPPP) for each project resulting in less than 1 acre of soil disturbance or not otherwise subject to requirements of NPDES program. (UPPP Guideline)

C. The work of this section consists of implementing measures to prevent discharges of pollutants, including temporary storm water pollution during construction activities, either through compliance with NPDES permit program, or in conformance with NPS guidance for UPPPs.

1.2 DEFINITIONS

A. Definitions pertaining to sustainable development: As defined in ASTM E2114.

B. Environmental Pollution and Damage: The presence of chemical, physical, or biological elements or agents which adversely affect human health or welfare; unfavorably alter ecological balances; or degrade utility of the environment for aesthetic, cultural, or historical purposes.

C. National Pollution Discharge Elimination System (NPDES) Phase I: Regulates discharges from construction sites that disturb 5 acres or more.

D. NPDES Phase II: Regulations expand existing General Permit requirements under Phase I to include and regulate discharges from construction sites that disturb land equal to or greater than one (1) acre and less than 5 acres, known as Small Construction Activity.

E. UPPP: Developed and implemented pollution prevention plan (including stormwater management measures, if needed) to protect environment from pollutants on construction projects with less than one acre of disturbance in conformance with NPS guidelines.

1.3 SUBMITTALS

A. After contract award and before pre-construction conference, prepare and submit:

1. A UPPP in conformance with NPS guidelines and adherence to applicable construction storm water management practices.

B. Inspection Schedule: Submit schedule for inspection and monitoring of pollution prevention measures.

C. Erosion Control Products: Submit manufacturer's product information and installation recommendations for silt fence, filter fabric, erosion control blanket, straw bales, and other materials proposed for use on this project.

1.4 QUALITY ASSURANCE

A. Contractor shall prepare and submit a plan to Contracting Officer (CO) for review and concurrence.

B. Orientation Meeting: Contractor shall arrange and conduct an Erosion and Sediment Control meeting/briefing to inform parties, scheduled to be on-site during project, of measures to be implemented for proper erosion and sediment control (may be included as part of Pre-Construction Meeting).

1. Installation of silt fences, storm drain protection, and other forms of erosion and sediment control shall not begin until after this meeting has occurred.

C. Orientation Meeting: Contractor shall be responsible for arranging and conducting Pollution Prevention meeting/briefing to inform parties scheduled to be on-site during project of measures to be implemented for proper pollution prevention and control (may be included as part of Pre-Construction Meeting).

1. Installation of silt fences, storm drain protection, and other forms of pollution prevention controls shall not begin until after this meeting has occurred.

D. Pollution Prevention Manager: Contractor shall designate Pollution Prevention Manager who will be responsible for implementation, inspection, maintenance, and amendments to approved plan.

1. Pollution Prevention Manager shall be familiar with UPPP procedures and Best Management Practices (BMPs) and shall ensure emergency procedures and plan are updated as needed and available for inspection.

2. When changes in approved plan are required, Pollution Prevention Manager shall prepare and certify an amendment and submit to Contracting Officer for review and concurrence.

E. Pollution Prevention and Erosion Control Manager: Contractor shall designate Pollution Prevention and Erosion Control Manager responsible for implementation, inspection, maintenance, and amendments to approved plan.

1. Pollution Prevention and Erosion Control Manager shall be familiar with temporary storm water pollution prevention procedures and Best Management Practices and ensure emergency procedures and plan are updated as needed and available for inspection.

2. When changes in approved plan are required, Pollution Prevention and Erosion Control Manager shall prepare and certify an amendment and submit to Contracting Officer for review and concurrence.

PART 2 - PRODUCTS

2.1 UNDER-AN-ACRE POLLUTION PREVENTION PLAN

A. Provide UPPP which conforms to NPS requirements (utilize UPPP template) and include:

1. Responsible Parties
2. General Information: Project Scope, Project Details, Site Information, and Spill Prevention
3. Standards and Constraints
4. Project Scheduling
5. Known Data on Soil and Fill
6. Activities with Potential to Generate Sediment
7. Activities and Materials with Potential to Pollute Storm Water
8. Management and Reporting BMPs
9. Waste Management BMPs
10. Non-Storm Water Pollution Control BMPs
11. Soil Stabilization BMPs
12. Sediment Control BMPs
13. Other Pollution Control BMPs
14. References
15. Preparer's Certification
16. Appendices: Contact Information, Pollution Prevention Control Map or Sheet(s), Standard Installation Specifications for each BMP, and Blank forms.

PART 3 - EXECUTION

3.1 ENVIRONMENTAL PROTECTION

A. Protection of Natural Resources: Comply with applicable regulations and these specifications. Preserve natural resources within project boundaries and outside limits of work performed under this Contract in their existing condition or restore to an equivalent or improved condition as approved by Contracting Officer.

B. Construction Zone: Arrange construction activities to minimize pollution (i.e., erosion, trash, etc.) to maximum practical extent.

1. Clearing, excavation, and grading shall be limited to those areas of project site necessary for construction. Minimize area exposed and unprotected.
2. Clearly mark and delineate limits of work activities.

3. Equipment shall not be allowed to operate outside limits of work or to disturb existing vegetation.
4. Excavation and grading shall be completed during dry season to maximum extent possible.
5. Material shall be stored away from locations where water is present to greatest extent practicable.

3.2 REGULATORY REQUIREMENTS

A. Permits: Contractor shall obtain required NPDES permits resulting in no impacts to scheduled work. Contractor shall account for possibility of significant lead time in scheduling and executing work.

1. Implement requirements of NPDES permit for erosion control due to storm water runoff during construction.
2. Implement good housekeeping practices, inspections and record keeping.
3. Prior to construction, Contractor and Subcontractors shall sign certifications (included in the plan) that they understand requirements of NPDES permit.
4. Subcontractors shall comply with requirements of NPDES under supervision of Contractor.
5. Accepted plan shall comply with terms and conditions of EPA permit.

B. Notice of Intent (NOI): Contractor shall file a Notice of Intent and formal SWPPP as required to the Agency(ies) with Jurisdiction.

C. Notice of Termination (NOT): After Substantial Completion of Work, file a Notice of Termination (NOT) with the Agency(ies) with Jurisdiction.

D. Contracting Officer Notification: Contractor shall notify Contracting Officer in writing and by telephone of these events:

1. Erosion and sediment control meeting/briefing.
2. Following installation of required sediment control structures.
3. Prior to removal of or modification to sediment control structures.
4. Prior to removal of sediment control structures.

3.3 TEMPORARY STORM WATER POLLUTION PREVENTION PLAN

A. Review and Acceptance: The Contractor and the CO will jointly review the draft Plan and agree to any needed revisions. The Contractor shall incorporate all revisions, sign, and submit the final Plan to the CO. The final Plan will be the document enforced on the project.

1. The accepted Plan will describe and ensure implementation of the practices which will be used to reduce the pollutants in storm water discharges.
2. The Contractor shall maintain a current copy of the Plan and all associated records and forms at the jobsite throughout the duration of the project.
3. The Plan shall be available at all times for public inspection and for the inspection and use of the CO.
4. Approval of Contractor's Plan will not relieve the Contractor of responsibility for compliance with applicable environmental regulations.

B. Implementation: Implement the Plan as required throughout the construction period and maintain all erosion control elements in proper working order.

1. Do not perform clearing and grubbing or earthwork until the Plan has been implemented.

C. The SWPPP (including inspection forms) and all data used to complete the NOI shall be provided to the CO after Substantial Completion of the project.

3.4 UNDER-AN_ACRE POLLUTION PREVENTION PLAN

A. Review and Acceptance: Contractor and Contracting Officer will jointly review draft Plan and agree to needed revisions. Contractor shall incorporate revisions, sign, and submit final Plan to Contracting Officer. Final Plan will be the document enforced on the project.

1. Accepted Plan will describe and ensure implementation of practices to be used to reduce pollutants in storm water discharges.
2. Contractor shall maintain current copy of Plan and associated records and forms at jobsite throughout duration of project.
3. Plan shall be available for public inspection and inspection and use of Contracting Officer.
4. Approval of Contractor's Plan will not relieve Contractor of responsibility for compliance with applicable environmental regulations.

B. Implementation: Implement Plan as required throughout construction period and maintain erosion control elements in proper working order.

1. Do not perform clearing and grubbing or earthwork until Plan has been implemented.

C. SWPPP (including inspection forms) and data used to complete the NOI shall be provided to Contracting Officer after Substantial Completion of project.

3.5 SITE INSPECTIONS AND PLAN REVISIONS

A. Inspections: Contractor and Contracting Officer will perform a weekly inspection onsite.

1. Inspection shall include disturbed areas not completely stabilized, areas used for storage of materials, locations where vehicles enter or exit site, and other erosion and sediment controls included in the Plan.
2. Inspections shall be documented.
3. Inspection forms shall be retained onsite in Plan notebook throughout construction period.

B. Plan Revisions: It may be necessary to revise Plan during construction to make necessary improvements, revisions, or to respond to unforeseen conditions noted during construction or site inspections.

1. Plan shall specify mechanism whereby revisions may be proposed by Contractor or Contracting Officer.
2. Contractor and Contracting Officer will jointly review each revision to Plan before changes incorporated and implemented. Contractor will then provide revised copy of Plan to Contracting Officer.

3. Accepted modifications will be implemented within 7 calendar days following date of inspection when deficiencies or necessary corrections are first noted.

C. Negligence: Provide additional temporary erosion and pollution controls made necessary by Contractor's errors or negligence at no additional cost to Government.

3.6 HOUSEKEEPING AND SITE MANAGEMENT

A. Store materials onsite in conformance to Federal, state, local, and manufacturer's regulations and specifications. Use Best Management Practices to minimize risk of materials coming into contact with environmental conditions (i.e. water and wind) that could disperse them.

B. Manage solid waste in conformance to Federal, state, and local regulations. Best Management Practices should be used to minimize risk of materials coming into contact with environmental conditions (i.e. water and wind) that could disperse them.

C. Include a spill prevention and control plan with provisions placed in SWPPP.

D. Manage hazardous waste (including contaminated soil) in conformance to Federal, state, local and NPS regulations and guidelines.

3.7 EROSION CONTROL MEASURES

A. Erosion control measures shall consist of Best Management Practices for storm water discharges, including silt fencing, barrier protectors, straw bales, temporary soil retention blankets, excelsior drainage filters, sediment traps and berms.

B. Berms and excelsior drainage filters shall be used to form sediment traps and control run-on and run-off into other areas, including creeks, streams, marshes, access roads, well areas, and staging areas.

C. Erosion control measures shall be used to contain only direct precipitation in construction zone. Contained water shall be allowed to percolate into ground or drain slowly through drainage filter sediment traps.

D. Earthen sediment traps or holding ponds shall not be used unless accepted by Contracting Officer.

E. Reduce runoff velocity and direct surface runoff around and away from fuel containment, storage, and borrow areas.

F. Divert surface runoff around and away from cut and fill slopes.

G. Place drainage filters around catch basins to create sediment traps to control run-off from construction area.

H. Excess water used for dust control shall be contained within demolition areas by erosion control measures.

I. Contractor shall prevent deposition of materials onto paved areas. Contractor shall inspect paved areas for deposited materials weekly and remove materials immediately.

J. Furnish, install, maintain, and operate necessary control measures and other equipment necessary to prevent erosion as described in approved SWPPP.

K. Furnish, install, maintain, and operate necessary control measures and other equipment necessary to prevent erosion as described in approved UPPP.

L. Before work begins, sufficient equipment shall be available on site to assure operation and adequacy of erosion control system can be maintained.

3.8 MAINTENANCE OF TEMPORARY FACILITIES

A. Ensure erosion and sediment control structures remain effective throughout excavation and grading operations. Relocate structures as necessary.

B. Inspect control structures after each significant rainfall. Promptly repair breaches which occur.

C. Contractor shall remove entrapped sediment from behind excelsior drainage filter after each storm.

3.9 REPORTING

A. If a discharge occurs or if project receives written notice or order from regulatory agency, Contractor shall immediately notify Contracting Officer and shall file written report to Agency(ies) with Jurisdiction within 7 days of discharge event, notice, or order. Corrective measures shall be implemented immediately following discharge, notice, or order. The report to the Agency(ies) with Jurisdiction shall contain:

1. Date, time, location, nature of operation, and type of discharge, including cause or nature of notice or order.
2. Best Management Practices deployed before discharge event, or prior to receiving notice or order.
3. Date of deployment and type of Best Management Practices deployed after discharge event, or after receiving notice or order, including additional Best Management Practices installed or planned to reduce or prevent re-occurrence.
4. An implementation and maintenance schedule for affected Best Management Practices.

3.10 SEDIMENT DISPOSAL

A. Sediment excavated from temporary sediment control structures shall be disposed on site with general fill, or with topsoil. Sediment shall be allowed to dry out as required before reuse.

B. Contractor shall place sediment removed from traps and other structures where it will not enter a storm drain or watercourse and where it will not immediately reenter the basin.

3.11 REMOVAL OF TEMPORARY POLLUTION CONTROL MEASURES

A. Temporary control measures shall be removed with permission of Contracting Officer within 20 working days after final acceptance of project, and/or once grading is complete and slopes have stabilized.

END OF SECTION 01 57 23

SECTION 01 67 00 - PRODUCT REQUIREMENTS

PART 1 - GENERAL

1.1 SUMMARY

A. Section includes administrative and procedural requirements for selection of products for use in Project; product delivery, storage, and handling; manufacturers' standard warranties on products; special warranties; and environmental requirements.

1.2 DEFINITIONS

A. Products: Items purchased for incorporating into Work, whether purchased for Project or taken from previously purchased stock. The term "product" includes "material," "equipment," "system," and terms of similar intent.

1. Named Products: Items identified by manufacturer's product name, including make or model number or other designation shown or listed in manufacturer's published product literature, current as of date of Contract Documents.
2. New Products: Items that have not previously been incorporated into another project or facility, except that products consisting of recycled-content materials are allowed, unless explicitly stated otherwise. Products salvaged or recycled from other projects are not considered new products.
3. Comparable Product: Product demonstrated and approved through submittal process, or where indicated as a product substitution, to have indicated qualities related to type, function, dimension, in-service performance, physical properties, appearance, and other characteristics that equal or exceed those of specified product.

B. Definitions pertaining to sustainable development: As defined in ASTM E2114.

C. Biobased Materials: As defined in Farm Security and Rural Investment Act, for purposes of Federal procurement of biobased products, "biobased" means a "commercial or industrial product (other than food or feed) composed, in whole or in significant part, of biological products or renewable domestic agricultural materials (including plant, animal, and marine materials) or forestry materials." Biobased materials also include fuels, chemicals, building materials, or electric power or heat produced from biomass as defined by The Biomass Research and Development Act of 2000.

1. Biobased content: Amount of biobased carbon in material or product as a percentage of weight (mass) of total organic carbon in material or product.

D. Chain-of-Custody: Process whereby a product or material is maintained under physical possession or control during its entire life cycle.

E. Environmentally preferable products: Products and services with lesser or reduced effect on the environment in comparison to conventional products and services. Refer to Environmental

Protection Agency's (EPA) Final Guidance on Environmentally Preferable Purchasing for more information.

F. Stewardship: Responsible use and management of resources in support of sustainability.

G. Sustainability: Maintenance of ecosystem components and functions for future generations.

1. Recycled Content Materials: Products containing pre-consumer or post-consumer materials as all or part of their feedstock. Recycled content claim shall be consistent with International Organization for Standardization (ISO) 140001 Standard for the Use of Environmental Marketing Claims.
2. Rapidly Renewable Material: Material made from plants typically harvested within a ten-year cycle.
3. Regional Materials: Materials manufactured and extracted, harvested, or recovered within a radius of 500 miles from Project location.

1.3 SUBMITTALS

A. Record Submittals as specified in – Sustainable Design Close-Out Documentation, submit:

1. Affirmative Procurement Reporting Form. Submit on form in Appendix A of this Section, or similar form as approved by Contracting Officer (CO).
2. Submit environmental data in accordance with Table 1 of ASTM E2129 for these products:

   a. Finish Carpentry
   b. Plastic Fabrications
   c. Joint Sealers
   d. Paints & Coatings

3. Material Safety Data Sheets (MSDS): For each product required by OSHA to have a MSDS, submit an MSDS. MSDS shall be prepared within the previous five years. Include information for MSDS Sections 1 to 16 in accordance with ANSI Z400.1 and as follows:

   a. Section 1: Chemical Product and Company Identification
   b. Section 2: Composition/Information on Ingredients
   c. Section 3: Hazards Identification
   d. Section 4: First Aid Measures
   e. Section 5: Fire Fighting Measures
   f. Section 6: Accidental Release Measures
   g. Section 7: Handling and Storage
   h. Section 8: Exposure Controls/Person Protection
   i. Section 9: Physical and Chemical Properties
   j. Section 10: Stability and Reactivity Data
   k. Section 11: Toxicological Information. Include data used to determine the hazards cited in Section 3. Identify acute data, carcinogenicity, reproductive effects, and target organ effects. Provide written description of the process used in evaluating chemical hazards relative to preparation of the MSDS.
   l. Section 12: Ecological Information. Include data regarding environmental impacts during raw materials acquisition, manufacture, and use. Include data regarding environmental impacts in event of accidental release.

m. Section 13: Disposal Considerations. Include data regarding proper disposal of the chemical. Include information regarding recycling and reuse. Indicate whether or not product is considered to be "hazardous waste" according to United States EPA Hazardous Waste Regulations 40 CFR 261 (Code of Federal Regulations).
n. Section 14: Transportation Information. Identify hazard class for shipping.
o. Section 15: Regulatory Information. Identify federal, state, and local regulations applicable to the material.
p. Section 16: Other Information. Include additional information relative to recycled content, biobased content, and other information regarding environmental and health impacts.

4. Chain of Custody: Submit chain-of-custody documentation for sustainable forestry for these products:

a. Rough Carpentry
b. Finish Carpentry
c. Furnishings & Accessories

1.4 QUALITY ASSURANCE

A. Compatibility of Options: If Contractor is given option of selecting between two or more products for use on Project, product selected shall be compatible with products previously selected, even if previously selected products were also options.

1.5 PRODUCT DELIVERY, STORAGE, AND HANDLING

A. Deliver, store, and handle products using means and methods that prevent damage, deterioration, and loss, including theft. Comply with manufacturer's written instructions.

B. Delivery and Handling:

1. Schedule delivery to minimize long-term storage at Project site and prevent overcrowding of construction spaces.
2. Coordinate delivery with installation time to ensure minimum holding time for items that are flammable, hazardous, easily damaged, or sensitive to deterioration, theft, and other losses.
3. Deliver products to Project site in undamaged condition; in manufacturer's original sealed container or other packaging system; complete with labels and instructions for handling, storing, unpacking, protecting, and installing.
4. Inspect products on delivery to ensure compliance with Contract Documents. Ensure products are undamaged and properly protected.
5. Obtain materials in biodegradable or recyclable/reusable packaging which uses minimum amount of packaging possible.

C. Storage:

1. Allow for inspection and measurement of quantity or counting of units.
2. Store materials in manner to not endanger Project structure.

3. Store products subject to damage by the elements, under cover in weather tight enclosure above ground, with ventilation adequate to prevent condensation.
4. Store cementitious products and materials on elevated platforms.
5. Store foam plastic from exposure to sunlight, except to extent necessary for period of installation and concealment.
6. Comply with product manufacturer's written instructions for temperature, humidity, ventilation, and weather-protection requirements for storage.
7. Protect stored products from damage and liquids from freezing.
8. Store loose granular materials in well-drained area on solid surfaces to prevent mixing with foreign matter.

1.6 PACKAGING

A. Where Contractor has option to provide one of listed products or equal, preference shall be given to products with minimal packaging and easily recyclable packaging as defined in ASTM D5834.

B. Maximize use of source reduction and recycling procedures outlined in ASTM D5834.

C. Provide minimum 45 percent post-consumer recycled content and minimum 100 percent recovered fiber content of industrial paperboard in accordance with EPA's Comprehensive Procurement Guidelines and ASTM D5663.

D. Provide minimum 15 percent post-consumer recycled content and minimum 100 percent recovered fiber content of carrier board in accordance with EPA's Comprehensive Procurement Guidelines and ASTM D5663.

E. Provide minimum 20percent post-consumer recycled content and minimum 40 percent recovered fiber content of brown papers (e.g., wrapping papers and bags) in accordance with EPA's Comprehensive Procurement Guidelines and ASTM D5663.

1.7 ENVIRONMENTALLY PREFERABLE PRODUCTS

A. Provide environmentally preferable products to greatest extent possible.

1. To greatest extent possible, provide products and materials with a lesser or reduced effect on the environment considering raw materials acquisition, production, manufacturing, packaging, distribution, reuse, operation, maintenance, and/or disposal of the product.
2. Eliminate use of ozone depleting compounds during and after construction where alternative environmentally preferable products are available, consistent with either Montreal Protocol and Title VI or Clean Air Act Amendments of 1990, or equivalent overall air quality benefits that take into account life cycle impacts.
3. Use products meeting or exceeding EPA's recycled content recommendations for EPA-designated products. Use materials with recycled content such that the sum of post-consumer recycled content plus one-half of the pre-consumer content constitutes at least 10% (based on cost) of total value of the materials in project.

1.8 PRODUCT WARRANTIES

A. Warranties specified in other Sections shall be in addition to, and run concurrent with, other warranties required by Contract Documents. Manufacturer's disclaimers and limitations on product warranties do not relieve Contractor of obligations under requirements of Contract Documents.

1. Manufacturer's Warranty: Preprinted written warranty published by individual manufacturer for product specifically endorsed by manufacturer to Owner.
2. Special Warranty: Written warranty required by or incorporated into Contract Documents, either to extend time limit provided by manufacturer's warranty or to provide more rights for Owner.

B. Special Warranties: Prepare written document containing appropriate terms and identification, ready for execution. Submit draft for approval before final execution.

1. Manufacturer's Standard Form: Modified to include Project-specific information and properly executed.
2. Specified Form: When specified forms are included with Specifications, prepare written document using appropriate form properly executed.
3. Refer to Divisions 2 through 49 Sections for specific content requirements and particular requirements for submitting special warranties.

C. Submittal Time: Comply with requirements in Section 01 77 00 "Closeout Procedures."

PART 2 - PRODUCTS

2.1 PRODUCT SELECTION PROCEDURES

A. General Product Requirements: Provide products to comply with Contract Documents, undamaged and, unless otherwise indicated, new at time of installation.

1. Provide products complete with accessories, trim, finish, fasteners, and other items needed for a complete installation and indicated use and effect.
2. Standard Products: If available, and unless custom products or nonstandard options are specified, provide standard products of types produced and used successfully in similar situations on other projects.
3. Government reserves right to limit selection to products with warranties not in conflict with requirements of Contract Documents.
4. Where products are accompanied by term "as selected," Contracting Officer will make selection.
5. Where products are accompanied by term "match sample," sample to be matched is Governments.
6. Descriptive, performance, and reference standard requirements in Specifications establish "salient characteristics" of products.

B. Product Selection Procedures:

1. Product: Where Specifications name single product and manufacturer, provide named product that complies with requirements or approved equal.
2. Manufacturer/Source: Where Specifications name single manufacturer or source, provide product by named manufacturer or source that complies with requirements or approved equal.
3. Products: Where Specifications include list of names of both products and manufacturers, provide one of the products listed that complies with requirements or approved equal.
4. Manufacturers: Where Specifications include list of manufacturers' names, provide a product by one of the manufacturers listed that complies with requirements or approved equal.
5. Available Products: Where Specifications include list of names of both products and manufacturers, provide one of the products listed, or an unnamed product, that complies with requirements. Comply with provisions in Part 2 "Comparable Products" Article for consideration of an unnamed product.
6. Available Manufacturers: Where Specifications include list of manufacturers, provide a product by one of the manufacturers listed, or an unnamed manufacturer, that complies with requirements. Comply with provisions in Part 2 "Comparable Products" Article for consideration of an unnamed product.
7. Product Options: Where Specifications indicate sizes, profiles, and dimensional requirements on Drawings are based on a specific product or system, provide specified product, system, or approved equal.
8. Basis-of-Design Product: Where Specifications name product and include a list of manufacturers, provide specified product or a comparable product by one of the other named manufacturers, or approved equal. Drawings and Specifications indicate sizes, profiles, dimensions, and other characteristics based on the product named.
9. Visual Matching Specification: Where Specifications require matching an established Sample, select product that complies with requirements and matches Architect's sample. Contracting Officers decision will be final on whether a proposed product matches.

    a. If no product available within specified category matches and complies with other specified requirements, comply with provisions in Part 2 "Product Substitutions" Article for proposal of product.

10. Visual Selection Specification: Where Specifications include phrase "as selected from manufacturer's colors, patterns, textures" or a similar phrase, select a product that complies with other specified requirements.

    a. Standard Range: Where Specifications include phrase "standard range of colors, patterns, textures" or similar phrase, Contracting Officer will select color, pattern, density, or texture from manufacturer's product line that does not include premium items.
    b. Full Range: Where Specifications include phrase "full range of colors, patterns, textures" or similar phrase, Contracting Officer will select color, pattern, density, or texture from manufacturer's product line that includes both standard and premium items.

2.2 COMPARABLE PRODUCTS

A. Conditions: Contracting Officer will consider Contractor's request for comparable product when the following conditions are satisfied. If following conditions are not satisfied, Contracting

Officer will return requests without action, except to record noncompliance with these requirements:

1. Evidence proposed product does not require revisions to Contract Documents, that it is consistent with Contract Documents and will produce indicated results and is compatible with other portions of Work.
2. Detailed comparison of significant qualities of proposed product with those named in Specifications. Significant qualities include attributes such as performance, weight, size, durability, visual effect, and specific features and requirements indicated.
3. Evidence proposed product provides specified warranty.
4. List of similar installations for completed projects with project names and addresses and names and addresses of architects and owners, if requested.
5. Samples, if requested.

PART 3 - EXECUTION

3.1 PROTECTION AFTER INSTALLATION

A. Provide adequate coverings as necessary to protect installed materials from damage resulting from natural elements, traffic, and subsequent construction. Remove when no longer needed.

END OF SECTION 01 67 00

AFFIRMATIVE PROCUREMENT REPORTING FORM
Recycled Content Materials & Biobased Content Materials

Project Name: _____ Project Number: _____

Contractor Name: _____ License Number: _____

Contractor Address: _____

Product	Total $ value provided	Total $ value with recycled content Pre-consumer	Total $ value with recycled content Post-consumer	Total $ value with biobased content	Exempted indicate 1,2,3,4	Comments
Hydraulic Mulch (paper based)						
Hydraulic Mulch (wood based)						
Compost						
Parking Stops (Concrete w/ fly ash, slag cement or low cement content)						
Parking Stops (Plastic/Rubber)						
Patio Blocks/Rubber						
Patio Blocks/Plastic						
Playground Surfaces						
Concrete with fly ash						
Concrete with slag cement						
Concrete with low cement content						
Plastic lumber						
Building Insulation						
Rock Wool						
Fiber glass						
Cellulose						
Perlite Comp Board						
Plastic Rigid Foam						
Glass Fiber Reinforced Foam						
Phenolic Rigid Foam						
Ceramic tile						
Resilient flooring						
Floor Tiles/Rubber						
Floor Tiles/Plastic						
Running Tracks						
Carpet (PET)						
Paint						

Reprocessed Latex Paint White & Light Colors						
Reprocessed Latex Dark Colors						
Consolidated Latex Paint						
Toilet/Shower partitions (plastic or steel)						
Other						

CERTIFICATION

I hereby certify the information provided herein is accurate and that the requisition/procurement of all materials listed on this form comply with current EPA standards for recycled/recovered materials content. The following exemptions may apply to the non-procurement of recycled/recovered content materials:

1. The product does not meet appropriate performance standards.
2. The product is not available within a reasonable time frame.
3. The product is not available competitively (from two or more sources).
4. The product is only available at an unreasonable price (compared with a comparable non-recycled content product.)

Signature: _____ Date: _____

END OF
AFFIRMATIVE PROCUREMENT REPORTING FORM
Recycled Content Materials & Biobased Content Materials

SECTION 01 73 40 - EXECUTION

PART 1 - GENERAL

1.1 SUMMARY

A. Section includes general procedural requirements governing execution of Work including:

1. Coordination with utility service providers
2. Construction layout
3. Field engineering and surveying
4. General installation of products
5. Progress cleaning
6. Starting and adjusting
7. Protection of installed construction
8. Correction of the Work

1.2 SUBMITTALS

A. Certificates: Submit certificate signed by land surveyor or professional engineer certifying location and elevation of improvements comply with requirements.

B. Landfill Receipts: Submit copy of receipts issued by landfill facility, licensed to accept hazardous materials, for hazardous waste disposal.

C. Certified Surveys: Submit two copies signed by land surveyor or professional engineer.

D. Quantity Surveys: Submit two copies showing quantities of work performed and actual construction completed in place.

1.3 QUALITY ASSURANCE

A. Land Surveyor Qualifications: A professional land surveyor or professional engineer who is legally qualified to practice in jurisdiction where Project is located and is experienced in providing land-surveying services of kind indicated.

PART 2 - PRODUCTS (Not Used)

PART 3 - EXECUTION

3.1 EXAMINATION

A. Existing Conditions: Existence and location of site improvements and other construction indicated as existing are not guaranteed.

1. Before beginning work, investigate and verify the existence and location of mechanical and electrical systems and other construction affecting the Work.

2. Before construction, verify the location and points of connection of utility services.

B. Existing Utilities: Existence and location of underground and other utilities and construction indicated as existing are not guaranteed. Before beginning sitework, investigate and verify existence and location of underground utilities and other construction affecting Work.

1. Before construction, verify location and invert elevation at points of connection of sanitary sewer, storm sewer, and water-service piping; and underground electrical services.
2. Furnish location data for work related to Project that must be performed by public utilities serving Project site.

C. Acceptance of Conditions: Examine substrates, areas, and conditions, with Installer or Applicator present where indicated, for compliance with requirements for installation tolerances and other conditions affecting performance. Record observations.

1. Verify compatibility with and suitability of substrates, including compatibility with existing finishes or primers.
2. Examine roughing-in for mechanical and electrical systems to verify actual locations of connections before equipment and fixture installation.
3. Examine walls, floors, and roofs for suitable conditions where products and systems are to be installed.
4. Proceed with installation only after unsatisfactory conditions have been corrected. Proceeding with the Work indicates acceptance of surfaces and conditions.

3.2 COORDINATION WITH UTILITY SERVICE PROVIDERS

A. Coordination with Utility Service Providers: Contact following Utility Service providers, sufficiently in advance to avoid delaying the work, to coordinate Contractor's portion of Work, testing requirements, inspections.

1. Electrical: Service Contact: Contact Kentucky Utility Service, 800-383-5582 to coordinate Electrical service requirements.

   a. Construction Contractor Responsibilities: Contractor is responsible for coordinating electrical service requirements.

2. Water Service Contact: Contact Larue County Water District #1, 270-325-3242 to coordinate Water service requirements.

   a. Construction Contractor Responsibilities: Contractor is responsible for coordinating water service requirements.

3. Wastewater Service Contact: Contact CEA Water, 1-270-773-2887 to coordinate Wastewater service requirements.

   a. Construction Contractor Responsibilities: You are responsible coordinating wastewater service requirements.

4. Telephone Service Contact: Contact Windstream, 800-843-9214 to coordinate Telephone service requirements.

    a. Construction Contractor Responsibilities: You are responsible for coordinating telephone service requirements.

3.3 PREPARATION

A. Field Measurements: Take field measurements as required to fit Work properly. Recheck measurements before installing each product. Where portions of Work are indicated fit to other construction, verify dimensions of other construction by field measurements before fabrication. Coordinate fabrication schedule with construction progress to avoid delaying Work.

B. Space Requirements: Verify space requirements and dimensions of items shown diagrammatically on Drawings.

C. Review of Contract Documents and Field Conditions: Immediately on discovery of need for clarification of the Contract Documents caused by differing field conditions outside control of Contractor, submit request for information to Contracting Officer in accordance with Section 01 31 00 "Project Management and Coordination."

3.4 CONSTRUCTION LAYOUT

A. Verification: Verify layout information shown on Drawings, in relation to the existing benchmarks before proceeding to lay out Work. Notify Contracting Officer promptly if discrepancies are discovered.

B. General: Engage a land surveyor or professional engineer to lay out Work using accepted surveying practices.

    1. Establish benchmarks and control points to set lines of construction and elsewhere as needed to locate each element of Project.
    2. Establish dimensions within tolerances indicated. Do not scale Drawings to obtain required dimensions.
    3. Inform installers of lines and levels to which they must comply.
    4. Check location, level and plumb, of every major element as Work progresses.
    5. Notify Contracting Officer when deviations from required lines and levels exceed allowable tolerances.
    6. Close site surveys with an error of closure equal to or less than the established standard.

C. Site Improvements: Locate and lay out site improvements, including pavements, grading, fill and topsoil placement, utility slopes, and invert elevations.

D. Building Lines and Levels: Locate and lay out control lines and levels for structures, building foundations, column grids, and floor levels, including those required for mechanical and electrical work. Transfer survey markings and elevations for use with control lines and levels. Level foundations and piers from two or more locations.

E. Record Log: Maintain log of layout control work. Record deviations from required lines and levels. Include beginning and ending dates and times of surveys, weather conditions, name and duty of each survey party member, and types of instruments and tapes used. Make log available for review by National Park Service (NPS).

3.5 FIELD ENGINEERING

A. Reference Points: Locate existing permanent benchmarks, control points, and similar reference points before beginning Work. Preserve and protect permanent benchmarks and control points during construction operations. Controls destroyed by Contractor will be replaced by Contractor at their expense.

1. Existing Monuments: All benchmarks, land corners, and triangulation points, established by other surveys, existing within construction area shall be preserved. If existing monuments interfere with Work, secure written permission before removing them.

B. Benchmarks: Establish and maintain a minimum of two permanent benchmarks on Project site, referenced to data established by survey control points. Comply with NPS requirements for type and size of benchmark.

1. Record benchmark locations, with horizontal and vertical data, on Project Record Documents.

C. Certified Survey: On completion of foundation walls, major site improvements, and other work requiring field-engineering services, prepare a certified survey showing dimensions, locations, angles, and elevations of construction and sitework.

3.6 INSTALLATION

A. General: Locate Work and components of Work accurately in correct alignment and elevation, as indicated.

1. Make vertical work plumb and make horizontal work level.
2. Where space is limited, install components to maximize space available for maintenance and ease of removal for replacement.
3. Conceal pipes, ducts, and wiring in finished areas, unless otherwise indicated.

B. Comply with manufacturer's written instructions and recommendations for installing products in applications indicated.

C. Install products at the time and under conditions for best possible results. Maintain conditions required for product performance until Substantial Completion.

D. Conduct construction operations so no part of the Work is subjected to damaging operations or loading in excess of that expected during normal conditions of occupancy.

E. Tools and Equipment: Do not use tools or equipment that produce harmful noise levels.

F. Templates: Obtain and distribute to parties involved templates for work specified to be factory prepared and field installed. Check Shop Drawings of other work to confirm adequate provisions are made for locating and installing products to comply with indicated requirements.

G. Anchors and Fasteners: Provide anchors and fasteners as required to anchor each component securely in place, accurately located and aligned with other portions of Work.

1. Mounting Heights: Where mounting heights are not indicated, mount components at heights directed by Contracting Officer.
2. Allow for building movement, thermal expansion, and contraction.
3. Coordinate installation of anchorages. Furnish setting drawings, templates, and directions for installing anchorages, including sleeves, concrete inserts, anchor bolts, and items with integral anchors to be embedded in concrete or masonry. Deliver to Project site in time for installation.

H. Joints: Make joints of uniform width. Where joint locations in exposed work are not indicated, arrange joints for best visual effect. Fit exposed connections together to form hairline joints.

I. Hazardous Materials: Use products, cleaners, and installation materials not considered hazardous.

J. Quantity surveys: Shall be conducted, and data derived from these surveys shall be used in computing quantities of work performed and actual construction completed and in place.

1. Contractor shall conduct original and final surveys and surveys for any periods for which progress payments are requested. These surveys shall be conducted under direction of a representative of the Contracting Officer, unless Contracting Officer waives requirement in a specific instance. Government shall make such computations as are necessary to determine quantities of work performed or finally in place. Contractor shall make computations based on surveys for any periods for which progress payments are requested.
2. Promptly upon completing a survey, Contractor shall furnish originals of field notes and other records relating to survey or layout of Work to Contracting Officer. Contractor shall retain copies of all such material furnished to Contracting Officer.

3.7 PROGRESS CLEANING

A. General: Clean Project site, work areas, and common areas daily. Coordinate progress cleaning for joint-use areas where more than one Installer has worked. Enforce requirements strictly. Dispose of materials lawfully.

1. Comply with requirements in National Fire Protection Association (NFPA) 241 for removal of combustible waste materials and debris at the end of every work session.
2. Do not hold materials more than 7 days during normal weather or 3 days if the temperature is expected to rise above 80 degrees Fahrenheit (27 degrees Celsius).
3. Containerize hazardous and unsanitary waste materials separately from other waste. Mark containers appropriately and dispose of legally, according to regulations.

B. Site: Maintain Project site free of waste materials and debris.

C. Work Areas: Clean areas where work is in progress to level of cleanliness necessary for proper execution of Work.

1. Remove liquid spills promptly.
2. Where dust would impair proper execution of Work, broom-clean or vacuum entire work area, as appropriate.
3. Contractor shall provide progress cleaning that minimizes sources of food, water, and harborage available to pests.

D. Installed Work: Keep installed work clean. Clean installed surfaces according to written instructions of manufacturer or fabricator of product installed, using only cleaning materials specifically recommended. If specific cleaning materials are not recommended, use cleaning materials not hazardous to health or property and will not damage exposed surfaces.

1. Utilize non-toxic cleaning materials and methods.

a. Comply with Green Seal Standard (GS) 37 for general purpose cleaning and bathroom cleaning.
b. Use natural cleaning materials where feasible. Natural cleaning materials include:

1) Abrasive cleaners: substitute 1/2 lemon dipped in borax.
2) Ammonia: substitute vinegar, salt and water mixture, or baking soda and water.
3) Disinfectants: substitute 1/2 cup borax in gallon water.
4) Drain cleaners: substitute 1/4 cup baking soda and 1/4 cup vinegar in boiling water.
5) Upholstery cleaners: substitute dry cornstarch.

E. Concealed Spaces: Remove debris from concealed spaces before enclosing the space.

F. Exposed Surfaces in Finished Areas: Clean exposed surfaces and protect from damage and deterioration at time of Substantial Completion.

G. Waste Disposal: Do not bury or burn waste materials on-site. Do not wash waste materials down sewers or into waterways.

H. Clean and protect construction in progress and adjoining materials already in place during handling and installation. Apply protective covering where required to ensure protection from damage or deterioration at Substantial Completion.

I. Clean and provide maintenance on completed construction as frequently as necessary through remainder of the construction period. Adjust and lubricate operable components to ensure operability without damaging effects.

J. Limiting Exposures: Supervise construction operations so that no part of construction completed or in progress, is subject to harmful, dangerous, damaging, or deleterious exposure during construction period.

K. Final Cleaning: At completion of Work, remove remaining waste materials, rubbish, tools, equipment, machinery and surplus materials. Clean exposed surfaces and leave Project clean and ready for occupancy.

1. Provide final cleaning in accordance with ASTM E1971.

3.8 STARTING AND ADJUSTING

A. Start equipment and operating components to confirm proper operation. Remove malfunctioning units, replace with new units, and retest.

B. Adjust operating components for proper operation without binding. Adjust equipment for proper operation.

C. Test each piece of equipment to verify proper operation. Test and adjust controls and safeties. Replace damaged and malfunctioning controls and equipment.

D. Manufacturer's Field Service: If factory-authorized service representative is required to inspect field-assembled components and equipment installation, comply with qualification requirements in Section 01 40 00 "Quality Requirements."

3.9 PROTECTION OF INSTALLED CONSTRUCTION

A. Provide final protection and maintain conditions that ensure installed Work is without damage or deterioration at time of Substantial Completion.

B. Comply with manufacturer's written instructions for temperature and relative humidity.

3.10 CORRECTION OF THE WORK

A. Repair or remove and replace defective construction. Restore damaged substrates and finishes. Comply with requirements in Section 01 73 29 "Cutting and Patching."

1. Repairing includes replacing defective parts, refinishing damaged surfaces, touching up with matching materials, and properly adjusting operating equipment.

B. Restore permanent facilities used during construction to specified condition.

C. Remove and replace damaged surfaces exposed to view if surfaces cannot be repaired without visible evidence of repair.

D. Repair components that do not operate properly. Remove and replace operating components that cannot be repaired.

E. Remove and replace chipped, scratched, and broken glass or reflective surfaces.

END OF SECTION 01 73 40

SECTION 01 74 19 - CONSTRUCTION WASTE MANAGEMENT AND DISPOSAL

PART 1 - GENERAL

1.1 SUMMARY

A. Section includes administrative and procedural requirements for:

1. Salvaging nonhazardous demolition and construction waste.
2. Recycling nonhazardous demolition and construction waste.
3. Disposing of nonhazardous demolition and construction waste.

1.2 DEFINITIONS

A. Construction Waste: Building and site improvement materials and other solid waste resulting from construction, remodeling, renovation, or repair operations. Construction waste includes packaging.

B. Demolition Waste: Building and site improvement materials resulting from demolition or selective demolition operations.

C. Solid Waste: Garbage, debris, sludge, or other discharged material (except hazardous waste) including solid, liquid, semisolid, or contained gaseous materials resulting from domestic, industrial, commercial, mining, or agricultural operations.

D. Debris: Non-hazardous solid waste generated during construction, demolition, or renovation of a structure which exceeds 2.5 inch (60 millimeter) particle size that is: a manufactured object; plant or animal matter; or natural geologic material (e.g. cobbles and boulders). A mixture of debris and other material such as soil or sludge is also subject to regulation as debris if mixture is comprised primarily of debris by volume, based on visual inspection.

E. Disposal: Removal off-site of demolition and construction waste and subsequent sale, recycling, reuse, or deposit in landfill or incinerator acceptable to authorities having jurisdiction.

F. Environmental Pollution and Damage: Presence of chemical, physical, or biological elements or agents which adversely affect human health or welfare; unfavorably alter ecological balances; or degrade utility of environment for aesthetic, cultural, or historical purposes.

G. Garbage: Refuse and scraps resulting from preparation, cooking, dispensing, and consumption of food.

H. Hazardous Materials: Material regulated as a hazardous material in accordance with 49 CFR 173 (Code of Federal Regulations), requires a Material Safety Data Sheet (MSDS) in accordance with 29 CFR 1910.1200, or which during end use, treatment, handling, storage, transportation or disposal meets or has components which meet or have potential to meet the definition of Hazardous Waste in accordance with 40 CFR 261.

I. Recycle: Recovery of demolition or construction waste for subsequent processing in preparation for reuse.

J. Salvage: Recovery of demolition or construction waste and subsequent sale or reuse in another facility.

K. Single-use plastic products: Plastic items intended to be disposed of immediately after use, including plastic and polystyrene food and beverage containers, bottles, straws, cups, cutlery, and disposable plastic bags.

1.3 PERFORMANCE REQUIREMENTS

A. General: Project shall minimize creation of construction, deconstruction, and demolition waste to protect and restore natural habitat and resources. Minimize factors contributing to waste such as over packaging, improper storage, ordering error, poor planning, breakage, mishandling, single-use plastic products, and contamination. A Waste Management Plan shall be developed to ensure that existing site and building materials are reused, salvaged, or recycled. Minimize waste disposal in landfills.

B. Salvage /Recycle Requirements: Develop waste management plan resulting in end-of-Project rates for salvage/recycling of 50 percent by weight of total waste generated by the Work. The following waste categories, at a minimum, shall be diverted from a landfill:

1. Land clearing debris (chipped debris can be used on site for mulch or erosion control)
2. Clean dimensional wood, palettes
3. Plywood, OSB (oriented strand board), and particle board
4. Concrete (can be ground and used for fill on site)
5. Asphaltic concrete (can be ground and used for fill on site)
6. Cardboard, paper, packaging, newsprint
7. Metals (from banding, stud trim, piping, rebar, roofing, other trim, steel, iron, galvanized sheet steel, stainless steel, aluminum, copper, zinc, lead, brass, and bronze)
8. Gypsum drywall - unpainted
9. Non-hazardous paint and paint cans
10. Beverage containers: Aluminum, glass, and plastic containers
11. Insulation
12. Ceiling grid and tiles
13. Ductwork
14. Wiring
15. Other mixed construction and demolition waste as appropriate.

C. If waste materials encountered during deconstruction/demolition or construction phase are found to contain lead, asbestos, polychlorinated biphenyls (PCBs), (such as fluorescent lamp ballasts), or other harmful substances, they are to be handled and removed in accordance with local, state, and federal laws and requirements concerning hazardous waste.

D. Existing items and material to be removed during deconstruction/demolition phase shall be reused in construction phase of the Project. Items that cannot be reused shall be recycled. Items considered for reuse must be in refurbishable condition and must meet quality standards set forth in these specifications. Contractor shall ensure quality of the item(s) in question will meet or exceed accepted industry or trade standards for first quality commercial grade application. During

construction, deconstruction, or demolition Contracting Officer (CO) may designate other objects or materials for reuse.

E. Salvage/Recycle Requirements: Government goal is to salvage and recycle as much nonhazardous demolition and construction waste as possible including the following materials:

F. Salvage/Recycle Requirements: Government goal is to salvage and recycle as much nonhazardous demolition and construction waste as possible.

1.4 SUBMITTALS

A. Waste Management Plan: After award of contract and prior to scheduled Pre-Construction Conference, Contractor shall submit a draft Waste Management Plan to Contracting Officer for approval. Submit [**3**] copies of plan. Revise and resubmit Plan as required by Contracting Officer. Approval of Contractor's Plan will not relieve Contractor of responsibility for compliance with applicable environmental regulations.

B. Progress Documentation: Supplemental to Waste Management Plan, document solid waste disposal, diversion, and cost/revenue analysis and submit completed worksheet on a monthly basis. See Project Waste Management Plan Worksheet Sample, attached to the end of the Division 1 Specifications, and report totals to date for column headings.

C. Waste Reduction Calculations: Before request for Substantial Completion, submit [**three**] copies of calculated end-of-Project rates for salvage, recycling, and disposal as a percentage of total waste generated by the Work.

D. Records of Donations: Indicate receipt and acceptance of salvageable waste donated to individuals and organizations. Indicate whether organization is tax exempt.

E. Records of Sales: Indicate receipt and acceptance of salvageable waste sold to individuals and organizations. Indicate whether organization is tax exempt.

F. Recycling and Processing Facility Records: Indicate receipt and acceptance of recyclable waste by recycling and processing facilities licensed to accept them. Include manifests, weight tickets, receipts, and invoices.

G. Landfill and Incinerator Disposal Records: Indicate receipt and acceptance of waste by landfills and incinerator facilities licensed to accept them. Include manifests, weight tickets, receipts, and invoices.

H. Qualification Data: For Waste Management Coordinator.

I. Progress payment requirements:

1. With each Application for payment, submit an updated Project Waste Management Plan worksheet for solid waste disposal and diversion.
2. With each Application for Payment, submit manifests, weight tickets, receipts, and invoices specifically identifying the Project and waste material.

J. Closeout Submittals

1. With Closeout Submittals, submit a summary of a Project Waste Management Plan worksheet for solid waste disposal and diversion.

1.5 QUALITY ASSURANCE

A. Waste Management Coordinator Qualifications: Experienced firm, with record of successful waste management coordination of projects with similar requirements, that employs a LEED™-Accredited Professional, certified by USGBC, as waste management coordinator.

B. Regulatory Requirements: Comply with hauling and disposal regulations of authorities having jurisdiction.

C. Waste Management Meeting: Conduct separate meeting or cover in Pre-Construction Conference and comply with requirements in Section 01 31 00 "Project Management and Coordination." Review methods and procedures related to waste management including:

1. Review and discuss waste management plan including responsibilities of Waste Management Coordinator.
2. Review requirements for documenting quantities of each type of waste and its disposition.
3. Review and finalize procedures for materials separation and verify availability of containers and bins needed to avoid delays.
4. Review procedures for periodic waste collection and transportation to recycling and disposal facilities.
5. Review procedures for reduction of single-use plastic products on site.
6. Review waste management requirements for each trade.

PART 2 - PRODUCTS

2.1 WASTE MANAGEMENT PLAN

A. General: Develop plan consisting of waste identification and waste reduction work plan. Include separate sections in plan for demolition and construction waste. Indicate quantities by weight or volume but use same units of measure throughout waste management plan.

B. Waste Identification: Indicate anticipated types and quantities of demolition, site-clearing, and construction waste generated by the Work. Include estimated quantities and assumptions for estimates.

C. Waste Reduction Work Plan: List each type of waste and whether it will be salvaged, recycled, or disposed of in landfill or incinerator. Include points of waste generation, total quantity of each type of waste, quantity for each means of recovery, and handling and transportation procedures.

1. Salvaged Materials for Reuse: For materials salvaged and reused in Project, describe methods for preparing salvaged materials before incorporation into the Work.
2. Salvaged Materials for Sale: For materials sold to individuals and organizations, include list of names, addresses, and telephone numbers.
3. Salvaged Materials for Donation: For materials donated to individuals and organizations, include list of names, addresses, and telephone numbers.

4. Recycled Materials: Include list of local receivers and processors and type of recycled materials each will accept. Include names, addresses, and telephone numbers.
5. Disposed Materials: Indicate how and where materials will be disposed of. Include name, address, and telephone number of each landfill and incinerator facility.
6. Handling and Transportation Procedures: Include method used for separating recyclable waste including sizes of containers, container labeling, and designated location on Project site where materials separation will be located.
7. Reduction of single-use plastic products: Include methods for water distribution to include bottle refilling stations if available for personnel.

D. Cost/Revenue Analysis: Indicate total cost of waste disposal as if there was no waste management plan and net additional cost or net savings resulting from implementing waste management plan. Include:

1. Landfill tip fees per ton.
2. If diverted, tip fee savings from landfill diversion.
3. Costs of recycling, salvage, or reuse.
4. Revenue from recycling, salvage, or reuse.
5. Total cost or savings from diversion. (Calculate by using tip fee savings and subtracting costs of recycling or adding revenue from recycling.)

PART 3 - EXECUTION

3.1 PLAN IMPLEMENTATION

A. General: Implement waste management plan as approved by Contracting Officer. Provide handling, containers, storage, signage, transportation, and other items as required to implement waste management plan during entire duration of Contract.

B. Waste Management Coordinator: Engage waste management coordinator responsible for implementing, monitoring, and reporting status of waste management work plan. Coordinator shall be present at Project site full time for duration of Project.

C. Contractor shall establish contacts with local recycling and reuse companies to set up lines of responsibility. Contractor shall be responsible for coordination in terms of identifying materials, pickup schedules, and standard quality for recycled materials.

D. Training: Train workers, subcontractors, and suppliers on proper waste management procedures, as appropriate for the Work occurring at Project site.

1. Distribute waste management plan to everyone concerned within three days of submittal return.
2. Distribute waste management plan to entities when they begin work on-site. Review plan procedures and locations established for salvage, recycling, and disposal.

E. Site Access and Temporary Controls: Conduct waste management operations to ensure minimum interference with roads, streets, walks, walkways, and other adjacent occupied and used facilities.

F. Separation facilities:

1. Contractor shall designate and Contracting Officer shall approve specific area or areas to facilitate separation of materials for potential reuse, salvage, recycling, and return.
2. Place waste and recycling bins near each other, and close to point of waste generation but out of traffic pattern.
3. Keep recycling and waste bin areas neat, clean, and clearly marked in order to avoid co-mingling of materials.
4. Protect bins during non-working hours from off-site contamination.
5. Check garbage dumpsters periodically for recyclables being thrown away and undocumented materials that could be recycled.

G. Materials handling procedures: Material to be recycled shall be protected from contamination and shall be handled, stored, and transported in a manner that meets requirements set by designated facilities for acceptance. Establish defined area for operations of each trade, especially woodcutting so off-cuts are kept in one area and can be sorted by dimension for future reuse.

3.2 SALVAGING DEMOLITION WASTE

A. Salvaged Items for Reuse in the Work:

1. Clean salvaged items.
2. Pack or crate items after cleaning. Identify contents of containers.
3. Store items in secure area until installation.
4. Protect items from damage during transport and storage.
5. Install salvaged items to comply with installation requirements for new materials and equipment. Provide connections, supports, and miscellaneous materials necessary to make items functional for use indicated.

B. Salvaged Items for Sale and Donation: Not permitted on Project site.

C. Salvaged Items for Governments Use:

1. Clean salvaged items.
2. Pack or crate items after cleaning. Identify contents of containers.
3. Allow for inspection if necessary.
4. Store items in secure area until delivery to Government.
5. Transport items to storage area designated by Government.
6. Protect items from damage during transport and storage.

3.3 RECYCLING DEMOLITION AND CONSTRUCTION WASTE, GENERAL

A. General: Recycle paper and beverage containers used by on-site workers.

B. Recycling Incentives: Revenues, savings, rebates, tax credits, and other incentives received for recycling waste materials shall accrue to Contractor.

C. Procedures: Separate recyclable waste from other waste materials, trash, and debris. Separate recyclable waste by type at Project site to maximum extent practical.

1. Provide appropriately marked containers or bins for controlling recyclable waste until removed from Project site. Include list of acceptable and unacceptable materials at each container and bin.

    a. Inspect containers and bins for contamination and remove contaminated materials if found.

2. Stockpile processed materials on-site without intermixing with other materials. Place, grade, and shape stockpiles to drain surface water. Cover to prevent windblown dust.
3. Stockpile materials away from construction area. Do not store within drip line of remaining trees.
4. Store components off ground and protect from weather.
5. Remove recyclable waste off Government property and transport to recycling receiver or processor.

3.4 RECYCLING DEMOLITION WASTE

A. Asphaltic Concrete Paving: Grind asphalt to maximum 4-inch (100 millimeter) size.

B. Asphaltic Concrete Paving: Break up and transport paving to asphalt-recycling facility.

1. Crush asphaltic concrete paving and screen to comply with requirements in Division 31 Section "Earth Moving".

C. Concrete: Remove reinforcement and other metals from concrete and sort with other metals.

1. Pulverize concrete to maximum 4-inch (100 millimeter) size.

D. Wood Materials: Sort and stack members according to size, type, and length. Separate lumber, engineered wood products, panel products, and treated wood materials.

E. Metals: Separate metals by type.

1. Structural Steel: Stack members according to size, type of member, and length.
2. Remove and dispose of bolts, nuts, washers, and other rough hardware.

3.5 RECYCLING CONSTRUCTION WASTE

A. Packaging:

1. Cardboard and Boxes: Break down packaging into flat sheets. Bundle and store in dry location.
2. Polystyrene Packaging: Separate and bag materials.
3. Pallets: As much as possible, require deliveries using pallets to remove pallets from Project site. For pallets that remain on-site, break down pallets into component wood pieces and comply with requirements for recycling wood.
4. Crates: Break down crates into component wood pieces and comply with requirements for recycling wood.

B. Site-Clearing Wastes: Chip brush, branches, and trees at landfill facility.

C. Wood Materials:

1. Clean Cut-Offs of Lumber: Grind or chip into small pieces.
2. Clean Sawdust: Bag sawdust not containing painted or treated wood.

3.6 DISPOSAL OF WASTE

A. General: Except for items or materials to be salvaged, recycled, or otherwise reused, remove waste materials from Project site and legally dispose in landfill or incinerator acceptable to authorities having jurisdiction.

1. Except as otherwise specified, do not allow waste materials to accumulate on-site.
2. Remove and transport debris in manner preventing spillage on adjacent surfaces and areas.

B. Burning: Do not burn waste materials.

C. Disposal: Transport waste materials off Government property and legally dispose of them.

END OF SECTION 01 74 19

SECTION 01 77 00 - CLOSEOUT PROCEDURES

PART 1 - GENERAL

1.1 SUMMARY

A. Section includes administrative and procedural requirements for contract closeout, including:

1. Project Record Drawings
2. Closeout Submittals
3. Substantial Completion and Final Inspection
4. Permit Closure and Transfer
5. Final Acceptance of the Work
6. Warranties

1.2 PROJECT RECORD DRAWINGS

A. Maintain one complete full-size set of contract drawings and one full-size set of vendor-supplied drawings. Clearly mark changes, deletions, and additions using National Park Service (NPS) drafting standards to show actual construction conditions. Show additions in red, deletions in green and special instructions in blue.

B. Keep record drawings current. Make record drawings available to Contracting Officer (CO) for inspection at the time of monthly progress payment requests. If project record drawings are not current, Contracting Officer may retain an appropriate amount of progress payment.

C. Submit complete record drawings on completion of total project. Include shop drawings, sketches, and additional drawings to be included in final set, with clear instructions showing the location of these drawings.

1.3 CLOSEOUT SUBMITTALS

A. A list of closeout requirements has been attached at the end of the Division 1 Specifications for your convenience. The intent is to provide an overall summary of requirements and not a comprehensive list. Terms and conditions of the contract require satisfaction of requirements of individual specification sections regardless of what is shown on the list. Submit the following before requesting final inspection:

1. Specific warranties, guarantees, workmanship bonds, final certifications, and similar documents.
2. Project Record Documents, operation and maintenance manuals, final completion construction digital images recorded on CD-R (compact disc-recordable) or DVD-R (digital video disc-recordable) with index and descriptions, and similar final record information.
3. Posted Operating Instructions: As specified in individual sections. Furnish operating instructions attached to or posted adjacent to equipment. Include wiring diagrams, control diagrams, control sequence, start-up, adjustment, operation, lubrication, shut-down, safety

precautions, procedures in the event of equipment failure, and other items of instruction recommended by manufacturer.

4. Deliver tools, spare parts, extra materials, and similar items to location designated by Contracting Officer. Label with manufacturer's name and model number where applicable.

    a. Special Tools: One set of special tools required to operate, adjust, dismantle, or repair equipment. Special tools are those not normally found in possession of mechanics or maintenance personnel.

5. Keys and Keying Schedule: Submit keys including duplicates. Wire keys for each lock securely together. Tag and plainly mark with lock number, equipment identification, or panel or switch number, and indicate location, building, and room name or number.
6. Make final changeover of permanent locks and deliver keys to Contracting Officer. Advise Park personnel of changeover in security provisions.
7. Terminate and remove temporary facilities, mockups, construction tools, and similar elements from Project site, complete final cleaning requirements, including touchup painting.
8. Touch up and repair and restore marred exposed finishes to eliminate visual defects.
9. Instruct NPS personnel in operation, adjustment, and maintenance of products, equipment, and systems.

1.4 FINAL INSPECTION, SUBSTANTIAL COMPLETION AND ACCEPTANCE PROCEDURES

A. Request final inspection in writing when project or designated portion of project is substantially complete. Contracting Officer will proceed with inspection within 10 days of receipt of written request or will advise Contractor of items that prevent project from being substantially complete.

B. If work is determined substantially complete, following final inspection, Contracting Officer will prepare Punch List and issue a Letter of Substantial Completion.

C. If work is not determined substantially complete following final inspection, Contracting Officer will notify Contractor in writing. Contractor shall request new final inspection after completing work. Re-inspection costs may be charged against Contractor in accordance with Inspection of Construction contract clause.

D. Contractor shall complete Punch List within 30 calendar days, documented weather permitting.

E. If Contractor completes items of work on Punch List and contractually required items, Contracting Officer will issue Letter of final acceptance of work.

F. If Contractor fails to complete work within the time frame, Contracting Officer may correct work with an appropriate reduction in contract price or charge for re-inspection costs in accordance with Inspection of Construction contract clause.

1.5 PERMIT CLOSURE AND TRANSFER

A. When work covered by the permits is complete, create list of tasks required to close or transfer permits to Park. Submit to Contracting Officer for approval.

B. After substantial completion and Punch List completion, permits shall be closed and documented by Agency(ies) with Jurisdiction for the permit.

C. If responsibility for permits is to be transferred to Park, Park shall be informed of permit provisions completed and responsibilities transferring to Park staff.

1.6 WARRANTIES

A. Submittal Time: Submit written warranties on request of Contracting Officer for designated portions of Work where commencement of warranties other than date of Substantial Completion is indicated.

B. Organize warranty documents into an orderly sequence based on table of contents of Project Manual.

1. Bind warranties and bonds in heavy-duty, 3-ring, vinyl-covered, loose-leaf binders, thickness as necessary to accommodate contents, and sized to receive 8-1/2 by 11 inch (215 by 280 millimeters) paper.
2. Provide heavy paper dividers with plastic-covered tabs for each separate warranty. Mark tab to identify product or installation. Provide typed description of product or installation, including name of product and name, address, and telephone number of Installer.
3. Identify each binder on front and spine with typed or printed title "WARRANTIES," Project name, and name of Contractor.
4. Warranty Electronic File: Scan warranties and bonds and assemble complete warranty and bond submittal package into a single indexed electronic PDF (portable document format) file with links enabling navigation to each item. Provide bookmarked table of contents at beginning of document.

C. Provide additional copies of each warranty in operation and maintenance manuals.

PART 2 - PRODUCTS

2.1 MATERIALS

A. See Division 1 Specification Section "Execution" for information on cleaning agents.

PART 3 - EXECUTION

3.1 FINAL CLEANING

A. General: Conduct final cleaning and waste-removal operations to comply with local laws and ordinances and Federal and local environmental and antipollution regulations.

B. Cleaning: Employ experienced workers or professional cleaners for final cleaning. Clean each surface or unit to condition expected in an average commercial building cleaning and maintenance program. Comply with manufacturer's written instructions.

1. Complete following cleaning operations before requesting inspection for certification of Substantial Completion for entire Project or for a portion of Project:

    a. Clean Project site, yard, and grounds, in areas disturbed by construction activities, including landscape development areas, of rubbish, waste material, litter, and other foreign substances.
    b. Sweep paved areas broom clean. Remove petrochemical spills, stains, and other foreign deposits.
    c. Rake grounds that are neither planted nor paved to smooth, even-textured surface.
    d. Remove tools, construction equipment, machinery, and surplus material from Project site.
    e. Remove snow and ice to provide safe access to the site.
    f. Clean exposed exterior and interior hard-surfaced finishes to dirt-free condition, free of stains, films, and foreign substances. Avoid disturbing natural weathering of exterior surfaces. Restore reflective surfaces to original condition.
    g. Sweep concrete floors broom clean in unoccupied spaces.
    h. Clean transparent materials, including mirrors and glass in doors and windows. Remove glazing compounds and vision-obscuring materials. Replace chipped or broken glass and transparent materials. Polish mirrors and glass.
    i. Remove labels that are not permanent.
    j. Touch up, repair, and restore marred, exposed finishes and surfaces. Replace finishes and surfaces that cannot be satisfactorily repaired or restored or that already show evidence of repair or restoration.

        1) Do not paint over "UL" (Underwriters Laboratories) and similar labels, including mechanical and electrical nameplates.

    k. Wipe surfaces of mechanical and electrical equipment and similar equipment. Remove excess lubrication, paint and mortar droppings, and other foreign substances.
    l. Replace parts subject to unusual operating conditions.
    m. Leave Project clean and ready for occupancy.

C. Pest Control: Engage experienced, licensed exterminator to make a final inspection and rid project of rodents, insects, and other pests. Provide Government with report.

D. Waste Disposal: Comply with requirements of Section 01 74 19 "Construction Waste Management and Disposal."

END OF SECTION 01 77 00

SECTION 01 78 23 - OPERATION AND MAINTENANCE DATA

PART 1 - GENERAL

1.1 SUMMARY

A. Section includes administrative and procedural requirements for preparing operation and maintenance manuals, including:

1. Manuals, general
2. Emergency manuals
3. Operation manuals for systems, subsystems, and equipment
4. Maintenance manuals for care and maintenance of products, materials, and finishes.

B. See Divisions 2 through 49 Sections for additional operation and maintenance manual requirements for Work in those Sections.

1.2 SUBMITTALS

A. Manual: Submit two copies of each manual in draft form or one electronic copy at least 15 days before final inspection. Contracting Officer (CO) will return copy or edit version with comments within 15 days of receipt.

B. Format: Submit operations and maintenance manuals in following format:

1. PDF (portable document format) electronic file. Assemble each manual into composite electronically indexed file. Submit on digital media acceptable to Contracting Officer.

   a. Name each indexed document file in composite electronic index with applicable item name. Include a complete electronically linked operation and maintenance directory.
   b. Enable inserted reviewer comments on draft submittals.

2. Hard copy manual: In accordance with Part 2 of this Section.

3. Correct or modify each manual to comply with Contracting Officers comments. Submit four (4) copies of each corrected manual within 15 days of receipt of Contracting Officers comments.

PART 2 - PRODUCTS

2.1 MANUALS, GENERAL

A. Organization: Unless otherwise indicated, organize manual into separate sections for each system and subsystem, and separate sections for each piece of equipment not part of a system. Manual shall contain title page, table of contents, and manual contents.

B. Title Page: Enclose title page in transparent plastic sleeve. Include:

1. Project Title
2. Location
3. Park
4. Contract Number
5. Prime Contractors Name and Address
6. Date of Substantial Completion
7. Binder Volume Number

C. Table of Contents: List each product included in manual, identified by product name, indexed to content of the volume, and cross-referenced to Specification Section number in Project Manual.

D. Manual Contents: Organize into sets of manageable size. Arrange contents alphabetically by system, subsystem, and equipment. Assemble instructions for subsystems, equipment, and components of one system into a single binder if needed.

1. Binders: White, commercial quality, hard back, 3-ring, vinyl-covered, loose-leaf binders, in thickness necessary to accommodate contents, sized to hold 8-1/2 by 11 inch (215 by 280 millimeter) paper; with clear plastic window sleeve on front and spine to hold label describing contents and pockets inside covers to hold folded oversize sheets.

    a. Cover Sheet: Identify binders on front and spine, with project title, location, park, contract number, prime contractor's name and address, date of substantial completion, and binder volume number. Insert cover sheet into clear plastic view pocket on front of binder. Insert sheet into clear plastic view pocket on spine with title "OPERATION AND MAINTENANCE MANUAL," Project title or name, and subject matter of contents. Indicate volume number for multiple-volume sets.

2. Data: Fill binders to no more than 75 percent of capacity. Punch holes shall not obscure any data. When contents of a single tabbed section cover more than one item, provide colored paper sheets to separate the data for each item.

    a. Manufacturers' Data: Provide originals for color or copyrighted data. Black and white data may be originals or clean, good quality reproductions. No copies produced by facsimile transmission and sheets with stamps, such as submittal approval stamps. Include only sheets that apply to items installed; cross out inapplicable data.
    b. Vendor Furnished As-Built Drawings: Maximum 24 inch by 36 inch sheets with minimum character or lettering size of 1/8 inch. Reduced-size reproductions may be provided instead of full-size drawings if reproductions are clear and legible. If reduced-size drawings are used, identify as "REDUCED SIZE" and provide graphic scales, if applicable.
    c. Custom Data: Data supplemented by drawings and schematics necessary to describe systems adequately.
    d. Equipment Data Sheet: Data, using form at end of this section.
    e. Schedules: Schedules reflecting final, as-installed conditions.
    f. Poorly reproduced or illegible data will be rejected.

3. Dividers: Divider sheets with Mylar reinforced edges and pre-printed numbered tabs aligned with numbers and title lines on index sheet. Include typed list of products and major

components of equipment included in section on each divider, cross-referenced to Specification Section number and title of Project Manual.

4. Protective Plastic Sleeves: Transparent plastic sleeves designed to enclose diagnostic software diskettes for computerized electronic equipment.
5. Drawings: Attach reinforced, punched binder tabs on drawings and bind with text.

    a. If oversize drawings are necessary, fold drawings to same size as text pages and use as foldouts.
    b. If drawings are too large to be used as foldouts, fold and place drawings in labeled envelopes and bind envelopes in rear of manual. At appropriate locations in manual, insert typewritten pages indicating drawing titles, descriptions of contents, and drawing locations.

2.2 EMERGENCY MANUALS

A. Content: Organize manual into separate section for type of emergency, emergency instructions, and emergency procedures.

B. Type of Emergency: Where applicable for each type of emergency indicated below, include instructions and procedures for each system, subsystem, piece of equipment, and component for fire, flood and chemical release or spill.

C. Emergency Instructions: Describe and explain warnings, trouble indications, error messages, and similar codes and signals. Include responsibilities of National Park Service (NPS) operating personnel for notification of Installer, supplier, and manufacturer to maintain warranties.

D. Emergency Procedures: Include instructions on stopping, shutdown instructions for each type of emergency, operating instructions for conditions outside normal operating limits, and required sequences for electric or electronic systems.

2.3 OPERATION AND MAINTENANCE MANUALS

A. Operation Requirements

1. Content: In addition to requirements in Section, include operation data required in individual Specification Sections and equipment descriptions, operating standards, operating procedures, operating logs, wiring and control diagrams, and license requirements.
2. Descriptions: Include:

    a. Product name and model number
    b. Manufacturer's name
    c. Equipment identification with serial number of each component
    d. Equipment function
    e. Operating characteristics
    f. Limiting conditions
    g. Performance curves
    h. Engineering data and tests
    i. Complete nomenclature and number of replacement parts

3. Operating Procedures: Include start-up, break-in, and control procedures; stopping and normal shutdown instructions; routine, normal, seasonal, and weekend operating instructions; and required sequences for electric or electronic systems.
4. Systems and Equipment Controls: Describe sequence of operation, and diagram controls as installed.
5. Piped Systems: Diagram piping as installed and identify color-coding where required for identification.

B. Maintenance Requirements for Systems and Equipment

1. Content: For each system, subsystem, and piece of equipment not part of a system, include source information, manufacturers' maintenance documentation, maintenance procedures, maintenance and service schedules, spare parts list and source information, maintenance service contracts, and warranty and bond information, and equipment data sheets as described below.
2. Source Information: List each system, subsystem, and piece of equipment included in manual, identified by product name and arranged to match manual's table of contents. For each product, list name, address, and telephone number of Installer or supplier and maintenance service agent, and cross-reference Specification Section number and title in Project Manual.
3. Manufacturers' Maintenance Documentation: Manufacturers' maintenance documentation including maintenance instructions, drawings and diagrams for maintenance, nomenclature of parts and components, and recommended spare parts for each component part or piece of equipment:
4. Maintenance Procedures: Test and inspection instructions, troubleshooting guide, disassembly instructions, and adjusting instructions, detailing essential maintenance and environmental procedures.
5. Maintenance and Service Schedules: Service and lubrication requirements, list of required lubricants for equipment, and separate schedules for preventive and routine maintenance and service with standard time allotment.
6. Spare Parts List and Source Information: Lists of replacement and repair parts, with parts identified and cross-referenced to manufacturers' maintenance documentation and local sources of maintenance materials and related services.
7. Warranties and Bonds: Copies of warranties and bonds and lists of circumstances and conditions that affect validity of warranties or bonds.

2.4 PRODUCT MAINTENANCE MANUAL

A. Content: Organize manual into separate section for each product, material, and finish. Include source information, product information, maintenance procedures, repair materials and sources, and warranties and bonds, as described below.

B. Source Information: List each product included in manual identified by product name and arranged to match manual's table of contents. For each product, list name, address, and telephone number of Installer or supplier and maintenance service agent, and cross-reference Specification Section number and title in Project Manual.

C. Product Information: Include:

1. Product name and model number
2. Manufacturer's name
3. Color, pattern, and texture
4. Material and chemical composition
5. Reordering information for specially manufactured products

D. Environmental Requirements

1. Identify environmentally preferable products incorporated into Project. Include: product model; manufacturer's name, address, phone, and website; and local technical representative.

   a. Verify plastic products to be incorporated into Project are labeled in accordance with ASTM D1972. Where products are not labeled, provide product data indicating polymeric information in Operation and Maintenance Manual.

      1) Type 1: Polyethylene Terephthalate (PET, PETE)
      2) Type 2: High Density Polyethylene (HDPE)
      3) Type 3: Vinyl (Polyvinyl Chloride or PVC)
      4) Type 4: Low Density Polyethylene (LDPE)
      5) Type 5: Polypropylene (PP)
      6) Type 6: Polystyrene (PS)
      7) Type 7: Other. Use of this code indicates that package in question is made with a resin other than the six listed above or is made of more than one resin listed above and used in a multi-layer combination.

   b. Describe maintenance procedures associated with environmentally preferable materials and systems. Provide cleaning recommendations in accordance with ASTM E1971 and approved Integrated Pest Management (IPM) plan.

      1) Include potential environmental impacts of recommended maintenance procedures and materials.
      2) Include potential indoor air quality impacts of recommended maintenance procedures and materials.
      3) Where proposed maintenance procedures incorporate composting of plastics, assess potential effect of each type of plastic to be included in composting process in accordance with ASTM D5509 or ASTM D6002

   c. Material Safety Data Sheets (MSDS): Include MSDSs as specified.

2. Develop environmental management programs for facility as follows:

   a. Waste management program: Develop in accordance with ASTM E1609. Maximize use of source reduction and recycling procedures outlined in ASTM D5834.
   b. Water management program: Develop water monitoring program for surface and ground water on project site in accordance with ASTM D5851 and consistent with water management program utilized during construction operations.

E. Maintenance Procedures: Include manufacturer's written recommendations and inspection procedures, types of cleaning agents, methods of cleaning, schedule for cleaning and maintenance, and repair instructions.

F. Repair Materials and Sources: Include lists of materials and local sources of materials and related services.

G. Warranties and Bonds: Include copies of warranties and bonds and lists of circumstances and conditions that affect validity of warranties or bonds.

2.5 SYSTEMS AND EQUIPMENT MAINTENANCE MANUALS

A. Content: For each system, subsystem, and piece of equipment not part of a system, include source information, manufacturers' maintenance documentation, maintenance procedures, maintenance and service schedules, spare parts list and source information, maintenance service contracts, and warranty and bond information, as described below.

B. Source Information: List each system, subsystem, and piece of equipment included in manual, identified by product name and arranged to match manual's table of contents. For each product, list name, address, and telephone number of Installer or supplier and maintenance service agent, and cross-reference Specification Section number and title in Project Manual and drawing or schedule designation or identifier where applicable.

C. Manufacturers' Maintenance Documentation: Manufacturers' maintenance documentation including the following information for each component part or piece of equipment:

1. Standard maintenance instructions and bulletins.
2. Drawings, diagrams, and instructions required for maintenance, including disassembly and component removal, replacement, and assembly.
3. Identification and nomenclature of parts and components.
4. List of items recommended to be stocked as spare parts.

D. Maintenance Procedures: Include the following and items detailing essential maintenance procedures:

1. Test and inspection instructions
2. Troubleshooting guide
3. Precautions against improper maintenance
4. Disassembly; component removal, repair, and replacement; and reassembly instructions
5. Aligning, adjusting, and checking instructions
6. Demonstration and training video recording

E. Maintenance and Service Schedules: Include service and lubrication requirements, list of required lubricants for equipment, and separate schedules for preventive and routine maintenance and service with standard time allotment.

1. Scheduled Maintenance and Service: Tabulate actions for daily, weekly, monthly, quarterly, semiannual, and annual frequencies.
2. Maintenance and Service Record: Include manufacturers' forms for recording maintenance.

F. Spare Parts List and Source Information: Include lists of replacement and repair parts, with parts identified and cross-referenced to manufacturers' maintenance documentation and local sources of maintenance materials and related services.

G. Maintenance Service Contracts: Include copies of maintenance agreements with name and telephone number of service agent.

H. Warranties and Bonds: Include copies of warranties and bonds and lists of circumstances and conditions that affect validity of warranties or bonds.

1. Include procedures and required notifications for warranty claims.

PART 3 - EXECUTION

3.1 GENERAL

A. At start of project, begin accumulating operation and maintenance data and initiate index. Install and index data in binders within 30 days after delivery of items. As custom written data and test results are produced, add to operation and maintenance data file.

B. List of Operation and Maintenance requirements has been attached at end of the Division 1 Specifications for your convenience. Intent is to provide an overall summary of requirements and not a comprehensive list. Terms and conditions of the contract require satisfaction of requirements of individual specification sections regardless of what is shown on the list.

C. Keep operation and maintenance data current. Make operation and maintenance binders available to Contracting Officer for inspection at time of monthly progress payment requests. If operation and maintenance binders are not current, Contracting Officer may retain an appropriate amount of the progress payment.

3.2 MANUAL PREPARATION

A. Manual Types

1. Emergency Manual: Assemble complete set of emergency information indicating procedures for use by emergency personnel and by NPS operating personnel for types of emergencies indicated.
2. Product Maintenance Manual: Assemble complete set of maintenance data indicating care and maintenance of each product, material, and finish incorporated into Work.
3. Operation and Maintenance Manuals: Assemble complete set of operation and maintenance data indicating operation and maintenance of each system, subsystem, and piece of equipment not part of a system.

B. Manual Contents: Including:

1. Manufacturers' Data: Where manuals contain manufacturers' standard printed data, include only sheets pertinent to product or component installed. Mark sheet to identify product or component incorporated into Work. If data include more than one item in a tabular format,

identify each item using appropriate references from Contract Documents. Identify data applicable to Work and delete references to information not applicable.

2. Custom Written Data: For data not in manufacturer's standard literature, provide text, drawings, and schematics specifically applicable to installed systems. Include step-by-step descriptions of operating procedures; identification of individual components and their functions; descriptions of how system components relate to one another and operate together to accomplish a common process or function; and sequence of operation for system control circuits. For seasonally operated systems, provide start-up and shutdown instructions.
3. Equipment Data Sheets: For each item of equipment included in operation and maintenance data, provide Equipment Data Sheet using form at the end of this section. For equipment consisting of a driven machine and a driver (for example, a pump and a motor), equipment data shall cover both the driven machine and the driver. For similar type equipment (for example, multiple exhaust fans of the same model and type), provide a single equipment data sheet with an attached schedule listing individual equipment items.
4. Vendor Furnished As-Built Drawings: Provide for each electrical and each mechanical control system.

    a. For each control system, provide control circuit schematic drawings. Identify each wire and terminal block number. Show terminal numbers on control devices. Show control wires and devices remote from control panel.
    b. For each control panel, provide general arrangement drawing showing location of each control component and terminal block on the panel front and interior. Include materials list of panel-mounted control components as well as field-installed control components remote from the panel, identifying components, manufacturer, model number, and initial set points or sensing ranges of devices where applicable.
    c. For packaged equipment systems, provide general arrangement drawings showing interrelationships of the various items of equipment and components.
    d. In addition to control wiring schematic, provide power wiring schematic drawing showing power flow to each motor. Identify each power conductor. Show over-current protection and motor starting devices.

C. Comply with Section 01 77 00 "Closeout Procedures" for schedule for submitting operation and maintenance documentation.

END OF SECTION 01 78 23

EQUIPMENT DATA SHEET	
Equipment Item: _____ Designation: _____ Function: _____ Location: _____ Project: _____ Model Number: _____ Serial Number: _____	
Manufacturer Address and Phone:	Supplier Address and Phone:
Preventive Maintenance Tasks:	
Nameplate Data:	
Spare Parts Furnished and Other Information:	

Closeout and Operation & Maintenance (O&M) Requirements **Template**

National Park Service (NPS) - Denver Service Center (DSC) | 1-27-21

Topic	Specification Section	Requirement	Submittal Date	Completed	Received by Park
Project Record Drawings	01 67 00	Record Drawings			
	31 10 00	Record Drawings			
System Demonstration and Training					
Tools Spare Parts Equipment					
Extra Stock					
Reports	01 32 16	CPM Reports			
	01 40 00	Contractor's Quality Control Daily Reports			
		Quality Control Daily Test Reports			
		Test Reports			
		Accessibility Inspection Report			
		Off-Site Inspection Reports			
	03 30 00	Material Test Reports			
		Field Quality-Control Reports			
	31 20 00	Material Test Reports			
	32 13 13	Material Test Reports			
		Field Quality-Control Reports			
		CQC Accessibility Inspection Report			
	32 92 00	Soil Analysis Reports			
		Material Test Reports			
Keys & Keying Schedule					
O&M Data Warranties Guarantees	01 77 00	Warranties			
	01 78 23	O&M Manuals			
	32 92 00	Maintenance Instructions			

SECTION 01 81 13.13 - SUSTAINABLE DESIGN REQUIREMENTS FOR NON-LEED™ PROJECTS

PART 1 - GENERAL

1.1 SUMMARY

A. Section includes general requirements and procedures for compliance with Federal Sustainability requirements. This project is not seeking Leadership in Energy & Environmental Design (LEED™) certification but shall comply with applicable Federal Sustainability requirements. Requirements include laws (Executive Orders (EO) and regulations), management policies, building codes and standards, Federal directives, and National Park Service (NPS) guidelines.

B. Many Federal requirements can be achieved only through intelligent and integrated design of the project and are beyond control of the Contractor. Certain requirements relate to the products and procedures used for construction, therefore, full cooperation of the Contractor and Subcontractors is essential to successful compliance with Federal requirements.

C. Contractors shall familiarize themselves with relevant requirements and provide necessary information and instruction to subcontractors and installers.

1. Some requirements involve quantifying percentages by weight; these require careful recordkeeping and reporting by Contractor.
2. See Denver Service Center (DSC) Workflows Sustainability Standards for a list of Federal Sustainability requirements. Applicable Federal Sustainability requirements are also summarized on the project's NPS Project Sustainability Checklist. Contractor is responsible for ensuring the elements in the NPS Project Sustainability Checklist, identified by the Architect/Engineer (A/E) team, are incorporated into the construction of the project.

D. Related Sections:

1. See Divisions 1 through 49 Sections for sustainability requirements specific to work of each of these Sections.

1.2 DEFINITIONS

A. Chain-of-Custody Certificates: Certificates signed by manufacturers certifying wood used to make products was obtained from forests certified by a Forest Stewardship Council (FSC)-accredited certification body to comply with FSC Standard STD-01-001, "FSC Principles and Criteria for Forest Stewardship." Certificates shall include evidence manufacturer is certified for chain of custody by an FSC-accredited certification body.

B. LEED™: Leadership in Energy & Environmental Design. Sustainability rating system developed by United States Green Building Council (USGBC).

C. Rapidly Renewable Materials: Materials made from plants typically harvested within 10-year or shorter cycle. Rapidly renewable materials include products made from bamboo, cotton, flax, jute, straw, sunflower seed hulls, vegetable oils, or wool.

D. Recycled Content: Recycled content value of a material assembly shall be determined by weight.

1. "Post-consumer" material: Waste material generated by households or by commercial, industrial, and institutional facilities in their role as end users of product, which can no longer be used for intended purpose.
2. "Pre-consumer" material: Material diverted from waste stream during manufacturing process. Reutilization of materials such as rework, regrind, or scrap generated in a process and capable of being reclaimed within the same process that generated it is excluded.

E. Biopreferred Products: Commercial or industrial products (other than food or feed) composed in whole, or in significant part, of biological products, renewable agricultural materials (including plant, animal, and marine materials), or forestry materials and includes biobased intermediate ingredients or feedstocks.

1.3 FEDERAL SUSTAINABILITY DOCUMENTATION SUBMITTALS

A. Most of Federal sustainability documentation submittals are aggregations of submittals already required in relevant technical specifications. They are mentioned here to ensure they are collected and organized together to efficiently document compliance with sustainability requirements.

B. Provide preliminary submittals to NPS indicating how the following Federal requirements will be met:

1. Recycled Content: List of specified/proposed materials with recycled content. Indicate cost, post-consumer recycled content, and pre-consumer recycled content for each product having recycled content.

2. Certified Wood: Product data and/or chain-of-custody certificates for products containing certified wood. Include statement indicating cost for each certified wood product.

3. Construction Indoor Air Quality (IAQ) Management Plan – During Construction:

a. Construction indoor-air-quality management plan.
b. Product data for temporary filtration media.
c. Product data for filtration media used during occupancy.
d. Construction Documentation: Six photographs at three different times during construction period, along with brief description of the Sheet Metal and Air Conditioning Contractors' National Association (SMACNA) approach employed, documenting implementation of indoor-air-quality management measures, such as protection of ducts and on-site stored or installed absorptive materials.

4. Construction IAQ Management Plan – Before Occupancy:

a. Signed statement describing building air flush-out procedures including dates when flush-out was started and completed and statement filtration media was replaced after flush-out.

b. Product data for filtration media used during flush-out and during occupancy.

5. Low Emitting Materials - Adhesives and Sealants: Product data for adhesives and sealants used inside weatherproofing system indicating Volatile Organic Compound (VOC) content of each product used. Indicate VOC content in g/L (grams per liter) calculated according to 40 CFR 59 Subpart D (Code of Federal Regulations).
6. Low Emitting Materials - Paints and Coatings: Product data for paints and coatings used inside weatherproofing system indicating chemical composition and VOC content of each product used. Indicate VOC content in g/L calculated according to 40 CFR 59 Subpart D.
7. Low Emitting Materials - Flooring: Product data for products containing composite wood or agrifiber products or wood glues indicating they do not contain urea-formaldehyde resin.
8. Biopreferred Products: Provide list of bio-based products used on project.

PART 2 - PRODUCTS

2.1 RECYCLED CONTENT OF MATERIALS

A. Recycled Content: Provide building materials with recycled content such that post-consumer recycled content plus one-half of pre-consumer recycled content constitutes a minimum of **10** percent of cost of materials used for Project.

1. Determine cost of post-consumer recycled content by dividing weight of post-consumer recycled content in item by total weight of item and multiplying by cost of item.
2. Determine cost of pre-consumer recycled content of an item by dividing weight of pre-consumer recycled content in item by total weight of item and multiplying by cost of item.
3. Do not include mechanical and electrical components, and specialty items such as elevators and equipment in calculation.

2.2 BIOPREFERRED PRODUCTS

A. Use bio-based products found on United States Department of Agriculture (USDA) Biopreferred Products list where applicable on project.

2.3 LOW-EMITTING MATERIALS

A. For applications inside the weatherproofing system, use adhesives and sealants that comply with VOC content limits in Specification Divisions 2 through 49.

B. For field applications inside the weatherproofing system, use paints and coatings that comply with VOC content limits in Specification Divisions 2 through 49.

C. Do not use composite wood or agrifiber products or adhesives that contain urea-formaldehyde resin.

PART 3 - EXECUTION

3.1 CLEAN-AGENT FIRE-EXTINGUISHING-AGENT REMOVAL

A. Remove Chlorofluorocarbons (CFC)-based refrigerants from existing Heating, Ventilation, Air Conditioning, and Refrigeration (HVAC&R) equipment indicated to remain and replace with refrigerants that are not CFC based. Replace or adjust existing equipment to accommodate new refrigerant as described in Division 23 Sections.

B. Remove clean-agent fire-extinguishing agents that contain Hydrochlorofluorocarbons (HCFCs) or halons and replace with agent that does not contain HCFCs or halons. See Division 21 Section "Clean-Agent Fire Extinguishing Systems" for additional requirements.

3.2 MEASUREMENT AND VERIFICATION

A. Coordinate with Divisions 2 through 49 for project requirements regarding installation of building level metering equipment to measure energy, water, and electric usage.

END OF SECTION 01 81 13

SECTION 02 41 13 – SELECTIVE SITE DEMOLITION

PART 1 - GENERAL

1.1 RELATED DOCUMENTS

A. Drawings and general provisions of the Contract, including General and Supplementary Conditions and Division 01 Specification Sections, apply to this Section.

1.2 SUMMARY

A. This section includes the following:

1. Obtain all required permits and furnish all equipment, tools, labor, materials, and incidentals to perform the scope of work.
2. Furnish and install tree protection fencing as indicated on the drawings.
3. Install erosion control measures.
4. Disconnect, remove, and cap all utility services as indicated or as required.
5. Unless indicated otherwise, remove, and legally dispose of all demolished or other materials from this site offsite.

B. Related Requirements:

1. Specification Section 31 10 00 - Site Clearing

1.3 DEFINITIONS

A. Demolish: Completely remove and legally dispose of off-site.

B. Remove: Detach items from existing construction and legally dispose of them off-site unless indicated to be removed and reinstalled.

C. Remove and Reinstall: Carefully detach from existing construction, in a manner to prevent damage, and store on site until site is ready for items to be reinstalled. Include fasteners or brackets needed for reattachment elsewhere.

1.4 MATERIALS OWNERSHIP

A. Unless otherwise indicated, demolition waste becomes property of Contractor.

B. Historic items, relics, antiques, and similar objects including, but not limited to, cornerstones and their contents, commemorative plaques and tablets, and other items of interest or value to Government that may be uncovered during demolition remain the property of Government.

1. Carefully salvage in a manner to prevent damage and promptly return to Park.

1.5 INFORMATIONAL SUBMITTALS

A. Proposed Protection Measures: Submit informational report, including Drawings, which indicates the measures proposed for protecting individuals and property, for environmental protection, for dust control and, for noise control. Indicate proposed locations and construction of barriers.

B. Schedule of Demolition Activities: Indicate the following:

1. Detailed sequence of demolition work, with starting and ending dates for each activity.
2. Temporary interruption of utility services.
3. Shutoff and capping or re-routing of utility services.
4. Inventory: Submit a list of items to be removed and reinstalled.

1.6 RELATED AGENCY CONTACTS

A. Contacts include, but may not be limited to, the following:

1. MACA Point of Contact: TBD
   Maintenance Division
   Mammoth Cave National Park
2. Any other agency or utility service company providing service to property.

1.7 QUALITY ASSURANCE

A. Regulatory Requirements: Comply with governing EPA notification regulations before beginning demolition. Comply with hauling and disposal regulations of authorities having jurisdiction.

1. Standards: Comply with ANSI/ASSE A10.6 and NFPA 241.
2. Predemolition Conference: Conduct conference at Project site.

   a. Inspect and discuss condition of construction to be demolished.
   b. Review structural load limitations of existing structures.
   c. Review and finalize demolition schedule and verify availability of demolition personnel, equipment, and facilities needed to make progress and avoid delays.
   d. Review and finalize protection requirements.
   e. Review procedures for noise control and dust control
   f. Review procedures for protection of adjacent site improvements.
   g. Review items to be removed and reinstalled.

1.8 EXISTING CONDITIONS

A. Conduct demolition activities to avoid encroachment onto adjacent properties.

B. Provide, erect, and maintain temporary barriers and security devices.

C. Conduct operations with minimum interference to public or private thoroughfares. Maintain safe access to site at all times. Do not close or obstruct roadways.

D. Before starting demolition work of this Section, inspect all preparatory work.

1.9 PROJECT CONDITIONS

A. Existing site improvements to be demolished will be vacated and their use discontinued before start of the Work.

1. Provide not less than 72 hours' notice of activities that will affect operations of site operations.
2. Maintain access to existing walkways and other site facilities.

a. Do not close or obstruct walkways, exits, or other site facilities without written permission from authorities having jurisdiction.

3. Government assumes no responsibility for existing site improvements or structures to be demolished.
4. Conditions existing at time of inspection for bidding purpose will be maintained by Government as far as practical.

B. Hazardous Materials: It is not expected that hazardous materials will be encountered in the Work.

1. If materials suspected of containing hazardous materials are encountered, do not disturb; immediately notify Contracting Officer. Hazardous materials will be removed by Government under a separate contract.

C. On-site storage or sale of removed items or materials is not permitted.

1.10 COORDINATION

A. Arrange demolition schedule so as not to interfere with Park's on-site operations and operations of adjacent existing visitor center building.

PART 2 - PRODUCTS

2.1 SOIL MATERIALS

A. Satisfactory Soils: Comply with requirements in Section 31 20 00 "Earth Moving."

2.2 TREE PROTECTION FENCING

A. Provide 4-foot high, orange polyethylene warning fence with metal posts, to serve as tree protection fence in the locations as indicated on the Contract Documents.

PART 3 – EXECUTION

3.1 PREPARATION

A. The Contractor shall inspect the site in relation to the scope of demolition work described herein prior to start of work.

3.2 PROTECTION

A. Existing Facilities: Protect adjacent walkways, driveways, roadways, and other existing site facilities during demolition operations. Maintain existing vehicular exits and entrances.

B. Existing Utilities: Maintain utility services to remain and protect from damage during demolition operations.

1. Do not interrupt existing utilities serving adjacent occupied or operating facilities unless authorized in writing by CO and authorities having jurisdiction.

2. Provide temporary services during interruptions to existing utilities, as acceptable to CO and authorities having jurisdiction.

a. Provide at least 72 hours' notice to occupants of affected buildings if shutdown of service is required during changeover.

C. Temporary Protection:

1. Protect existing site improvements, appurtenances, and landscaping to remain.
2. Erect a plainly visible fence around drip line of individual trees or around perimeter drip line of groups of trees to remain.
3. Remove temporary barriers and protections where hazards no longer exist. Where open excavations or other hazardous conditions remain, leave temporary barriers and protections in place.
4. Provide temporary barricades and other protection required to prevent injury to people and damage to adjacent facilities to remain.
5. Provide protection to ensure safe passage of people around site demolition area and portions of adjacent site facilities to remain in use.

3.3 GENERAL

A. The Limit of Construction (Contract Limit Line) is to be strictly adhered to.

B. Demolish indicated structures and appurtenances in an orderly and careful manner.

C. Except where noted otherwise, immediately remove demolished material from site. Transport all materials in compliance with applicable permits, codes, and standards.

D. Disconnect and cap all remaining designated utility lines within demolition areas. Use caution to protect existing utilities to remain.

E. Mark location of disconnected utilities. Identify and indicate capping locations of remaining utilities on Project Record Documents.

F. Filling voids: Completely fill below-grade areas and voids resulting from demolition of improvements to proposed sub-grade elevations. Use satisfactory soil materials consisting of stone, gravel, and sand, free from debris, trash, frozen materials, roots, and other organic matter. Construction debris from demolition operations shall not be used as fill. Prior to placement of fill materials, ensure that areas to be filled are free of standing water, frost, frozen material, trash, and debris. Place fill materials in horizontal layers not exceeding 8” in loose depth. Compact each layer at optimum moisture content of fill material to a density equal to original adjacent ground unless subsequent excavation for new work is required. After fill placement and compaction, grade surface to meet adjacent contours and to provide flow to surface drainage structures.

3.4 DEMOLITION

A. General: Demolish indicated site improvements completely unless otherwise noted. Use methods required to complete the Work within limitations of governing regulations and as follows:

1. Do not use cutting torches until work area is cleared of flammable materials. Maintain portable fire-suppression devices during flame-cutting operations.
2. Maintain fire watch during and for at least 2 hours after flame cutting operations.
3. Maintain adequate ventilation when using cutting torches.

B. Site Access and Temporary Controls: Conduct site demolition and debris-removal operations to ensure minimum interference with roads, streets, walks, walkways, and other adjacent and used facilities.

1. Do not close or obstruct streets, walks, walkways, or other adjacent occupied or used facilities without permission from CO and authorities having jurisdiction. Provide alternate routes around closed or obstructed traffic ways if required by authorities having jurisdiction.
2. Use water mist and other suitable methods to limit spread of dust and dirt. Comply with governing environmental-protection regulations. Do not use water when it may damage adjacent construction or create hazardous or objectionable conditions, such as ice, flooding, and pollution.
3. Explosives: Use of explosives is not permitted.

3.5 SITE RESTORATION

A. Below-Grade Areas: Rough grade below-grade areas ready for further excavation or new construction.

B. Below-Grade Areas: Completely fill below-grade areas and voids resulting from site demolition operations with satisfactory soil materials according to backfill requirements in Section 31 20 00 "Earth Moving."

C. Site Grading: Uniformly rough grade area of demolished construction to a smooth surface, free from irregular surface changes. Provide a smooth transition between adjacent existing grades and new grades.

3.6 DISPOSAL OF DEMOLISHED MATERIALS

A. General: Remove from site debris, rubbish, and other materials resulting from demolition operations.

B. Removal: Transport materials removed from the demolition operation and dispose of offsite in a legally approved manner, to permitted location(s). Remove and transport debris and rubbish in a manner that will prevent spillage on streets or adjacent areas.

1. Immediately clean up any spillage from streets and adjacent areas.

C. Do not burn demolished materials.

3.7 REPAIR AND CLEAN UP

A. Promptly repair damage to existing site improvements to remain caused by demolition operations.

B. Upon completion of demolition work, remove tools, equipment, and demolished materials from site.

END OF SECTION 02 41 13

SECTION 03 30 00 - CAST-IN-PLACE CONCRETE

PART 1 - GENERAL

1.1 RELATED DOCUMENTS

A. Drawings and general provisions of the Contract, including General and Supplementary Conditions and Division 01 Specification Sections, apply to this Section.

1.2 SUMMARY

A. Section includes cast-in-place concrete, including formwork, reinforcement, concrete materials, mixture design, placement procedures, and finishes, for the following:

1. Footings.
2. Foundation walls.
3. Suspended structural slabs.

B. Related Sections:

1. Section 31 20 00 "Earth Moving" for drainage fill under slabs-on-grade.
2. Section 32 13 13 "Concrete Paving" for concrete pavement and walks.

1.3 DEFINITIONS

A. Cementitious Materials: Portland cement alone or in combination with one or more of the following: blended hydraulic cement, fly ash and other pozzolans, ground granulated blast-furnace slag, and silica fume; subject to compliance with requirements.

1.4 ACTION SUBMITTALS

A. Product Data: For each type of product indicated.

B. Design Mixtures: For each concrete mixture. Submit alternate design mixtures when characteristics of materials, Project conditions, weather, test results, or other circumstances warrant adjustments.

1. Indicate amounts of mixing water to be withheld for later addition at Project site.

C. Steel Reinforcement Shop Drawings: Placing drawings that detail fabrication, bending, and placement. Include bar sizes, lengths, material, grade, bar schedules, stirrup spacing, bent bar diagrams, bar arrangement, splices and laps, mechanical connections, tie spacing, hoop spacing, and supports for concrete reinforcement.

D. Formwork Shop Drawings: Prepared by or under the supervision of a qualified professional engineer detailing fabrication, assembly, and support of formwork.

1. Shoring and Reshoring: Indicate proposed schedule and sequence of stripping formwork, shoring removal, and reshoring installation and removal.

E. Construction Joint Layout: Indicate proposed construction joints required to construct the structure for approval.

1.5 INFORMATIONAL SUBMITTALS

A. Qualification Data: For Installer manufacturer and testing agency.

B. Welding certificates.

C. Material Certificates: For each of the following, signed by manufacturers:

1. Cementitious materials.
2. Admixtures.
3. Form materials and form-release agents.
4. Steel reinforcement and accessories.
5. Curing compounds.
6. Bonding agents.
7. Adhesives.
8. Semirigid joint filler.
9. Joint-filler strips.

D. Material Test Reports: For the following, from a qualified testing agency, indicating compliance with requirements:

1. Aggregates. Include service record data indicating absence of deleterious expansion of concrete due to alkali aggregate reactivity.

E. Field quality-control reports.

F. Minutes of preinstallation conference.

1.6 QUALITY ASSURANCE

A. Manufacturer Qualifications: A firm experienced in manufacturing ready-mixed concrete products and that complies with ASTM C 94/C 94M requirements for production facilities and equipment.

1. Manufacturer certified according to NRMCA's "Certification of Ready Mixed Concrete Production Facilities."

B. Installer Qualifications: A qualified installer who employs on Project personnel qualified as ACI-certified Flatwork Technician and Finisher and a supervisor who is an ACI-certified Concrete Flatwork Technician.

C. Testing Agency Qualifications: An independent agency, qualified according to ASTM C 1077 and ASTM E 329 for testing indicated.

1. Personnel conducting field tests shall be qualified as ACI Concrete Field-Testing Technician, Grade 1, according to ACI CP-1 or an equivalent certification program.
2. Personnel performing laboratory tests shall be ACI-certified Concrete Strength Testing Technician and Concrete Laboratory Testing Technician - Grade I. Testing Agency laboratory supervisor shall be an ACI-certified Concrete Laboratory Testing Technician - Grade II.

D. Source Limitations: Obtain each type or class of cementitious material of the same brand from the same manufacturer's plant, obtain aggregate from single source, and obtain admixtures from single source from single manufacturer.

E. Welding Qualifications: Qualify procedures and personnel according to AWS D1.4/D 1.4M, "Structural Welding Code - Reinforcing Steel."

1. ACI Publications: Comply with the following unless modified by requirements in the Contract Documents: ACI 301, "Specifications for Structural Concrete," Sections 1 through 6, 8.
2. ACI 117, "Specifications for Tolerances for Concrete Construction and Materials."

F. Concrete Testing Service: Engage a qualified independent testing agency to perform material evaluation tests and to design concrete mixtures.

G. Mockups: Cast concrete and formed-surface panels to demonstrate typical joints, surface finish, texture, tolerances, and standard of workmanship.

1. Build panel approximately 100 sq. ft. for formed surface in the location indicated or, if not indicated, as directed by Contracting Officer (CO).
2. Approved mockups may become part of the completed Work if undisturbed at time of Substantial Completion.

H. Preinstallation Conference: Conduct conference at Project site.

1. Before submitting design mixtures, review concrete design mixture and examine procedures for ensuring quality of concrete materials. Require representatives of each entity directly concerned with cast-in-place concrete to attend, including the following:

a. Contractor's superintendent.
b. Independent testing agency responsible for concrete design mixtures.
c. Ready-mix concrete manufacturer.
d. Concrete subcontractor.

1.7 DELIVERY, STORAGE, AND HANDLING

A. Steel Reinforcement: Deliver, store, and handle steel reinforcement to prevent bending and damage.

PART 2 - PRODUCTS

2.1 FORM-FACING MATERIALS

A. Smooth-Formed Finished Concrete: Form-facing panels that will provide continuous, true, and smooth concrete surfaces. Furnish in largest practicable sizes to minimize number of joints.

1. Plywood, metal, or other approved panel materials.
2. Exterior-grade plywood panels, suitable for concrete forms, complying with DOC PS 1, and as follows:

a. Medium-density overlay, Class 1 or better; mill-release agent treated, and edge sealed.
b. Structural 1, B-B or better; mill oiled, and edge sealed.
c. B-B (Concrete Form), Class 1 or better; mill oiled, and edge sealed.

B. Rough-Formed Finished Concrete: Plywood, lumber, metal, or another approved material. Provide lumber dressed on at least two edges and one side for tight fit.

C. Forms for Cylindrical Columns, Pedestals, and Supports: Metal, glass-fiber-reinforced plastic, paper, or fiber tubes that will produce surfaces with gradual or abrupt irregularities not exceeding specified formwork surface class. Provide units with sufficient wall thickness to resist plastic concrete loads without detrimental deformation.

D. Pan-Type Forms: Glass-fiber-reinforced plastic or formed steel, stiffened to resist plastic concrete loads without detrimental deformation.

E. Void Forms: Biodegradable paper surface, treated for moisture resistance, structurally sufficient to support weight of plastic concrete and other superimposed loads.

F. Chamfer Strips: Wood, metal, PVC, or rubber strips, 3/4 by 3/4-inch, minimum.

G. Rustication Strips: Wood, metal, PVC, or rubber strips, kerfed for ease of form removal.

H. Form-Release Agent: Commercially formulated form-release agent that will not bond with, stain, or adversely affect concrete surfaces and will not impair subsequent treatments of concrete surfaces.

1. Formulate form-release agent with rust inhibitor for steel form-facing materials.

I. Form Ties: Factory-fabricated, removable, or snap-off metal or glass-fiber-reinforced plastic form ties designed to resist lateral pressure of fresh concrete on forms and to prevent spalling of concrete on removal.

1. Furnish units that will leave no corrodible metal closer than 1 inch to the plane of exposed concrete surface.
2. Furnish ties that, when removed, will leave holes no larger than 1 inch in diameter in concrete surface.

2.2 STEEL REINFORCEMENT

A. Reinforcing Bars: ASTM A 615/A 615M, Grade 60 deformed.

B. Steel Bar Mats: ASTM A 184/A 184M, fabricated from ASTM A 615/A 615M, Grade 60 ASTM A 706/A 706M, deformed bars, assembled with clips.

2.3 REINFORCEMENT ACCESSORIES

A. Joint Dowel Bars: ASTM A 615/A 615M, Grade 60 plain-steel bars, cut true to length with ends square and free of burrs.

B. Zinc Repair Material: ASTM A 780, zinc-based solder, paint containing zinc dust, or sprayed zinc.

C. Bar Supports: Bolsters, chairs, spacers, and other devices for spacing, supporting, and fastening reinforcing bars and welded wire reinforcement in place. Manufacture bar supports from steel wire, plastic, or precast concrete according to CRSI's "Manual of Standard Practice," of greater compressive strength than concrete and as follows:

1. For concrete surfaces exposed to view where legs of wire bar supports contact forms, use CRSI Class 1 plastic-protected steel wire or CRSI Class 2 stainless-steel bar supports.

2.4 CONCRETE MATERIALS

A. Cementitious Material: Use the following cementitious materials, of the same type, brand, and source, throughout Project:

1. Portland Cement: ASTM C 150, Type II.

a. Fly Ash: ASTM C 618, Class F or C.
b. Ground Granulated Blast-Furnace Slag: ASTM C 989, Grade 100 or 120.

B. Normal-Weight Aggregates: ASTM C 33, Class 3M coarse aggregate or better, graded. Provide aggregates from a single source with documented service record data of at least 10 years' satisfactory service in similar applications and service conditions using similar aggregates and cementitious materials.

1. Maximum Coarse-Aggregate Size: 1 inch nominal.
2. Fine Aggregate: Free of materials with deleterious reactivity to alkali in cement.

C. Lightweight Aggregate: ASTM C 330, 3/4-inch nominal maximum aggregate size.

D. Water: ASTM C 94/C 94M and potable.

2.5 ADMIXTURES

A. Air-Entraining Admixture: ASTM C 260.

B. Chemical Admixtures: Provide admixtures certified by manufacturer to be compatible with other admixtures and that will not contribute water-soluble chloride ions exceeding those permitted in hardened concrete. Do not use calcium chloride or admixtures containing calcium chloride.

1. Water-Reducing Admixture: ASTM C 494/C 494M, Type A.
2. Retarding Admixture: ASTM C 494/C 494M, Type B.
3. Water-Reducing and Retarding Admixture: ASTM C 494/C 494M, Type D.
4. High-Range, Water-Reducing Admixture: ASTM C 494/C 494M, Type F.
5. High-Range, Water-Reducing and Retarding Admixture: ASTM C 494/C 494M, Type G.
6. Plasticizing and Retarding Admixture: ASTM C 1017/C 1017M, Type II.

C. Set-Accelerating Corrosion-Inhibiting Admixture: Commercially formulated, anodic inhibitor or mixed cathodic and anodic inhibitor; capable of forming a protective barrier and minimizing chloride reactions with steel reinforcement in concrete and complying with ASTM C 494/C 494M, Type C.

D. Non-Set-Accelerating Corrosion-Inhibiting Admixture: Commercially formulated, non-set-accelerating, anodic inhibitor or mixed cathodic and anodic inhibitor; capable of forming a protective barrier and minimizing chloride reactions with steel reinforcement in concrete.

E. Granular Fill: Clean mixture of crushed stone or crushed or uncrushed gravel; ASTM D 448, Size 57, with 100 percent passing a 1-1/2-inch sieve and 0 to 5 percent passing a No. 8 sieve.

F. Fine-Graded Granular Material: Clean mixture of crushed stone, crushed gravel, and manufactured or natural sand; ASTM D 448, Size 10, with 100 percent passing a 3/8-inch sieve, 10 to 30 percent passing a No. 100 sieve, and at least 5 percent passing No. 200 sieve; complying with deleterious substance limits of ASTM C 33 for fine aggregates.

2.6 CURING MATERIALS

A. Evaporation Retarder: Waterborne, monomolecular film forming, manufactured for application to fresh concrete.

B. Absorptive Cover: AASHTO M 182, Class 2, burlap cloth made from jute or kenaf, weighing approximately 9 oz./sq. yd. when dry.

C. Moisture-Retaining Cover: ASTM C 171, polyethylene film or white burlap-polyethylene sheet.

D. Water: Potable.

E. Clear, Waterborne, Membrane-Forming Curing Compound: ASTM C 309, Type 1, Class B, dissipating.

1. For concrete indicated to be sealed, curing compound shall be compatible with sealer.

2.7 RELATED MATERIALS

A. Expansion- and Isolation-Joint-Filler Strips: ASTM D 1751, asphalt-saturated cellulosic fiber or ASTM D 1752, cork or self-expanding cork.

B. Bonding Agent: ASTM C 1059/C 1059M, Type II, non-redispersible, acrylic emulsion or styrene butadiene.

C. Epoxy Bonding Adhesive: ASTM C 881, two-component epoxy resin, capable of humid curing and bonding to damp surfaces, of class suitable for application temperature and of grade to suit requirements, and as follows:

1. Types I, II, IV and V, Grade 2, for bonding hardened or freshly mixed concrete to hardened concrete.

D. Dovetail Anchor Slots: Stainless steel-steel sheet, not less than 0.034 inch thick, with bent tab anchors. Temporarily fill or cover face opening of slots to prevent intrusion of concrete or debris.

2.8 CONCRETE MIXTURES, GENERAL

A. Prepare design mixtures for each type and strength of concrete, proportioned on the basis of laboratory trial mixture or field test data, or both, according to ACI 301.

1. Use a qualified independent testing agency for preparing and reporting proposed mixture designs based on laboratory trial mixtures.

B. Cementitious Materials: Limit percentage, by weight, of cementitious materials other than portland cement in concrete as follows:

1. Fly Ash: 25 percent.
2. Combined Fly Ash and Pozzolan: 25 percent.
3. Ground Granulated Blast-Furnace Slag: 50 percent.
4. Combined Fly Ash or Pozzolan and Ground Granulated Blast-Furnace Slag: 50 percent portland cement minimum, with fly ash or pozzolan not exceeding 25 percent.

C. Limit water-soluble, chloride-ion content in hardened concrete to 0.15 percent by weight of cement.

D. Admixtures: Use admixtures according to manufacturer's written instructions.

1. Use admixture in concrete, as required, for placement and workability.
2. Use water-reducing and retarding admixture when required by high temperatures, low humidity, or other adverse placement conditions.
3. Use water-reducing admixture in pumped concrete, concrete for heavy-use industrial slabs and parking structure slabs, concrete required to be watertight, and concrete with a water-cementitious materials ratio below 0.50.
4. Use corrosion-inhibiting admixture in concrete mixtures where indicated.

2.9 CONCRETE MIXTURES FOR SITE ELEMENTS

A. Footings: Proportion normal-weight concrete mixture as follows:

1. Minimum Compressive Strength: 4000 psi at 28 days.
2. Maximum Water-Cementitious Materials Ratio: 0.50
3. Slump Limit: 1-4 inches maximum.
4. Air Content: 6 percent, plus or minus 1.5 percent at point of delivery for 1-inch nominal maximum aggregate size.

B. Foundation Walls: Proportion normal-weight concrete mixture as follows:

1. Minimum Compressive Strength: 4000 psi at 28 days.
2. Maximum Water-Cementitious Materials Ratio: 0.50.
3. Slump Limit: 1-4 inches maximum.
4. Air Content: 6 percent, plus or minus 1.5 percent at point of delivery for 1-inch nominal maximum aggregate size.

C. Suspended Slabs: Proportion normal-weight concrete mixture as follows:

1. Minimum Compressive Strength: 4000 psi
2. at 28 days.
3. Slump Limit: 4 inches plus or minus 1 inch.
4. Air Content: 6 percent, plus or minus 1.5 percent at point of delivery for 1-inch nominal maximum aggregate size.

2.10 FABRICATING REINFORCEMENT

A. Fabricate steel reinforcement according to CRSI's "Manual of Standard Practice."

2.11 CONCRETE MIXING

A. Ready-Mixed Concrete: Measure, batch, mix, and deliver concrete according to ASTM C 94/C 94M and ASTM C 1116/C 1116M and furnish batch ticket information.

1. When air temperature is between 85 and 90 deg F, reduce mixing and delivery time from 1-1/2 hours to 75 minutes; when air temperature is above 90 deg F, reduce mixing and delivery time to 60 minutes.

B. Project-Site Mixing: Measure, batch, and mix concrete materials and concrete according to ASTM C 94/C 94M. Mix concrete materials in appropriate drum-type batch machine mixer.

1. For mixer capacity of 1 cu. yd. or smaller, continue mixing at least 1-1/2 minutes, but not more than 5 minutes after ingredients are in mixer, before any part of batch is released.
2. For mixer capacity larger than 1 cu. yd., increase mixing time by 15 seconds for each additional 1 cu. yd.
3. Provide batch ticket for each batch discharged and used in the Work, indicating Project identification name and number, date, mixture type, mixture time, quantity, and amount of water added. Record approximate location of final deposit in structure.

PART 3 - EXECUTION

3.1 FORMWORK

A. Design, erect, shore, brace, and maintain formwork, according to ACI 301, to support vertical, lateral, static, and dynamic loads, and construction loads that might be applied, until structure can support such loads.

B. Construct formwork so concrete members and structures are of size, shape, alignment, elevation, and position indicated, within tolerance limits of ACI 117.

C. Limit concrete surface irregularities, designated by ACI 347 as abrupt or gradual, as follows:

1. Class A, 1/8 inch for smooth-formed finished surfaces.
2. Class B, 1/4 inch for rough-formed finished surfaces.

D. Construct forms tight enough to prevent loss of concrete mortar.

E. Fabricate forms for easy removal without hammering or prying against concrete surfaces. Provide crush or wrecking plates where stripping may damage cast concrete surfaces. Provide top forms for inclined surfaces steeper than 1.5 horizontal to 1 vertical.

1. Install keyways, reglets, recesses, and the like, for easy removal.
2. Do not use rust-stained steel form-facing material.

F. Set edge forms, bulkheads, and intermediate screed strips for slabs to achieve required elevations and slopes in finished concrete surfaces. Provide and secure units to support screed strips; use strike-off templates or compacting-type screeds.

G. Provide temporary openings for cleanouts and inspection ports where interior area of formwork is inaccessible. Close openings with panels tightly fitted to forms and securely braced to prevent loss of concrete mortar. Locate temporary openings in forms at inconspicuous locations.

H. Chamfer exterior corners and edges of permanently exposed concrete.

I. Form openings, chases, offsets, sinkages, keyways, reglets, blocking, screeds, and bulkheads required in the Work. Determine sizes and locations from trades providing such items.

J. Clean forms and adjacent surfaces to receive concrete. Remove chips, wood, sawdust, dirt, and other debris just before placing concrete.

K. Retighten forms and bracing before placing concrete, as required, to prevent mortar leaks and maintain proper alignment.

L. Coat contact surfaces of forms with form-release agent, according to manufacturer's written instructions, before placing reinforcement.

3.2 EMBEDDED ITEMS

A. Place and secure anchorage devices and other embedded items required for adjoining work that is attached to or supported by cast-in-place concrete. Use setting drawings, templates, diagrams, instructions, and directions furnished with items to be embedded.

1. Install anchor rods, accurately located, to elevations required and complying with tolerances in Section 7.5 of AISC's "Code of Standard Practice for Steel Buildings and Bridges."
2. Install dovetail anchor slots in concrete structures as indicated.

3.3 REMOVING AND REUSING FORMS

A. General: Formwork for sides of beams, walls, columns, and similar parts of the Work that does not support weight of concrete may be removed after cumulatively curing at not less than 50 deg F for 24 hours after placing concrete. Concrete has to be hard enough to not be damaged by form-removal operations and curing and protection operations need to be maintained.

1. Leave formwork for beam soffits, joists, slabs, and other structural elements that supports weight of concrete in place until concrete has achieved at least 70 percent of its 28-day design compressive strength.
2. Remove forms only if shores have been arranged to permit removal of forms without loosening or disturbing shores.

B. Clean and repair surfaces of forms to be reused in the Work. Split, frayed, delaminated, or otherwise damaged form-facing material will not be acceptable for exposed surfaces. Apply new form-release agent.

C. When forms are reused, clean surfaces, remove fins and laitance, and tighten to close joints. Align and secure joints to avoid offsets. Do not use patched forms for exposed concrete surfaces unless approved by CO.

3.4 SHORES AND RESHORES

A. Comply with ACI 318 and ACI 301 for design, installation, and removal of shoring and reshoring.

1. Do not remove shoring or reshoring until measurement of slab tolerances is complete.

B. Plan sequence of removal of shores and reshore to avoid damage to concrete. Locate and provide adequate reshoring to support construction without excessive stress or deflection.

3.5 STEEL REINFORCEMENT

A. General: Comply with CRSI's "Manual of Standard Practice" for placing reinforcement.

B. Clean reinforcement of loose rust and mill scale, earth, ice, and other foreign materials that would reduce bond to concrete.

C. Accurately position, support, and secure reinforcement against displacement. Locate and support reinforcement with bar supports to maintain minimum concrete cover. Do not tack weld crossing reinforcing bars.

1. Weld reinforcing bars according to AWS D1.4/D 1.4M, where indicated.

D. Set wire ties with ends directed into concrete, not toward exposed concrete surfaces.

E. Install welded wire reinforcement in longest practicable lengths on bar supports spaced to minimize sagging. Lap edges and ends of adjoining sheets at least one mesh spacing. Offset laps of adjoining sheet widths to prevent continuous laps in either direction. Lace overlaps with wire.

3.6 JOINTS

A. General: Construct joints true to line with faces perpendicular to surface plane of concrete.

B. Construction Joints: Install so strength and appearance of concrete are not impaired, at locations indicated on drawings.

1. Place joints perpendicular to main reinforcement. Continue reinforcement across construction joints unless otherwise indicated.
2. Form keyed joints as indicated. Embed keys at least 1-1/2 inches into concrete.
3. Locate joints for beams, slabs, joists, and girders in the middle third of spans. Offset joints in girders a minimum distance of twice the beam width from a beam-girder intersection.
4. Locate horizontal joints in walls and columns at underside of floors, slabs, beams, and girders and at the top of footings or floor slabs.
5. Space vertical joints in walls as indicated. Locate joints beside piers integral with walls, near corners, and in concealed locations where possible.
6. Use a bonding agent at locations where fresh concrete is placed against hardened or partially hardened concrete surfaces.
7. Use epoxy-bonding adhesive at locations where fresh concrete is placed against hardened or partially hardened concrete surfaces.

C. Doweled Joints: Install dowel bars and support assemblies at joints where indicated. Lubricate or asphalt coat one-half of dowel length to prevent concrete bonding to one side of joint.

3.7 CONCRETE PLACEMENT

A. Before placing concrete, verify that installation of formwork, reinforcement, and embedded items is complete and that required inspections have been performed.

B. Do not add water to concrete during delivery, at Project site, or during placement unless approved by Structural engineer.

C. Before test sampling and placing concrete, water may be added at Project site, subject to limitations of ACI 301.

1. Do not add water to concrete after adding high-range water-reducing admixtures to mixture.

D. Deposit concrete continuously in one layer or in horizontal layers of such thickness that no new concrete will be placed on concrete that has hardened enough to cause seams or planes of weakness. If a section cannot be placed continuously, provide construction joints as indicated. Deposit concrete to avoid segregation.

1. Deposit concrete in horizontal layers of depth to not exceed formwork design pressures and in a manner to avoid inclined construction joints.
2. Consolidate placed concrete with mechanical vibrating equipment according to ACI 301.
3. Do not use vibrators to transport concrete inside forms. Insert and withdraw vibrators vertically at uniformly spaced locations to rapidly penetrate placed layer and at least 6 inches into preceding layer. Do not insert vibrators into lower layers of concrete that have begun to lose plasticity. At each insertion, limit duration of vibration to time necessary to consolidate concrete and complete embedment of reinforcement and other embedded items without causing mixture constituents to segregate.

E. Deposit and consolidate concrete slabs in a continuous operation, within limits of construction joints, until placement of a panel or section is complete.

1. Consolidate concrete during placement operations so concrete is thoroughly worked around reinforcement and other embedded items and into corners.
2. Maintain reinforcement in position on chairs during concrete placement.
3. Screed slab surfaces with a straightedge and strike off to correct elevations.
4. Slope surfaces uniformly to drains where required.

5. Begin initial floating using bull floats or darbies to form a uniform and open-textured surface plane, before excess bleedwater appears on the surface. Do not further disturb slab surfaces before starting finishing operations.

F. Cold-Weather Placement: Comply with ACI 306.1 and as follows. Protect concrete work from physical damage or reduced strength that could be caused by frost, freezing actions, or low temperatures.

1. When average high and low temperature is expected to fall below 40 deg F for three successive days, maintain delivered concrete mixture temperature within the temperature range required by ACI 301.
2. Do not use frozen materials or materials containing ice or snow. Do not place concrete on frozen subgrade or on subgrade containing frozen materials.
3. Do not use calcium chloride, salt, or other materials containing antifreeze agents or chemical accelerators unless otherwise specified and approved in mixture designs.

G. Hot-Weather Placement: Comply with ACI 301 and as follows:

1. Maintain concrete temperature below 90 deg F at time of placement. Chilled mixing water or chopped ice may be used to control temperature, provided water equivalent of ice is calculated to total amount of mixing water. Using liquid nitrogen to cool concrete is Contractor's option.
2. Fog-spray forms, steel reinforcement, and subgrade just before placing concrete. Keep subgrade uniformly moist without standing water, soft spots, or dry areas.

3.8 FINISHING FORMED SURFACES

A. Rough-Formed Finish: As-cast concrete texture imparted by form-facing material with tie holes and defects repaired and patched. Remove fins and other projections that exceed specified limits on formed-surface irregularities.

1. Apply to concrete surfaces not exposed to public view.

B. Smooth-Formed Finish: As-cast concrete texture imparted by form-facing material, arranged in an orderly and symmetrical manner with a minimum of seams. Repair and patch tie holes and defects. Remove fins and other projections that exceed specified limits on formed-surface irregularities.

1. Apply to concrete surfaces exposed to public view, to be covered with material applied directly to concrete.

C. Related Unformed Surfaces: At tops of walls, horizontal offsets, and similar unformed surfaces adjacent to formed surfaces, strike off smooth and finish with a texture matching adjacent formed surfaces. Continue final surface treatment of formed surfaces uniformly across adjacent unformed surfaces unless otherwise indicated.

3.9 FINISHING SLABS: Section 32 13 13 "Concrete Paving" for concrete pavement and walks.

3.10 MISCELLANEOUS CONCRETE ITEMS

A. Filling In: Fill in holes and openings left in concrete structures after work of other trades is in place unless otherwise indicated. Mix, place, and cure concrete, as specified, to blend with in-place construction. Provide other miscellaneous concrete filling indicated or required to complete the Work.

B. Steel Pan Stairs: Provide concrete fill for steel pan stair treads, landings, and associated items. Cast-in inserts and accessories as shown on Drawings. Screed, tamp, and trowel finish concrete surfaces.

3.11 CONCRETE PROTECTING AND CURING

A. General: Protect freshly placed concrete from premature drying and excessive cold or hot temperatures. Comply with ACI 306.1 for cold-weather protection and ACI 301 for hot-weather protection during curing.

B. Evaporation Retarder: Apply evaporation retarder to unformed concrete surfaces if hot, dry, or windy conditions cause moisture loss approaching before and during finishing operations. Apply according to manufacturer's written instructions after placing, screeding, and bull floating or darbying concrete, but before float finishing.

C. Formed Surfaces: Cure formed concrete surfaces, including underside of beams, supported slabs, and other similar surfaces. If forms remain during curing period, moist cure after loosening forms. If removing forms before end of curing period, continue curing for the remainder of the curing period.

D. Unformed Surfaces: Begin curing immediately after finishing concrete. Cure unformed surfaces, including floors and slabs, concrete floor toppings, and other surfaces.

E. Cure concrete according to ACI 308.1, by one or a combination of the following methods:

1. Moisture Curing: Keep surfaces continuously moist for not less than seven days with the following materials:

   a. Water.
   b. Continuous water-fog spray.
   c. Absorptive cover, water saturated, and kept continuously wet. Cover concrete surfaces and edges with 12-inch lap over adjacent absorptive covers.

2. Moisture-Retaining-Cover Curing: Cover concrete surfaces with moisture-retaining cover for curing concrete, placed in widest practicable width, with sides and ends lapped at least 12 inches, and sealed by waterproof tape or adhesive. Cure for not less than seven days. Immediately repair any holes or tears during curing period using cover material and waterproof tape.
3. Curing Compound: Apply uniformly in continuous operation by power spray or roller according to manufacturer's written instructions. Recoat areas subjected to heavy rainfall within three hours after initial application. Maintain continuity of coating and repair damage during curing period.

3.12 JOINT FILLING

A. Prepare, clean, and install joint filler according to manufacturer's written instructions.

1. Defer joint filling until concrete has aged at least one month. Do not fill joints until construction traffic has permanently ceased.

B. Remove dirt, debris, saw cuttings, curing compounds, and sealers from joints; leave contact faces of joint clean and dry.

C. Install semirigid joint filler full depth in saw-cut joints and at least 2 inches deep in formed joints. Overfill joint and trim joint filler flush with top of joint after hardening.

3.13 CONCRETE SURFACE REPAIRS

A. Defective Concrete: Repair and patch defective areas when approved by Architect. Remove and replace concrete that cannot be repaired and patched to CO's approval.

B. Patching Mortar: Mix dry-pack patching mortar, consisting of one-part portland cement to two and one-half parts fine aggregate passing a No. 16 sieve, using only enough water for handling and placing.

C. Repairing Formed Surfaces: Surface defects include color and texture irregularities, cracks, spalls, air bubbles, honeycombs, rock pockets, fins and other projections on the surface, and stains and other discolorations that cannot be removed by cleaning.

1. Immediately after form removal, cut out honeycombs, rock pockets, and voids more than 1/2 inch in any dimension to solid concrete. Limit cut depth to 3/4 inch. Make edges of cuts perpendicular to concrete surface. Clean, dampen with water, and brush-coat holes and voids with bonding agent. Fill and compact with patching mortar before bonding agent has dried. Fill form-tie voids with patching mortar or cone plugs secured in place with bonding agent.
2. Repair defects on surfaces exposed to view by blending white portland cement and standard portland cement so that, when dry, patching mortar will match surrounding color. Patch a test area at inconspicuous locations to verify mixture and color match before proceeding with patching. Compact mortar in place and strike off slightly higher than surrounding surface.
3. Repair defects on concealed formed surfaces that affect concrete's durability and structural performance as determined by CO.

D. Repairing Unformed Surfaces: Test unformed surfaces, for finish and verify surface tolerances specified for each surface. Correct low and high areas. Test surfaces sloped to drain for trueness of slope and smoothness; use a sloped template.

1. Repair finished surfaces containing defects. Surface defects include spalls, popouts, honeycombs, rock pockets, crazing and cracks in excess of 0.01 inch wide or that penetrate to reinforcement or completely through unreinforced sections regardless of width, and other objectionable conditions.
2. After concrete has cured at least 14 days, correct high areas by grinding.
3. Correct localized low areas during or immediately after completing surface finishing operations by cutting out low areas and replacing with patching mortar. Finish repaired areas to blend into adjacent concrete.
4. Repair defective areas, except random cracks and single holes 1 inch or less in diameter, by cutting out and replacing with fresh concrete. Remove defective areas with clean, square cuts and expose steel reinforcement with at least a 3/4-inch clearance all around. Dampen concrete surfaces in contact with patching concrete and apply bonding agent. Mix patching concrete of same materials and mixture as original concrete except without coarse aggregate. Place, compact, and finish to blend with adjacent finished concrete. Cure in same manner as adjacent concrete.

E. Perform structural repairs of concrete, subject to CO's approval, using epoxy adhesive and patching mortar.

F. Repair materials and installation not specified above may be used, subject to CO's approval.

3.14 FIELD QUALITY CONTROL

A. Testing and Inspecting: Contractor will engage a qualified testing and inspecting agency to perform tests and inspections and to submit reports.

B. Inspections:

1. Steel reinforcement placement.
2. Steel reinforcement welding.
3. Headed bolts and studs.
4. Verification of use of required design mixture.
5. Concrete placement, including conveying and depositing.
6. Curing procedures and maintenance of curing temperature.
7. Verification of concrete strength before removal of shores and forms from beams and slabs.

C. Concrete Tests: Testing of composite samples of fresh concrete obtained according to ASTM C 172 shall be performed according to the following requirements:

1. Testing Frequency: Obtain one composite sample for each day's pour of each concrete mixture exceeding 5 cu. yd. but less than 25 cu. yd., plus one set for each additional 50 cu. yd. or fraction thereof.
2. Testing Frequency: Obtain at least one composite sample for each 100-cu. yd. or fraction thereof of each concrete mixture placed each day.
   a. When frequency of testing will provide fewer than five compressive-strength tests for each concrete mixture, testing shall be conducted from at least five randomly selected batches or from each batch if fewer than five are used.
3. Slump: ASTM C 143/C 143M; one test at point of placement for each composite sample, but not less than one test for each day's pour of each concrete mixture. Perform additional tests when concrete consistency appears to change.
4. Air Content: ASTM C 231, pressure method, for normal-weight concrete; ASTM C 173/C 173M, volumetric method, for structural lightweight concrete; one test for each composite sample, but not less than one test for each day's pour of each concrete mixture.
5. Concrete Temperature: ASTM C 1064/C 1064M; one test hourly when air temperature is 40 deg F and below and when 80 deg F and above, and one test for each composite sample.
6. Unit Weight: ASTM C 567, fresh unit weight of structural lightweight concrete; one test for each composite sample, but not less than one test for each day's pour of each concrete mixture.
7. Compression Test Specimens: ASTM C 31/C 31M.
   a. Cast and laboratory cure two sets of two standard cylinder specimens for each composite sample.
   b. Cast and field cure two sets of two standard cylinder specimens for each composite sample.
8. Compressive-Strength Tests: ASTM C 39/C 39M; test one set of two laboratory-cured specimens at 7 days and one set of two specimens at 28 days.
   a. Test one set of two field-cured specimens at 7 days and one set of two specimens at 28 days.
   b. A compressive-strength test shall be the average compressive strength from a set of two specimens obtained from same composite sample and tested at age indicated.

9. When strength of field-cured cylinders is less than 85 percent of companion laboratory-cured cylinders, Contractor shall evaluate operations and provide corrective procedures for protecting and curing in-place concrete.
10. Strength of each concrete mixture will be satisfactory if every average of any three consecutive compressive-strength tests equals or exceeds specified compressive strength and no compressive-strength test value falls below specified compressive strength by more than 500 psi
11. Test results shall be reported in writing to CO, concrete manufacturer, and Contractor within 48 hours of testing. Reports of compressive-strength tests shall contain Project identification name and number, date of concrete placement, name of concrete testing and inspecting agency, location of concrete batch in Work, design compressive strength at 28 days, concrete mixture proportions and materials, compressive breaking strength, and type of break for both 7- and 28-day tests.
12. Nondestructive Testing: Impact hammer, sonoscope, or other nondestructive device may be permitted by Architect but will not be used as sole basis for approval or rejection of concrete.
13. Additional Tests: Testing and inspecting agency shall make additional tests of concrete when test results indicate that slump, air entrainment, compressive strengths, or other requirements have not been met, as directed by Architect. Testing and inspecting agency may conduct tests to determine adequacy of concrete by cored cylinders complying with ASTM C 42/C 42M or by other methods as directed by Architect.
14. Additional testing and inspecting, at Contractor's expense, will be performed to determine compliance of replaced or additional work with specified requirements.
15. Correct deficiencies in the Work that test reports and inspections indicate do not comply with the Contract Documents.

END OF SECTION 03 30 00

SECTION 05 50 00 - METAL FABRICATIONS

PART 1 - GENERAL

1.1 RELATED DOCUMENTS

A. Drawings and general provisions of the Contract, including General and Supplementary Conditions and Division 01 Specification Sections, apply to this Section.

1.2 SUMMARY

A. Section Includes:

1. Miscellaneous steel framing and supports.
2. Steel weld plates and angles.

B. Products furnished, but not installed, under this Section:

1. Anchor bolts, steel pipe sleeves, slotted-channel inserts, and wedge-type inserts indicated to be cast into concrete or built into unit masonry.
2. Steel weld plates and angles for casting into concrete for applications where they are not specified in other Sections.

C. Related Sections:

1. Section 05 73 00 " Metal Mesh Infill."

1.3 PERFORMANCE REQUIREMENTS

A. Delegated Design: Design including comprehensive engineering analysis by a qualified professional engineer registered in Commonwealth of Kentucky, using performance requirements and design criteria indicated.

B. Thermal Movements: Allow for thermal movements from ambient and surface temperature changes acting on exterior metal fabrications by preventing buckling, opening of joints, overstressing of components, failure of connections, and other detrimental effects.

1. Temperature Change: 120 deg F, ambient; 180 deg F, material surfaces.

1.4 ACTION SUBMITTALS

A. Product Data: For the following:

1. Steel components.
2. Paint products.
3. Grout.

B. Shop Drawings: Show fabrication and installation details for metal fabrications.

1. Include plans, elevations, sections, and details of metal fabrications and their connections. Show anchorage and accessory items.
2. Templates: For anchors and bolts

C. Delegated-Design Submittal: For installed products indicated to comply with performance requirements and design criteria, including analysis data signed and sealed by the qualified professional engineer, registered in Commonwealth of Kentucky, responsible for their preparation.

1.5 INFORMATIONAL SUBMITTALS

A. Qualification Data: For qualified professional engineer registered in Commonwealth of Kentucky.

B. Mill Certificates: Signed by manufacturers of stainless-steel certifying that products furnished comply with requirements.

C. Welding certificates.

D. Paint Compatibility Certificates: From manufacturers of topcoats applied over shop primers certifying that shop primers are compatible with topcoats.

1.6 QUALITY ASSURANCE

A. Welding Qualifications: Qualify procedures and personnel according to AWS D1.1/D1.1M, "Structural Welding Code - Steel."

B. Welding Qualifications: Qualify procedures and personnel according to the following:

1. AWS D1.1/D1.1M, "Structural Welding Code - Steel."
2. AWS D1.6, "Structural Welding Code - Stainless Steel."

1.7 PROJECT CONDITIONS

A. Field Measurements: Verify actual locations of walls and other construction contiguous with metal fabrications by field measurements before fabrication.

1.8 COORDINATION

A. Coordinate selection of shop primers with topcoats to be applied over them. Comply with paint and coating manufacturers' written recommendations to ensure that shop primers and topcoats are compatible with one another.

B. Coordinate installation of anchorages and steel weld plates and angles for casting into concrete. Furnish setting drawings, templates, and directions for installing anchorages, including sleeves, concrete inserts, anchor bolts, and items with integral anchors, which are to be embedded in concrete or masonry. Deliver such items to Project site in time for installation.

PART 2 - PRODUCTS

2.1 METALS, GENERAL

A. Metal Surfaces, General: Provide materials with smooth, flat surfaces unless otherwise indicated. For metal fabrications exposed to view in the completed Work, provide materials without seam marks, roller marks, rolled trade names, or blemishes.

2.2 FERROUS METALS

A. Steel Plates, Shapes, and Bars: ASTM A 36/A 36M.

B. Stainless-Steel Sheet, Strip, and Plate: ASTM A 240/A 240M or ASTM A 666, Type 304.

C. Stainless-Steel Bars and Shapes: ASTM A 276, Type 304.

D. Steel Tubing: ASTM A 500, cold-formed steel tubing.

E. Steel Pipe: ASTM A 53/A 53M, standard weight (Schedule 40) unless otherwise indicated.

2.3 FASTENERS

A. General: Unless otherwise indicated, provide Type 304 stainless-steel fasteners for exterior use and zinc-plated fasteners with coating complying with ASTM B 633 Class Fe/Zn 5, at exterior walls. Select fasteners for type, grade, and class required.

B. Cast-in-Place Anchors in Concrete: Either threaded type or wedge type unless otherwise indicated; galvanized ferrous castings, either ASTM A 47/A 47M malleable iron or ASTM A 27/A 27M cast steel. Provide bolts, washers, and shims as needed, all hot dip galvanized per ASTM F 2329.

C. Post-Installed Anchors: Torque-controlled expansion anchors or chemical anchors.

1. Material for Exterior Locations and Where Stainless Steel is Indicated: Alloy Group 1 A1) stainless-steel bolts, ASTM F 593, and nuts, ASTM F 594.

2.4 MISCELLANEOUS MATERIALS

A. Universal Shop Primer: Fast-curing, lead- and chromate-free, universal modified-alkyd primer complying with MPI#79 and compatible with topcoat.

1. Use primer containing pigments that make it easily distinguishable from zinc-rich primer.

B. Epoxy Zinc-Rich Primer: Complying with MPI#20 and compatible with topcoat.

C. Galvanizing Repair Paint: High-zinc-dust-content paint complying with SSPC-Paint 20 and compatible with paints specified to be used over it.

D. Nonshrink, Nonmetallic Grout: Factory-packaged, nonstaining, noncorrosive, nongaseous grout complying with ASTM C 1107. Provide grout specifically recommended by manufacturer for exterior applications.

E. Concrete: Comply with requirements in Section 03 30 00 "Cast-in-Place Concrete" for normal-weight, air-entrained, concrete with a minimum 28-day compressive strength of 4000 psi.

2.5 FABRICATION, GENERAL

A. Shop Assembly: Preassemble items in the shop to greatest extent possible. Disassemble units only as necessary for shipping and handling limitations. Use connections that maintain structural value of joined pieces. Clearly mark units for reassembly and coordinated installation.

B. Cut, drill, and punch metals cleanly and accurately. Remove burrs and ease edges to a radius of approximately 1/32 inch unless otherwise indicated. Remove sharp or rough areas on exposed surfaces.

C. Form bent-metal corners to smallest radius possible without causing grain separation or otherwise impairing work.

D. Form exposed work with accurate angles and surfaces and straight edges.

E. Weld corners and seams continuously to comply with the following:

1. Use materials and methods that minimize distortion and develop strength and corrosion resistance of base metals.
2. Obtain fusion without undercut or overlap.
3. Remove welding flux immediately.
4. At exposed connections, finish exposed welds and surfaces smooth and blended so no roughness shows after finishing.

F. Form exposed connections with hairline joints, flush and smooth, using concealed fasteners or welds where possible. Where exposed fasteners are required, use Phillips flat-head (countersunk) fasteners unless otherwise indicated. Locate joints where least conspicuous.

G. Fabricate seams and other connections that will be exposed to weather in a manner to exclude water. Provide weep holes where water may accumulate.

H. Cut, reinforce, drill, and tap metal fabrications as indicated to receive finish hardware, screws, and similar items.

I. Provide for anchorage of type indicated, coordinate with supporting structure. Space anchoring devices to secure metal fabrications rigidly in place and to support indicated loads.

1. Where units are indicated to be cast into concrete or built into masonry, equip with integrally welded steel strap anchors, with a minimum embedment hook, not less than 8 inches from ends and corners of units and 24 inches o.c., unless otherwise indicated.

2.6 MISCELLANEOUS FRAMING AND SUPPORTS

A. General: Provide steel framing and supports not specified in other Sections as needed to complete the Work.

B. Fabricate units from steel shapes, plates, and bars of welded construction unless otherwise indicated. Fabricate to sizes, shapes, and profiles indicated and as necessary to receive adjacent construction.

1. Furnish inserts for units installed after concrete is placed.

C. Galvanize miscellaneous framing and supports where indicated.

D. Prime miscellaneous framing and supports with zinc-rich primer.

2.7 STEEL WELD PLATES AND ANGLES

A. Provide steel weld plates and angles not specified in other Sections, for items supported from concrete construction as needed to complete the Work. Provide each unit with no fewer than two integrally welded steel strap anchors for embedding in concrete.

2.8 FINISHES, GENERAL

A. Comply with NAAMM's "Metal Finishes Manual for Architectural and Metal Products" for recommendations for applying and designating finishes.

B. Finish metal fabrications after assembly.

C. Finish exposed surfaces to remove tool and die marks and stretch lines, and to blend into surrounding surface.

2.9 STEEL AND IRON FINISHES

A. Galvanizing: Hot dip galvanize items as indicated to comply with ASTM A 153/A 153M for steel and iron hardware and with ASTM A 123/A 123M for other steel and iron products.

1. Do not quench or apply post galvanizing treatments that might interfere with paint adhesion.

B. Preparation for Shop Priming: Prepare uncoated ferrous-metal surfaces to comply with requirements indicated below for environmental exposure conditions of installed metal fabrications:

1. Exteriors (SSPC Zone 1B) and Items Indicated to Receive Zinc-Rich Primer: SSPC-SP 6/NACE No. 3, "Commercial Blast Cleaning."

C. Shop Priming: Apply shop primer to uncoated surfaces of metal fabrications, except those with galvanized finishes and those to be embedded in concrete, sprayed-on fireproofing, or masonry, to comply with SSPC-PA 1, "Paint Application Specification No. 1: Shop, Field, and Maintenance Painting," for shop painting.

PART 3 - EXECUTION

3.1 INSTALLATION, GENERAL

A. Cutting, Fitting, and Placement: Perform cutting, drilling, and fitting required for installing metal fabrications. Set metal fabrications accurately in location, alignment, and elevation; with edges and surfaces level, plumb, true, and free of rack; and measured from established lines and levels.

B. Fit exposed connections accurately together to form hairline joints. Weld connections that are not to be left as exposed joints but cannot be shop welded because of shipping size limitations. Do not weld, cut, or abrade surfaces of exterior units that have been hot dip galvanized after fabrication and are for bolted or screwed field connections.

C. Field Welding: Comply with the following requirements:

1. Use materials and methods that minimize distortion and develop strength and corrosion resistance of base metals.
2. Obtain fusion without undercut or overlap.
3. Remove welding flux immediately.
4. At exposed connections, finish exposed welds and surfaces smooth and blended so no roughness shows after finishing and contour of welded surface matches that of adjacent surface.

D. Fastening to In-Place Construction: Provide anchorage devices and fasteners where metal fabrications are required to be fastened to in-place construction. Provide threaded fasteners for use with concrete and masonry inserts, toggle bolts, through bolts, lag screws, wood screws, and other connectors.

E. Provide temporary bracing or anchors in formwork for items that are to be built into concrete, masonry, or similar construction.

1. Use nonshrink, nonmetallic grout in exposed locations unless otherwise indicated.
2. Pack grout solidly between bearing surfaces and plates to ensure that no voids remain.

3.2 ADJUSTING AND CLEANING

A. Touchup Painting: Immediately after erection, clean field welds, bolted connections, and abraded areas. Paint uncoated and abraded areas with the same material as used for shop painting to comply with SSPC-PA 1 for touching up shop-painted surfaces.

1. Apply by brush or spray to provide a minimum 2.0-mil dry film thickness.

B. Galvanized Surfaces: Clean field welds, bolted connections, and abraded areas and repair galvanizing to comply with ASTM A 780.

END OF SECTION 05 50 00

SECTION 05 73 00 - METAL RAILINGS

PART 1 - GENERAL

1.1 RELATED DOCUMENTS

A. Drawings and general provisions of the Contract, including General and Supplementary Conditions and Division 01 Specification Sections, apply to this Section.

1.2 DEFINITIONS

A. Railings: Guards, handrails, and similar devices used for protection of occupants at open-sided areas, pedestrian guidance and support, visual separation, or wall protection.

1.3 PERFORMANCE REQUIREMENTS

A. Delegated Design: Design railings, including comprehensive engineering analysis by a qualified professional engineer registered in Commonwealth of Kentucky, using performance requirements and design criteria indicated.

B. General: In engineering railings to withstand structural loads indicated, determine allowable design working stresses of railing materials based on the following:

1. Steel: 72 percent of minimum yield strength.

C. Structural Performance: Railings shall withstand the effects of gravity loads and the following loads and stresses within limits and under conditions indicated:

1. Handrails and Top Rails of Guards:

a. Uniform load of 50 lbf/ft. applied in any direction.
b. Concentrated load of 200 lbf applied in any direction.
c. Uniform and concentrated loads need not be assumed to act concurrently.

2. Infill of Guards:

a. Concentrated load of 50 lbf applied horizontally on an area of 1 sq. ft.
b. Infill load and other loads need not be assumed to act concurrently.

3. Glass-Supported Railings: Support each section of top rail by a minimum of three glass panels or by other means so top rail will remain in place if any one panel fails.

D. Thermal Movements: Allow for thermal movements from ambient and surface temperature changes acting on exterior metal fabrications by preventing buckling, opening of joints, overstressing of components, failure of connections, and other detrimental effects.

1. Temperature Change: 120 deg F, ambient; 180 deg F, material surfaces.

E. Control of Corrosion: Prevent galvanic action and other forms of corrosion by insulating metals and other materials from direct contact with incompatible materials.

1.4 ACTION SUBMITTALS

A. Product Data: For the following:

1. Manufacturer's product lines of railings assembled from standard components.
2. Grout, anchoring cement, and paint products.

B. Shop Drawings: Include plans, elevations, sections, details, and attachments to other work.

1. For illuminated posts, include wiring diagrams and roughing-in details.

C. Samples for Initial Selection: For products involving selection of color, texture, or design, including mechanical finishes.

1. Assembled Samples of railing systems, made from full-size components, including top rail, post, handrail, and infill. Show method of finishing members at intersections. Samples need not be full height.

D. Delegated-Design Submittal: For installed products indicated to comply with performance requirements and design criteria, including analysis data signed and sealed by the qualified professional engineer, registered in Commonwealth of Kentucky, responsible for their preparation.

1.5 INFORMATIONAL SUBMITTALS

A. Qualification Data: For qualified professional engineer, registered in Commonwealth of Kentucky, and testing agency.

B. Qualifications of stainless-steel products certifying that products furnished comply with requirements.

C. Welding certificates.

D. Product Test Reports: Based on evaluation of comprehensive tests performed by a qualified testing agency, according to ASTM E 894 and ASTM E 935.

E. Preconstruction test reports.

1.6 QUALITY ASSURANCE

A. Source Limitations: Obtain each type of railing from single source from single manufacturer.

B. Welding Qualifications: Qualify procedures and personnel according to the following:

1. AWS D1.1/D1.1M, "Structural Welding Code - Steel."
2. AWS D1.6, "Structural Welding Code - Stainless Steel."

C. Safety Glazing Labeling: Permanently mark glass with certification label of the SGCC or manufacturer. Label shall indicate manufacturer's name, type of glass, thickness, and safety glazing standard with which glass complies.

D. Mockups: Build mockups to verify selections made under sample submittals and to demonstrate aesthetic effects and set quality standards for fabrication and installation.

1. Build mockups as shown on Drawings.
2. Build mockups for each form and finish of railing consisting of two posts, top rail, infill area, and anchorage system components that are full height and are not less than 24 inches in length.
3. Approved mockups may become part of the completed Work if undisturbed at time of Substantial Completion.

E. Preinstallation Conference: Conduct conference at Project site.

1.7 PROJECT CONDITIONS

A. Field Measurements: Verify actual locations of walls and other construction contiguous with railings by field measurements before fabrication and indicate measurements on Shop Drawings.

1.8 COORDINATION AND SCHEDULING

A. Coordinate selection of shop primers with topcoats to be applied over them. Comply with paint and coating manufacturers' written recommendations to ensure that shop primers and topcoats are compatible with one another.

B. Coordinate installation of anchorages for railings. Furnish setting drawings, templates, and directions for installing anchorages, including sleeves, concrete inserts, anchor bolts, and items with integral anchors, which are to be embedded in concrete or masonry. Deliver such items to Project site in time for installation.

C. Schedule installation so wall attachments are made only to completed walls. Do not support railings temporarily by any means that do not suit structural performance requirements.

PART 2 - PRODUCTS

2.1 METALS, GENERAL

A. Metal Surfaces, General: Provide materials with smooth surfaces, without seam marks, roller marks, rolled trade names, stains, discolorations, or blemishes.

B. Brackets, Flanges, and Anchors: Same metal and finish as supported rails unless otherwise indicated.

1. Provide formed-steel brackets with predrilled hole for bolted anchorage and with snap-on cover that matches rail finish and conceals bracket base and bolt head.

2.2 STEEL AND IRON

A. Tubing: ASTM A 500 (cold formed) or [ASTM A 513.

B. Bars: Hot-rolled, carbon steel complying with ASTM A 29/A 29M, Grade 1010.

C. Plates, Shapes, and Bars: ASTM A 36/A 36M.

D. Cast Iron: Either gray iron, ASTM A 48/A 48M, or malleable iron, ASTM A 47/A 47M, unless otherwise indicated.

2.3 FASTENERS

A. Fastener Materials: Unless otherwise indicated, provide the following:

1. Galvanized-Steel Components: Plated-steel fasteners complying with ASTM B 633, Class Fe/Zn 25 for electrodeposited zinc coating.

B. Fasteners for Anchoring to Other Construction: Select fasteners of type, grade, and class required to produce connections suitable for anchoring railings to other types of construction indicated and capable of withstanding design loads.

C. Provide concealed fasteners for interconnecting railing components and for attaching railings to other work unless exposed fasteners are unavoidable.

1. Provide tamper-resistant flat-head machine screws for exposed fasteners unless otherwise indicated.

D. Anchors, General: Anchors capable of sustaining, without failure, a load equal to six times the load imposed when installed in unit masonry and four times the load imposed when installed in concrete, as determined by testing according to ASTM E 488, conducted by a qualified independent testing agency.

E. Post-Installed Anchors: Torque-controlled expansion anchors or chemical anchors.

2.4 MISCELLANEOUS MATERIALS

A. Welding Rods and Bare Electrodes: Select according to AWS specifications for metal alloy welded.

1. Welded and as required for color match, strength, and compatibility in fabricated items.

B. Universal Shop Primer: Fast-curing, lead- and chromate-free, universal modified-alkyd primer complying with MPI#79 and compatible with topcoat.

1. Use primer containing pigments that make it easily distinguishable from zinc-rich primer.

C. Epoxy Zinc-Rich Primer: Complying with MPI#20 and compatible with topcoat.

D. Epoxy Intermediate Coat: Complying with MPI#77 and compatible with primer and topcoat.

E. Polyurethane Topcoat: Complying with MPI #72 and compatible with undercoat.

F. Nonshrink, Nonmetallic Grout: Factory-packaged, nonstaining, noncorrosive, nongaseous grout complying with ASTM C 1107. Provide grout specifically recommended by manufacturer for exterior applications.

G. Anchoring Cement: Factory-packaged, nonshrink, nonstaining, hydraulic-controlled expansion cement formulation for mixing with water at Project site to create pourable anchoring, patching, and grouting compound.

1. Water-Resistant Product: At exterior locations provide formulation that is resistant to erosion from water exposure without needing protection by a sealer or waterproof coating and that is recommended by manufacturer for exterior use.

2.5 FABRICATION

A. General: Fabricate railings to comply with requirements indicated for design, dimensions, member sizes and spacing, details, finish, and anchorage, but not less than that required to support structural loads.

B. Assemble railings in the shop to greatest extent possible to minimize field splicing and assembly. Disassemble units only as necessary for shipping and handling limitations. Clearly mark units for reassembly and coordinated installation. Use connections that maintain structural value of joined pieces.

C. Make up wire-rope assemblies in the shop to field-measured dimensions with fittings machine swaged. Minimize amount of turnbuckle take-up used for dimensional adjustment so maximum amount is available for tensioning wire ropes. Tag wire-rope assemblies and fittings to identify installation locations and orientations for coordinated installation.

D. Cut, drill, and punch metals cleanly and accurately. Remove burrs and ease edges to a radius of approximately 1/32 inch unless otherwise indicated. Remove sharp or rough areas on exposed surfaces.

E. Form work true to line and level with accurate angles and surfaces.

F. Fabricate connections that will be exposed to weather in a manner to exclude water. Provide weep holes where water may accumulate. Locate weep holes in inconspicuous locations.

G. Cut, reinforce, drill, and tap as indicated to receive finish hardware, screws, and similar items.

H. Connections: Fabricate railings with welded connections unless otherwise indicated.

I. Welded Connections: Cope components at connections to provide close fit, or use fittings designed for this purpose. Weld all around at connections, including at fittings.

1. Use materials and methods that minimize distortion and develop strength and corrosion resistance of base metals.
2. Obtain fusion without undercut or overlap.
3. Remove flux immediately.
4. At exposed connections, finish exposed welds to comply with NOMMA's "Voluntary Joint Finish Standards" for Type 1 welds: no evidence of a welded joint.

J. Mechanical Connections: Connect members with concealed mechanical fasteners and fittings. Fabricate members and fittings to produce flush, smooth, rigid, hairline joints.

1. Fabricate splice joints for field connection using an epoxy structural adhesive if this is manufacturer's standard splicing method.

K. Form changes in direction as follows:

1. As detailed.

L. Bend members in jigs to produce uniform curvature for each configuration required; maintain cross section of member throughout entire bend without buckling, twisting, cracking, or otherwise deforming exposed surfaces of components.

M. Close exposed ends of hollow railing members with prefabricated end fittings.

N. Provide wall returns at ends of wall-mounted handrails unless otherwise indicated. Close ends of returns unless clearance between end of rail and wall is 1/4 inch or less.

O. Brackets, Flanges, Fittings, and Anchors: Provide wall brackets, flanges, miscellaneous fittings, and anchors to interconnect railing members to other work unless otherwise indicated.

P. For railing posts set in concrete, provide stainless-steel sleeves not less than 6 inches long with inside dimensions not less than 1/2 inch greater than outside dimensions of post, with metal plate forming bottom closure.

2.6 GLAZING PANEL FABRICATION

A. General: Fabricate to sizes and shapes required; provide for proper edge clearance and bite on glazing panels.

1. Clean-cut or flat-grind edges at butt-glazed sealant joints to produce square edges with slight chamfers at junctions of edges and faces
2. Grind smooth exposed edges, including those at open joints, to produce square edges with slight chamfers at junctions of edges and faces.

B. Infill Panels: Provide laminated, tempered glass panels.

2.7 GENERAL FINISH REQUIREMENTS

A. Comply with NAAMM's "Metal Finishes Manual for Architectural and Metal Products" for recommendations for applying and designating finishes.

B. Protect mechanical finishes on exposed surfaces from damage by applying a strippable, temporary protective covering before shipment.

C. Appearance of Finished Work: Noticeable variations in same piece are not acceptable. Variations in appearance of abutting or adjacent pieces are acceptable if they are within one-half of the range of approved Samples. Variations in appearance of other components are

acceptable if they are within the range of approved Samples and are assembled or installed to minimize contrast.

D. Provide exposed fasteners with finish matching appearance, including color and texture, of railings.

2.8 STEEL AND IRON FINISHES

A. Galvanized Railings:

1. Hot dip galvanize steel and iron railings, including hardware, after fabrication.
2. Comply with ASTM A 123/A 123M for hot-dip galvanized railings.
3. Comply with ASTM A 153/A 153M for hot-dip galvanized hardware.
4. Do not quench or apply post galvanizing treatments that might interfere with paint adhesion.
5. Fill vent and drain holes that are exposed in the finished Work, unless indicated to remain as weep holes, by plugging with zinc solder and filing off smooth.

B. For galvanized railings, provide hot-dip galvanized fittings, brackets, fasteners, sleeves, and other ferrous components.

C. Preparing Galvanized Railings for Shop Priming: After galvanizing, thoroughly clean railings of grease, dirt, oil, flux, and other foreign matter, and treat with etching cleaner.

D. For nongalvanized-steel railings, provide nongalvanized ferrous-metal fittings, brackets, fasteners, and sleeves, except galvanize anchors to be embedded in exterior concrete or masonry.

E. Preparing Nongalvanized Items for Shop Priming: Prepare uncoated ferrous-metal surfaces to comply with requirements indicated below:

1. Exterior Railings: SSPC-SP 6/NACE No. 3, "Commercial Blast Cleaning."
2. Railings Indicated to Receive Zinc-Rich Primer: SSPC-SP 6/NACE No. 3, "Commercial Blast Cleaning."
3. Railings Indicated to Receive Primers Specified in Section 099600 "High-Performance Coatings": SSPC-SP 6/NACE No. 3, "Commercial Blast Cleaning."
4. Other Railings: SSPC-SP 7/NACE No. 4, "Brush-off Blast Cleaning."

F. Primer Application: Apply shop primer to prepared surfaces of railings unless otherwise indicated. Comply with requirements in SSPC-PA 1, "Paint Application Specification No. 1: Shop, Field, and Maintenance Painting of Steel," for shop painting. Primer need not be applied to surfaces to be embedded in concrete or masonry.

1. Shop prime uncoated railings with universal shop primer unless zinc-rich primer is indicated.
2. Do not apply primer to galvanized surfaces.

G. High-Performance Coating: Apply epoxy intermediate and polyurethane topcoats to prime-coated surfaces. Comply with coating manufacturer's written instructions and with requirements in SSPC-PA 1, "Paint Application Specification No. 1: Shop, Field, and Maintenance Painting of Steel," for shop painting. Apply at spreading rates recommended by coating manufacturer.

PART 3 - EXECUTION

3.1 INSTALLATION, GENERAL

A. Fit exposed connections together to form tight, hairline joints.

B. Perform cutting, drilling, and fitting required for installing railings. Set railings accurately in location, alignment, and elevation; measured from established lines and levels and free of rack.

1. Do not weld, cut, or abrade surfaces of railing components that have been coated or finished after fabrication and that are intended for field connection by mechanical or other means without further cutting or fitting.
2. Set posts plumb within a tolerance of 1/16 inch in 3 feet
3. Align rails so variations from level for horizontal members and variations from parallel with rake of steps and ramps for sloping members do not exceed 1/4 inch in 12 feet.

C. Adjust railings before anchoring to ensure matching alignment at abutting joints.

D. Fastening to In-Place Construction: Use anchorage devices and fasteners where necessary for securing railings and for properly transferring loads to in-place construction.

3.2 RAILING CONNECTIONS

A. Welded Connections: Use fully welded joints for permanently connecting railing components. Comply with requirements for welded connections in "Fabrication" Article whether welding is performed in the shop or in the field.

B. Expansion Joints: Install expansion joints at locations indicated but not farther apart than required to accommodate thermal movement. Provide slip-joint internal sleeve extending 2 inches beyond joint on either side, fasten internal sleeve securely to one side, and locate joint within 6 inches of post.

3.3 ANCHORING POSTS

A. Use steel pipe sleeves preset and anchored into concrete for installing posts. After posts have been inserted into sleeves, fill annular space between post and sleeve with nonshrink, nonmetallic grout or anchoring cement, mixed and placed to comply with anchoring material manufacturer's written instructions.

B. Form or core-drill holes not less than 5 inches deep and 3/4 inch larger than OD of post for installing posts in concrete. Clean holes of loose material, insert posts, and fill annular space between post and concrete with nonshrink, nonmetallic grout or anchoring cement, mixed and placed to comply with anchoring material manufacturer's written instructions.

C. Leave anchorage joint exposed with 1/8-inch buildup, sloped away from post.

3.4 ATTACHING RAILINGS

A. Anchor railing ends to concrete and masonry with railing ends and anchored to wall construction with anchors and bolts.

B. Attach handrails to walls with wall brackets. Provide brackets with 1-1/2-inch clearance from inside face of handrail and finished wall surface. Locate brackets as indicated or, if not indicated, at spacing required to support structural loads.

1. Use type of bracket with flange tapped for concealed anchorage to threaded hanger bolt.
2. Locate brackets as indicated or, if not indicated, at spacing required to support structural loads.

C. Secure wall brackets and railing end flanges to building construction as follows:

1. For concrete and solid masonry anchorage, use drilled-in expansion shields and hanger or lag bolts.

3.5 FIELD QUALITY CONTROL

A. Testing Agency: Contractor will engage a qualified testing and inspecting agency to perform field tests and inspections and prepare test reports.

3.6 CLEANING

A. Clean and polish glass glazing as recommended in writing by manufacturer. Wash both exposed surfaces in each area of Project not more than four days before date scheduled for inspections that establish date of Substantial Completion.

B. Touchup Painting: Immediately after erection, clean field welds, bolted connections, and abraded areas of shop paint, and paint exposed areas with the same material as used for shop painting to comply with SSPC-PA 1 for touching up shop-painted surfaces.

1. Apply by brush or spray to provide a minimum 2.0-mil dry film thickness.

C. Galvanized Surfaces: Clean field welds, bolted connections, and abraded areas and repair galvanizing to comply with ASTM A 780.

3.7 PROTECTION

A. Protect finishes of railings from damage during construction period with temporary protective coverings approved by railing manufacturer. Remove protective coverings at time of Substantial Completion.

B. Restore finishes damaged during installation and construction period so no evidence remains of correction work. Return items that cannot be refinished in the field to the shop; make required alterations and refinish entire unit or provide new units.

END OF SECTION 05 73 00

SECTION 05 73 10 - METAL MESH INFILL

PART 1 - GENERAL

1.1 RELATED DOCUMENTS

A. Drawings and general provisions of the Contract, including General and Supplementary Conditions and Division 01 Specification Sections, apply to this Section.

1.2 SUMMARY

A. Section Includes:

1. Hot dipped galvanized mesh infill of guards.

B. Related Sections:

1. Section 06 10 63 "Exterior Carpentry" for wood framing, railings, and wood posts for anchoring railings.

1.3 DEFINITIONS

A. Railings: Guards, handrails, and similar devices used for protection of users at open-sided deck areas and pedestrian guidance and support.

1.4 PERFORMANCE REQUIREMENTS

A. General: In engineering railings to withstand structural loads indicated, determine allowable design working stresses of railing materials based on the following:

1. Steel: 72 percent of minimum yield strength.

B. Structural Performance: Railings shall withstand the effects of gravity loads and the following loads and stresses within limits and under conditions indicated:

1. Handrails and Top Rails of Guards:

a. Uniform load of 50 lbf/ft. applied in any direction.
b. Concentrated load of 200 lbf applied in any direction.
c. Uniform and concentrated loads need not be assumed to act concurrently.

2. Infill of Guards:

a. Concentrated load of 50 lbf applied horizontally on an area of 1 sq. ft.
b. Infill load and other loads need not be assumed to act concurrently.

C. Thermal Movements: Allow for thermal movements from ambient and surface temperature changes acting on exterior metal fabrications by preventing buckling, opening of joints, overstressing of components, failure of connections, and other detrimental effects.

1. Temperature Change: 120 deg F, ambient; 180 deg F, material surfaces.

D. Control of Corrosion: Prevent galvanic action and other forms of corrosion by insulating metals and other materials from direct contact with incompatible materials.

1.5 ACTION SUBMITTALS

A. Product Data: For the following:

1. Manufacturer's product lines of railings assembled from standard components.

B. Samples for Initial Selection: For products involving selection of color, texture, or design.

C. Samples for Verification: For each type of exposed finish required.

1. Assembled Samples of railing systems, made from full-size components, including top rail, post, handrail, and infill. Show method of finishing members at intersections. Samples need not be full height.

1.6 QUALITY ASSURANCE

A. Source Limitations: Obtain each type of railing from single source from single manufacturer.

B. Mockups: Build mockups to verify selections made under sample submittals and to demonstrate aesthetic effects and set quality standards for fabrication and installation.

1. Build mockups for each form and finish of railing consisting of two posts, top rail, infill area, and anchorage system components that are full height and are not less than 96 inches in length.
2. Approved mockups may become part of the completed Work if undisturbed at time of Substantial Completion.

1.7 PROJECT CONDITIONS

A. Field Measurements: Verify actual locations of piles and other construction contiguous with railings by field measurements before fabrication and indicate measurements on Shop Drawings.

PART 2 - PRODUCTS

2.1 METALS, GENERAL

A. Metal Surfaces, General: Provide materials with smooth surfaces, without seam marks, roller marks, rolled trade names, stains, discolorations, or blemishes.

B. Brackets, Flanges, and Anchors: Same metal and finish as supported rails unless otherwise indicated.

2.2 STEEL AND IRON

A. Woven-Wire Mesh: Intermediate-crimp, with pattern as indicated, 2-inch woven-wire mesh, made from 0.192-inch (6 gauge) nominal diameter wire complying with ASTM A 510.

2.3 FASTENERS

A. Fastener Materials: Unless otherwise indicated, provide the following:

1. Galvanized-Steel Components: Plated-steel fasteners complying with ASTM B 633, Class Fe/Zn 25 for electrodeposited zinc coating.

B. Fasteners for Anchoring to Other Construction: Select fasteners of type, grade, and class required to produce connections suitable for anchoring railings to other types of construction indicated and capable of withstanding design loads.

C. Provide concealed fasteners for interconnecting railing components and for attaching railings to other work unless exposed fasteners are the standard fastening method for railings indicated.

D. Anchors, General: Anchors capable of sustaining, without failure, a load equal to six times the load imposed when installed in unit masonry and four times the load imposed when installed in concrete, as determined by testing according to ASTM E 488, conducted by a qualified independent testing agency.

2.4 FABRICATION

A. General: Fabricate railings to comply with requirements indicated for design, dimensions, member sizes and spacing, details, finish, and anchorage, but not less than that required to support structural loads.

B. Assemble railings in the shop to greatest extent possible to minimize field splicing and assembly. Disassemble units only as necessary for shipping and handling limitations. Clearly mark units for reassembly and coordinated installation. Use connections that maintain structural value of joined pieces.

C. Form work true to line and level with accurate angles and surfaces.

D. Cut, reinforce, drill, and tap as indicated to receive finish hardware, screws, and similar items.

E. Mechanical Connections: Connect members with concealed mechanical fasteners and fittings. Fabricate members and fittings to produce flush, smooth, rigid, hairline joints.

F. Woven-Wire Mesh Infill Panels: Fabricate infill panels from woven-wire mesh crimped into 1-by-1/2-by-1/8-inch metal channel frames.

1. Make wire mesh and frames from steel.
2. Orient wire mesh as indicated.

G. Rubrail: Where indicated, provide rubrails as indicated Fabricate woven-wire mesh infill panels to dimensions and details indicated.

2.5 STEEL AND IRON FINISHES

A. Galvanized Railings:

1. Hot dip galvanize steel and iron railings, including hardware, after fabrication.
2. Comply with ASTM A 123/A 123M for hot-dip galvanized railings.
3. Comply with ASTM A 153/A 153M for hot-dip galvanized hardware.

B. For galvanized railings, provide hot-dip galvanized fittings, brackets, fasteners, sleeves, and other ferrous components.

PART 3 - EXECUTION

3.1 INSTALLATION, GENERAL

A. Fit exposed connections together to form tight, hairline joints.

B. Perform cutting, drilling, and fitting required for installing railings. Set railings accurately in location, alignment, and elevation; measured from established lines and levels and free of rack.

1. Do not weld, cut, or abrade surfaces of railing components that have been coated or finished after fabrication and that are intended for field connection by mechanical or other means without further cutting or fitting.

2. Set posts plumb within a tolerance of 1/16 inch in 3 feet.
3. Align rails so variations from level for horizontal members and variations from parallel with rake of steps and ramps for sloping members do not exceed 1/4 inch in 12 feet.

C. Adjust railings before anchoring to ensure matching alignment at abutting joints.

D. Fastening to In-Place Construction: Use anchorage devices and fasteners where necessary for securing railings and for properly transferring loads to in-place construction.

3.2 ATTACHHMENT TO RAILINGS

A. Provide fastener as indicated or, if not indicated, at spacing required to support structural loads.

3.3 CLEANING

A. Galvanized Surfaces: Clean field welds, bolted connections, and abraded areas and repair galvanizing to comply with ASTM A 780.

3.4 PROTECTION

A. Protect finishes of railings from damage during construction period with temporary protective coverings approved by railing manufacturer. Remove protective coverings at time of Substantial Completion.

B. Restore finishes damaged during installation and construction period so no evidence remains of correction work. Return items that cannot be refinished in the field to the shop; make required alterations and refinish entire unit or provide new units.

END OF SECTION 05 73 10

SECTION 06 10 63 - EXTERIOR CARPENTRY

PART 1 - GENERAL

1.1 RELATED DOCUMENTS

A. Drawings and general provisions of the Contract, including General and Supplementary Conditions and Division 01 Specification Sections, apply to this Section.

1.2 SUMMARY

A. Section Includes:

1. Elevated decks including composite lumber decking, railings, and support framing.
2. Ramps.
3. Wood benches.

B. Related Sections:

1. Section 05 50 00 “Metal Fabrications “for Metal Guardrails
2. Section 05 73 00 "Metal Mesh Infill" for railings.

1.3 DEFINITIONS

A. Boards: Lumber of less than 2 inches nominal in thickness and 2 inches nominal or greater width.

B. Dimension Lumber: Lumber of 2 inches nominal or greater but less than 5 inches nominal in least dimension.

C. Timber: Lumber of 5 inches nominal or greater in least dimension.

D. Lumber grading agencies, and the abbreviations used to reference them, include the following:

1. NeLMA: Northeastern Lumber Manufacturers' Association.
2. NLGA: National Lumber Grades Authority.
3. SPIB: The Southern Pine Inspection Bureau.

E. Railings: Guards, handrails, and similar devices used for protection of users at open-sided deck areas and pedestrian guidance and support.

1.4 PERFORMANCE REQUIREMENTS FOR RAILINGS

A. Structural Performance: Railings shall withstand the effects of gravity loads and the following loads and stresses within limits and under conditions indicated:

1. Handrails and Top Rails of Guards:

a. Uniform load of 50 lbf/ft. applied in any direction.
b. Concentrated load of 200 lbf applied in any direction.
c. Uniform and concentrated loads need not be assumed to act concurrently.

2. Woven-Wire Mesh Infill Panels:

a. Concentrated load of 50 lbf applied horizontally on an area of 1 sq. ft.
b. Infill load and other loads need not be assumed to act concurrently.

1.5 ACTION SUBMITTALS

A. Product Data: For preservative-treated wood products, composite lumber decking, and metal framing anchors.

1. For preservative-treated wood products, include chemical treatment manufacturer's written instructions for handling, storing, installing, and finishing treated material.
2. For composite lumber decking and metal framing anchors, include installation instructions.

B. Samples: For composite lumber decking not less than 24 inches long, showing the range of variation to be expected in appearance, including surface texture.

1.6 INFORMATIONAL SUBMITTALS

A. Material Certificates:

1. For lumber specified to comply with minimum allowable unit stresses. Indicate species and grade selected for each use and design values approved by ALSC's Board of Review.
2. For preservative-treated wood products. Indicate type of preservative used and net amount of preservative retained

B. Certificates of Inspection: Issued by lumber grading agency for exposed wood products not marked with grade stamp.

C. Evaluation Reports: For the following:

1. Preservative-treated wood products.
2. Composite lumber decking.
3. Metal framing anchors.
4. Decking fasteners.

1.7 DELIVERY, STORAGE, AND HANDLING

A. Store materials under cover and protected from weather and contact with damp or wet surfaces. Stack lumber flat with spacers between each bundle to provide air circulation. Provide for air circulation around stacks and under coverings.

B. Handle and store composite lumber to comply with manufacturer's written instructions.

PART 2 - PRODUCTS

2.1 LUMBER, GENERAL

A. Lumber: Comply with DOC PS 20 and with applicable rules of grading agencies indicated. If no grading agency is indicated, provide lumber that complies with the applicable rules of any rules-writing agency certified by ALSC's Board of Review. Provide lumber graded by an agency certified by ALSC's Board of Review to inspect and grade lumber under the rules indicated.

1. Factory mark each item with grade stamp of grading agency.
2. For items that are exposed to view in the completed Work, mark grade stamp on end or back of each piece or omit grade stamp and provide certificates of grade compliance issued by grading agency.
3. Where nominal sizes are indicated, provide actual sizes required by DOC PS 20 for moisture content specified. Where actual sizes are indicated, they are minimum dressed sizes for dry wood products.
4. Provide dressed lumber, S4S, unless otherwise indicated.

2.2 DIMENSION LUMBER

A. Maximum Moisture Content: 19 percent for 2-inch nominal thickness or less; 19 percent for more than 2-inch nominal.

B. Exposed Lumber: Provide material hand selected for freedom from characteristics, on exposed surfaces and edges, that would impair finish appearance, including decay, honeycomb, knot holes, shake, splits, torn grain, and wane.

C. Deck Framing:

1. Exposed to view. No. 1 or better and the following species:

a. Southern pine; SPIB.
b. Mixed southern pine; SPIB.

2. Not Exposed to view. No. 1 or better and the following species:

a. Southern pine; SPIB.
b. Mixed southern pine; SPIB.

D. Dimension Lumber Posts: No. 1 grade or better and the following species:

1. Mixed southern pine; SPIB.
2. Spruce-pine-fir or spruce-pine-fir (South); NeLMA, NLGA, WCLIB, or WWPA.

E. Dimension Lumber Railing Members: No. 1 grade or better and the following species:

1. Mixed southern pine; SPIB.

F. Dimension Lumber for Benches: No. 1 grade and the following species:

1. Mixed southern pine; SPIB.

2.3 BOARDS

A. Maximum Moisture Content: 19 percent.

B. Provide boards hand selected for freedom from characteristics, on exposed surfaces and edges, that would impair finish appearance, including decay, honeycomb, knot holes, shake, splits, torn grain, and wane.

C. Fascia Boards:

1. Southern pine, B & B finish; SPIB.

D. Railing Boards:

1. Southern pine, B & B finish; SPIB.

E. Boards for Benches:

1. Southern pine, Edge Grain B & B finish; SPIB.

2.4 TIMBER

A. Maximum Moisture Content: 19 percent.

B. Dressing: Provide dressed timber (S4S) unless otherwise indicated.

C. Timber Posts:

1. Not exposed to view Southern pine; No. 2 SPIB.
2. Exposed to view Southern pine; No. 1 SPIB.

2.5 ENGINEERED LUMBER

A. LVL shall have the following minimum properties:

1. Modulus of Elasticity E = 1.9 x 10^6 psi
2. Flexural Stress Fb = 3000 psi
3. Horizontal Shear (joist) Fv = 300 psi
4. Compression Perpendicular to Grain (joist) Fc(perp) = 750 psi
5. Compression Parallel to Grain Fc(para) = 2500 psi

2.6 WOOD-PRESERVATIVE-TREATED MATERIALS

A. Preservative Treatment by Pressure Process: AWPA U1; Use Category UC3b using waterborne preservative to 0.60 lb/cu ft retention ACQ.

1. Kiln dry lumber and plywood after treatment to a maximum moisture content of 19 and 18 percent respectively.
2. Preservative Chemicals: Acceptable to authorities having jurisdiction and containing no arsenic or chromium.
3. For exposed items indicated to receive transparent finish, do not use chemical formulations that contain colorants or that bleed through or otherwise adversely affect finishes.
4. Do not use material that is warped or does not comply with requirements for untreated material.
5. Mark lumber with treatment-quality mark of an inspection agency approved by the American Lumber Standard Committee's Board of Review.

   a. For exposed lumber indicated to receive a stained or natural finish, mark end or back of each piece or omit marking and provide certificates of treatment compliance issued by inspection agency.

6. Mark plywood with appropriate classification marking of an inspection agency acceptable to authorities having jurisdiction.

   a. For exposed plywood indicated to receive a stained or natural finish, mark back of each piece.

7. Preservative Treatment by Pressure Process: AWPA U1; Use Category UC3b using waterborne preservative to 0.60 lb/cu ft retention ACQ.

2.7 COMPOSITE LUMBER DECKING

A. Plastic Lumber, General: Products acceptable to authorities having jurisdiction and for which current model code evaluation reports exist that show compliance with building code in effect for Project for indicated occupancy and type of construction.

1. Allowable loads and spans, as documented in evaluation reports or in information referenced in evaluation reports, shall not be less than design loads and spans indicated.

B. All-Plastic Lumber: Solid shapes made from PVC with no cellulose fiber.

1. Decking Size: 1-1/2 by 5-1/2 inches actual.
2. Configuration: Provide product with grooved edges designed for fastening with concealed splines or tongue-and-groove edges designed for concealed fastening.
3. Surface Texture:
4. Color: As selected by from manufacturer's full range.

2.8 FASTENERS

A. General: Provide fasteners of size and type indicated that comply with requirements specified in this article for material and manufacture. Provide nails or screws, in sufficient length, to penetrate not less than 1-1/2 inches into wood substrate.

1. Use fasteners with hot-dip zinc coating complying with ASTM A 153/A 153M or ASTM F 2329 unless otherwise indicated.
2. For pressure-preservative-treated wood, use stainless-steel fasteners.
3. For composite decking, use stainless-steel fasteners where fasteners are exposed to view.

B. Nails: ASTM F 1667.

C. Power-Driven Fasteners: NES NER-272.

D. Wood Screws: ASME B18.6.1.

E. Lag Screws: ASME B18.2.1.

F. Carbon-Steel Bolts: ASTM A 307 with ASTM A 563 hex nuts and, where indicated, flat washers all hot-dip zinc coated.

G. Postinstalled Anchors: Stainless-steel, chemical, or torque-controlled expansion anchors with capability to sustain, without failure, a load equal to six times the load imposed when installed in unit masonry assemblies and equal to four times the load imposed when installed in concrete as determined by testing per ASTM E 488 conducted by a qualified independent testing and inspecting agency.

1. Stainless-steel bolts and nuts complying with ASTM F 593 and ASTM F 594, Alloy Group 1 or 2.

2.9 METAL FRAMING ANCHORS

A. Allowable Design Loads: Provide products with allowable design loads, as published by manufacturer. Manufacturer's published values shall be determined from empirical data or by rational engineering analysis and demonstrated by comprehensive testing performed by a qualified independent testing agency.

B. Galvanized-Steel Sheet: Hot-dip, zinc-coated steel sheet complying with ASTM A 653/A 653M, G185 coating designation.

C. Joist Hangers: U-shaped, with 2-inch- long seat and 1-1/4-inch- wide nailing flanges at least 85 percent of joist depth.

1. Thickness:0.062 inch

D. Top Flange Hangers: U-shaped joist hangers, full depth of joist, formed from metal strap with tabs bent to extend over and be fastened to supporting member.

1. Strap Width: 2 inches.
2. Thickness: 0.062 inch.

E. Post Bases: Adjustable-socket type for bolting in place with standoff plate to raise post 1 inch above base and with 2-inch- minimum side cover, socket 0.062 inch thick, and standoff and adjustment plates 0.108 inch thick.

F. Joist Ties: Flat straps, with holes for fasteners, for tying joists together over supports.

1. Width: 1-1/4 inches.
2. Thickness: 0.062 inch
3. Length: 24 inches

2.10 CONCEALED DECKING FASTENERS

A. Deck Splines: Plastic splines designed to fit in grooves routed into the sides of decking material and be fastened to deck framing with screws. Splines provide uniform spacing of decking material. Splines are made from UV-resistant polypropylene.

B. Deck Clips: Black oxide coated stainless-steel clips designed to be fastened to deck framing with screws, and to secure decking material with teeth that also provide uniform spacing of decking material.

C. Deck Tracks: Formed metal strips designed to be fastened to deck framing and to secure decking material from underside with screws. Made from stainless steel.

PART 3 - EXECUTION

3.1 EXAMINATION

A. Examine substrates and conditions, with Installer present, for compliance with requirements for installation tolerances and other conditions affecting performance of the Work.

B. Proceed with installation only after unsatisfactory conditions have been corrected.

3.2 PREPARATION

A. Clean substrates of projections and substances detrimental to application.

B. Prime lumber to be painted, including both faces and edges. Cut to required lengths and prime ends. Comply with requirements in Section 099113 "Exterior Painting."

3.3 INSTALLATION, GENERAL

A. Set exterior carpentry to required levels and lines, with members plumb, true to line, cut, and fitted. Fit exterior rough carpentry to other construction; scribe and cope as needed for accurate fit.

B. Framing Standard: Comply with AF&PA's "Details for Conventional Wood Frame Construction" unless otherwise indicated.

C. Install composite lumber to comply with manufacturer's written instructions.

D. Secure decking to framing with concealed decking fasteners.

E. Install metal framing anchors to comply with manufacturer's written instructions.

F. Do not splice structural members between supports unless otherwise indicated.

G. Provide blocking and framing as indicated and as required to support facing materials, fixtures, specialty items, and trim.

H. Sort and select lumber so that natural characteristics will not interfere with installation or with fastening other materials to lumber. Do not use materials with defects that interfere with function of member or pieces that are too small to use with minimum number of joints or optimum joint arrangement.

I. Comply with AWPA M4 for applying field treatment to cut surfaces of preservative-treated lumber.

J. Securely attach exterior carpentry work to substrate by anchoring and fastening as indicated, complying with the following:

1. NES NER-272 for power-driven fasteners.
2. Table 2304.9.1, "Fastening Schedule," in ICC's International Building Code.
3. Table 23-II-B-1, "Nailing Schedule," in ICBO's Uniform Building Code.
4. Table 2305.2, "Fastening Schedule," in BOCA's BOCA National Building Code.
5. Table 2306.1, "Fastening Schedule," in SBCCI's Standard Building Code.
6. Table R602.3(1), "Fastener Schedule for Structural Members" and Table R602.3(2), "Alternate Attachments," in ICC's International Residential Code for One- and Two-Family Dwellings.

K. Use common wire nails unless otherwise indicated. Select fasteners of size that will not fully penetrate members where opposite side will be exposed to view. Make tight connections between members. Install fasteners without splitting wood; do not countersink nail heads unless otherwise indicated.

L. For exposed work, arrange fasteners in straight rows parallel with edges of members, with fasteners evenly spaced, and with adjacent rows staggered.

3.4 ELEVATED DECK JOIST FRAMING INSTALLATION

A. General: Install joists with crown edge up and support ends of each member with not less than 1-1/2 inches of bearing on wood or metal, or 3 inches on masonry. Attach f joists where framed into wood supporting members by using wood ledgers as indicated or, if not indicated, by using metal joist hangers. Do not notch joists.

B. Frame openings with headers and trimmers supported by metal joist hangers; double headers and trimmers where span of header exceeds 48 inches.

C. Lap members framing from opposite sides of beams or girders not less than 4 inches or securely tie opposing members together. Provide solid blocking of 2-inch nominal thickness by depth of joist over supports.

D. Provide solid blocking of 2-inch nominal thickness by depth of joist at intervals of 96 inches o.c., between joists.

3.5 RAILING INSTALLATION

A. Railings: Secure railing members with wire mesh infill as indicated on drawings.

B. Field Quality Control for Railing Assemblies

1. Testing Agency: Contractor will engage a qualified testing and inspecting agency to perform field tests and inspections and prepare test reports.
2. Extent and Testing Methodology: Testing agency will randomly select completed railing assemblies for testing that are representative of different railing designs and conditions in the completed Work. Railings will be tested according to ASTM E 894 and ASTM E 935 for compliance with performance requirements.
3. Remove and replace railings where test results indicate that they do not comply with specified requirements unless they can be repaired in a manner satisfactory to the CO and will comply with specified requirements.

4. Additional testing and inspecting, at Contractor's expense, will be performed to determine compliance of replaced or additional work with specified requirements.

END OF SECTION 06 10 63

SECTION 06 60 00 - FIBERGLASS REINFORCED POLYMER (FRP) PRODUCTS

PART 1 - GENERAL

1.1 RELATED DOCUMENTS:

A. Drawings and general provisions of Contract, including General and Supplementary Conditions and Division-1 Specification Sections, apply to work of this section.

1.2 SUMMARY

A. This section includes the following FRP Products & Fabrications:

1. FRP Pultruded Gratings and Treads

B. Related Sections include the following:

1. Section 05 50 00 - Metal Fabrications

1.3 SCOPE OF WORK:

A. Furnish all labor, materials, equipment, and incidentals necessary to install the fiberglass reinforced polymer (FRP) and products as specified herein.

1.4 REFERENCES

A. American Society for Testing and Materials (ASTM)

1. ASTM D 638 - Tensile Properties of Plastics
2. ASTM D 790 - Flexural Properties of Unreinforced and Reinforced Plastics Insulating
3. ASTM D 1525 -Vicat Softening Temperature of Plastics

1.5 QUALITY ASSURANCE:

A. The material covered by these specifications shall be furnished by an ISO-9001 certified manufacturer of proven ability who has regularly engaged in the manufacture and installation of FRP systems. If requested, experience shall be demonstrated by a record of at least five (5) previous, separate, similar, successful installations in the last five (5) years.

B. Substitution of any component or modification of system shall be made only when approved by the Contracting Officer (CO).

C. Fabricator Qualifications: Firm experienced in successfully producing FRP fabrications similar to that indicated for this project, with sufficient production capacity to produce required units without causing delay in the work.

D. In addition to requirements of these specifications, comply with manufacturer's instructions and recommendations for work.

1.6 DESIGN CRITERIA:

A. The design of FRP products including connections shall be in accordance with the 2015 International Building Code and generally accepted standards in the FRP industry.

B. Design live loads of FRP gratings and floor panels shall not be less than 100 pounds per sq. ft. uniformly distributed or a 300-pound concentrated load on an area of 4 inches square at the

center of each tread or span, unless specifically stated otherwise in drawings and/or supplementary conditions. Grating and floor panel deflection at the center of a simple span shall not to exceed 0.125 inches.

C. Structural members shall be designed to support all applied loads. Deflection in any direction for simple span members and cantilever members shall not be more than L/360 or L/60, of span, respectively, for structural members. Connections shall be designed to transfer the loads.

1.7 ACTION SUBMITTALS:

A. Shop drawings of all fabricated pultruded gratings and treads, standard railings, structural plates and shapes, components, and appurtenances shall be submitted to the CO for approval in accordance with the requirements of Section 01 33 23. Fabrication shall not start until receipt of CO's approval marked "Approved As Submitted" or "Approved As Noted".

1. Include calculations for all designed components and connections.
2. Drawings and calculations shall bear the seal and signature of a structural engineer registered in the Commonwealth of Kentucky.

B. Manufacturer's catalog data showing:

1. Dimensions, spacing, and construction of grating
2. Design tables showing limits for span length and deflection under various uniform and concentrated loads
3. Materials of construction

C. Detailed shop drawings showing:

1. Dimensions
2. Sectional assembly showing all components required
3. Location and identification mark
4. Size and type of supporting frames required
5. Detailed installation recommendations and instructions.

D. Samples of each type of product shall be submitted for approval prior to placement of purchase orders.

1.8 SHIPPING AND STORAGE INSTRUCTIONS:

A. All systems, sub-systems and structures shall be shop fabricated and assembled into the largest practical size suitable for transporting.

B. All fabricated components, such as pultruded gratings and treads, standard railings, structural plates and shapes, and appurtenances shall be stored before, during, and after shipment in a manner to prevent cracking, twisting, bending, breaking, chipping or damage of any kind to the materials or equipment, including damage due to over exposure to the sun. Any material which, in the opinion of the CO, has become damaged as to be unfit for use, shall be promptly removed from the site of work, and the Contractor shall receive no compensation for the damaged material or its removal.

C. Identify and match-mark all materials, items and fabrications for installation and field assembly.

PART 2 - PRODUCTS

2.1 GENERAL

A. All FRP items furnished under this Section shall be composed of fiberglass reinforcement and resin in qualities, quantities, properties, arrangements, and dimensions as necessary to meet the design requirements and dimensions as specified in the Contract Documents.

B. All FRP products noted in 1.2 shall be manufactured using a pultruded process utilizing polyester resin with flame retardant and ultraviolet (UV) inhibitor additives. A synthetic surface veil shall be the outermost layer covering the exterior surface. The flame retardant FRP shapes shall achieve a flame spread of 25 or less in accordance with ASTM test method E-84.

C. Gratings shall also have a tested burn time of less than 30 seconds and an extent of burn rate of less than or equal to 10 millimeters per ASTM D635. Manufacturer may be required to provide certification of ASTM E84 test on grating panels from an independent testing laboratory. Test data shall be from full scale testing of actual production grating of the same type of material supplied on the project. Test data performed only on the base resin shall not be acceptable.

D. After fabrication, all cut ends, holes, and abrasions of FRP shapes shall be sealed with a compatible resin coating.

E. All exposed surfaces shall be smooth and true to form.

F. All grating clips shall be manufactured of Type 304L stainless steel.

G. Manufacturers:

1. Strongwell – (276) 645-8103
2. American Grating – (800) 266-2258 or (626) 855-1777
3. Creative Pultrusions – (888) 274-7855 or (814) 839-4186
4. Fibergrate Composite Structures Inc. – (800) 527-4043 or (972) 250-1633
5. IKG Industries – (800) 835-8356 or (713) 378-3924
6. Precisioneering - 800-465-1800 or (416) 751-9200
7. FRP Grating (650) 372-9968
8. Or approved alternative manufacturer

2.2 PULTRUDED GRATINGS AND TREADS:

A. General

1. Grating shall be shipped from the manufacturer, palletized, and banded with exposed edges protected to prevent damage in shipment.
2. Each piece shall be clearly marked showing manufacturer's applicable drawing number.

B. Design

1. The panels shall be 1-1/2 inches deep and sustain a deflection of no more than 0.125 inches under a uniform distributed load of 100 psf for the span lengths shown on the plans. The clear opening between bearing bars shall be no more than 0.40 in.
2. The bearing bars shall be joined into panels by passing continuous length fiberglass pultruded cross rods through the web of each bearing bar. A continuous fiberglass pultruded bar shaped section shall be wedged between the two cross rod spacers

mechanically locking the notches in the cross-rod spacers to the web of the bearing bars. Continuous chemical bonding shall be achieved between the cross-rod spacers and the bearing web and between the bar shaped wedge and the two cross rod spacers locking the entire panel together to give a panel that resists twist and prevents internal movement of the bearing bars.

3. Stair treads shall be capable of withstanding a uniform load of 100 lbs. per sq. ft. or a concentrated load of 300 lbs. on an area of 4 inches square located in the center of the tread, whichever produces greater stress.
4. The top surface of all panels shall have a non-skid coarse grit affixed to the surface by an epoxy resin followed by a topcoat of epoxy resin.
5. Panels shall be fabricated to the sizes shown on the drawings.
6. Hold down clamps shall be type 304L stainless steel saddle clips. A minimum of four each per panel.
7. Color: Gray. As selected by CO from manufacturer's full range.

C. Products

1. The FRP grating and stair treads shall be fabricated from bearing bars and cross rods manufactured by the pultrusion process. The glass fiber reinforcement for the bearing bars shall be a core of continuous glass strand rovings wrapped with continuous strand glass mat. A synthetic surface veil shall be the outermost layer covering the exterior surfaces.
2. Fiberglass Grating and Stair Treads

   a. Fiberglass grating and stair treads shall be made from a chemical resistant, fire retardant polyester resin system with antimony trioxide added to meet the flame rating of 25 or less in accordance with ASTM E- 84 testing and meet the self-extinguishing requirements of ASTM D-635. U. V. inhibitors are added to the resin.

3. Fiberglass Plate

   a. Fiberglass plate shall be made from a chemical resistant, fire retardant polyester resin system with fire retardant additives to meet a flame rating of 25 or less in accordance with ASTM E-84 testing and meet the self-extinguishing requirements of ASTM D-635. U. V. inhibitors are added to the resin.

4. All cut and machined edges, holes and abrasions shall be sealed with a resin compatible with the resin matrix used in the bearing bars and cross rods.
5. All panels shall be fabricated to the sizes shown on the approved shop drawings.

2.3 STRUCTURAL SHAPES AND PLATE:

A. Material

1. Structural shapes and plate shall be made from isophthalic polyester or vinyl ester resin with fire retardant additives to meet a flame rating of less than 25 per ASTM E-84 and meet the self-extinguishing requirements of ASTM D-635. All structural shapes shall contain a U. V. inhibitor.

B. Process

1. Manufactured by the pultrusion process.
2. Structural FRP members composition shall consist of a glass fiber reinforced polyester or vinyl ester resin matrix, approximately 50% glass by weight. A synthetic surface veil

shall be the outermost layer covering the exterior surfaces. Glass strand rovings shall be used internally for longitudinal strength. Continuous strand glass mats or stitched reinforcements shall be used internally for transverse strength.

3. Mechanical properties shall meet or exceed the values listed in Table 1.

TABLE 1
FIBERGLASS PULTRUDED MATERIAL PROPERTIES
MINIMUM ULTIMATE COUPON PROPERTIES (UN)

Properties	ASTM Test Method	Units/ Value	Shapes	Plate		
				1/8” 3.175mm	3/16”-1/4” 4.76-6.35mm	3/8”-1” 9.5-25.4mm
MECHANICAL						
Tensile Stress, LW	D638	Psi	30,000	30,000	20,000	20,000
		N/mm^2	207	138	138	138
Tensile Stress, CW	D638	Psi	7,000	7,500	10,000	10,000
		N/mm^2	48.3	51.7	68.9	68.9
Tensile Modulus, LW	D638	10^6 psi	2.5	1.8	1.8	1.8
		$10^3 N/mm^2$	17.2	12.4	12.4	12.4
Tensile Modulus, CW	D638	10^6 psi	0.8	0.7	0.9	1.4
		$10^3 N/mm^2$	5.52	4.83	6.21	9.65
Compressive Stress, LW	D695	Psi	30,000	24,000	24,000	24,000
		N/mm^2	207	165	165	165
Compressive Stress, CW	D695	Psi	15,000	15,500	16,500	20,000
		N/mm^2	103	107	114	138
Compressive Modulus, LW	D695	10^6 psi	2.5	1.8	1.8	1.8
		$10^3 N/mm^2$	17.2	12.4	12.4	12.4
Compressive Modulus, CW	D695	10^6 psi	1	1	1	1
		$10^3 N/mm^2$	6.89	6.89	6.89	6.89
Flexural Stress, LW	D790	Psi	30,000	35,000	35,000	30,000
		N/mm^2	207	241	241	207
Flexural Stress, CW	D790	Psi	10,000	13,000	15,000	18,000
		N/mm^2	68.9	89.6	103	124
Flexural Modulus, LW	D790	10^6 psi	1.6	1.8	2	2
		$10^3 N/mm^2$	11.0	12.4	13.8	13.8
Flexural Modulus, CW	D790	10^6 psi	0.8	0.9	1.1	1.4
		$10^3 N/mm^2$	5.52	6.21	7.58	9.65
Modulus of Elasticity, 1	Full Section	10^6 psi	2.6			
		$10^3 N/mm^2$	17.9			
Modulus of Elasticity >4” >102mm	Full Section	10^6 psi	2.5			
		$10^3 N/mm^2$	17.2			

Parallel Compressive Shear Stress, LW, 2	D3846		3,000 20.7			
Shear Modulus, LWe	-		0.425 2.93			
Short Beam Shear, LWj	D2344		4,500 31.0			
Bearing Stress, LW	D953		30,000 207	32,000 220.6	32,000 221	32,000 221
Poisson's Ratio, LWk	D3039		0.33 0.330	0.31 0.310	0.31 0.310	0.31 0.310
Notched Izod Impact, LW	D256		25 1.33	18.5 0.988	20 107	20 107
Notched Izod Impact, CW	D256		4 0.214	5 0.267	5 0.267	5 0.267
PHYSICAL						
Barcol Hardness	D2583	-	45, 4	40	40	40
24 HR Water Absorption, 7	D570	% Max By wt.	0.6	0.6	0.6	0.6
Density	D792	Lbs/in^3 10^{-3}g/mm	.062-.070 1.72-1.94	.060-.068 1.66-1.88	.060-.068 1.66-1.88	.060-.068 1.66-1.88
Coefficient of Thermal Expansion, LW, 9	D696	10^{-6} in/in F 10^{-6} in/in C	4.4 8.0	4.4 8.0	4.4 8.0	4.4 8.0
Thermal Conductivity, 9	C177	BTU-in Ft2/hr/F	4 0.58			
ELECTRICAL						
Arc Resistance, LW, 9	D495	Seconds	120			
Dielectric Strength, LW	D149	KV/in KV/mm	35 1.38	35 1.38	35 1.38	35 1.38
Dielectric Strength, PF, 9	D149	Volts/mil	200	200	N.T.	N.T.

Properties	**ASTM Test Method**	**Units/ Value**	**Shapes**	**Plate**		
				1/8" 3.175mm	**3/16"-1/4" 4.76-6.35mm**	**3/8"-1" 9.5-25.4mm**

FLAMMABILITY, 6						
Flammability Classification (1/16")	UL94	VO				
Tunnel Test	ASTM E-84	24 Max				
NBS Smoke Chamber	ASTM E-662	650-700 (typical)				
Flammability	ASTM D635	Self-Extinguishing				
UL Thermal Index	Generic	130°C				
British Fire Test	BS476-7	Class 1				

All values are minimum ultimate properties from coupon tests except as noted.

1. This value is determined from full section simple beam bending of structural shapes.
2. The shear stress test results will change radically if the notched orientation is altered. The value in this chart represents the test configuration where the notches are machined parallel to the reinforcing mat. For notches machined perpendicular to the reinforcing mat, this value would be two to three times larger.
3. The Shear Modulus value has been determined from tests with full sections of structural shapes.
4. Value would be 50 if the surfacing veil were not there.
5. Plate compressive stress/modulus measured edgewise and flexural stress/modulus measured flatwise.
6. Measured as a percentage maximum by weight.
7. Span to depth ratio of 3:1; angles will have a minimum value of 4,000 psi and the I/W shapes are tested in the web.
8. Typical values because these are shape and composite dependent tests.

LW = Lengthwise
PF = Perpendicular to laminate face
CW = Crosswise
N.T. = Not Tested

PART 3 - EXECUTION

3.1 PREPARATION

A. Coordinate and furnish anchorages, setting drawings, diagrams, templates, instructions, and directions for installation of anchorages, including concrete inserts, sleeves, anchor bolts and miscellaneous items having integral anchors that are to be embedded in concrete construction. Coordinate delivery of such items to project site.

B. Set sleeves in concrete with tops flush with finish surface elevations; protect sleeves from infiltration of water and debris.

3.2 INSPECTION AND TESTING

A. The CO shall have the right to inspect and test all materials to be furnished under these specifications prior to their shipment from the point of manufacture.

B. All labor, power, materials, equipment, and appurtenances required for testing shall be furnished by the Contractor at no cost to the Government.

3.3 INSTALLATION, GENERAL

A. Fastening to in-place construction: Provide anchorage devices and fasteners where necessary for securing miscellaneous FRP fabrications to in-place construction; include threaded fasteners for concrete inserts, toggle bolts, through-bolts, lag bolts and other connectors as determined by the CO.

B. Cutting, fitting and placement: Perform cutting, drilling, and fitting required for installation of miscellaneous FRP fabrications. Set FRP fabrication accurately in location, alignment, and elevation; with edges and surfaces level, plumb, true, and free of rack; measured from established lines and levels.

C. Provide temporary bracing or anchors in form work for items that are to be built into concrete masonry or similar construction.

3.4 ALL FRP INSTALLATION:

A. All field cut, and drilled edges, holes and abrasions shall be sealed with a catalyzed resin compatible with the original resin as recommended by the manufacturer and approved by the CO prior to use. The sealing of the edges shall prevent premature fraying at the field cut edges.

B. Install items specified as indicated and in accordance with manufacturer's instructions.

END OF SECTION 06 60 00

SECTION 07 92 00 - JOINT SEALANTS

PART 1 - GENERAL

1.1 RELATED DOCUMENTS

A. Drawings and general provisions of the Contract, including General and Supplementary Conditions and Division 01 Specification Sections, apply to this Section.

1.2 SUMMARY

A. Section Includes:

1. Urethane joint sealants.

1.3 ACTION SUBMITTALS

A. Product Data: For each joint-sealant product indicated.

B. Samples for Initial Selection: Manufacturer's color charts consisting of strips of cured sealants showing the full range of colors available for each product exposed to view.

C. Samples for Verification: For each kind and color of joint sealant required, provide Samples with joint sealants in 1/2-inch- wide joints formed between two 6-inch- long strips of material matching the appearance of exposed surfaces adjacent to joint sealants.

D. Joint-Sealant Schedule: Include the following information:

1. Joint-sealant application, joint location, and designation.
2. Joint-sealant manufacturer and product name.
3. Joint-sealant formulation.
4. Joint-sealant color.

1.4 INFOMATIONAL SUBMITTALS

A. Qualification Data: For qualified Installer.

B. Product Certificates: For each kind of joint sealant and accessory, from manufacturer.

1.5 QUALITY ASSURANCE

A. Installer Qualifications: Manufacturer's authorized representative who is trained and approved for installation of units required for this Project.

B. Source Limitations: Obtain each kind of joint sealant from single source from single manufacturer.

C. Mockups: Install sealant in mockups of assemblies specified in other Sections that are indicated to receive joint sealants specified in this Section. Use materials and installation methods specified in this Section.

1.6 PROJECT CONDITIONS

A. Do not proceed with installation of joint sealants under the following conditions:

1. When ambient and substrate temperature conditions are outside limits permitted by joint-sealant manufacturer or are below 40 deg F.

2. When joint substrates are wet.
3. Where joint widths are less than those allowed by joint-sealant manufacturer for applications indicated.
4. Where contaminants capable of interfering with adhesion have not yet been removed from joint substrates.

PART 2 - PRODUCTS

2.1 MATERIALS, GENERAL

A. Compatibility: Provide joint sealants, backings, and other related materials that are compatible with one another and with joint substrates under conditions of service and application, as demonstrated by joint-sealant manufacturer, based on testing and field experience.

B. Colors of Exposed Joint Sealants: As selected by Architect from manufacturer's full range.

2.2 URETHANE JOINT SEALANTS

A. Vertical Surfaces: Urethane Joint Sealant: ASTM C 920, Type S, Grade NS, Class 25, Use M,A or O as applicable.

B. Horizontal Surfaces in Traffic Areas: Traffic-Grade, Urethane Joint Sealant: ASTM C 920, Type S or M, Grade P, Grade NS, Class 25, for Use T, in areas with slopes exceeding 1 percent.

2.3 JOINT SEALANT BACKING

A. General: Provide sealant backings of material that are nonstaining; are compatible with joint substrates, sealants, primers, and other joint fillers; and are approved for applications indicated by sealant manufacturer based on field experience and laboratory testing.

B. Bond-Breaker Tape: Polyethylene tape or other plastic tape recommended by sealant manufacturer for preventing sealant from adhering to rigid, inflexible joint-filler materials or joint surfaces at back of joint. Provide self-adhesive tape where applicable.

PART 3 - EXECUTION

3.1 EXAMINATION

A. Examine joints indicated to receive joint sealants, with Installer present, for compliance with requirements for joint configuration, installation tolerances, and other conditions affecting joint-sealant performance.

B. Proceed with installation only after unsatisfactory conditions have been corrected.

3.2 PREPARATION

A. Surface Cleaning of Joints: Clean out joints immediately before installing joint sealants to comply with joint-sealant manufacturer's written instructions and the following requirements:

1. Remove all foreign material from joint substrates that could interfere with adhesion of joint sealant, including dust, paints (except for permanent, protective coatings tested and approved for sealant adhesion and compatibility by sealant manufacturer), old joint sealants, oil, grease, waterproofing, water repellents, water, surface dirt, and frost.

2. Clean porous joint substrate surfaces by brushing, grinding, mechanical abrading, or a combination of these methods to produce a clean, sound substrate capable of developing optimum bond with joint sealants. Remove loose particles remaining after cleaning operations above by vacuuming or blowing out joints with oil-free compressed air. Porous joint substrates include the following:

    a. Concrete Paving

3. Remove laitance and form-release agents from concrete.

3.3 INSTALLATION OF JOINT SEALANTS

A. General: Comply with joint-sealant manufacturer's written installation instructions for products and applications indicated, unless more stringent requirements apply.

B. Sealant Installation Standard: Comply with recommendations in ASTM C 1193 for use of joint sealants as applicable to materials, applications, and conditions indicated.

C. Install sealant backings of kind indicated to support sealants during application and at position required to produce cross-sectional shapes and depths of installed sealants relative to joint widths that allow optimum sealant movement capability.

1. Do not leave gaps between ends of sealant backings.
2. Do not stretch, twist, puncture, or tear sealant backings.
3. Remove absorbent sealant backings that have become wet before sealant application and replace them with dry materials.

D. Install bond-breaker tape behind sealants where sealant backings are not used between sealants and backs of joints.

E. Install sealants using proven techniques that comply with the following and at the same time backings are installed:

1. Place sealants so they directly contact and fully wet joint substrates.
2. Completely fill recesses in each joint configuration.
3. Produce uniform, cross-sectional shapes and depths relative to joint widths that allow optimum sealant movement capability.

F. Tooling of Nonsag Sealants: Immediately after sealant application and before skinning or curing begins, tool sealants according to requirements specified in subparagraphs below to form smooth, uniform beads of configuration indicated; to eliminate air pockets; and to ensure contact and adhesion of sealant with sides of joint.

1. Remove excess sealant from surfaces adjacent to joints.
2. Use tooling agents that are approved in writing by sealant manufacturer and that do not discolor sealants or adjacent surfaces.
3. Provide concave joint profile per Figure 8A in ASTM C 1193, unless otherwise indicated.

3.4 CLEANING

A. Clean off excess sealant or sealant smears adjacent to joints as the Work progresses by methods and with cleaning materials approved in writing by manufacturers of joint sealants and of products in which joints occur.

3.5 PROTECTION

A. Protect joint sealants during and after curing period from contact with contaminating substances and from damage resulting from construction operations or other causes so sealants are without deterioration or damage at time of Substantial Completion. If, despite such protection, damage or deterioration occurs, cut out and remove damaged or deteriorated joint sealants immediately so installations with repaired areas are indistinguishable from original work.

END OF SECTION 07 92 00

SECTION 10 14 26 - REGULATORY SIGNAGE

PART 1 - GENERAL

1.1 RELATED DOCUMENTS

A. Drawings and general provisions of the Contract, including General and Supplementary Conditions and Division 01 Specification Sections, apply to this Section.

1.2 SUMMARY

A. Section Includes:

1. Non-illuminated post and panel signs.

B. Related Requirements:

1. Section 03 30 00 – Cast-In-Place Concrete

1.3 REFERENCES

A. Manual on Uniform Traffic Control Devices (MUTCD) (latest edition).

1.4 QUALITY ASSURANCE

A. Regulatory Requirements: All work and materials shall be in accordance with the Manual on Uniform Traffic Control Devices (MUTCD) (latest edition).

1.5 COORDINATION

A. Furnish templates and tolerance information for placement of sign-anchorage devices embedded in permanent construction by other installers.

1.6 ACTION SUBMITTALS

A. Product Data: For each type of product.

B. Shop Drawings: For post signage.

1. Include fabrication and installation details and attachments to other work.
2. Show sign mounting heights, locations of supplementary supports to be provided by others, and accessories.
3. Show typestyles, graphic elements, and layout for each sign at least half size scale.

C. Samples for Verification: For each type of sign assembly, showing all components and with the required finish(es), in manufacturer's standard size unless otherwise indicated and as follows:

1. Post and Panel Signs: Not less than 12 inches including post.

D. Sign Schedule: Use same designations specified or indicated on Drawings or in a sign schedule.

1.7 INFORMATIONAL SUBMITTALS

A. Sample Warranty: For special warranty.

1.8 CLOSEOUT SUBMITTALS

A. Maintenance Data: For signs to include in maintenance manuals.

1.9 FIELD CONDITIONS

A. Field Measurements: Verify locations of anchorage devices embedded in permanent construction by other installers by field measurements before fabrication and indicate measurements on Shop Drawings.

1.10 WARRANTY

A. Special Warranty: Manufacturer agrees to repair or replace components of signs that fail in materials or workmanship within specified warranty period.

1. Failures include, but are not limited to, the following:

a. Deterioration of finishes beyond normal weathering.
b. Deterioration of embedded graphic image.
c. Separation or delamination of sheet materials and components.

2. Warranty Period: Five years from date of Substantial Completion.

PART 2 - PRODUCTS

2.1 PERFORMANCE REQUIREMENTS

A. Thermal Movements: For exterior signs, allow for thermal movements from ambient and surface temperature changes.

1. Temperature Change: 120 deg F, ambient; 180 deg F, material surfaces.

B. Accessibility Standard: Comply with applicable provisions in the U.S. Architectural & Transportation Barriers Compliance Board's ADA-ABA Accessibility Guidelines for Buildings and Facilities and ICC A117.1 for signs.

2.2 POST AND PANEL SIGNS

A. Post and Panel Sign: Sign of single-panel configuration; with smooth, uniform surfaces and support assembly; with message and characters having uniform faces, sharp corners, and precisely formed lines and profiles; and as follows:

1. Solid-Sheet Sign Panels: Aluminum sheet with finish specified in "Sign-Panel-Face Finish and Applied Graphics" Subparagraph below and as follows:

a. Thickness: Fabricate all temporary panels and those permanent panels that are 30 by 30 inches or smaller from 0.080-inch thick aluminum sheets. Fabricate larger permanent panels from 0.125-inch thick aluminum sheets unless otherwise recommended by signage manufacture.

2. Supply signs panels with top and bottom center holes for post- or fence- mounting.

2.3 MATERIALS

A. Aluminum Sheet and Plate: ASTM B 209, alloy and temper recommended by aluminum producer and finisher for type of use and finish indicated.

B. Aluminum Extrusions: ASTM B 221, alloy and temper recommended by aluminum producer and finisher for type of use and finish indicated.

C. Sign blanks shall be free from laminations, blisters, open seams, pits, holes, or other defects that may affect their appearance or use. The thickness shall be uniform and the blank commercially flat. Perform shearing, cutting, and punching before preparing the blanks for application of retroreflective material.

D. Clean, degrease, and chomate the blanks or otherwise properly prepare the panels according to methods recommended by the sheeting manufacturer.

E. Sign Retroreflective Sheeting. Conform to the MUTCD and the following:

1. Sign retroreflective sheeting shall conform to ASTM D 4956-04. Conform to ASTM D 4956-04 Supplemental Requirement S1, fungus Resistance, if specified.
2. When an adhesive is used, use ASTM D 4956-04, backing class 1, 2, 3, or 4.

F. Letters, Numerals, Arrows, Symbols, and Borders. Form letters, numerals, and other units to provide a continuous stroke width with smooth edges. Make the surface flat and free of warp, blisters, wrinkles, burrs, and splinters. Conform to one of the following:

1. Engineer grade prismatic - meets ASTM d 4956 type I economical prismatic sheeting.
2. Screen Process: Apply letters, numerals, arrows, symbols, and borders on the retroreflective sheeting or opaque background of the sign by direct or reverse screen process. Apply messages and borders of a color darker than the background to the paint or the retroreflective sheeting by direct process. Produce messages and borders of a color lighter than sign background by the reverse screen process. Use opaque or transparent colors, inks, and paints in the screen process of the type and quality recommended by the retroreflective sheeting manufacturer. Perform the screening in a manner that results in a uniform color and tone, with sharply-defined edges of legends and borders, and without blemishes on the sign background that will affect intended use. Air dry or bake the signs after screening according to manufacturer's recommendations to provide a smooth hard finish. Any signs with blisters or other blemishes will be rejected.
3. High-intensity prismatic - meets ASTM d 4956, type III, type IV and type X.

G. Direct Applied Characters: Cut letters, numerals, symbols, borders, and other features of the sign message from the type and color of the retroreflective sheeting specified, and apply to the sign background's retroreflective sheeting according to the retroreflective sheeting manufacturer's instructions. For the retroreflective sheeting minimum coefficient of retroreflection (RA), conform to ASTM D 4956-04.

2.4 ACCESSORIES

A. Fasteners and Anchors: Manufacturer's standard as required for secure anchorage of signage, noncorrosive and compatible with each material joined, and complying with the following:

1. Use concealed fasteners and anchors unless indicated to be exposed.
2. For exterior exposure, furnish stainless-steel devices unless otherwise indicated.
3. Exposed Metal-Fastener Components, General:

   a. Fabricated from same basic metal and finish of fastened metal unless otherwise indicated.
   b. Fastener Heads: For nonstructural connections, use screws and bolts with tamper-resistant, slots unless otherwise indicated.

4. Inserts: Furnish inserts to be set by other trades into concrete or masonry work.

B. Bituminous Paint: Cold-applied asphalt emulsion complying with ASTM D 1187.

C. Anchoring Materials:

1. Nonshrink, Nonmetallic Grout: Factory-packaged, nonstaining, noncorrosive, nongaseous grout complying with ASTM C 1107/C 1107M. Provide grout specifically recommended by manufacturer for interior and exterior applications.
2. Anchoring Cement: Factory-packaged, nonshrink, nonstaining, hydraulic-controlled expansion cement formulation for mixing with water at Project site to create pourable anchoring, patching, and grouting compound.

   a. Water-Resistant Product: At exterior locations, provide formulation that is resistant to erosion from water exposure without needing protection by a sealer or waterproof coating and that is recommended by manufacturer for exterior use.

2.5 FABRICATION

A. General: Provide manufacturer's standard sign assemblies according to requirements indicated.

1. Preassemble signs in the shop to greatest extent possible. Disassemble signs only as necessary for shipping and handling limitations. Clearly mark units for reassembly and installation, in locations concealed from view after final assembly.
2. Mill joints to tight, hairline fit. Form joints exposed to weather to resist water penetration and retention.
3. Comply with AWS for recommended practices in welding and brazing. Provide welds and brazes behind finished surfaces without distorting or discoloring exposed side. Clean exposed welded and brazed joints of flux, and dress exposed and contact surfaces.
4. Conceal fasteners and anchors unless indicated to be exposed; locate exposed fasteners where they will be inconspicuous.
5. Internally brace signs for stability and for securing fasteners.

B. Sign Message Panels: Construct sign-panel surfaces to be smooth and to remain flat under installed conditions within a tolerance of plus or minus 1/16 inch measured diagonally from corner to corner.

1. Coordinate dimensions and attachment methods to produce message panels with closely fitting joints. Align edges and surfaces with one another in the relationship indicated.
2. Increase panel thickness or reinforce with concealed stiffeners or backing materials as needed to produce surfaces without distortion, buckles, warp, or other surface deformations.
3. Continuously weld joints and seams unless other methods are indicated; grind, fill, and dress welds to produce smooth, flush, exposed surfaces with welds invisible after final finishing.

C. Post Fabrication: Fabricate posts designed to withstand wind pressure indicated for Project location and of lengths required for installation method indicated for each sign.

1. Aluminum Posts: Manufacturer's standard 0.125-inch- thick, extruded-aluminum tubing unless otherwise indicated, with brackets or slots to engage sign panels. Include post caps, fillers, spacers, junction boxes, access panels, reinforcement where required for loading conditions, and related accessories required for complete installation.
2. Direct Burial: Fabricate posts 36 inches longer than height of sign to permit direct burial or embedment in concrete foundations or concrete-filled postholes.

2.6 GENERAL FINISH REQUIREMENTS

A. Protect mechanical finishes on exposed surfaces from damage by applying a strippable, temporary protective covering before shipping.

B. Appearance of Finished Work: Noticeable variations in same piece are not acceptable. Variations in appearance of adjoining components are acceptable if they are within the range of approved Samples and are assembled or installed to minimize contrast.

PART 3 - EXECUTION

3.1 EXAMINATION

A. Examine substrates, areas, and conditions, with Installer present, for compliance with requirements for installation tolerances and other conditions affecting performance of signage work.

B. Verify that sign-support surfaces are within tolerances to accommodate signs.

C. Proceed with installation only after unsatisfactory conditions have been corrected.

3.2 INSTALLATION

A. General: Install signs using installation methods indicated and according to manufacturer's written instructions.

1. Install signs level, plumb, and at locations and heights indicated, with sign surfaces free of distortion and other defects in appearance.
2. Install signs so they do not protrude or obstruct according to accessibility standard.
3. Before installation, verify that sign components are clean and free of materials or debris that would impair installation.
4. Corrosion Protection: Coat concealed surfaces of exterior aluminum in contact with grout, concrete, masonry, wood, or dissimilar metals, with a heavy coat of bituminous paint.

3.3 INSTALLING POSTS

A. Vertical Tolerance: Set posts plumb within a tolerance of 1/16 inch in 3 feet.

B. Direct-Burial Method:

1. Excavation: Excavate posthole to dimensions indicated. Reconstruct subgrade that is not firm, undisturbed, or compacted soil, or that is damaged by freezing temperatures, frost, rain, accumulated water, or construction activities by excavating an additional 12 inches, backfilling with satisfactory soil or well-graded aggregate, and compacting to original subgrade elevation.
2. Setting in Earth: Set post in position, support to prevent movement, and backfill with satisfactory soil or well-graded aggregate as recommended in writing by manufacturer. Place and compact backfill in 6-inch lifts, compacting each lift.
3. Setting in Cast-in-Place Concrete: Set post in position, support to prevent movement, and place concrete in posthole or for concrete foundation as indicated.

   a. Leave anchorage joint exposed with 1/8-inch anchoring material sloped away from post.

3.4 ADJUSTING AND CLEANING

A. Remove and replace damaged or deformed signs and signs that do not comply with specified requirements. Replace signs with damaged or deteriorated finishes or components that cannot be successfully repaired by finish touchup or similar minor repair procedures.

B. Remove temporary protective coverings and strippable films as signs are installed.

C. On completion of installation, clean exposed surfaces of signs according to manufacturer's written instructions and touch up minor nicks and abrasions in finish. Maintain signs in a clean condition during construction and protect from damage until acceptance by Contracting Officer.

END OF SECTION 10 14 26

SECTION 31 10 00 - SITE CLEARING

PART 1 - GENERAL

1.1 RELATED DOCUMENTS

A. Drawings and general provisions of the Contract, including General and Supplementary Conditions and Division 01 Specification Sections, apply to this Section.

1.2 SUMMARY

A. Section Includes:

1. Protecting existing vegetation to remain.
2. Removing existing vegetation completely remove stumps and root systems.
3. Clearing and grubbing.
4. Stripping and stockpiling topsoil.
5. Removing above- and below-grade site improvements.
6. Disconnecting, capping, or sealing, and removing site utilities abandoning site utilities in place.
7. Site demolition of structures or paving to accommodate proposed site improvements.
8. Filling of voids and excavations resulting from the work.
9. Disposal of material from clearing, grubbing and demolition in approved off-site disposal areas.

B. Related Sections:

1. Specification Section 02 41 13 - Selective Site Demolition
2. Specification Section 31 20 00 - Earth Moving
3. Specification Section 31 25 00 - Erosion and Sedimentation Controls

1.3 MATERIAL OWNERSHIP

A. Except for stripped topsoil and other materials indicated to be stockpiled or otherwise remain Government property, cleared materials shall become Contractor's property and shall be removed from Project site.

1.4 QUALITY ASSURANCE

A. Coordinate mobilization/clearing work with the Contracting Officer (CO) and affected utility companies.

B. Contact the CO and other affected entities with services in the work area a minimum of 3 working days prior to the start of work near construction zone.

1.5 ACTION SUBMITTALS

A. The Contractor shall submit the following information to the CO for review before commencing work:

1. All permits and notices authorizing site clearing and demolition.
2. Permits for transport and disposal of debris.
3. Demolition procedures and operational sequence.

1.6 INFORMATIONAL SUBMITTALS

A. Record Drawings: Identifying and accurately showing locations of capped utilities and other subsurface structural, electrical, and mechanical conditions.

B. Copies of all permits and releases prior to disposal.

1.7 PROJECT CONDITIONS

A. Traffic: Minimize interference with adjoining roads, streets, walks, and other adjacent occupied or used facilities during site-clearing operations.

1. Do not close or obstruct streets, walks, or other adjacent occupied or used facilities without permission from the CO and authorities having jurisdiction.
2. Provide alternate routes around closed or obstructed traffic ways if required by the CO or authorities having jurisdiction.

B. Site conditions existing during the bidding period will be maintained by the Government in so far as practical.

C. Actual site condition variations that differ from those of the bidding period and which affect site clearing operations shall be brought to the attention of the Government prior to the commencement of any site work.

D. Salvable Improvements: Carefully remove items indicated to be salvaged and store on Government premises as directed by the CO.

E. Utility Locator Service: Notify KENTUCKY 811 for area where Project is located before beginning site clearing operations.

F. Do not commence site clearing operations until temporary erosion- and sedimentation-control and plant-protection measures are in place.

G. The following practices are prohibited within tree protection zones:

1. Storage of construction materials, debris, or excavated material.
2. Parking vehicles or equipment.
3. Foot traffic.
4. Erection of sheds or structures.
5. Impoundment of water.
6. Excavation or other digging unless otherwise indicated.
7. Attachment of signs to or wrapping materials around trees or plants unless otherwise indicated.

H. Do not direct vehicle or equipment exhaust towards protection zones.

I. Prohibit heat sources, flames, ignition sources, and smoking within or near protection zones.

J. Soil Stripping, Handling, and Stockpiling: Perform only when the topsoil is dry or slightly moist.

K. Permits: Contractor shall apply for and obtain Kentucky Pollutant Discharge Elimination System (KPDES) as specified under Section 31 25 00 “Erosion and Sedimentation Controls”.

1.8 MATERIALS

A. Satisfactory Soil Material: Requirements for satisfactory soil material are specified in Section 31 20 00 "Earth Moving."

1. Obtain approved borrow soil material off-site when satisfactory soil material is not available on-site.

B. Tree Protection Fencing

1. Tree protection fencing shall be an orange plastic web fence, 4 feet high minimum. Wood stakes shall be six (6) foot long by 1 inch by 1-inch square driven a minimum of two (2) feet into the ground. Posts shall be spaced eight (8) feet on center, maximum.

PART 2 - PRODUCTS - NOT APPLICABLE

PART 3 - EXECUTION

3.1 PREPARATION

A. Locate, identify, and protect utilities/services/site features that are indicated to remain from damage.

B. Protect and maintain benchmarks and survey control points from disturbance during construction.

C. Protect existing site improvements to remain from damage during construction.

1. Restore damaged improvements to their original condition, as acceptable to the CO.

D. Environmental and Tree Protection: As follows:

1. Protect trees, plant growth, and features designated to remain.
2. Before clearing begins, protect designated trees to remain with tree protection fencing to the approximate diameter of foliage (dripline of the tree) to prevent damage to the trunk, foliage and root system by construction equipment and procedures.
3. Replace damaged shrubs and other vegetation designated to remain with the same size and species.
4. Construction equipment shall minimize travel under drip lines of trees to be protected.
5. Fence/flag construction limits of protected areas to assure isolation and explain limits in field to all equipment operators.
6. The Contractor shall repair or replace immediately any damage to existing trees or root systems that are indicated to remain. The Contractor shall employ an arborist licensed in the jurisdiction of the Project, Commonwealth of Kentucky, to determine the repair, replacement needs and methods for approval by the CO.
7. The tree protection fencing shall be maintained for the duration of construction operations. The work shall include immediate replacement of any damaged fence. Fencing shall be removed from the site at the completion of construction operations. The fencing disposal shall be in accordance with local, state, and federal laws and regulations for the disposal of the material.

E. Temporary and permanent stockpiles shall be coordinated with the CO.

F. The Contractor shall flag the limits of clearing shown on the drawings by accurate field survey with marked stakes or other means acceptable to the CO. The CO shall be notified a minimum of five (5) working days prior to scheduled commencement of clearing operations to review the flagged limits. Adjust the clearing limits as directed by the CO.

G. Protect existing site improvements to remain from damage during construction.

1. Restore damaged improvements to their original condition, as acceptable to the CO.

3.2 TEMPORARY EROSION AND SEDIMENTATION CONTROL

A. Provide temporary erosion- and sedimentation-control measures to prevent soil erosion and discharge of soil-bearing water runoff or airborne dust to adjacent property and walkways, according to erosion- and sedimentation-control Drawings and requirements of authorities having jurisdiction.

B. Verify that flows of water redirected from construction areas or generated by construction activity do not enter or cross protection zones.

C. Inspect, maintain, and repair erosion- and sedimentation-control measures during construction until permanent vegetation has been established.

D. Remove erosion and sedimentation controls and restore and stabilize areas disturbed during removal.

3.3 EXISTING UTILITIES

A. Locate, identify, disconnect, and seal or cap utilities indicated to be removed or abandoned in place.

1. Arrange with utility companies to shut off indicated utilities.

B. Locate, identify, and disconnect utilities indicated to be abandoned in place.

C. Interrupting Existing Utilities: Do not interrupt utilities serving facilities occupied by the Government or others unless permitted under the following conditions and then only after arranging to provide temporary utility services according to requirements indicated:

1. Notify the CO not less than two days in advance of proposed utility interruptions.
2. Do not proceed with utility interruptions without Architect's written permission.

D. Excavate for and remove underground utilities indicated to be removed.

3.4 CLEARING AND GRUBBING

A. Remove obstructions, trees, shrubs, and other vegetation to permit installation of new construction.

1. Do not remove trees, shrubs, and other vegetation indicated to remain or to be relocated.
2. The Contractor shall grub the area within the clearing limits to completely remove stumps and root systems.
3. Use only hand methods for grubbing within protection zones.
4. Chip removed tree branches and dispose of off-site.

B. Fill depressions caused by clearing and grubbing operations with satisfactory soil material unless further excavation or earthwork is indicated.

1. Place fill material as specified under Section 31 20 00 – Earth Moving.

3.5 TOPSOIL STRIPPING

A. Remove sod and grass before stripping topsoil.

B. Strip topsoil to depth of minimum depth of 4 inches or depth to prevent intermingling with underlying subsoil or other waste materials.

1. Remove subsoil and nonsoil materials from topsoil, including clay lumps, gravel, and other objects more than 1 inches in diameter; trash, debris, weeds, roots, and other waste materials.

C. Stockpile topsoil away from edge of excavations without intermixing with subsoil. Grade and shape stockpiles to drain surface water. Cover to prevent windblown dust and erosion by water.

1. Limit height of topsoil stockpiles to 72 inches.
2. Do not stockpile topsoil within protection zones.
3. Dispose of surplus topsoil. Surplus topsoil is that which exceeds quantity indicated to be stockpiled or reused.
4. Stockpile surplus topsoil to allow for respreading deeper topsoil.

3.6 SITE IMPROVEMENTS

A. Remove existing above- and below-grade improvements as indicated and necessary to facilitate new construction.

B. Remove slabs, paving, curbs, gutters, and aggregate base as indicated.

1. Unless existing full-depth joints coincide with line of demolition, neatly saw-cut along line of existing pavement to remain before removing adjacent existing pavement. Saw-cut faces vertically.

3.7 DISPOSAL OF SURPLUS AND WASTE MATERIALS

A. Remove surplus soil material, unsuitable topsoil, obstructions, demolished materials, and waste materials including trash and debris, and legally dispose of them off Government's property in accordance with the approved permits, procedures, and operational sequence.

B. Separate recyclable materials produced during site clearing from other nonrecyclable materials. Store or stockpile without intermixing with other materials and transport them to recycling facilities. Do not interfere with other project work.

C. No burning of any material will be allowed.

END OF SECTION 31 10 00

SECTION 31 20 00 - EARTH MOVING

PART 1 - GENERAL

1.1 RELATED DOCUMENTS

A. Drawings and general provisions of the Contract, including General and Supplementary Conditions and Division 01 Specification Sections, apply to this Section.

1.2 SUMMARY

A. Section Includes:

1. Preparing subgrades for slabs-on-grade, walks, pavements, and seeding.
2. Excavating and backfilling for structures.
3. Drainage course for concrete slabs-on-grade.
4. Base course for concrete walks and pavements.
5. Excavating and backfilling trenches for utilities and pits for buried utility structures.

B. Related Sections:

1. Section 01 50 00 - Temporary Facilities and Controls
2. Section 03 30 00 - Cast-In-Place Concrete
3. Section 31 10 00 - Site Clearing
4. Section 32 13 13 - Concrete Paving
5. Section 32 92 00 - Seeding

1.3 DEFINITIONS

A. Backfill: Soil material or controlled low-strength material used to fill an excavation.

1. Initial Backfill: Backfill placed beside and over pipe in a trench, including haunches to support sides of pipe.
2. Final Backfill: Backfill placed over initial backfill to fill a trench.

B. Base Course: Aggregate layer placed between the subgrade and paving.

C. Bedding Course: Aggregate layer placed over the excavated subgrade in a trench before laying pipe.

D. Borrow Soil: Satisfactory soil imported from off-site for use as fill or backfill.

E. Excavation: Removal of material encountered above subgrade elevations and to lines and dimensions indicated.

1. Authorized Additional Excavation: Excavation below subgrade elevations or beyond indicated lines and dimensions as directed by Contracting Officer (CO). Authorized additional excavation and replacement material will be paid for according to Contract provisions changes in the Work.
2. Unauthorized Excavation: Excavation below subgrade elevations or beyond indicated lines and dimensions without direction by the CO. Unauthorized excavation, as well as remedial work directed by the CO, shall be without additional compensation.

F. Fill: Soil materials used to raise existing grades.

G. Structures: Footings, foundations, retaining walls, slabs, tanks, curbs, mechanical and electrical appurtenances, or other man-made stationary features constructed above or below the ground surface.

H. Subgrade: Uppermost surface of an excavation or the top surface of a fill or backfill immediately below base course, drainage fill, drainage course, or topsoil materials.

I. Utilities: On-site underground pipes, conduits, ducts, and cables, as well as underground services within buildings.

1.4 ACTION SUBMITTALS

A. Product Data: For each type of the following manufactured products required:

1. Warning tapes.

B. Samples for Verification: For the following products, in sizes indicated below:

1. Warning Tape: 12 inches long.

1.5 INFORMATIONAL SUBMITTALS

A. Qualification Data: For qualified testing agency.

B. Material Test Reports: For each on-site and borrow soil material proposed for fill and backfill as follows:

1. Classification according to ASTM D 2487.
2. Laboratory compaction curve according to ASTM D 698 or ASTM D 1557.

C. Preexcavation Photographs or Videotape: Show existing conditions of adjoining construction and site improvements, including finish surfaces, which might be misconstrued as damage caused by earth moving operations. Submit before earth moving begins.

1.6 QUALITY ASSURANCE

A. Geotechnical Testing Agency Qualifications: Qualified according to ASTM E 329 and ASTM D 3740 for testing indicated.

1.7 PROJECT CONDITIONS

A. Traffic: Minimize interference with adjoining roads, streets, walks, and other adjacent occupied or used facilities during earth moving operations.

1. Do not close or obstruct streets, walks, or other adjacent occupied or used facilities without permission from the CO and authorities having jurisdiction.
2. Provide alternate routes around closed or obstructed traffic ways if required by the CO or authorities having jurisdiction.

B. NO BLASTING: The use of explosives or blasting is not allowed within the Park unless permitted in writing by the CO.

C. Utility Locator Service: Notify KENTUCKY 811 for area where Project is located before beginning earth moving operations.

D. Do not commence earth moving operations until temporary erosion- and sedimentation-control measures, specified in specified in Section 312500 - Erosion and Sedimentation Control are in place.

E. Do not commence earth moving operations until plant-protection measures are in place.

F. The following practices are prohibited within protection zones:

1. Storage of construction materials, debris, or excavated material.
2. Parking vehicles or equipment.
3. Foot traffic.
4. Erection of sheds or structures.
5. Impoundment of water.
6. Excavation or other digging unless otherwise indicated.
7. Attachment of signs to or wrapping materials around trees or plants unless otherwise indicated.

G. Do not direct vehicle or equipment exhaust towards protection zones.

H. Prohibit heat sources, flames, ignition sources, and smoking within or near protection zones.

PART 2 - PRODUCTS

2.1 SOIL MATERIALS

A. General: Provide borrow soil materials when sufficient satisfactory soil materials are not available from excavations.

B. Satisfactory Soils: Soil Classification Groups GW, GP, GM, SW, SP, and SM according to ASTM D 2487, or a combination of these groups; free of rock or gravel larger than 2 inches in any dimension, debris, waste, frozen materials, vegetation, and other deleterious matter.

C. Unsatisfactory Soils: Soil Classification Groups GC, SC, CL, ML, OL, CH, MH, OH, and PT according to ASTM D 2487, or a combination of these groups.

1. Unsatisfactory soils also include satisfactory soils not maintained within 2 percent of optimum moisture content at time of compaction.

D. Base Course: Naturally or artificially graded mixture of natural or crushed gravel, crushed stone, and natural or crushed sand; ASTM D 2940; with at least 95 percent passing a 1-1/2-inch sieve and not more than 8 percent passing a No. 200 sieve.

E. Engineered Fill: Naturally or artificially graded mixture of natural or crushed gravel, crushed stone, and natural or crushed sand; ASTM D 2940; with at least 90 percent passing a 1-1/2-inch sieve and not more than 12 percent passing a No. 200 sieve.

F. Bedding Course: Naturally or artificially graded mixture of natural or crushed gravel, crushed stone, and natural or crushed sand; ASTM D 2940; except with 100 percent passing a 1-inch sieve and not more than 8 percent passing a No. 200 sieve.

G. Sand: ASTM C 33; fine aggregate.

H. Topsoil: See Specification 329200 - SEEDING

2.2 ACCESSORIES

1. Detectable Warning Tape: Acid- and alkali-resistant, polyethylene film warning tape manufactured for marking and identifying underground utilities, a minimum of 6 inches wide and 4 mils thick, continuously inscribed with a description of the utility, with metallic core encased in a protective jacket for corrosion protection, detectable by metal detector when tape is buried up to 30 inches deep.

A. Manufacturer: Reef Industries or approved equal.

B. Model: Terra Tape Diamond Detectable

C. Salient Characteristics

1. Physical

a. Material: 4-ply laminate composed of a virgin film, solid core aluminum foil, and clear virgin polyethylene film that is bonded together with molten polyethylene and printed with colored ink in a diamond pattern.
b. Width: 6 inches
c. Thickness: 5 mil (ASTM D-2103)
d. 6" Load @ Yield: 140 LBF (ASTM D-882)
e. Elongation: 200% (ASTM D-882)
f. Tongue Tear: 2.9 LBF (ASTM D-1938)
g. Trapezoidal Tear: 9.4 LBF (ASTM D-4533)
h. PPT Resistance: 7.5 LBF (ASTM D-2582)
i. Printability: > 40 Dynes (ASTM D-2578)

2. Functional

a. None

3. Performance

a. None

D. Tape colors shall be as follows as recommended by the American Public Works Association (APWA):

Electric	Red
Gas and Oil	Yellow
Communications	Orange
Water	Blue
Sewer and Drain	Green
Chemical	Red (not APWA)

PART 3 - EXECUTION

3.1 PREPARATION

A. Protect structures, utilities, sidewalks, pavements, and other facilities from damage caused by settlement, lateral movement, undermining, washout, and other hazards created by earth moving operations.

B. Protect and maintain erosion and sedimentation controls during earth moving operations.

C. Protect subgrades and foundation soils from freezing temperatures and frost. Remove temporary protection before placing subsequent materials.

3.2 DEWATERING

A. Prevent surface water and ground water from entering excavations, from ponding on prepared subgrades, and from flooding Project site and surrounding area.

B. Protect subgrades from softening, undermining, washout, and damage by rain or water accumulation.

1. Reroute surface water runoff away from excavated areas. Do not allow water to accumulate in excavations. Do not use excavated trenches as temporary drainage ditches.

3.3 EXPLOSIVES

A. Explosives: Do not use explosives.

3.4 EXCAVATION, GENERAL

A. Unclassified Excavation: Excavate to subgrade elevations regardless of the character of surface and subsurface conditions encountered. Unclassified excavated materials may include rock, soil materials, and obstructions. No changes in the Contract Sum or the Contract Time will be authorized for rock excavation or removal of obstructions.

1. If excavated materials intended for fill and backfill include unsatisfactory soil materials and rock, replace with satisfactory soil materials.

3.5 EXCAVATION FOR STRUCTURES

A. Excavate to indicated elevations and dimensions within a tolerance of plus or minus 1 inch. If applicable, extend excavations a sufficient distance from structures for placing and removing concrete formwork, for installing services and other construction, and for inspections.

1. Excavations for Footings and Foundations: Do not disturb bottom of excavation. Excavate by hand to final grade just before placing concrete reinforcement. Trim bottoms to required lines and grades to leave solid base to receive other work.

3.6 EXCAVATION FOR WALKS AND PAVEMENTS

A. Excavate surfaces under walks and pavements to indicated lines, cross sections, elevations, and subgrades.

3.7 EXCAVATION FOR UTILITY TRENCHES

A. Excavate trenches to indicated gradients, lines, depths, and elevations.

1. Beyond building perimeter, excavate trenches to allow installation of top of pipe below frost line.

B. Excavate trenches to uniform widths to provide the following clearance on each side of pipe or conduit. Excavate trench walls vertically from trench bottom to 12 inches higher than top of pipe or conduit unless otherwise indicated.

1. Clearance: 12 inches each side of pipe or conduit or as indicated on drawings.

C. Trench Bottoms: Excavate and shape trench bottoms to provide uniform bearing and support of pipes and conduit. Shape subgrade to provide continuous support for bells, joints, and barrels of pipes and for joints, fittings, and bodies of conduits. Remove projecting stones and sharp objects along trench subgrade.

1. Trench Bottoms: Excavate trenches 4 inches deeper than bottom of pipe and conduit elevations to allow for bedding course. Hand-excavate deeper for bells of pipe.

a. Where rock or other unyielding bearing material occurs, excavate trenches 6 inches deeper than elevation required in to allow for bedding course. Retain paragraph below if required.

3.8 SUBGRADE INSPECTION

A. Notify the Geotechnical Engineer when excavations have reached required subgrade.

B. If the Contractor's geotechnical engineer determines that unsatisfactory soil is present, continue excavation and replace with compacted backfill or fill material as directed.

C. Proof-roll subgrade below slabs and pavements with a pneumatic-tired equipment to identify soft pockets and areas of excess yielding. Do not proof-roll wet or saturated subgrades.

1. Excavate soft spots, unsatisfactory soils, and areas of excessive pumping or rutting, as determined by the Contractor's geotechnical engineer, and replace with compacted backfill or fill as directed.

D. Authorized additional excavation and replacement material will be paid for according to Contract provisions for changes in the Work.

E. Reconstruct subgrades damaged by freezing temperatures, frost, rain, accumulated water, or construction activities, as directed by the Contractor's geotechnical engineer, without additional compensation.

3.9 UNAUTHORIZED EXCAVATION

A. Fill unauthorized excavation under foundations or wall footings by extending bottom elevation of concrete foundation or footing to excavation bottom, without altering top elevation. Lean concrete fill, with 28-day compressive strength of 2500 psi, may be used when approved by the Geotechnical Engineer.

1. Fill unauthorized excavations under other construction, pipe, or conduit as directed by the CO.

3.10 STORAGE OF SOIL MATERIALS

A. Stockpile borrow soil materials and excavated satisfactory soil materials without intermixing. Place, grade, and shape stockpiles to drain surface water. Cover to prevent windblown dust.

1. Stockpile soil materials away from edge of excavations. Do not store within drip line of remaining trees.

3.11 BACKFILL

A. Place and compact backfill in excavations promptly, but not before completing the following:

1. Construction below finish grade including, where applicable, subdrainage, dampproofing, waterproofing, and perimeter insulation.
2. Surveying locations of underground utilities for Record Documents.
3. Testing and inspecting underground utilities.
4. Removing concrete formwork.
5. Removing trash and debris.
6. Removing temporary shoring and bracing, and sheeting.
7. Installing permanent or temporary horizontal bracing on horizontally supported walls.

B. Place backfill on subgrades free of mud, frost, snow, or ice.

3.12 UTILITY TRENCH BACKFILL

A. Place backfill on subgrades free of mud, frost, snow, or ice.

B. Place and compact bedding course on trench bottoms and where indicated. Shape bedding course to provide continuous support for bells, joints, and barrels of pipes and for joints, fittings, and bodies of conduits.

C. Trenches under Footings: Backfill trenches excavated under footings and within 18 inches of bottom of footings with satisfactory soil; fill with concrete to elevation of bottom of footings. Concrete is specified in Section 03 30 00 "Cast-in-Place Concrete."

D. Backfill voids with satisfactory soil while removing shoring and bracing.

E. Place and compact initial backfill of material, free of particles larger than 1 inch in any dimension, to a height of 12 inches over the pipe or conduit.

   1. Carefully compact initial backfill under pipe haunches and compact evenly up on both sides and along the full length of piping or conduit to avoid damage or displacement of piping or conduit. Coordinate backfilling with utilities testing.

F. Place and compact final backfill of satisfactory soil to final subgrade elevation.

G. Install warning tape directly above utilities, 12 inches below finished grade, except 6 inches below subgrade under pavements and slabs.

3.13 SOIL FILL

A. Plow, scarify, bench, or break up sloped surfaces steeper than 1 vertical to 4 horizontal so fill material will bond with existing material.

B. Place and compact fill material in layers to required elevations as follows:

   1. Under grass and planted areas, use satisfactory soil material.
   2. Under walks and pavements, use satisfactory soil material.
   3. Under steps and ramps, use engineered fill.
   4. Under footings and foundations, use engineered fill.

C. Place soil fill on subgrades free of mud, frost, snow, or ice.

3.14 SOIL MOISTURE CONTROL

A. Uniformly moisten or aerate subgrade and each subsequent fill or backfill soil layer before compaction to within 2 percent of optimum moisture content.

   1. Do not place backfill or fill soil material on surfaces that are muddy, frozen, or contain frost or ice.
   2. Remove and replace, or scarify and air dry, otherwise satisfactory soil material that exceeds optimum moisture content by 2 percent and is too wet to compact to specified dry unit weight.

3.15 COMPACTION OF SOIL BACKFILLS AND FILLS

A. Place backfill and fill soil materials in layers not more than 8 inches dimension in loose depth for material compacted by heavy compaction equipment, and not more than 4 inches in loose depth for material compacted by hand-operated tampers.

B. Place backfill and fill soil materials evenly on all sides of structures to required elevations, and uniformly along the full length of each structure.

C. Compact soil materials to not less than the following percentages of maximum dry unit weight according to ASTM D 698:

1. Under structures, building slabs, steps, and pavements, scarify and recompact top 12 inches of existing subgrade and each layer of backfill or fill soil material at 98 percent.
2. Under walkways, scarify and recompact top 6 inches below subgrade and compact each layer of backfill or fill soil material at 95 percent.
3. Under turf or unpaved areas, scarify and recompact top 6 inches below subgrade and compact each layer of backfill or fill soil material at 85 percent.
4. For utility trenches, compact each layer of initial and final backfill soil material at 90 percent.

3.16 GRADING

A. General: Uniformly grade areas to a smooth surface, free of irregular surface changes. Comply with compaction requirements and grade to cross sections, lines, and elevations indicated.

1. Provide a smooth transition between adjacent existing grades and new grades.
2. Cut out soft spots, fill low spots, and trim high spots to comply with required surface tolerances.

B. Site Grading: Slope grades to direct water away from buildings and to prevent ponding. Finish subgrades to required elevations within the following tolerances:

1. Turf or Unpaved Areas: Plus, or minus 1 inch.
2. Walks: Plus, or minus 1/2 inch.
3. Pavements: Plus, or minus 1/2 inch.

3.17 BASE COURSES UNDER PAVEMENTS AND WALKS

A. Place base course on subgrades free of mud, frost, snow, or ice.

B. On prepared subgrade, place and base course under pavements and walks as follows:

1. Shape and base course to required crown elevations and cross-slope grades.
2. Place and base course 6 inches or less in compacted thickness in a single layer.
3. Place and base course that exceeds 6 inches in compacted thickness in layers of equal thickness, with no compacted layer more than 6 inches thick or less than 3 inches thick.
4. Compact subgrade and base course at optimum moisture content to required grades, lines, cross sections, and thickness to not less than 98 percent of maximum dry unit weight according to ASTM D 698.

3.18 FIELD QUALITY CONTROL

A. Testing required determining compliance for the work of this section will be the responsibility of the Contractor, at no additional expense to the Government.

B. Testing Agency: Contractor will engage a qualified geotechnical engineering testing agency to perform tests and inspections.

C. Allow testing agency to inspect and test subgrades and each fill or backfill layer. Proceed with subsequent earth moving only after test results for previously completed work comply with requirements.

D. Footing Subgrade: At footing subgrades, at least one test of each soil stratum will be performed to verify design bearing capacities. Subsequent verification and approval of other footing subgrades may be based on a visual comparison of subgrade with tested subgrade when approved by the CO.

E. Testing agency will test compaction of soils in place according to ASTM D 1556, ASTM D 2167, ASTM D 2922, and ASTM D 2937, as applicable. Tests will be performed at the following locations and frequencies:

1. Paved Areas: At subgrade and at each compacted fill and backfill layer, at least one test for every 2000 sq. ft. or less of paved area or building slab, but in no case fewer than three tests.
2. Foundation Wall Backfill: At each compacted backfill layer, at least one test for every 100 feet or less of wall length, but no fewer than two tests.
3. Trench Backfill: At each compacted initial and final backfill layer, at least one test for every 150 feet or less of trench length, but no fewer than two tests.

F. When testing agency reports that subgrades, fills, or backfills have not achieved degree of compaction specified, scarify, and moisten or aerate, or remove and replace soil materials to depth required; recompact and retest until specified compaction is obtained.

3.19 PROTECTION

A. Protecting Graded Areas: Protect newly graded areas from traffic, freezing, and erosion. Keep free of trash and debris.

B. Repair and reestablish grades to specified tolerances where completed or partially completed surfaces become eroded, rutted, settled, or where they lose compaction due to subsequent construction operations or weather conditions.

1. Scarify or remove and replace soil material to depth as directed by the CO; reshape and recompact.

C. Where settling occurs before Project correction period elapses, remove finished surfacing, backfill with additional soil material, compact, and reconstruct surfacing.

1. Restore appearance, quality, and condition of finished surfacing to match adjacent work, and eliminate evidence of restoration to greatest extent possible.

3.20 DISPOSAL OF SURPLUS AND WASTE MATERIALS

A. Remove surplus satisfactory soil and waste materials, including unsatisfactory soil, trash, and debris, and legally dispose of them off Government's property.

END OF SECTION 31 20 00

SECTION 31 25 00 - EROSION AND SEDIMENTATION CONTROLS

PART 1 – GENERAL

1.1 RELATED DOCUMENTS

A. Drawings and general provisions of the Contract, including General and Supplementary Conditions and Division 01 Specification Sections, apply to this Section.

1.2 SUMMARY

A. Section Includes:

1. Furnishing, installing, and maintaining temporary soil erosion controls and temporary sedimentation controls.
2. Tree Protection
3. Temporary seeding
4. Erosion control blankets
5. Mulching

B. Related Sections:

1. Section 31 10 00 – Site Clearing

1.3 DEFINITIONS

A. Temporary erosion controls shall include silt fence grassing, rice straw wattles, mulching, watering, and reseeding on- site sloped surfaces, and at those locations which will ensure that erosion during construction will be either eliminated or minimized, and that no disturbed soils enter existing ditches, storm sewers or culverts, and that no soil leaves the construction limits.

1.4 ACTION SUBMITTALS

A. Product data for silt barriers, erosion control blankets.

B. Certificates of purity and content for all seed products if required/allowed for use by the Contracting Officer (CO).

1. Provide fresh, clean, new crop seed complying with tolerance for purity and germination as established by the Official Seed Analysts of North America.
2. Provide seed mixtures composed of grass species and other cover crop at the proportions and rates indicated on the drawings.
3. Submit seed vendor's certified statement for each seed mixture required, stating botanical and common name, percentages by weight, and percentages of purity, germination and weed seed content for each specified seed species.
4. Copy of KPDES Permit for project.

C. The Contractor shall review the soil erosion control plan and identify any additional erosion control measures to be employed, along with a construction sequencing plan and schedule as necessary to meet state and local regulations. The Contractor shall properly maintain and operate the soil erosion and sedimentation control plan, inspect the construction activity as necessary by local and state regulations/permits, and take any needed corrective actions.

1.5 INFORMATIONAL SUBMITTALS

A. Storm Water Operator Qualifications

1. Contractor shall submit name of their Storm Water Operator for the project.
2. Storm water operator shall have all necessary required state and/or certifications and will be responsible for all required site inspections and documentations.

B. Certifications for weed free straw mulch.

1.6 QUALITY ASSURANCE

A. Provide erosion control methods in accordance with methods as indicated on the erosion control plan and requirements of authorities having jurisdiction. Comply with Kentucky Pollutant Discharge Elimination System (KPDES) rules and regulations in terms of both installation and maintenance during construction.

B. The Contractor shall make application for the project KPDES Permit. Contractor will familiarize themselves with the requirements of this permit and be responsible for execution of these requirements.

C. Erosion control devices as shown on the drawings are the minimum effort required based upon the finished grades for the site. Contractor is responsible to provide ongoing maintenance of all erosion control measures and provide additional devices for erosion protection at the Contractor's expense to minimize sediment leaving the site or entering wetlands, ditches, or storm sewers during all phases of activity.

D. The Contractor's Storm Water Operator shall inspect the construction activity at least once per week, and within 24 hours after every precipitation event that results in a discharge from the site, to determine if any corrective actions are needed. The Contractor shall promptly take all necessary corrective actions. The Storm Water Operator shall keep a log of the inspection and corrective actions available, for inspection by the CO and the public at the construction site at all times. The Contractor shall retain the log on file for a period of 3 years from the date of the latest inspection or corrective action. The Contractor shall also furnish a copy of this log to the CO upon completion of the project.

1.7 DELIVERY, STORAGE, AND HANDLING

A. Delivery grass and other seed crop materials in sealed containers. Damaged packaging containing product is not acceptable.

PART 2 - PRODUCT

2.1 SILT-BARRIER PRODUCTS

A. Filter stone shall be crushed one (1)-inch stone without excessive fines or dust.

B. Silt barrier shall provide a water flow capacity of 40 gallons per minute per square foot.

1. Manufacturer: Silt-Saver or approved equal.
2. Type: Silt Fence

3. Salient characteristics

a. Physical

1) Woven geotextile with four 350lb tensile strength belts woven into fabric
2) 50 sieve fabric
3) Install silt barrier in all catch basins until final paving

b. Functional

1) Allow minimum 40 gallons per minute per square foot flow capacity

c. Performance

1) 90-day warranty against manufacturer defects

2.2 TEMPORARY SEED MATERIALS

A. Seed mixtures for temporary erosion/soil protection application shall be perennial ryegrass, alfalfa; or approved equal.

2.3 RICE STRAW WATTLES

A. Certified weed free.

B. As indicated on drawings.

2.4 EROSION CONTROL BLANKET

A. Manufacturer: North American Green Bionet or approved equal

B. Type: SC150BN

C. Salient Characteristics

1. Physical

a. 100% biodegradable, machine-produced mat of coconut fiber with permissible shear stress exceeding 2.25 psf.
b. Blanket shall be consistent thickness with coconut fiber evenly distributed over entire area of mat
c. Blanket shall be covered on the top side with a 60x50 woven coir fiber netting with mesh openings not to exceed .75-inch by .75-inch
d. Blanket shall be covered on bottom side with 100% biodegradable woven natural fiber jute netting
e. Jute netting shall form an approximate .50-inch by 1-inch mesh
f. Blanket shall be sewn together on 1.50-inch centers with degradable thread
g. Shall meet Type 4 specification requirements established by the Erosion Control Technology Council (ECTC) and Federal Highway Administration (FHWA) FP-03 Section 713.17.

2. Functional

a. Functional longevity of greater than 36 months

3. Performance

a. None

2.5 TREE PROTECTION

A. Manufacturer: Mar-Mac Industries, Inc. HDPE Barrier Fence or approved equal.

B. Tree Protection Fencing: Orange plastic fence, minimum height, 4 feet.

C. Salient Characteristics

1. Physical

a. Color: Orange
b. Mesh: Extruded Rectangular Mesh with 3.94”X1.02” openings.
c. Height: 4’
d. Material: High Density Polyethylene (HDPE)

2. Functional

a. Maximum Load Tensile Strength

1) Machine Direction: 0.88 KN/M
2) Transverse Direction: 3.16 KN/M

3. Performance

a. UV Stability minimum 6 months

2.6 MULCHES

A. Certified Weed Free Straw Mulch: Provide air-dry, clean, mildew and seed-free, threshed straw of wheat, rye, oats, or barley.

PART 3 - EXECUTION

3.1 PROTECTION

A. Locate, identify, and protect park features that remain from damage.

B. Protection of Wetlands, Streams, Drainage ways: Contractor shall be responsible for protection of NPS contiguous land to the project work zone. If any erosion of fill or cut slopes start migrating outside the works, the Contractor shall notify the CO immediately and identify corrective action that needs to take place. Corrective action will be dependent on condition but can range from placing rip rap on slope to prevent further erosion to installing a silt fence.

C. Erosion Control and Dust Control: Contractor shall be responsible for dust control until final construction operations are complete.

D. Environmental protection: Comply with any applicable permits.

E. Protect benchmarks from damage and displacement.

3.2 GENERAL

A. The Contractor shall construct the sedimentation control devices prior to clearing and grubbing the remaining site to ensure complete silt control.

B. Erosion and sedimentation controls shall be maintained in a condition which will retain unfiltered water.

C. The Contractor shall be solely responsible for ensuring that no silt or debris leaves the construction site or enters protected wetlands, streams, or drainage ditches. Any silt or debris that does leave the immediate site shall be immediately cleaned up, and the area disturbed shall be returned to its natural state at the Contractor's expense.

D. The Contractor shall be responsible to clean-up all silt debris built up on the site and for the removal of all erosion control measures at the appropriate times as directed by the CO.

3.3 INSTALLATION

A. Erosion and Sedimentation Control Devices. Erosion and sedimentation control measures to be taken during construction include, but are not necessarily limited to the following:

1. Prevent sediment from leaving the project site by installing silt fencing and rice straw wattles as indicated on the plans.
2. Provide temporary erosion controls consisting of silt fencing and rice straw wattles to maintain existing drainage patterns. Install rice straw wattles to provide filtration of runoff.
3. Remove deteriorated and rice straw wattles which has become dislodged. Place new rice straw wattles.

B. Chemicals and Pollutants:

1. Store construction materials and chemicals that could contribute pollutants to the runoff within an enclosure, container, or provide containment approved system around the perimeter of the storage area, to prevent discharge of these materials into runoff from the construction site.
2. Perform equipment maintenance in designated areas using measures such as drip pans to control petroleum products spillage.
3. Immediately clean up and properly dispose of spills of construction related materials such as paints, solvents, or other chemicals.

3.4 Rice STRAW WATTLES

A. Rice straw wattles shall be installed at the locations, shown on the Drawings and in general as follows:

1. Adjacent to wetlands.
2. Toe of slope of embankment construction to filter all runoff flowing to off-site discharges.
3. Around all stockpiles.
4. Other locations shown on the Contract Drawings and required by laws, regulations, and permits.

B. Sediment shall be removed and disposed of periodically from behind the rice straw wattles. The accumulated sediment shall not be allowed to rise above the mid-height of the wattle. All sediment, rice straw wattles, and appurtenances shall be removed and disposed of at the completion of the Contract.

3.5 TREE PROTECTION FENCING

A. Tree Protection Fencing: Install as at locations indicated on drawings.

3.6 EROSION CONTROL BLANKET

A. Protect seeded areas with slopes exceeding 1:4 with erosion control blankets.

B. Install and anchor with biodegradable fasteners according to manufacturer's written instructions.

3.7 TEMPORARY SEEDING

A. Seed Bed Preparation:

1. Rough grade areas to smooth, even surface with loose uniformly fine texture. Roll, rake, and drag lawn areas. Remove ridges and fill depressions as required to meet finish grades. Limit fine grading to areas which can be planted immediately after grading.
2. Prepared seed bed shall be friable topsoil, free from subsoil clay lumps, brush, weeds, and other litter, and shall be free of roots, stumps, and stones larger than 1 inch in any dimension.
3. If seed bed has become muddy, hard, or excessively dry, retill to a smooth, friable, uniform condition, free from stones or lumps. Regrade all settling prior to seeding. Seed immediately after bed preparation.

B. Seeding Areas Less Steep Than a 1:4 (Vertical to Horizontal) Slope:

1. Do not use wet seed or seed that is moldy or otherwise damaged in transit or storage.
2. Place seed with a mechanical drill seeder (Brillion or equal). Distribute seed evenly over entire area by drilling equal quantity in 2 directions at right angles to each other.
3. Do not seed immediately following rain or if seed bed is muddy.
4. Roll sown area with a roller weighing at least 200 pounds per lineal foot.
5. Immediately after seeding and compacting, apply mulch material to attain even coverage over the entire target area.

C. Protect seeded areas with slopes not exceeding 1:4 by spreading straw mulch. Spread uniformly at a minimum rate of 2 tons/acre to form a continuous blanket 1-1/2 inches thickness in loose thickness over seeded areas. Spread by hand, blower, or other suitable equipment.

1. Anchor straw mulch by crimping into soil with suitable mechanical equipment.

3.8 MAINTENANCE OF EROSION AND SEDIMENTATION CONTROL MEASURES

A. The Contractor shall check the condition of erosion and sedimentation control devices daily and maintain them in good operating condition. Weed Free Rice Straw Wattles shall be replaced when deteriorated.

B. The Contractor shall inspect the condition of weed free straw wattles and other erosion and sedimentation control devices after each rainstorm and during major storm events. Repairs shall be made, as necessary.

C. Temporary soil erosion and sedimentation control devices shall be removed and adjacent areas outside the limits of grading restored upon completion of the work and after disturbed areas have been revegetated.

END OF SECTION 31 25 00

SECTION 31 50 00 - EXCAVATION SUPPORT AND PROTECTION

PART 1 - GENERAL

1.1 RELATED DOCUMENTS

A. Drawings and general provisions of the Contract, including General and Supplementary Conditions and Division 01 Specification Sections, apply to this Section.

1.2 SUMMARY

A. Section includes temporary excavation support and protection systems.

B. Related Sections:

1. Section 01 32 33 "Photographic Documentation" for recording preexisting conditions and excavation support and protection system progress.
2. Section 01 50 00 "Temporary Facilities and Controls" for temporary utilities and support facilities.

1.3 PERFORMANCE REQUIREMENTS

A. Design and furnish, install, monitor, and maintain excavation support and protection system capable of supporting excavation sidewalls and of resisting soil and hydrostatic pressure and superimposed and construction loads.

1. Delegated Design: Design excavation support and protection system, including comprehensive engineering analysis by a qualified professional engineer, registered in Commonwealth of Kentucky, using performance requirements and design criteria indicated.
2. Prevent surface water from entering excavations by grading, dikes, or other means.
3. Install excavation support and protection systems without damaging existing buildings, structures, and site improvements adjacent to excavation.
4. Monitor vibrations, settlements, and movements.

1.4 ACTION SUBMITTALS

A. Shop Drawings: For excavation support and protection system.

B. Delegated-Design Submittal: For excavation support and protection system indicated to comply with performance requirements and design criteria, including analysis data signed and sealed by the qualified professional engineer, registered in Commonwealth of Kentucky, responsible for their preparation.

1.5 INFORMATIONAL SUBMITTALS

A. Qualification Data: For qualified professional engineer, registered in Commonwealth of Kentucky.

B. Other Informational Submittals:

1. Photographs or Videotape: Show existing conditions of adjacent construction and site improvements that might be misconstrued as damage caused by the absence of, the installation of, or the performance of excavation support and protection systems. Submit before Work begins.

2. Record Drawings: Identifying and locating capped utilities and other subsurface structural, electrical, or mechanical conditions.

1.6 QUALITY ASSURANCE

A. Preinstallation Conference: Conduct conference at Project site.

1. Review methods and procedures related to excavation support and protection system including, but not limited to, the following:

a. Geotechnical report.
b. Existing utilities and subsurface conditions.
c. Proposed excavations.
d. Proposed equipment.
e. Monitoring of excavation support and protection system.
f. Working area location and stability.
g. Coordination with waterproofing.
h. Abandonment or removal of excavation support and protection system.

1.7 PROJECT CONDITIONS

A. Interruption of Existing Utilities: Do not interrupt any utility serving facilities occupied by Owner or others unless permitted under the following conditions and then only after arranging to provide temporary utility according to requirements indicated:

1. Notify Contracting Officer (CO) no fewer than two days in advance of proposed interruption of utility.
2. Do not proceed with interruption of utility without written permission.

B. Project-Site Information: A geotechnical report has been prepared for this Project and is available for information only. The opinions expressed in this report are those of geotechnical engineer and represent interpretations of subsoil conditions, tests, and results of analyses conducted by geotechnical engineer. The Government will not be responsible for interpretations or conclusions drawn from the data.

1. Make additional test borings and conduct other exploratory operations necessary for excavation support and protection.
2. The geotechnical report is included elsewhere in the Project Manual.

C. Survey Work: Engage a qualified land surveyor or professional engineer, registered in Commonwealth of Kentucky, to survey adjacent existing buildings, structures, and site improvements; establish exact elevations at fixed points to act as benchmarks. Clearly identify benchmarks and record existing elevations.

1. During installation of excavation support and protection systems, regularly resurvey benchmarks, maintaining an accurate log of surveyed elevations and positions for comparison with original elevations and positions. Promptly notify CO if changes in elevations or positions occur or if cracks, sags, or other damage is evident in adjacent construction.

PART 2 - PRODUCTS

2.1 MATERIALS

A. General: Provide materials that are either new or in serviceable condition.

B. Structural Steel: ASTM A 36/A 36M, ASTM A 690/A 690M, or ASTM A 992/A 992M.

C. Steel Sheet Piling: ASTM A 328/A 328M, ASTM A 572/A 572M, or ASTM A 690/A 690M; with continuous interlocks.

1. Corners: Site-fabricated mechanical interlock.

D. Wood Lagging: Lumber, mixed hardwood, nominal rough thickness of size and strength required for application

E. Tiebacks: Steel strand, ASTM A 416/A 416M.

PART 3 - EXECUTION

3.1 PREPARATION

A. Protect structures, utilities, sidewalks, pavements, and other facilities from damage caused by settlement, lateral movement, undermining, washout, and other hazards that could develop during excavation support and protection system operations.

1. Shore, support, and protect utilities encountered.

B. Install excavation support and protection systems to ensure minimum interference with roads, streets, walks, and other adjacent occupied and used facilities.

1. Do not close or obstruct streets, walks, or other adjacent occupied or used facilities without permission from CO and authorities having jurisdiction. Provide alternate routes around closed or obstructed traffic ways if required by authorities having jurisdiction.

C. Locate excavation support and protection systems clear of permanent construction so that forming and finishing of concrete surfaces are not impeded.

D. Monitor excavation support and protection systems daily during excavation progress and for as long as excavation remains open. Promptly correct bulges, breakage, or other evidence of movement to ensure that excavation support and protection systems remain stable.

E. Promptly repair damages to adjacent facilities caused by installing excavation support and protection systems.

3.2 WOOD LAGGING

A. Install wood lagging within flanges of soldier piles as excavation proceeds. Trim excavation as required to install lagging. Fill voids behind lagging with soil, and compact.

3.3 SHEET PILING

A. Before starting excavation, install one-piece sheet piling lengths and tightly interlock to form a continuous barrier. Accurately place the piling, using templates and guide frames unless otherwise recommended in writing by the sheet piling manufacturer. Limit vertical offset of adjacent sheet piling to 60 inches. Accurately align exposed faces of sheet piling to vary not more than 2 inches from a horizontal line and not more than 1:120 out of vertical alignment Cut tops of sheet piling to uniform elevation at top of excavation.

3.4 TIEBACKS

A. Tiebacks: Drill, install, grout, and tension tiebacks. Test load-carrying capacity of each tieback and replace and retest deficient tiebacks.

1. Test loading shall be observed by a qualified professional engineer, registered in Commonwealth of Kentucky, responsible for design of excavation support and protection system.
2. Maintain tiebacks in place until permanent construction is able to withstand lateral soil and hydrostatic pressures.

3.5 BRACING

A. Bracing: Locate bracing to clear columns, floor framing construction, and other permanent work. If necessary to move brace, install new bracing before removing original brace.

1. Do not place bracing where it will be cast into or included in permanent concrete work unless otherwise approved.
2. Install internal bracing, if required, to prevent spreading or distortion of braced frames.
3. Maintain bracing until structural elements are supported by other bracing or until permanent construction is able to withstand lateral earth and hydrostatic pressures.

3.6 REMOVAL AND REPAIRS

A. Remove excavation support and protection systems when construction has progressed sufficiently to support excavation and bear soil and hydrostatic pressures. Remove in stages to avoid disturbing underlying soils or damaging structures, pavements, facilities, and utilities.

1. Fill voids immediately with approved backfill compacted to density specified in Section 31 20 00 "Earth Moving."
2. Repair or replace, adjacent work damaged or displaced by removing excavation support and protection systems.

END OF SECTION 31 50 00

SECTION 32 12 16 - ASPHALT PAVING

PART 1 - GENERAL

1.1 RELATED DOCUMENTS

A. Drawings and general provisions of the Contract, including General and Supplementary Conditions and Division 01 Specification Sections, apply to this Section.

1.2 SUMMARY

A. Section Includes:

1. Cold milling of existing asphalt pavement.
2. Hot-mix asphalt patching.
3. Hot-mix asphalt paving.
4. Hot-mix asphalt overlay.

B. Related Requirements:

1. Section 02 41 13 - Selective Site Demolition
2. Section 31 20 00 - Earth Moving
3. Section 32 17 23 - Pavement Markings

1.3 ACTION SUBMITTALS

A. Product Data: For each type of product.

1. Include technical data and tested physical and performance properties.
2. Job-Mix Designs: Certification, by authorities having jurisdiction, of approval of each job mix proposed for the Work.
3. Job-Mix Designs: For each job mix proposed for the Work.

1.4 INFORMATIONAL SUBMITTALS

A. Qualification Data: For manufacturer and testing agency.

B. Material Certificates: For each paving material. Include statement that mixes containing recycled materials will perform equal to mixes produced from all new materials.

C. Material Test Reports: For each paving material, by a qualified testing agency.

D. Field quality-control reports.

1.5 QUALITY ASSURANCE

A. Manufacturer Qualifications: Manufacturer shall be registered with and approved by authorities having jurisdiction in the Commonwealth of Kentucky.

B. Testing Agency Qualifications: Qualified according to ASTM D 3666 for testing indicated.

C. Regulatory Requirements: Comply with Kentucky Department of Highways Standard Specifications for Road and Bridge Construction, Current Edition for asphalt paving work.

1.6 FIELD CONDITIONS

A. Environmental Limitations: Do not apply asphalt materials if subgrade is wet or excessively damp, if rain is imminent or expected before time required for adequate cure, or if the following conditions are not met:

1. Tack Coat: Minimum surface temperature of 60 deg F.
2. Asphalt Base Course: Minimum surface temperature of 40 deg F and rising at time of placement.
3. Asphalt Surface Course: Minimum surface temperature of 60 deg F at time of placement.

PART 2 - PRODUCTS

2.1 AGGREGATES

A. Clean, hard, durable fragments or particles of crushed stone meeting the requirements of Section 302 of the Kentucky Department of Highways Standard Specifications for Road and Bridge Construction for Dense Graded Aggregate Base.

2.2 ASPHALT MATERIALS

A. Tack Coat: Furnish and install material conforming to SS-1, SS-1h or RS-1, Section 806 of the Kentucky Department of Highways Standard Specifications for Road and Bridge Construction.

2.3 MIXES

A. Hot-Mix Asphalt: Dense, hot-laid, hot-mix asphalt plant mixes complying with the following requirements:

1. Base Course: Materials for bituminous base course shall be in accordance with Section 403 of the Kentucky Department of Highways Standard Specifications for Road and Bridge Construction, Current Edition.
2. Surface Course: Materials for bituminous surface course shall be in accordance with Section 403 of the Kentucky Department of Highways Standard Specifications for Road and Bridge Construction, Current Edition.

PART 3 - EXECUTION

3.1 EXAMINATION

A. Verify that subgrade is dry and in suitable condition to begin paving.

3.2 COLD MILLING

A. Clean existing pavement surface of loose and deleterious material immediately before cold milling. Remove existing asphalt pavement by cold milling to grades and cross sections indicated.

1. Mill to a depth of 2 inches.
2. Mill to a uniform finished surface free of excessive gouges, grooves, and ridges.
3. Control rate of milling to prevent tearing of existing asphalt course.
4. Repair or replace curbs, manholes, and other construction damaged during cold milling.
5. Excavate and trim unbound-aggregate base course, if encountered, and keep material separate from milled hot-mix asphalt.
6. Patch surface depressions deeper than 1 inch after milling, before wearing course is laid.

7. Handle milled asphalt material according to approved waste management plan required in Section 017419 "Construction Waste Management and Disposal."
8. Keep milled pavement surface free of loose material and dust.
9. Do not allow milled materials to accumulate on-site.

3.3 PATCHING

A. Asphalt Pavement: Saw cut perimeter of patch and excavate existing pavement section to sound base. Excavate rectangular or trapezoidal patches, extending 12 inches into perimeter of adjacent sound pavement, unless otherwise indicated. Cut excavation faces vertically. Remove excavated material. Recompact existing unbound-aggregate base course to form new subgrade.

B. Tack Coat: Before placing patch material, apply tack coat uniformly to vertical asphalt surfaces abutting the patch. Apply at a rate of 0.05 to 0.15 gal./sq. yd.

1. Allow tack coat to cure undisturbed before applying hot-mix asphalt paving.
2. Avoid smearing or staining adjoining surfaces, appurtenances, and surroundings. Remove spillages and clean affected surfaces.

C. Placing Patch Material: Fill excavated pavement areas with hot-mix asphalt base mix for full thickness of patch and, while still hot, compact flush with adjacent surface.

D. Placing Patch Material: Partially fill excavated pavements with hot-mix asphalt base mix and, while still hot, compact. Cover asphalt base course with compacted, hot-mix surface layer finished flush with adjacent surfaces.

3.4 REPAIRS

A. Leveling Course: Install and compact leveling course consisting of hot-mix asphalt surface course to level sags and fill depressions deeper than 1 inch in existing pavements.

1. Install leveling wedges in compacted lifts not exceeding 3 inches thick.

B. Crack and Joint Filling: Remove existing joint filler material from cracks or joints to a depth of 1/4 inch.

1. Clean cracks and joints in existing hot-mix asphalt pavement.
2. Use emulsified-asphalt slurry to seal cracks and joints less than 1/4 inch wide. Fill flush with surface of existing pavement and remove excess.
3. Use hot-applied joint sealant to seal cracks and joints more than 1/4 inch wide. Fill flush with surface of existing pavement and remove excess.

3.5 SURFACE PREPARATION

A. General: Immediately before placing asphalt materials, remove loose and deleterious material from substrate surfaces. Ensure that prepared subgrade is ready to receive paving.

B. Tack Coat: Apply uniformly to surfaces of existing pavement at a rate of 0.05 to 0.15 gal./sq. yd.

1. Allow tack coat to cure undisturbed before applying hot-mix asphalt paving.
2. Avoid smearing or staining adjoining surfaces, appurtenances, and surroundings. Remove spillages and clean affected surfaces.

3.6 PLACING HOT-MIX ASPHALT

A. Machine place hot-mix asphalt on prepared surface, spread uniformly, and strike off. Place asphalt mix by hand in areas inaccessible to equipment in a manner that prevents segregation of mix. Place each course to required grade, cross section, and thickness when compacted.

1. Place hot-mix asphalt base course in number of lifts and thicknesses indicated.
2. Place hot-mix asphalt surface course in single lift.
3. Spread mix at a minimum temperature of 250 deg F.
4. Begin applying mix along centerline of crown for crowned sections and on high side of one-way slopes unless otherwise indicated.
5. Regulate paver machine speed to obtain smooth, continuous surface free of pulls and tears in asphalt-paving mat.

B. Place paving in consecutive strips not less than 10 feet wide unless infill edge strips of a lesser width are required.

1. After first strip has been placed and rolled, place succeeding strips and extend rolling to overlap previous strips. Overlap mix placement about 1 to 1-1/2 inches from strip to strip to ensure proper compaction of mix along longitudinal joints.
2. Complete a section of asphalt base course before placing asphalt surface course.

C. Promptly correct surface irregularities in paving course behind paver. Use suitable hand tools to remove excess material forming high spots. Fill depressions with hot-mix asphalt to prevent segregation of mix; use suitable hand tools to smooth surface.

3.7 JOINTS

A. Construct joints to ensure a continuous bond between adjoining paving sections. Construct joints free of depressions, with same texture and smoothness as other sections of hot-mix asphalt course.

3.8 COMPACTION

A. General: Begin compaction as soon as placed hot-mix paving will bear roller weight without excessive displacement. Compact hot-mix paving with hot, hand tampers or with vibratory-plate compactors in areas inaccessible to rollers.

1. Complete compaction before mix temperature cools to 185 deg F .

B. Breakdown Rolling: Complete breakdown or initial rolling immediately after rolling joints and outside edge. Examine surface immediately after breakdown rolling for indicated crown, grade, and smoothness. Correct laydown and rolling operations to comply with requirements.

C. Intermediate Rolling: Begin intermediate rolling immediately after breakdown rolling while hot-mix asphalt is still hot enough to achieve specified density. Continue rolling until hot-mix asphalt course has been uniformly compacted to the following density:

1. Average Density: 92 percent of reference maximum theoretical density according to ASTM D 2041, but not less than 90 percent or greater than 96 percent.

D. Finish Rolling: Finish roll paved surfaces to remove roller marks while hot-mix asphalt is still warm.

E. Edge Shaping: While surface is being compacted and finished, trim edges of pavement to proper alignment. Bevel edges while asphalt is still hot; compact thoroughly.

F. Repairs: Remove paved areas that are defective or contaminated with foreign materials and replace with fresh, hot-mix asphalt. Compact by rolling to specified density and surface smoothness.

G. Protection: After final rolling, do not permit vehicular traffic on pavement until it has cooled and hardened.

H. Erect barricades to protect paving from traffic until mixture has cooled enough not to become marked.

3.9 INSTALLATION TOLERANCES

A. Pavement Thickness: Compact each course to produce the thickness indicated within the following tolerances:

1. Base Course: Plus, or minus 1/2 inch.
2. Surface Course: Plus 1/4 inch, no minus.

B. Pavement Surface Smoothness: Compact each course to produce a surface smoothness within the following tolerances as determined by using a 10-foot straightedge applied transversely or longitudinally to paved areas:

1. Base Course: 1/4 inch.
2. Surface Course: 1/8 inch .

3.10 FIELD QUALITY CONTROL

A. Testing required determining compliance for the work of this section will be the responsibility of the Contractor, at no additional expense to the Government.

B. Testing Agency: Contractor shall engage a qualified testing agency to perform tests and inspections.

C. Thickness: In-place compacted thickness of hot-mix asphalt courses will be determined according to ASTM D 3549.

D. Surface Smoothness: Finished surface of each hot-mix asphalt course will be tested for compliance with smoothness tolerances.

E. Remove and replace or install additional hot-mix asphalt where test results or measurements indicate that it does not comply with specified requirements.

3.11 WASTE HANDLING

A. General: Handle asphalt-paving waste according to approved waste management plan required in Section 01 74 19 "Construction Waste Management and Disposal."

B. Except for material indicated to be recycled, remove excavated materials from Project site and legally dispose of them in an EPA-approved landfill.

END OF SECTION 32 12 16

SECTION 32 13 13 - CONCRETE PAVING

PART 1 - GENERAL

1.1 RELATED DOCUMENTS

A. Drawings and general provisions of the Contract, including General and Supplementary Conditions and Division 01 Specification Sections, apply to this Section.

1.2 SUMMARY

A. Section Includes:

1. Exposed aggregate walkways and paving
2. Walkways and curbing.
3. ABAAS tactile domes.

B. Related Sections:

1. Section 03 30 00 - Cast-In-Place Concrete
2. Section 31 20 00 - Earth Moving

1.3 DEFINITIONS

A. Cementitious Materials: Portland cement alone or in combination with one or more of blended hydraulic cement, ground granulated blast-furnace slag, and silica fume.

1.4 ACTION SUBMITTALS

A. Product Data: For each type of product indicated.

B. Submit manufacturer's literature for ABAAS tactile domes describing products and installation procedures.

C. Shop Drawings: Submit shop drawing showing steel reinforcement for each concrete pavement type indicated on drawings.

D. Proposed joint layout plan for concrete paving.

E. Samples for Initial Selection: For each type of product, ingredient, or admixture requiring color selection.

F. Other Action Submittals:

1. Design Mixtures: Submit concrete mix designs for concrete pavement and curbs. Mix design shall include quantities and sources of all aggregates, cement, fly ash, and admixtures to be used. Mix designs are to be prepared by a state department of transportation certified testing laboratory regularly engaged in designing and testing concrete for exterior paving. Test results for mix designs to be used shall be within the past 12 months.
2. For each concrete paving mixture. Include alternate design mixtures when characteristics of materials, Project conditions, weather, test results, or other circumstances warrant adjustments.

1.5 INFORMATIONAL SUBMITTALS

A. Qualification Data: For qualified ready-mix concrete manufacturer and testing agency.

B. ABAAS Installer's Qualifications: Engage an experienced installer certified in writing for Cast in Place concrete.

C. Submit manufacturer's product data for the following:

1. Form release agent.
2. Preformed joint filler.
3. Concrete reinforcement specification data from manufacturer.
4. Detectable Warning including manufacturer's certification that product complies with ABAAS.

D. Material Certificates: For the following, from manufacturer:

1. Cementitious materials.
2. Steel reinforcement and reinforcement accessories.
3. Admixtures.
4. Curing compounds.
5. Applied finish materials.
6. Bonding agent or epoxy adhesive.
7. Joint fillers.

E. Material Test Reports: For each of the following:

1. Aggregates. Include service-record data indicating absence of deleterious expansion of concrete due to alkali-aggregate reactivity.

F. Field quality-control reports.

G. CQC Accessibility Inspection Report: Submit applicable sections of the Accessibility Inspection Report. Refer to Division 01 Section, "Quality Requirements."

1.6 QUALITY ASSURANCE

A. Installer Qualifications: An experienced installer who has completed pavement work similar in material, design, and extent to that indicated for this Project and whose work has resulted in construction with a record of successful in-service performance.

B. Ready-Mix-Concrete Manufacturer Qualifications: A firm experienced in manufacturing ready-mixed concrete products and that complies with ASTM C 94/C 94M requirements for production facilities and equipment.

1. Manufacturer certified according to NRMCA's "Certification of Ready Mixed Concrete Production Facilities" (Quality Control Manual - Section 3, "Plant Certification Checklist").
2. Personnel conducting field tests shall be qualified as ACI Concrete Field-Testing Technician, Grade 1, according to ACI CP-1 or an equivalent certification program.

C. The Contractor shall retain and pay for the services of an independent testing and inspection firm and/or a Geotechnical Consultant to perform on-site observation and testing during the various phases of the construction operations identified in this specification section.

D. Testing Agency Qualifications: Qualified according to ASTM C 1077 and ASTM E 329 for testing indicated.

E. Concrete Testing Service: Engage a qualified testing agency to perform material evaluation tests and to design concrete mixtures.

F. ACI Publications: Comply with ACI 301 unless otherwise indicated.

G. Mockups: Build mockups to verify selections made under sample submittals and to demonstrate aesthetic effects and set quality standards for materials and execution.

1. Mockup appearance for exposed aggregate paving shall match the plaza at the MACA Visitor Center.
2. Build 3 mockups of full-thickness sections of concrete paving to demonstrate typical joints; surface finish, texture, and color; curing; and standard of workmanship.
3. Build mockups of concrete paving in the location and of the size indicated or, if not indicated, build mockups where directed by Contracting Officer (CO) and not less than 48 inches by 48 inches.
4. Notify the CO seven (7) days in advance of dates and times when mockups will be constructed.
5. Obtain CO's approval of mockups before starting construction.
6. Maintain approved mockups during construction in an undisturbed condition as a standard for judging the completed pavement.
7. Approval of mockups does not constitute approval of deviations from the Contract Documents contained in mockups unless the CO specifically approves such deviations in writing.
8. Approved mockups may become part of the completed Work if undisturbed at time of Substantial Completion.

H. Accessibility Inspection: Work described in this section shall be in compliance with the Architectural Barriers Act Accessibility Standards (ABAAS). Inspect at various stages of construction as needed to ensure the finished installation meets the guidelines.

1.7 PROJECT CONDITIONS

A. Traffic Control: Maintain access for vehicular and pedestrian traffic as required for other construction activities.

1.8 WARRANTY

A. Warranty: Furnish written warranty, executed by Contractor, for quality of paving. Contractor shall make necessary repairs to concrete or ABAAS tactile dome systems, due to defects or faulty materials or workmanship, which may appear within one year from the date of substantial completion. This shall include but is not limited to ASR cracking, spalling, holes, cracking, water ponding, sub-grade failures, or damage to ABAAS domes.

B. Warranty Period: 1 year from date of Substantial Completion.

C. The CO, prior to expiration of the one-year warranty shall make a review of the concrete areas and identify all areas of deficiencies that must be repaired or replaced.

PART 2 - PRODUCTS

2.1 FORMS

A. Form Materials: Plywood, metal, metal-framed plywood, or other approved panel-type materials to provide full-depth, continuous, straight, and smooth exposed surfaces.

1. Use flexible or uniformly curved forms for curves with a radius of 100 feet or less. Do not use notched and bent forms.

B. Form-Release Agent: Commercially formulated form-release agent that will not bond with, stain, or adversely affect concrete surfaces and that will not impair subsequent treatments of concrete surfaces.

2.2 STEEL REINFORCEMENT

A. Plain-Steel Welded Wire Reinforcement: ASTM A 185/A 185M, fabricated from galvanized-steel wire into flat sheets.

B. Deformed-Steel Welded Wire Reinforcement: ASTM A 497/A 497M, flat sheet.

C. Reinforcing Bars: ASTM A 615/A 615M, Grade 60; deformed.

D. Bar Supports: Bolsters, chairs, spacers, and other devices for spacing, supporting, and fastening reinforcing bars, welded wire reinforcement in place. Manufacture bar supports according to CRSI's "Manual of Standard Practice" from steel wire, plastic, or precast concrete of greater compressive strength than concrete specified, and as follows:

1. Equip wire bar supports with sand plates or horizontal runners where base material will not support chair legs.

2.3 CONCRETE MATERIALS

A. Cementitious Material: Use the following cementitious materials, of same type, brand, and source throughout Project:

1. Portland Cement: ASTM C 150, portland cement Type I or Type II.

   a. Fly Ash: Do not use.
   b. Ground Granulated Blast-Furnace Slag: ASTM C 989, Grade 100 or 120.

2. Blended Hydraulic Cement: ASTM C 595, Type IS, portland blast-furnace slag cement.

B. Normal-Weight Aggregates: ASTM C 33, Class 4M uniformly graded. Provide aggregates from a single source with documented service-record data of at least 10 years' satisfactory service in similar paving applications and service conditions using similar aggregates and cementitious materials.

1. Maximum Coarse-Aggregate Size: 3/4-inch nominal.
2. Fine Aggregate: Free of materials with deleterious reactivity to alkali in cement.

C. Exposed Aggregate: Selected, hard, and durable; washed; free of materials with deleterious reactivity to cement or that cause staining; from a single source, with gap-graded coarse aggregate as follows:

1. Aggregate Sizes: 1/2.
2. Sieve Size:

3/4"	100% passing
1/2"	99% passing
3/8"	71% passing
#4	1% passing
#8	0.5% passing

D. Water: Potable and complying with ASTM C 94/C 94M.

E. Air-Entraining Admixture: ASTM C 260.

F. Chemical Admixtures: Admixtures certified by manufacturer to be compatible with other admixtures and to contain not more than 0.1 percent water-soluble chloride ions by mass of cementitious material.

1. Water-Reducing Admixture: ASTM C 494/C 494M, Type A.
2. Retarding Admixture: ASTM C 494/C 494M, Type B.
3. Water-Reducing and Retarding Admixture: ASTM C 494/C 494M, Type D.
4. High-Range, Water-Reducing Admixture: ASTM C 494/C 494M, Type F.
5. Plasticizing and Retarding Admixture: ASTM C 1017/C 1017M, Type II.

2.4 CURING MATERIALS

A. Absorptive Cover: AASHTO M 182, Class 3, burlap cloth made from jute or kenaf, weighing approximately 9 oz./sq. yd. dry.

B. Moisture-Retaining Cover: ASTM C 171, polyethylene film or white burlap-polyethylene sheet.

C. Water: Potable.

D. Evaporation Retarder: Waterborne, monomolecular, film forming, manufactured for application to fresh concrete.

E. Clear, Waterborne, Membrane-Forming Curing Compound: ASTM C 309, Type 1, Class B, dissipating.

2.5 RELATED MATERIALS

A. Joint Fillers: ASTM D 1751, asphalt-saturated cellulosic fiber or ASTM D 1752, cork, or self-expanding cork in preformed strips.

B. Bonding Agent: ASTM C 1059, Type II, non-redispersible, acrylic emulsion or styrene butadiene.

C. Epoxy Bonding Adhesive: ASTM C 881/C 881M, two-component epoxy resin capable of humid curing and bonding to damp surfaces; of class suitable for application temperature, of grade complying with requirements, and of the following types:

1. Types I and II, non-load bearing, for bonding hardened or freshly mixed concrete to hardened concrete.

2.6 CONCRETE MIXTURES

A. Prepare design mixtures, proportioned according to ACI 301, for each type and strength of normal-weight concrete, and as determined by either laboratory trial mixtures or field experience.

1. Use a qualified independent testing agency for preparing and reporting proposed concrete design mixtures for the trial batch method.

B. Proportion mixtures to provide normal-weight concrete with the following properties:

1. Compressive Strength (28 Days): 4000 psi.
2. Maximum Water-Cementitious Materials Ratio at Point of Placement: 0.45.
3. Slump Limit: 4 inches, plus or minus 1 inch.

C. Add air-entraining admixture at manufacturer's prescribed rate to result in normal-weight concrete at point of placement having an air content as follows:

1. Air Content: 6 percent plus or minus 1.5 percent.

D. Chemical Admixtures: Use admixtures according to manufacturer's written instructions.

1. Use chemical mixtures in concrete as required for placement and workability.
2. Use water-reducing and retarding admixture when required by high temperatures, low humidity, or other adverse placement conditions.

E. Cementitious Materials: Limit percentage, by weight, of cementitious materials other than portland cement in concrete as follows:

1. Fly Ash. Do not use.
2. Ground Granulated Blast-Furnace Slag: 25 percent.

F. Color Pigment: Add color pigment to concrete mixture according to manufacturer's written instructions and to result in hardened concrete color consistent with approved mockup.

2.7 CONCRETE MIXING

A. Ready-Mixed Concrete: Measure, batch, and mix concrete materials and concrete according to ASTM C 94/C 94M and ASTM C 1116/C 1116M. Furnish batch certificates for each batch discharged and used in the Work.

1. When air temperature is between 85 and 90 deg F, reduce mixing and delivery time from 1-1/2 hours to 75 minutes; when air temperature is above 90 deg F reduce mixing and delivery time to 60 minutes.

2.8 DETECTABLE WARNINGS

A. Detectable warnings shall meet ABAAS and State Standards, whichever is more stringent

1. Manufacturer: ADA Solutions Inc. or approved equal
2. Type: Cast-In-Place Replaceable Tactile Warning
3. Salient characteristics

a. Physical

1) Description: Cast-in-place replaceable panel
2) Compressive Strength: 30,000 psi
3) Flexural Strength: 18,000 psi
4) Dome Spacing: 2.35” center to center
5) Slip Resistance: Dry = 1.03; Wet = 0.83
6) Freeze/Thaw Durability: Suitable in freeze thaw conditions
7) Color: Dark Gray color; integral throughout
8) Size varies

b. Functional

1) None

c. Performance

1) Manufacturer Warranty: 7-year warranty from date of Contract’s final completion, includes manufacturing defects, breakage, and deformation
2) Installation Warranty: Warrantied in writing for 2 years by the installer. Products must be guaranteed from defective work and loosening of panels.

PART 3 - EXECUTION

3.1 EXAMINATION

A. Examine exposed subgrades and subbase surfaces for compliance with requirements for dimensional, grading, and elevation tolerances.

B. If contractor's Geotechnical Engineer determines that unsatisfactory soil is present, continue excavation and replace with compacted backfill or fill material as directed. Correct subbase areas with soft spots or other unsatisfactory conditions according to requirements in Section 312000 - Earth Moving. and as directed by the CO.

C. Proceed with installation only after unsatisfactory conditions have been corrected.

3.2 PREPARATION

A. Remove loose material from compacted subbase surface immediately before placing concrete.

3.3 EDGE FORMS AND SCREED CONSTRUCTION

A. Set, brace, and secure edge forms, bulkheads, and intermediate screed guides to required lines, grades, and elevations. Install forms to allow continuous progress of work and so forms can remain in place at least 24 hours after concrete placement.

B. Clean forms after each use and coat with form-release agent to ensure separation from concrete without damage.

3.4 STEEL REINFORCEMENT

A. General: Comply with CRSI's "Manual of Standard Practice" for fabricating, placing, and supporting reinforcement.

B. Clean reinforcement of loose rust and mill scale, earth, ice, or other bond-reducing materials.

C. Arrange, space, and securely tie bars and bar supports to hold reinforcement in position during concrete placement. Maintain minimum cover to reinforcement.

D. Install welded wire reinforcement in lengths as long as practicable. Lap adjoining pieces at least one full mesh, and lace splices with wire. Offset laps of adjoining widths to prevent continuous laps in either direction.

E. Install fabricated bar mats in lengths as long as practicable. Handle units to keep them flat and free of distortions. Straighten bends, kinks, and other irregularities, or replace units as required before placement. Set mats for a minimum 2-inch overlap of adjacent mats.

3.5 JOINTS

A. General: Form construction, isolation, and contraction joints and tool edges true to line, with faces perpendicular to surface plane of concrete. Construct transverse joints at right angles to centerline unless otherwise indicated.

1. When joining existing paving, place transverse joints to align with previously placed joints unless otherwise indicated.

B. Construction Joints: Set construction joints at side and end terminations of paving and at locations where paving operations are stopped for more than one-half hour unless paving terminates at isolation joints.

1. Continue steel reinforcement across construction joints unless otherwise indicated. Do not continue reinforcement through sides of paving strips unless otherwise indicated.
2. Provide tie bars at sides of paving strips where indicated.
3. Butt Joints: Use bonding agent at joint locations where fresh concrete is placed against hardened or partially hardened concrete surfaces.
4. Keyed Joints: Provide preformed keyway-section forms or bulkhead forms with keys unless otherwise indicated. Embed keys at least 1-1/2 inches into concrete.

C. Isolation Joints: Form isolation joints of preformed joint-filler strips abutting concrete curbs, catch basins, manholes, inlets, structures, other fixed objects, and where indicated.

1. Locate expansion joints at intervals indicated.
2. Extend joint fillers full width and depth of joint.
3. Terminate joint filler not less than 1/2 inch or more than 1 inch below finished surface if joint sealant is indicated.
4. Place top of joint filler flush with finished concrete surface if joint sealant is not indicated.
5. Furnish joint fillers in one-piece lengths. Where more than one length is required, lace or clip joint-filler sections together.
6. During concrete placement, protect top edge of joint filler with metal, plastic, or another temporary preformed cap. Remove protective cap after concrete has been placed on both sides of joint.

D. Contraction Joints: Form weakened-plane contraction joints, sectioning concrete into areas as indicated. Construct contraction joints for a depth equal to at least one-fourth of the concrete thickness, as follows, to match jointing of existing adjacent concrete paving:

1. Grooved Joints: Form contraction joints after initial floating by grooving and finishing each edge of joint with grooving tool to a 1/4-inch radius. Repeat grooving of contraction joints after applying surface finishes. Eliminate grooving-tool marks on concrete surfaces.

E. Edging: After initial floating, tool edges of paving, gutters, curbs, and joints in concrete with an edging tool to a 1/4-inch -inch radius. Repeat tooling of edges after applying surface finishes. Eliminate edging-tool marks on concrete surfaces.

3.6 FORM INSPECTION

A. Schedule an inspection by the CO to occur prior to placement of any concrete, and after setting forms, placement of vapor retarder membranes, all reinforcing, embedded items, and other accessories is complete.

3.7 CONCRETE PLACEMENT

A. Before placing concrete, inspect and complete formwork installation, steel reinforcement, and items to be embedded or cast-in.

1. Provide CQC Inspection report of inspection of formwork for accessibility issues.

B. Remove snow, ice, or frost from subbase surface and steel reinforcement before placing concrete. Do not place concrete on frozen surfaces.

C. Moisten subbase to provide a uniform dampened condition at time concrete is placed. Do not place concrete around manholes or other structures until they are at required finish elevation and alignment.

D. Comply with ACI 301 requirements for measuring, mixing, transporting, and placing concrete.

E. Do not add water to concrete during delivery or at Project site. Do not add water to fresh concrete after testing.

F. Deposit and spread concrete in a continuous operation between transverse joints. Do not push or drag concrete into place or use vibrators to move concrete into place.

G. Consolidate concrete according to ACI 301 by mechanical vibrating equipment supplemented by hand spading, rodding, or tamping.

1. Consolidate concrete along face of forms and adjacent to transverse joints with an internal vibrator. Keep vibrator away from joint assemblies, reinforcement, or side forms. Use only square-faced shovels for hand spreading and consolidation. Consolidate with care to prevent dislocating reinforcement, and joint devices.

H. Screed paving surface with a straightedge and strike off.

I. Commence initial floating using bull floats or darbies to impart an open-textured and uniform surface plane before excess moisture or bleed water appears on the surface. Do not further disturb concrete surfaces before beginning finishing operations or spreading surface treatments.

J. Cold-Weather Placement: Protect concrete work from physical damage or reduced strength that could be caused by frost, freezing, or low temperatures. Comply with ACI 306.1 and the following:

1. When air temperature has fallen to or is expected to fall below 40 deg F, uniformly heat water and aggregates before mixing to obtain a concrete mixture temperature of not less than 50 deg F and not more than 80 deg F at point of placement.
2. Do not use frozen materials or materials containing ice or snow.
3. Do not use calcium chloride, salt, or other materials containing antifreeze agents or chemical accelerators unless otherwise specified and approved in design mixtures.

K. Hot-Weather Placement: Comply with ACI 301 and as follows when hot-weather conditions exist:

1. Cool ingredients before mixing to maintain concrete temperature below 90 deg F at time of placement. Chilled mixing water or chopped ice may be used to control temperature, provided water equivalent of ice is calculated in total amount of mixing water. Using liquid nitrogen to cool concrete is Contractor's option.
2. Cover steel reinforcement with water-soaked burlap so steel temperature will not exceed ambient air temperature immediately before embedding in concrete.
3. Fog-spray forms, steel reinforcement, and subgrade just before placing concrete. Keep subgrade moisture uniform without standing water, soft spots, or dry areas.

3.8 FLOAT FINISHING

A. General: Do not add water to concrete surfaces during finishing operations.

B. Float Finish: Begin the second floating operation when bleed-water sheen has disappeared, and concrete surface has stiffened sufficiently to permit operations. Float surface with power-driven floats or by hand floating if area is small or inaccessible to power units. Finish surfaces to true planes. Cut down high spots and fill low spots. Refloat surface immediately to uniform granular texture.

1. Non- slip Magnesium Float Finish (MAG)

3.9 SPECIAL FINISHES

A. Monolithic Exposed-Aggregate Finish: Expose coarse aggregate in pavement surfaces as follows:

1. Immediately after float finishing, spray-apply chemical surface retarder to pavement according to manufacturer's written instructions.
2. Cover pavement surface with plastic sheeting, sealing laps with tape, and remove when ready to continue finishing operations.
3. Without dislodging aggregate, remove excess mortar by lightly brushing surface with a stiff, nylon-bristle broom. Do not expose more than one-third of the average diameter of the aggregate and not more than one-half of the diameter of the smallest aggregate.
4. Fine-spray surface with water and brush. Repeat water flushing and brushing cycle until cement film is removed from aggregate surfaces to depth required. Contractor is to collect water with a wet-vac or divert the water through the oil and grit

3.10 CONCRETE PROTECTION AND CURING

A. General: Protect freshly placed concrete from premature drying and excessive cold or hot temperatures.

B. Comply with ACI 306.1 for cold-weather protection.

C. Evaporation Retarder: Apply evaporation retarder to concrete surfaces if hot, dry, or windy conditions cause moisture loss approaching 0.2 lb/sq. ft. x h before and during finishing operations. Apply according to manufacturer's written instructions after placing, screeding, and bull floating or darbying concrete but before float finishing.

D. Begin curing after finishing concrete but not before free water has disappeared from concrete surface.

E. Curing Methods: Cure concrete by moisture curing moisture-retaining-cover curing compound or a combination of these as follows:

1. Moisture Curing: Keep surfaces continuously moist for not less than seven days with the following materials:

   a. Water.
   b. Continuous water-fog spray.
   c. Absorptive cover, water saturated and kept continuously wet. Cover concrete surfaces and edges with 12-inch lap over adjacent absorptive covers.

2. Moisture-Retaining-Cover Curing: Cover concrete surfaces with moisture-retaining cover, placed in widest practicable width, with sides and ends lapped at least 12 inches and sealed by waterproof tape or adhesive. Immediately repair any holes or tears occurring during installation or curing period using cover material and waterproof tape.
3. Curing Compound: Apply uniformly in continuous operation by power spray or roller according to manufacturer's written instructions. Recoat areas that have been subjected to heavy rainfall within three hours after initial application. Maintain continuity of coating, and repair damage during curing period.

3.11 DETECTABLE WARNINGS

A. Detectable warnings shall be installed at locations as shown on plans and per manufacturer’s recommendations.

3.12 ACCESSIBILITY INSPECTIONS

A. Perform pre-installation accessibility inspection: Concerning formwork, and preliminary site work and grading tasks, check to ensure construction tolerances or margins are sufficient to ensure compliance of completed work. Ensure that grades and slopes adhere to DSC Accessible Route Design Standards. Ensure that embedded items are properly placed, including reinforcement work and anchors. Ensure that obstructions are treated in advance of commencing next stage. Report any inconsistencies to CO and submit Report within 24 hours of commencing inspection. Cover and protect work in progress if necessary to protect work until CO can review/approve findings. Correct errors or deficiencies before proceeding with second stage - installation of slabs, flush bands, or other finished materials/items.

B. Perform post-installation accessibility inspection: Immediately upon completion, and when curing will permit examination, record observations, and cite non-compliance with ABASS. Supplement report with digital images, notes, sketches, red-line drawings, survey data, product literature or miscellaneous items explaining completed work. Submit report within 24 hours of commencing inspection to CO.

3.13 PAVING TOLERANCES

A. Comply with tolerances in ABAAS and as follows. Tolerances above ABAAS maximums are not allowed, and pavement will be rejected:

1. Elevation: 1/8 inch.
2. Thickness: Plus 3/8-inch, minus 1/4 inch.
3. Surface: Gap below 10-foot- long, unleveled straightedge not to exceed 1/8 inch.
4. Alignment of Tie-Bar End Relative to Line Perpendicular to Paving Edge: 1/2 inch per 12 inches of tie bar.
5. Joint Spacing: 3 inches.
6. Contraction Joint Depth: Plus 1/4 inch, no minus.
7. Joint Width: None.

3.14 FIELD QUALITY CONTROL

A. Testing required determining compliance for the work of this section will be the responsibility of the Contractor, at no additional expense to the Government.

B. Testing Services: Testing of composite samples of fresh concrete obtained according to ASTM C 172 shall be performed according to the following requirements:

1. Testing Frequency: Obtain at least one composite sample for each 5000-sq. ft. or fraction thereof of each concrete mixture placed each day.

   a. When frequency of testing will provide fewer than five compressive-strength tests for each concrete mixture, testing shall be conducted from at least five randomly selected batches or from each batch if fewer than five are used.

2. Slump: ASTM C 143/C 143M; one test at point of placement for each composite sample, but not less than one test for each day's pour of each concrete mixture. Perform additional tests when concrete consistency appears to change.
3. Air Content: ASTM C 231, pressure method; one test for each composite sample, but not less than one test for each day's pour of each concrete mixture.
4. Concrete Temperature: ASTM C 1064/C 1064M; one test hourly when air temperature is 40 deg. F and below and when it is 80 deg. F and above, and one test for each composite sample.

5. Compression Test Specimens: ASTM C 31/C 31M; cast and laboratory cure one set of three standard cylinder specimens for each composite sample.
6. Compressive-Strength Tests: ASTM C 39/C 39M; test one specimen at seven days and two specimens at 28 days.
    a. A compressive-strength test shall be the average compressive strength from two specimens obtained from same composite sample and tested at 28 days.

C. Strength of each concrete mixture will be satisfactory if average of any three-consecutive compressive-strength tests equals or exceeds specified compressive strength and no compressive-strength test value falls below specified compressive strength by more than 500 psi.

D. Test results shall be reported in writing to the CO, concrete manufacturer, and Contractor within 48 hours of testing. Reports of compressive-strength tests shall contain Project identification name and number, date of concrete placement, name of concrete testing and inspecting agency, location of concrete batch in Work, design compressive strength at 28 days, concrete mixture proportions and materials, compressive breaking strength, and type of break for both 7- and 28-day tests.

E. Nondestructive Testing: Impact hammer, sonoscope, or other nondestructive device may be permitted by the CO but will not be used as sole basis for approval or rejection of concrete.

F. Additional Tests: Testing and inspecting agency shall make additional tests of concrete when test results indicate that slump, air entrainment, compressive strengths, or other requirements have not been met, as directed by the CO.

G. Concrete paving will be considered defective if it does not pass tests and inspections.

H. Additional testing and inspecting, at Contractor's expense, will be performed to determine compliance of replaced or additional work with specified requirements.

I. Accessibility Inspections: Contractor shall inspect finished grades and confirm compliance with the Architectural Barriers Act Accessibility Standards (ABAAS). Finished grades must comply with ABAAS requirements prior to Substantial Completion.

J. Prepare test and inspection reports.

3.15 REPAIRS AND PROTECTION

A. Remove and replace concrete paving that is broken, damaged, or defective or that does not comply with requirements in this Section. Remove work in complete sections from joint to joint unless otherwise approved by the CO.

B. Drill test cores, where directed by the CO, when necessary to determine magnitude of cracks or defective areas. Fill drilled core holes in satisfactory paving areas with portland cement concrete bonded to paving with epoxy adhesive.

C. Protect concrete paving from damage. Exclude traffic from paving for at least 14 days after placement. When construction traffic is permitted, maintain paving as clean as possible by removing surface stains and spillage of materials as they occur.

D. Maintain concrete paving free of stains, discoloration, dirt, and other foreign material. Sweep paving not more than two days before date scheduled for Substantial Completion inspections.

END OF SECTION 32 13 13

SECTION 32 17 23 - PAVEMENT MARKINGS

PART 1 - GENERAL

1.1 RELATED DOCUMENTS

A. Drawings and general provisions of the Contract, including General and Supplementary Conditions and Division 01 Specification Sections, apply to this Section.

1.2 SUMMARY

A. Reference Standards: This Section specifies requirements for removal of existing pavement markings and construction of new pavement markings.

B. The work includes:

1. Pavement surface preparation.
2. Furnishing and installing new pavement markings.
3. Traffic lines, legends, and markings on asphalt and concrete surfaces.
4. Thermoplastic Pavement Markings.

C. Sections which directly relate to the work of this Section include:

1. Specification Section 32 12 16 – Asphalt Paving.

1.3 QUALITY ASSURANCE

A. Reference Standards:

1. ABA Architectural Barriers Act (ABA)
2. ABAAS United States Access Board
   Architectural Barriers Act Accessibility Standards (ABAAS)
   www.access-board.gov.
3. Regulatory Requirements: Comply with Kentucky Department of Highways Standard Specifications for Road and Bridge Construction, current edition.

1.4 SITE CONDITIONS

A. The Contractor shall cordon off areas where markings are being applied. Barricades, drums, warning signs, warning lights, and similar devices shall be used as required.

1.5 ACTION SUBMITTALS

A. Submit material certificate to the Contracting Officer (CO), signed by the material producer and Contractor, certifying that materials comply with these specifications and have been approved for use by authorities having jurisdiction in the Commonwealth of Kentucky.

1. Color sample for each pavement marking indicated.

1.6 INFORMATIONAL SUBMITTALS

A. Product Data

B. Manufacturer's Certificate: Certify products meet or exceed specified requirements.

C. Manufacturer's Installation Instructions: Submit instructions for application temperatures, eradication requirements, application rate, and line thickness.

1.7 QUALIFICATIONS

A. Manufacturer: Company specializing in manufacturing Products specified in this section with minimum 5 years' experience.

B. Applicator: Company specializing in performing work of this section with minimum 5 years' experience.

1.8 DELIVERY, STORAGE, AND HANDLING

A. Deliver pavement-marking materials to Project site in original packages with seals unbroken and bearing manufacturer's labels containing brand name and type of material, date of manufacture, and directions for storage.

B. Store pavement-marking materials in a clean, dry, protected location within temperature range required by manufacturer. Protect stored materials from direct sunlight.

C. Invert containers several days prior to use when paint has been stored more than two months. Minimize exposure to air when transferring paint. Seal drums and tanks when not in use.

1.9 ENVIRONMENTAL REQUIREMENTS

A. Do not apply materials when surface and ambient temperatures are outside temperature ranges required by paint product manufacturer or:

1. Thermoplastic: Do not apply until ambient air temperature and temperature of the pavement is 50 degrees F or higher.

B. Do not apply materials during rain or snow when relative humidity is outside humidity ranges or moisture content of surfaces exceed those required by paint product manufacturer.

C. Volatile Organic Content (VOC). Do not exceed State or Environmental Protection Agency maximum VOC on traffic paint.

PART 2 - PRODUCTS

2.1 MATERIALS

A. Pavement markings shall conform to and Contractor, certifying that materials comply with these specifications and have been approved for use by authorities having jurisdiction in the Commonwealth of Kentucky, current edition.

B. Thermoplastic: Alkyd based ready mixed, fast dry, lead free, non-toxic, for roadways.

2.2 EQUIPMENT

A. Roadway Application for Continuous Longitudinal Lines: Use equipment with following capabilities.

1. Device to heat paint to manufacturer's temperature recommendation for fast dryad thermoplastic applications.

B. Machine Calibration: Calibrate machines to meet specified tolerances.

C. Other Equipment: For application of crosswalks, intersections, stop lines, legends and another miscellaneous items by walk behind stripers, hand spray or stencil trucks, apply with equipment meeting requirements of this section.

PART 3 – EXECUTION

3.1 EXAMINATION

A. Verification of existing conditions before starting work.

B. Do not apply paint to concrete surfaces until concrete has cured for 28 days.

3.2 PREPARATION

A. Maintenance and Protection of Traffic:

1. Prevent traffic from interrupting or driving on newly applied markings before markings dry.
2. Maintain access to existing school and other properties requiring access.

B. Surface Preparation.

1. The Contractor shall clean the pavement of dust, dirt, concrete curing compounds, and other foreign material which may be detrimental to the adhesion of the pavement marking materials.
2. Clean and dry paved surface prior to painting.
3. Blow or sweep surface free of dirt, debris, oil, grease, or gasoline.
4. Spot location of final pavement markings as specified and as indicated on Drawings by applying pavement spots 25 feet on center.
5. Notify CO after placing pavement spots and minimum three days prior to applying traffic lines.

3.3 EXISTING WORK

A. Remove existing markings in an acceptable manner. Do not remove existing pavement markings by painting over with black paint. Remove by methods that will cause least damage to pavement structure or pavement surface. Satisfactorily repair any pavement or surface damage caused by removal methods.

B. Clean and repair existing or remaining lines and legends.

3.4 PAVEMENT MARKING APPLICATION

A. Agitate 1-15 minutes prior to application to ensure even distribution.

B. The material shall be applied to the pavement by equipment designed and manufactured specifically for the application of pavement markings.

C. The Contractor shall employ the services of a registered land surveyor to provide control for layout of pavement markings.

D. Dispense thermoplastic at temperature recommended by manufacture to thickness of:

1. 120 mils for center lines, skip lines, transverse markings, and legends.
2. 90 mils for edge lines diagonals and arrow symbols.

E. Pavement markings shall be applied in accordance with the layout shown on the Drawings. No markings shall be applied to new bituminous pavement until the top course has cured east one week and allow two weeks curing for newly installed bituminous concrete curbing.

F. All parking stalls shall be single stripe and shall be spaced equally. The line indicated on the Drawings is on the center line of the stall marking.

G. Where entire areas are to be cross-hatched, the striping shall conform to the cross-hatching shown on the Drawings.

H. all parking stall markings shall be straight with sharp corners and clean edges. Directional arrows, cross-hatching, lane divider stripes, stop lines, and lettering shall be painted white to the size, length, and spacing shown on the Drawings.

I. All markings shall be applied in one coat with brush, spray, or marking machine over clean dry pavement surfaces, when the atmospheric temperature is at or above 40°F., and when the weather is otherwise favorable in the opinion of the CO.

J. Use only skilled workmen who are experienced and normally employed in the work of installing pavement markings. Supply all the necessary equipment and materials required for the work.

K. The Contractor shall protect the pavement, trees, shrubs, mulch, and other site fixtures from over-spray of paint and damage from pavement marking operations.

L. Unless material is tack free at end of paint application convoy, use traffic cones to protect markings from traffic until track free.

M. When vehicle crosses a marking and tracks it or when splattering or overspray occurs, eradicate affected marking and resultant tracking and apply new markings.

N. Collect and legally dispose of residues from painting operations.

O. Traffic shall not be permitted on the pavement until markings are thoroughly dry.

3.5 APPLICATION TOLERANCES

A. Maximum Variation from Wet Film Thickness: 1 mil.

B. Maintain cycle length for skip lines at tolerance of plus or minus 6 inches per 40 feet and line length or plus or minus 3 inches per 10 feet.

C. Maximum Variation from Specified Application Temperature: Plus, or minus 5 degrees F.

3.6 FIELD QUALITY CONTROL

A. Inspect for incorrect location, insufficient thickness, line width, coverage, retention, uncured or discolored material, and insufficient bonding.

B. Repair lines and markings which after application and curing do not meet following criteria:

1. Incorrect Location: Remove and replace incorrectly placed patterns.
2. Insufficient Thickness, Line Width or Retention: Remove defective material by grinding or blast cleaning to remove substantial amount of lines or pavement markings to roughen marking surface. Remove loose particles and debris. Apply new markings on cleaned surface in accordance with this Section.
3. Uncured or Discolored Material, Insufficient Bonding: Remove defective markings in accordance with this Section and clean pavement surface one foot beyond affected area. Apply new markings on cleaned surface in accordance with this Section.

C. Replace failed or defective markings in entire section of defective markings within 30 days after notification when any of the following exists:

1. Marking is discolored or exhibits pigment loss and is determined to be unacceptable by visual comparison with beaded color plates.

D. When eradication of existing paint lines is necessary, eradicate by shot blast or water blast method. Do not gouge or groove pavement more than 1/16 inch during removal. Limit area of removal to area of marking plus 1 inch on all sides. Prevent damage to transverse and longitudinal joint sealers and repair any damage.

E. Maintain daily log showing work complete, results of inspections or tests, pavement and air temperatures, relative humidity, presence of any moisture on pavement, and any material or equipment problems. Make legible entries in log in ink, sign, and submit by end of each workday. Enter environmental data into log prior to starting work each day and at two additional times during day.

3.7 PROTECTION OF FINISHED WORK

A. Protect pavement markings from vehicular and pedestrian traffic until cured. Follow manufacturer's recommendations.

3.8 INSPECTION FOR ACCESSIBILITY

A. Contractor shall conduct incremental inspections using the DSC CQC Accessibility Inspection Report provided in Section 01 40 00 as the basis for recording observations of each work component. Report can be supplemented by sketches, dimensions, digital images, drawings, technical reports, product literature, etc. to explain the finished work. Inspection will confirm if work meets ABAAS requirements for accessibility. All non-compliant conditions must be recorded. Each project will compile interim inspections leading to a Final Accessibility Inspection, conducted by NPS at conclusion of project.

B. Commence inspection immediately after each task is finished. Submit completed Report to CO within 24 hours of commencing inspection. NPS will utilize Interim Reports to prepare for Final Inspection.

END OF SECTION 32 17 23

SECTION 32 82 60 - WOOD FENCING

PART 1 - GENERAL

1.1 DESCRIPTION

A. The work of this section consists of furnishing and installing split rail fencing.

1.2 SUBMITTALS

A. Product Data: For each type of fencing product. Indicate component materials, dimensions, profiles, textures, and colors.

B. Material samples of wood fencing.

PART 2 - PRODUCTS

2.1 POSTS

A. Species: Locust, without bark.

B. Sizes as indicated on the drawings.

2.2 RAILS

A. Species: Locust, without bark, minimum 11 feet long, tapered at ends to allow a minimum 6-inch overlap.

PART 3 - EXECUTION

3.1 ALIGNMENT

A. Erect to lines and grades indicated on the drawings.

3.2 POSTS

A. Set vertical to depth shown, spaced 10 feet apart.

3.3 RAILS

A. Install rails as shown.

3.4 CLEAN-UP

A. Remove resulting debris and leave area in a neat, clean, acceptable condition.

END OF SECTION 32 82 60

SECTION 32 92 00 - SEEDING

PART 1 - GENERAL

1.1 RELATED DOCUMENTS

A. Drawings and general provisions of the Contract, including General and Supplementary Conditions and Division 01 Specification Sections, apply to this Section.

1.2 SUMMARY

A. Section Includes:

1. Seeding.
2. Turf renovation.
3. Certified Weed Free Topsoil

B. Related Sections:

1. Section 31 10 00 - Site Clearing
2. Section 31 20 00 - Earth Moving
3. Section 31 25 00 - Erosion and Sediment Controls

1.3 DEFINITIONS

A. Finish Grade: Elevation of finished surface of planting soil.

B. Manufactured Topsoil: Soil produced off-site by homogeneously blending mineral soils or sand with stabilized organic soil amendments to produce topsoil or planting soil.

C. Pesticide: A substance or mixture intended for preventing, destroying, repelling, or mitigating a pest. This includes insecticides, miticides, herbicides, fungicides, rodenticides, and molluscicides. It also includes substances or mixtures intended for use as a plant regulator, defoliant, or desiccant.

D. Planting Soil: Certified Weed Free: Standardized topsoil; imported topsoil; manufactured topsoil that is modified with soil amendments and perhaps fertilizers to produce a soil mixture best for plant growth or existing, native surface topsoil and existing in-place surface soil.

E. Subgrade: Surface or elevation of subsoil remaining after excavation is complete, or top surface of a fill or backfill before planting soil is placed.

F. Subsoil: All soil beneath the topsoil layer of the soil profile and typified by the lack of organic matter and soil organisms.

1.4 ACTION SUBMITTALS

A. Soil Analysis Reports: Contractor shall furnish soil analysis report by a qualified soil-testing laboratory

1. Testing methods and written recommendations shall comply with USDA's Handbook No. 60.
2. Report suitability of tested soil for turf growth.
3. Based on the test results, state recommendations for soil treatments and soil amendments to be incorporated. State recommendations in weight per 1000 sq. ft. or volume per cu. yd. for nitrogen, phosphorus, and potash nutrients and soil amendments to be added to produce satisfactory planting soil suitable for healthy, viable seed growth.

B. Product Data: For each type of product indicated.

C. Pesticides and Herbicides: Include product label and manufacturer's application instructions specific to this Project.

1.5 INFORMATIONAL SUBMITTALS

A. Certification of Grass Seed: From seed vendor for each grass-seed monostand or mixture stating the botanical and common name, percentage by weight of each species and variety, and percentage of purity, germination, and weed seed. Include the year of production and date of packaging.

1. Certification of each seed mixture. Include identification of source and name and telephone number of supplier.

B. Certifications for weed free straw mulch.

C. Qualification Data: For qualified landscape Installer.

D. Product Certificates: For soil amendments and fertilizers, from manufacturer.

E. Material Test Reports: For standardized ASTM D 5268 topsoil, existing native surface topsoil, existing in-place surface soil and certified weed free imported or manufactured topsoil.

1. Prior to ordering any imported topsoil, submit soil test report to the Contracting Officer (CO) for review and approval. Do not order materials until approval has been obtained. Delivered materials shall closely match the approved samples.
2. Certification of weed free imported or manufactured topsoil.
3. Source of certified weed free imported topsoil.

F. Maintenance Instructions: Recommended procedures to be established by CO for maintenance of turf during a calendar year. Submit before expiration of required initial maintenance periods.

1.6 QUALITY ASSURANCE

A. Installer Qualifications: A qualified landscape Installer whose work has resulted in successful turf establishment.

1. Professional Membership: Installer shall be a member in good standing of either the Professional Landcare Network or the American Nursery and Landscape Association.
2. Experience: Five years' experience in turf installation in addition to requirements in Section 014000 "Quality Requirements."
3. Installer's Field Supervision: Require Installer to maintain an experienced full-time supervisor on Project site when work is in progress.
4. Personnel Certifications: Installer's field supervisor shall have certification in one of the following categories from the Professional Landcare Network:

   a. Certified Landscape Technician - Exterior, with installation specialty area(s), designated CLT-Exterior.
   b. Certified Turfgrass Professional, designated CTP.
   c. Certified Turfgrass Professional of Cool Season Lawns, designated CTP-CSL.

5. Maintenance Proximity: Not more than two hours' normal travel time from Installer's place of business to Project site.
6. Pesticide Applicator: State licensed, commercial.

B. Soil-Testing Laboratory Qualifications: An independent laboratory or university laboratory, recognized by the State Department of Agriculture, with the experience and capability to conduct the testing indicated and that specializes in types of tests to be performed.

1.7 DELIVERY, STORAGE, AND HANDLING

A. Seed and Other Packaged Materials: Deliver packaged materials in original, unopened containers showing weight, certified analysis, name and address of manufacturer, and indication of conformance with state and federal laws, as applicable.

B. Bulk Materials:

1. Do not dump or store bulk materials near structures, utilities, walkways, and pavements, or on existing turf areas or plants.
2. Provide erosion-control measures to prevent erosion or displacement of bulk materials, discharge of soil-bearing water runoff, and airborne dust reaching adjacent properties, water conveyance systems, or walkways.
3. Accompany each delivery of bulk fertilizers, lime, and soil amendments with appropriate certificates.

1.8 PROJECT CONDITIONS

A. Planting Restrictions: Plant during one of the following periods only.

1. Spring Planting: March 15 through June 1.
2. Fall Planting: September 15 through November 15.

B. Weather Limitations: Proceed with planting only when existing and forecasted weather conditions permit planting to be performed when beneficial and optimum results may be obtained. Apply products during favorable weather conditions according to manufacturer's written instructions.

1.9 MAINTENANCE SERVICE

A. Initial Turf Maintenance Service: Provide full maintenance by skilled employees of landscape Installer. Maintain as required in Part 3. Begin maintenance immediately after each area is planted and continue until acceptable turf is established but for not less than the following periods:

1. Seeded Turf: 60 days from date of planting completion.

a. When initial maintenance period has not elapsed before end of planting season, or if turf is not fully established, continue maintenance during next planting season.

PART 2 - PRODUCTS

2.1 SEED

A. Grass Seed: Fresh, clean, dry, new-crop seed complying with AOSA's "Journal of Seed Technology; Rules for Testing Seeds" for purity and germination tolerances.

B. Seed Species State-certified (General): Turf-Type Tall Fescue (Festuca arundinacea) of one or a mix of the varieties below:

1. R-4
2. Justice
3. Padre

4. Inferno
5. Falcon IV

2.2 TOPSOIL

A. Certified Weed Free Topsoil: ASTM D 5268, a pH range of 5.5 to 7, a minimum of 3.5 percent organic material content; free of stones 1 inch (25 mm) or larger in any dimension and other extraneous materials harmful to plant growth.

1. Topsoil Source: Amend existing in-place surface soil to produce topsoil. Verify suitability of surface soil to produce topsoil via soil analysis described in Part 1.4A. Clean surface soil of roots, plants, stones, clay lumps, and other extraneous materials harmful to plant growth.

a. Surface soil may be supplemented with imported or manufactured topsoil from off-site sources.

2.3 INORGANIC SOIL AMENDMENTS

A. Lime: ASTM C 602, agricultural liming material containing a minimum of 80 percent calcium carbonate equivalent and as follows:

1. Provide lime in form of ground dolomitic limestone.

B. Iron Sulfate: Granulated ferrous sulfate containing a minimum of 20 percent iron and 10 percent sulfur.

C. Perlite: Horticultural perlite, soil amendment grade.

D. Agricultural Gypsum: Minimum 90 percent calcium sulfate, finely ground with 90 percent passing through No. 50 sieve.

E. Sand: Clean, washed, natural or manufactured, and free of toxic materials.

F. Diatomaceous Earth: Calcined, 90 percent silica, with approximately 140 percent water absorption capacity by weight.

G. Zeolites: Mineral clinoptilolite with at least 60 percent water absorption by weight.

2.4 ORGANIC SOIL AMENDMENTS

A. Compost: Well-composted, stable, and certified weed-free organic matter, pH range of 5.5 to 8; moisture content 35 to 55 percent by weight; 100 percent passing through 1-inch; soluble salt content of 5 to 10 decisiemens/m; not exceeding 0.5 percent inert contaminants and free of substances toxic to plantings; and as follows:

1. Organic Matter Content: 60 percent of dry weight.
2. Feedstock: Agricultural, food, or industrial residuals; biosolids; yard trimmings; or source-separated or compostable mixed solid waste.

2.5 FERTILIZERS

A. Slow-Release Fertilizer: Granular or pelleted fertilizer consisting of 50 percent water-insoluble nitrogen, phosphorus, and potassium in the following composition:

1. Composition: Nitrogen, phosphorous, and potassium in amounts recommended in soil reports from a qualified soil-testing laboratory.

2.6 PLANTING SOILS

A. Planting Soil: Interchangeable with Topsoil for this project. Existing, in-place surface soil and stockpiled on-site amended per Soils Report to create acceptable topsoil or planting soil and with the following requirements: Verify suitability of existing surface soil to produce viable planting soil via Soil Analysis. Remove stones, roots, plants, clods, clay lumps, pockets of coarse sand, concrete slurry, concrete layers or chunks, cement, plaster, building debris, and other extraneous materials harmful to plant growth. Mix surface soil with the following soil amendments and fertilizers as indicated below to produce planting soil

1. Planting soil shall conform to the recommendations written in the Soils Report. Existing soil and topsoil fill shall be mixed with the soil amendments and fertilizers recommended in the Soils Report and in the quantities indicated therein.

2.7 MULCHES

A. Certified Weed Free Straw Mulch: Provide air-dry, clean, mildew and seed-free, threshed straw of wheat, rye, oats, or barley.

B. Compost: Well-composted, stable, and certified weed-free organic matter, pH range of 5.5 to 8; moisture content 35 to 55 percent by weight; 100 percent passing through 1-inch; soluble salt content of 5 to 10 decisiemens/m; not exceeding 0.5 percent inert contaminants and free of substances toxic to plantings; and as follows:

1. Organic Matter Content: 60 percent of dry weight.

2.8 PESTICIDES

A. General: Pesticide, registered and approved by EPA, acceptable to authorities having jurisdiction, and of type recommended by manufacturer for each specific problem and as required for Project conditions and application. Do not use restricted pesticides unless authorized in writing by authorities having jurisdiction.

2.9 EROSION-CONTROL MATERIALS: See Section 31 25 00 “Erosion and Sediment Controls.”

PART 3 - EXECUTION

3.1 EXAMINATION

A. Examine areas to be planted for compliance with requirements and other conditions affecting performance.

1. Verify that no foreign or deleterious material or liquid such as paint, paint washout, concrete slurry, concrete layers or chunks, cement, plaster, oils, gasoline, diesel fuel, paint thinner, turpentine, tar, roofing compound, or acid has been deposited in soil within a planting area.
2. Do not mix or place soils and soil amendments in frozen, wet, or muddy conditions.
3. Suspend soil spreading, grading, and tilling operations during periods of excessive soil moisture until the moisture content reaches acceptable levels to attain the required results.
4. Uniformly moisten excessively dry soil that is not workable, and which is too dusty.

B. Proceed with installation only after unsatisfactory conditions have been corrected.

C. If contamination by foreign or deleterious material or liquid is present in soil within a planting area, remove the soil and contamination as directed by the CO and replace with new planting soil.

3.2 PREPARATION

A. Protect structures, utilities, sidewalks, pavements, and other facilities, trees, shrubs, and plantings from damage caused by planting operations.

   1. Protect grade stakes set by others until directed to remove them.

B. Install erosion-control measures to prevent erosion or displacement of soils and discharge of soil-bearing water runoff or airborne dust to adjacent properties and walkways.

3.3 TURF AREA PREPARATION

A. Limit turf subgrade preparation to areas to be planted.

B. Newly Graded Subgrades: Loosen subgrade to a minimum depth of 6 inches. Remove stones larger than 1 inch in any dimension and sticks, roots, rubbish, and other extraneous matter and legally dispose of them off Government's property.

   1. Take representative samples of project soil areas to receive lawn seed prior to planting and submit to testing laboratory. Samples shall be taken according to testing laboratory recommendations.
   2. Submit results of soil testing to the CO for approval prior to amending soil and seeding. Apply soil amendments and fertilizer on surface, and thoroughly blend planting soil mix at rates required by soil test and as approved or modified by the CO. Amendments shall be mixed/tilled into the top 4 inches of soil minimum.

      a. Delay mixing fertilizer with planting soil if planting will not proceed within five (5) days.
      b. Mix lime with dry soil before mixing in fertilizer.

   3. Thoroughly blend soil amendments and fertilizer into exiting soil planting soil.

   4. Spread topsoil to a depth of 4 inches but not less than required to meet finish grades after light rolling and natural settlement. Do not spread if planting soil or subgrade is frozen, muddy, or excessively wet.

      a. Spread approximately 1/2 the thickness of planting soil over loosened subgrade. Mix thoroughly into top 2 inches of subgrade. Spread remainder of planting soil.

C. Unchanged or Partially Altered Subgrades: If turf is to be planted in areas unaltered or undisturbed by excavating, grading, or surface-soil stripping operations, prepare surface soil as follows:

   1. Remove existing grass, vegetation, and turf. Do not mix into surface soil.
   2. Loosen surface soil to a depth of at least 6 inches. Apply soil amendments and fertilizers according to planting soil mix proportions and mix thoroughly into top 4 inches of soil. Till soil to a homogeneous mixture of fine texture.
   3. Remove stones larger than 1 inch in any dimension and sticks, roots, trash, and other extraneous matter.
   4. Legally dispose of waste material, including grass, vegetation, and turf, off Government's property.

D. Finish Grading: Grade planting areas to a smooth, uniform surface plane with loose, uniformly fine texture. Grade to within plus or minus 1/2 inch of finish elevation. Roll and rake, remove ridges, and fill depressions to meet finish grades. Limit finish grading to areas that can be planted in the immediate future.

E. Moisten prepared area before planting if soil is dry. Water thoroughly and allow surface to dry before planting. Do not create muddy soil.

F. Before planting, obtain CO's acceptance of finish grading; restore planting areas if eroded or otherwise disturbed after finish grading.

3.4 SEEDING

A. Sow seed with spreader or seeding machine. Do not broadcast or drop seed when wind velocity exceeds 5 mph. Evenly distribute seed by sowing equal quantities in two directions at right angles to each other.

1. Do not use wet seed or seed that is moldy or otherwise damaged.
2. Do not seed against existing trees. Limit extent of seed to outside edge of planting saucer.

B. Sow seed at a total rate of 8 lb/1000 sq. ft.

C. Rake seed lightly into top 1/8 inch of soil, roll lightly, and water with fine spray.

D. Protect seeded areas with slopes exceeding 1:4 with erosion-control blankets. Install and anchor with biodegradable fasteners according to manufacturer's written instructions.

E. Protect seeded areas with slopes not exceeding 1:4 by spreading straw mulch. Spread uniformly at a minimum rate of 2 tons/acre to form a continuous blanket 1-1/2 inches thickness in loose thickness over seeded areas. Spread by hand, blower, or other suitable equipment.

1. Anchor straw mulch by crimping into soil with suitable mechanical equipment.

F. Protect seeded areas from hot, dry weather or drying winds by applying compost mulch within 24 hours after completing seeding operations. Soak areas, scatter mulch uniformly to a thickness of 3/16 inch, and roll surface smooth.

3.5 TURF RENOVATION

A. Renovate existing turf.

B. Renovate existing turf damaged by Contractor's operations, such as storage of materials or equipment and movement of vehicles.

1. Reestablish turf where settlement or washouts occur or where minor regrading is required.
2. Install new planting soil as required.

C. Remove sod and vegetation from diseased or unsatisfactory turf areas; do not bury in soil.

D. Remove topsoil containing foreign materials such as oil drippings, fuel spills, stones, gravel, and other construction materials resulting from Contractor's operations, and replace with new planting soil.

E. Mow, dethatch, core aerate, and rake existing turf.

F. Remove weeds before seeding. Where weeds are extensive, apply selective herbicides as required. Do not use pre-emergence herbicides.

G. Remove waste and foreign materials, including weeds, soil cores, grass, vegetation, and turf, and legally dispose of them off Government’s property.

H. Till stripped, bare, and compacted areas thoroughly to a soil depth of 6 inches.

I. Apply soil amendments and initial fertilizers required for establishing new turf and mix thoroughly into top 4 inches of existing soil. Install new planting soil to fill low spots and meet finish grades.

J. Apply seed and protect with straw mulch as required for new turf.

K. Water newly planted areas and keep moist until new turf is established.

3.6 TURF MAINTENANCE

A. Maintain and establish turf by watering, fertilizing, weeding, mowing, trimming, replanting, and performing other operations as required to establish healthy, viable turf. Roll, regrade, and replant bare or eroded areas and remulch to produce a uniformly smooth turf. Provide materials and installation the same as those used in the original installation.

1. Fill in as necessary soil subsidence that may occur because of settling or other processes. Replace materials and turf damaged or lost in areas of subsidence.
2. In areas where mulch has been disturbed by wind or maintenance operations, add new mulch and anchor as required to prevent displacement.
3. Apply treatments as required to keep turf and soil free of pests and pathogens or disease. Use integrated pest management practices whenever possible to minimize the use of pesticides and reduce hazards.

B. Watering: Install and maintain temporary piping, hoses, and turf-watering equipment to convey water from sources and to keep turf uniformly moist to a depth of 4 inches.

1. Schedule watering to prevent wilting, puddling, erosion, and displacement of seed or mulch. Lay out temporary watering system to avoid walking over muddy or newly planted areas.
2. Water turf with fine spray at a minimum rate of 1 inch per week unless rainfall precipitation is adequate.

C. Mow to a 3” height. Repeat mowing each week for duration of maintenance period to maintain specified height without cutting more than 1/3 of grass height. Remove no more than 1/3 of grass-leaf growth in initial or subsequent mowings.

3.7 SATISFACTORY TURF

A. Turf installations shall meet the following criteria as determined by the CO:

1. Satisfactory Seeded Turf: At end of maintenance period, a healthy, uniform, close stand of grass has been established, free of weeds and surface irregularities, with coverage exceeding 90 percent over any 10 sq. ft. and bare spots not exceeding 5 by 5 inches.

B. Use specified materials to reestablish turf that does not comply with requirements and continue maintenance until turf is satisfactory.

3.8 PESTICIDE APPLICATION

A. Apply pesticides and other chemical products and biological control agents in accordance with requirements of authorities having jurisdiction and manufacturer's written recommendations. Coordinate applications with Government's operations and others in proximity to the Work. Notify CO before each application is performed.

3.9 CLEANUP AND PROTECTION

A. Promptly remove soil and debris created by turf work from paved areas. Clean wheels of vehicles before leaving site to avoid tracking soil onto roads, walks, or other paved areas.

B. Erect temporary fencing or barricades and warning signs as required to protect newly planted areas from traffic. Maintain fencing and barricades throughout initial maintenance period and remove after plantings are established.

END OF SECTION 32 92 00

SECTION 32 93 00 - PLANTS

PART 1 - GENERAL

1.1 RELATED DOCUMENTS

A. Drawings and general provisions of the Contract, including General and Supplementary Conditions and Division 01 Specification Sections, apply to this Section.

1.2 SUMMARY

A. Section Includes:

1. Plants.
2. Planting soils.
3. Tree stabilization.

B. Related Sections:

1. Section 31 10 00 "Site Clearing" for protection of existing trees and plantings, topsoil stripping and stockpiling, and site clearing.
2. Section 31 20 00 "Earth Moving" for excavation, filling, and rough grading and for subsurface aggregate drainage and drainage backfill materials.

1.3 DEFINITIONS

A. Backfill: The earth used to replace or the act of replacing earth in an excavation.

B. Balled and Burlapped Stock: Plants dug with firm, natural balls of earth in which they were grown, with ball size not less than diameter and depth recommended by ANSI Z60.1 for type and size of plant required; wrapped with burlap, tied, rigidly supported, and drum laced with twine with the root flare visible at the surface of the ball as recommended by ANSI Z60.1.

C. Container-Grown Stock: Healthy, vigorous, well-rooted plants grown in a container, with a well-established root system reaching sides of container and maintaining a firm ball when removed from container. Container shall be rigid enough to hold ball shape and protect root mass during shipping and be sized according to ANSI Z60.1 for type and size of plant required.

D. Finish Grade: Elevation of finished surface of planting soil.

E. Multi-Stem: Where three or more main stems arise from the ground from a single root crown or at a point right above the root crown.

F. Pesticide: A substance or mixture intended for preventing, destroying, repelling, or mitigating a pest. This includes insecticides, miticides, herbicides, fungicides, rodenticides, and molluscicides. It also includes substances or mixtures intended for use as a plant regulator, defoliant, or desiccant.

G. Pests: Living organisms that occur where they are not desired, or that cause damage to plants, animals, or people. These include insects, mites, grubs, mollusks (snails and slugs), rodents (gophers, moles, and mice), unwanted plants (weeds), fungi, bacteria, and viruses.

H. Planting Area: Areas to be planted.

I. Planting Soil: Standardized topsoil; existing, native surface topsoil; existing, in-place surface soil; imported topsoil; that is modified with soil amendments and perhaps fertilizers to produce a soil mixture best for plant growth.

J. Plant; Plants; Plant Material: These terms refer to vegetation in general, including trees and shrubs or herbaceous vegetation.

K. Root Flare: Also called "trunk flare." The area at the base of the plant's stem or trunk where the stem or trunk broadens to form roots; the area of transition between the root system and the stem or trunk.

L. Stem Girdling Roots: Roots that encircle the stems (trunks) of plants below the soil surface.

M. Subgrade: Surface or elevation of subsoil remaining after excavation is complete, or the top surface of a fill or backfill before planting soil is placed.

N. Subsoil: All soil beneath the topsoil layer of the soil profile, and typified by the lack of organic matter and soil organisms.

O. Surface Soil: Soil that is present at the top layer of the existing soil profile at the Project site. In undisturbed areas, the surface soil is typically topsoil; but in disturbed areas such as urban environments, the surface soil can be subsoil.

1.4 ACTION SUBMITTALS

A. Product Data: For each type of product indicated, including soils.

1. Plant Materials: Include quantities, sizes, quality, and sources for plant materials.
2. Pesticides and Herbicides: Include product label and manufacturer's application instructions specific to the Project.

B. Samples for Verification: For each of the following:

1. Organic Mulch: 1-quart volume of each organic mulch required; in sealed plastic bags labeled with composition of materials by percentage of weight and source of mulch. Each Sample shall be typical of the lot of material to be furnished; provide an accurate representation of color, texture, and organic makeup.

a. Weed Fee Certification mulch and imported topsoil.

1.5 INFORMATIONAL SUBMITTALS

A. Qualification Data: For qualified landscape Installer. Include list of similar projects completed by Installer demonstrating Installer's capabilities and experience. Include project names, addresses, and year completed, and include names and addresses of owners' contact persons.

B. Product Certificates: For each type of manufactured product, from manufacturer, and complying with the following:

1. Manufacturer's certified analysis of standard products.
2. Analysis of other materials by a recognized laboratory made according to methods established by the Association of Official Analytical Chemists, where applicable.

C. Material Test Reports: For standardized ASTM D 5268 topsoil, existing native surface topsoil, existing in-place surface soil and certified weed free imported topsoil.

1. Certification of weed free imported or manufactured topsoil.
2. Source of certified weed free imported topsoil.

D. Maintenance Instructions: Recommended procedures to be established by Government for maintenance of plants during a calendar year. Submit before start of required maintenance periods.

E. Warranty: Sample of warranty.

1.6 QUALITY ASSURANCE

A. Installer Qualifications: A qualified landscape Installer whose work has resulted in successful establishment of plants.

1. Professional Membership: Installer shall be a member in good standing of either the Professional Landcare Network or the American Nursery and Landscape Association.
2. Experience: Five years' experience in landscape installation in addition to requirements in Section 01 40 00 "Quality Requirements."
3. Installer's Field Supervision: Require Installer to maintain an experienced full-time supervisor on Project site when work is in progress.
4. Personnel Certifications: Installer's supervisor shall have certification in one of the following categories from the Professional Landcare Network:

a. Certified Landscape Technician - Exterior, with installation specialty area(s), designated CLT-Exterior.
b. Certified Ornamental Landscape Professional, designated COLP.

5. Pesticide Applicator: State licensed, commercial.

B. The Contractor shall retain and pay for the services of an independent testing firm to perform on-site observation and soil testing during the various phases of the construction operations identified in this specification section.

C. Soil-Testing Laboratory Qualifications: An independent or university laboratory, recognized by the Commonwealth of Virginia or Maryland State Department of Agriculture, with the experience and capability to conduct the testing indicated and that specializes in types of tests to be performed.

D. Soil Analysis: For each unamended soil type, furnish soil analysis and a written report by a qualified soil-testing laboratory stating percentages of organic matter; gradation of sand, silt, and clay content; cation exchange capacity; sodium absorption ratio; deleterious material; pH; and mineral and plant-nutrient content of the soil.

1. Testing methods and written recommendations shall comply with USDA's Handbook No. 60.
2. The soil-testing laboratory shall oversee soil sampling; with depth, location, and number of samples to be taken per instructions from Contracting Officer (CO). A minimum of three representative samples shall be taken from varied locations for each soil to be used or amended for planting purposes.
3. Report suitability of tested soil for plant growth.

a. Based upon the test results, state recommendations for soil treatments and soil amendments to be incorporated. State recommendations in weight per 1000 sq. ft. or volume per cu. yd. for nitrogen, phosphorus, and potash nutrients and soil amendments to be added to produce satisfactory planting soil suitable for healthy, viable plants.
b. Report presence of problem salts, minerals, or heavy metals, including aluminum, arsenic, barium, cadmium, chromium, cobalt, lead, lithium, and vanadium. If such problem materials are present, provide additional recommendations for corrective action.

E. Provide quality, size, genus, species, and variety of plants indicated, complying with applicable requirements in ANSI Z60.1.

F. Measurements: Measure according to ANSI Z60.1. Do not prune to obtain required sizes.

1. Trees and Shrubs: Measure with branches and trunks or canes in their normal position. Take height measurements from or near the top of the root flare for field-grown stock and container grown stock. Measure main body of trees and shrubs for height and spread; do not measure branches or roots tip to tip. Take caliper measurements 6 inches above the root flare for trees up to 4-inch caliper size.

G. Plant Material Observation: CO may observe plant material either at place of growth or at site before planting for compliance with requirements for genus, species, variety, cultivar, size, and quality. CO retains right to observe trees and shrubs further for size and condition of balls and root systems, pests, disease symptoms, injuries, and latent defects and to reject unsatisfactory or defective material at any time during progress of work. Remove rejected trees and shrubs immediately from Project site.

1. Notify CO of sources of planting materials seven days in advance of delivery to site.

H. Preinstallation Conference: Conduct conference at Project site.

1.7 DELIVERY, STORAGE, AND HANDLING

A. Packaged Materials: Deliver packaged materials in original, unopened containers showing weight, certified analysis, name and address of manufacturer, and indication of conformance with state and federal laws if applicable.

B. Bulk Materials:

1. Do not dump or store bulk materials near structures, utilities, walkways and pavements, or on existing turf areas or plants.
2. Provide erosion-control measures to prevent erosion or displacement of bulk materials, discharge of soil-bearing water runoff, and airborne dust reaching adjacent properties, water conveyance systems, or walkways.
3. Accompany each delivery of bulk fertilizers, lime, and soil amendments with appropriate certificates.

C. Deliver bare-root stock plants freshly dug. Immediately after digging up bare-root stock, pack root system in wet straw, hay, or other suitable material to keep root system moist until planting.

D. Do not prune trees and shrubs before delivery. Protect bark, branches, and root systems from sun scald, drying, wind burn, sweating, whipping, and other handling and tying damage. Do not bend or bind-tie trees and shrubs in such a manner as to destroy their natural shape. Provide protective covering of plants during shipping and delivery. Do not drop plants during delivery and handling.

E. Handle planting stock by root ball.

F. Deliver plants after preparations for planting have been completed, and install immediately. If planting is delayed more than six hours after delivery, set trees and shrubs in their appropriate aspect (sun, filtered sun, or shade), protect from weather and mechanical damage, and keep roots moist.

1. Set balled stock on ground and cover ball with soil, peat moss, sawdust, or other acceptable material.
2. Do not remove container-grown stock from containers before time of planting.

3. Water root systems of plants stored on-site deeply and thoroughly with a fine-mist spray. Water as often as necessary to maintain root systems in a moist, but not overly-wet condition.
4. Reject dried-out plants.

1.8 PROJECT CONDITIONS

A. Field Measurements: Verify actual grade elevations, service and utility locations, irrigation system components, and dimensions of plantings and construction contiguous with new plantings by field measurements before proceeding with planting work.

B. Planting Restrictions: Plant during one of the following periods. Coordinate planting periods with maintenance periods to provide required maintenance from date of Substantial Completion.

1. Spring Planting: as indicated on drawings.
2. Fall Planting: as indicated on drawings.

C. Weather Limitations: Proceed with planting only when existing and forecasted weather conditions permit planting to be performed when beneficial and optimum results may be obtained. Apply products during favorable weather conditions according to manufacturer's written instructions and warranty requirements.

1.9 WARRANTY

A. Special Warranty: Installer agrees to repair or replace plantings and accessories that fail in materials, workmanship, or growth within specified warranty period.

1. Failures include, but are not limited to, the following:

a. Death and unsatisfactory growth, except for defects resulting from abuse, lack of adequate maintenance, or neglect by Government, or incidents that are beyond Contractor's control.
b. Structural failures including plantings falling or blowing over.
c. Faulty performance of shrub stabilization.
d. Deterioration of metals, metal finishes, and other materials beyond normal weathering.

2. Warranty Periods from Date of Substantial Completion:

a. Trees and Shrubs: 12 months.

3. Include the following remedial actions as a minimum:

a. Immediately remove dead plants and replace unless required to plant in the succeeding planting season.
b. Replace plants that are more than 25 percent dead or in an unhealthy condition at end of warranty period.
c. A limit of one replacement of each plant will be required except for losses or replacements due to failure to comply with requirements.
d. Provide extended warranty for period equal to original warranty period, for replaced plant material.

1.10 MAINTENANCE SERVICE

A. Initial Maintenance Service for Trees and Shrubs: Provide maintenance by skilled employees of landscape Installer. Maintain as required in Part 3. Begin maintenance immediately after

plants are installed and continue until plantings are acceptably healthy and well established but for not less than maintenance period below.

1. Maintenance Period: Three months from date of Substantial Completion.

PART 2 - PRODUCTS

2.1 PLANT MATERIAL

A. General: Furnish nursery-grown plants true to genus, species, variety, cultivar, stem form, shearing, and other features indicated in Plant Schedule or Plant Legend shown on Drawings and complying with ANSI Z60.1; and with healthy root systems developed by transplanting or root pruning. Provide well-shaped, fully branched, healthy, vigorous stock, densely foliated when in leaf and free of disease, pests, eggs, larvae, and defects such as knots, sun scald, injuries, abrasions, and disfigurement.

1. Trees with damaged, crooked, or multiple leaders; tight vertical branches where bark is squeezed between two branches or between branch and trunk ("included bark"); crossing trunks; cut-off limbs more than 3/4 inch in diameter; or with stem girdling roots will be rejected.

B. Provide plants of sizes, grades, and ball or container sizes complying with ANSI Z60.1 for types and form of plants required. Plants of a larger size may be used if acceptable to CO, with a proportionate increase in size of roots or balls.

C. Root-Ball Depth: Furnish trees and shrubs with root balls measured from top of root ball, which shall begin at root flare according to ANSI Z60.1. Root flare shall be visible before planting.

D. Labeling: Label each at least one plant of each variety, size, and caliper with a securely attached, waterproof tag bearing legible designation of common name and full scientific name, including genus and species. Include nomenclature for hybrid, variety, or cultivar, if applicable for the plant as shown on Drawings.

E. If formal arrangements or consecutive order of plants is shown on Drawings, select stock for uniform height and spread, and number the labels to assure symmetry in planting.

2.2 INORGANIC SOIL AMENDMENTS

A. Lime: ASTM C 602, agricultural liming material containing a minimum of 80 percent calcium carbonate equivalent and as follows:

1. Class: O, with a minimum of 95 percent passing through No. 8 sieve and a minimum of 55 percent passing through No. 60 sieve.
2. Provide lime in form of ground dolomitic limestone or calcitic limestone depending on soil analysis and recommendations.

B. Sulfur: Granular, biodegradable, and containing a minimum of 90 percent sulfur, with a minimum of 99 percent passing through No. 6 sieve and a maximum of 10 percent passing through No. 40 sieve.

C. Iron Sulfate: Granulated ferrous sulfate containing a minimum of 20 percent iron and 10 percent sulfur.

D. Aluminum Sulfate: Commercial grade, unadulterated.

E. Perlite: Horticultural perlite, soil amendment grade.

F. Agricultural Gypsum: Minimum 90 percent calcium sulfate, finely ground with 90 percent passing through No. 50 sieve.

G. Sand: Clean, washed, natural or manufactured, and free of toxic materials.

2.3 ORGANIC SOIL AMENDMENTS

A. Compost: Well-composted, stable, and weed-free organic matter, pH range of 5.5 to 8; moisture content 35 to 55 percent by weight; 100 percent passing through 1/2-inch sieve; soluble salt content of 5 to 10 decisiemens/m; not exceeding 0.5 percent inert contaminants and free of substances toxic to plantings; and as follows:

1. Organic Matter Content: 50 to 60 percent of dry weight.

2.4 FERTILIZERS

A. Bonemeal: Commercial, raw or steamed, finely ground; in amounts recommended in soil reports from a qualified soil-testing laboratory.

B. Commercial Fertilizer: Commercial-grade complete fertilizer of neutral character, consisting of fast- and slow-release nitrogen, 50 percent derived from natural organic sources of urea formaldehyde, phosphorous, and potassium in the following composition:

1. Composition: Nitrogen, phosphorous, and potassium in amounts recommended in soil reports from a qualified soil-testing laboratory.

C. Slow-Release Fertilizer: Granular or pelleted fertilizer consisting of 50 percent water-insoluble nitrogen, phosphorus, and potassium in the following composition:

1. Composition: Nitrogen, phosphorous, and potassium in amounts recommended in soil reports from a qualified soil-testing laboratory.

2.5 PLANTING SOILS

A. Planting Soil Mix: ASTM D 5268 topsoil, with pH range of 5.5 to 7, a minimum of 6 percent organic material content; free of stones 1 inch or larger in any dimension and other extraneous materials harmful to plant growth.

1. Verify suitability of native surface topsoil to produce viable planting soil with soil testing agency. Clean soil of roots, plants, sod, stones, clay lumps, and other extraneous materials harmful to plant growth.
2. Mix topsoil with the soil amendments and fertilizers as recommended by the Testing Agency for use of existing topsoil to produce the planting soil mix.
3. Supplement with other approved soil mixes when quantities are insufficient.

B. Planting Soil: Existing, in-place surface soil. Verify suitability of existing surface soil to produce viable planting soil with soil testing agency. If soil is determined to be acceptable, remove stones, roots, plants, sod, clods, clay lumps, pockets of coarse sand, concrete slurry, concrete layers or chunks, cement, plaster, building debris, and other extraneous materials harmful to plant growth.

1. Mix surface soil with the soil amendments and fertilizers as recommended by the Testing Agency for use of existing surface soil to produce the planting soil mix.
2. Supplement with other approved soil mixes when quantities are insufficient.

C. Planting Soil: Imported certified weed free topsoil from off-site sources. Obtain topsoil displaced from naturally well-drained construction or mining sites where topsoil occurs at least 4 inches deep; do not obtain from agricultural land, bogs, or marshes.

1. Additional Properties of Imported Topsoil : Screened and free of stones 1 inch or larger in any dimension; free of roots, plants, sod, clods, clay lumps, pockets of coarse sand, paint, paint washout, concrete slurry, concrete layers or chunks, cement, plaster, building debris, oils, gasoline, diesel fuel, paint thinner, turpentine, tar, roofing compound, acid, and other extraneous materials harmful to plant growth; free of obnoxious weeds and invasive plants including quackgrass, Johnsongrass, poison ivy, nutsedge, nimblewill, Canada thistle, bindweed, bentgrass, wild garlic, ground ivy, perennial sorrel, and bromegrass; not infested with nematodes; grubs; or other pests, pest eggs, or other undesirable organisms and disease-causing plant pathogens; friable and with sufficient structure to give good tilth and aeration. Continuous, air-filled pore space content on a volume/volume basis shall be at least 15 percent when moisture is present at field capacity. Soil shall have a field capacity of at least 15 percent on a dry weight basis.
2. Mix imported topsoil with the following soil amendments and fertilizers to produce planting soil as recommended by testing agency for existing and imported soils.
3. Supplement with other approved soil mixes when quantities are insufficient.

2.6 MULCHES

A. Certified Weed Free Organic Mulch: Free from deleterious materials and suitable as a top dressing of trees and shrubs, consisting of one of the following:

1. Type: Double Shredded Hardwood Bark Mulch, natural color.
2. Size Range: 3 inches maximum, 1/2-inch minimum.

B. Compost Mulch: Well-composted, stable, and certified weed-free organic matter, pH range of 5.5 to 8; moisture content 35 to 55 percent by weight; 100 percent passing through 1-inch sieve; soluble salt content of 2 to 5 decisiemens/m; not exceeding 0.5 percent inert contaminants and free of substances toxic to plantings; and as follows:

1. Organic Matter Content: 50 to 60 percent of dry weight.

2.7 PESTICIDES

A. General: Pesticide registered and approved by EPA, acceptable to authorities having jurisdiction, and of type recommended by manufacturer for each specific problem and as required for Project conditions and application. Do not use restricted pesticides unless authorized in writing by authorities having jurisdiction.

B. Pre-Emergent Herbicide (Selective and Non-Selective): Effective for controlling the germination or growth of weeds within planted areas at the soil level directly below the mulch layer.

C. Post-Emergent Herbicide (Selective and Non-Selective): Effective for controlling weed growth that has already germinated.

2.8 TREE AND SHRUB STABILIZATION MATERIALS

A. Stakes:

1. Upright Stakes: Rough-sawn, sound, new hardwood free of knots, holes, cross grain, and other defects, 2-by-2-inch nominal by length indicated, pointed at one end.

2. Flexible Ties: Wide rubber or elastic bands or straps of length required to reach stakes.
3. Tie Wires: ASTM A 641/A 641M, Class 1, galvanized-steel wire, two-strand, twisted, 0.106 inch in diameter.
4. Hose Chafing Guards: Reinforced rubber of plastic hose at least 1/2" in diameter, black, cut to lengths required to protect trunks from damage.

2.9 MISCELLANEOUS PRODUCTS

A. Water and hoses or other methods of transportation and conveyance to be furnished by Contractor

B. Antidesiccant: Water-insoluble emulsion, permeable moisture retarder, film forming, for trees and shrubs. Deliver in original, sealed, and fully labeled containers and mix according to manufacturer's written instructions.

C. Burlap: Non-synthetic, biodegradable.

PART 3 - EXECUTION

3.1 EXAMINATION

A. Examine areas to receive plants for compliance with requirements and conditions affecting installation and performance.

1. Verify that no foreign or deleterious material or liquid such as paint, paint washout, concrete slurry, concrete layers or chunks, cement, plaster, oils, gasoline, diesel fuel, paint thinner, turpentine, tar, roofing compound, or acid has been deposited in soil within a planting area.
2. Do not mix or place soils and soil amendments in frozen, wet, or muddy conditions.
3. Suspend soil spreading, grading, and tilling operations during periods of excessive soil moisture until the moisture content reaches acceptable levels to attain the required results.
4. Uniformly moisten excessively dry soil that is not workable and which is too dusty.

B. Proceed with installation only after unsatisfactory conditions have been corrected.

C. If contamination by foreign or deleterious material or liquid is present in soil within a planting area, remove the soil and contamination as directed by CO and replace with new planting soil.

3.2 PREPARATION

A. Protect structures, utilities, sidewalks, pavements, and other facilities and turf areas and existing plants from damage caused by planting operations.

B. Install erosion-control measures to prevent erosion or displacement of soils and discharge of soil-bearing water runoff or airborne dust to adjacent properties and walkways.

C. Lay out individual tree and shrub locations and areas for multiple plantings. Stake locations, outline areas, adjust locations when requested, and obtain CO's acceptance of layout before excavating or planting. Make minor adjustments as required.

D. Apply antidesiccant to trees and shrubs using power spray to provide an adequate film over trunks (before wrapping), branches, stems, twigs, and foliage to protect during digging, handling, and transportation.

1. If deciduous trees and shrubs are moved in full leaf, spray with antidesiccant at nursery before moving and again two weeks after planting.

E. Wrap trees and shrubs with burlap fabric over trunks, branches, stems, twigs, and foliage to protect from wind and other damage during digging, handling, and transportation.

3.3 PLANTING AREA ESTABLISHMENT

A. Loosen subgrade of planting areas to a minimum depth of 8 inches. Remove stones larger than 1 inch in any dimension and sticks, roots, rubbish, and other extraneous matter and legally dispose of them off Government's property.

1. Excavate existing soil as required to achieve planting where soils are unsuitable for planting mix.
2. Apply fertilizer and other amendments at recommended rates directly to subgrade before loosening.
3. Thoroughly blend planting soil off-site before spreading or spread topsoil, apply soil amendments and fertilizer on surface, and thoroughly blend planting soil.

    a. Delay mixing fertilizer with planting soil if planting will not proceed within a few days.
    b. Mix lime with dry soil before mixing fertilizer.

4. Spread planting soil to a depth as required to meet finish grades after natural settlement. Do not spread if planting soil or subgrade is frozen, muddy, or excessively wet.

    a. Where soils have been heavily compacted during construction spread approximately one-half the thickness of planting soil over loosened subgrade. Mix thoroughly into top 4 inches of subgrade. Spread remainder of planting soil.

B. Finish Grading: Grade planting areas to a smooth, uniform surface plane with loose, uniformly fine texture. Roll and rake, remove ridges, and fill depressions to meet finish grades.

C. Before planting, obtain CO's acceptance of finish grading; restore planting areas if eroded or otherwise disturbed after finish grading.

3.4 EXCAVATION FOR TREES AND SHRUBS

A. Planting Pits and Trenches: Excavate circular planting pits with sides sloping inward at a 45-degree angle. Excavations with vertical sides are not acceptable. Trim perimeter of bottom leaving center area of bottom raised slightly to support root ball and assist in drainage away from center. Do not further disturb base. Ensure that root ball will sit on undisturbed base soil to prevent settling. Scarify sides of planting pit smeared or smoothed during excavation.

1. Excavate ball diameter for balled and burlapped and container-grown stock as indicated.
2. Do not excavate deeper than depth of the root ball, measured from the root flare to the bottom of the root ball.
3. If area under the plant was initially dug too deep, add soil to raise it to the correct level and thoroughly tamp the added soil to prevent settling.
4. Maintain required angles of repose of adjacent materials as shown on the Drawings. Do not excavate subgrades of adjacent paving, structures, hardscapes, or other new or existing improvements.
5. Maintain supervision of excavations during working hours.
6. Keep excavations covered or otherwise protected when unattended by Installer's personnel.

B. Subsoil and topsoil removed from excavations may be used as part of planting soil if determined to be suitable by Soil Testing Agency.

C. Obstructions: Notify CO if unexpected rock, hardpan, or other obstructions detrimental to trees and shrubs are encountered in excavations.

D. Drainage: Notify CO if subsoil conditions evidence unexpected water seepage or retention in shrub planting pits.

E. Fill excavations with water and allow to percolate away before positioning trees and shrubs.

3.5 TREE AND SHRUB PLANTING

A. Before planting, verify that root flare is visible at top of root ball according to ANSI Z60.1. If root flare is not visible, remove soil in a level manner from the root ball to where the top-most root emerges from the trunk. After soil removal to expose the root flare, verify that root ball still meets size requirements.

B. Remove stem girdling roots and kinked roots. Remove injured roots by cutting cleanly; do not break.

C. Set balled and burlapped stock plumb and in center of planting pit or trench with root flare as indicated on drawings for trees and shrubs above adjacent finish grades.

1. Use approved planting soil mixes for backfill.
2. After placing some backfill around root ball to stabilize plant, carefully cut and remove burlap, rope, and wire baskets from tops of root balls and from sides, but do not remove from under root balls. Remove pallets, if any, before setting. Do not use planting stock if root ball is cracked or broken before or during planting operation.
3. Backfill around root ball in layers, tamping to settle soil and eliminate voids and air pockets. When planting pit is approximately one-half filled, water thoroughly before placing remainder of backfill. Repeat watering until no more water is absorbed.
4. Continue backfilling process. Water again after placing and tamping final layer of soil.

D. Set container-grown stock plumb and in center of planting pit or trench with root flare 1 inch above adjacent finish grades.

1. Use approved planting soil mixes for backfill.
2. Carefully remove root ball from container without damaging root ball or plant.
3. Backfill around root ball in layers, tamping to settle soil and eliminate voids and air pockets. When planting pit is approximately one-half filled, water thoroughly before placing remainder of backfill. Repeat watering until no more water is absorbed.
4. Continue backfilling process. Water again after placing and tamping final layer of soil.

E. When planting on slopes, set the plant so the root flare on the uphill side is flush with the surrounding soil on the slope; the edge of the root ball on the downhill side will be above the surrounding soil. Apply enough soil to cover the downhill side of the root ball.

3.6 TREE AND SHRUB PRUNING

A. Prune, thin, and shape trees and shrubs according to standard professional horticultural and arboricultural practices. Do not cut leaders; remove only injured, dying, or dead branches from trees and shrubs; and prune to retain natural character.

B. Do not apply pruning paint to wounds.

3.7 STABILIZATION

A. Install trunk stabilization as indicated on drawings:

1. Support trees and shrubs with bands of flexible ties at contact points with trunk. Allow enough slack to avoid rigid restraint of trees.

3.8 PLANTING AREA MULCHING

A. Mulch backfilled surfaces of planting areas and other areas indicated.

1. Organic Mulch in Planting Areas: Apply 3-inch average thickness of organic mulch over whole surface of planting area, and finish level with adjacent finish grades. Do not place mulch within 3 inches of trunks or stems.

3.9 PLANT MAINTENANCE

A. Maintain plantings by pruning, cultivating, and watering, weeding, fertilizing, mulching, restoring planting saucers, adjusting and repairing shrub-stabilization devices, resetting to proper grades or vertical position, and performing other operations as required to establish healthy, viable plantings. Spray or treat as required to keep trees and shrubs free of insects and disease.

B. Fill in as necessary soil subsidence that may occur because of settling or other processes. Replace mulch materials damaged or lost in areas of subsidence.

C. Apply treatments as required to keep plant materials, planted areas, and soils free of pests and pathogens or disease. Use integrated past management practices whenever possible to minimize the use of pesticides and reduce hazards. Treatments include physical controls such as hosing off foliage, mechanical controls such as traps, and biological control agents.

3.10 PESTICIDE APPLICATION

A. Apply pesticides and other chemical products and biological control agents in accordance with authorities having jurisdiction and manufacturer's written recommendations. Coordinate applications with Government’s operations and others in proximity to the Work. Notify CO before each application is performed.

B. Pre-Emergent Herbicides (Selective and Non-Selective): Apply to shrub, and ground-cover areas in accordance with manufacturer's written recommendations. Do not apply to seeded areas.

C. Post-Emergent Herbicides (Selective and Non-Selective): Apply only as necessary to treat already-germinated weeds and in accordance with manufacturer's written recommendations.

3.11 CLEANUP AND PROTECTION

A. During planting, keep adjacent paving and construction clean and work area in an orderly condition.

B. Protect plants from damage due to landscape operations and operations of other contractors and trades. Maintain protection during installation and maintenance periods. Treat, repair, or replace damaged plantings.

C. After installation and before Substantial Completion, remove nursery tags, nursery stakes, tie tape, labels, wire, burlap, and other debris from plant material, planting areas, and Project site.

3.12 DISPOSAL

A. Remove surplus soil and waste material including excess subsoil, unsuitable soil, trash, and debris and legally dispose of them off Government's property.

END OF SECTION 32 93 00

Appendices

A. Mammoth Cave – Heritage Trail and Sand Cave Trail Geotechnical Engineering Report

Appendix A

Mammoth Cave – Heritage Trail and Sand Cave Trail Geotechnical Engineering Report

Mammoth Cave - Heritage Trail and Sand Cave Trail

Geotechnical Engineering Report

Prepared for:

VHB Inc.
351 McLaw Circle Ste. 3
Williamsburg, VA 23185

Terracon
Explore with us

Nationwide
Terracon.com

- Facilities
- Environmental
- Geotechnical
- Materials

611 Lunken Park Drive
Cincinnati, Ohio 45226
P (513) 321-5816
Terracon.com

August 1, 2023

VHB Inc.
351 McLaw Circle Ste. 3
Williamsburg, VA 23185

Attn: Vikrant Desai
P: 757.279.2832
E: vdesai@vhb.com

Re: Geotechnical Engineering Report
Mammoth Cave - Heritage Trail and Sand Cave Trail
Mammoth Cave National Park
Cave City, Edmonson County, Kentucky
Terracon Project No. N1225082

Dear Mr. Desai:

We have completed the scope of Geotechnical Engineering services for the above-referenced project in general accordance with Task Order 140P5221F0045 executed on April 1, 2022. This report presents the findings of the subsurface exploration and provides geotechnical recommendations concerning earthwork and the design and construction of foundations and retaining walls for the proposed project.

We appreciate the opportunity to be of service to you on this project. If you have any questions concerning this report or if we may be of further service, please contact us.

Sincerely,

Terracon

S. Taylor Taluskie, P.E.
Group Manager

Jeffery D. Dunlap, P.E.
Senior Associate – Group Manager

Table of Contents

Introduction 1
Project Description 1
Site Conditions 3
Geotechnical Characterization 4
Groundwater conditions 5
Geologic Hazards 5
Seismic Site Class 6
Geotechnical Overview 6
Earthwork 8
Site Preparation 8
Subgrade Preparation 9
Fill Material Types 10
Fill Placement and Compaction Requirements 11
Earthwork Construction Considerations 12
Construction Observation and Testing 13
Shallow Foundations 13
Design Parameters – Compressive Loads 14
Design Parameters – Overturning and Uplift Loads 15
Foundation Construction Considerations 15
Lateral Earth Pressures 16
Design Parameters 16
Subsurface Drainage for Below-Grade Walls 18
Pavements 19
Pavement Subgrade Support Characteristics 19
General Pavement Comments 19
Pavement Drainage 20
Pavement Maintenance 20
General Comments 21

Figures

GeoModel
Kentucky Geological Survey - Karst Potential Map

Attachments

Exploration and Testing Procedures
Site Location and Exploration Plans
Exploration and Laboratory Results
Supporting Information

Note: This report was originally delivered in a web-based format. Blue Bold text in the report indicates a referenced section heading. The PDF version also includes hyperlinks which direct the reader to that section and clicking on the Terracon logo will bring you back to this page. For more interactive features, please view your project online at client.terracon.com.

Refer to each individual Attachment for a listing of contents.

Introduction

This report presents the results of our subsurface exploration and Geotechnical Engineering services performed for the proposed improvements to the Mammoth Cave Hotel, Heritage Trail, and Sand Cave Trail located at Mammoth Cave National Park in Cave City, Edmonson County, Kentucky. The purpose of these services was to provide information and geotechnical engineering recommendations relative to:

- Subsurface soil and rock conditions
- Groundwater conditions
- Seismic site classification per IBC
- Site preparation and earthwork
- Foundation design and construction
- Lateral earth pressure

The geotechnical engineering Scope of Services for this project included the advancement of a test boring, the advancement of hand auger and Dynamic Cone Penetrometer (DCP) soundings, geophysical surveys, laboratory testing, engineering analysis, and preparation of this report.

Drawings showing the site and boring locations are shown on the Site Location and Exploration Plan, respectively. The results of the laboratory testing performed on soil samples obtained from the site during our field exploration are included on the boring logs and/or as separate graphs in the Exploration Results section.

Project Description

Our initial understanding of the project was provided in our proposal and was discussed during project planning. A period of collaboration has transpired since the project was initiated, and our final understanding of the project conditions is as follows:

- Terracon's original scope included the design of segmental retaining walls. The design team decided that concrete cantilever walls were the preferred approach, and the segmental wall design portion was removed from our scope in an updated Task Order executed on April 4, 2023.

Item	Description
Information Provided	Our understanding of the project as described in the NPS IDIQ Task Order (April 4, 2023), 100% Draft Concept Documents (VHB, May 2023), and various email and phone correspondence with VHB.
Project Description	The proposed project includes the following: ▪ Improvements to the Mammoth Cave Hotel concrete patio. A new concrete patio south of the pedestrian bridge connecting the hotel to the Visitor Center. The patio will be partially supported by a new cantilever retaining wall and a partially elevated structural slab. A new pedestrian bridge connecting a new outdoor classroom area and the Heritage Trail. The outdoor classroom will also include a cantilever retaining wall. ▪ Improvements to the Heritage trail include a new boardwalk and two new overlooks. ▪ Improvement to the Sand Cave Trail includes a new boardwalk and a new overlook on top of an exposed rock face.
Proposed Structures	▪ The new hotel patio will be partially slab-on-grade and partially an elevated structural slab with a new cantilever retaining wall. ▪ The pedestrian bridge includes two equal spans for a total length of about 47 feet. Piers are planned to support the bridge between spans. ▪ The proposed boardwalks and overlooks will be supported by timber columns.
Maximum Loads	Maximum loading conditions have not been provided as of the date of this report. Based on experience with similar structures, we anticipated loadings on the following loading conditions in our analyses. We respectfully request that the loading conditions be confirmed before construction. ▪ Patio Slab: 150 psf ▪ Patio Columns: 15 kips ▪ Pedestrian Bridge Abutment/Piers: 250 kips ▪ Boardwalk Column:5 kips ▪ Overlook Column: 10 kips

Item	Description
Grading/Slopes	Based on the provided grading plans, new fills will be required behind the proposed retaining walls. Other portions of the project will require limited earthwork. We understand that the trails and boardwalks are located in archeologically protected areas and cuts are limited
Free-Standing Retaining Walls	New retaining walls are required for the hotel patio and the new Outdoor Classroom. The walls will be concrete cantilevered retaining walls with decorative facing. Retaining wall design to be performed by others. Exposed retaining wall heights of less than 10 feet are anticipated.
Pavements	The hotel patio will be partially slab-on-grade. New pedestrian paths around the hotel will be slab-on-grade. Portions of the Heritage and Sand Cave trails will be paved with concrete. Pavement design is to be performed by others.

Terracon should be notified if any of the above information is inconsistent with the planned construction as modifications to our recommendations may be necessary.

Site Conditions

The following description of site conditions is derived from our site visit in association with the field exploration and our review of publicly available geologic and topographic maps.

Item	Description
Parcel Information	Both sites are located within Mammoth Cave National Park near Cave City, Edmonson County, Kentucky. The Mammoth Cave Hotel and Heritage Trail are located at the address 171 Hotel Road. The Sand Cave Trailhead is off Old Mammoth Cave Road (KY 255) just east of the intersection with Park Ridge Road. Hotel & Heritage Trail Latitude/Longitude: 37.1862° N, 86.1014° W Sand Cave Trail Latitude/Longitude: 37.1527° N, 86.04769° W See Site Location
Existing Improvements	The Mammoth Cave Hotel includes a restaurant and gift shop. A pedestrian bridge connects the hotel to the Visitor Center. The Heritage and Sand Cave Trails are unpaved.
Current Ground Cover	Various (concrete, grass, brush, wooden boardwalks, exposed earth, and wooded)

Item	Description
Existing Topography	There is a swale/ravine between the existing hotel and the existing Visitor Center, which the existing pedestrian bridge spans. A portion of the Heritage Trail follows the ridge of the swale and generally circles a pinnacle. Grades along the Heritage Trail range from about Elevation 722 feet to Elevation 735 feet, MSL. The Sand Cave Trail generally goes down in topography toward the cave. Grades along the Sand Trail range from about Elevation 769 feet to Elevation 784 feet, MSL. Existing topographical information is included in the provided 100% Draft Construction drawing.
Geology	According to USGS, both sites map within the Upper Mississippian-aged Rocks of Chesterian age, lower part, consisting of limestone and sandstone. According to the KGS, the majority of the area is the Big Clifty Sandstone Member, Golconda Formation. A small portion of the Sand Trail is the Haney Limestone Member, Golconda Formation. Areas adjacent to the sites are mapped as the Girkin Formation (very high karst potential).

Geotechnical Characterization

We have developed a general characterization of the subsurface conditions based on our review of the subsurface exploration, laboratory data, geologic setting, and our understanding of the project. This characterization, termed GeoModel, forms the basis of our geotechnical calculations and evaluation of the site. Conditions observed at each exploration point are indicated on the individual logs. The individual logs can be found in the Exploration Results and the GeoModel can be found in the Figures attachment of this report.

Model Layer	Layer Name	General Description
1	Existing Fill	Undocumented fill; lean to fat clay, brown.
2	Native Overburden	Lean clay, sandy lean, clay silty clay, clayey sand; brown.
3	Bedrock	Sandstone, slightly weathered.

Groundwater conditions

No groundwater was observed at the exploration points while advancing or during the short amount of time the holes remained open upon completion. However, this does not necessarily mean that exploration terminated above stable groundwater levels. A relatively long period of time may be necessary for the groundwater level to develop and stabilize in a borehole in these materials. Long-term observations in piezometers or observation wells sealed from the influence of surface water are often required to define the field or in-situ groundwater level in materials of this type.

Groundwater level fluctuations occur due to seasonal variations in the amount of rainfall, runoff, and other factors not evident at the time the borings were performed. Therefore, groundwater levels during construction or at other times in the life of the structure may be higher or lower than the levels indicated on the boring logs. The possibility of groundwater level fluctuations should be considered when developing the design and construction plans for the project.

Geologic Hazards

The project site is in an area of significant karst potential. Karst Potential Maps by the Kentucky Geological Survey are included in the Figures section of this report. Karst is a distinctive landscape that commonly occurs where carbonate bedrock strata (i.e. limestone and dolostone) are subjected to dissolution weathering by even slightly acidic surface and groundwater. Rainwater picks up carbon dioxide from the atmosphere and as it infiltrates down through the soil profile. The weathering is typified by a chemical solutioning process that progresses along joints, fractures and bedding planes in the bedrock. This process often results in a highly irregular rock profile that contains deep weathered slots filled with soft soils. Voids are created as the bedrock dissolves and over time widened fractures, solution cavities, and caves form. This may progress to ground subsidence and/or sinkholes as soil overburden ravels into or is eroded by groundwater into the subsurface voids.

Prediction of future subsidence or collapse is very difficult and even an extensive subsurface exploration cannot rule out the possibility of ground subsidence. As with any site underlain by a carbonate bedrock formation, karst activity is on-going and there is always the risk of future impact to ground-supported structures.

Auger refusal is defined as the depth below the ground surface at which a test boring can no longer be advanced with the soil drilling technique being used. In an area of uncontrolled fill, it is not uncommon to find boulders or large fragments of man-made debris in which the augers can refuse on. In an area of limestone bedrock, auger refusal can result on slabs of unweathered limestone suspended in the residual soil matrix ("floaters"), on rock "pinnacles" rising above the surrounding bedrock surface, in widened joints that may extend well below the surrounding bedrock surface, or on the upper surface of continuous bedrock. Several of these possible auger refusal conditions are illustrated in the adjacent figure.

AUGER REFUSAL ILLUSTRATION

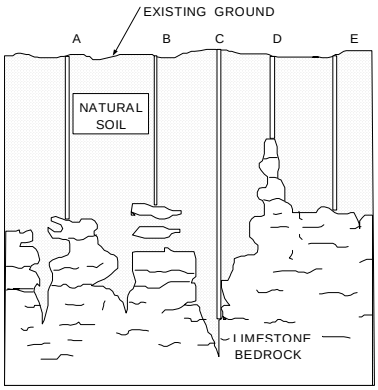

THIS FIGURE IS FOR ILLUSTRATIVE PURPOSES ONLY AND DOES NOT NECESSARILY DEPICT THE SPECIFIC BEDROCK CONDITIONS AT THIS SITE

Seismic Site Class

The seismic design requirements for buildings and other structures are based on Seismic Design Category. Site Classification is required to determine the Seismic Design Category for a structure. The Site Classification is based on the upper 100 feet of the site profile defined by a weighted average value of either shear wave velocity, standard penetration resistance, or undrained shear strength in accordance with Section 20.4 of ASCE 7 and the International Building Code (IBC). Based on the bedrock properties observed at the site and as described in the exploration logs and results, our professional opinion is that a Seismic Site Classification of B be considered for the project, provided that all foundations will be at least 10 feet from the top of bedrock. This Seismic Site Classification is based on the shear wave velocity of the upper 100 feet. At Heritage Trail, the Multi-Channel Analysis of Surface Waves (MASW) data were considered in the evaluation to a depth of 100 feet at Lines 1, 2, and 3. The Sand Cave Trail site properties were estimated based on our experience and knowledge of the geologic conditions of the general area. Additional deeper borings or geophysical testing may be performed to confirm the conditions below the current boring depth.

Geotechnical Overview

The field exploration generally encountered native cohesive and cohesionless overburden soils over sandstone bedrock. Refusal or sandstone bedrock was encountered at depths ranging from about 1.4 to 5 feet below grades at the time of exploration. The majority of

the bedrock is mapped as the Big Clifty Sandstone Member, Golconda Formation, which is not mapped as having karst potential, but karst conditions could be encountered during construction or over the life of the structures, considering the caves at the Park. The bedrock is mapped as the Haney Limestone Member, Golconda Formation, which is a limestone bedrock near Hand Auger/DCP Sounding S-2 at the Sandy Cave Trail site. The Hanely Limestone Member is mapped as having high karst potential.

Existing fill was encountered at Hand Auger/DCP soundings H-1 and H-2 to the refusal depths. We have not been provided records that this material was placed with engineering moisture and compaction controls and consider it to be undocumented. Undocumented fill is not suitable for direct foundation support.

Due to archeological concerns at the site, we understand that grading for the trail projects will be limited. The deepest fills will be required around the hotel plaza and outdoor classroom areas, which will generally be supported by concrete cantilevered retaining walls.

The near-surface cohesive soils could become unstable with typical earthwork and construction traffic, especially after precipitation events. Effective drainage should be completed early in the construction sequence and maintained after construction to avoid potential issues. If possible, grading should be performed during the warmer and drier times of the year. If grading is performed during the winter and spring months, an increased risk for possible undercutting and replacement of unstable subgrade will persist until earthwork-related construction is complete. Additional site preparation recommendations, including subgrade improvement and fill placement, are provided in the Earthwork section.

Three Multi-Channel Analysis of Surface Waves (MASW) arrays were performed near the proposed pedestrian bridge and outdoor classroom. The results are included in the Exploration Results. The different seismic velocities, combined with the boring logs, were used to interpret the top of bedrock, changes in material/lithology, and potential karst features. In general, low-velocity zones (blue to green on the color scale) are indicative of overburden, clay seams, potential voids, and weathered/fractured rock. Higher velocity zones (green to red on the color scale) are indicative of competent bedrock. The MASW lines display multiple indications of a weathered/karstic zone within the top of the bedrock. The interpreted anomalies consist of low-velocity zones surrounded by apparent bedrock that may represent clay or air-filled voids within the bedrock. Some features are consistent with caprock underlain by weathered zones or clay seams. Areas of completely to highly weathered bedrock should be anticipated across the project site.

Considering the relatively shallow depths of bedrock at the exploration points, we recommend that all structures be supported by spread footings bearing directly on competent, slightly weathered sandstone or limestone bedrock encountered at depths of

1.4 to 5.4 feet below the existing ground surface. Supporting structure foundations on a combination of bedrock and soil will result in unacceptable differential settlement between foundations supported on competent bedrock and overburden soils. Typically valleys in the bedrock surface with clay fill is softer and disturbed than residual soils and would not provide adequate foundation support. The Shallow Foundations section addresses support of the pedestrian bridge and overlooks directly bearing on bedrock. Retaining walls are also recommended to bear directly on competent bedrock.

Where foundations will be adjacent to an exposed rock face (at the overlook for the Sand Cave Trail, e.g.), the outer edge of the footing should be at least 10 feet from the edge of the rock face.

Parameters for the design of the concrete cantilever walls are included in the Lateral Earth Pressures section.

The recommendations contained in this report are based upon the results of field and laboratory testing (presented in the Exploration Results), engineering analyses, and our current understanding of the proposed project. The General Comments section provides an understanding of the report limitations.

Earthwork

Earthwork is anticipated to include demolition, clearing and grubbing, excavations, and engineered fill placement. The following sections provide recommendations for use in the preparation of specifications for the work. Recommendations include critical quality criteria, as necessary, to render the site in the state considered in our geotechnical engineering evaluation for foundations and retaining walls.

Site Preparation

Prior to placing new fill, existing vegetation, topsoil, and root mats should be removed. Complete stripping of the topsoil should be performed in the proposed building and parking/driveway areas.

Mature trees are located within or near the footprint of some of the proposed buildings, which will require removal at the onset of construction. Tree root systems can remove substantial moisture from surrounding soils. Where trees are removed, the full root ball and all associated dry and desiccated soils should be removed. The soil materials which contain less than 5 percent organics can be reused as engineered fill provided the material is moisture conditioned and properly compacted.

Where fill is placed on existing slopes steeper than 5H:1V, benches should be cut into the existing slopes prior to fill placement. The benches should have a minimum vertical

face height of 1 foot and a maximum vertical face height of 3 feet and should be cut wide enough to accommodate the compaction equipment. This benching will help provide a positive bond between the fill and natural soils and reduce the possibility of failure along the fill/natural soil interface.

Subgrade Preparation

The subgrade should be proof-rolled with an adequately loaded vehicle such as a fully-loaded tandem-axle dump truck or other heaviest piece of construction equipment being used for construction. The proof-rolling should be performed under the observation of the Geotechnical Engineer or representative. Areas excessively deflecting under the proof-roll should be delineated and subsequently addressed by the Geotechnical Engineer. Excessively wet or dry material should either be removed or moisture conditioned and recompacted.

All exposed areas which will receive fill, once properly cleared and benched where necessary, should be scarified to a minimum depth of 10 inches, moisture conditioned as necessary, and compacted per the compaction requirements in this report. Compacted structural fill soils should then be placed to the proposed design grade and the moisture content and compaction of subgrade soils should be maintained until foundation or pavement construction.

Based upon the subsurface conditions determined from the geotechnical exploration, subgrade soils exposed during construction are anticipated to be relatively workable; however, the workability of the subgrade may be affected by precipitation, repetitive construction traffic or other factors. If unworkable conditions develop, workability may be improved by scarifying and drying. Based on the soil conditions observed in the boring and hand auger/DCP probes, earthwork operations should be planned for the historically drier and warmer summer and fall months, if possible, to limit potential deeper undercuts due to higher amounts of precipitation and lower temperatures and shorter daytime hours which limit drying of soils above optimum moisture content.

Subgrade soils may consist of soft to medium stiff soils. If weak subgrade soil conditions are encountered during construction, the subgrade could be improved by undercutting the subgrade soils, aerating them (discing and aeration) and recompacting the soils, which may be feasible during periods of sunny and dry weather. Alternatively, weak subgrade soils could be improved by partially undercutting 1 to 2 feet below subgrade elevation and placing a triaxial geogrid and compacting DGA crushed stone to subgrade elevation or performing chemical modification using quick lime or lime kiln dust containing free lime.

Fill Material Types

Fill required to achieve design grade should be classified as structural fill and general fill. Structural fill is material used below, or within 10 feet of structures or constructed slopes. General fill is material used to achieve grades outside of these areas.

Reuse of On-Site Soil: Excavated on-site soil may be selectively reused as fill below pavement and landscaping areas. Moisture conditioning may be required for reuse. Portions of the on-site soil have an elevated fines content and will be sensitive to moisture conditions (particularly during seasonally wet periods) and may not be suitable for reuse when above optimum moisture content.

Material property requirements for on-site soil for use as general fill and structural fill are noted in the table below:

Property	General Fill	Structural Fill
Composition	Free of deleterious material	
Maximum particle size	6 inches (or 2/3 of the lift thickness)	3 inches
Fines content	Not limited	Not limited
Plasticity	Not limited	Maximum plasticity index of 25
GeoModel Layer Expected to be Suitable[1]	1,2	1,2

1. Based on subsurface exploration. Actual material suitability should be determined in the field at the time of construction.

Imported Fill Materials: Imported fill materials should meet the following material property requirements. Regardless of its source, compacted fill should consist of approved materials that are free of organic matter and debris. Frozen material should not be used, and fill should not be placed on a frozen subgrade.

Soil Type [1]	USCS Classification	Acceptable Parameters (for Structural Fill)
Low Plasticity Cohesive	CL, CL-ML	Liquid Limit (LL) less than or equal to 40 Plasticity index less than or equal to 25 Less than 25% retained on No. 200 sieve
High Plasticity Cohesive	CL(LL>40), CH	Not recommended for use as structural fill

Soil Type [1]	USCS Classification	Acceptable Parameters (for Structural Fill)
Granular	GW, GM, GC, SW, SM, SC, GW-GM, GW-GC, SW-SM, SW-SC	Less than 50% passing No. 200 sieve
Granular (Drainage Only)	GP, SP, SP-SM, GP-SM	Less than 10% fines Less than 5% fines to be considered free-draining

1. Structural and general fill should consist of approved materials free of organic matter and debris. Frozen material should not be used, and fill should not be placed on a frozen subgrade. A sample of each material type should be submitted to the Geotechnical Engineer for evaluation prior to use on this site. Additional geotechnical consultation should be provided prior to the use of uniformly graded gravel on the site.

Fill Placement and Compaction Requirements

Structural and general fill should meet the following compaction requirements.

Item	Structural Fill	General Fill
Maximum Lift Thickness	▪ 8 inches or less in loose thickness when heavy, self-propelled compaction equipment is used ▪ 4 to 6 inches in loose thickness when hand-guided equipment (i.e. jumping jack or plate compactor) is used	Same as structural fill
Minimum Compaction Requirements [1,2,3]	▪ 98% of max. dry density	95% of max. dry density
Water Content Range [1]	▪ Low plasticity cohesive: -2% to +3% of optimum ▪ Granular: -3% to +3% of optimum	As required to achieve min. compaction requirements

Item	Structural Fill	General Fill

1. Maximum density and optimum water content as determined by the standard Proctor test (ASTM D 698).
2. High plasticity cohesive fill is not recommended for use as structural fill.
3. If the granular material is coarse sand or gravel, or of a uniform size, or has a low fines content, compaction comparison to relative density may be more appropriate. In this case, granular materials should be compacted to at least 70% relative density (ASTM D 4253 and D 4254). Materials not amenable to density testing should be placed and compacted to a stable condition observed by the Geotechnical Engineer or representative.

Earthwork Construction Considerations

Shallow excavations for the proposed structures are anticipated to be accomplished with conventional construction equipment. Any excavations penetrating into the competent sandstone or limestone bedrock materials will require more effort using larger tracked excavators or hoe rams. Any utility excavations or wall footings may require the use of a rock trencher. Upon completion of filling and grading, care should be taken to maintain the subgrade water content prior to the construction of grade-supported improvements such as steps and slabs-on-grade. Construction traffic over the completed subgrades should be avoided. The site should also be graded to prevent ponding of surface water on the prepared subgrades or in excavations. Water collecting over or adjacent to construction areas should be removed. If the subgrade freezes, desiccates, saturates, or is disturbed, the affected material should be removed, or the materials should be scarified, moisture conditioned, and recompacted prior to floor slab construction.

The groundwater table could affect overexcavation efforts, depending on the time of year, especially for overexcavation and replacement of lower-strength soils. A temporary dewatering system consisting of sumps with pumps may be necessary to achieve the recommended depth of overexcavation depending on groundwater conditions at the time of construction.

As a minimum, excavations should be performed in accordance with OSHA 29 CFR, Part 1926, Subpart P, “Excavations” and its appendices, and in accordance with any applicable local and/or state regulations.

Construction site safety is the sole responsibility of the contractor who controls the means, methods, and sequencing of construction operations. Under no circumstances shall the information provided herein be interpreted to mean Terracon is assuming responsibility for construction site safety or the contractor's activities; such responsibility shall neither be implied nor inferred.

Final cut and fill slopes should be constructed at 2.5H:1V or flatter. We recommend that slopes be over-built and then cut back to the final slope configuration to improve compaction at the face of the slope. Vegetation or erosion control should be established as soon as possible after construction to limit erosion occurring on the slopes. Slopes steeper than 2.5H:1V should be reinforced using geogrid/geotextile. A complete reinforced soil slope analysis should be performed for any reinforced slopes, including global stability analysis.

Excavations or other activities resulting in ground disturbance have the potential to affect adjoining properties and structures. Our scope of services does not include a review of available final grading information or consider potential temporary grading performed by the contractor for potential effects such as ground movement beyond the project limits. A preconstruction/ precondition survey should be conducted to document nearby property/infrastructure prior to any site development activity. Excavation or ground disturbance activities adjacent or near property lines should be monitored or instrumented for potential ground movements that could negatively affect adjoining property and/or structures.

Construction Observation and Testing

The earthwork efforts should be observed by the Geotechnical Engineer (or others under their direction). Observation should include documentation of adequate removal of surficial materials (vegetation, topsoil, and pavements), evaluation and remediation of existing fill materials, as well as proof-rolling and mitigation of unsuitable areas delineated by the proof-roll.

Each lift of compacted fill should be tested, evaluated, and reworked, as necessary, as recommended by the Geotechnical Engineer prior to the placement of additional lifts. Each lift of fill should be tested for density and water content.

In areas of foundation excavations, the bearing subgrade should be evaluated by the Geotechnical Engineer or their representative. If unanticipated conditions are observed, the Geotechnical Engineer should prescribe mitigation options.

In addition to the documentation of the essential parameters necessary for construction, the continuation of the Geotechnical Engineer into the construction phase of the project provides the continuity to maintain the Geotechnical Engineer's evaluation of subsurface conditions, including assessing variations and associated design changes.

Shallow Foundations

If the site has been prepared in accordance with the requirements noted in Earthwork, the following design parameters are applicable for shallow foundations.

Design Parameters – Compressive Loads

Item	Description
Maximum Net Allowable Bearing Pressure [1, 2]	5,000 psf - foundations bearing on competent sandstone or limestone bedrock and 8,000 psf for foundations bearing a minimum of 1 foot below the top of competent sandstone or limestone.
Required Bearing Stratum [3]	GeoModel Layer 3 Bearing material to be approved by Terracon
Minimum Foundation Dimensions	Per IBC 1809.7
Ultimate Passive Resistance[4]	Uniform 500 psf for native clay or structural fill Uniform 3,000 psf for bedrock
Sliding Resistance [5]	130 psf allowable cohesion (native/structural fill clay) 0.25 allowable coefficient of friction – granular/sandstone material
Minimum Embedment below Finished Grade [6]	24 inches
Estimated Total Settlement from Structural Loads [2]	Less than about 3/4 inch

1. The maximum net allowable bearing pressure is the pressure in excess of the minimum surrounding overburden pressure at the footing base elevation. Values assume that exterior grades are no steeper than 20% within 10 feet of a structure. Where foundations will be adjacent to an exposed rock face (at the overlook for the Sand Cave Trail, e.g.), the outer edge of the footing should be at least 10 feet from the edge of the rock face.
2. Values provided are for maximum loads noted in Project Description. Additional geotechnical consultation will be necessary if higher loads are anticipated.
3. Unsuitable or soft soils should be overexcavated and replaced per the recommendations presented in Earthwork.
4. The use of passive earth pressures require the sides of the excavation for the spread footing foundation to be nearly vertical and the concrete placed neat against these vertical faces or that the footing forms be removed and compacted structural fill be placed against the vertical footing face. Assumes no hydrostatic pressure. Ignore above frost depth.
5. Can be used to compute sliding resistance where foundations are placed on suitable soil/bedrock materials. For fine-grained materials, lateral resistance using cohesion should not exceed ½ the dead load. For the allowable coefficient of sliding, a factor of safety of 1.5 has been applied.

Item	Description

6. Embedment necessary to minimize the effects of frost and/or seasonal water content variations. For sloping ground, maintain depth below the lowest adjacent exterior grade within 5 horizontal feet of the structure. Recommended bearing capacity is based on completent bedrock bearing material and deeper bearing depths should be anticipated.

Design Parameters – Overturning and Uplift Loads

Shallow foundations subjected to overturning loads should be proportioned such that the resultant eccentricity is maintained in the center-third of the foundation (e.g., e < b/6, where b is the foundation width). This requirement is intended to keep the entire foundation area in compression during the extreme lateral/overturning load event. Foundation oversizing may be required to satisfy this condition.

Uplift resistance of spread footings can be developed from the effective weight of the footing and the overlying soils with consideration to the IBC basic load combinations.

Item	Description
Soil Moist Unit Weight	115 pcf
Soil Effective Unit Weight[1]	50 pcf
Soil weight included in uplift resistance	Soil included within the prism extending up from the top perimeter of the footing at an angle of 20 degrees from vertical to ground surface

1. Effective (or buoyant) unit weight should be used for soil above the foundation level and below a water level. The high groundwater level should be used in uplift design as applicable.

Foundation Construction Considerations

As noted in Earthwork, the footing excavations should be evaluated under the observation of the Geotechnical Engineer. The base of all foundation excavations should be free of water and loose soil, prior to placing concrete. Concrete should be placed soon after excavating to reduce bearing soil disturbance. Care should be taken to prevent wetting or drying of the bearing materials during construction. Excessively wet or dry material or any loose/disturbed material in the bottom of the footing excavations should be removed/reconditioned before the foundation concrete is placed.

The recommended bearing material is competent sandstone or limestone bedrock, which was encountered at depths between 1.4 and 5.4 feet below the existing grade at the boring and the hand/auger /DCP soundings. As a result, foundation excavations will need to extend below the minimum bearing depth for frost considerations.

If unsuitable bearing soils are observed at the base of the planned footing excavation or the footings need to extend deeper to bear on or into bedrock, the excavation should be extended deeper to suitable soils/bedrock, and the footings could bear directly on these soils/bedrock at the lower level or on lean concrete backfill (minimum 28-day f'c=2,000 psi) placed in the excavations between the bedrock and the design minimum bearing depth. Please note that MASW Line 2 indicated that weathered bedrock may be as deep as 10 feet below grade in one location and additional undercut should be anticipated. The lean concrete replacement zone is illustrated in the sketch below.

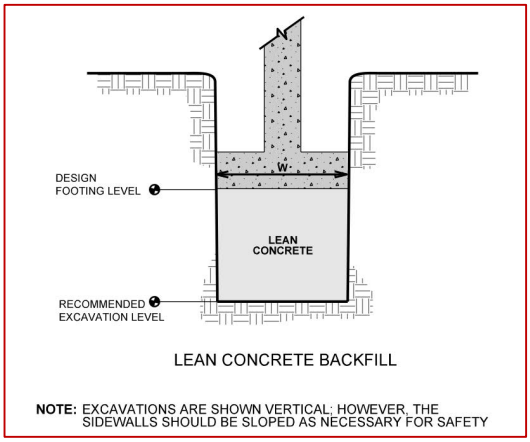

Lateral Earth Pressures

Design Parameters

Structures with unbalanced backfill levels on opposite sides should be designed for earth pressures at least equal to values indicated in the following table. Earth pressures will be influenced by the structural design of the walls, conditions of wall restraint, methods of construction, and/or compaction, and the strength of the materials being restrained. Two wall restraint conditions are shown in the diagram below. Active earth pressure is commonly used for the design of free-standing cantilever retaining walls and assumes wall movement. The "at-rest" condition assumes no wall movement and is commonly used for basement walls, loading dock walls, or other walls restrained at the top. The recommended design lateral earth pressures do not include a factor of safety and do not provide for possible hydrostatic pressure on the walls (unless stated).

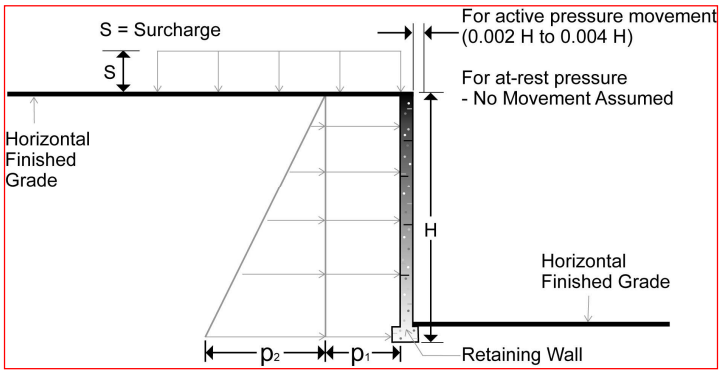

Lateral Earth Pressure Design Parameters

Earth Pressure Condition [1]	Coefficient for Backfill Type [2]	Surcharge Pressure [3] p_1 (psf)	Equivalent Fluid Pressures (psf) [2,4]	
			Unsaturated [5]	Submerged [5]
Active (Ka)	Granular - 0.31 Fine Grained - 0.41	(0.31)S (0.41)S	(34)H (50)H	(77)H (85)H
At-Rest (Ko)	Granular - 0.47 Fine Grained - 0.58	(0.47)S (0.58)S	(52)H (70)H	(85)H (95)H

1. For active earth pressure, the wall must rotate about the base, with top lateral movements 0.002 H to 0.004 H, where H is wall height. For passive earth pressure, the wall must move horizontally to mobilize resistance. Fat clay or other expansive soils should not be used as backfill behind the wall.
2. Uniform, horizontal backfill, with a maximum unit weight of 120 pcf for cohesive soils and 110 pcf for granular soils.
3. Uniform surcharge, where S is surcharge pressure.
4. Loading from heavy compaction equipment is not included.
5. To achieve “Unsaturated” conditions, follow the guidelines in Subsurface Drainage for Below-Grade Walls below. “Submerged” conditions are recommended when drainage behind walls is not incorporated into the design.

Backfill placed against structures should consist of granular soils or low plasticity cohesive soils. For the granular values to be valid, the granular backfill must extend out and up from the base of the wall at an angle of at least 45 degrees from vertical for the active case.

Footings, labs-on-grade, or other loads bearing on backfill behind walls may have a significant influence on the lateral earth pressure. Placing footings within the wall backfill and in the zone of active soil influence on the wall should be avoided unless structural analyses indicate the wall can safely withstand the increased pressure.

The lateral earth pressure recommendations given in this section apply to the design of rigid retaining walls subject to slight rotation, such as cantilever, or gravity-type concrete walls. These recommendations do not apply to the design of modular block-geogrid reinforced backfill walls (also termed MSE walls). Recommendations covering these types of wall systems are beyond the scope of services for this assignment. However, we would be pleased to develop a proposal for the evaluation and design of such wall systems upon request.

Subsurface Drainage for Below-Grade Walls

A perforated rigid plastic drain line installed behind the base of walls and extending below the adjacent grade is recommended to prevent hydrostatic loading on the walls. The invert of a drain line around a below-grade building area or exterior retaining wall should be placed near the foundation bearing level. The drain line should be sloped to provide positive gravity drainage to daylight or to a sump pit and pump. The drain line should be surrounded by clean, free-draining granular material having less than 5% passing the No. 200 sieve, such as No. 57 aggregate. The free-draining aggregate should be encapsulated in a filter fabric. The granular fill should extend to within 2 feet of the final grade, where it should be capped with a concrete slab or compacted cohesive fill to reduce infiltration of surface water into the drain system.

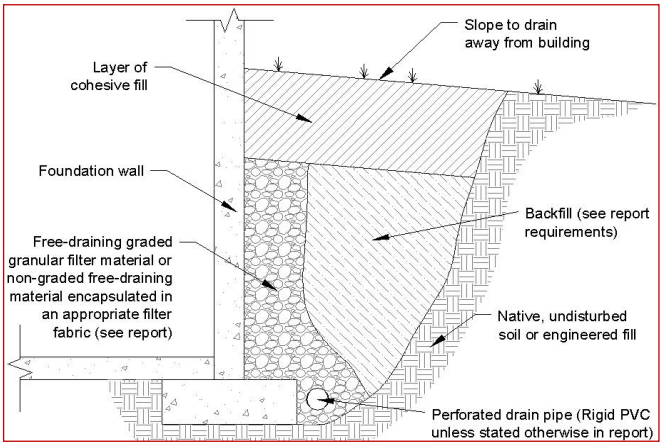

As an alternative to free-draining granular fill, a prefabricated drainage structure may be used. A prefabricated drainage structure is a plastic drainage core or mesh which is covered with filter fabric to prevent soil intrusion and is fastened to the wall prior to placing backfill.

Pavements

Pavement Subgrade Support Characteristics

Sufficient information is not available for us to provide an opinion of minimum pavement thickness for the project. For pavement design by others, we recommend that a subgrade California Bearing Ratio, CBR, of 5 be used for the asphaltic concrete pavement designs. We recommend that a modulus of subgrade reaction of 125 pci be used for the Portland cement concrete pavement designs. These values were empirically derived based upon our experience with the sandy lean clay, lean clay and silty clay subgrade soils and our expectation of the quality of the subgrade as prescribed by the Site Preparation conditions as outlined in Earthwork.

General Pavement Comments

Pavement thickness designs provided by others are minimum thickness designs. The recommended modulus of subgrade reaction values recommended in this report can be used in determining the minimum trail thickness and slab-on-grade thickness designs, which assume the subgrade has been prepared as recommended in Earthwork.

Although not required for structural support of the trail, a minimum 4-inch thick base course layer is recommended to help reduce the potential for slab curl, shrinkage cracking, and subgrade pumping through joints (if equipment will use the trails for maintenance). For exterior slab-on-grade, a minimum 4 inches of granular base is recommended below between the prepared subgrade and the bottom of the slab to provide a capillary break, reduce shrinkage cracking, and reduce the potential for slab curling. Proper joint spacing will also be required to prevent excessive slab curling and shrinkage cracking. Joints should be sealed to prevent the entry of foreign material and doweled where necessary for load transfer. PCC pavement details for joint spacing, joint reinforcement, and joint sealing should be prepared in accordance with ACI 330 and ACI 325.

Where practical, we recommend early-entry cutting of crack-control joints in PCC trail pavements and exterior slab-on-grade. Cutting of the concrete in its “green” state typically reduces the potential for micro-cracking of the pavements prior to the crack control joints being formed, compared to cutting the joints after the concrete has fully set. Micro-cracking of pavements may lead to crack formation in locations other than the sawed joints, and/or reduction of fatigue life of the pavement.

Openings in pavements, such as decorative landscaped areas, are sources for water infiltration into surrounding pavement systems. Water can collect in the islands and migrate into the surrounding subgrade soils thereby degrading support of the pavement. Islands with raised concrete curbs, irrigated foliage, and low permeability near-surface

soils are particular areas of concern. The civil design for the pavements with these conditions should include features to restrict or collect and discharge excess water from the islands. Examples of features are edge drains connected to the stormwater collection system, longitudinal subdrains, or other suitable outlets and impermeable barriers preventing lateral migration of water such as a cutoff wall installed to a depth below the pavement structure.

Pavement Drainage

Pavements should be sloped to provide rapid drainage of surface water. Water allowed to pond on or adjacent to the pavements could saturate the subgrade and contribute to premature pavement deterioration. In addition, the pavement subgrade should be graded to provide positive drainage within the granular base section. Appropriate sub-drainage or connection to a suitable daylight outlet should be provided to remove water from the subgrade if encountered during construction.

Pavement Maintenance

The pavement sections designed by others represent minimum recommended thicknesses and, as such, periodic upkeep should be anticipated. Preventive maintenance should be planned and provided for through an ongoing pavement management program. Maintenance activities are intended to slow the rate of pavement deterioration and to preserve pavement investment. Pavement care consists of both localized (e.g., crack and joint sealing and patching) and global maintenance (e.g., surface sealing). Additional engineering consultation is recommended to determine the type and extent of a cost-effective program. Even with periodic maintenance, some movements, and related cracking may still occur, and repairs may be required.

Pavement performance is affected by its surroundings. In addition to providing preventive maintenance, the civil engineer should consider the following recommendations in the design and layout of pavements:

- The final grade adjacent to paved areas should slope down from the edges at a minimum of 2%.
- Subgrade and pavement surfaces should have a minimum 2% slope to promote proper surface drainage unless a 1% slope is required for ADA-accessible areas.
- Install pavement drainage systems surrounding areas anticipated for frequent wetting.
- Install joint sealant and seal cracks immediately.
- Seal all landscaped areas in or adjacent to pavements to reduce moisture migration to subgrade soils.

General Comments

Our analysis and opinions are based upon our understanding of the project, the geotechnical conditions in the area, and the data obtained from our site exploration. Variations will occur between exploration point locations or due to the modifying effects of construction or weather. The nature and extent of such variations may not become evident until during or after construction. Terracon should be retained as the Geotechnical Engineer, where noted in this report, to provide observation and testing services during pertinent construction phases. If variations appear, we can provide further evaluation and supplemental recommendations. If variations are noted in the absence of our observation and testing services on-site, we should be immediately notified so that we can provide evaluation and supplemental recommendations.

Our Scope of Services does not include either specifically or by implication any environmental or biological (e.g., mold, fungi, bacteria) assessment of the site or identification or prevention of pollutants, hazardous materials, or conditions. If the owner is concerned about the potential for such contamination or pollution, other studies should be undertaken.

Our services and any correspondence are intended for the sole benefit and exclusive use of our client for specific application to the project discussed and are accomplished in accordance with generally accepted geotechnical engineering practices with no third-party beneficiaries intended. Any third-party access to services or correspondence is solely for information purposes to support the services provided by Terracon to our client. Reliance upon the services and any work product is limited to our client and is not intended for third parties. Any use or reliance of the provided information by third parties is done solely at their own risk. No warranties, either express or implied, are intended or made.

Site characteristics as provided are for design purposes and not to estimate excavation cost. Any use of our report in that regard is done at the sole risk of the excavating cost estimator as there may be variations on the site that are not apparent in the data that could significantly impact excavation cost. Any parties charged with estimating excavation costs should seek their own site characterization for specific purposes to obtain the specific level of detail necessary for costing. Site safety and cost estimating including excavation support and dewatering requirements/design are the responsibility of others. Construction and site development have the potential to affect adjacent properties. Such impacts can include damages due to vibration, modification of groundwater/surface water flow during construction, foundation movement due to undermining or subsidence from excavation, as well as noise or air quality concerns. Evaluation of these items on nearby properties is commonly associated with contractor means and methods and is not addressed in this report. The owner and contractor should consider a preconstruction/precondition survey of the surrounding development. If changes in the nature, design, or location of the project are planned, our conclusions

and recommendations shall not be considered valid unless we review the changes and either verify or modify our conclusions in writing.

Figures

Contents:

GeoModel (2 pages)
Kentucky Geological Survey - Karst Potential Map (2 pages)

Terracon
611 Lunken Park Dr
Cincinnati, OH

GeoModel

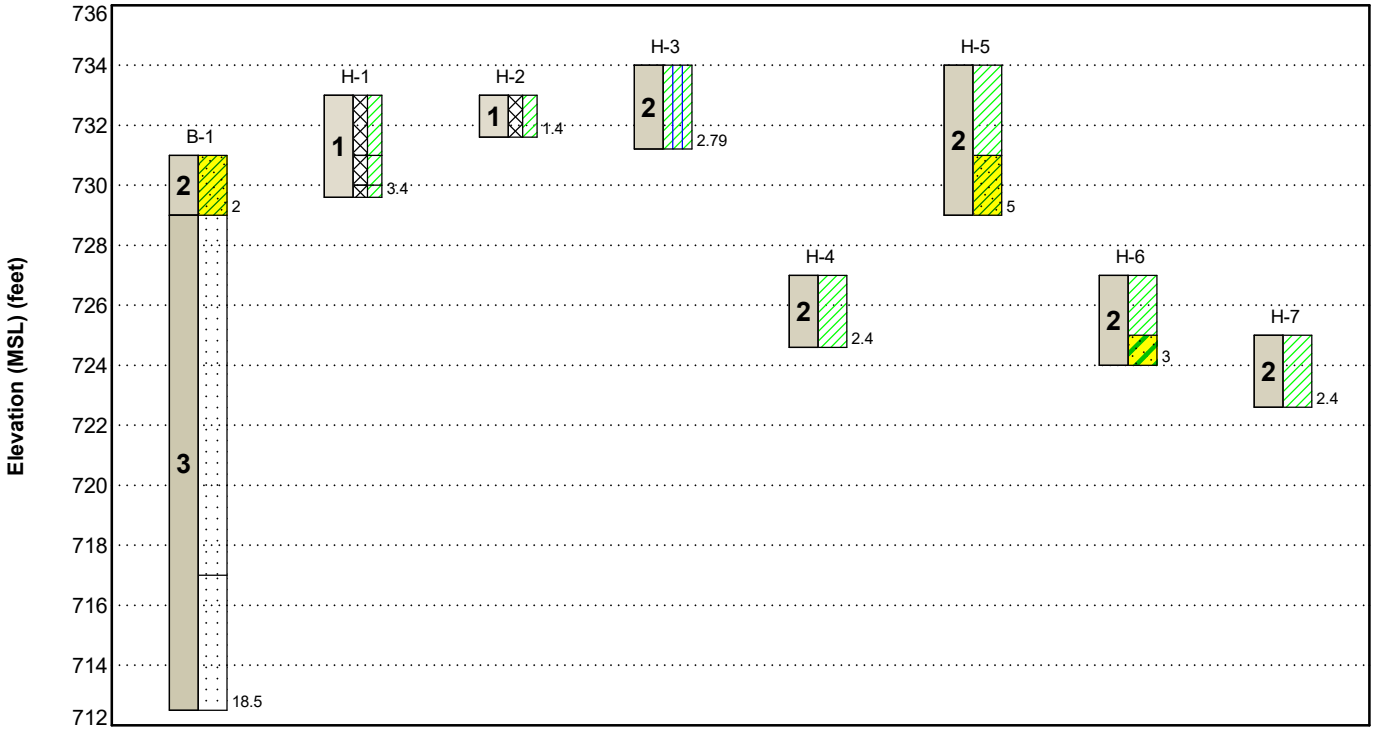

This is not a cross section. This is intended to display the Geotechnical Model only. See individual logs for more detailed conditions.

Model Layer	Layer Name	General Description
1	**Existing Fill**	Undocumented fill; lean to fat clay, brown.
2	**Native Overburden**	Lean clay, sandy lean, clay silty clay, clayey sand; brown.
3	**Bedrock**	Sandstone, slightly weathered.

LEGEND

- Sandy Lean Clay
- Silty Clay
- Sandstone
- Clayey Sand
- Lean Clay

NOTES:
Layering shown on this figure has been developed by the geotechnical engineer for purposes of modeling the subsurface conditions as required for the subsequent geotechnical engineering for this project. Numbers adjacent to soil column indicate depth below ground surface.

Heritage Trail and Sand Cave Trail
Mammoth Cave National Park | Cave City, KY
Terracon Project No. N1225082

611 Lunken Park Dr
Cincinnati, OH

GeoModel

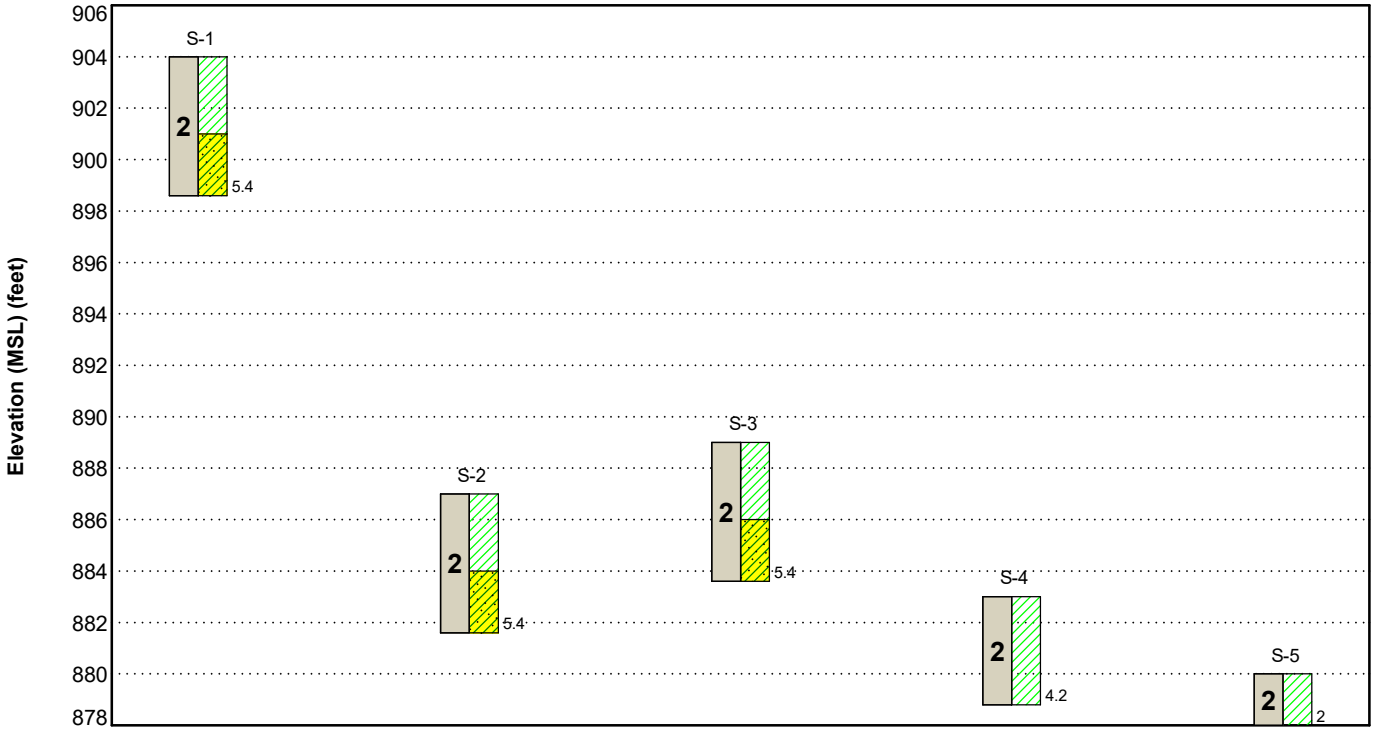

This is not a cross section. This is intended to display the Geotechnical Model only. See individual logs for more detailed conditions.

Model Layer	Layer Name	General Description
1	**Existing Fill**	Undocumented fill; lean to fat clay, brown.
2	**Native Overburden**	Lean clay, sandy lean, clay silty clay, clayey sand; brown.
3	**Bedrock**	Sandstone, slightly weathered.

LEGEND

Lean Clay

Sandy Lean Clay

NOTES:
Layering shown on this figure has been developed by the geotechnical engineer for purposes of modeling the subsurface conditions as required for the subsequent geotechnical engineering for this project. Numbers adjacent to soil column indicate depth below ground surface.

Kentucky Geological Survey – Karst Potential Map (Heritage Trail)

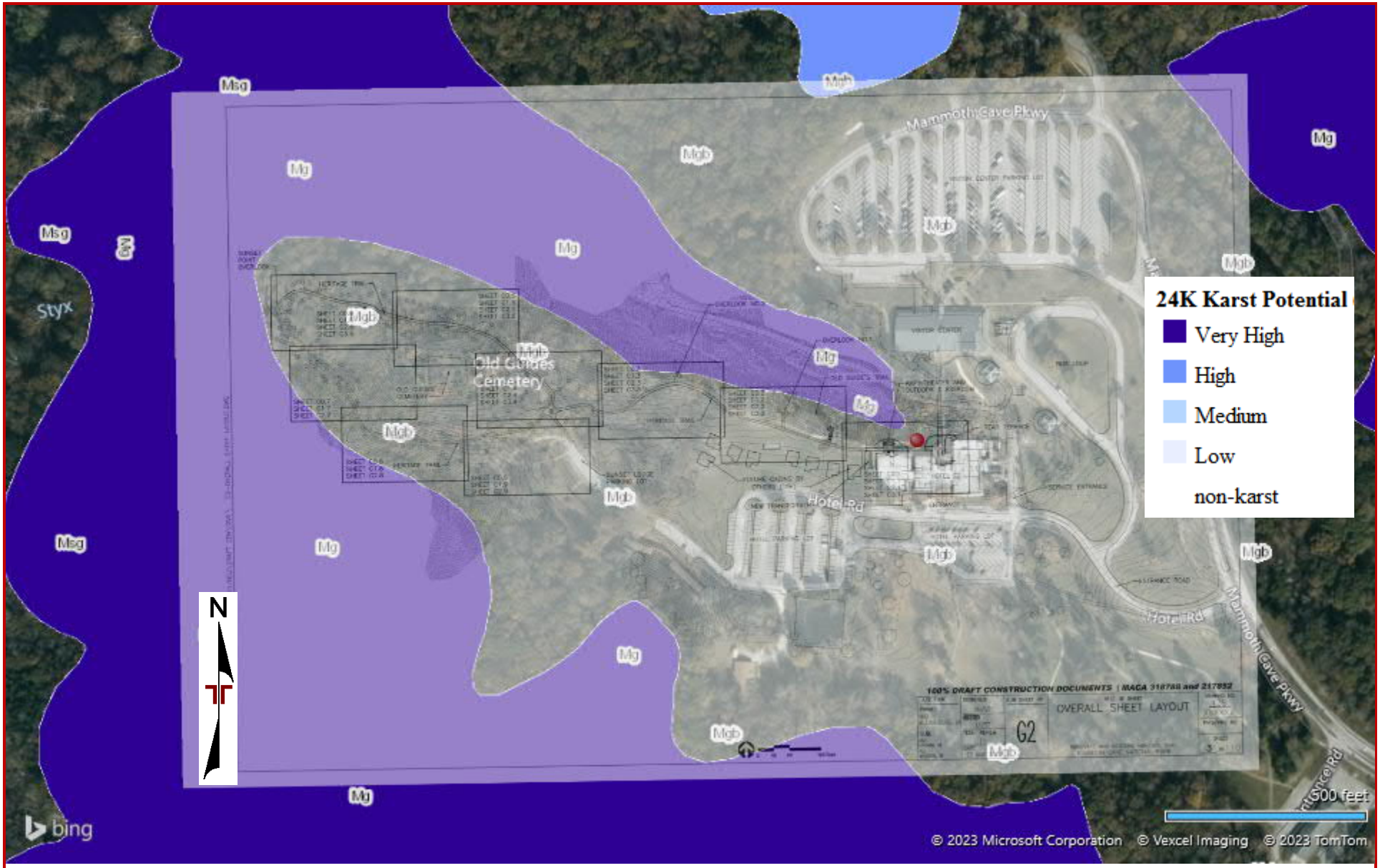

DIAGRAM IS FOR GENERAL LOCATION ONLY, AND IS NOT INTENDED FOR CONSTRUCTION PURPOSES

MAP PROVIDED BY MICROSOFT BING MAPS

Kentucky Geological Survey – Karst Potential Map (Sand Cave Trail)

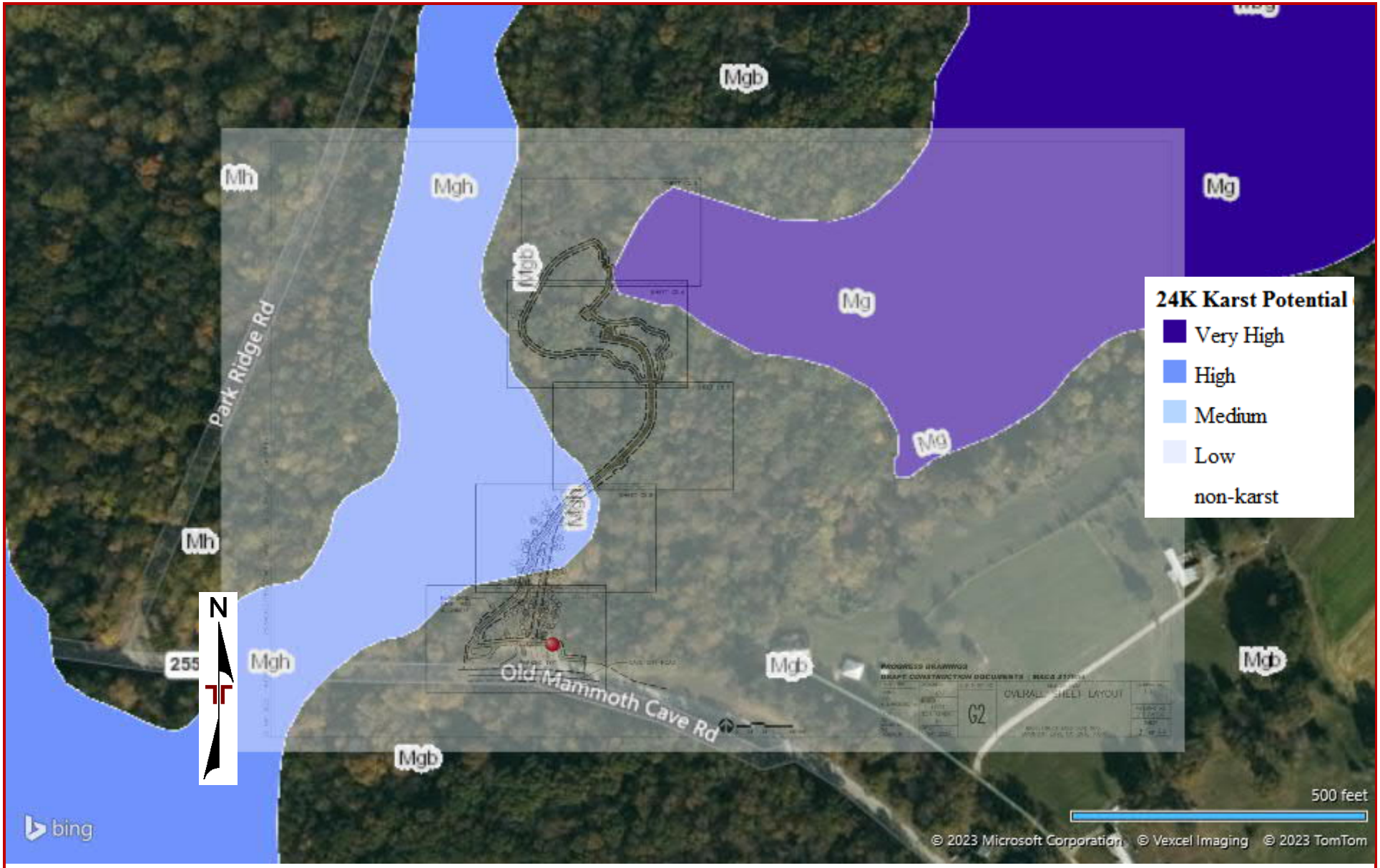

DIAGRAM IS FOR GENERAL LOCATION ONLY, AND IS NOT INTENDED FOR CONSTRUCTION PURPOSES

MAP PROVIDED BY MICROSOFT BING MAPS

Attachments

Exploration and Testing Procedures

Field Exploration

Number of Exploration Points	Approximate Boring Depth (feet)	Location
1 Test Boring	18.5	Patio
7 Hand Auger/DCP Soundings	1.4 to 5	Heritage Trail/Outdoor Classroom
5 Hand Auger/DCP Soundings	2 to 5.4	Sand Cave Trail

Boring and Sounding Layout and Elevations: Terracon personnel provided the boring and sounding layout and measured ground surface elevations using handheld GPS equipment (estimated horizontal accuracy of about ±1 foot) and referencing existing site features. If elevations and a more precise boring layout are desired, we recommend borings be surveyed.

Test Boring Exploration Procedures: We advanced the borings with a track-mounted rotary drill rig using continuous-flight, hollow-stem augers. Four samples were obtained in the upper 10 feet of each boring and at intervals of 5 feet thereafter. In the thin-walled tube sampling procedure, a thin-walled, seamless steel tube with a sharp cutting edge was pushed hydraulically into the soil to obtain a relatively undisturbed sample. In the split-barrel sampling procedure, a standard 2-inch outer diameter split-barrel sampling spoon was driven into the ground by a 140-pound automatic hammer falling a distance of 30 inches. The number of blows required to advance the sampling spoon the last 12 inches of a normal 18-inch penetration is recorded as the Standard Penetration Test (SPT) resistance value. The SPT resistance values, also referred to as N-values, are indicated on the boring logs at the test depths. We observed and recorded groundwater levels during drilling and sampling. For safety purposes, all borings were backfilled with auger cuttings after their completion.

The sampling depths, penetration distances, and other sampling information was recorded on the field boring logs. The samples were placed in appropriate containers and taken to our soil laboratory for testing and classification by a Geotechnical Engineer. Our exploration team prepared field boring logs as part of the drilling operations. These field logs included visual classifications of the materials observed during drilling and our interpretation of the subsurface conditions between samples. Final boring logs were prepared from the field logs. The final boring logs represent the Geotechnical Engineer's interpretation of the field logs and include modifications based on observations and tests of the samples in our laboratory.

Hand Auger/DCP Sounding Exploration Procedures: Due to access issues for our drill rigs, several of the exploration points were advanced using a hand auger. The soil was sampled using a hand auger and the soil consistency was evaluated by performing Dynamic Cone Penetrometer (DCP) soundings. DCP soundings were performed using the dynamic cone penetrometer in general accordance with ASTM Special Technical Publication #399 – Dynamic Cone for Shallow In-Situ Penetration Testing. The DCP tests utilized a 15-lb hammer which free falls 20 inches to drive a cone point with a 45-degree tip.

Geophysical: Terracon performed geophysical exploration services consisting of a seismic survey using the Multi-Channel Analysis of Surface Waves (MASW) method. The primary goal of this survey was to characterize the site's subsurface conditions, specifically addressing the depth to bedrock and potential karst features. The MASW method was employed by placing an array of twenty-four 4.5Hz geophones, spaced approximately 5 feet apart, for a total line length of 115 feet. Three survey lines were conducted within the proposed project area. The lines extended in the East-West direction, as displayed in Exhibit 1.

Source strikes were completed with a sledgehammer along each line while recording the seismic responses. The data was then processed using dispersion analysis software (SurfSeis, engineered by the Kansas Geological Survey) that extracts the fundamental-mode dispersion curve(s). The curves are inverted and modeled to yield a 1D shear-wave velocity profile along the array for a corresponding depth. At each strike source, the 1D profiles are created and then combined to yield a 2D profile. These 2D profiles are then examined for changes in shear wave velocities to indicate the top of bedrock and potential karst features within the bedrock.

All geophysical testing methods rely on instrument signals to indicate physical conditions in the field. Signal information can be affected by on-site conditions beyond the control of the operator, such as, but not limited to, cultural features, ground water, buried objects, and cultural noise (e.g. traffic). Interpretation of those signals is based on a combination of known factors combined with the experience of the operator and geophysical scientist evaluating the results.

Laboratory Testing

The project engineer reviewed the field data and assigned laboratory tests. The laboratory testing program included the following types of tests:

- Moisture Content
- Unconfined Compression (bedrock)
- Atterberg Limits

The laboratory testing program included the examination of soil samples by an engineer and/or geologist. Based on the results of our field and laboratory programs, we described and classified the soil samples in accordance with the Unified Soil Classification System.

Rock classification was conducted using locally accepted practices for engineering purposes. Boring log rock classification was determined using the Description of Rock Properties.

Site Location and Exploration Plans

Contents:

Site Location Plan (3 pages)
Exploration Plan (3 pages)

Note: All attachments are one page unless noted above.

Site Location

DIAGRAM IS FOR GENERAL LOCATION ONLY, AND IS NOT INTENDED FOR CONSTRUCTION PURPOSES

MAP PROVIDED BY MICROSOFT BING MAPS

Site Location – Heritage Trail

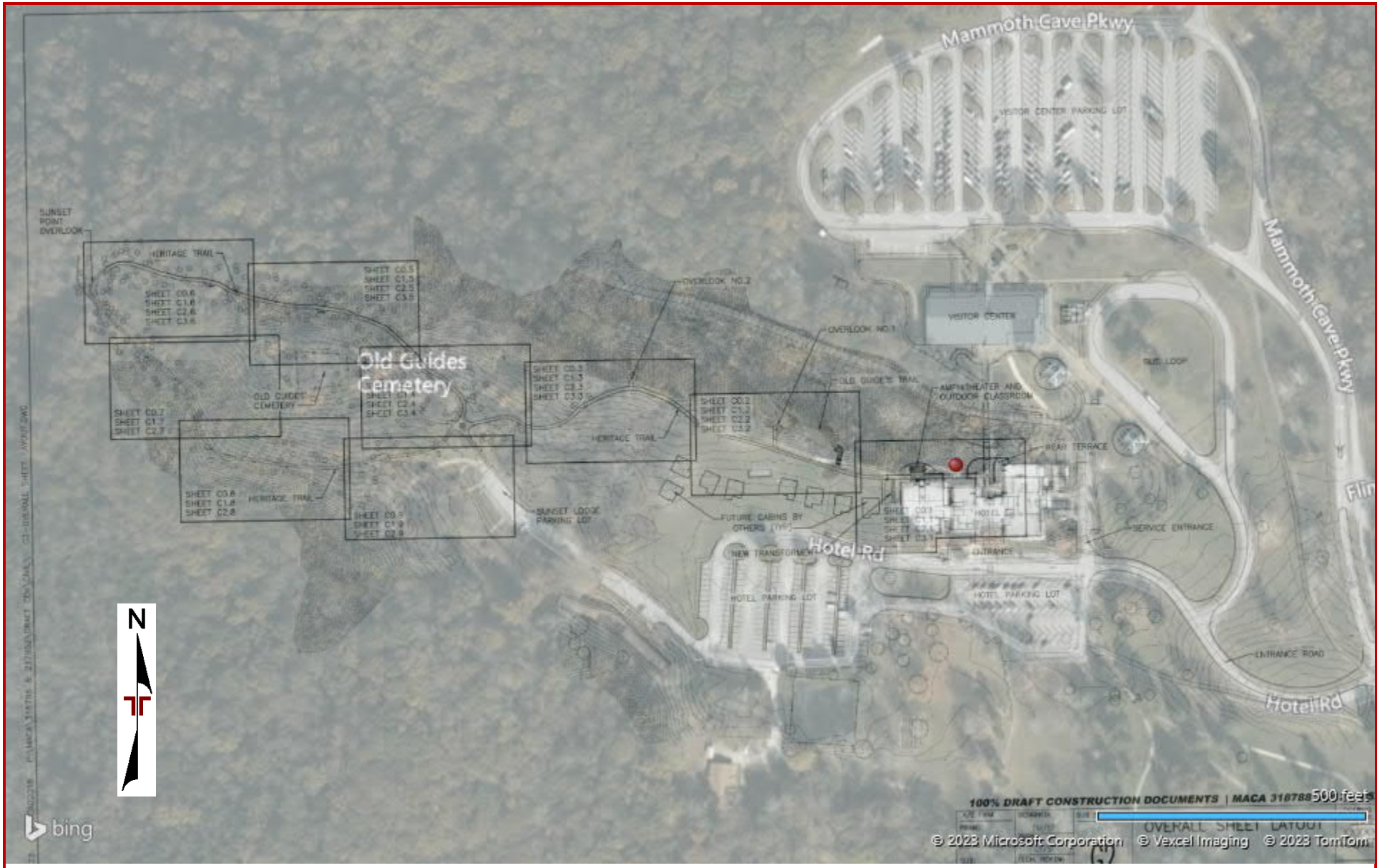

DIAGRAM IS FOR GENERAL LOCATION ONLY, AND IS NOT INTENDED FOR CONSTRUCTION PURPOSES

MAP PROVIDED BY MICROSOFT BING MAPS

Site Location – Sand Cave Trail

DIAGRAM IS FOR GENERAL LOCATION ONLY, AND IS NOT INTENDED FOR CONSTRUCTION PURPOSES

MAP PROVIDED BY MICROSOFT BING MAPS

Exploration Plan – Heritage Trail

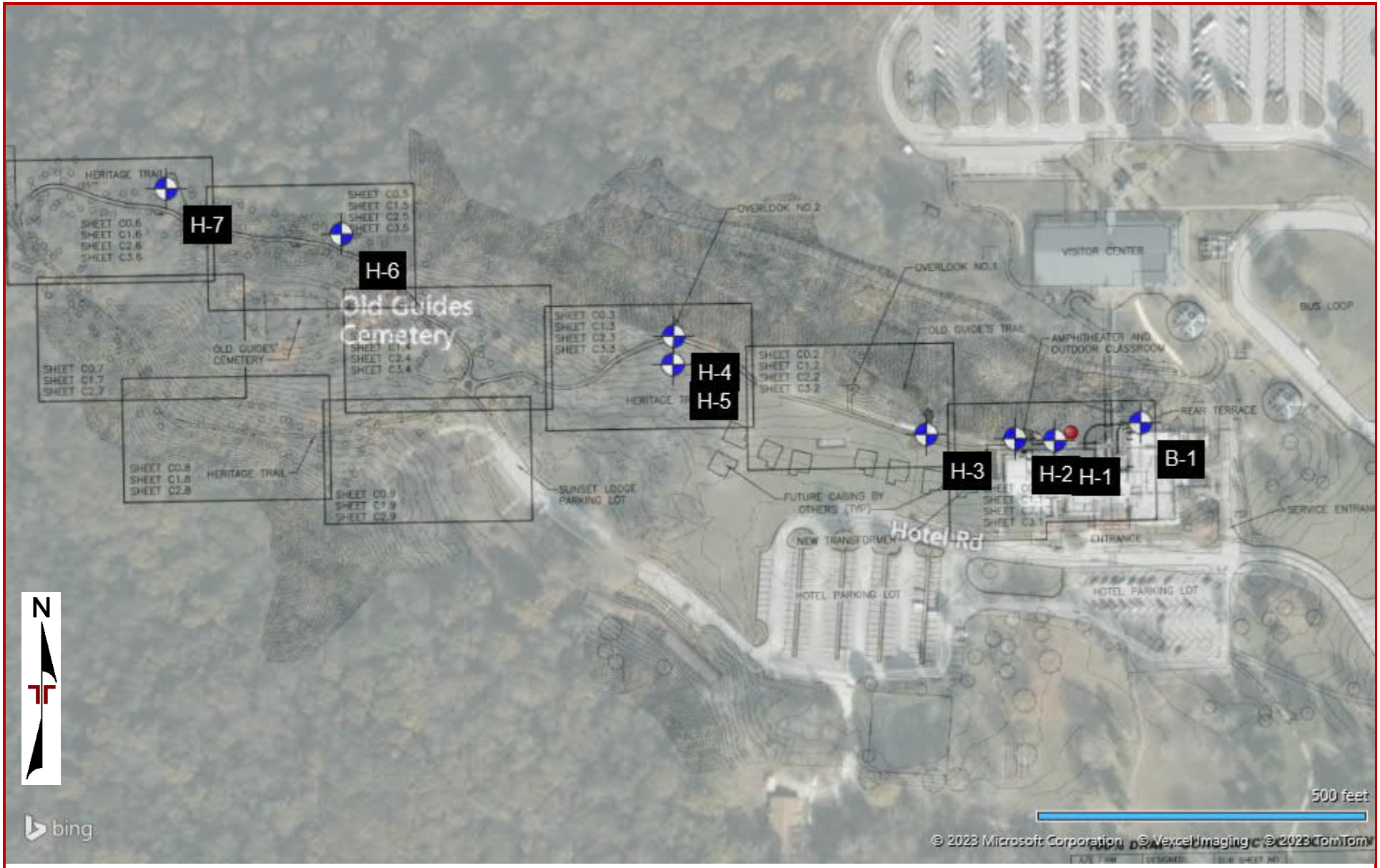

DIAGRAM IS FOR GENERAL LOCATION ONLY, AND IS NOT INTENDED FOR CONSTRUCTION PURPOSES

MAP PROVIDED BY MICROSOFT BING MAPS

Exploration Plan – Heritage Trail w/ MASW

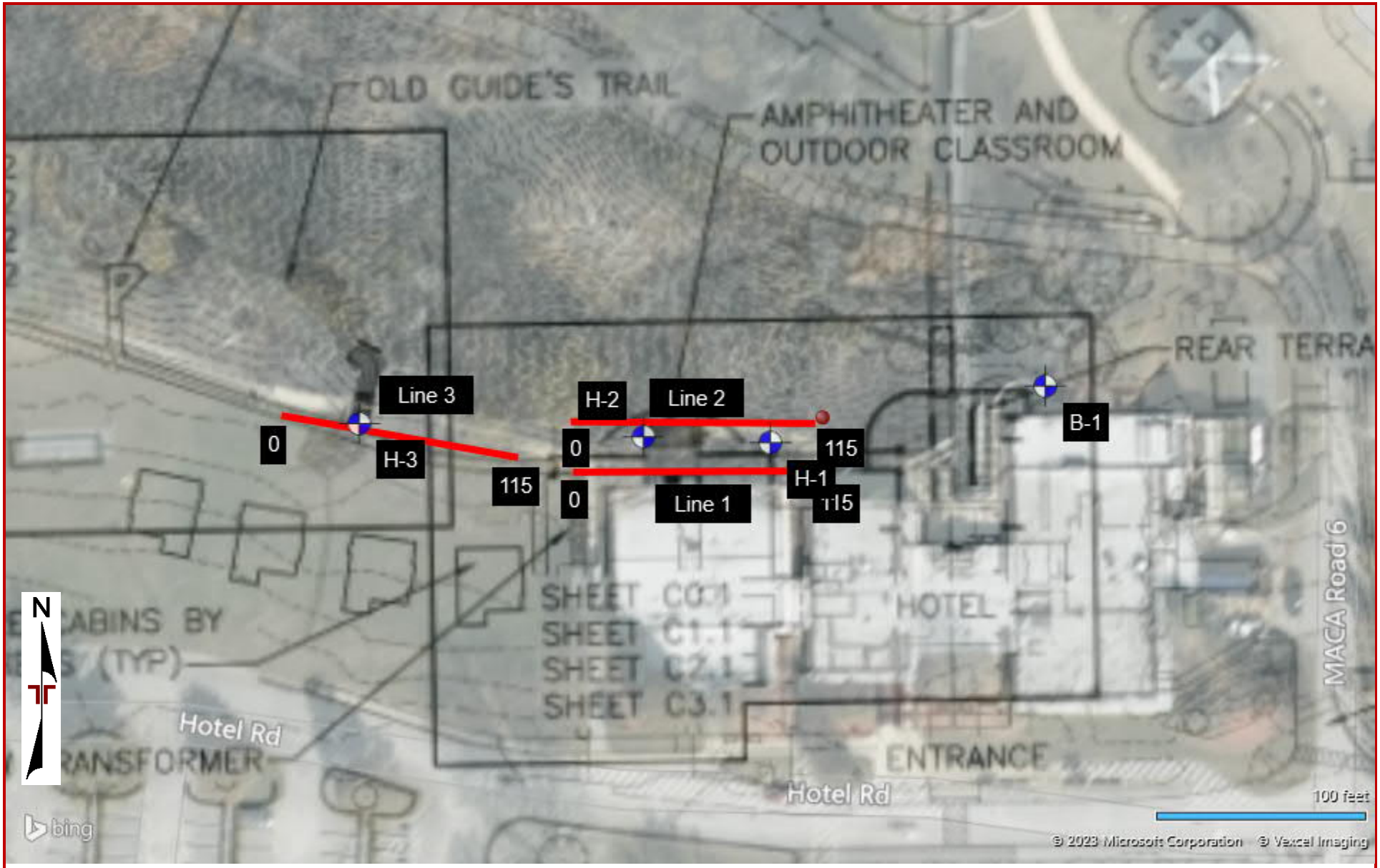

DIAGRAM IS FOR GENERAL LOCATION ONLY, AND IS NOT INTENDED FOR CONSTRUCTION PURPOSES

MAP PROVIDED BY MICROSOFT BING MAPS

Exploration Plan – Sand Cave Trail

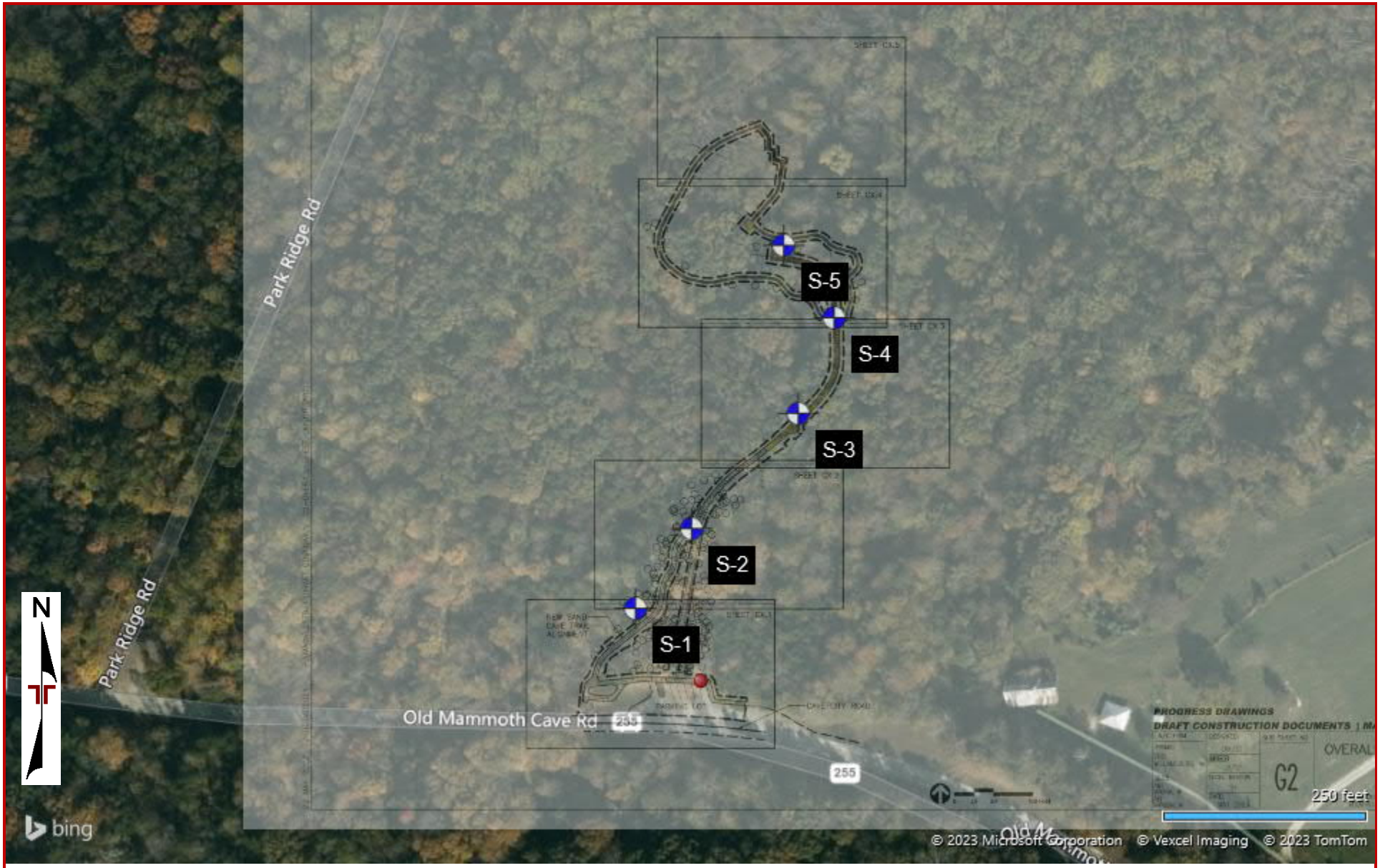

DIAGRAM IS FOR GENERAL LOCATION ONLY, AND IS NOT INTENDED FOR CONSTRUCTION PURPOSES

MAP PROVIDED BY MICROSOFT BING MAPS

Exploration and Laboratory Results

Contents:

Boring Log (B-1)
Probe Logs (H-1 to H-7, S-1 to S-5)
Rock Core Photograph
MASW Cross Sections
Atterberg Limits
Unconfined Compression Test (Bedrock)

Note: All attachments are one page unless noted above.

Heritage Trail and Sand Cave Trail
Mammoth Cave National Park | Cave City, KY
Terracon Project No. N1225082

611 Lunken Park Dr
Cincinnati, OH

Boring Log No. B-1

Location: See Exploration Plan

Latitude: 37.1863° Longitude: -86.1011°

Model Layer	Graphic Log	Depth (Ft.)	Elevation: 731 (Ft.) +/-	Depth (Ft.)	Water Level Observations	Sample Type	Recovery (%)	Field Test Results	RQD (%)	Water Content (%)	Atterberg Limits LL-PL-PI
2			**SANDY LEAN CLAY (CL)**, with sandstone fragments, reddish brown, very stiff								
		2.0	729				100	10-13-50/5"			
3			**SANDSTONE**, light tan with red staining and weathering, fine to medium-grained, very close to close fracture spacing, slightly weathered, strong rock								
			-vertical fracture from about 3 to 4 feet	5			100		59		
			-horizontal clay-filled fracture (about 1/4" thick) at about 6.1 feet	10			100		8		
			-vertical fracture from about 11.3 to 11.6 feet								
			-horizontal clay-filled fracture (about 1/4" thick) at about 13.6 feet				100		36		
		14.0	717								
			SANDSTONE, light tan with red staining and weathering, fine to medium-grained, close to moderate fracture spacing, slightly weathered, strong rock	15							
			-horizontal clay-filled fracture (about 1/4" thick) at about 16.5 feet				100		70		
		18.5	712.5								
			Boring Terminated at 18.5 Feet								

See Exploration and Testing Procedures for a description of field and laboratory procedures used and additional data (If any).

See Supporting Information for explanation of symbols and abbreviations.

Water Level Observations

No water observed during drilling

Drill Rig
Geoprobe 6620 DT

Hammer Type
Automatic

Driller
A. Moore

Logged by

Boring Started
05-18-2022

Boring Completed
05-18-2022

Notes

Elevation Reference: Coordinates from Terracon GPS survey. Elevation from Concept Site Plan (VHB).

Hammer Energy Transfer Ratio = 97%

Advancement Method
3.25-inch Continuous-Flight Hollow-Stem Augers
2-inch Split-Barrel Sampler
NQ2 Rock Core Barrel

Abandonment Method
Boring backfilled with auger cuttings upon completion.

Heritage Trail and Sand Cave Trail
Mammoth Cave National Park | Cave City, KY
Terracon Project No. N1225082

611 Lunken Park Dr
Cincinnati, OH

Probe Log No. H-1

Location: See Exploration Plan

Latitude: 37.1862° Longitude: -86.1015°

Model Layer	Graphic Log	Depth (Ft.)	Elevation: 733 (Ft.) +/-	Depth (Ft.)	Water Level Observations	Sample Type	Recovery (%)	Field Test Results	RQD (%)	Water Content (%)	Atterberg Limits LL-PL-PI
1			**FILL - LEAN CLAY**, trace sand, brown					2-2-2 N=2		22.0	
		2.0	731								
			FILL - LEAN CLAY, with gravel, reddish brown to brown					3-3-5 N=4		15.8	37-17-20
		3.0	730								
		3.4	**FILL - LEAN CLAY**, trace sand, brown 729.6					4-7-5 N=4			
			Hand Auger Refusal in Existing Fill at 3.4 Feet								

See Exploration and Testing Procedures for a description of field and laboratory procedures used and additional data (If any).

See Supporting Information for explanation of symbols and abbreviations.

Water Level Observations

No water observed during sampling

Drill Rig
Hand Equipment

Hammer Type
Manual

Driller
R. Stobart

Logged by

Probe Started
04-13-2022

Probe Completed
04-13-2022

Notes

Elevation Reference: Coordinates from Terracon GPS survey. Elevation from Concept Site Plan (VHB).

Blow counts are blows per each 1 3/4" DCP sampling interval. The listed N-value is the approximate equivalent SPT N-value (blows/foot) based on correlations from the DCP manufacturer and encountered soil type.

Advancement Method
Hand Auger
DCP

Abandonment Method
Boring backfilled with auger cuttings upon completion.

Heritage Trail and Sand Cave Trail
Mammoth Cave National Park | Cave City, KY
Terracon Project No. N1225082

611 Lunken Park Dr
Cincinnati, OH

Probe Log No. H-2

Location: See Exploration Plan

Latitude: 37.1862° Longitude: -86.1017°

Model Layer	Graphic Log	Depth (Ft.)	Elevation: 733 (Ft.) +/-	Depth (Ft.)	Water Level Observations	Sample Type	Recovery (%)	Field Test Results	RQD (%)	Water Content (%)	Atterberg Limits LL-PL-PI
1			**FILL - LEAN CLAY**, trace sand								
		1.4	731.6					6-7-6 N=4		23.6	32-19-13
			Hand Auger Refusal in Existing Fill at 1.4 Feet								

See Exploration and Testing Procedures for a description of field and laboratory procedures used and additional data (If any).

See Supporting Information for explanation of symbols and abbreviations.

Water Level Observations

No water observed during sampling

Drill Rig
Hand Equipment

Hammer Type
Manual

Driller
R. Stobart

Logged by

Probe Started
04-13-2022

Probe Completed
04-13-2022

Notes

Elevation Reference: Coordinates from Terracon GPS survey. Elevation from Concept Site Plan (VHB).

Blow counts are blows per each 1 3/4" DCP sampling interval. The listed N-value is the approximate equivalent SPT N-value (blows/foot) based on correlations from the DCP manufacturer and encountered soil type.

Advancement Method
Hand Auger
DCP

Abandonment Method
Boring backfilled with auger cuttings upon completion.

Heritage Trail and Sand Cave Trail
Mammoth Cave National Park | Cave City, KY
Terracon Project No. N1225082

611 Lunken Park Dr
Cincinnati, OH

Probe Log No. H-3

Model Layer	Graphic Log	Location: See Exploration Plan Latitude: 37.1862° Longitude: -86.1022° Depth (Ft.) Elevation: 734 (Ft.) +/-	Depth (Ft.)	Water Level Observations	Sample Type	Recovery (%)	Field Test Results	RQD (%)	Water Content (%)	Atterberg Limits LL-PL-PI
2		**SILTY CLAY (CL-ML)**, trace gravel, brown, medium stiff								
							2-2-3 N=3		27.1	
							2-2-2 N=3			25-19-6
		2.8 731.21								
		Hand Auger Refusal at 2.8 Feet								

See Exploration and Testing Procedures for a description of field and laboratory procedures used and additional data (If any).

See Supporting Information for explanation of symbols and abbreviations.

Water Level Observations

No water observed during sampling

Drill Rig
Hand Equipment

Hammer Type
Manual

Driller
R. Stobart

Logged by

Probe Started
04-14-2022

Probe Completed
04-14-2022

Notes

Elevation Reference: Coordinates from Terracon GPS survey. Elevation from Concept Site Plan (VHB).

Blow counts are blows per each 1 3/4" DCP sampling interval. The listed N-value is the approximate equivalent SPT N-value (blows/foot) based on correlations from the DCP manufacturer and encountered soil type.

Advancement Method
Hand Auger
DCP

Abandonment Method
Boring backfilled with auger cuttings upon completion.

Terracon
611 Lunken Park Dr
Cincinnati, OH

Probe Log No. H-4

Location: See Exploration Plan

Latitude: 37.1866° Longitude: -86.1035°

Model Layer	Graphic Log	Depth (Ft.)	Elevation: 727 (Ft.) +/-	Depth (Ft.)	Water Level Observations	Sample Type	Recovery (%)	Field Test Results	RQD (%)	Water Content (%)	Atterberg Limits LL-PL-PI
2			**LEAN CLAY (CL)**, trace sand, reddish brown, medium stiff					2-2-3 N=3		21.8	
		2.4	724.6					3-4-35 N=4		22.0	
			Hand Auger and DCP Refusal at 2.4 Feet								

See Exploration and Testing Procedures for a description of field and laboratory procedures used and additional data (If any).

See Supporting Information for explanation of symbols and abbreviations.

Water Level Observations

No water observed during sampling

Drill Rig
Hand Equipment

Hammer Type
Manual

Driller
R. Stobart

Logged by

Probe Started
04-14-2022

Probe Completed
04-14-2022

Notes

Elevation Reference: Coordinates from Terracon GPS survey. Elevation from Concept Site Plan (VHB).

Blow counts are blows per each 1 3/4" DCP sampling interval. The listed N-value is the approximate equivalent SPT N-value (blows/foot) based on correlations from the DCP manufacturer and encountered soil type.

Advancement Method
Hand Auger
DCP

Abandonment Method
Boring backfilled with auger cuttings upon completion.

Heritage Trail and Sand Cave Trail
Mammoth Cave National Park | Cave City, KY
Terracon Project No. N1225082

611 Lunken Park Dr
Cincinnati, OH

Probe Log No. H-5

Location: See Exploration Plan

Latitude: 37.1865° Longitude: -86.1035°

Model Layer	Graphic Log	Depth (Ft.)	Elevation: 734 (Ft.) +/-	Depth (Ft.)	Water Level Observations	Sample Type	Recovery (%)	Field Test Results	RQD (%)	Water Content (%)	Atterberg Limits LL-PL-PI
2			**LEAN CLAY (CL)**, trace sand, trace gravel, brownish gray, medium stiff to stiff					3-3-4 N=3		24.0	
								4-8-12 N=8			
		3.0	731								
			SANDY LEAN CLAY (CL), reddish brown to brown, stiff, sandstone fragments					6-16-26 N=14		25.1	
								12-20-20 N=12			
		5.0	729	5							
			Hand Auger and DCP Refusal at 5 Feet					20/0.5"			

See Exploration and Testing Procedures for a description of field and laboratory procedures used and additional data (If any).

See Supporting Information for explanation of symbols and abbreviations.

Water Level Observations

No water observed during sampling

Drill Rig
Hand Equipment

Hammer Type
Manual

Driller
R. Stobart

Logged by

Probe Started
04-14-2022

Probe Completed
04-14-2022

Notes

Elevation Reference: Coordinates from Terracon GPS survey. Elevation from Concept Site Plan (VHB).

Blow counts are blows per each 1 3/4" DCP sampling interval. The listed N-value is the approximate equivalent SPT N-value (blows/foot) based on correlations from the DCP manufacturer and encountered soil type.

Advancement Method
Hand Auger
DCP

Abandonment Method
Boring backfilled with auger cuttings upon completion.

Heritage Trail and Sand Cave Trail
Mammoth Cave National Park | Cave City, KY
Terracon Project No. N1225082

611 Lunken Park Dr
Cincinnati, OH

Probe Log No. H-6

Location: See Exploration Plan

Latitude: 37.1871° Longitude: -86.1052°

Model Layer	Graphic Log	Depth (Ft.)	Elevation: 727 (Ft.) +/-	Depth (Ft.)	Water Level Observations	Sample Type	Recovery (%)	Field Test Results	RQD (%)	Water Content (%)	Atterberg Limits LL-PL-PI
2			**LEAN CLAY (CL)**, with sand, brown, medium stiff					3-3-5 N=4		21.1	
		2.0	725								
			CLAYEY SAND (SC), with sandstone fragments, reddish brown, loose to medium dense					5-7-10 N=7			
		3.0	724								
			Hand Auger and DCP Refusal at 3 Feet					50/0"			

See Exploration and Testing Procedures for a description of field and laboratory procedures used and additional data (If any).

See Supporting Information for explanation of symbols and abbreviations.

Water Level Observations

No water observed during sampling

Drill Rig
Hand Equipment

Hammer Type
Manual

Driller
R. Stobart

Logged by

Probe Started
04-14-2022

Probe Completed
04-14-2022

Notes

Elevation Reference: Coordinates from Terracon GPS survey. Elevation from Concept Site Plan (VHB).

Blow counts are blows per each 1 3/4" DCP sampling interval. The listed N-value is the approximate equivalent SPT N-value (blows/foot) based on correlations from the DCP manufacturer and encountered soil type.

Advancement Method
Hand Auger
DCP

Abandonment Method
Boring backfilled with auger cuttings upon completion.

Heritage Trail and Sand Cave Trail
Mammoth Cave National Park | Cave City, KY
Terracon Project No. N1225082

611 Lunken Park Dr
Cincinnati, OH

Probe Log No. H-7

Location: See Exploration Plan

Latitude: 37.1873° Longitude: -86.1061°

Elevation: 725 (Ft.) +/-

Model Layer	Graphic Log	Depth (Ft.)	Description	Depth (Ft.)	Water Level Observations	Sample Type	Recovery (%)	Field Test Results	RQD (%)	Water Content (%)	Atterberg Limits LL-PL-PI
2			**LEAN CLAY (CL)**, with sand, trace gravel, reddish brown, medium stiff to stiff					4-5-6 N=4		20.5	
		2.4		722.6				10-12-14 N=9			
			Hand Auger Refusal at 2.4 Feet								

See Exploration and Testing Procedures for a description of field and laboratory procedures used and additional data (If any).

See Supporting Information for explanation of symbols and abbreviations.

Water Level Observations

No water observed during sampling

Drill Rig
Hand Equipment

Hammer Type
Manual

Driller
R. Stobart

Logged by

Probe Started
04-14-2022

Probe Completed
04-14-2022

Notes

Elevation Reference: Coordinates from Terracon GPS survey. Elevation from Concept Site Plan (VHB).

Blow counts are blows per each 1 3/4" DCP sampling interval. The listed N-value is the approximate equivalent SPT N-value (blows/foot) based on correlations from the DCP manufacturer and encountered soil type.

Advancement Method
Hand Auger
DCP

Abandonment Method
Boring backfilled with auger cuttings upon completion.

Heritage Trail and Sand Cave Trail
Mammoth Cave National Park | Cave City, KY
Terracon Project No. N1225082

611 Lunken Park Dr
Cincinnati, OH

Probe Log No. S-1

Location: See Exploration Plan

Latitude: 37.1530° Longitude: -86.0479°

Model Layer	Graphic Log	Depth (Ft.)	Elevation: 904 (Ft.) +/-	Depth (Ft.)	Water Level Observations	Sample Type	Recovery (%)	Field Test Results	RQD (%)	Water Content (%)	Atterberg Limits LL-PL-PI
2			**LEAN CLAY (CL)**, trace sand, reddish brown, medium stiff					3-3-5 N=4			33-19-14
								4-5-4 N=3			
		3.0	901								
			SANDY LEAN CLAY (CL), trace gravel, brown, stiff					4-8-10 N=7			
								11-23-23 N=13			
				5							
		5.4	898.6					25-25-30 N=15			
			Probe Terminated at 5.4 Feet								

See Exploration and Testing Procedures for a description of field and laboratory procedures used and additional data (If any).

See Supporting Information for explanation of symbols and abbreviations.

Water Level Observations

No water observed during sampling

Drill Rig
Hand Equipment

Hammer Type
Manual

Driller
R. Stobart

Logged by

Probe Started
04-14-2022

Probe Completed
04-14-2022

Notes

Elevation Reference: Coordinates and elevation from Terracon GPS Survey

Blow counts are blows per each 1 3/4" DCP sampling interval. The listed N-value is the approximate equivalent SPT N-value (blows/foot) based on correlations from the DCP manufacturer and encountered soil type.

Advancement Method
Hand Auger
DCP

Abandonment Method
Boring backfilled with auger cuttings upon completion.

Heritage Trail and Sand Cave Trail
Mammoth Cave National Park | Cave City, KY
Terracon Project No. N1225082

611 Lunken Park Dr
Cincinnati, OH

Probe Log No. S-2

Location: See Exploration Plan

Latitude: 37.1532° Longitude: -86.0477°

Elevation: 887 (Ft.) +/-

Model Layer	Graphic Log	Depth (Ft.)	Description	Depth (Ft.)	Water Level Observations	Sample Type	Recovery (%)	Field Test Results	RQD (%)	Water Content (%)	Atterberg Limits LL-PL-PI
2			**LEAN CLAY (CL)**, with sand, brown, medium stiff to stiff								
								3-4-4 N=3		26.8	
								11-12-19 N=11			
		3.0	884								
			SANDY LEAN CLAY (CL), reddish brown to light brown, stiff					15-23-22 N=12		15.8	
								17-20-21 N=12			
		5.4	881.6	5				20-20-20 N=12		23.4	
			Probe Terminated at 5.4 Feet								

See Exploration and Testing Procedures for a description of field and laboratory procedures used and additional data (If any).

See Supporting Information for explanation of symbols and abbreviations.

Water Level Observations

No water observed during sampling

Drill Rig
Hand Equipment

Hammer Type
Manual

Driller
R. Stobart

Logged by

Probe Started
04-14-2022

Probe Completed
04-14-2022

Notes

Elevation Reference: Coordinates and elevation from Terracon GPS Survey

Blow counts are blows per each 1 3/4" DCP sampling interval. The listed N-value is the approximate equivalent SPT N-value (blows/foot) based on correlations from the DCP manufacturer and encountered soil type.

Advancement Method
Hand Auger
DCP

Abandonment Method
Boring backfilled with auger cuttings upon completion.

Heritage Trail and Sand Cave Trail
Mammoth Cave National Park | Cave City, KY
Terracon Project No. N1225082

611 Lunken Park Dr
Cincinnati, OH

Probe Log No. S-3

Location: See Exploration Plan

Latitude: 37.1536° Longitude: -86.0473°

Model Layer	Graphic Log	Depth (Ft.)	Elevation: 889 (Ft.) +/-	Depth (Ft.)	Water Level Observations	Sample Type	Recovery (%)	Field Test Results	RQD (%)	Water Content (%)	Atterberg Limits LL-PL-PI
2			**LEAN CLAY (CL)**, trace sand, brown, medium stiff					3-2-3 N=2		27.5	
								5-5-6 N=4		27.6	
		3.0	886								
			SANDY LEAN CLAY (CL), reddish brown and gray, stiff					10-12-12 N=8			
								15-15-17 N=11		32.2	
		5.4	883.6	5				16-17-25 N=14			
			Probe Terminated at 5.4 Feet								

See Exploration and Testing Procedures for a description of field and laboratory procedures used and additional data (If any).

See Supporting Information for explanation of symbols and abbreviations.

Water Level Observations

No water observed during sampling

Drill Rig
Hand Equipment

Hammer Type
Manual

Driller
R. Stobart

Logged by

Probe Started
04-15-2022

Probe Completed
04-15-2022

Notes

Elevation Reference: Coordinates and elevation from Terracon GPS Survey

Blow counts are blows per each 1 3/4" DCP sampling interval. The listed N-value is the approximate equivalent SPT N-value (blows/foot) based on correlations from the DCP manufacturer and encountered soil type.

Advancement Method
Hand Auger
DCP

Abandonment Method
Boring backfilled with auger cuttings upon completion.

Heritage Trail and Sand Cave Trail
Mammoth Cave National Park | Cave City, KY
Terracon Project No. N1225082

611 Lunken Park Dr
Cincinnati, OH

Probe Log No. S-4

Location: See Exploration Plan

Latitude: 37.1539° Longitude: -86.0471°

Depth (Ft.) Elevation: 883 (Ft.) +/-

Model Layer	Graphic Log	Description	Depth (Ft.)	Water Level Observations	Sample Type	Recovery (%)	Field Test Results	RQD (%)	Water Content (%)	Atterberg Limits LL-PL-PI
2		**LEAN CLAY (CL)**, reddish brown, medium stiff to stiff								
							4-3-4 N=3		26.7	30-15-15
							4-5-6 N=4			
		-with sandstone fragments starting at 3 feet					8-14-14 N=9		19.1	
		4.2 878.8					20-50/1.5"			
		Hand Auger and DCP Refusal at 4.2 Feet								

See Exploration and Testing Procedures for a description of field and laboratory procedures used and additional data (If any).

See Supporting Information for explanation of symbols and abbreviations.

Water Level Observations

No water observed during sampling

Drill Rig
Hand Equipment

Hammer Type
Manual

Driller
R. Stobart

Logged by

Probe Started
04-15-2022

Probe Completed
04-15-2022

Notes

Elevation Reference: Coordinates and elevation from Terracon GPS Survey

Blow counts are blows per each 1 3/4" DCP sampling interval. The listed N-value is the approximate equivalent SPT N-value (blows/foot) based on correlations from the DCP manufacturer and encountered soil type.

Advancement Method
Hand Auger
DCP

Abandonment Method
Boring backfilled with auger cuttings upon completion.

Heritage Trail and Sand Cave Trail
Mammoth Cave National Park | Cave City, KY
Terracon Project No. N1225082

611 Lunken Park Dr
Cincinnati, OH

Probe Log No. S-5

Model Layer	Graphic Log	Location: See Exploration Plan Latitude: 37.1542° Longitude: -86.0473° Depth (Ft.) Elevation: 880 (Ft.) +/-	Depth (Ft.)	Water Level Observations	Sample Type	Recovery (%)	Field Test Results	RQD (%)	Water Content (%)	Atterberg Limits LL-PL-PI
2		**LEAN CLAY (CL)**, trace sand, reddish brown, medium stiff 2.0 878					3-2-1 N=2		21.1	
		Hand Auger and DCP Refusal at 2 Feet					50/0"			

See Exploration and Testing Procedures for a description of field and laboratory procedures used and additional data (If any).

See Supporting Information for explanation of symbols and abbreviations.

Water Level Observations

No water observed during sampling

Drill Rig
Hand Equipment

Hammer Type
Manual

Driller
R. Stobart

Logged by

Probe Started
04-15-2022

Probe Completed
04-15-2022

Notes

Elevation Reference: Coordinates and elevation from Terracon GPS Survey

Blow counts are blows per each 1 3/4" DCP sampling interval. The listed N-value is the approximate equivalent SPT N-value (blows/foot) based on correlations from the DCP manufacturer and encountered soil type.

Advancement Method
Hand Auger
DCP

Abandonment Method
Boring backfilled with auger cuttings upon completion.

Rock Core Photograph

Rock Core Photograph: B-1 2.5’ to 18.5’

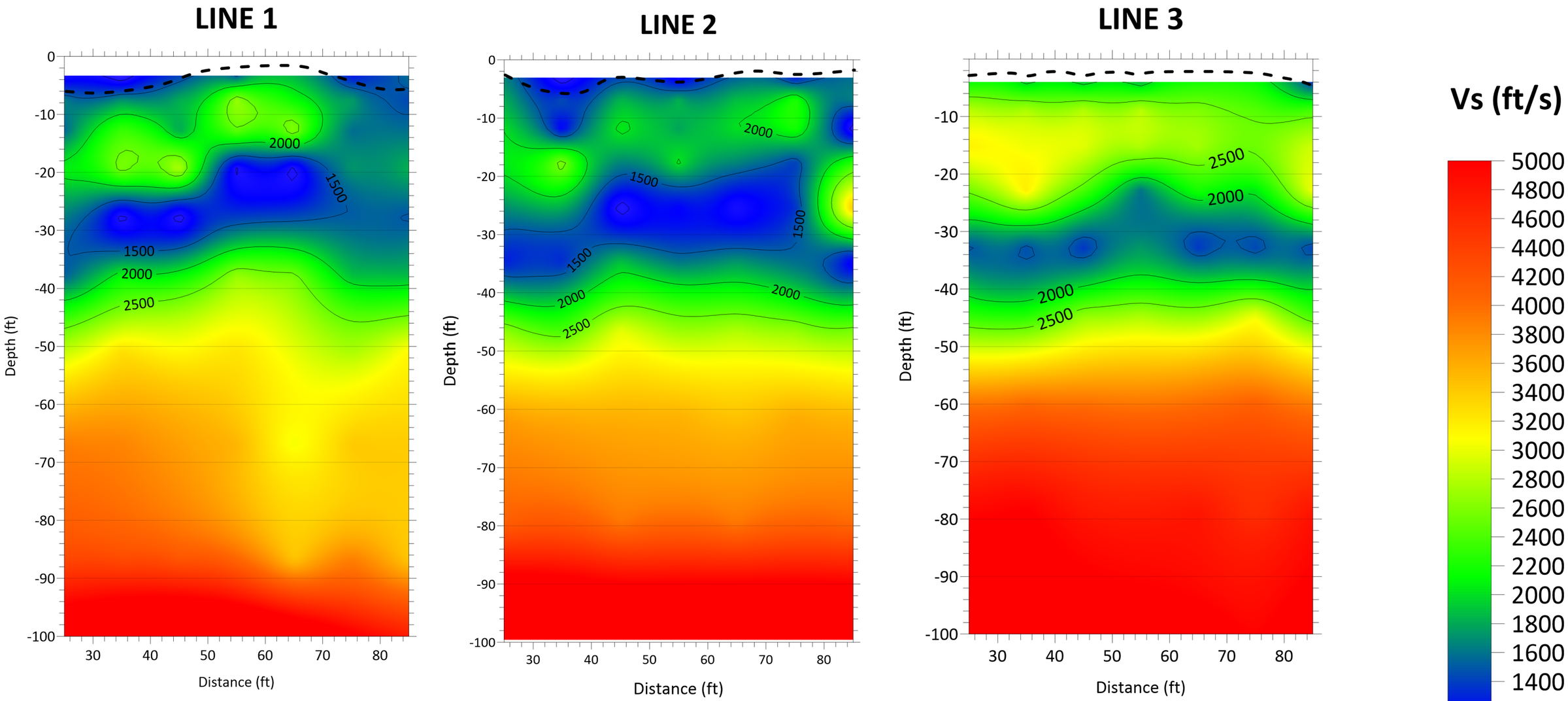

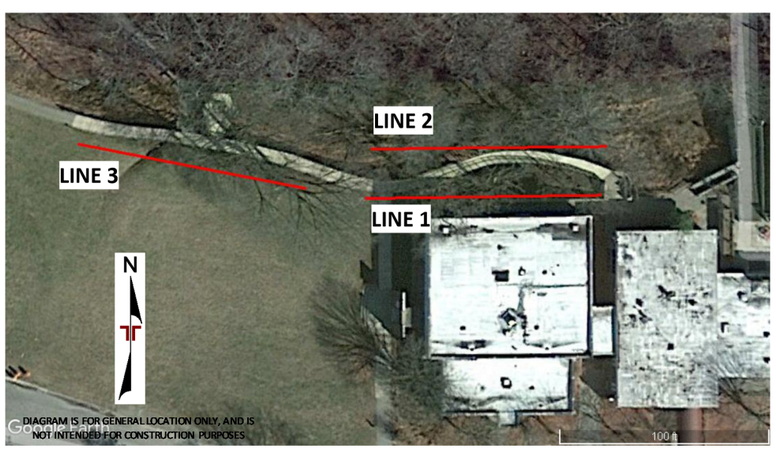

Approximate Top of Bedrock

Project Manager: RG	Project No. N1225082	Terracon Consulting Engineers & Scientists 611 Lunken Park Drive Cincinnati, Ohio 45226	**MASW CROSS SECTIONS** Mammoth Cave Heritage Trail Cave City, Edmonson County, Kentucky	EXHIBIT
Drawn by: JCT	Scale: As Shown			1
Checked by: KJS	File Name: X Section			
Approved by: JDD	Date: 425/2022			

Heritage Trail and Sand Cave Trail
Mammoth Cave National Park | Cave City, KY
Terracon Project No. N1225082

611 Lunken Park Dr
Cincinnati, OH

Atterberg Limit Results

ASTM D4318

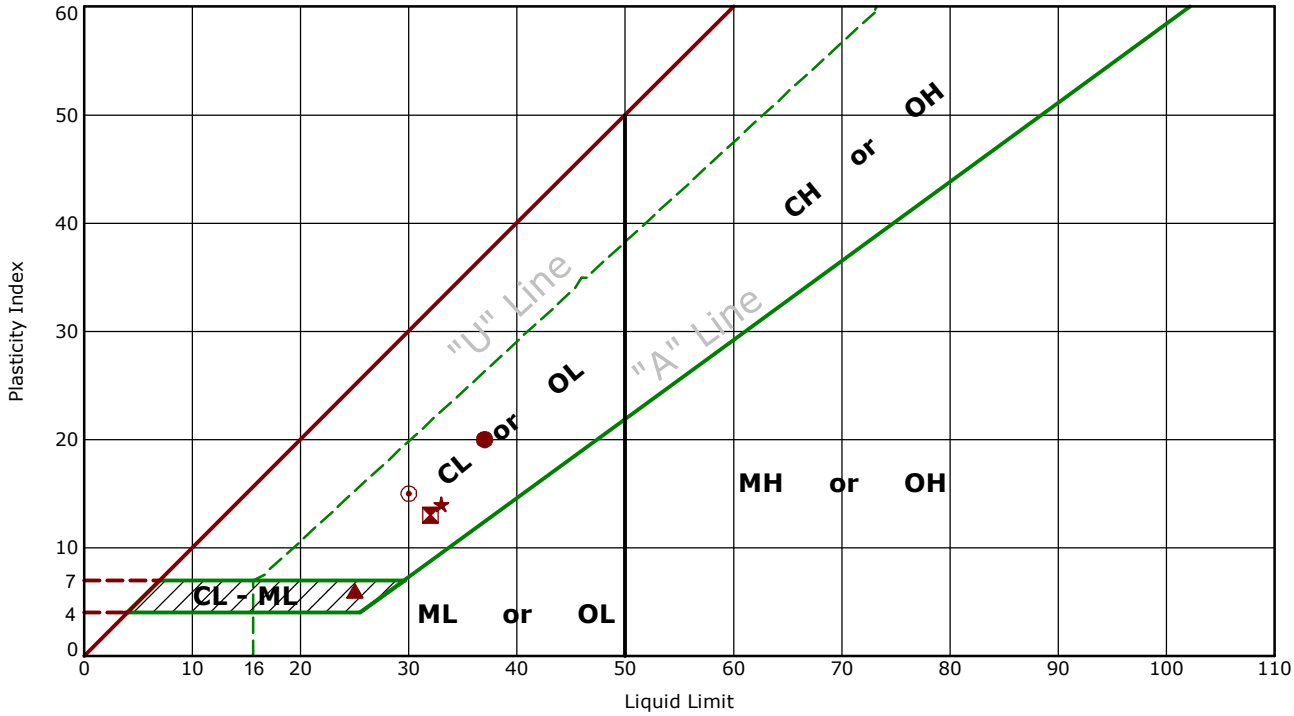

	Boring ID	Depth (Ft)	LL	PL	PI	Fines	USCS	Description
●	H-1	2 - 2.4	37	17	20		CL	Lean Clay
⊠	H-2	1 - 1.4	32	19	13		CL	Lean Clay
▲	H-3	2 - 2.4	25	19	6		CL-ML	Silty Clay
★	S-1	1 - 1.4	33	19	14		CL	Lean Clay
⊙	S-4	1 - 1.4	30	15	15		CL	Lean Clay

Rock Core D7012 Method C

Terracon

Client
VHB Williamsburg, VA

Project
Heritage Trail and Sand Cave Trail

Project No. N1225082

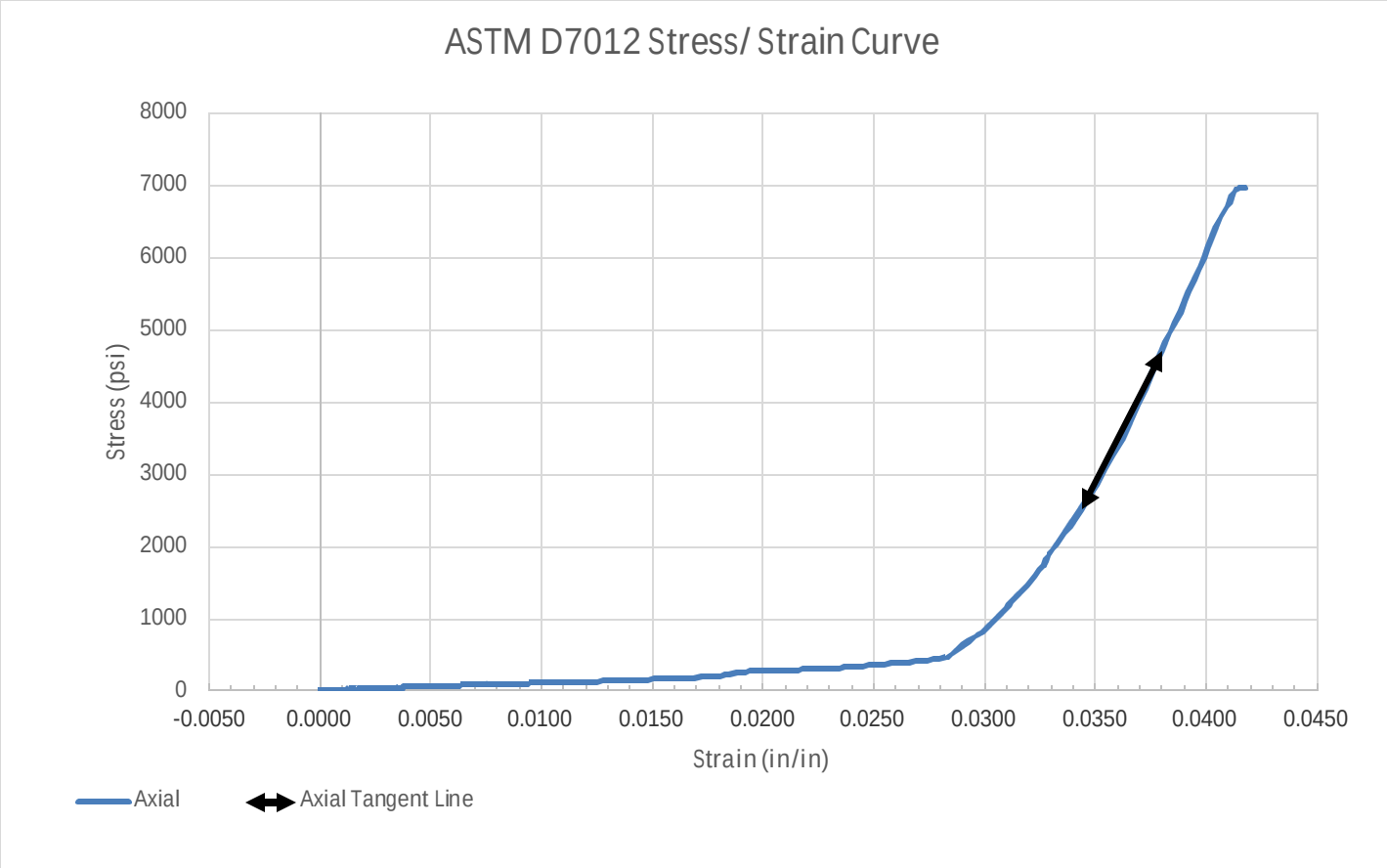

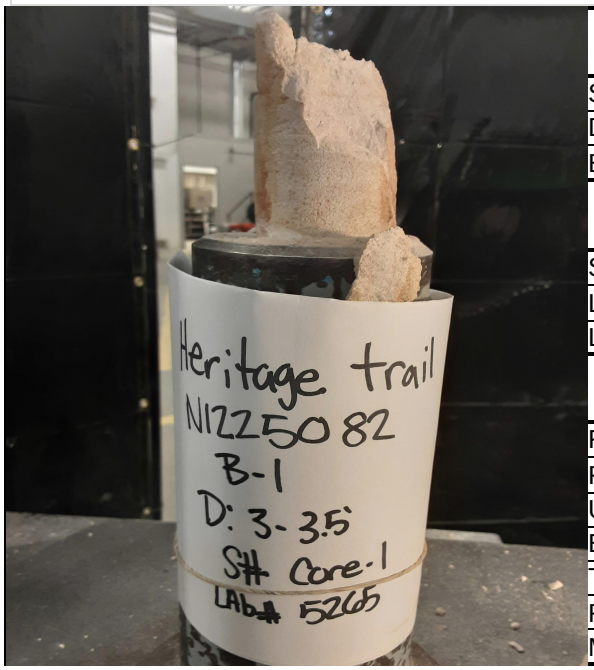

SAMPLE LOCATION

Site:	Heritage Trail and Sand Cave Trail		
Description:	Sandstone		
Boring:	B-1	Depth (feet):	3-3.5'

SPECIMEN INFORMATION

Sample No.:	Core-1	Mass (g):	478.75
Length (in.):	4.14	Diameter (in.):	1.86
L/D Ratio:	2.226	Density (pcf):	162.133

TEST RESULTS

Failure Load (lbs):	21666
Failure Strain (in/in):	0.044
Unconfined Compressive Strength (psi):	6,966
Elastic Modulus, E, (ksi):	602
Time of Failure (min):	03:46
Rate of Loading (in/sec):	0.04
Moisture Content Post-break:	0.31%

Rock Core D7012 Method C

Client
VHB Williamsburg, VA

Project
Heritage Trail and Sand Cave Trail

Project No. N1225082

Equipment:	TICCS ID:
Calipers	W-44049
Scale	B-71466
Dial Indicator	C-70608
Compression (spherically seated)	C-48999

Samples were prepared and tested in accordance with ASTM D4543 and D7012. Deviations, if any, are noted below:

Notes:

Per ASTM D4543, this specimen shall have a minimum diameter of 1.875 inches, or as directed by the client.

Per ASTM D4543, this specimen has not met the requirements for perpendicularity, by exceeding 0.250º.
Per ASTM D4543, this specimen has not met the requirements for flatness, by exceeding 0.001 inches.
Per ASTM D4543, this specimen has not met the requirements for parallelism, by exceeding 0.25º.

According to ASTM D7012 Section 8.2.1, this specimen, although not meeting all requirements of ASTM D4543 is acceptable for testing. However, the results reported may differ from results obtained from a test specimen that meets the requirements of D4543.

Supporting Information

Contents:

General Notes
Unified Soil Classification System
Description of Rock Properties

Note: All attachments are one page unless noted above.

Terracon
611 Lunken Park Dr
Cincinnati, OH

General Notes

Sampling	Water Level	Field Tests
Rock Core Dynamic Cone Penetrometer Standard Penetration Test	Water Initially Encountered Water Level After a Specified Period of Time Water Level After a Specified Period of Time Cave In Encountered Water levels indicated on the soil boring logs are the levels measured in the borehole at the times indicated. Groundwater level variations will occur over time. In low permeability soils, accurate determination of groundwater levels is not possible with short term water level observations.	N — Standard Penetration Test Resistance (Blows/Ft.) (HP) — Hand Penetrometer (T) — Torvane (DCP) — Dynamic Cone Penetrometer UC — Unconfined Compressive Strength (PID) — Photo-Ionization Detector (OVA) — Organic Vapor Analyzer

Descriptive Soil Classification

Soil classification as noted on the soil boring logs is based Unified Soil Classification System. Where sufficient laboratory data exist to classify the soils consistent with ASTM D2487 "Classification of Soils for Engineering Purposes" this procedure is used. ASTM D2488 "Description and Identification of Soils (Visual-Manual Procedure)" is also used to classify the soils, particularly where insufficient laboratory data exist to classify the soils in accordance with ASTM D2487. In addition to USCS classification, coarse grained soils are classified on the basis of their in-place relative density, and fine-grained soils are classified on the basis of their consistency. See "Strength Terms" table below for details. The ASTM standards noted above are for reference to methodology in general. In some cases, variations to methods are applied as a result of local practice or professional judgment.

Location And Elevation Notes

Exploration point locations as shown on the Exploration Plan and as noted on the soil boring logs in the form of Latitude and Longitude are approximate. See Exploration and Testing Procedures in the report for the methods used to locate the exploration points for this project. Surface elevation data annotated with +/- indicates that no actual topographical survey was conducted to confirm the surface elevation. Instead, the surface elevation was approximately determined from topographic maps of the area.

Strength Terms

Relative Density of Coarse-Grained Soils (More than 50% retained on No. 200 sieve.) Density determined by Standard Penetration Resistance		Consistency of Fine-Grained Soils (50% or more passing the No. 200 sieve.) Consistency determined by laboratory shear strength testing, field visual-manual procedures or standard penetration resistance		
Relative Density	**Standard Penetration or N-Value (Blows/Ft.)**	**Consistency**	**Unconfined Compressive Strength Qu (tsf)**	**Standard Penetration or N-Value (Blows/Ft.)**
Very Loose	0 - 3	Very Soft	less than 0.25	0 - 1
Loose	4 - 9	Soft	0.25 to 0.50	2 - 4
Medium Dense	10 - 29	Medium Stiff	0.50 to 1.00	4 - 8
Dense	30 - 50	Stiff	1.00 to 2.00	8 - 15
Very Dense	> 50	Very Stiff	2.00 to 4.00	15 - 30
		Hard	> 4.00	> 30

Relevance of Exploration and Laboratory Test Results

Exploration/field results and/or laboratory test data contained within this document are intended for application to the project as described in this document. Use of such exploration/field results and/or laboratory test data should not be used independently of this document.

Unified Soil Classification System

Criteria for Assigning Group Symbols and Group Names Using Laboratory Tests [A]				Soil Classification	
				Group Symbol	Group Name [B]
Coarse-Grained Soils: More than 50% retained on No. 200 sieve	Gravels: More than 50% of coarse fraction retained on No. 4 sieve	Clean Gravels: Less than 5% fines [C]	Cu≥4 and 1≤Cc≤3 [E]	GW	Well-graded gravel [F]
			Cu<4 and/or [Cc<1 or Cc>3.0] [E]	GP	Poorly graded gravel [F]
		Gravels with Fines: More than 12% fines [C]	Fines classify as ML or MH	GM	Silty gravel [F, G, H]
			Fines classify as CL or CH	GC	Clayey gravel [F, G, H]
	Sands: 50% or more of coarse fraction passes No. 4 sieve	Clean Sands: Less than 5% fines [D]	Cu≥6 and 1≤Cc≤3 [E]	SW	Well-graded sand [I]
			Cu<6 and/or [Cc<1 or Cc>3.0] [E]	SP	Poorly graded sand [I]
		Sands with Fines: More than 12% fines [D]	Fines classify as ML or MH	SM	Silty sand [G, H, I]
			Fines classify as CL or CH	SC	Clayey sand [G, H, I]
Fine-Grained Soils: 50% or more passes the No. 200 sieve	Silts and Clays: Liquid limit less than 50	Inorganic:	PI > 7 and plots above "A" line [J]	CL	Lean clay [K, L, M]
			PI < 4 or plots below "A" line [J]	ML	Silt [K, L, M]
		Organic:	$\frac{LL\ oven\ dried}{LL\ not\ dried} < 0.75$	OL	Organic clay [K, L, M, N]
					Organic silt [K, L, M, O]
	Silts and Clays: Liquid limit 50 or more	Inorganic:	PI plots on or above "A" line	CH	Fat clay [K, L, M]
			PI plots below "A" line	MH	Elastic silt [K, L, M]
		Organic:	$\frac{LL\ oven\ dried}{LL\ not\ dried} < 0.75$	OH	Organic clay [K, L, M, P]
					Organic silt [K, L, M, Q]
Highly organic soils:	Primarily organic matter, dark in color, and organic odor			PT	Peat

[A] Based on the material passing the 3-inch (75-mm) sieve.
[B] If field sample contained cobbles or boulders, or both, add "with cobbles or boulders, or both" to group name.
[C] Gravels with 5 to 12% fines require dual symbols: GW-GM well-graded gravel with silt, GW-GC well-graded gravel with clay, GP-GM poorly graded gravel with silt, GP-GC poorly graded gravel with clay.
[D] Sands with 5 to 12% fines require dual symbols: SW-SM well-graded sand with silt, SW-SC well-graded sand with clay, SP-SM poorly graded sand with silt, SP-SC poorly graded sand with clay.
[E] $Cu = D_{60}/D_{10}$ $\quad Cc = \frac{(D_{30})^2}{D_{10} \times D_{60}}$
[F] If soil contains ≥ 15% sand, add "with sand" to group name.
[G] If fines classify as CL-ML, use dual symbol GC-GM, or SC-SM.
[H] If fines are organic, add "with organic fines" to group name.
[I] If soil contains ≥ 15% gravel, add "with gravel" to group name.
[J] If Atterberg limits plot in shaded area, soil is a CL-ML, silty clay.
[K] If soil contains 15 to 29% plus No. 200, add "with sand" or "with gravel," whichever is predominant.
[L] If soil contains ≥ 30% plus No. 200 predominantly sand, add "sandy" to group name.
[M] If soil contains ≥ 30% plus No. 200, predominantly gravel, add "gravelly" to group name.
[N] PI ≥ 4 and plots on or above "A" line.
[O] PI < 4 or plots below "A" line.
[P] PI plots on or above "A" line.
[Q] PI plots below "A" line.

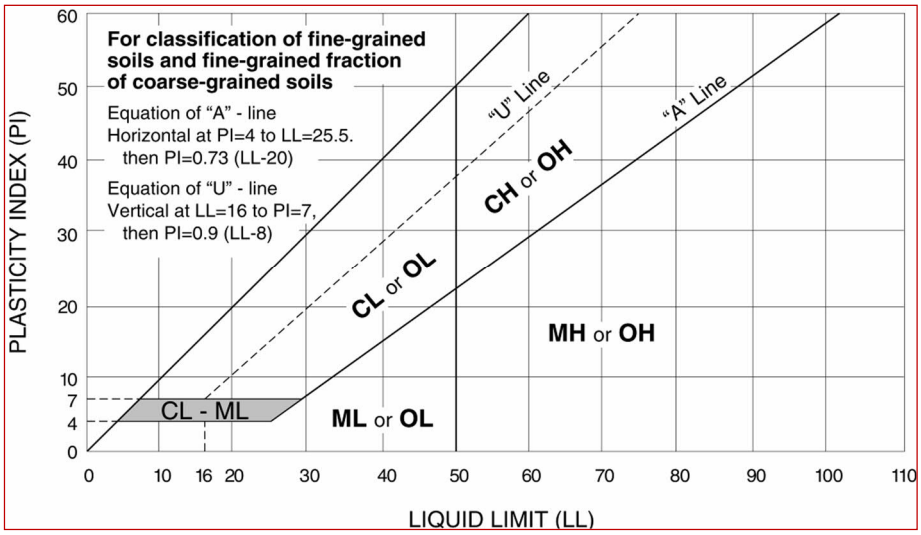

Rock Classification Notes

WEATHERING	
Term	**Description**
Fresh	Mineral crystals appear bright; show no discoloration. Features show little or now staining on surfaces. Discoloration does not extend into intact rock.
Slightly weathered	Rock generally fresh except along fractures. Some fractures stained and discoloration may extend <0.5 inches into rock.
Moderately weathered	Significant portions of rock are dull and discolored. Rock may be significantly weaker than in fresh state near fractures. Soil zones of limited extent may occur along some fractures.
Highly weathered	Rock dull and discolored throughout. Majority of rock mass is significantly weaker and has decomposed and/or disintegrated; isolated zones of stronger rock and/or soil may occur throughout.
Completely weathered	All rock material is decomposed and/or disintegrated to soil. The rock mass or fabric is still evident and largely intact. Isolated zones of stronger rock may occur locally.

STRENGTH OR HARDNESS		
Description	**Field Identification**	**Uniaxial Compressive Strength, psi**
Extremely strong	Can only be chipped with geological hammer. Rock rings on hammer blows. Cannot be scratched with a sharp pick. Hand specimens require several hard hammer blows to break.	>36,000
Very strong	Several blows of a geological hammer to fracture. Cannot be scratched with a 20d common steel nail. Can be scratched with a geologist's pick only with difficulty.	15,000-36,000
Strong	More than one blow of a geological hammer needed to fracture. Can be scratched with a 20d nail or geologist's pick. Gouges or grooves to ¼ inch deep can be excavated by a hard blow of a geologist's pick. Hand specimens can be detached by a moderate blow.	7,500-15,000
Medium strong	One blow of geological hammer needed to fracture. Can be distinctly scratched with 20d nail. Can be grooved or gouged 1/16 in. deep by firm pressure with a geologist's pick point. Can be fractured with single firm blow of geological hammer. Can be excavated in small chips (about 1-in. maximum size) by hard blows of the point of a geologist's pick;	3,500-7,500
Weak	Shallow indent by firm blow with geological hammer point. Can be gouged or grooved readily with geologist's pick point. Can be excavated in pieces several inches in size by moderate blows of a pick point. Small thin pieces can be broken by finger pressure.	700-3,500
Very weak	Crumbles under firm blow with geological hammer point. Can be excavated readily with the point of a geologist's pick. Pieces 1-in. or more in thickness can be broken with finger pressure. Can be scratched readily by fingernail.	150-700

DISCONTINUITY DESCRIPTION			
Fracture Spacing (Joints, Faults, Other Fractures)		Bedding Spacing (May Include Foliation or Banding)	
Description	**Spacing**	**Description**	**Spacing**
Intensely fractured	< 2.5 inches	Laminated	< ½-inch
Highly fractured	2.5 – 8 inches	Very thin	½ – 2 inches
Moderately fractured	8 inches to 2 feet	Thin	2 inches – 1 foot
Slightly fractured	2 to 6.5 feet	Medium	1 – 3 feet
Very slightly fractured	> 6.5 feet	Thick	3 – 10 feet
		Massive	> 10 feet

ROCK QUALITY DESIGNATION (RQD) [1]	
Description	**RQD Value (%)**
Very Poor	0 - 25
Poor	25 – 50
Fair	50 – 75
Good	75 – 90
Excellent	90 - 100

1. The combined length of all sound and intact core segments equal to or greater than 4 inches in length, expressed as a percentage of the total core run length.