934th AIRLIFT WING
UNITED STATES AIR FORCE RESERVE

760 MILITARY HIGHWAY
MINNEAPOLIS MINNESOTA
55450-2100

FINAL DESIGN

PROJECT # QJKL 26-0002

SUSTAIN AIRCRAFT PARKING APRON

SHEET #	DESCRIPTION
T001	TITLE SHEET
C101	APRON REPAIR PLAN
C102	APRON MARKING PLAN
C601	DETAILS
C602	DETAILS/PHOTO

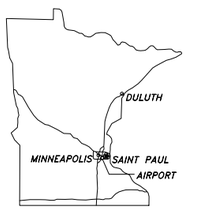

STATE OF MINNESOTA
SCALE: N.T.S.

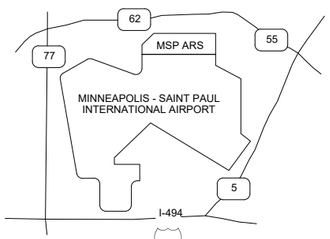

VICINITY MAP
SCALE: N.T.S.

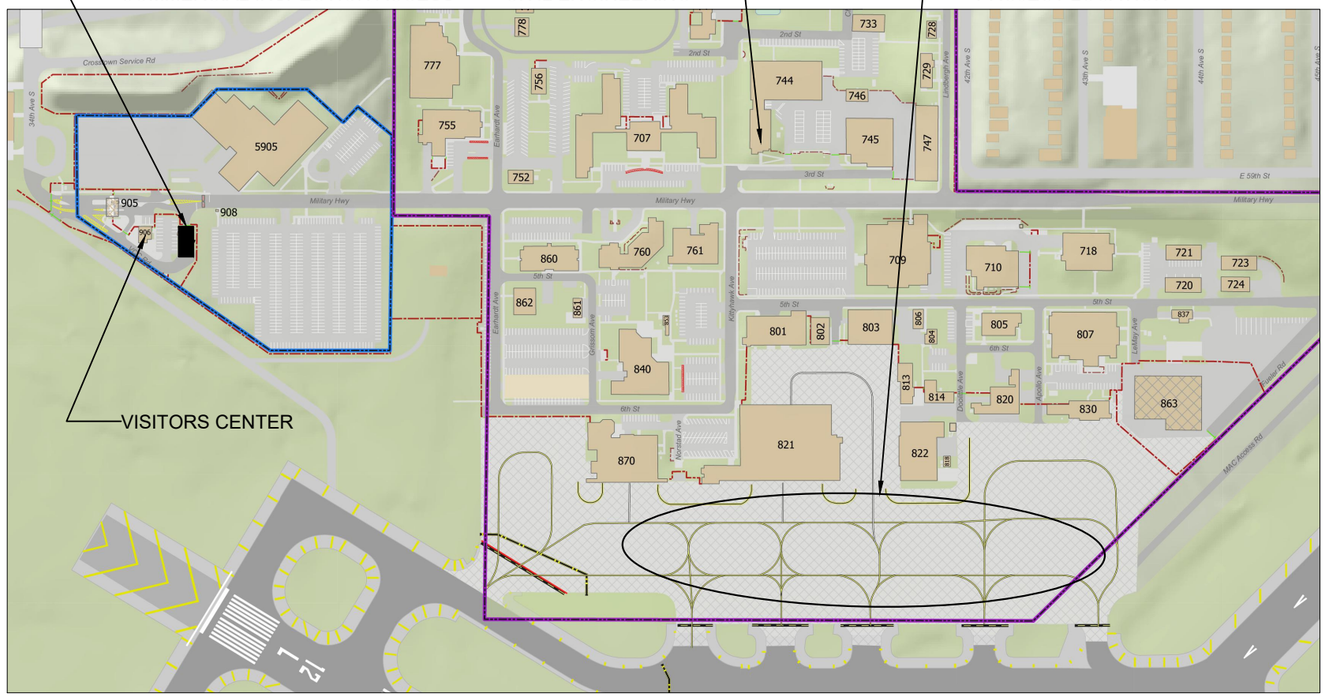

Designed by: CDD	Date: 4/07/26	Rev
Dwn by: CDD		
Reviewed by: TMT		
Submitted by: 934 AW		

934TH AIRLIFT WING, USAFR
760 MILITARY HIGHWAY
MINNEAPOLIS, MN 55450-2100

934TH CIVIL ENGINEERING
BUILDING 744

SUSTAIN AIRCRAFT PARKING APRON
QJKL 26-0002

TITLE SHEET

SHEET ID:
T001
Sheet 1 of 5

APRON REPAIR QUANTITY ESTIMATES
AREA: 531,212 SF
PORTLAND CEMENT CONCRETE REPAIRS
JOINTS: 77,000 LF
CRACKS: 400 LF
SPALL PATCHING: 50 SF (AVG. DEPTH 2.5")

JOINT WIDTH VARIES FROM .5 - 1.25"

CONSTRUCTION FENCE —x——x——

CONTRACTOR TO ADHERE TO THE REQUIREMENTS SPECIFIED IN THE FREE ZONE LETTER. THIS LETTER OUTLINES CONTRACTOR RESPONSIBILITIES WHILE WORKING IN/NEAR THE RESTRICTED AREA. LETTER IS GENERATED BY THE GOVERNMENT AND WILL BE ISSUED AFTER PROJECT AWARD.

GENERAL NOTES:

1. THE CONSTRUCTION ZONE IS LOCATED IN A RESTRICTED AREA.
2. AIRCRAFT MOVEMENT MAY PERIODICALLY IMPACT WORK.
3. REPAIRS WILL BE PHASED TO FACILITATE AIRCRAFT MOVEMENT, HANGAR ACCESS, AND MAINTENANCE DEPENDENT ON THE CONSTRUCTION SCHEDULE AND DURATION. WORK PLAN PHASING TO BE DISCUSSED AT PRECONSTRUCTION MEETING. PHASING SHOWN IS SUBJECT TO CHANGE.

CONCRETE REPAIR NOTES:

1. SAWCUT A MINIMUM OF 3 INCHES BEYOND SPALLS TO BE REPAIRED BY PATCHING.
2. PARTIAL DEPTH PATCHING SHALL BE A MINIMUM OF 2 INCHES THICKNESS.
3. CORNER SPALL REPAIRS MUST BE AT LEAST 6 INCHES FROM CORNERS.
4. SPALLS MORE THAN 5.33 INCHES DEEP OR IF DOWELS ARE ENCOUNTERED WILL BE TEMPORARILY REPAIRED BY PARTIAL DEPTH PATCHING AND DOCUMENTED FOR FUTURE FULL-DEPTH REPAIR.
5. PATCH SURFACE SHALL BE SMOOTH AND MATCH ADJACENT SURFACE ELEVATIONS.
6. WHERE PATCHES INTERSECT CRACKS ON TWO SIDES, SAWCUT ACROSS PATCH TO JOIN CRACKS & SEAL.

FENCE NOTES:

1. CONTRACTOR TO INSTALL 4' HIGH ORANGE SNOW FENCE AROUND THE PERIMETER OF THE WORK ZONE SUPPORTED BY WATER FILLED LOW PROFILE BARRICADES WITH RED LIGHTS SPACED NO MORE THAN 50' APART IAW UFC 3-260-04. FENCE & BARRIERS MAY BE MOVED AS WORK PROGRESSES. SEE DETAIL 3 ON SHEET C602.

SEALANT NOTES:

1. SEALANT AND BACKER ROD WILL BE REMOVED BY A MACHINE CAPABLE OF REMOVING SEALANT/BACKER ROD AND FACING BOTH JOINT FACES SIMULTANEOUSLY.
2. JOINT FACES SHALL BE MEDIA BLASTED AND PRESSURE WASHED PRIOR TO BACKER ROD INSTALLATION.
3. BACKER ROD WILL BE SIZED & INSTALLED WITH SUFFICIENT COMPRESSION TO RETAIN SEALANT AND TO ACHIEVE NECESSARY DEPTH TO WIDTH RATIO AS SPECIFIED BY THE SEALANT MANUFACTURER.
4. SEE SPECIFICATIONS FOR APPROVED SEALANT APPLICATION METHODS.

KEY NOTES:

1. REPAIR CONCRETE SLAB JOINTS. INCLUDES REMOVAL, DISPOSAL, MEDIA BLASTING & PRESSURE WASHING OF JOINT FACES, AND REPLACEMENT OF ALL EXISTING SEALANT & BACKER ROD IN THE SHADED AREA SHOWN. SEE DETAILS ON SHEET C-601.
2. REPAIR CONCRETE CRACKS. INCLUDES REMOVAL AND REPLACEMENT OF DEFECTIVE EXISTING CRACK SEALANT AND ROUTING & SEALING OF NEW CRACKS. SEE DETAILS ON SHEET C-601.
3. REPAIR CONCRETE SPALLS. GOVT TO MARK SPALL LOCATIONS PRIOR TO CONSTRUCTION. SEE DETAILS SHEET C-601 AND CONCRETE REPAIR NOTES THIS SHEET.

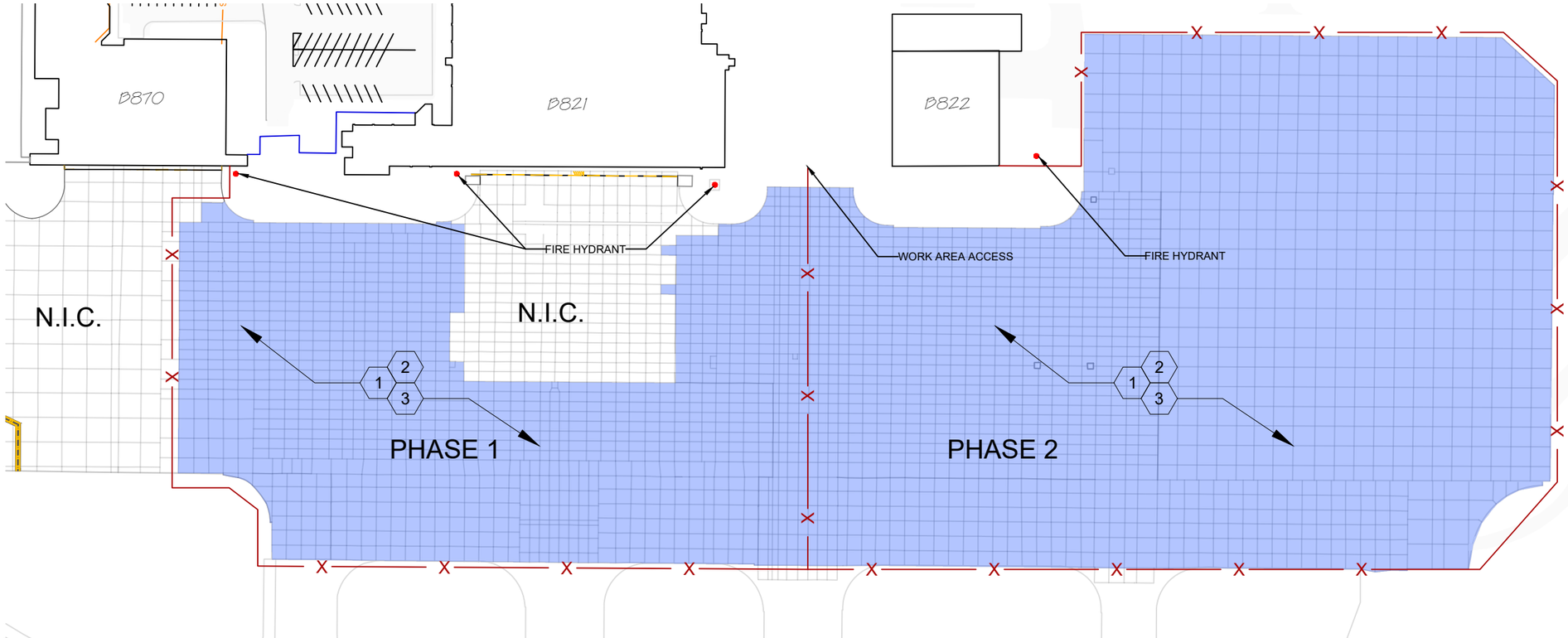

A APRON REPAIR PLAN

Scale: N.T.S.

MARK	DESCRIPTION	DATE

Designed by: CDD
Dwn by: CDD
Reviewed by: TMT
Submitted by: 934 AW
Date: 4/07/26
Rev

934TH AIRLIFT WING, USAFR
760 MILITARY HIGHWAY
MINNEAPOLIS, MN 55450-2100

934TH CIVIL ENGINEERING
BUILDING 744

SUSTAIN AIRCRAFT PARKING APRON
QJKL 26-0002

APRON REPAIR PLAN

FINAL DESIGN

SHEET ID:
C101
Sheet 2 of 5

TAXI LINES - 6" BLACK/6" YELLOW*/6" BLACK	APPROX. 10,000 LF
SHOULDERS - 6" DOUBLE YELLOW* WITH 6" GAP	APPROX. 1,400 LF
RESTRICTED AREA LINE - 6" RED*	APPROX. 3,400 LF
SAFETY ARCS - 6" GREEN	APPROX. 1,600 LF
11 AGE BOXES - 6" BLACK/6" WHITE*/6" BLACK WITH 18" WHITE* LETTERING	APPROX. 11' x 11'
15 AIRCRAFT NOSE GEAR PARKING BLOCKS - YELLOW* WITH 6" BLACK OUTLINE	APPROX. 3' X 5'
36 RESTRICTED AREA SIGNS - BLACK & RED TEXT OVER WHITE*	SEE DETAIL 1 ON SHEET C602
2 ENTRY CONTROL POINTS (ECP) 6" WHITE* WITH 6" SPACE (RED* LINE CENTERED ACROSS)	APPROX. 3' X 30' (NO BLACK DASHES)
TOW LINES - 6" BLACK/6" WHITE*/6" BLACK	APPROX. 1,000 LF
38 GROUNDING POINTS (EXCLUDES 9 WITHIN IN TAXI LINES) - YELLOW	12" DIAMETER CIRCLE.
ILS HOLD LINE AND RED ILS SIGN	NOT IN CONTRACT.
NON-MOVEMENT BOUNDARY	NOT IN CONTRACT.

GENERAL MARKING NOTES:

1. AIRCRAFT PARKING APRON MARKING MUST MEET THE REQUIREMENTS OF UFC 3-260-04.
2. THE CONTRACTOR SHALL ENSURE HANGARS ARE CLEAR FOR AIRCRAFT ACCESS TO THE GREATEST EXTENT POSSIBLE. COORDINATE WORK SCHEDULE WITH THE PROJECT ENGINEER.
3. ALL SURFACES TO RECEIVE NEW PAINT SHALL BE PRESSURE WASHED & DRY PRIOR TO APPLICATION.
4. PREPARE AND REPAINT ALL EXISTING MARKINGS INCLUDING: TAXI LEAD-IN LINES, SHOULDER LINES, SAFETY ARCS, AGE PARKING BOXES, GROUNDING POINTS, AIRCRAFT NOSE GEAR BOXES, AIRCRAFT TOW LINES, RESTRICTED AREA BORDER AND SIGNS, AND ENTRY CONTROL POINTS.
5. ALL CONCRETE & JOINT REPAIRS SHALL BE COMPLETED PRIOR TO PAINT APPLICATION.
6. QUANTITIES AND LENGTHS MUST BE FIELD VERIFIED.
7. DO NOT PAINT GROUND RECEPTACLES; PROTECT FROM PAINT & OVERSPRAY.
8. CONTRACTOR TO REMOVE LOOSE GLASS BEADS FROM THE APRON AFTER APPLICATION.

* RETRO-REFLECTIVE PAINT- POST APPLIED MATERIAL MANUFACTURED IN ACCORDANCE WITH THE MOST CURRENT VERSION OF FEDERAL SPECIFICATION TT-B-1325D. APPLY TYPE III, GRADATION A, DROP ON, HIGH INDEX OF REFRACTION GLASS BEADS IMMEDIATELY AFTER PAINT APPLICATION AT A MINIMUM RATE OF 10 POUNDS PER GALLON OF PAINT IN ACCORDANCE WITH UFC 3-260-04 DATED 16 MAY 2018.

PAINT COLOR CHIP NUMBERS FROM SAE-AMS-STD-595

WHITE - 37925
YELLOW - 33538
RED - 31136
BLACK - 37038
GREEN - 34108

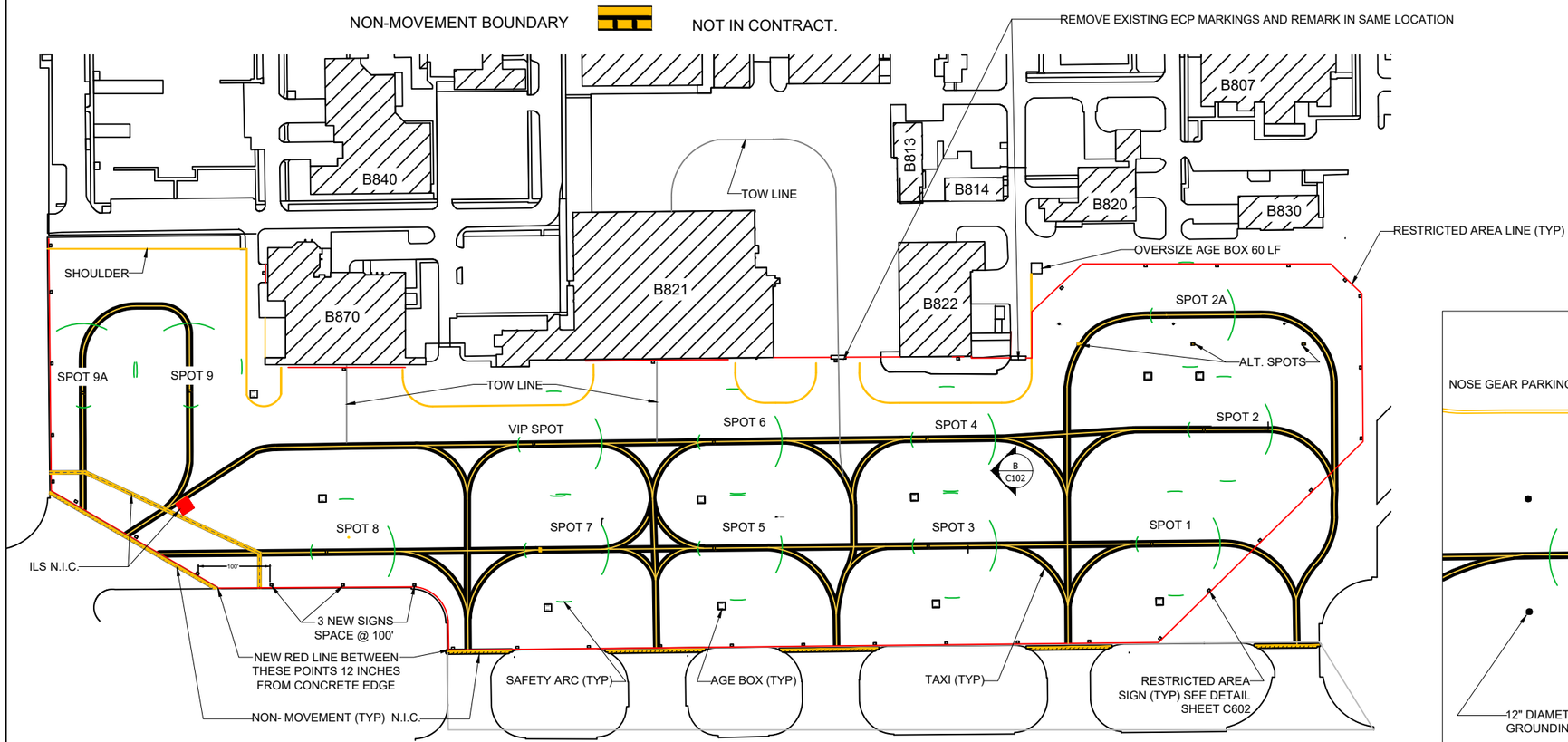

A APRON MARKING PLAN

Scale: N.T.S.

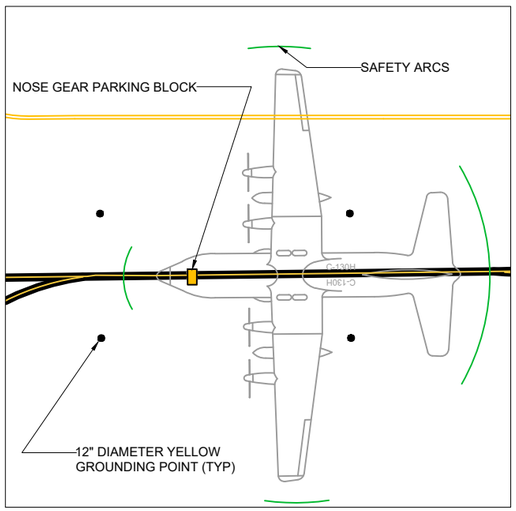

B TYPICAL AIRCRAFT PARKING SPOT MARKINGS

Scale: N.T.S.

MARK	DESCRIPTION	DATE

934TH AIRLIFT WING, USAFR
760 MILITARY HIGHWAY
MINNEAPOLIS, MN 55450-2100

934TH CIVIL ENGINEERING
BUILDING 744

Designed by: CDD
Dwn by: CDD
Reviewed by: TMT
Submitted by: 934 AW
Date: 1/14/26
Rev

SUSTAIN AIRCRAFT PARKING APRON
QJKL 26-0002

APRON MARKING PLAN

SHEET ID:
C102
Sheet 3 of 5

FINAL DESIGN

SAWCUT ALONG CRACK, REMOVE LOOSE DEBRIS, PRESSURE WASH & SEAL. COMPLY WITH SEALANT MANUFACTURERS INSTRUCTIONS FOR MAX. SEALANT WIDTH. IF BEYOND LIMITS, PERFORM PARTIAL DEPTH PATCHING.

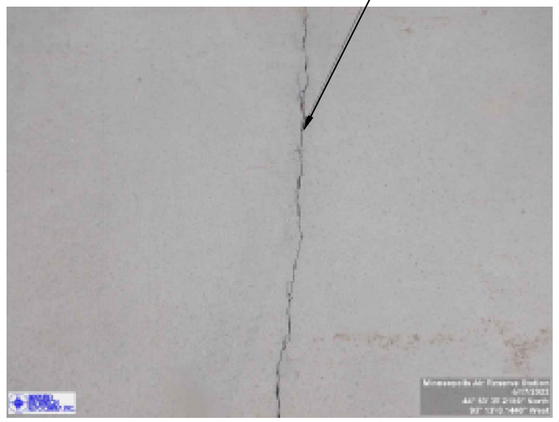

1 PORTLAND CEMENT PAVEMENT CRACK
N.T.S.

REMOVE LOOSE DEBRIS, PRESSURE WASH & SEAL. COMPLY WITH SEALANT MANUFACTURERS INSTRUCTIONS FOR MAX. SEALANT WIDTH. IF BEYOND LIMITS PERFORM PARTIAL DEPTH PATCHING.

2 LOW SEVERITY JOINT SPALL
N.T.S.

SAW CUT 2" MIN DEPTH & EXTEND REPAIR AREA MIN. 3" BEYOND SPALL.

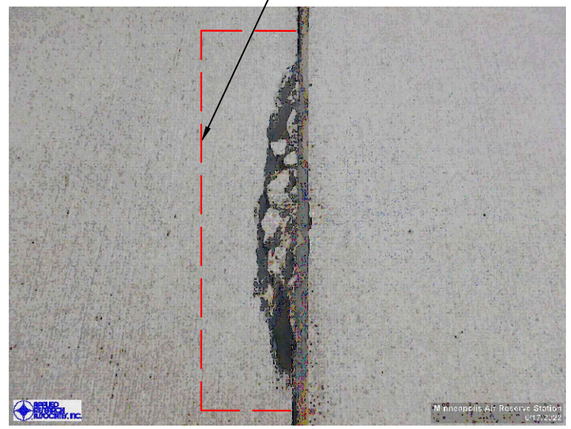

3 MEDIUM/HIGH SEVERITY JOINT SPALL
N.T.S.

SAW CUT MIN 6" FROM JOINT CORNER

4 CORNER SPALL (TYP.)
N.T.S.

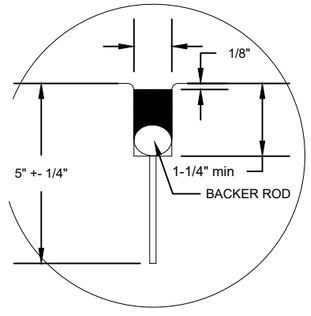

NOTE: SHAPE AND WIDTH FACTOR TO COMPLY WITH SEALANT MANUFACTURERS CRITERIA.

5 CONTROL JOINT DETAIL
N.T.S.

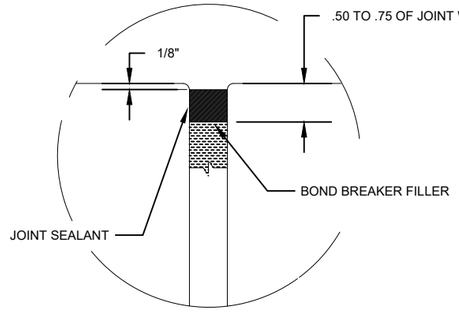

NOTE: SHAPE AND WIDTH FACTOR TO COMPLY WITH SEALANT MANUFACTURERS CRITERIA.

6 CONSTRUCTION JOINT DETAIL
N.T.S.

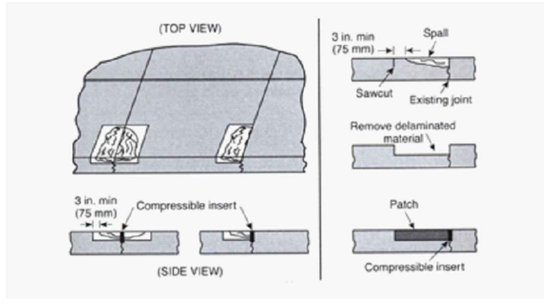

7 PARTIAL DEPTH CONCRETE SPALL REPAIR
N.T.S.

MARK	DESCRIPTION	DATE

Date: 4/07/26 Rev

Designed by: CDD
Drawn by: CDD
Reviewed by: TMT
Submitted by: 934 AW

934TH AIRLIFT WING, USAFR
738 AUSTIN AVENUE
MINNEAPOLIS, MN 55450-2100

934TH CIVIL ENGINEERING
BUILDING 744

SUSTAIN AIRCRAFT PARKING APRON
QJKL 26-0002

DETAILS

SHEET ID:
C601
Sheet 4 of 5

FINAL DESIGN

Contractor is responsible for having all stencils made per the dimensions shown above. Each stencil shall be an "adhesive type" so that it temporarily sticks to the surface while the painting is being accomplished. Each sign requires a separate stencil. The painting shall occur in following order:

1. Paint the white background.
2. Paint the red lettering.
3. Cover the red lettering and then paint the black letters and lines.
4. Remove the stencil.

1 RESTRICTED AREA SIGN DETAIL
N.T.S.

2 PHOTO OF EXISTING SIGN
N.T.S.

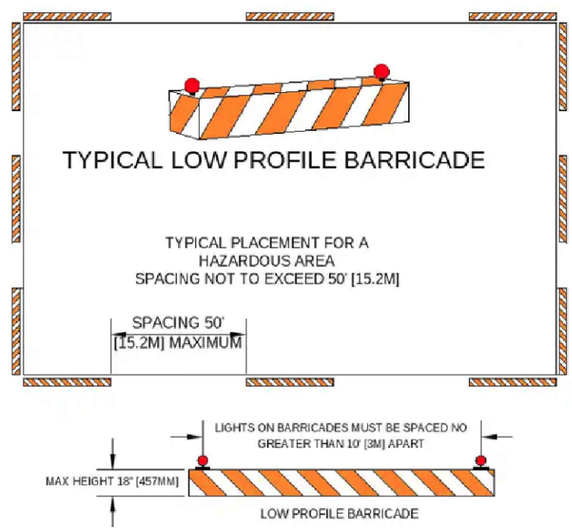

3 LOW PROFILE BARRICADE
N.T.S.

MARK	DESCRIPTION	DATE

Designed by: CDD
Dwn by: CDD
Reviewed by: TMT
Submitted by: 934 AW
Date: 4/07/26
Rev

934TH AIRLIFT WING, USAFR
760 MILITARY HIGHWAY
MINNEAPOLIS, MN 55450-2100

934TH CIVIL ENGINEERING
BUILDING 744

SUSTAIN AIRCRAFT PARKING APRON
QJKL 26-0002
DETAIL/PHOTO

SHEET ID:
C602
Sheet 5 of 5

FINAL DESIGN