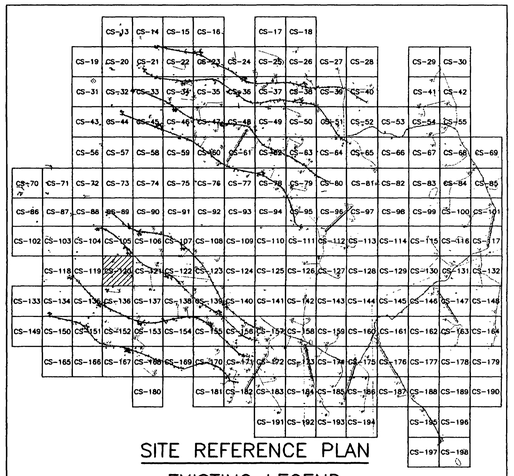

SITE REFERENCE PLAN

EXISTING LEGEND

- MAJOR CONTOUR (2m INTERVALS)
- MINOR CONTOUR
- CREEK
- EXISTING ROAD
- CHAIN LINK FENCE
- 326.00 SPOT ELEVATION
- ARCHEOLOGICAL SITE
- 59 SURVEY MARKER
- TREELINE
- UTILITY POLE
- EXISTING AMTC (ECM-1)
- STATIONARY ARMOR TARGET
- ELECTRICAL MANHOLES
- EXISTING BUILDINGS

PROPOSED LEGEND

- CV-1, JV-1, CC-1, JC-1 — SAT, SIT
- OLD IMPACT AREA
- OLD IMPACT BUFFER ZONE AREA
- TANK TRAILS
- PRIMARY TARGET SERVICE ROAD
- 266 FINISHED GRADING
- SECONDARY TARGET SERVICE ROADS
- CM-1, JM-1 — AMTC
- C-34 DRAINAGE PIPE w/ PIPE NO.
- C4-B, J4-B — DEFILADE
- C-100 CURVE NUMBER
- SWALE
- POWER CENTER (PC1A, PJ1A)
- CENTRAL AAR BUILDING — BUILDINGS
- CONCRETE TURNING PADS
- C-28 TURN PAD NUMBER
- B-30 SOIL BORING
- FC-1 CAMERAS
- CL-1 RANGE LIMIT MARKER
- TP-3 TEST PITS
- CT-1, JT-1 TRENCH
- EXISTING TARGET DEMOLITION
- FLAG POLE

STATE OF TEXAS
E. LAMAR FAULK
86158
LICENSED
PROFESSIONAL ENGINEER

THE SEAL APPEARING ON THIS DOCUMENT WAS AUTHORIZED BY E. LAMAR FAULK ON AUGUST 8, 2001

N

GRAPHIC SCALE
12 6 0 6 12
SCALE: 1:600

US Army Corps of Engineers
FORT WORTH DISTRICT

POLYENGINEERING, INC.
ENGINEERS AND ARCHITECTS
POLYENGINEERING, INC.
1936 Headland Avenue
Dothan, Alabama 36303
(334) 793-6700 (voice)
(334) 793-8015 (fax)

Mark	Description	Date	Appr.
15	REVISE SECONDARY TARGET SERVICE ROAD. ADDED SEAL.	AUG 01	ELF

Date: 13 June 2001 | Rev.
Sol No. DACA63-01-B-0007
Contr No. DACA63-01-C-0016
Designed by: Rebecca S. Hand
Dwn by: J. Peaden | Ckd by: M. Dixon
Reviewed by: Scott Faulk
Submitted by: E. Lamar Faulk
File name:
Plot date:
Plot scale: 1:600

U.S. ARMY ENGINEER DISTRICT
CORPS OF ENGINEERS
FORT WORTH, TEXAS

POLYENGINEERING, INC.
ENGINEERS & ARCHITECTS
DOTHAN, ALABAMA

FORT HOOD, TEXAS
DIGITAL MULTI-PURPOSE RANGE COMPLEX
PN 51915
FY 01
RANGE PLAN SHEET

Sheet reference number:
CS-120
Sheet of

Contr No. DACA63-01-C-0016

00687010

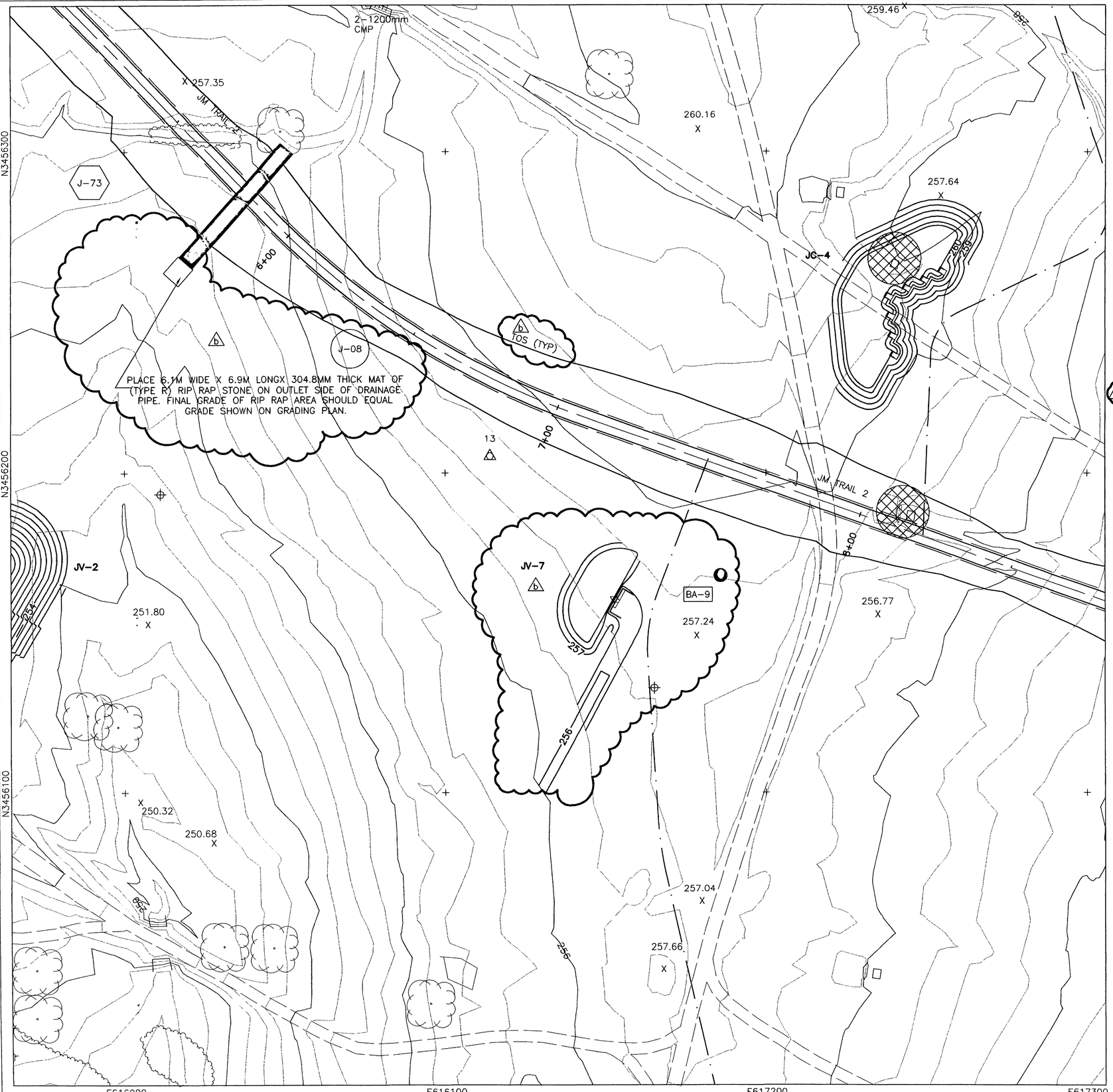

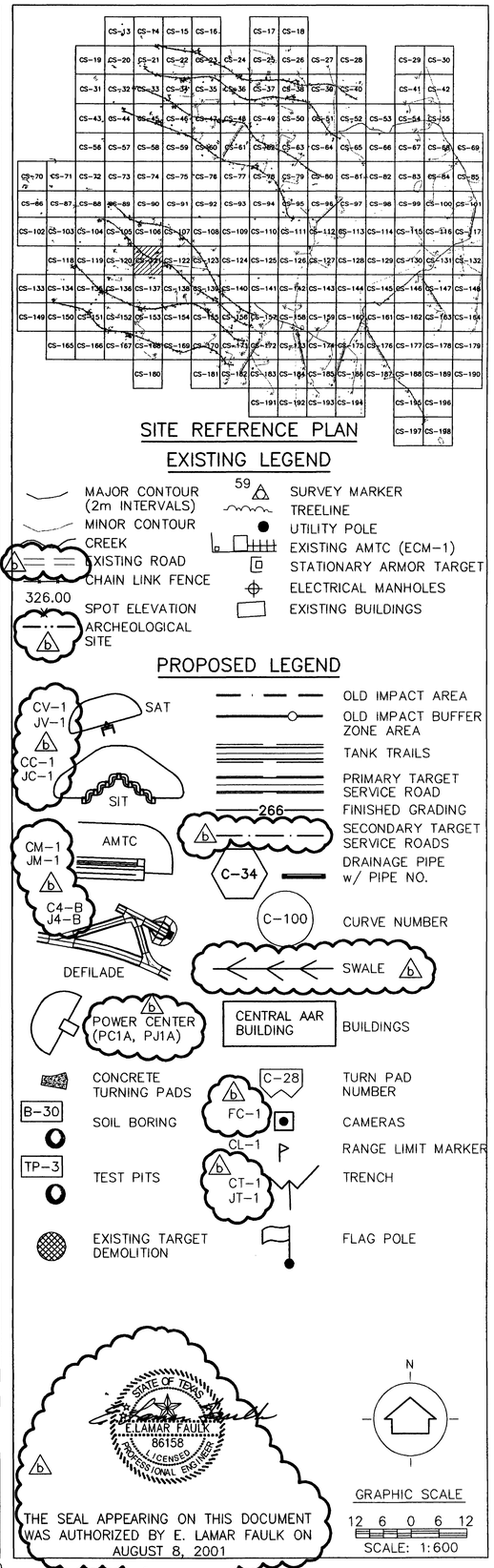

US Army Corps of Engineers
FORT WORTH DISTRICT

POLYENGINEERING, INC.
ENGINEERS AND ARCHITECTS
1906 Headland Avenue
Dothan, Alabama 36303
(334) 793-4700 (voice)
(334) 793-8018 (fax)

No.	Mark	Description	Date	Appr.
1	A	REVISED TARGET GRADING TITLE BLOCK EDIT, ADD RIP RAP, TOE OF SLOPE, REVISED LEGEND, ADDED SEAL	AUG 01	ELF

Designed by: Rebecca S. Hand
Date: June 2001
Rev.
Drn. by: J. Peaden
Ckd by: M. Dixon
Sol No. DACA63-01-B-0007
Reviewed by: Scott Faulk
Contr No. DACA63-01-C-0016
Submitted by: E. Lamar Faulk
File name:
Release:
Plot scale: 1:600

U.S. ARMY ENGINEER DISTRICT
CORPS OF ENGINEERS
FORT WORTH, TEXAS

POLYENGINEERING, INC.
ENGINEERS & ARCHITECTS
DOTHAN, ALABAMA

FORT HOOD, TEXAS
DIGITAL MULTI-PURPOSE RANGE COMPLEX
PN 51915 (IMPRO) FY 01

RANGE PLAN SHEET

Sheet reference number:
CS-121
Sheet of

Contr No. DACA63-01-C-0016

00687830

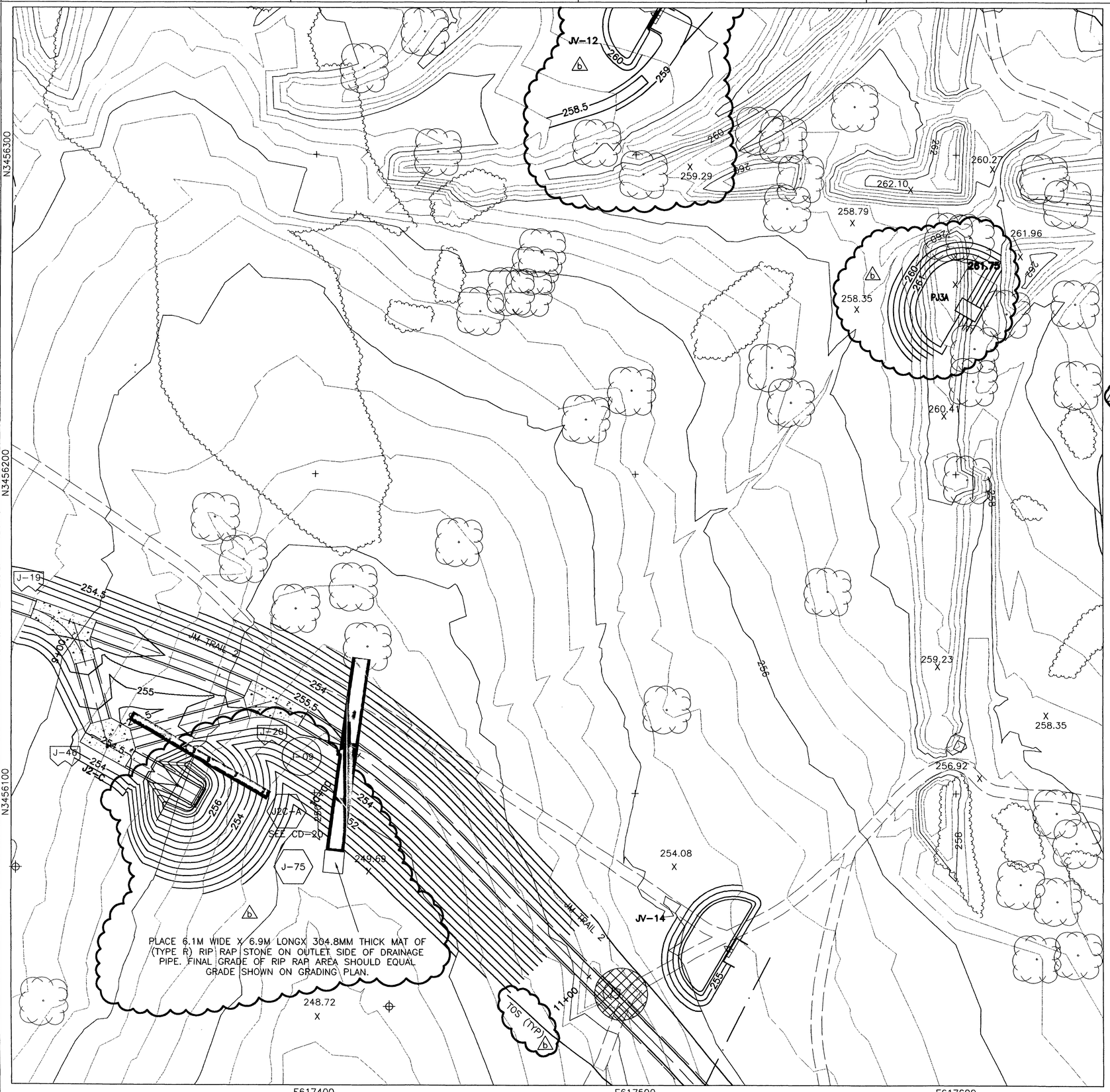

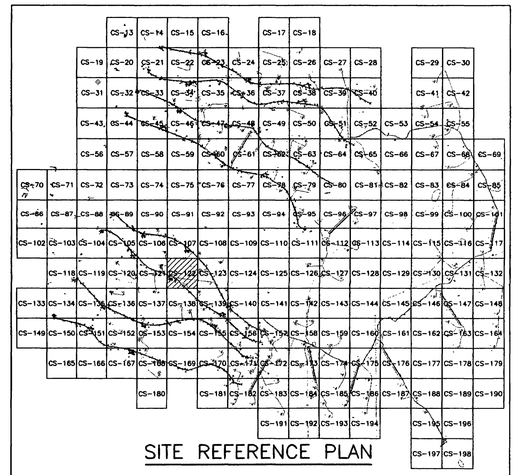

SITE REFERENCE PLAN

EXISTING LEGEND

- MAJOR CONTOUR (2m INTERVALS)
- MINOR CONTOUR
- CREEK
- EXISTING ROAD
- CHAIN LINK FENCE
- 326.00 SPOT ELEVATION
- ARCHEOLOGICAL SITE
- 59 SURVEY MARKER
- TREELINE
- UTILITY POLE
- EXISTING AMTC (ECM-1)
- STATIONARY ARMOR TARGET
- ELECTRICAL MANHOLES
- EXISTING BUILDINGS

PROPOSED LEGEND

- CV-1 JV-1 SAT
- CC-1 JC-1 SIT
- CM-1 JM-1 AMTC
- C4-B J4-B DEFILADE
- OLD IMPACT AREA
- OLD IMPACT BUFFER ZONE AREA
- TANK TRAILS
- PRIMARY TARGET SERVICE ROAD
- 266 FINISHED GRADING
- SECONDARY TARGET SERVICE ROADS
- C-34 DRAINAGE PIPE w/ PIPE NO.
- C-100 CURVE NUMBER
- SWALE
- POWER CENTER (PC1A, PJ1A)
- CENTRAL AAR BUILDING — BUILDINGS
- CONCRETE TURNING PADS
- B-30 SOIL BORING
- TP-3 TEST PITS
- EXISTING TARGET DEMOLITION
- C-28 TURN PAD NUMBER
- FC-1 CAMERAS
- CL-1 RANGE LIMIT MARKER
- CT-1 JT-1 TRENCH
- FLAG POLE

STATE OF TEXAS — E. LAMAR FAULK — 86158 — LICENSED — PROFESSIONAL ENGINEER

THE SEAL APPEARING ON THIS DOCUMENT WAS AUTHORIZED BY E. LAMAR FAULK ON AUGUST 8, 2001

N

GRAPHIC SCALE
12 6 0 6 12
SCALE: 1:600

US Army Corps of Engineers
FORT WORTH DISTRICT

POLYENGINEERING, INC.
ENGINEERS AND ARCHITECTS
1956 Headland Avenue
Dothan, Alabama 36303
(334) 793-4700 (voice)
(334) 793-8016 (fax)

Mark	Description	Date	Appr.
A	ADDED TOE OF SLOPE, REVISED LEGEND, ADDED SEAL, REV. TARGET GRADING	AUG 01	ELF
B	ADDED POWER CENTER AND DEFILADE GRADING,TITLE BLOCK EDIT, ADD RIP RAP		

Designed by: Rebecca S. Hand
Dwn by: J. Peeden
Ckd by: M. Dixon
Reviewed by: Scott Faulk
Submitted by: E. Lamar Faulk
Date: 13 June 2001
Rev.
Sol No. DAC63-01-B-0003
Contr No. DAC63-01-C-0016
File name:
Plot date:
Plot scale: 1:600

U.S. ARMY ENGINEER DISTRICT
CORPS OF ENGINEERS
FORT WORTH, TEXAS

POLYENGINEERING, INC.
ENGINEERS & ARCHITECTS
DOTHAN, ALABAMA

FORT HOOD, TEXAS
DIGITAL MULTI-PURPOSE RANGE COMPLEX (DMPRC)
PN 51915
FY 01

RANGE PLAN SHEET

Sheet reference number:
CS-122
Sheet of

Contr No. DAC63-01-C-0016

00687610

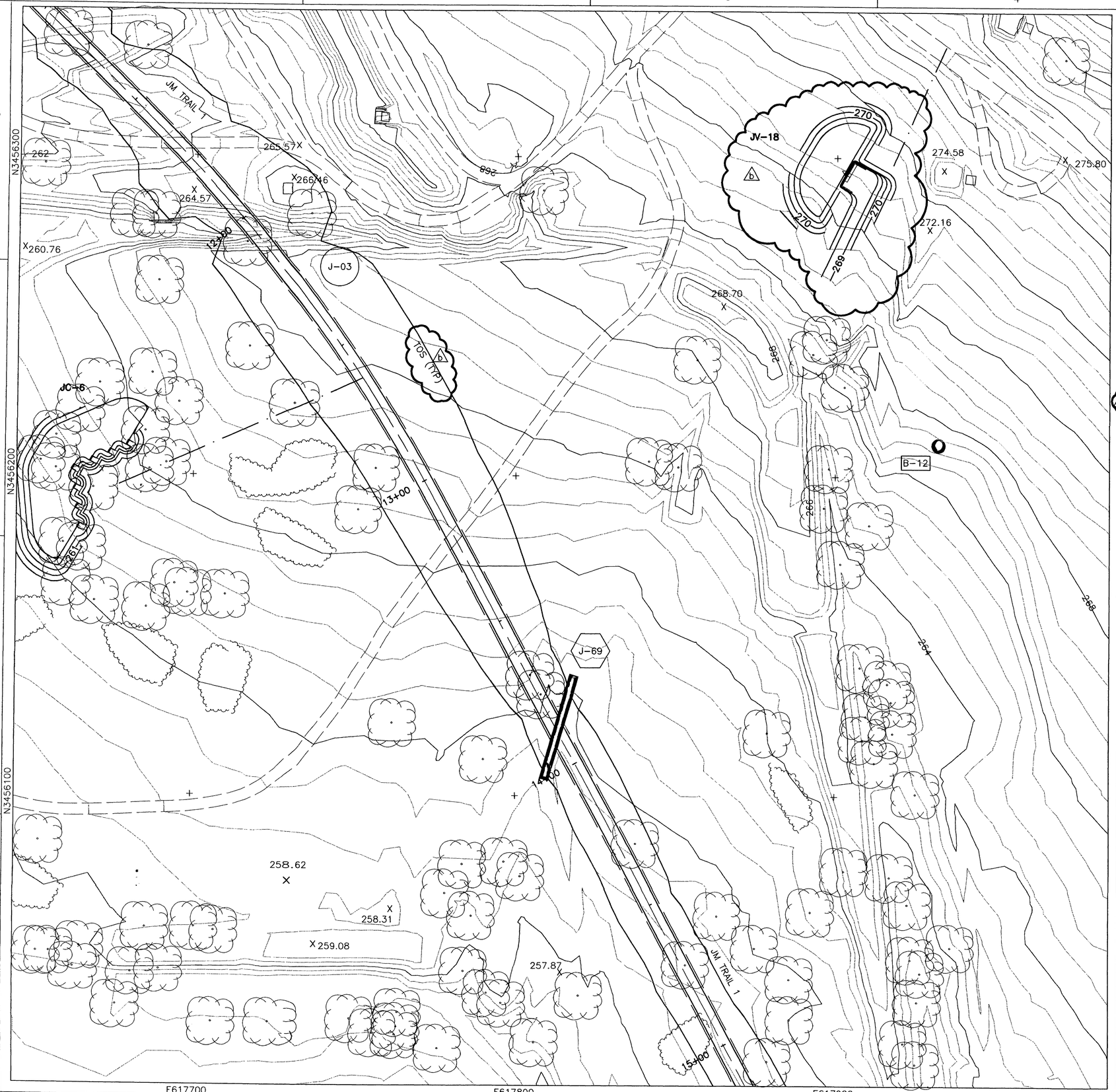

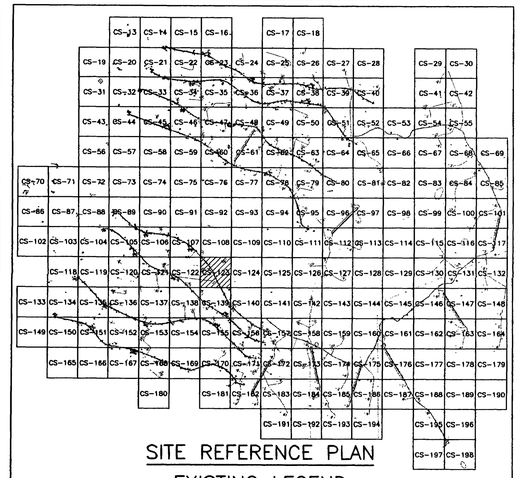

SITE REFERENCE PLAN

EXISTING LEGEND

- MAJOR CONTOUR (2m INTERVALS)
- MINOR CONTOUR
- CREEK
- EXISTING ROAD
- CHAIN LINK FENCE
- 326.00 SPOT ELEVATION
- ARCHEOLOGICAL SITE
- 59 SURVEY MARKER
- TREELINE
- UTILITY POLE
- EXISTING AMTC (ECM-1)
- STATIONARY ARMOR TARGET
- ELECTRICAL MANHOLES
- EXISTING BUILDINGS

PROPOSED LEGEND

- CV-1, JV-1, CC-1, JC-1 — SAT, SIT
- OLD IMPACT AREA
- OLD IMPACT BUFFER ZONE AREA
- TANK TRAILS
- PRIMARY TARGET SERVICE ROAD
- 266 FINISHED GRADING
- SECONDARY TARGET SERVICE ROADS
- CM-1, JM-1 — AMTC
- C-34 DRAINAGE PIPE w/ PIPE NO.
- C4-B, J4-B — DEFILADE
- C-100 CURVE NUMBER
- SWALE
- POWER CENTER (PC1A, PJ1A)
- CENTRAL AAR BUILDING — BUILDINGS
- CONCRETE TURNING PADS
- C-28 TURN PAD NUMBER
- B-30 SOIL BORING
- FC-1 CAMERAS
- CL-1 RANGE LIMIT MARKER
- TP-3 TEST PITS
- CT-1, JT-1 TRENCH
- EXISTING TARGET DEMOLITION
- FLAG POLE

STATE OF TEXAS — E. LAMAR FAULK — 86158 — LICENSED PROFESSIONAL ENGINEER

THE SEAL APPEARING ON THIS DOCUMENT WAS AUTHORIZED BY E. LAMAR FAULK ON AUGUST 8, 2001

N

GRAPHIC SCALE

12 6 0 6 12

SCALE: 1:600

US Army Corps of Engineers
FORT WORTH DISTRICT

POLYENGINEERING, INC.
ENGINEERS AND ARCHITECTS

POLYENGINEERING, INC.
1925 Headland Avenue
Dothan, Alabama 36303
(334) 793-2700 (voice)
(334) 793-9015 (fax)

Mark	Description	Date	Appr.
15	TITLE BLOCK EDIT, ADD TOE OF SLOPE, REVISED LEGEND & TARGET GRADING, ADD SEAL	AUG 01	ELF

Designed by: Rebecca S. Hand
Dwn by: J. Peeden
Ckd by: M. Dixon
Reviewed by: Scott Faulk
Submitted by: E. Lamar Faulk
Date: 19 June 2001
Rev.
Sol No. DAC63-01-B-0007
Contr No. DAC63-01-C-0016
File name:
Plot date:
Plot scale: 1:600

U.S. ARMY ENGINEER DISTRICT
CORPS OF ENGINEERS
FORT WORTH, TEXAS

POLYENGINEERING, INC.
ENGINEERS & ARCHITECTS
DOTHAN, ALABAMA

FORT HOOD, TEXAS
DIGITAL MULTI-PURPOSE RANGE COMPLEX (DMPRC)
PN 51915
FY 01

RANGE PLAN SHEET

Sheet reference number:
CS-123
Sheet of

Contr No. DAC63-01-C-0016

00687850

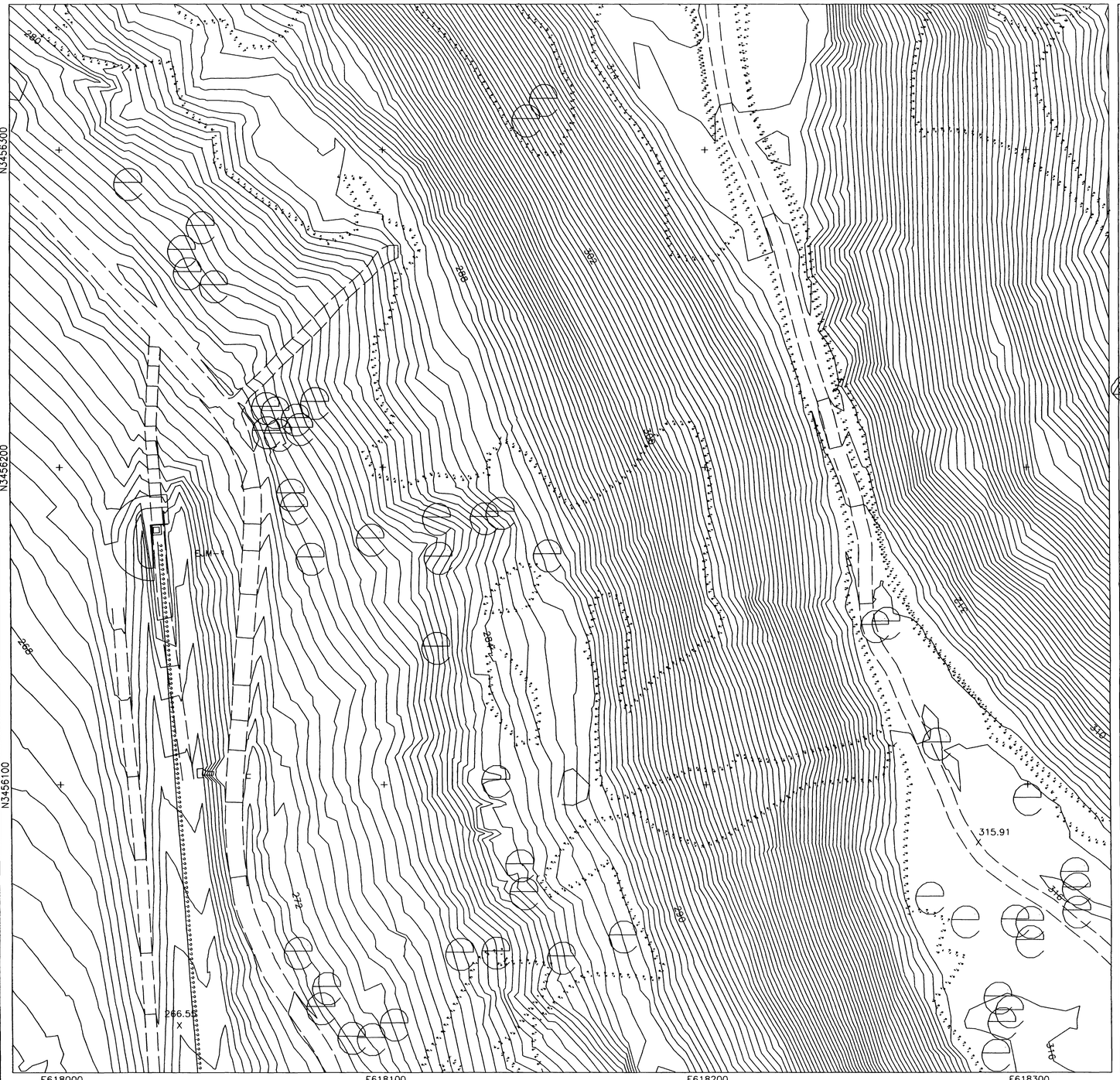

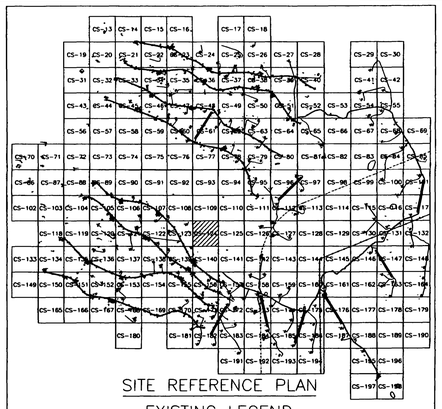

SITE REFERENCE PLAN

EXISTING LEGEND

- MAJOR CONTOUR (2m INTERVALS)
- MINOR CONTOUR
- CREEK
- EXISTING ROAD
- CHAIN LINK FENCE
- 326.00 SPOT ELEVATION
- ARCHEOLOGICAL SITE
- 59 SURVEY MARKER
- TREELINE
- UTILITY POLE
- EXISTING AMTC (ECM-1)
- STATIONARY ARMOR TARGET
- ELECTRICAL MANHOLES
- EXISTING BUILDINGS

PROPOSED LEGEND

- CV-1 JV-1 SAT
- CC-1 JC-1 SIT
- CM-1 JM-1 AMTC
- C4-B J4-B DEFILADE
- POWER CENTER (PC1A, PJ1A)
- CONCRETE TURNING PADS
- B-30 SOIL BORING
- TP-3 TEST PITS
- EXISTING TARGET DEMOLITION
- OLD IMPACT AREA
- OLD IMPACT BUFFER ZONE AREA
- TANK TRAILS
- PRIMARY TARGET SERVICE ROAD
- FINISHED GRADING
- 266 SECONDARY TARGET SERVICE ROADS
- C-34 DRAINAGE PIPE w/ PIPE NO.
- C-100 CURVE NUMBER
- SWALE
- CENTRAL AAR BUILDING BUILDINGS
- C-28 TURN PAD NUMBER
- FC-1 CAMERAS
- CL-1 RANGE LIMIT MARKER
- CT-1 JT-1 TRENCH
- FLAG POLE

STATE OF TEXAS
E. LAMAR FAULK
86158
LICENSED
PROFESSIONAL ENGINEER

THE SEAL APPEARING ON THIS DOCUMENT WAS AUTHORIZED BY E. LAMAR FAULK ON AUGUST 8, 2001

N

GRAPHIC SCALE
12 6 0 6 12
SCALE: 1:600

US Army Corps of Engineers
FORT WORTH DISTRICT

POLYENGINEERING, INC.
1806 Boulevard Avenue
Dothan, Alabama 36301
(334) 793-1701 (voice)
(334) 793-9016 (fax)

Rev.	Description	Date	By
A	TITLE BLOCK EDIT, REVISED LEGEND, ADDED SEAL	AUG 01 2005	ELF

Designed by: Reviewed by: Hood
Dwn by: J. Peeden
Ckd by: M. Dixon
Reviewed by: Scott Faulk
Submitted by: E. Lamar Faulk
Date: 19 June 2001
Sol No. DACA63-01-B-0007
Contr No. DACA63-01-C-0016
File name:
Plot date:
Plot scale: 1:600
Rev: D

U.S. ARMY ENGINEER DISTRICT
CORPS OF ENGINEERS
FORT WORTH, TEXAS

POLYENGINEERING, INC.
ENGINEERS & ARCHITECTS
DOTHAN, ALABAMA

FORT HOOD, TEXAS
DIGITAL MULTI-PURPOSE RANGE COMPLEX
PN 51915
FY 01

RANGE PLAN SHEET

Sheet reference number:
CS-124
Sheet of

Contr No. DACA63-01-C-0016

...ICS-124.dwg 8/11/2005 2:32:55 PM

00687060

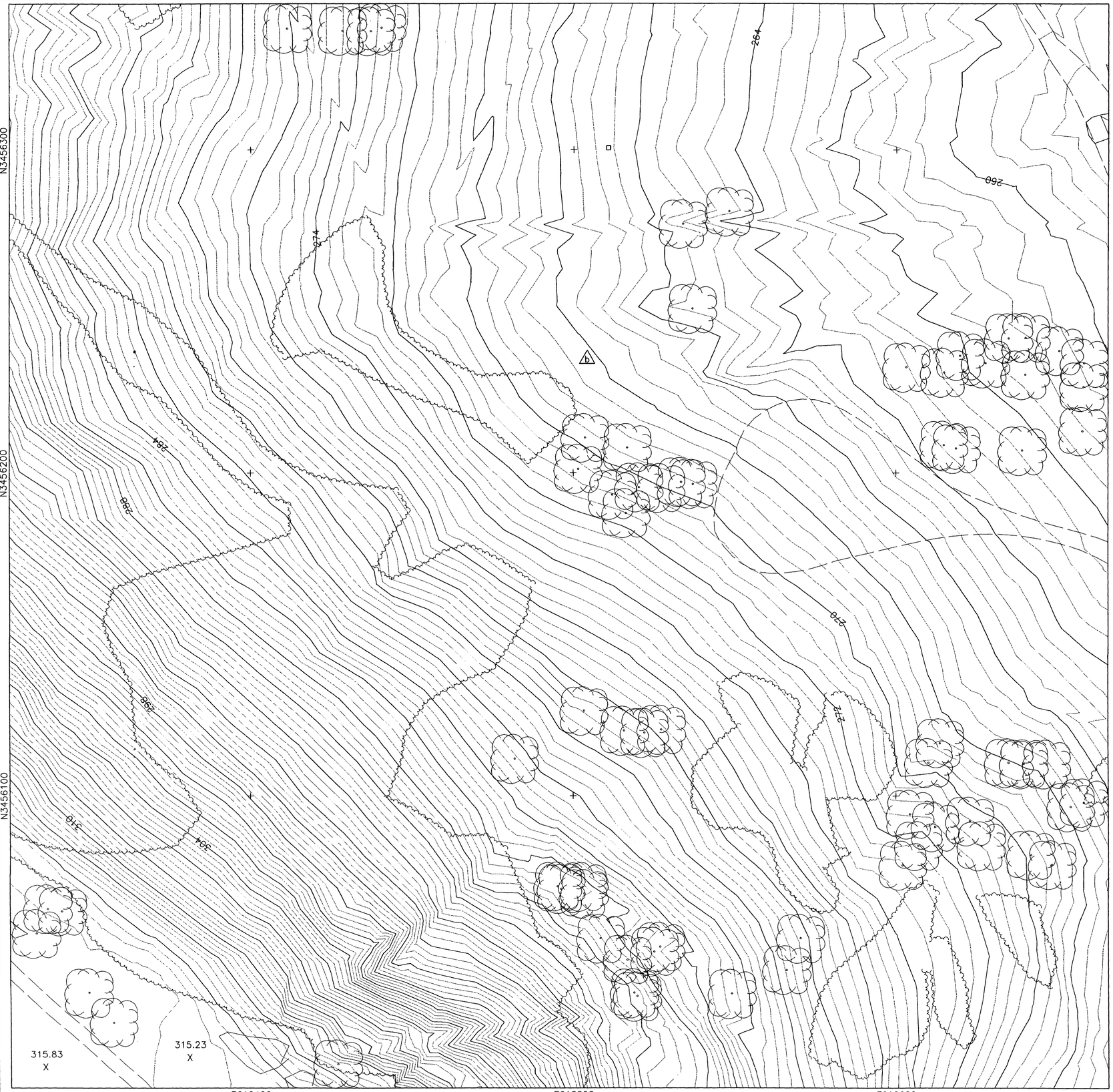

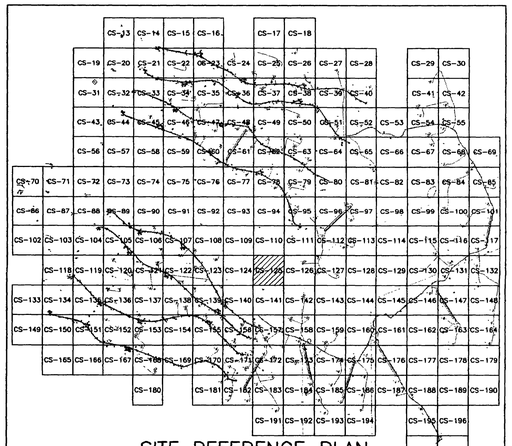

SITE REFERENCE PLAN

EXISTING LEGEND

- MAJOR CONTOUR (2m INTERVALS)
- MINOR CONTOUR
- CREEK
- EXISTING ROAD
- CHAIN LINK FENCE
- 326.00 X — SPOT ELEVATION
- ARCHEOLOGICAL SITE
- 59 — SURVEY MARKER
- TREELINE
- UTILITY POLE
- EXISTING AMTC (ECM-1)
- STATIONARY ARMOR TARGET
- ELECTRICAL MANHOLES
- EXISTING BUILDINGS

PROPOSED LEGEND

- CV-1, JV-1 — SAT
- CC-1, JC-1 — SIT
- CM-1, JM-1 — AMTC
- C4-B, J4-B — DEFILADE
- POWER CENTER (PC1A, PJ1A)
- CONCRETE TURNING PADS
- B-30 — SOIL BORING
- TP-3 — TEST PITS
- EXISTING TARGET DEMOLITION
- OLD IMPACT AREA
- OLD IMPACT BUFFER ZONE AREA
- TANK TRAILS
- PRIMARY TARGET SERVICE ROAD
- 266 — FINISHED GRADING
- SECONDARY TARGET SERVICE ROADS
- C-34 — DRAINAGE PIPE w/ PIPE NO.
- C-100 — CURVE NUMBER
- SWALE
- CENTRAL AAR BUILDING — BUILDINGS
- C-28 — TURN PAD NUMBER
- FC-1 — CAMERAS
- CL-1 — RANGE LIMIT MARKER
- CT-1, JT-1 — TRENCH
- FLAG POLE

STATE OF TEXAS
E. LAMAR FAULK
86158
LICENSED
PROFESSIONAL ENGINEER

THE SEAL APPEARING ON THIS DOCUMENT WAS AUTHORIZED BY E. LAMAR FAULK ON AUGUST 8, 2001

N

GRAPHIC SCALE
12 6 0 6 12
SCALE: 1:600

US Army Corps of Engineers
FORT WORTH DISTRICT

POLYENGINEERING, INC.
ENGINEERS AND ARCHITECTS
1025 Headland Avenue
Dothan, Alabama 36303
(334) 794-4700 (voice)
(334) 794-8045 (fax)

Mark	Description	Date	Appr.
A	ADDED SHEET	AUG 01	ELF

Rev.

Date: 19 JUNE 2001
Sol No. DACA63-01-B-0007
Contr No. DACA63-01-C-0016
File name:
Plot date:
Plot scale: 1:600

Designed by: Rebecca S. Hand
Dwn by: J. Peeden
Ckd by: M. Dixon
Reviewed by: Scott Faulk
Submitted by: ELF
E. Lamar Faulk

U.S. ARMY ENGINEER DISTRICT
CORPS OF ENGINEERS
FORT WORTH, TEXAS

POLYENGINEERING, INC.
ENGINEERS & ARCHITECTS
DOTHAN, ALABAMA

FORT HOOD, TEXAS
DIGITAL MULTI-PURPOSE RANGE COMPLEX (DMPRC)
PN 51915 FY 01

RANGE PLAN SHEET

Sheet reference number:
CS-125
Sheet of

Contr No. DACA63-01-C-0016

20687070

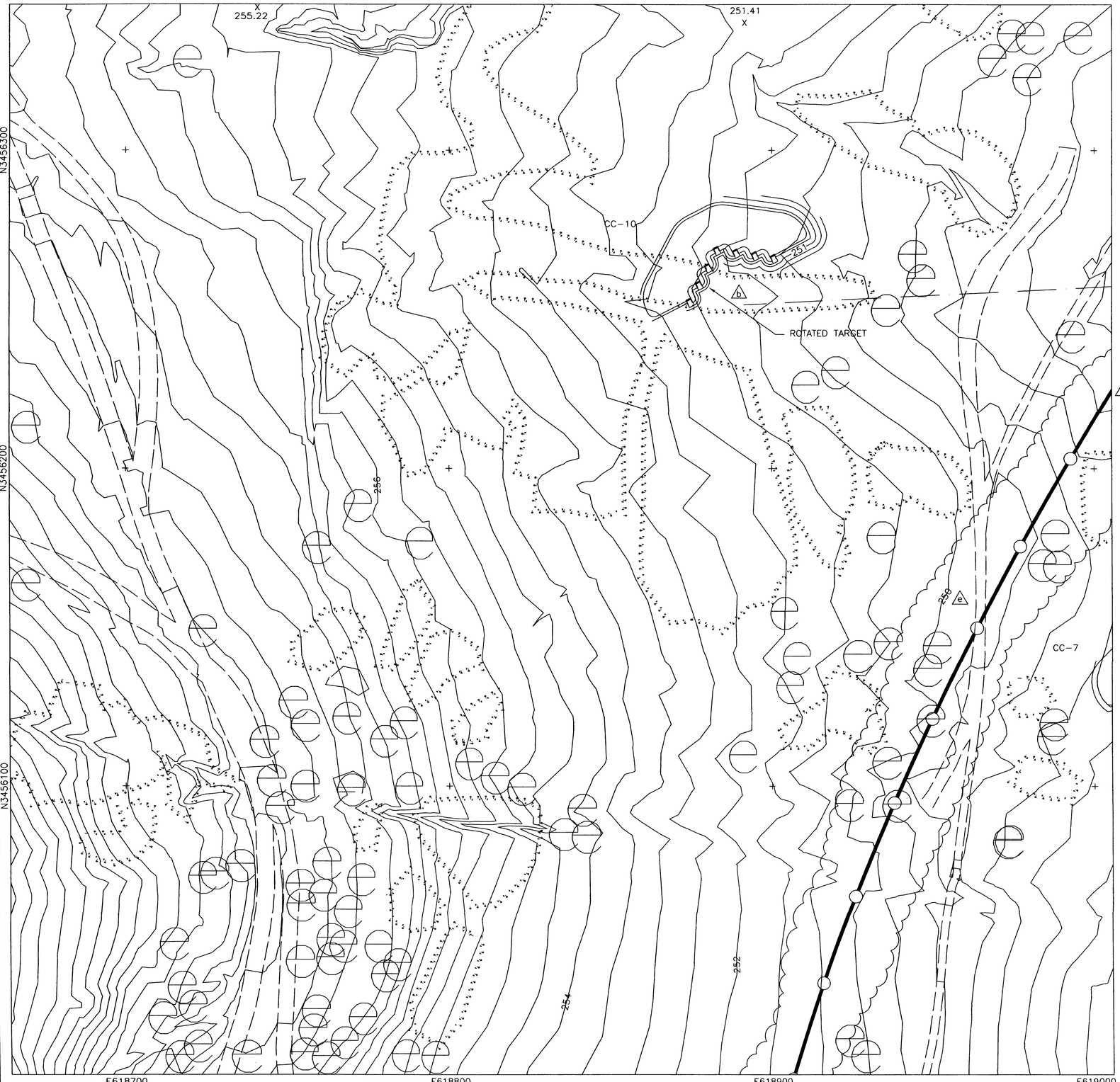

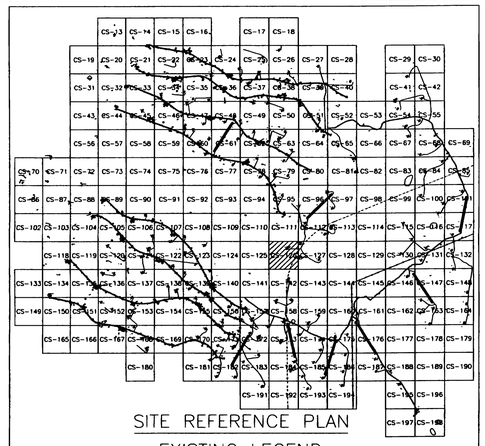

SITE REFERENCE PLAN

EXISTING LEGEND

- MAJOR CONTOUR (2m INTERVALS)
- MINOR CONTOUR
- CREEK
- EXISTING ROAD
- CHAIN LINK FENCE
- 326.00 X SPOT ELEVATION
- ARCHEOLOGICAL SITE
- 59 SURVEY MARKER
- TREELINE
- UTILITY POLE
- EXISTING AMTC (ECM-1)
- STATIONARY ARMOR TARGET
- ELECTRICAL MANHOLES
- EXISTING BUILDINGS

PROPOSED LEGEND

- CV-1 JV-1 SAT
- CC-1 JC-1 SIT
- CM-1 JM-1 AMTC
- C4-B J4-B DEFILADE
- POWER CENTER (PC1A, PJ1A)
- CONCRETE TURNING PADS
- B-30 SOIL BORING
- TP-3 TEST PITS
- EXISTING TARGET DEMOLITION
- OLD IMPACT AREA
- OLD IMPACT BUFFER ZONE AREA
- TANK TRAILS
- PRIMARY TARGET SERVICE ROAD
- 266 FINISHED GRADING
- SECONDARY TARGET SERVICE ROADS
- C-34 DRAINAGE PIPE w/ PIPE NO.
- C-100 CURVE NUMBER
- SWALE
- CENTRAL AAR BUILDING — BUILDINGS
- C-28 TURN PAD NUMBER
- FC-1 CAMERAS
- CL-1 RANGE LIMIT MARKER
- CT-1 JT-1 TRENCH
- FLAG POLE

STATE OF TEXAS — E. LAMAR FAULK — 86158 — LICENSED PROFESSIONAL ENGINEER

THE SEAL APPEARING ON THIS DOCUMENT WAS AUTHORIZED BY E. LAMAR FAULK ON AUGUST 8, 2001

N

GRAPHIC SCALE

12 6 0 6 12

SCALE: 1:600

US Army Corps of Engineers
FORT WORTH DISTRICT

POLYENGINEERING, INC.
1820 Headland Avenue
Dothan, Alabama 36303
(334) 793-4700 (voice)
(334) 793-9015 (fax)

Mark	Description	Date	Appr.
A	REVISED IMPACT AREA LINETYPE	SEPT. 01	ELF
B	TITLE BLOCK EDIT, REVISED TARGET GRADING, REVISED LEGEND, ADDED SEAL	AUG. 01	ELF

Designed by: Rebecca S. Hand
Dwn by: J. Peaden
Ckd by: M. Dixon
Reviewed by: Scott Faulk
Submitted by: E. Lamar Faulk
Date: 19 June 2001
Sol No. DACA63-01-B-0007
Contr No. DACA63-01-C-0016
File name:
Plot date:
Plot scale: 1:600
Rev. B

U.S. ARMY ENGINEER DISTRICT
CORPS OF ENGINEERS
FORT WORTH, TEXAS

POLYENGINEERING, INC.
ENGINEERS & ARCHITECTS
DOTHAN, ALABAMA

DIGITAL MULTI-PURPOSE RANGE COMPLEX
FY 01
PN 51915
FORT HOOD, TEXAS

RANGE PLAN SHEET

Sheet reference number:
CS-126
Sheet of

Contr No. DACA63-01-C-0016

...\CS-126.dwg 8/11/2005 2:32:00 PM

00687060

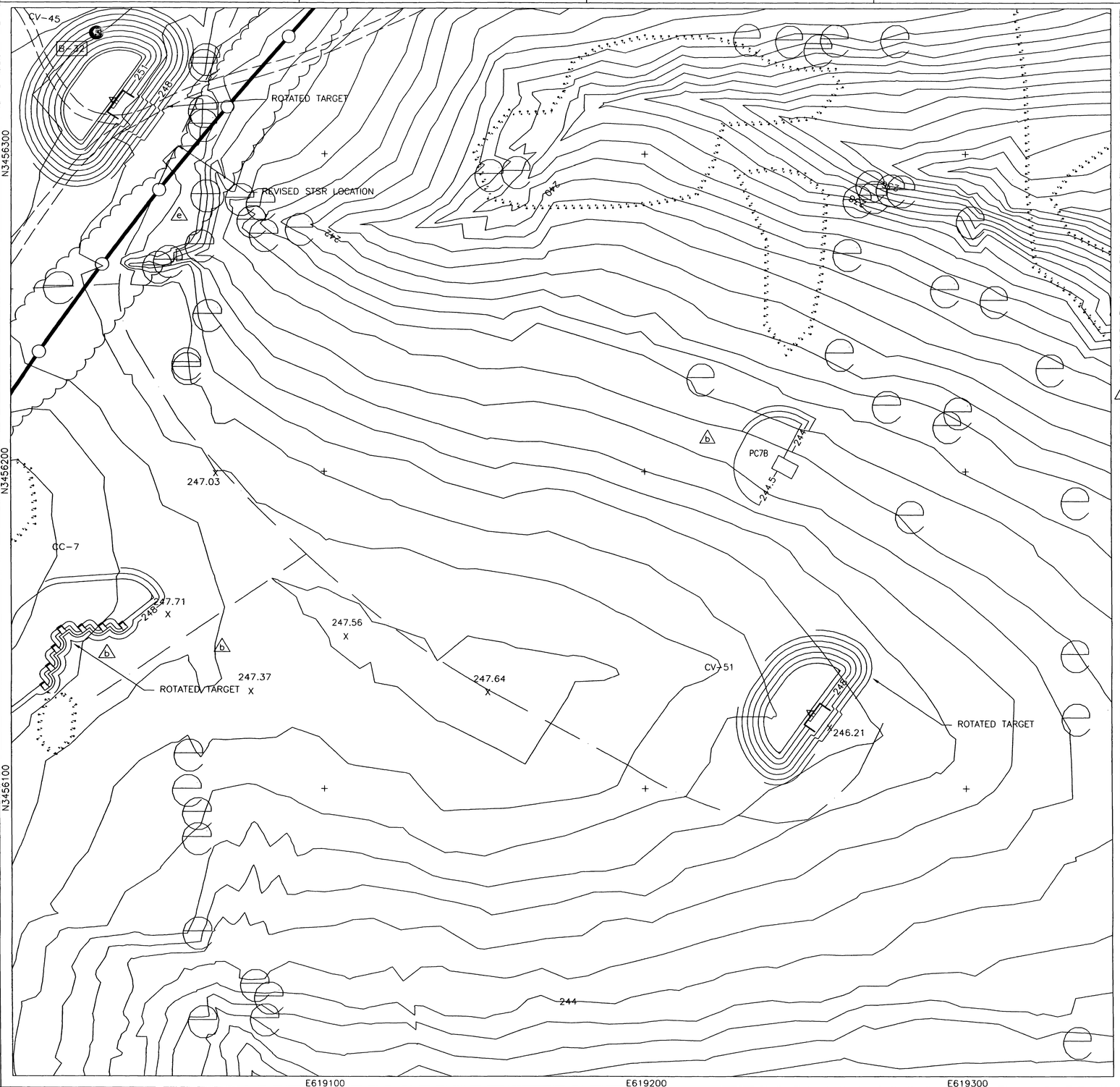

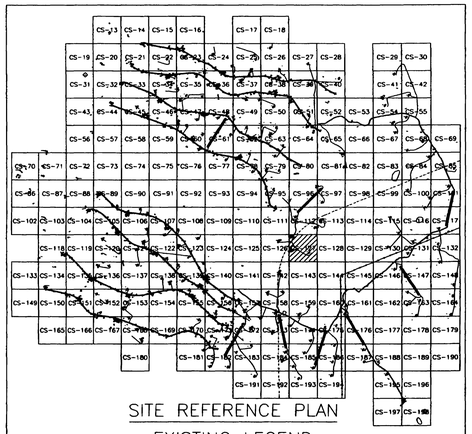

SITE REFERENCE PLAN

EXISTING LEGEND

- MAJOR CONTOUR (2m INTERVALS)
- MINOR CONTOUR
- CREEK
- EXISTING ROAD
- CHAIN LINK FENCE
- 326.00 X SPOT ELEVATION
- ARCHEOLOGICAL SITE
- 59 SURVEY MARKER
- TREELINE
- UTILITY POLE
- EXISTING AMTC (ECM-1)
- STATIONARY ARMOR TARGET
- ELECTRICAL MANHOLES
- EXISTING BUILDINGS

PROPOSED LEGEND

- CV-1 JV-1 SAT
- CC-1 JC-1 SIT
- CM-1 JM-1 AMTC
- C4-B J4-B DEFILADE
- POWER CENTER (PC1A, PJ1A)
- CONCRETE TURNING PADS
- B-30 SOIL BORING
- TP-3 TEST PITS
- EXISTING TARGET DEMOLITION
- OLD IMPACT AREA
- OLD IMPACT BUFFER ZONE AREA
- TANK TRAILS
- PRIMARY TARGET SERVICE ROAD
- 266 FINISHED GRADING
- SECONDARY TARGET SERVICE ROADS
- C-34 DRAINAGE PIPE w/ PIPE NO.
- C-100 CURVE NUMBER
- SWALE
- CENTRAL AAR BUILDING — BUILDINGS
- C-28 TURN PAD NUMBER
- FC-1 CAMERAS
- CL-1 RANGE LIMIT MARKER
- CT-1 JT-1 TRENCH
- FLAG POLE

STATE OF TEXAS — E. LAMAR FAULK — 86158 — LICENSED — PROFESSIONAL ENGINEER

THE SEAL APPEARING ON THIS DOCUMENT WAS AUTHORIZED BY E. LAMAR FAULK ON AUGUST 8, 2001

N

GRAPHIC SCALE

12 6 0 6 12

SCALE: 1:600

US Army Corps of Engineers
FORT WORTH DISTRICT

POLYENGINEERING, INC.
1550 Bradford Avenue
Dothan, Alabama 36303
(334) 792-4700 (voice)
(334) 792-8015 (fax)

Mark	Description	Date	Appr.
1	REVISED IMPACT AREA LINEWORK ADDED POWER CENTER GRADING, REMOVED NORTH-SOUTH SOLID LINE	SEPT 01	E.L.F.
0	TITLE BLOCK EDIT, REVISE TARGET GRADING, REVISED LEGEND, ADDED SEAL	AUG 01	E.L.F.

Designed by: Rebecca S. Hand
Dwn by: J. Peeden
Ckd by: M. Dixon
Reviewed by: Scott Fuller
Submitted by: E. Lamar Faulk
Date: 19 June 2001
Sol No. DACA63-01-B-0007
DACA63-01-C-0016
File name:
Plot date:
Plot scale: 1:600
Rev.

U.S. ARMY ENGINEER DISTRICT
CORPS OF ENGINEERS
FORT WORTH, TEXAS

POLYENGINEERING, INC.
ENGINEERS & ARCHITECTS
DOTHAN, ALABAMA

FORT HOOD, TEXAS
DIGITAL MULTI-PURPOSE RANGE COMPLEX (DMPRC)
PN 51915 FY 01

RANGE PLAN SHEET

Sheet reference number:
CS-127
Sheet of

Contr No. DACA63-01-C-0016

00687030

127.dwg 8/11/2005 2:30:28 PM

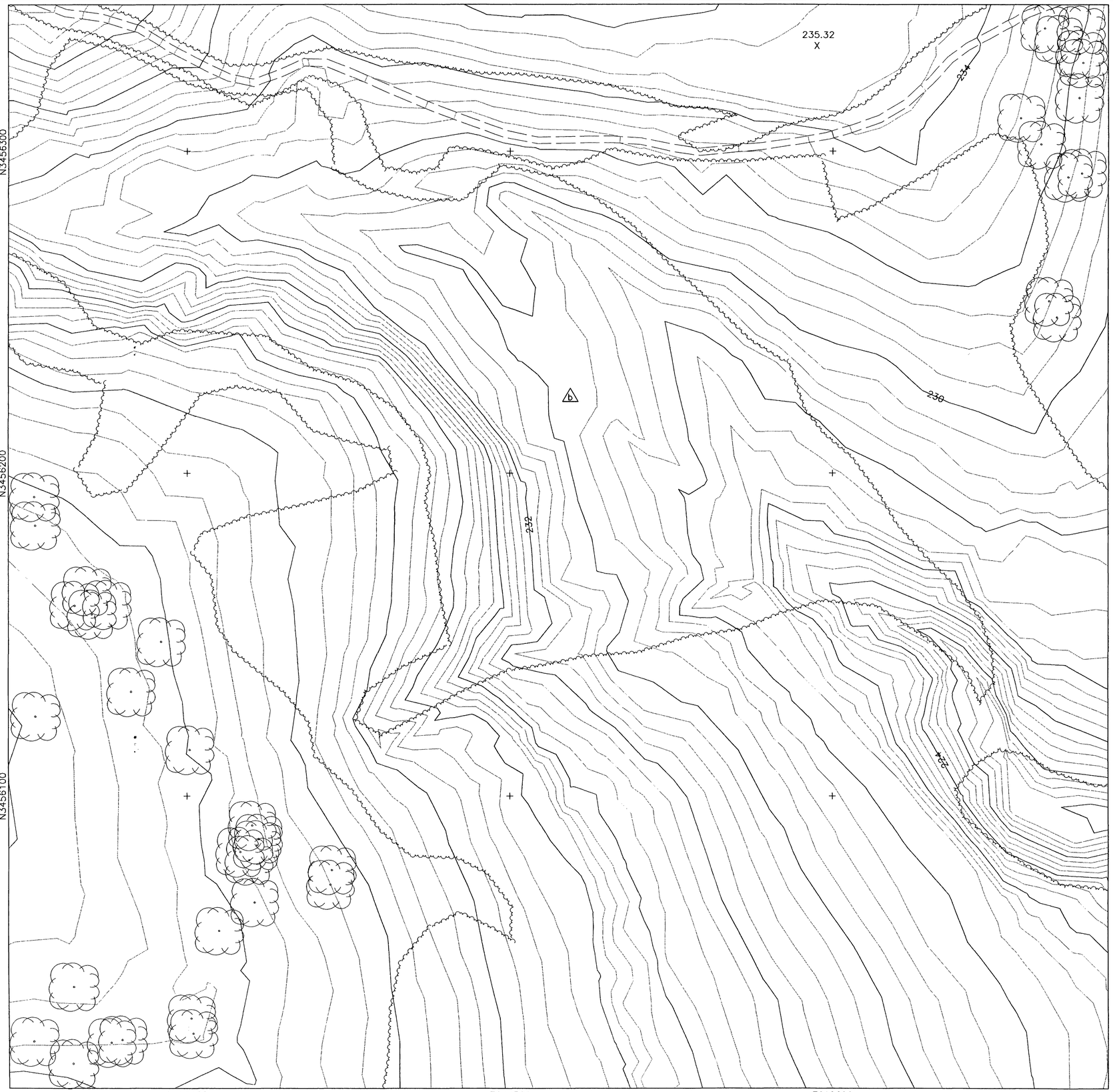

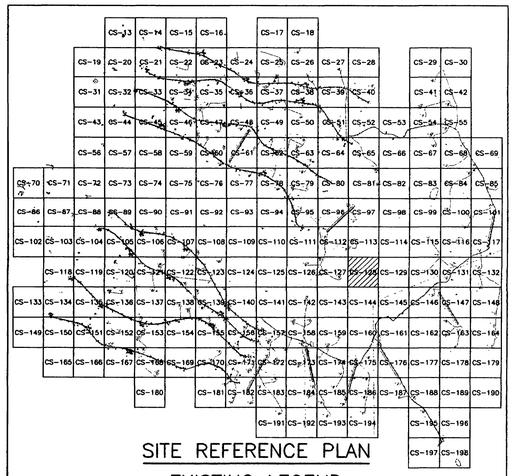

SITE REFERENCE PLAN

EXISTING LEGEND

- MAJOR CONTOUR (2m INTERVALS)
- MINOR CONTOUR
- CREEK
- EXISTING ROAD
- CHAIN LINK FENCE
- 326.00 X — SPOT ELEVATION
- ARCHEOLOGICAL SITE
- 59 — SURVEY MARKER
- TREELINE
- UTILITY POLE
- EXISTING AMTC (ECM-1)
- STATIONARY ARMOR TARGET
- ELECTRICAL MANHOLES
- EXISTING BUILDINGS

PROPOSED LEGEND

- CV-1, JV-1 — SAT
- CC-1, JC-1 — SIT
- CM-1, JM-1 — AMTC
- C4-B, J4-B — DEFILADE
- POWER CENTER (PC1A, PJ1A)
- CONCRETE TURNING PADS
- B-30 — SOIL BORING
- TP-3 — TEST PITS
- EXISTING TARGET DEMOLITION
- OLD IMPACT AREA
- OLD IMPACT BUFFER ZONE AREA
- TANK TRAILS
- PRIMARY TARGET SERVICE ROAD
- 266 — FINISHED GRADING
- SECONDARY TARGET SERVICE ROADS
- C-34 — DRAINAGE PIPE w/ PIPE NO.
- C-100 — CURVE NUMBER
- SWALE
- CENTRAL AAR BUILDING — BUILDINGS
- C-28 — TURN PAD NUMBER
- FC-1 — CAMERAS
- CL-1 — RANGE LIMIT MARKER
- CT-1, JT-1 — TRENCH
- FLAG POLE

STATE OF TEXAS
E. LAMAR FAULK
86158
LICENSED
PROFESSIONAL ENGINEER

THE SEAL APPEARING ON THIS DOCUMENT WAS AUTHORIZED BY E. LAMAR FAULK ON AUGUST 8, 2001

N

GRAPHIC SCALE
12 6 0 6 12
SCALE: 1:600

US Army Corps of Engineers
FORT WORTH DISTRICT

POLYENGINEERING, INC.
ENGINEERS AND ARCHITECTS
1025 Headland Avenue
Dothan, Alabama 36303
(334) 793-4700 (voice)
(334) 793-3015 (fax)

Mark	Description	Date	Appr.
1	ADDED SHEET	AUG 01	ELF

Date: 19 JUNE 2001
Rev.
Sol No. DACA63-01-B-0007
Contr No. DACA63-01-C-0016
File name:
Plot date:
Plot scale: 1:600

Designed by: Rebecca S. Hand
Dwn by: J. Peaden
Ckd by: M. Dixon
Reviewed by: Scott Faulk
Submitted by: E. Lamar Faulk

U.S. ARMY ENGINEER DISTRICT
CORPS OF ENGINEERS
FORT WORTH, TEXAS

POLYENGINEERING, INC.
ENGINEERS & ARCHITECTS
DOTHAN, ALABAMA

FORT HOOD, TEXAS
DIGITAL MULTI-PURPOSE RANGE COMPLEX (DMPRC)
PN 51915 FY 01

RANGE PLAN SHEET

Sheet reference number:
CS-128
Sheet of

Contr No. DACA63-01-C-0016

00687700

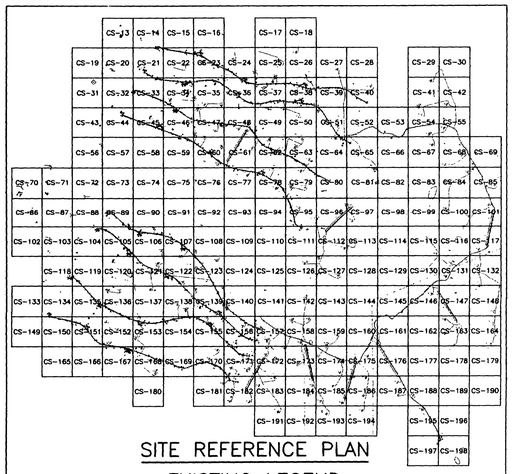

SITE REFERENCE PLAN

EXISTING LEGEND

- MAJOR CONTOUR (2m INTERVALS)
- MINOR CONTOUR
- CREEK
- EXISTING ROAD
- CHAIN LINK FENCE
- 326.00 X SPOT ELEVATION
- ARCHEOLOGICAL SITE
- 59 SURVEY MARKER
- TREELINE
- UTILITY POLE
- EXISTING AMTC (ECM-1)
- STATIONARY ARMOR TARGET
- ELECTRICAL MANHOLES
- EXISTING BUILDINGS

PROPOSED LEGEND

- CV-1 JV-1 SAT
- CC-1 JC-1 SIT
- CM-1 JM-1 AMTC
- C4-B J4-B DEFILADE
- POWER CENTER (PC1A, PJ1A)
- CONCRETE TURNING PADS
- B-30 SOIL BORING
- TP-3 TEST PITS
- EXISTING TARGET DEMOLITION
- OLD IMPACT AREA
- OLD IMPACT BUFFER ZONE AREA
- TANK TRAILS
- PRIMARY TARGET SERVICE ROAD
- 266 FINISHED GRADING
- SECONDARY TARGET SERVICE ROADS
- C-34 DRAINAGE PIPE w/ PIPE NO.
- C-100 CURVE NUMBER
- SWALE
- CENTRAL AAR BUILDING BUILDINGS
- C-28 TURN PAD NUMBER
- FC-1 CAMERAS
- CL-1 RANGE LIMIT MARKER
- CT-1 JT-1 TRENCH
- FLAG POLE

STATE OF TEXAS
E. LAMAR FAULK
86158
LICENSED
PROFESSIONAL ENGINEER

THE SEAL APPEARING ON THIS DOCUMENT WAS AUTHORIZED BY E. LAMAR FAULK ON AUGUST 8, 2001

N

GRAPHIC SCALE
12 6 0 6 12
SCALE: 1:600

US Army Corps of Engineers
FORT WORTH DISTRICT

POLYENGINEERING, INC.
ENGINEERS AND ARCHITECTS
POLYENGINEERING, INC.
1995 Headland Avenue
Dothan, Alabama 36303
(334) 793-4700 (voice)
(334) 793-8015 (fax)

Mark	Description	Date	Appr.
1	ADDED SHEET	AUG 01	ELF

Designed by: Rebecca S. Hand
Dwn by: J. Peeden
Ckd by: M. Dixon
Reviewed by: Scott Faulk
Submitted by: E. Lamar Faulk
Date: 19 JUNE 2001
Rev.
Sol No. DACA63-01-B-0007
Contr No. DACA63-01-C-0016
File name:
Plot date:
Plot scale: 1:600

U.S. ARMY ENGINEER DISTRICT
CORPS OF ENGINEERS
FORT WORTH, TEXAS

POLYENGINEERING, INC.
ENGINEERS & ARCHITECTS
DOTHAN, ALABAMA

FORT HOOD, TEXAS
DIGITAL MULTI-PURPOSE RANGE COMPLEX
PN 51915 FY 01
RANGE PLAN SHEET

Sheet reference number:
CS-129
Sheet of

Contr No. DACA63-01-C-0016

00687710

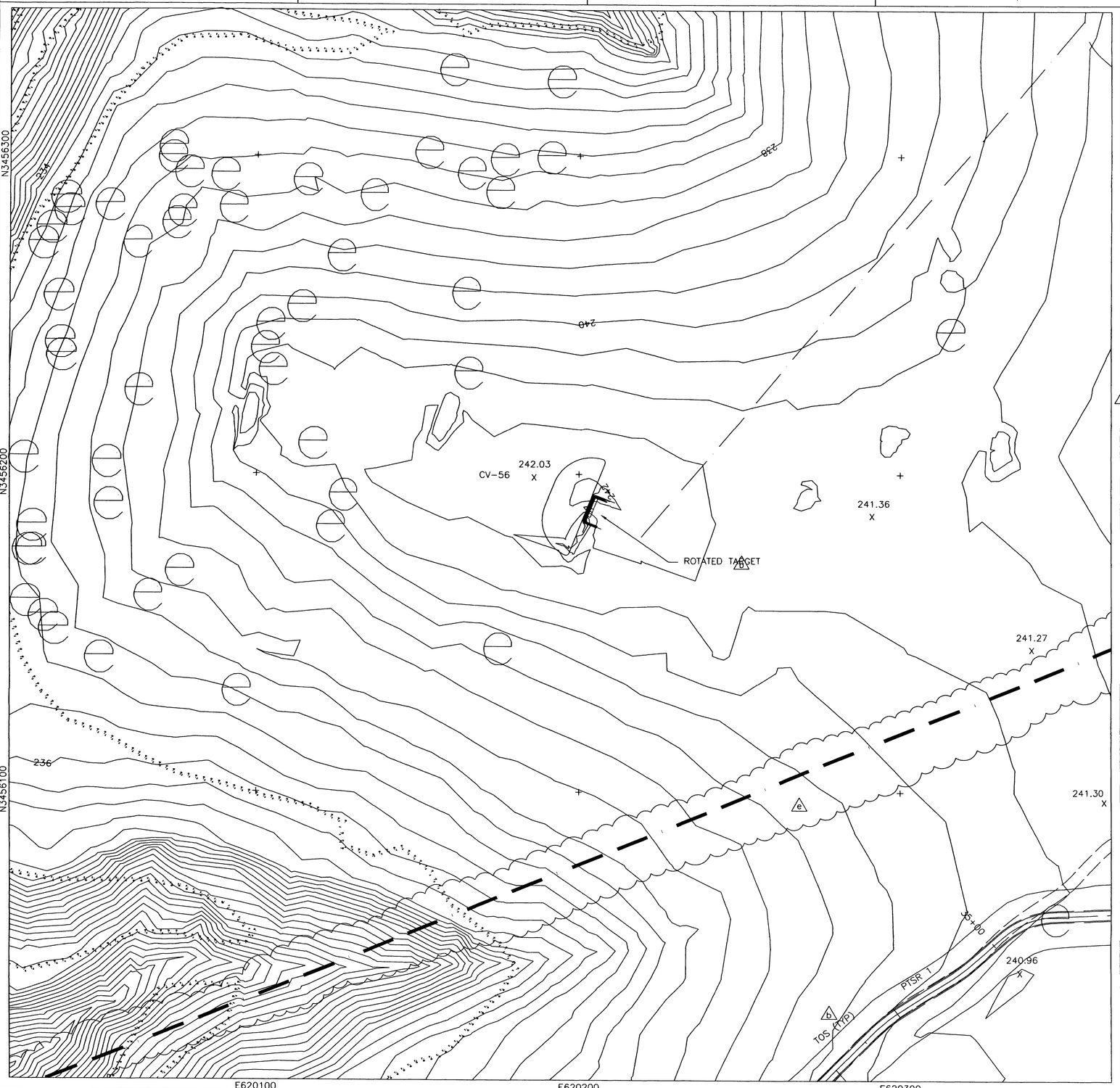

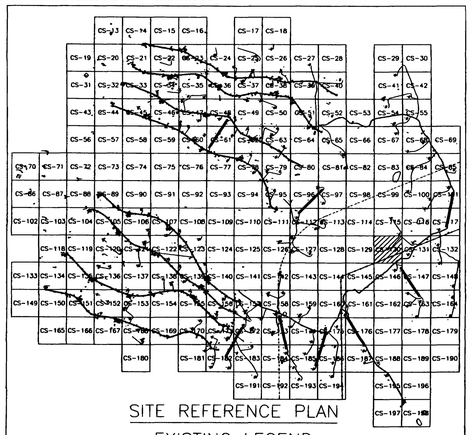

SITE REFERENCE PLAN

EXISTING LEGEND

- MAJOR CONTOUR (2m INTERVALS)
- MINOR CONTOUR
- CREEK
- EXISTING ROAD
- CHAIN LINK FENCE
- 326.00 X — SPOT ELEVATION
- ARCHEOLOGICAL SITE
- 59 — SURVEY MARKER
- TREELINE
- UTILITY POLE
- EXISTING AMTC (ECM-1)
- STATIONARY ARMOR TARGET
- ELECTRICAL MANHOLES
- EXISTING BUILDINGS

PROPOSED LEGEND

- CV-1, JV-1 — SAT
- CC-1, JC-1 — SIT
- CM-1, JM-1 — AMTC
- C4-B, J4-B — DEFILADE
- POWER CENTER (PC1A, PJ1A)
- CONCRETE TURNING PADS
- B-30 — SOIL BORING
- TP-3 — TEST PITS
- EXISTING TARGET DEMOLITION
- OLD IMPACT AREA
- OLD IMPACT BUFFER ZONE AREA
- TANK TRAILS
- PRIMARY TARGET SERVICE ROAD
- 266 — FINISHED GRADING
- SECONDARY TARGET SERVICE ROADS
- C-34 — DRAINAGE PIPE w/ PIPE NO.
- C-100 — CURVE NUMBER
- SWALE
- CENTRAL AAR BUILDING — BUILDINGS
- C-28 — TURN PAD NUMBER
- FC-1 — CAMERAS
- CL-1 — RANGE LIMIT MARKER
- CT-1, JT-1 — TRENCH
- FLAG POLE

STATE OF TEXAS — E. LAMAR FAULK — 86158 — LICENSED — PROFESSIONAL ENGINEER

THE SEAL APPEARING ON THIS DOCUMENT WAS AUTHORIZED BY E. LAMAR FAULK ON AUGUST 8, 2001

N

GRAPHIC SCALE
12 6 0 6 12
SCALE: 1:600

US Army Corps of Engineers
FORT WORTH DISTRICT

POLYENGINEERING, INC.
1855 Headland Avenue
Dothan, Alabama 36303
(334) 793-4700 (voice)
(334) 793-9015 (fax)

Mark	Description	Date	Appr.
1	REVISED IMPACT AREA LINETYPE	SEPT 01	ELF
2	TITLE BLOCK EDIT, ADD TOE OF SLOPE, REVISED LEGEND & TARGET GRADE, ADDED SEAL	AUG 01	ELF

Designed by: Rebecca S. Hand
Dwn by: J. Pedden
Ckd by: M. Dixon
Reviewed by: Scott Faulk
Submitted by: E. Lamar Faulk
Date: 19 June 2001
Rev.
Sol No. DACA63-01-B-0003
Contr No. DACA63-01-C-0016
File name:
Plot date:
Plot scale: 1:600

U.S. ARMY ENGINEER DISTRICT
CORPS OF ENGINEERS
FORT WORTH, TEXAS

POLYENGINEERING, INC.
ENGINEERS & ARCHITECTS
DOTHAN, ALABAMA

FORT HOOD, TEXAS
DIGITAL MULTI-PURPOSE RANGE COMPLEX (DMPRC) FY 01
PN 51915

RANGE PLAN SHEET

Sheet reference number:
CS-130
Sheet of

Contr No. DACA63-01-C-0016

0.dwg 8/11/2005 2:25:13 PM

00687

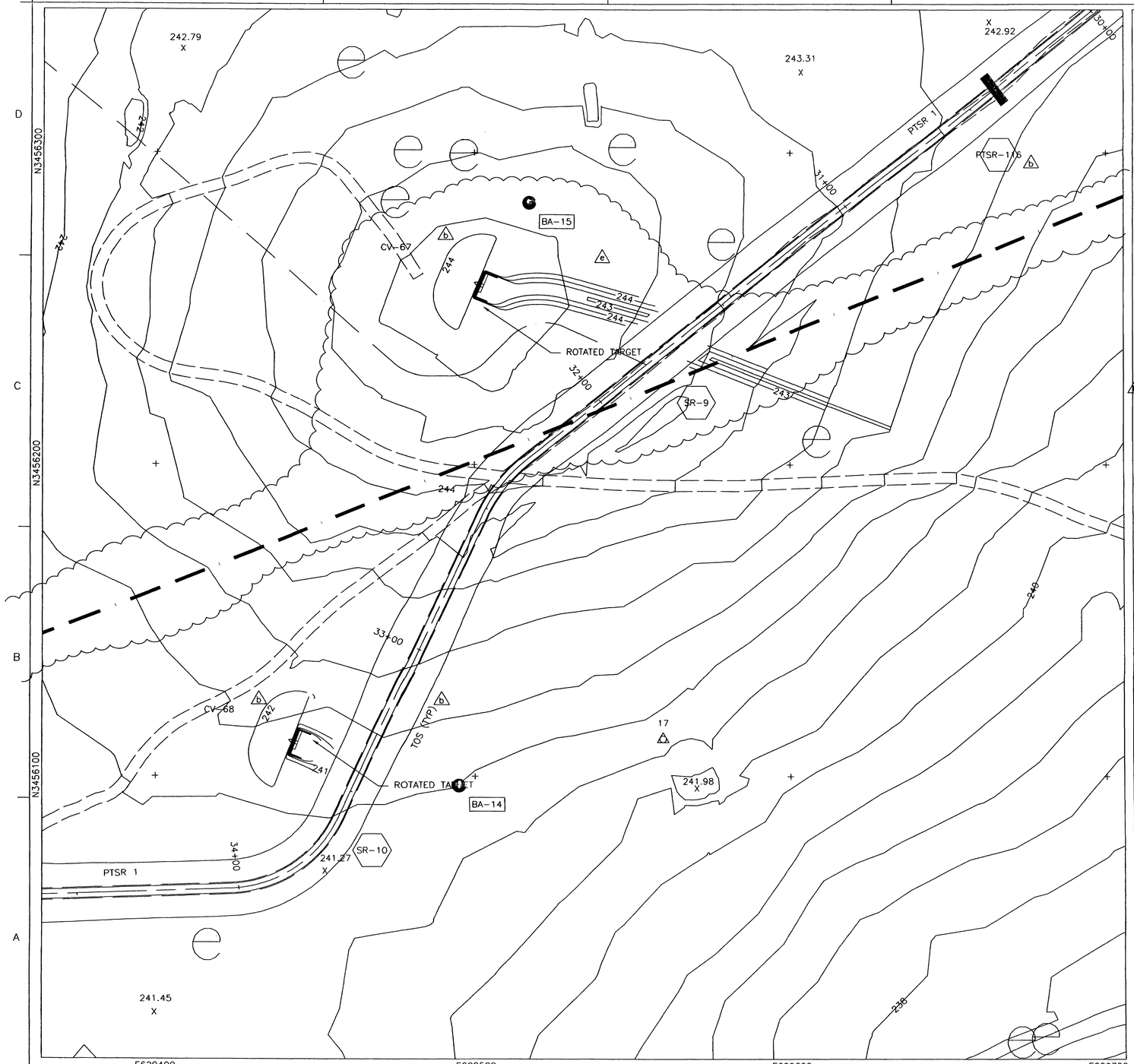

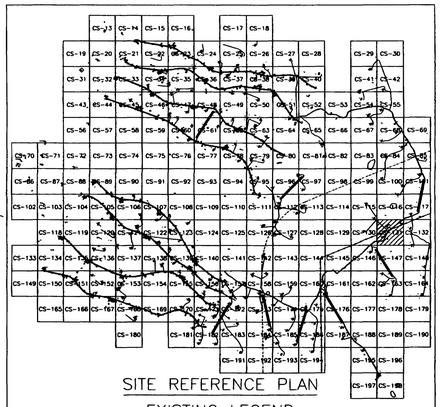

SITE REFERENCE PLAN

EXISTING LEGEND

- MAJOR CONTOUR (2m INTERVALS)
- MINOR CONTOUR
- CREEK
- EXISTING ROAD
- CHAIN LINK FENCE
- 326.00 X SPOT ELEVATION
- ARCHEOLOGICAL SITE
- 59 SURVEY MARKER
- TREELINE
- UTILITY POLE
- EXISTING AMTC (ECM-1)
- STATIONARY ARMOR TARGET
- ELECTRICAL MANHOLES
- EXISTING BUILDINGS

PROPOSED LEGEND

- CV-1, JV-1 SAT
- CC-1, JC-1 SIT
- CM-1, JM-1 AMTC
- C4-B, J4-B DEFILADE
- POWER CENTER (PC1A, PJ1A)
- CONCRETE TURNING PADS
- B-30 SOIL BORING
- TP-3 TEST PITS
- EXISTING TARGET DEMOLITION
- OLD IMPACT AREA
- OLD IMPACT BUFFER ZONE AREA
- TANK TRAILS
- PRIMARY TARGET SERVICE ROAD
- FINISHED GRADING
- 266 SECONDARY TARGET SERVICE ROADS
- C-34 DRAINAGE PIPE w/ PIPE NO.
- C-100 CURVE NUMBER
- SWALE
- CENTRAL AAR BUILDING — BUILDINGS
- C-28 TURN PAD NUMBER
- FC-1 CAMERAS
- CL-1 RANGE LIMIT MARKER
- CT-1, JT-1 TRENCH
- FLAG POLE

STATE OF TEXAS — E. LAMAR FAULK — 86158 — LICENSED PROFESSIONAL ENGINEER

THE SEAL APPEARING ON THIS DOCUMENT WAS AUTHORIZED BY E. LAMAR FAULK ON AUGUST 8, 2001

N

GRAPHIC SCALE
12 6 0 6 12
SCALE: 1:600

US Army Corps of Engineers
FORT WORTH DISTRICT

POLYENGINEERING, INC.
1825 Montland Avenue
Dothan, Alabama 36305
(334) 793-1700 (voice)
(334) 793-8016 (fax)

Rev.	Description	Date	Dwn
A	REVISED IMPACT AREA LINETYPE	SEPT 01	ELF
B	REVISED LEGEND, ADDED SEAL, REV TARGET GRADING ADDED FINISHED GRADING ANNOTATION,INC. TOE OF SLOPE, TITLE BLOCK, EDIT	AUG 01	ELF

Designed by: Barbara S. Flood
Drafted by: J. Peeden
Chk'd by: W. Dixon
Reviewed by: Scott Faulk
Submitted by: E. Lamar Faulk
Date: 16 June 2001
Sol. No. DACA63-01-B-0007
Contr. No. DACA63-01-C-0016
File name:
Plot date:
Plot scale: 1:600

U.S. ARMY ENGINEER DISTRICT
CORPS OF ENGINEERS
FORT WORTH, TEXAS

POLYENGINEERING, INC.
ENGINEERS & ARCHITECTS
DOTHAN, ALABAMA

FORT HOOD, TEXAS
DIGITAL MULTI-PURPOSE RANGE COMPLEX
PN 51915 (MPRC) FY 01

RANGE PLAN SHEET

Sheet reference number:
CS-131
Sheet of

Contr No. DACA63-01-C-0016

00687730

...\CS-131.dwg 8/11/2005 2:24:20 PM

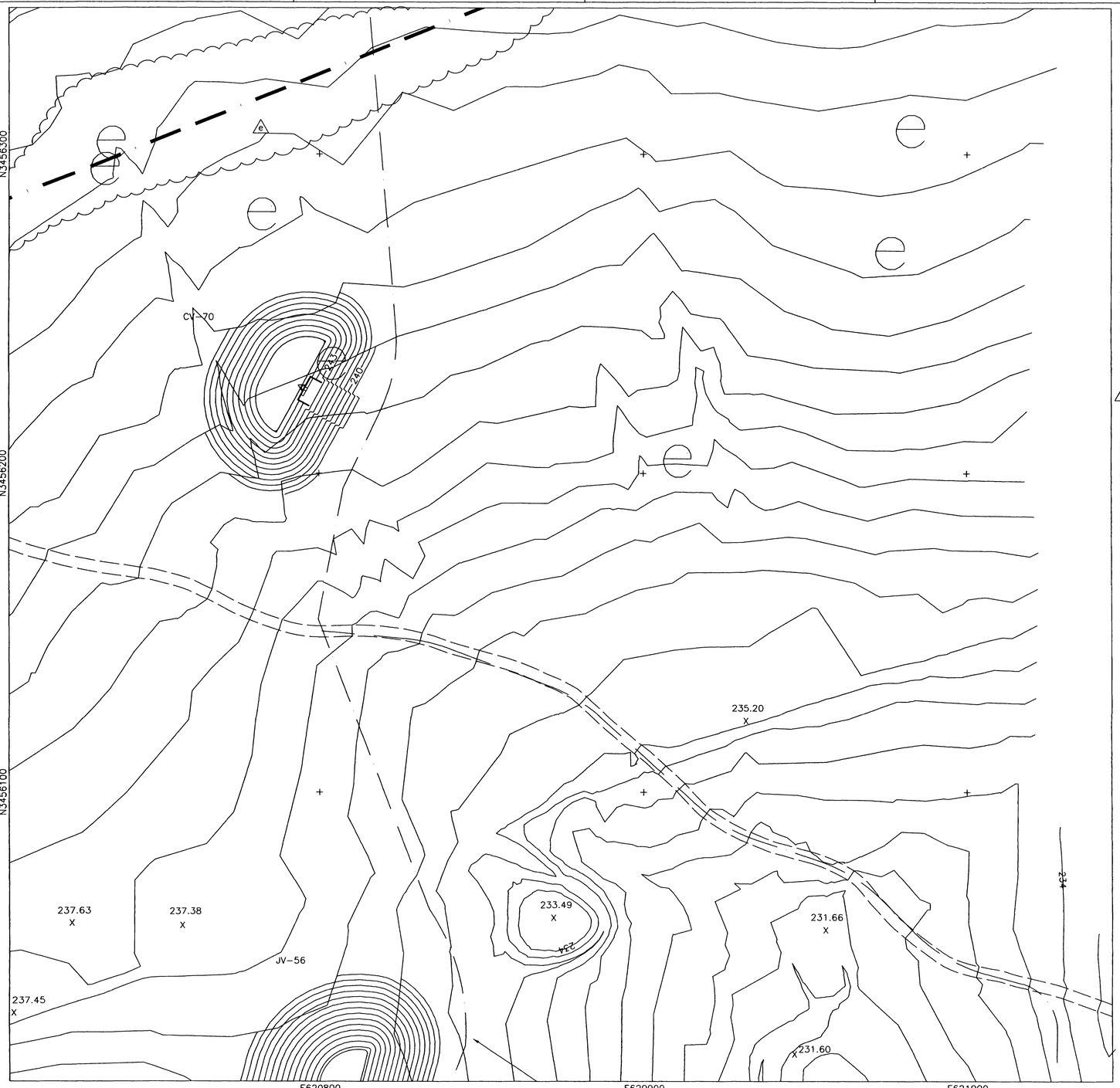

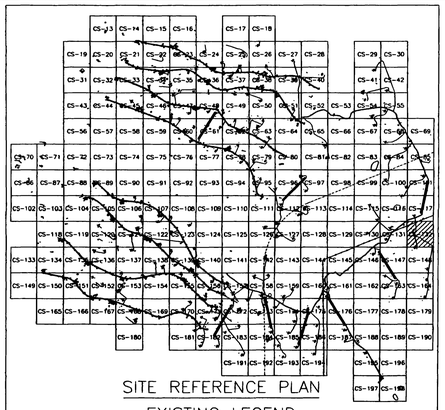

SITE REFERENCE PLAN

EXISTING LEGEND

- MAJOR CONTOUR (2m INTERVALS)
- MINOR CONTOUR
- CREEK
- EXISTING ROAD
- CHAIN LINK FENCE
- 326.00 X — SPOT ELEVATION
- ARCHEOLOGICAL SITE
- 59 — SURVEY MARKER
- TREELINE
- UTILITY POLE
- EXISTING AMTC (ECM-1)
- STATIONARY ARMOR TARGET
- ELECTRICAL MANHOLES
- EXISTING BUILDINGS

PROPOSED LEGEND

- CV-1, JV-1 — SAT
- CC-1, JC-1 — SIT
- CM-1, JM-1 — AMTC
- C4-B, J4-B — DEFILADE
- POWER CENTER (PC1A, PJ1A)
- CONCRETE TURNING PADS
- B-30 — SOIL BORING
- TP-3 — TEST PITS
- EXISTING TARGET DEMOLITION
- OLD IMPACT AREA
- OLD IMPACT BUFFER ZONE AREA
- TANK TRAILS
- PRIMARY TARGET SERVICE ROAD
- 266 — FINISHED GRADING
- SECONDARY TARGET SERVICE ROADS
- C-34 — DRAINAGE PIPE w/ PIPE NO.
- C-100 — CURVE NUMBER
- SWALE
- CENTRAL AAR BUILDING — BUILDINGS
- C-28 — TURN PAD NUMBER
- FC-1 — CAMERAS
- CL-1 — RANGE LIMIT MARKER
- CT-1, JT-1 — TRENCH
- FLAG POLE

STATE OF TEXAS — E. LAMAR FAULK — 86158 — LICENSED — PROFESSIONAL ENGINEER

THE SEAL APPEARING ON THIS DOCUMENT WAS AUTHORIZED BY E. LAMAR FAULK ON AUGUST 8, 2001

N

GRAPHIC SCALE

12 6 0 6 12

SCALE: 1:600

US Army Corps of Engineers
FORT WORTH DISTRICT

POLYENGINEERING, INC.
1886 Southland Avenue
Dothan, Alabama 36303
(334) 793-1790 (voice)
(334) 793-8016 (fax)

Mark	Description	Date	Appr.
1	REVISED IMPACT AREA LABELING	SEPT 01	EJF
2	TITLE BLOCK, CORT, REVISED LEGEND, ADDED SEAL	AUG 01	EJF

Designed by: Rebecca S. Hand
Dwn by: J. Peeden
Ckd by: M. Dixon
Reviewed by: Scott Fouts
Submitted by: E. Lamar Faulk
Date: 19 June 2001
Sol No. DACA63-01-B-0007
Contr No. DACA63-01-C-0016
File name:
Plot date:
Plot scale: 1:600
Rev.

U.S. ARMY ENGINEER DISTRICT
CORPS OF ENGINEERS
FORT WORTH, TEXAS

POLYENGINEERING, INC.
ENGINEERS & ARCHITECTS
DOTHAN, ALABAMA

FORT HOOD, TEXAS
DIGITAL MULTI-PURPOSE RANGE COMPLEX
(DMPRC) FY 01
PN 51915

RANGE PLAN SHEET

Sheet reference number:
CS-132
Sheet of

Contr No. DACA63-01-C-0016

...\CS-132.dwg 8/11/2005 2:18:05 PM

0068

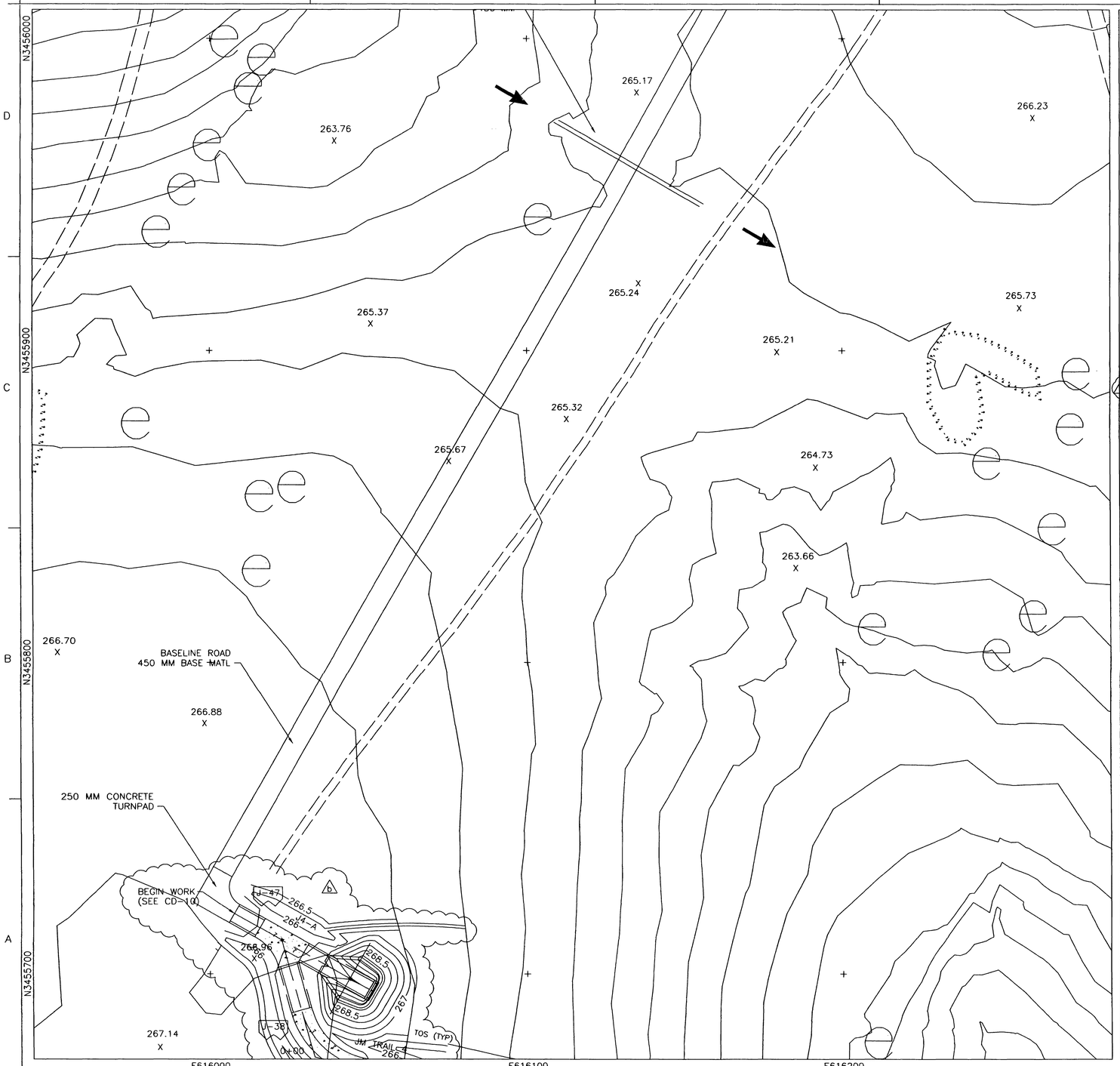

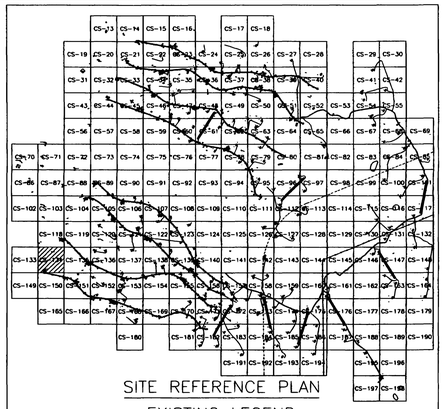

SITE REFERENCE PLAN

EXISTING LEGEND

- MAJOR CONTOUR (2m INTERVALS)
- MINOR CONTOUR
- CREEK
- EXISTING ROAD
- CHAIN LINK FENCE
- 326.00 SPOT ELEVATION
- ARCHEOLOGICAL SITE
- 59 SURVEY MARKER
- TREELINE
- UTILITY POLE
- EXISTING AMTC (ECM-1)
- STATIONARY ARMOR TARGET
- ELECTRICAL MANHOLES
- EXISTING BUILDINGS

PROPOSED LEGEND

- CV-1 JV-1 CC-1 JC-1 — SAT, SIT
- CM-1 JM-1 C4-B J4-B — AMTC, DEFILADE
- OLD IMPACT AREA
- OLD IMPACT BUFFER ZONE AREA
- TANK TRAILS
- PRIMARY TARGET SERVICE ROAD
- 266 FINISHED GRADING
- SECONDARY TARGET SERVICE ROADS
- C-34 DRAINAGE PIPE w/ PIPE NO.
- C-100 CURVE NUMBER
- SWALE
- POWER CENTER (PC1A, PJ1A)
- CENTRAL AAR BUILDING — BUILDINGS
- CONCRETE TURNING PADS
- C-28 TURN PAD NUMBER
- B-30 SOIL BORING
- FC-1 CAMERAS
- CL-1 RANGE LIMIT MARKER
- TP-3 TEST PITS
- CT-1 JT-1 TRENCH
- EXISTING TARGET DEMOLITION
- FLAG POLE

STATE OF TEXAS
E. LAMAR FAULK
86158
LICENSED
PROFESSIONAL ENGINEER

THE SEAL APPEARING ON THIS DOCUMENT WAS AUTHORIZED BY E. LAMAR FAULK ON AUGUST 8, 2001

N

GRAPHIC SCALE
12 6 0 6 12
SCALE: 1:600

US Army Corps of Engineers
FORT WORTH DISTRICT

POLYENGINEERING, INC.
1006 Headland Avenue
Dothan, Alabama 36303
(334) 793-4700 (voice)
(334) 793-8016 (fax)

Mark	Description	Date	Appr.
A	REVISED LEGEND, ADDED SEAL		
B	REVISED DEFILADE GRAPHIC, TITLE BLOCK EDIT, ADDED LABEL AND TOS OF SLOPE	AUG 01	ELF

Designed by: Rebecca S. Hand
Dwn by: J. Powell
Ckd by: M. Brown
Reviewed by: Scott Faulk
Submitted by: E. Lamar Faulk
Date: 19 June 2001
Rev.
Sol. No. DACA63-01-B-0007
Ctrl. No. DACA63-01-C-0016
File name:
Plot date:
Plot scale: 1:600

U.S. ARMY ENGINEER DISTRICT
CORPS OF ENGINEERS
FORT WORTH, TEXAS

POLYENGINEERING, INC.
ENGINEERS & ARCHITECTS
DOTHAN, ALABAMA

DIGITAL MULTI-PURPOSE RANGE COMPLEX (DMPRC)
FORT HOOD, TEXAS
PN 51915
FY (6)

RANGE PLAN SHEET

Sheet reference number:
CS-134
Sheet of

Ctrl No. DACA63-01-C-0016

..\CS-134.dwg 8/11/2005 2:16:57 PM

00687750

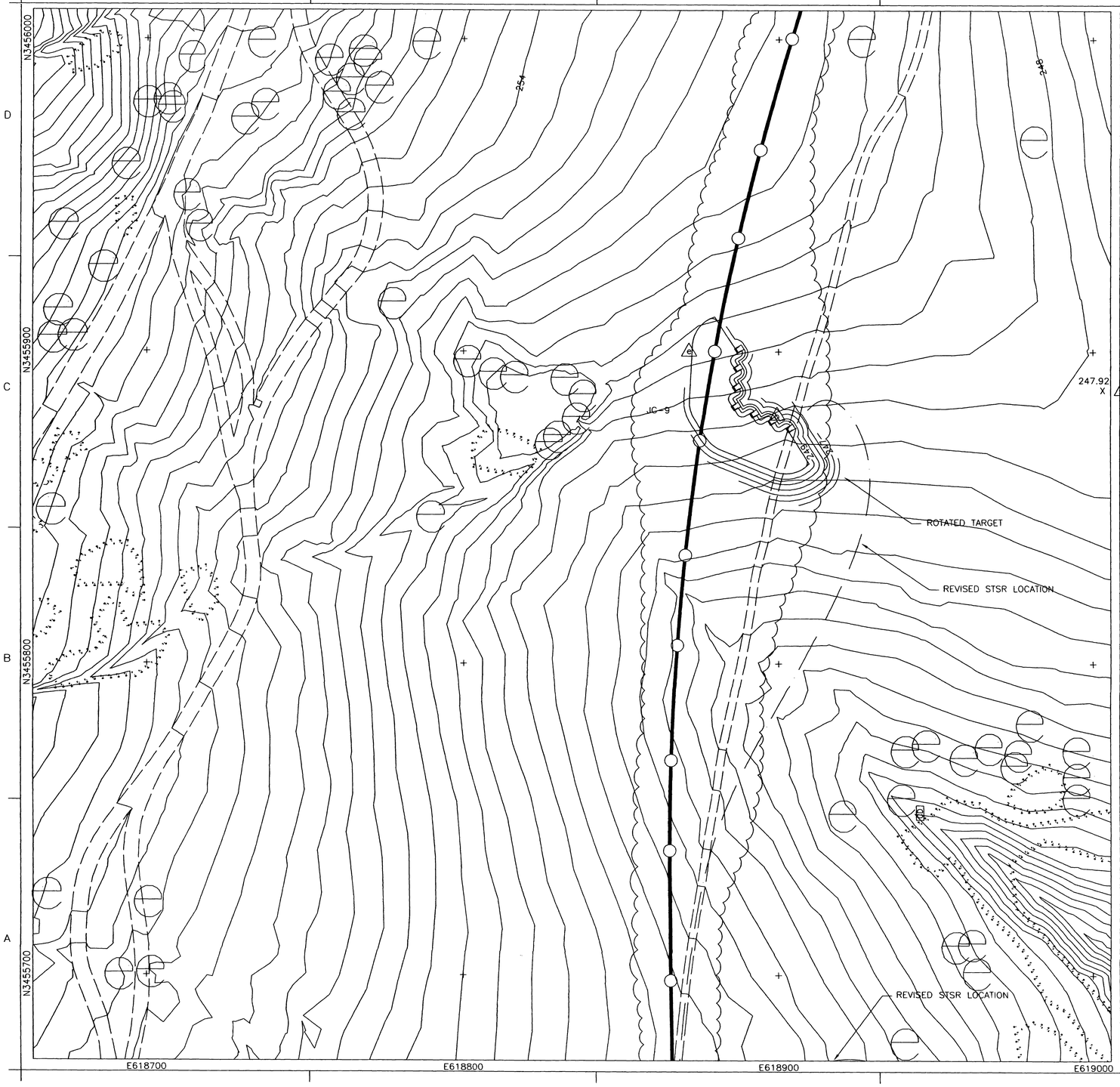

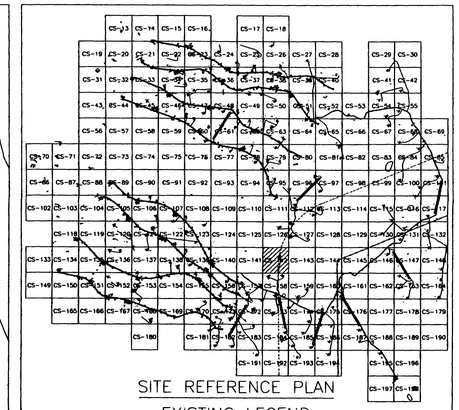

SITE REFERENCE PLAN

EXISTING LEGEND

- MAJOR CONTOUR (2m INTERVALS)
- MINOR CONTOUR
- CREEK
- EXISTING ROAD
- CHAIN LINK FENCE
- 326.00 X — SPOT ELEVATION
- ARCHEOLOGICAL SITE
- 59 — SURVEY MARKER
- TREELINE
- UTILITY POLE
- EXISTING AMTC (ECM-1)
- STATIONARY ARMOR TARGET
- ELECTRICAL MANHOLES
- EXISTING BUILDINGS

PROPOSED LEGEND

- CV-1, JV-1 — SAT
- CC-1, JC-1 — SIT
- CM-1, JM-1 — AMTC
- C4-B, J4-B — DEFILADE
- POWER CENTER (PC1A, PJ1A)
- CONCRETE TURNING PADS
- B-30 — SOIL BORING
- TP-3 — TEST PITS
- EXISTING TARGET DEMOLITION
- OLD IMPACT AREA
- OLD IMPACT BUFFER ZONE AREA
- TANK TRAILS
- PRIMARY TARGET SERVICE ROAD
- 266 — FINISHED GRADING
- SECONDARY TARGET SERVICE ROADS
- C-34 — DRAINAGE PIPE w/ PIPE NO.
- C-100 — CURVE NUMBER
- SWALE
- CENTRAL AAR BUILDING — BUILDINGS
- C-28 — TURN PAD NUMBER
- FC-1 — CAMERAS
- CL-1 — RANGE LIMIT MARKER
- CT-1, JT-1 — TRENCH
- FLAG POLE

STATE OF TEXAS — E. LAMAR FAULK — 86158 — LICENSED — PROFESSIONAL ENGINEER

THE SEAL APPEARING ON THIS DOCUMENT WAS AUTHORIZED BY E. LAMAR FAULK ON AUGUST 8, 2001

N

GRAPHIC SCALE

12 6 0 6 12

SCALE: 1:600

US Army Corps of Engineers
FORT WORTH DISTRICT

POLYENGINEERING, INC.
1898 Bradford Avenue
Dothan, Alabama 36303
(334) 793-6790 (voice)
(334) 793-9816 (fax)

Mark	Description	Date	Appr.
1	REVISED IMPACT AREA LINETYPE	SEPT 01	ELF
2	TITLE BLOCK EDIT, REVISED TARGET GRADING	AUG 01	ELF

Designed by: Rebecca S. Hand
Drawn by: J. Poden
Checked by: W. Dixon
Reviewed by: Scott Faulk
Submitted by: E. Lamar Faulk
Date: June 2001
Rev.
Sol. No. DACA63-01-B-0007
Contr. No. DACA63-01-C-0016
File name:
Plot date:
Plot scale: 1:600

U.S. ARMY ENGINEER DISTRICT
CORPS OF ENGINEERS
FORT WORTH, TEXAS

POLYENGINEERING, INC.
ENGINEERS & ARCHITECTS
DOTHAN, ALABAMA

FORT HOOD, TEXAS
DIGITAL MULTI-PURPOSE RANGE COMPLEX (DMPRC)
PN 519115 FY 01

RANGE PLAN SHEET

Sheet reference number:
CS-142
Sheet of

Contr. No. DACA63-01-C-0016

CS-142.dwg 8/11/2005 1:32:50 PM

00687700

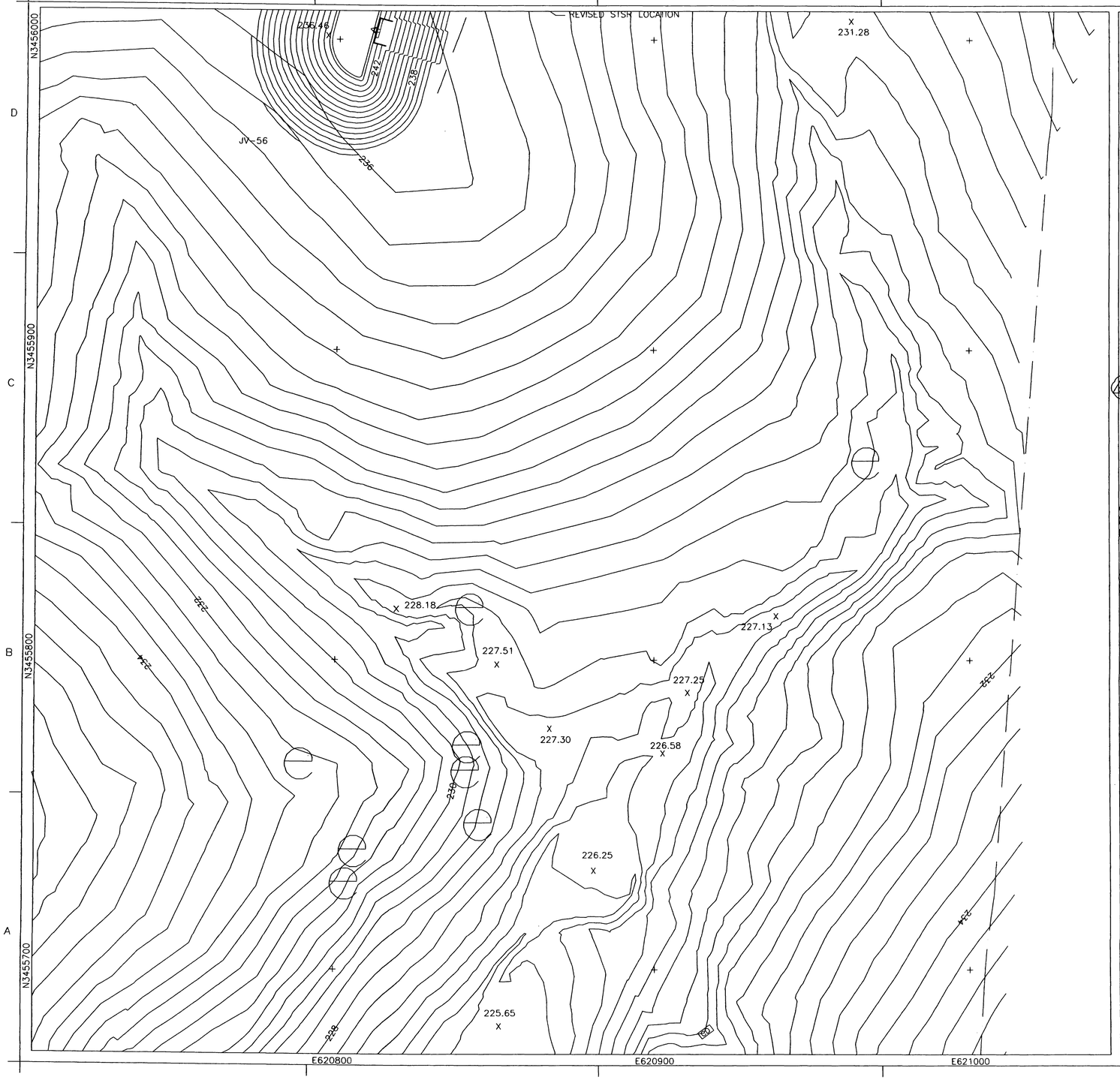

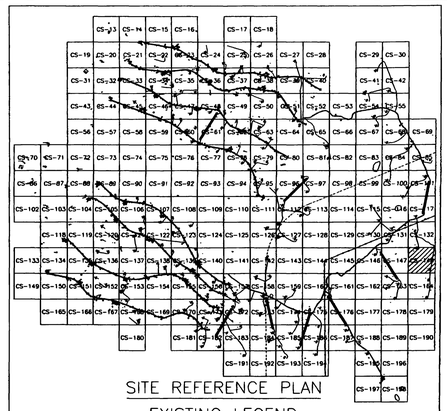

SITE REFERENCE PLAN

EXISTING LEGEND

- MAJOR CONTOUR (2m INTERVALS)
- MINOR CONTOUR
- CREEK
- EXISTING ROAD
- CHAIN LINK FENCE
- 326.00 SPOT ELEVATION
- ARCHEOLOGICAL SITE
- 59 SURVEY MARKER
- TREELINE
- UTILITY POLE
- EXISTING AMTC (ECM-1)
- STATIONARY ARMOR TARGET
- ELECTRICAL MANHOLES
- EXISTING BUILDINGS

PROPOSED LEGEND

- CV-1, JV-1, CC-1, JC-1, SAT, SIT
- OLD IMPACT AREA
- OLD IMPACT BUFFER ZONE AREA
- TANK TRAILS
- PRIMARY TARGET SERVICE ROAD
- 266 FINISHED GRADING
- SECONDARY TARGET SERVICE ROADS
- CM-1, JM-1, AMTC, C4-B, J4-B, DEFILADE
- C-34 DRAINAGE PIPE w/ PIPE NO.
- C-100 CURVE NUMBER
- SWALE
- POWER CENTER (PC1A, PJ1A)
- CENTRAL AAR BUILDING
- BUILDINGS
- CONCRETE TURNING PADS
- C-28 TURN PAD NUMBER
- B-30 SOIL BORING
- FC-1 CAMERAS
- CL-1 RANGE LIMIT MARKER
- TP-3 TEST PITS
- CT-1, JT-1 TRENCH
- EXISTING TARGET DEMOLITION
- FLAG POLE

STATE OF TEXAS
E. LAMAR FAULK
86158
LICENSED
PROFESSIONAL ENGINEER

THE SEAL APPEARING ON THIS DOCUMENT WAS AUTHORIZED BY E. LAMAR FAULK ON AUGUST 8, 2001

N

GRAPHIC SCALE
12 6 0 6 12
SCALE: 1:600

US Army Corps of Engineers
FORT WORTH DISTRICT

POLYENGINEERING, INC.
1804 Medical Arts Ave.
Dothan, Alabama 36303
(334) 793-4700 (voice)
(334) 793-8018 (fax)

Mark	Description	Date	Appr.
1	TITLE BLOCK EDIT, REVISED LEGEND, ADDED SEAL	AUG 01	ELF

Designed by: E. Lamar Faulk
Drawn by: J. Peeden
Cad by: M. Dixon
Reviewed by: Scott A. Foutz
Submitted by: E. Lamar Faulk
Date: August 2001
Sol No. DACA63-01-B-0007
Contr No. DACA63-01-C-0016
File name:
Plot date:
Plot scale: 1:600
Rev. 1

U.S. ARMY ENGINEER DISTRICT
CORPS OF ENGINEERS
FORT WORTH, TEXAS

POLYENGINEERING, INC.
ENGINEERS & ARCHITECTS
DOTHAN, ALABAMA

FORT HOOD, TEXAS
DIGITAL MULTI-PURPOSE RANGE COMPLEX
PN 519145 (DPW) FY 01

RANGE PLAN SHEET

Sheet reference number:
CS-148
Sheet of

Contr No. DACA63-01-C-0016

..\CS-148.DWG 8/11/2005 1:31:36 PM

00687710

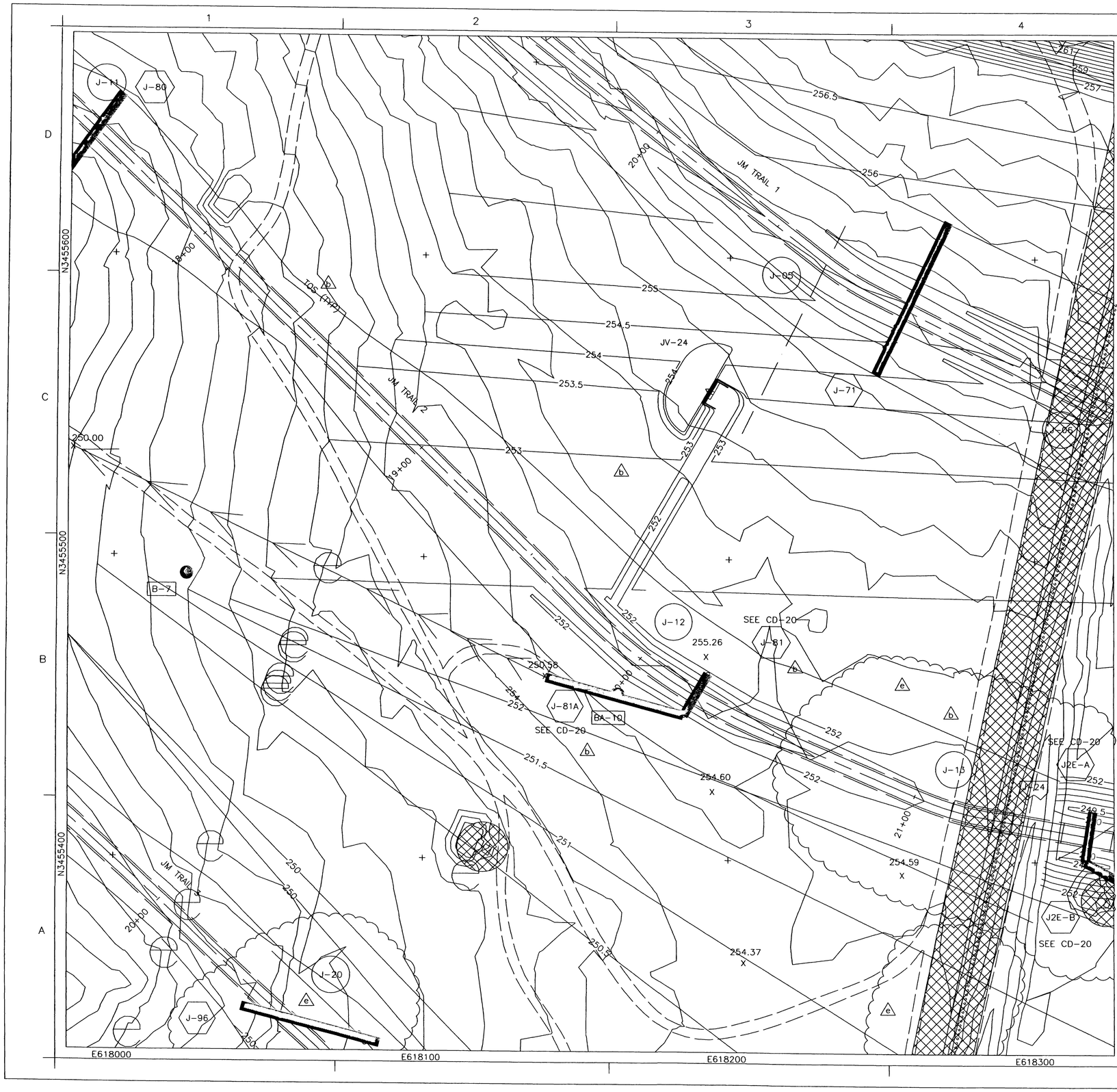

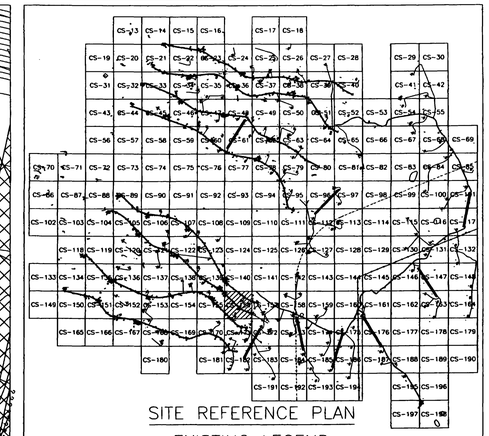

SITE REFERENCE PLAN

EXISTING LEGEND

- MAJOR CONTOUR (2m INTERVALS)
- MINOR CONTOUR
- CREEK
- EXISTING ROAD
- CHAIN LINK FENCE
- 326.00 X SPOT ELEVATION
- ARCHEOLOGICAL SITE
- 59 SURVEY MARKER
- TREELINE
- UTILITY POLE
- EXISTING AMTC (ECM-1)
- STATIONARY ARMOR TARGET
- ELECTRICAL MANHOLES
- EXISTING BUILDINGS

PROPOSED LEGEND

- CV-1, JV-1 SAT
- CC-1, JC-1 SIT
- CM-1, JM-1 AMTC
- C4-B, J4-B DEFILADE
- POWER CENTER (PC1A, PJ1A)
- CONCRETE TURNING PADS
- B-30 SOIL BORING
- TP-3 TEST PITS
- EXISTING TARGET DEMOLITION
- OLD IMPACT AREA
- OLD IMPACT BUFFER ZONE AREA
- TANK TRAILS
- PRIMARY TARGET SERVICE ROAD
- 266 FINISHED GRADING
- SECONDARY TARGET SERVICE ROADS
- C-34 DRAINAGE PIPE w/ PIPE NO.
- C-100 CURVE NUMBER
- SWALE
- CENTRAL AAR BUILDING BUILDINGS
- C-28 TURN PAD NUMBER
- FC-1 CAMERAS
- CL-1 RANGE LIMIT MARKER
- CT-1, JT-1 TRENCH
- FLAG POLE

STATE OF TEXAS
E. LAMAR FAULK
86158
LICENSED
PROFESSIONAL ENGINEER

THE SEAL APPEARING ON THIS DOCUMENT WAS AUTHORIZED BY E. LAMAR FAULK ON AUGUST 8, 2001

N

GRAPHIC SCALE
12 6 0 6 12
SCALE: 1:600

US Army Corps of Engineers
FORT WORTH DISTRICT

POLYENGINEERING, INC.
1905 Boulmont Avenue
Dothan, Alabama 36303
(334) 792-4700 (voice)
(334) 793-9015 (fax)

Mark	Description	Date	Appr.
3	ADDED PIPE, REVISED DEMOLITION AND DEFILADE GRADING	AUG 01	ELF
2	ADDED CONCRETE TURNING AT END OF TRAIL TURN, PIPE, AND MANCHALE AND SPIKE		
1	ADD TITLE BLOCK, END, ADDED TOE OF SLOPE, REVISED TARGET GRADING	AUG 01	ELF
0	REVISED LEGEND, ADDED SEAL		

Rev.

Designed by: Rebecca S. Hand
Drawn by: J. Peeden
Ckd by: M. Dixon
Reviewed by: Scott T. Dale
Submitted by: E. Lamar Faulk
Date: 19 June 2001
Sol. No. DACA63-01-B-0007
Contr. No. DACA63-01-C-0016
File name: 01-156
Plot date:
Plot scale: 1:600

U.S. ARMY ENGINEER DISTRICT
CORPS OF ENGINEERS
FORT WORTH, TEXAS

POLYENGINEERING, INC.
ENGINEERS & ARCHITECTS
DOTHAN, ALABAMA

FORT HOOD, TEXAS
DIGITAL MULTI-PURPOSE RANGE COMPLEX (DMPRC)
PN 51915 FY 01

RANGE PLAN SHEET

Sheet reference number:
CS-156
Sheet of

Contr. No. DACA63-01-C-0016

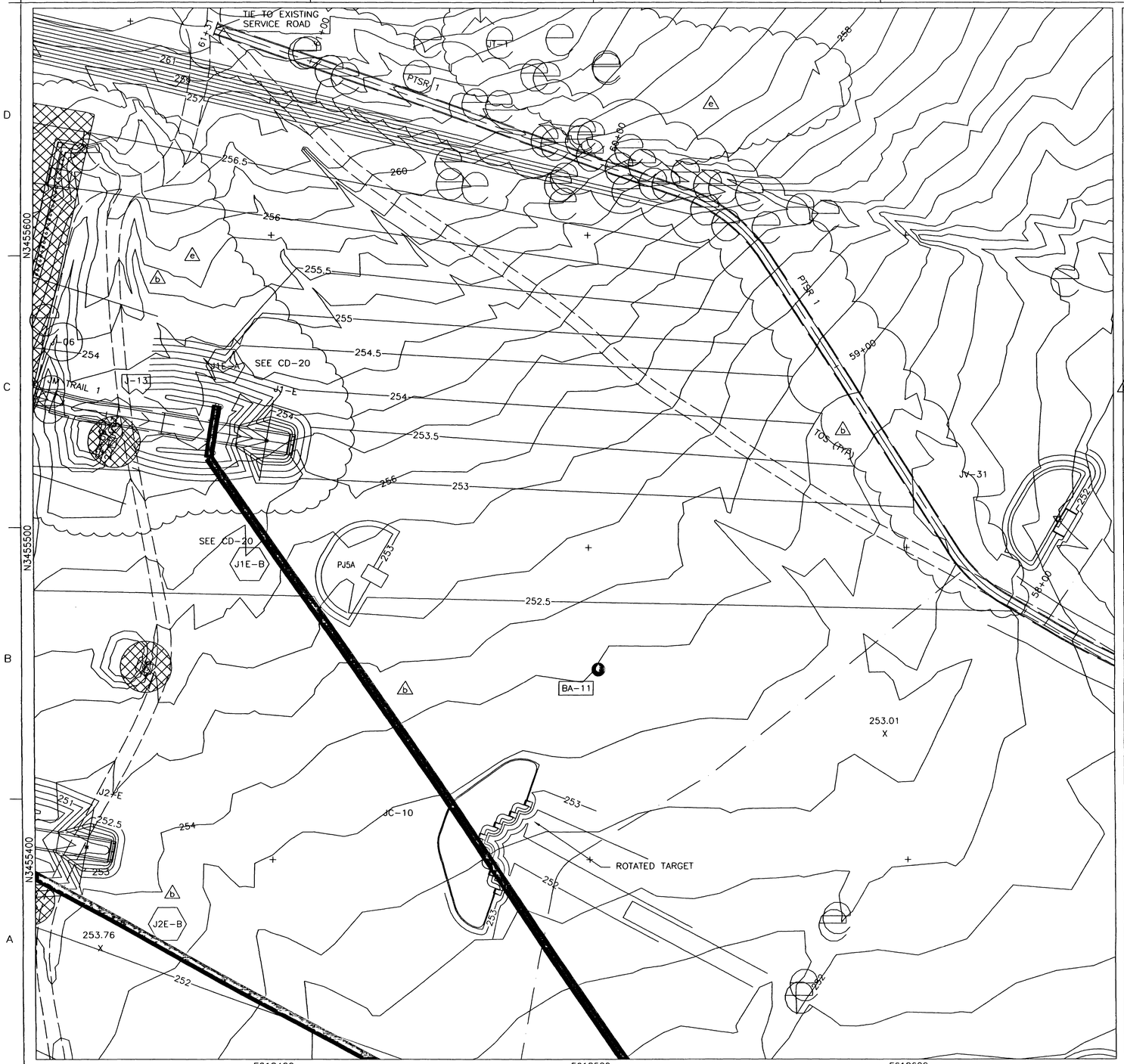

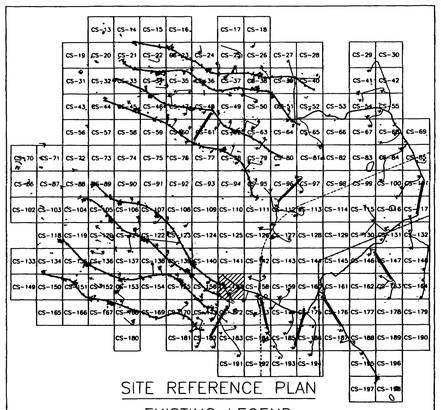

SITE REFERENCE PLAN

EXISTING LEGEND

- MAJOR CONTOUR (2m INTERVALS)
- MINOR CONTOUR
- CREEK
- EXISTING ROAD
- CHAIN LINK FENCE
- 326.00 X — SPOT ELEVATION
- ARCHEOLOGICAL SITE
- SURVEY MARKER
- TREELINE
- UTILITY POLE
- EXISTING AMTC (ECM-1)
- STATIONARY ARMOR TARGET
- ELECTRICAL MANHOLES
- EXISTING BUILDINGS

PROPOSED LEGEND

- CV-1, JV-1 — SAT
- CC-1, JC-1 — SIT
- CM-1, JM-1 — AMTC
- C4-B, J4-B — DEFILADE
- POWER CENTER (PC1A, PJ1A)
- CONCRETE TURNING PADS
- B-30 — SOIL BORING
- TP-3 — TEST PITS
- EXISTING TARGET DEMOLITION
- OLD IMPACT AREA
- OLD IMPACT BUFFER ZONE AREA
- TANK TRAILS
- PRIMARY TARGET SERVICE ROAD
- 266 — FINISHED GRADING
- SECONDARY TARGET SERVICE ROADS
- C-34 — DRAINAGE PIPE w/ PIPE NO.
- C-100 — CURVE NUMBER
- SWALE
- CENTRAL AAR BUILDING — BUILDINGS
- C-28 — TURN PAD NUMBER
- FC-1 — CAMERAS
- CL-1 — RANGE LIMIT MARKER
- CT-1, JT-1 — TRENCH
- FLAG POLE

STATE OF TEXAS — E. LAMAR FAULK — 86158 — LICENSED — PROFESSIONAL ENGINEER

THE SEAL APPEARING ON THIS DOCUMENT WAS AUTHORIZED BY E. LAMAR FAULK ON AUGUST 8, 2001

N

GRAPHIC SCALE

12 6 0 6 12

SCALE: 1:600

US Army Corps of Engineers
FORT WORTH DISTRICT

POLYENGINEERING, INC.
1905 Sandlewood Avenue
Dothan, Alabama 36303
(334) 793-4700 (voice)
(334) 793-8016 (fax)

Mark	Description	Date	Appr.
A	REVISED DEMOLITION AND DEFILADE GRADING, ADDED TRENCH DRAINAGE. ADD TOE OF SLOPE, REVISED LEGEND AND TARGET GRADING, ADDED SEAL.	AUG 01	ELF
B	ADDED POWER CENTER GRADING AND TITLE BLOCK EDIT, REVISED DEFILADE GRADING. ADDED CONCRETE TURNPAD AT END OF TRAIL, ADD PIPES MANHOLES & CONTOURS.	AUG 01	ELF

Designed by: Brandon S. Hand
Dwn by: S. Pecden
Ckd by: M. Dixon
Reviewed by: Scott Faulk
Submitted by: E. Lamar Faulk
Date: 18 June 2001
Rev.
Sol No. DACA63-01-B-0001
Contr No. DACA63-01-C-0016
File name:
Plot date:
Plot scale: 1:600

U.S. ARMY ENGINEER DISTRICT
CORPS OF ENGINEERS
FORT WORTH, TEXAS

POLYENGINEERING, INC.
ENGINEERS & ARCHITECTS
DOTHAN, ALABAMA

FORT HOOD, TEXAS
DIGITAL MULTI-PURPOSE RANGE COMPLEX (DMPRC)
PN 519115 FY 01

RANGE PLAN SHEET

Sheet reference number:
CS-157
Sheet of

Contr. No. DACA63-01-C-0016

...\CS-157.dwg 8/11/2005 1:19:20 PM

00687730

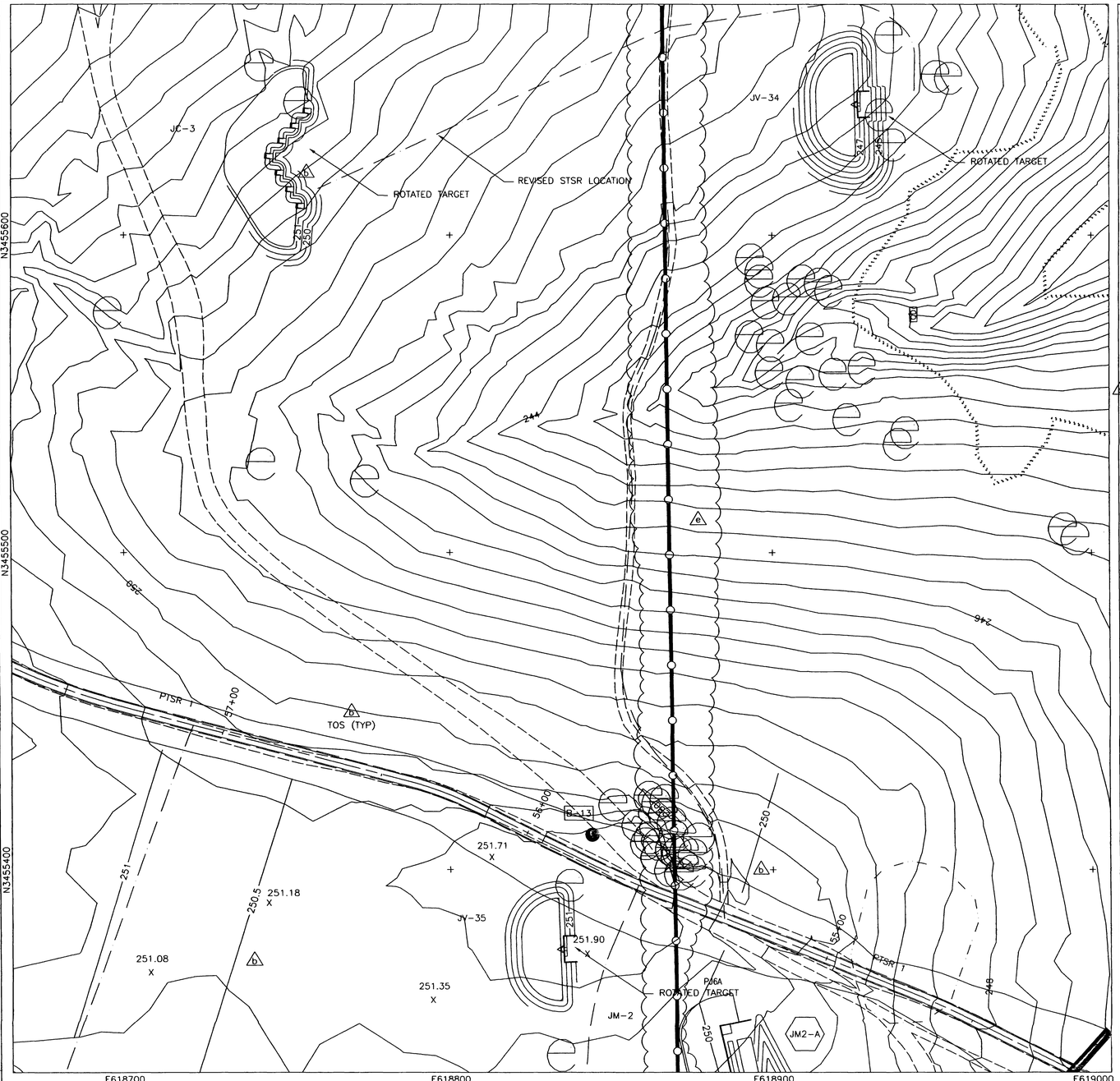

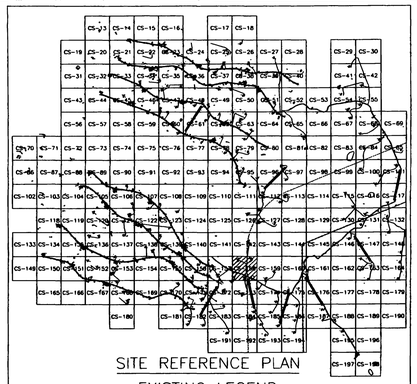

SITE REFERENCE PLAN

EXISTING LEGEND

- MAJOR CONTOUR (2m INTERVALS)
- MINOR CONTOUR
- CREEK
- EXISTING ROAD
- CHAIN LINK FENCE
- 326.00 X SPOT ELEVATION
- ARCHEOLOGICAL SITE
- 59 SURVEY MARKER
- TREELINE
- UTILITY POLE
- EXISTING AMTC (ECM-1)
- STATIONARY ARMOR TARGET
- ELECTRICAL MANHOLES
- EXISTING BUILDINGS

PROPOSED LEGEND

- CV-1, JV-1 SAT
- CC-1, JC-1 SIT
- CM-1, JM-1 AMTC
- C4-B, J4-B DEFILADE
- POWER CENTER (PC1A, PJ1A)
- CONCRETE TURNING PADS
- B-30 SOIL BORING
- TP-3 TEST PITS
- EXISTING TARGET DEMOLITION
- OLD IMPACT AREA
- OLD IMPACT BUFFER ZONE AREA
- TANK TRAILS
- PRIMARY TARGET SERVICE ROAD
- 266 FINISHED GRADING
- SECONDARY TARGET SERVICE ROADS
- C-34 DRAINAGE PIPE w/ PIPE NO.
- C-100 CURVE NUMBER
- SWALE
- CENTRAL AAR BUILDING — BUILDINGS
- C-28 TURN PAD NUMBER
- FC-1 CAMERAS
- CL-1 RANGE LIMIT MARKER
- CT-1, JT-1 TRENCH
- FLAG POLE

STATE OF TEXAS — E. LAMAR FAULK — 86158 — LICENSED — PROFESSIONAL ENGINEER

THE SEAL APPEARING ON THIS DOCUMENT WAS AUTHORIZED BY E. LAMAR FAULK ON AUGUST 8, 2001

N

GRAPHIC SCALE

12 6 0 6 12

SCALE: 1:600

US Army Corps of Engineers
FORT WORTH DISTRICT

POLYENGINEERING, INC.
1200 Rosebland Avenue
Dothan, Alabama 36303
(334) 793-1798 (voice)
(334) 793-9015 (fax)

Mark	Description	Date	Appr.
1	ROTATED IMPACT AREA LIMITS	SEPT 01	ELF
2	DELETED BLOCK DUE ADDED SITE OF SLOPE, REVISED TARGET, ORIGINAL REVISED LEGEND	AUG 01	ELF
3	ADDED SEAL, REVISED SITE GRADING		

Designed by: Rebecca S. Hand
Dwn by: J. Peeden
Ckd by: M. Dixon
Reviewed by: Scott Fluke
Submitted by: E. Lamar Faulk
Date: 19 June 2001
Sol No. DACA63-01-B-0007
Contr No. DACA63-01-C-0016
File name:
Plot date:
Plot scale: 1:600
Rev.

U.S. ARMY ENGINEER DISTRICT CORPS OF ENGINEERS FORT WORTH, TEXAS

POLYENGINEERING, INC. ENGINEERS & ARCHITECTS DOTHAN, ALABAMA

FORT HOOD, TEXAS
DIGITAL MULTI-PURPOSE RANGE COMPLEX (DMPRC)
PN 51915 FY 01

RANGE PLAN SHEET

Sheet reference number:
CS-158
Sheet of

Contr No. DACA63-01-C-0016

..\CS-158.dwg 8/11/2005 1:18:26 PM

00687800

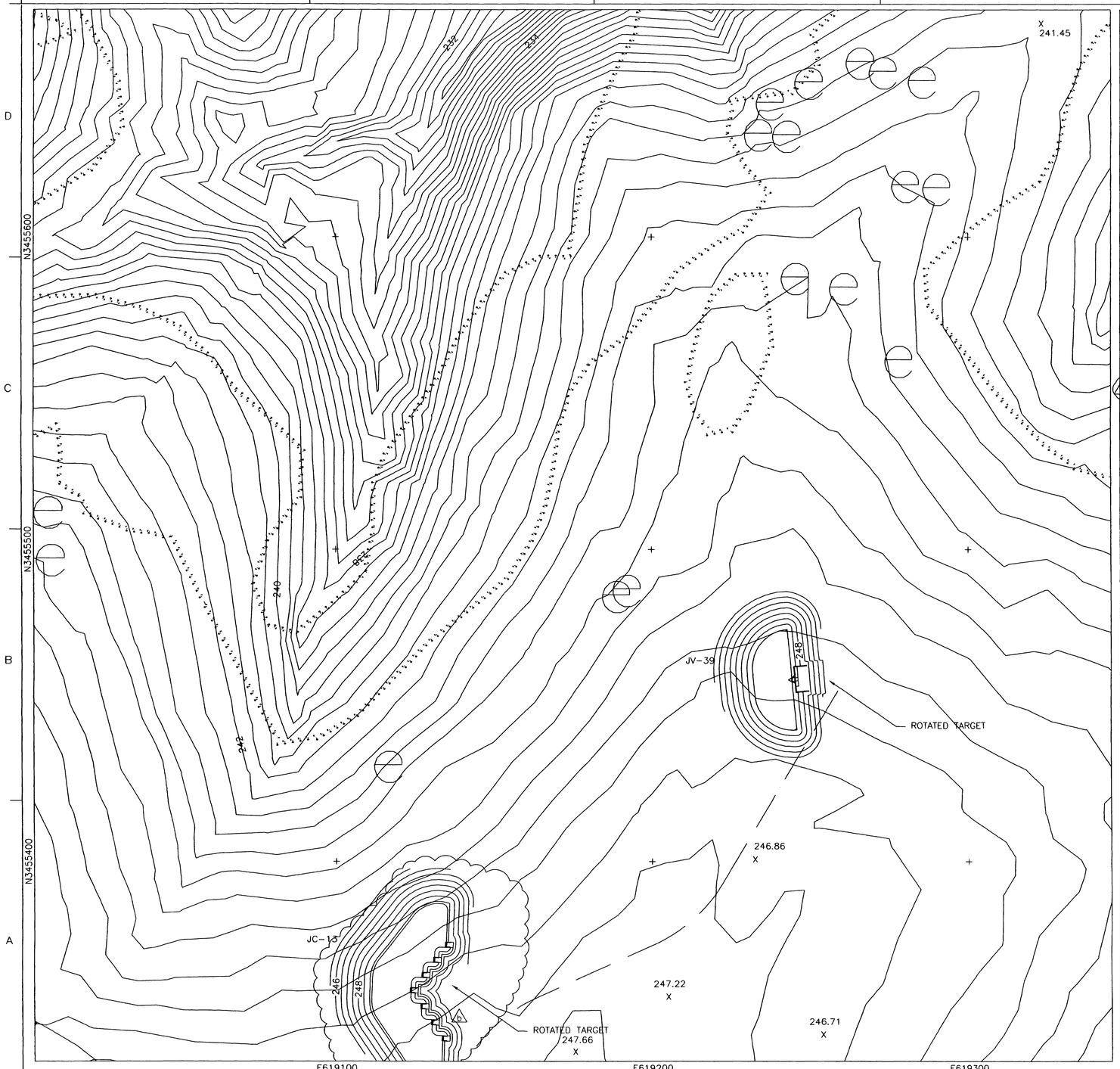

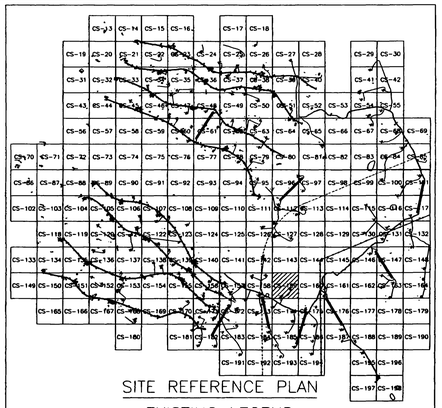

SITE REFERENCE PLAN

EXISTING LEGEND

- MAJOR CONTOUR (2m INTERVALS)
- MINOR CONTOUR
- CREEK
- EXISTING ROAD
- CHAIN LINK FENCE
- 326.00 SPOT ELEVATION
- ARCHEOLOGICAL SITE
- 59 SURVEY MARKER
- TREELINE
- UTILITY POLE
- EXISTING AMTC (ECM-1)
- STATIONARY ARMOR TARGET
- ELECTRICAL MANHOLES
- EXISTING BUILDINGS

PROPOSED LEGEND

- CV-1, JV-1, CC-1, JC-1
- SAT
- SIT
- AMTC
- CM-1, JM-1
- C4-B, J4-B
- DEFILADE
- OLD IMPACT AREA
- OLD IMPACT BUFFER ZONE AREA
- TANK TRAILS
- PRIMARY TARGET SERVICE ROAD
- 266 FINISHED GRADING
- SECONDARY TARGET SERVICE ROADS
- C-34 DRAINAGE PIPE w/ PIPE NO.
- C-100 CURVE NUMBER
- SWALE
- POWER CENTER (PC1A, PJ1A)
- CENTRAL AAR BUILDING — BUILDINGS
- CONCRETE TURNING PADS
- C-28 TURN PAD NUMBER
- B-30 SOIL BORING
- FC-1 CAMERAS
- CL-1 RANGE LIMIT MARKER
- TP-3 TEST PITS
- CT-1, JT-1 TRENCH
- EXISTING TARGET DEMOLITION
- FLAG POLE

STATE OF TEXAS
E. LAMAR FAULK
86158
LICENSED
PROFESSIONAL ENGINEER

THE SEAL APPEARING ON THIS DOCUMENT WAS AUTHORIZED BY E. LAMAR FAULK ON AUGUST 8, 2001

N

GRAPHIC SCALE
12 6 0 6 12
SCALE: 1:600

US Army Corps of Engineers
FORT WORTH DISTRICT

POLYENGINEERING, INC.
1950 Headland Avenue
Dothan, Alabama 36303
(334) 793-4799 (voice)
(334) 793-9518 (fax)

Mark	Description	Date	Appr.
A	TITLE BLOCK EDIT, REVISE TARGET GRADING, REVISED LEGEND, ADDED SEAL	AUG 01	ELF

Designed by: Rebecca S. Hand
Dwn by: J. Redden
Ckd by: M. Dixon
Reviewed by: Scott Tuck
Submitted by: E. Lamar Faulk
Date: 19 June 2001
Rev.
Sol No. DACA63-01-B-0007
Contr No. DACA63-01-C-0016
File name:
Plot date:
Plot scale: 1:600

U.S. ARMY ENGINEER DISTRICT
CORPS OF ENGINEERS
FORT WORTH, TEXAS

POLYENGINEERING, INC.
ENGINEERS & ARCHITECTS
DOTHAN, ALABAMA

FORT HOOD, TEXAS
MULTI-PURPOSE RANGE COMPLEX
(MPRC)
PN 51915
FY 01

RANGE PLAN SHEET

Sheet reference number:
CS-159
Sheet of

Contr No. DACA63-01-C-0016

...\CS-159.dwg 8/11/2005 1:17:43 PM

006878 0

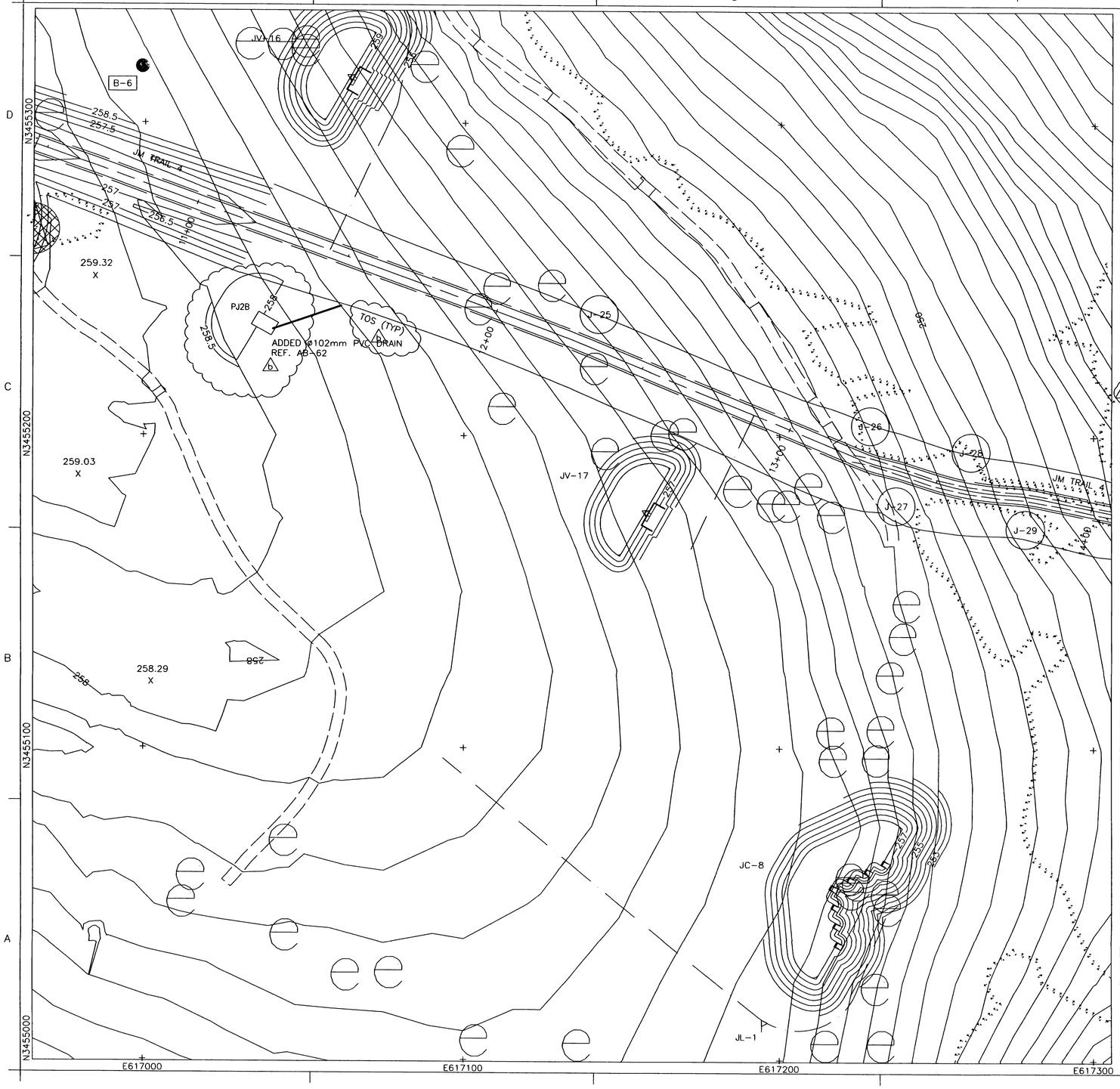

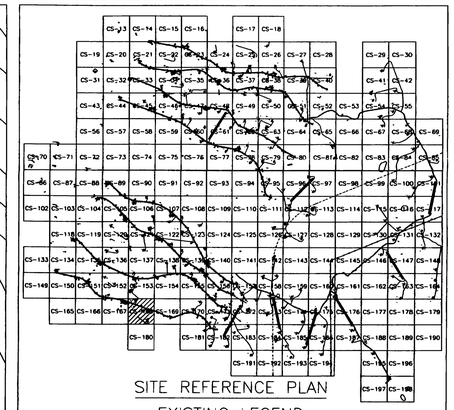

SITE REFERENCE PLAN

EXISTING LEGEND

- MAJOR CONTOUR (2m INTERVALS)
- MINOR CONTOUR
- CREEK
- EXISTING ROAD
- CHAIN LINK FENCE
- 326.00 SPOT ELEVATION
- ARCHEOLOGICAL SITE
- 59 SURVEY MARKER
- TREELINE
- UTILITY POLE
- EXISTING AMTC (ECM-1)
- STATIONARY ARMOR TARGET
- ELECTRICAL MANHOLES
- EXISTING BUILDINGS

PROPOSED LEGEND

- CV-1, JV-1, CC-1, JC-1 — SAT, SIT
- CM-1, JM-1 — AMTC
- C4-B, J4-B — DEFILADE
- POWER CENTER (PC1A, PJ1A)
- CONCRETE TURNING PADS
- B-30 SOIL BORING
- TP-3 TEST PITS
- EXISTING TARGET DEMOLITION
- OLD IMPACT AREA
- OLD IMPACT BUFFER ZONE AREA
- TANK TRAILS
- PRIMARY TARGET SERVICE ROAD
- 266 FINISHED GRADING
- SECONDARY TARGET SERVICE ROADS
- C-34 DRAINAGE PIPE w/ PIPE NO.
- C-100 CURVE NUMBER
- SWALE
- CENTRAL AAR BUILDING — BUILDINGS
- C-28 TURN PAD NUMBER
- FC-1 CAMERAS
- CL-1 RANGE LIMIT MARKER
- CT-1, JT-1 TRENCH
- FLAG POLE

STATE OF TEXAS
E. LAMAR FAULK
86158
LICENSED
PROFESSIONAL ENGINEER

THE SEAL APPEARING ON THIS DOCUMENT WAS AUTHORIZED BY E. LAMAR FAULK ON AUGUST 8, 2001

N

GRAPHIC SCALE
12 6 0 6 12
SCALE: 1:600

US Army Corps of Engineers
FORT WORTH DISTRICT

POLYENGINEERING, INC.
1408 Southland Avenue
Dothan, Alabama 36303
(334) 793-2700 (voice)
(334) 793-9010 (fax)

Mark	Description	Date	Appr.
A	REVISED LEGEND, ADDED SEAL		
B	ADDED POWER CENTER GRADING AND TITLE BLOCK EDIT, ADD TOE OF SLOPE	AUG 01	ELF

Designed by: Rebecca S. Hand
Drawn by: J. Rodden
Checked by: W. Dixon
Reviewed by: Scott Faulk
Submitted by: E. Lamar Faulk
Date: 15 June 2001
Rev.
Contr No. DACA63-01-C-0016
File name: CS-168.dwg
Plot date:
Plot scale: 1:600

U.S. ARMY ENGINEER DISTRICT
CORPS OF ENGINEERS
FORT WORTH, TEXAS

POLYENGINEERING, INC.
ENGINEERS & ARCHITECTS
DOTHAN, ALABAMA

FORT HOOD, TEXAS
DIGITAL MULTI-PURPOSE RANGE COMPLEX
PN 519145 (PY/01)

RANGE PLAN SHEET

Sheet reference number:
CS-168
Sheet of

Contr No. DACA63-01-C-0016

...\CS-168.dwg 8/11/2005 1:16:06 PM

00687810

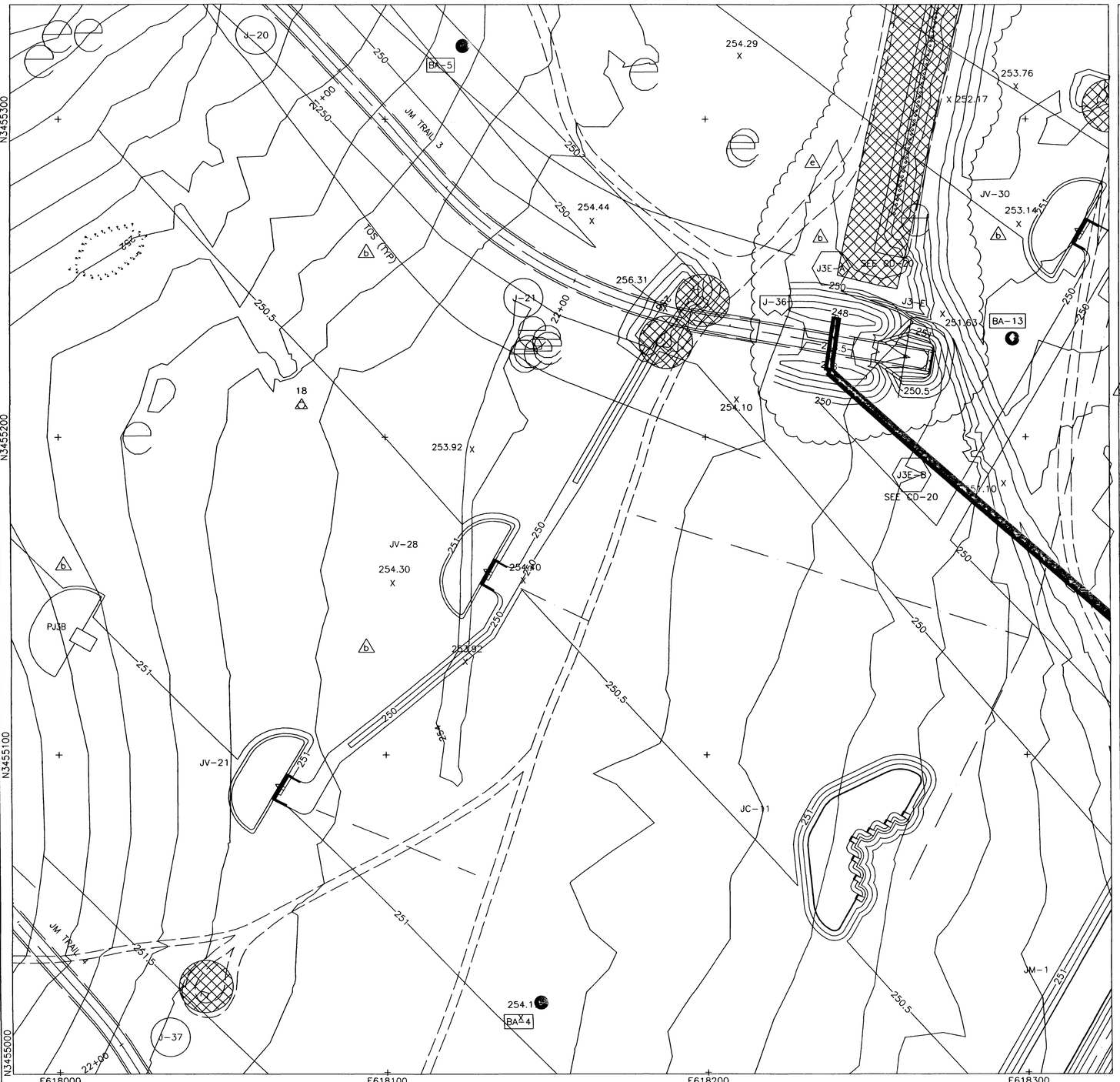

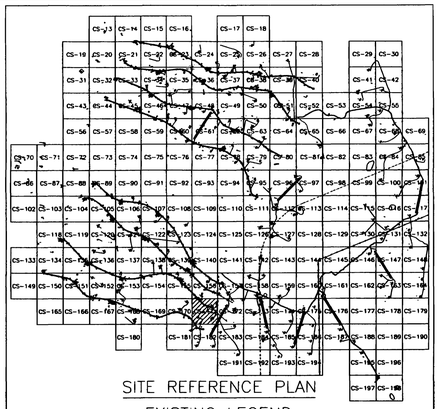

SITE REFERENCE PLAN

EXISTING LEGEND

- MAJOR CONTOUR (2m INTERVALS)
- MINOR CONTOUR
- CREEK
- EXISTING ROAD
- CHAIN LINK FENCE
- 326.00 X — SPOT ELEVATION
- ARCHEOLOGICAL SITE
- 59 — SURVEY MARKER
- TREELINE
- UTILITY POLE
- EXISTING AMTC (ECM-1)
- STATIONARY ARMOR TARGET
- ELECTRICAL MANHOLES
- EXISTING BUILDINGS

PROPOSED LEGEND

- CV-1, JV-1 — SAT
- CC-1, JC-1 — SIT
- CM-1, JM-1 — AMTC
- C4-B, J4-B — DEFILADE
- POWER CENTER (PC1A, PJ1A)
- CONCRETE TURNING PADS
- B-30 — SOIL BORING
- TP-3 — TEST PITS
- EXISTING TARGET DEMOLITION
- OLD IMPACT AREA
- OLD IMPACT BUFFER ZONE AREA
- TANK TRAILS
- PRIMARY TARGET SERVICE ROAD
- 266 — FINISHED GRADING
- SECONDARY TARGET SERVICE ROADS
- C-34 — DRAINAGE PIPE w/ PIPE NO.
- C-100 — CURVE NUMBER
- SWALE
- CENTRAL AAR BUILDING — BUILDINGS
- C-28 — TURN PAD NUMBER
- FC-1 — CAMERAS
- CL-1 — RANGE LIMIT MARKER
- CT-1, JT-1 — TRENCH
- FLAG POLE

STATE OF TEXAS — E. LAMAR FAULK — 86158 — LICENSED — PROFESSIONAL ENGINEER

THE SEAL APPEARING ON THIS DOCUMENT WAS AUTHORIZED BY E. LAMAR FAULK ON AUGUST 8, 2001

N

GRAPHIC SCALE

12 6 0 6 12

SCALE: 1:600

US Army Corps of Engineers
FORT WORTH DISTRICT

POLYENGINEERING, INC.
4800 Meadowood Avenue
Dothan, Alabama 36303
(334) 793-4700 (voice)
(334) 793-9915 (fax)

Rev.	Description	Date	By
1	REVISED DEFILADE GRADING AND DEMOLITION	SEPT 01	ELF
2	REVISED TARGET GRADING		
3	TITLE BLOCK EDIT, ADD REFERENCE NOTE, PIPES AND TOE OF SLOPE, REVISED LEGEND		
4	ADDED CONCRETE TURNPAD AT END OF TRAIL, POWER CENTER AND DEFILADE GRADING	AUG 01 2006	ELF MPC

Designed by: Barbara S. Hand
Dwn by: J. Peeden
Ckd by: M. Dixon
Reviewed by: Scott Faulk
Reviewed by: Submitted by: E. Lamar Faulk
Date: 19 June 2001
Sol No. DACA63-01-B-0007
Contr No. DACA63-01-C-0016
File name:
Plot date:
Plot scale: 1:600

U.S. ARMY ENGINEER DISTRICT
CORPS OF ENGINEERS
FORT WORTH, TEXAS

POLYENGINEERING, INC.
ENGINEERS & ARCHITECTS
DOTHAN, ALABAMA

FORT HOOD, TEXAS
DIGITAL MULTI-PURPOSE RANGE COMPLEX (DMPRC)
PN 51915 FY 01

RANGE PLAN SHEET

Sheet reference number:
CS-171
Sheet of

Contr No. DACA63-01-C-0016

...\CS-171.dwg 8/11/2005 1:15:00 PM

00687830

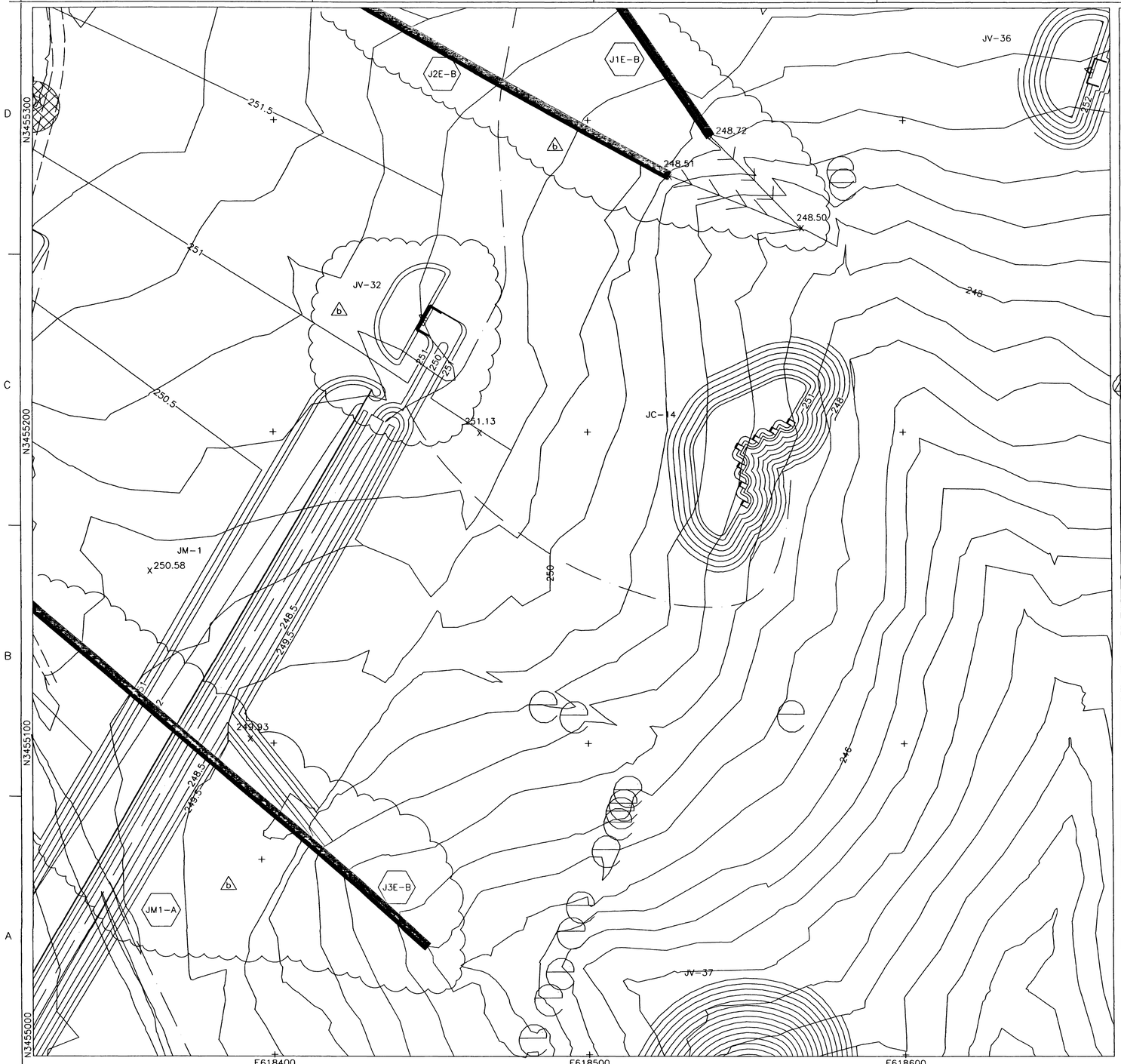

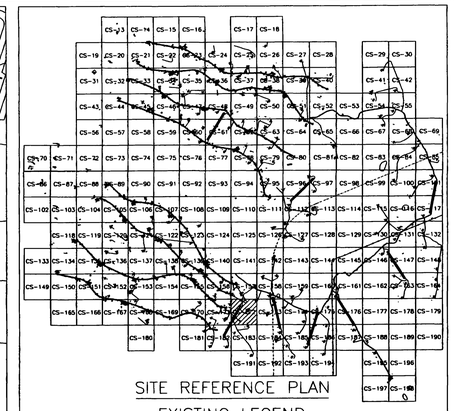

SITE REFERENCE PLAN

EXISTING LEGEND

- MAJOR CONTOUR (2m INTERVALS)
- MINOR CONTOUR
- CREEK
- EXISTING ROAD
- CHAIN LINK FENCE
- 326.00 SPOT ELEVATION
- ARCHEOLOGICAL SITE
- 59 SURVEY MARKER
- TREELINE
- UTILITY POLE
- EXISTING AMTC (ECM-1)
- STATIONARY ARMOR TARGET
- ELECTRICAL MANHOLES
- EXISTING BUILDINGS

PROPOSED LEGEND

- CV-1, JV-1, CC-1, JC-1 — SAT
- SIT
- CM-1, JM-1 — AMTC
- C4-B, J4-B — DEFILADE
- POWER CENTER (PC1A, PJ1A)
- CONCRETE TURNING PADS
- B-30 SOIL BORING
- TP-3 TEST PITS
- EXISTING TARGET DEMOLITION
- OLD IMPACT AREA
- OLD IMPACT BUFFER ZONE AREA
- TANK TRAILS
- PRIMARY TARGET SERVICE ROAD
- 266 FINISHED GRADING
- SECONDARY TARGET SERVICE ROADS
- C-34 DRAINAGE PIPE w/ PIPE NO.
- C-100 CURVE NUMBER
- SWALE
- CENTRAL AAR BUILDING — BUILDINGS
- C-28 TURN PAD NUMBER
- FC-1 CAMERAS
- CL-1 RANGE LIMIT MARKER
- CT-1, JT-1 TRENCH
- FLAG POLE

STATE OF TEXAS
E. LAMAR FAULK
86158
LICENSED
PROFESSIONAL ENGINEER

THE SEAL APPEARING ON THIS DOCUMENT WAS AUTHORIZED BY E. LAMAR FAULK ON AUGUST 8, 2001

N

GRAPHIC SCALE
12 6 0 6 12
SCALE: 1:600

US Army Corps of Engineers
FORT WORTH DISTRICT

POLYENGINEERING, INC.
4800 Beechland Avenue
Dothan, Alabama 36303
(334) 793-7700 (voice)
(334) 793-8016 (fax)

Mark	Description	Date	Appr.
A	REVISED LEGEND, ADDED SEAL	AUG. 01	ELF
B	TITLE BLOCK EDIT, ADD PIPES AND DITCH, REVISED TARGET GRADING		

Designed by: Rebecca S. Hand
Date: 19 June 2001
Rev.
Dwn by: J. L. Pearson
Chkd by: J. L. Pearson
Contr. No. DACA63-01-C-0007
Reviewed by: Scott Faulk
Contr. No. DACA63-01-C-0016
Submitted by: E. Lamar Faulk
File name:
Plot date:
Plot scale: 1:600

U.S. ARMY ENGINEER DISTRICT
CORPS OF ENGINEERS
FORT WORTH, TEXAS

POLYENGINEERING, INC.
ENGINEERS & ARCHITECTS
DOTHAN, ALABAMA

FORT HOOD, TEXAS
DIGITAL MULTI-PURPOSE RANGE COMPLEX (DMPRC)
PIN 51915
FY 01

RANGE PLAN SHEET

Sheet reference number:
CS-172
Sheet of

Contr No. DACA63-01-C-0016

...\CS-172.dwg 8/11/2005 1:13:27 PM

00687840

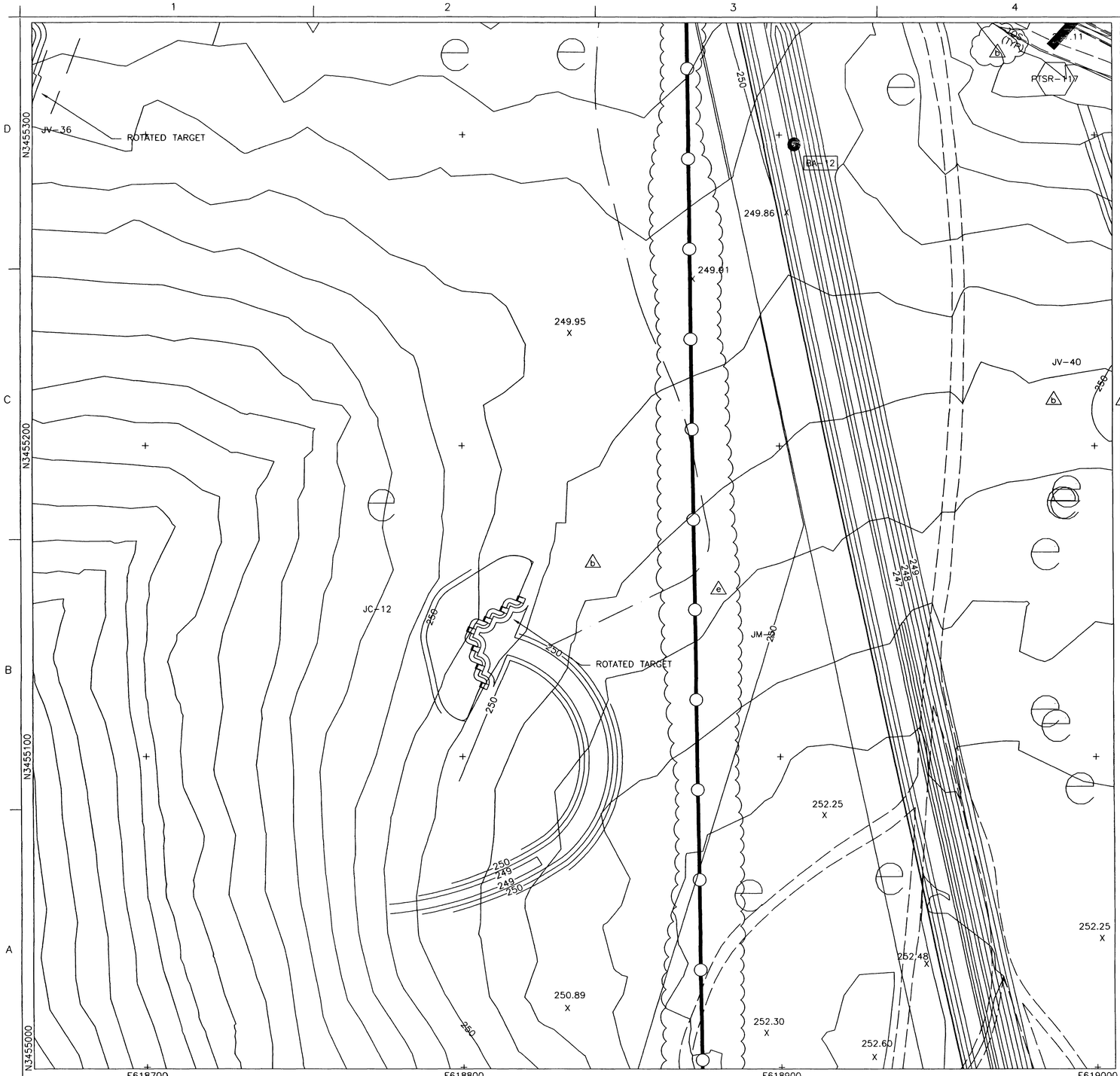

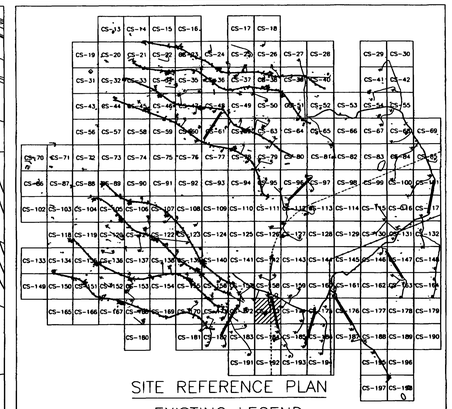

SITE REFERENCE PLAN

EXISTING LEGEND

- MAJOR CONTOUR (2m INTERVALS)
- MINOR CONTOUR
- CREEK
- EXISTING ROAD
- CHAIN LINK FENCE
- 326.00 X — SPOT ELEVATION
- ARCHEOLOGICAL SITE
- 59 — SURVEY MARKER
- TREELINE
- UTILITY POLE
- EXISTING AMTC (ECM-1)
- STATIONARY ARMOR TARGET
- ELECTRICAL MANHOLES
- EXISTING BUILDINGS

PROPOSED LEGEND

- CV-1, JV-1 — SAT
- CC-1, JC-1 — SIT
- CM-1, JM-1 — AMTC
- C4-B, J4-B — DEFILADE
- POWER CENTER (PC1A, PJ1A)
- CONCRETE TURNING PADS
- B-30 — SOIL BORING
- TP-3 — TEST PITS
- EXISTING TARGET DEMOLITION
- OLD IMPACT AREA
- OLD IMPACT BUFFER ZONE AREA
- TANK TRAILS
- PRIMARY TARGET SERVICE ROAD
- 266 — FINISHED GRADING
- SECONDARY TARGET SERVICE ROADS
- C-34 — DRAINAGE PIPE w/ PIPE NO.
- C-100 — CURVE NUMBER
- SWALE
- CENTRAL AAR BUILDING — BUILDINGS
- C-28 — TURN PAD NUMBER
- FC-1 — CAMERAS
- CL-1 — RANGE LIMIT MARKER
- CT-1, JT-1 — TRENCH
- FLAG POLE

STATE OF TEXAS — E. LAMAR FAULK — 86158 — LICENSED — PROFESSIONAL ENGINEER

THE SEAL APPEARING ON THIS DOCUMENT WAS AUTHORIZED BY E. LAMAR FAULK ON AUGUST 8, 2001

N

GRAPHIC SCALE

12 6 0 6 12

SCALE: 1:600

US Army Corps of Engineers
FORT WORTH DISTRICT

POLYENGINEERING, INC.
1600 Rutherford Avenue
Dothan, Alabama 36303
(334) 793-4700 (voice)
(334) 793-9015 (fax)

Rev.	Description	Date	Appr.
1	REVISED IMPACT AREA LIMESTONE	SEPT 01	ELF
2	REVISED TARGET GRADING, TITLE BLOCK EDIT, ADD TOE OF SLOPE, REVISED LEGEND, ADDED SEAL	AUG 01	ELF

Date: 19 June 2001
Sol No. DACA63-01-B-0007
Contr No. DACA63-01-C-0016
File name:
Plot date:
Plot scale: 1:600

Designed by: Rebecca S. Hand
Dwn by: J. Peaden
Ckd by: M. Dixon
Reviewed by: Jack Tyler
Submitted by: E. Lamar Faulk

U.S. ARMY ENGINEER DISTRICT
CORPS OF ENGINEERS
FORT WORTH, TEXAS

POLYENGINEERING, INC.
ENGINEERS & ARCHITECTS
DOTHAN, ALABAMA

FORT HOOD, TEXAS
DIGITAL MULTI-PURPOSE RANGE COMPLEX (DMPRC)
PN 51915
FY 01

RANGE PLAN SHEET

Sheet reference number:
CS-173
Sheet of

Contr No. DACA63-01-C-0016

...\CS-173.DWG 8/11/2005 1:11:20 PM

00687850

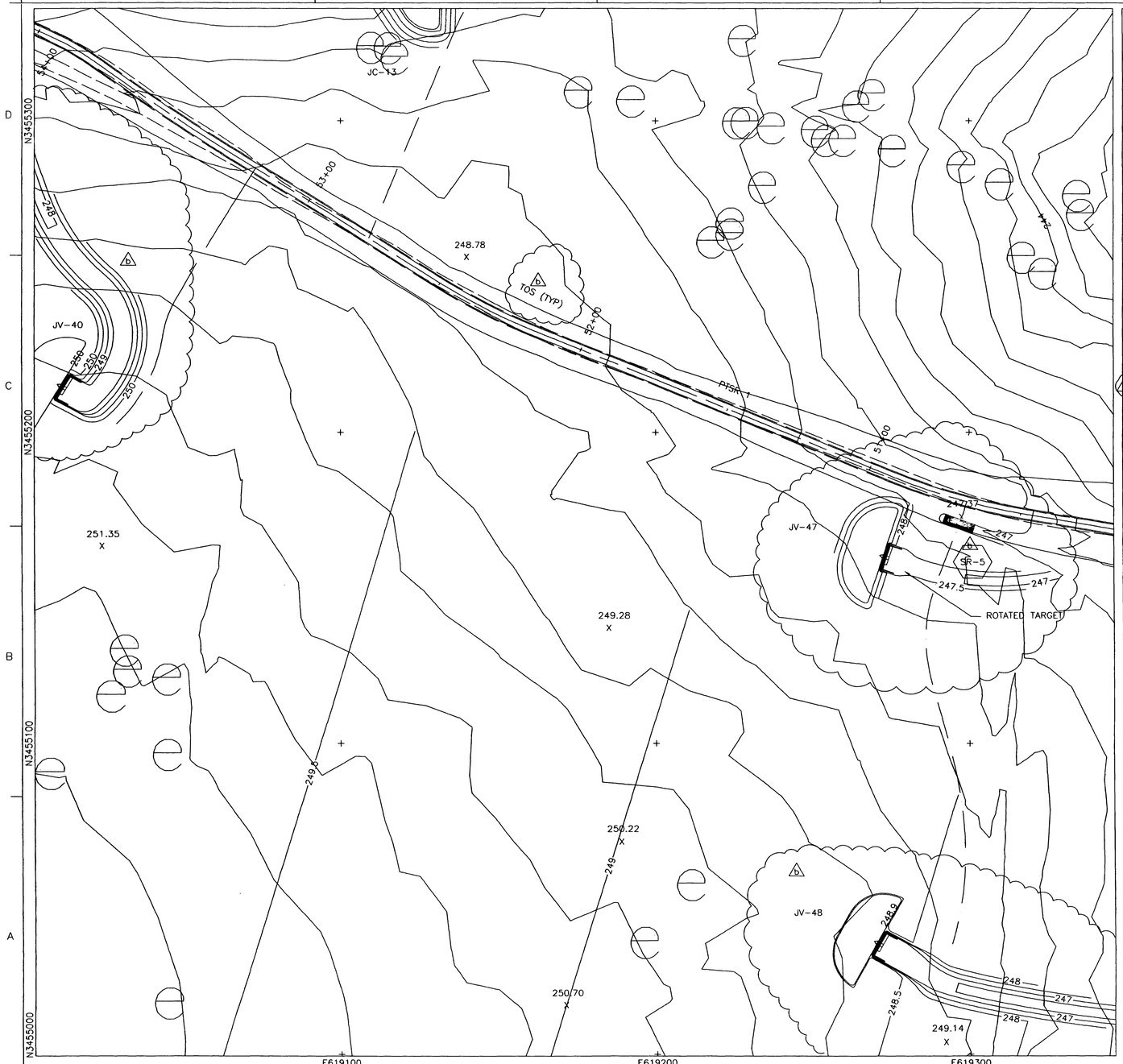

SITE REFERENCE PLAN

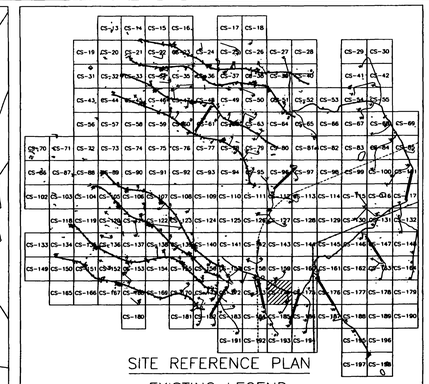

EXISTING LEGEND

- MAJOR CONTOUR (2m INTERVALS)
- MINOR CONTOUR
- CREEK
- EXISTING ROAD
- CHAIN LINK FENCE
- 326.00 SPOT ELEVATION
- ARCHEOLOGICAL SITE
- 59 SURVEY MARKER
- TREELINE
- UTILITY POLE
- EXISTING AMTC (ECM-1)
- STATIONARY ARMOR TARGET
- ELECTRICAL MANHOLES
- EXISTING BUILDINGS

PROPOSED LEGEND

- CV-1, JV-1, CC-1, JC-1 — SAT, SIT
- CM-1, JM-1, C4-B, J4-B — AMTC, DEFILADE
- OLD IMPACT AREA
- OLD IMPACT BUFFER ZONE AREA
- TANK TRAILS
- PRIMARY TARGET SERVICE ROAD
- FINISHED GRADING
- 266 SECONDARY TARGET SERVICE ROADS
- C-34 DRAINAGE PIPE w/ PIPE NO.
- C-100 CURVE NUMBER
- SWALE
- POWER CENTER (PC1A, PJ1A)
- CENTRAL AAR BUILDING — BUILDINGS
- CONCRETE TURNING PADS
- C-28 TURN PAD NUMBER
- B-30 SOIL BORING
- FC-1 CAMERAS
- CL-1 RANGE LIMIT MARKER
- TP-3 TEST PITS
- CT-1, JT-1 TRENCH
- EXISTING TARGET DEMOLITION
- FLAG POLE

STATE OF TEXAS — E. LAMAR FAULK 86158 — LICENSED PROFESSIONAL ENGINEER

THE SEAL APPEARING ON THIS DOCUMENT WAS AUTHORIZED BY E. LAMAR FAULK ON AUGUST 8, 2001

N

GRAPHIC SCALE
12 6 0 6 12
SCALE: 1:600

US Army Corps of Engineers
FORT WORTH DISTRICT

POLYENGINEERING, INC.
1806 Woodland Avenue
Dothan, Alabama 36303
(334) 793-4700 (voice)
(334) 793-9016 (fax)

No.	Description	Date	By
1	REVISED TARGET GRADING, REVISED LEGEND, ADDED SEAL, TITLE BLOCK EDIT, ADD TOE OF SLOPE, ADDED SERVICE ROAD PIPE	AUG 01	ELF

Designed by: Rebecca S. Hand
Drawn by: J. Pender
Checked by: W. Dixon
Reviewed by: Scott Faulk
Submitted by: E. Lamar Faulk
Date: 15 July 2001
Contr. No. DACA63-01-B-0007
Task Order 0016
File name: 53-174.dwg
Plot scale: 1:600
Rev.

U.S. ARMY ENGINEER DISTRICT
CORPS OF ENGINEERS
FORT WORTH, TEXAS

POLYENGINEERING, INC.
ENGINEERS & ARCHITECTS
DOTHAN, ALABAMA

FORT HOOD, TEXAS
DIGITAL MULTI-PURPOSE RANGE COMPLEX (DMPRC)
PN 51919 FY 01

RANGE PLAN SHEET

Sheet reference number:
CS-174
Sheet of

Contr. No. DACA63-01-C-0016

..\CS-174.dwg 8/11/2005 1:09:18 PM

00687860

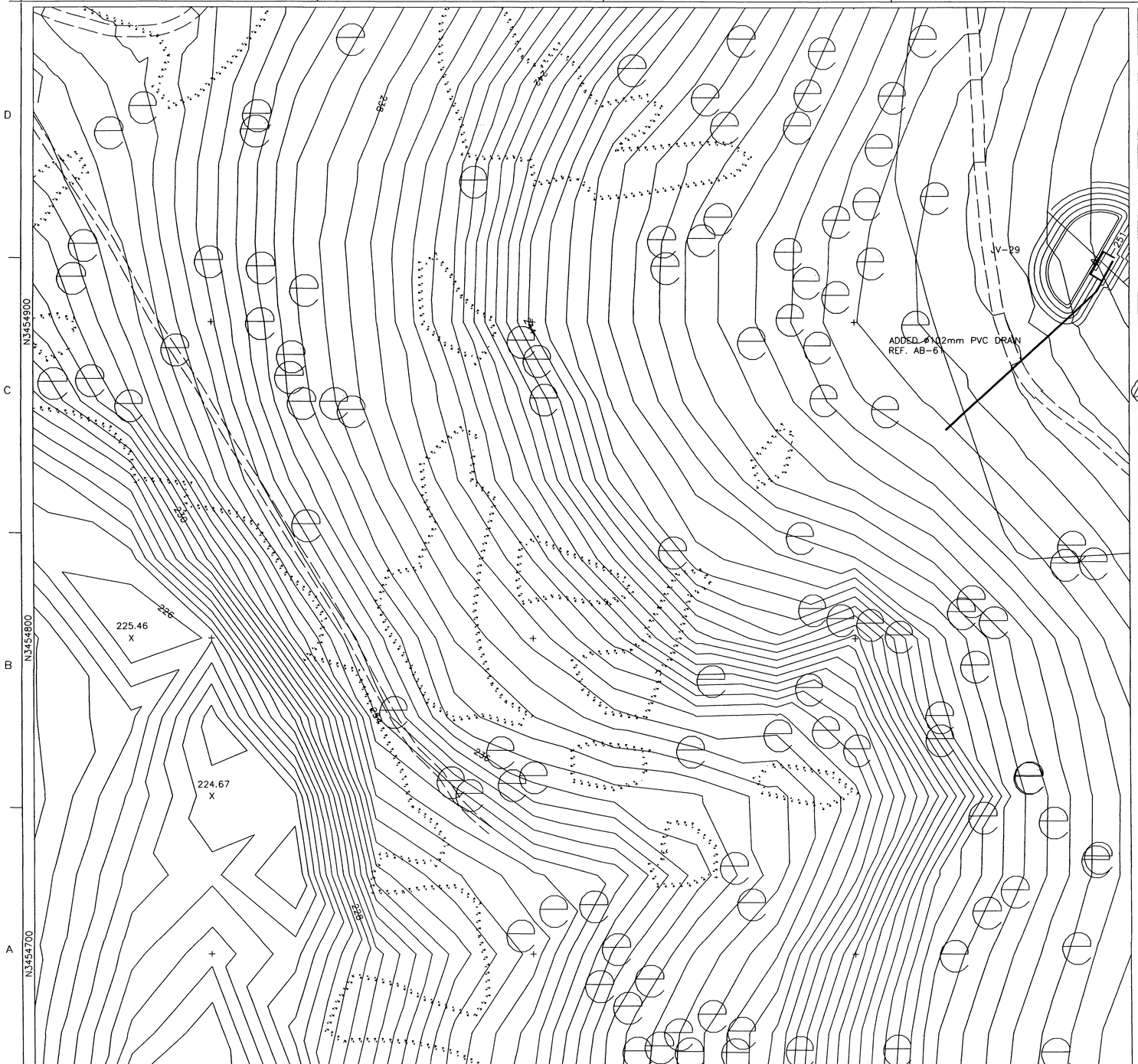

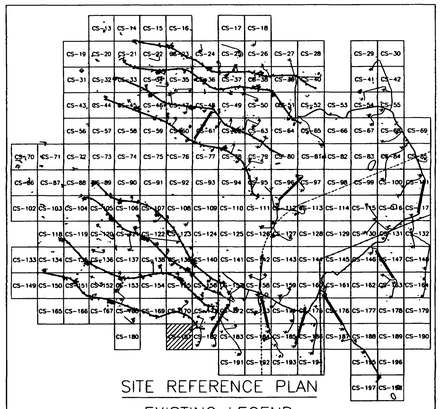

SITE REFERENCE PLAN

EXISTING LEGEND

- MAJOR CONTOUR (2m INTERVALS)
- MINOR CONTOUR
- CREEK
- EXISTING ROAD
- CHAIN LINK FENCE
- 326.00 SPOT ELEVATION
- ARCHEOLOGICAL SITE
- 59 SURVEY MARKER
- TREELINE
- UTILITY POLE
- EXISTING AMTC (ECM-1)
- STATIONARY ARMOR TARGET
- ELECTRICAL MANHOLES
- EXISTING BUILDINGS

PROPOSED LEGEND

- CV-1, JV-1, CC-1, JC-1 — SAT, SIT
- OLD IMPACT AREA
- OLD IMPACT BUFFER ZONE AREA
- TANK TRAILS
- PRIMARY TARGET SERVICE ROAD
- FINISHED GRADING
- SECONDARY TARGET SERVICE ROADS
- CM-1, JM-1 — AMTC
- C4-B, J4-B — DEFILADE
- 266 C-34 — DRAINAGE PIPE w/ PIPE NO.
- C-100 — CURVE NUMBER
- SWALE
- POWER CENTER (PC1A, PJ1A)
- CENTRAL AAR BUILDING — BUILDINGS
- CONCRETE TURNING PADS
- B-30 SOIL BORING
- TP-3 TEST PITS
- EXISTING TARGET DEMOLITION
- C-28 — TURN PAD NUMBER
- FC-1 — CAMERAS
- CL-1 — RANGE LIMIT MARKER
- CT-1, JT-1 — TRENCH
- FLAG POLE

STATE OF TEXAS
E. LAMAR FAULK
86158
LICENSED
PROFESSIONAL ENGINEER

THE SEAL APPEARING ON THIS DOCUMENT WAS AUTHORIZED BY E. LAMAR FAULK ON AUGUST 8, 2001

N

GRAPHIC SCALE
12 6 0 6 12
SCALE: 1:600

US Army Corps of Engineers
FORT WORTH DISTRICT

POLYENGINEERING, INC.
1486 Montland Avenue
Dothan, Alabama 36303
(334) 793-4700 (voice)
(334) 793-9018 (fax)

Mark	Description	Date	Appr.
1	TITLE BLOCK EDIT, REVISED LEGEND, ADDED SEAL	AUG 01	ELF

Designed by: Rebecca S. Hood
Drawn by: J. Paul Brown
Checked by: M. Dixon
Reviewed by: Scott Faulk
Submitted by: E. Lamar Faulk
Date: August 8, 2001
Scale: 1:600
Contr. No. DACA63-01-B-0007
Rev.
File name:
Plot date:
Plot scale: 1:600

U.S. ARMY ENGINEER DISTRICT
CORPS OF ENGINEERS
FORT WORTH, TEXAS

POLYENGINEERING, INC.
ENGINEERS & ARCHITECTS
DOTHAN, ALABAMA

FORT HOOD, TEXAS
DIGITAL MULTI-PURPOSE RANGE COMPLEX (DMPRC)
PN 51919 FY 01

RANGE PLAN SHEET

Sheet reference number:
CS-181
Sheet of

Contr No. DACA63-01-C-0016

...\CS-181.dwg 8/11/2005 1:07:17 PM

00687370

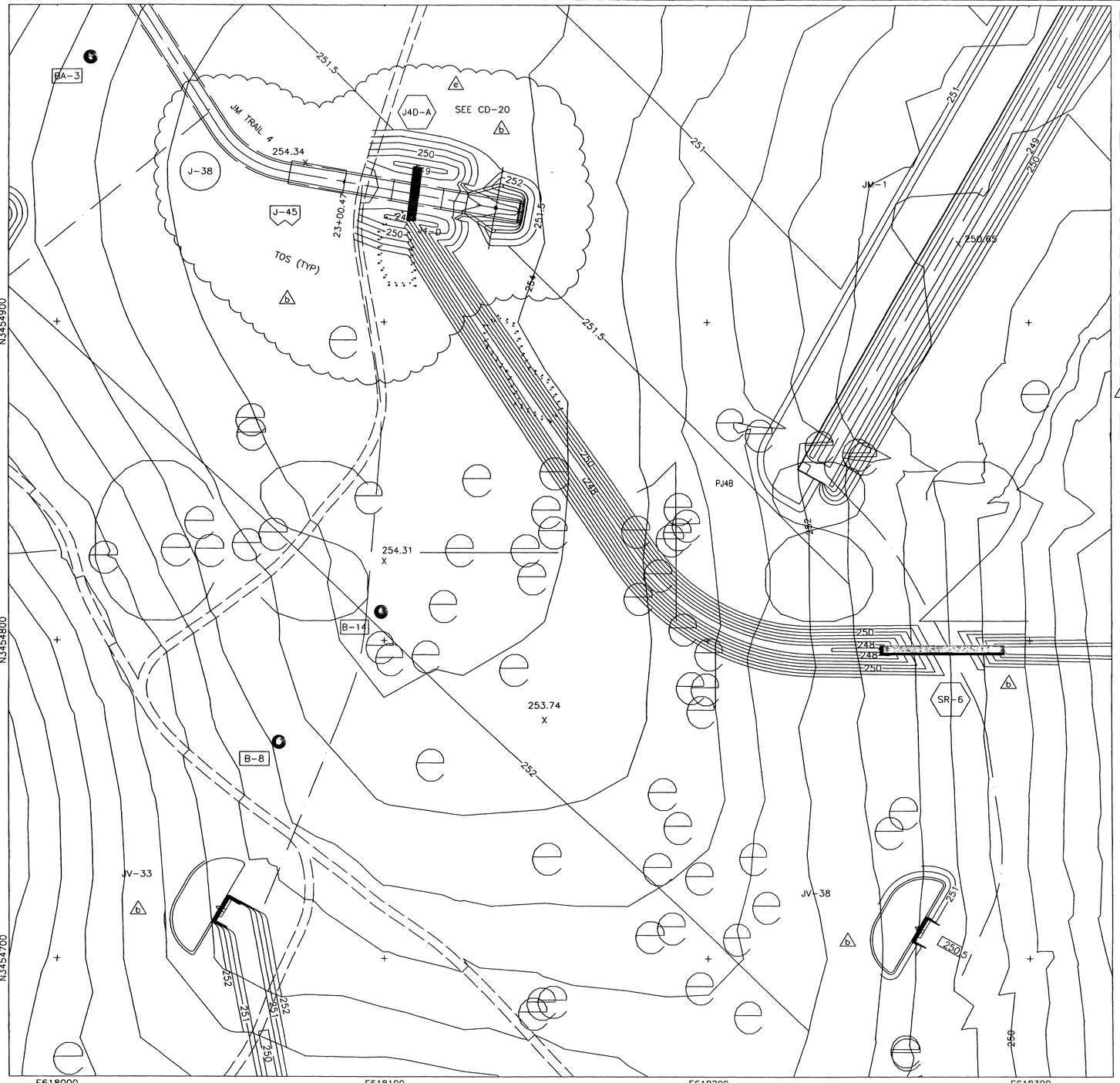

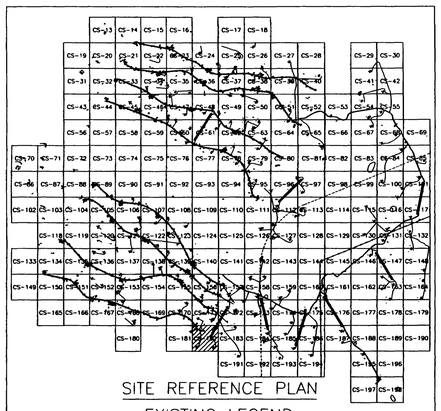

SITE REFERENCE PLAN

EXISTING LEGEND

- MAJOR CONTOUR (2m INTERVALS)
- MINOR CONTOUR
- CREEK
- EXISTING ROAD
- CHAIN LINK FENCE
- 326.00 X — SPOT ELEVATION
- ARCHEOLOGICAL SITE
- 59 — SURVEY MARKER
- TREELINE
- UTILITY POLE
- EXISTING AMTC (ECM-1)
- STATIONARY ARMOR TARGET
- ELECTRICAL MANHOLES
- EXISTING BUILDINGS

PROPOSED LEGEND

- CV-1, JV-1 — SAT
- CC-1, JC-1 — SIT
- CM-1, JM-1 — AMTC
- C4-B, J4-B — DEFILADE
- POWER CENTER (PC1A, PJ1A)
- CONCRETE TURNING PADS
- B-30 — SOIL BORING
- TP-3 — TEST PITS
- EXISTING TARGET DEMOLITION
- OLD IMPACT AREA
- OLD IMPACT BUFFER ZONE AREA
- TANK TRAILS
- PRIMARY TARGET SERVICE ROAD
- 266 — FINISHED GRADING
- SECONDARY TARGET SERVICE ROADS
- C-34 — DRAINAGE PIPE w/ PIPE NO.
- C-100 — CURVE NUMBER
- SWALE
- CENTRAL AAR BUILDING — BUILDINGS
- C-28 — TURN PAD NUMBER
- FC-1 — CAMERAS
- CL-1 — RANGE LIMIT MARKER
- CT-1, JT-1 — TRENCH
- FLAG POLE

STATE OF TEXAS — E. LAMAR FAULK — 86158 — LICENSED — PROFESSIONAL ENGINEER

THE SEAL APPEARING ON THIS DOCUMENT WAS AUTHORIZED BY E. LAMAR FAULK ON AUGUST 8, 2001

N

GRAPHIC SCALE
12 6 0 6 12
SCALE: 1:600

US Army Corps of Engineers
FORT WORTH DISTRICT

POLYENGINEERING, INC.
4306 Boothe Avenue
Dothan, Alabama 36303
(334) 793-4700 (voice)
(334) 793-8015 (fax)

Mark	Description	Date	Appr.
A	REVISED DEFLADE GRADING, REVISED LEGEND, ADDED SEAL	SEPT 01	ELF
B	REVISED DEFLADE GRADING AND ADDED TOE OF SLOPE, ADDED SR-6 PIPE		
C	ADDED CONCRETE TURNPAD AT END OR TRAIL, REFERENCE NOTE AND TITLE BLOCK EDIT.	AUG 01	ELF

Designed by: Rebecca S. Hand
Dwn by: L. Pendergraft
Ckd by: M. Brown
Reviewed by: Scott Faulk
Submitted by: E. Lamar Faulk
Date: 19 June 2001
Rev.
Solicit. No. DACA63-01-B-0007
Contr. No. DACA63-01-C-0016
File name:
Plot date:
Plot scale: 1:600

U.S. ARMY ENGINEER DISTRICT
CORPS OF ENGINEERS
FORT WORTH, TEXAS

POLYENGINEERING, INC.
ENGINEERS & ARCHITECTS
DOTHAN, ALABAMA

FORT HOOD, TEXAS
DIGITAL MULTI-PURPOSE RANGE COMPLEX (DMPRC)
PN 51915 FY 01

RANGE PLAN SHEET

Sheet reference number:
CS-182
Sheet of

Contr No. DACA63-01-C-0016

.\CS-182.dwg 8/11/2005 1:06:14 PM

00687330

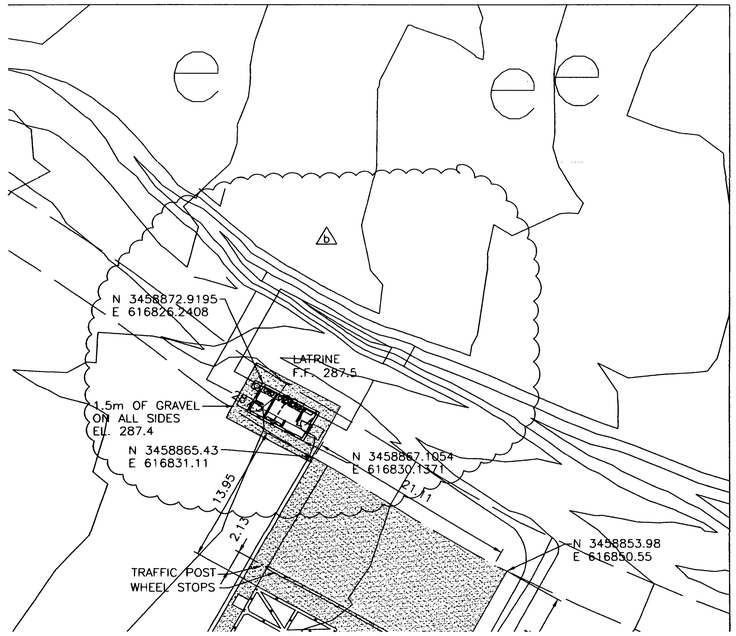

LATRINE (NORTH) LAYOUT
SCALE: 1:250

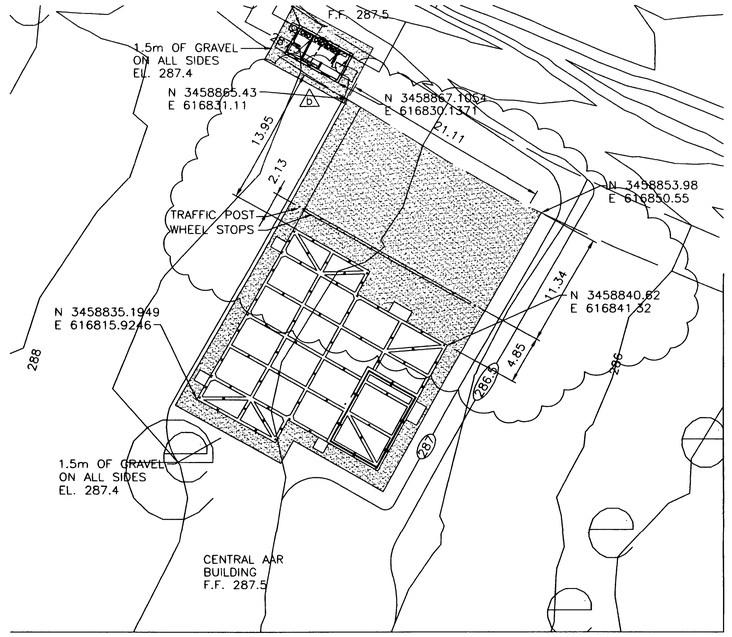

CENTRAL AAR BUILDING LAYOUT
SCALE: 1:250

STATE OF TEXAS
E. LAMAR FAULK
86158
LICENSED
PROFESSIONAL ENGINEER

THE SEAL APPEARING ON THIS DOCUMENT WAS AUTHORIZED BY E. LAMAR FAULK ON AUGUST 8, 2001

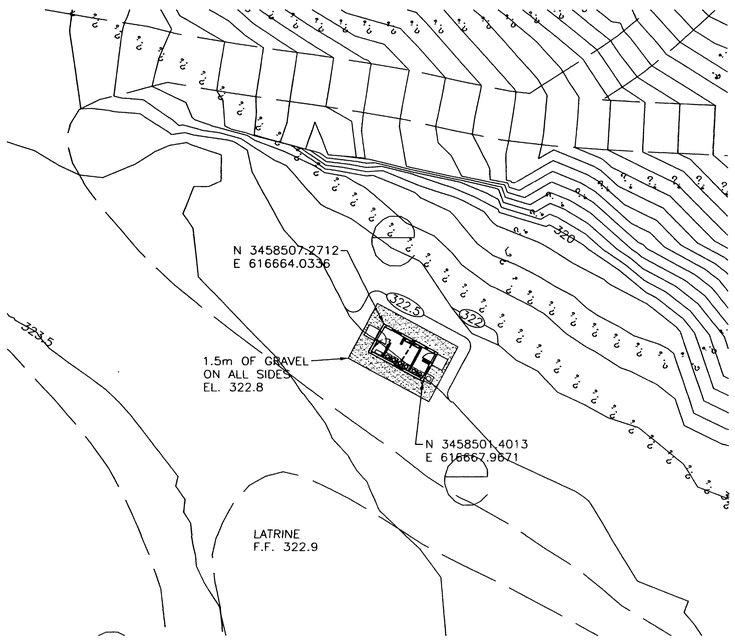

LATRINE (SOUTH) LAYOUT
SCALE: 1:250

LEGEND

- TREELINE
- TREE
- EXISTING ROAD
- MAJOR CONTOUR
- MINOR CONTOUR
- 289 FINISHED GRADING
- GRAVEL

N

GRAPHIC SCALE
5 2.5 0 2.5 5
SCALE: 1:250

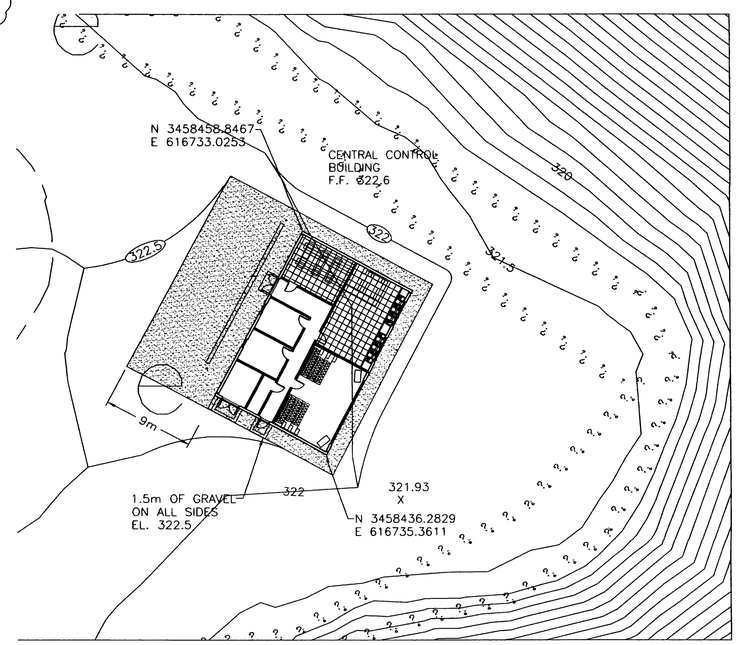

CENTRAL CONTROL BUILDING LAYOUT
SCALE: 1:250

US Army Corps of Engineers
FORT WORTH DISTRICT

POLYENGINEERING, INC.
1906 Southland Avenue
Dothan, Alabama 36303
(334) 793-4700 (voice)
(334) 793-3915 (fax)

Mark	Description	Date	Appr.
A	MOVED LATRINE (NORTH), ADDED SEAL	AUG 01	ELF
B	MOD TYPICAL GRAVEL DIM FOR AAR BUILDING AND TITLE BLOCK EDIT, ADDED LEGEND		

Designed by: Rebecca S. Hand
Dwn by: Lt Robert W. Jones
Reviewed by: Scott Faulk
Submitted by: E. Lamor Faulk
Date: 13 JUNE 2001
Sol No. DACA63-01-B-0007
Contr No. DACA63-01-C-0016
File name:
Plot date:
Plot scale: AS SHOWN
Rev: B 2016

U.S. ARMY ENGINEER DISTRICT
CORPS OF ENGINEERS
FORT WORTH, TEXAS

POLYENGINEERING, INC.
ENGINEERS & ARCHITECTS
DOTHAN, ALABAMA

FORT HOOD, TEXAS
DIGITAL MULTI-PURPOSE RANGE COMPLEX
(DMPRC)
FY 01
PN 519915

SUPPORT AREA LAYOUT

Sheet reference number:
CS-200
Sheet of

Contr No. DACA63-01-C-0016

00687890

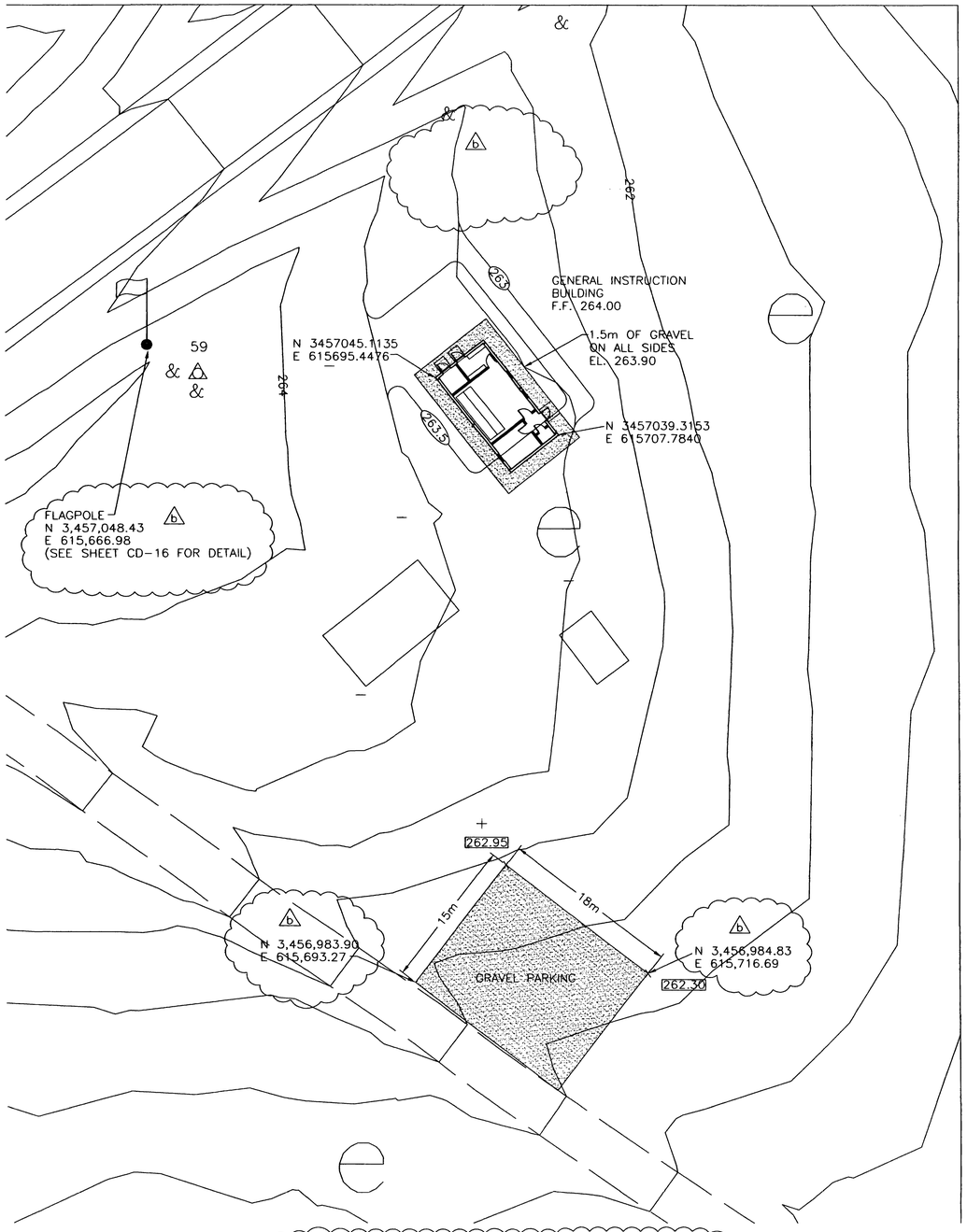

GENERAL INSTRUCTION BUILDING LAYOUT

SCALE: 1:250

LEGEND

- TREELINE
- TREE
- EXISTING ROAD
- MAJOR CONTOUR
- MINOR CONTOUR
- 289 FINISHED GRADING
- GRAVEL
- EXISTING BUILDINGS
- POWER POLE

N

GRAPHIC SCALE

5 2.5 0 2.5 5

SCALE: 1:250

STATE OF TEXAS
E. LAMAR FAULK
86158
LICENSED
PROFESSIONAL ENGINEER

THE SEAL APPEARING ON THIS DOCUMENT WAS AUTHORIZED BY E. LAMAR FAULK ON AUGUST 8, 2001

US Army Corps of Engineers
FORT WORTH DISTRICT

POLYENGINEERING, INC.
1825 Newland Avenue
Dothan, Alabama 36303
(334) 793-4700 (voice)
(334) 793-8015 (fax)

Mark	Description	Date	Appr.
1	CORRECTED LABEL OF LAYOUT AND BUILDING, ADDED HORIZONTAL CONTROL, PARKING AND TITLE BLOCK EDIT, REVISED NOTE, ADDED LEGEND, ADDED SEAL.	AUG 01	ELF

Designed by: Richard S. Freund
Dwn by: J. Peeden
Ckd by: M. Dixon
Reviewed by: Scott Faulk
Submitted by: E. Lamar Faulk
Date: 19 JUNE 2001
Sol No. DACA63-01-B-0007
Contr. No. DACA63-01-C-0016
File name:
Plot date:
Plot scale: AS SHOWN
Rev.

U.S. ARMY ENGINEER DISTRICT
CORPS OF ENGINEERS
FORT WORTH, TEXAS

POLYENGINEERING, INC.
ENGINEERS & ARCHITECTS
DOTHAN, ALABAMA

FORT HOOD, TEXAS
DIGITAL MULTI-PURPOSE RANGE COMPLEX
PN 51915 FY 01

SUPPORT AREA LAYOUT

Sheet reference number:
CS-201
Sheet of

Contr No. DACA63-01-C-0016

00687000

PRIMARY TARGET SERVICE ROAD 1 CURVE DATA

CURVE No.	SHEET REFERENCE	P.I. STATION	P.I. NORTHING	P.I. EASTING	P.C. STATION	P.T. STATION	DELTA	RADIUS	DEGREE OF CURVE	ARC LENGTH	TANGENT LENGTH	CHORD LENGTH
P-93	CS-158	54+65.24	3455357.539	618952.504	54+51.96	54+78.50	5°04'05"	300.000	1°54'35"	26.536	13.277	26.528
P-94	CS-158	55+72.23	3455397.379	618853.186	55+59.95	55+84.50	4°41'15"	300.000	1°54'35"	24.544	12.279	24.537
P-95	CS-158	56+33.46	3455424.747	618798.402	56+23.43	56+43.42	11°27'03"	100.000	5°43'46"	19.985	10.026	19.952
P-96	CS-157,CS-158	57+64.00	3455458.760	618672.294	57+35.89	57+91.78	16°00'12"	200.000	2°51'53"	55.863	28.114	55.681
P-97	CS-157	59+39.00	3455549.333	618522.138	59+30.70	59+47.25	9°28'44"	100.000	5°43'46"	16.544	8.291	16.525
P-98	CS-157	59+84.36	3455578.866	618487.652	59+78.43	59+90.28	6°47'30"	100.000	5°43'46"	11.854	5.934	11.847
P-99	CS-157	60+58.11	3455619.885	618426.344	60+46.90	60+69.23	12°47'42"	100.000	5°43'46"	22.331	11.212	22.285

PRIMARY TARGET SERVICE ROAD 2 CURVE DATA

CURVE No.	SHEET REFERENCE	P.I. STATION	P.I. NORTHING	P.I. EASTING	P.C. STATION	P.T. STATION	DELTA	RADIUS	DEGREE OF CURVE	ARC LENGTH	TANGENT LENGTH	CHORD LENGTH
P-100	CS-161	1+36.48	3455354.582	619712.485	1+32.82	1+39.84	40°15'15"	10.000	57°17'45"	7.026	3.665	6.882
P-101	CS-161	1+36.48	3455354.582	619712.485	1+32.82	1+39.84	40°15'15"	10.000	57°17'45"	7.026	3.665	6.882
P-102	CS-161	1+52.14	3455340.976	619720.827	1+47.08	1+56.67	44°59'60"	12.200	46°57'50"	9.582	5.053	9.337
P-103	CS-176	1+61.94	3455330.937	619718.419	1+56.88	1+66.46	44°59'60"	12.200	46°57'50"	9.582	5.053	9.337
P-104	CS-187	5+66.76	3454985.363	619930.286	5+60.64	5+72.87	7°00'27"	100.000	5°43'46"	12.230	6.123	12.223
P-105	CS-187	6+76.94	3454885.094	619975.990	6+41.74	7+12.02	8°03'12"	500.000	1°08'45"	70.278	35.197	70.220
P-106	CS-188	8+45.46	3454742.963	620066.739	8+25.72	8+64.69	22°19'54"	100.00	5°43'46"	38.976	19.739	38.730
P-107	CS-195	10+06.86	3454649.842	620199.184	9+84.64	10+28.37	25°03'19"	100.000	5°43'46"	43.730	22.220	43.382
P-108	CS-195	13+24.69	3454373.518	620357.655	13+14.71	13+34.61	11°24'05"	100.000	5°43'46"	19.899	9.983	19.866
P-109	CS-198	14+31.80	3454271.837	620391.544	14+05.48	14+52.04	66°41'50"	40.000	14°19'26"	46.563	26.324	43.979

STATE OF TEXAS
E. LAMAR FAULK
86158
LICENSED
PROFESSIONAL ENGINEER

THE SEAL APPEARING ON THIS DOCUMENT WAS AUTHORIZED BY E. LAMAR FAULK ON AUGUST 8, 2001

US Army Corps of Engineers
FORT WORTH DISTRICT

POLYENGINEERING, INC.
1905 Heedland Avenue
Dothan, Alabama 36303
(334) 793-4700 (voice)
(334) 793-9816 (fax)

Mark	Description	Date	Appr.
4	TITLE BLOCK EDIT, ADDED SEAL	AUG 01	ELF

U.S. ARMY ENGINEER DISTRICT
CORPS OF ENGINEERS
FORT WORTH, TEXAS

POLYENGINEERING, INC.
ENGINEERS & ARCHITECTS
DOTHAN, ALABAMA

Designed by: Rebecca S. Hand
Dwn by: J. Peeden
Ckd by: M. Dixon
Reviewed by: Scott Faulk
Submitted by: E. Lamar Faulk
Date: 19 JUNE 2001
Rev:
Sol No. DACA63-01-B-0007
Contr No. DACA63-01-D-0016
File name:
Plot date:
Plot scale: AS SHOWN

FORT HOOD, TEXAS
DIGITAL MULTI-PURPOSE RANGE COMPLEX (DMPRC)
PN 51915 FY 01

PRIMARY TARGET SERVICE ROAD
CURVE DATA SHEET

Sheet reference number:
CS-206
Sheet of

Contr No. DACA63-01-C-0016

CULVERT SCHEDULE

CULVERT No.	SHEET REF.	ROADWAY	STATION	SIZE	LENGTH (m)	SLOPE	SKEW ANGLE	DISTANCE LEFT (m)	DISTANCE RIGHT (m)	LEFT INVERT	RIGHT INVERT	MATERIAL	WALL THICKNESS (mm)	CORRUGATION SIZE (mm)	1.2m MANHOLE TOP (m)	1.2m MANHOLE INVERT (m)
C-1	CS-14	WEST RANGE ROAD	N/A	2x1950	23.00	1.10	92 DEG	11.64	11.36	279.50	279.25	B.C.C.M.P.	1.6256	75 x 25		
C-6	CS-22	CC TRAIL 4	312.38	3x1950	52.00	0.010	49 DEG	23.19	28.81	267.00	266.50	B.C.C.M.P.	1.6256	75 x 25		
C-7	CS-24	CC TRAIL 4	930.55	2x1500	26.00	0.008	84 DEG	11.53	14.47	259.40	259.20	B.C.C.M.P.	1.6256	75 x 25		
C-8	CS-36,37	CC TRAIL 4	1171.22	900	30.00	0.017	96 DEG	13.96	16.04	259.00	258.50	B.C.C.M.P.	1.6256	67 x 13		
C-9	CS-37	CC TRAIL 4	1344.01	825	23.00	0.022	104 DEG	12.13	10.87	285.50	285.00	B.C.C.M.P.	1.6256	67 x 13		
C-10	CS-38	CC TRAIL 4	1617.34	1950	43.00	0.002	105 DEG	20.13	22.87	254.00	253.90	B.C.C.M.P.	1.6256	75 x 25		
C-12	CS-39	CC TRAIL 4	2006.24	1200	34.00	0.018	75 DEG	16.34	17.66	254.40	253.80	B.C.C.M.P.	1.6256	67 x 13		
C-15	CS-34	CC TRAIL 3	533.42	4x2100	50.00	0.002	57 DEG	25.16	24.84	263.00	262.90	B.C.C.M.P.	1.6256	75 x 25		
C-17	CS-34	CC TRAIL 3	560.71	600	34.00	0.027	87 DEG	15.43	18.57	263.50	262.60	B.C.C.M.P.	1.6256	67 x 13		
C-18	CS-37	CC TRAIL 3	1379.93	2x1800	36.00	0.003	51 DEG	16.19	19.81	251.10	251.00	B.C.C.M.P.	1.6256	75 x 25		
C-19	CS-37.1	CC TRAIL 3	15+35.6716	1200	34.00	2.35	80 DEG	10.88	20.13	251.80	251.00	B.C.C.M.P.	1.6256	75 x 25		
C-21	CS-37	CC TRAIL 3	1582.85	2x900	24.00	0.004	83 DEG	9.51	14.49	251.30	251.20	B.C.C.M.P.	1.6256	67 x 13		
C-22	CS-38	CC TRAIL 3	1835.18	2100	37.85	0.021	55 DEG	16.53	21.31	249.70	248.90	B.C.C.M.P.	1.6256	75 x 25		
C-22A	CS-38	C3-D DEFILADE	AS SHOWN	2100	32.00	0.003	109 DEG	14.14	17.86	249.90	249.80	B.C.C.M.P.	1.6256	75 x 25		
C-23	CS-51	CC TRAIL 3	2244.74	1650	54.00	0.028	44 DEG	23.94	30.06	246.00	244.50	B.C.C.M.P.	1.6256	75 x 25		
C-25	CS-21,33	CC TRAIL 3	139.33	1200	44.00	0.089	145 DEG	25.36	18.64	269.50	270.75	B.C.C.M.P.	1.6256	75 x 25		
C-35	CS-34	CC TRAIL 2	415.96	2x1650	30.00	0.031	110 DEG	13.67	16.33	268.00	268.10	B.C.C.M.P.	1.6256	75 x 25		
C-36	CS-46	CC TRAIL 2	514.52	1950	62.50	0.008	135 DEG	21.96	28.06	265.00	265.50	B.C.C.M.P.	1.6256	75 x 25		
C-36A	CS-46	CC TRAIL 2	474.99	450	50.00	0.025	127 DEG	32.30	30.21	265.00	266.25	B.C.C.M.P.	1.6256	75 x 25		
C-38	CS-47	CC TRAIL 2	895.88	2x1800	42.00	0.019	137 DEG	22.53	19.47	261.00	261.80	B.C.C.M.P.	1.6256	75 x 25		
C-39	CS-48	CC TRAIL 2	1199.72	1200	34.00	0.041	97 DEG	14.55	19.45	258.40	259.80	B.C.C.M.P.	1.6256	75 x 25		
C-41	CS-62.1	CC TRAIL 2	17+94.51	3x900x550E	18.59	0.50	120 DEG	8.55	10.04	255.50	255.40	B.C.C.M.P.	1.6256	75 x 25		
C-42	CS-61,77	CC TRAIL 1	1384.16	1200	46.00	0.017	39 DEG	24.16	21.84	262.30	261.50	B.C.C.M.P.	1.6256	75 x 25		
C-47	CS-45	CC TRAIL 1	205.09	2x1350	24.70	0.053	99 DEG	15.29	9.37	274.95	276.25	B.C.C.M.P.	1.6256	75 x 25		
C-48	CS-45	CC TRAIL 1	401.25	2x1350	26.00	0.039	89 DEG	16.06	9.94	274.00	275.00	B.C.C.M.P.	1.6256	75 x 25		
C-49	CS-46,59	CC TRAIL 1	686.72	1950	38.00	0.024	89 DEG	22.99	15.01	270.50	271.40	B.C.C.M.P.	1.6256	75 x 25		
C-50	CS-60	CC TRAIL 1	961.41	LWC	15.70	N/A	N/A	N/A	N/A	N/A	N/A	N/A	N/A	N/A		
C-51	CS-78,79,95	CC TRAIL 1	2101.05	3x1950	60.00	0.032	120 DEG	33.86	26.14	247.00	248.90	B.C.C.M.P.	1.6256	75 x 25		
J-67	CS-106	JM TRAIL 1	440.42	2x1800	51.20	0.020	44 DEG	20.07	31.14	263.70	263.00	B.C.C.M.P.	1.6256	75 x 25		
J-68	CS-106	JM TRAIL 1	645.97	2x1800	29.30	0.003	68 DEG	11.65	17.65	262.50	262.20	B.C.C.M.P.	1.6256	75 x 25		
J-69	CS-123	JM TRAIL 1	1388.75	1800	34.00	0.006	44 DEG	18.44	15.56	258.20	258.00	B.C.C.M.P.	1.6256	75 x 25		
J-70	CS-140	JM TRAIL 1	1800.00	1650	27.00	0.056	90 DEG	8.69	18.31	256.00	254.50	B.C.C.M.P.	1.6256	75 x 25		
J-73	CS-121	JM TRAIL 2	581.53	2x1950	29.30	0.041	84 DEG	11.81	17.47	256.20	255.00	B.C.C.M.P.	1.6256	75 x 25		
J-75	CS-122	JM TRAIL 2	996.17	2x2100	61.00	0.020	63 DEG	28.49	32.51	251.00	249.75	B.C.C.M.P.	1.6256	75 x 25		
J-77	CS-139	JM TRAIL 2	1457.47	1950	47.00	0.034	74 DEG	20.81	26.19	251.00	249.40	B.C.C.M.P.	1.6256	75 x 25		
J-80	CS-155,156	JM TRAIL 2	1751.32	1800	39.00	0.064	80 DEG	14.48	24.52	251.00	248.50	B.C.C.M.P.	1.6256	75 x 25		
J-81	CS-156	JM TRAIL 2	20+21.47	750	16.00	0.003	91 DEG	8.40	7.61	250.80	250.75	B.C.C.M.P.	1.3208	67 x 13	252.00	250.80
J-81A	CS-156	JM TRAIL 2	AS SHOWN	750	47.00	0.004	N/A	N/A	N/A	250.75	250.58	B.C.C.M.P.	1.3208	67 x 13	252.00	250.75
J-90	CS-153,154	JM TRAIL 3	1208.46	5x2100	74.00	0.013	68 DEG	36.50	37.50	239.75	238.80	B.C.C.M.P.	1.6256	75 x 25		
J-91	CS-155	JM TRAIL 3	1574.72	3x1350	28.00	0.032	110 DEG	12.40	15.60	245.90	245.00	B.C.C.M.P.	1.6256	75 x 25		
J-94	CS-155	JM TRAIL 3	1794.24	2100	53.00	0.036	92 DEG	22.63	30.37	244.90	243.00	B.C.C.M.P.	1.6256	75 x 25		
J-96	CS-156,171	JM TRAIL 3	20+56.53	1200	46.00	1.30	152 DEG	31.67	14.33	249.50	250.10	B.C.C.M.P.	1.6256	75 x 25		
J-98	CS-150,151	JM TRAIL 4	256.16	1500	52.00	0.023	54 DEG	24.41	27.59	258.50	257.30	B.C.C.M.P.	1.6256	75 x 25		
J-102	CS-152,167	JM TRAIL 4	744.95	975	42.00	0.035	70 DEG	18.78	23.22	255.20	253.75	B.C.C.M.P.	1.6256	67 x 13		
J-104	CS-169	JM TRAIL 4	1643.44	LWC w/ 450	15.18	0.016	74 DEG	8.88	6.30	230.75	230.50	B.C.C.M.P.	1.6256	67 x 13		
C1B-A	CS-45	C1-B DEFILADE	AS SHOWN	450	21.00	0.005	97 DEG	8.63	12.27	273.05	273.15	B.C.C.M.P.	1.3208	67 x 13	274.40	273.15
C1B-B	CS-45	C1-B DEFILADE	AS SHOWN	450	14.00	0.004	N/A	N/A	N/A	273.00	273.05	B.C.C.M.P.	1.3208	67 x 13	273.50	273.05
C1C-A	CS-60	C1-C DEFILADE	AS SHOWN	450	22.50	0.005	86 DEG	8.69	13.81	267.75	267.64	B.C.C.M.P.	1.6256	67 x 13	268.00/268.50	267.64/267.75
C1-D	CS-78	C1-D DEFILADE	AS SHOWN	450	38.00	0.005	117 DEG	22.05	15.95	256.56	256.75	B.C.C.M.P.	1.3208	67 x 13	257.50	256.75
C1E-A	CS-95,111	C1-E DEFILADE	2486.57	450	11.00	0.005	89 DEG	8.50	8.43	250.75	250.67	B.C.C.M.P.	1.6256	67 x 13	251.50	250.75
C1E-B	CS-95	C1-E DEFILADE	AS SHOWN	450	21.06	0.005	89 DEG	N/A	N/A	250.67	250.56	B.C.C.M.P.	1.6256	67 x 13	251.50	250.67
C2-A	CS-32	C2-A DEFILADE	AS SHOWN	450	17.00	0.005	57 DEG	8.17	8.83	278.50	278.42	B.C.C.M.P.	1.3208	67 x 13	279.25	278.50
C2C-A	CS-47	C2-C DEFILADE	1060.63	450	17.20	0.029	84 DEG	10.72	6.49	262.00	262.50	B.C.C.M.P.	1.6256	67 x 13		
C2D-A	CS-62	C2-D DEFILADE	AS SHOWN	450	20.00	0.005	90 DEG	11.87	8.13	254.90	254.80	B.C.C.M.P.	1.6256	67 x 13	255.60	254.80
C2D-B	CS-62	C2-D DEFILADE	1752.42	450	98.00	0.001	128 DEG	70.68	27.32	254.80	254.70	B.C.C.M.P.	1.6256	67 x 13		
C3B-B	CS-34	C3-B DEFILADE	AS SHOWN	450	33.00	0.022	39 DEG	11.69	21.31	264.74	264.00	B.C.C.M.P.	1.3208	67 x 13	265.00	264.74
C3C-B	CS-36	CC TRAIL 3	1105.97	450	58.50	0.005	54 DEG	14.95	43.56	255.60	255.30	B.C.C.M.P.	1.6256	75 x 25		
C4C-A	CS-36	C4-C DEFILADE	AS SHOWN	450	24.00	0.010	115 DEG	7.91	16.09	259.75	259.50	B.C.C.M.P.	1.6256	75 x 25	260.50	259.75
C4C-B	CS-36	CC TRAIL 4	1031.46	450	27.50	0.005	90 DEG	15.90	11.60	259.50	259.37	B.C.C.M.P.	1.6256	75 x 25		
C4D-A	CS-38	CC TRAIL 4	1709.76	450	36.00	0.053	89 DEG	15.31	20.69	254.90	253.00	B.C.C.M.P.	1.6256	75 x 25		
C4A-A	CS-21	C4-A DEFILADE	AS SHOWN	450	40.00	0.003	N/A	N/A	N/A	275.50	275.40	B.C.C.M.P.	1.6256	67 x 13		
C4B-B	CS-23	C4-B DEFILADE	AS SHOWN	450	27.99	0.007	51 DEG	17.20	10.78	269.8	270.00	B.C.C.M.P.	1.6256	67 x 13	271.00	270.00

STATIONS INCREASE THIS WAY

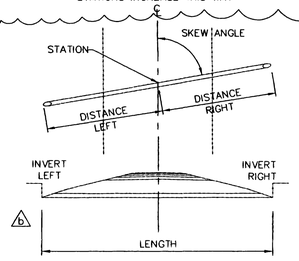

TYPICAL STRAIGHT PIPE

TYPICAL PIPE PROFILE

NOT TO SCALE

STATE OF TEXAS
E. LAMAR FAULK
86158
LICENSED
PROFESSIONAL ENGINEER

THE SEAL APPEARING ON THIS DOCUMENT WAS AUTHORIZED BY E. LAMAR FAULK ON AUGUST 8, 2001

LWC = LOW WATER CROSSING (SEE DETAIL SHEET)

US Army Corps of Engineers
FORT WORTH DISTRICT

POLYENGINEERING, INC.
1956 Headland Avenue
Dothan, Alabama 36303
(334) 793-1760 (voice)
(334) 793-9818 (fax)

No.	Description	Date	Appr.
1	REVISED CHART	AUG 01	ELF
2	REVISED CULVERT SCHEDULE & DETAIL, REMOVE NOTE, ADDED SEAL	AUG 01	ELF

U.S. ARMY ENGINEER DISTRICT
CORPS OF ENGINEERS
FORT WORTH, TEXAS

POLYENGINEERING, INC.
ENGINEERS & ARCHITECTS
DOTHAN, ALABAMA

Designed by: Rebecca S. Hand
Dwn by: A. Dixon
Ckd by: M. Dixon
Reviewed by: Scott Grafe
Submitted by: E. Lamar Faulk
Date: 19 JUNE 2001
Sol No. DACA63-01-B-0007
Contract No. DACA63-01-C-0016
File name:
Plot date:
Plot scale: AS SHOWN
Rev.

FORT HOOD, TEXAS
DIGITAL MULTI-PURPOSE RANGE COMPLEX
PN 51915 FY 01

PIPE SCHEDULE AND DETAILS

Sheet reference number:
CS-207
Sheet of

Contr No. DACA63-01-C-0016

8/11/2005 12:58:36 PM

00687010

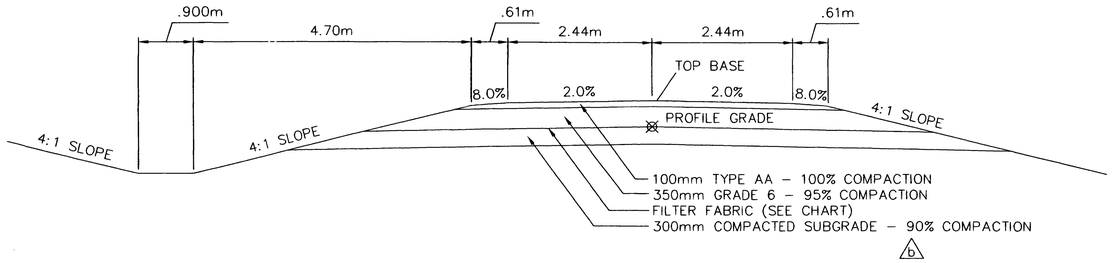

TANK TRAILS

SCALE: 1:50

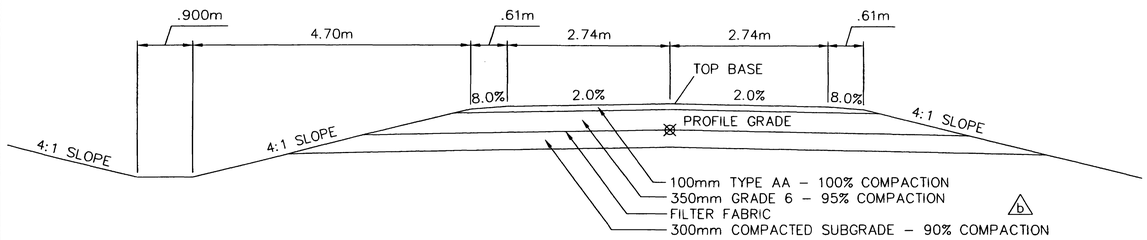

DEFILADE ACCESS ROADS

SCALE: 1:50

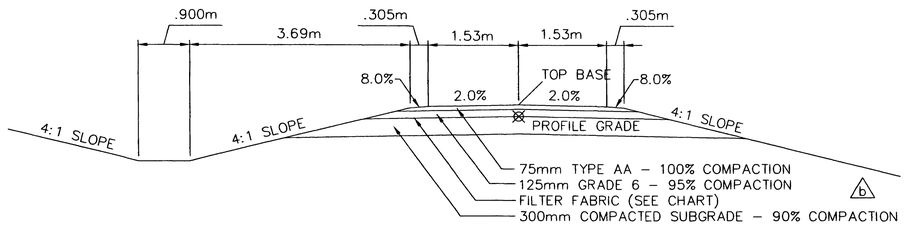

PRIMARY TARGET SERVICE ROADS

SCALE: 1:50

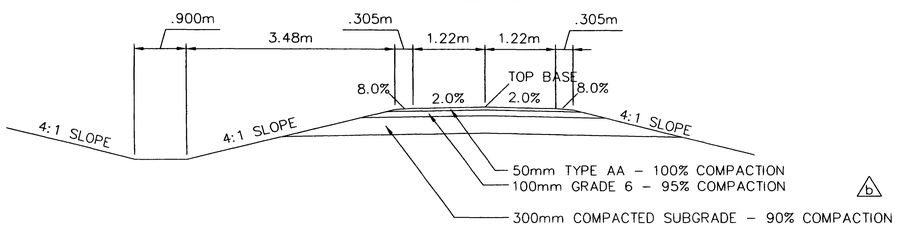

SECONDARY TARGET SERVICE ROAD

SCALE: 1:50

e

FINAL LOCATION OF SECONDARY TARGET SERVICE ROADS (STSR'S) WILL BE MADE IN THE FIELD. GENERAL LOCATIONS OF STSR'S ARE SHOWN ON THE RANGE PLAN SHEETS. STSR'S WILL GENERALLY FOLLOW NATURAL TERRAIN AND COMPLY WITH TARGET EMPLACEMENT DETAIL SHEETS CD-2, CD-3 AND CD-5.

b

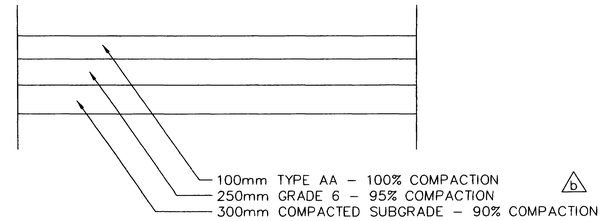

GRAVEL PARKING

NOT TO SCALE

b

THE SEAL APPEARING ON THIS DOCUMENT WAS AUTHORIZED BY E. LAMAR FAULK ON AUGUST 8, 2001

FILTER FABRIC LOCATIONS

ROADWAY/TRAIL b	START STATION	END STATION
CC TRAIL 1	9+00	10+00
	17+20	18+40
CC TRAIL 2	15+80	21+80
CC TRAIL 3	0+60	3+20
	10+40	18+00
CC TRAIL 4	5+80	8+80
JM TRAIL 1	5+00	5+60
	7+50	18+80
JM TRAIL 2	1+20	4+00
JM TRAIL 3	7+70	8+60
	14+40	16+80
JM TRAIL 4	15+20	18+20
PTSR 1	3+80	5+60
	13+70	14+50
	16+10	17+10
	19+40	21+20
	28+60	31+00
	33+30	36+40
	40+80	42+20
	45+40	47+80
	56+40	58+40
PTSR 2	4+60	7+60
	11+00	12+80

CHANNEL LINING LOCATIONS

ROADWAY/TRAIL e	START STATION	END STATION
CC TRAIL 2	6+00	7+20
CC TRAIL 3	0+00	1+40
CC TRAIL 4	5+20	8+40
	20+40	21+30
	23+60	24+40
CC PTSR 1	2+00	4+60
	6+70	13+00
	18+00	19+00
	23+20	31+20
	37+40	41+60
JM TRAIL 1	0+00	2+20
	8+00	13+40
	19+20	22+00
JM TRAIL 2	18+80	21+60

NOTE:
PLACE CHANNEL LINING ON BOTH SIDES OF TRAIL IN DITCH ACCORDING TO SPECIFICATION SECTION 02635.

GRAPHIC SCALE

1 .5 0 .5 1

SCALE: 1:50

US Army Corps of Engineers
FORT WORTH DISTRICT

POLYENGINEERING, INC.
1855 Headland Avenue
Dothan, Alabama 36303
(334) 793-6700 (voice)
(334) 793-9015 (fax)

Mark	Description	Date	Appr.
2	ADDED NOTE AND CHART	SEPT 01	ELF
1	REMOVE PEDESTRIAN RATED SURFACE DETAIL AND TITLE BLOCK EDIT, ADDED SEAL	AUG 01	ELF
0	ADDED COMPACTION REQUIREMENTS FOR ROADWAY MATERIALS		

Rev.

Date: 19 June 2001

Designed by: Rebecca S. Hand
Dwn by: J. Peeden
Ckd by: M. Dixon
Reviewed by: Scott Faulk
Submitted by: E. Lamar Faulk

Sol No. DACA63-01-B-0007
Contr No. DACA63-01-C-0016 b
File name:
Plot date:
Plot scale: AS SHOWN

U.S. ARMY ENGINEER DISTRICT
CORPS OF ENGINEERS
FORT WORTH, TEXAS

POLYENGINEERING, INC.
ENGINEERS & ARCHITECTS
DOTHAN, ALABAMA

FORT HOOD, TEXAS
DIGITAL MULTI-PURPOSE RANGE COMPLEX (DMPRC)
PN 51915 FY 01 b

TYPICAL ROAD TRAILS AND PARKING SECTIONS

Sheet reference number:
CD-1
Sheet of

Contr No. DACA63-01-C-0016

00687030

'wg 8/12/2005 8:01:45 AM

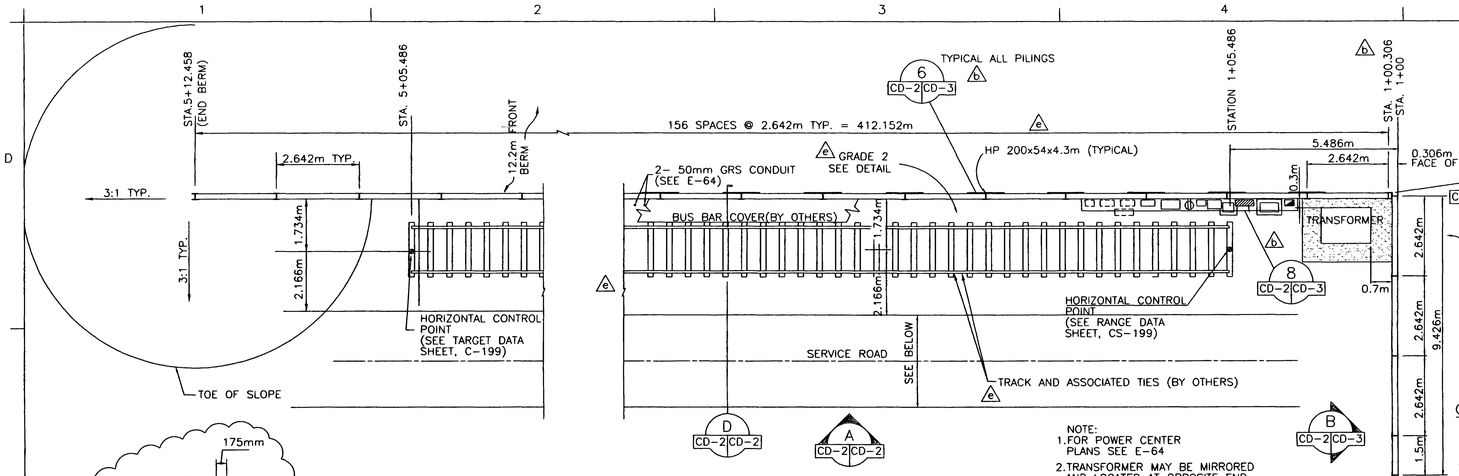

PLAN : TYPICAL ARMOR MOVING TARGET CARRIER SYSTEM

SCALE: 1:75

NOTE:
1. FOR POWER CENTER PLANS SEE E-64
2. TRANSFORMER MAY BE MIRRORED AND LOCATED AT OPPOSITE END OF AMTC EMPLACEMENT, SEE E-64

STATE OF TEXAS — E. LAMAR FAULK — 86158 — LICENSED — PROFESSIONAL ENGINEER

THE SEAL APPEARING ON THIS DOCUMENT WAS AUTHORIZED BY E. LAMAR FAULK ON AUGUST 8, 2001

GRAPHIC SCALE

SCALE: 1:10

SCALE: 1:20

SCALE: 1:40

SCALE: 1:75

SCALE: 1:125

GENERAL NOTES:

1. PLACE AMTC GEOGRID FULL LENGTH OF TRACK LINE.
2. BALLAST SHALL BE GRADE 2 STONE.
3. SEE E-64 FOR LOCATION OF TRANSFORMERS AND POWER CENTERS.
4. THIS DRAWING IS TYPICAL – SEE SITE PLANS AND TARGET DATA SHEET, CS-199 FOR INDIVIDUAL TARGET ORIENTATION.
5. THE FIRST 19.8m OF THE BALLAST SHALL BE PLACED AT A THICKNESS OF 250mm AND THE REMAINDER OF THE TRACK BALLAST SHALL BE PLACED AT A THICKNESS OF 100mm.
6. 300m OF BALLAST GRADE 2 SHALL BE STOCKPILED AT EACH AMTC SITE. COST OF MATERIAL AND DELIVERY TO AMTC SITES SHALL BE THE RESPONSIBILITY OF THE CONTRACTOR.
7. STATION 1+00 IS ALWAYS LOCATED ON THE TRANSFORMER END OF THE AMTC.

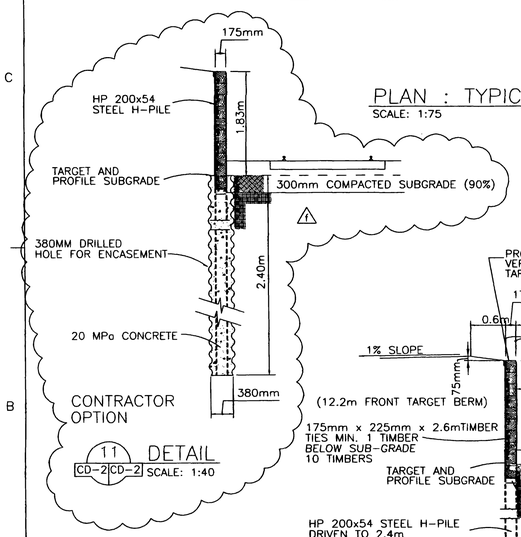

11 DETAIL
CD-2 CD-2 SCALE: 1:40

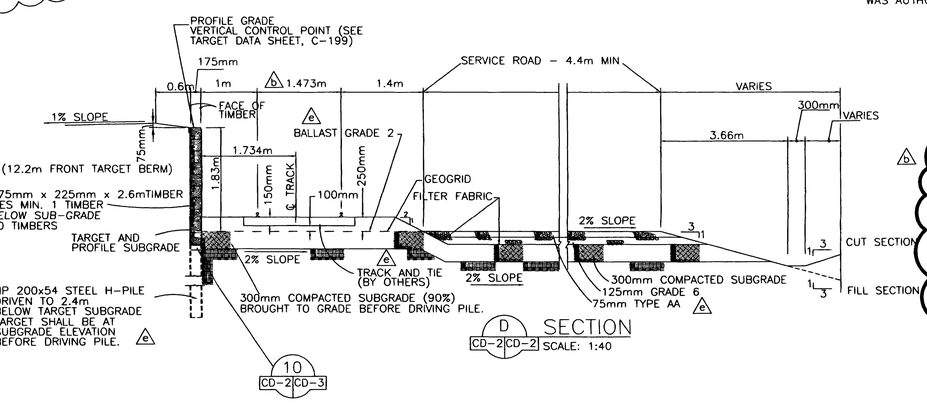

D SECTION
CD-2 CD-2 SCALE: 1:40

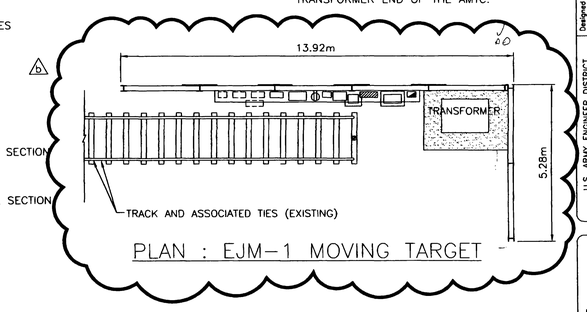

PLAN : EJM-1 MOVING TARGET

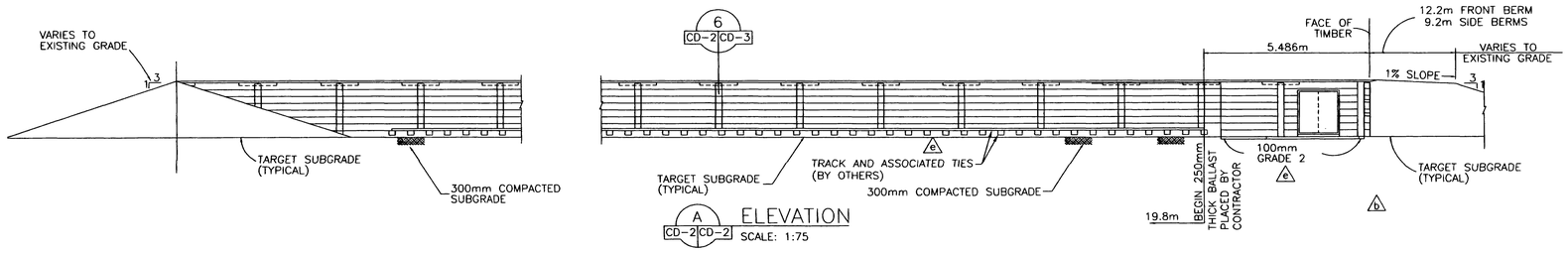

A ELEVATION
CD-2 CD-2 SCALE: 1:75

US Army Corps of Engineers
FORT WORTH DISTRICT

POLYENGINEERING, INC.
1905 Blackland Avenue
Anniston, Alabama 36202
(256) 236-4700 (voice)
(256) 236-0614 (fax)

Mark	Description	Date	Appr.
4	ADDED DIMENSION BETWEEN TRANSFORMER AND TARGET	SEPT 01	ELF
3	ADDED NOTES, ADDED TRACK AND TIE NOTES, DELETED TIEDOWN	SEPT 01	ELF
2	CORRECTED DIMENSION, STATION AND SECTION IDENTIFICATION, ADDED SEAL	AUG 01	ELF

Designed by: Walker B. Hound
Date: 13 June 2001
Sol No. DACA63-01-B-0007
Rev.
Drawn by: J.D. Pendell
Chkd by: Mike Dixon
Contr No. DACA63-01-C-0016
Reviewed by: Scott Faulk
Plot date: Plot scale: AS SHOWN
Submitted by: E. Lamar Faulk

U.S. ARMY ENGINEER DISTRICT
CORPS OF ENGINEERS
FORT WORTH, TEXAS

POLYENGINEERING, INC.
ENGINEERS & ARCHITECTS
OTTAWA, ALABAMA

FORT HOOD, TEXAS
DIGITAL MULTIPURPOSE RANGE COMPLEX (DMPRC) FY 01
PN 51915

AMTC EMPLACEMENT

Sheet reference number:
CD-2
Sheet of

Contr No. DACA63-01-C-0016

wg 8/12/2005 7:55:59 AM

00687940

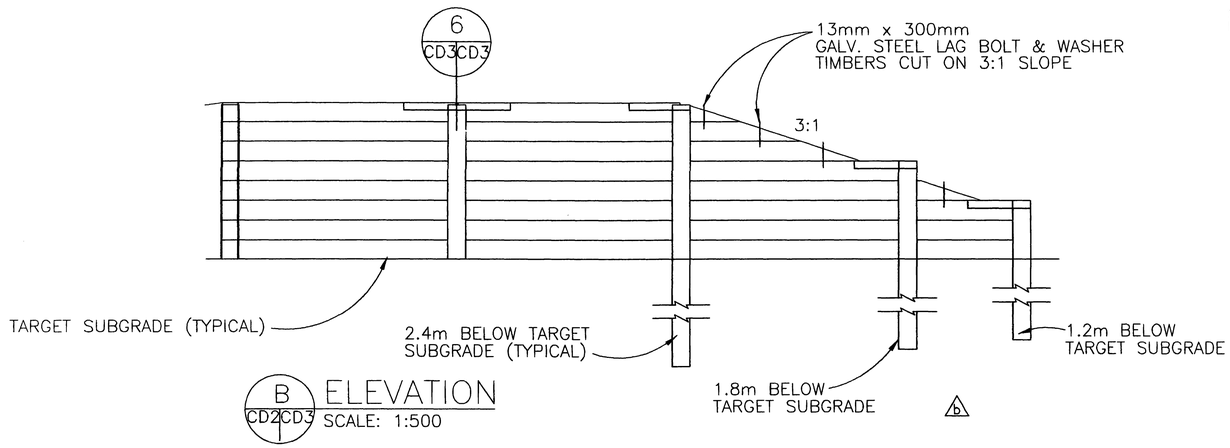

B CD2 CD3 ELEVATION
SCALE: 1:500

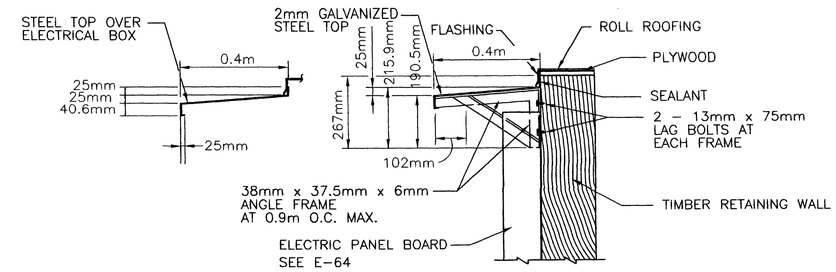

8 CD2 CD3 ELECTRICAL BOX COVER DETAIL
SCALE: 1:10

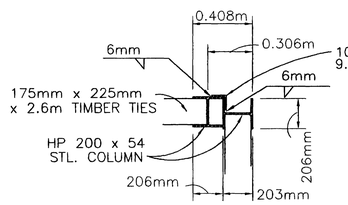

5 CD2 CD3 CD9 DETAIL
SCALE: 1:20

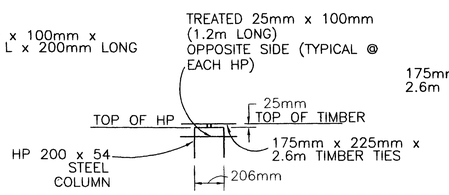

6 CD2 CD3 CD3 DETAIL
SCALE: 1:20

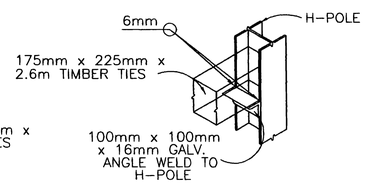

10 CD2 CD3 DETAIL
SCALE: 1:20

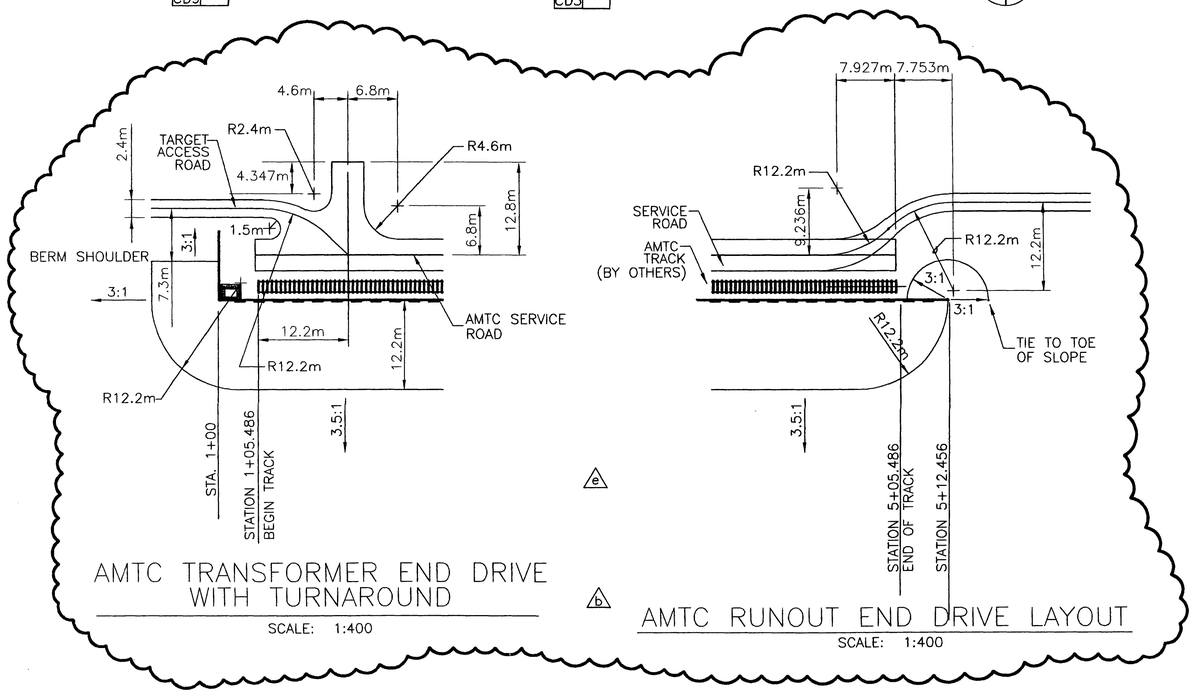

AMTC TRANSFORMER END DRIVE
WITH TURNAROUND
SCALE: 1:400

AMTC RUNOUT END DRIVE LAYOUT
SCALE: 1:400

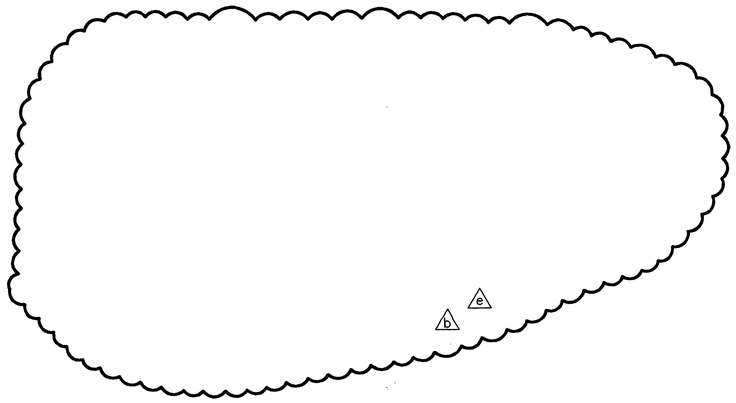

THE SEAL APPEARING ON THIS DOCUMENT
WAS AUTHORIZED BY E. LAMAR FAULK ON
AUGUST 8, 2001

GRAPHIC SCALE

.2 .1 0 .1 .2
SCALE: 1:10

.4 .2 0 .2 .4
SCALE: 1:20

8 4 0 4 8
SCALE: 1:400

10 5 0 5 10
SCALE: 1:500

US Army Corps of Engineers
FORT WORTH DISTRICT

POLYENGINEERING, INC.
ENGINEERS AND ARCHITECTS
POLYENGINEERING, INC.
1905 Headland Avenue
Dothan, Alabama 36305
(334) 793-6700 (voice)
(334) 793-3016 (fax)

Mark	Description	Date	Appr.
2	ENTRY NOTES, DELETED DETAIL	SEPT 01	ELF
1	ARTC AND TITLE BLOCK EDIT, ADDED SEAL, REVISED END DRIVE DETAILS	AUG 01	ELF

Designed by: Rebecca S. Hand
Dwn by: J.D. Peoples
Ckd by: Mike Dixon
Date: 13 June 2001
Rev.
Sol No. DACA63-01-B-0007
Contr No. DACA63-01-D-0016
Reviewed by: Scott Faulk
Submitted by: E. Lamar Faulk
File name:
Plot date:
Plot scale: AS SHOWN

U.S. ARMY ENGINEER DISTRICT
CORPS OF ENGINEERS
FORT WORTH, TEXAS

POLYENGINEERING, INC.
ENGINEERS & ARCHITECTS
DOTHAN, ALABAMA

FORT HOOD, TEXAS
DIGITAL MULTI-PURPOSE RANGE COMPLEX
(DMPRC) FY 01
PN 51915

AMTC BERMS AND DETAILS

Sheet reference number:
CD-3
Sheet of

Contr. No. DACA63-01-C-0016

00687950

GENERAL NOTES

1. CONCRETE SHALL DEVELOP A MINIMUM COMPRESSIVE STRENGTH OF 20 MPa IN 28 DAYS.
2. EMPLACEMENTS SHALL BE CONSTRUCTED OF REINFORCED CONCRETE:
   CONCRETE STRUCTURES SHALL BE PRE-CAST OR CAST-IN-PLACE.
3. ALL REINFORCING STEEL BE PER ASTM A615, M GRADE 400.
4. AREAS DISTURBED BY CONSTRUCTION ACTIVITIES SHALL BE REVEGETATED CONSISTENT WITH THE NATURAL SURROUNDINGS. GROUND COVER SHALL NOT REDUCE TARGET VISIBILITY.

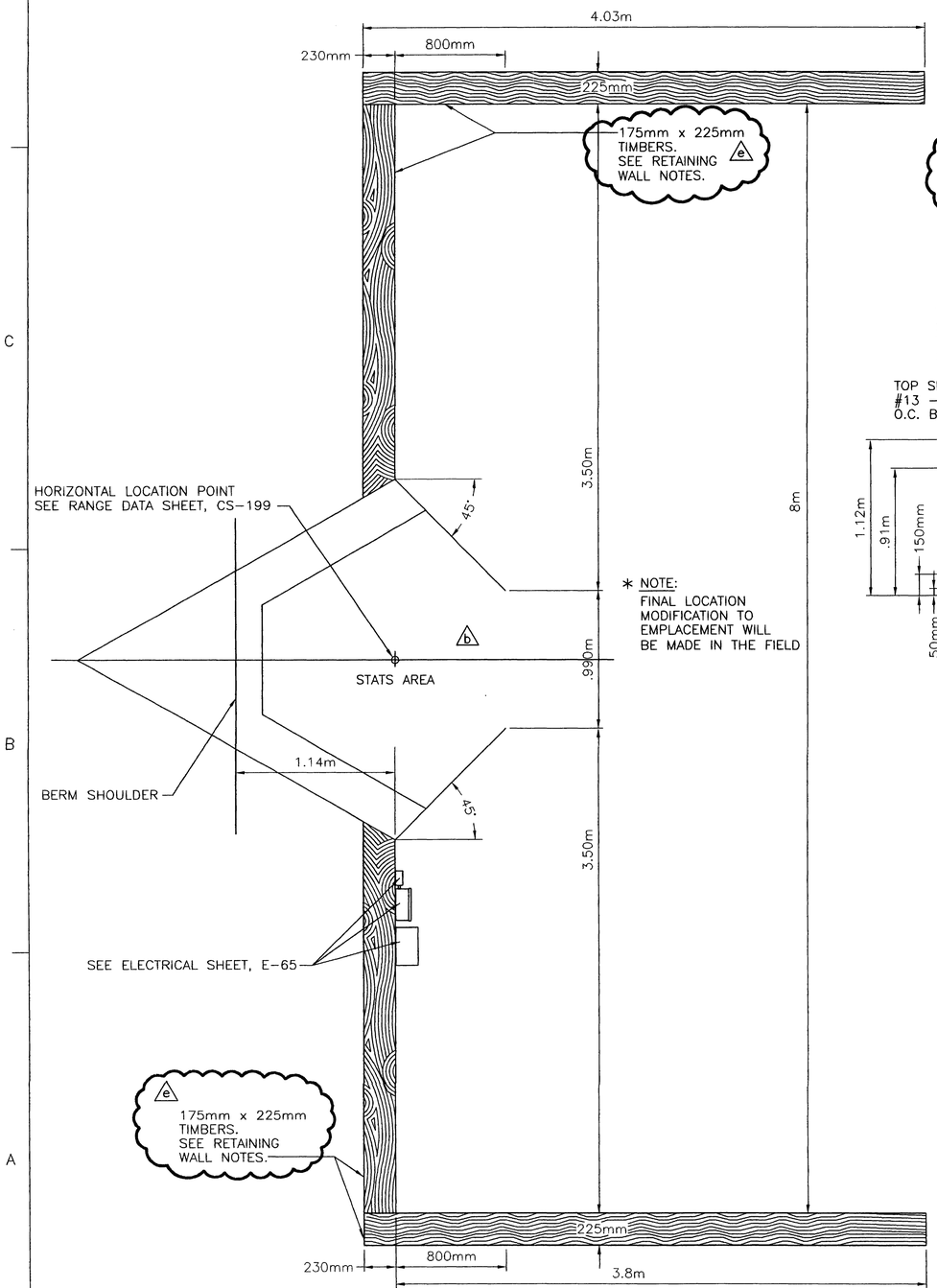

ARROWHEAD PLAN
SCALE: 1:20
(SEE SHEET CD-5 FOR DETAILS)

NOTE: (RETAINING WALL FOR SAT) e
RETAINING WALLS SHALL BE CONSTRUCTED OF TREATED TIMBERS OR RAILROAD TIES & SECURED WITH #16 DEFORMED STEEL REINFORCING BARS DRIVEN VERTICALLY THROUGH FIELD-DRILLED HOLES. THE BARS SHALL HAVE VARYING LENGTHS DRIVEN AT LEAST 500 mm BELOW TIMBERS AND SHALL BE LOCATED ON A 610 mm SPACING. FILTER FABRIC SHALL BE INSTALLED BEHIND ALL WOOD RETAINING WALLS. FABRIC SHALL EXTEND THE FULL HEIGHT OF THE WALL.

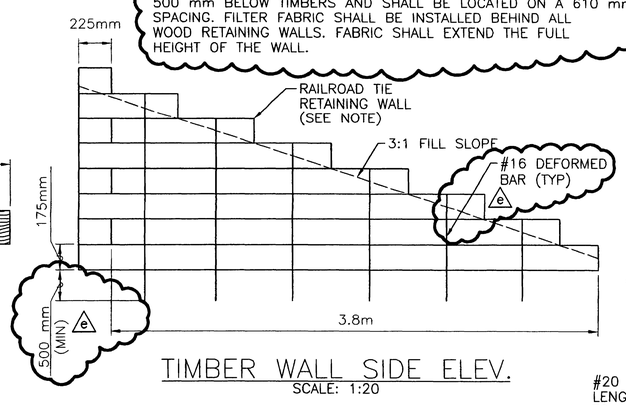

TIMBER WALL SIDE ELEV.
SCALE: 1:20

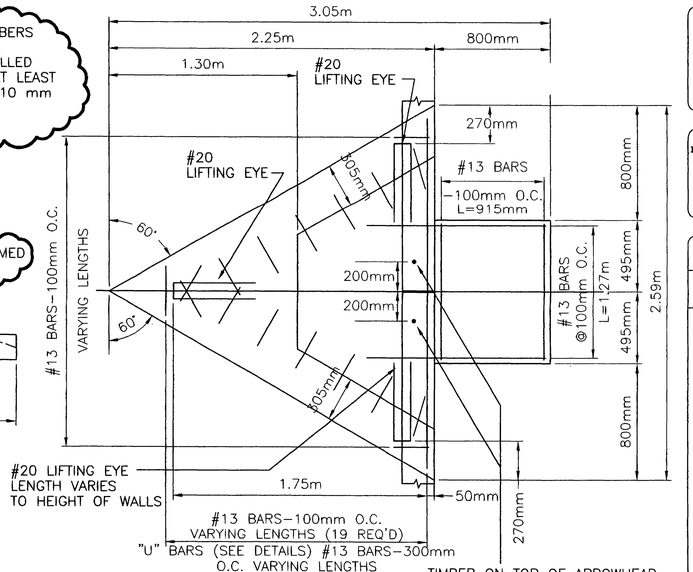

TOP SLAB VIEW
SCALE: 1:20

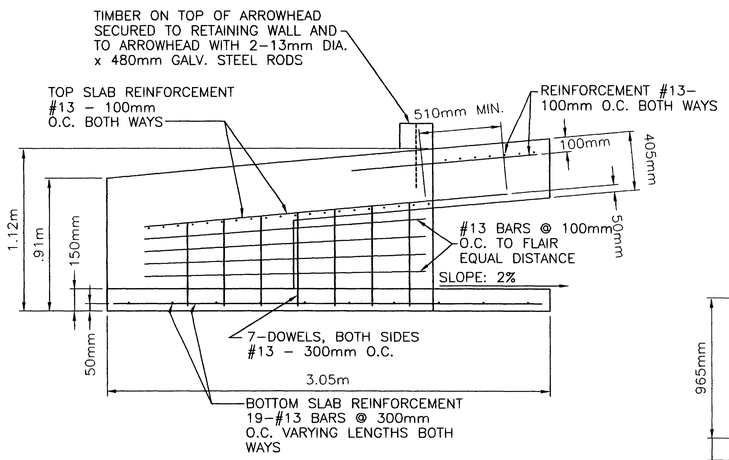

SIDE ELEVATION
SCALE: 1:20

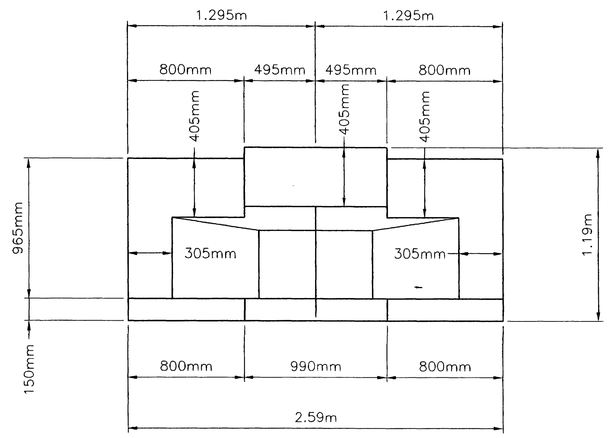

REAR ELEVATION
SCALE: 1:20

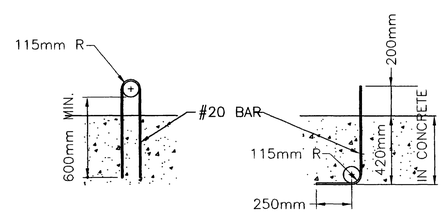

LIFTING EYE DETAIL
NOT TO SCALE

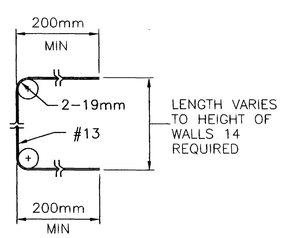

"U" BAR DETAIL
NOT TO SCALE

STATE OF TEXAS
E. LAMAR FAULK
86158
LICENSED
PROFESSIONAL ENGINEER

b

THE SEAL APPEARING ON THIS DOCUMENT WAS AUTHORIZED BY E. LAMAR FAULK ON AUGUST 8, 2001

GRAPHIC SCALE
.4 .2 0 .2 .4
SCALE: 1:20

US Army Corps of Engineers
FORT WORTH DISTRICT

POLYENGINEERING, INC.
ENGINEERS AND ARCHITECTS
POLYENGINEERING, INC.
1996 Hartford Avenue
Dothan, Alabama 36305
(334) 793-4700 (voice)
(334) 793-9018 (fax)

Mark	Description	Date	Appr.
b	EDITED AND ADDED NOTES, ADDED DIMENSIONS	SEPT 01	ELF
a	REMOVE STATS ANCHORING BOLTS AND TITLE BLOCK EDIT, ADDED SEAL.	AUG 01	ELF

Designed by: Rebecca S. Hand
Dwn by: J.D. Peaden
Ckd by: Mike Dixon
Reviewed by: Scott Faulk
Submitted by: E. Lamar Faulk
Date: 19 June 2001
Rev.
Sol No. DACA63-01-B-0007
Contr No. DACA63-01-C-0016 b
File name:
Plot date:
Plot scale: AS SHOWN

U.S. ARMY ENGINEER DISTRICT CORPS OF ENGINEERS FORT WORTH, TEXAS

POLYENGINEERING, INC. ENGINEERS & ARCHITECTS DOTHAN, ALABAMA

FORT HOOD, TEXAS
DIGITAL MULTI-PURPOSE RANGE COMPLEX (DMPRC)
PN 51915 b FY 01
STATIONARY ARMOR TARGET

Sheet reference number:
CD-4
Sheet of

Contr No. DACA63-01-C-0016

00687950

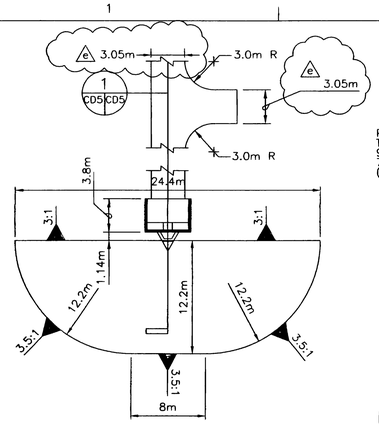

TYPICAL STATIONARY ARMOR TARGET

SCALE: 1:250

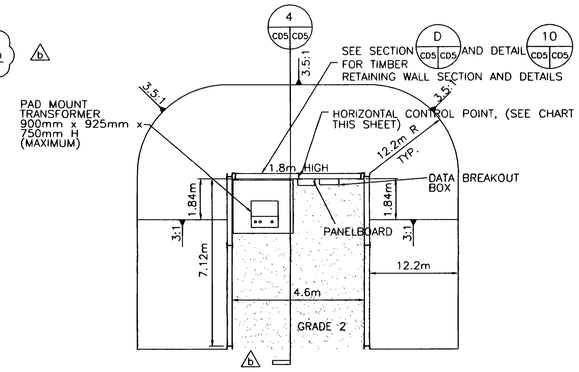

DOWNRANGE POWER CENTER PROTECTION BERM

NOT TO SCALE

CLABBER CREEK POWER CENTERS

POWER CENTER	SHEET REFERENCE	NORTHING	EASTING	ELEVATION
PC1A	CS-23	3458468.966	617871.390	268.50
PC2A	CS-37	3458237.699	618513.926	257.75
PC3A	CS-50	3457724.218	618776.642	252.00
PC4A	CS-51	3457855.532	619097.156	248.50
PC5A	CS-40	3458292.965	619417.970	252.00
PC6A	CS-65	3457379.449	619614.097	245.50
PC7A	CS-68	3457617.392	620425.353	244.50
PC8A	CS-41	3458150.975	620311.248	254.70
PC1B	CS-34	3458058.738	617321.036	269.75
PC2B	CS-47	3457825.048	617814.574	264.75
PC3B	CS-48	SEE AMTC	CM-01	264.00
PC4B	CS-77	3457274.410	618127.830	262.75
PC5B	CS-79	3457049.817	618788.352	249.00
PC6B	CS-112	SEE AMTC	CM-02	252.00
PC7B	CS-127	3456203.413	619241.299	244.50
PC8B	CS-116	3456404.281	620476.248	242.30
PC9B	CS-117	SEE AMTC	CM-03	248.00
PC10B	CS-84	3457025.316	620667.267	244.00

JACK MOUNTAIN POWER CENTERS

POWER CENTER	SHEET REFERENCE	NORTHING	EASTING	ELEVATION
PJ1A	CS-107	3456594.829	617374.312	265.50
PJ2A	CS-120	3456076.008	616902.036	253.00
PJ3A	CS-122	3456253.485	617600.524	261.50
PJ4A	CS-139	3455815.161	617806.240	253.00
PJ5A	CS-157	3455492.624	618428.323	253.50
PJ6A	CS-158	SEE AMTC	JM-02	250.00
PJ7A	CS-175	SEE AMTC	JM-03	248.50
PJ8A	CS-161,176	SEE AMTC	JM-04	247.50
PJ9A	CS-146	3455945.816	620356.957	244.40
PJ1B	CS-152,167	3455336.577	616640.844	256.00
PJ2B	CS-168	3455237.773	617034.255	258.00
PJ3B	CS-171	3455138.343	618004.168	251.25
PJ4B	CS-182	SEE AMTC	JM-01	252.20
PJ5B	CS-184	3454700.179	618876.594	245.00
PJ6B	CS-194	3454563.319	619383.891	244.00
PJ7B	CS-195	3454567.627	620202.768	240.00
PJ8B	164	3455522.004	620716.207	233.75

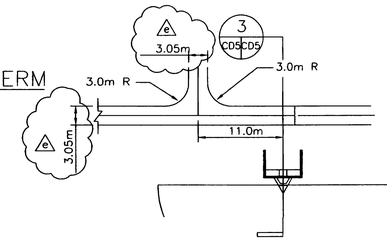

ALTERNATE ACCESS ROAD

SCALE: 1:300

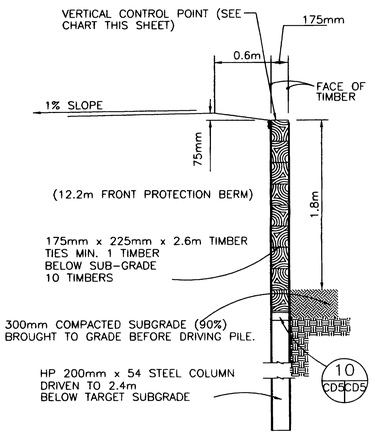

10 CD5 CD5

D SECTION

SCALE: 1:25

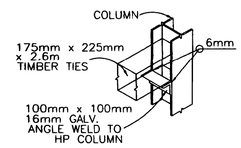

10 DETAIL

SCALE: 1:20

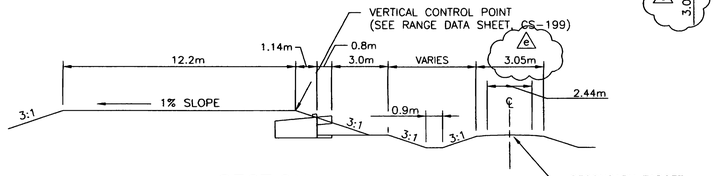

3 SECTION

SCALE: 1:125

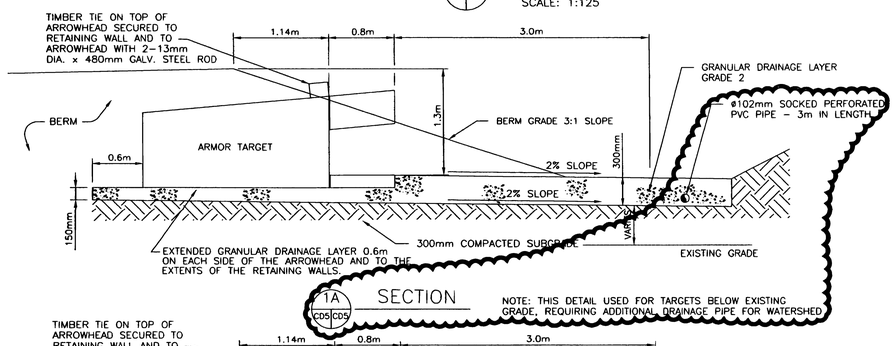

1A SECTION

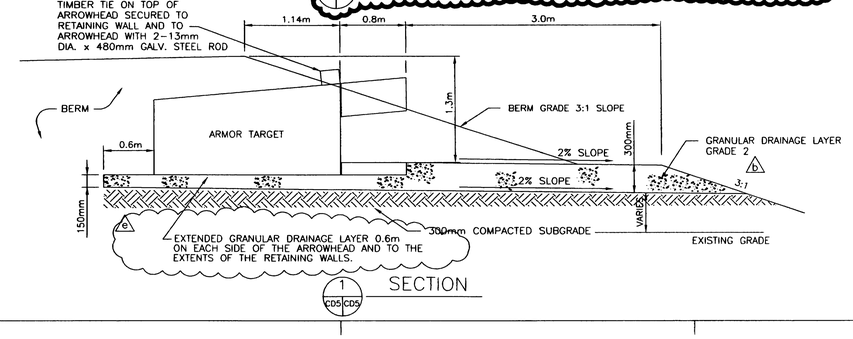

1 SECTION

THE SEAL APPEARING ON THIS DOCUMENT WAS AUTHORIZED BY E. LAMAR FAULK ON AUGUST 8, 2001

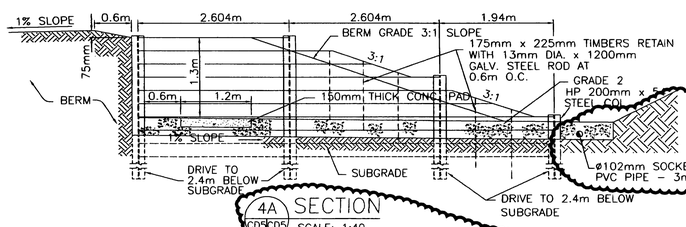

4 SECTION

SCALE: 1:40

4A SECTION

SCALE: 1:40

NOTE: THIS DETAIL USED FOR TARGETS BELOW EXISTING GRADE, REQUIRING ADDITIONAL DRAINAGE PIPE FOR WATERSHED

GRAPHIC SCALE

.4 .2 0 .2 .4 — SCALE: 1:20
.5 .25 0 .25 .5 — SCALE: 1:25
.8 .4 0 .4 .8 — SCALE: 1:40
2.5 1.25 0 1.25 2.5 — SCALE: 1:125
5 2.5 0 2.5 5 — SCALE: 1:250
6 3 0 3 6 — SCALE: 1:300

US Army Corps of Engineers
FORT WORTH DISTRICT

POLYENGINEERING, INC.
1500 Blackland Avenue
Dothan, Alabama 36303
(334) 793-2700 (voice)
(334) 793-1014 (fax)

Mark	Description	Date	Appr.
A	ISSUED FOR/FOR ADDED NOTE	SEPT 01	ELF
B	TITLE BLOCK AND TEXT ADD ADDED SEAL	AUG 01	ELF

Designed by: Rebecca S. Hand
Date: 19 June 2001
Rev.
Dwn by: J.D. Peoples
Ckd by: Mike Dixon
Sol No. DACA63-01-B-0007
Contr No. DACA63-01-C-0016
Reviewed by: Scott Faulk
Plot date:
Submitted by: E. Lamar Faulk
Plot scale: AS SHOWN

U.S. ARMY ENGINEER DISTRICT
CORPS OF ENGINEERS
FORT WORTH, TEXAS

POLYENGINEERING, INC.
ENGINEERS & ARCHITECTS
DOTHAN, ALABAMA

FORT HOOD, TEXAS
DIGITAL MULTI-PURPOSE RANGE COMPLEX
PN 51915 PY 01

STATIONARY ARMOR TARGET
BERMS AND DETAILS
POWER CENTER EMPLACEMENT

Sheet reference number:
CD-5
Sheet of

Contr No. DACA63-01-C-0016

..\CD-5.dwg 8/12/2005 7:51:50 AM

00687970

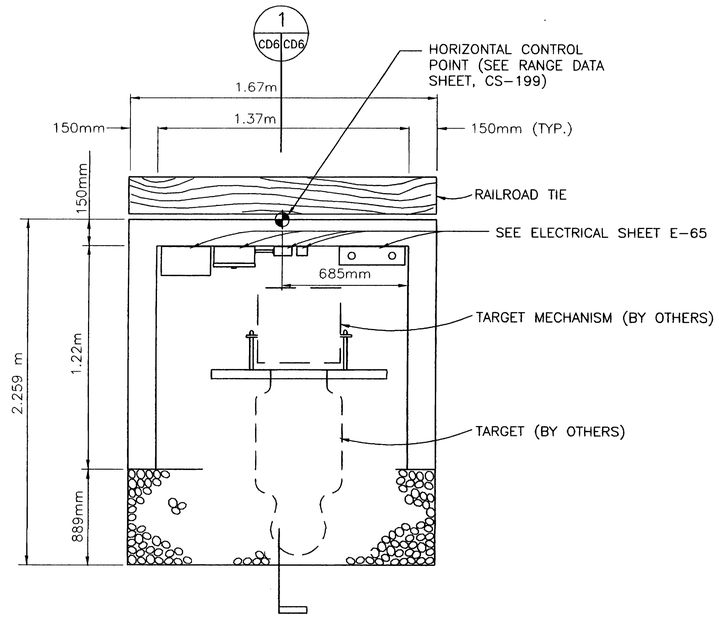

STATIONARY INFANTRY TARGET

NOT TO SCALE — SURFACE/FILL PLACEMENT

BERM WIDTH: (b)

TARGETS CC-01 – CC-03, JC-01 AND JC-02 ARE 6.1m.
ALL OTHERS ARE 12.2m.

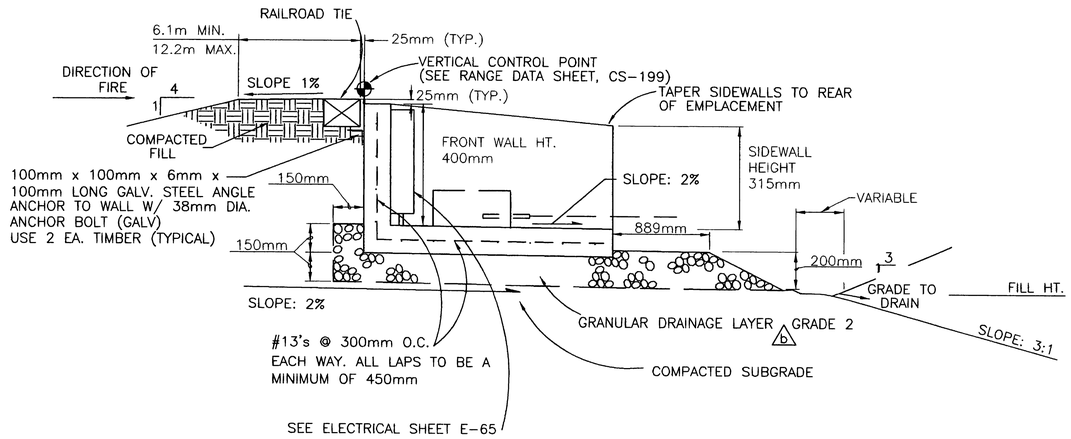

1 CD6 CD6 SECTION
NOT TO SCALE

GENERAL NOTES:

1. CONCRETE SHALL DEVELOP A MINIMUM COMPRESSIVE STRENGTH OF 20MPa IN 28 DAYS.
2. EMPLACEMENTS SHALL BE CONSTRUCTED OF REINFORCED CONCRETE; CONCRETE STRUCTURES SHALL BE PRE-CAST OR CAST-IN-PLACE.
3. ALL REINFORCING STEEL SHALL BE PER ASTM A615M, GRADE 60.
4. FOR DETAILS OF THE ELECTRICAL & DATA BOXES, REFER TO SHEET E-65 IN THE ELECTRICAL DRAWINGS. ADEQUATE BLOCK-OUT OPENINGS SHALL BE MADE THROUGH THE CONCRETE PAD TO ACCOMODATE ALL CONDUIT AND CABLES.
5. SEE RANGE DATA SHEET CS-199 FOR COORDINATES AND ELEVATIONS OF TARGET CLUSTERS.
6. ALL CONCRETE ON STATIONARY INFANTRY TARGET DETAIL MUST BE COVERED BY THE BERM.
7. SEE INFANTRY TARGET BERMS AND DETAILS, SHEET CD-7 (b) FOR TARGET LAYOUT AND HORIZONTAL CONTROL

STATE OF TEXAS
E. LAMAR FAULK
86158
LICENSED
PROFESSIONAL ENGINEER
(e) (b)

THE SEAL APPEARING ON THIS DOCUMENT WAS AUTHORIZED BY E. LAMAR FAULK ON AUGUST 8, 2001

US Army Corps of Engineers
FORT WORTH DISTRICT

POLYENGINEERING, INC.
ENGINEERS AND ARCHITECTS
1826 Headland Avenue
Dothan, Alabama 36305
(334) 792-4700 (voice)
(334) 792-9516 (fax)

Mark	Description	Date	Appr.
1	EDITED SEAL	SEPT 01	ELF
2	EDITED TEXT AND TITLE BLOCK TO TAGGED SEAL	AUG 01	ELF

Date: 19 June 2001 — Rev.
Designed by: Rebecca S. Hand
Dwn by: J. Peaden — Ckd by: M. Dixon
Sol No. DACA63-01-B-0007
Reviewed by: Scott Faulk
Contr No. DACA63-01-C-0016 (b)
Submitted by: E. Lamar Faulk
File name:
Plot date:
Plot scale: NO SCALE

U.S. ARMY ENGINEER DISTRICT
CORPS OF ENGINEERS
FORT WORTH, TEXAS

POLYENGINEERING, INC.
ENGINEERS & ARCHITECTS
DOTHAN, ALABAMA

FORT HOOD, TEXAS
DIGITAL MULTI-PURPOSE RANGE COMPLEX (DMPRC)
PN 51915 FY 01 (b)

STATIONARY INFANTRY TARGET

Sheet reference number:
CD-6
Sheet of

Contr No. DACA63-01-C-0016

00687900

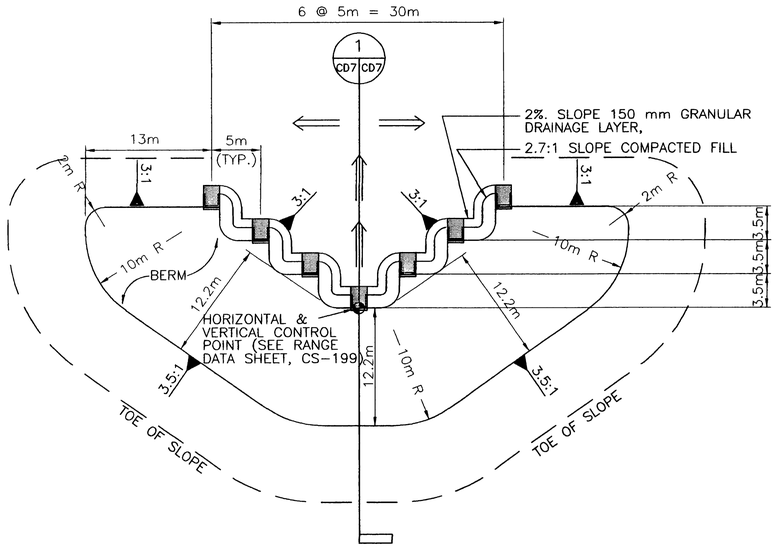

STATIONARY INFANTRY TARGET V-GROUP WITH 12.2m BERM

SCALE: 1:300

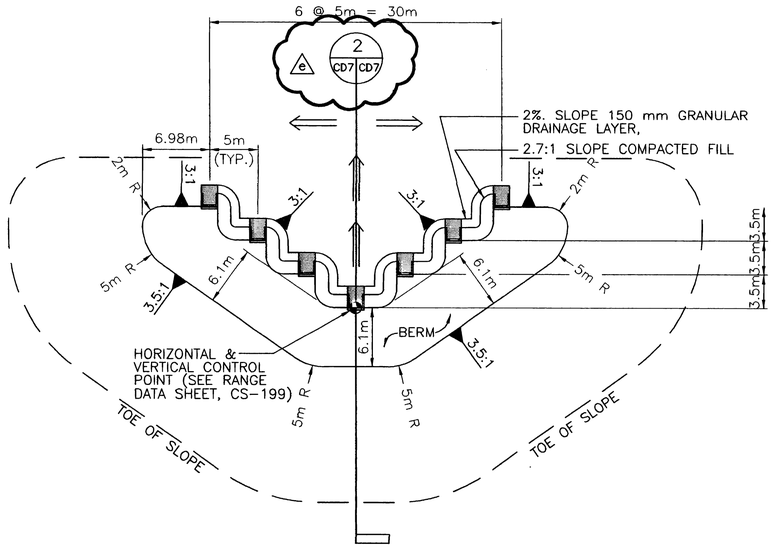

STATIONARY INFANTRY TARGET V-GROUP WITH 6.1m BERM

SCALE: 1:300

b

TARGETS CC-1,CC-2,CC-3, JC-1,JC-2 USE A 6.1m BERM. ALL OTHERS USE A 12.2m BERM.

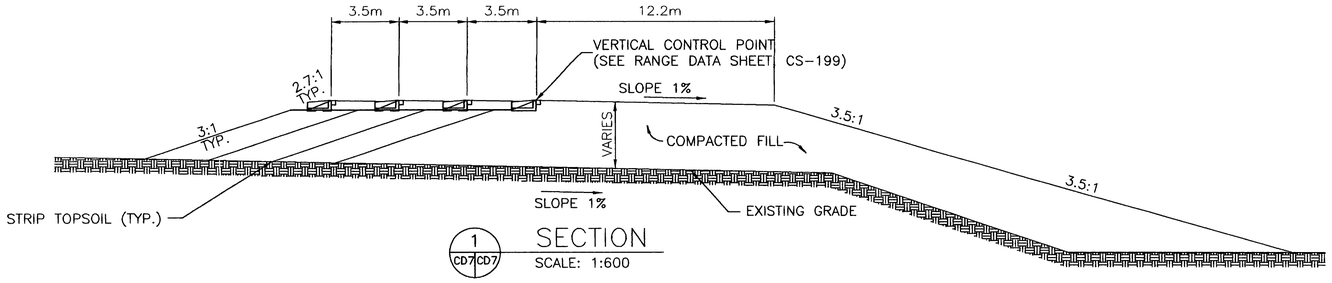

1 CD7 CD7 SECTION

SCALE: 1:600

b

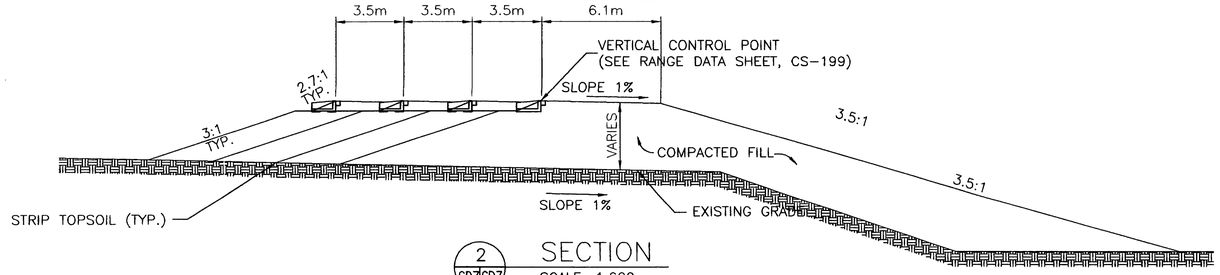

2 CD7 CD7 SECTION

SCALE: 1:600

NOTES:

1. SEE PLAN SHEETS AND RANGE DATA SHEET FOR ORIENTATION OF STATIONARY INFANTRY TARGET V-GROUPS.

LEGEND

SWALE FLOW DIRECTION

SIT

STATE OF TEXAS
E. LAMAR FAULK
86158
LICENSED
PROFESSIONAL ENGINEER

b

THE SEAL APPEARING ON THIS DOCUMENT WAS AUTHORIZED BY E. LAMAR FAULK ON AUGUST 8, 2001

GRAPHIC SCALE

6 3 0 3 6

SCALE: 1:300

12 6 0 6 12

SCALE: 1:600

US Army Corps of Engineers
FORT WORTH DISTRICT

POLYENGINEERING, INC.
1905 Headland Avenue
Dothan, Alabama 36305
(334) 793-2790 (voice)
(334) 793-9015 (fax)

Mark	Description	Date	Appr.
1	EDITED SECTION CALLOUT	SEPT 01	ELF
3	TARGET BERM NOTE, CORRECT DIMENSION AND TITLE BLOCK EDIT, ADDED SEAL	AUG 01	ELF

Designed by: Rebecca S. Hand
Dwn by: J.D. Peeden
Ckd by: Mike Dixon
Reviewed by: Scott Faulk
Submitted by: E. Lamar Faulk
Date: 19 June 2001
Rev.
Sol No. DACA63-01-B-0007
Contr No. DACA63-01-C-0016 b
File name:
Plot date:
Plot scale: AS SHOWN

U.S. ARMY ENGINEER DISTRICT
CORPS OF ENGINEERS
FORT WORTH, TEXAS

POLYENGINEERING, INC.
ENGINEERS & ARCHITECTS
DOTHAN, ALABAMA

FORT HOOD, TEXAS
DIGITAL MULTI-PURPOSE RANGE COMPLEX (DMPRC)
PN 51915 FY 01 b

INFANTRY TARGET
BERMS AND DETAILS
(V-GROUP)

Sheet reference number:
CD-7
Sheet of

Contr No. DACA63-01-C-0016

00687030

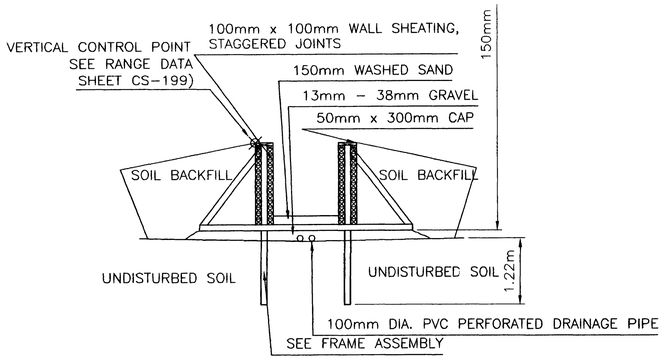

C CD8 CD8 TRENCH SECTION
N.T.S.

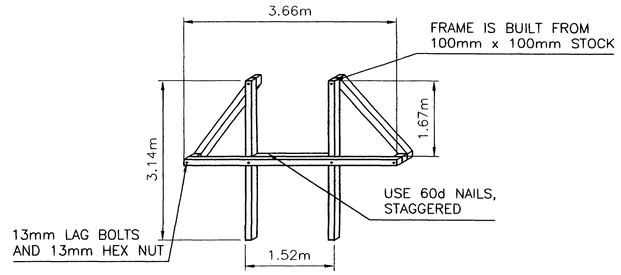

FRAME ASSEMBLY
N.T.S.

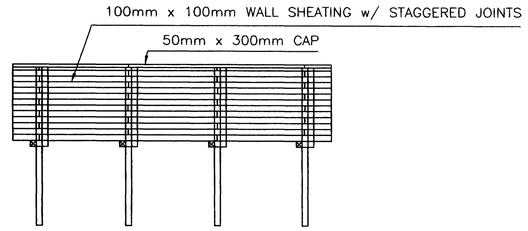

B CD8 CD8 WALL DETAIL
N.T.S.

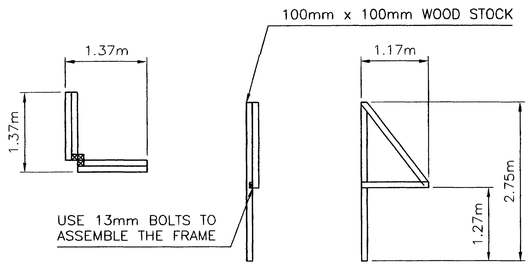

CORNER BRACING ASSEMBLY
N.T.S.

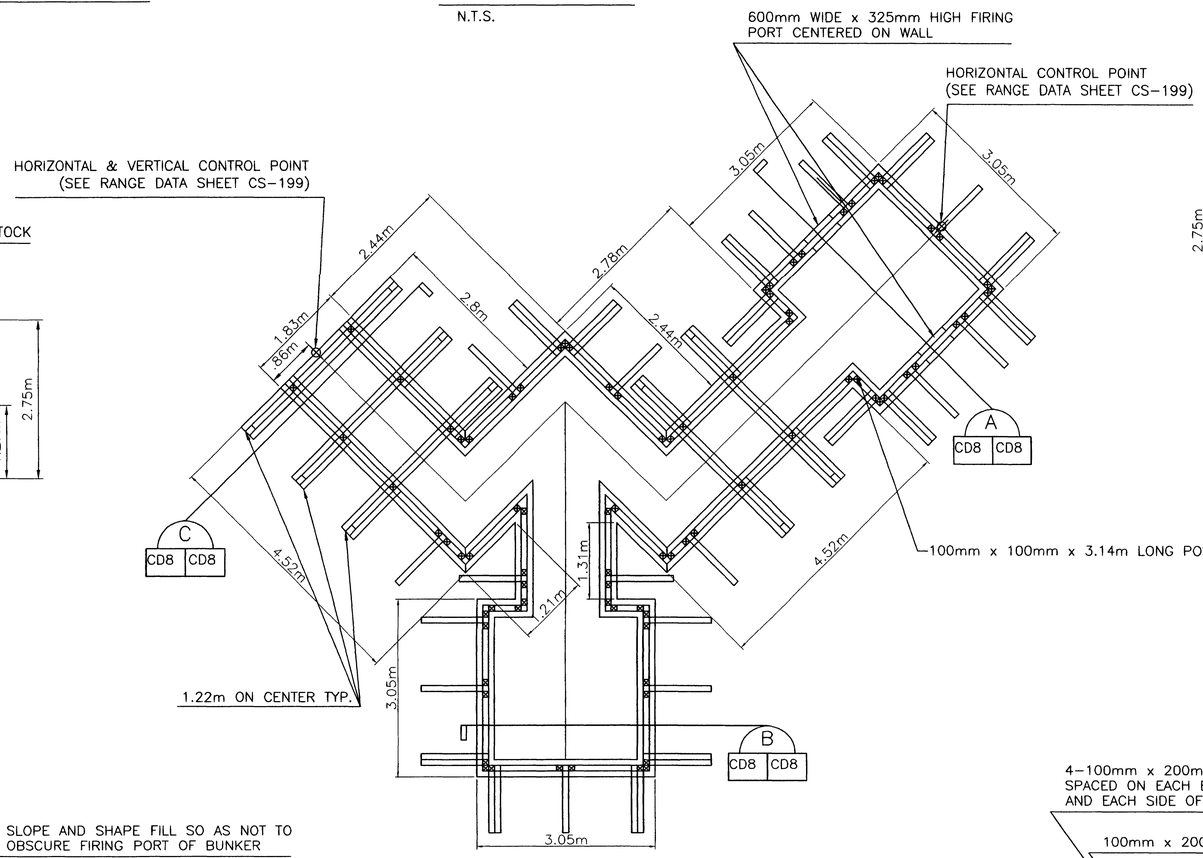

TYPICAL TRENCH PLAN VIEW
SCALE 1:50

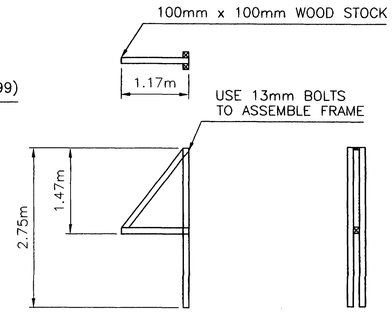

ONE SIDE BRACING ASSEMBLY
N.T.S.

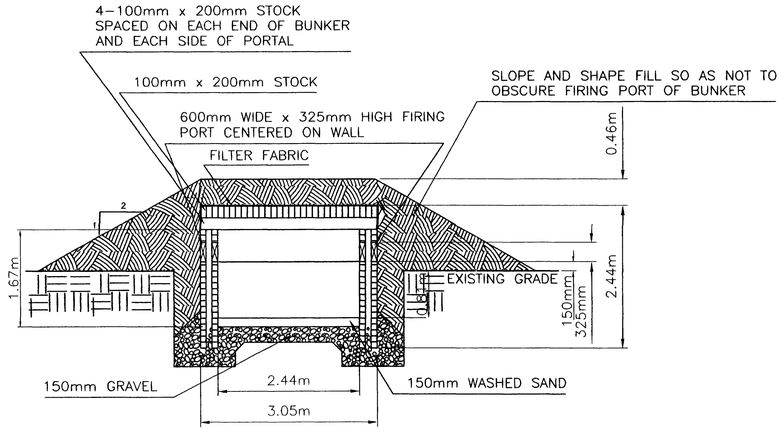

A CD8 CD8 DETAIL – FIRING BUNKER
N.T.S.
NOTE: Floor of bunker is level with trench floor.

General Notes

1. Areas disturbed by construction activities shall be revegitated consistent with the natural surroundings.
2. Trench shall be constructed such that water will not accumulate in trench or bunker.
3. Contractor shall provide positive drainage away from trench and construction site.
4. All wood shall be preservative treated.
5. Use 60d nails staggered and 13mm lag bolts with 13mm hex nuts to secure all wood.

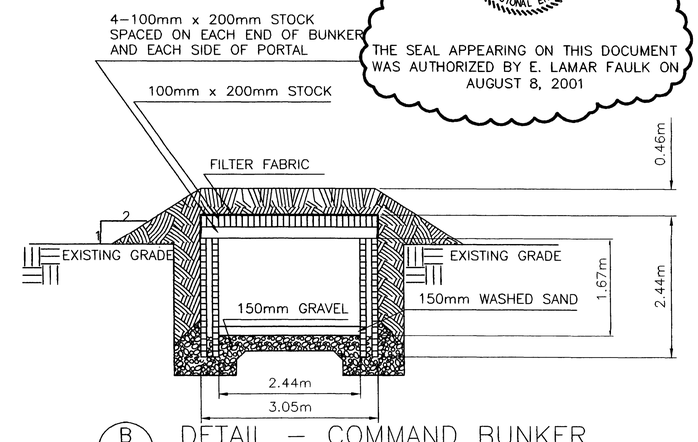

B CD8 CD8 DETAIL – COMMAND BUNKER
N.T.S.
NOTE: Floor of bunker is level with trench floor.

THE SEAL APPEARING ON THIS DOCUMENT WAS AUTHORIZED BY E. LAMAR FAULK ON AUGUST 8, 2001

US Army Corps of Engineers
FORT WORTH DISTRICT

POLYENGINEERING, INC.
1002 Redland Avenue
Dothan, Alabama 36303
(334) 793-4750 (voice)
(334) 793-9015 (fax)

Rev.	Date	Description	By	Appr.
A	SEPT 01	ENTIRE SEAL	ELF	ELF
B	AUG 01	TITLE BLOCK EDIT, ADDED SEAL	ELF	ELF

Designed by: Rebecca S. Hand
Dwn by: J. Preeden
Ckd by: M. Dixon
Reviewed by: Scott Faulk
Submitted by: E. Lamar Faulk
Date: 13 June 2001
Rev.
Sol No. DACA63-01-B-0007
Contr No. DACA63-01-C-0016
File name:
Plot date:
Plot scale: 1:500

U.S. ARMY ENGINEER DISTRICT
CORPS OF ENGINEERS
FORT WORTH, TEXAS

POLYENGINEERING, INC.
ENGINEERS & ARCHITECTS
DOTHAN, ALABAMA

FORT HOOD, TEXAS
DIGITAL MULTI-PURPOSE RANGE COMPLEX (DMPRC)
PN 51915 FY 01

TRENCH DETAILS

Sheet reference number:
CD-8
Sheet of

Contr No. DACA63-01-C-0016

00686000

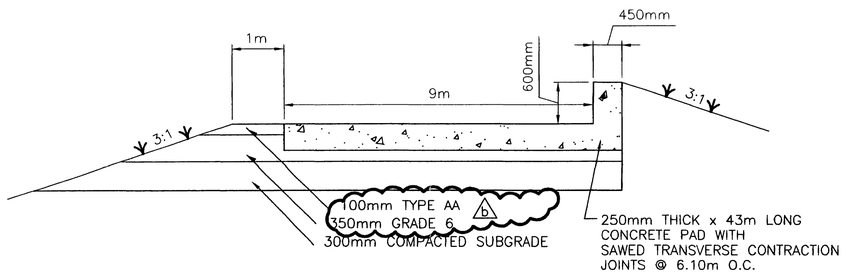

SEE CONCRETE JOINT DETAILS SHEET CD-15

SCREENING LINE TYPICAL SECTION

NOT TO SCALE

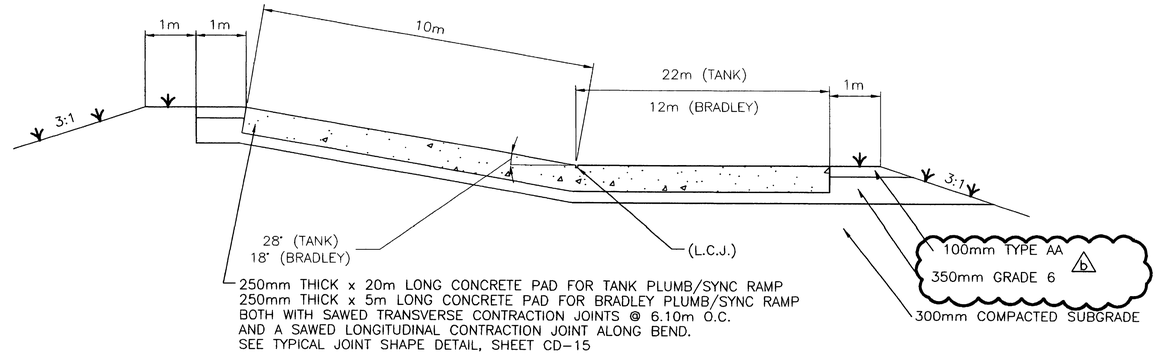

PLUMB/SYNC RAMP TYPICAL SECTION

NOT TO SCALE

NOTE: PLUMB/SYNC RAMPS SHALL NOT CONTAIN ANY REINFORCING STEEL OR METAL JOINT MATERIAL.

STATE OF TEXAS
E. LAMAR FAULK
86158
LICENSED
PROFESSIONAL ENGINEER

THE SEAL APPEARING ON THIS DOCUMENT WAS AUTHORIZED BY E. LAMAR FAULK ON AUGUST 8, 2001

US Army Corps of Engineers
FORT WORTH DISTRICT

POLYENGINEERING, INC.
ENGINEERS AND ARCHITECTS
POLYENGINEERING, INC.
1905 Roseland Avenue
Dothan, Alabama 36303
(334) 793-4700 (voice)
(334) 793-9015 (fax)

Mark	Description	Date	Appr.
3	TITLE BLOCK AND TEXT EDIT, ADDED SEAL	AUG 01	ELF

Designed by: Reverons S. Hood
Dwn by: J.D. Pendergraft
Ckd by: Mike Dixon
Date: 19 June 2001
Sol No. DACA63-01-B-0007
Contr No. DACA63-01-C-0016
Rev.
Reviewed by: Scott Faulk
Submitted by: E. Lamar Faulk
File date:
Plot date:
Plot scale: NO SCALE

U.S. ARMY ENGINEER DISTRICT
CORPS OF ENGINEERS
FORT WORTH, TEXAS

POLYENGINEERING, INC.
ENGINEERS & ARCHITECTS
DOTHAN, ALABAMA

FORT HOOD, TEXAS
DIGITAL MULTI-PURPOSE RANGE COMPLEX
(DMPRC)
PN 51915 FY 01

SCREENING LINE AND
PLUMB/SYNC RAMP
TYPICAL SECTIONS

Sheet reference number:
CD-9
Sheet of

Contr. No. DACA63-01-C-0016

00688010

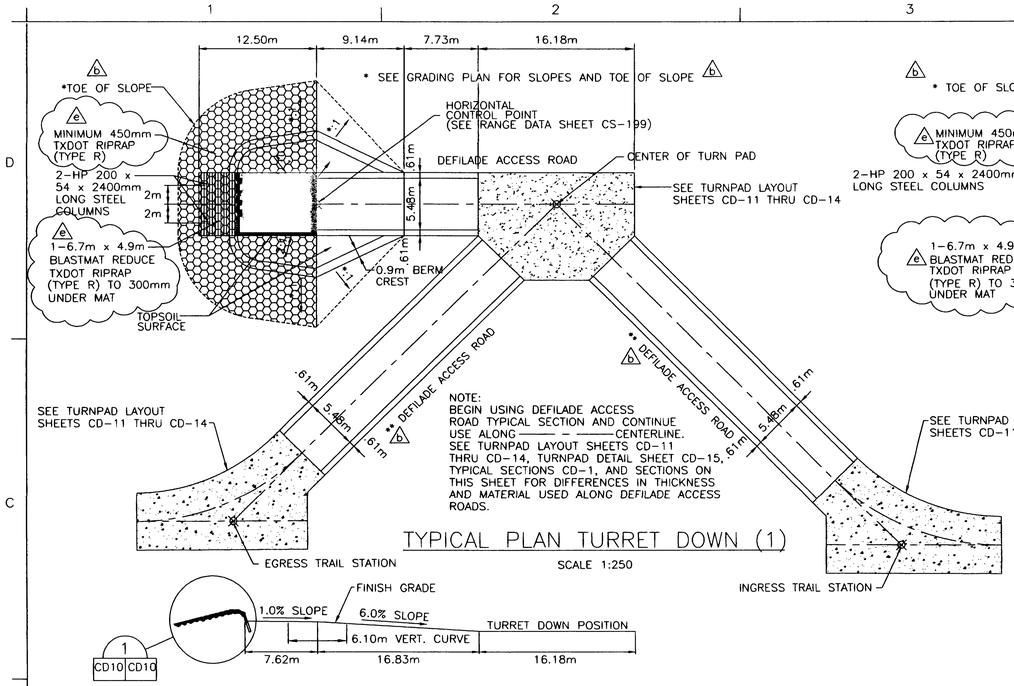

TYPICAL PLAN TURRET DOWN (1)

SCALE 1:250

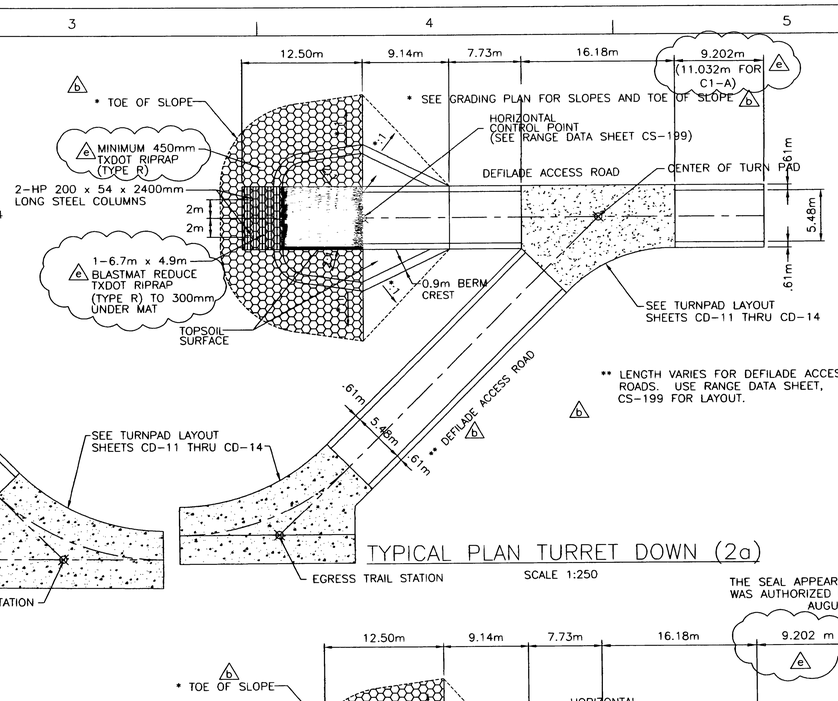

TYPICAL PLAN TURRET DOWN (2a)

SCALE 1:250

THE SEAL APPEARING ON THIS DOCUMENT WAS AUTHORIZED BY E. LAMAR FAULK ON AUGUST 8, 2001

TYPICAL PROFILE TURRET DOWN (1)

SCALE 1:250

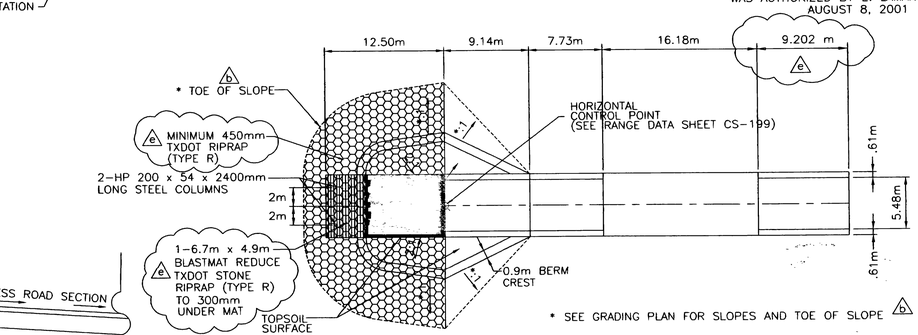

TYPICAL PLAN TURRET DOWN (2b)

SCALE 1:250

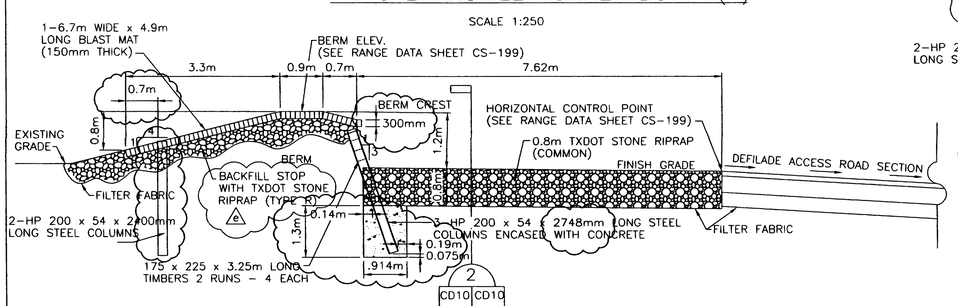

TIMBER STOP BLOCK AND DEFILADE SECTION

SCALE 1:50

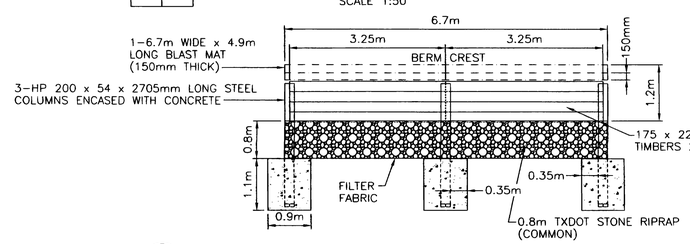

TIMBER STOP BLOCK AND DEFILADE SECTION

SCALE 1:50

NOTES:

1. SPALLS AND SMALL STONES WEIGHING LESS THAN 10 KG SHALL BE USED TO FILL OPEN JOINTS AND VOIDS IN STONE RIPRAP (TYPE R & COMMON) AND SHALL BE PLACED TO A TIGHT FIT.
2. CONCRETE SHALL HAVE A MINIMUM FLEXURE STRENGTH OF 4.5MPa AT 28 DAYS.
3. BLASTMATS SHALL BE INSTALLED WITH THE LONGEST SECTION OF THE TIRES ORIENTED IN THE DIRECTION OF FIRE.
4. BLASTMATS SHALL BE SECURED TO EACH OF THE 3 - 200 x 54 x 2705mm "H" PILES AND THE 2-200x54x2400mm "H" PILES WITH A DOUBLE-CLAMPED 15.6mm STEEL-CORE CABLE. A 18mm HOLE SHALL BE PUNCHED INTO THE WEB OF THE "H" PILE WITH A 50mm CLEARANCE FROM THE TOP OF THE "H" PILE.
5. BLASTMATS SHALL BE FOUR STAR RUBBER BLASTING MATS, LEBANON JUNCTION,KENTUCKY, OR APPROVED EQUAL.
6. SEE SITE PLAN SHEETS FOR OREINTATION AND IDENTIFICATION AND RANGE DATA SHEET CS-199 FOR CONTROL POINTS.

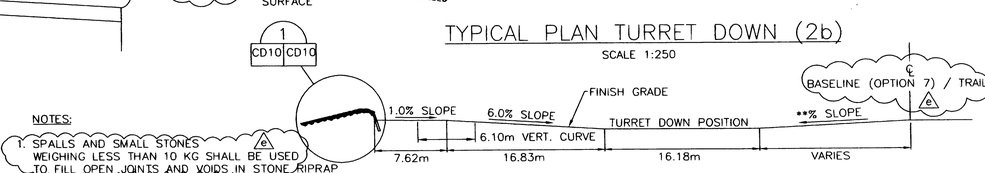

** SLOPE IS 5.0% FOR ALL DEFILADES EXCEPT FOR DEFILADE J3-A. SLOPE IS 1.45% FOR J3-A

TYPICAL PROFILE TURRET DOWN (2a & 2b)

SCALE 1:250

LEGEND

- TXDOT STONE RIPRAP (COMMON)
- TXDOT STONE RIPRAP (TYPE R)
- BLASTMAT
- CONCRETE

GRAPHIC SCALE

5 0 5 1 — SCALE: 1:50

5 2.5 0 2.5 5 — SCALE: 1:250

US Army Corps of Engineers FORT WORTH DISTRICT

POLYENGINEERING, INC.
1806 Bradford Avenue
Dothan, Alabama 36303
(334) 793-7700 (voice)
(334) 793-9818 (fax)

Mark	Description	Date	By
A	DOTED RIPRAP CALLOUTS, CHANGED DWG/DOWN, EDITED LEGEND AND NOTES	SEPT. 01	ELF
B	NOTE EDIT AND TITLE BLOCK EDIT, ADDED SEAL	AUG. 01	ELF

Designed by: Rebecca S. Hand	Date: 19 June 2001
Dwn by: J.D. Peeden / Ckd by: Mike Dixon	Sol No. DACA63-01-B-0007
Reviewed by: Scott Cole	Contr No. DACA63-01-C-0016
Submitted by: E. Lamar Faulk	File name: Plot date: Plot scale: AS SHOWN

U.S. ARMY ENGINEER DISTRICT CORPS OF ENGINEERS FORT WORTH, TEXAS

POLYENGINEERING, INC. ENGINEERS & ARCHITECTS DOTHAN, ALABAMA

FORT HOOD, TEXAS
DIGITAL MULTI-PURPOSE RANGE COMPLEX (DMPRC) FY 01
PN 51915

DEFILADE DETAILS TURRET DOWN

Sheet reference number: CD-10

Sheet of

Contr No. DACA63-01-C-0016

00680030

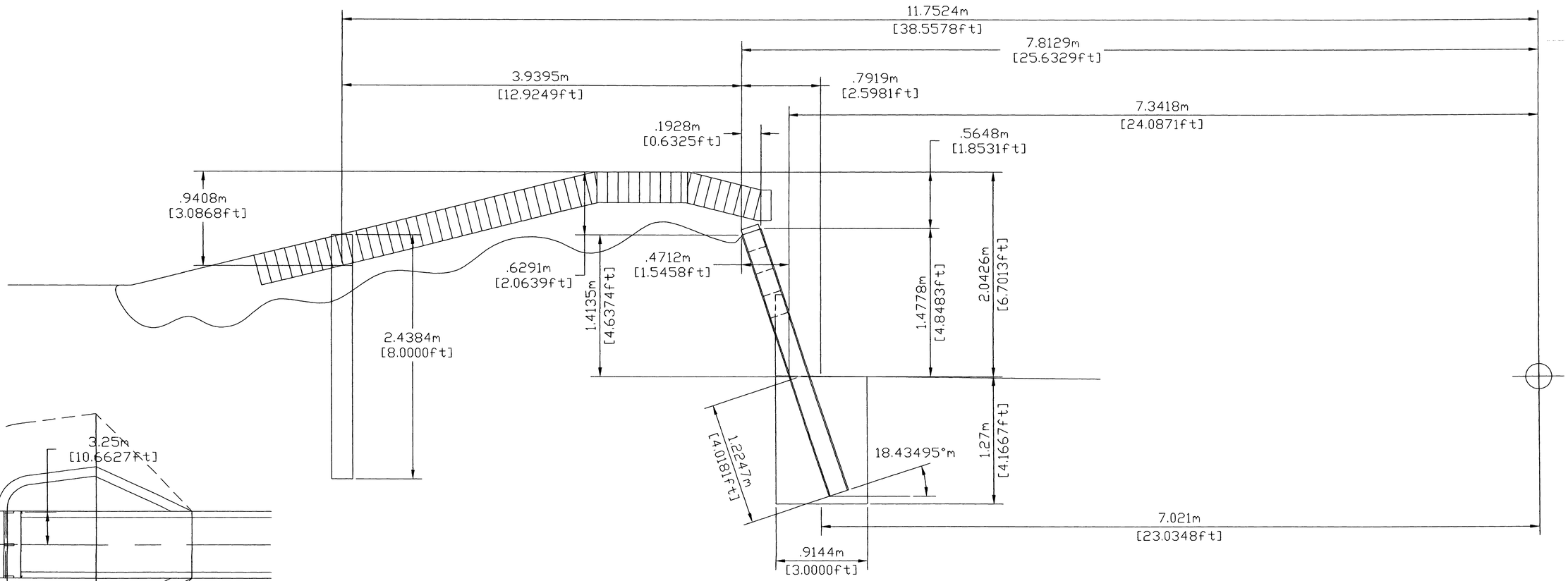

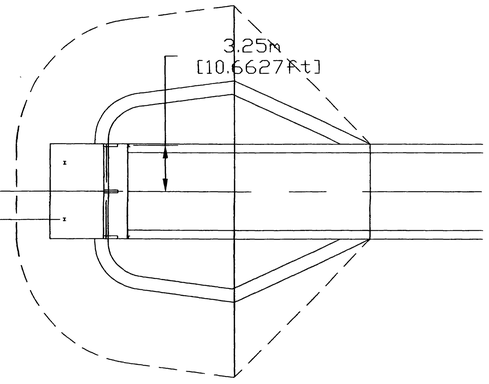

NOTES: 1) THIS DRAWING REFLECTS A 6" LOWERING OF H-PILES CAUSED BY AN INCREASE IN BLASTMAT THICKNESS FROM 6" TO 12"

2) H-PILES @ FRONT OF DEFILADE HAVE BEEN MOVED 1' FURTHEF SO H-PILES ARE FLUSH WITH END OF BLASTMAT. THUS, THE TOP OF H-PILES WILL BE 3" LOWER BECAUSE OF 4:1 SLOPE

s_berm_rev2.dwg 8/11/2005 10:28:30 AM

CD-10 A

00686030 "DRAWING AS BUILT"

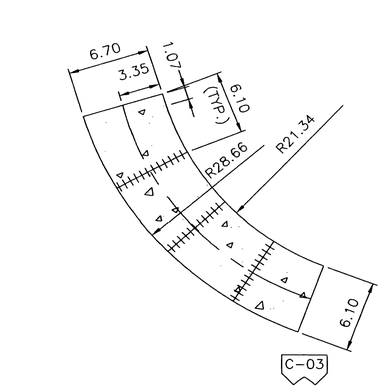

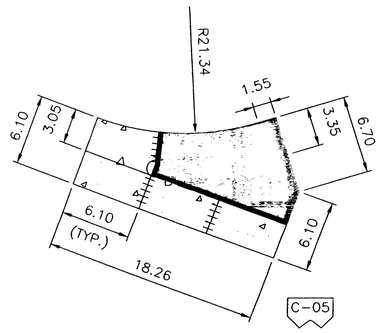

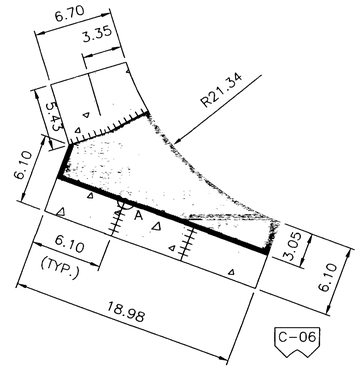

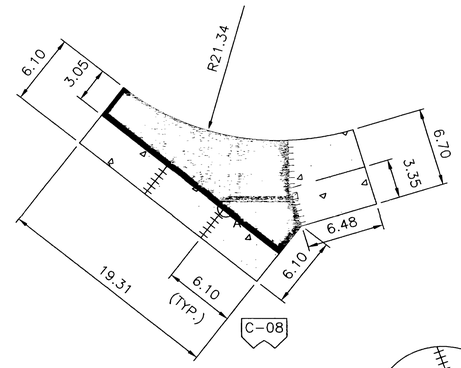

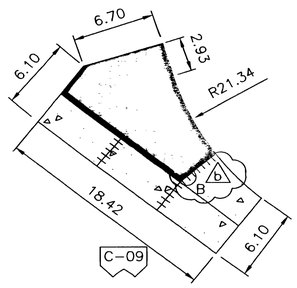

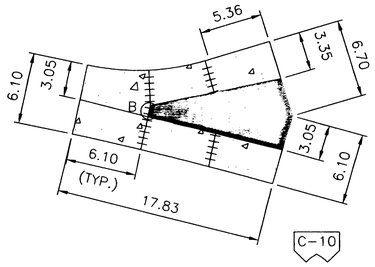

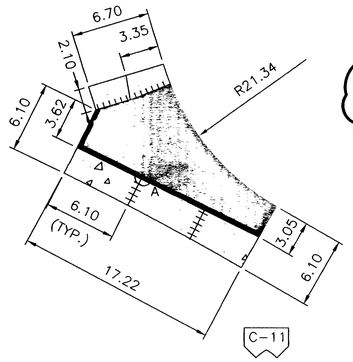

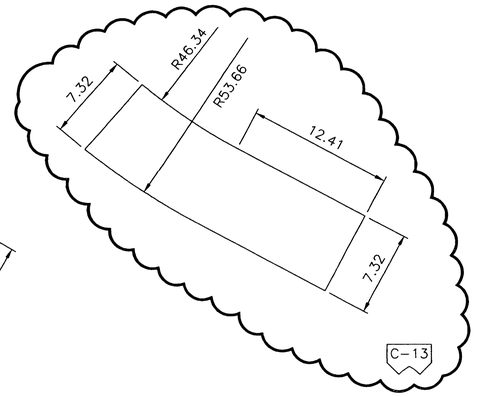

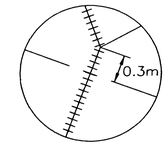

DETAIL A

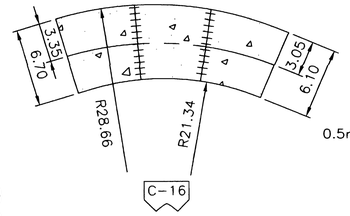

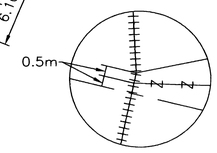

DETAIL B

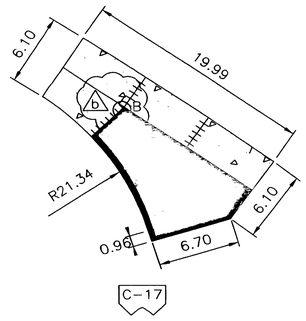

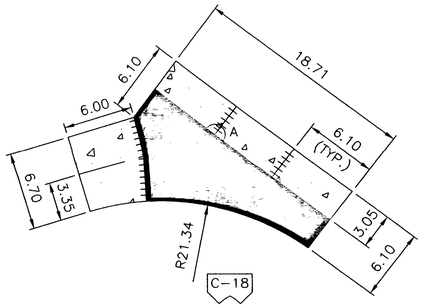

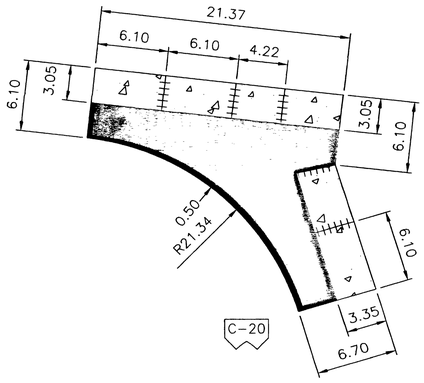

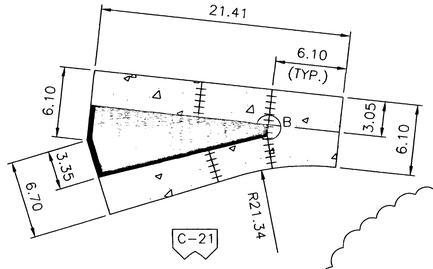

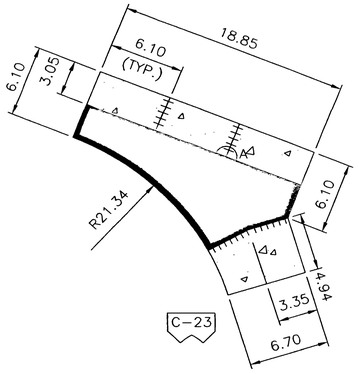

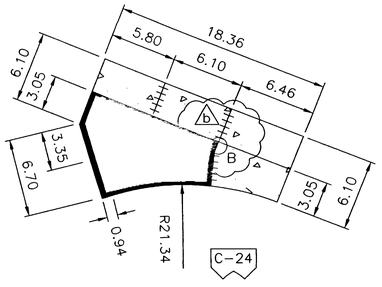

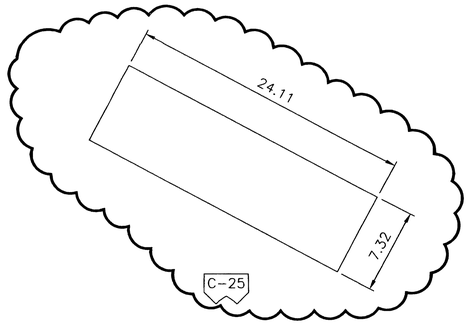

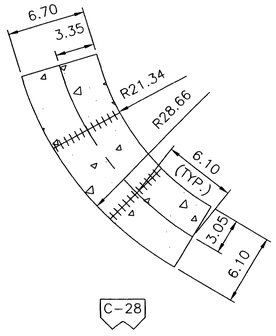

NOTES:

1. SEE SHEET CD-15 FOR JOINT DETAILS
2. ALL DIMENSIONS ARE SHOWN IN METERS UNLESS OTHERWISE INDICATED.

THE SEAL APPEARING ON THIS DOCUMENT WAS AUTHORIZED BY E. LAMAR FAULK ON AUGUST 8, 2001

N

GRAPHIC SCALE

5 2.5 0 2.5 5

SCALE: 1:250

LEGEND

- LONGITUDINAL CONTRACTION JOINT (L.C.J.)
- LONGITUDINAL CONSTRUCTION JOINTS (C.J.)
- TRANSVERSE CONTRACTION JOINT (T.C.J.)
- #13 REINFORCING @ 300mm O.C. EACH WAY LOCATED 75mm FROM TOP OF SLAB IN SHADED AREAS
- 100mm x 100mm x 6mm ANGLE IRON EMBEDDED INTO CONCRETE (TYPICAL AT ALL ADJOINING TRAIL EDGES)
- CONCRETE

US Army Corps of Engineers
FORT WORTH DISTRICT

POLYENGINEERING, INC.
1955 Headland Avenue
Dothan, Alabama 36303
(334) 793-4700 (voice)
(334) 793-9015 (fax)

Mark	Description	Date	Appr.
B	ADDED SEAL		
A	ADDED CONCRETE TURN PAD AT END OF TRAILS, ADDED DETAIL B AND TITLE BLOCK EDIT	AUG 01	ELF

Designed by: Rebecca S. Hand
Dwn by: McElhaney
Ckd by: M. Dixon
Reviewed by: Scott Faulk
Submitted by: E. Lamar Faulk
Date: 19 JUNE 2001
Sol No. DACA63-01-B-0007
Contr. No. DACA63-01-C-0015
Rev. B
File name:
Plot date:
Plot scale: 1:250

U.S. ARMY ENGINEER DISTRICT
CORPS OF ENGINEERS
FORT WORTH, TEXAS

POLYENGINEERING, INC.
ENGINEERS & ARCHITECTS
DOTHAN, ALABAMA

FORT HOOD, TEXAS
DIGITAL MULTI-PURPOSE RANGE COMPLEX
PN 51915
FY 01
TURN PAD LAYOUT

Sheet reference number:
CD-11
Sheet of

Contr No. DACA63-01-C-0016

00686020

dwg 8/12/2005 8:00:56 AM

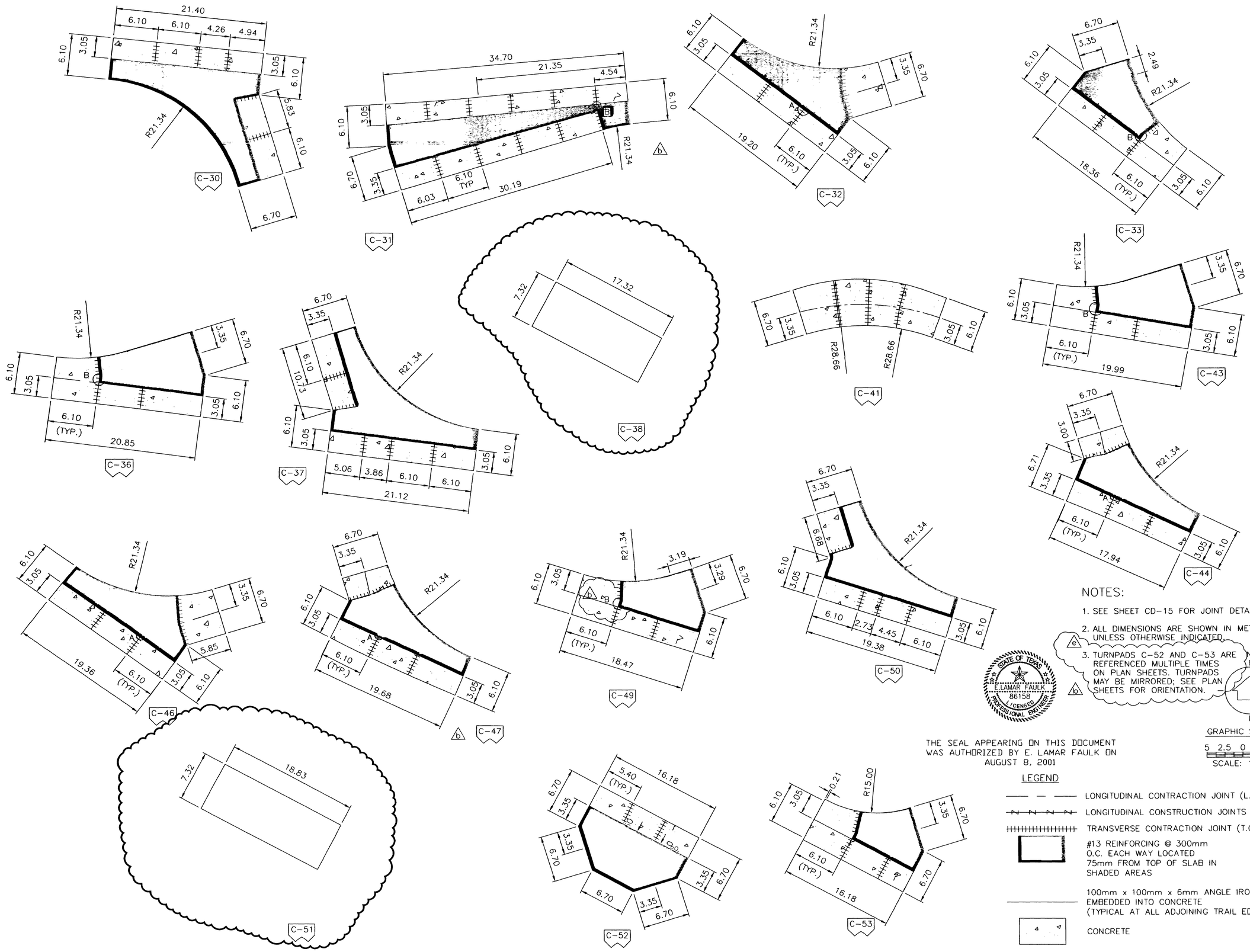

NOTES:

1. SEE SHEET CD-15 FOR JOINT DETAILS
2. ALL DIMENSIONS ARE SHOWN IN METERS UNLESS OTHERWISE INDICATED.
3. TURNPADS C-52 AND C-53 ARE REFERENCED MULTIPLE TIMES ON PLAN SHEETS. TURNPADS MAY BE MIRRORED; SEE PLAN SHEETS FOR ORIENTATION.

STATE OF TEXAS
E. LAMAR FAULK
86158
LICENSED
PROFESSIONAL ENGINEER

THE SEAL APPEARING ON THIS DOCUMENT WAS AUTHORIZED BY E. LAMAR FAULK ON AUGUST 8, 2001

GRAPHIC SCALE

5 2.5 0 7.5

SCALE: 1:250

LEGEND

- LONGITUDINAL CONTRACTION JOINT (L.C.J.)
- LONGITUDINAL CONSTRUCTION JOINTS (C.J.)
- TRANSVERSE CONTRACTION JOINT (T.C.J.)
- #13 REINFORCING @ 300mm O.C. EACH WAY LOCATED 75mm FROM TOP OF SLAB IN SHADED AREAS
- 100mm x 100mm x 6mm ANGLE IRON EMBEDDED INTO CONCRETE (TYPICAL AT ALL ADJOINING TRAIL EDGES)
- CONCRETE

US Army Corps of Engineers
FORT WORTH DISTRICT

POLYENGINEERING, INC.
POLYENGINEERING, INC.
1850 Headland Avenue
Dothan, Alabama 36303
(334) 792-4700 (voice)
(334) 793-9015 (fax)

Rev.	Date	Description	By	Appr.
A	SEPT 01	EDITED NOTES TITLE BLOCK EDIT, ADDED SEAL	ELF	ELF
B	AUG 01	ADDED CONCRETE, TURN PAD AT END OF TRAILS, ADDED DETAIL B, CORRECT DETAILS.	ELF	ELF

Designed by: Rebecca S. Hand
Date: 19 JUNE, 2001
Rev.
Drawn by: McElhaney
Sol. No. DACA63-01-B-0007
Cont. No. DACA63-01-C-0016
Checked by: M. Dixon
Reviewed by: Scott Faulk
Plot name:
Plot scale: 1:250
Submitted by: E. Lamar Faulk

U.S. ARMY ENGINEER DISTRICT
CORPS OF ENGINEERS
FORT WORTH, TEXAS

POLYENGINEERING, INC.
ENGINEERS & ARCHITECTS
DOTHAN, ALABAMA

FORT HOOD, TEXAS
DIGITAL MULTI-PURPOSE RANGE COMPLEX (DMPRC)
PN 51915 FY 01

TURN PAD LAYOUT

Sheet reference number:
CD-12
Sheet of

Contr. No. DACA63-01-C-0016

00088050

Dwg 8/12/2005 7:59:08 AM

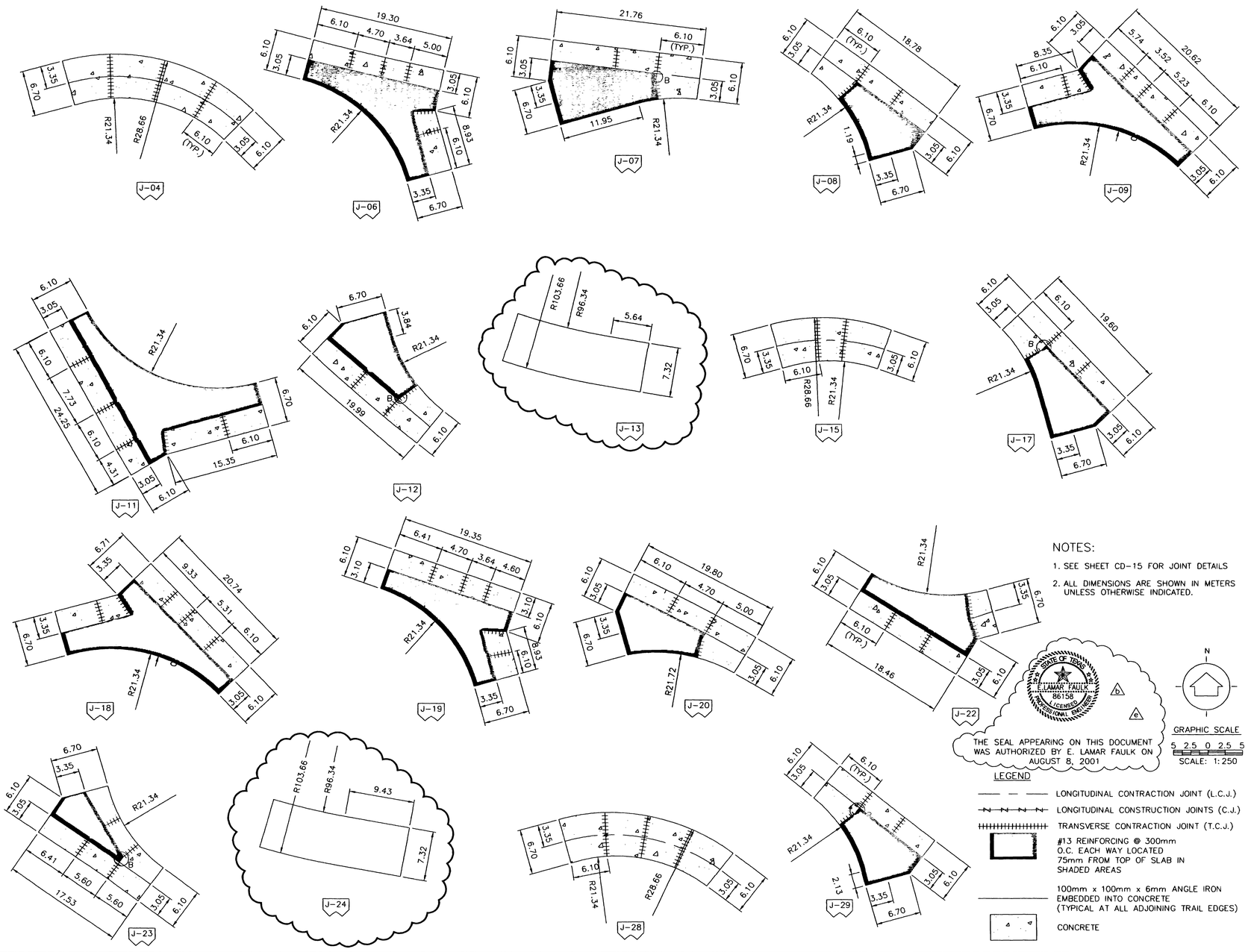

NOTES:

1. SEE SHEET CD-15 FOR JOINT DETAILS
2. ALL DIMENSIONS ARE SHOWN IN METERS UNLESS OTHERWISE INDICATED.

STATE OF TEXAS
E. LAMAR FAULK
86158
LICENSED
PROFESSIONAL ENGINEER

THE SEAL APPEARING ON THIS DOCUMENT WAS AUTHORIZED BY E. LAMAR FAULK ON AUGUST 8, 2001

N

GRAPHIC SCALE

5 2.5 0 2.5 5

SCALE: 1:250

LEGEND

- LONGITUDINAL CONTRACTION JOINT (L.C.J.)
- LONGITUDINAL CONSTRUCTION JOINTS (C.J.)
- TRANSVERSE CONTRACTION JOINT (T.C.J.)
- #13 REINFORCING @ 300mm O.C. EACH WAY LOCATED 75mm FROM TOP OF SLAB IN SHADED AREAS
- 100mm x 100mm x 6mm ANGLE IRON EMBEDDED INTO CONCRETE (TYPICAL AT ALL ADJOINING TRAIL EDGES)
- CONCRETE

US Army Corps of Engineers
FORT WORTH DISTRICT

POLYENGINEERING, INC.
1806 Southeast Avenue
Dothan, Alabama 36301
(334) 793-7726 (Voice)
(334) 793-6016 (Fax)

Symbol	Description	Date	Rev.
a	EDITED SEAL	SEPT. 01	01F
b	ADDED CONCRETE TURN PAD AT END OF TRAIL, EDIT TITLE BLOCK, ADDE SEAL	AUG. 01	01E

Designed by: Rebecca S. Hand
Date: 19 JUNE 2001
Rev.
Dwn by: Angela Dixon
Ckd by: Lu Brown
Sol. No. DACA63-01-B-0007
Contr. No. DACA63-01-C-0016
Reviewed by: Scott Faulk
Submitted by: E. Lamar Faulk
File name:
Plot date:
Plot scale: 1:250

U.S. ARMY ENGINEER DISTRICT
CORPS OF ENGINEERS
FORT WORTH, TEXAS

POLYENGINEERING, INC.
ENGINEERS & ARCHITECTS
DOTHAN, ALABAMA

FORT HOOD, TEXAS
DIGITAL MULTI-PURPOSE RANGE COMPLEX (DMPRC)
PN 59915 FY 01

TURN PAD LAYOUT

Sheet reference number:
CD-13
Sheet of

Contr No. DACA63-01-C-0016

3.dwg 8/12/2005 7:57:58 AM

00688

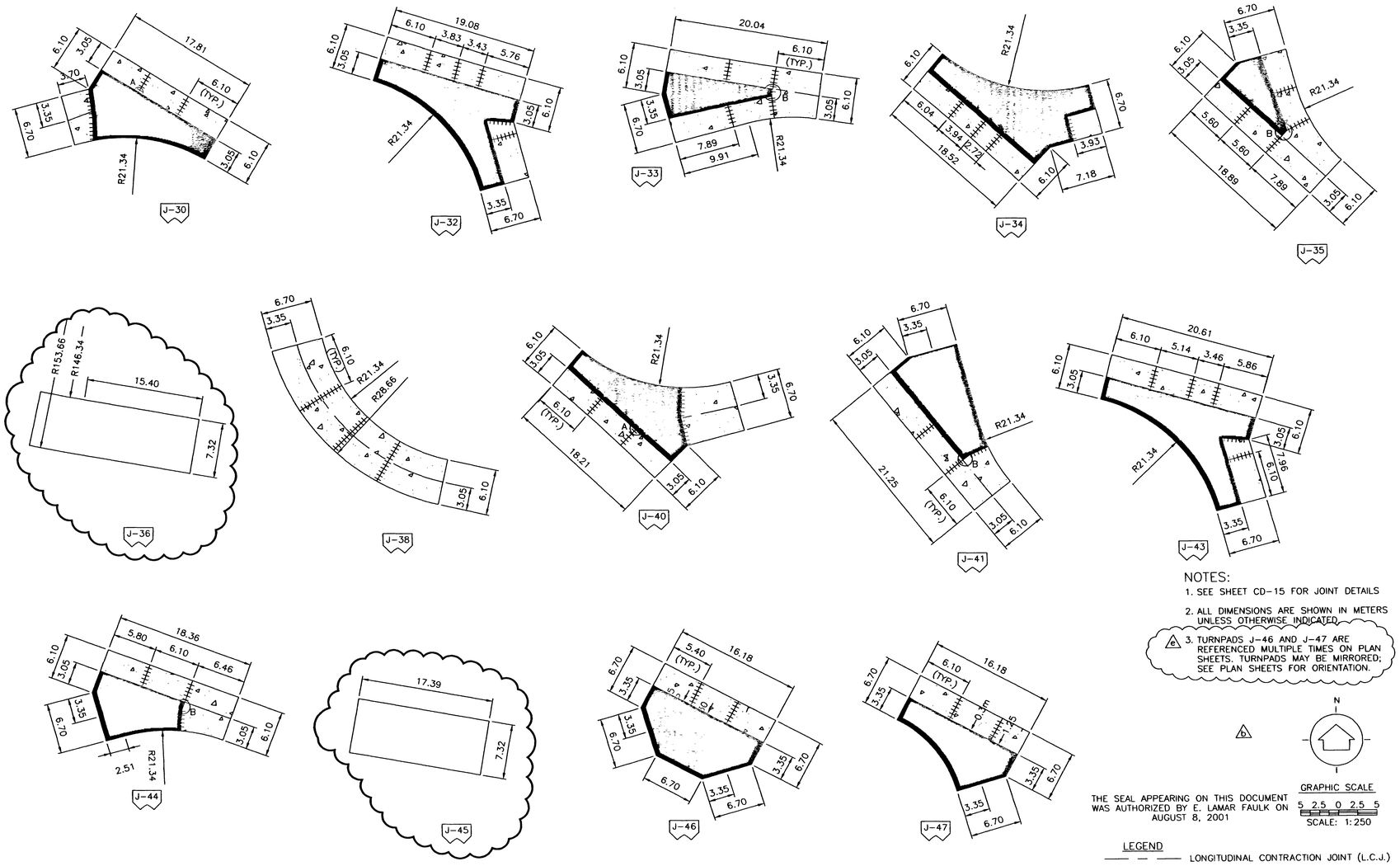

NOTES:

1. SEE SHEET CD-15 FOR JOINT DETAILS
2. ALL DIMENSIONS ARE SHOWN IN METERS UNLESS OTHERWISE INDICATED.
3. TURNPADS J-46 AND J-47 ARE REFERENCED MULTIPLE TIMES ON PLAN SHEETS. TURNPADS MAY BE MIRRORED; SEE PLAN SHEETS FOR ORIENTATION.

THE SEAL APPEARING ON THIS DOCUMENT WAS AUTHORIZED BY E. LAMAR FAULK ON AUGUST 8, 2001

GRAPHIC SCALE

5 2.5 0 2.5 5

SCALE: 1:250

LEGEND

- LONGITUDINAL CONTRACTION JOINT (L.C.J.)
- LONGITUDINAL CONSTRUCTION JOINTS (C.J.)
- TRANSVERSE CONTRACTION JOINT (T.C.J.)
- #13 REINFORCING @ 300mm O.C. EACH WAY LOCATED 75mm FROM TOP OF SLAB IN SHADED AREAS
- 100mm x 100mm x 6mm ANGLE IRON EMBEDDED INTO CONCRETE (TYPICAL AT ALL ADJOINING TRAIL EDGES)
- CONCRETE

US Army Corps of Engineers
FORT WORTH DISTRICT

POLYENGINEERING, INC.
1300 Bradford Avenue
Dothan, Alabama 36303
(334) 793-7788 (voice)
(334) 793-9816 (fax)

Rev.	Date	Description	By	Appr.
1	ADDED NOTE		SEPT 01	ELF
2	ADDED CONCRETE LINK PAD AT END OF TRAILEST TRIL BLOCK ADDED SEAL		MAY 02	ELF

Designed by: Rebecca S. Hand
Dwn by: Scott Faulk
Ckd by: A. Chandler
Reviewed by: Scott Faulk
Submitted by: E. Lamar Faulk
Date: 19 JUNE 2001
Sol. No. DACA63-01-B-0007
Contr. No. DACA63-01-C-0016
File name:
Plot date:
Plot scale: 1:250

U.S. ARMY ENGINEER DISTRICT
CORPS OF ENGINEERS
FORT WORTH, TEXAS

POLYENGINEERING, INC.
ENGINEERS & ARCHITECTS
DOTHAN, ALABAMA

FORT HOOD, TEXAS
DIGITAL MULTI-PURPOSE RANGE COMPLEX (DMPRC)
PN 51915 FY 01

TURN PAD LAYOUT

Sheet reference number:
CD-14
Sheet of

Contr. No. DACA63-01-C-0016

14.dwg 8/12/2005 7:57:27 AM

00688070

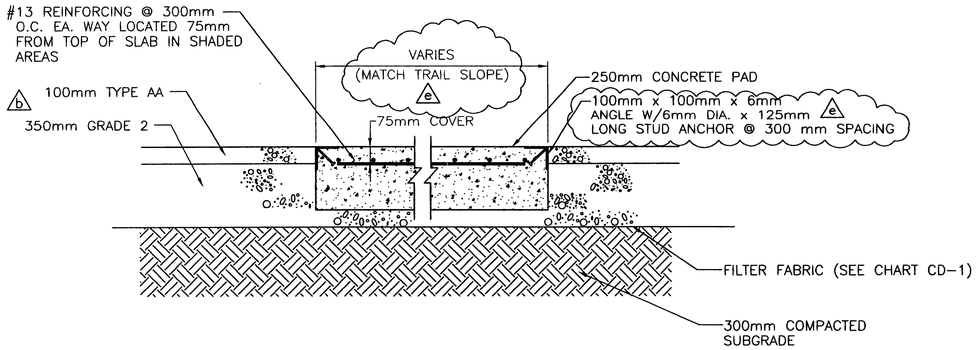

TURN PAD ON TRAIL AND DEFILADE

NOT TO SCALE

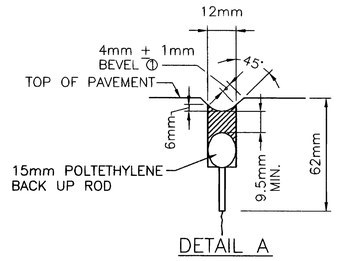

TYPICAL JOINT SHAPE DETAIL

NOT TO SCALE

NOTE:
① - THESE EDGES SHALL BE BEVELED USING A CUTTING OR GRINDING DEVICE.

JOINT TOLERANCES: SAW CUT DEPTH – 0mm TO + 12mm
SAW CUT DEPTH – 0mm TO + 1.5mm
SEAL BEAD THICKNESS – 0mm TO + 3mm

NOTE:
SAWCUTS ARE TO BE CUT WITH A BLADE THAT WILL PROVIDE A BEVEL ON EACH CORNER.

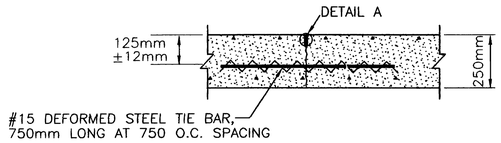

LONGITUDINAL CONTRACTION JOINT (L.C.J.)

(NON–REINFORCED PAVEMENT)

NOT TO SCALE

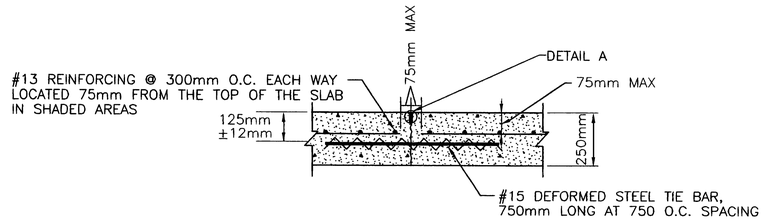

LONGITUDINAL CONTRACTION JOINT (L.C.J.)

(REINFORCED PAVEMENT)

NOT TO SCALE

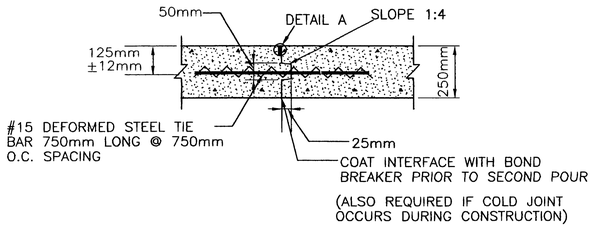

LONGITUDINAL CONSTRUCTION JOINT (C.J.)

(NON–REINFORCED PAVEMENT)

NOT TO SCALE

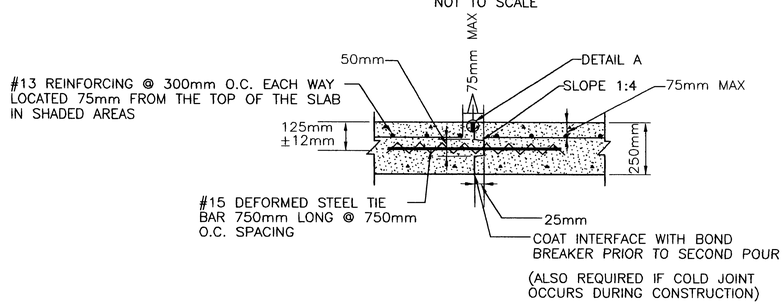

LONGITUDINAL CONSTRUCTION JOINT (C.J.)

(REINFORCED PAVEMENT)

NOT TO SCALE

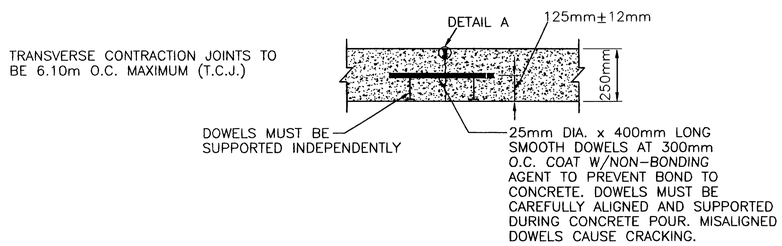

TRANSVERSE CONTRACTION JOINT (T.C.J.)

(NON–REINFORCED PAVEMENT)

NOT TO SCALE

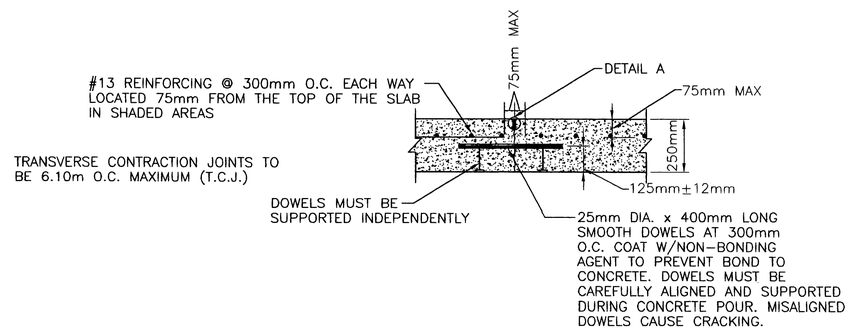

TRANSVERSE CONTRACTION JOINT (T.C.J.)

(REINFORCED PAVEMENT)

NOT TO SCALE

STATE OF TEXAS
E. LAMAR FAULK
86158
LICENSED
PROFESSIONAL ENGINEER

b

THE SEAL APPEARING ON THIS DOCUMENT WAS AUTHORIZED BY E. LAMAR FAULK ON AUGUST 8, 2001

US Army Corps of Engineers
FORT WORTH DISTRICT

POLYENGINEERING, INC.
ENGINEERS & ARCHITECTS
POLYENGINEERING, INC.
1855 Medical Avenue
Dothan, Alabama 36305
(334) 793-4700 (voice)
(334) 793-3015 (fax)

Mark	Description	Date	Appr.
2	EDITED NOTES	SEPT 01	ELF
1	TITLE BLOCK AND TEXT EDIT. ADDED SEAL	AUG 01	ELF

Designed by: Rebecca S. Hand
Dwn by: J. Peaden
Ckd by: M. Dixon
Reviewed by: Scott Faulk
Submitted by: E. Lamar Faulk
Date: 19 June 2001
Sol No. DACA63-01-B-0007
Contr No. DACA63-01-C-0016 b
File name:
Plot date:
Plot scale: AS SHOWN
Rev.

U.S. ARMY ENGINEER DISTRICT
CORPS OF ENGINEERS
FORT WORTH, TEXAS

POLYENGINEERING, INC.
ENGINEERS & ARCHITECTS
DOTHAN, ALABAMA

FORT HOOD, TEXAS
DIGITAL MULTI-PURPOSE RANGE COMPLEX (DMPRC)
PN 51915
FY 01 b

TURN PAD DETAILS

Sheet reference number:
CD–15
Sheet of

Contr No. DACA63-01-C-0016

00688080

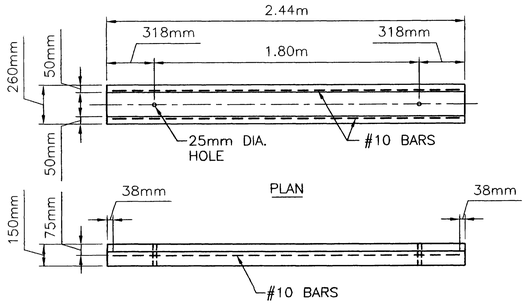

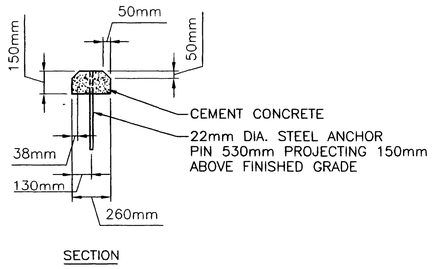

PRECAST WHEEL STOPS

SCALE: 1:20

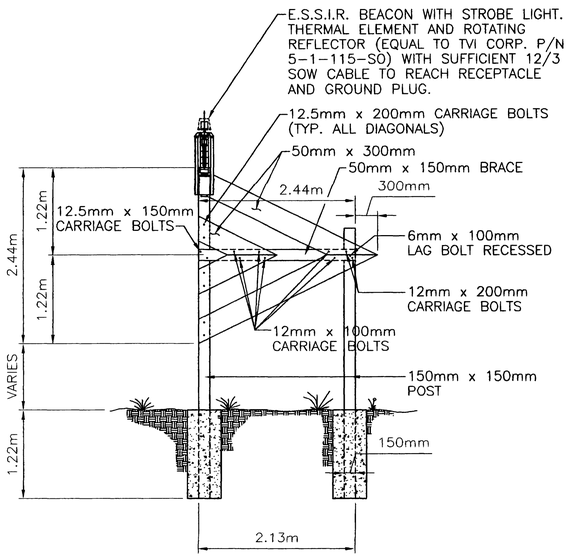

RANGE LIMIT MARKER

SCALE: 1:40

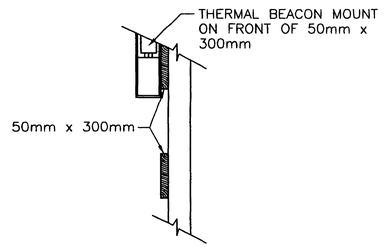

NOT TO SCALE

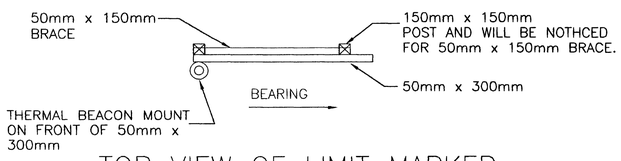

TOP VIEW OF LIMIT MARKER

SCALE: 1:40

NOTES:

1. DIAGONALS SHALL BE PAINTED LUMINOUS INTERNATION ORANGE.
2. ALL HARDWARE SHALL BE GALVANIZED.
3. ALL WOOD TO BE PRESERVATIVE TREATED.
4. CARRIAGE BOLTS SHALL BE EQUIPED WITH WASHER, LOCKWASHER & NUT.
5. LAG BOLTS SHALL BE 6mm DIA. AND EQUIPPED WITH WASHER.
6. LEFT SIDE MARKER IS SHOWN; RIGHT SIDE MARKER OPPOSITE HAND.

RANGE MARKER POINTS			
NAME	NORTHERN	EASTERN	BEARING
CL-1	3,458,702.325	618,431.155	S 28°08'09" E
CL-2	3,458,485.672	620,347.205	S 28°08'09" E
CL-3	3,455,447.984	620,985.601	N 55°14'44" E
JL-1	3,455,009.207	617,194.511	N 29°35'18" E
JL-2	3,454,510.068	619,094.177	N 29°35'18" E
JL-3	3,457,473.316	621,001.142	S 48°50'20" E

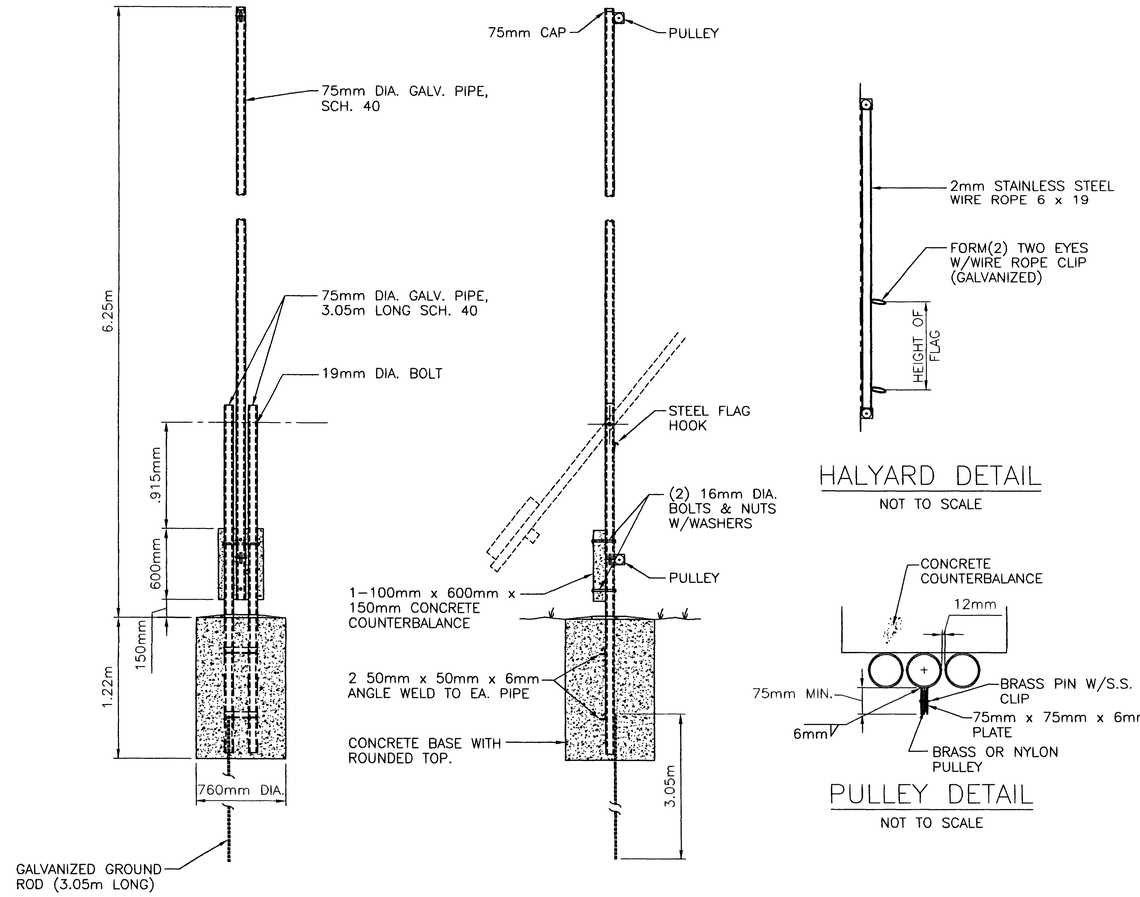

HALYARD DETAIL

NOT TO SCALE

PULLEY DETAIL

NOT TO SCALE

FLAGPOLE ELEVATIONS AND DETAILS

SCALE: 1:25

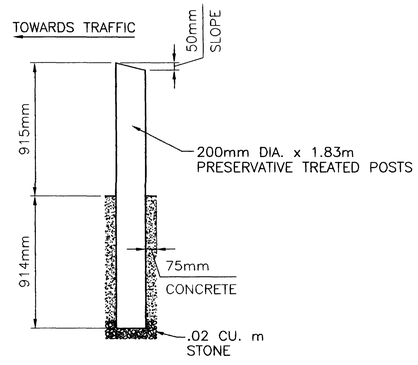

TYPICAL TRAFFIC POST

SCALE: 1:20

THE SEAL APPEARING ON THIS DOCUMENT WAS AUTHORIZED BY E. LAMAR FAULK ON AUGUST 8, 2001

GRAPHIC SCALE

.4 .2 0 .2 .4
SCALE: 1:20

.5 .25 0 .25 .5
SCALE: 1:25

.8 .4 0 .4 .8
SCALE: 1:40

US Army Corps of Engineers
FORT WORTH DISTRICT

POLYENGINEERING, INC.
ENGINEERS AND ARCHITECTS
POLYENGINEERING, INC.
1905 Headland Avenue
Dothan, Alabama 36303
(334) 793-4700 (voice)
(334) 793-2016 (fax)

Mark	Description	Date	Appr.
1	EDITED SEAL	SEPT 01	ELF
2	TITLE BLOCK, EDIT, ADDED SEAL	AUG 01	ELF

Designed by: Rebecca S. Hood
Date: 19 June 2001
Rev.
Drawn by: J. Perren
Checked by: M. Dixon
Sol No. DACA63-01-B-0007
Contr. No. DACA63-01-D-0016
Reviewed by: Scott Faulk
File name:
Plot date:
Plot scale: AS SHOWN
Submitted by: E. Lamar Faulk

U.S. ARMY ENGINEER DISTRICT
CORPS OF ENGINEERS
FORT WORTH, TEXAS

POLYENGINEERING, INC.
ENGINEERS & ARCHITECTS
DOTHAN, ALABAMA

FORT HOOD, TEXAS
DIGITAL MULTI-PURPOSE RANGE COMPLEX (DMPRC)
PN 51915 FY 01

MISCELLANEOUS DETAILS

Sheet reference number:
CD-16
Sheet of

Contr No. DACA63-01-C-0016

00688090

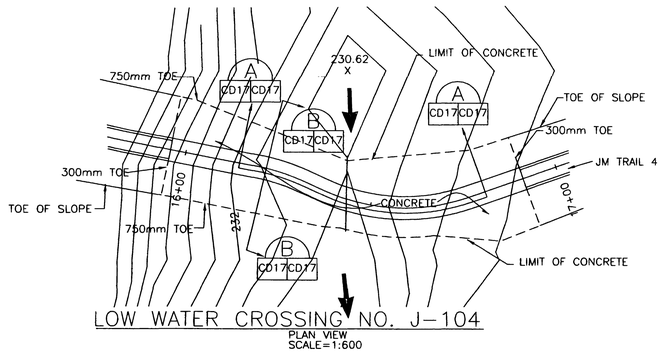

LOW WATER CROSSING NO. J-104
PLAN VIEW
SCALE=1:600

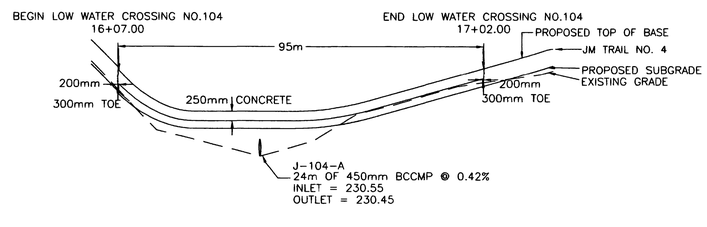

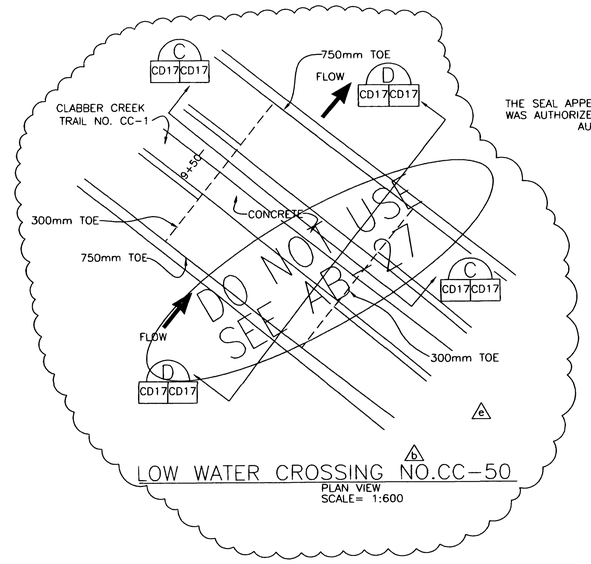

LOW WATER CROSSING NO.CC-50
PLAN VIEW
SCALE= 1:600

THE SEAL APPEARING ON THIS DOCUMENT WAS AUTHORIZED BY E. LAMAR FAULK ON AUGUST 8, 2001

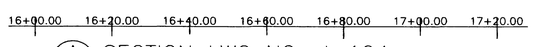

A SECTION LWC NO. J-104
CD17 CD17
SCALE: HOR.= 1:600
VER.= 1:60

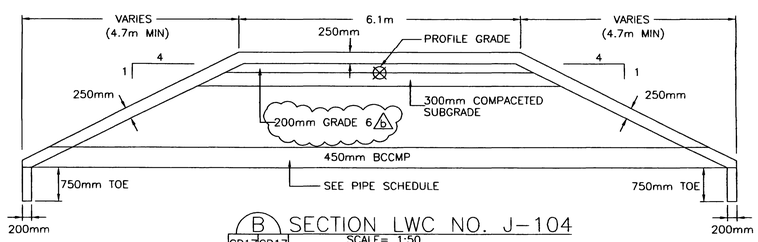

B SECTION LWC NO. J-104
CD17 CD17
SCALE= 1:50

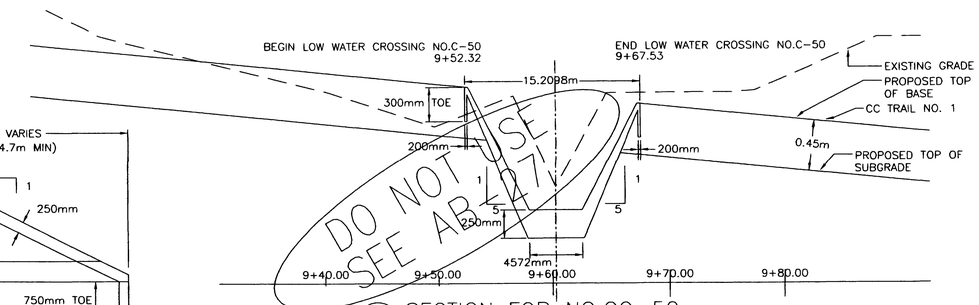

C SECTION FOR NO.CC-50
CD17 CD17
SCALE: HOR.= 1:200
VER.= 1:20

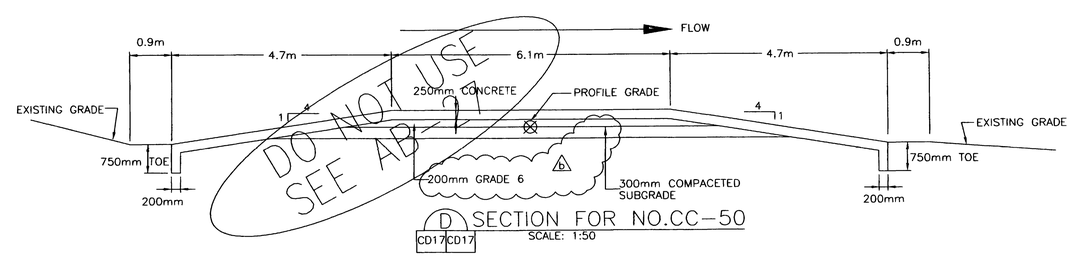

D SECTION FOR NO.CC-50
CD17 CD17
SCALE: 1:50

NOTES:

1. BCCM PIPE SHALL BE BEVELED BY SAWING AFTER SLOPE PAVING HAS BEEN PLACED AND SUFFICIENTLY CURED, SOME HAND FINISHING MAY BE NECESSARY.
2. THE CONTRACTOR SHALL CONNECT THE BCCMP TO 250mm THICK CONCRETE SLOPE PAVEMENT BY MECHANICAL MEANS OR OTHER DEVICES APPROVED BY THE CONTRACTING OFFICER. b
3. CONCRETE SHALL BE 650 FLEX.

US Army Corps of Engineers
FORT WORTH DISTRICT

POLYENGINEERING, INC.
ENGINEERS & ARCHITECTS
POLYENGINEERING, INC.
1835 Headland Avenue
Dothan, Alabama 36303
(334) 793-1700 (voice)
(334) 793-9015 (fax)

Rev.	Description	Date
A	REVISED SCALE	SEPT. 01
B	ADDED NOTE, CORRECTED LENGTH OF LWC, TITLE BLOCK CORR., ADDED SEAL	AUG. 01

Date: 19 June 2001
Sol No.: DACA63-01-B-0007
Contr No.: DACA63-01-C-0016 b
File name:
Plot date:
Plot scale: NO SCALE

Designed by: Rebecca S. Flood
Drawn by: Chris Dyer
Checked by: J. Peden
W. Dixon
Reviewed by: Scott Faulk
Submitted by: E. Lamar Faulk

U.S. ARMY ENGINEER DISTRICT
CORPS OF ENGINEERS
FORT WORTH, TEXAS

POLYENGINEERING, INC.
ENGINEERS & ARCHITECTS
DOTHAN, ALABAMA

FORT HOOD, TEXAS
DIGITAL MULTI-PURPOSE RANGE COMPLEX (DMPRC) FY 01 b
PN 51915

LOW WATER CROSSING DETAILS

Sheet reference number:
CD-17
Sheet of

Contr No. DACA63-01-C-0016

17.dwg 8/12/2005 7:55:21 AM

00688 00

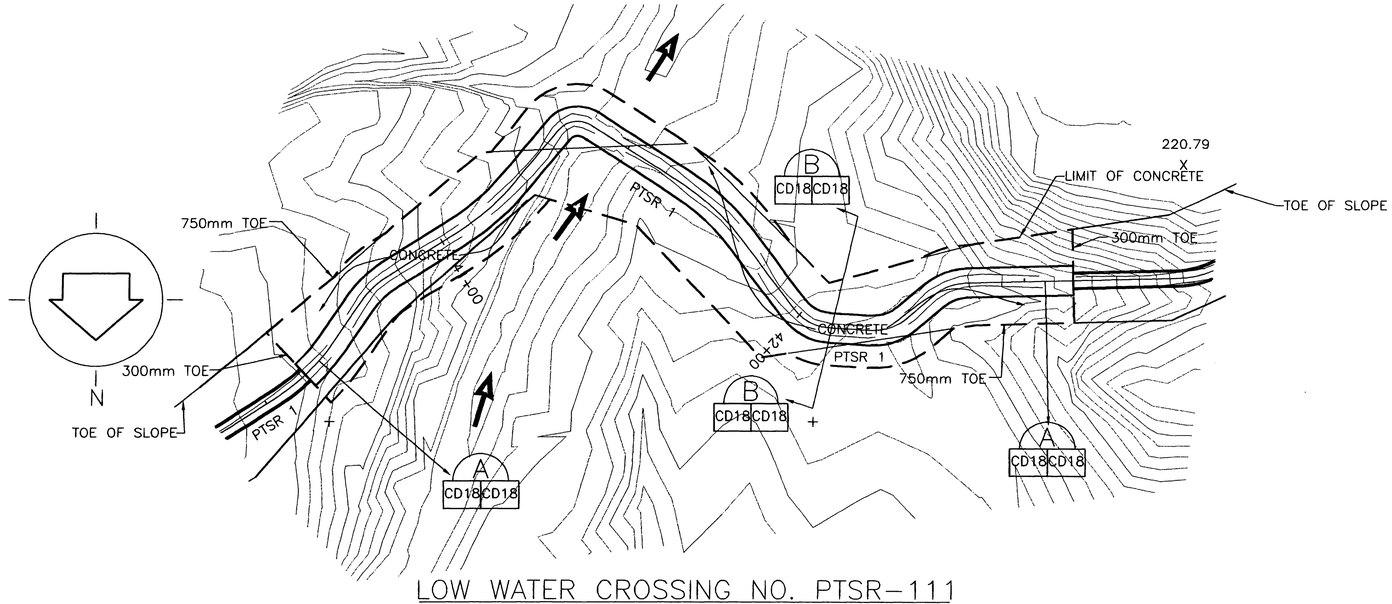

LOW WATER CROSSING NO. PTSR-111

PLAN VIEW
SCALE=1:600

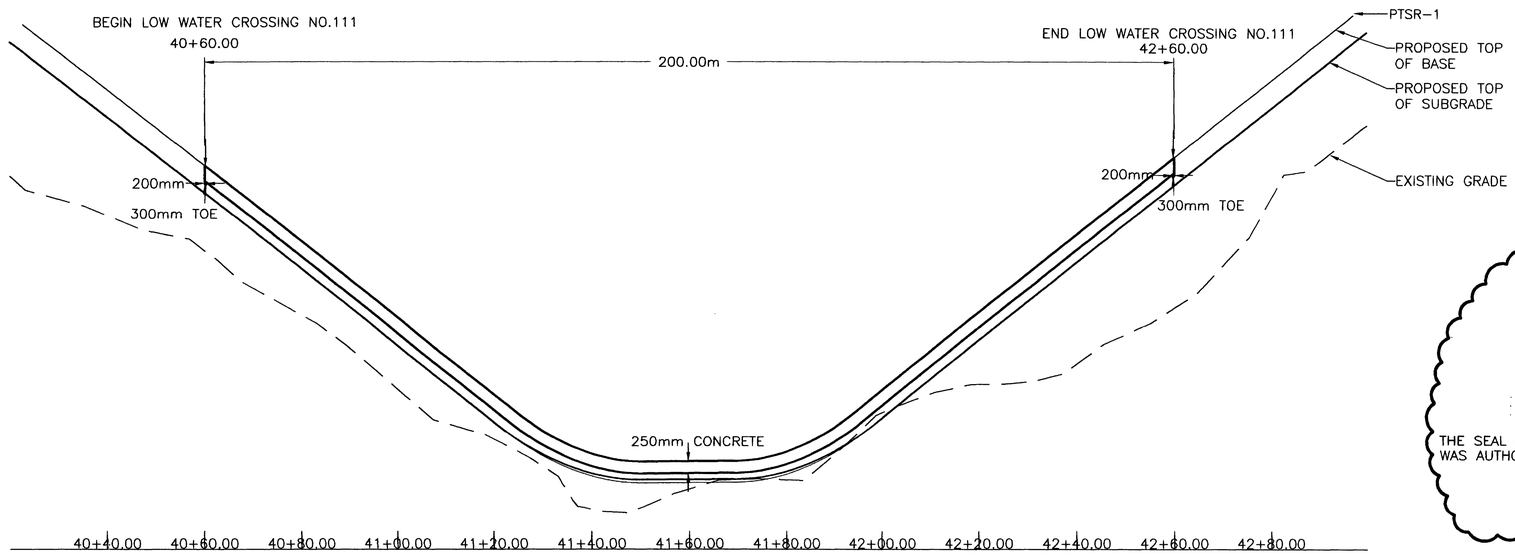

A SECTION FOR LWC NO. PTSR-111

CD18 CD18
SCALE: HOR.= 1:600
VER.= 1:60

NOTES:

1. BCCM PIPE SHALL BE BEVELED BY SAWING AFTER SLOPE PAVING HAS BEEN PLACED AND SUFFICIENTLY CURED, SOME HAND FINISHING MAY BE NECESSARY.
2. CONTRACTOR SHALL INSURE THROUGH MECHANICAL MEANS OR OTHER APPROVED DEVICES THAT CONNECTION BETWEEN THE BEVELED PIPE END AND THE CONCRETE WILL NOT BE DETACHED.
3. CONCRETE SHALL BE 650 FLEX.
4. CONCRETE SHALL EXTEND TO TOE OF SLOPE OF THE FILL OR 3.69m, WHICHEVER IS GREATER.

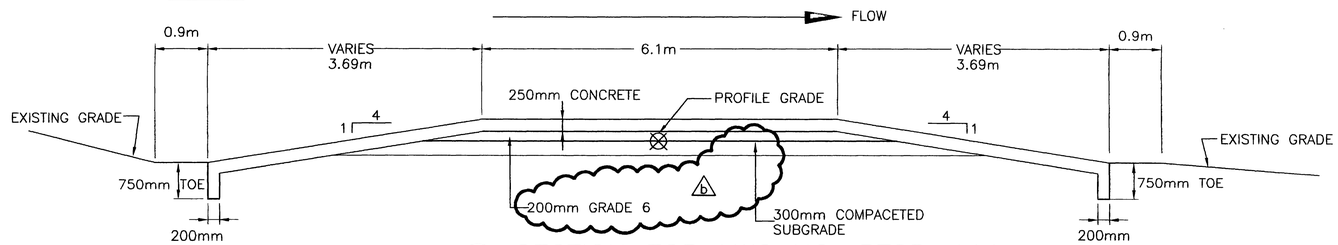

B SECTION FOR LWC NO. PTSR-111

CD18 CD18
SCALE: 1:50

THE SEAL APPEARING ON THIS DOCUMENT WAS AUTHORIZED BY E. LAMAR FAULK ON AUGUST 8, 2001

STATE OF TEXAS
E. LAMAR FAULK
86156
LICENSED
PROFESSIONAL ENGINEER

US Army Corps of Engineers
FORT WORTH DISTRICT

POLYENGINEERING, INC.
ENGINEERS AND ARCHITECTS
POLYENGINEERING, INC.
1035 Headland Avenue
Dothan, Alabama 36303
(334) 793-4700 (voice)
(334) 793-8015 (fax)

Mark	Description	Date	Appr.
4	TITLE BLOCK AND TEXT EDIT, ADDED SEAL	AUG 01	ELF

Designed by: Rebecca S. Hand
Dwn by: J. Peeden
Ckd by: M. Dixon
Reviewed by: Scott Faulk
Submitted by: E. Lamar Faulk
Date: 19 June 2001
Rev.
Sol No. DACA63-01-B-0007
Contr No. DACA63-01-C-0016
File name:
Plot date:
Plot scale: NO SCALE

U.S. ARMY ENGINEER DISTRICT
CORPS OF ENGINEERS
FORT WORTH, TEXAS

POLYENGINEERING, INC.
ENGINEERS & ARCHITECTS
DOTHAN, ALABAMA

FORT HOOD, TEXAS
DIGITAL MULTI-PURPOSE RANGE COMPLEX
PN 51915 (DMPRC)
FY 01

LOW WATER CROSSING DETAILS

Sheet reference number:
CD-18
Sheet of

Contr No. DACA63-01-C-0016

00688110

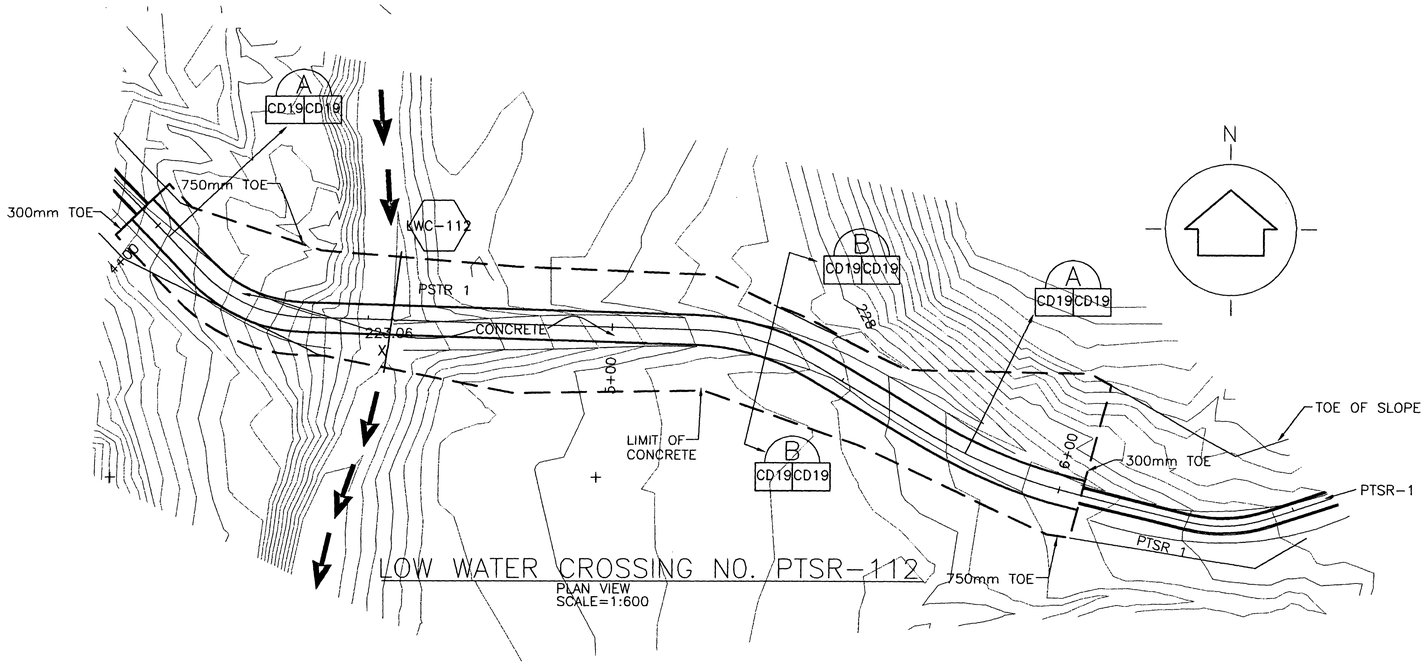

LOW WATER CROSSING NO. PTSR-112
PLAN VIEW
SCALE=1:600

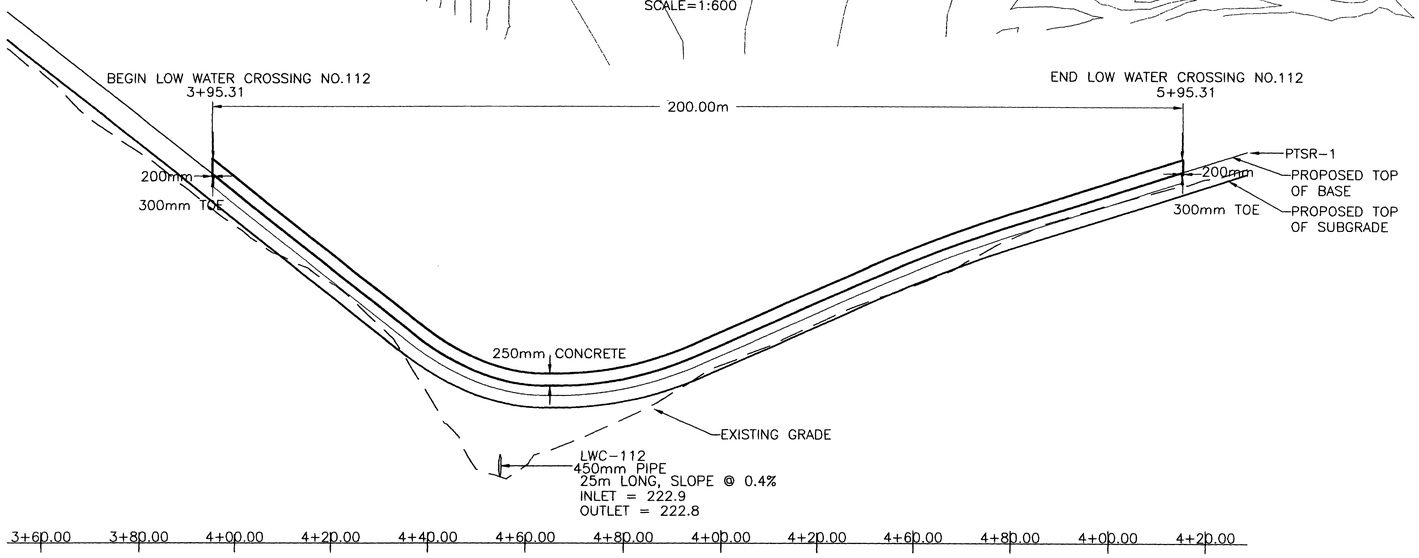

A SECTION FOR LWC NO. PTSR-112
CD19CD19
SCALE: HOR.= 1:600
VER.= 1:60

NOTES:

1. BCCM PIPE SHALL BE BEVELED BY SAWING AFTER SLOPE PAVING HAS BEEN PLACED AND SUFFICIENTLY CURED, SOME HAND FINISHING MAY BE NECESSARY.
2. CONTRACTOR SHALL INSURE THROUGH MECHANICAL MEANS OR OTHER APPROVED DEVICES THAT CONNECTION BETWEEN THE BEVELED PIPE END AND THE CONCRETE WILL NOT BE DETACHED.
3. CONCRETE SHALL BE 650 FLEX.
4. CONCRETE SHALL EXTEND TO TOE OF SLOPE OF THE FILL OR 3.69m, WHICHEVER IS GREATER.

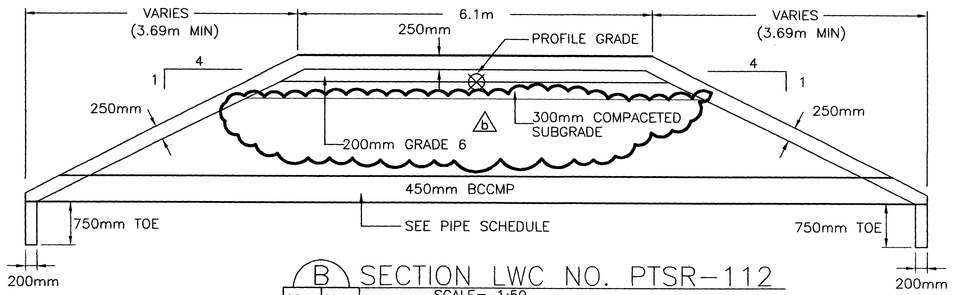

B SECTION LWC NO. PTSR-112
CD19CD19
SCALE= 1:50

THE SEAL APPEARING ON THIS DOCUMENT WAS AUTHORIZED BY E. LAMAR FAULK ON AUGUST 8, 2001

US Army Corps of Engineers
FORT WORTH DISTRICT

POLYENGINEERING, INC.
ENGINEERS AND ARCHITECTS
POLYENGINEERING, INC.
1938 Headland Avenue
Dothan, Alabama 36303
(334) 793-4700 (voice)
(334) 793-8015 (fax)

Mark	Description	Date	Appr.
4	CORRECT SECTION B TITLE BLOCK EDIT, ADDED SEAL	AUG 01	ELF

Date: 19 June 2001 | Rev.
Designed by: Rebecca S. Hand
Dwn by: J. Peaden | Ckd by: M. Dixon
Reviewed by: Scott Faulk
Submitted by: E. Lamar Faulk
Sol No. DACA63-01-B-0007
Contr No. DACA63-01-C-0016
File name:
Plot date:
Plot scale: NO SCALE

U.S. ARMY ENGINEER DISTRICT
CORPS OF ENGINEERS
FORT WORTH, TEXAS

POLYENGINEERING, INC.
ENGINEERS & ARCHITECTS
DOTHAN, ALABAMA

FORT HOOD, TEXAS
DIGITAL MULTI-PURPOSE RANGE COMPLEX (DMPRC)
PN 51915 FY 01

LOW WATER CROSSING DETAILS

Sheet reference number:
CD-19
Sheet of

Contr No. DACA63-01-C-0016

00688120

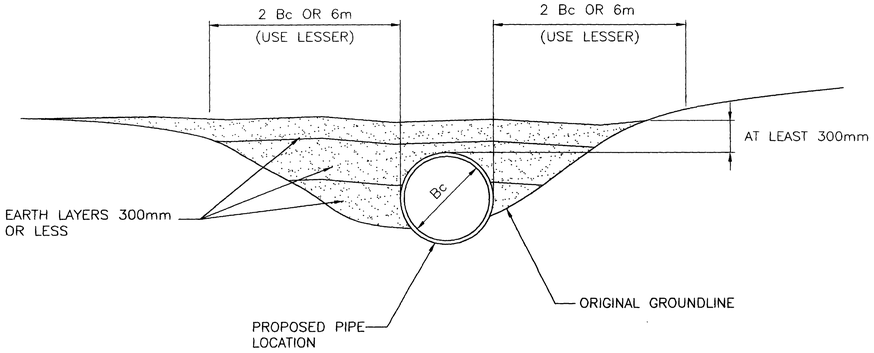

MINIMUM COMPACTED FILL PRIOR TO TRENCH EXCAVATION

NO SCALE

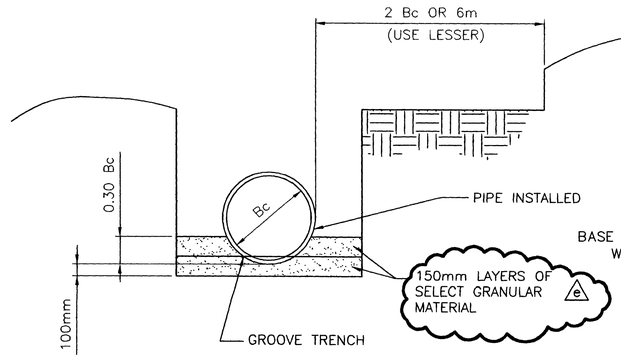

PIPE BEDDING IN EARTH

NO SCALE

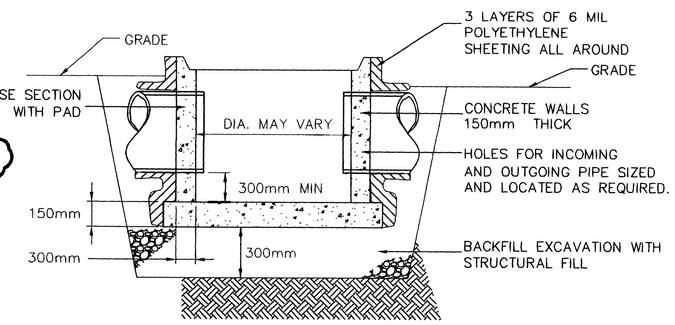

INLET BOX FOR DEFILADES

NO SCALE b

GENERAL NOTES:

1. MANHOLE DEPTH SHALL BE AS NECESSARY FOR REQUIRED CLEARANCES.
2. DETAILS SHOWN ARE TO INDICATE GENERAL DESIGN AND MAY VARY AMONG MANUFACTURERS.
3. PRECAST BASES SHALL HAVE NO. 3 REBAR ON 300mm CENTERS EACH WAY
4. SEAL INLET AND OUTLET PIPES TO MANHOLE W/ NON-SHRINK GROUT.
5. PRECAST CONCRETE MANHOLE BASES SHALL CONFORM TO ATSM C.478.

e

STATE OF TEXAS
E. LAMAR FAULK
86158
LICENSED
PROFESSIONAL ENGINEER

b

THE SEAL APPEARING ON THIS DOCUMENT WAS AUTHORIZED BY E. LAMAR FAULK ON AUGUST 8, 2001

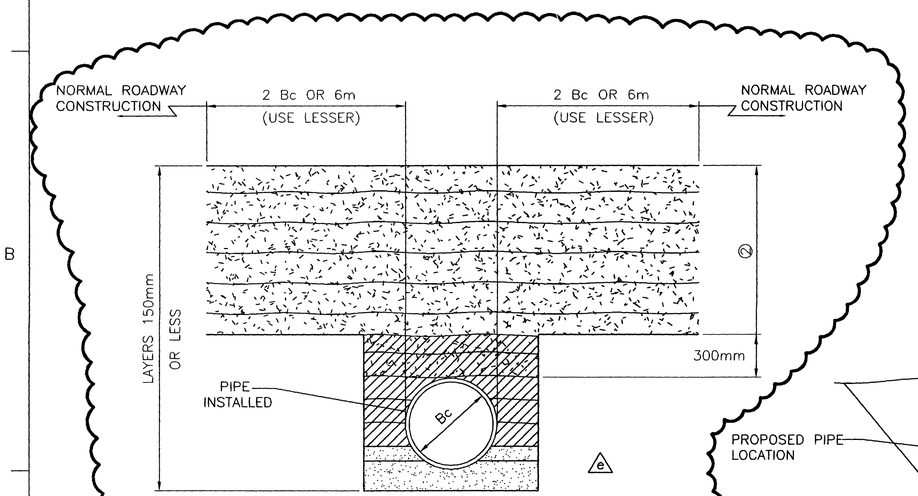

2 920mm REQUIRED IF FILL HEIGHT PERMITS

b

A. COMPACT SELECT GRANULAR MATERIAL IN LAYERS 150mm OR LESS TO A HEIGHT OF AT LEAST 300mm ABOVE TOP OF PIPE

B. COMPACT SELECTED FINE SOIL TO ELEVATION 2 ABOVE TOP OF PIPE. MEET DENSITY REQUIREMENTS FOR ADJACENT EMBANKMENTS.

C. PROCEED WITH NORMAL ROADWAY CONSTRUCTION.

PIPE BACKFILL DETAIL

NO SCALE

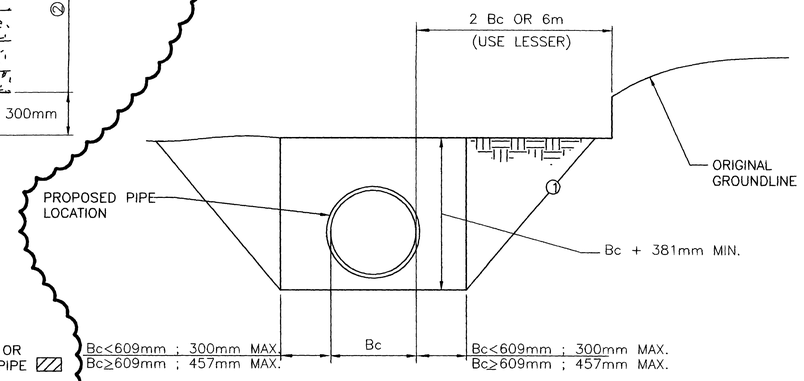

1 FOR Bc OVER 1.22m, COMPLY WITH OSHA REQUIREMENTS.

MINIMUM EARTH TRENCH EXCAVATION

NO SCALE

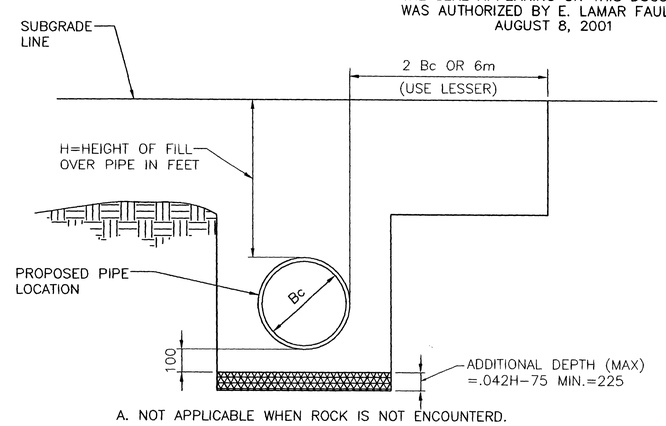

A. NOT APPLICABLE WHEN ROCK IS NOT ENCOUNTERD.

B. IF ROCK FOUNDATION IS ENCOUNTERED, TRENCHS ADDITION DEPTH USING FORMULA GIVEN. THIS ADDITIONAL DEPTH SHALL BE AT LEAST 225mm AND WILL NOT BE REQUIRED TO BE MORE THAN .75H-75mm. REGARDLESS OF THE ABOVE FORMULA RESULTS.

C. BACKFILL ADDITIONAL EXCAVATION AREA WITH EARTH CUSHIION OF FIRMLY COMPACTED FINE SOILS IN LAYERS 150mm OR LESS.

ROCK FOUNDATION DETAIL

NO SCALE

US Army Corps of Engineers
FORT WORTH DISTRICT

POLYENGINEERING, INC.
ENGINEERS & ARCHITECTS
POLYENGINEERING, INC.
1905 Headland Avenue
Dothan, Alabama 36305
(334) 793-2700 (voice)
(334) 793-9016 (fax)

Mark	Description	Date	Appr.
A	REVISED NOTES AND DETAILS	AUG 01	ELF
B	TITLE BLOCK AND TEXT EDIT, ADDED SEAL	AUG 01	ELF

Designed by: Rebecca S. Hand
Dwn by: J. Peeden
Ckd by: M. Dixon
Reviewed by: Scott Faulk
Submitted by: E. Lamar Faulk
Date: 19 June 2001
Rev.
Sol No. DACA63-01-B-0007
Contr No. DACA63-01-C-0016 b
File name:
Plot date:
Plot scale: NO SCALE

U.S. ARMY ENGINEER DISTRICT
CORPS OF ENGINEERS
FORT WORTH, TEXAS

POLYENGINEERING, INC.
ENGINEERS & ARCHITECTS
DOTHAN, ALABAMA

FORT HOOD, TEXAS
DIGITAL MULTI-PURPOSE RANGE COMPLEX (DMPRC)
PN 51915 FY 01 b

DRAINAGE DETAILS

Sheet reference number:
CD-20
Sheet of

Contr No. DACA63-01-C-0016

00688:30

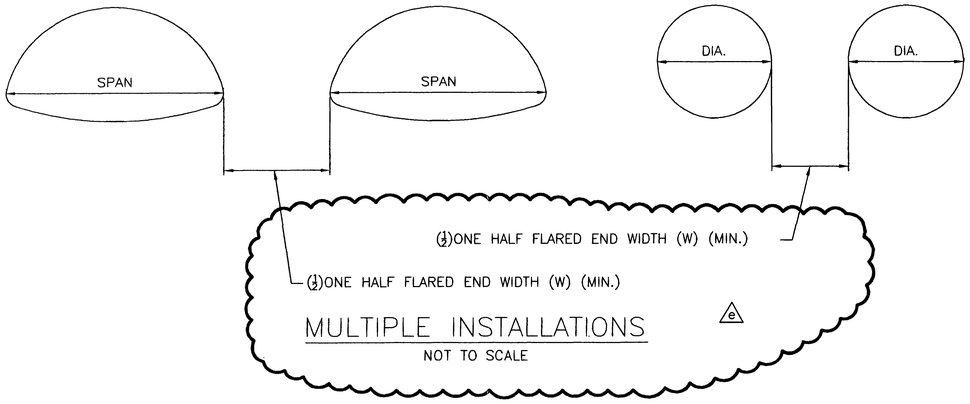

MULTIPLE INSTALLATIONS

NOT TO SCALE

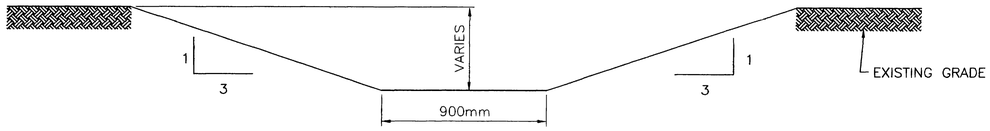

TYPICAL SECTION FOR ALL DRAINAGE DITCHES
NOT IN CUT SECTIONS, ROADS OR OTHERWISE DETAILED

NO SCALE

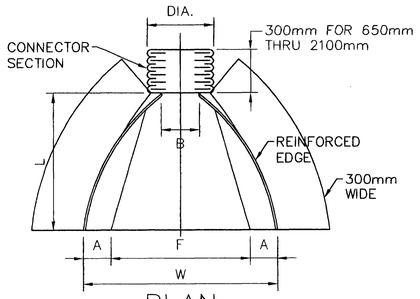

PLAN

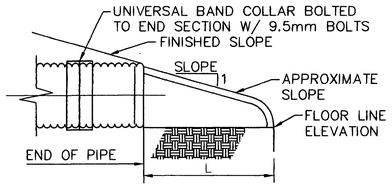

TYPICAL CROSS SECTION

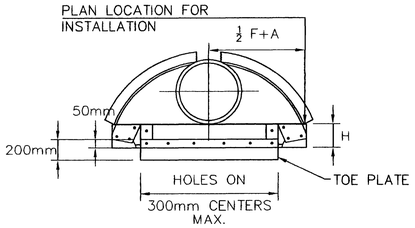

ELEVATION

NOTES:

1. TOE PLATES SHALL BE PUNCHED TO MATCH HOLES IN APRON LIP. ATTACH WITH 9.5mm GALVANIZED BOLTS.
2. CONNECTOR SECTION, CONER PLATE, AND TOE PLATE SHALL BE SAME THICKNESS AND MATERIAL AS APRON.
3. OTHER APPROVED DESIGNS MAY BE USED IN LIEU OF THE TYPE SHOWN.

FABRICATED BCCM FLARED END PIPE SECTION

NOT TO SCALE

PIPE DIA. (mm.)	SPECIFIED THICKNESS (mm.)	A MIN. (mm.)	B MAX. (mm.)	H MIN. (mm.)	L ± 2 (mm.)	W MAX WIDTH (mm.)	APPROXIMATE AVERAGE END SECTION SLOPE
450	1.626	200	200	150	790	965	2 1/2
600	1.626	250	300	150	1040	1270	2 1/2
750	2.007	250	325	200	1300	1500	2 1/2
900	2.007	310	318	225	1520	1880	2 1/2
1050	2.769	368	300	270	1750	2180	2 1/2
1200	2.769	430	740	300	2000	2340	2 1/4
1350	2.769	470	765	300	2130	2640	2
1500	2.769	460	910	300	2230	2950	1 3/4
1650	2.769	460	910	300	2210	3100	1 1/2
1800	2.769	460	1120	300	2250	3100	1 1/3
1950	2.769	460	1170	300	2220	3560	1 1/4
2100	2.769	460	1220	300	2220	3700	1 1/6
525 x 375	1.246	190	280	150	610	965	2 1/2
900 x 550	2.007	250	410	152	990	1580	2 1/2

THE SEAL APPEARING ON THIS DOCUMENT WAS AUTHORIZED BY E. LAMAR FAULK ON AUGUST 8, 2001

US Army Corps of Engineers
FORT WORTH DISTRICT

POLYENGINEERING, INC.
ENGINEERS AND ARCHITECTS
1935 Headland Avenue
Dothan, Alabama 36305
(334) 793-6700 (voice)
(334) 793-6016 (fax)

Mark	Description	Date	Appr.
1	REVISED DETAIL	SEPT 01	ELF
2	TITLE BLOCK EDIT, ADDED SEAL	AUG 01	ELF

Designed by: Rebecca S. Hand
Dwn by: J. Peeden
Ckd by: M. Dixon
Reviewed by: Scott Faulk
Submitted by: E. Lamar Faulk
Date: 19 June 2001
Rev.
Sol No. DACA63-01-B-0007
Contr No. DACA63-01-C-0016
File name:
Plot date:
Plot scale: NO SCALE

U.S. ARMY ENGINEER DISTRICT
CORPS OF ENGINEERS
FORT WORTH, TEXAS

POLYENGINEERING, INC.
ENGINEERS & ARCHITECTS
DOTHAN, ALABAMA

FORT HOOD, TEXAS
DIGITAL MULTI-PURPOSE RANGE COMPLEX (DMPRC)
PN 51915 FY 01

DRAINAGE DETAILS

Sheet reference number:
CD-21
Sheet of

Contr. No. DACA63-01-C-0016

00688 40

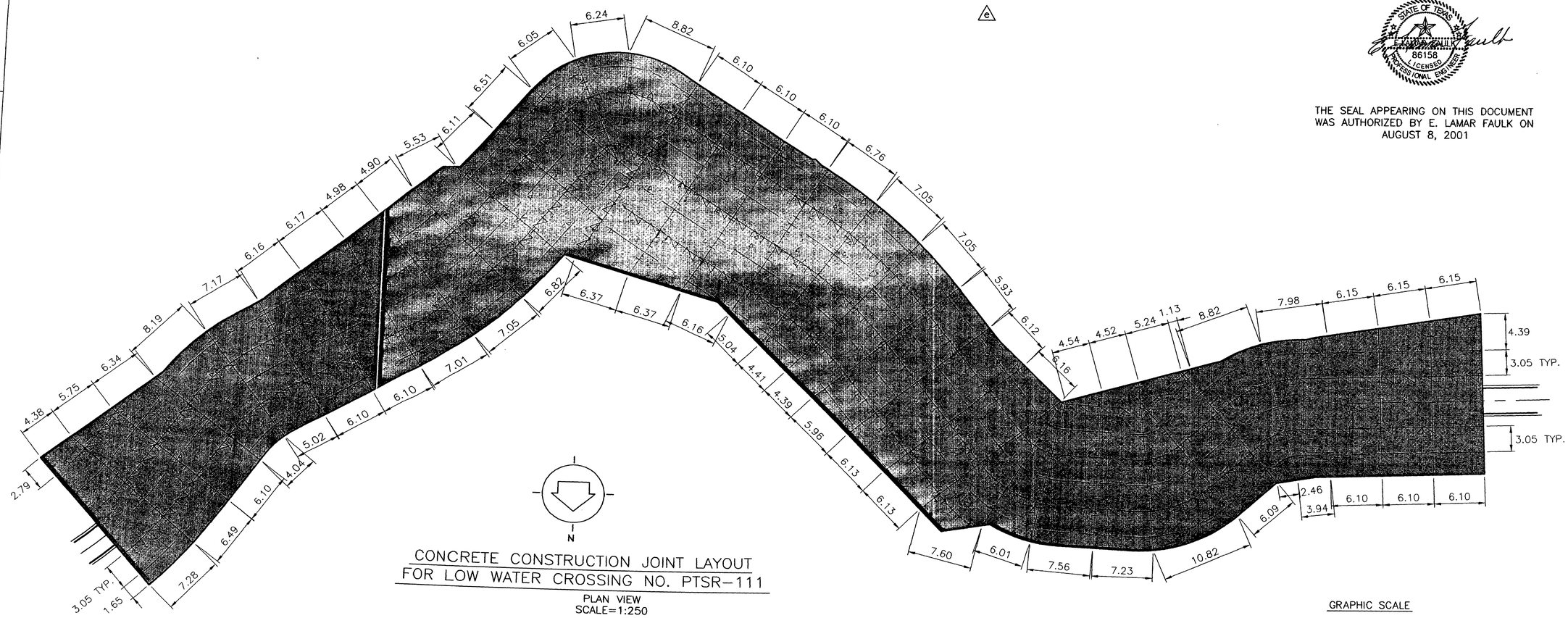

CONCRETE CONSTRUCTION JOINT LAYOUT
FOR LOW WATER CROSSING NO. PTSR-111

PLAN VIEW
SCALE=1:250

THE SEAL APPEARING ON THIS DOCUMENT WAS AUTHORIZED BY E. LAMAR FAULK ON AUGUST 8, 2001

STATE OF TEXAS
E. LAMAR FAULK
86158
LICENSED
PROFESSIONAL ENGINEER

GRAPHIC SCALE

5 2.5 0 2.5 5

SCALE: 1:250

NOTES:

1. SEE SHEET CD-15 FOR JOINT DETAILS
2. ALL DIMENSIONS ARE SHOWN IN METERS UNLESS OTHERWISE INDICATED.

LEGEND

- LONGITUDINAL CONTRACTION JOINT (L.C.J.)
- LONGITUDINAL CONSTRUCTION JOINTS (C.J.)
- TRANSVERSE CONTRACTION JOINT (T.C.J.)
- #13 REINFORCING @ 300mm O.C. EACH WAY LOCATED 75mm FROM TOP OF SLAB IN SHADED AREAS
- 100mm x 100mm x 6mm ANGLE IRON EMBEDDED INTO CONCRETE (TYPICAL AT ALL ADJOINING TRAIL EDGES)
- CONCRETE

US Army Corps of Engineers
FORT WORTH DISTRICT

POLYENGINEERING, INC.
ENGINEERS AND ARCHITECTS
POLYENGINEERING, INC.
1835 Headland Avenue
Dothan, Alabama 36303
(334) 793-4700 (voice)
(334) 793-9015 (fax)

Mark	Description	Date	By
A	ADVD. SHEET	SEPT 01	EJF

Designed by: Rebecca S. Hand
Dwn by: J. J. Reeden
Ckd by: M. Dixon
Reviewed by: Scott Faulk
Submitted by: E. Lamar Faulk
Date: July 2001
Sol. No.: DACA63-01-B-0007
Contr No.: DACA63-01-C-0016
File name:
Plot date:
Plot scale: NO SCALE
Rev.:

U.S. ARMY ENGINEER DISTRICT
CORPS OF ENGINEERS
FORT WORTH, TEXAS

POLYENGINEERING, INC.
ENGINEERS, & ARCHITECTS
DOTHAN, ALABAMA

FORT HOOD, TEXAS
DIGITAL MULTI-PURPOSE RANGE COMPLEX (DMPRC)
PN 51915 FY 01

CONCRETE CONSTRUCTION JOINT LAYOUT

Sheet reference number:
CD-38

Sheet of

00698150

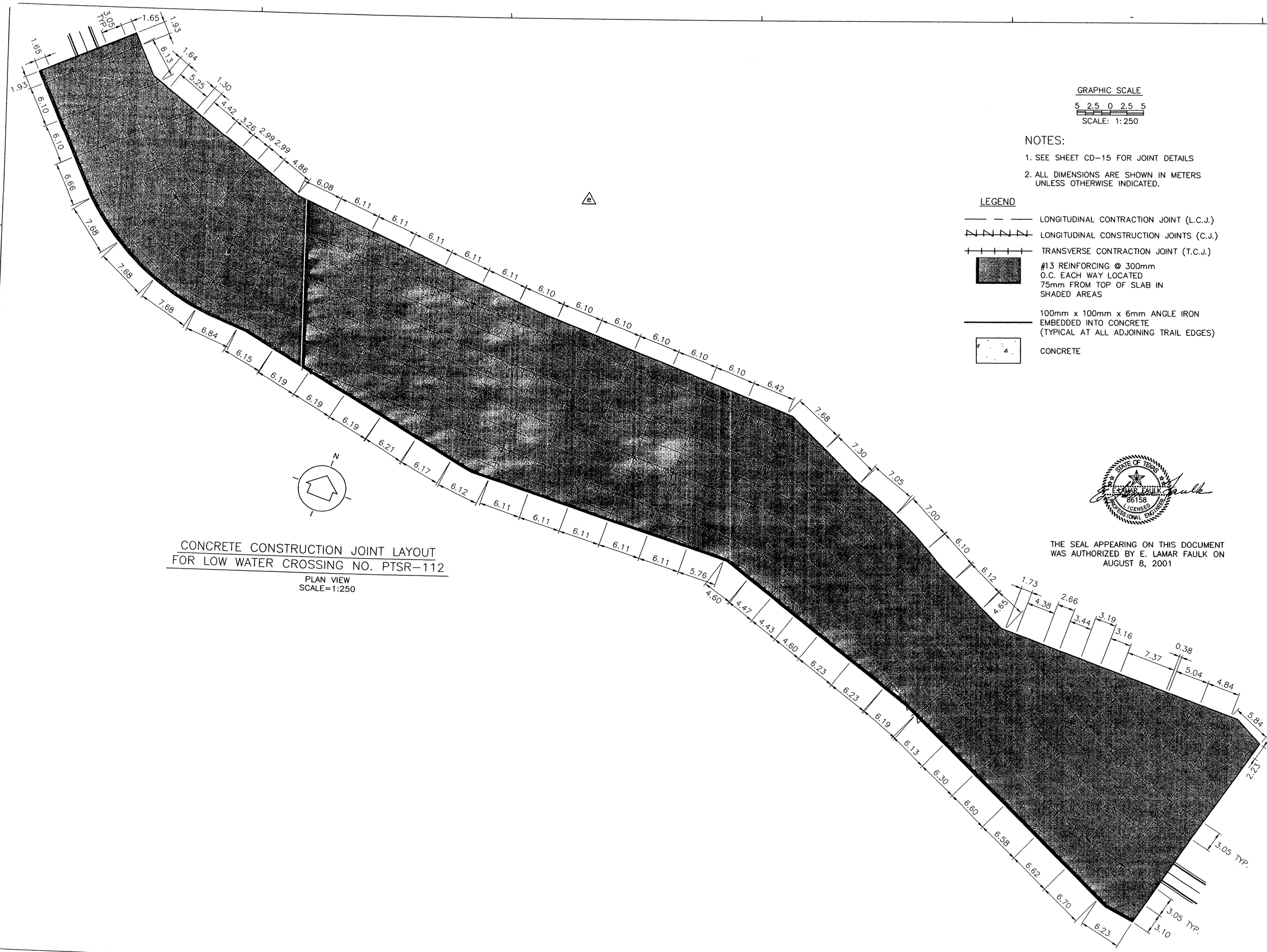
3.05 TYP.
1.65
1.93
1.65
1.93
6.13
1.64
5.25
1.30
4.42
3.26
2.99
2.99
4.86
6.08
6.10
6.10
6.66
7.68
7.68
7.68
6.84
6.15
6.19
6.19
6.19
6.21
6.17
6.12
6.11
6.11
6.11
6.11
5.76
4.60
4.47
4.43
4.60
6.23
6.23
6.19
6.13
6.30
6.60
6.58
6.62
6.70
6.23
3.10
3.05 TYP.
3.05 TYP.
2.23
5.84
4.84
5.04
0.38
7.37
3.16
3.19
3.44
2.66
4.38
1.73
4.65
6.12
6.10
7.00
7.05
7.30
7.68
6.42
6.10
6.10
6.10
6.10
6.10
6.10
6.11
6.11
6.11
6.11

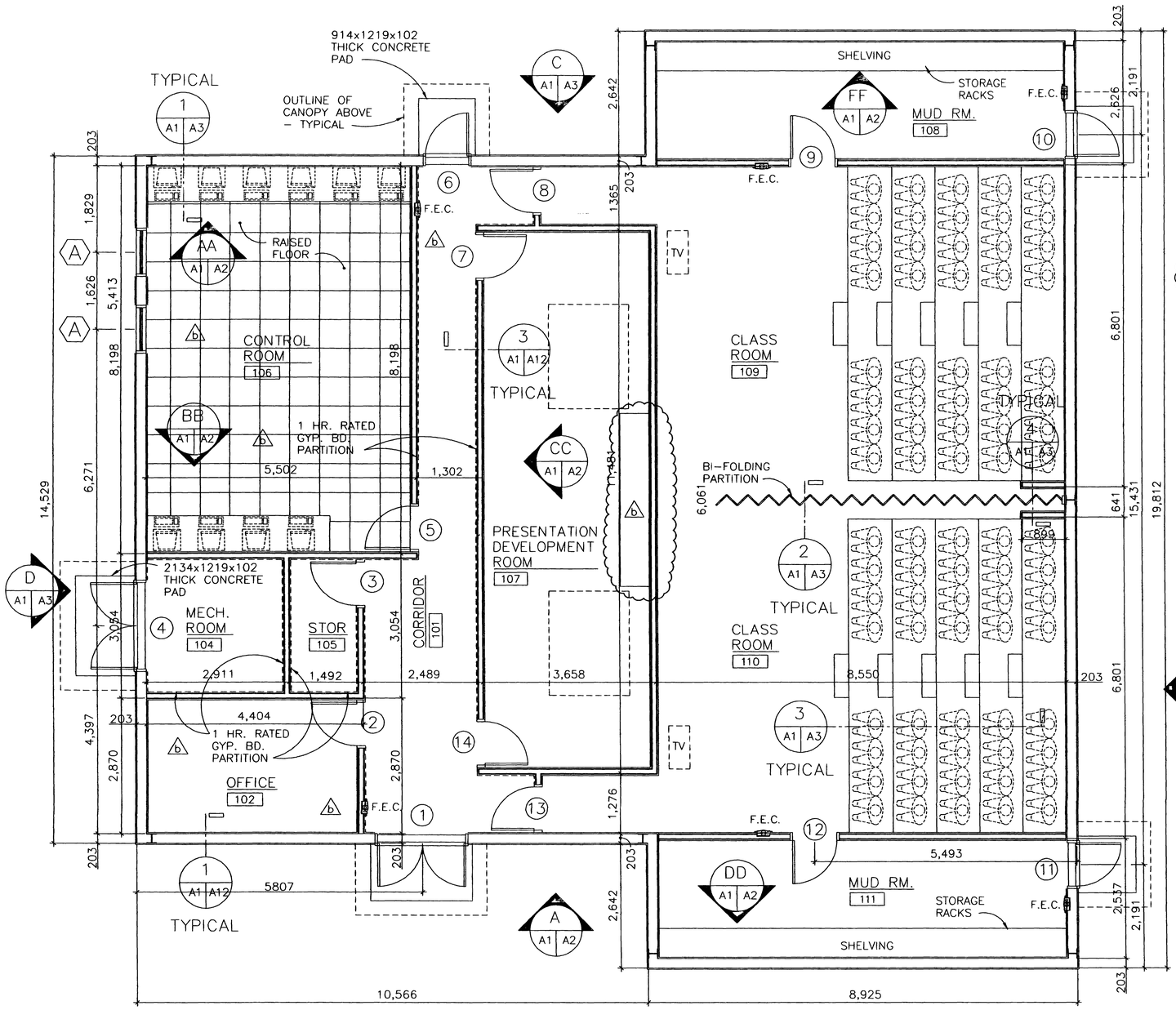

FLOOR PLAN

SCALE 1:50
330.7 SQUARE METERS

F.E.C. – FIRE EXTINGUISHER CABINET

NOTE :
ALL DIMENSIONS ARE FROM FACE OF METAL STUD TO FACE OF METAL STUD. (UNLESS NOTED)

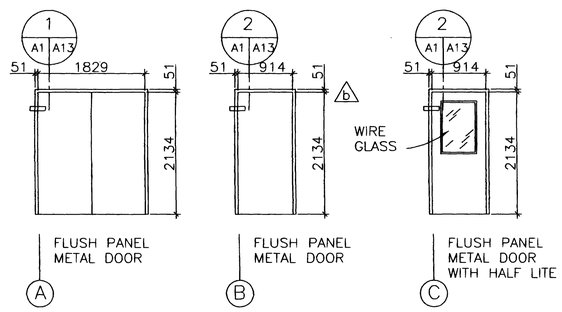

DOOR TYPES:

NOT TO SCALE

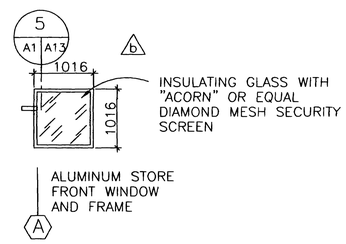

WINDOW TYPES:

NOT TO SCALE

ROOM FINISH SCHEDULE

ROOM NO.	ROOM NAME	FLOOR/BASE	WALLS	CEILING	CLG. HT.
101	CORRIDOR	VINYL COMP-OSITION TILE/ VINYL BASE	13 GYPSUM BOARD ON METAL FURRING – PAINTED	610x610 SUSPENDED ACOUSTICAL TILE	2438
102	OFFICE	VINYL COMP-OSITION TILE/ VINYL BASE	13 GYPSUM BOARD ON METAL FURRING – PAINTED	610x610 SUSPENDED ACOUSTICAL TILE	2438
103	O M I T T E D				
104	MECHANICAL ROOM	SEALED CONCRETE/ VINYL BASE	13 GYPSUM BD. ON MTL. FURRING @ MTL. STUDS @ 610 O.C. – PAINTED	16 GYPSUM BOARD – PAINTED	3048
105	STORAGE	SEALED CONCRETE/ VINYL BASE	13 GYPSUM BD. ON MTL. FURRING @ MTL. STUDS @ 610 O.C. – PAINTED	610x610 SUSPENDED ACOUSTICAL TILE	2438
e 106	CONTROL ROOM	V.C.T./VINYL BASE–RAISED FLOOR	13 GYPSUM BOARD ON METAL FURRING – PAINTED	16 GYPSUM BOARD – PAINTED	2438
107	PROJECTION/ WORK ROOM	SEALED CONCRETE/ VINYL BASE	13 GYPSUM BD. ON MTL. FURRING @ MTL. STUDS @ 610 O.C. – PAINTED	16 GYPSUM BOARD – PAINTED	4115
108	MUD ROOM	SEALED CONCRETE/ VINYL BASE	13 GYPSUM BOARD ON METAL FURRING – PAINTED	610x610 SUSPENDED ACOUSTICAL TILE	3048
109	CLASS ROOM	VINYL COMP-OSITION TILE/ VINYL BASE	13 GYPSUM BD. ON MTL. FURRING @ MTL. STUDS @ 610 O.C. – PAINTED	610x610 SUSPENDED ACOUSTICAL TILE	4115
110	CLASS ROOM	VINYL COMP-OSITION TILE/ VINYL BASE	13 GYPSUM BD. ON MTL. FURRING @ MTL. STUDS @ 610 O.C. – PAINTED	610x610 SUSPENDED ACOUSTICAL TILE	4115
111	MUD ROOM	SEALED CONCRETE/ VINYL BASE	13 GYPSUM BOARD ON METAL FURRING – PAINTED	610x610 SUSPENDED ACOUSTICAL TILE	3048

DOOR & FRAME SCHEDULE

NO.	DOORS SIZE	GLAZ.	RATG.	TYPE	FRAMES TYPE	DETAILS HEAD	DETAILS JAMB	DETAILS SILL	HDWE. SET NO.
1	1829 x 2134 x 46	—	—	A	H.M.	1/A1 /A13	1/A1 /A13	—	4
2	914 x 2134 x 46	S.G.	20 MIN.	C	H.M.	2/A1 /A13	2/A1 /A13	—	2
3	914 x 2134 x 46	—	20 MIN.	B	H.M.	2/A1 /A13	2/A1 /A13	—	2
4	1829 x 2134 x 46	—	—	A	H.M.	1/A1 /A13	1/A1 /A13	—	3
5	914 x 2134 x 46	S.G.	20 MIN.	C	H.M.	2/A1 /A13	2/A1 /A13	—	2
6	914 x 2134 x 46	—	—	B	H.M.	1/A1 /A13	1/A1 /A13	—	1
7	914 x 2134 x 46	—	20 MIN.	B	H.M.	2/A1 /A13	2/A1 /A13	—	2
8	914 x 2134 x 46	S.G.	20 MIN.	C	H.M.	2/A1 /A13	2/A1 /A13	—	6
9	914 x 2134 x 46	S.G.	—	C	H.M.	2/A1 /A13	2/A1 /A13	—	6
10	914 x 2134 x 46	—	—	B	H.M.	1/A1 /A13	1/A1 /A13	—	1
11	914 x 2134 x 46	—	—	B	H.M.	1/A1 /A13	1/A1 /A13	—	1
12	914 x 2134 x 46	S.G.	—	C	H.M.	2/A1 /A13	2/A1 /A13	—	6
13	914 x 2134 x 46	S.G.	20 MIN.	C	H.M.	2/A1 /A13	2/A1 /A13	—	6
14	914 x 2134 x 46	—	20 MIN.	B	H.M.	2/A1 /A13	2/A1 /A13	—	2

H.M. – HOLLOW METAL S.G. – SAFETY GLASS

THE SEAL APPEARING ON THIS DOCUMENT WAS AUTHORIZED BY ALTON G. MOORE ON AUGUST 8, 2001

GRAPHIC SCALE
1000 500 0 500 1000
SCALE: 1:50

US Army Corps of Engineers
FORT WORTH DISTRICT

POLYENGINEERING, INC.
1855 Headland Avenue
Dothan, Alabama 36303
(334) 793-4700 (voice)
(334) 793-9015 (fax)

Mark	Description	Date	Appr.
1	VINYL COMPOSITION TILE ON RAISED FLOOR NOTED		
2	TITLE BLOCK EDIT, ADDED SEAL		
3	FIRE WALL, FIRE EXTINGUISHER, GLASS NOTE ADDED AND ROOM CHANGED	AUG 01	ELF

Designed by: Alton G. Moore
Dwn by: J.E. Brady
Ckd by: Tena Barnes
Reviewed by: Scott Faulk
Submitted by: E. Lamar Faulk
Date: 19 JUNE 2001
Rev.
Sol No. DACA63-01-B-0007
Contr No. DACA63-01-C-0016
File name:
Plot date:
Plot scale: AS SHOWN

U.S. ARMY ENGINEER DISTRICT
CORPS OF ENGINEERS
FORT WORTH, TEXAS

POLYENGINEERING, INC.
ENGINEERS & ARCHITECTS
DOTHAN, ALABAMA

FORT HOOD, TEXAS
DIGITAL MULTI-PURPOSE RANGE COMPLEX (DMPRC) FY 01
PN 51915

AFTER ACTION REVIEW
FLOOR PLAN AND SCHEDULES

Sheet reference number:
A–1
Sheet . of .

Contr No. DACA63-01-C-0016

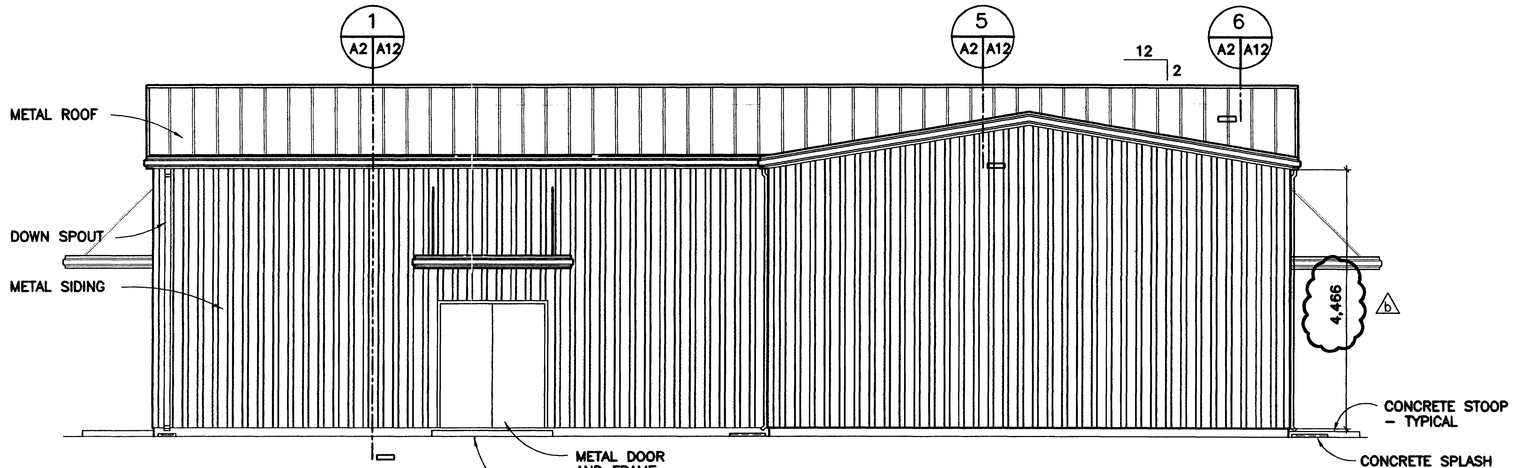

A ELEVATION
A1 A2 SCALE 1:50

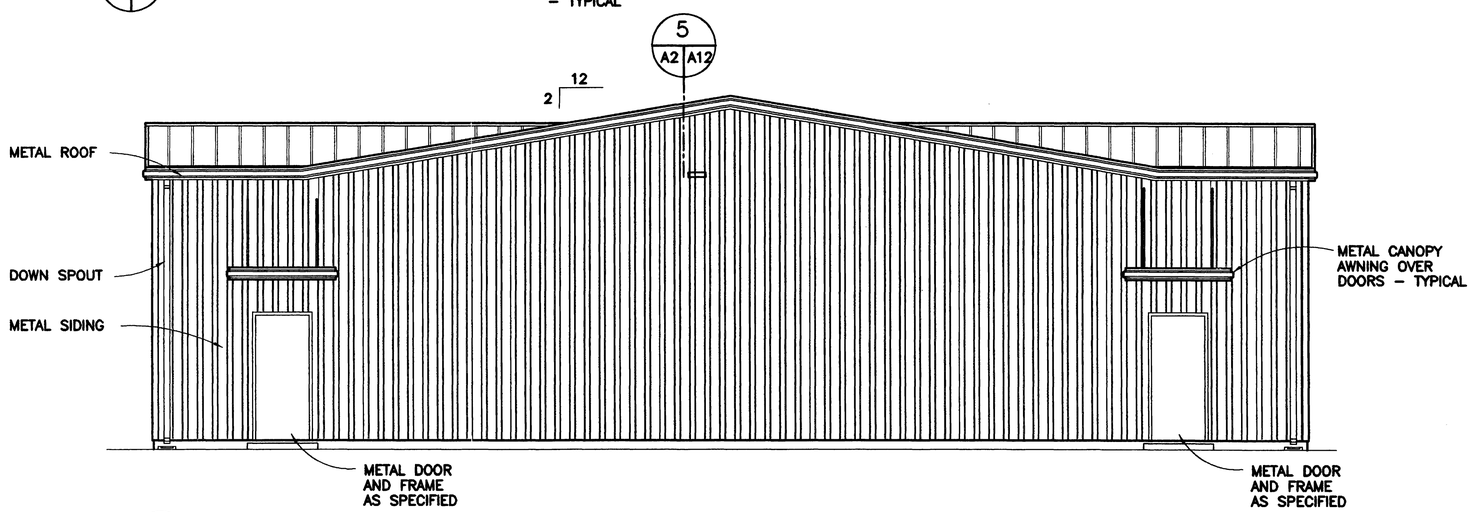

B ELEVATION
A1 A2 SCALE 1:50

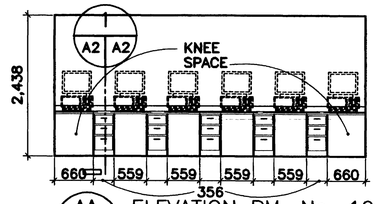

AA ELEVATION RM. No. 106
A1 A2 SCALE 1:50

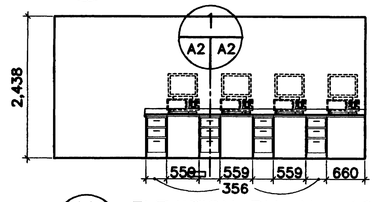

AA ELEVATION RM. No. 106
A1 A2 SCALE 1:50

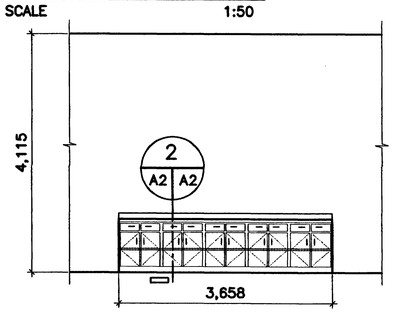

CC ELEVATION RM. No. 107
A1 A2 SCALE 1:50

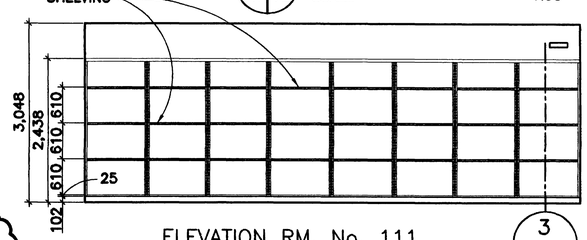

ELEVATION RM. No. 111
MIRROR FOR RM. No. 108
ELEVATION "FF"

DD
A1 A2 SCALE 1:50

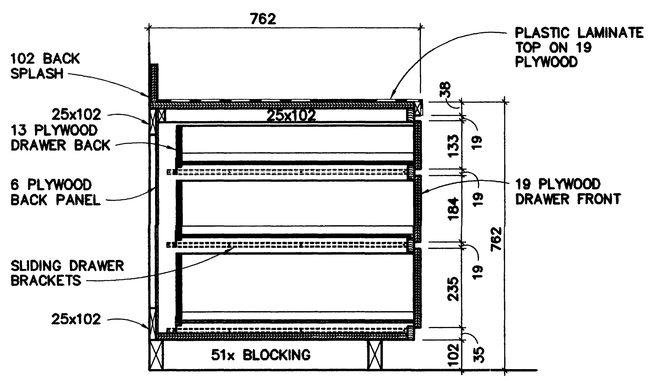

1 SECTION
A2 A2 NOT TO SCALE

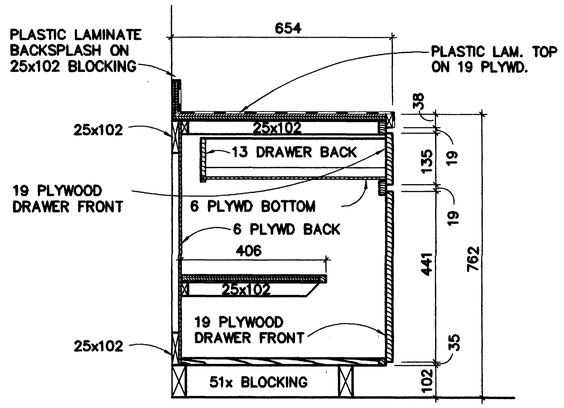

2 SECTION
A2 A2 NOT TO SCALE

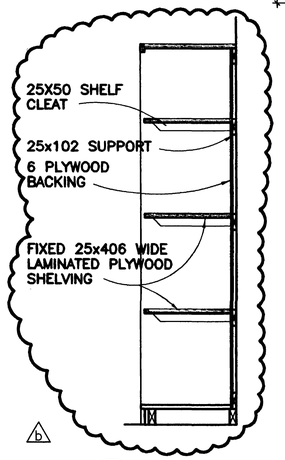

3 DETAIL
A2 A2 NOT TO SCALE

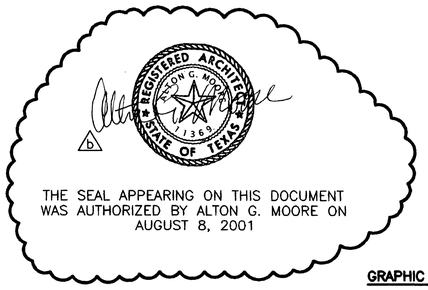

THE SEAL APPEARING ON THIS DOCUMENT WAS AUTHORIZED BY ALTON G. MOORE ON AUGUST 8, 2001

GRAPHIC SCALE
1000 500 0 500 1000
SCALE: 1:50

US Army Corps of Engineers
FORT WORTH DISTRICT

POLYENGINEERING, INC.
1995 Bradford Avenue
Dothan, Alabama 36303
(334) 792-4700 (voice)
(334) 792-3012 (fax)

Mark	Description	Date	Appr.
5	SECTION ADDED AND BUILDING HEIGHT RAISED, TITLE BLOCK EDIT, ADDED SEAL.	AUG 01	ELF

Date: 19 JUNE 2001 | Rev.
SOF No. DACA63-01-B-0007 | Contr No. DACA63-01-C-0016
File name: Plot date: Plot scale: AS SHOWN

Designed by: Alton G. Moore
Dwn by: J.E. Brady | Ckd by: Terra Burns
Reviewed by: Scott Faulk
Submitted by: E. Lamar Faulk

U.S. ARMY ENGINEER DISTRICT
CORPS OF ENGINEERS
FORT WORTH, TEXAS

POLYENGINEERING, INC.
ENGINEERS & ARCHITECTS
DOTHAN, ALABAMA

FORT HOOD, TEXAS
DIGITAL MULTI-PURPOSE RANGE COMPLEX (DMPRC)
PN 51915
FY 01

AFTER ACTION REVIEW
EXTERIOR AND INTERIOR ELEVATIONS AND DETAILS

Sheet reference number: A–2
Sheet . of .

Contr No. DACA63-01-C-0016

0655 -0

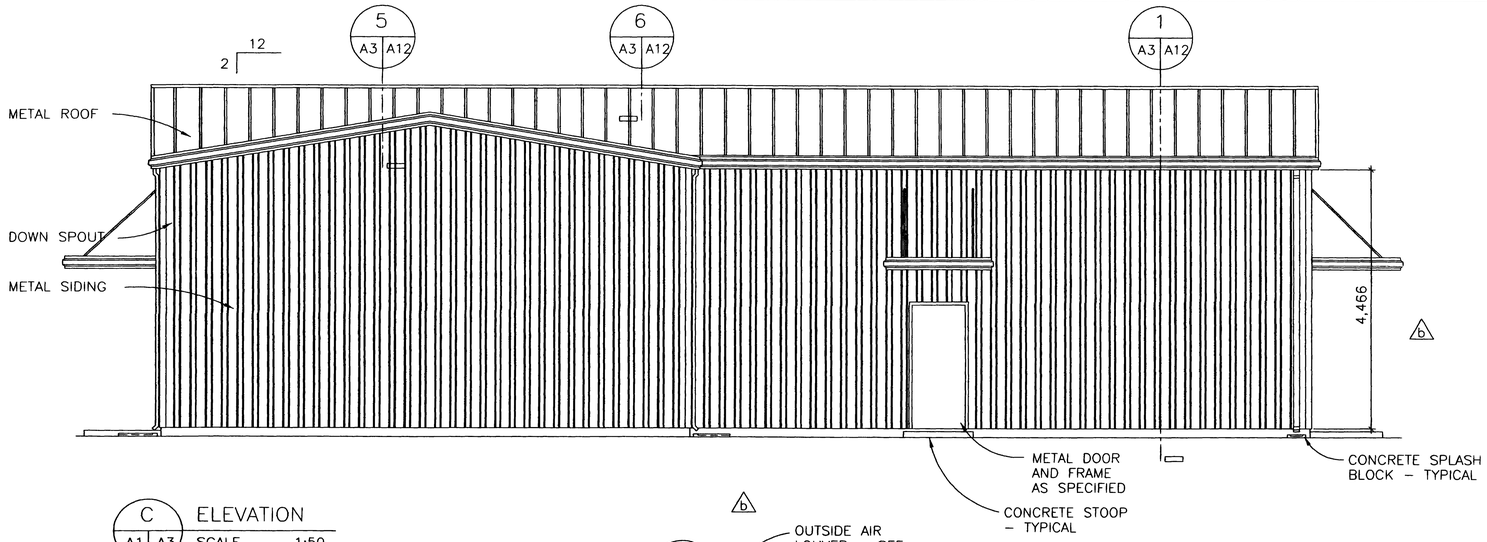

C ELEVATION
A1 A3 SCALE 1:50

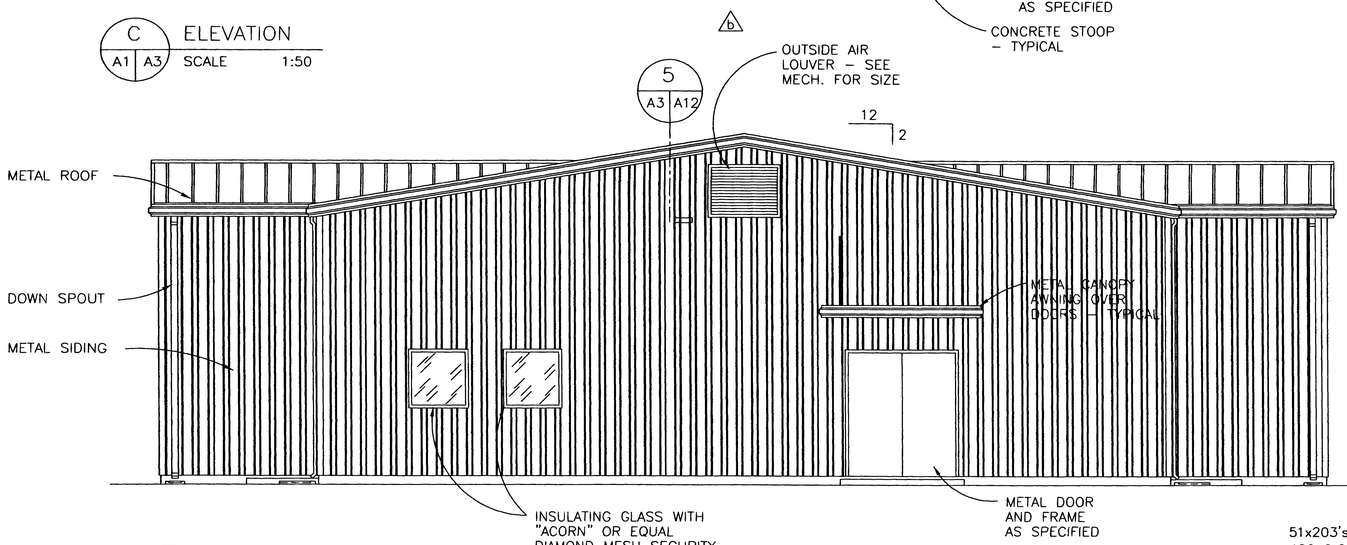

D ELEVATION
A1 A3 SCALE 1:50

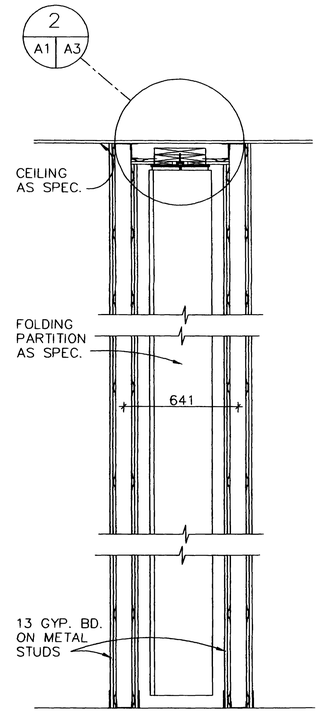

4 SECTION
A1 A3 NOT TO SCALE

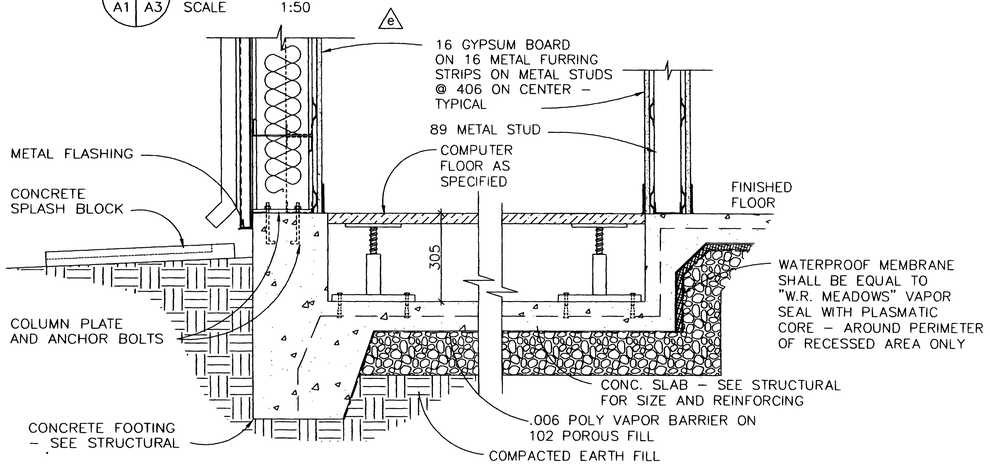

1 SECTION
A1 A3 NOT TO SCALE

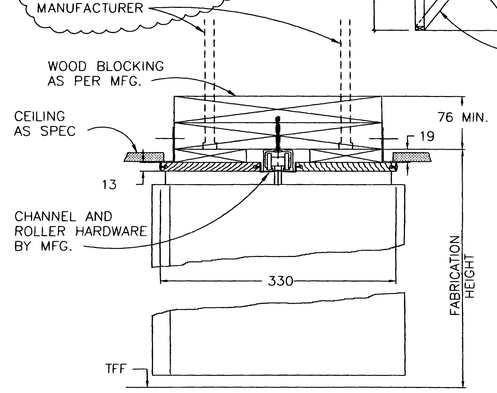

2 SECTION
A1 A3 NOT TO SCALE

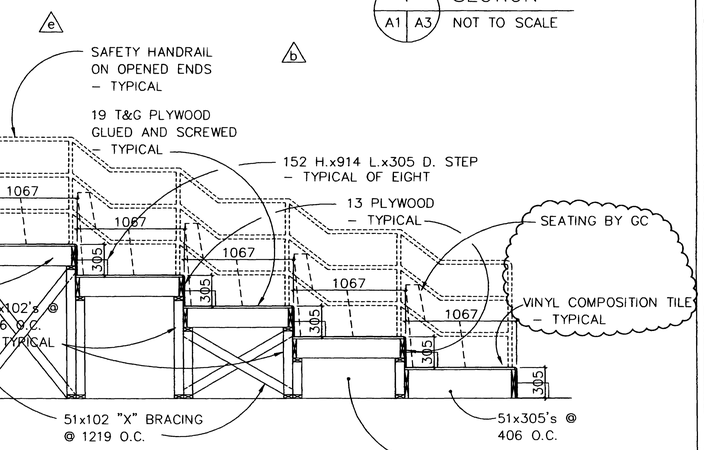

3 TYPICAL BLEACHER SECTION
A1 A3 NOT TO SCALE

USE FLOOR PLAN FOR ACTUAL NUMBER OF RISERS

b

b ALTON G. MOORE 71369

THE SEAL APPEARING ON THIS DOCUMENT WAS AUTHORIZED BY ALTON G. MOORE ON AUGUST 8, 2001

GRAPHIC SCALE
1000 500 0 500 1000
SCALE: 1:50
200 100 0 100 200
SCALE: 1:10

US Army Corps of Engineers
FORT WORTH DISTRICT

POLYENGINEERING, INC.
1550 Radiant Avenue
Dothan, Alabama 36303
(334) 793-4700 (voice)
(334) 793-8015 (fax)

Mark	Description	Date	Appr.
1	SAFETY RAIL ADDED AND NOTE ADDED	SEPT 01	ELF
2	SAFETY RAIL ADDED AND NOTE ADDED	SEPT 01	ELF
3	SECTION ADDED, GLASS NOTED AND BUILDING HEIGHT RAISED AND TITLE BLOCK EDIT	AUG 01	ELF

Designed by: Alton G. Moore
Dwn by: J.E. Brady
Ckd by: Terra Barnes
Reviewed by: Scott Faulk
Submitted by: E. Lamar Faulk
Date: 19 JUNE 2001
Rev.
Sol No. DACA63-01-B-0007
Contr No. DACA63-01-C-0016
File name:
Plot scale: AS SHOWN
Plot date:

U.S. ARMY ENGINEER DISTRICT
CORPS OF ENGINEERS
FORT WORTH, TEXAS

POLYENGINEERING, INC.
ENGINEERS & ARCHITECTS
DOTHAN, ALABAMA

FORT HOOD, TEXAS
DIGITAL MULTI-PURPOSE RANGE COMPLEX (DMPRC)
PN 51915 FY 01

AFTER ACTION REVIEW
EXTERIOR ELEVATIONS AND DETAILS

Sheet reference number:
A–3
Sheet of

Contr No. DACA63-01-C-0016

8/12/2005 8:12:08 AM

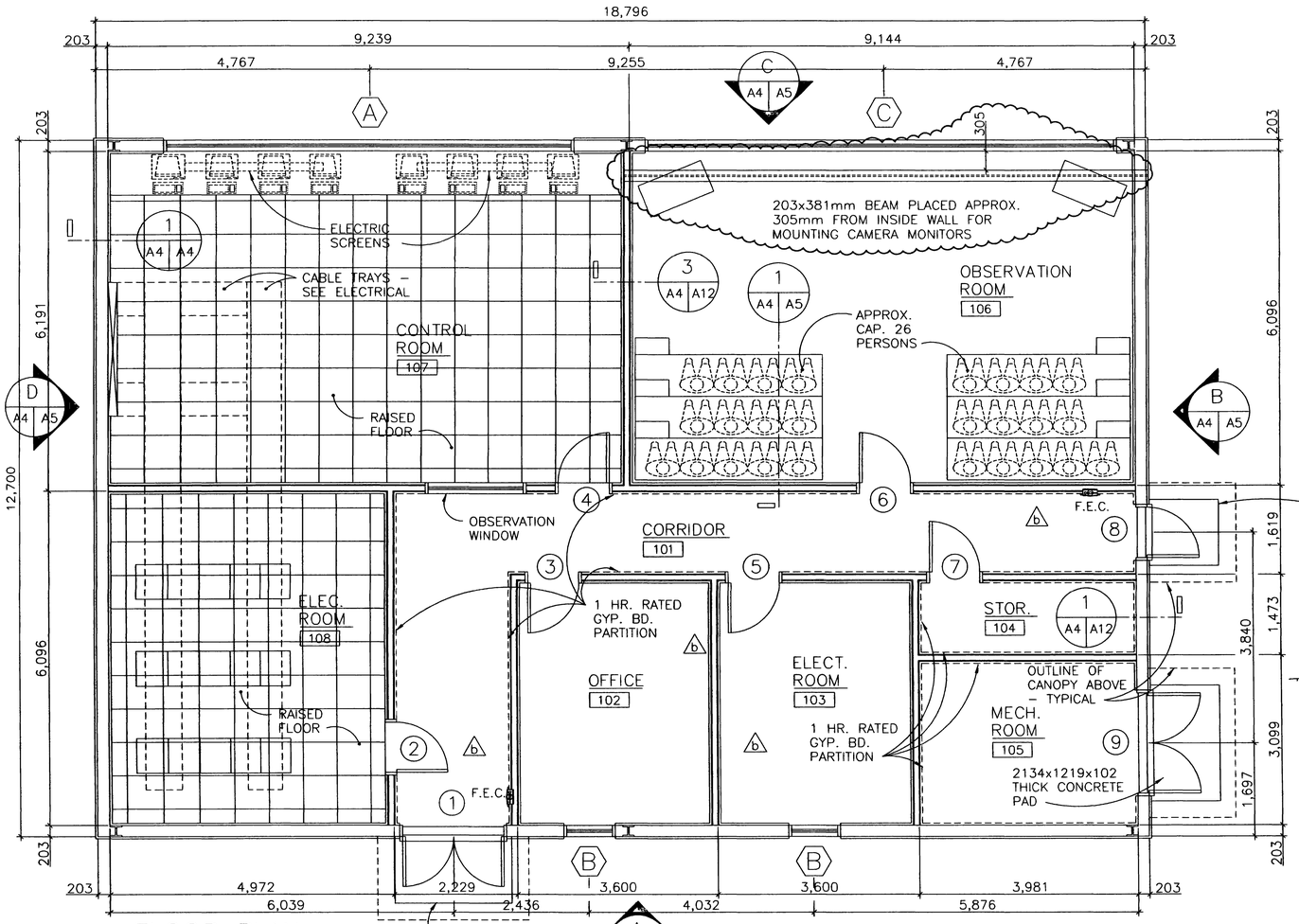

FLOOR PLAN

SCALE 1:50 238.7 SQ. M

ROOM FINISH SCHEDULE

ROOM NO.	ROOM NAME	FLOOR/BASE	WALLS	CEILING	CLG. HT.
101	CORRIDOR	VINYL COMPOSITION TILE/ VINYL BASE	13 GYPSUM BOARD ON METAL FURRING – PAINTED	610x610 SUSPENDED ACOUSTICAL TILE	2438
102	OFFICE	VINYL COMPOSITION TILE/ VINYL BASE	13 GYPSUM BOARD ON METAL FURRING – PAINTED	610x610 SUSPENDED ACOUSTICAL TILE	2438
103	ELECTRICAL ROOM	VINYL COMPOSITION TILE/ VINYL BASE	13 GYPSUM BOARD ON METAL FURRING – PAINTED	610x610 SUSPENDED ACOUSTICAL TILE	2438
104	STORAGE	VINYL COMPOSITION TILE/ VINYL BASE	13 GYPSUM BOARD ON METAL FURRING – PAINTED	610x610 SUSPENDED ACOUSTICAL TILE	2438
105	MECHANICAL ROOM	SEALED CONCRETE/ VINYL BASE	13 GYPSUM BD. ON MTL. FURRING @ MTL. STUDS @ 610 O.C. – PAINTED	16 GYPSUM BOARD – PAINTED	2438
106	OBSERVATION ROOM	VINYL COMPOSITION TILE/ VINYL BASE	13 GYPSUM BOARD ON METAL FURRING – PAINTED	610x610 SUSPENDED ACOUSTICAL TILE	3048
e 107	CONTROL ROOM	V.C.T./VINYL BASE–RAISED FLOOR	13 GYPSUM BOARD ON METAL FURRING – PAINTED	610x610 SUSPENDED ACOUSTICAL TILE	2438
e 108	ELECTRICAL ROOM	V.C.T./VINYL BASE–RAISED FLOOR	13 GYPSUM BD. ON MTL. FURRING @ MTL. STUDS @ 610 O.C. – PAINTED	16 GYPSUM BOARD – PAINTED	3048

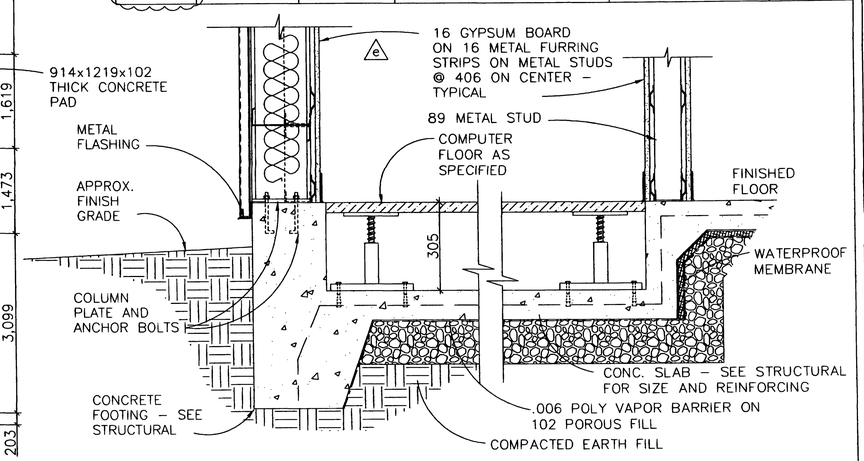

1 SECTION (A4 | A4) NOT TO SCALE

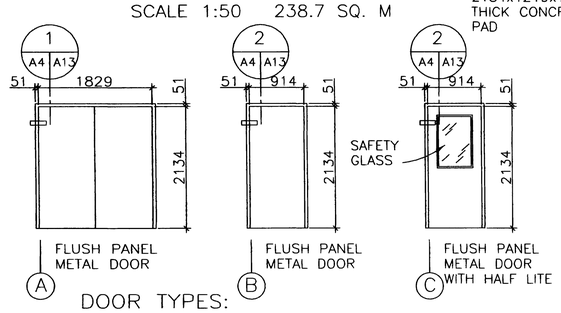

DOOR TYPES:

NOT TO SCALE

DOOR & FRAME SCHEDULE

NO.	DOORS SIZE	GLAZ.	RATG.	TYPE	FRAMES TYPE	DETAILS HEAD	DETAILS JAMB	DETAILS SILL	HDWE. SET NO.
1	1829 x 2134 x 46	—	—	A	H.M.	1/A4 /A13	1/A4 /A13	—	4
2	914 x 2134 x 46	—	20 MIN.	B	H.M.	2/A4 /A13	2/A4 /A13	—	2
3	914 x 2134 x 46	S.G.	20 MIN.	C	H.M.	2/A4 /A13	2/A4 /A13	—	2
4	914 x 2134 x 46	S.G.	20 MIN.	C	H.M.	2/A4 /A13	2/A4 /A13	—	2
5	914 x 2134 x 46	S.G.	20 MIN.	C	H.M.	2/A4 /A13	2/A4 /A13	—	2
6	914 x 2134 x 46	S.G.	20 MIN.	C	H.M.	2/A4 /A13	2/A4 /A13	—	2
7	914 x 2134 x 46	—	20 MIN.	B	H.M.	2/A4 /A13	2/A4 /A13	—	2
8	914 x 2134 x 46	—	—	B	H.M.	1/A4 /A13	1/A4 /A13	—	1
9	914 x 2134 x 46	—	—	A	H.M.	1/A4 /A13	1/A4 /A13	—	3

H.M. – HOLLOW METAL S.G. – SAFETY GLASS

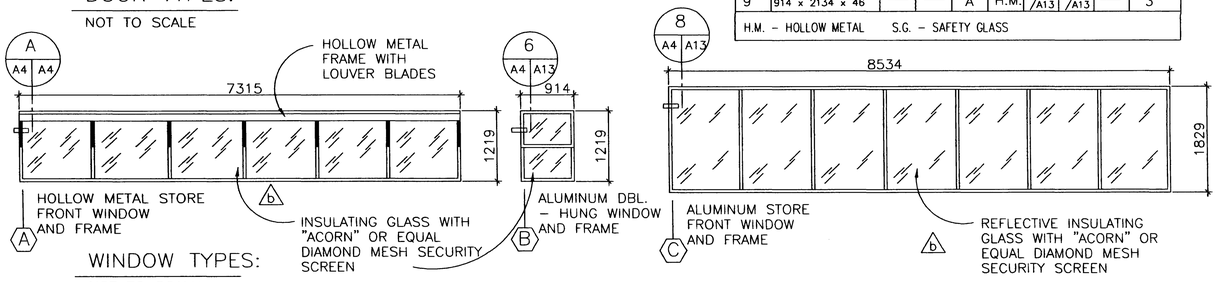

WINDOW TYPES:

NOT TO SCALE

F.E.C. – FIRE EXTINGUISHER CABINET

NOTE :
ALL DIMENSIONS ARE FROM FACE OF METAL STUD TO FACE OF METAL STUD. (UNLESS NOTED)

THE SEAL APPEARING ON THIS DOCUMENT WAS AUTHORIZED BY ALTON G. MOORE ON AUGUST 8, 2001

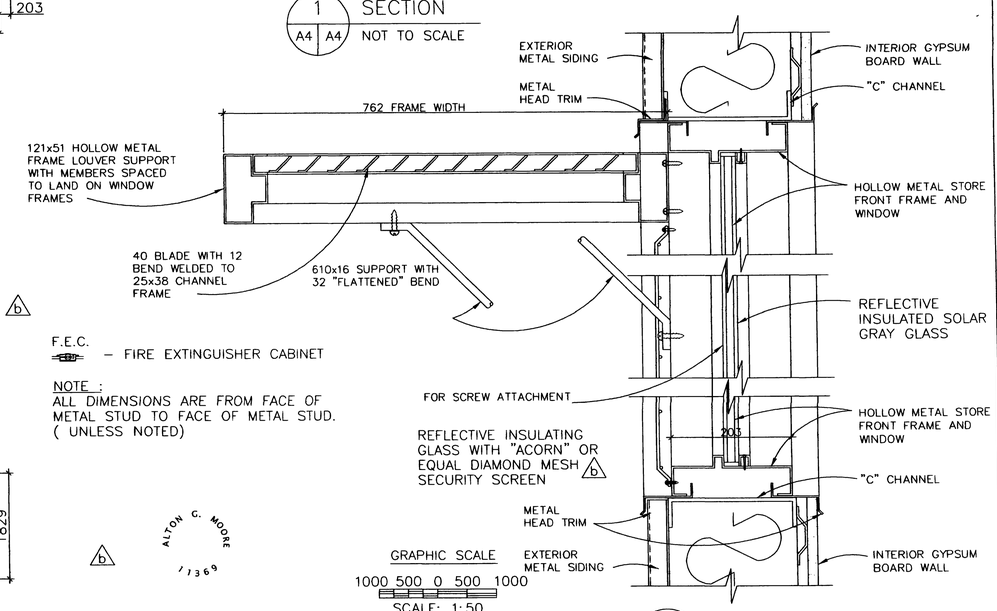

GRAPHIC SCALE
1000 500 0 500 1000
SCALE: 1:50

100 50 0 50 100
SCALE: 1:5

A DETAIL (A4 | A4) SCALE 1:5

US Army Corps of Engineers
FORT WORTH DISTRICT

POLYENGINEERING, INC.
1855 Headland Avenue
Dothan, Alabama 36303
(334) 793-4700 (voice)
(334) 793-8015 (fax)

Mark	Description	Date	Appr.
2	NOTE ADDED & VINYL COMPOSITION TILE ON RAISED FLOOR NOTED	AUG 01	ELF
1	FIRE EXTINGUISHERS AND WIRE GLASS NOTED AND TITLE BLOCK EDIT. ADDED SEAL		

Designed by: Alton G. Moore
Dwn by: D.D. Loester
Ckd by: Tena Borner
Date: 19 JUNE 2001
Sol No. DACA63-01-B-0007
Rev.
Contr No. DACA63-01-C-0016
Reviewed by: Scott Faulk
Plot date:
Plot scale: AS SHOWN
Submitted by: E. Lamar Faulk

U.S. ARMY ENGINEER DISTRICT
CORPS OF ENGINEERS
FORT WORTH, TEXAS

POLYENGINEERING, INC.
ENGINEERS & ARCHITECTS
DOTHAN, ALABAMA

FORT HOOD, TEXAS
DIGITAL MULTI-PURPOSE RANGE COMPLEX (DMPRC)
PN 51915 FY 01

CENTRAL CONTROL BUILDING
FLOOR PLAN AND SCHEDULES

56248

Sheet reference number:
A–4
Sheet . of .

Contr No. DACA63-01-C-0016

0068

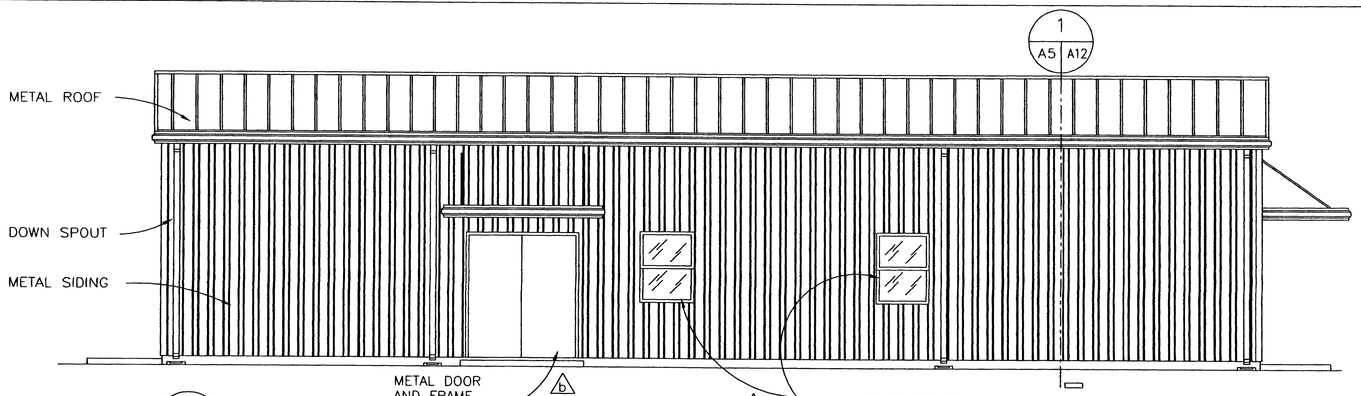

A ELEVATION
A4 A5 SCALE 1:50

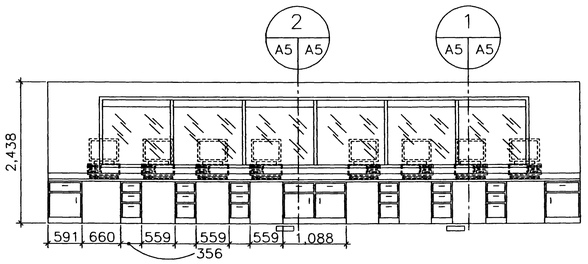

AA ELEVATION RM. No. 107
A4 A5 SCALE 1:50

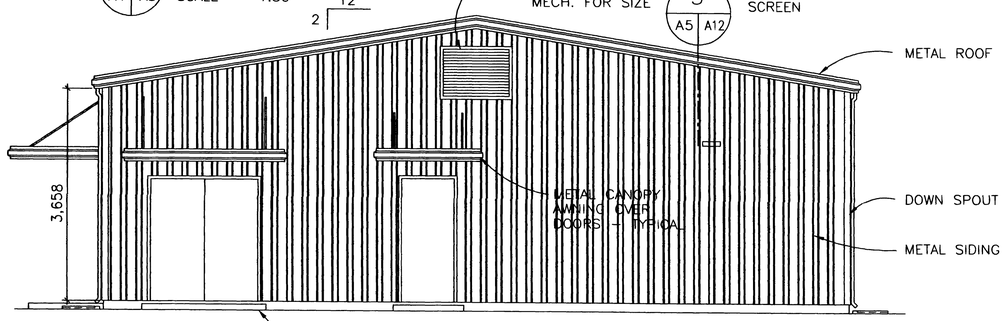

B ELEVATION
A4 A5 SCALE 1:50

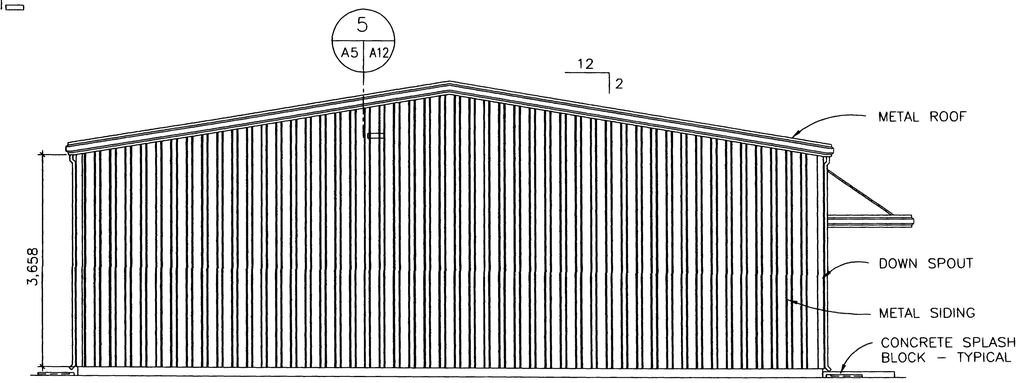

D ELEVATION
A4 A5 SCALE 1:50

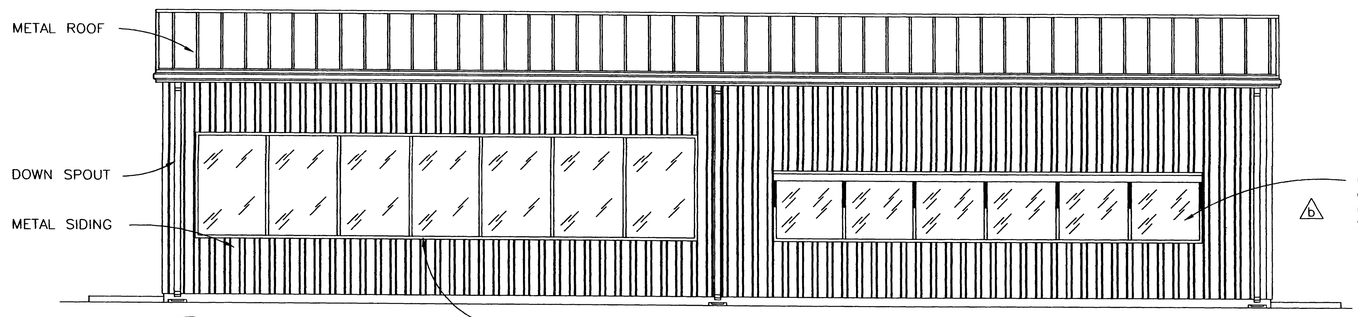

C ELEVATION
A4 A5 SCALE 1:50

THE SEAL APPEARING ON THIS DOCUMENT WAS AUTHORIZED BY ALTON G. MOORE ON AUGUST 8, 2001

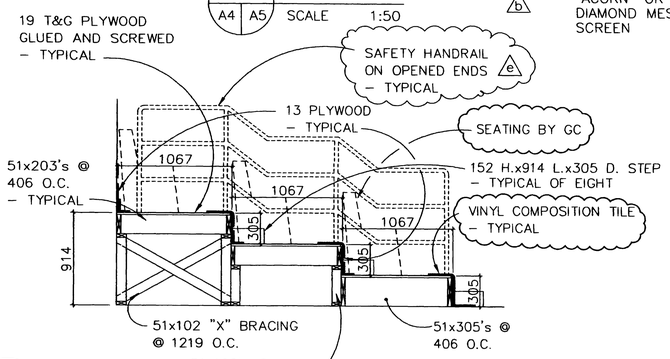

1 SECTION
A4 A5 NOT TO SCALE

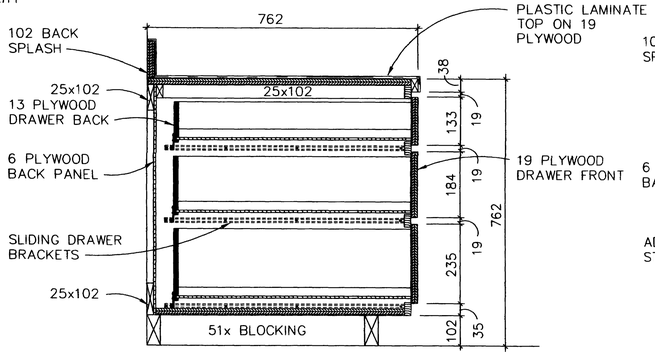

1 SECTION
A5 A5 NOT TO SCALE

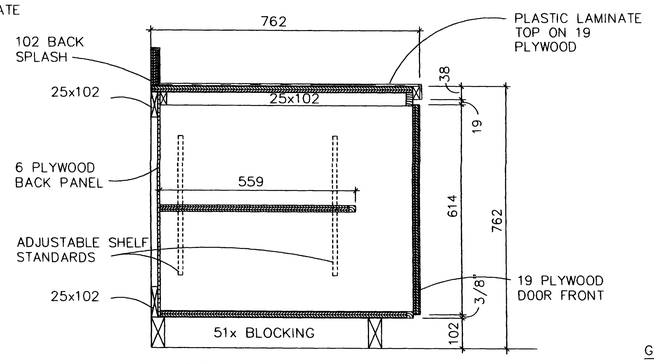

2 SECTION
A5 A5 NOT TO SCALE

GRAPHIC SCALE
1000 500 0 500 1000
SCALE: 1:50

US Army Corps of Engineers
FORT WORTH DISTRICT

POLYENGINEERING, INC.
1855 Headland Avenue
Dothan, Alabama 36305
(334) 793-4700 (voice)
(334) 793-9015 (fax)

Mark	Description	Date	Appr.
3	SAFETY HANDRAIL ADDED	AUG 01	ELF
2	WIRE GLASS NOTED AND TITLE BLOCK EDIT. ADDED SEAL		

Designed by: Alton G. Moore
Dwn by: G.D. Lassiter
Ckd by: Teno Barnes
Date: 19 JUNE 2001
Rev.
Sol No. DACA63-01-B-0007
Contr. No. DACA63-01-C-0016
Reviewed by: Scott Faulk
Submitted by: E. Lamar Faulk
File name:
Plot date:
Plot scale: AS SHOWN

U.S. ARMY ENGINEER DISTRICT
CORPS OF ENGINEERS
FORT WORTH, TEXAS

POLYENGINEERING, INC.
ENGINEERS & ARCHITECTS
DOTHAN, ALABAMA

FORT HOOD, TEXAS
DIGITAL MULTI-PURPOSE RANGE COMPLEX
PN 51915 FY 01

CENTRAL CONTROL BUILDING
EXTERIOR AN INTERIOR
ELEVATIONS AND DETAILS

Sheet reference number:
A-5
Sheet . of .

Contr No. DACA63-01-C-0016

8/12/2005 8:10:37 AM

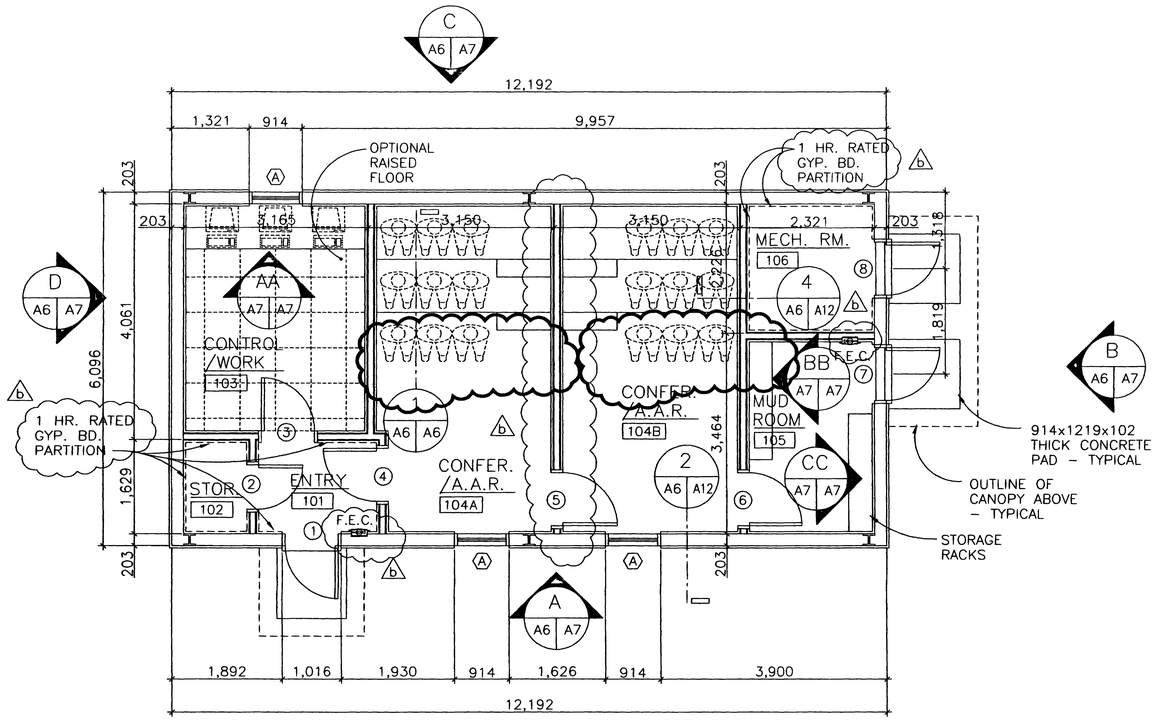

FLOOR PLAN

SCALE 1:50

74.3 SQUARE METERS

F.E.C. – FIRE EXTINGUISHER CABINET

NOTE :
ALL DIMENSIONS ARE FROM FACE OF METAL STUD TO FACE OF METAL STUD. (UNLESS NOTED)

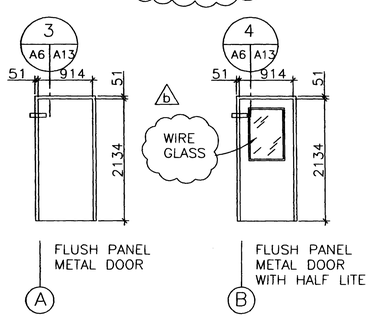

DOOR TYPES:

NOT TO SCALE

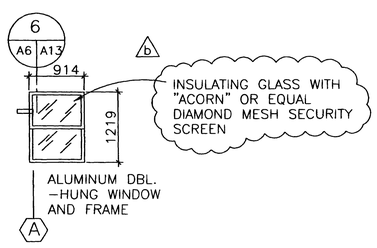

WINDOW TYPES:

NOT TO SCALE

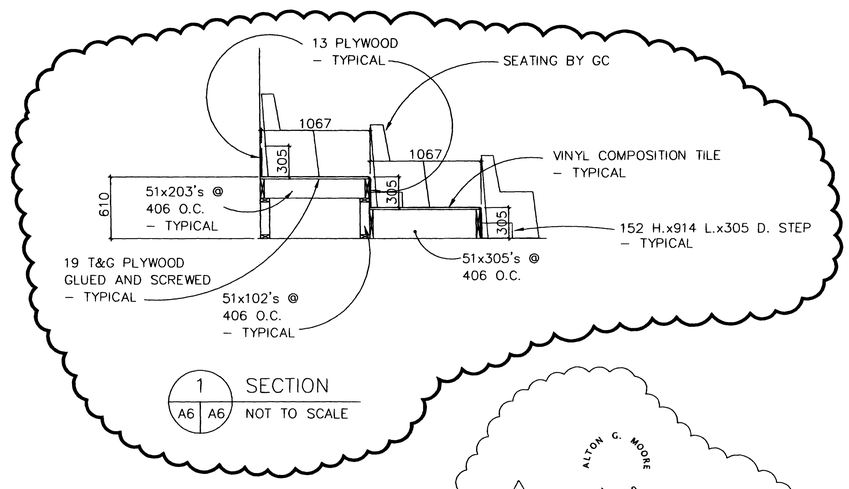

SECTION

NOT TO SCALE

THE SEAL APPEARING ON THIS DOCUMENT WAS AUTHORIZED BY ALTON G. MOORE ON AUGUST 8, 2001

GRAPHIC SCALE

1000 500 0 500 1000

SCALE: 1:50

ROOM FINISH SCHEDULE

ROOM NO.	ROOM NAME	FLOOR	BASE	WALLS	CEILING
101	ENTRY ROOM	COMPOSITION TILE	METAL	STD. LINER PANEL	MFG. STD. CLG. PANEL FINISH
102	STORAGE ROOM	COMPOSITION TILE	METAL	STD. LINER PANEL	MFG. STD. CLG. PANEL FINISH
103	CONTROL/ WORK ROOM	COMPOSITION TILE	METAL	STD. LINER PANEL	MFG. STD. CLG. PANEL FINISH
104	CONFERENCE /A.A.R. ROOM	COMPOSITION TILE	METAL	STD. LINER PANEL	MFG. STD. CLG. PANEL FINISH
105	MUD ROOM	CONCRETE W/ SEALER	METAL	STD. LINER PANEL	MFG. STD. CLG. PANEL FINISH
106	MECHANICAL ROOM	CONCRETE W/ SEALER	METAL	STD. LINER PANEL	MFG. STD. CLG. PANEL FINISH

DOOR & FRAME SCHEDULE

NO.	DOORS				FRAMES				HDWE. SET NO.
	SIZE	GLAZ.	RATG.	TYPE	TYPE	DETAILS HEAD	DETAILS JAMB	DETAILS SILL	
1	914 x 2134 x 46	—	—	A	H.M.	3/A6 /A13	3/A6 /A13	—	1
2	914 x 2134 x 46	—	20 MIN.	A	H.M.	4/A6 /A13	4/A6 /A13	—	2
3	914 x 2134 x 46	S.G.	—	B	H.M.	4/A6 /A13	4/A6 /A13	—	2
4	914 x 2134 x 46	S.G.	—	B	H.M.	4/A6 /A13	4/A6 /A13	—	6
5	914 x 2134 x 46	S.G.	—	B	H.M.	4/A6 /A13	4/A6 /A13	—	6
6	914 x 2134 x 46	S.G.	—	B	H.M.	4/A6 /A13	4/A6 /A13	—	6
7	914 x 2134 x 46	—	—	A	H.M.	3/A6 /A13	3/A6 /A13	—	1
8	914 x 2134 x 46	—	—	A	H.M.	3/A6 /A13	3/A6 /A13	—	5

H.M. – HOLLOW METAL S.G. – SAFETY GLASS

US Army Corps of Engineers
FORT WORTH DISTRICT

POLYENGINEERING, INC.
1800 Headland Avenue
Dothan, Alabama 36305
(334) 793-4700 (voice)
(334) 793-8015 (fax)

Mark	Description	Date	Appr.
1	ADDED SEAL FIRE EXTINGUISHERS, FIRE WALL AND WIRE GLASS NOTED AND TITLE BLOCK EDIT	AUG. 01	ELF

Designed by: Alton G. Moore
Dwn by: G.D. Lassiter
Cktd by: Tens Barnes
Reviewed by: Scott Foulk
Submitted by: E. Lamar Foulk
Date: 13 JUNE 2001
Sol No. DACA63-01-B-0007
Contr. No. DACA63-01-C-0016
File name:
Plot date:
Plot scale: AS SHOWN
Rev.

U.S. ARMY ENGINEER DISTRICT
CORPS OF ENGINEERS
FORT WORTH, TEXAS

POLYENGINEERING, INC.
ENGINEERS & ARCHITECTS
DOTHAN, ALABAMA

FORT HOOD, TEXAS
DIGITAL MULTI-PURPOSE RANGE COMPLEX (DMPRC)
PN 51915 (FY 01)

GENERAL INSTRUCTION FLOOR PLAN AND SCHEDULES

E6257

Sheet reference number:
A-6
Sheet . of .

Contr No. DACA63-01-C-0016

8/12/2005 8:04:40 AM

006892 0

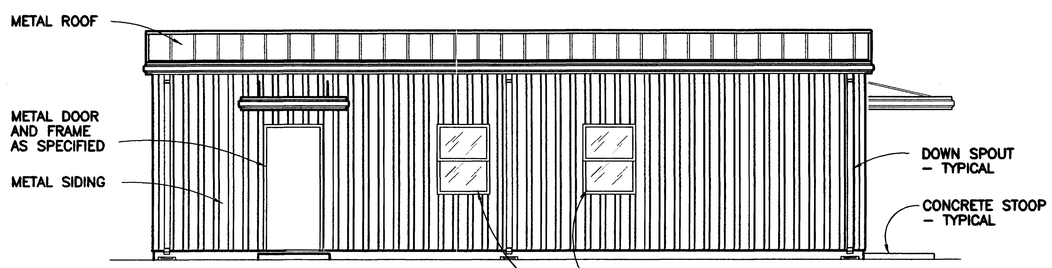

A ELEVATION
A6 A7 SCALE 1:50

INSULATING GLASS WITH "ACORN" OR EQUAL DIAMOND MESH SECURITY SCREEN

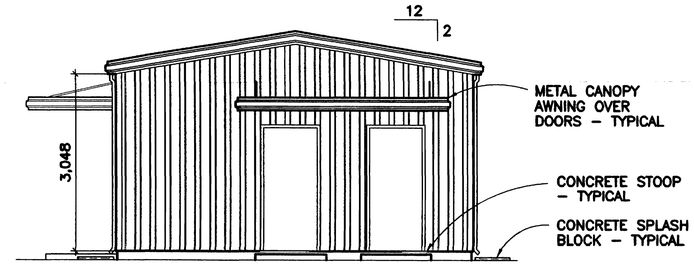

B ELEVATION
A6 A7 SCALE 1:50

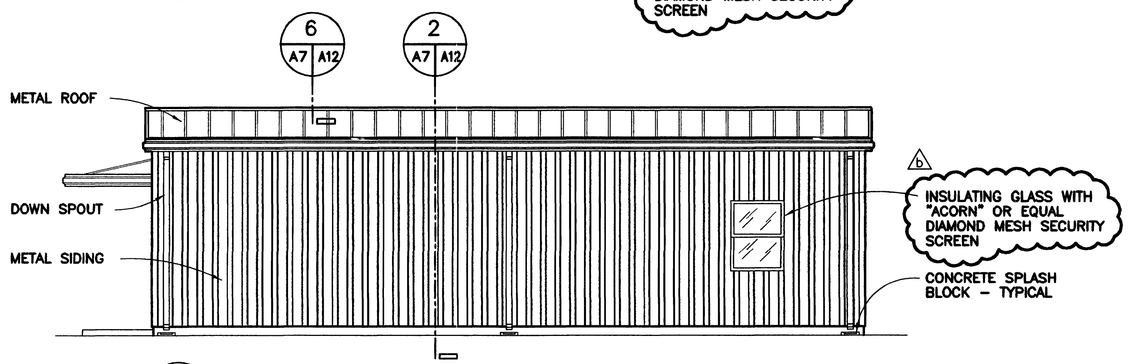

B ELEVATION
A6 A7 SCALE 1:50

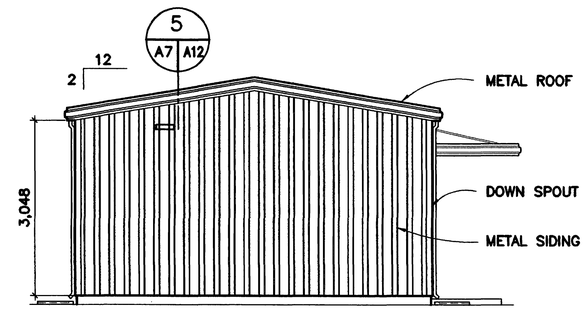

D ELEVATION
A6 A7 SCALE 1:50

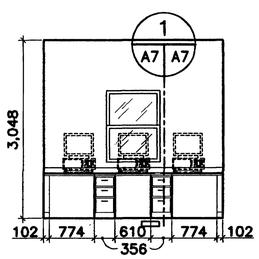

AA ELEVATION RM. No. 105
A6 A7 SCALE 1:50

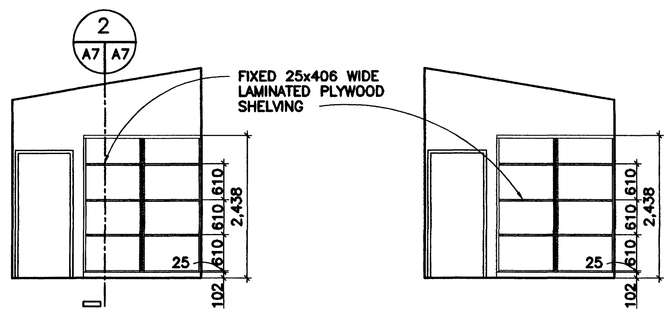

BB ELEVATION RM. No. 105
A6 A7 SCALE 1:50

CC ELEVATION RM. No. 105
A6 A7 SCALE 1:50

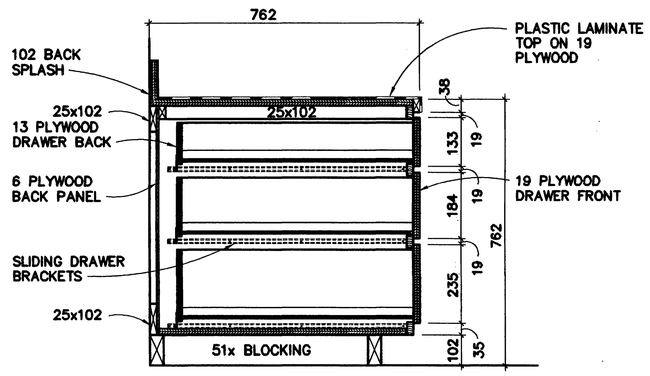

1 SECTION
A7 A7 NOT TO SCALE

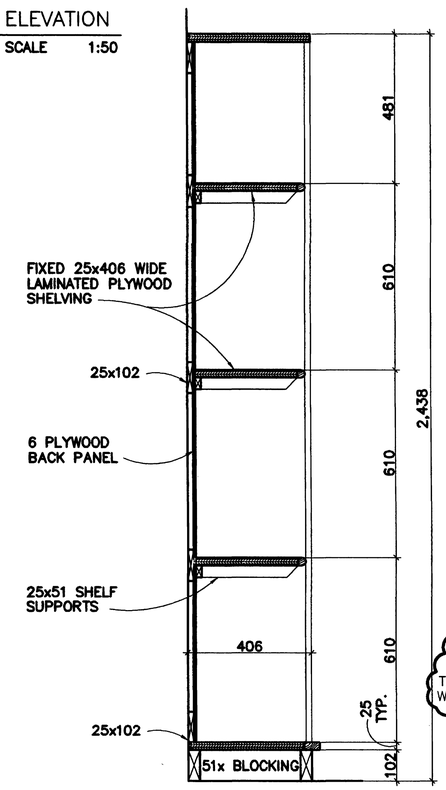

2 SECTION
A7 A7 NOT TO SCALE

THE SEAL APPEARING ON THIS DOCUMENT WAS AUTHORIZED BY ALTON G. MOORE ON AUGUST 8, 2001

GRAPHIC SCALE
1000 500 0 500 1000
SCALE: 1:50

US Army Corps of Engineers
FORT WORTH DISTRICT

POLYENGINEERING, INC.
1905 Boodhead Avenue
Dothan, Alabama 36303
(334) 792-4700 (voice)
(334) 792-5018 (fax)

Mark	Description	Date	Drwn	Appr.
5	WIRE GLASS, WINDOWS NOTED AND TITLE BLOCK EDIT, ADDED SEAL	AUG 01	ELF	

Designed by: Alton G. Moore
Dwn by: G.D. Lassiter
Ckd by: Tano Borne
Reviewed by: Scott Foulk
Submitted by: E. Lamar Foulk
Date: 19 JUNE 2001
Rev.
Sol No. DACA63-01-B-0007
Contr No. DACA63-01-C-0016
File name:
Plot date:
Plot scale: AS SHOWN

U.S. ARMY ENGINEER DISTRICT
CORPS OF ENGINEERS
FORT WORTH, TEXAS

POLYENGINEERING, INC.
ENGINEERS & ARCHITECTS
DOTHAN, ALABAMA

FORT HOOD, TEXAS
DIGITAL MULTI-PURPOSE RANGE COMPLEX (DMPRC)
PN 51915
FY 01

GENERAL INSTRUCTION
EXTERIOR AND INTERIOR
ELEVATIONS AND DETAILS

Sheet reference number:
A–7
Sheet . of .

Contr. No. DACA63-01-C-0016

00886-0

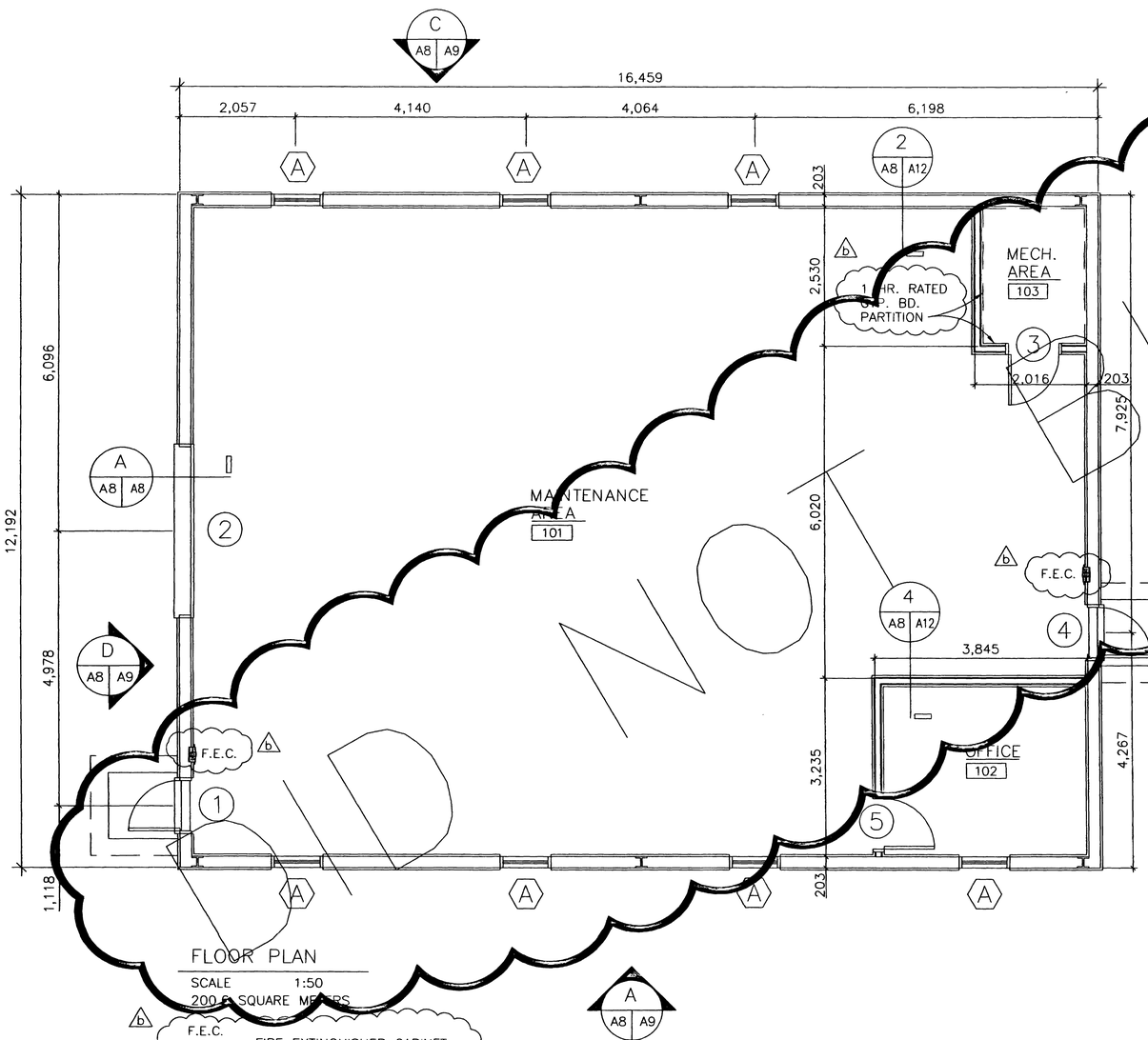

FLOOR PLAN

SCALE 1:50

200.6 SQUARE METERS

F.E.C. – FIRE EXTINGUISHER CABINET

NOTE :
ALL DIMENSIONS ARE FROM FACE OF METAL STUD TO FACE OF METAL STUD. (UNLESS NOTED)

ROOM FINISH SCHEDULE

ROOM NO.	ROOM NAME	FLOOR	BASE	WALLS	CEILING
101	MAINTENANCE AREA	CONCRETE W/ SEALER	METAL	STD. LINER PANEL	MFG. STD. CLG. PANEL FINISH
102	OFFICE	COMPOSITION TILE	METAL	STD. LINER PANEL	MFG. STD. CLG. PANEL FINISH
103	MECHANICAL ROOM	CONCRETE W/ SEALER	METAL	STD. LINER PANEL	MFG. STD. CLG. PANEL FINISH

DOOR & FRAME SCHEDULE

DOORS					FRAMES				HDWE. SET NO.
NO.	SIZE	GLAZ.	RATG.	TYPE	TYPE	DETAILS HEAD	DETAILS JAMB	DETAILS SILL	
1	914 x 2134 x 46	—	—	A	H.M.	3/A8 /A13	3/A8 /A13	—	1
2	914 x 2134 x 46	—	—	C	—	—	—	—	7
3	914 x 2134 x 46	—	20 MIN.	A	H.M.	3/A8 /A13	3/A8 /A13	—	2
4	914 x 2134 x 46	—	—	A	H.M.	3/A8 /A13	3/A8 /A13	—	1
5	914 x 2134 x 46	S.G.	—	B	H.M.	4/A8 /A13	4/A8 /A13	—	2

H.M. - HOLLOW METAL S.G. - SAFETY GLASS

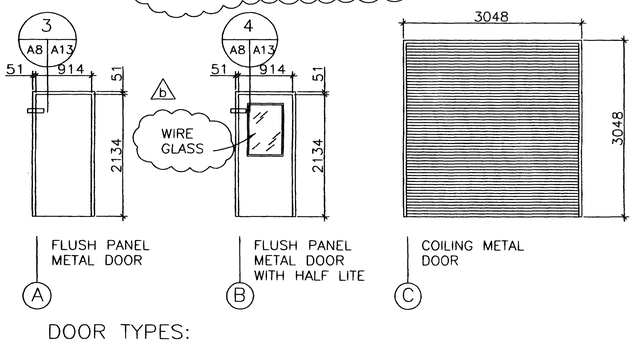

FLUSH PANEL METAL DOOR (A)

FLUSH PANEL METAL DOOR WITH HALF LITE (B)

COILING METAL DOOR (C)

DOOR TYPES:

NOT TO SCALE

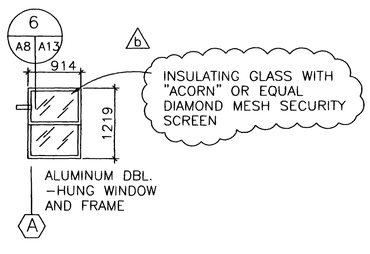

WINDOW TYPES:

NOT TO SCALE

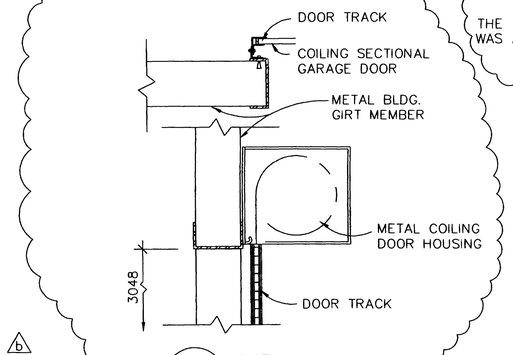

A DETAIL

NOT TO SCALE

ALTON G. MOORE 11369

THE SEAL APPEARING ON THIS DOCUMENT WAS AUTHORIZED BY ALTON G. MOORE ON AUGUST 8, 2001

GRAPHIC SCALE

1000 500 0 500 1000

SCALE: 1:50

US Army Corps of Engineers
FORT WORTH DISTRICT

POLYENGINEERING, INC.
1835 Headland Avenue
Dothan, Alabama 36305
(334) 793-4700 (voice)
(334) 793-9015 (fax)

Mark	Description	Date	Appr.
10	TITLE BLOCK EDIT, ADDED SEAL. FIRE EXTINGUISHER, FIRE WALL, WIRE GLASS NOTED AND DETAIL ADDED	AUG 01	ELF

Designed by: Alton G. Moore
Dwn by: G.D. Lassiter
Ckd by: Tena Barnes
Reviewed by: Scott Faulk
Submitted by: E. Lamar Faulk
Date: 19 JUNE 2001
Rev.
Sol No.
Contr. No. DACA63-01-B-0007
Plot date:
Plot scale: AS SHOWN

U.S. ARMY ENGINEER DISTRICT
CORPS OF ENGINEERS
FORT WORTH, TEXAS

POLYENGINEERING, INC.
ENGINEERS & ARCHITECTS
DOTHAN, ALABAMA

FORT HOOD, TEXAS
DIGITAL MULTI-PURPOSE RANGE COMPLEX (DMPRC)
PN 519115 (FY 01)

GENERAL MAINTENANCE
FLOOR PLAN AND SCHEDULES

Sheet reference number:
A-8
Sheet . of .

Contr No. DACA63-01-C-0016

NOT FOR CONSTRUCTION

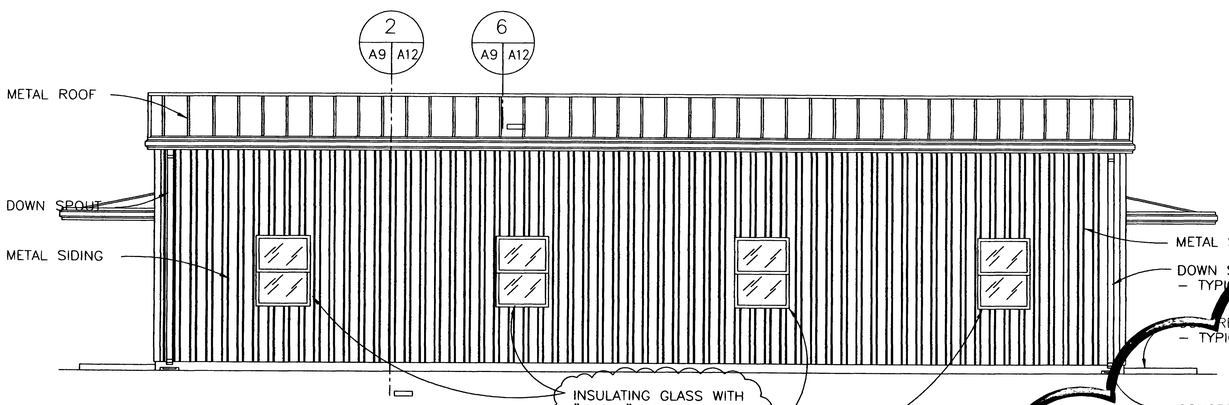

A ELEVATION
A8 A9 SCALE 1:50

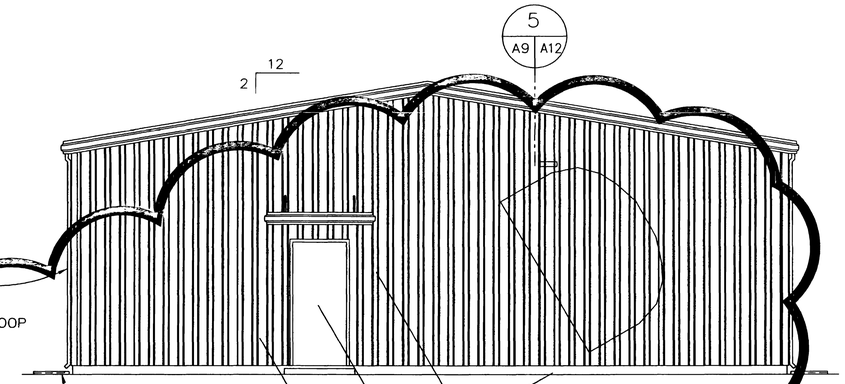

B ELEVATION
A8 A9 SCALE 1:50

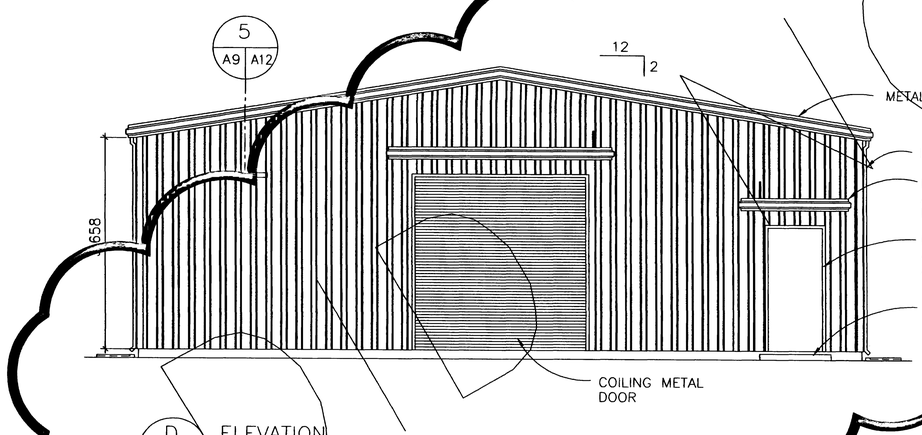

D ELEVATION
A8 A9 SCALE 1:50

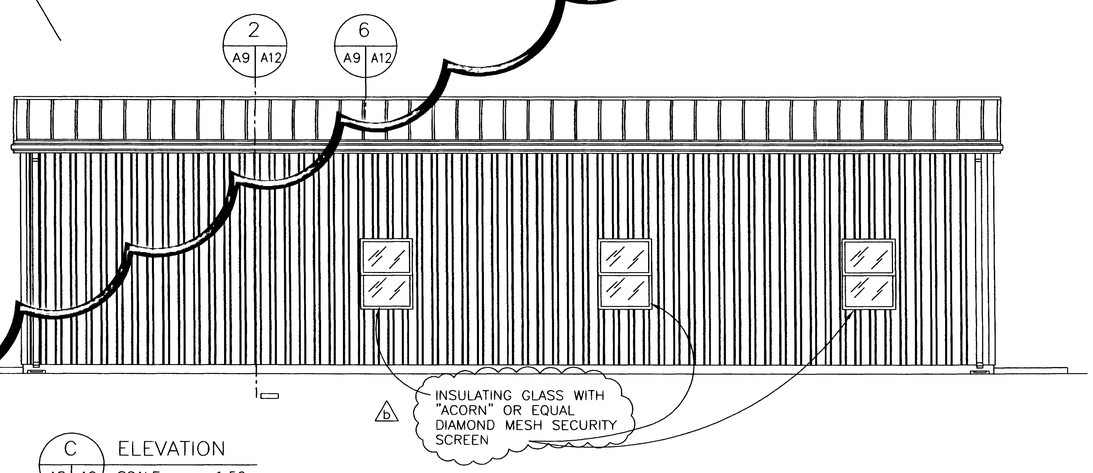

C ELEVATION
A8 A9 SCALE 1:50

ALTON G. MOORE
71369
b

THE SEAL APPEARING ON THIS DOCUMENT WAS AUTHORIZED BY ALTON G. MOORE ON AUGUST 8, 2001

GRAPHIC SCALE
1000 500 0 500 1000
SCALE: 1:50

US Army Corps of Engineers
FORT WORTH DISTRICT

POLYENGINEERING, INC.
1906 Hazelhurst Avenue
Dothan, Alabama 36303
(334) 793-4700 (voice)
(334) 793-9015 (fax)

Mark	Description	Date	Appr.
1	WIRE GLASS NOTED AND TITLE BLOCK EDIT, ADDED SEAL	AUG 01	ELF

Designed by: Alton G. Moore
Dwn by: G.D. Lassiter
Ckd by: Tena Barnes
Reviewed by: Scott Faulk
Submitted by: E. Lamar Faulk
Date: 19 JUNE 2001
Rev.
Sol No. DACA63-01-B-0007
Contr No. DACA63-01-C-0016
File name:
Plot date:
Plot scale: AS SHOWN

U.S. ARMY ENGINEER DISTRICT
CORPS OF ENGINEERS
FORT WORTH, TEXAS

POLYENGINEERING, INC.
ENGINEERS & ARCHITECTS
DOTHAN, ALABAMA

FORT HOOD, TEXAS
DIGITAL MULTI-PURPOSE RANGE COMPLEX
PN 51915
FY 01
b
GENERAL MAINTENANCE
EXTERIOR ELEVATIONS

Sheet reference number:
A–9
Sheet . of .

Contr No. DACA63-01-C-0016

dwg 8/12/2005 8:03:29 AM

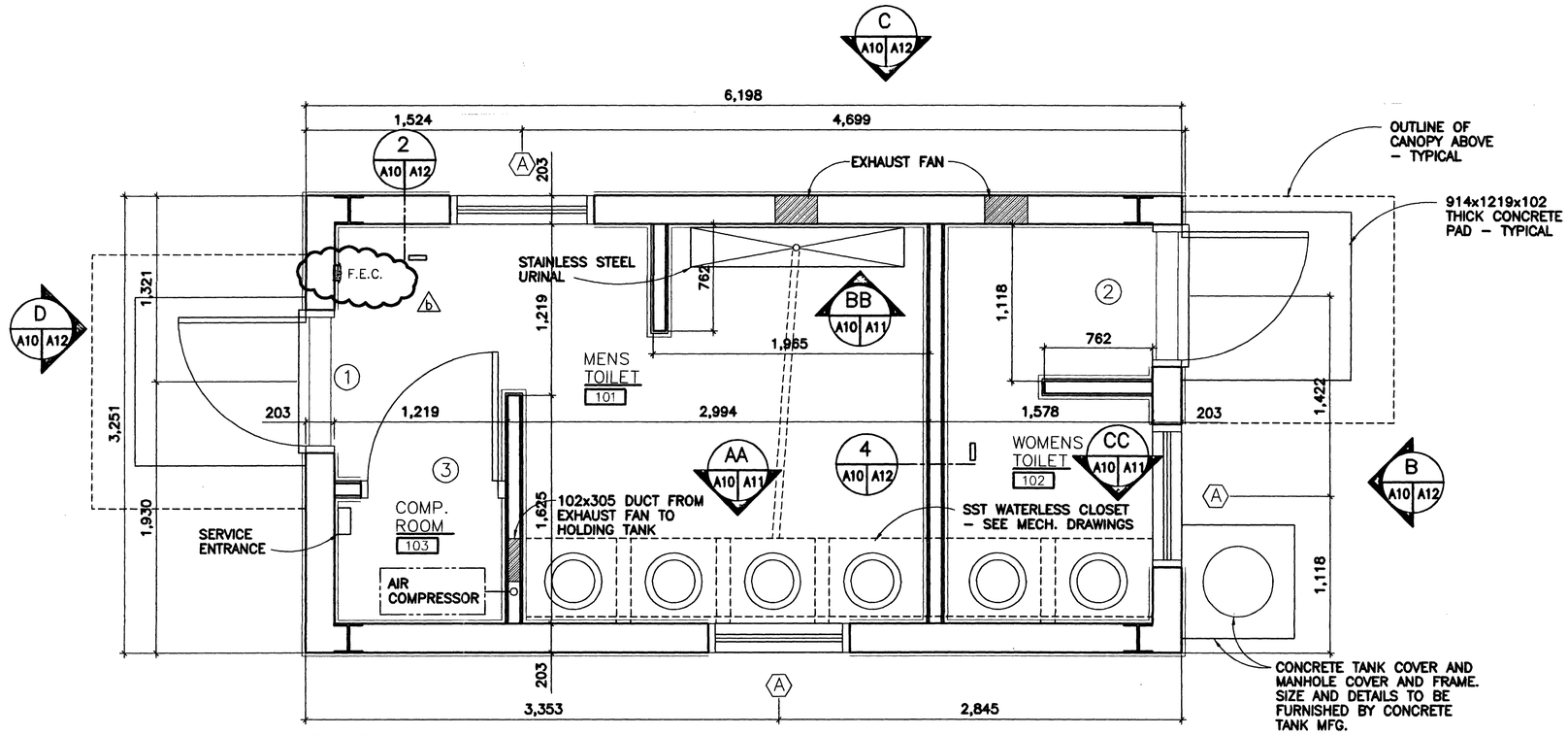

FLOOR PLAN

SCALE 1:20

20 SQUARE METERS

TOILET TISSUE DISPENSER SHALL BE EQUAL TO TYPE II SURFACE MOUNTED WITH TWO ROLLS OF TISSUE MOUNTED HORIZONTALLY, CABINET SHALL BE STAINLESS STEEL SATIN FINISH, AT EACH WATERLESS CLOSET.

F.E.C. – FIRE EXTINGUISHER CABINET

NOTE :
ALL DIMENSIONS ARE FROM FACE OF METAL STUD TO FACE OF METAL STUD. (UNLESS NOTED)

ROOM FINISH SCHEDULE

ROOM NO.	ROOM NAME	FLOOR	BASE	WALLS	CEILING
101	MENS TOILET	CONCRETE W/ SEALER	METAL	STD. LINER PANEL	MFG. STD. CLG. PANEL FINISH
102	WOMENS TOILET	CONCRETE W/ SEALER	METAL	STD. LINER PANEL	MFG. STD. CLG. PANEL FINISH
103	AIR COMP. ROOM	CONCRETE W/ SEALER	METAL	STD. LINER PANEL	MFG. STD. CLG. PANEL FINISH

DOOR & FRAME SCHEDULE

NO.	DOORS				FRAMES				HDWE. SET NO.
	SIZE	GLAZ.	RATG.	TYPE	TYPE	DETAILS HEAD	DETAILS JAMB	DETAILS SILL	
1	914 x 2134 x 46	—	—	A	H.M.	3/A10 /A13	3/A10 /A13	—	1
2	914 x 2134 x 46	—	—	A	H.M.	3/A10 /A13	3/A10 /A13	—	1
3	914 x 2134 x 46	—	—	A	H.M.	4/A10 /A13	4/A10 /A13	—	2

H.M. – HOLLOW METAL

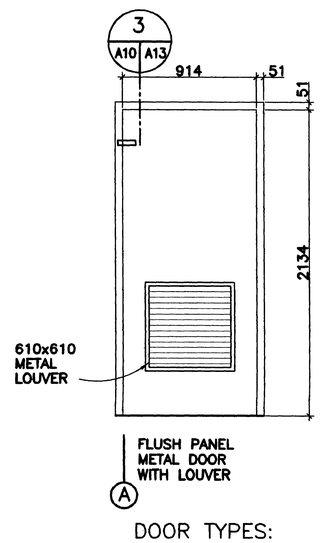

DOOR TYPES:

NOT TO SCALE

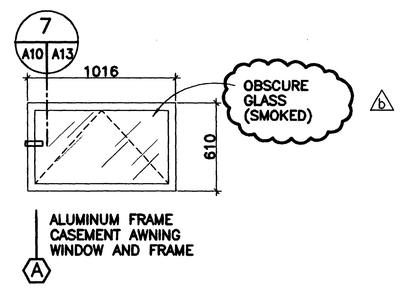

WINDOW TYPES:

NOT TO SCALE

THE SEAL APPEARING ON THIS DOCUMENT WAS AUTHORIZED BY ALTON G. MOORE ON AUGUST 8, 2001

GRAPHIC SCALE

400 200 0 200 400

SCALE: 1:20

US Army Corps of Engineers
FORT WORTH DISTRICT

POLYENGINEERING, INC.
1005 Headland Avenue
Dothan, Alabama 36303
(334) 792-4709 (voice)
(334) 792-2018 (fax)

Mark	Description	Date	Appr.
5	FIRE EXTINGUISHER AND GLASS NOTE ADDED AND TITLE BLOCK EDIT. ADDED SEAL	AUG 01	ELF

Date: 28 JUNE 2001 Rev.
Sol No. DACA63-01-B-0007
Contr No. DACA63-01-C-0016
File name:
Plot date:
Plot scale: AS SHOWN

Designed by: Alton G. Moore
Dwn by: J.E. Brady
Ckd by: Tena Barnes
Reviewed by: Scott Faulk
Submitted by: E. Lamar Faulk

U.S. ARMY ENGINEER DISTRICT
CORPS OF ENGINEERS
FORT WORTH, TEXAS

POLYENGINEERING, INC.
ENGINEERS & ARCHITECTS
DOTHAN, ALABAMA

FORT HOOD, TEXAS
DIGITAL MULTI-PURPOSE RANGE COMPLEX
PN 51915 FY 01

DUAL-SEX LATRINE
FLOOR PLAN AND SCHEDULES

Sheet reference number:
A-10
Sheet . of .

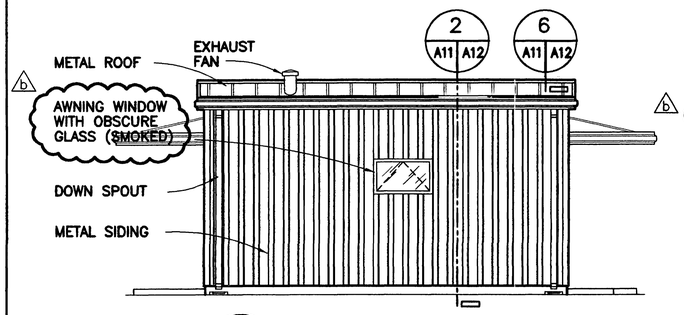

A ELEVATION
A10 A11 SCALE 1:50

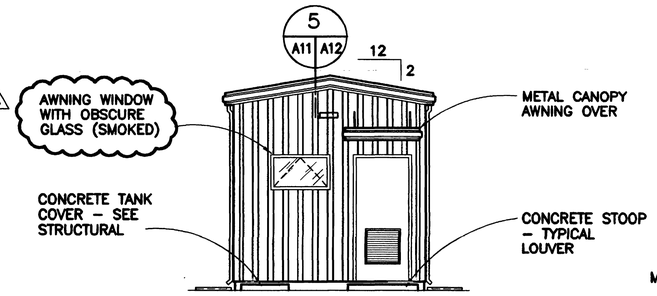

B ELEVATION
A10 A11 SCALE 1:50

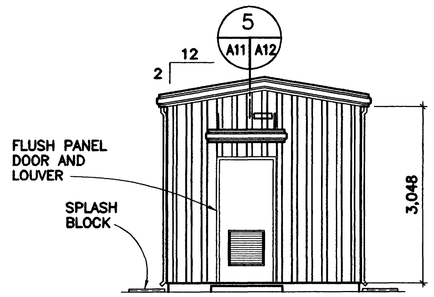

D ELEVATION
A10 A11 SCALE 1:50

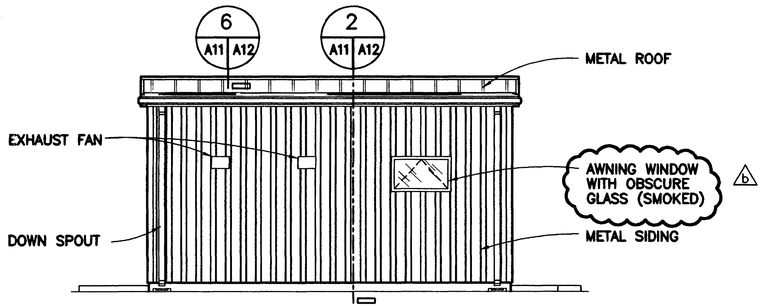

C ELEVATION
A10 A11 SCALE 1:50

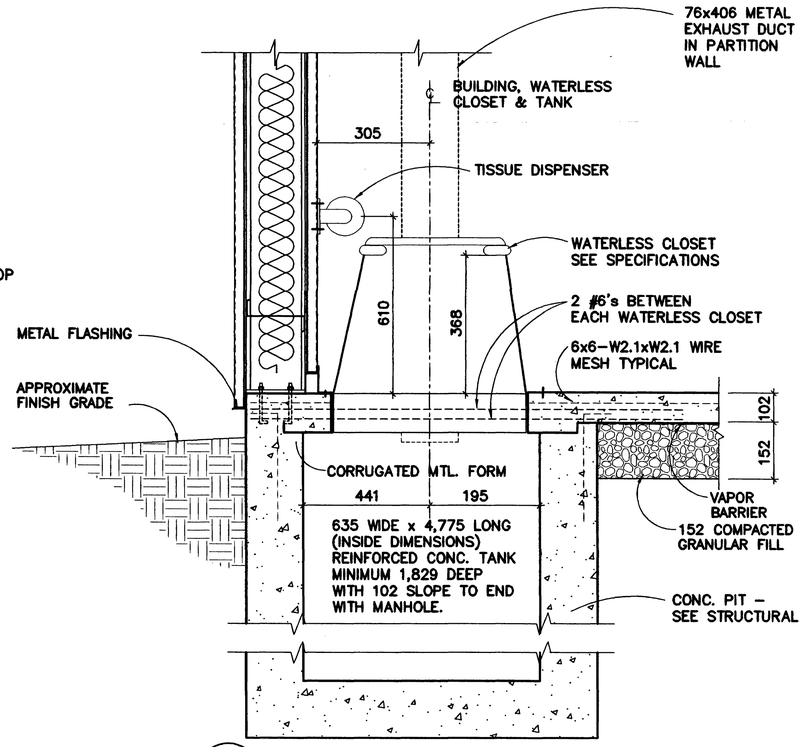

1 SECTION
A11 A11 SCALE 1:10

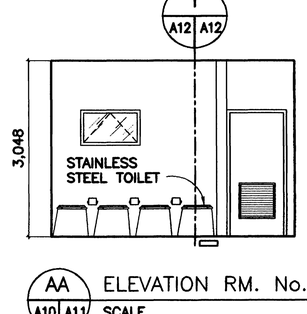

AA ELEVATION RM. No. 101
A10 A11 SCALE 1:50

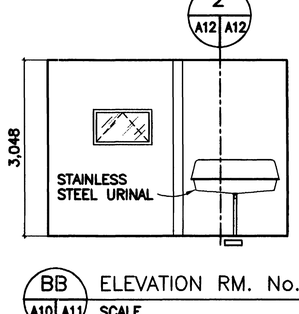

BB ELEVATION RM. No. 101
A10 A11 SCALE 1:50

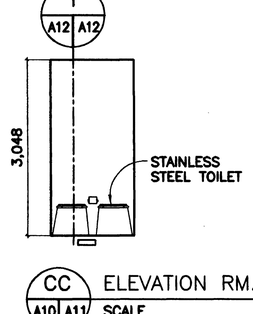

CC ELEVATION RM. No. 102
A10 A11 SCALE 1:50

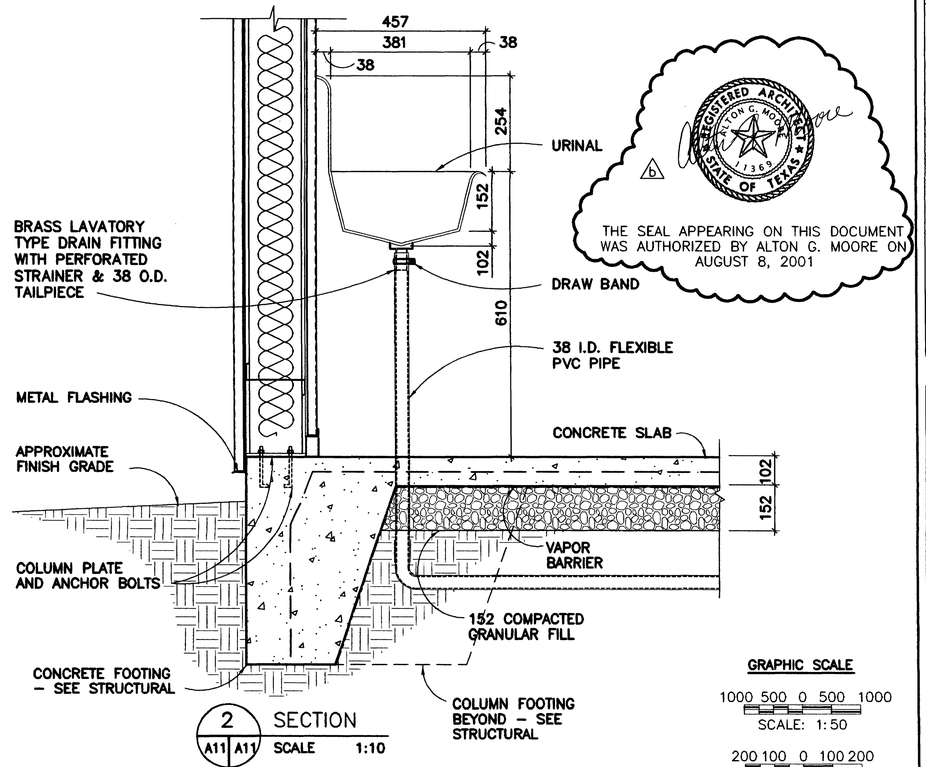

2 SECTION
A11 A11 SCALE 1:10

THE SEAL APPEARING ON THIS DOCUMENT WAS AUTHORIZED BY ALTON G. MOORE ON AUGUST 8, 2001

GRAPHIC SCALE
1000 500 0 500 1000
SCALE: 1:50
200 100 0 100 200
SCALE: 1:10

US Army Corps of Engineers
FORT WORTH DISTRICT

POLYENGINEERING, INC.
1905 Headland Avenue
Dothan, Alabama 36303
(334) 793-4700 (voice)
(334) 793-9016 (fax)

Mark	Description	Date	Appr.
0	GLASS NOTE ADDED AND TITLE BLOCK EXPL ADDED SEAL	AUG 01	ELF

Date: 18 JUNE 2001
Rev.
Sol No. DACA63-01-B-0007
Contr No. DACA63-01-C-0016
Designed by: Alton G. Moore
Drn by: J.E. Brady
Ckd by: Tena Barnes
Reviewed by: Scott Faulk
Submitted by: E. Lamar Faulk
File name:
Plot date:
Plot scale: AS SHOWN

U.S. ARMY ENGINEER DISTRICT
CORPS OF ENGINEERS
FORT WORTH, TEXAS

POLYENGINEERING, INC.
ENGINEERS & ARCHITECTS
DOTHAN, ALABAMA

FORT HOOD, TEXAS
DIGITAL MULTI-PURPOSE RANGE COMPLEX
(IMPROVEMENTS)
PN 51915
FY 01

DUAL-SEX LATRINE
EXTERIOR AND INTERIOR
ELEVATIONS AND DETAILS

Sheet reference number:
A–11
Sheet . of .

00665280

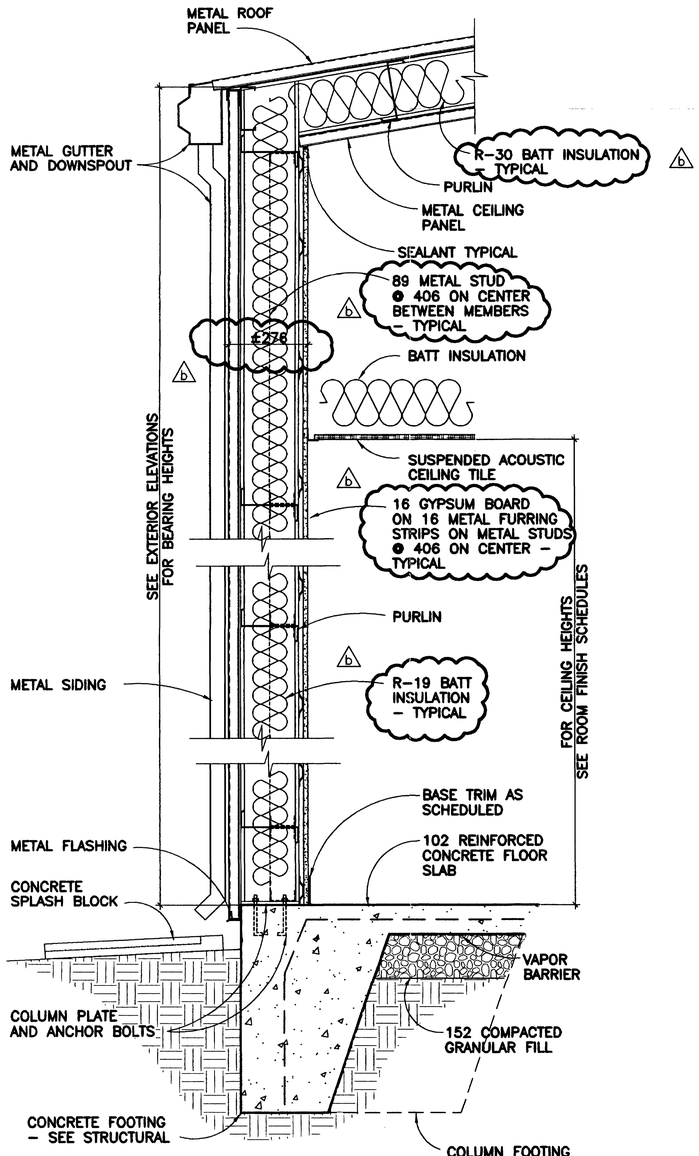

1 SECTION
* A12 SCALE 1:10

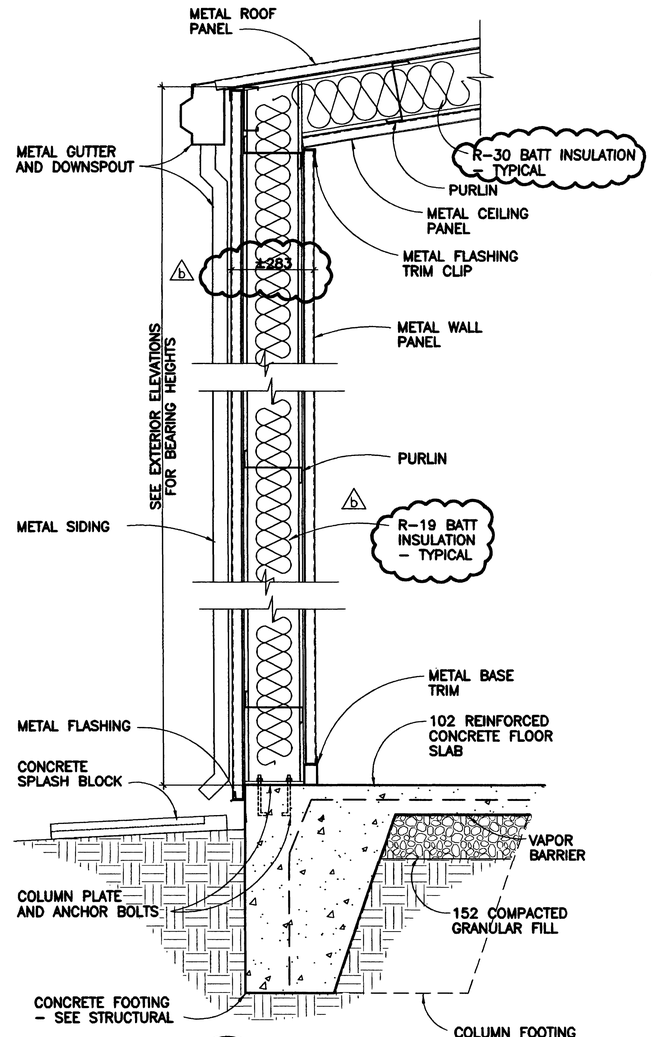

2 SECTION
* A12 SCALE 1:10

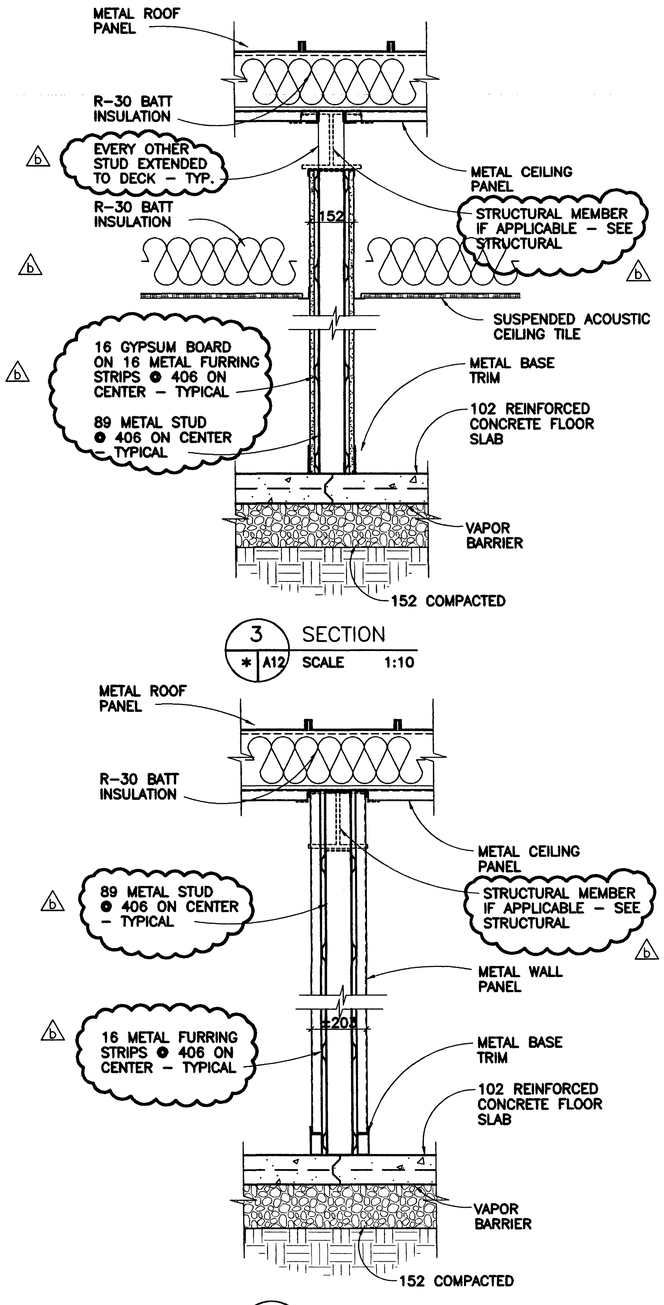

3 SECTION
* A12 SCALE 1:10

4 SECTION
* A12 SCALE 1:10

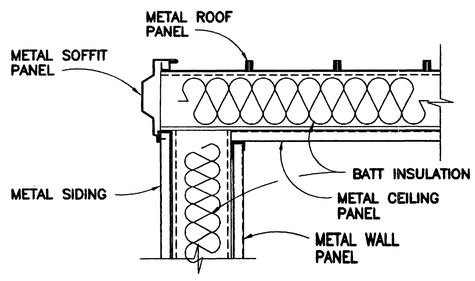

5 SECTION
* A12 SCALE 1:10

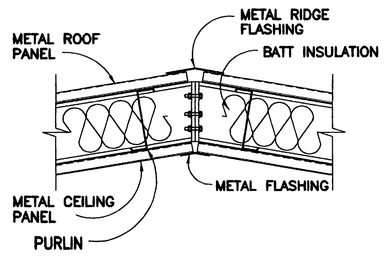

6 SECTION
* A12 SCALE 1:10

GRAPHIC SCALE
200 100 0 100 200
SCALE: 1:10

NOTE (*) IN SYMBOL REFERS TO INDIVIDUAL PAGE NUMBERS AS SHOWN ON PREVIOUS PLANS.

REGISTERED ARCHITECT ALTON G. MOORE 1369 STATE OF TEXAS

THE SEAL APPEARING ON THIS DOCUMENT WAS AUTHORIZED BY ALTON G. MOORE ON AUGUST 8, 2001

US Army Corps of Engineers
FORT WORTH DISTRICT

POLYENGINEERING, INC.
POLYENGINEERING, INC.
1905 Headland Avenue
Dothan, Alabama 36305
(334) 793-4790 (voice)
(334) 793-2015 (fax)

Mark	Description	Date	Appr.
15	NOTES AND DIMENSIONS ADDED AS SHOWN AND TITLE BLOCK EDIT. ADDED SEAL	AUG 01	ELF

Designed by: Alton G. Moore
Drawn by: J.E. Body
Did by: Tena Bond
Date: 19 JUNE 2001
Rev.
Sol No.: DACA65-01-B-0007
Contr. No.: DACA65-01-C-0016
Reviewed by: Scott Faulk
Submitted by: E. Lamar Faulk
File name:
Plot date:
Plot scale: AS SHOWN

U.S. ARMY ENGINEER DISTRICT
CORPS OF ENGINEERS
FORT WORTH, TEXAS

POLYENGINEERING, INC.
ENGINEERS & ARCHITECTS
DOTHAN, ALABAMA

FORT HOOD, TEXAS
DIGITAL MULTI-PURPOSE RANGE COMPLEX (DMPRC)
PN 51915 FY 01

TYPICAL SECTIONS AND DETAILS

Sheet reference number:
A-12
Sheet . of .

00688290

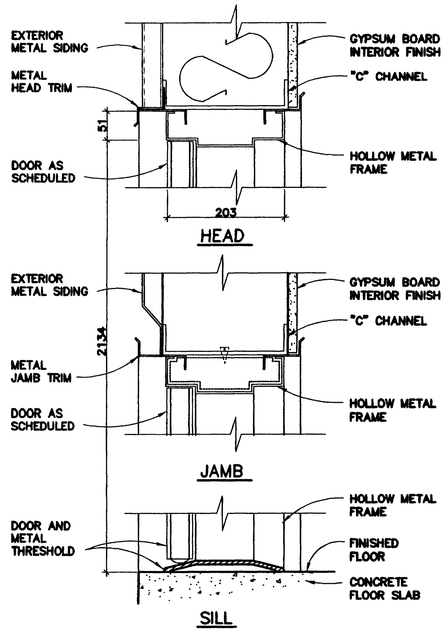

1 SECTION
* A13 SCALE 1:5

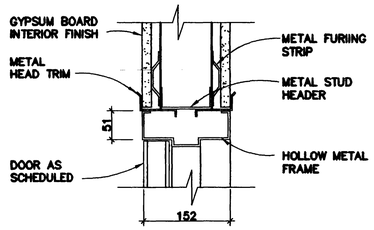

2 SECTION
* A13 SCALE 1:5

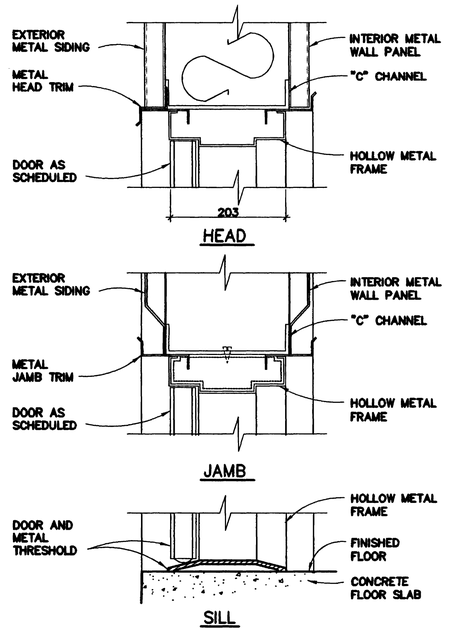

3 SECTION
* A13 SCALE 1:5

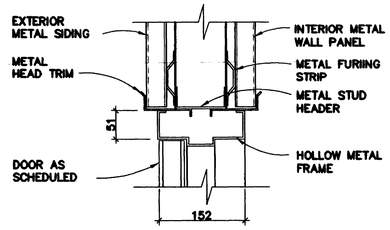

4 SECTION
* A13 SCALE 1:5

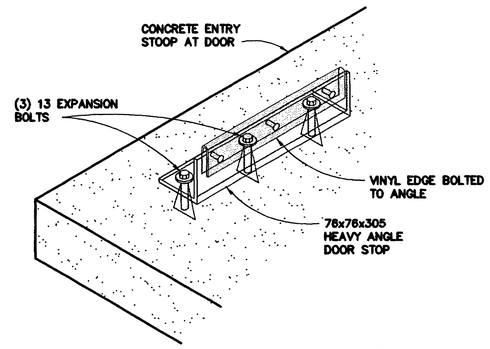

TYPICAL DOOR STOP DETAIL
SCALE 1:5

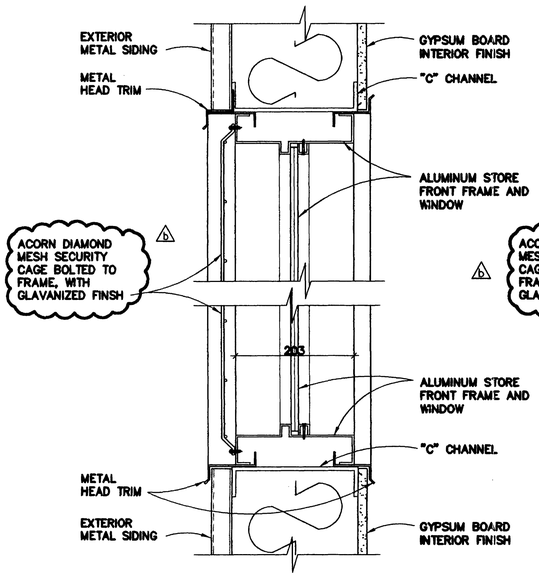

5 SECTION
* A13 SCALE 1:5

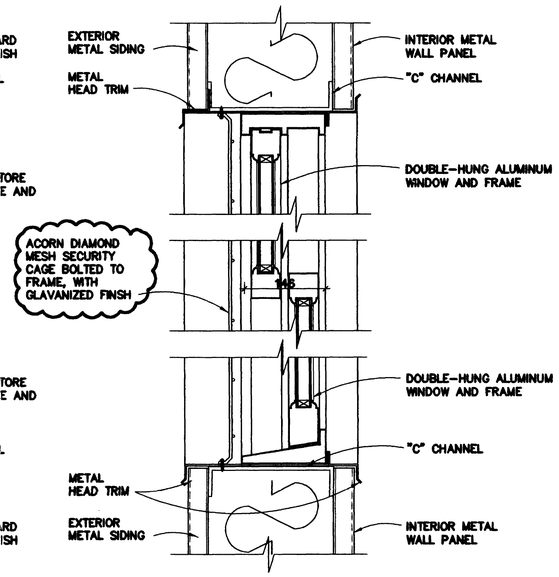

6 SECTION
* A13 SCALE 1:5

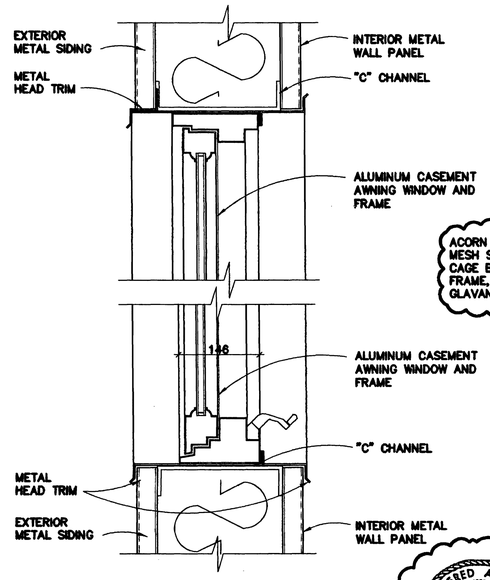

7 SECTION
* A13 SCALE 1:5

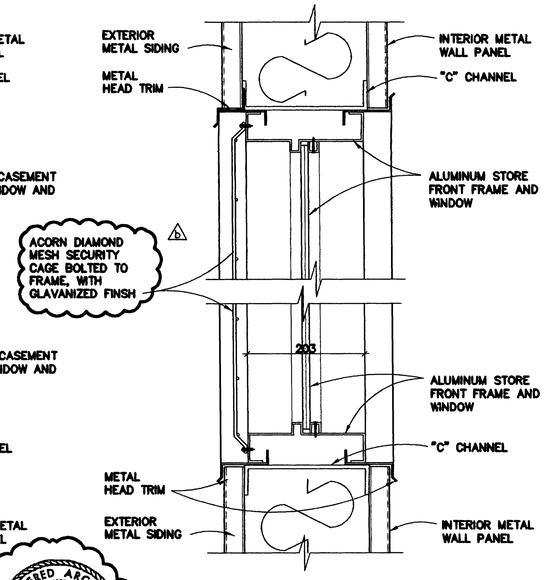

8 SECTION
* A13 SCALE 1:5

REGISTERED ARCHITECT ALTON G. MOORE 1369 STATE OF TEXAS

THE SEAL APPEARING ON THIS DOCUMENT WAS AUTHORIZED BY ALTON G. MOORE ON AUGUST 8, 2001

GRAPHIC SCALE
100 50 0 50 100
SCALE: 1:5

NOTE (*) IN SYMBOL REFERS TO INDIVIDUAL PAGE NUMBERS AS SHOWN ON PREVIOUS PLANS.

US Army Corps of Engineers
FORT WORTH DISTRICT

POLYENGINEERING, INC.
ENGINEERS AND ARCHITECTS
POLYENGINEERING, INC.
1966 Headland Avenue
Dothan, Alabama 36303
(334) 793-4720 (voice)
(334) 793-9018 (fax)

Mark	Description	Date	Appr.
5	WINDOW NOTE ADDED AND TITLE BLOCK EDIT. ADDED SEAL.	AUG. 01	E.F.

Designed by: Alton G. Moore
Dwn by: J.E. Brady
Ckd by: Tava Brown
Date: 19 JUNE 2001
Sol No. DACA63-01-B-0007
Contr No. DACA63-01-D-0015
Rev.
Reviewed by: Scott Funk
Submitted by: E. Lamar Faulk
Plot date:
Plot scale: AS SHOWN

U.S. ARMY ENGINEER DISTRICT
CORPS OF ENGINEERS
FORT WORTH, TEXAS

POLYENGINEERING, INC.
ENGINEERS & ARCHITECTS
DOTHAN, ALABAMA

FORT HOOD, TEXAS
DIGITAL MULTI-PURPOSE RANGE COMPLEX (DMPRC)
PN 51915
FY 01

TYPICAL DOOR AND WINDOW DETAILS

Sheet reference number:
A-13
Sheet . of .

00663 .0

ABBREVIATIONS

ABOVE FINISH FLOOR	- AFF
ADDITIONAL	- ADDN
ADJACENT	- ADJ
AIR CONDITIONER	- A/C
AIR HANDLING UNIT	- AHU
ALTERNATE	- ALT
ANCHOR	- ANC
ANCHOR BOLT	- AB
AND	- &
ANGLE	- L
APPROVED	- APPRV
APPROXIMATE	- APPROX
ARCHITECTURAL	- ARCH.
ARCHITECTURALLY EXPOSED STRUCTURAL STEEL	- AESS
AT (WHEN INDICATING SPACING ONLY)	- @
BACK TO BACK	- B TO B
BALANCE	- BAL
BASEMENT	- BSMT
BASE PLATE	- BSPL
BEAM	- BM
BEARING	- BRG
BELOW FINISH FLOOR	- BFF
BETWEEN	- BTWN
BLOCK	- BLK
BLOCKING	- BLKG
BOTTOM	- BOT
BOTTOM CHORD EXTENSION	- BCX
BRICK	- BRK
BRIDGING	- BRDG
BUILDING	- BLDG
CENTER	- CTR
CENTERLINE	- CL
CENTER TO CENTER	- C TO C
CHANNEL	- C
CLEAR OR CLEARANCE	- CLR
COLUMN	- COL
COMPLETE JOINT PENETRATION	- CJP
COMPRESSION	- COMP
CONCRETE	- CONC
CONCRETE MASONRY UNIT	- CMU
CONNECTION(S)	- CONN(S)
CONTINUOUS	- CONT
CONTRACTOR	- CONTR
CONSTRUCTION	- CONST
CONTROL JOINT	- CJ
CORNER	- COR
COORDINATE	- COORD
COVER PLATE	- COV PL
DEGREE	- DEG OR °
DEGREE CELCIUS	- C°
DEGREE FAHRENHEIT	- F°
DETAIL	- DET
DEAD LOAD	- DL
DIAGONAL	- DIAG
DIAMETER	- DIA or Ø
DIMENSION(S)	- DIM(S)
DRAWING(S)	- DWG(S)
DOUBLE	- DBL
DOUBLE EXTRA STRONG	- XXS
DOWEL(S)	- DWL(S)
DOWN	- DN
EACH	- EA
EACH FACE	- EF
EACH WAY	- EW
EDGE OF DECK	- EOD
EDGE OF SLAB	- EOS
ELECTRICAL	- ELEC
ELEVATION	- EL
ELEVATOR	- ELEV
ENGINEER	- ENGR
EQUAL	- EQ
EQUIPMENT	- EQUIP.
EXISTING	- EXIST.
EXPANSION	- EXP
EXPANSION ANCHOR	- EXP ANC
EXPANSION JOINT	- EJ
EXTENSION	- EXTN
EXTERIOR	- EXT
EXTRA STRONG	- XS

FABRICATOR	- FABR
FACE TO FACE	- F TO F
FAR SIDE	- FS
FASTENER	- FAS
FIELD VERIFY	- FV
FINISH(ED)	- FIN.
FINISHED FLOOR	- FF
FLANGE	- FLG
FLOOR	- FLR
FLOOR DRAIN	- FD
FOOT	- FT
FOOTING	- FTG
FOUNDATION	- FDN
FRAMING	- FRMG
GAGE OR GAUGE	- GA
GALVANIZED	- GALV
GENERAL	- GEN
GENERAL CONTRACTOR	- GC
GOVERNMENT	- GOVT
GRADE	- GR
GRADE BEAM	- GB
GROUND	- GRD
HARD ROCK	- HD RK
HEADED STUD(S)	- H STUD(S)
HEIGHT	- HT
HIGH STRENGTH	- HS
HOOK	- HK
HORIZONTAL	- HORZ
INFORMATION	- INFO
INSIDE DIAMETER	- ID
INSIDE FACE	- I.F.
INTERIOR	- INT
INTERMEDIATE	- INTM
JOINT	- JT
JOIST(S)	- JST(S)
JOIST GIRDER	- JG
KIPS (1000 LBS)	- K
KIPS PER LINEAL FOOT	- KLF
KIPS PER SQUARE INCH	- KSI
KIPS PER SQUARE FOOT	- KSF
LIGHTWEIGHT CONCRETE	- LWT CONC
LIVE LOAD	- LL
LONGITUDINAL	- LONG.
LONG LEG HORIZONTAL	- LLH
LONG LEG VERTICAL	- LLV
MANUFACTURE(R)	- MFR
MASONRY	- MAS
MASONRY OPENING	- MO
MATERIAL	- MATL
MAXIMUM	- MAX
MECHANICAL	- MECH
MEZZANINE	- MEZZ
MIDDLE	- MID
MINIMUM	- MIN
MISCELLANEOUS	- MISC
MOMENT	- M
MOMENT CONNECTION(S)	- MC
NEAR FACE	- NF
NEAR SIDE	- NS
NOMINAL	- NOM
NOT IN CONTRACT	- NIC
NOT TO SCALE	- NTS
NUMBER	- NO. or #
ON CENTER	- OC
OPENING(S)	- OPNG(S)
OPPOSITE	- OPP
OUTSIDE FACE	- O.F.
OUTSIDE DIAMETER	- OD
OUTSTANDING LEG	- OSL

PARALLEL	- PAR.
PARTITION(S)	- PARTN(S)
PENETRATION	- PEN
PERMANENT	- PERM
PERPENDICULAR	- PERP
PLATE	- PL
PLUMBING	- PLBG
PNEUMATIC	- PNEU
POST-TENSION	- PT
POUNDS	- LBS
POUNDS PER LINEAL FOOT	- PLF
POUNDS PER SQUARE INCH	- PSI
POUNDS PER SQUARE FT	- PSF
POUNDS PER CUBIC YARD	- PCY
POUNDS PER CUBIC INCH	- PCI
PRECAST CONCRETE	- PC
PREFABRICATED	- PREFAB
PRELIMINARY	- PRELIM
PRESSURE INJECTED FOOTING	- PIF
PROJECTION	- PROJ
RADIUS	- R
REFERENCE	- REF
REINFORCED CONC PIPE	- RCP
REINFORCING	- REINF
REQUIRED	- REQD
RISER	- RIS
ROOF	- RF
ROOF DRAIN	- RD
ROOF TOP UNIT	- RTU
ROOM	- RM
ROUND	- RND
SCHEDULE	- SCHED
SECTION	- SECT
SHEAR	- V
SHEET	- SHT
SIMILAR	- SIM
SPACE	- SP
SPECIFICATION(S)	- SPEC(S)
SPECIFIED	- SPECD
SQUARE	- SQ
STANDARD	- STD
STEEL	- STL
STIFFENER	- STIFF.
STRAIGHT	- STR
STIRRUPS	- STIR.
STRUCTURE OR STRUCT'L	- STRUCT
SYMMETRICAL	- SYM
SUPPORT(S)	- SUPT(S)
TEMPERATURE	- TEMP
TENSION	- T
THICK	- THK
TONGUE AND GROOVE	- T&G
TOP AND BOTTOM	- T&B
TOP CHORD EXTENSION	- TCX
TOP OF BEAM	- TOB
TOP OF FOOTING	- TOF
TOP OF JOIST	- TOJ
TOP OF PIER	- T.O.P.
TOP OF PILE CAP	- TOPC
TOP OF STEEL	- TOS
TOP OF WALL	- TOW
TREAD	- TR
TYPICAL	- TYP
UNLESS NOTED	- U.N.
VERTICAL	- VERT
WATERPROOFING	- WPFG
WATERSTOP	- WS
WELDED WIRE FABRIC	- WWF
WIND LOAD	- WL
WIND MOMENT CONNECTION	- WC
WINDOW	- WDW
WITH	- W/
WITHOUT	- W/O
WOOD	- WD
WORK POINT	- WP
WEIGHT	- WT
WIDE FLANGE	- WF

GENERAL NOTES

1. GENERAL

1.1 DESIGN CRITERIA:

A. CODES AND SPECIFICATIONS:

1. GENERAL BUILDING CODE:
UNIFORM BUILDING CODE, 1997 EDITION.

2. CONCRETE:
BUILDING CODE REQUIREMENTS FOR REINFORCED CONCRETE (ACI 318-95).

3. TI 809-02 STRUCTURAL DESIGN CRITERIA FOR BUILDINGS.

4. ASCE 7-95. MINIMUM DESIGN LOADS FOR BUILDINGS AND OTHER STRUCTURES.

5. TECHNICAL LETTER - ETL 1110-3-471 - DESIGN AND CONSTRUCTION OF CONVENTIONALLY REINFORCED RIBBED MAT SLABS (RRMS).

6. CESWD-ED-TS/G - CRITERIA LETTER.

B. DESIGN LOADS (PSF):

1. DEAD LOADS:
ANY CHANGES IN CONSTRUCTION MATERIALS FROM THOSE SHOWN ON THE ARCHITECTURAL OR STRUCTURAL DRAWINGS SHALL BE REPORTED BY THE GENERAL CONTRACTOR TO THE STRUCTURAL ENGINEER FOR VERIFICATION OF LOAD-CARRYING CAPACITY OF THE STRUCTURE.

2. LIVE LOADS:
b e EARTH SUPPORTED SLAB----------4.78 kPa
b e ROOF----------.96 kPa
SNOW LOAD:
A) GROUND SNOW LOAD (Pg)----------0.24 kPa
B) IMPORTANCE FACTOR (I)----------1.0
C) EXPOSURE FACTOR (Ce)----------0.7

C. LATERAL LOADS:

1. WIND LOADS:
A) BASIC WIND SPEED----------40.23 m/s
B) IMPORTANCE FACTOR----------1.0

2. SEISMIC LOADS:
THE SEISMIC DESIGN CATEGORY FOR THIS PROJECT IS 'B'. THEREFORE, SEISMIC LOADING IS NOT CONSIDERED IN THIS DESIGN, PER TI-809-04.

REFERENCE:
SEISMIC DESIGN FOR BUILDINGS, TI-809-04
STRUCTURAL DESIGN CRITERIA, CHAPTER IV

SEISMIC LOADING IS NOT CONSIDERED IN THIS DEGIGN, BECAUSE THE SEISMIC DESIGN CATEGORY FOR THIS PROJECT IS 'B'.

1.2 SUBMIT ALL SHOP DRAWINGS ON ONE REPRODUCIBLE PRINT (SEPIA) AND ONE BLUE LINE PRINT ONLY. THE REPRODUCIBLE PRINT WILL BE RETURNED. ALL BLUE LINE PRINTS REQUIRED BY THE CONTRACTOR ARE THE RESPONSIBILITY OF THE CONTRACTOR AND SHOULD BE MADE AFTER THE REPRODUCIBLE PRINT IS RETURNED. IF ADDITIONAL BLUE LINES ARE SUBMITTED, THEY WILL BE RETURNED UNMARKED.

1.3 ALL DETAILS SHOWN ARE TYPICAL. SIMILAR DETAILS APPLY TO SIMILAR CONDITIONS, UNLESS NOTED.

1.4 CONTRACTOR SHALL VERIFY ALL DIMENSIONS AND SITE CONDITIONS PRIOR TO FABRICATION/CONSTRUCTION. NOTIFY STRUCTURAL ENGINEER AND ARCHITECT OF ANY DISCREPANCIES PRIOR TO FABRICATION/CONSTRUCTION.

2. FOUNDATION

2.1 GEOTECHNICAL REPORT: FOUNDATION DESIGN IS BASED ON THE GEOTECHNICAL REPORTS LISTED BELOW:

'FORT HOOD, TEXAS-DIGITAL MULT-PURPOSE RANGE COMPLEX', BY FORT WORTH DISTRICT CORPS OF ENGINEERS, DATED FEBUARY 2001.
'REPORT OF GEOTECHNICAL EXPLORATION FORT HOOD RANGE UPGRADE', BY LAW ENGINEERING, DATED JUNE 19, 2000. (PROJECT NUMBER 60120-0-2022)
'REPORT OF ADDITIONAL GEOTECHNICAL EXPLORATION, DRAFT COPY', BY LAW ENGINEERING, DATED APRIL 27, 2001. (PROJECT NUMBER 60121-1-2571).

b e

2.2 MAXIMUM BEARING PRESSURE:
SPREAD FOOTINGS----------96 kPa
RIBBED MAT SLAB----------96 kPa

2.3 ALL FOUNDATION BEARING SURFACES SHALL BE REVIEWED BY THE GEOTECHNICAL ENGINEER PRIOR TO PLACING CONCRETE TO INSURE THEIR COMPLIANCE WITH PRESSURES NOTED. ALL FOOTING ELEVATIONS ARE ESTIMATED AND MAY BE ADJUSTED IN THE FIELD BY THE GEOTECHNICAL ENGINEER.

2.4 COMPACTED FILL WITHIN THE BUILDING AREA (AND EXTENDING 3048 MM OUTSIDE THE EXTERIOR BUILDING LINE) SHALL MEET THE REQUIREMENTS NOTED IN THE SPECIFICATIONS.
b e

2.5 BACKFILL FOR FOUNDATION AND RETAINING WALLS SHALL BE A FREE DRAINING GRANULAR MATERIAL. b e BACKFILL SHALL BE COMPACTED SUFFICIENTLY TO PREVENT SUBSIDENCE OF SURFACE ADJACENT TO WALL. THE GRANULAR MATERIAL SHALL BE PLACED IN A 45 DEGREE WEDGE EXTENDING FROM THE BASE OF THE FOOTING.

2.6 FOUNDATION AND RETAINING WALLS SHALL NOT BE BACKFILLED UNTIL CONCRETE HAS ATTAINED THE REQUIRED 28 DAY COMPRESSIVE STRENGTH.

2.7 ALL RIBBED MAT SLAB SURFACES SHALL BE MOIST CURED FOR 7 DAYS USING WET MATS.

2.8 PLACE 150mm CAPILLARY WATER BARRIER AND VAPOR BARRIER UNDER ALL FLOOR SLABS.

2.9 FOOTING EXCAVATION
A) FOOTINGS SHALL BE NEATLY EXCAVATED WHERE POSSIBLE WITH SIDES AND TOP EDGES FREE OF LOOSE OR WET MATERIALS. WHERE NEAT EXCAVATION IS NOT POSSIBLE, FOOTING EXCAVATION SHALL BE OPEN CUT WITH EDGES FORMED AND BRACED. ALL FOOTINGS WITH FORMED EDGES SHALL BE BACKFILLED FROM BOTTOM TO TOP OF FOOTING WITH LEAN CONCRETE. THE BOTTOM EXCAVATION SHALL BE CLEAN AND DRY WITH ALL LOOSE MATERIAL REMOVED FOR AN ESSENTIALLY FLAT BEARING SURFACE. EXCAVATIONS SHALL NOT BE LEFT OVERNIGHT UNLESS A 2" UNREINFORCED SEAL (MUD) SLAB IS PLACED AT THE BOTTOM OF THE FOOTING EXCAVATION. WHERE SOFT OR UNSUITABLE BEARING SURFACES ARE ENCOUNTERED, THE AREA SHALL BE UNDERCUT AS REQUIRED AND REPLACED WITH LEAN CONCRETE OR COMPACTED DENSE GRADED CRUSHED STONE AS DIRECTED BY THE GEOTECHNICAL ENGINEER. b
B) ALL BACKFILL SHALL BE NON EXPANSIVE b e FILL AS REQUIRED BY THE GEOTECHNICAL ENGINEER EMPLOYED BY THE GENERAL CONTRACTOR. EXCAVATED MATERIAL MAY BE USED AS BACKFILL MATERIAL WITH WRITTEN APPROVAL FROM THE GEOTECHNICAL ENGINEER STATING THAT SUCH MATERIAL IS SUITABLE AS BACKFILL AND INSTRUCTIONS ARE GIVEN FOR PROPER MOISTURE CONTENT AND COMPACTION. THE TESTING LABORATORY APPROVAL AND INSTRUCTIONS FOR COMPACTION SHALL BE SUBMITTED TO THE ENGINEER FOR REVIEW.

3. CONCRETE

3.1 CONCRETING OPERATIONS SHALL COMPLY WITH ACI STANDARDS.

3.2 CONCRETE COMPRESSIVE STRENGTH AT 28 DAYS (kPa), TYPE OF CONCRETE, MAXIMUM W/C (WATER/CEMENTITIOUS MATERIALS RATIO), AIR CONTENT, SLUMP AND CONCRETE USE:

STRENGTH	TYPE	W/C	AIR	SLUMP	USE
20.69	NORMAL WT.	0.42	4-6%	76.2 MM TO 127 MM	SLAB ON GRADE AND FOOTINGS

3.3 REINFORCING BARS: ASTM A615 GRADE 60.

b
3.4 e REINFORCING STEEL SHOWN IN SECTIONS AND DETAILS ARE A SCHEMATIC INDICATION THAT REINFORCING EXISTS. SEE SCHEDULES, SECTION NOTES AND GENERAL NOTES FOR ACTUAL REINFORCING REQUIRED.

3.5 REINFORCING BAR PLACING ACCESSORIES IN ACCORDANCE WITH ACI MANUAL OF STANDARD PRACTICE. WHERE CONCRETE IS EXPOSED IN FINISHED BUILDING, PROVIDE ACCESSORIES WITH RUSTPROOF LEGS. WHERE CONCRETE IS SAND-BLASTED OR BUSH-HAMMERED, PROVIDE ACCESSORIES OF STAINLESS STEEL.

3.6 DETAIL REINFORCEMENT IN ACCORDANCE WITH ACI 315. REINFORCEMENT SHALL NOT BE WELDED UNLESS NOTED OR APPROVED BY THE ENGINEER.

3.7 ALL SPLICES SHALL BE CLASS 'B' TENSION LAP SPLICE, UNLESS NOTED.

3.8 ALL REINFORCING MARKED 'CONTINUOUS' SHALL BE SPLICED WITH CLASS 'B' TENSION LAP SPLICE, UNLESS NOTED.

3.9 CONCRETE COVERAGE OF REINFORCEMENT, UNLESS NOTED:
FOOTINGS----------50 MM TOP & 76 MM BOTTOM & SIDES
SUMP AND PIT WALLS----------50 MM BOTH FACES
FOUNDATION RETAINING WALLS----------50 MM BOTH FACES
RIBBED MATS----------40 MM BOTH FACES

3.10 EARTH SUPPORTED SLABS: 152 MM THICK, REINFORCED WITH #10@305, EACH WAY AT MID-DEPTH OF SLAB, UNLESS NOTED.

4. PREFABRICATED METAL BUILDING

4.1 METAL BUILDING MANUFACTURER SHALL BE A MEMBER OF MBMA (METAL BUILDING MANUFACTURERS ASSOCIATION) AND BE AISC CERTIFIED FOR CATEGORY MB.

4.2 METAL BUILDING SHALL BE DESIGNED IN ACCORDANCE WITH THE METAL BUILDING MANUFACTURERS ASSOCIATION'S DESIGN PRACTICES MANUAL 1996.

4.3 ANCHOR BOLT SIZE, TOTAL LENGTH, AND LOCATION BY METAL BUILDING SUPPLIER. FOR ANCHOR BOLT EMBEDMENT LENGTH, SEE SHEET. S.2. ANCHOR BOLTS PURCHASED AND INSTALLED BY GENERAL CONTRACTOR.

4.4 BEFORE FOOTING INSTALLATION, THE ANCHOR BOLT EMBEDMENT LENGTHS MUST BE VERIFIED. THE FOOTING DEPTH SHALL BE THE SCHEDULED DEPTH OR THE ANCHOR BOLT EMBEDMENT LENGTH PLUS, WHICHEVER IS GREATER.

4.5 HORIZONTAL FORCE TRANSFER FROM METAL BUILDING COLUMN BASE TO CONCRETE SHALL BE BY THE METAL BUILDING SUPPLIER.

4.6 METAL BUILDING SUPPLIER TO VERIFY COLUMN LAYOUT. ANY CHANGES MUST BE SUBMITTED FOR REVIEW OF FOUNDATION DESIGN BEFORE CONSTRUCTION STARTS.

4.7 BEFORE FOOTING INSTALLATION, METAL BUILDING SUPPLIER SHALL SUBMIT DESIGN LOADS AND COLUMN REACTIONS. SEE SHEET S1.2 FOR ASSUMED REACTIONS.

LaneBishopYortDolahayInc.
Consulting Structural Engineers
716 So 30th St Birmingham, Alabama
Telephone (205)251-4500 35233
Facsimile (205)324-4181
PROJECT NO. 5883

STATE OF TEXAS
D. DALE YORK
82469
REGISTERED PROFESSIONAL ENGINEER

THE SEAL APPEARING ON THIS DOCUMENT WAS AUTHORIZED BY D. DALE YORK P.E. 82469, ON AUG 01,2001

US Army Corps of Engineers
FORT WORTH DISTRICT

POLYENGINEERING, INC.
ENGINEERS & ARCHITECTS
1905 Headland Avenue
Dothan, Alabama 36303
(334) 792-4700 (voice)
(334) 793-9216 (fax)

Mark	Date	Description	Draw	Appr.
A	SEPT 01	CHANGES TO GENERAL NOTES	WBJ	
B	AUG 01	CHANGES TO GENERAL NOTES	WBJ	

Date: 19 JUL 2001
Rev.
Sol No. DACA63-01-B-0007
Contr No. DACA63-01-C-0016
File name:
Plot date:
Plot scale: AS SHOWN

Designed by: DESBY
Ckd by: CHKBY
Dwn by: DWNBY
Reviewed by: RVBY
Submitted by: SUBBY

U.S. ARMY ENGINEER DISTRICT
CORPS OF ENGINEERS
FORT WORTH, TEXAS

POLYENGINEERING, INC.
ENGINEERS & ARCHITECTS
DOTHAN, ALABAMA

FORT HOOD, TEXAS
DIGITAL MULTI-PURPOSE RANGE COMPLEX (DMPRC)
PN 51915 FY 01

GENERAL NOTES AND ABBREVIATIONS

Sheet reference number:
S-1
Sheet of

Lane Bishop York Delahay Inc.
Consulting Structural Engineers
716 So 30th St Birmingham, Alabama
Telephone (205)251-4500 35233
Facsimile (205)324-4181
LBYD
PROJECT NO. 5883

STATE OF TEXAS — D. DALE YORK — 82469 — REGISTERED PROFESSIONAL ENGINEER

THE SEAL APPEARING ON THIS DOCUMENT WAS AUTHORIZED BY D. DALE YORK P.E. 82469, ON AUG 01,2001

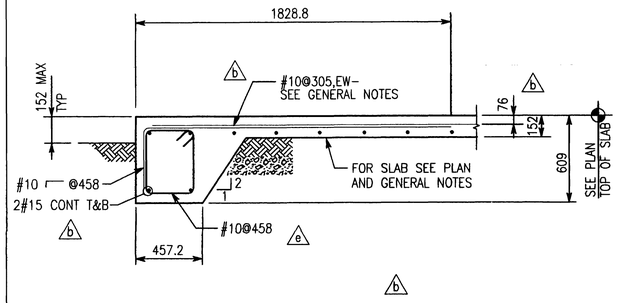

SECTION 1/S1.2 1:20

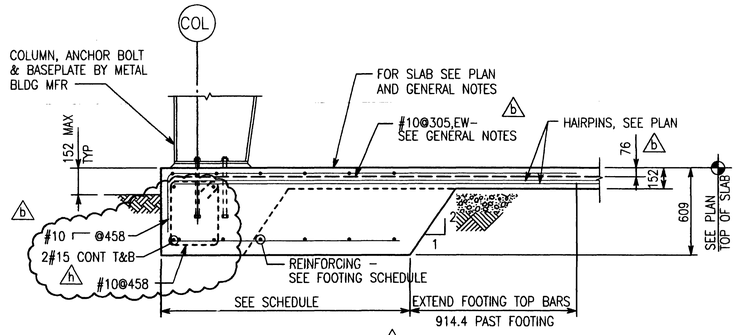

SECTION 2/S1.2 1:20

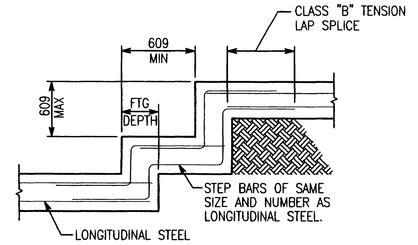

FOOTING STEP DETAIL
TYPICAL

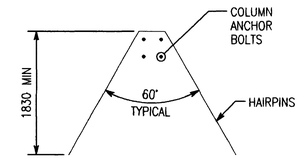

COLUMN HAIRPIN DETAIL
TYPICAL

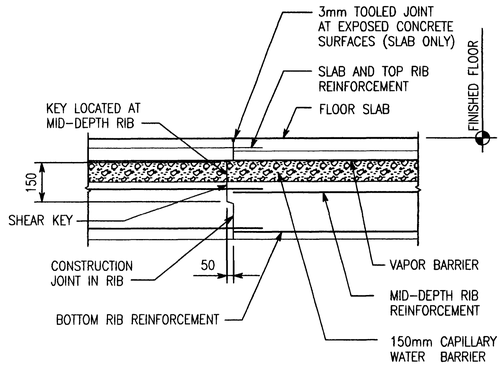

RIBBED MAT CONSTRUCTION JOINT
FLOOR SLAB AND RIB REINFORCEMENT LAPS SHALL BE CLASS B.

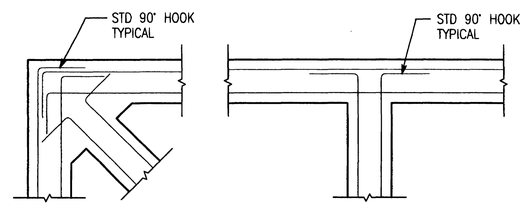

CORNER INTERSECTION

RIBBED MAT FOUNDATION
TYPICAL RIB REINFORCEMENT

1. REINFORCING SHOWN APPLIES TO TOP, BOTTOM AND INTERMEDIATE BARS.
2. SEE "TENSION LAP SPLICE AND EMBEDMENT LENGTHS" FOR SPLICE REQUIREMENTS.
3. THE STANDARD 90° HOOKS ON DIAGONAL AND TRANSVERSE RIB REINFORCEMENT MAY BE VERTICAL RATHER THAN HORIZONTAL.
4. THE HOOKED BARS SHOWN MAY BE CHANGED TO HOOKED BENT BARS THAT LAP WITH STRAIGHT BARS IN THE CONTRACTOR'S AT THE CONTRACTOR'S OPTION.

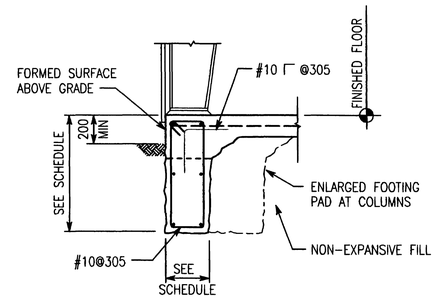

SECTION 3/S1.2 1:20

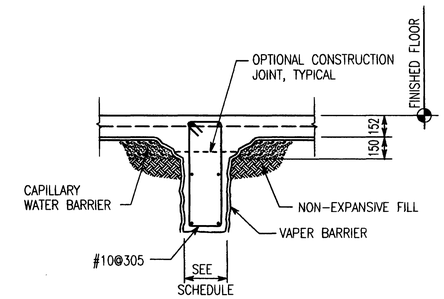

SECTION 4/S1.2 1:20

RIBBED MAT FOUNDATION SECTIONS

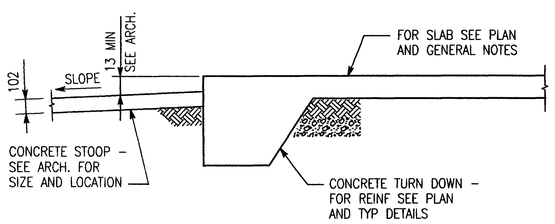

CONCRETE STOOP DETAIL
TYPICAL - FOR LOCATION, SEE ARCH.

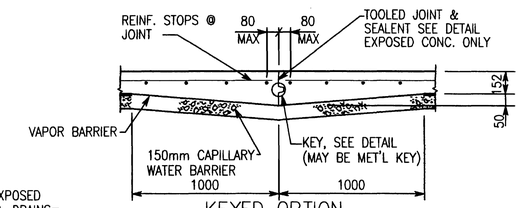

KEYED OPTION

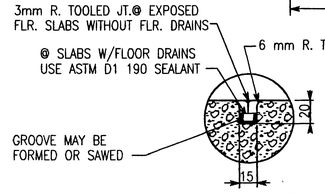

TOOLED JT. & SEALANT

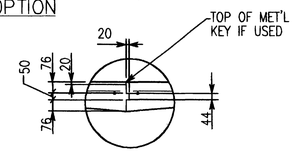

DETAIL OF KEY

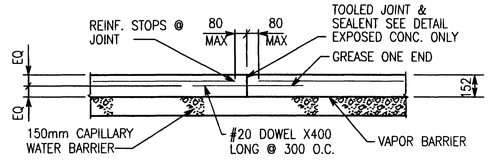

DOWELED OPTION
(CONTRACTION TYPE)

SLAB CONSTRUCTION JOINT DETAILS
TYPICAL
(FOR FLOOR SLABS ON GRADE EXCEPT RIB-MATS)
JOINT TYPE IS OPTIONAL

RIBBED MAT SCHEDULE

RIB #	SIZE	TOP BARS	INTERMEDIATE BARS	BOTTOM BARS	NOTES
P1	300x810	2#20	2#20	2#20	
P2	203x1115	3#20	4#20	3#20	2
P3	203x1115	2#20	4#20	2#20	2
T1	300x810	2#25	2#20	2#25	
T2	300x1115	2#25	4#20	2#25	2
D1	300x810	2#25	2#20	2#25	

NOTES:
1. SEE PLAN FOR RIB NUMBER AND LOCATION.
2. PROVIDE TWO LAYERS OF INTERMEDIATE REINFORCING.

TENSION LAP SPLICE AND EMBEDMENT LENGTHS
fy = 420 MPa (60000 psi), f'c = 21 MPa (3000 psi)

BAR SIZE	BAR DIA (mm)	EMBEDMENT (mm)				CLASS B LAP (mm)			
		TOP BAR		OTHER BARS		TOP BAR		OTHER BARS	
		CASE 1	CASE 2	CASE 1	CASE 2	CASE 1	CASE 2	CASE 1	CASE 2
10	9.5	560	815	435	635	715	1070	560	815
13	12.7	740	1095	560	840	940	1425	740	1095
16	15.9	915	1375	715	1045	1195	1880	915	1375
19	19.1	1095	1625	840	1270	1425	2135	1095	1625
22	22.2	1600	2390	1220	1830	2060	3100	1600	2390
25	25.4	1830	2720	1400	2085	2365	3530	1830	2720
29	28.7	2060	3075	1575	2365	2670	3990	2060	3075
32	32.3	2315	3455	1780	2670	3000	4500	2315	3455
36	35.8	2565	3835	1985	2950	3330	4980	2565	3835

1. TABLE A PRESENTS LENGTHS OF TENSION DEVELOPMENT LENGTHS AND TENSION LAP SPLICE LENGTHS BASED ON ACI 318-95, SECTION 12.2.2.
2. CASE 1 LENGTHS APPLY TO BEAMS WITH CONCRETE COVER EQUAL OR GREATER THAN THE BAR DIAMETER, CLEAR BAR SPACING EQUAL OR GREATER THAN THE BAR DIAMETER AND WITH STIRRUPS OR TIES NOT LESS THAN THE CODE MINIMUM THOROUTHOUT THE LENGTH IN THE TABLE.
3. CASE 2 LENGTHS APPLY TO BEAMS WITH CONCRETE COVER LESS THAN THE BAR DIAMETER, AND CLEAR BAR SPACING LESS THAN THE BAR DIAMETER.
4. TOP BARS ARE HORIZONTAL REINFORCEMENT PLACED SO THAT MORE THAN 30cm OF CONCRETE IS CAST BELOW THE REINFORCEMENT.

US Army Corps of Engineers
FORT WORTH DISTRICT

POLYENGINEERING, INC.
1256 Bonham Avenue
Dothan, Alabama 36303
(334) 793-4700 (voice)
(334) 793-9016 (fax)

Mark	Description	Date	Appr.
1	CLOSED STIRRUP	SEPT 01	W/B
2	CONCRETE STOOP DETAIL AND CLOSED STIRRUP	SEPT 01	W/B
3	SLAB REINFORCING, SLAB CONSTRUCTION DETAIL	MAR 01	WBB

Designed by: DESBY
Dwn by: DWNBY
Reviewed by: RVBY
Submitted by: SUBBY
Date: 19 JUL 2001
Rev.
Sol No. DACA63-01-B-0007
Contr No. DACA63-01-C-0016
File name:
Plot date:
Plot scale: AS SHOWN

U.S. ARMY ENGINEER DISTRICT
CORPS OF ENGINEERS
FORT WORTH, TEXAS

POLYENGINEERING, INC.
ENGINEERS & ARCHITECTS
DOTHAN, ALABAMA

FORT HOOD, TEXAS
DIGITAL MULTI-PURPOSE RANGE COMPLEX
PN 51915 FY 01

TYPICAL DETAILS
AND
SECTIONS

Sheet reference number:
S-2
Sheet of

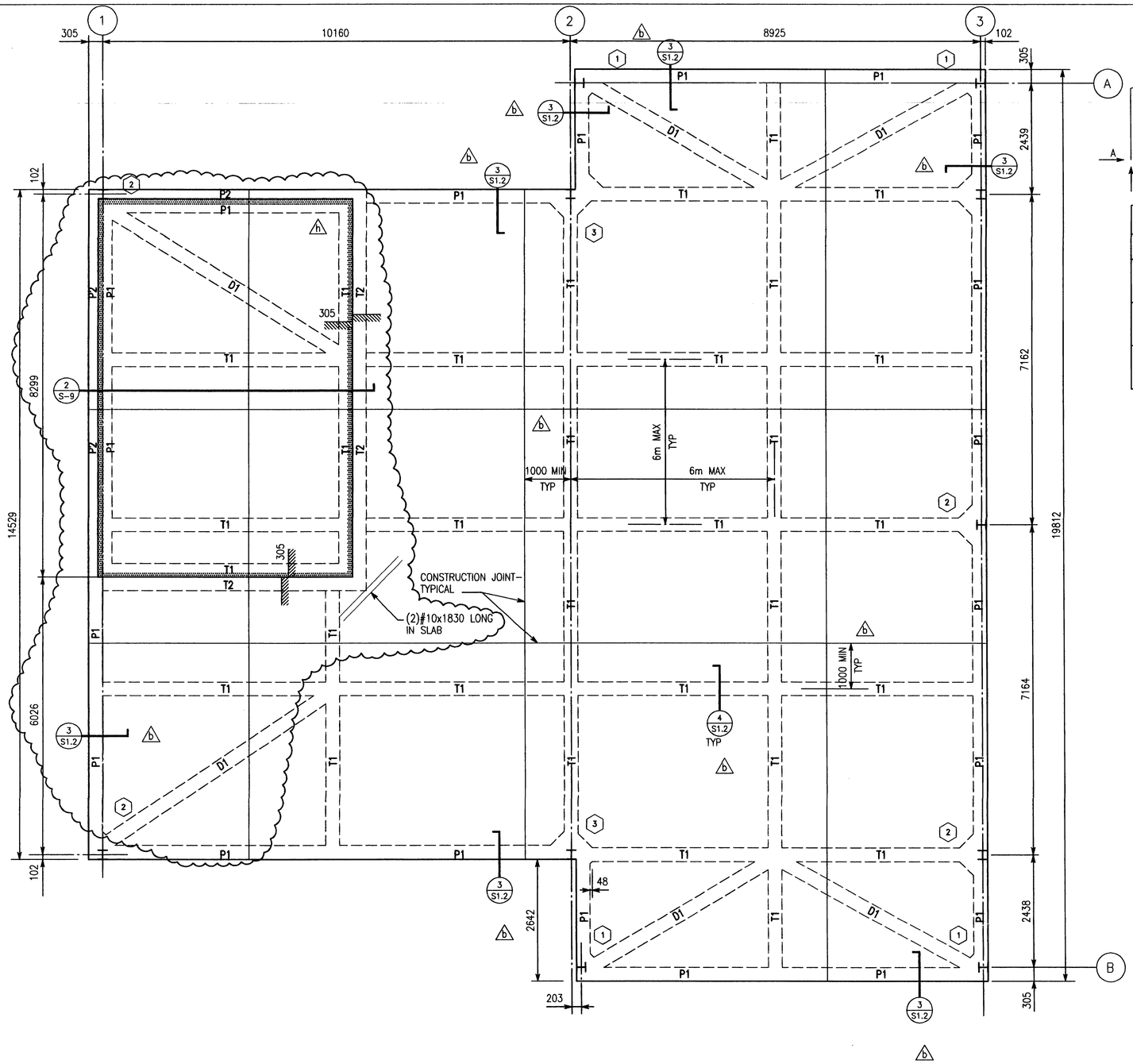

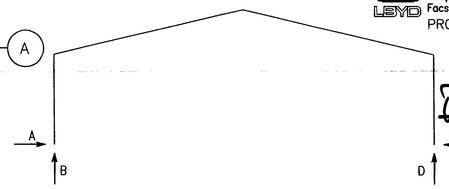

Lane Bishop York Delahay Inc.
Consulting Structural Engineers
716 So 30th St Birmingham, Alabama
Telephone (205)251-4500 35233
Facsimile (205)324-4181

PROJECT NO. 5883

STATE OF TEXAS — D. DALE YORK — 82469 — REGISTERED PROFESSIONAL ENGINEER

THE SEAL APPEARING ON THIS DOCUMENT WAS AUTHORIZED BY D. DALE YORK P.E. 82469, ON AUG 01,2001

US Army Corps of Engineers
FORT WORTH DISTRICT

POLYENGINEERING, INC.
REGISTERED ENGINEERS
1905 Headland Avenue
Dothan, Alabama 36305
(334) 793-4720 (voice)
(334) 793-9016 (fax)

COLUMN REACTIONS (kN)

LOCATION	LOAD CASE	A	B	C	D
LINE 1,3	DL+LL	22.2	40.0	22.2	40.0
	DL+WL	−21.8	−35.1	−8.9	−22.7
LINE 2	DL+LL	44.5	79.6	44.5	79.6
	DL+WL	−43.6	−70.3	−17.8	−45.4
LINE A,B	DL+LL	5.8	22.7	5.8	22.7
	DL+WL	−8.5	−22.7	2.7	−9.8

FOOTING SCHEDULE

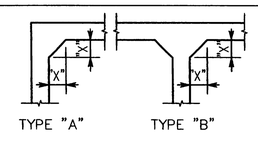

MARK	1	2	3
TYPE	"A"	"B"	"B"
DIM "X"	300	300	600

NOTE:
CONTRACTOR COORDINATE WITH PEMB MANFACTURER, BASE PLATE SIZES AND COLUMN SIZES, TO VERIFY IF PEDESTAL IS NEEDED FOR COLUMN AT RECESSED SLAB.

PLAN NORTH

AFTER ACTION REVIEW FOUNDATION AND FLOOR PLAN

1 : 50

1. FINISH FLOOR (TOP OF SLAB) REFERENCE ELEVATION 0.00, UNLESS NOTED
2. FOR RIBBED MAT SLAB CONSTRUCTION, SEE GENERAL NOTES, PLAN AND TYPICAL DETAILS.
3. GENERAL CONTRACTOR TO COORDINATE ALL DRAWINGS WITH METAL BUILDING SUPPLIER BEFORE FOUNDATION INSTALLATION BEGINS.
4. GENERAL CONTRACTOR SHALL OBTAIN AND LAYOUT ANCHOR BOLTS FROM ANCHOR BOLT SETTING PLAN PROVIDED BY THE METAL BUILDING MANUFACTURER.
5. CONSTRUCTION JOINTS IN BEAMS AND FLOOR SLABS SHALL BE PLACED WITH A JOINT SPACING NOT TO EXCEED 6m.
6. P1, T1, D1, ETC... DENOTE RIB NUMBERS. SEE SCHEDULE ON SHEET S-2 FOR SIZES AND REINFORCING.

GRAPHIC SCALE
1000 500 0 500 1000
SCALE: 1:50

Mark	Description	Date	Appr.
2	REVISED TO INCORPORATE DETAIL AND CLOSED STIRRUP	SEPT 01	WJB
1	ISSUED FOR CONSTRUCTION	AUG 01	WJB

Date: 19 JUL 2001 | Rev.
Designed by: DESBY
Chkd by: CHKBY
Dwn by: DWNBY
Sol No. DACA63-01-B-0007
Reviewed by: RVBY
Contr. No. DACA63-01-C-0016
Submitted by: SUBBY
File name:
Plot date:
Plot scale: AS SHOWN

U.S. ARMY ENGINEER DISTRICT
CORPS OF ENGINEERS
FORT WORTH, TEXAS

POLYENGINEERING, INC.
ENGINEERS & ARCHITECTS
DOTHAN, ALABAMA

FORT HOOD, TEXAS
DIGITAL MULTI-PURPOSE RANGE COMPLEX (DMPRC) FY 01
PN 51915

AFTER ACTION REVIEW
FOUNDATION AND FLOOR PLAN

Sheet reference number:
S-3
Sheet of

00663330

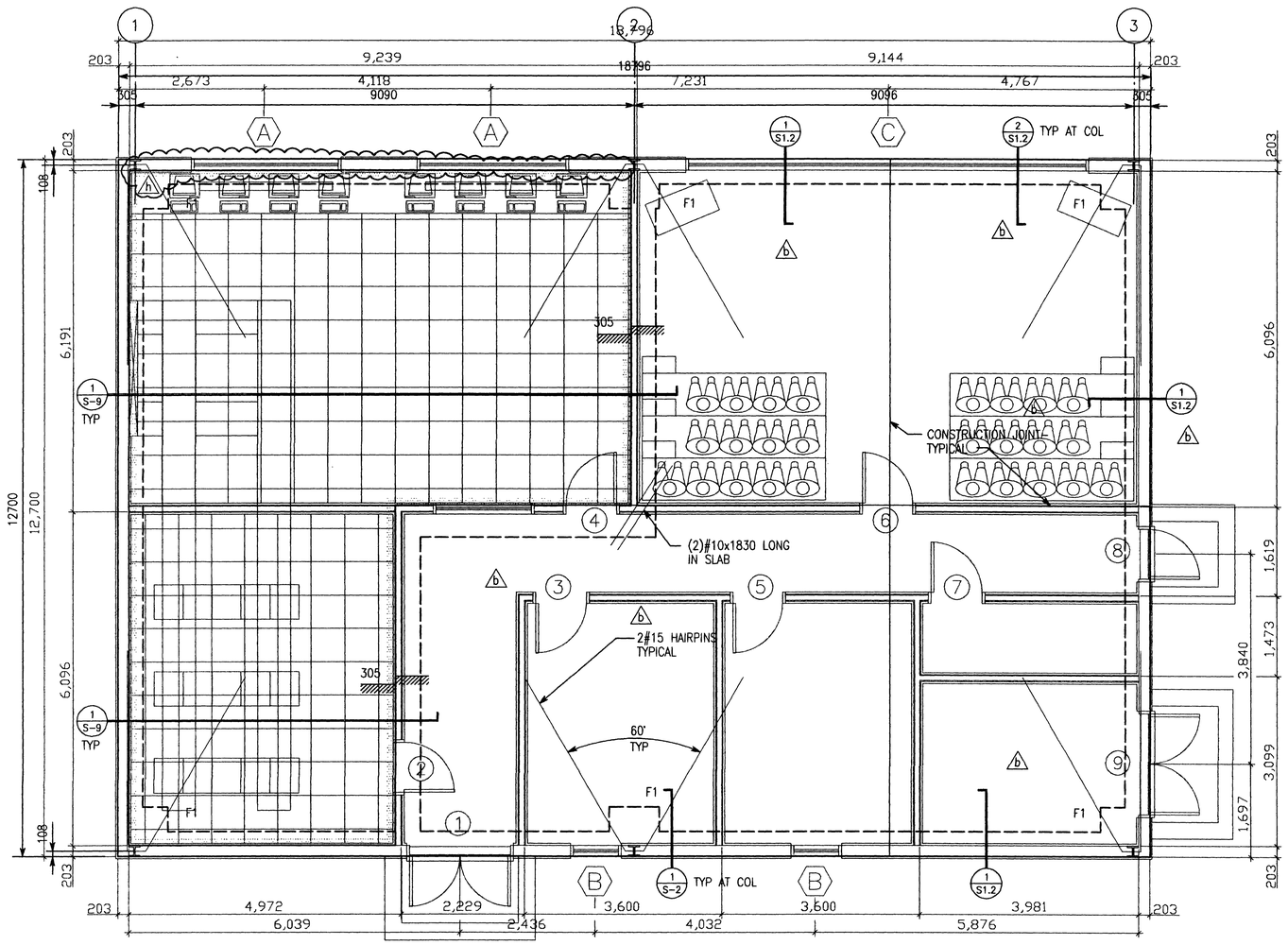

PLAN NORTH

CONTROL CENTRAL FOUNDATION AND FLOOR PLAN 1=50

1. FINISH FLOOR (TOP OF SLAB) REFERENCE ELEVATION 0.00, UNLESS NOTED
2. FOR SLAB ON GRADE CONSTRUCTION, SEE GENERAL NOTES, PLAN AND TYPICAL DETAILS.
3. GENERAL CONTRACTOR TO COORDINATE ALL DRAWINGS WITH METAL BUILDING SUPPLIER BEFORE FOUNDATION INSTALLATION BEGINS.
4. GENERAL CONTRACTOR SHALL OBTAIN AND LAYOUT ANCHOR BOLTS FROM ANCHOR BOLT SETTING PLAN PROVIDED BY THE METAL BUILDING MANUFACTURER.
5. F1 FOUNDATION – 914x914x609 W/ (4) #20 EACH WAY, TOP AND BOTTOM.

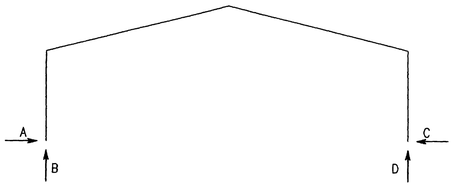

COLUMN REACTIONS (kN)					
LOCATION	LOAD CASE	A	B	C	D
LINE 1,3	DL+LL	17.8	32.9	17.8	32.9
	DL+WL	−17.3	−28.9	−7.6	−18.7
LINE 2	DL+LL	35.1	65.8	35.1	65.8
	DL+WL	−34.7	−57.8	−14.7	−36.9

NOTE:
CONTRACTOR COORDINATE WITH PEMB MANFACTURER, BASE PLATE SIZES AND COLUMN SIZES, TO VARIFY IF PEDESTAL IS NEEDED FOR COLUMN AT RECESSED SLAB.

b

STATE OF TEXAS
D. DALE YORK
82469
REGISTERED PROFESSIONAL ENGINEER

THE SEAL APPEARING ON THIS DOCUMENT WAS AUTHORIZED BY D. DALE YORK P.E. 82469, ON AUG 01,2001

LaneBishopYorkDekalb inc.
Consulting Structural Engineers
716 So 30th St Birmingham, Alabama
Telephone (205)251-4500 35233
Facsimile (205)324-4181
PROJECT NO. 5883

US Army Corps of Engineers
FORT WORTH DISTRICT

POLYENGINEERING, INC.
ENGINEERS AND ARCHITECTS
POLYENGINEERING, INC.
1900 Bradford Avenue
Dothan, Alabama 36305
(334) 793-4700 (voice)
(334) 793-8018 (fax)

Mark	Description	Date	Appr.
1	REVISED SLAB EDGE	SEPT 01	W/B
0	CONSTRUCTION JOINTS, FOUNDATION, SECTIONS	AUG 01	W/B

Date: 19 JUL 2001 Rev:
Sol No. DACA63-01-B-0007
Contr. No. DACA63-01-C-0016
File name:
Plot date:
Plot scale: AS SHOWN

Designed by: DESBY
Dwn by: DWGBY
Ckd by: CHKBY
Reviewed by: RVBY
Submitted by: SUBBY

U.S. ARMY ENGINEER DISTRICT
CORPS OF ENGINEERS
FORT WORTH, TEXAS

POLYENGINEERING, INC.
ENGINEERS & ARCHITECTS
DOTHAN, ALABAMA

FORT HOOD, TEXAS
DIGITAL MULTI-PURPOSE RANGE COMPLEX
PN 519115 (PROJ) FY 01

CONTROL CENTER
FOUNDATION AND
FLOOR PLAN

56248

GRAPHIC SCALE
1000 500 0 500 1000
SCALE: 1:50

Sheet reference number:
S-4
Sheet of

Contr. No. DACA63-01-C-0016

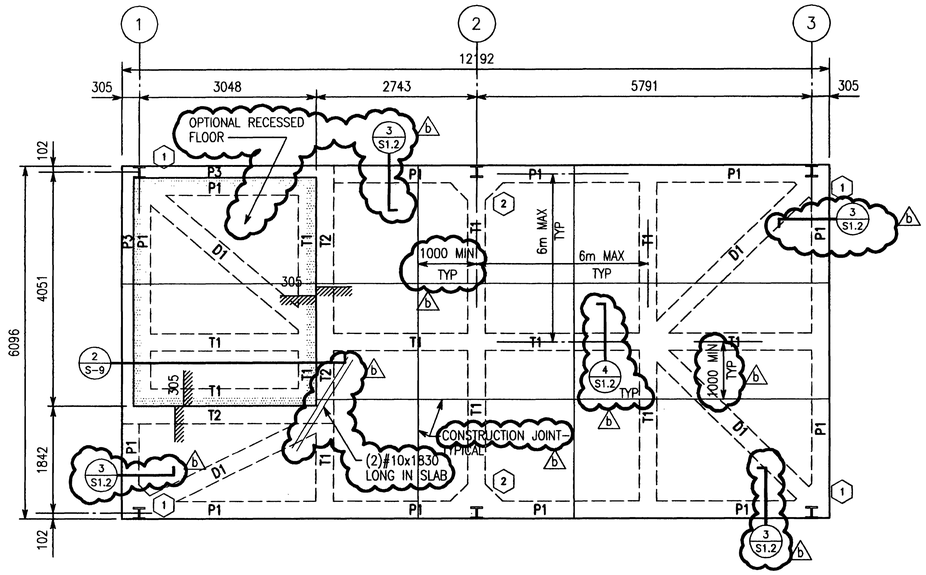

PLAN NORTH

GENERAL INSTRUCTION
FOUNDATION AND FLOOR PLAN 1=50

1. FINISH FLOOR (TOP OF SLAB) REFERENCE ELEVATION 0.00, UNLESS NOTED
2. FOR RIBBED MAT SLAB CONSTRUCTION, SEE GENERAL NOTES, PLAN AND TYPICAL DETAILS.
3. GENERAL CONTRACTOR TO COORDINATE ALL DRAWINGS WITH METAL BUILDING SUPPLIER BEFORE FOUNDATION INSTALLATION BEGINS.
4. GENERAL CONTRACTOR SHALL OBTAIN AND LAYOUT ANCHOR BOLTS FROM ANCHOR BOLT SETTING PLAN PROVIDED BY THE METAL BUILDING MANUFACTURER.
5. CONSTRUCTION JOINTS IN BEAMS AND FLOOR SLABS SHALL BE PLACED WITH A JOINT SPACING NOT TO EXCEED 6m.
6. P1, T1, D1, ETC... DENOTE RIB NUMBERS. SEE SCHEDULE ON SHEET S-2 FOR SIZES AND REINFORCING.

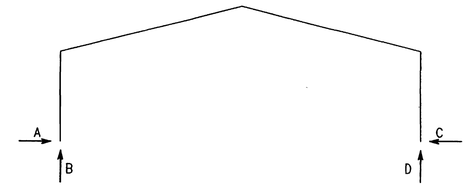

COLUMN REACTIONS (kN)

LOCATION	LOAD CASE	A	B	C	D
LINE 1,3	DL+LL	2.2	10.7	2.2	10.7
	DL+WL	−1.3	−10.2	3.6	−4.9
LINE 2	DL+LL	4.4	21.4	4.4	21.4
	DL+WL	−2.7	−20.5	7.2	−9.3

FOOTING SCHEDULE

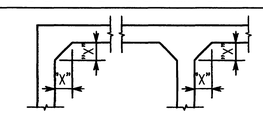

TYPE "A" TYPE "B"

MARK	1	2	3
TYPE	"A"	"B"	"B"
DIM "X"	300	300	600

NOTE:
CONTRACTOR COORDINATE WITH PEMB MANFACTURER, BASE PLATE SIZES AND COLUMN SIZES, TO VARIFY IF PEDESTAL IS NEEDED FOR COLUMN AT RECESSED SLAB.

GRAPHIC SCALE
1000 500 0 500 1000
SCALE: 1:50

Lane Bishop York Dekalb Inc.
Consulting Structural Engineers
716 So 30th St Birmingham, Alabama
Telephone (205)251-4500 35233
Facsimile (205)324-4181
PROJECT NO. 5883

STATE OF TEXAS
D. DALE YORK
82469
REGISTERED PROFESSIONAL ENGINEER

THE SEAL APPEARING ON THIS DOCUMENT WAS AUTHORIZED BY D. DALE YORK P.E. 82469, ON AUG 01,2001

US Army Corps of Engineers
FORT WORTH DISTRICT

POLYENGINEERING, INC.
1966 Ruckland Avenue
Dothan, Alabama 36303
(334) 793-4700 (voice)
(334) 793-8016 (fax)

Mark	Description	Date	Appr.
1	CONSTRUCTION JOINT, FOUNDATION SECTIONS	AUG 01	W.B.

Designed by: DESBY
Dwn by: DWNBY
Ckd by: CHKBY
Reviewed by: RVBY
Submitted by: SUBBY
Date: 19 JUL 2001
Rev.
Sol No. DACA63-01-B-0007
Contr No. DACA63-01-C-0016
File name:
Plot date:
Plot scale: AS SHOWN

U.S. ARMY ENGINEER DISTRICT
CORPS OF ENGINEERS
FORT WORTH, TEXAS

POLYENGINEERING, INC.
ENGINEERS & ARCHITECTS
DOTHAN, ALABAMA

FORT HOOD, TEXAS
DIGITAL MULTI-PURPOSE RANGE COMPLEX (DMPRC)
PN 51915 FY 01

GENERAL INSTRUCTION
FOUNDATION & FLOOR PLAN [redacted]

Sheet reference number:
S-5
Sheet of

00688360

Lane Bishop York Delahay Inc.
Consulting Structural Engineers
716 So 30th St Birmingham, Alabama
Telephone (205)251-4500 35233
Facsimile (205)324-4181
LBYD
PROJECT NO. 5883

US Army Corps of Engineers
FORT WORTH DISTRICT

STATE OF TEXAS
D. DALE YORK
82469
REGISTERED PROFESSIONAL ENGINEER

THE SEAL APPEARING ON THIS DOCUMENT WAS AUTHORIZED BY D. DALE YORK P.E. 82469, ON AUG 01,2001

POLYENGINEERING, INC.
1905 Headland Avenue
Dothan, Alabama 36305
(334) 793-2700 (voice)
(334) 793-9916 (fax)

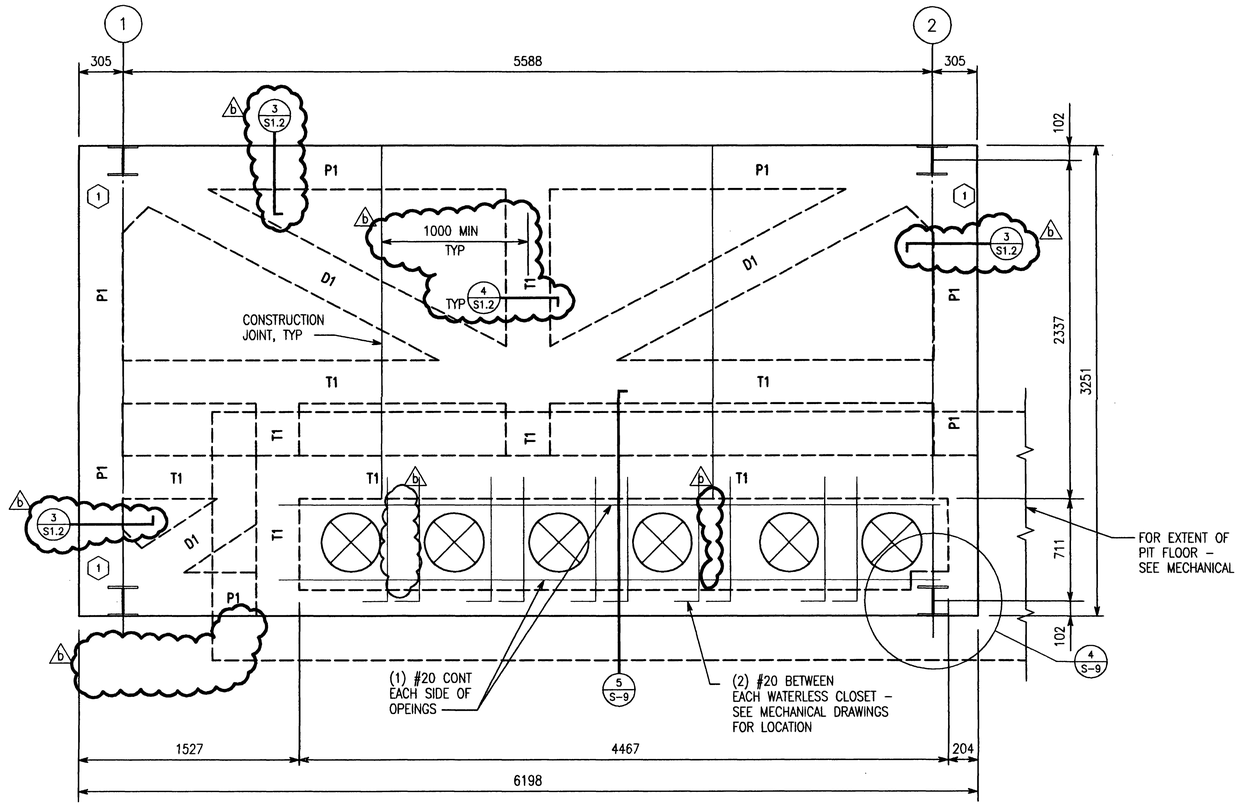

PLAN NORTH

DUAL SEX LATRINE FOUNDATION AND FLOOR PLAN 1:20

1. FINISH FLOOR (TOP OF SLAB) REFERENCE ELEVATION 0.00, UNLESS NOTED
2. FOR RIBBED MAT SLAB CONSTRUCTION, SEE GENERAL NOTES, PLAN AND TYPICAL DETAILS.
3. GENERAL CONTRACTOR TO COORDINATE ALL DRAWINGS WITH METAL BUILDING SUPPLIER BEFORE FOUNDATION INSTALLATION BEGINS.
4. GENERAL CONTRACTOR SHALL OBTAIN AND LAYOUT ANCHOR BOLTS FROM ANCHOR BOLT SETTING PLAN PROVIDED BY THE METAL BUILDING MANUFACTURER.
5. CONSTRUCTION JOINTS IN BEAMS AND FLOOR SLABS SHALL BE PLACED WITH A JOINT SPACING NOT TO EXCEED 6m.
6. P1, T1, D1, ETC... DENOTE RIB NUMBERS. SEE SCHEDULE ON SHEET S-2 FOR SIZES AND REINFORCING.

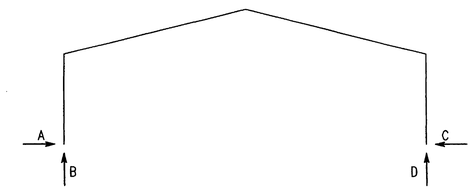

COLUMN REACTIONS (kN)

LOCATION	LOAD CASE	A	B	C	D
LINE 1,2	DL+LL	4.4	6.2	4.4	6.2
	DL+WL	3.6	–8.0	8.5	–2.2

FOOTING SCHEDULE

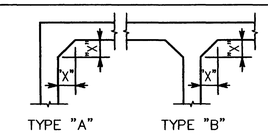

MARK	1	2
TYPE	"A"	"B"
DIM "X"	300	300

GRAPHIC SCALE
400 200 0 200 400
SCALE: 1:20

Mark	Description	Date	Appr.
B	CONSTRUCTION JOINTS, FOUNDATION SECTIONS	AUG 01	W/B

Designed by: DESBY
Dwn by: DWNBY
Ckd by: CHKBY
Reviewed by: RVBY
Submitted by: SUBBY
Date: 19 JUL 2001
Rev.
Sol No. DACA63-01-B-0007
Contr No. DACA63-01-C-0016
File name:
Plot date:
Plot scale: AS SHOWN

U.S. ARMY ENGINEER DISTRICT
CORPS OF ENGINEERS
FORT WORTH, TEXAS

POLYENGINEERING, INC.
ENGINEERS & ARCHITECTS
DOTHAN, ALABAMA

FORT HOOD, TEXAS
DIGITAL MULTI-PURPOSE RANGE COMPLEX (DMPRC)
PN 51915 FY 01

DUAL SEX LATRINE FOUNDATION AND FLOOR PLAN

Sheet reference number:
S-7
Sheet of

00688370

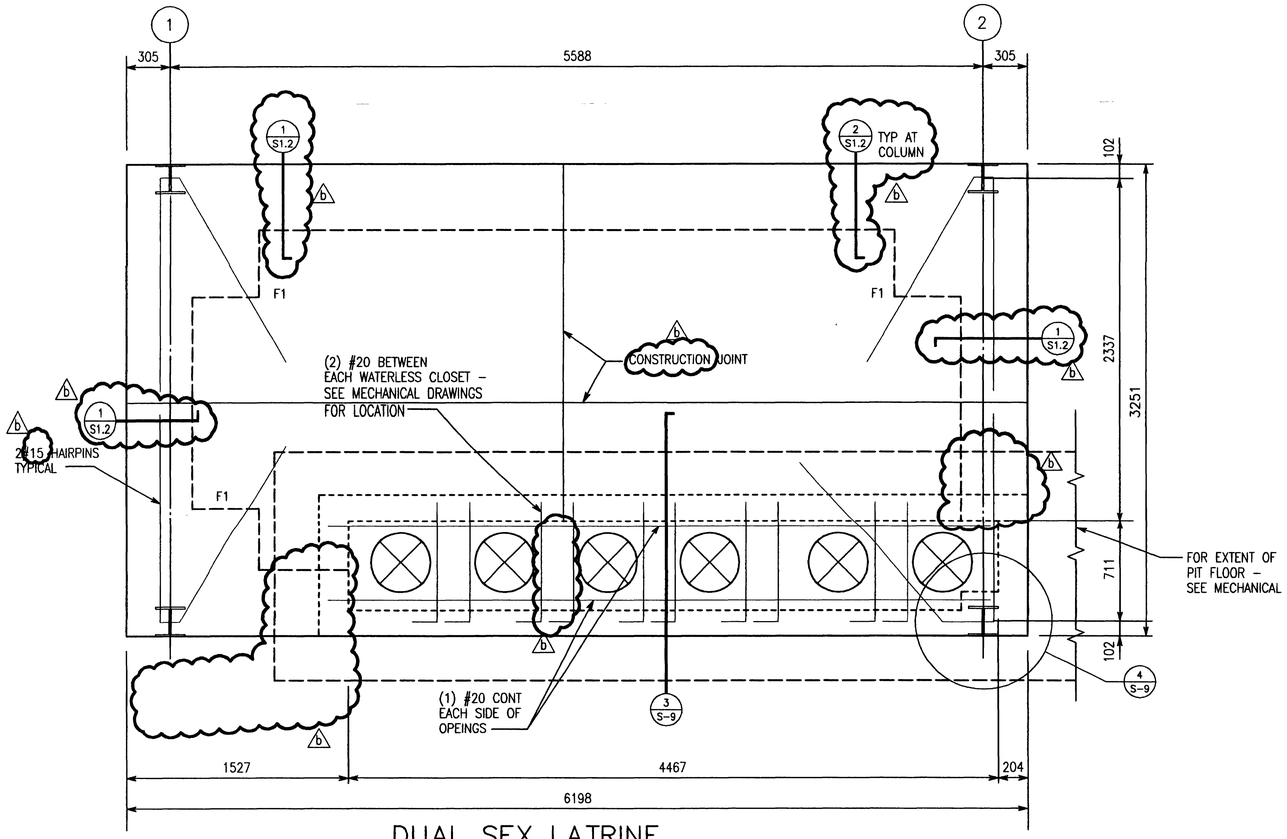

DUAL SEX LATRINE FOUNDATION AND FLOOR PLAN 1:20

PLAN NORTH

1. FINISH FLOOR (TOP OF SLAB) REFERENCE ELEVATION 0.00, UNLESS NOTED
2. FOR SLAB ON GRADE CONSTRUCTION, SEE GENERAL NOTES, PLAN AND TYPICAL DETAILS.
3. GENERAL CONTRACTOR TO COORDINATE ALL DRAWINGS WITH METAL BUILDING SUPPLIER BEFORE FOUNDATION INSTALLATION BEGINS.
4. GENERAL CONTRACTOR SHALL OBTAIN AND LAYOUT ANCHOR BOLTS FROM ANCHOR BOLT SETTING PLAN PROVIDED BY THE METAL BUILDING MANUFACTURER.
5. F1 FOUNDATION – 914x914x609 WITH (4) #20 EACH WAY, TOP AND BOTTOM.

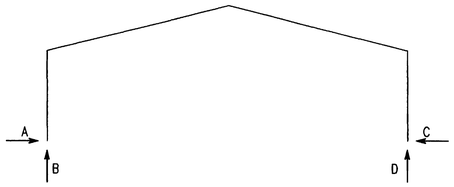

COLUMN REACTIONS (kN)					
LOCATION	LOAD CASE	A	B	C	D
LINE 1,2	DL+LL	4.4	6.2	4.4	6.2
	DL+WL	3.6	−8.0	8.5	−2.2

GRAPHIC SCALE
400 200 0 200 400
SCALE: 1:20

Lane Bishop York Dekalb Inc.
Consulting Structural Engineers
716 So 30th St Birmingham, Alabama
Telephone (205)251-4500 35233
Facsimile (205)324-4181
PROJECT NO. 5883

STATE OF TEXAS
D. DALE YORK
82469
REGISTERED PROFESSIONAL ENGINEER

THE SEAL APPEARING ON THIS DOCUMENT WAS AUTHORIZED BY D. DALE YORK P.E. 82469, ON AUG 01,2001

US Army Corps of Engineers
FORT WORTH DISTRICT

POLYENGINEERING, INC.
ENGINEERS AND ARCHITECTS
POLYENGINEERING, INC.
1035 Rosland Avenue
Dothan, Alabama 36303
(334) 793-4700 (voice)
(334) 793-9815 (fax)

Mark	Description	Date	Appr.
3	CONSTRUCTION JOINT, FOUNDATION SECTIONS	AUG 01	WBJ

Designed by: DESBY
Dwn by: DWNBY
Ckd by: CHKBY
Reviewed by: RVBY
Submitted by: SUBBY
Date: 19 JUL 2001
Rev.
Sol No. DAC463-01-B-0007
Contr No. DAC463-01-C-0016
File name:
Plot date:
Plot scale: AS SHOWN

U.S. ARMY ENGINEER DISTRICT
CORPS OF ENGINEERS
FORT WORTH, TEXAS

POLYENGINEERING, INC.
ENGINEERS & ARCHITECTS
DOTHAN, ALABAMA

FORT HOOD, TEXAS
DIGITAL MULTI-PURPOSE RANGE COMPLEX (DMPRC) FY 01
PN 51915

DUAL SEX LATRINE
FOUNDATION AND
FLOOR PLAN

Sheet reference number:
S-8
Sheet of

Contr No. DAC463-01-C-0016

00668380

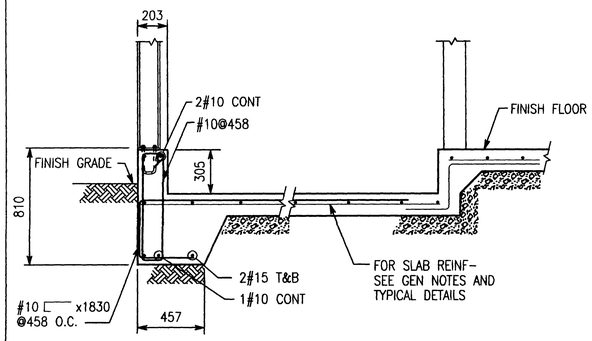

SECTION 1/S-9 1:20 b

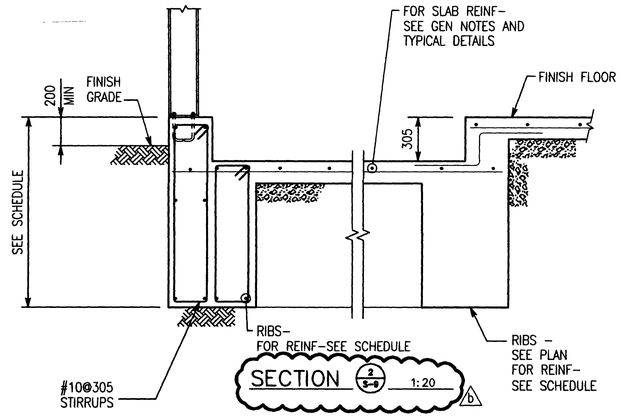

SECTION 2/S-9 1:20 b

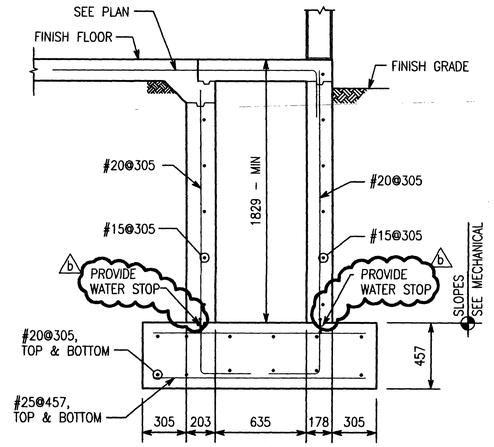

SECTION 3/S-9 1:20

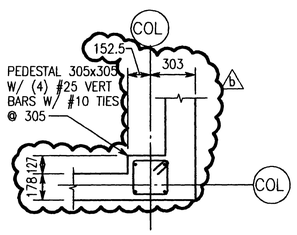

DETAIL 4/S-9 1:20

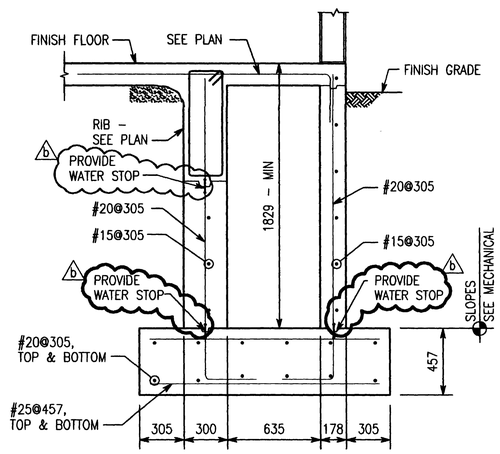

SECTION 5/S-9 1:20

LaneBishopYorkDolahayInc.
Consulting Structural Engineers
716 So 30th St Birmingham, Alabama
Telephone (205)251-4500 35233
Facsimile (205)324-4181
LBYD

PROJECT NO. 5883

STATE OF TEXAS
D. DALE YORK
62469
REGISTERED PROFESSIONAL ENGINEER

THE SEAL APPEARING ON THIS DOCUMENT WAS AUTHORIZED BY D. DALE YORK P.E. 62469, ON AUG 01,2001

US Army Corps of Engineers
FORT WORTH DISTRICT

POLYENGINEERING, INC.
ENGINEERS AND ARCHITECTS
POLYENGINEERING, INC.
1905 Headland Avenue
Dothan, Alabama 36303
(334) 792-4791 (voice)
(334) 792-5018 (fax)

Mark	Description	Date	Appr.
3	NEW SECTIONS FOR TOWER, WATERSTOPS, DIMENSIONS	AUG 01	M.B.

Date: 19 JUL 2001
Rev.
Sol No. DACA63-01-B-0007
Contr No. DACA63-01-C-0016
File name:
Plot date:
Plot scale: AS SHOWN

Designed by: DESBY
Dwn by: DWNBY
Ckd by: CHKBY
Reviewed by: RVBY
Submitted by: SUBBY

U.S. ARMY ENGINEER DISTRICT
CORPS OF ENGINEERS
FORT WORTH, TEXAS

POLYENGINEERING, INC.
ENGINEERS & ARCHITECTS
DOTHAN, ALABAMA

FORT HOOD, TEXAS
DIGITAL MULTI-PURPOSE RANGE COMPLEX
(DMPRC)
PN 51915 FY 01
CONTROL TOWER
SECTIONS

Sheet reference number:
S-9
Sheet of

Contr No. DACA63-01-C-0016

00688390

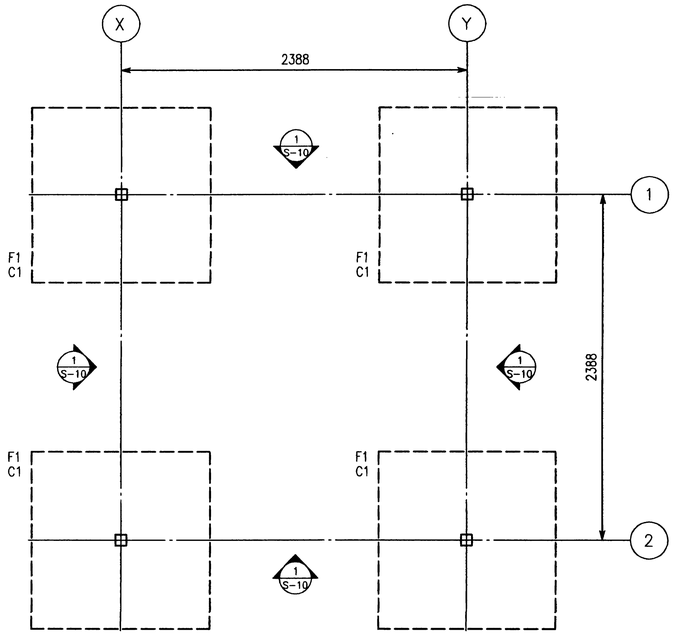

FOUNDATION PLAN 1:20

1. TOP OF FOOTINGS -305 BELOW FINISHED GRADE.
2. F1-FOOTING 1220x1220x457 WITH (5) #15, EACH WAY, TOP AND BOTTOM. e
3. C1-COLUMN TS 76x76x6.4 WITH BASEPLATE 19x305x305 WITH (4) 19mmx305 LONG (229+76 PROJECTION) ANCHOR BOLTS.
4. ALL EXPOSED STEEL TO BE GALVANIZED. e

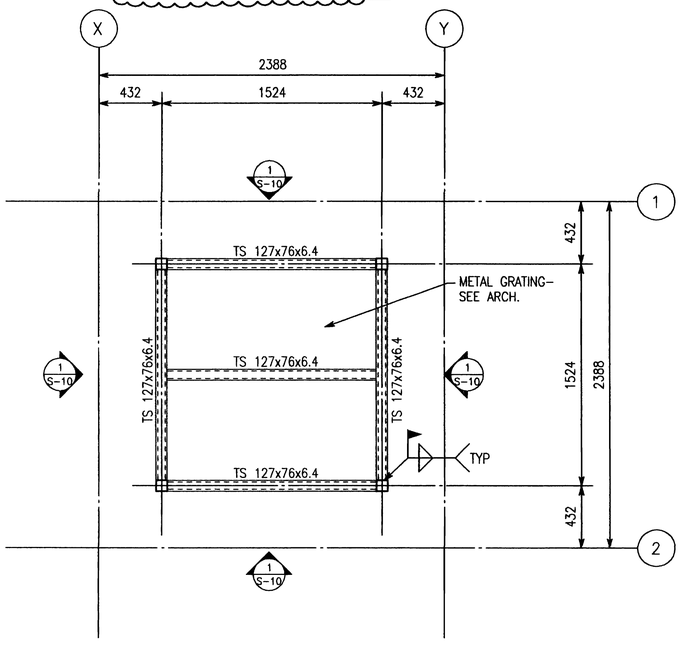

PLATFORM PLAN 1:20

1. TOP OF STEEL 5182 ABOVE TOP OF FOOTING.
2. FOR LOCATION OF TOWERS, SEE CIVIL DRAWINGS. e

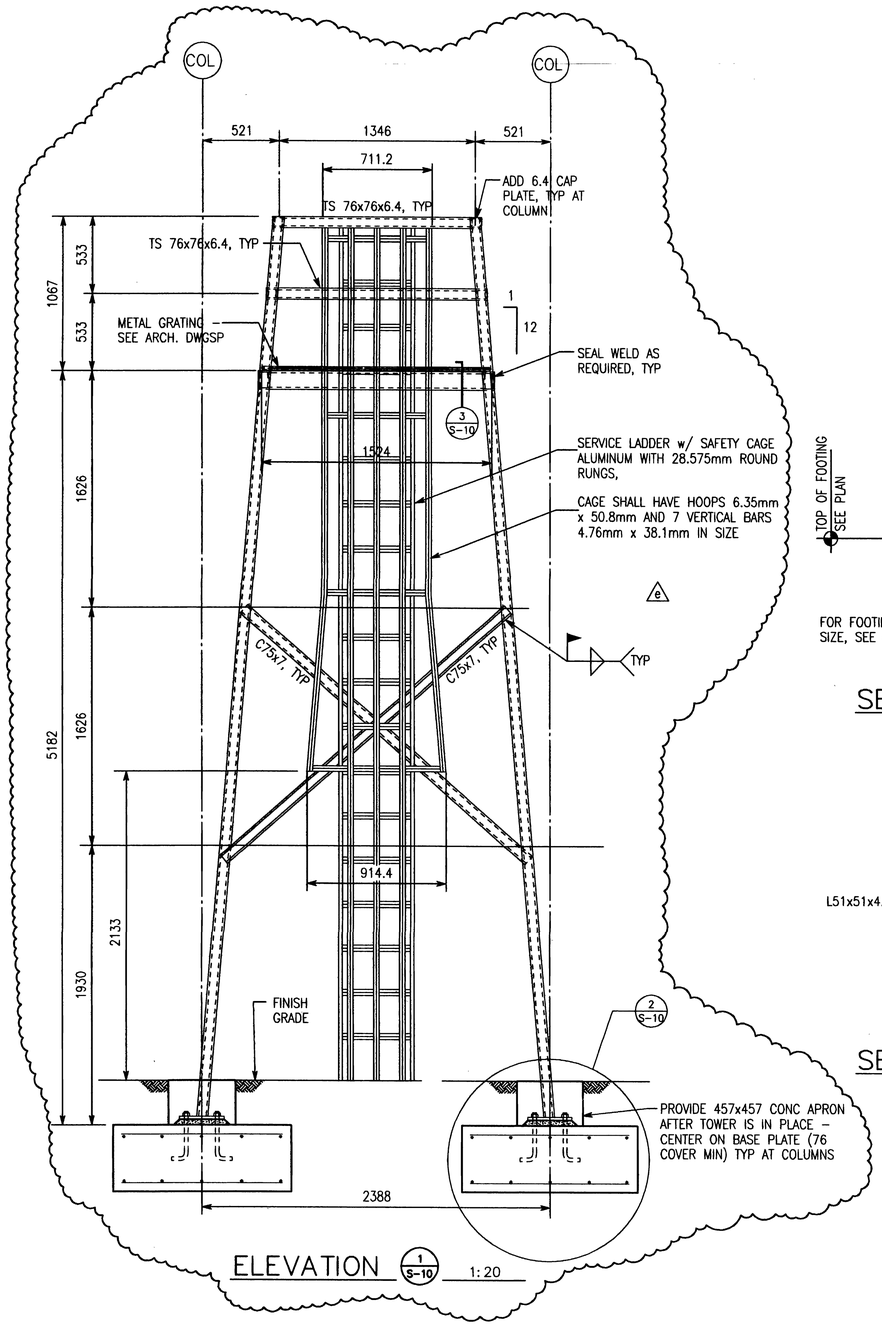

ELEVATION 1/S-10 1:20

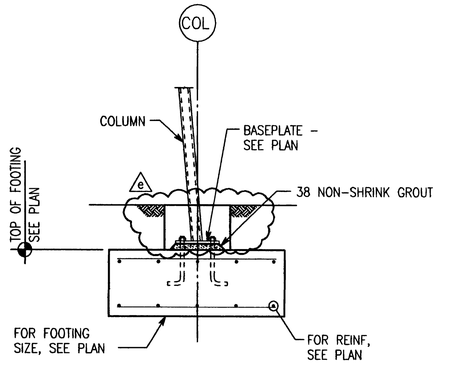

SECTION 2/S-10 1:20

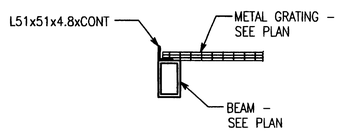

SECTION 3/S-10 1:10

GRAPHIC SCALE
400 200 0 200 400
SCALE: 1:20 b

Lane Bishop York Dekalb Inc.
Consulting Structural Engineers
716 So 30th St Birmingham, Alabama
Telephone (205)251-4500 35233
Facsimile (205)324-4181
LBYD

PROJECT NO. 5883

STATE OF TEXAS
D. DALE YORK
82469
REGISTERED PROFESSIONAL ENGINEER

THE SEAL APPEARING ON THIS DOCUMENT WAS AUTHORIZED BY D. DALE YORK P.E. 82469, ON AUG 01,2001

US Army Corps of Engineers
FORT WORTH DISTRICT

POLYENGINEERING, INC.
1886 Headland Avenue
Dothan, Alabama 36305
(334) 792-4700 (voice)
(334) 792-9110 (fax)

Mark	Description	Date	Appr.
A5	ANCHOR BOLT LENGTH, COVER REQUIREMENTS, ADDED LADDER AND CAGE.	SEPT 01	W/B
A2	NEW SHEET	AUG 01	W/B

Rev.

Date: 19 JUL 2001
Sol No. DACA63-01-B-0007
Contr No. DACA63-01-C-0016
File name:
Plot date:
Plot scale: AS SHOWN

Designed by: DESBY
Dwn by: DWNBY
Ckd by: CHKBY
Reviewed by: RVBY
Submitted by: SUBBY

U.S. ARMY ENGINEER DISTRICT
CORPS OF ENGINEERS
FORT WORTH, TEXAS

POLYENGINEERING, INC.
ENGINEERS & ARCHITECTS
DOTHAN, ALABAMA

FORT HOOD, TEXAS
DIGITAL MULTI-PURPOSE RANGE COMPLEX (DMPRC) FY 01
PN 51915
CONTROL TOWER
TYPICAL DETAILS
AND
SECTIONS

Sheet reference number:
S-10
Sheet of

Contr No. DACA63-01-C-0016

20686400

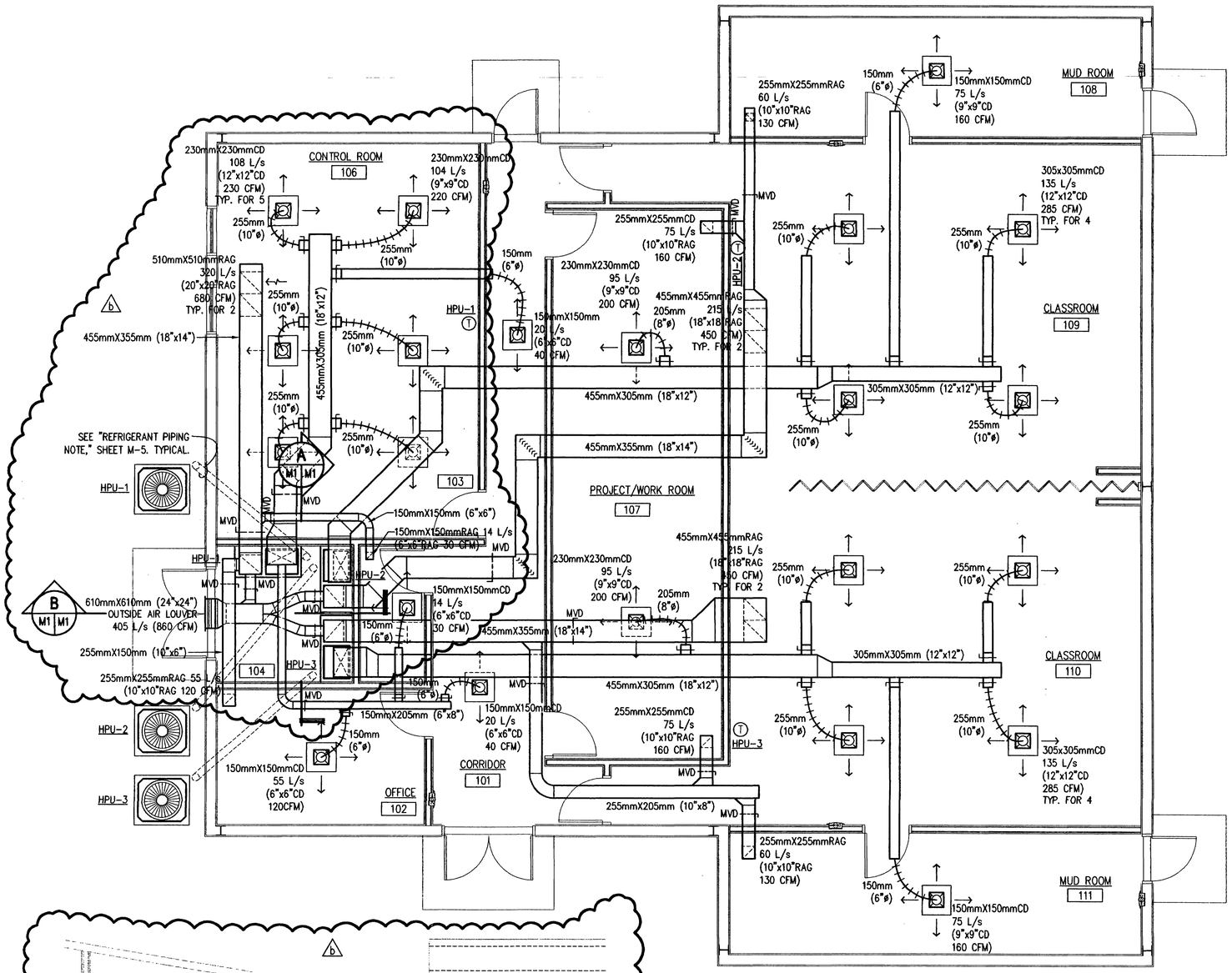

HVAC FLOOR PLAN
AFTER ACTION REVIEW BUILDING

SCALE: 1:50

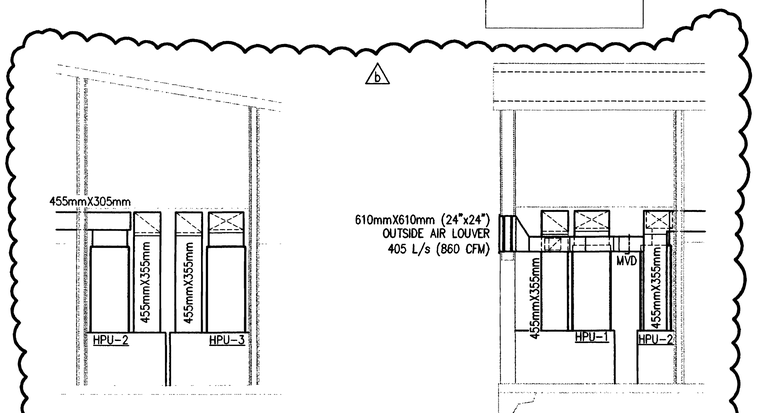

SECTION A (M1 | M1)
SCALE: 1:50

SECTION B (M1 | M1)
SCALE: 1:50

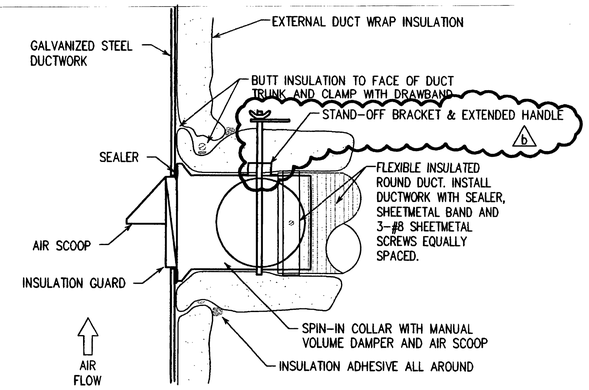

ROUND DUCT TAP-IN MOUNTING DETAIL

NOT TO SCALE

1000 500 0 500 1000
SCALE: 1:50

THE SEAL APPEARING ON THIS DOCUMENT WAS AUTHORIZED BY CHARLES D. BROWN ON AUGUST 8, 2001

ALABAMA REGISTERED PROFESSIONAL ENGINEER C. D. BROWN No. 14-3-01

US Army Corps of Engineers
FORT WORTH DISTRICT

POLYENGINEERING, INC.
1000 Montland Avenue
Dothan, Alabama 36303
(334) 793-6720 (voice)
(334) 793-6016 (fax)

Mark	Description	Date	Appr.
A	ADDED RETURN AIR GRILLES FOR ROOMS 102 & 104. ADDED MECH. ROOM SECTIONS.		
	TITLE BLOCK EDIT		

Designed by: Charles D. Brown
Dwn by: D. Burns
Ckd by: F. Corbari
Reviewed by:
Submitted by: E. Lamar Foulk
Date: 19 July 2001
Rev:
Sol. No. DACA63-01-B-0007
Contr. No. DACA63-01-C-0016
File name:
Plot date:
Plot scale: 1:50

U.S. ARMY ENGINEER DISTRICT
CORPS OF ENGINEERS
FORT WORTH, TEXAS

POLYENGINEERING, INC.
ENGINEERS & ARCHITECTS
DOTHAN, ALABAMA

FORT HOOD, TEXAS
DIGITAL MULTI-PURPOSE RANGE COMPLEX (DMPRC)
PN 51915 FY00

HVAC FLOOR PLAN
AFTER ACTION REVIEW BUILDING

Sheet reference number: M-1
Sheet of

Contr. No. DACA63-01-C-0016

00688410

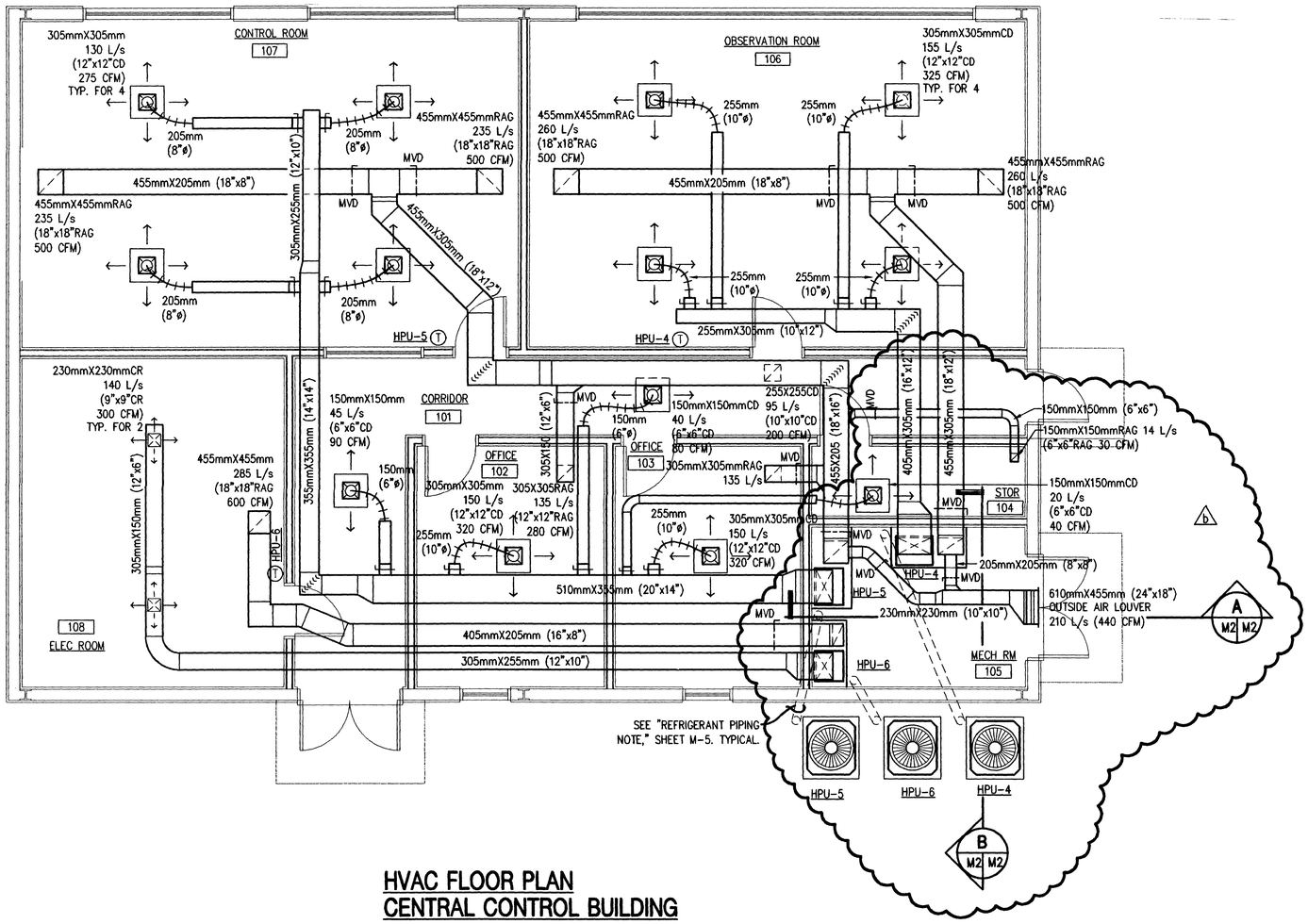

HVAC FLOOR PLAN
CENTRAL CONTROL BUILDING

SCALE: 1:50

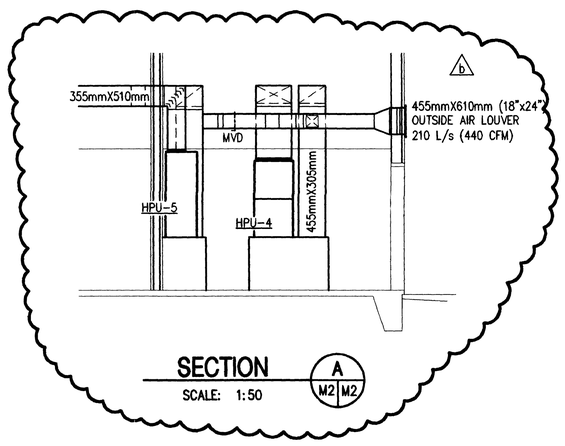

SECTION A M2 M2

SCALE: 1:50

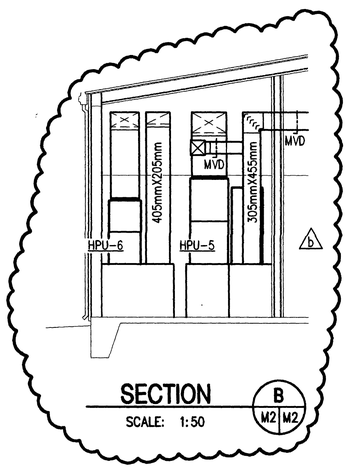

SECTION B M2 M2

SCALE: 1:50

1000 500 0 500 1000

SCALE: 1:50

THE SEAL APPEARING ON THIS DOCUMENT WAS AUTHORIZED BY CHARLES D. BROWN ON AUGUST 8, 2001

ALABAMA REGISTERED PROFESSIONAL ENGINEER C.D. BROWN 10-8-01

US Army Corps of Engineers
FORT WORTH DISTRICT

POLYENGINEERING, INC.
3205 Montland Avenue
Dothan, Alabama 36303
(334) 793-4700 (voice)
(334) 793-9218 (fax)

Mark	Description	Date	Appr.
b	ADDED MECH. ROOM SECTIONS, ADDED RETURN AIR GRILLE IN ROOM 104. TITLE BLOCK EDIT		

Designed by: Charles D. Brown
Dwn by: D. Burns
Ckd by: F. Corbari
Reviewed by:
Submitted by: E. Lamar Faulk
Date: 19 July 2001
Rev.
Sol. No. DACA63-01-B-0007
Contr. No. DACA63-01-C-0016
File name:
Plot date:
Plot scale: 1:50

U.S. ARMY ENGINEER DISTRICT
CORPS OF ENGINEERS
FORT WORTH, TEXAS

POLYENGINEERING, INC.
ENGINEERS & ARCHITECTS
DOTHAN, ALABAMA

FORT HOOD, TEXAS
DIGITAL MULTI-PURPOSE RANGE COMPLEX
PN 51915 PHASE 00

HVAC FLOOR PLAN
CENTRAL CONTROL BUILDING

Sheet reference number: M-2

Sheet of

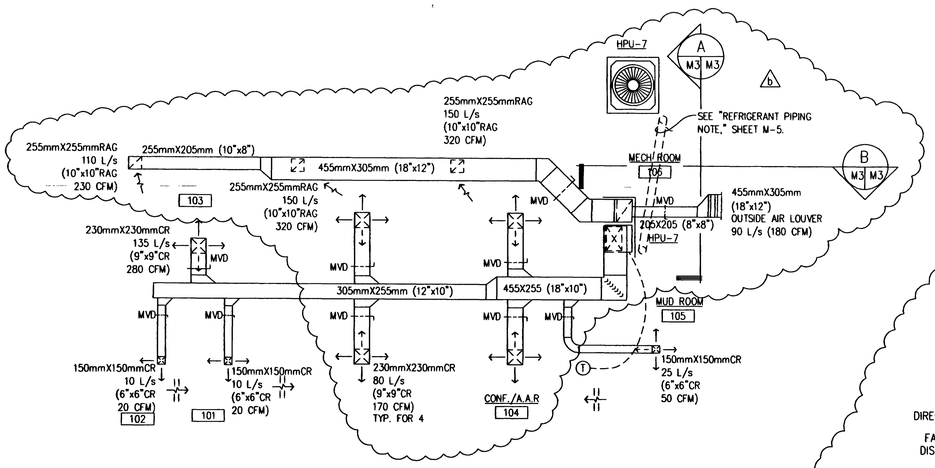

HVAC FLOOR PLAN
GENERAL INSTRUCTION BUILDING

SCALE: 1:50

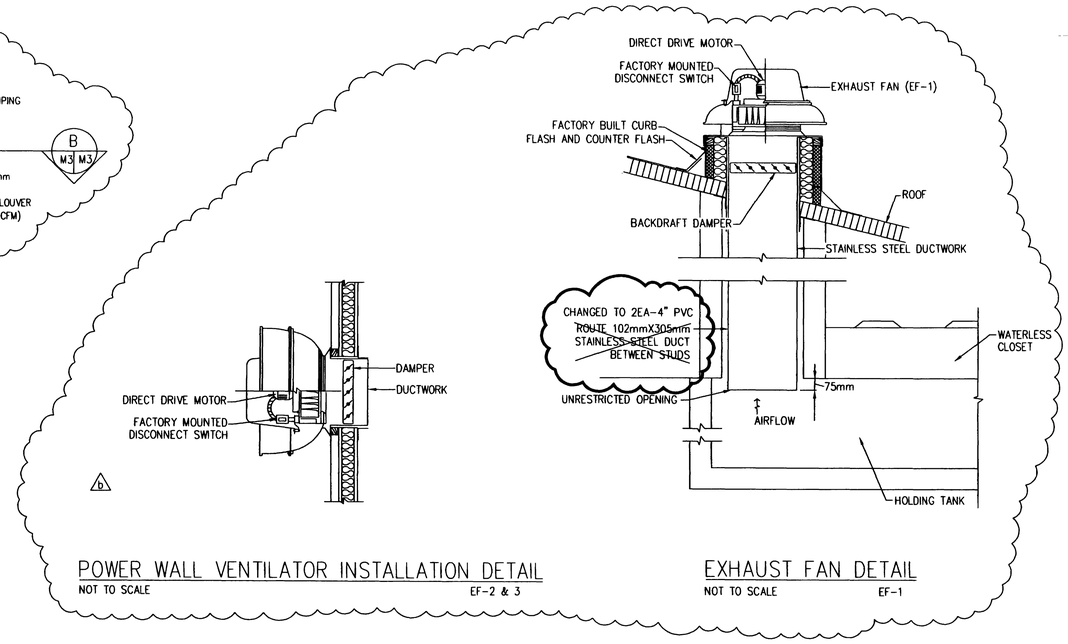

POWER WALL VENTILATOR INSTALLATION DETAIL

NOT TO SCALE EF-2 & 3

EXHAUST FAN DETAIL

NOT TO SCALE EF-1

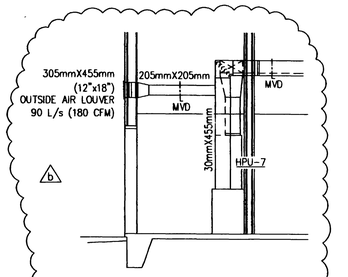

SECTION A

SCALE: 1:50

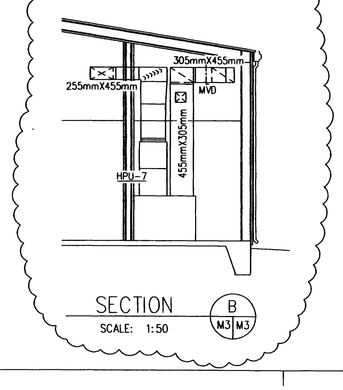

SECTION B

SCALE: 1:50

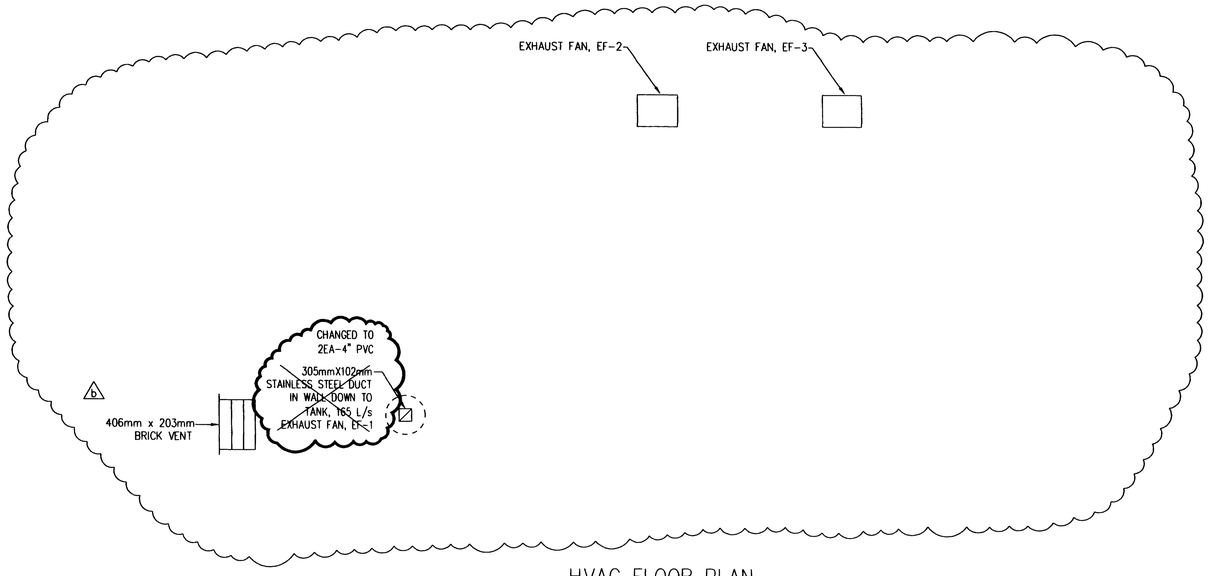

HVAC FLOOR PLAN
LATRINE BUILDING

SCALE: 1:20

0 200 400 800

SCALE: 1:20

1000 500 0 500 1000

SCALE: 1:50

THE SEAL APPEARING ON THIS DOCUMENT WAS AUTHORIZED BY CHARLES D. BROWN ON AUGUST 8, 2001

ALABAMA REGISTERED No.17076 PROFESSIONAL ENGINEER C.D. BROWN

US Army Corps of Engineers
FORT WORTH DISTRICT

POLYENGINEERING, INC.
1020 Headland Avenue
Dothan, Alabama 36303
(334) 793-6720 (voice)
(334) 793-9216 (fax)

Mark	Description	Date	Appr.
A	ADDED DETAILS, ADDED SECTIONS, ADDED BRICK VENT, UPDATED PLAN		

Designed by: Charles D. Brown
Dwn by: D. Burns
Ckd by: F. Corbori
Reviewed by:
Submitted by: E. Lamar Faulk
Date: 19 July 2001
Rev.
Sol. No. DACA63-01-B-0007
Contr. No. DACA63-01-C-0016
File name:
Plot date:
Plot scale: 1:50

U.S. ARMY ENGINEER DISTRICT
CORPS OF ENGINEERS
FORT WORTH, TEXAS

POLYENGINEERING, INC.
ENGINEERS & ARCHITECTS
DOTHAN, ALABAMA

FORT HOOD, TEXAS
DIGITAL MULTI-PURPOSE RANGE COMPLEX
PN 51915 FY 00

HVAC FLOOR PLANS
GENERAL INSTRUCTION BUILDING
LATRINE BUILDING

Sheet reference number:
M-3
Sheet of

Contr. No. DACA63-01-C-0016

2_M3.dwg 8/12/2005 8:14:13 AM

00688430

SPLIT SYSTEM AIR TO AIR HEAT PUMP UNIT SCHEDULE

MARK	INDOOR SECTION: TOTAL AIR L/s	OUTSIDE AIR L/s	EXTERNAL STATIC PRESSURE PASCALS	MAXIMUM FAN WATTS	ELECTRICAL DATA: VOLTS	PHASE	Hz	FILTER DATA: MAXIMUM FACE VELOCITY – Cm/s	TYPE	THICK	OUTDOOR SECTION: COMPRESSOR: QUANTITY	MAXIMUM RATED LOAD AMPS EA.	CONDENSER FANS: QUANTITY	MAXIMUM FULL LOAD AMPS EA.	ELECTRICAL DATA: VOLTS	PHASE	Hz	ARI COOLING DATA ③: TOTAL MINIMUM NET CAPACITY WATTS	MINIMUM S.E.E.R.	ARI HEATING DATA③: MINIMUM HIGH TEMP. ARI RATING @ 8°Cdb: CAPACITY WATTS	C.O.P.	AUXILIARY HEATER DATA: TYPE	TOTAL KW	NO. OF STEPS	ELECTRICAL DATA: VOLTS	PHASE	Hz	REMARKS
HPU-1	755	115	△b 76 ①	375	208	1	60	380	②	25mm	1	14.0	1	1.9	208	1	60	13,470	10.0	13,320	3.40	④	7.2	1	208	3	60	⑤⑥⑦⑧⑨
HPU-2	710	145	119 ①	375	208	1	60	380	②	25mm	1	14.0	1	1.9	208	1	60	14,050	10.0	13,470	3.85	④	7.2	1	208	3	60	⑤⑥⑦⑧⑨
HPU-3	710	145	74 ①	375	208	1	60	380	②	25mm	1	14.0	1	1.9	208	1	60	14,050	10.0	13,470	3.85	④	7.2	1	208	3	60	⑤⑥⑦⑧⑨
HPU-4	615	95	101 ①	375	208	1	60	380	②	25mm	1	14.0	1	1.9	208	1	60	13,030	10.0	13,180	3.34	④	7.2	1	208	3	60	⑤⑥⑦⑧⑨
HPU-5	920	115	127 ①	375	208	1	60	380	②	25mm	1	17.0	1	1.9	208	1	60	17,420	10.0	16,400	3.40	④	7.2	1	208	3	60	⑤⑥⑦⑧⑨
HPU-6	285	0	82 ①	186	208	1	60	380	②	25mm	1	8.0	1	0.5	208	1	60	5,450	10.0	5,130	3.42	④	3.6	1	208	1	60	⑤⑥⑦⑧⑨
HPU-7	500	85	60 ①	250	208	1	60	380	②	25mm	1	12.0	1	1.4	208	1	60	10,600	10.0	10,600	3.30	④	5.8	1	208	1	60	⑤⑥⑦⑧⑨

SPLIT-SYSTEM HEAT PUMP UNIT NOTES

① DOES NOT INCLUDE AIR PRESSURE DROP THROUGH FILTER OR ELECTRIC RESISTANT HEATER.

② DISPOSABLE

③ AT ARI STANDARD CONDITIONS.

④ ELECTRIC RESISTANCE.

⑤ REFRIGERANT PIPING SIZE, ROUTING AND CONFIGURATION SHALL BE AS RECOMMENDED BY MANUFACTURER OF HEAT PUMP. INSULATE ENTIRE SUCTION PIPE WITH 20mm FLEXIBLE UNICELLULAR INSULATION.

⑥ PROVIDE COMPRESSOR WITH ANTI-SHORT CYCLE CONTROLS AND TIME DELAY RELAY ON COMPRESSOR RESTART.

⑦ PROVIDE OUTDOOR SECTION WITH PVC COATED COIL GUARDS. OUTDOOR SECTION SHALL HAVE COPPER TUBES WITH ALUMINUM FINS.

△b ⑧ CONDENSATE PIPING SHALL BE 25mm PVC PIPING. TRAP AT UNIT AND ROUTE OUTDOORS, TURN DOWN AND SPILL INTO TRENCH DRAIN, SEE DETAIL. CONSTRUCT TRAP OUT OF TEES WITH A CAP ON EACH TEE.

⑨ ROUTE REFRIGERANT AND CONDENSATE PIPING TO ALLOW CONVENIENT ACCESS TO HEAT PUMP INDOOR SECTION FOR SERVICING. ALLOW A MINIMUM OF 915mm CLEARANCE IN FRONT OF ALL UNIT ACCESS PANELS.

FAN SCHEDULE

MARK	TYPE ①	DRIVE ②	SERVICE ③	LOCATION	CONTROL	INTERLOCKS	PERFORMANCE DATA: AIR FLOW L/s	EXTERNAL STATIC PRESS. Pa	MAXIMUM RPM	MAX SONES	ELECTRICAL DATA: MINIMUM POWER, Watts	VOLTS	PHASE	HERTZ	REMARKS
EF-1	PRV	DD	EA	SEE PLANS	WALL SW.	NONE	120	31	1,125	4.5	83	120	1	60	⑤
EF-2	PWV	DD	EA	SEE PLANS	WALL SW.	④	120	31	1,150	6.4	30	120	1	60	
EF-3	PWV	DD	EA	SEE PLANS	WALL SW.	④	50	31	1,690	3.3	10	120	1	60	

FAN SCHEDULE NOTES:

① PRV POWERED ROOFTOP VENTILATOR
PWV POWER WALL VENTILATOR

② DD – DIRECT DRIVE
BD – BELT DRIVE

③ EA – EXHAUST AIR

④ PROVIDE FAN WITH A TIME DELAY SWITCH FOR CONTROL OF FAN AND LIGHTS.

⑤ PROVIDE FAN WITH A SPEED CONTROLLER FOR AIR FLOW BALANCING. MOUNT CONTROLLER WITHIN FAN HOUSING.

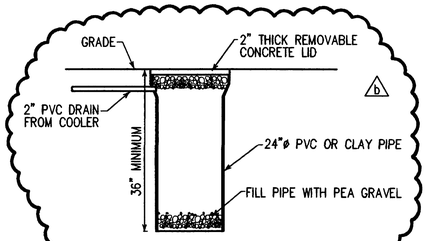

DRYWELL DETAIL

NOT TO SCALE

GENERAL HVAC NOTES

1. ALL RECTANGULAR SUPPLY, RETURN, AND OUTSIDE AIR DUCTWORK SHALL BE GALVANIZED STEEL, LOW PRESSURE RECTANGULAR, SMACNA STATIC PRESSURE CLASS 250Pa, SEAL CLASS B, EXTERNALLY INSULATED WITH 50mm THICK DUCTWRAP. DUCT SIZES INDICATED ARE ACTUAL SHEET METAL DIMENSIONS.
2. ALL EXHAUST AIR DUCTWORK SHALL BE GALVANIZED STEEL, LOW PRESSURE RECTANGULAR, SMACNA STATIC PRESSURE CLASS 250Pa, SEAL CLASS C, UNINSULATED. DUCT SIZES INDICATED ARE ACTUAL SHEET METAL DIMENSIONS.
3. THE MECHANICAL CONTRACTOR SHALL COORDINATE WITH THE GENERAL CONTRACTOR AND OTHER TRADES ALL REQUIRED OPENINGS IN WALLS, FOUNDATIONS, FLOORS, AND ROOFS.
4. ALL EXHAUST FAN OUTLETS SHALL BE LOCATED A MINIMUM OF 4570 mm FROM ANY OUTSIDE AIR INLET.

REFRIGERANT PIPING NOTE:

ROUTE REFRIGERANT PIPING UNDERGROUND INSIDE A 100mm PVC-DWV PIPE SLEEVE. TERMINATE PIPE SLEEVE APPROX. 100mm A.F.F. SEAL INDOOR AND OUTDOOR ENDS OF PIPE SLEEVE WATER TIGHT. ROUTE REFRIGERANT PIPING UP INSIDE OF WALL AND THEN TO EACH AIR HANDLER. SEE HVAC FLOOR PLANS, FOR AIR HANDLER LOCATIONS. INSULATE ENTIRE LENGTH OF EACH REFRIGERANT SUCTION PIPE WITH 20mm THICK FLEXIBLE UNICELLULAR INSULATION.

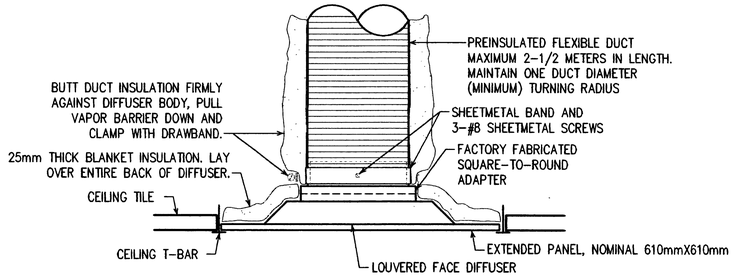

LOUVERED FACE CEILING DIFFUSER MOUNTING DETAIL

NOT TO SCALE

HVAC LEGEND △b

255mmX205mm	RECTANGULAR DUCTWORK. SIZES SHOWN ARE INSIDE CLEAR DIMENSIONS. SEE △b HVAC NOTES ON THIS SHEET.
	SQUARE THROAT ELBOW IN RECTANGULAR DUCTWORK WITH DOUBLE WALL TURNING VANES.
205mmø	FACTORY FABRICATED AND INSULATED FLEXIBLE ROUND DUCT. SIZE SHOWN IS INSIDE CLEAR DIMENSION.
	RECTANGULAR BRANCH DUCT TAKEOFF FROM RECTANGULAR MAIN DUCT. TAKEOFF SHALL BE MADE WITH A 45 DEGREE COLLAR.
	ROUND BRANCH DUCT TAKEOFF FROM RECTANGULAR MAIN DUCT. BRANCH DUCT SHALL BE FLEXIBLE ROUND DUCT OR ROUND SNAPLOCK DUCT AS INDICATED. ROUND DUCT TAP-IN SHALL BE MADE WITH SIDE TAKEOFF FITTING WITH MANUAL VOLUME DAMPER AND AIR SCOOP. SEE "ROUND DUCT TAP-IN MOUNTING DETAIL" ON SHEET M1.
MVD	MANUAL VOLUME DAMPER.
	RECTANGULAR SUPPLY OR OUTSIDE AIR DUCTWORK IN SECTION.
	RECTANGULAR RETURN OR EXHAUST AIR DUCTWORK IN SECTION.
305mmX305mmCD 160 L/s	CEILING DIFFUSER. LOUVERED FACE. SQUARE FACE DIMENSIONS, ROUND NECK SIZE, AND AIR FLOW AS INDICATED. DIRECTION OF FLOW AS INDICATED BY ARROWS. PROVIDE WITH FACTORY FABRICATED SQUARE-TO-ROUND ADAPTER. POVIDE WITH EXTENDED PANEL IF INSTALLED IN A LAY-IN CEILING. SEE "LOUVERED FACE CEILING DIFFUSER MOUNTING DETAIL" ON THIS SHEET. TITUS MODEL TDC OR APPROVED EQUAL.
255mmX155mmCR 50 L/s	CEILING REGISTER. CURVED BLADE. RECTANGULAR NECK SIZE AND AIR FLOW AS INDICATED. DIRECTION OF THROW AS INDICATED BY ARROWS. PROVIDE WITH OPPOSED BLADE VOLUME CONTROL DAMPER. TITUS MODEL 250 OR APPROVED EQUAL.
305mmX305mmRAG 120 L/s	RETURN AIR GRILLE. EGG CRATE FACE. SQUARE NECK SIZE AND AIR FLOW AS INDICATED. PROVIDE WITH EXTENDED PANEL IF INSTALLED IN A LAY-IN CEILING. PAINT RETURN AIR DUCT THAT IS VISIBLE THROUGH GRILLE FLAT BLACK.
OAL	OUTSIDE AIR LOUVER.
	SUPPLY AND OUTSIDE AIR FLOW.
	RETURN AND EXHAUST AIR FLOW.
	UNDERCUT DOOR 20mm TO ALLOW AIR FLOW.
T	THERMOSTAT. MOUNT AT 1525mm A.F.F.
EF-#	EXHAUST FAN. SEE SCHEDULE ON THIS SHEET. △b
A.F.F.	ABOVE FINISHED FLOOR.

SPLIT SYSTEM HEAT PUMP SEQUENCE OF OPERATION: △b

EACH SYSTEM SHALL BE PROVIDED WITH ROOM THERMOSTAT. THERMOSTATS SHALL HAVE SUBBASE WITH SYSTEM HEAT-OFF-COOL AND FAN AUTO-ON CONTROLS. THERMOSTAT SHALL BE DESIGNED TO PERMIT INTERLOCK WITH OUTDOOR THERMOSTAT AND SHALL ALSO HAVE AN EMERGENCY HEAT SWITCH TO ENERGIZE THE AUXILIARY ELECTRIC STRIP HEATER. THE OUTDOOR UNIT SHALL HAVE AN OUTDOOR THERMOSTAT DESIGNED TO ENERGIZE THE ELECTRIC STRIP HEATER AND LOCATE THE COMPRESSOR AT A SET TEMPERATURE.

△b THE SEAL APPEARING ON THIS DOCUMENT WAS AUTHORIZED BY CHARLES D. BROWN ON AUGUST 8, 2001

ALABAMA REGISTERED PROFESSIONAL ENGINEER C.D. BROWN 10-6-01

US Army Corps of Engineers
FORT WORTH DISTRICT

POLYENGINEERING, INC.
1966 Bradford Avenue
Dothan, Alabama 36303
(334) 793-6720 (voice)
(334) 793-6018 (fax)

Mark	Description	Date	Appr.
△a	ADDED DETAIL & SEQUENCE OF OPERATION, MODIFIED SCHEDULE & LEGEND		

TITLE BLOCK EDIT

Date: 19 July 2001 | Rev.
Sol. No. DACA63-01-B-0007
Contr. No. DACA63-01-C-0016
File name:
Plot date:
Plot scale: 1:100

Designed by: Charles D. Brown
Dwn by: D. Burns
Ckd by: F. Corbari
Reviewed by:
Submitted by: E. Lamar Faulk

U.S. ARMY ENGINEER DISTRICT
CORPS OF ENGINEERS
FORT WORTH, TEXAS

POLYENGINEERING, INC.
ENGINEERS & ARCHITECTS
DOTHAN, ALABAMA

FORT HOOD, TEXAS
DIGITAL MULTI-PURPOSE RANGE COMPLEX (DMPRC) F-QQ
PN 51915

HVAC SCHEDULES AND DETAILS

Sheet reference number: M-5
Sheet of

00688440

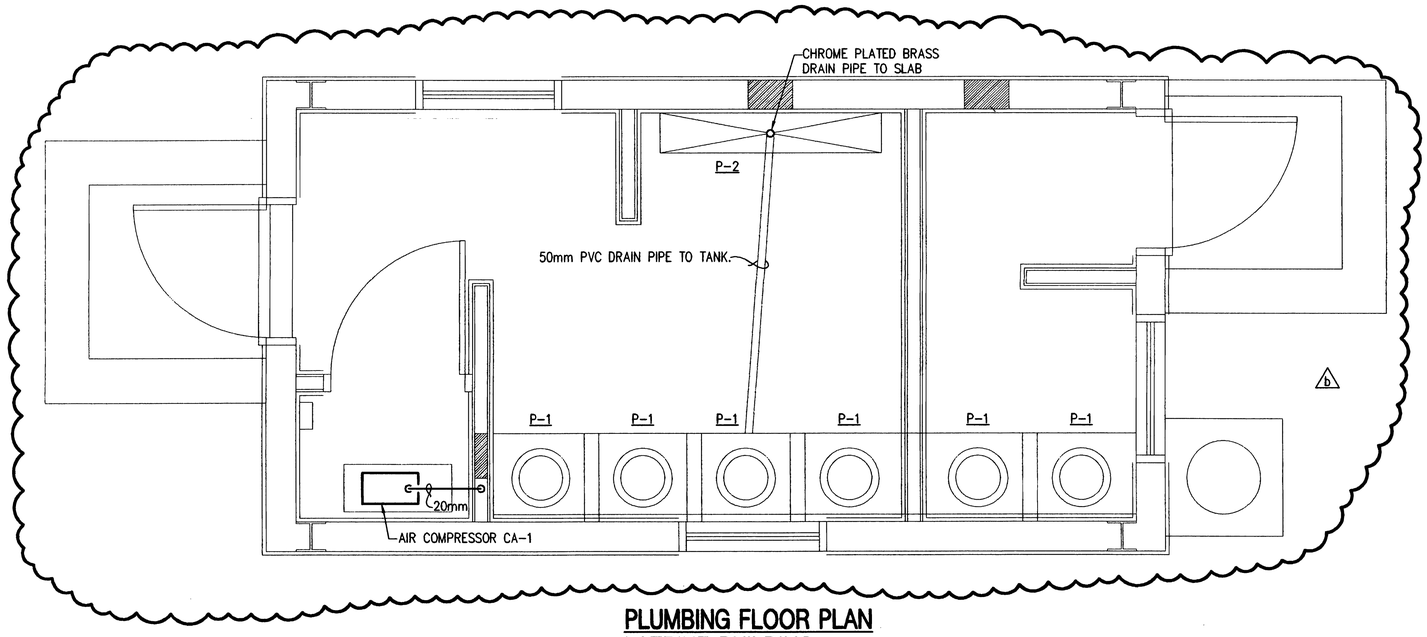

PLUMBING FLOOR PLAN
LATRINE BUILDING

SCALE: 1:20

PLUMBING LEGEND

—CA—	COMPRESSED AIR PIPING
—⊣⊢—	UNION
—ɔ—	ELBOW TURNED DOWN
—o—	CONNECTION, BOTTOM
P-#	PLUMBING FIXTURE MARK – SEE SCHEDULE

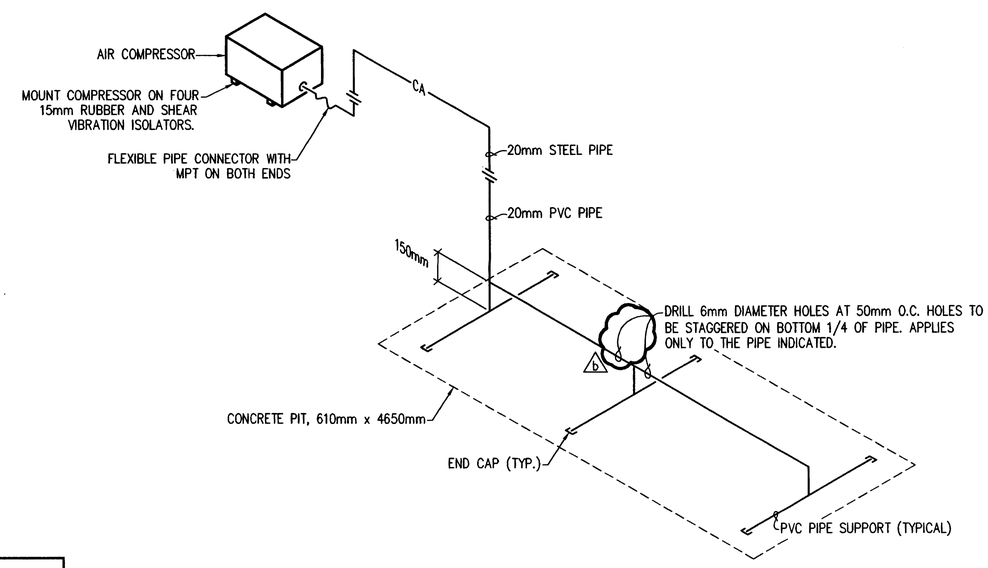

COMPRESSED AIR RISER DIAGRAM

NOT TO SCALE

b

AIR COMPRESSOR SCHEDULE

MARK	L/S	kPa	kW	MAXIMUM RPM	ELECTRICAL		
					VOLTS	PHASE	HZ
CA-1	6.37	65	1.5	3450	208	1	60

AIR COMPRESSOR NOTE:

AIR COMPRESSOR SHALL BE A POSITIVE DISPLACEMENT ROTARY TWIN LOBE, OR SLIDING VANE TYPE AIR BLOWER. BLOWER MAY BE DIRECT OR BELT DRIVE. THE UNIT SHALL INCLUDE AN AIR INTAKE, MUFFLER, FILTER, AND PRESSURE RELIEF VALVE WITH A UNIT MOUNTED PUSH-BUTTON MOTOR STARTER IN A NEMA 1 ENCLOSURE. PVC PIPE AND FITTINGS SHALL BE SCHEDULE 40, CONFORMING TO ASTM D1785 AND D2466. STEEL PIPE SHALL BE ASTM A120, SCHEDULE 40, GALVANIZED.

PLUMBING FIXTURE CONNECTION SCHEDULE

MARK #	FIXTURE TYPE	CONNECTIONS			REMARKS
		WASTE	CW	HW	
P-1	WATERLESS TOILET STOOL	–	–	–	STAINLESS STEEL WITH SEAT AND COVER
P-2	URINAL (MULTI-PERSON TYPE)	40mm	–	–	STAINLESS STEEL WITH PERFORATED STRAINER. SEE ARCHITECTURAL DRAWINGS FOR SIZE AND DETAIL OF URINAL.

0 200 400 800
SCALE: 1:20

THE SEAL APPEARING ON THIS DOCUMENT WAS AUTHORIZED BY CHARLES D. BROWN ON AUGUST 8, 2001

ALABAMA REGISTERED No.18076 PROFESSIONAL ENGINEER C. D. BROWN 10-4-01

US Army Corps of Engineers
FORT WORTH DISTRICT

POLYENGINEERING, INC.
ENGINEERS & ARCHITECTS
POLYENGINEERING, INC.
1905 Headland Avenue
Dothan, Alabama 36303
(334) 793-4700 (voice)
(334) 793-5018 (fax)

Mark	Description	Date	Appr.
A	ADDED LEADER, CHANGED PRESSURE, UPDATE PLAN, ADDED NOTES TO PLAN.		
	TITLE BLOCK EDIT		

Designed by: Charles D. Brown
Dwn by: D. Burns
Ckd by: F. Corbari
Reviewed by:
Submitted by: E. Lamar Faulk
Date: 19 July 2001
Rev.
Sol. No. DACA63-01-B-0007
Contr. No. DACA63-01-C-0016
File name:
Plot date:
Plot scale: 1:50

U.S. ARMY ENGINEER DISTRICT
CORPS OF ENGINEERS
FORT WORTH, TEXAS

POLYENGINEERING, INC.
ENGINEERS & ARCHITECTS
DOTHAN, ALABAMA

FORT HOOD, TEXAS
DIGITAL MULTI-PURPOSE RANGE COMPLEX
PN 51915 FY00
PLUMBING FLOOR PLAN
LATRINE BUILDING

b

Sheet reference number:
P-1
Sheet of

b

00688450

Contr. No. DACA63-01-C-0016

POWER POLE EQUIPMENT LIST	
ITEM	DESCRIPTION
A	MACHINE BOLT – 16mm X LENGTH REQUIRED
B	SHACKLE, ANCHOR
C	CURVED WASHER, NUT AND MF LOCKNUT – 16mm
D	RIGID INSULATED CLEVIS – 38mm x 13mm x 3mm CHANNEL, CLASS 53-3
E	JUMPERS – COPPER, SIZE AS REQUIRED
F	ALUMINUM HOT LINE CLAMP AND BAIL CLAMP W/ALUMINUM-TO-COPPER STIRRUP
G	LIGHTNING ARRESTER – 9 KV
H	PRIMARY FUSED CUTOUT – 100 AMP, OPEN TYPE, RATED 14.4 KV LOADBREAK TYPE
I	COPPER CONDUCTOR – SD, BARE WITH PROTECTIVE MOLDING
J	NOT USED
K	NOT USED
L	CABLE TERMINATOR – 1/C, 15 KV AND CROSSARM MOUNTING BRACKET
M	LINE-POST TYPE INSULATOR AND BRACKET
N	NOT USED
P	PIN AND INSULATOR – CLASS 56-3
Q	CABLE SEAL AND SUPPORT FITTING – 100mm
R	NOT USED
S	NOT USED
T	12mm GALVANIZED RIGID STEEL CONDUIT – SEE TYP. GROUNDING DETAIL, THIS SHEET
U	2-HOLE GALVANIZED STEEL CONDUIT STRAP
V	100mm GALVANIZED RIGID STEEL CONDUIT RISER
W	1-PHASE CUTOUT AND ARRESTER MOUNTING BRACKET
X	METAL COMBINATION CUTOUT LIGHTNING ARRESTER BRACKET FOR CROSSARM
Y	NOT USED
Z	NOT USED
AA	COMMUNICATIONS CABLE HANGAR
BB	FIBERGLASS CUTOUT & ARRESTOR TRI-ARM MOUNTING BRACKET – SEE DETAIL, SHEET E4
CC	TRI-MOUNT CABLE TERMINATOR BRACKET

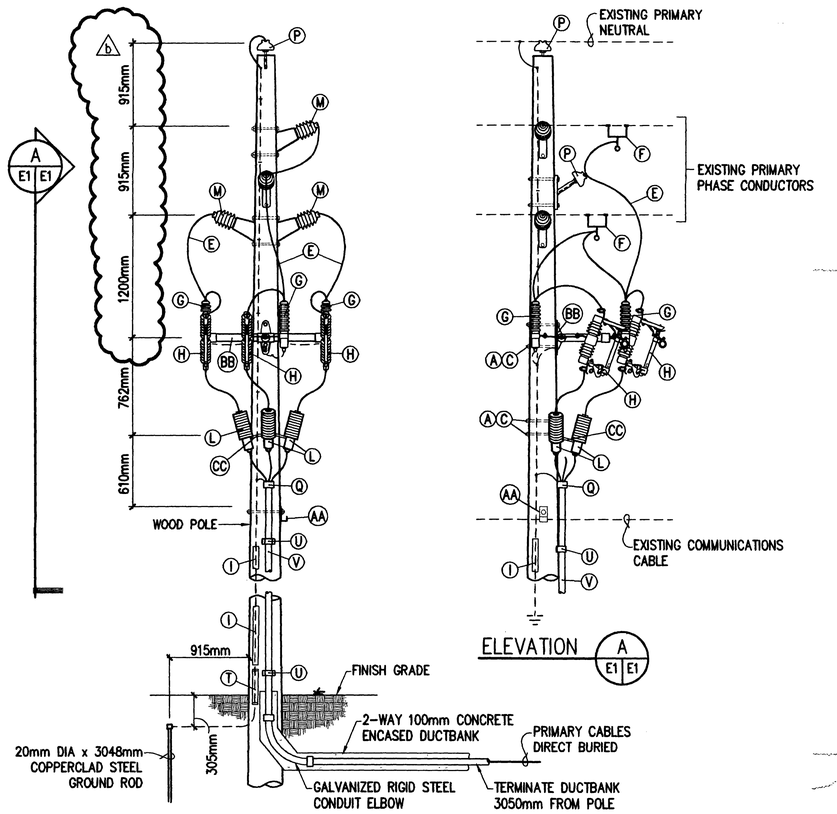

1 E2,E4,E10 E1 POLE DETAIL

NOT TO SCALE

GENERAL NOTES

1. CONTRACTOR SHALL COORDINATE WORK WITH BASE OPERATING AND MAINTENANCE PERSONNEL TO MINIMIZE CONFLICTS WITH OTHER UTILITY SYSTEMS AND REDUCE OUTAGES TO ONLY THOSE NECESSARY FOR WORK IN PROGRESS.
2. POLE DETAILS SHOWN ON DRAWINGS ARE INTENDED TO REPRESENT TYPICAL CONSTRUCTION STANDARDS FOR NEW CONSTRUCTION. THE DRAWINGS ARE NOT MEANT TO BE COMPLETE IN EVERY DETAIL, NOR DO THEY REPRESENT THE ONLY ACCEPTABLE METHODS FOR ACCOMPLISHING THE CONSTRUCTION. THE CONTRACTOR SHALL ADHERE TO THE REQUIREMENTS OF THE SPECIFICATIONS AND SHALL INSURE THAT CONSTRUCTION TECHNIQUES ARE IN ACCORDANCE WITH NESC REQUIREMENTS AND GOOD ENGINEERING PRACTICE. MAJOR DEVIATIONS FROM DETAILS HEREIN SHALL BE SUBJECT TO APPROVAL BY THE CONTRACTING OFFICER PRIOR TO INSTALLATION.
3. ALL EXISTING ITEMS AND EQUIPMENT INDICATED TO BE REMOVED AND NOT REUSED SHALL REMAIN THE PROPERTY OF THE GOVERNMENT AND SHALL BE CAREFULLY SALVAGED AND TRANSPORTED TO A LOCATION AT FORT CAMPBELL AS DIRECTED BY THE CONTRACTING OFFICER. POLES SHALL BE DISPOSED OF IN AN APPROVED LANDFILL OR IN ACCORDANCE WITH LAWS AND CONTRACT REQUIREMENTS GOVERNING HAZARDOUS OR TOXIC WASTE AS APPROPRIATE.

PHASING

THE CONTRACTOR SHALL PHASE CONSTRUCTION TO MINIMIZE INTERRUPTION TO POWER ON BASE. THE CONTRACTOR SHALL OBTAIN PRIOR APPROVAL FROM THE CONTRACTING OFFICER BEFORE SCHEDULING AN OUTAGE FOR CONSTRUCTION AND SHALL REQUEST APPROVALS FROM THE CONTRACTING OFFICER AT LEAST 10 WORKING DAYS PRIOR TO REQUESTED DATE.

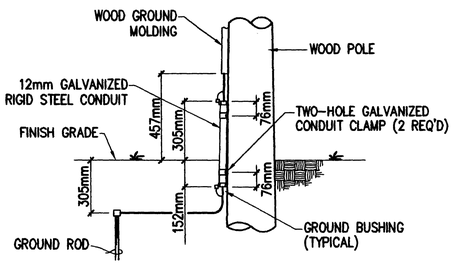

TYPICAL GROUNDING DETAIL

NOT TO SCALE

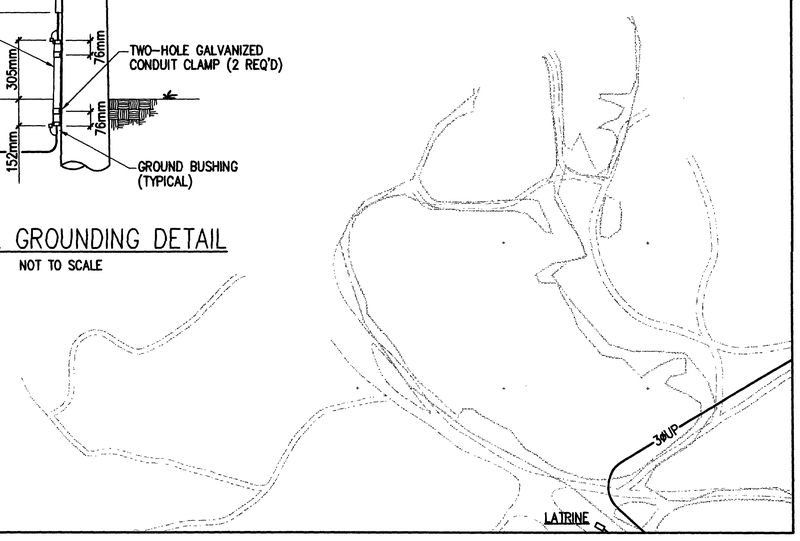

NORTH

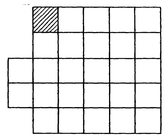

SITE KEY PLAN

NOT TO SCALE

ELECTRICAL SITE LEGEND

PC2■ POWER CENTER DESIGNATION CONSISTING OF PAD MOUNTED TRANSFORMER, PRIMARY CABLE TERMINATING/SECTIONALIZING ENCLOSURE, AND LOW VOLTAGE DISTRIBUTION. SEE POWER DISTRIBUTION SINGLE LINE DIAGRAMS, SHEETS E-50 THRU E-54.

PM-□ PAD MOUNTED AIR INTERRUPTER SWITCH – 15KV, 600AMP, 95KV BIL WITH 200 AMP FUSED SWITCHES.

TP1□ PAD MOUNTED TRANSFORMER. SEE POWER DISTRIBUTION SINGLE LINE DIAGRAMS, SHEETS E-50 THRU E-54.

3ØUP UNDERGROUND DIRECT BURIED 3-PHASE 15KV PRIMARY CABLES. SEE POWER DISTRIBUTION SINGLE LINE DIAGRAMS, SHEETS SHEETS E-50 THRU E-54.

1ØUP UNDERGROUND DIRECT BURIED 15KV 1-PHASE PRIMARY CABLES. SEE POWER DISTRIBUTION SINGLE LINE DIAGRAMS, SHEETS SHEETS E-50 THRU E-54.

1ØUS UNDERGROUND DIRECT BURIED 1-PHASE SECONDARY CABLES

S1 3/C – #2 WITH GROUND DIRECT BURY 600 VOLT POWER CABLE

S2 3/C – #4 WITH GROUND DIRECT BURY 600 VOLT POWER CABLE

S3 3/C – #6 WITH GROUND DIRECT BURY 600 VOLT POWER CABLE

S4 3/C – #8 WITH GROUND DIRECT BURY 600 VOLT POWER CABLE

S5 3/C – #10 WITH GROUND DIRECT BURY 600 VOLT POWER CABLE

CONCRETE ENCASEMENT REQUIRED UNDER SERVICE ROADS, TRAILS, LOW WATER CROSSINGS, AND CREEK CROSSINGS. CONDUIT SIZES AS REQUIRED FOR CABLE(S). 100mm MINIMUM FOR 3ØUP.

—EOP— EXISTING OVERHEAD PRIMARY TO REMAIN

● NEW WOOD POLE – HEIGHT AND CLASS AS INDICATED

○ EXISTING WOOD POLE

RLM RANGE LIMIT MARKER CONTROL CABLE

RANGE LIMIT MARKER

FLIR CAMERA

CV-1 STATIONARY ARMOR TARGETS (STATS)

CV-1 FUTURE STATIONARY ARMOR TARGETS (STATS)

CC-2 STATIONARY INFANTRY TARGETS (SIT)

ECM-1 EXISTING ARMOR MOVING TARGET

DEFILADE

M-01 ARMOR MOVING TARGETS (AMTC)

PRIMARY TARGET SERVICE ROAD

TANK TRAILS, CROSSOVERS, ACCESS ROADS

EXISTING ROAD

0 20 40 80
SCALE: 1:2000

THE SEAL APPEARING ON THIS DOCUMENT WAS AUTHORIZED BY SAMUEL LEE GULLEY ON AUGUST 8, 2001

SAMUEL LEE GULLEY CERTIFICATE NO. 37 STATE OF FLORIDA PROFESSIONAL ENGINEER

US Army Corps of Engineers
FORT WORTH DISTRICT

POLYENGINEERING, INC.
POLYENGINEERING, INC.
1956 Headland Avenue
Dothan, Alabama 36305
(334) 793-4780 (voice)
(334) 793-8015 (fax)

Mark	Description	Date	Appr.
A	REVISED DETAIL, TITLE BLOCK EDIT, REVISED SCALE, ADDED SEAL	AUG 01	SLG

Designed by: Samuel L. Gulley
Dwn by: T. Bolton
Ckd by: F. Corbari
Reviewed by:
Submitted by: E. Lamar Faulk
Date: 19 July 2001
Sol. No. DACA63-01-B-0007
Contr. No. DACA63-01-C-0016
File name:
Plot date:
Plot scale: 1:200
Rev.

U.S. ARMY ENGINEER DISTRICT
CORPS OF ENGINEERS
FORT WORTH, TEXAS

POLYENGINEERING, INC.
ENGINEERS & ARCHITECTS
DOTHAN, ALABAMA

FORT HOOD, TEXAS
DIGITAL MULTI-PURPOSE RANGE COMPLEX
PN 51915 FY00

ELECTRICAL SITE PLAN
RANGE POWER DISTRIBUTION

Sheet reference number: E-1
Sheet of

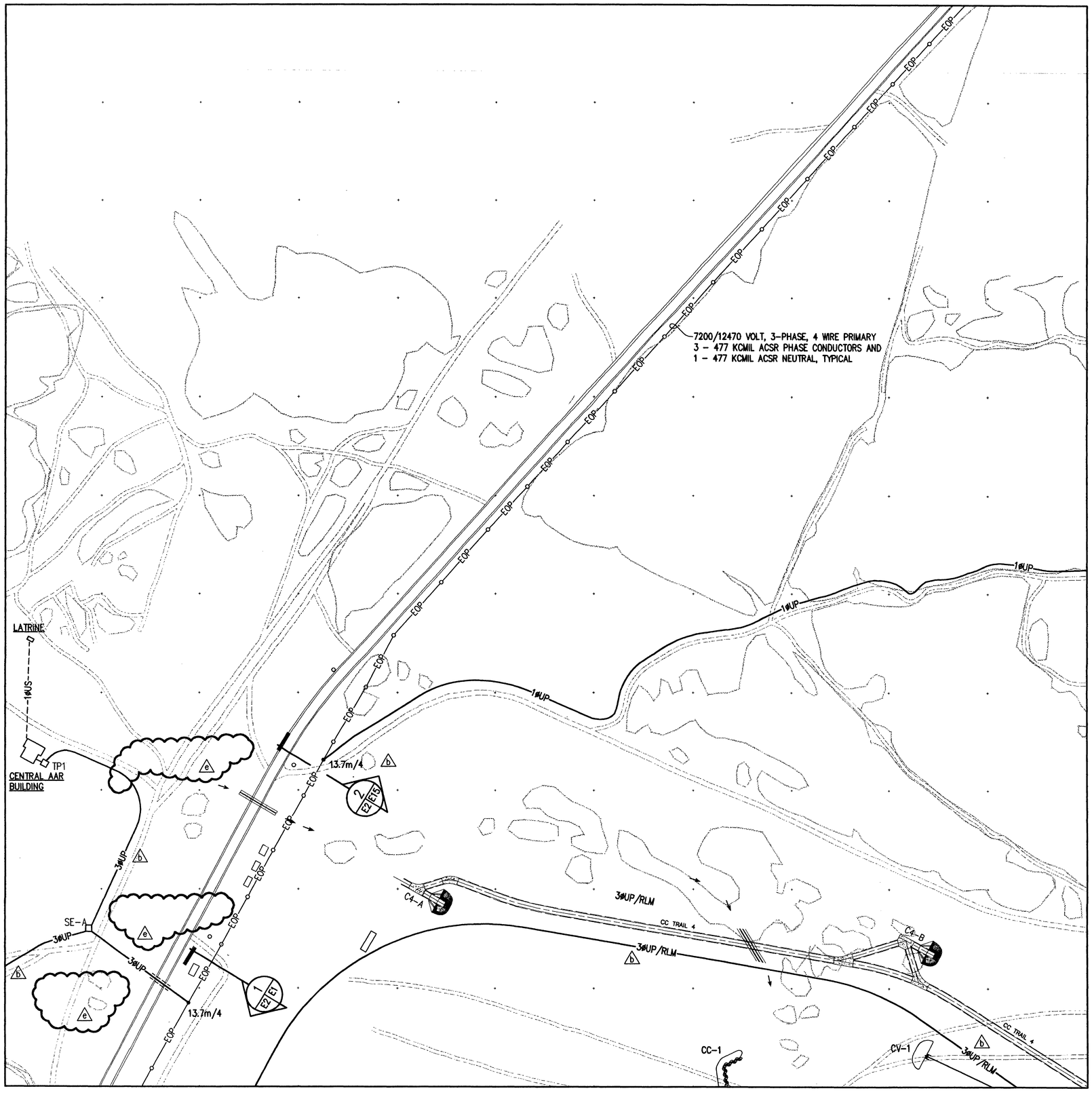

NORTH

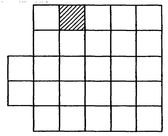

SITE KEY PLAN

NOT TO SCALE

ELECTRICAL SITE LEGEND

PC2■ POWER CENTER DESIGNATION CONSISTING OF PAD MOUNTED TRANSFORMER, PRIMARY CABLE TERMINATING/SECTIONALIZING ENCLOSURE, AND LOW VOLTAGE DISTRIBUTION. SEE POWER DISTRIBUTION SINGLE LINE DIAGRAMS, SHEETS E-50 THRU E-54.

PM-□ PAD MOUNTED AIR INTERRUPTER SWITCH - 15KV, 600AMP, 95KV BIL WITH 200 AMP FUSED SWITCHES.

TP1□ PAD MOUNTED TRANSFORMER. SEE POWER DISTRIBUTION SINGLE LINE DIAGRAMS, SHEETS E-50 THRU E-54.

3ØUP UNDERGROUND DIRECT BURIED 3-PHASE 15KV PRIMARY CABLES. SEE POWER DISTRIBUTION SINGLE LINE DIAGRAMS, SHEETS SHEETS E-50 THRU E-54.

1ØUP UNDERGROUND DIRECT BURIED 15KV 1-PHASE PRIMARY CABLES. SEE POWER DISTRIBUTION SINGLE LINE DIAGRAMS, SHEETS SHEETS E-50 THRU E-54.

1ØUS UNDERGROUND DIRECT BURIED 1-PHASE SECONDARY CABLES

(S1) 3/C - #2 WITH GROUND DIRECT BURY 600 VOLT POWER CABLE

(S2) 3/C - #4 WITH GROUND DIRECT BURY 600 VOLT POWER CABLE

(S3) 3/C - #6 WITH GROUND DIRECT BURY 600 VOLT POWER CABLE

(S4) 3/C - #8 WITH GROUND DIRECT BURY 600 VOLT POWER CABLE

(S5) 3/C - #10 WITH GROUND DIRECT BURY 600 VOLT POWER CABLE

CONCRETE ENCASEMENT REQUIRED UNDER SERVICE ROADS, TRAILS, LOW WATER CROSSINGS, AND CREEK CROSSINGS. CONDUIT SIZES AS REQUIRED FOR CABLE(S). 100mm MINIMUM FOR 3ØUP.

—EOP— EXISTING OVERHEAD PRIMARY TO REMAIN

● NEW WOOD POLE - HEIGHT AND CLASS AS INDICATED

○ EXISTING WOOD POLE

RLM RANGE LIMIT MARKER CONTROL CABLE

RANGE LIMIT MARKER

FLIR CAMERA

CV-1 STATIONARY ARMOR TARGETS (STATS)

CV-1 FUTURE STATIONARY ARMOR TARGETS (STATS)

CC-2 STATIONARY INFANTRY TARGETS (SIT)

ECM-1 EXISTING ARMOR MOVING TARGET

DEFILADE

M-01 ARMOR MOVING TARGETS (AMTC)

PRIMARY TARGET SERVICE ROAD

TANK TRAILS, CROSSOVERS, ACCESS ROADS

EXISTING ROAD

0 20 40 80
SCALE: 1:2000

THE SEAL APPEARING ON THIS DOCUMENT WAS AUTHORIZED BY SAMUEL LEE GULLEY ON AUGUST 8, 2001

SAMUEL LEE GULLEY CERTIFICATE NO. 37 STATE OF FLORIDA PROFESSIONAL ENGINEER

Sheet reference number: E-2

Sheet of

US Army Corps of Engineers
FORT WORTH DISTRICT

POLYENGINEERING, INC.
1905 Blackhead Avenue
Dothan, Alabama 36305
(334) 793-6720 (voice)
(334) 793-6715 (fax)

Mark	Description	Date	Appr.
1	ADDED RLM CABLE, TITLE BLOCK EDIT, ADDED SEAL	AUG 01	SLG

Date: 19 July 2001
Rev.
Sol. No. DAC453-01-B-0007
Contr. No. DAC453-01-C-0016
File name:
Plot date:
Plot scale: 1:200

Designed by: Samuel L. Gulley
Dwn by: T. Bolton
Ckd by: F. Corbari
Reviewed by:
Submitted by: E. Lamar Foulk

U.S. ARMY ENGINEER DISTRICT
CORPS OF ENGINEERS
FORT WORTH, TEXAS

POLYENGINEERING, INC.
ENGINEERS & ARCHITECTS
DOTHAN, ALABAMA

FORT HOOD, TEXAS
DIGITAL MULTI-PURPOSE RANGE COMPLEX (DMPRC)
PN 51915

ELECTRICAL SITE PLAN
RANGE POWER DISTRIBUTION

00688470

A E3 E3 ELEVATION/SECTION

PLAN

PAD-MOUNTED COMPARTMENTAL TRANSFORMER DETAIL

NOT TO SCALE

NOTES:

ALL GROUND CONNECTIONS SHALL BE BRAZED OR EXOTHERMIC WELDED. GROUND RESISTANCE SHALL BE 25 OHMS OR LESS.

PROVIDE ENGRAVED RED METAL SIGN WITH LETTERS "DANGER HIGH VOLTAGE". SIGN SHALL BE 305mm WIDE BY 230mm HIGH. SECURE TO DOOR OF HOUSING WITH BRASS SCREWS.

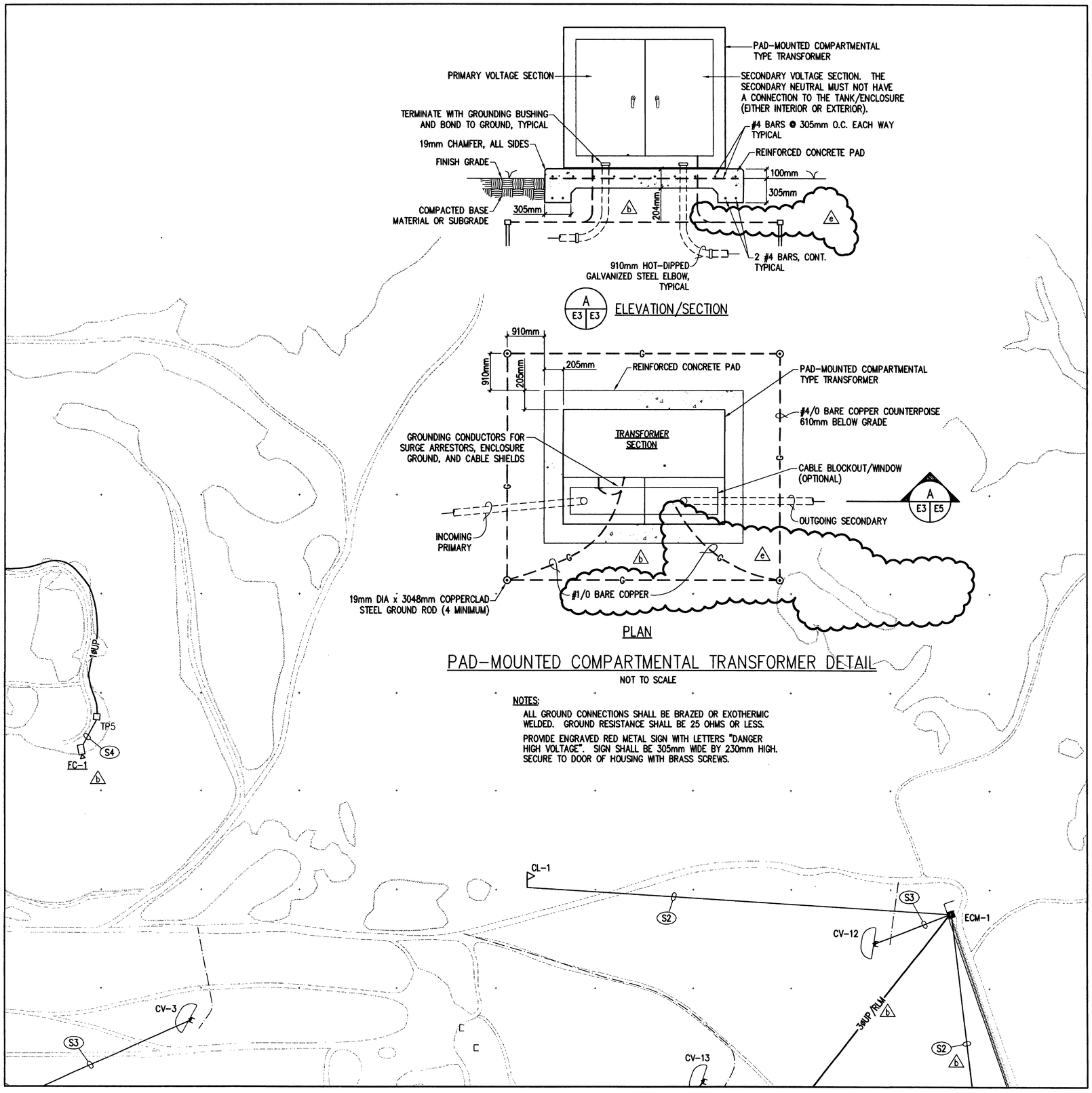

NORTH

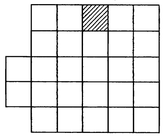

SITE KEY PLAN

NOT TO SCALE

ELECTRICAL SITE LEGEND

PC2■	POWER CENTER DESIGNATION CONSISTING OF PAD MOUNTED TRANSFORMER, PRIMARY CABLE TERMINATING/SECTIONALIZING ENCLOSURE, AND LOW VOLTAGE DISTRIBUTION. SEE POWER DISTRIBUTION SINGLE LINE DIAGRAMS, SHEETS E-50 THRU E-54.
PM-□	PAD MOUNTED AIR INTERRUPTER SWITCH - 15KV, 600AMP, 95KV BIL WITH 200 AMP FUSED SWITCHES.
TP1□	PAD MOUNTED TRANSFORMER. SEE POWER DISTRIBUTION SINGLE LINE DIAGRAMS, SHEETS E-50 THRU E-54.
3ØUP	UNDERGROUND DIRECT BURIED 3-PHASE 15KV PRIMARY CABLES. SEE POWER DISTRIBUTION SINGLE LINE DIAGRAMS, SHEETS SHEETS E-50 THRU E-54.
1ØUP	UNDERGROUND DIRECT BURIED 15KV 1-PHASE PRIMARY CABLES. SEE POWER DISTRIBUTION SINGLE LINE DIAGRAMS, SHEETS SHEETS E-50 THRU E-54.
1ØUS	UNDERGROUND DIRECT BURIED 1-PHASE SECONDARY CABLES
(S1)	3/C - #2 WITH GROUND DIRECT BURY 600 VOLT POWER CABLE
(S2)	3/C - #4 WITH GROUND DIRECT BURY 600 VOLT POWER CABLE
(S3)	3/C - #6 WITH GROUND DIRECT BURY 600 VOLT POWER CABLE
(S4)	3/C - #8 WITH GROUND DIRECT BURY 600 VOLT POWER CABLE
(S5)	3/C - #10 WITH GROUND DIRECT BURY 600 VOLT POWER CABLE
═══	CONCRETE ENCASEMENT REQUIRED UNDER SERVICE ROADS, TRAILS, LOW WATER CROSSINGS, AND CREEK CROSSINGS. CONDUIT SIZES AS REQUIRED FOR CABLE(S). 100mm MINIMUM FOR 3ØUP.
—EOP—	EXISTING OVERHEAD PRIMARY TO REMAIN
●	NEW WOOD POLE - HEIGHT AND CLASS AS INDICATED
○	EXISTING WOOD POLE
RLM	RANGE LIMIT MARKER CONTROL CABLE
◁	RANGE LIMIT MARKER
▷□	FLIR CAMERA
CV-1	STATIONARY ARMOR TARGETS (STATS)
CV-1	FUTURE STATIONARY ARMOR TARGETS (STATS)
CC-2	STATIONARY INFANTRY TARGETS (SIT)
ECM-1	EXISTING ARMOR MOVING TARGET
	DEFILADE
M-01	ARMOR MOVING TARGETS (AMTC)
	PRIMARY TARGET SERVICE ROAD
	TANK TRAILS, CROSSOVERS, ACCESS ROADS
	EXISTING ROAD

0 20 40 80
SCALE: 1:2000

THE SEAL APPEARING ON THIS DOCUMENT WAS AUTHORIZED BY SAMUEL LEE GULLEY ON AUGUST 8, 2001

SAMUEL LEE GULLEY CERTIFICATE No. 39101 STATE OF FLORIDA PROFESSIONAL ENGINEER

US Army Corps of Engineers
FORT WORTH DISTRICT

POLYENGINEERING, INC.
1995 Headland Avenue
Dothan, Alabama 36303
(334) 793-4790 (voice)
(334) 793-8010 (fax)

Mark	Description	Date	Appr.
2	REVISED DETAIL	SEPT 01	SLG
1	ADDED RLM CABLE AND REVISED DETAIL	AUG 01	SLG

Date: 19 July 2001 | Rev.
Sol. No. DACA63-01-B-0007
Contr. No. DACA63-01-C-0016
File name:
Plot date:
Plot scale: 1:200

Designed by: Samuel L. Gulley
Dwn by: T. Bolton
Ckd by: F. Carbon
Reviewed by:
Submitted by: E. Lamar Foulk

U.S. ARMY ENGINEER DISTRICT
CORPS OF ENGINEERS
FORT WORTH, TEXAS

POLYENGINEERING, INC.
ENGINEERS & ARCHITECTS
DOTHAN, ALABAMA

FORT HOOD, TEXAS
DIGITAL MULTI-PURPOSE RANGE COMPLEX (DMPRC)
PN 51915 FY 00

ELECTRICAL SITE PLAN
RANGE POWER DISTRIBUTION

Sheet reference number: E-3
Sheet x of x

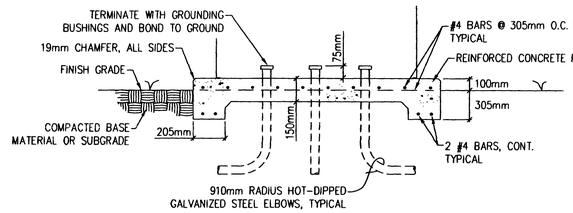

A / E4 | E4 ELEVATION/SECTION

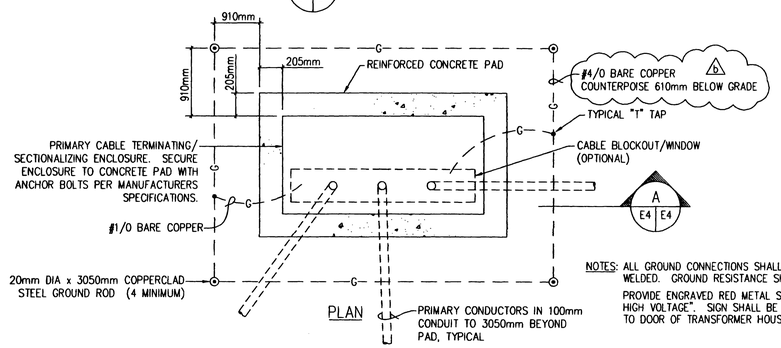

PLAN

A / E4 | E4

NOTES: ALL GROUND CONNECTIONS SHALL BE BRAZED OR EXOTHERMIC WELDED. GROUND RESISTANCE SHALL BE 25 OHMS OR LESS.

PROVIDE ENGRAVED RED METAL SIGN WITH LETTERS "DANGER HIGH VOLTAGE". SIGN SHALL BE 12" WIDE BY 9" HIGH. SECURE TO DOOR OF TRANSFORMER HOUSING WITH BRASS SCREWS.

SECTIONALIZING ENCLOSURE PAD DETAIL

NOT TO SCALE

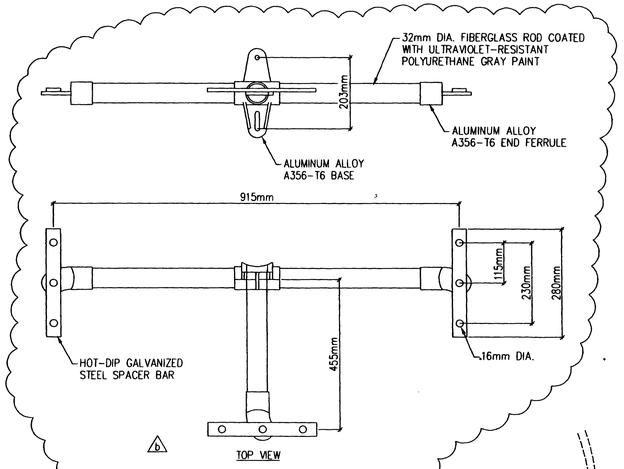

CUTOUT & ARRESTER TRI-ARM MOUNTING BRACKET DETAIL

NOT TO SCALE

ITEM (BB) IN POWER POLE EQUIPMENT LIST. SEE SHEET E-1.

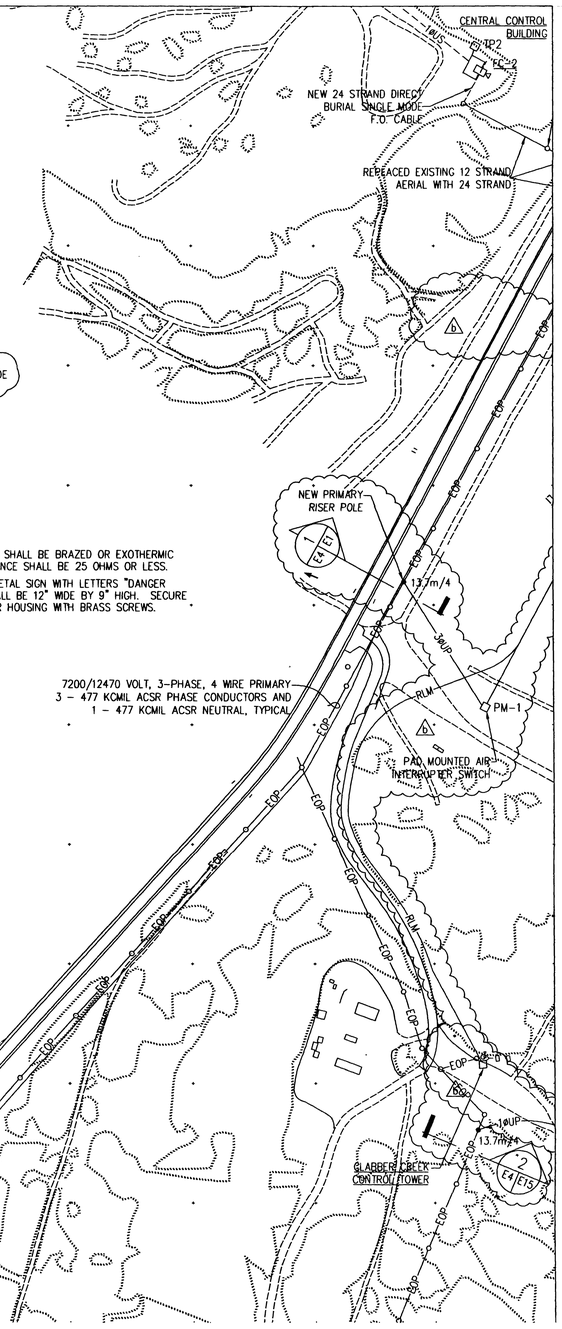

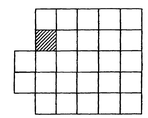

SITE KEY PLAN

NOT TO SCALE

ELECTRICAL SITE LEGEND

PC2■ POWER CENTER DESIGNATION CONSISTING OF PAD MOUNTED TRANSFORMER, PRIMARY CABLE TERMINATING/SECTIONALIZING ENCLOSURE, AND LOW VOLTAGE DISTRIBUTION. SEE POWER DISTRIBUTION SINGLE LINE DIAGRAMS, SHEETS E-50 THRU E-54.

PM-□ PAD MOUNTED AIR INTERRUPTER SWITCH – 15KV, 600AMP, 95KV BIL WITH 200 AMP FUSED SWITCHES.

TP1 □ PAD MOUNTED TRANSFORMER. SEE POWER DISTRIBUTION SINGLE LINE DIAGRAMS, SHEETS E-50 THRU E-54.

3ØUP UNDERGROUND DIRECT BURIED 3-PHASE 15KV PRIMARY CABLES. SEE POWER DISTRIBUTION SINGLE LINE DIAGRAMS, SHEETS SHEETS E-50 THRU E-54.

1ØUP UNDERGROUND DIRECT BURIED 15KV 1-PHASE PRIMARY CABLES. SEE POWER DISTRIBUTION SINGLE LINE DIAGRAMS, SHEETS SHEETS E-50 THRU E-54.

1ØUS UNDERGROUND DIRECT BURIED 1-PHASE SECONDARY CABLES

(S1) 3/C – #2 WITH GROUND DIRECT BURY 600 VOLT POWER CABLE

(S2) 3/C – #4 WITH GROUND DIRECT BURY 600 VOLT POWER CABLE

(S3) 3/C – #6 WITH GROUND DIRECT BURY 600 VOLT POWER CABLE

(S4) 3/C – #8 WITH GROUND DIRECT BURY 600 VOLT POWER CABLE

(S5) 3/C – #10 WITH GROUND DIRECT BURY 600 VOLT POWER CABLE

CONCRETE ENCASEMENT REQUIRED UNDER SERVICE ROADS, TRAILS, LOW WATER CROSSINGS, AND CREEK CROSSINGS. CONDUIT SIZES AS REQUIRED FOR CABLE(S). 100mm MINIMUM FOR 3ØUP.

—EOP— EXISTING OVERHEAD PRIMARY TO REMAIN

● NEW WOOD POLE – HEIGHT AND CLASS AS INDICATED

○ EXISTING WOOD POLE

RLM RANGE LIMIT MARKER CONTROL CABLE

RANGE LIMIT MARKER

FLIR CAMERA

CV-1 STATIONARY ARMOR TARGETS (STATS)

CV-1 FUTURE STATIONARY ARMOR TARGETS (STATS)

CC-2 STATIONARY INFANTRY TARGETS (SIT)

ECM-1 EXISTING ARMOR MOVING TARGET

DEFILADE

M-01 ARMOR MOVING TARGETS (AMTC)

PRIMARY TARGET SERVICE ROAD

TANK TRAILS, CROSSOVERS, ACCESS ROADS

EXISTING ROAD

0 20 40 80
SCALE: 1:2000

THE SEAL APPEARING ON THIS DOCUMENT WAS AUTHORIZED BY SAMUEL LEE GULLEY ON AUGUST 8, 2001

SAMUEL LEE GULLEY CERTIFICATE No. 50007 STATE OF FLORIDA PROFESSIONAL ENGINEER

Sheet reference number: E-4

Sheet of

US Army Corps of Engineers FORT WORTH DISTRICT

POLYENGINEERING, INC.

Rev.	Description	Date	Appr.
A	ADDED RLM CABLE, RELOCATED PM-1, AND CONVERTED DIMENSIONS TO METRIC	AUG 01	SLG

TITLE BLOCK EDIT, ADDED SEAL

U.S. ARMY ENGINEER DISTRICT CORPS OF ENGINEERS FORT WORTH, TEXAS

POLYENGINEERING, INC. ENGINEERS & ARCHITECTS DOTHAN, ALABAMA

Designed by: Samuel L. Gulley
Dwn by: T. Bolton
Chkd by: F. Carlson
Reviewed by:
Submitted by: E. Lamar Faulk

Date: 19 July 2001
Sol. No. DACA63-01-B-0007
Contr. No. DACA63-01-C-0018
File name:
Plot date:
Plot scale: 1:200

FORT HOOD, TEXAS
DIGITAL MULTI-PURPOSE RANGE COMPLEX
PN 51915 PH 00

ELECTRICAL SITE PLAN
RANGE POWER DISTRIBUTION

Contr. No. DACA63-01-C-0018

...\2000-022_E04.dwg 8/12/2005 9:27:34 AM

00688490

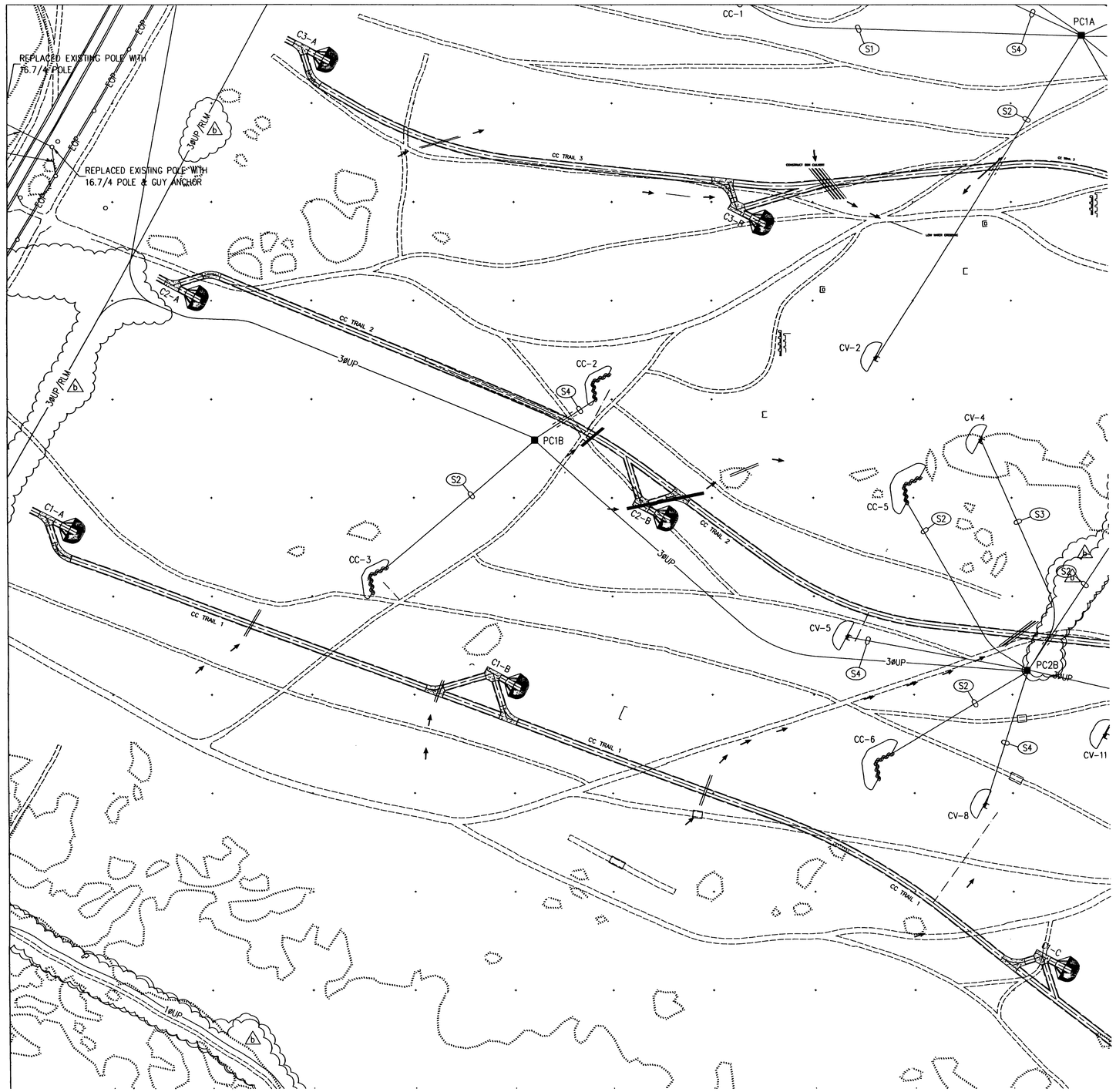

NORTH

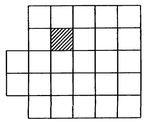

SITE KEY PLAN

NOT TO SCALE

ELECTRICAL SITE LEGEND

PC2■	POWER CENTER DESIGNATION CONSISTING OF PAD MOUNTED TRANSFORMER, PRIMARY CABLE TERMINATING/SECTIONALIZING ENCLOSURE, AND LOW VOLTAGE DISTRIBUTION. SEE POWER DISTRIBUTION SINGLE LINE DIAGRAMS, SHEETS E-50 THRU E-54.
PM-□	PAD MOUNTED AIR INTERRUPTER SWITCH - 15KV, 600AMP, 95KV BIL WITH 200 AMP FUSED SWITCHES.
TP1□	PAD MOUNTED TRANSFORMER. SEE POWER DISTRIBUTION SINGLE LINE DIAGRAMS, SHEETS E-50 THRU E-54.
3ØUP	UNDERGROUND DIRECT BURIED 3-PHASE 15KV PRIMARY CABLES. SEE POWER DISTRIBUTION SINGLE LINE DIAGRAMS, SHEETS SHEETS E-50 THRU E-54.
1ØUP	UNDERGROUND DIRECT BURIED 15KV 1-PHASE PRIMARY CABLES. SEE POWER DISTRIBUTION SINGLE LINE DIAGRAMS, SHEETS SHEETS E-50 THRU E-54.
1ØUS	UNDERGROUND DIRECT BURIED 1-PHASE SECONDARY CABLES
(S1)	3/C - #2 WITH GROUND DIRECT BURY 600 VOLT POWER CABLE
(S2)	3/C - #4 WITH GROUND DIRECT BURY 600 VOLT POWER CABLE
(S3)	3/C - #6 WITH GROUND DIRECT BURY 600 VOLT POWER CABLE
(S4)	3/C - #8 WITH GROUND DIRECT BURY 600 VOLT POWER CABLE
(S5)	3/C - #10 WITH GROUND DIRECT BURY 600 VOLT POWER CABLE
=====	CONCRETE ENCASEMENT REQUIRED UNDER SERVICE ROADS, TRAILS, LOW WATER CROSSINGS, AND CREEK CROSSINGS. CONDUIT SIZES AS REQUIRED FOR CABLE(S). 100mm MINIMUM FOR 3ØUP.
—EOP—	EXISTING OVERHEAD PRIMARY TO REMAIN
●	NEW WOOD POLE - HEIGHT AND CLASS AS INDICATED
○	EXISTING WOOD POLE
RLM	RANGE LIMIT MARKER CONTROL CABLE
◁	RANGE LIMIT MARKER
▷□	FLIR CAMERA
CV-1	STATIONARY ARMOR TARGETS (STATS)
CV-1	FUTURE STATIONARY ARMOR TARGETS (STATS)
CC-2	STATIONARY INFANTRY TARGETS (SIT)
ECM-1	EXISTING ARMOR MOVING TARGET
	DEFILADE
M-01	ARMOR MOVING TARGETS (AMTC)
	PRIMARY TARGET SERVICE ROAD
	TANK TRAILS, CROSSOVERS, ACCESS ROADS
	EXISTING ROAD

0 20 40 80

SCALE: 1:2000

THE SEAL APPEARING ON THIS DOCUMENT WAS AUTHORIZED BY SAMUEL LEE GULLEY ON AUGUST 8, 2001

SAMUEL LEE GULLEY CERTIFICATE No. 50007 STATE OF FLORIDA PROFESSIONAL ENGINEER

US Army Corps of Engineers FORT WORTH DISTRICT

POLYENGINEERING, INC.
1550 Southland Avenue
Dothan, Alabama 36303
(334) 793-4700 (voice)
(334) 793-8018 (fax)

Mark	Description	Date	Appr.
A	ADDED SEAL		
B	ADDED RLM CABLE, TARGET CIRCUIT, AND CAMERA POWER, TITLE BLOCK EDIT	AUG 01	SLG

Designed by: Samuel L. Gulley
Dwn by: L. Robison
Chkd by: F. Copeland
Reviewed by:
Submitted by: E. Lamar Foulk
Date: 18 July 2001
Rev.
Sol. No.
Contr. No. DACA63-01-B-0007
Contr. No. DACA63-01-C-0016
File name:
Plot date:
Plot scale: 1:200

U.S. ARMY ENGINEER DISTRICT
CORPS OF ENGINEERS
FORT WORTH, TEXAS

POLYENGINEERING, INC.
ENGINEERS & ARCHITECTS
DOTHAN, ALABAMA

FORT HOOD, TEXAS
DIGITAL MULTI-PURPOSE RANGE COMPLEX (DMPRC)
PN 51915

ELECTRICAL SITE PLAN
RANGE POWER DISTRIBUTION

Sheet reference number: E-5

Sheet of

Contr. No. DACA63-01-C-0016

-022_E05.dwg 8/12/2005 9:26:35 AM

00688500

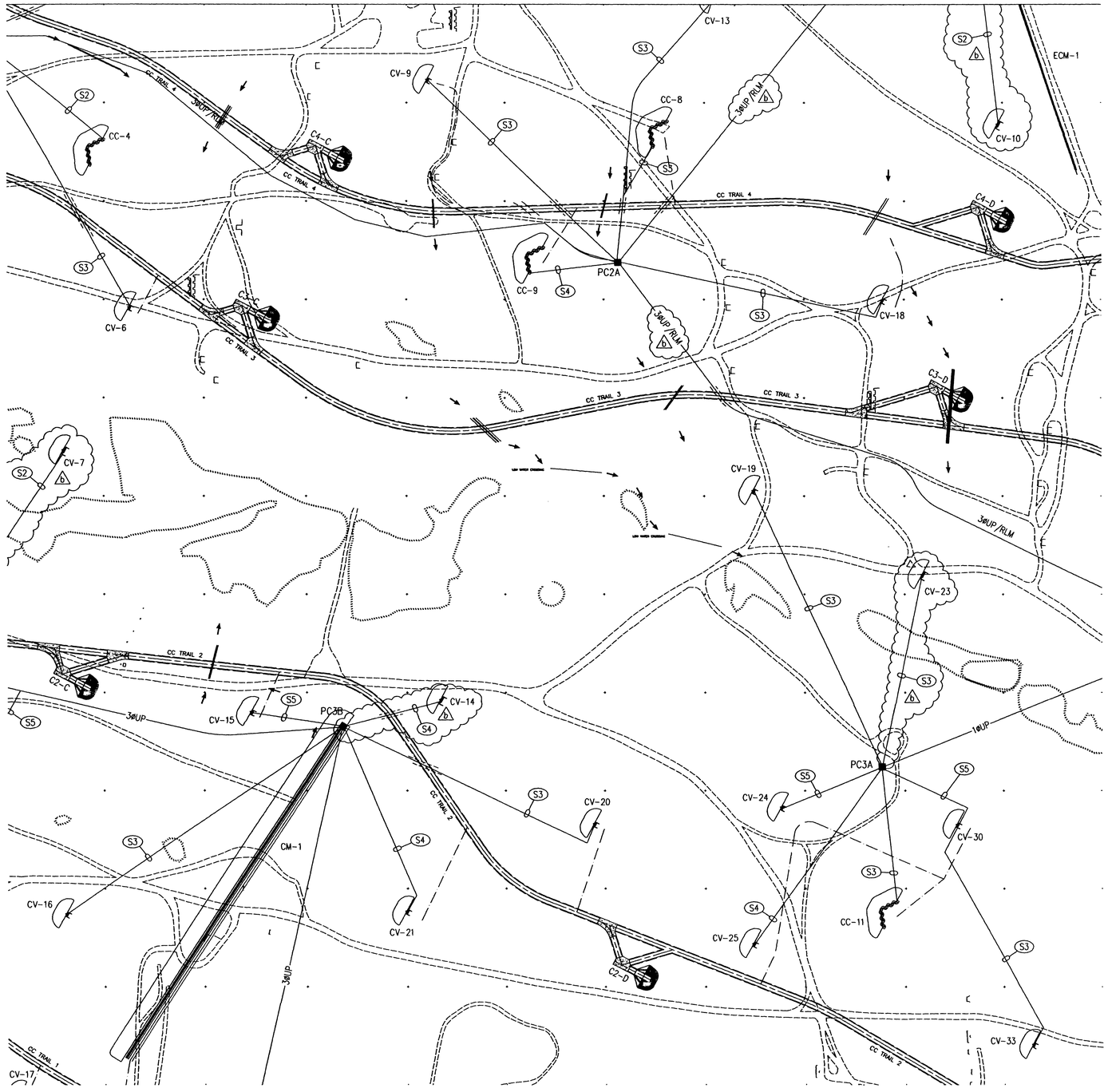

NORTH

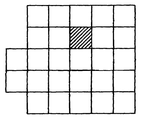

SITE KEY PLAN

NOT TO SCALE

ELECTRICAL SITE LEGEND

PC2■	POWER CENTER DESIGNATION CONSISTING OF PAD MOUNTED TRANSFORMER, PRIMARY CABLE TERMINATING/SECTIONALIZING ENCLOSURE, AND LOW VOLTAGE DISTRIBUTION. SEE POWER DISTRIBUTION SINGLE LINE DIAGRAMS, SHEETS E-50 THRU E-54.
PM-□	PAD MOUNTED AIR INTERRUPTER SWITCH - 15KV, 600AMP, 95KV BIL WITH 200 AMP FUSED SWITCHES.
TP1 □	PAD MOUNTED TRANSFORMER. SEE POWER DISTRIBUTION SINGLE LINE DIAGRAMS, SHEETS E-50 THRU E-54.
3ØUP	UNDERGROUND DIRECT BURIED 3-PHASE 15KV PRIMARY CABLES. SEE POWER DISTRIBUTION SINGLE LINE DIAGRAMS, SHEETS SHEETS E-50 THRU E-54.
1ØUP	UNDERGROUND DIRECT BURIED 15KV 1-PHASE PRIMARY CABLES. SEE POWER DISTRIBUTION SINGLE LINE DIAGRAMS, SHEETS SHEETS E-50 THRU E-54.
1ØUS	UNDERGROUND DIRECT BURIED 1-PHASE SECONDARY CABLES
(S1)	3/C - #2 WITH GROUND DIRECT BURY 600 VOLT POWER CABLE
(S2)	3/C - #4 WITH GROUND DIRECT BURY 600 VOLT POWER CABLE
(S3)	3/C - #6 WITH GROUND DIRECT BURY 600 VOLT POWER CABLE
(S4)	3/C - #8 WITH GROUND DIRECT BURY 600 VOLT POWER CABLE
(S5)	3/C - #10 WITH GROUND DIRECT BURY 600 VOLT POWER CABLE
=====	CONCRETE ENCASEMENT REQUIRED UNDER SERVICE ROADS, TRAILS, LOW WATER CROSSINGS, AND CREEK CROSSINGS. CONDUIT SIZES AS REQUIRED FOR CABLE(S). 100mm MINIMUM FOR 3ØUP.
—EOP—	EXISTING OVERHEAD PRIMARY TO REMAIN
●	NEW WOOD POLE - HEIGHT AND CLASS AS INDICATED
○	EXISTING WOOD POLE
RLM	RANGE LIMIT MARKER CONTROL CABLE
◁	RANGE LIMIT MARKER
▷□	FLIR CAMERA
CV-1	STATIONARY ARMOR TARGETS (STATS)
CV-1	FUTURE STATIONARY ARMOR TARGETS (STATS)
CC-2	STATIONARY INFANTRY TARGETS (SIT)
ECM-1	EXISTING ARMOR MOVING TARGET
	DEFILADE
M-01	ARMOR MOVING TARGETS (AMTC)
	PRIMARY TARGET SERVICE ROAD
	TANK TRAILS, CROSSOVERS, ACCESS ROADS
	EXISTING ROAD

0 20 40 80

SCALE: 1:2000

THE SEAL APPEARING ON THIS DOCUMENT WAS AUTHORIZED BY SAMUEL LEE GULLEY ON AUGUST 8, 2001

SAMUEL LEE GULLEY CERTIFICATE No. 50007 STATE OF FLORIDA PROFESSIONAL ENGINEER

Sheet reference number: E-6

Sheet of

US Army Corps of Engineers FORT WORTH DISTRICT

POLYENGINEERING, INC. 1000 Medical Arcade Dothan, Alabama 36303 (334) 793-5705 (voice) (334) 793-0015 (fax)

Rev.	Description	Date	Appr.
A3	ADDED RLM CABLE AND TARGETS, TITLE BLOCK EDIT, ADDED SEAL	AUG 01	SLG

Designed by: Samuel L. Gulley
Drawn by: T. Bolton
Ckd by: F. Corbari
Reviewed by:
Submitted by: E. Lamar Faulk
Date: 16 July 2001
Sol. No. DACA63-01-B-0007
Contr. No. DACA63-01-C-0016
File name:
Plot date:
Plot scale: 1:200
Rev.

U.S. ARMY ENGINEER DISTRICT CORPS OF ENGINEERS FORT WORTH, TEXAS

POLYENGINEERING, INC. ENGINEERS & ARCHITECTS DOTHAN, ALABAMA

FORT HOOD, TEXAS
DIGITAL MULTI-PURPOSE RANGE COMPLEX (DMPRC)
PN 519315
FY 00

ELECTRICAL SITE PLAN
RANGE POWER DISTRIBUTION

Contr. No. DACA63-01-C-0016

...\2000-022_E06.dwg 8/12/2005 9:25:27 AM

00688510

NORTH

SITE KEY PLAN

NOT TO SCALE

ELECTRICAL SITE LEGEND

PC2■ POWER CENTER DESIGNATION CONSISTING OF PAD MOUNTED TRANSFORMER, PRIMARY CABLE TERMINATING/SECTIONALIZING ENCLOSURE, AND LOW VOLTAGE DISTRIBUTION. SEE POWER DISTRIBUTION SINGLE LINE DIAGRAMS, SHEETS E-50 THRU E-54.

PM-□ PAD MOUNTED AIR INTERRUPTER SWITCH - 15KV, 600AMP, 95KV BIL WITH 200 AMP FUSED SWITCHES.

TP1 □ PAD MOUNTED TRANSFORMER. SEE POWER DISTRIBUTION SINGLE LINE DIAGRAMS, SHEETS E-50 THRU E-54.

3ØUP UNDERGROUND DIRECT BURIED 3-PHASE 15KV PRIMARY CABLES. SEE POWER DISTRIBUTION SINGLE LINE DIAGRAMS, SHEETS SHEETS E-50 THRU E-54.

1ØUP UNDERGROUND DIRECT BURIED 15KV 1-PHASE PRIMARY CABLES. SEE POWER DISTRIBUTION SINGLE LINE DIAGRAMS, SHEETS SHEETS E-50 THRU E-54.

1ØUS UNDERGROUND DIRECT BURIED 1-PHASE SECONDARY CABLES

(S1) 3/C - #2 WITH GROUND DIRECT BURY 600 VOLT POWER CABLE

(S2) 3/C - #4 WITH GROUND DIRECT BURY 600 VOLT POWER CABLE

(S3) 3/C - #6 WITH GROUND DIRECT BURY 600 VOLT POWER CABLE

(S4) 3/C - #8 WITH GROUND DIRECT BURY 600 VOLT POWER CABLE

(S5) 3/C - #10 WITH GROUND DIRECT BURY 600 VOLT POWER CABLE

CONCRETE ENCASEMENT REQUIRED UNDER SERVICE ROADS, TRAILS, LOW WATER CROSSINGS, AND CREEK CROSSINGS. CONDUIT SIZES AS REQUIRED FOR CABLE(S). 100mm MINIMUM FOR 3ØUP.

—EOP— EXISTING OVERHEAD PRIMARY TO REMAIN

● NEW WOOD POLE - HEIGHT AND CLASS AS INDICATED

○ EXISTING WOOD POLE

RLM RANGE LIMIT MARKER CONTROL CABLE

◁ RANGE LIMIT MARKER

FLIR CAMERA

CV-1 STATIONARY ARMOR TARGETS (STATS)

CV-1 FUTURE STATIONARY ARMOR TARGETS (STATS)

CC-2 STATIONARY INFANTRY TARGETS (SIT)

ECM-1 EXISTING ARMOR MOVING TARGET

DEFILADE

M-01 ARMOR MOVING TARGETS (AMTC)

PRIMARY TARGET SERVICE ROAD

TANK TRAILS, CROSSOVERS, ACCESS ROADS

EXISTING ROAD

0 20 40 80
SCALE: 1:2000

THE SEAL APPEARING ON THIS DOCUMENT WAS AUTHORIZED BY SAMUEL LEE GULLEY ON AUGUST 6, 2001

SAMUEL LEE GULLEY CERTIFICATE No. 50007 STATE OF FLORIDA PROFESSIONAL ENGINEER

US Army Corps of Engineers
FORT WORTH DISTRICT

POLYENGINEERING, INC.
1550 Hardland Avenue
Dothan, Alabama 36303
(334) 792-4700 (voice)
(334) 792-9216 (fax)

Mark	Description	Date	App.
1	ADDED RLM CABLE AND TARGETS, TITLE BLOCK EDIT, ADDED SEAL	AUG 01	SLG

Date: 19 July 2001 | Rev.
Sol. No. DACA63-01-B-0007
Contr. No. DACA63-01-C-0016
File name:
Plot date:
Plot scale: 1:200

Designed by: Samuel L. Gulley
Dwn by: T. Bolton
Ckd by: F. Corbori
Reviewed by:
Submitted by: E. Lamar Faulk

U.S. ARMY ENGINEER DISTRICT
CORPS OF ENGINEERS
FORT WORTH, TEXAS

POLYENGINEERING, INC.
ENGINEERS & ARCHITECTS
DOTHAN, ALABAMA

FORT HOOD, TEXAS
DIGITAL MULTI-PURPOSE RANGE COMPLEX (DMPRC)
PN 51915 FY 00

ELECTRICAL SITE PLAN
RANGE POWER DISTRIBUTION

Sheet reference number: E-7
Sheet of

Contr. No. DACA63-01-C-0016

..\2000-022_E07.dwg 8/12/2005 9:24:28 AM

00688520

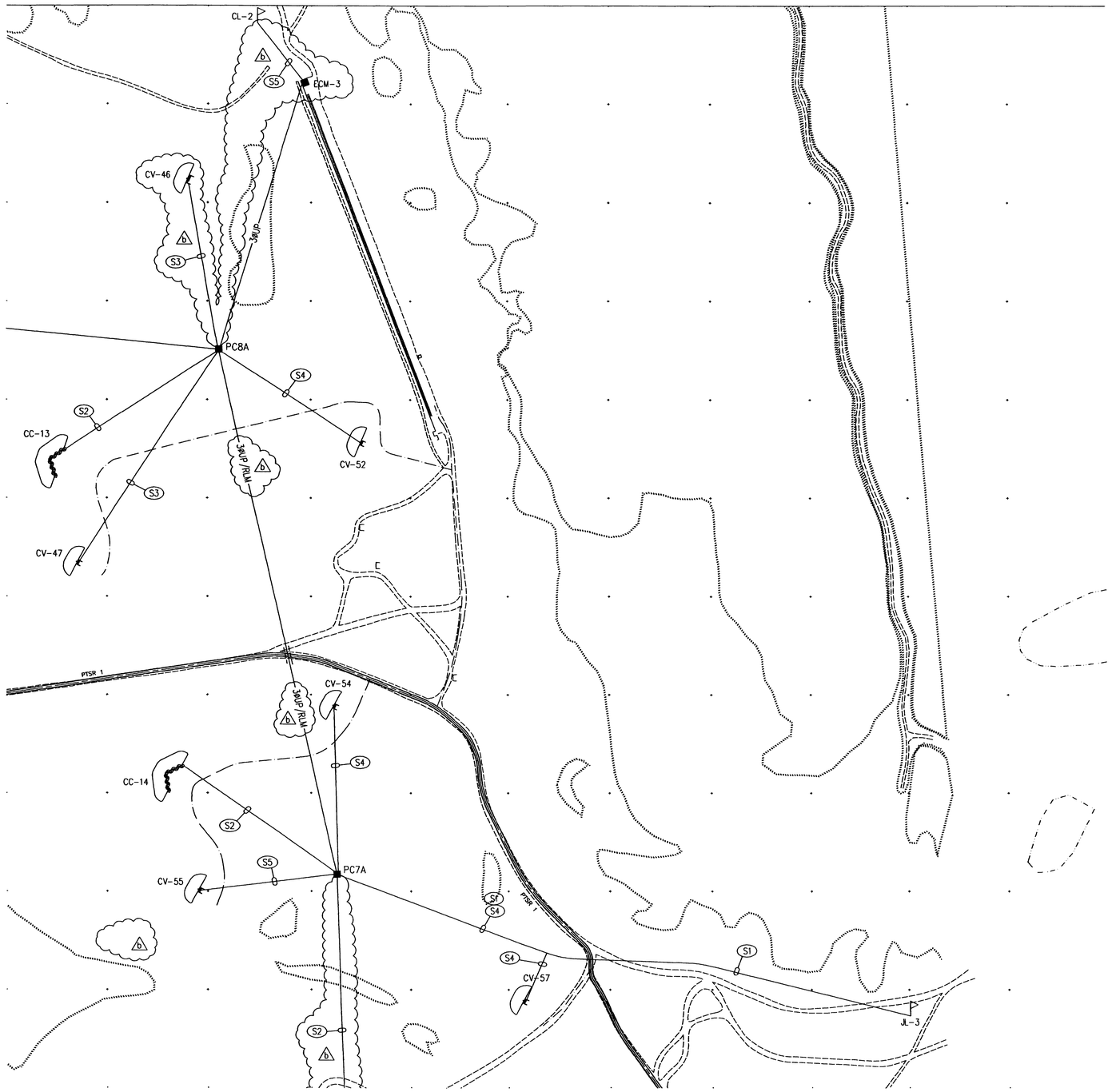

NORTH

SITE KEY PLAN

NOT TO SCALE

ELECTRICAL SITE LEGEND

PC2■ POWER CENTER DESIGNATION CONSISTING OF PAD MOUNTED TRANSFORMER, PRIMARY CABLE TERMINATING/SECTIONALIZING ENCLOSURE, AND LOW VOLTAGE DISTRIBUTION. SEE POWER DISTRIBUTION SINGLE LINE DIAGRAMS, SHEETS E-50 THRU E-54.

PM-□ PAD MOUNTED AIR INTERRUPTER SWITCH - 15KV, 600AMP, 95KV BIL WITH 200 AMP FUSED SWITCHES.

TP1□ PAD MOUNTED TRANSFORMER. SEE POWER DISTRIBUTION SINGLE LINE DIAGRAMS, SHEETS E-50 THRU E-54.

3ØUP UNDERGROUND DIRECT BURIED 3-PHASE 15KV PRIMARY CABLES. SEE POWER DISTRIBUTION SINGLE LINE DIAGRAMS, SHEETS SHEETS E-50 THRU E-54.

1ØUP UNDERGROUND DIRECT BURIED 15KV 1-PHASE PRIMARY CABLES. SEE POWER DISTRIBUTION SINGLE LINE DIAGRAMS, SHEETS SHEETS E-50 THRU E-54.

1ØUS UNDERGROUND DIRECT BURIED 1-PHASE SECONDARY CABLES

(S1) 3/C - #2 WITH GROUND DIRECT BURY 600 VOLT POWER CABLE

(S2) 3/C - #4 WITH GROUND DIRECT BURY 600 VOLT POWER CABLE

(S3) 3/C - #6 WITH GROUND DIRECT BURY 600 VOLT POWER CABLE

(S4) 3/C - #8 WITH GROUND DIRECT BURY 600 VOLT POWER CABLE

(S5) 3/C - #10 WITH GROUND DIRECT BURY 600 VOLT POWER CABLE

CONCRETE ENCASEMENT REQUIRED UNDER SERVICE ROADS, TRAILS, LOW WATER CROSSINGS, AND CREEK CROSSINGS. CONDUIT SIZES AS REQUIRED FOR CABLE(S). 100mm MINIMUM FOR 3ØUP.

—EOP— EXISTING OVERHEAD PRIMARY TO REMAIN

● NEW WOOD POLE - HEIGHT AND CLASS AS INDICATED

○ EXISTING WOOD POLE

RLM RANGE LIMIT MARKER CONTROL CABLE

RANGE LIMIT MARKER

FLIR CAMERA

CV-1 STATIONARY ARMOR TARGETS (STATS)

CV-1 FUTURE STATIONARY ARMOR TARGETS (STATS)

CC-2 STATIONARY INFANTRY TARGETS (SIT)

ECM-1 EXISTING ARMOR MOVING TARGET

DEFILADE

M-01 ARMOR MOVING TARGETS (AMTC)

PRIMARY TARGET SERVICE ROAD

TANK TRAILS, CROSSOVERS, ACCESS ROADS

EXISTING ROAD

SCALE: 1:2000

THE SEAL APPEARING ON THIS DOCUMENT WAS AUTHORIZED BY SAMUEL LEE GULLEY ON AUGUST 8, 2001

SAMUEL LEE GULLEY CERTIFICATE No. 50007 STATE OF FLORIDA PROFESSIONAL ENGINEER

US Army Corps of Engineers FORT WORTH DISTRICT

POLYENGINEERING, INC. 1020 Boulevard Avenue Dothan, Alabama 36303 (334) 792-4760 (voice) (334) 792-2016 (fax)

Mark	Description	Date	Appr.
10	ADDED RLM CABLE AND TARGET, TITLE BLOCK EDIT, ADDED SEAL	AUG 01	SLG

U.S. ARMY ENGINEER DISTRICT CORPS OF ENGINEERS FORT WORTH, TEXAS

POLYENGINEERING, INC. ENGINEERS & ARCHITECTS DOTHAN, ALABAMA

Designed by: Samuel L. Gulley
Dwn by: T. Bolton
Ckd by: F. Carlson
Reviewed by:
Submitted by: E. Lamar Faulk
Date: 19 July 2001
Sol. No. DACA63-01-B-0007
Contract No. DACA63-01-C-0016
File name:
Plot date:
Plot scale: 1:200
Rev.

FORT HOOD, TEXAS
DIGITAL MULTI-PURPOSE RANGE COMPLEX (DMPRC)
PN 51915

ELECTRICAL SITE PLAN
RANGE POWER DISTRIBUTION

Sheet reference number: E-8

Sheet of

Contr. No. DACA63-01-C-0016

...\2000-022_E08.dwg 8/12/2005 9:20:39 AM

00688530

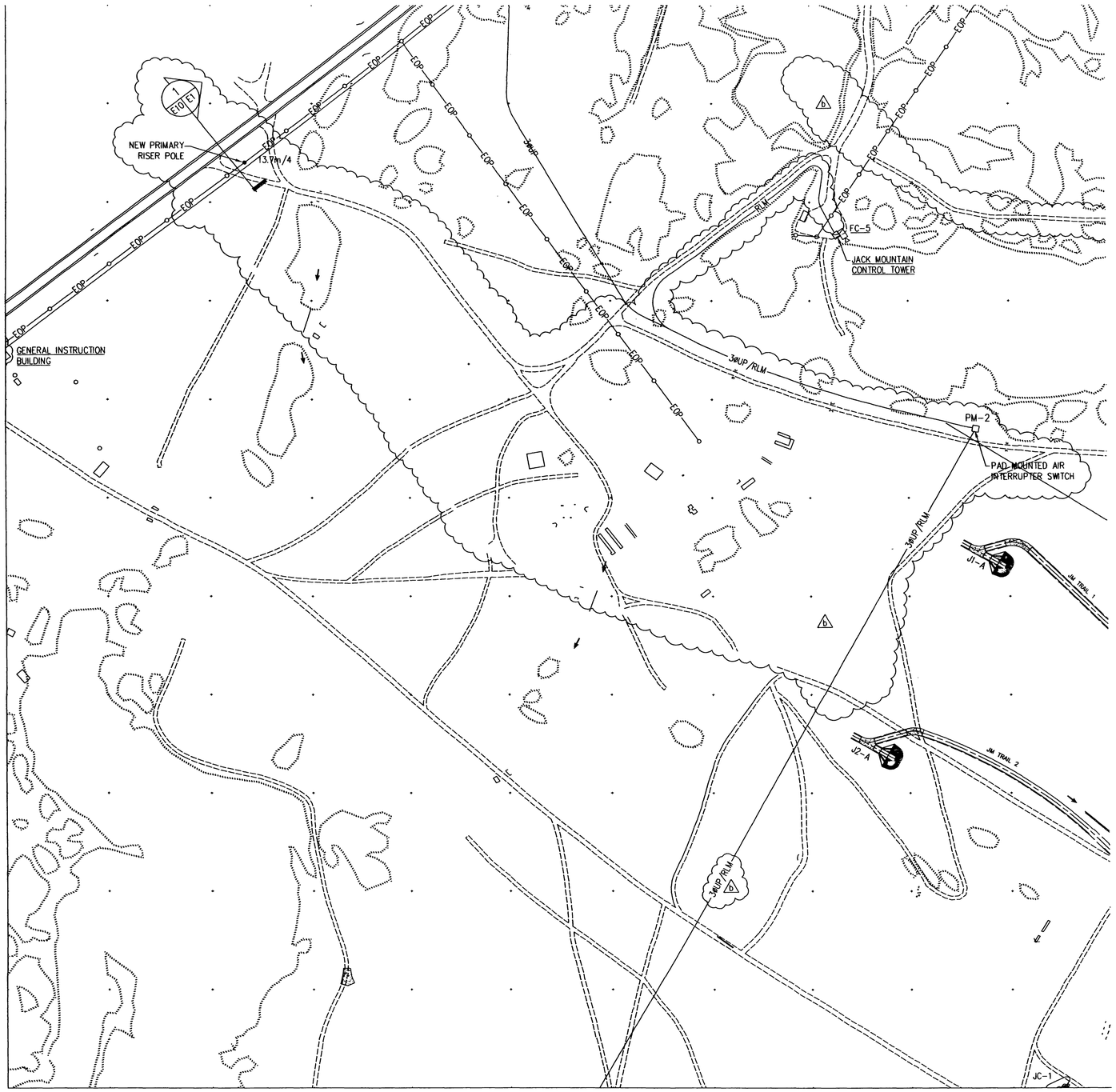

NORTH

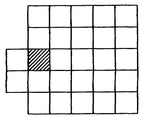

SITE KEY PLAN

NOT TO SCALE

ELECTRICAL SITE LEGEND

PC2■	POWER CENTER DESIGNATION CONSISTING OF PAD MOUNTED TRANSFORMER, PRIMARY CABLE TERMINATING/SECTIONALIZING ENCLOSURE, AND LOW VOLTAGE DISTRIBUTION. SEE POWER DISTRIBUTION SINGLE LINE DIAGRAMS, SHEETS E-50 THRU E-54.
PM-□	PAD MOUNTED AIR INTERRUPTER SWITCH - 15KV, 600AMP, 95KV BIL WITH 200 AMP FUSED SWITCHES.
TP1□	PAD MOUNTED TRANSFORMER. SEE POWER DISTRIBUTION SINGLE LINE DIAGRAMS, SHEETS E-50 THRU E-54.
3ØUP	UNDERGROUND DIRECT BURIED 3-PHASE 15KV PRIMARY CABLES. SEE POWER DISTRIBUTION SINGLE LINE DIAGRAMS, SHEETS SHEETS E-50 THRU E-54.
1ØUP	UNDERGROUND DIRECT BURIED 15KV 1-PHASE PRIMARY CABLES. SEE POWER DISTRIBUTION SINGLE LINE DIAGRAMS, SHEETS SHEETS E-50 THRU E-54.
1ØUS	UNDERGROUND DIRECT BURIED 1-PHASE SECONDARY CABLES
(S1)	3/C - #2 WITH GROUND DIRECT BURY 600 VOLT POWER CABLE
(S2)	3/C - #4 WITH GROUND DIRECT BURY 600 VOLT POWER CABLE
(S3)	3/C - #6 WITH GROUND DIRECT BURY 600 VOLT POWER CABLE
(S4)	3/C - #8 WITH GROUND DIRECT BURY 600 VOLT POWER CABLE
(S5)	3/C - #10 WITH GROUND DIRECT BURY 600 VOLT POWER CABLE
=====	CONCRETE ENCASEMENT REQUIRED UNDER SERVICE ROADS, TRAILS, LOW WATER CROSSINGS, AND CREEK CROSSINGS. CONDUIT SIZES AS REQUIRED FOR CABLE(S). 100mm MINIMUM FOR 3ØUP.
—EOP—	EXISTING OVERHEAD PRIMARY TO REMAIN
●	NEW WOOD POLE - HEIGHT AND CLASS AS INDICATED
○	EXISTING WOOD POLE
RLM	RANGE LIMIT MARKER CONTROL CABLE
◁	RANGE LIMIT MARKER
▷□	FLIR CAMERA
CV-1	STATIONARY ARMOR TARGETS (STATS)
CV-1	FUTURE STATIONARY ARMOR TARGETS (STATS)
CC-2	STATIONARY INFANTRY TARGETS (SIT)
ECM-1	EXISTING ARMOR MOVING TARGET
	DEFILADE
M-01	ARMOR MOVING TARGETS (AMTC)
	PRIMARY TARGET SERVICE ROAD
	TANK TRAILS, CROSSOVERS, ACCESS ROADS
	EXISTING ROAD

0 20 40 80

SCALE: 1:2000

THE SEAL APPEARING ON THIS DOCUMENT WAS AUTHORIZED BY SAMUEL LEE GULLEY ON AUGUST 8, 2001

SAMUEL LEE GULLEY CERTIFICATE No. 50007 STATE OF FLORIDA PROFESSIONAL ENGINEER

US Army Corps of Engineers
FORT WORTH DISTRICT

POLYENGINEERING, INC.
1320 Southland Avenue
Dothan, Alabama 36303
(334) 793-4799 (voice)
(334) 793-8016 (fax)

Rev.	Description	Date	Appr.
A	ADDED BLM CABLE AND RELOCATED PM-2, TITLE BLOCK EDIT, ADDED SEAL	AUG 01	S.G.

Designed by: Samuel L. Gulley
Dwn by: T. Bolton
Chkd by: F. Carbori
Reviewed by:
Submitted by: E. Lamar Faulk
Date: 19 July 2001
Rev:
Sol. No. DACA63-01-B-0007
Contr. No. DACA63-01-C-0016
File name:
Plot date:
Plot scale: 1:200

U.S. ARMY ENGINEER DISTRICT
CORPS OF ENGINEERS
FORT WORTH, TEXAS

POLYENGINEERING, INC.
ENGINEERS & ARCHITECTS
DOTHAN, ALABAMA

FORT HOOD, TEXAS
DIGITAL MULTI-PURPOSE RANGE COMPLEX (DMPRC)
PN 519115 FY 00

ELECTRICAL SITE PLAN
RANGE POWER DISTRIBUTION

Sheet reference number: E-10

Sheet of

Contr. No. DACA63-01-C-0016

..\2000-022_E10.dwg 8/12/2005 9:19:38 AM

00688540

NORTH

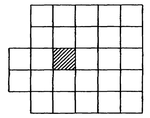

SITE KEY PLAN

NOT TO SCALE

ELECTRICAL SITE LEGEND

PC2■	POWER CENTER DESIGNATION CONSISTING OF PAD MOUNTED TRANSFORMER, PRIMARY CABLE TERMINATING/SECTIONALIZING ENCLOSURE, AND LOW VOLTAGE DISTRIBUTION. SEE POWER DISTRIBUTION SINGLE LINE DIAGRAMS, SHEETS E-50 THRU E-54.
PM-□	PAD MOUNTED AIR INTERRUPTER SWITCH - 15KV, 600AMP, 95KV BIL WITH 200 AMP FUSED SWITCHES.
TP1□	PAD MOUNTED TRANSFORMER. SEE POWER DISTRIBUTION SINGLE LINE DIAGRAMS, SHEETS E-50 THRU E-54.
3ØUP	UNDERGROUND DIRECT BURIED 3-PHASE 15KV PRIMARY CABLES. SEE POWER DISTRIBUTION SINGLE LINE DIAGRAMS, SHEETS SHEETS E-50 THRU E-54.
1ØUP	UNDERGROUND DIRECT BURIED 15KV 1-PHASE PRIMARY CABLES. SEE POWER DISTRIBUTION SINGLE LINE DIAGRAMS, SHEETS SHEETS E-50 THRU E-54.
1ØUS	UNDERGROUND DIRECT BURIED 1-PHASE SECONDARY CABLES
(S1)	3/C - #2 WITH GROUND DIRECT BURY 600 VOLT POWER CABLE
(S2)	3/C - #4 WITH GROUND DIRECT BURY 600 VOLT POWER CABLE
(S3)	3/C - #6 WITH GROUND DIRECT BURY 600 VOLT POWER CABLE
(S4)	3/C - #8 WITH GROUND DIRECT BURY 600 VOLT POWER CABLE
(S5)	3/C - #10 WITH GROUND DIRECT BURY 600 VOLT POWER CABLE
=====	CONCRETE ENCASEMENT REQUIRED UNDER SERVICE ROADS, TRAILS, LOW WATER CROSSINGS, AND CREEK CROSSINGS. CONDUIT SIZES AS REQUIRED FOR CABLE(S). 100mm MINIMUM FOR 3ØUP.
—EOP—	EXISTING OVERHEAD PRIMARY TO REMAIN
●	NEW WOOD POLE - HEIGHT AND CLASS AS INDICATED
○	EXISTING WOOD POLE
RLM	RANGE LIMIT MARKER CONTROL CABLE
◁	RANGE LIMIT MARKER
▷□	FLIR CAMERA
CV-1	STATIONARY ARMOR TARGETS (STATS)
CV-1	FUTURE STATIONARY ARMOR TARGETS (STATS)
CC-2	STATIONARY INFANTRY TARGETS (SIT)
ECM-1	EXISTING ARMOR MOVING TARGET
	DEFILADE
M-01	ARMOR MOVING TARGETS (AMTC)
	PRIMARY TARGET SERVICE ROAD
	TANK TRAILS, CROSSOVERS, ACCESS ROADS
	EXISTING ROAD

SCALE: 1:2000 (0 20 40 80)

THE SEAL APPEARING ON THIS DOCUMENT WAS AUTHORIZED BY SAMUEL LEE GULLEY ON AUGUST 8, 2001

SAMUEL LEE GULLEY CERTIFICATE No. 50007 STATE OF FLORIDA PROFESSIONAL ENGINEER

US Army Corps of Engineers
FORT WORTH DISTRICT

POLYENGINEERING, INC.
1025 Sandhurst Avenue
Dothan, Alabama 36303
(334) 793-6700 (voice)
(334) 793-9016 (fax)

Mark	Description	Date	Appr.
1	RELOCATED CAMERA CIRCUIT, TITLE BLOCK EDIT, ADDED SEAL	AUG 01	SLG

Designed by: Samuel L. Gulley
Drawn by: T. Belton
Checked by: F. Corbori
Reviewed by:
Submitted by: E. Lamar Faulk
Date: 15 July 2001
Sol. No. DACA63-01-B-0007
Contr. No. DACA63-01-C-0016
File name:
Plot date:
Plot scale: 1:200
Rev.

U.S. ARMY ENGINEER DISTRICT
CORPS OF ENGINEERS
FORT WORTH, TEXAS

POLYENGINEERING, INC.
ENGINEERS & ARCHITECTS
DOTHAN, ALABAMA

FORT HOOD, TEXAS
DIGITAL MULTI-PURPOSE RANGE COMPLEX (DMPRC)
PN 519115 P-00

ELECTRICAL SITE PLAN
RANGE POWER DISTRIBUTION

Sheet reference number: E-11
Sheet of

Contr. No. DACA63-01-C-0016

..\2000-022_E11.dwg 8/12/2005 9:18:32 AM

00688550

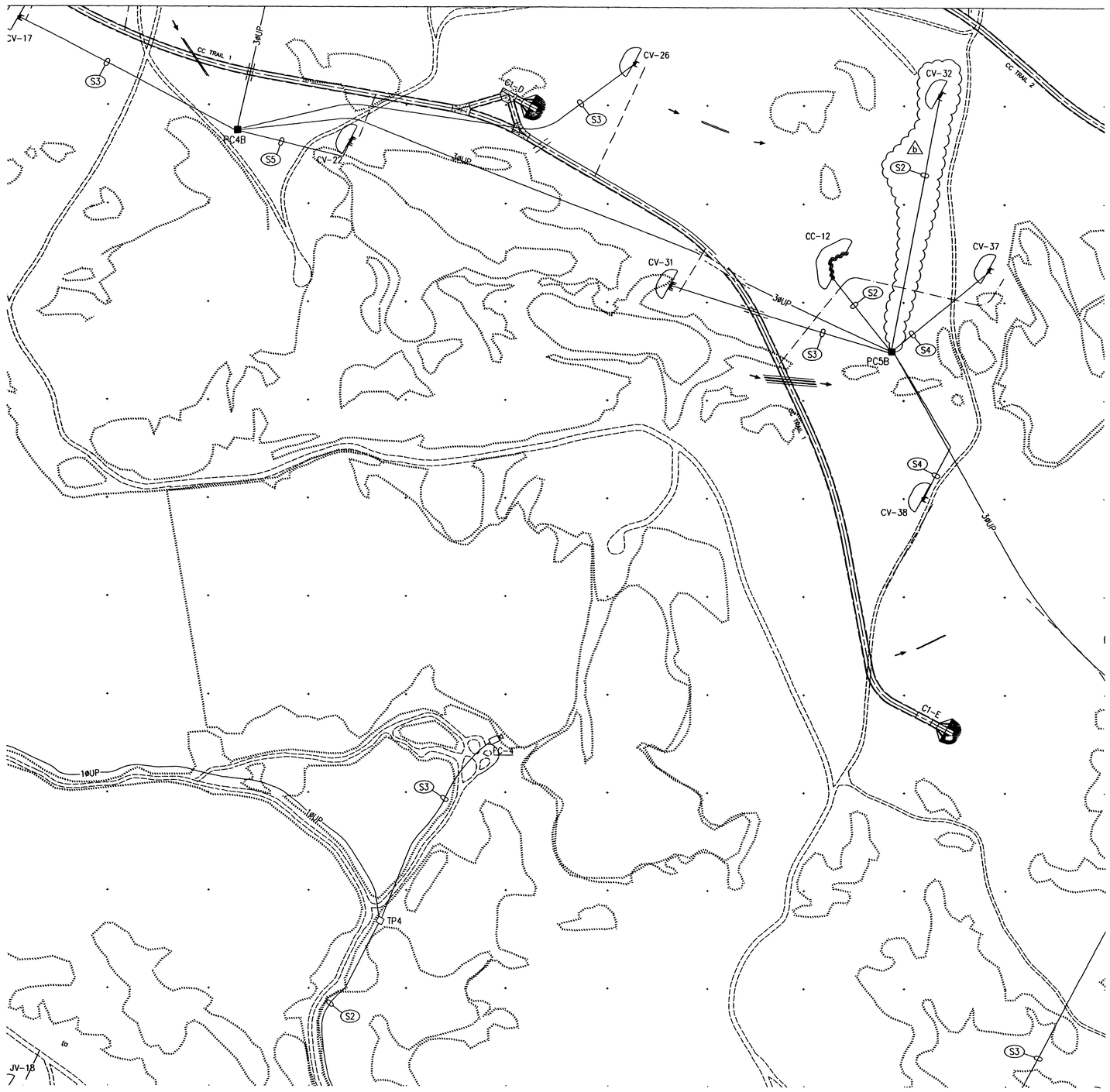

NORTH

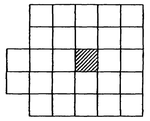

SITE KEY PLAN

NOT TO SCALE

ELECTRICAL SITE LEGEND

PC2■	POWER CENTER DESIGNATION CONSISTING OF PAD MOUNTED TRANSFORMER, PRIMARY CABLE TERMINATING/SECTIONALIZING ENCLOSURE, AND LOW VOLTAGE DISTRIBUTION. SEE POWER DISTRIBUTION SINGLE LINE DIAGRAMS, SHEETS E-50 THRU E-54.
PM-□	PAD MOUNTED AIR INTERRUPTER SWITCH - 15KV, 600AMP, 95KV BIL WITH 200 AMP FUSED SWITCHES.
TP1□	PAD MOUNTED TRANSFORMER. SEE POWER DISTRIBUTION SINGLE LINE DIAGRAMS, SHEETS E-50 THRU E-54.
3ØUP	UNDERGROUND DIRECT BURIED 3-PHASE 15KV PRIMARY CABLES. SEE POWER DISTRIBUTION SINGLE LINE DIAGRAMS, SHEETS SHEETS E-50 THRU E-54.
1ØUP	UNDERGROUND DIRECT BURIED 15KV 1-PHASE PRIMARY CABLES. SEE POWER DISTRIBUTION SINGLE LINE DIAGRAMS, SHEETS SHEETS E-50 THRU E-54.
1ØUS	UNDERGROUND DIRECT BURIED 1-PHASE SECONDARY CABLES
(S1)	3/C - #2 WITH GROUND DIRECT BURY 600 VOLT POWER CABLE
(S2)	3/C - #4 WITH GROUND DIRECT BURY 600 VOLT POWER CABLE
(S3)	3/C - #6 WITH GROUND DIRECT BURY 600 VOLT POWER CABLE
(S4)	3/C - #8 WITH GROUND DIRECT BURY 600 VOLT POWER CABLE
(S5)	3/C - #10 WITH GROUND DIRECT BURY 600 VOLT POWER CABLE
=====	CONCRETE ENCASEMENT REQUIRED UNDER SERVICE ROADS, TRAILS, LOW WATER CROSSINGS, AND CREEK CROSSINGS. CONDUIT SIZES AS REQUIRED FOR CABLE(S). 100mm MINIMUM FOR 3ØUP.
—EOP—	EXISTING OVERHEAD PRIMARY TO REMAIN
●	NEW WOOD POLE - HEIGHT AND CLASS AS INDICATED
○	EXISTING WOOD POLE
RLM	RANGE LIMIT MARKER CONTROL CABLE
◁	RANGE LIMIT MARKER
▷□	FLIR CAMERA
CV-1	STATIONARY ARMOR TARGETS (STATS)
CV-1	FUTURE STATIONARY ARMOR TARGETS (STATS)
CC-2	STATIONARY INFANTRY TARGETS (SIT)
ECM-1	EXISTING ARMOR MOVING TARGET
	DEFILADE
M-01	ARMOR MOVING TARGETS (AMTC)
	PRIMARY TARGET SERVICE ROAD
	TANK TRAILS, CROSSOVERS, ACCESS ROADS
	EXISTING ROAD

b

0 20 40 80

SCALE: 1:2000

b

THE SEAL APPEARING ON THIS DOCUMENT WAS AUTHORIZED BY SAMUEL LEE GULLEY ON AUGUST 8, 2001

SAMUEL LEE GULLEY CERTIFICATE No. 50007 STATE OF FLORIDA PROFESSIONAL ENGINEER

Sheet reference number: E-12

Sheet of

b

US Army Corps of Engineers
FORT WORTH DISTRICT

POLYENGINEERING, INC.
1905 Woodland Avenue
Dothan, Alabama 36303
(334) 793-4700 (voice)
(334) 793-3010 (fax)

Rev.	Description	Date	Appr.
A	ADDED INRIET, TITLE BLOCK EDIT, ADDED SEAL	AUG 01	SJG

Designed by: Samuel L. Gulley
Dwn by: T. Bolton
Ckd by: F. Corbeil
Reviewed by:
Submitted by: E. Lamar Faulk
Date: 19 July 2001
Sol. No. DACA63-01-B-0007
Contr. No. DACA63-01-C-0016
File name:
Plot scale: 1:200
Plot date:

U.S. ARMY ENGINEER DISTRICT CORPS OF ENGINEERS FORT WORTH, TEXAS

POLYENGINEERING, INC. ENGINEERS & ARCHITECTS DOTHAN, ALABAMA

FORT HOOD, TEXAS
DIGITAL MULTI-PURPOSE RANGE COMPLEX (DMPRC)
PN 51915

b

00

ELECTRICAL SITE PLAN
RANGE POWER DISTRIBUTION

Contr. No. DACA63-01-C-0016

...\2000-022_E12.dwg 8/12/2005 9:17:57 AM

00688360