NORTH

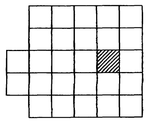

SITE KEY PLAN

NOT TO SCALE

ELECTRICAL SITE LEGEND

PC2■ POWER CENTER DESIGNATION CONSISTING OF PAD MOUNTED TRANSFORMER, PRIMARY CABLE TERMINATING/SECTIONALIZING ENCLOSURE, AND LOW VOLTAGE DISTRIBUTION. SEE POWER DISTRIBUTION SINGLE LINE DIAGRAMS, SHEETS E-50 THRU E-54.

PM-□ PAD MOUNTED AIR INTERRUPTER SWITCH – 15KV, 600AMP, 95KV BIL WITH 200 AMP FUSED SWITCHES.

TP1□ PAD MOUNTED TRANSFORMER. SEE POWER DISTRIBUTION SINGLE LINE DIAGRAMS, SHEETS E-50 THRU E-54.

3ØUP UNDERGROUND DIRECT BURIED 3-PHASE 15KV PRIMARY CABLES. SEE POWER DISTRIBUTION SINGLE LINE DIAGRAMS, SHEETS SHEETS E-50 THRU E-54.

1ØUP UNDERGROUND DIRECT BURIED 15KV 1-PHASE PRIMARY CABLES. SEE POWER DISTRIBUTION SINGLE LINE DIAGRAMS, SHEETS SHEETS E-50 THRU E-54.

1ØUS UNDERGROUND DIRECT BURIED 1-PHASE SECONDARY CABLES

(S1) 3/C – #2 WITH GROUND DIRECT BURY 600 VOLT POWER CABLE

(S2) 3/C – #4 WITH GROUND DIRECT BURY 600 VOLT POWER CABLE

(S3) 3/C – #6 WITH GROUND DIRECT BURY 600 VOLT POWER CABLE

(S4) 3/C – #8 WITH GROUND DIRECT BURY 600 VOLT POWER CABLE

(S5) 3/C – #10 WITH GROUND DIRECT BURY 600 VOLT POWER CABLE

CONCRETE ENCASEMENT REQUIRED UNDER SERVICE ROADS, TRAILS, LOW WATER CROSSINGS, AND CREEK CROSSINGS. CONDUIT SIZES AS REQUIRED FOR CABLE(S). 100mm MINIMUM FOR 3ØUP.

—EOP— EXISTING OVERHEAD PRIMARY TO REMAIN

● NEW WOOD POLE – HEIGHT AND CLASS AS INDICATED

○ EXISTING WOOD POLE

RLM RANGE LIMIT MARKER CONTROL CABLE

RANGE LIMIT MARKER

FLIR CAMERA

CV-1 STATIONARY ARMOR TARGETS (STATS)

CV-1 FUTURE STATIONARY ARMOR TARGETS (STATS)

CC-2 STATIONARY INFANTRY TARGETS (SIT)

ECM-1 EXISTING ARMOR MOVING TARGET

DEFILADE

M-01 ARMOR MOVING TARGETS (AMTC)

PRIMARY TARGET SERVICE ROAD

TANK TRAILS, CROSSOVERS, ACCESS ROADS

EXISTING ROAD

0 20 40 80

SCALE: 1:2000

THE SEAL APPEARING ON THIS DOCUMENT WAS AUTHORIZED BY SAMUEL LEE GULLEY ON AUGUST 8, 2001

SAMUEL LEE GULLEY CERTIFICATE No. 50007 STATE OF FLORIDA PROFESSIONAL ENGINEER

Sheet reference number: E-13

Sheet of

US Army Corps of Engineers FORT WORTH DISTRICT

POLYENGINEERING, INC. 1205 Bradford Avenue Dothan, Alabama 36303 (334) 793-4700 (voice) (334) 793-8018 (fax)

Mark	Description	Date	Appr.
A	TITLE BLOCK EDIT. ADDED SEAL	AUG 01	ELF

Designed by: Samuel L. Gulley
Drawn by: T. Bolton
Chkd by: F. Corbani
Date: July 2001
Sol. No. DACA63-01-B-0007
Rev.
Reviewed by:
Contr. No. DACA63-01-C-0016
File name:
Plot date:
Plot scale: 1:200
Submitted by: E. Lamar Faulk

U.S. ARMY ENGINEER DISTRICT CORPS OF ENGINEERS FORT WORTH, TEXAS

POLYENGINEERING, INC. ENGINEERS & ARCHITECTS DOTHAN, ALABAMA

FORT HOOD, TEXAS DIGITAL MULTI-PURPOSE RANGE COMPLEX (DMPRC) PN 519915 FY 00

ELECTRICAL SITE PLAN RANGE POWER DISTRIBUTION

Contr. No. DACA63-01-C-0016

...\2000-022_E13.dwg 8/12/2005 9:17:24 AM

00688570

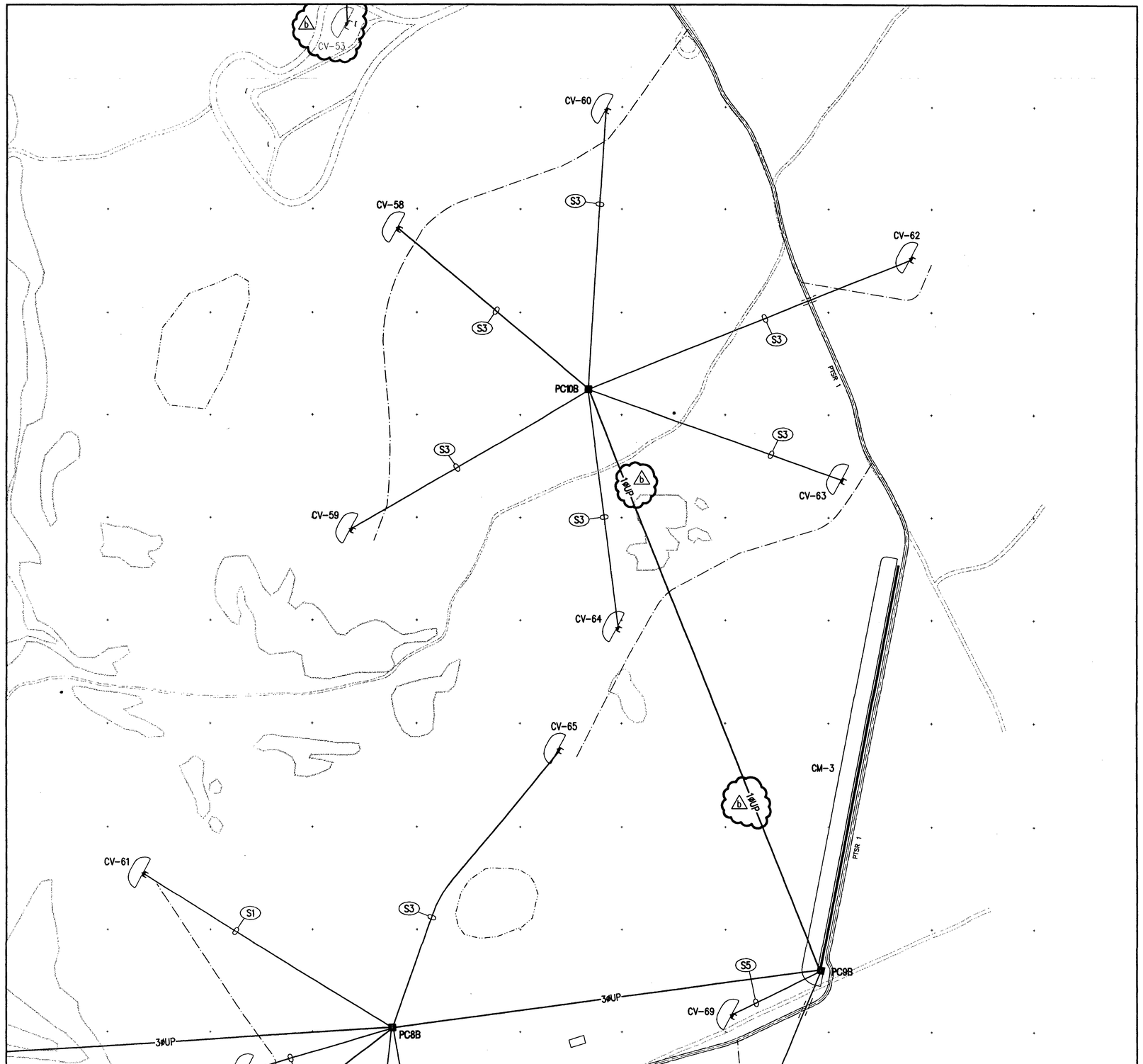

NORTH

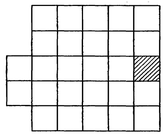

SITE KEY PLAN

NOT TO SCALE

ELECTRICAL SITE LEGEND

PC2 ■ POWER CENTER DESIGNATION CONSISTING OF PAD MOUNTED TRANSFORMER, PRIMARY CABLE TERMINATING/SECTIONALIZING ENCLOSURE, AND LOW VOLTAGE DISTRIBUTION. SEE POWER DISTRIBUTION SINGLE LINE DIAGRAMS, SHEETS E-50 THRU E-54.

PM-1 □ PAD MOUNTED AIR INTERRUPTER SWITCH – 15KV, 600AMP, 95KV BIL WITH 200 AMP FUSED SWITCHES.

TP1 □ PAD MOUNTED TRANSFORMER. SEE POWER DISTRIBUTION SINGLE LINE DIAGRAMS, SHEETS E-50 THRU E-54.

3ØUP UNDERGROUND DIRECT BURIED 3-PHASE 15KV PRIMARY CABLES. SEE POWER DISTRIBUTION SINGLE LINE DIAGRAMS, SHEETS SHEETS E-50 THRU E-54.

1ØUP UNDERGROUND DIRECT BURIED 15KV 1-PHASE PRIMARY CABLES. SEE POWER DISTRIBUTION SINGLE LINE DIAGRAMS, SHEETS SHEETS E-50 THRU E-54.

1ØUS UNDERGROUND DIRECT BURIED 1-PHASE SECONDARY CABLES

(S1) 3/C – #2 WITH GROUND DIRECT BURY 600 VOLT POWER CABLE

(S2) 3/C – #4 WITH GROUND DIRECT BURY 600 VOLT POWER CABLE

(S3) 3/C – #6 WITH GROUND DIRECT BURY 600 VOLT POWER CABLE

(S4) 3/C – #8 WITH GROUND DIRECT BURY 600 VOLT POWER CABLE

(S5) 3/C – #10 WITH GROUND DIRECT BURY 600 VOLT POWER CABLE

CONCRETE ENCASEMENT REQUIRED UNDER SERVICE ROADS, TRAILS, LOW WATER CROSSINGS, AND CREEK CROSSINGS. CONDUIT SIZES AS REQUIRED FOR CABLE(S). 100mm MINIMUM FOR 3ØUP.

—EOP— EXISTING OVERHEAD PRIMARY TO REMAIN

● NEW WOOD POLE – HEIGHT AND CLASS AS INDICATED

○ EXISTING WOOD POLE

RLM RANGE LIMIT MARKER CONTROL CABLE

RANGE LIMIT MARKER

FLIR CAMERA

CV-1 STATIONARY ARMOR TARGETS (STATS)

CV-1 FUTURE STATIONARY ARMOR TARGETS (STATS)

CC-2 STATIONARY INFANTRY TARGETS (SIT)

ECM-1 EXISTING ARMOR MOVING TARGET

DEFILADE

M-01 ARMOR MOVING TARGETS (AMTC)

PRIMARY TARGET SERVICE ROAD

TANK TRAILS, CROSSOVERS, ACCESS ROADS

EXISTING ROAD

0 20 40 80
SCALE: 1:2000

THE SEAL APPEARING ON THIS DOCUMENT WAS AUTHORIZED BY SAMUEL LEE GULLEY ON AUGUST 8, 2001

SAMUEL LEE GULLEY CERTIFICATE NO. 34001 STATE OF FLORIDA PROFESSIONAL ENGINEER

US Army Corps of Engineers
FORT WORTH DISTRICT

POLYENGINEERING, INC.
1958 Headland Avenue
Dothan, Alabama 36303
(334) 792-4700 (voice)
(334) 792-9216 (fax)

Mark	Description	Date	Appr.
1	ADDED RLM CABLE AND TARGET, TITLE BLOCK EDIT, ADDED SEAL	AUG 01	SLG

Designed by: Samuel L. Gulley
Dwn by: T. Belton
Ckd by: F. Corbari
Reviewed by:
Submitted by: E. Lamar Faulk
Date: 19 July 2001
Rev.
Sol. No. DACA63-01-B-0007
Contr. No. DACA63-01-C-0016
File name:
Plot date:
Plot scale: 1:200

U.S. ARMY ENGINEER DISTRICT
CORPS OF ENGINEERS
FORT WORTH, TEXAS

POLYENGINEERING, INC.
ENGINEERS & ARCHITECTS
DOTHAN, ALABAMA

FORT HOOD, TEXAS
DIGITAL MULTI-PURPOSE RANGE COMPLEX
(DMPRC)
PN 51915 P00

ELECTRICAL SITE PLAN
RANGE POWER DISTRIBUTION

Sheet reference number:
E-14
Sheet of

00688580

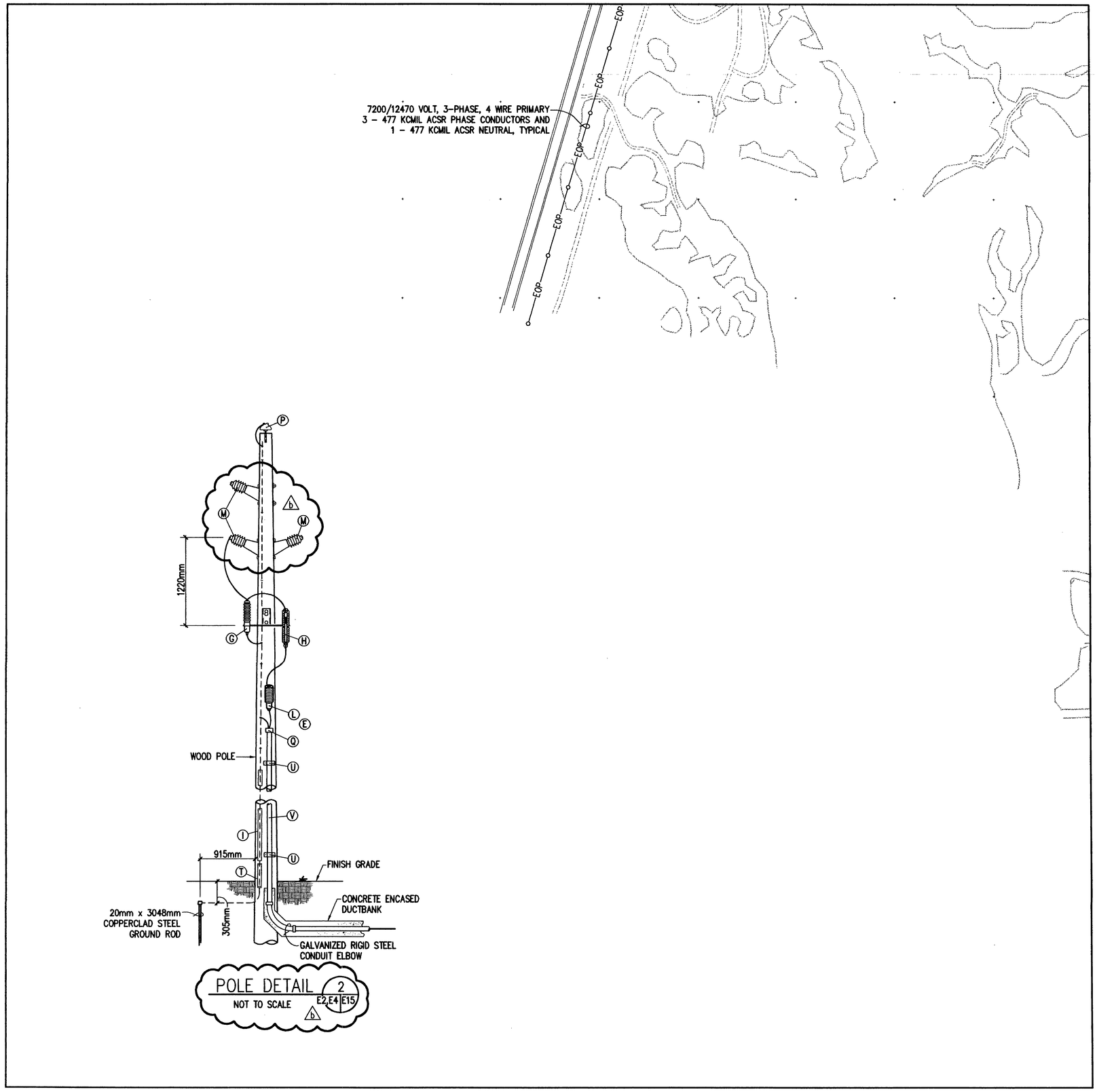

POLE DETAIL 2
NOT TO SCALE
E2,E4 E15

NORTH

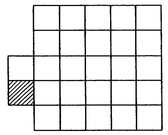

SITE KEY PLAN
NOT TO SCALE

ELECTRICAL SITE LEGEND

PC2■ POWER CENTER DESIGNATION CONSISTING OF PAD MOUNTED TRANSFORMER, PRIMARY CABLE TERMINATING/SECTIONALIZING ENCLOSURE, AND LOW VOLTAGE DISTRIBUTION. SEE POWER DISTRIBUTION SINGLE LINE DIAGRAMS, SHEETS E-50 THRU E-54.

PM-□ PAD MOUNTED AIR INTERRUPTER SWITCH - 15KV, 600AMP, 95KV BIL WITH 200 AMP FUSED SWITCHES.

TP1□ PAD MOUNTED TRANSFORMER. SEE POWER DISTRIBUTION SINGLE LINE DIAGRAMS, SHEETS E-50 THRU E-54.

3ØUP UNDERGROUND DIRECT BURIED 3-PHASE 15KV PRIMARY CABLES. SEE POWER DISTRIBUTION SINGLE LINE DIAGRAMS, SHEETS SHEETS E-50 THRU E-54.

1ØUP UNDERGROUND DIRECT BURIED 15KV 1-PHASE PRIMARY CABLES. SEE POWER DISTRIBUTION SINGLE LINE DIAGRAMS, SHEETS SHEETS E-50 THRU E-54.

1ØUS UNDERGROUND DIRECT BURIED 1-PHASE SECONDARY CABLES

(S1) 3/C - #2 WITH GROUND DIRECT BURY 600 VOLT POWER CABLE
(S2) 3/C - #4 WITH GROUND DIRECT BURY 600 VOLT POWER CABLE
(S3) 3/C - #6 WITH GROUND DIRECT BURY 600 VOLT POWER CABLE
(S4) 3/C - #8 WITH GROUND DIRECT BURY 600 VOLT POWER CABLE
(S5) 3/C - #10 WITH GROUND DIRECT BURY 600 VOLT POWER CABLE

CONCRETE ENCASEMENT REQUIRED UNDER SERVICE ROADS, TRAILS, LOW WATER CROSSINGS, AND CREEK CROSSINGS. CONDUIT SIZES AS REQUIRED FOR CABLE(S). 100mm MINIMUM FOR 3ØUP.

—EOP— EXISTING OVERHEAD PRIMARY TO REMAIN
● NEW WOOD POLE - HEIGHT AND CLASS AS INDICATED
○ EXISTING WOOD POLE
RLM RANGE LIMIT MARKER CONTROL CABLE
◁ RANGE LIMIT MARKER
▷□ FLIR CAMERA
CV-1 STATIONARY ARMOR TARGETS (STATS)
CV-1 FUTURE STATIONARY ARMOR TARGETS (STATS)
CC-2 STATIONARY INFANTRY TARGETS (SIT)
ECM-1 EXISTING ARMOR MOVING TARGET
DEFILADE
M-01 ARMOR MOVING TARGETS (AMTC)
PRIMARY TARGET SERVICE ROAD
TANK TRAILS, CROSSOVERS, ACCESS ROADS
EXISTING ROAD

0 20 40 80
SCALE: 1:2000

THE SEAL APPEARING ON THIS DOCUMENT WAS AUTHORIZED BY SAMUEL LEE GULLEY ON AUGUST 8, 2001

SAMUEL LEE GULLEY CERTIFICATE No. 34201 STATE OF FLORIDA PROFESSIONAL ENGINEER

US Army Corps of Engineers
FORT WORTH DISTRICT

POLYENGINEERING, INC.
1936 Headland Avenue
Dothan, Alabama 36305
(334) 792-4790 (voice)
(334) 792-5018 (fax)

Mark	Description	Date	Appr.
A	REVISED DETAIL, TITLE BLOCK EDIT, ADDED SEAL	AUG 01	SLG

Designed by: Samuel L. Gulley
Dwn by: T. Bolton
Ckd by: F. Corbett
Reviewed by:
Submitted by: E. Lamar Faulk
Date: 19 July 2001
Rev.
Sol. No. DACA63-01-B-0007
Contr. No. DACA63-01-C-0016
File name:
Plot date:
Plot scale: 1:200

U.S. ARMY ENGINEER DISTRICT
CORPS OF ENGINEERS
FORT WORTH, TEXAS

POLYENGINEERING, INC.
ENGINEERS & ARCHITECTS
DOTHAN, ALABAMA

FORT HOOD, TEXAS
DIGITAL MULTI-PURPOSE RANGE COMPLEX (DMPRC)
PN 51915 FY00

ELECTRICAL SITE PLAN
RANGE POWER DISTRIBUTION

Sheet reference number: E-15
Sheet of

00688590

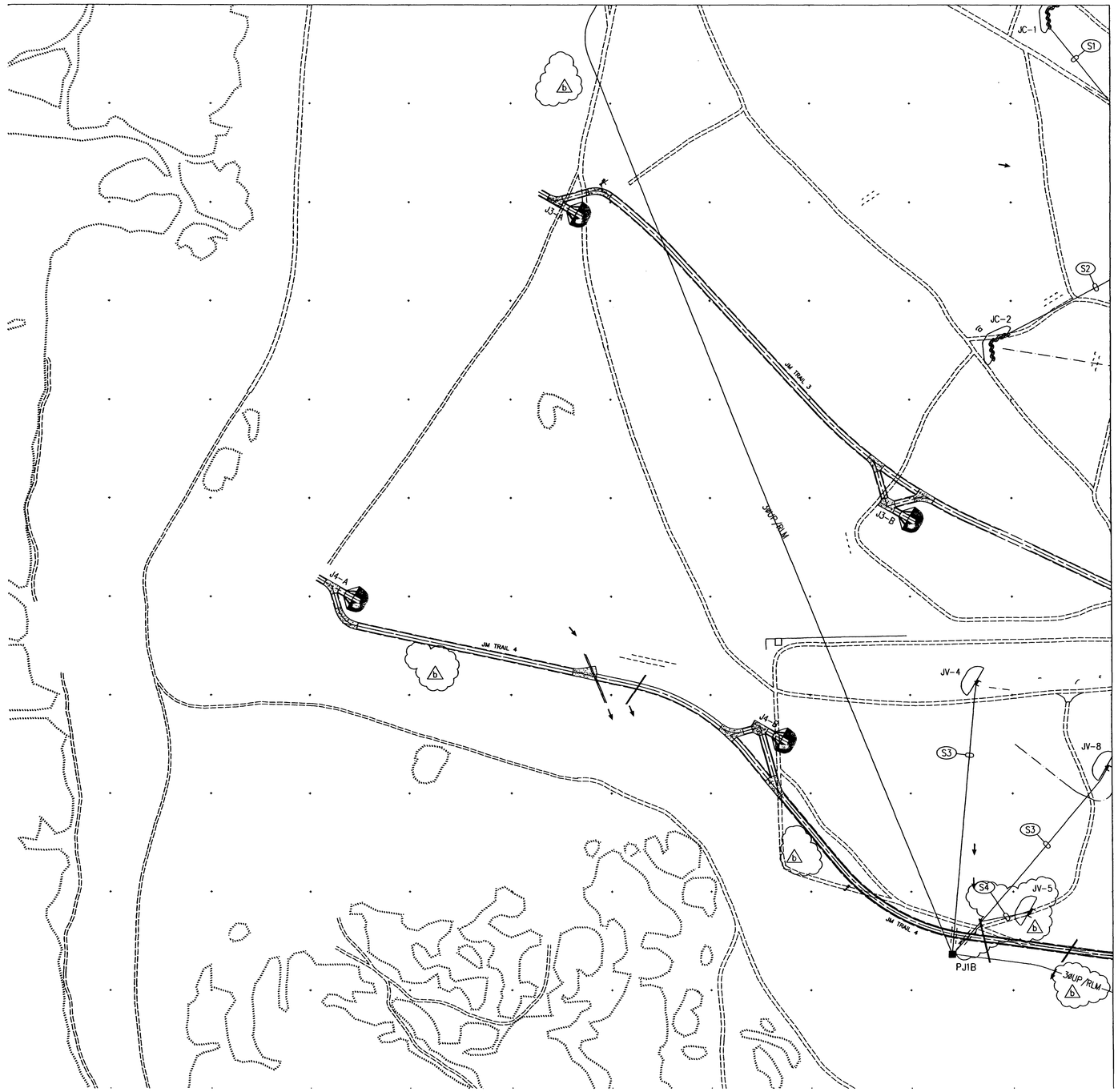

NORTH

SITE KEY PLAN

NOT TO SCALE

ELECTRICAL SITE LEGEND

PC2■	POWER CENTER DESIGNATION CONSISTING OF PAD MOUNTED TRANSFORMER, PRIMARY CABLE TERMINATING/SECTIONALIZING ENCLOSURE, AND LOW VOLTAGE DISTRIBUTION. SEE POWER DISTRIBUTION SINGLE LINE DIAGRAMS, SHEETS E-50 THRU E-54.
PM-□	PAD MOUNTED AIR INTERRUPTER SWITCH - 15KV, 600AMP, 95KV BIL WITH 200 AMP FUSED SWITCHES.
TP1□	PAD MOUNTED TRANSFORMER. SEE POWER DISTRIBUTION SINGLE LINE DIAGRAMS, SHEETS E-50 THRU E-54.
3ØUP	UNDERGROUND DIRECT BURIED 3-PHASE 15KV PRIMARY CABLES. SEE POWER DISTRIBUTION SINGLE LINE DIAGRAMS, SHEETS SHEETS E-50 THRU E-54.
1ØUP	UNDERGROUND DIRECT BURIED 15KV 1-PHASE PRIMARY CABLES. SEE POWER DISTRIBUTION SINGLE LINE DIAGRAMS, SHEETS SHEETS E-50 THRU E-54.
1ØUS	UNDERGROUND DIRECT BURIED 1-PHASE SECONDARY CABLES
(S1)	3/C - #2 WITH GROUND DIRECT BURY 600 VOLT POWER CABLE
(S2)	3/C - #4 WITH GROUND DIRECT BURY 600 VOLT POWER CABLE
(S3)	3/C - #6 WITH GROUND DIRECT BURY 600 VOLT POWER CABLE
(S4)	3/C - #8 WITH GROUND DIRECT BURY 600 VOLT POWER CABLE
(S5)	3/C - #10 WITH GROUND DIRECT BURY 600 VOLT POWER CABLE
======	CONCRETE ENCASEMENT REQUIRED UNDER SERVICE ROADS, TRAILS, LOW WATER CROSSINGS, AND CREEK CROSSINGS. CONDUIT SIZES AS REQUIRED FOR CABLE(S). 100mm MINIMUM FOR 3ØUP.
—EOP—	EXISTING OVERHEAD PRIMARY TO REMAIN
●	NEW WOOD POLE - HEIGHT AND CLASS AS INDICATED
○	EXISTING WOOD POLE
RLM	RANGE LIMIT MARKER CONTROL CABLE
◁	RANGE LIMIT MARKER
▷□	FLIR CAMERA
CV-1	STATIONARY ARMOR TARGETS (STATS)
CV-1	FUTURE STATIONARY ARMOR TARGETS (STATS)
CC-2	STATIONARY INFANTRY TARGETS (SIT)
ECM-1	EXISTING ARMOR MOVING TARGET
	DEFILADE
M-01	ARMOR MOVING TARGETS (AMTC)
	PRIMARY TARGET SERVICE ROAD
	TANK TRAILS, CROSSOVERS, ACCESS ROADS
	EXISTING ROAD

SCALE: 1:2000 (0 20 40 80)

THE SEAL APPEARING ON THIS DOCUMENT WAS AUTHORIZED BY SAMUEL LEE GULLEY ON AUGUST 8, 2001

SAMUEL LEE GULLEY CERTIFICATE No. 50007 STATE OF FLORIDA PROFESSIONAL ENGINEER

US Army Corps of Engineers FORT WORTH DISTRICT

POLYENGINEERING, INC. 1826 Headland Avenue Dothan, Alabama 36303 (334) 793-4700 (voice) (334) 793-0818 (fax)

Symbol	Description	Date	Sym
A3	ADDED RLM CABLE AND TARGET, TITLE BLOCK CORR, ADDED SEAL	AUG 01	SLG

Designed by: Samuel L. Gulley
Dwn by: T. Bolton
Chkd by: F. Corbari
Reviewed by:
Submitted by: E. Lamar Faulk
Date: 19 July 2001
Sol. No. DACA63-01-B-0007
Contr. No. DACA63-01-C-0018
File name:
Plot date:
Plot scale: 1:200
Rev.

U.S. ARMY ENGINEER DISTRICT CORPS OF ENGINEERS FORT WORTH, TEXAS

POLYENGINEERING, INC. ENGINEERS & ARCHITECTS DOTHAN, ALABAMA

FORT HOOD, TEXAS DIGITAL MULTI-PURPOSE RANGE COMPLEX PN 51915 FY 00

ELECTRICAL SITE PLAN RANGE POWER DISTRIBUTION

Sheet reference number: E-16

Sheet x of x

Contr. No. DACA63-01-C-0018

..\2000-022_E16.dwg 8/12/2005 9:16:35 AM

00688600

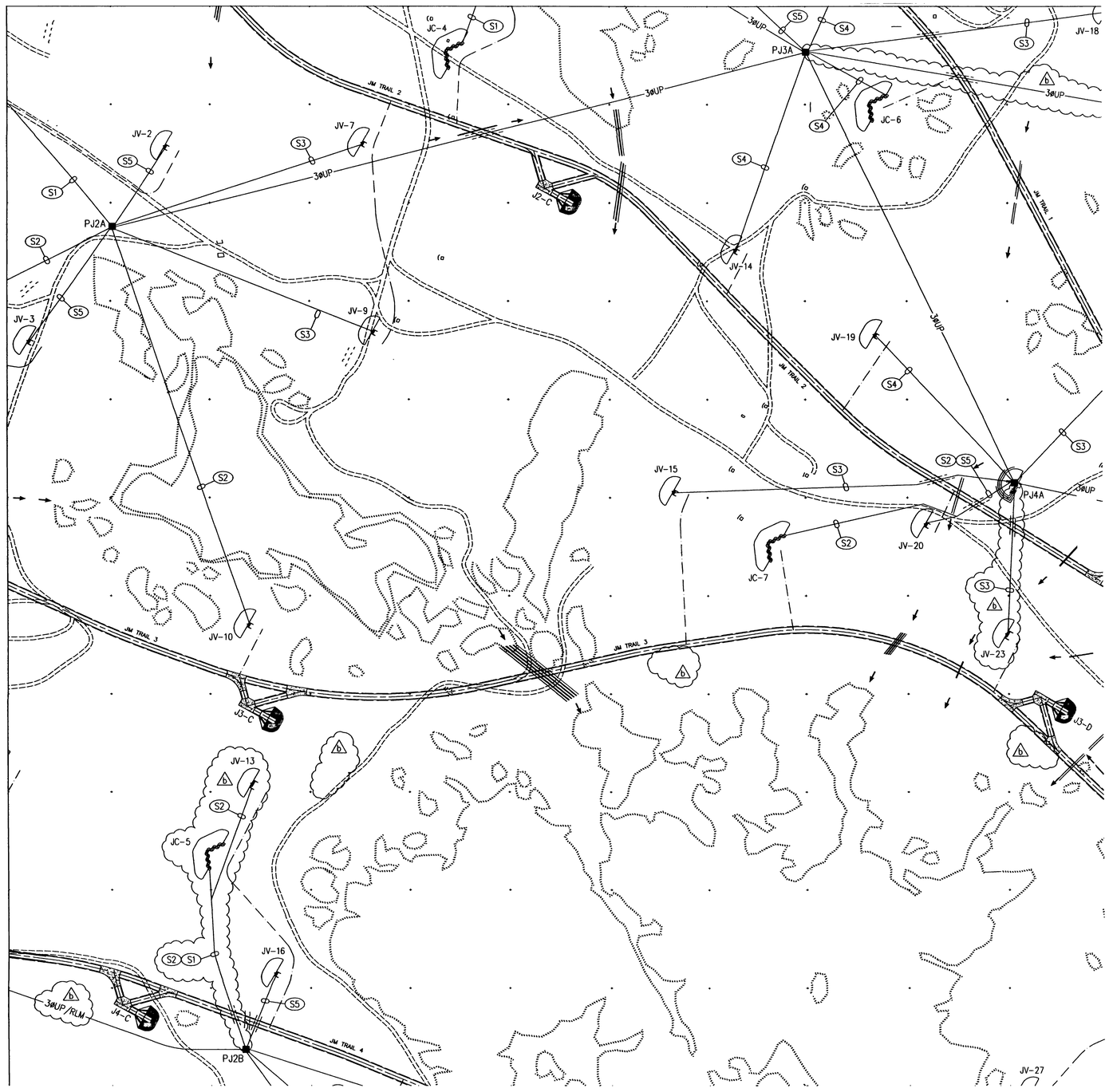

NORTH

SITE KEY PLAN

NOT TO SCALE

ELECTRICAL SITE LEGEND

PC2■ POWER CENTER DESIGNATION CONSISTING OF PAD MOUNTED TRANSFORMER, PRIMARY CABLE TERMINATING/SECTIONALIZING ENCLOSURE, AND LOW VOLTAGE DISTRIBUTION. SEE POWER DISTRIBUTION SINGLE LINE DIAGRAMS, SHEETS E-50 THRU E-54.

PM-□ PAD MOUNTED AIR INTERRUPTER SWITCH – 15KV, 600AMP, 95KV BIL WITH 200 AMP FUSED SWITCHES.

TP1□ PAD MOUNTED TRANSFORMER. SEE POWER DISTRIBUTION SINGLE LINE DIAGRAMS, SHEETS E-50 THRU E-54.

3ØUP UNDERGROUND DIRECT BURIED 3-PHASE 15KV PRIMARY CABLES. SEE POWER DISTRIBUTION SINGLE LINE DIAGRAMS, SHEETS SHEETS E-50 THRU E-54.

1ØUP UNDERGROUND DIRECT BURIED 15KV 1-PHASE PRIMARY CABLES. SEE POWER DISTRIBUTION SINGLE LINE DIAGRAMS, SHEETS SHEETS E-50 THRU E-54.

1ØUS UNDERGROUND DIRECT BURIED 1-PHASE SECONDARY CABLES

(S1) 3/C – #2 WITH GROUND DIRECT BURY 600 VOLT POWER CABLE

(S2) 3/C – #4 WITH GROUND DIRECT BURY 600 VOLT POWER CABLE

(S3) 3/C – #6 WITH GROUND DIRECT BURY 600 VOLT POWER CABLE

(S4) 3/C – #8 WITH GROUND DIRECT BURY 600 VOLT POWER CABLE

(S5) 3/C – #10 WITH GROUND DIRECT BURY 600 VOLT POWER CABLE

CONCRETE ENCASEMENT REQUIRED UNDER SERVICE ROADS, TRAILS, LOW WATER CROSSINGS, AND CREEK CROSSINGS. CONDUIT SIZES AS REQUIRED FOR CABLE(S). 100mm MINIMUM FOR 3ØUP.

—EOP— EXISTING OVERHEAD PRIMARY TO REMAIN

● NEW WOOD POLE – HEIGHT AND CLASS AS INDICATED

○ EXISTING WOOD POLE

RLM RANGE LIMIT MARKER CONTROL CABLE

RANGE LIMIT MARKER

FLIR CAMERA

CV-1 STATIONARY ARMOR TARGETS (STATS)

CV-1 FUTURE STATIONARY ARMOR TARGETS (STATS)

CC-2 STATIONARY INFANTRY TARGETS (SIT)

ECM-1 EXISTING ARMOR MOVING TARGET

DEFILADE

M-01 ARMOR MOVING TARGETS (AMTC)

PRIMARY TARGET SERVICE ROAD

TANK TRAILS, CROSSOVERS, ACCESS ROADS

EXISTING ROAD

0 20 40 80

SCALE: 1:2000

THE SEAL APPEARING ON THIS DOCUMENT WAS AUTHORIZED BY SAMUEL LEE GULLEY ON AUGUST 8, 2001

SAMUEL LEE GULLEY CERTIFICATE No. 50007 STATE OF FLORIDA PROFESSIONAL ENGINEER

US Army Corps of Engineers FORT WORTH DISTRICT

POLYENGINEERING, INC. 2550 Bradford Avenue Dothan, Alabama 36303 (334) 793-9700 (voice) (334) 793-9710 (fax)

Symb.	Description	Date	Appr.
1	ADDED RLM CABLE AND TARGETS, TITLE BLOCK EDIT, ADDED SEAL	AUG 01	SLG

Designed by: Samuel L. Gulley
Dwn by: T. Bolton
Chd by: F. Corbari
Reviewed by:
Submitted by: E. Lamar Faulk

Date: 19 July 2001
Sol. No. DACA63-01-B-0007
Contr. No. DACA63-01-C-0016
File name:
Plot date:
Plot scale: 1:200

Rev.

U.S. ARMY ENGINEER DISTRICT CORPS OF ENGINEERS FORT WORTH, TEXAS

POLYENGINEERING, INC. ENGINEERS & ARCHITECTS DOTHAN, ALABAMA

FORT HOOD, TEXAS
DIGITAL MULTI-PURPOSE RANGE COMPLEX (DMPRC)
PN 51913
FY 00

ELECTRICAL SITE PLAN
RANGE POWER DISTRIBUTION

Sheet reference number: E-17

Sheet of

Contr. No. DACA63-01-C-0016

...\2000-022_E17.dwg 8/12/2005 9:15:46 AM

00688010

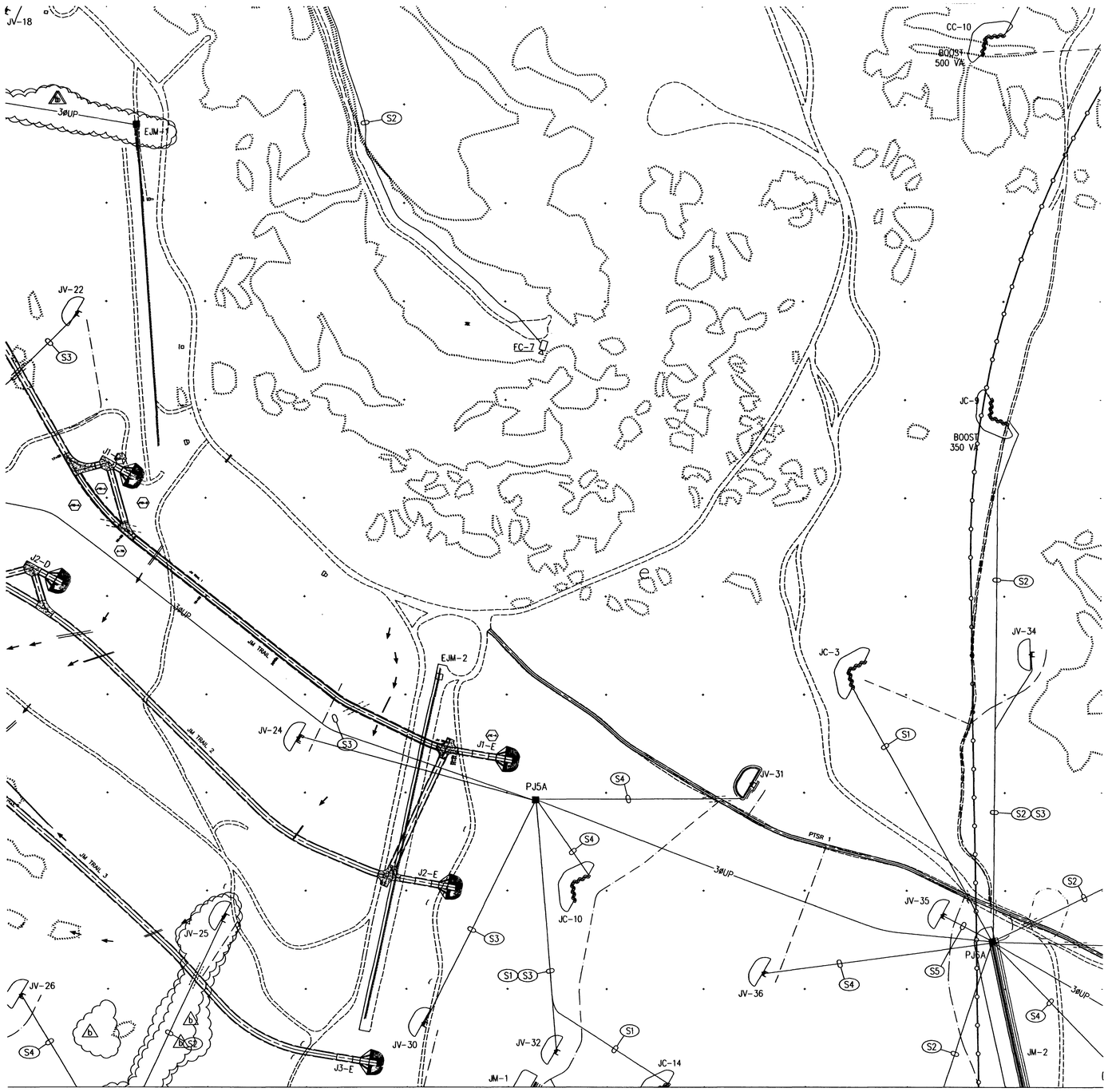

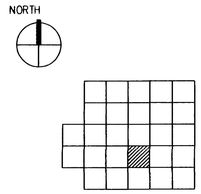

SITE KEY PLAN

NOT TO SCALE

ELECTRICAL SITE LEGEND

PC2■ POWER CENTER DESIGNATION CONSISTING OF PAD MOUNTED TRANSFORMER, PRIMARY CABLE TERMINATING/SECTIONALIZING ENCLOSURE, AND LOW VOLTAGE DISTRIBUTION. SEE POWER DISTRIBUTION SINGLE LINE DIAGRAMS, SHEETS E-50 THRU E-54.

PM-□ PAD MOUNTED AIR INTERRUPTER SWITCH - 15KV, 600AMP, 95KV BIL WITH 200 AMP FUSED SWITCHES.

TP1□ PAD MOUNTED TRANSFORMER. SEE POWER DISTRIBUTION SINGLE LINE DIAGRAMS, SHEETS E-50 THRU E-54.

3ØUP UNDERGROUND DIRECT BURIED 3-PHASE 15KV PRIMARY CABLES. SEE POWER DISTRIBUTION SINGLE LINE DIAGRAMS, SHEETS SHEETS E-50 THRU E-54.

1ØUP UNDERGROUND DIRECT BURIED 15KV 1-PHASE PRIMARY CABLES. SEE POWER DISTRIBUTION SINGLE LINE DIAGRAMS, SHEETS SHEETS E-50 THRU E-54.

1ØUS UNDERGROUND DIRECT BURIED 1-PHASE SECONDARY CABLES

(S1) 3/C - #2 WITH GROUND DIRECT BURY 600 VOLT POWER CABLE

(S2) 3/C - #4 WITH GROUND DIRECT BURY 600 VOLT POWER CABLE

(S3) 3/C - #6 WITH GROUND DIRECT BURY 600 VOLT POWER CABLE

(S4) 3/C - #8 WITH GROUND DIRECT BURY 600 VOLT POWER CABLE

(S5) 3/C - #10 WITH GROUND DIRECT BURY 600 VOLT POWER CABLE

CONCRETE ENCASEMENT REQUIRED UNDER SERVICE ROADS, TRAILS, LOW WATER CROSSINGS, AND CREEK CROSSINGS. CONDUIT SIZES AS REQUIRED FOR CABLE(S). 100mm MINIMUM FOR 3ØUP.

—EOP— EXISTING OVERHEAD PRIMARY TO REMAIN

● NEW WOOD POLE - HEIGHT AND CLASS AS INDICATED

○ EXISTING WOOD POLE

RLM RANGE LIMIT MARKER CONTROL CABLE

◁ RANGE LIMIT MARKER

FLIR CAMERA

CV-1 STATIONARY ARMOR TARGETS (STATS)

CV-1 FUTURE STATIONARY ARMOR TARGETS (STATS)

CC-2 STATIONARY INFANTRY TARGETS (SIT)

ECM-1 EXISTING ARMOR MOVING TARGET

DEFILADE

M-01 ARMOR MOVING TARGETS (AMTC)

PRIMARY TARGET SERVICE ROAD

TANK TRAILS, CROSSOVERS, ACCESS ROADS

EXISTING ROAD

0 20 40 80

SCALE: 1:2000

THE SEAL APPEARING ON THIS DOCUMENT WAS AUTHORIZED BY SAMUEL LEE GULLEY ON AUGUST 8, 2001

SAMUEL LEE GULLEY CERTIFICATE No. 50007 STATE OF FLORIDA PROFESSIONAL ENGINEER

US Army Corps of Engineers
FORT WORTH DISTRICT

POLYENGINEERING, INC.
1520 Hartford Avenue
Dothan, Alabama 36303
(334) 793-2709 (voice)
(334) 793-9018 (fax)

Mark	Description	Date	Appr.
1	ADDED ENCASEMENT	AUG 01	SLG
2	ADDED RLM CABLE AND TARGETS	AUG 01	SLG

Designed by: Samuel L. Gulley
Dwn by: T. Bolton
Ckd by: F. Carpuri
Reviewed by:
Submitted by: E. Lamar Faulk
Date: 19 July 2001
Rev.
Sol. No. DACA63-01-B-0007
Contr. No. DACA63-01-C-0016
File name:
Plot date:
Plot scale: 1:200

U.S. ARMY ENGINEER DISTRICT
CORPS OF ENGINEERS
FORT WORTH, TEXAS

POLYENGINEERING, INC.
ENGINEERS & ARCHITECTS
DOTHAN, ALABAMA

FORT HOOD, TEXAS
DIGITAL MULTI-PURPOSE RANGE COMPLEX (DMPRC)
PN 519115 FY 00

ELECTRICAL SITE PLAN
RANGE POWER DISTRIBUTION

Sheet reference number:
E-18
Sheet x of x

Contr. No. DACA63-01-C-0016

..\2000-022_E18.dwg 8/12/2005 9:14:50 AM

00688020

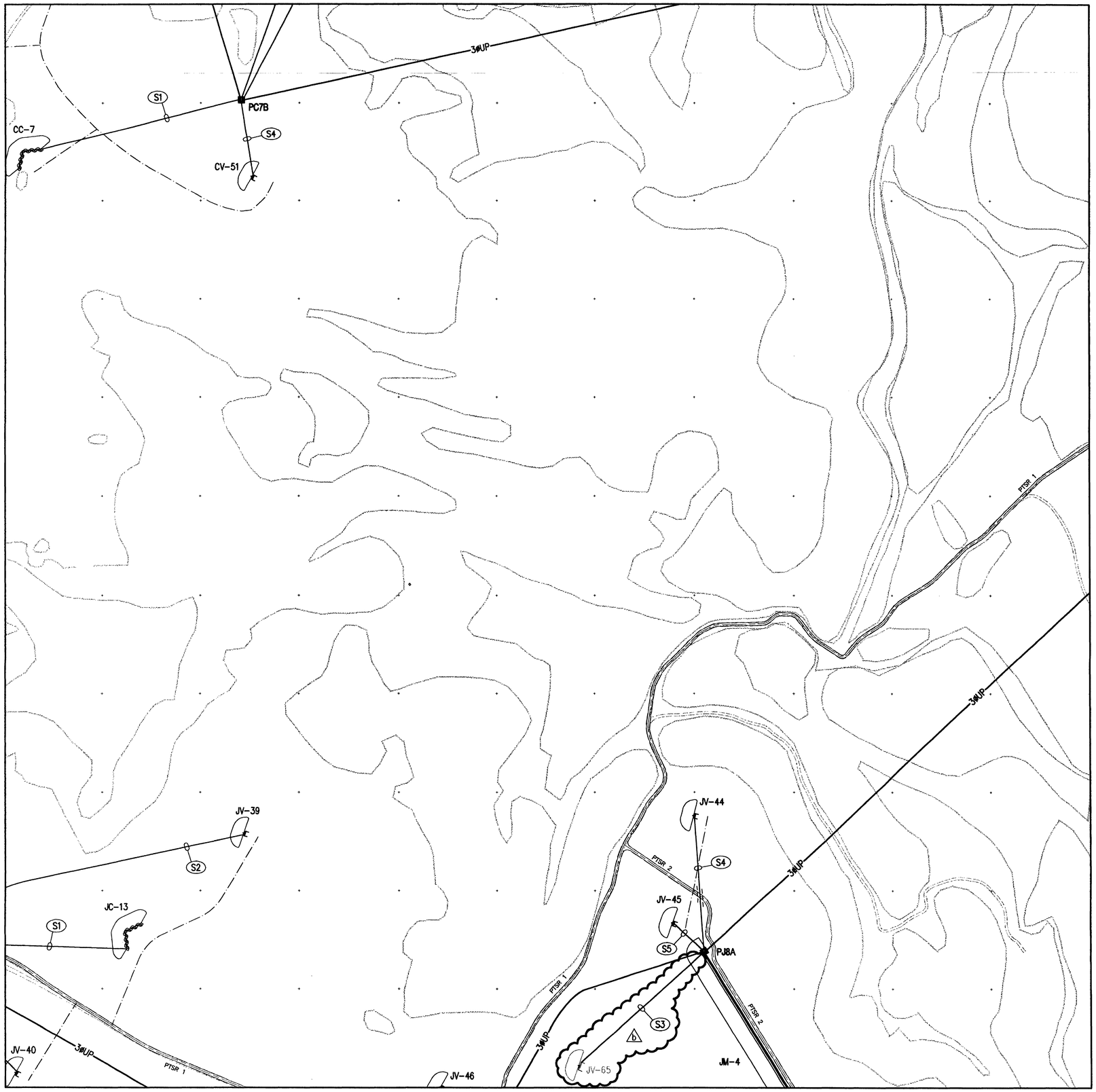

NORTH

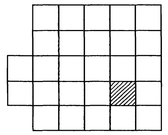

SITE KEY PLAN

NOT TO SCALE

ELECTRICAL SITE LEGEND

PC2 ■ POWER CENTER DESIGNATION CONSISTING OF PAD MOUNTED TRANSFORMER, PRIMARY CABLE TERMINATING/SECTIONALIZING ENCLOSURE, AND LOW VOLTAGE DISTRIBUTION. SEE POWER DISTRIBUTION SINGLE LINE DIAGRAMS, SHEETS E-50 THRU E-54.

PM-1 □ PAD MOUNTED AIR INTERRUPTER SWITCH – 15KV, 600AMP, 95KV BIL WITH 200 AMP FUSED SWITCHES.

TP1 □ PAD MOUNTED TRANSFORMER. SEE POWER DISTRIBUTION SINGLE LINE DIAGRAMS, SHEETS E-50 THRU E-54.

3ØUP UNDERGROUND DIRECT BURIED 3-PHASE 15KV PRIMARY CABLES. SEE POWER DISTRIBUTION SINGLE LINE DIAGRAMS, SHEETS SHEETS E-50 THRU E-54.

1ØUP UNDERGROUND DIRECT BURIED 15KV 1-PHASE PRIMARY CABLES. SEE POWER DISTRIBUTION SINGLE LINE DIAGRAMS, SHEETS SHEETS E-50 THRU E-54.

1ØUS UNDERGROUND DIRECT BURIED 1-PHASE SECONDARY CABLES

(S1) 3/C – #2 WITH GROUND DIRECT BURY 600 VOLT POWER CABLE

(S2) 3/C – #4 WITH GROUND DIRECT BURY 600 VOLT POWER CABLE

(S3) 3/C – #6 WITH GROUND DIRECT BURY 600 VOLT POWER CABLE

(S4) 3/C – #8 WITH GROUND DIRECT BURY 600 VOLT POWER CABLE

(S5) 3/C – #10 WITH GROUND DIRECT BURY 600 VOLT POWER CABLE

CONCRETE ENCASEMENT REQUIRED UNDER SERVICE ROADS, TRAILS, LOW WATER CROSSINGS, AND CREEK CROSSINGS. CONDUIT SIZES AS REQUIRED FOR CABLE(S). 100mm MINIMUM FOR 3ØUP.

—EOP— EXISTING OVERHEAD PRIMARY TO REMAIN

● NEW WOOD POLE – HEIGHT AND CLASS AS INDICATED

○ EXISTING WOOD POLE

RLM RANGE LIMIT MARKER CONTROL CABLE

RANGE LIMIT MARKER

FLIR CAMERA

CV-1 STATIONARY ARMOR TARGETS (STATS)

CV-1 FUTURE STATIONARY ARMOR TARGETS (STATS)

CC-2 STATIONARY INFANTRY TARGETS (SIT)

ECM-1 EXISTING ARMOR MOVING TARGET

DEFILADE

M-01 ARMOR MOVING TARGETS (AMTC)

PRIMARY TARGET SERVICE ROAD

TANK TRAILS, CROSSOVERS, ACCESS ROADS

EXISTING ROAD

0 20 40 80
SCALE: 1:2000

THE SEAL APPEARING ON THIS DOCUMENT WAS AUTHORIZED BY SAMUEL LEE GULLEY ON AUGUST 8, 2001

SAMUEL LEE GULLEY CERTIFICATE NO. 35000 STATE OF FLORIDA PROFESSIONAL ENGINEER

Sheet reference number: E-19

Sheet of

US Army Corps of Engineers
FORT WORTH DISTRICT

POLYENGINEERING, INC.
ENGINEERS AND ARCHITECTS
1905 Headland Avenue
Dothan, Alabama 36303
(334) 793-2709 (voice)
(334) 793-9016 (fax)

Symb.	Description	Date	Appr.
A3	ADDED TARGET, TITLE BLOCK EDIT, ADDED SEAL	AUG 01	SLG

Date: 19 July 2001 | Rev.
Sol. No. DACA63-01-B-0007
Contr. No. DACA63-01-C-0016
File name:
Plot date:
Plot scale: 1:200

Designed by: Samuel L. Gulley
Dwn by: T. Bolton | Ckd by: F. Corbari
Reviewed by:
Submitted by: E. Lamar Faulk

U.S. ARMY ENGINEER DISTRICT
CORPS OF ENGINEERS
FORT WORTH, TEXAS

POLYENGINEERING, INC.
ENGINEERS & ARCHITECTS
DOTHAN, ALABAMA

FORT HOOD, TEXAS
DIGITAL MULTI-PURPOSE RANGE COMPLEX (DMPRC)
PN 51915

ELECTRICAL SITE PLAN
RANGE POWER DISTRIBUTION

00688630

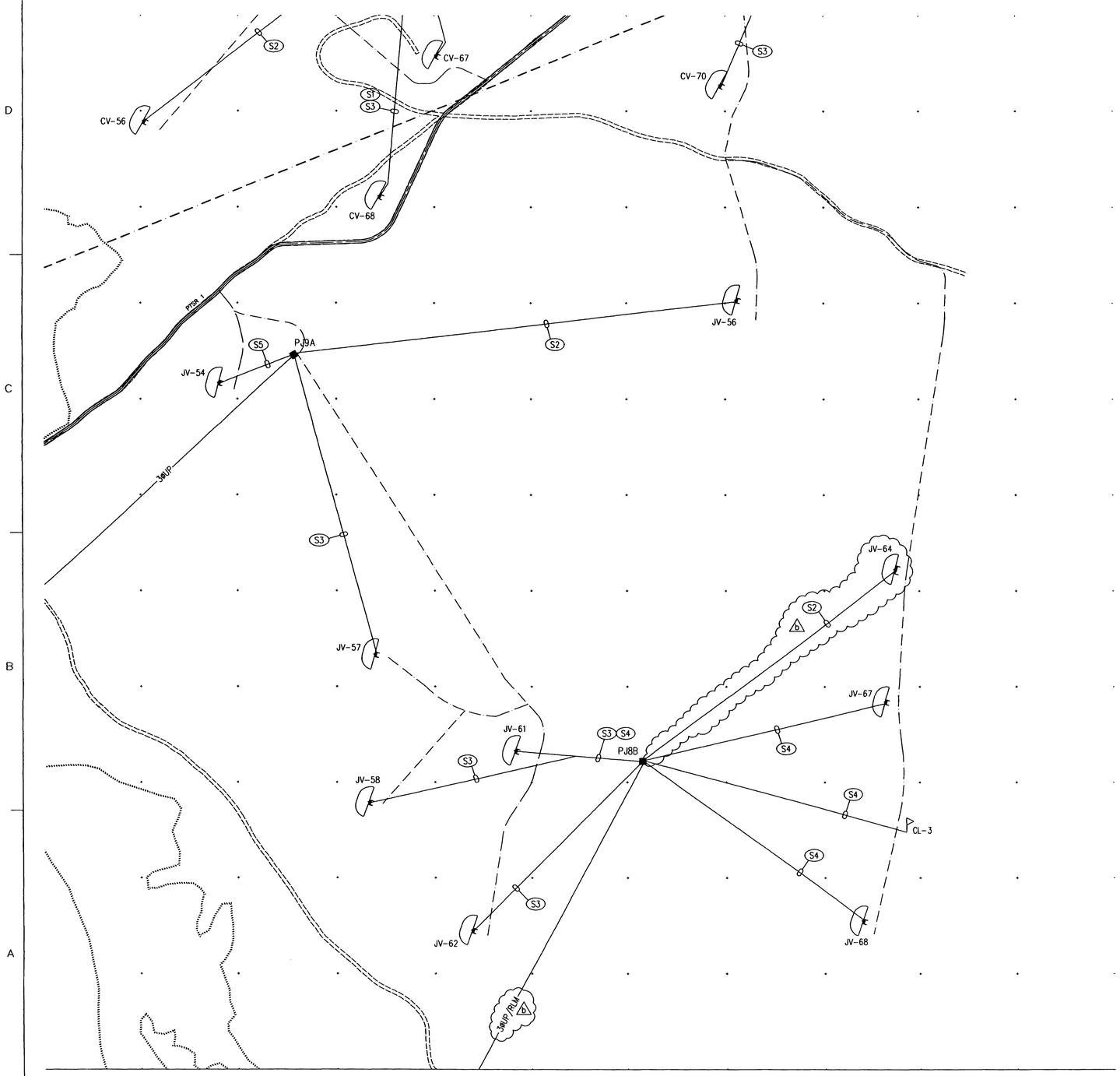

NORTH

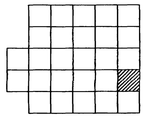

SITE KEY PLAN

NOT TO SCALE

ELECTRICAL SITE LEGEND

PC2■	POWER CENTER DESIGNATION CONSISTING OF PAD MOUNTED TRANSFORMER, PRIMARY CABLE TERMINATING/SECTIONALIZING ENCLOSURE, AND LOW VOLTAGE DISTRIBUTION. SEE POWER DISTRIBUTION SINGLE LINE DIAGRAMS, SHEETS E-50 THRU E-54.
PM-□	PAD MOUNTED AIR INTERRUPTER SWITCH – 15KV, 600AMP, 95KV BIL WITH 200 AMP FUSED SWITCHES.
TP1□	PAD MOUNTED TRANSFORMER. SEE POWER DISTRIBUTION SINGLE LINE DIAGRAMS, SHEETS E-50 THRU E-54.
3ØUP	UNDERGROUND DIRECT BURIED 3-PHASE 15KV PRIMARY CABLES. SEE POWER DISTRIBUTION SINGLE LINE DIAGRAMS, SHEETS SHEETS E-50 THRU E-54.
1ØUP	UNDERGROUND DIRECT BURIED 15KV 1-PHASE PRIMARY CABLES. SEE POWER DISTRIBUTION SINGLE LINE DIAGRAMS, SHEETS SHEETS E-50 THRU E-54.
1ØUS	UNDERGROUND DIRECT BURIED 1-PHASE SECONDARY CABLES
(S1)	3/C – #2 WITH GROUND DIRECT BURY 600 VOLT POWER CABLE
(S2)	3/C – #4 WITH GROUND DIRECT BURY 600 VOLT POWER CABLE
(S3)	3/C – #6 WITH GROUND DIRECT BURY 600 VOLT POWER CABLE
(S4)	3/C – #8 WITH GROUND DIRECT BURY 600 VOLT POWER CABLE
(S5)	3/C – #10 WITH GROUND DIRECT BURY 600 VOLT POWER CABLE
======	CONCRETE ENCASEMENT REQUIRED UNDER SERVICE ROADS, TRAILS, LOW WATER CROSSINGS, AND CREEK CROSSINGS. CONDUIT SIZES AS REQUIRED FOR CABLE(S). 100mm MINIMUM FOR 3ØUP.
—EOP—	EXISTING OVERHEAD PRIMARY TO REMAIN
●	NEW WOOD POLE – HEIGHT AND CLASS AS INDICATED
○	EXISTING WOOD POLE
RLM	RANGE LIMIT MARKER CONTROL CABLE
	RANGE LIMIT MARKER
	FLIR CAMERA
CV-1	STATIONARY ARMOR TARGETS (STATS)
CV-1	FUTURE STATIONARY ARMOR TARGETS (STATS)
CC-2	STATIONARY INFANTRY TARGETS (SIT)
ECM-1	EXISTING ARMOR MOVING TARGET
	DEFILADE
M-01	ARMOR MOVING TARGETS (AMTC)
	PRIMARY TARGET SERVICE ROAD
	TANK TRAILS, CROSSOVERS, ACCESS ROADS
	EXISTING ROAD

SCALE: 1:2000 (0 20 40 80)

THE SEAL APPEARING ON THIS DOCUMENT WAS AUTHORIZED BY SAMUEL LEE GULLEY ON AUGUST 8, 2001

SAMUEL LEE GULLEY CERTIFICATE No. 50007 STATE OF FLORIDA PROFESSIONAL ENGINEER

US Army Corps of Engineers FORT WORTH DISTRICT

POLYENGINEERING, INC. 1205 Hardland Avenue Dothan, Alabama 36303 (334) 793-1720 (voice) (334) 793-9516 (fax)

Rev.	Date	Description	By
A/E	AUG 01	ADDED R/W CABLE, TITLE BLOCK EDIT, ADDED SEAL	SLG

Designed by: Samuel L. Gulley
Dwn by: T. Bolton
Ckd by: F. Corbari
Reviewed by:
Submitted by: E. Lamar Faulk

Date: 19 July 2001
Sol. No. DACA63-01-B-0007
Contr. No. DACA63-01-C-0016
File name:
Plot date:
Plot scale: 1:200

U.S. ARMY ENGINEER DISTRICT CORPS OF ENGINEERS FORT WORTH, TEXAS

POLYENGINEERING, INC. ENGINEERS & ARCHITECTS DOTHAN, ALABAMA

FORT HOOD, TEXAS DIGITAL MULTI-PURPOSE RANGE COMPLEX PN 519115 PY 00

ELECTRICAL SITE PLAN RANGE POWER DISTRIBUTION

Sheet reference number: E-20

Sheet of

Contr. No. DACA63-01-C-0016

...\2000-022_E20.dwg 8/12/2005 9:14:15 AM

00688640

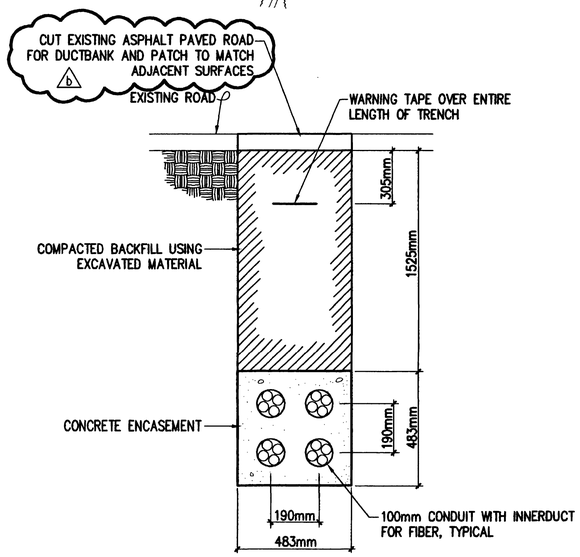

TYPICAL CONCRETE ENCASED DUCTBANK FIBER OPTIC TRUNK LINES UNDER WEST RANGE ROAD

NOT TO SCALE

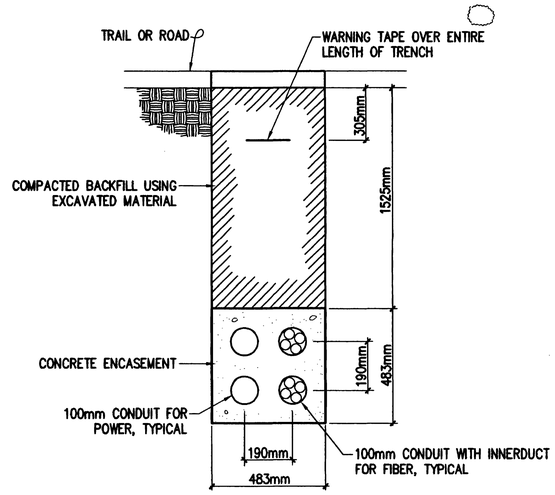

TYPICAL CONCRETE ENCASED DUCTBANK UNDER TANK TRAILS AND ROADS

NOT TO SCALE

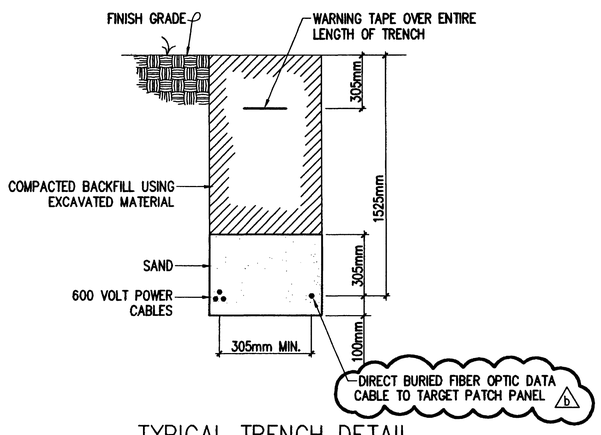

TYPICAL TRENCH DETAIL SECONDARY POWER (LOW VOLTAGE) & FIBER OPTIC DATA

NOT TO SCALE

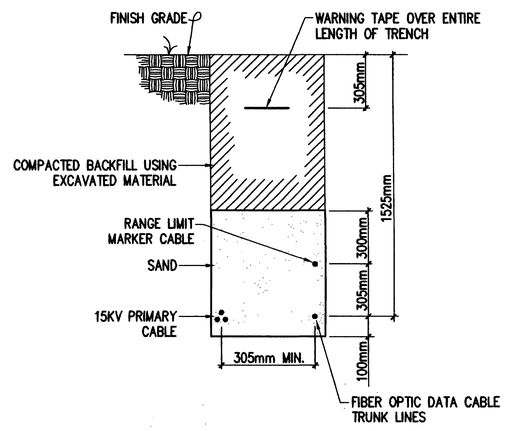

TYPICAL TRENCH DETAIL PRIMARY POWER, FIBER OPTIC DATA AND LIMIT MARKER CONTROL CABLE

NOT TO SCALE

NORTH

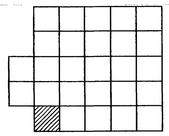

SITE KEY PLAN

NOT TO SCALE

ELECTRICAL SITE LEGEND

PC2■	POWER CENTER DESIGNATION CONSISTING OF PAD MOUNTED TRANSFORMER, PRIMARY CABLE TERMINATING/SECTIONALIZING ENCLOSURE, AND LOW VOLTAGE DISTRIBUTION. SEE POWER DISTRIBUTION SINGLE LINE DIAGRAMS, SHEETS E-50 THRU E-54.
PM-□	PAD MOUNTED AIR INTERRUPTER SWITCH – 15KV, 600AMP, 95KV BIL WITH 200 AMP FUSED SWITCHES.
TP1□	PAD MOUNTED TRANSFORMER. SEE POWER DISTRIBUTION SINGLE LINE DIAGRAMS, SHEETS E-50 THRU E-54.
3ØUP	UNDERGROUND DIRECT BURIED 3-PHASE 15KV PRIMARY CABLES. SEE POWER DISTRIBUTION SINGLE LINE DIAGRAMS, SHEETS SHEETS E-50 THRU E-54.
1ØUP	UNDERGROUND DIRECT BURIED 15KV 1-PHASE PRIMARY CABLES. SEE POWER DISTRIBUTION SINGLE LINE DIAGRAMS, SHEETS SHEETS E-50 THRU E-54.
1ØUS	UNDERGROUND DIRECT BURIED 1-PHASE SECONDARY CABLES
(S1)	3/C – #2 WITH GROUND DIRECT BURY 600 VOLT POWER CABLE
(S2)	3/C – #4 WITH GROUND DIRECT BURY 600 VOLT POWER CABLE
(S3)	3/C – #6 WITH GROUND DIRECT BURY 600 VOLT POWER CABLE
(S4)	3/C – #8 WITH GROUND DIRECT BURY 600 VOLT POWER CABLE
(S5)	3/C – #10 WITH GROUND DIRECT BURY 600 VOLT POWER CABLE
═══	CONCRETE ENCASEMENT REQUIRED UNDER SERVICE ROADS, TRAILS, LOW WATER CROSSINGS, AND CREEK CROSSINGS. CONDUIT SIZES AS REQUIRED FOR CABLE(S). 100mm MINIMUM FOR 3ØUP.
—EOP—	EXISTING OVERHEAD PRIMARY TO REMAIN
●	NEW WOOD POLE – HEIGHT AND CLASS AS INDICATED
○	EXISTING WOOD POLE
RLM	RANGE LIMIT MARKER CONTROL CABLE
◁	RANGE LIMIT MARKER
▷□	FLIR CAMERA
CV-1	STATIONARY ARMOR TARGETS (STATS)
CV-1	FUTURE STATIONARY ARMOR TARGETS (STATS)
CC-2	STATIONARY INFANTRY TARGETS (SIT)
ECM-1	EXISTING ARMOR MOVING TARGET
	DEFILADE
M-01	ARMOR MOVING TARGETS (AMTC)
	PRIMARY TARGET SERVICE ROAD
	TANK TRAILS, CROSSOVERS, ACCESS ROADS
	EXISTING ROAD

b

0 20 40 80

SCALE: 1:2000

b

THE SEAL APPEARING ON THIS DOCUMENT WAS AUTHORIZED BY SAMUEL LEE GULLEY ON AUGUST 8, 2001

SAMUEL LEE GULLEY CERTIFICATE NO. 34101 STATE OF FLORIDA PROFESSIONAL ENGINEER

US Army Corps of Engineers
FORT WORTH DISTRICT

POLYENGINEERING, INC.
1502 Headland Avenue
Dothan, Alabama 36303
(334) 793-4720 (voice)
(334) 793-9515 (fax)

Mark	Description	Date	Appr.
A5	REVISED DETAILS, TITLE BLOCK EDIT, ADDED SEAL	AUG 01	SJG

Designed by: Samuel L. Gulley
Dwn by: T. Bolton
Ckd by: F. Carbonl
Reviewed by:
Date: 19 July 2001
Rev.
Sol. No. DACA63-01-B-0007
Contr. No. DACA63-01-C-0016
File name:
Plot date:
Plot scale: 1:200
Submitted by: E. Lamar Faulk

U.S. ARMY ENGINEER DISTRICT
CORPS OF ENGINEERS
FORT WORTH, TEXAS

POLYENGINEERING, INC.
ENGINEERS & ARCHITECTS
DOTHAN, ALABAMA

FORT HOOD, TEXAS
DIGITAL MULTI-PURPOSE RANGE COMPLEX (DMPRC)
PN 51915 FY 00

b

ELECTRICAL SITE PLAN
RANGE POWER DISTRIBUTION

Sheet reference number: E-21

Sheet of

b

00688050

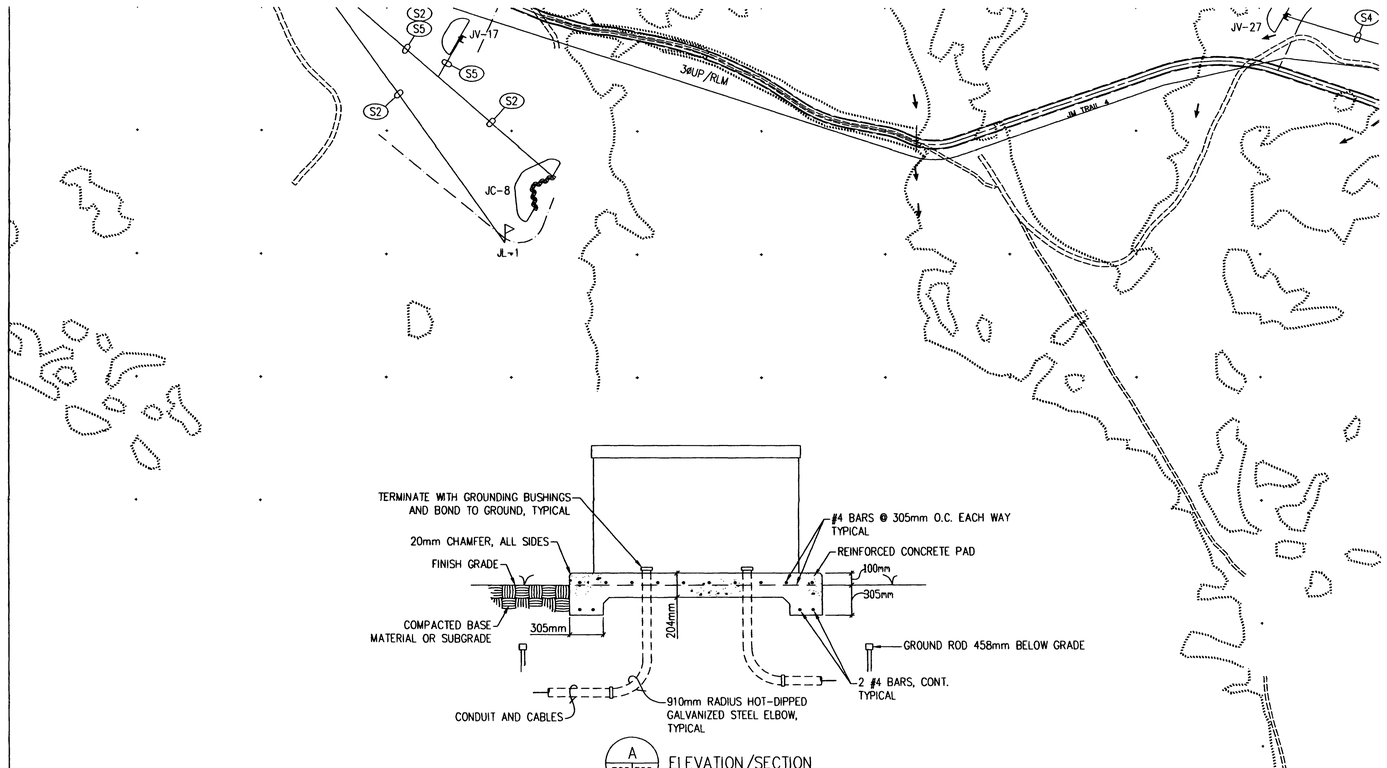

A E22 E22 ELEVATION/SECTION

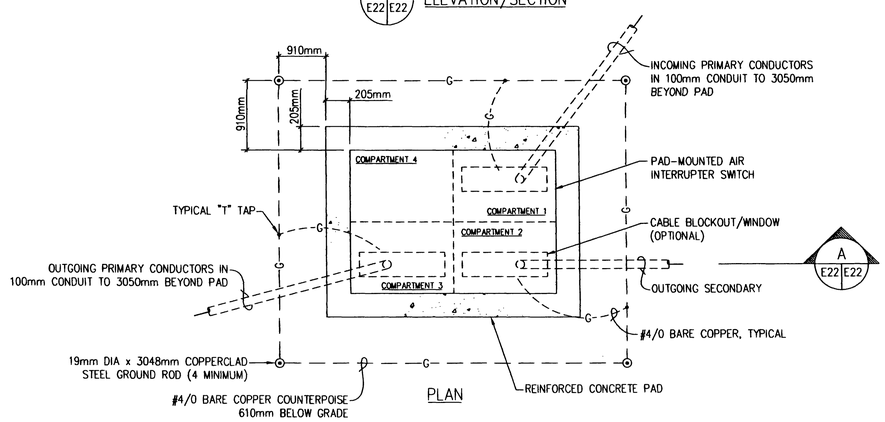

A E22 E22

PLAN

PAD-MOUNTED AIR INTERRUPTER SWITCH DETAIL

NOT TO SCALE

NOTES:

ALL GROUND CONNECTIONS SHALL BE BRAZED OR EXOTHERMIC WELDED. GROUND RESISTANCE SHALL BE 25 OHMS OR LESS.

PROVIDE ENGRAVED RED METAL SIGN WITH LETTERS "DANGER HIGH VOLTAGE". SIGN SHALL BE 305mm WIDE BY 230mm HIGH. SECURE TO DOOR OF HOUSING WITH BRASS SCREWS.

NORTH

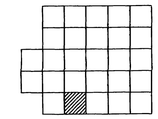

SITE KEY PLAN

NOT TO SCALE

ELECTRICAL SITE LEGEND

PC2■ POWER CENTER DESIGNATION CONSISTING OF PAD MOUNTED TRANSFORMER, PRIMARY CABLE TERMINATING/SECTIONALIZING ENCLOSURE, AND LOW VOLTAGE DISTRIBUTION. SEE POWER DISTRIBUTION SINGLE LINE DIAGRAMS, SHEETS E-50 THRU E-54.

PM-□ PAD MOUNTED AIR INTERRUPTER SWITCH – 15KV, 600AMP, 95KV BIL WITH 200 AMP FUSED SWITCHES.

TP1□ PAD MOUNTED TRANSFORMER. SEE POWER DISTRIBUTION SINGLE LINE DIAGRAMS, SHEETS E-50 THRU E-54.

3ØUP UNDERGROUND DIRECT BURIED 3-PHASE 15KV PRIMARY CABLES. SEE POWER DISTRIBUTION SINGLE LINE DIAGRAMS, SHEETS SHEETS E-50 THRU E-54.

1ØUP UNDERGROUND DIRECT BURIED 15KV 1-PHASE PRIMARY CABLES. SEE POWER DISTRIBUTION SINGLE LINE DIAGRAMS, SHEETS SHEETS E-50 THRU E-54.

1ØUS UNDERGROUND DIRECT BURIED 1-PHASE SECONDARY CABLES

(S1) 3/C – #2 WITH GROUND DIRECT BURY 600 VOLT POWER CABLE

(S2) 3/C – #4 WITH GROUND DIRECT BURY 600 VOLT POWER CABLE

(S3) 3/C – #6 WITH GROUND DIRECT BURY 600 VOLT POWER CABLE

(S4) 3/C – #8 WITH GROUND DIRECT BURY 600 VOLT POWER CABLE

(S5) 3/C – #10 WITH GROUND DIRECT BURY 600 VOLT POWER CABLE

====== CONCRETE ENCASEMENT REQUIRED UNDER SERVICE ROADS, TRAILS, LOW WATER CROSSINGS, AND CREEK CROSSINGS. CONDUIT SIZES AS REQUIRED FOR CABLE(S). 100mm MINIMUM FOR 3ØUP.

—EOP— EXISTING OVERHEAD PRIMARY TO REMAIN

● NEW WOOD POLE – HEIGHT AND CLASS AS INDICATED

○ EXISTING WOOD POLE

RLM RANGE LIMIT MARKER CONTROL CABLE

◁ RANGE LIMIT MARKER

FLIR CAMERA

CV-1 STATIONARY ARMOR TARGETS (STATS)

CV-1 FUTURE STATIONARY ARMOR TARGETS (STATS)

CC-2 STATIONARY INFANTRY TARGETS (SIT)

ECM-1 EXISTING ARMOR MOVING TARGET

DEFILADE

M-01 ARMOR MOVING TARGETS (AMTC)

PRIMARY TARGET SERVICE ROAD

TANK TRAILS, CROSSOVERS, ACCESS ROADS

EXISTING ROAD

b

0 20 40 80

SCALE: 1:2000

b

THE SEAL APPEARING ON THIS DOCUMENT WAS AUTHORIZED BY SAMUEL LEE GULLEY ON AUGUST 8, 2001

SAMUEL LEE GULLEY CERTIFICATE No. 50007 STATE OF FLORIDA PROFESSIONAL ENGINEER

US Army Corps of Engineers FORT WORTH DISTRICT

POLYENGINEERING, INC. CONSULTING ENGINEERS & ARCHITECTS
POLYENGINEERING, INC.
1200 Medical Arena
Dothan, Alabama 36303
(334) 793-4700 (Voice)
(334) 793-8016 (Fax)

Mark	Description	Date	Appr.
A3	ADDED RLM CABLE, TITLE BLOCK CDT. ADDED SEAL	AUG 01	SLG

Designed by: Samuel L. Gulley
Date: 19 July 2001
Rev.
Dwn by: Jack Williams
Chk by: T. Dawson
Solicitation No. DACA63-01-B-0007
Reviewed by:
Contr. No. DACA63-01-C-0016
Submitted by: E. Lamar Faulk
File name:
Plot date:
Plot scale: 1:200

U.S. ARMY ENGINEER DISTRICT CORPS OF ENGINEERS FORT WORTH, TEXAS

POLYENGINEERING, INC. ENGINEERS & ARCHITECTS DOTHAN, ALABAMA

FORT HOOD, TEXAS
DIGITAL MULTI-PURPOSE RANGE COMPLEX (DMPRC)
PN 519115
b
F-00

ELECTRICAL SITE PLAN
RANGE POWER DISTRIBUTION

Sheet reference number: E-22

Sheet of b

Contr. No. DACA63-01-C-0016

..\2000-022_E22.dwg 8/12/2005 9:05:42 AM

00688660

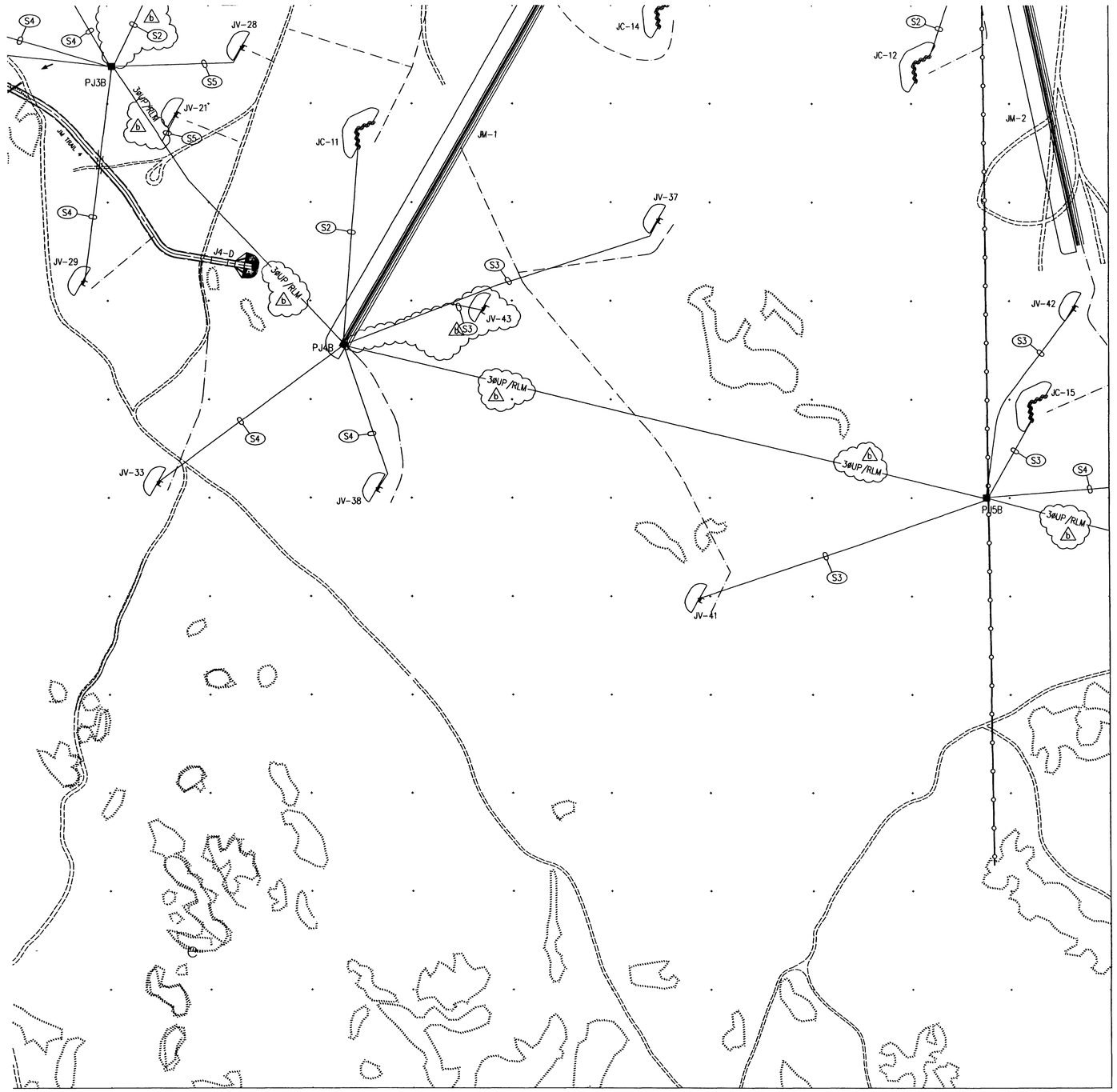

NORTH

SITE KEY PLAN

NOT TO SCALE

ELECTRICAL SITE LEGEND

PC2■ POWER CENTER DESIGNATION CONSISTING OF PAD MOUNTED TRANSFORMER, PRIMARY CABLE TERMINATING/SECTIONALIZING ENCLOSURE, AND LOW VOLTAGE DISTRIBUTION. SEE POWER DISTRIBUTION SINGLE LINE DIAGRAMS, SHEETS E-50 THRU E-54.

PM-□ PAD MOUNTED AIR INTERRUPTER SWITCH - 15KV, 600AMP, 95KV BIL WITH 200 AMP FUSED SWITCHES.

TP1 □ PAD MOUNTED TRANSFORMER. SEE POWER DISTRIBUTION SINGLE LINE DIAGRAMS, SHEETS E-50 THRU E-54.

3#UP UNDERGROUND DIRECT BURIED 3-PHASE 15KV PRIMARY CABLES. SEE POWER DISTRIBUTION SINGLE LINE DIAGRAMS, SHEETS SHEETS E-50 THRU E-54.

1#UP UNDERGROUND DIRECT BURIED 15KV 1-PHASE PRIMARY CABLES. SEE POWER DISTRIBUTION SINGLE LINE DIAGRAMS, SHEETS SHEETS E-50 THRU E-54.

1#US UNDERGROUND DIRECT BURIED 1-PHASE SECONDARY CABLES

(S1) 3/C - #2 WITH GROUND DIRECT BURY 600 VOLT POWER CABLE

(S2) 3/C - #4 WITH GROUND DIRECT BURY 600 VOLT POWER CABLE

(S3) 3/C - #6 WITH GROUND DIRECT BURY 600 VOLT POWER CABLE

(S4) 3/C - #8 WITH GROUND DIRECT BURY 600 VOLT POWER CABLE

(S5) 3/C - #10 WITH GROUND DIRECT BURY 600 VOLT POWER CABLE

CONCRETE ENCASEMENT REQUIRED UNDER SERVICE ROADS, TRAILS, LOW WATER CROSSINGS, AND CREEK CROSSINGS. CONDUIT SIZES AS REQUIRED FOR CABLE(S). 100mm MINIMUM FOR 3#UP.

—EOP— EXISTING OVERHEAD PRIMARY TO REMAIN

● NEW WOOD POLE - HEIGHT AND CLASS AS INDICATED

○ EXISTING WOOD POLE

RLM RANGE LIMIT MARKER CONTROL CABLE

RANGE LIMIT MARKER

FLIR CAMERA

CV-1 STATIONARY ARMOR TARGETS (STATS)

CV-1 FUTURE STATIONARY ARMOR TARGETS (STATS)

CC-2 STATIONARY INFANTRY TARGETS (SIT)

ECM-1 EXISTING ARMOR MOVING TARGET

DEFILADE

M-01 ARMOR MOVING TARGETS (AMTC)

PRIMARY TARGET SERVICE ROAD

TANK TRAILS, CROSSOVERS, ACCESS ROADS

EXISTING ROAD

0 20 40 80
SCALE: 1:2000

THE SEAL APPEARING ON THIS DOCUMENT WAS AUTHORIZED BY SAMUEL LEE GULLEY ON AUGUST 8, 2001

SAMUEL LEE GULLEY CERTIFICATE No. 50007 STATE OF FLORIDA PROFESSIONAL ENGINEER

US Army Corps of Engineers
FORT WORTH DISTRICT

POLYENGINEERING, INC.
1500 Southland Avenue
Dothan, Alabama 36303
(334) 793-4700 (voice)
(334) 793-8014 (fax)

Mark	Description	Date	Appr.
1	ADDED RLM CABLE AND TARGETS, TITLE BLOCK EDIT, ADDED SEAL	AUG 01	SLG

Designed by: Samuel L. Gulley
Dwn by: T. Bolton
Ckd by: F. Corbori
Reviewed by:
Submitted by: E. Lamar Faulk
Date: 19 July 2001
Rev.
Sol. No. DACA63-01-B-0007
Contr. No. DACA63-01-C-0016
Plot name:
Plot number:
Plot scale: 1:200

U.S. ARMY ENGINEER DISTRICT
CORPS OF ENGINEERS
FORT WORTH, TEXAS

POLYENGINEERING, INC.
ENGINEERS & ARCHITECTS
DOTHAN, ALABAMA

FORT HOOD, TEXAS
DIGITAL MULTI-PURPOSE RANGE COMPLEX
(DMPRC)
PN 51915

ELECTRICAL SITE PLAN
RANGE POWER DISTRIBUTION

Sheet reference number:
E-23
Sheet of

Contr. No. DACA63-01-C-0016

...\2000-022_E23.dwg 8/12/2005 9:04:58 AM

00688670

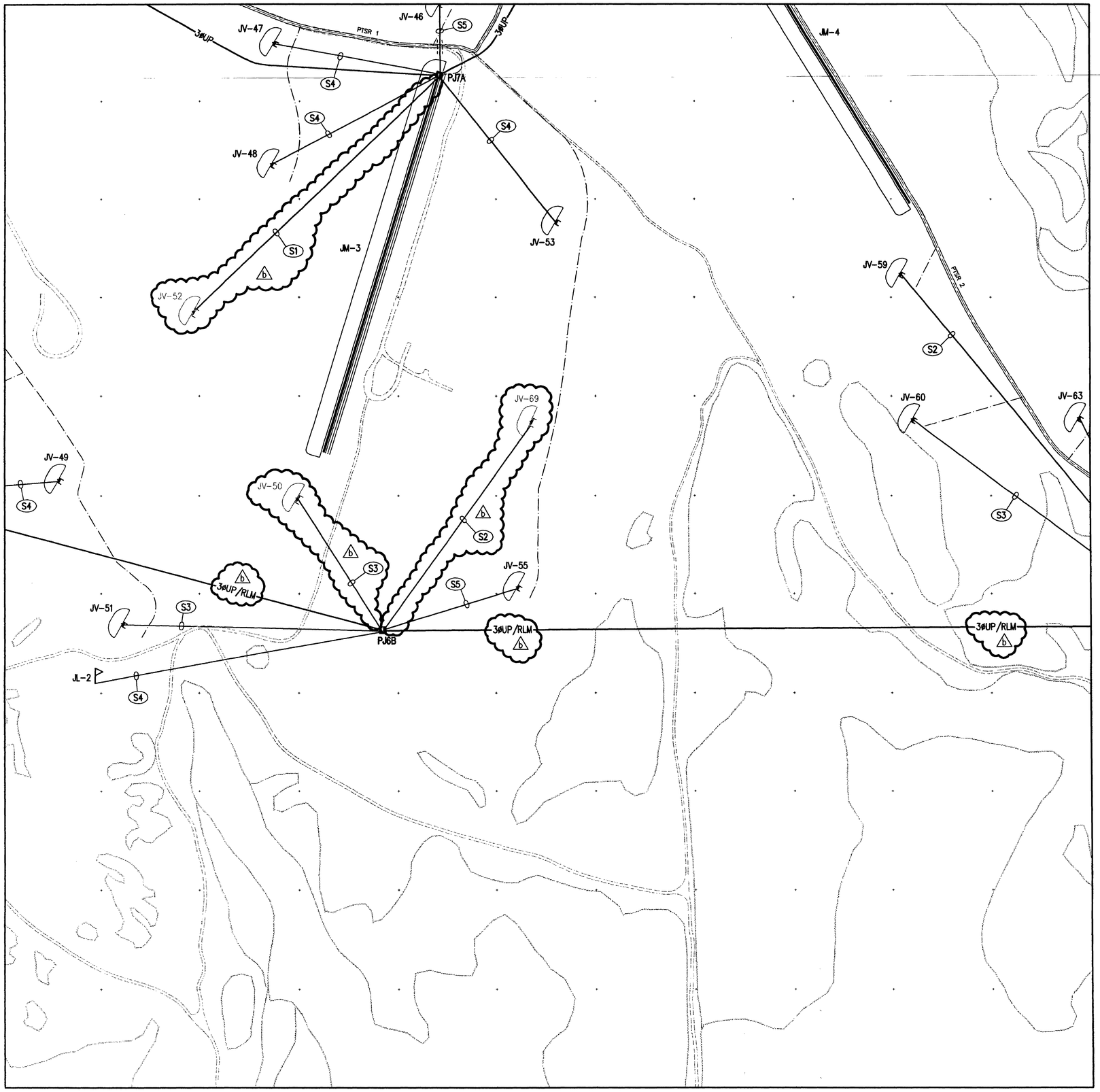

NORTH

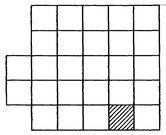

SITE KEY PLAN

NOT TO SCALE

ELECTRICAL SITE LEGEND

PC2 ■ POWER CENTER DESIGNATION CONSISTING OF PAD MOUNTED TRANSFORMER, PRIMARY CABLE TERMINATING/SECTIONALIZING ENCLOSURE, AND LOW VOLTAGE DISTRIBUTION. SEE POWER DISTRIBUTION SINGLE LINE DIAGRAMS, SHEETS E-50 THRU E-54.

PM-1 □ PAD MOUNTED AIR INTERRUPTER SWITCH – 15KV, 600AMP, 95KV BIL WITH 200 AMP FUSED SWITCHES.

TP1 □ PAD MOUNTED TRANSFORMER. SEE POWER DISTRIBUTION SINGLE LINE DIAGRAMS, SHEETS E-50 THRU E-54.

3ØUP UNDERGROUND DIRECT BURIED 3-PHASE 15KV PRIMARY CABLES. SEE POWER DISTRIBUTION SINGLE LINE DIAGRAMS, SHEETS SHEETS E-50 THRU E-54.

1ØUP UNDERGROUND DIRECT BURIED 15KV 1-PHASE PRIMARY CABLES. SEE POWER DISTRIBUTION SINGLE LINE DIAGRAMS, SHEETS SHEETS E-50 THRU E-54.

1ØUS UNDERGROUND DIRECT BURIED 1-PHASE SECONDARY CABLES

(S1) 3/C – #2 WITH GROUND DIRECT BURY 600 VOLT POWER CABLE

(S2) 3/C – #4 WITH GROUND DIRECT BURY 600 VOLT POWER CABLE

(S3) 3/C – #6 WITH GROUND DIRECT BURY 600 VOLT POWER CABLE

(S4) 3/C – #8 WITH GROUND DIRECT BURY 600 VOLT POWER CABLE

(S5) 3/C – #10 WITH GROUND DIRECT BURY 600 VOLT POWER CABLE

CONCRETE ENCASEMENT REQUIRED UNDER SERVICE ROADS, TRAILS, LOW WATER CROSSINGS, AND CREEK CROSSINGS. CONDUIT SIZES AS REQUIRED FOR CABLE(S). 100mm MINIMUM FOR 3ØUP.

—EOP— EXISTING OVERHEAD PRIMARY TO REMAIN

● NEW WOOD POLE – HEIGHT AND CLASS AS INDICATED

○ EXISTING WOOD POLE

RLM RANGE LIMIT MARKER CONTROL CABLE

◁ RANGE LIMIT MARKER

FLIR CAMERA

CV-1 STATIONARY ARMOR TARGETS (STATS)

CV-1 FUTURE STATIONARY ARMOR TARGETS (STATS)

CC-2 STATIONARY INFANTRY TARGETS (SIT)

ECM-1 EXISTING ARMOR MOVING TARGET

DEFILADE

M-01 ARMOR MOVING TARGETS (AMTC)

PRIMARY TARGET SERVICE ROAD

TANK TRAILS, CROSSOVERS, ACCESS ROADS

EXISTING ROAD

0 20 40 80

SCALE: 1:2000

THE SEAL APPEARING ON THIS DOCUMENT WAS AUTHORIZED BY SAMUEL LEE GULLEY ON AUGUST 8, 2001

SAMUEL LEE GULLEY CERTIFICATE NO. 52091 STATE OF FLORIDA PROFESSIONAL ENGINEER

US Army Corps of Engineers
FORT WORTH DISTRICT

POLYENGINEERING, INC.
Engineers & Architects
POLYENGINEERING, INC.
1988 Headland Avenue
Dothan, Alabama 36303
(334) 793-4700 (voice)
(334) 793-3016 (fax)

Mark	Description	Date	Appr.
1	ADDED RLM CABLE AND TARGETS, TITLE BLOCK EDIT, ADDED SEAL	AUG 01	SLG

Date: 19 July 2001 | Rev.
Sol. No. DACA63-01-B-0007
Contr. No. DACA63-01-C-0016
File name:
Plot date:
Plot scale: 1:200

Designed by: Samuel L. Gulley
Drn by: T. Bolton
Ckd by: F. Corbari
Reviewed by:
Submitted by: E. Lamar Faulk

U.S. ARMY ENGINEER DISTRICT
CORPS OF ENGINEERS
FORT WORTH, TEXAS

POLYENGINEERING, INC.
ENGINEERS & ARCHITECTS
DOTHAN, ALABAMA

FORT HOOD, TEXAS
DIGITAL MULTI-PURPOSE RANGE COMPLEX
PN 51915

ELECTRICAL SITE PLAN
RANGE POWER DISTRIBUTION

Sheet reference number: E-24

Sheet of

00688680

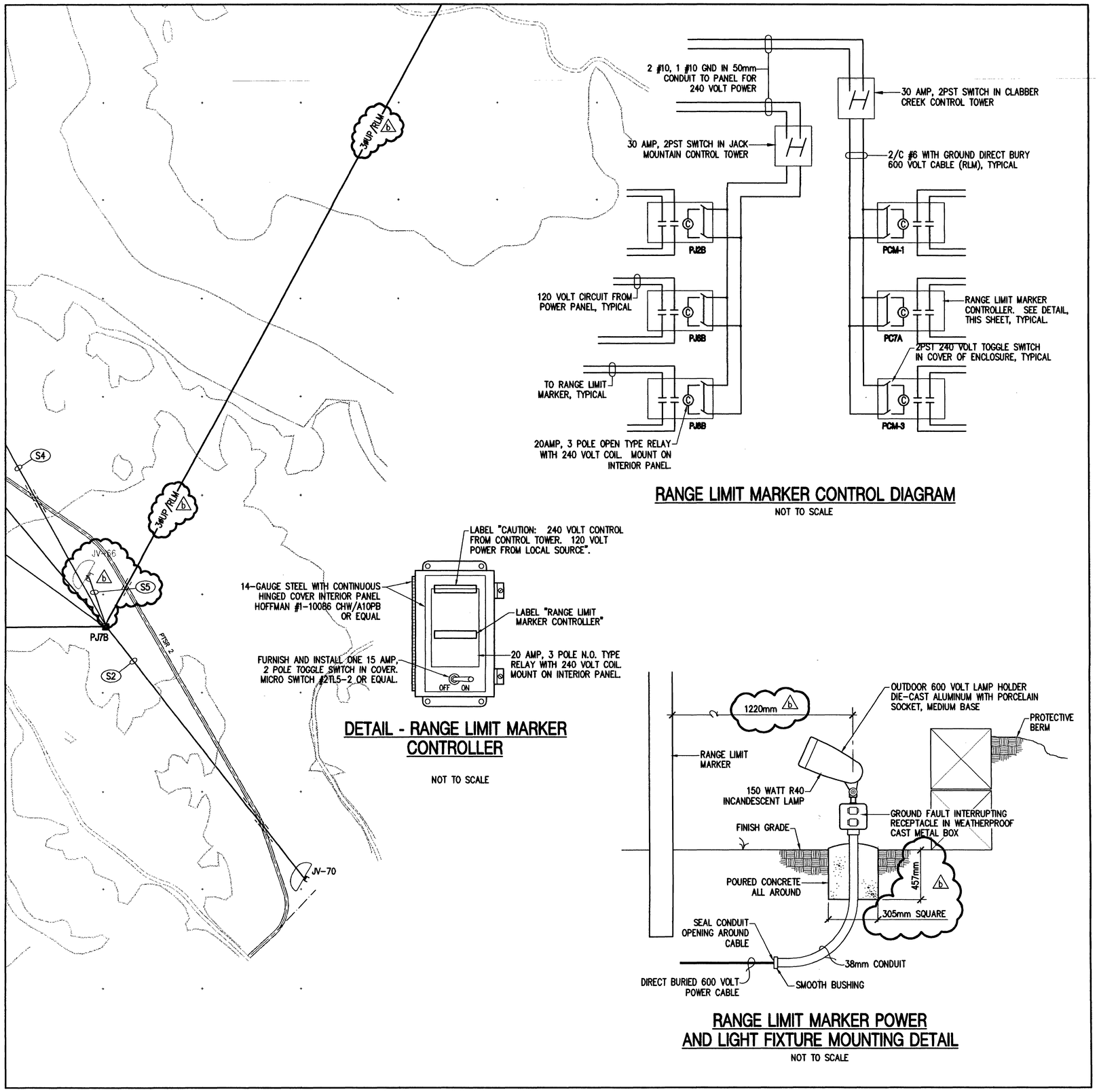

RANGE LIMIT MARKER CONTROL DIAGRAM

NOT TO SCALE

DETAIL - RANGE LIMIT MARKER CONTROLLER

NOT TO SCALE

RANGE LIMIT MARKER POWER AND LIGHT FIXTURE MOUNTING DETAIL

NOT TO SCALE

NORTH

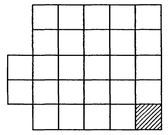

SITE KEY PLAN

NOT TO SCALE

ELECTRICAL SITE LEGEND

PC2 ■	POWER CENTER DESIGNATION CONSISTING OF PAD MOUNTED TRANSFORMER, PRIMARY CABLE TERMINATING/SECTIONALIZING ENCLOSURE, AND LOW VOLTAGE DISTRIBUTION. SEE POWER DISTRIBUTION SINGLE LINE DIAGRAMS, SHEETS E-50 THRU E-54.
PM-1 □	PAD MOUNTED AIR INTERRUPTER SWITCH – 15KV, 600AMP, 95KV BIL WITH 200 AMP FUSED SWITCHES.
TP1 □	PAD MOUNTED TRANSFORMER. SEE POWER DISTRIBUTION SINGLE LINE DIAGRAMS, SHEETS E-50 THRU E-54.
3ØUP	UNDERGROUND DIRECT BURIED 3-PHASE 15KV PRIMARY CABLES. SEE POWER DISTRIBUTION SINGLE LINE DIAGRAMS, SHEETS SHEETS E-50 THRU E-54.
1ØUP	UNDERGROUND DIRECT BURIED 15KV 1-PHASE PRIMARY CABLES. SEE POWER DISTRIBUTION SINGLE LINE DIAGRAMS, SHEETS SHEETS E-50 THRU E-54.
1ØUS	UNDERGROUND DIRECT BURIED 1-PHASE SECONDARY CABLES
(S1)	3/C – #2 WITH GROUND DIRECT BURY 600 VOLT POWER CABLE
(S2)	3/C – #4 WITH GROUND DIRECT BURY 600 VOLT POWER CABLE
(S3)	3/C – #6 WITH GROUND DIRECT BURY 600 VOLT POWER CABLE
(S4)	3/C – #8 WITH GROUND DIRECT BURY 600 VOLT POWER CABLE
(S5)	3/C – #10 WITH GROUND DIRECT BURY 600 VOLT POWER CABLE
═══	CONCRETE ENCASEMENT REQUIRED UNDER SERVICE ROADS, TRAILS, LOW WATER CROSSINGS, AND CREEK CROSSINGS. CONDUIT SIZES AS REQUIRED FOR CABLE(S). 100mm MINIMUM FOR 3ØUP.
—EOP—	EXISTING OVERHEAD PRIMARY TO REMAIN
●	NEW WOOD POLE – HEIGHT AND CLASS AS INDICATED
○	EXISTING WOOD POLE
RLM	RANGE LIMIT MARKER CONTROL CABLE
	RANGE LIMIT MARKER
	FLIR CAMERA
CV-1	STATIONARY ARMOR TARGETS (STATS)
CV-1	FUTURE STATIONARY ARMOR TARGETS (STATS)
CC-2	STATIONARY INFANTRY TARGETS (SIT)
ECM-1	EXISTING ARMOR MOVING TARGET
	DEFILADE
M-01	ARMOR MOVING TARGETS (AMTC)
	PRIMARY TARGET SERVICE ROAD
	TANK TRAILS, CROSSOVERS, ACCESS ROADS
	EXISTING ROAD

0 20 40 80
SCALE: 1:2000

THE SEAL APPEARING ON THIS DOCUMENT WAS AUTHORIZED BY SAMUEL LEE GULLEY ON AUGUST 8, 2001

SAMUEL LEE GULLEY CERTIFICATE NO. 34 STATE OF FLORIDA PROFESSIONAL ENGINEER

US Army Corps of Engineers
FORT WORTH DISTRICT

POLYENGINEERING, INC.
CONSULTING ENGINEERS & ARCHITECTS
POLYENGINEERING, INC.
1020 Southland Avenue
Dothan, Alabama 36305
(334) 793-2720 (voice)
(334) 793-9016 (fax)

Rev.	Description	Date	Appr.
A	ADDED RLM CABLE, TARGET, AND REVISED DETAIL, TITLE BLOCK EDIT, ADDED SEAL	AUG 01	SLG

Date: 19 July 2001
Rev.
Sol. No. DACA63-01-B-0007
Contr. No. DACA63-01-C-0016
Designed by: Samuel L. Gulley
Dwn by: T. Bolton
Ckd by: F. Corbett
Reviewed by:
Plot name:
Plot date:
Plot scale: 1:200
Submitted by: E. Lamar Faulk

U.S. ARMY ENGINEER DISTRICT
CORPS OF ENGINEERS
FORT WORTH, TEXAS

POLYENGINEERING, INC.
ENGINEERS & ARCHITECTS
DOTHAN, ALABAMA

FORT HOOD, TEXAS
DIGITAL MULTI-PURPOSE RANGE COMPLEX (DMPRC)
PN 51915 FC 00

ELECTRICAL SITE PLAN
RANGE POWER DISTRIBUTION

Sheet reference number: E-25
Sheet of

00688690

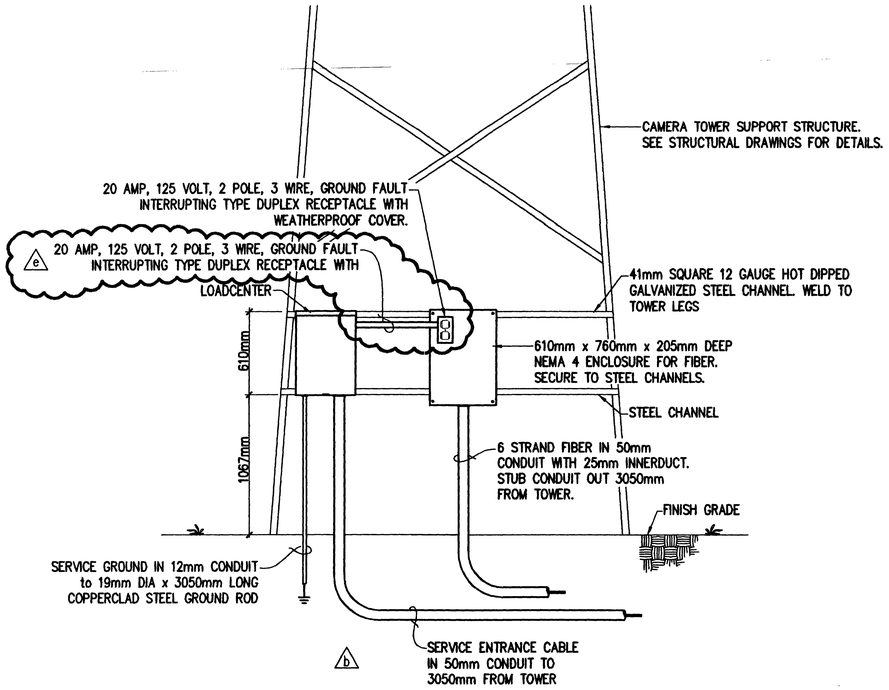

SAFETY CAMERA (FLIR) DETAIL
POWER AND FIBER INSTALLATION

NOT TO SCALE

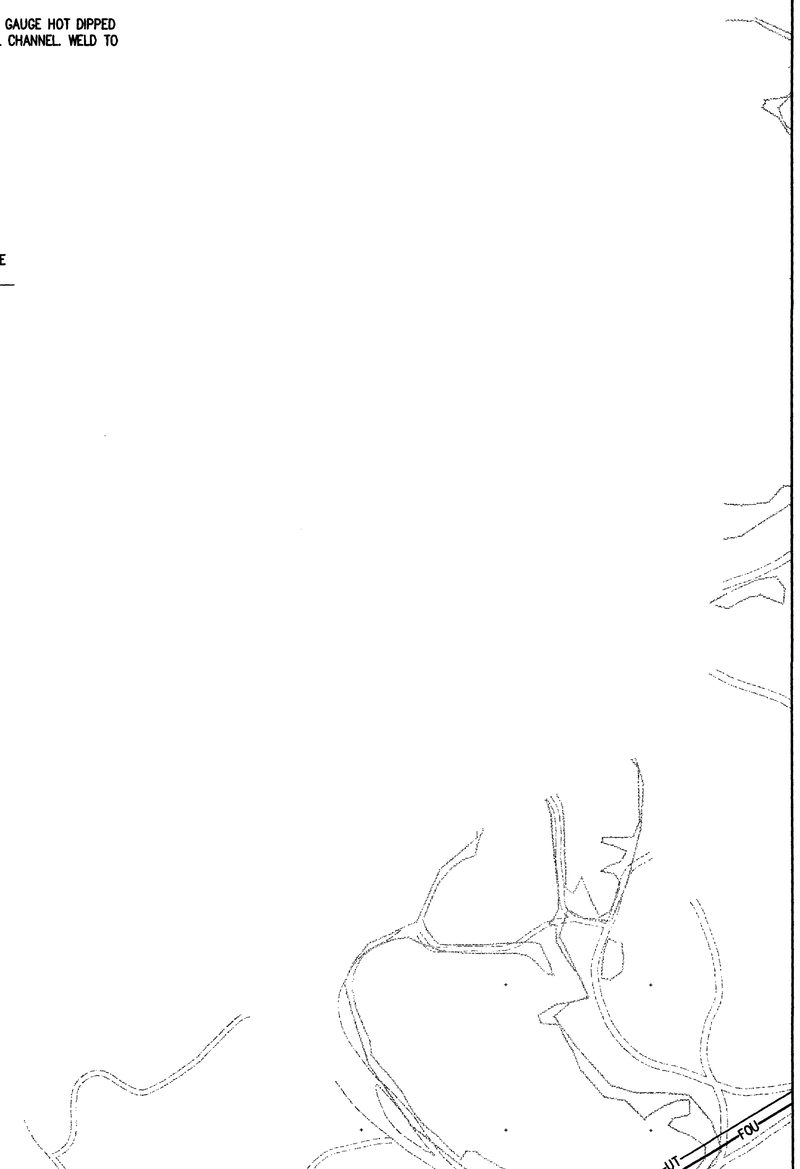

NORTH

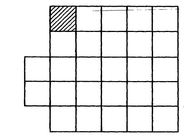

SITE KEY PLAN

NOT TO SCALE

DATA SITE LEGEND

PC1	POWER CENTER DESIGNATION
	CONCRETE ENCASEMENT REQUIRED UNDER SERVICE ROADS, TRAILS, LOW WATER CROSSINGS, AND CREEK CROSSINGS. CONDUIT SIZES AS REQUIRED FOR CABLE(S).
—FOU—	DIRECT BURIED FIBER OPTIC CABLE TRUNK LINE
—FO—	DIRECT BURIED FIBER OPTIC CABLE
—UT—	DIRECT BURIED TELEPHONE CABLE
—EUT—	EXISTING UNDERGROUND TELEPHONE
	COMMUNICATIONS PEDESTAL
	FLIR CAMERA
	NEW WOOD POLE – HEIGHT AND CLASS AS INDICATED
	EXISTING WOOD POLE
CV-1	STATIONARY ARMOR TARGETS (STATS)
CV-1	FUTURE STATIONARY ARMOR TARGETS (STATS)
CC-2	STATIONARY INFANTRY TARGETS (SIT)
ECM-1	EXISTING ARMOR MOVING TARGET
	DEFILADE
M-01	ARMOR MOVING TARGETS (AMTC)
	PRIMARY TARGET SERVICE ROAD
	TANK TRAILS, CROSSOVERS, ACCESS ROADS
	EXISTING ROAD
	TREE LINE

0 20 40 80
SCALE: 1:2000

THE SEAL APPEARING ON THIS DOCUMENT WAS AUTHORIZED BY SAMUEL LEE GULLEY ON AUGUST 8, 2001

SAMUEL LEE GULLEY CERTIFICATE NO. 34017 STATE OF FLORIDA PROFESSIONAL ENGINEER

US Army Corps of Engineers
FORT WORTH DISTRICT

POLYENGINEERING, INC.
POLYENGINEERING, INC.
1906 Headland Avenue
Dothan, Alabama 36305
(334) 793-2720 (voice)
(334) 793-2015 (fax)

Mark	Description	Date	Appr.
1	REVISED DETAIL	SEPT 01	SLG
2	ADDED SAFETY CAMERA DETAIL	AUG 01	SLG

Designed by: Samuel L. Gulley
Dwn by: T. Bolton
Ckd by: F. Corbari
Reviewed by:
Submitted by: E. Lamar Foulk
Date: 19 July 2001
Rev.
Sol. No. DACA63-01-B-0007
Contr. No. DACA63-01-C-0016
File name:
Plot date:
Plot scale: 1:200

U.S. ARMY ENGINEER DISTRICT
CORPS OF ENGINEERS
FORT WORTH, TEXAS

POLYENGINEERING, INC.
ENGINEERS & ARCHITECTS
DOTHAN, ALABAMA

FORT HOOD, TEXAS
DIGITAL MULTI-PURPOSE RANGE COMPLEX (DMPRC) FY 00
PN 51915

ELECTRICAL SITE PLAN
RANGE DATA DISTRIBUTION

Sheet reference number:
E-26
Sheet x of x

Contr. No. DACA63-01-C-0016

00688700

NORTH

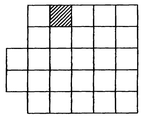

SITE KEY PLAN

NOT TO SCALE

DATA SITE LEGEND

- PC1 ■ POWER CENTER DESIGNATION
- CONCRETE ENCASEMENT REQUIRED UNDER SERVICE ROADS, TRAILS, LOW WATER CROSSINGS, AND CREEK CROSSINGS. CONDUIT SIZES AS REQUIRED FOR CABLE(S).
- —FOU— DIRECT BURIED FIBER OPTIC CABLE TRUNK LINE
- —FO— DIRECT BURIED FIBER OPTIC CABLE
- —UT— DIRECT BURIED TELEPHONE CABLE
- —EUT— EXISTING UNDERGROUND TELEPHONE
- COMMUNICATIONS PEDESTAL
- FLIR CAMERA
- NEW WOOD POLE – HEIGHT AND CLASS AS INDICATED
- EXISTING WOOD POLE
- CV-1 STATIONARY ARMOR TARGETS (STATS)
- CV-1 FUTURE STATIONARY ARMOR TARGETS (STATS)
- CC-2 STATIONARY INFANTRY TARGETS (SIT)
- ECM-1 EXISTING ARMOR MOVING TARGET
- DEFILADE
- M-01 ARMOR MOVING TARGETS (AMTC)
- PRIMARY TARGET SERVICE ROAD
- TANK TRAILS, CROSSOVERS, ACCESS ROADS
- EXISTING ROAD
- TREE LINE

0 20 40 80

SCALE: 1:2000

THE SEAL APPEARING ON THIS DOCUMENT WAS AUTHORIZED BY SAMUEL LEE GULLEY ON AUGUST 8, 2001

SAMUEL LEE GULLEY CERTIFICATE No. 50007 STATE OF FLORIDA PROFESSIONAL ENGINEER

US Army Corps of Engineers
FORT WORTH DISTRICT

POLYENGINEERING, INC.
1820 Rosedale Avenue
Dothan, Alabama 36303
(334) 793-4700 (voice)
(334) 793-8016 (fax)

Rev.	Description	Date	Appr.
A	ADDED FOU	SEP 01	SLG
B	ADDED FIBER COUNT	AUG 01	SLG

Designed by: Samuel L. Gulley
Drawn by: Brian Robertson
Checked by: Eric Carlson
Reviewed by:
Submitted by: E. Lamar Faulk
Date: 13 July 2001
Sol. No. DACA63-01-B-0007
Contr. No. DACA63-01-C-0016
File name:
Plot date:
Plot scale: 1:200

U.S. ARMY ENGINEER DISTRICT
CORPS OF ENGINEERS
FORT WORTH, TEXAS

POLYENGINEERING, INC.
ENGINEERS & ARCHITECTS
DOTHAN, ALABAMA

FORT HOOD, TEXAS
DIGITAL MULTI-PURPOSE RANGE COMPLEX
PN 51915 (DMPRC) FY 00

ELECTRICAL SITE PLAN
RANGE DATA DISTRIBUTION

Sheet reference number:
E-27
Sheet x of x

Contr. No. DACA63-01-C-0016

...\2000-022_E27.dwg 8/12/2005 8:44:12 AM

00688710

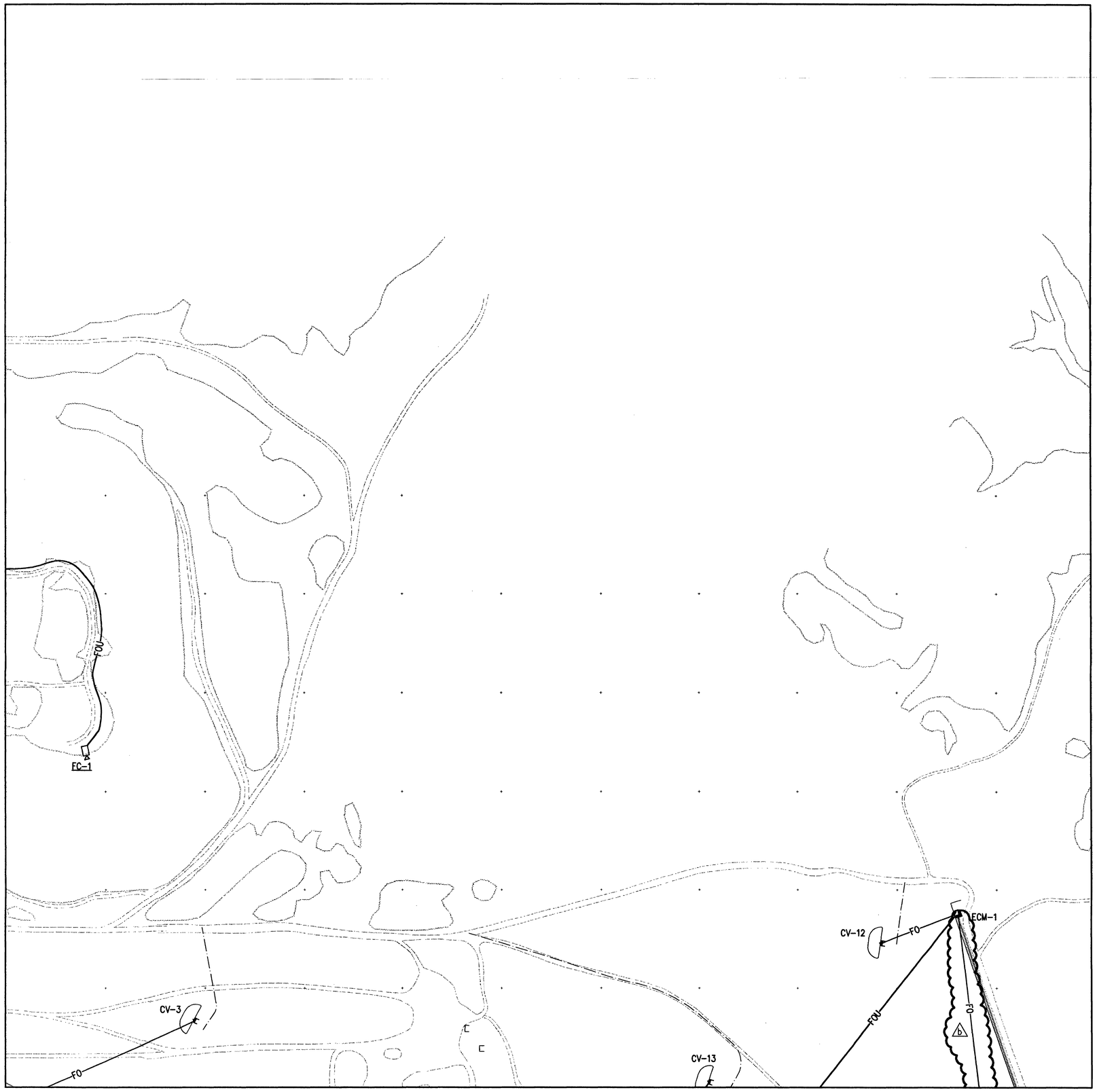

NORTH

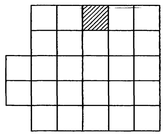

SITE KEY PLAN

NOT TO SCALE

DATA SITE LEGEND

- PC1 — POWER CENTER DESIGNATION
- CONCRETE ENCASEMENT REQUIRED UNDER SERVICE ROADS, TRAILS, LOW WATER CROSSINGS, AND CREEK CROSSINGS. CONDUIT SIZES AS REQUIRED FOR CABLE(S).
- —FOU— DIRECT BURIED FIBER OPTIC CABLE TRUNK LINE
- —FO— DIRECT BURIED FIBER OPTIC CABLE
- —UT— DIRECT BURIED TELEPHONE CABLE
- —EUT— EXISTING UNDERGROUND TELEPHONE
- COMMUNICATIONS PEDESTAL
- FLIR CAMERA
- NEW WOOD POLE – HEIGHT AND CLASS AS INDICATED
- EXISTING WOOD POLE
- CV-1 — STATIONARY ARMOR TARGETS (STATS)
- CV-1 — FUTURE STATIONARY ARMOR TARGETS (STATS)
- CC-2 — STATIONARY INFANTRY TARGETS (SIT)
- ECM-1 — EXISTING ARMOR MOVING TARGET
- DEFILADE
- M-01 — ARMOR MOVING TARGETS (AMTC)
- PRIMARY TARGET SERVICE ROAD
- TANK TRAILS, CROSSOVERS, ACCESS ROADS
- EXISTING ROAD
- TREE LINE

SCALE: 1:2000 (0 20 40 80)

THE SEAL APPEARING ON THIS DOCUMENT WAS AUTHORIZED BY SAMUEL LEE GULLEY ON AUGUST 8, 2001

SAMUEL LEE GULLEY — No. 16681 — CERTIFICATE — STATE OF FLORIDA — PROFESSIONAL ENGINEER

US Army Corps of Engineers
FORT WORTH DISTRICT

POLYENGINEERING, INC.
POLYENGINEERING, INC.
1988 Headland Avenue
Dothan, Alabama 36305
(334) 793-2700 (voice)
(334) 793-2018 (fax)

Mark	Description	Date	Appr.
2	ADDED TARGET, TITLE BLOCK EDIT, ADDED SEAL	AUG 01	SLG

Designed by: Samuel L. Gulley
Drn by: T. Bolton
Ckd by: F. Corbari
Reviewed by:
Submitted by: E. Lamar Faulk
Date: 19 July 2001
Rev.
Sol. No. DACA63-01-B-0007
Contr. No. DACA63-01-C-0016
File name:
Plot date:
Plot scale: 1:200

U.S. ARMY ENGINEER DISTRICT
CORPS OF ENGINEERS
FORT WORTH, TEXAS

POLYENGINEERING, INC.
ENGINEERS & ARCHITECTS
DOTHAN, ALABAMA

FORT HOOD, TEXAS
DIGITAL MULTI-PURPOSE RANGE COMPLEX (DMPRC)
PN 51915 P00

ELECTRICAL SITE PLAN
RANGE DATA DISTRIBUTION

Sheet reference number: E-28

Sheet of

00688770

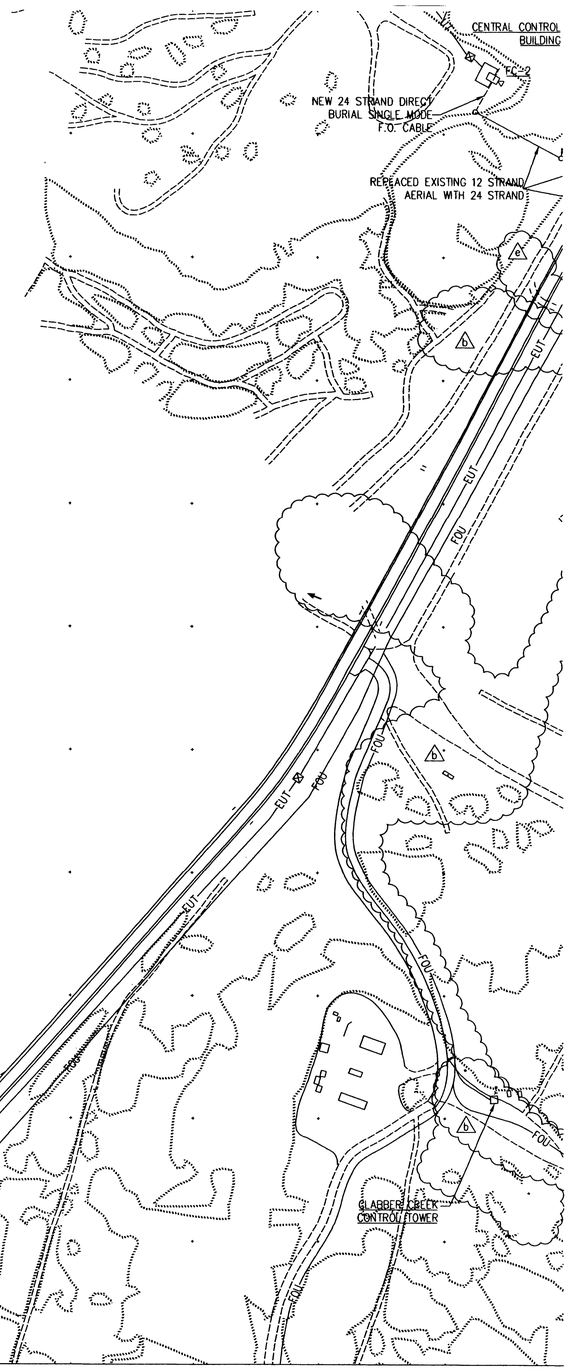

NORTH

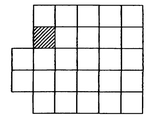

SITE KEY PLAN

NOT TO SCALE

DATA SITE LEGEND

- PC1 ■ POWER CENTER DESIGNATION
- CONCRETE ENCASEMENT REQUIRED UNDER SERVICE ROADS, TRAILS, LOW WATER CROSSINGS, AND CREEK CROSSINGS. CONDUIT SIZES AS REQUIRED FOR CABLE(S).
- —FOU— DIRECT BURIED FIBER OPTIC CABLE TRUNK LINE
- —FO— DIRECT BURIED FIBER OPTIC CABLE
- —UT— DIRECT BURIED TELEPHONE CABLE
- —EUT— EXISTING UNDERGROUND TELEPHONE
- ⊠ COMMUNICATIONS PEDESTAL
- FLIR CAMERA
- ● NEW WOOD POLE - HEIGHT AND CLASS AS INDICATED
- ○ EXISTING WOOD POLE
- CV-1 STATIONARY ARMOR TARGETS (STATS)
- CV-1 FUTURE STATIONARY ARMOR TARGETS (STATS)
- CC-2 STATIONARY INFANTRY TARGETS (SIT)
- ECM-1 EXISTING ARMOR MOVING TARGET
- DEFILADE
- M-01 ARMOR MOVING TARGETS (AMTC)
- PRIMARY TARGET SERVICE ROAD
- TANK TRAILS, CROSSOVERS, ACCESS ROADS
- EXISTING ROAD
- TREE LINE

0 20 40 80

SCALE: 1:2000

THE SEAL APPEARING ON THIS DOCUMENT WAS AUTHORIZED BY SAMUEL LEE GULLEY ON AUGUST 8, 2001

SAMUEL LEE GULLEY CERTIFICATE No. 50007 STATE OF FLORIDA PROFESSIONAL ENGINEER

US Army Corps of Engineers
FORT WORTH DISTRICT

POLYENGINEERING, INC.
1908 Boulevard Avenue
Dothan, Alabama 36303
(334) 793-4701 (voice)
(334) 793-9010 (fax)

Mark	Description	Date	Appr.
1	RE-ROUTED FOU	SEPT 01	SLG
2	RE-ROUTED FOU	AUG 01	SLG

Designed by: Samuel L. Gulley
Dwn by: T. Bolton
Ckd by: F. Corbari
Reviewed by:
Submitted by: E. Lamar Faulk
Date: 13 July 2001
Rev.
Sol. No. DACA63-01-B-0007
Contr. No. DACA63-01-C-0016
File name:
Plot date:
Plot scale: 1:200

U.S. ARMY ENGINEER DISTRICT
CORPS OF ENGINEERS
FORT WORTH, TEXAS

POLYENGINEERING, INC.
ENGINEERS & ARCHITECTS
DOTHAN, ALABAMA

FORT HOOD, TEXAS
DIGITAL MULTI-PURPOSE RANGE COMPLEX (DMPRC)
PN 51915
FY 00

ELECTRICAL SITE PLAN
RANGE DATA DISTRIBUTION

Sheet reference number:
E-29
Sheet x of x

Contr. No. DACA63-01-C-0016

..\2000-022_E29.dwg 8/12/2005 8:43:19 AM

00688730

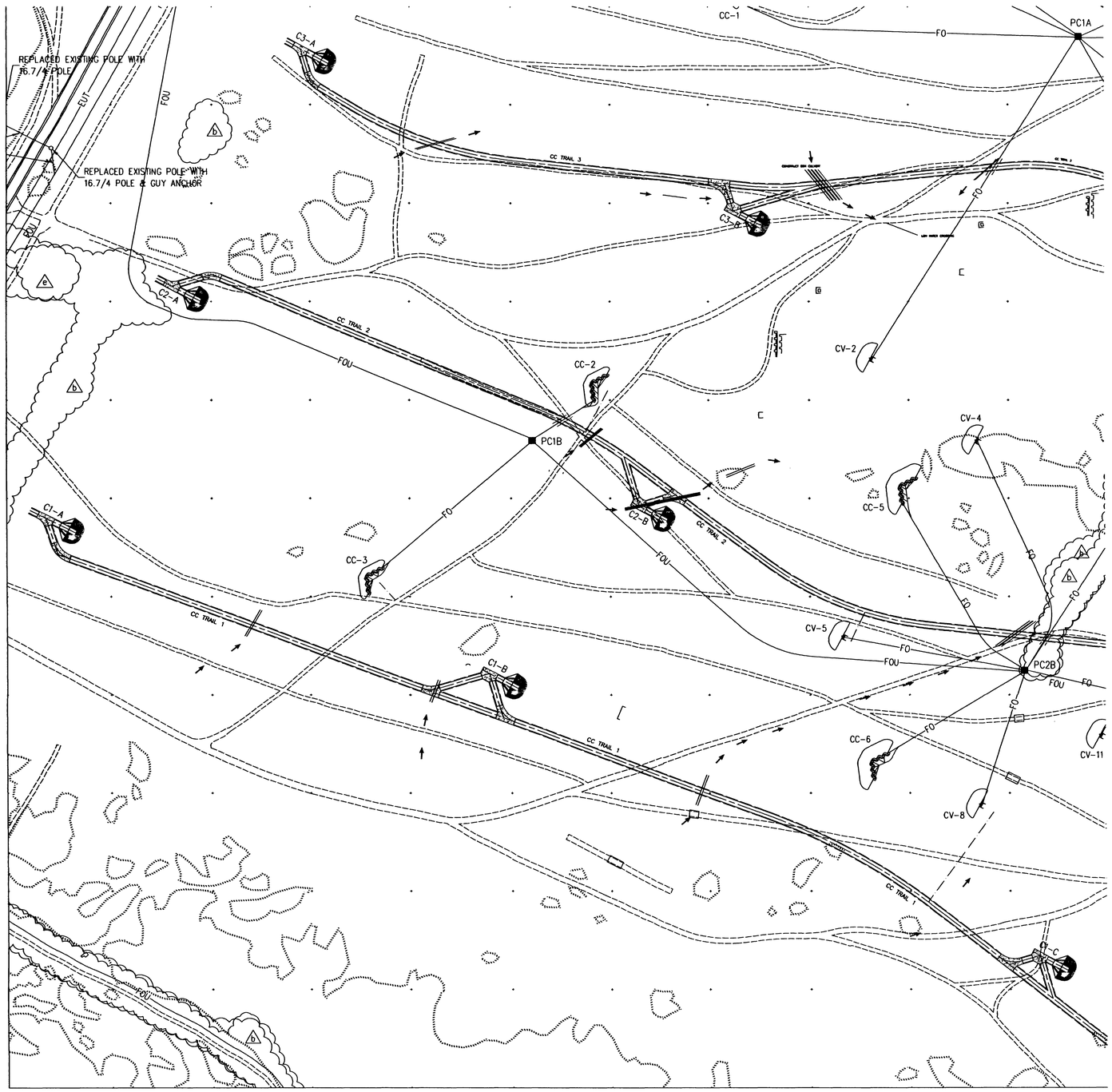

NORTH

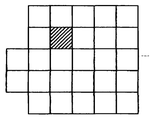

SITE KEY PLAN

NOT TO SCALE

DATA SITE LEGEND

PC1	POWER CENTER DESIGNATION
	CONCRETE ENCASEMENT REQUIRED UNDER SERVICE ROADS, TRAILS, LOW WATER CROSSINGS, AND CREEK CROSSINGS. CONDUIT SIZES AS REQUIRED FOR CABLE(S).
—FOU—	DIRECT BURIED FIBER OPTIC CABLE TRUNK LINE
—FO—	DIRECT BURIED FIBER OPTIC CABLE
—UT—	DIRECT BURIED TELEPHONE CABLE
—EUT—	EXISTING UNDERGROUND TELEPHONE
	COMMUNICATIONS PEDESTAL
	FLIR CAMERA
	NEW WOOD POLE - HEIGHT AND CLASS AS INDICATED
	EXISTING WOOD POLE
CV-1	STATIONARY ARMOR TARGETS (STATS)
CV-1	FUTURE STATIONARY ARMOR TARGETS (STATS)
CC-2	STATIONARY INFANTRY TARGETS (SIT)
ECM-1	EXISTING ARMOR MOVING TARGET
	DEFILADE
M-01	ARMOR MOVING TARGETS (AMTC)
	PRIMARY TARGET SERVICE ROAD
	TANK TRAILS, CROSSOVERS, ACCESS ROADS
	EXISTING ROAD
	TREE LINE

SCALE: 1:2000 (0, 20, 40, 80)

THE SEAL APPEARING ON THIS DOCUMENT WAS AUTHORIZED BY SAMUEL LEE GULLEY ON AUGUST 8, 2001

SAMUEL LEE GULLEY CERTIFICATE No. 50007 STATE OF FLORIDA PROFESSIONAL ENGINEER

US Army Corps of Engineers FORT WORTH DISTRICT

POLYENGINEERING, INC. 1906 Southeast Avenue Dothan, Alabama 36303 (334) 793-4701 (voice) (334) 793-3018 (fax)

Sym.	Description	Date	By	Appr.
1	RE-ROUTED FOU	SEPT 01	SLG	SLG
2	RE-ROUTED CAMERA CIRCUIT AND ADDED TARGET	AUG 01	SLG	SMH

U.S. ARMY ENGINEER DISTRICT
CORPS OF ENGINEERS
FORT WORTH, TEXAS

POLYENGINEERING, INC.
ENGINEERS & ARCHITECTS
DOTHAN, ALABAMA

Designed by: Samuel L. Gulley
Drawn by: T. Bolton
Reviewed by:
Submitted by: E. Lamar Faulk
Date: 15 July 2001
Sol. No.: DACA63-01-B-0007
Contr. No.: DACA63-01-C-0016
File name:
Plot date:
Plot scale: 1:200
Rev.

FORT HOOD, TEXAS
DIGITAL MULTI-PURPOSE RANGE COMPLEX (DMPRC)
PN 519115 FY 00

ELECTRICAL SITE PLAN
RANGE DATA DISTRIBUTION

Sheet reference number:
E-30
Sheet x of x

Contr. No. DACA63-01-C-0016

..\2000-022_E30.dwg 8/12/2005 8:42:38 AM

00688740

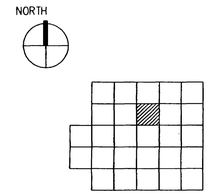

SITE KEY PLAN

NOT TO SCALE

DATA SITE LEGEND

- PC1 ■ POWER CENTER DESIGNATION
- CONCRETE ENCASEMENT REQUIRED UNDER SERVICE ROADS, TRAILS, LOW WATER CROSSINGS, AND CREEK CROSSINGS. CONDUIT SIZES AS REQUIRED FOR CABLE(S).
- —FOU— DIRECT BURIED FIBER OPTIC CABLE TRUNK LINE
- —FO— DIRECT BURIED FIBER OPTIC CABLE
- —UT— DIRECT BURIED TELEPHONE CABLE
- —EUT— EXISTING UNDERGROUND TELEPHONE
- ⊠ COMMUNICATIONS PEDESTAL
- PC FLIR CAMERA
- ● NEW WOOD POLE – HEIGHT AND CLASS AS INDICATED
- ○ EXISTING WOOD POLE
- CV-1 STATIONARY ARMOR TARGETS (STATS)
- CV-1 FUTURE STATIONARY ARMOR TARGETS (STATS)
- CC-2 STATIONARY INFANTRY TARGETS (SIT)
- ECM-1 EXISTING ARMOR MOVING TARGET
- DEFILADE
- M-01 ARMOR MOVING TARGETS (AMTC)
- PRIMARY TARGET SERVICE ROAD
- TANK TRAILS, CROSSOVERS, ACCESS ROADS
- EXISTING ROAD
- TREE LINE

SCALE: 1:2000 (0 20 40 80)

THE SEAL APPEARING ON THIS DOCUMENT WAS AUTHORIZED BY SAMUEL LEE GULLEY ON AUGUST 8, 2001

SAMUEL LEE GULLEY CERTIFICATE No. 50007 STATE OF FLORIDA PROFESSIONAL ENGINEER

US Army Corps of Engineers
FORT WORTH DISTRICT

POLYENGINEERING, INC.
1950 Headland Avenue
Dothan, Alabama 36305
(334) 793-4700 (voice)
(334) 793-9015 (fax)

Mark	Description	Date	Appr.
A	ADDED TARGETS, TITLE BLOCK EDIT, ADDED SEAL	AUG 01	SLG

U.S. ARMY ENGINEER DISTRICT
CORPS OF ENGINEERS
FORT WORTH, TEXAS

POLYENGINEERING, INC.
ENGINEERS & ARCHITECTS
DOTHAN, ALABAMA

Designed by: Samuel L. Gulley
Dwn by: T. Bolton
Chd by: F. Carbari
Date: 13 July 2001
Rev.
Sol. No. DACA63-01-B-0007
Contr. No. DACA63-01-C-0016
Reviewed by:
Submitted by: E. Lamar Faulk
File name:
Plot date:
Plot scale: 1:200

FORT HOOD, TEXAS
DIGITAL MULTI-PURPOSE RANGE COMPLEX (DMPRC)
PN 51915 FY 00

ELECTRICAL SITE PLAN
RANGE DATA DISTRIBUTION

Sheet reference number: E-31

Sheet of

Contr. No. DACA63-01-C-0016

..\2000-022_E31.dwg 8/12/2005 8:41:45 AM

00684750

NORTH

SITE KEY PLAN

NOT TO SCALE

DATA SITE LEGEND

- PC1 ■ POWER CENTER DESIGNATION
- CONCRETE ENCASEMENT REQUIRED UNDER SERVICE ROADS, TRAILS, LOW WATER CROSSINGS, AND CREEK CROSSINGS. CONDUIT SIZES AS REQUIRED FOR CABLE(S).
- —FOU— DIRECT BURIED FIBER OPTIC CABLE TRUNK LINE
- —FO— DIRECT BURIED FIBER OPTIC CABLE
- —UT— DIRECT BURIED TELEPHONE CABLE
- —EUT— EXISTING UNDERGROUND TELEPHONE
- ⊠ COMMUNICATIONS PEDESTAL
- FLIR CAMERA
- ● NEW WOOD POLE – HEIGHT AND CLASS AS INDICATED
- ○ EXISTING WOOD POLE
- CV-1 STATIONARY ARMOR TARGETS (STATS)
- CV-1 FUTURE STATIONARY ARMOR TARGETS (STATS)
- CC-2 STATIONARY INFANTRY TARGETS (SIT)
- ECM-1 EXISTING ARMOR MOVING TARGET
- DEFILADE
- M-01 ARMOR MOVING TARGETS (AMTC)
- PRIMARY TARGET SERVICE ROAD
- TANK TRAILS, CROSSOVERS, ACCESS ROADS
- EXISTING ROAD
- TREE LINE

0 20 40 80

SCALE: 1:2000

THE SEAL APPEARING ON THIS DOCUMENT WAS AUTHORIZED BY SAMUEL LEE GULLEY ON AUGUST 8, 2001

SAMUEL LEE GULLEY CERTIFICATE No. 50007 STATE OF FLORIDA PROFESSIONAL ENGINEER

US Army Corps of Engineers
FORT WORTH DISTRICT

POLYENGINEERING, INC.
1820 Headland Avenue
Dothan, Alabama 36305
(334) 793-4700 (voice)
(334) 793-9016 (fax)

Rev.	Date	Description	Appr.
A3	AUG 01	ADDED TARGET, TITLE BLOCK CORR, ADDED SEAL	SLG

Designed by: Samuel L. Gulley
Dwn by: T. Bolton
Chkd by: F. Corbari
Reviewed by:
Submitted by: E. Lamar Faulk
Date: 19 July 2001
Sol. No. DACA63-01-B-0007
Contr. No. DACA63-01-C-0016
File name:
Plot date:
Plot scale: 1:200

U.S. ARMY ENGINEER DISTRICT
CORPS OF ENGINEERS
FORT WORTH, TEXAS

POLYENGINEERING, INC.
ENGINEERS & ARCHITECTS
DOTHAN, ALABAMA

FORT HOOD, TEXAS
DIGITAL MULTI-PURPOSE RANGE COMPLEX (DMPRC)
PN 519115
FY 00

ELECTRICAL SITE PLAN
RANGE DATA DISTRIBUTION

Sheet reference number: E-32

Sheet of

Contr. No. DACA63-01-C-0016

...\2000-022_E32.dwg 8/12/2005 8:41:09 AM

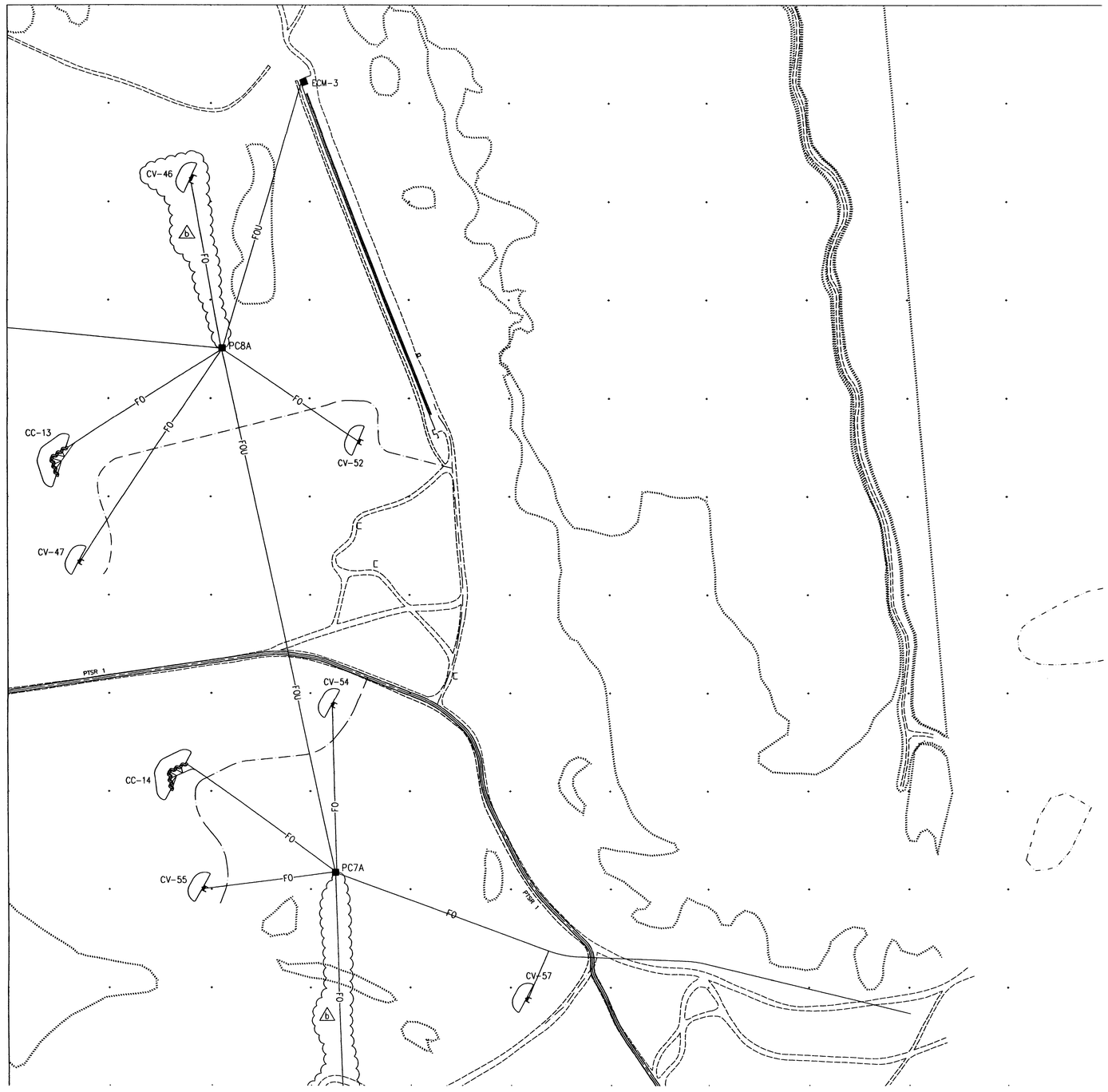

NORTH

SITE KEY PLAN
NOT TO SCALE

DATA SITE LEGEND

- PC1 ■ POWER CENTER DESIGNATION
- CONCRETE ENCASEMENT REQUIRED UNDER SERVICE ROADS, TRAILS, LOW WATER CROSSINGS, AND CREEK CROSSINGS. CONDUIT SIZES AS REQUIRED FOR CABLE(S).
- —FOU— DIRECT BURIED FIBER OPTIC CABLE TRUNK LINE
- —FO— DIRECT BURIED FIBER OPTIC CABLE
- —UT— DIRECT BURIED TELEPHONE CABLE
- —EUT— EXISTING UNDERGROUND TELEPHONE
- ⊠ COMMUNICATIONS PEDESTAL
- FLIR CAMERA
- ● NEW WOOD POLE – HEIGHT AND CLASS AS INDICATED
- ○ EXISTING WOOD POLE
- CV-1 STATIONARY ARMOR TARGETS (STATS)
- CV-1 FUTURE STATIONARY ARMOR TARGETS (STATS)
- CC-2 STATIONARY INFANTRY TARGETS (SIT)
- ECM-1 EXISTING ARMOR MOVING TARGET
- DEFILADE
- M-01 ARMOR MOVING TARGETS (AMTC)
- PRIMARY TARGET SERVICE ROAD
- TANK TRAILS, CROSSOVERS, ACCESS ROADS
- EXISTING ROAD
- TREE LINE

SCALE: 1:2000

THE SEAL APPEARING ON THIS DOCUMENT WAS AUTHORIZED BY SAMUEL LEE GULLEY ON AUGUST 8, 2001

SAMUEL LEE GULLEY CERTIFICATE No. 50007 STATE OF FLORIDA PROFESSIONAL ENGINEER

US Army Corps of Engineers
FORT WORTH DISTRICT

POLYENGINEERING, INC.
1905 Woodland Avenue
Dothan, Alabama 36303
(334) 793-2700 (voice)
(334) 793-9010 (fax)

Mark	Description	Date	Appr.
A	ADDED TARGETS, TITLE BLOCK EDIT, ADDED SEAL	AUG 01	SLG

Designed by: Samuel L. Gulley
Dwn by: T. Bolton
Chd by: F. Corbari
Reviewed by:
Submitted by: E. Lamar Faulk
Date: 19 July 2001
Sol. No. DACA63-01-B-0007
Contr. No. DACA63-01-C-0016
File name:
Plot date:
Plot scale: 1:200
Rev.

U.S. ARMY ENGINEER DISTRICT
CORPS OF ENGINEERS
FORT WORTH, TEXAS

POLYENGINEERING, INC.
ENGINEERS & ARCHITECTS
DOTHAN, ALABAMA

FORT HOOD, TEXAS
DIGITAL MULTI-PURPOSE RANGE COMPLEX
PN 519113 (POLYENG)
P/L 00

ELECTRICAL SITE PLAN
RANGE DATA DISTRIBUTION

Sheet reference number: E-33
Sheet of

Contr. No. DACA63-01-C-0016

..\2000-022_E33.dwg 8/12/2005 8:40:45 AM

00665770

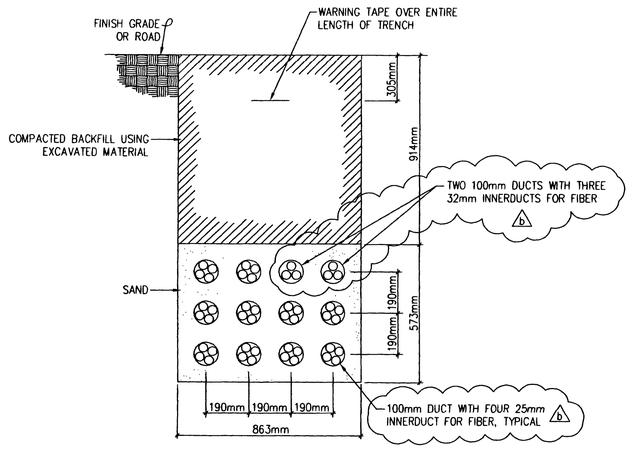

12-WAY CONCRETE ENCASED DUCTBANK AT CENTRAL CONTROL BUILDING

NOT TO SCALE

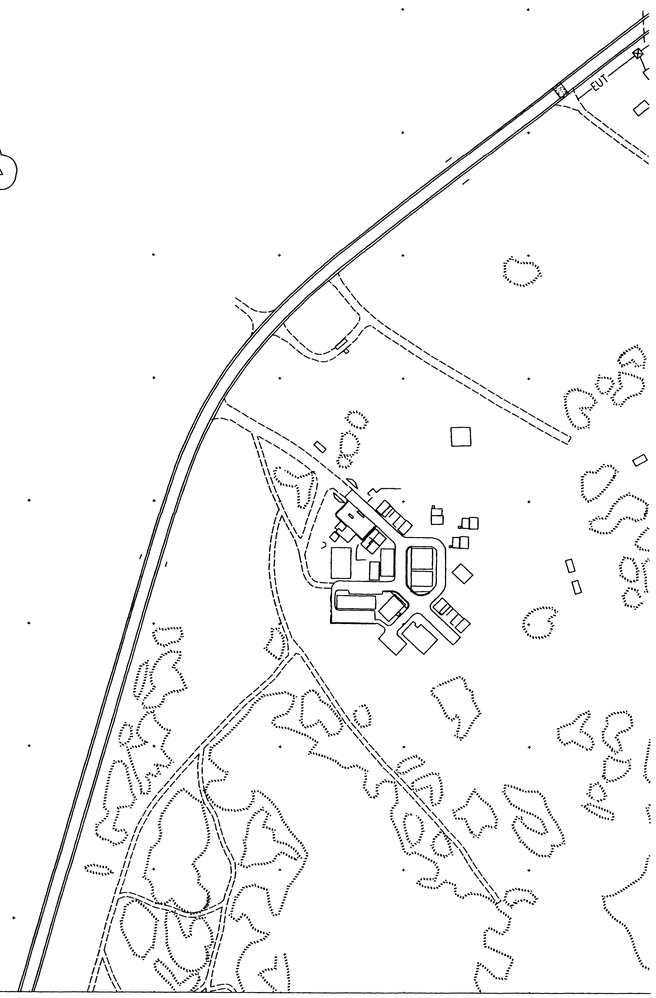

NORTH

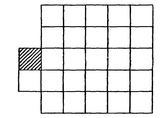

SITE KEY PLAN

NOT TO SCALE

DATA SITE LEGEND

PC1 ■	POWER CENTER DESIGNATION
⁝⁝⁝⁝⁝⁝	CONCRETE ENCASEMENT REQUIRED UNDER SERVICE ROADS, TRAILS, LOW WATER CROSSINGS, AND CREEK CROSSINGS. CONDUIT SIZES AS REQUIRED FOR CABLE(S).
—FOU—	DIRECT BURIED FIBER OPTIC CABLE TRUNK LINE
—FO—	DIRECT BURIED FIBER OPTIC CABLE
—UT—	DIRECT BURIED TELEPHONE CABLE
—EUT—	EXISTING UNDERGROUND TELEPHONE
⊠	COMMUNICATIONS PEDESTAL
▷□	FLIR CAMERA
●	NEW WOOD POLE – HEIGHT AND CLASS AS INDICATED
○	EXISTING WOOD POLE
CV-1	STATIONARY ARMOR TARGETS (STATS)
CV-1	FUTURE STATIONARY ARMOR TARGETS (STATS)
CC-2	STATIONARY INFANTRY TARGETS (SIT)
ECM-1	EXISTING ARMOR MOVING TARGET
	DEFILADE
M-01	ARMOR MOVING TARGETS (AMTC)
	PRIMARY TARGET SERVICE ROAD
	TANK TRAILS, CROSSOVERS, ACCESS ROADS
	EXISTING ROAD
	TREE LINE

b

0 20 40 80

SCALE: 1:2000

b

THE SEAL APPEARING ON THIS DOCUMENT WAS AUTHORIZED BY SAMUEL LEE GULLEY ON AUGUST 8, 2001

SAMUEL LEE GULLEY CERTIFICATE No. 50007 STATE OF FLORIDA PROFESSIONAL ENGINEER

US Army Corps of Engineers
FORT WORTH DISTRICT

POLYENGINEERING, INC.
1200 Smallwood Avenue
Dothan, Alabama 36303
(334) 793-6700 (voice)
(334) 793-9919 (fax)

Rev.	Description	Date	Appr.
A	REVISED DETAIL, TITLE BLOCK ENT, ADDED SEAL	AUG 01	SLG

Designed by: Samuel L. Gulley
Dwn by: T. Bolton
Ckd by: F. Corbari
Reviewed by:
Submitted by: E. Lamar Faulk
Date: 19 July 2001
Sol. No. DACA63-01-B-0007
Contr. No. DACA63-01-C-0016
File name:
Plot date:
Plot scale: 1:200

U.S. ARMY ENGINEER DISTRICT
CORPS OF ENGINEERS
FORT WORTH, TEXAS

POLYENGINEERING, INC.
ENGINEERS & ARCHITECTS
DOTHAN, ALABAMA

FORT HOOD, TEXAS
DIGITAL MULTI-PURPOSE RANGE COMPLEX
PN 51915 FY 00

b

ELECTRICAL SITE PLAN
RANGE DATA DISTRIBUTION

Sheet reference number:
E-34
Sheet of
b

Contr. No. DACA63-01-C-0016

...\2000-022_E34.dwg 8/12/2005 8:40:20 AM

00685750

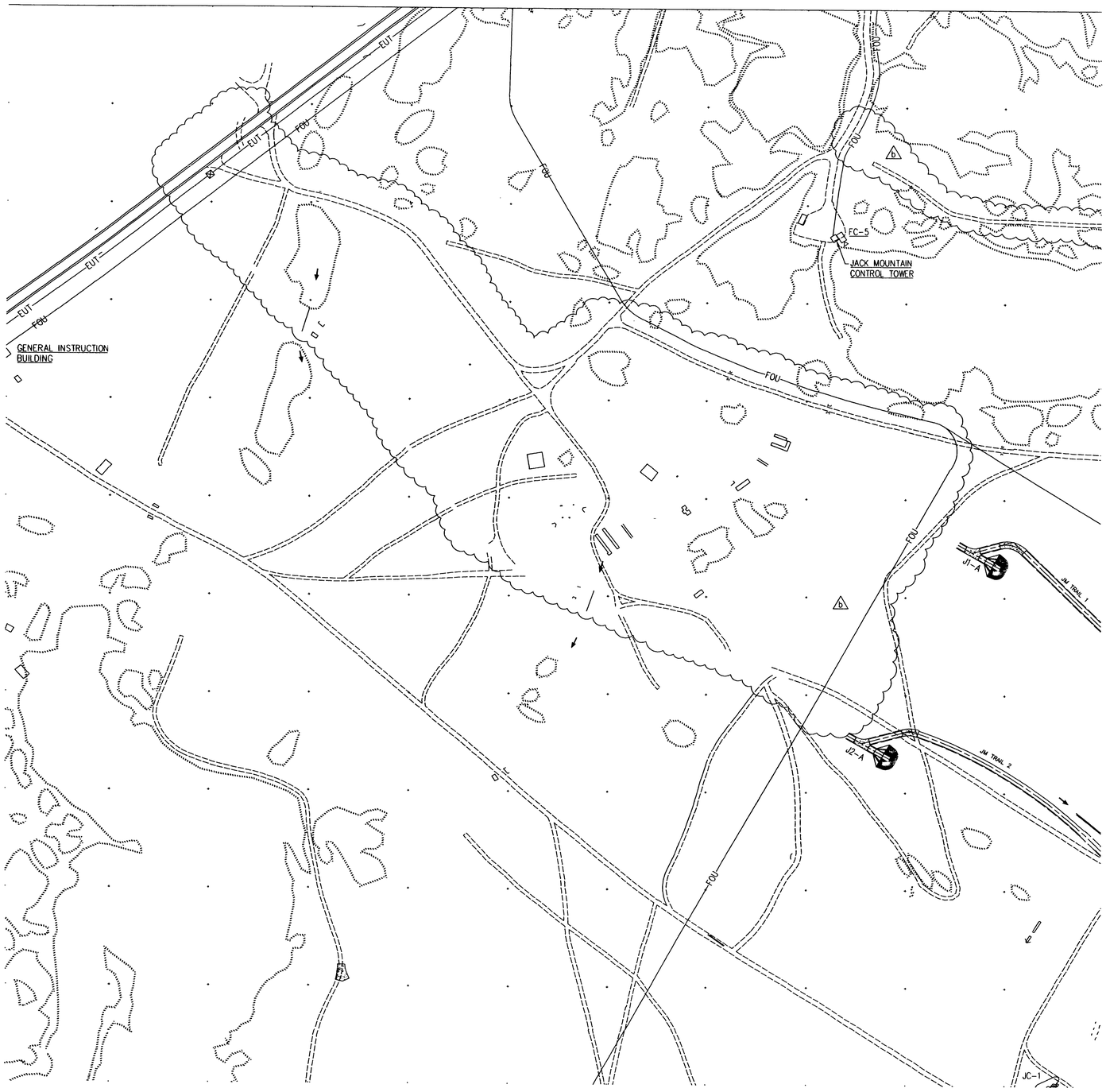

NORTH

SITE KEY PLAN
NOT TO SCALE

DATA SITE LEGEND

- PC1 ■ POWER CENTER DESIGNATION
- CONCRETE ENCASEMENT REQUIRED UNDER SERVICE ROADS, TRAILS, LOW WATER CROSSINGS, AND CREEK CROSSINGS. CONDUIT SIZES AS REQUIRED FOR CABLE(S).
- —FOU— DIRECT BURIED FIBER OPTIC CABLE TRUNK LINE
- —FO— DIRECT BURIED FIBER OPTIC CABLE
- —UT— DIRECT BURIED TELEPHONE CABLE
- —EUT— EXISTING UNDERGROUND TELEPHONE
- ⊠ COMMUNICATIONS PEDESTAL
- FLIR CAMERA
- ● NEW WOOD POLE – HEIGHT AND CLASS AS INDICATED
- ○ EXISTING WOOD POLE
- CV-1 STATIONARY ARMOR TARGETS (STATS)
- CV-1 FUTURE STATIONARY ARMOR TARGETS (STATS)
- CC-2 STATIONARY INFANTRY TARGETS (SIT)
- ECM-1 EXISTING ARMOR MOVING TARGET
- DEFILADE
- M-01 ARMOR MOVING TARGETS (AMTC)
- PRIMARY TARGET SERVICE ROAD
- TANK TRAILS, CROSSOVERS, ACCESS ROADS
- EXISTING ROAD
- TREE LINE

0 20 40 80
SCALE: 1:2000

THE SEAL APPEARING ON THIS DOCUMENT WAS AUTHORIZED BY SAMUEL LEE GULLEY ON AUGUST 8, 2001

SAMUEL LEE GULLEY CERTIFICATE No. 50007 STATE OF FLORIDA PROFESSIONAL ENGINEER

US Army Corps of Engineers
FORT WORTH DISTRICT

POLYENGINEERING, INC.
1936 Headland Avenue
Dothan, Alabama 36303
(334) 793-4700 (voice)
(334) 793-4016 (fax)

Mark	Description	Date	Appr.
3	RE-ROUTED FOU, TITLE BLOCK EDIT, ADDED SEAL	AUG 01	SLG

U.S. ARMY ENGINEER DISTRICT
CORPS OF ENGINEERS
FORT WORTH, TEXAS

POLYENGINEERING, INC.
ENGINEERS & ARCHITECTS
DOTHAN, ALABAMA

Designed by: Samuel L. Gulley
Dwn by: T. Bolton
Ckd by: F. Corbari
Reviewed by:
Submitted by: E. Lamar Faulk
Date: 19 July 2001
Rev.
Sol. No. DACA63-01-B-0007
Contr. No. DACA63-01-C-0016
File name:
Plot date:
Plot scale: 1:200

FORT HOOD, TEXAS
DIGITAL MULTI-PURPOSE RANGE COMPLEX (DMPRC)
PN 51915 P(00

ELECTRICAL SITE PLAN
RANGE DATA DISTRIBUTION

Sheet reference number: E-35
Sheet of

Contr. No. DACA63-01-C-0016

00688700

00-022_E35.dwg 8/12/2005 8:39:27 AM

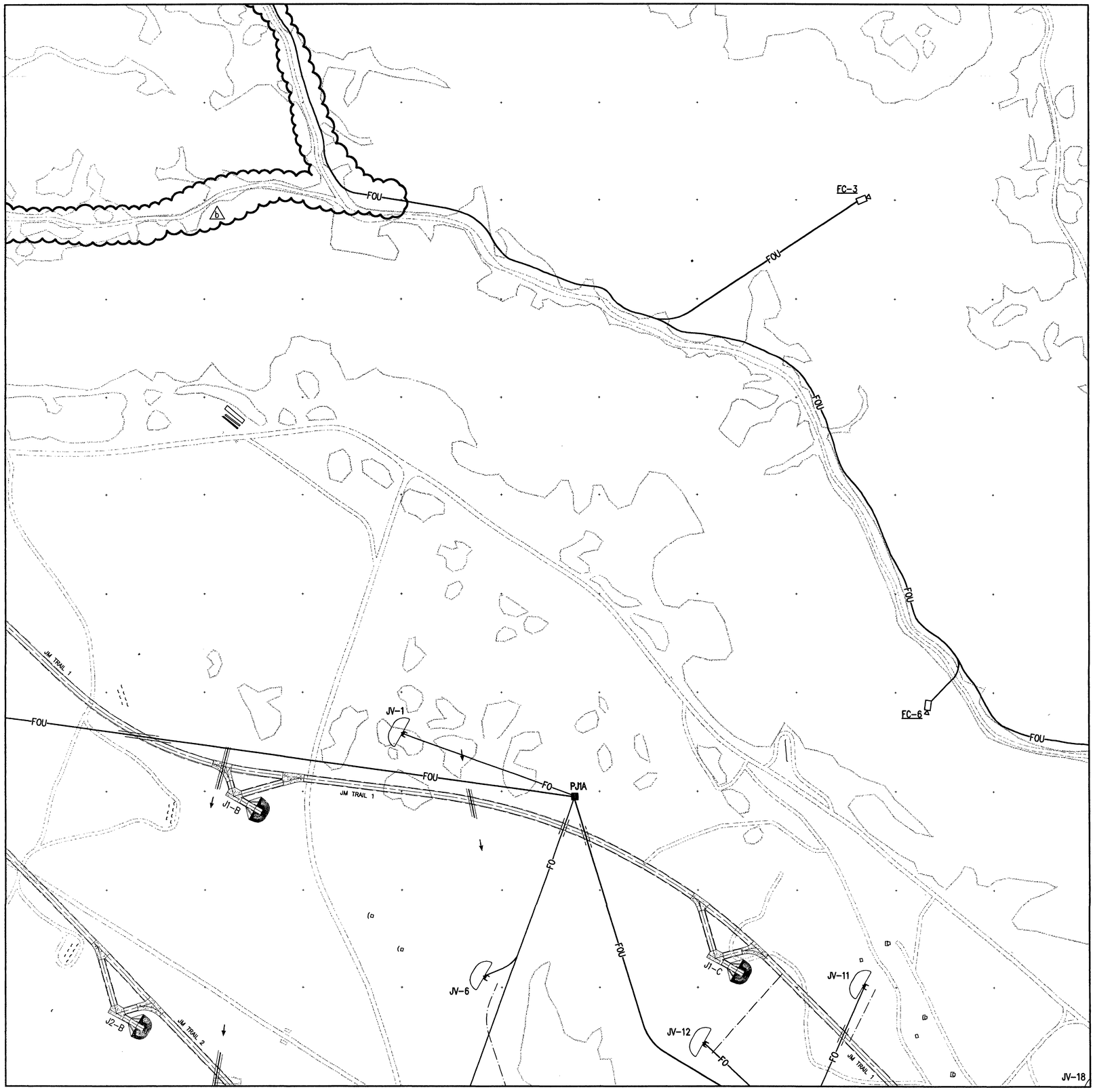

NORTH

SITE KEY PLAN

NOT TO SCALE

DATA SITE LEGEND

- PC1 ■ POWER CENTER DESIGNATION
- CONCRETE ENCASEMENT REQUIRED UNDER SERVICE ROADS, TRAILS, LOW WATER CROSSINGS, AND CREEK CROSSINGS. CONDUIT SIZES AS REQUIRED FOR CABLE(S).
- —FOU— DIRECT BURIED FIBER OPTIC CABLE TRUNK LINE
- —FO— DIRECT BURIED FIBER OPTIC CABLE
- —UT— DIRECT BURIED TELEPHONE CABLE
- —EUT— EXISTING UNDERGROUND TELEPHONE
- COMMUNICATIONS PEDESTAL
- FLIR CAMERA
- NEW WOOD POLE – HEIGHT AND CLASS AS INDICATED
- EXISTING WOOD POLE
- CV-1 STATIONARY ARMOR TARGETS (STATS)
- CV-1 FUTURE STATIONARY ARMOR TARGETS (STATS)
- CC-2 STATIONARY INFANTRY TARGETS (SIT)
- ECM-1 EXISTING ARMOR MOVING TARGET
- DEFILADE
- M-01 ARMOR MOVING TARGETS (AMTC)
- PRIMARY TARGET SERVICE ROAD
- TANK TRAILS, CROSSOVERS, ACCESS ROADS
- EXISTING ROAD
- TREE LINE

0 20 40 80
SCALE: 1:2000

THE SEAL APPEARING ON THIS DOCUMENT WAS AUTHORIZED BY SAMUEL LEE GULLEY ON AUGUST 8, 2001

SAMUEL LEE GULLEY CERTIFICATE NO. 51915 STATE OF FLORIDA PROFESSIONAL ENGINEER

US Army Corps of Engineers
FORT WORTH DISTRICT

POLYENGINEERING, INC.
POLYENGINEERING, INC.
1956 Headland Avenue
Dothan, Alabama 36303
(334) 793-4700 (voice)
(334) 793-9018 (fax)

Mark	Description	Date	Appr.
A	RE-ROUTED FOU, TITLE BLOCK EDIT, ADDED SEAL	AUG 01	SLG

Designed by: Samuel L. Gulley
Dwn by: T. Bolton
Ckd by: F. Corbari
Reviewed by:
Submitted by: E. Lamar Foulk
Date: 19 July 2001
Rev.
Sol. No. DACA63-01-B-0007
Contr. No. DACA63-01-C-0016
File name:
Plot date:
Plot scale: 1:200

U.S. ARMY ENGINEER DISTRICT
CORPS OF ENGINEERS
FORT WORTH, TEXAS

POLYENGINEERING, INC.
ENGINEERS & ARCHITECTS
DOTHAN, ALABAMA

FORT HOOD, TEXAS
DIGITAL MULTI-PURPOSE RANGE COMPLEX (DMPRC)
PN 51915 FQ

ELECTRICAL SITE PLAN
RANGE DATA DISTRIBUTION

Sheet reference number: E-36
Sheet x of x

00680010

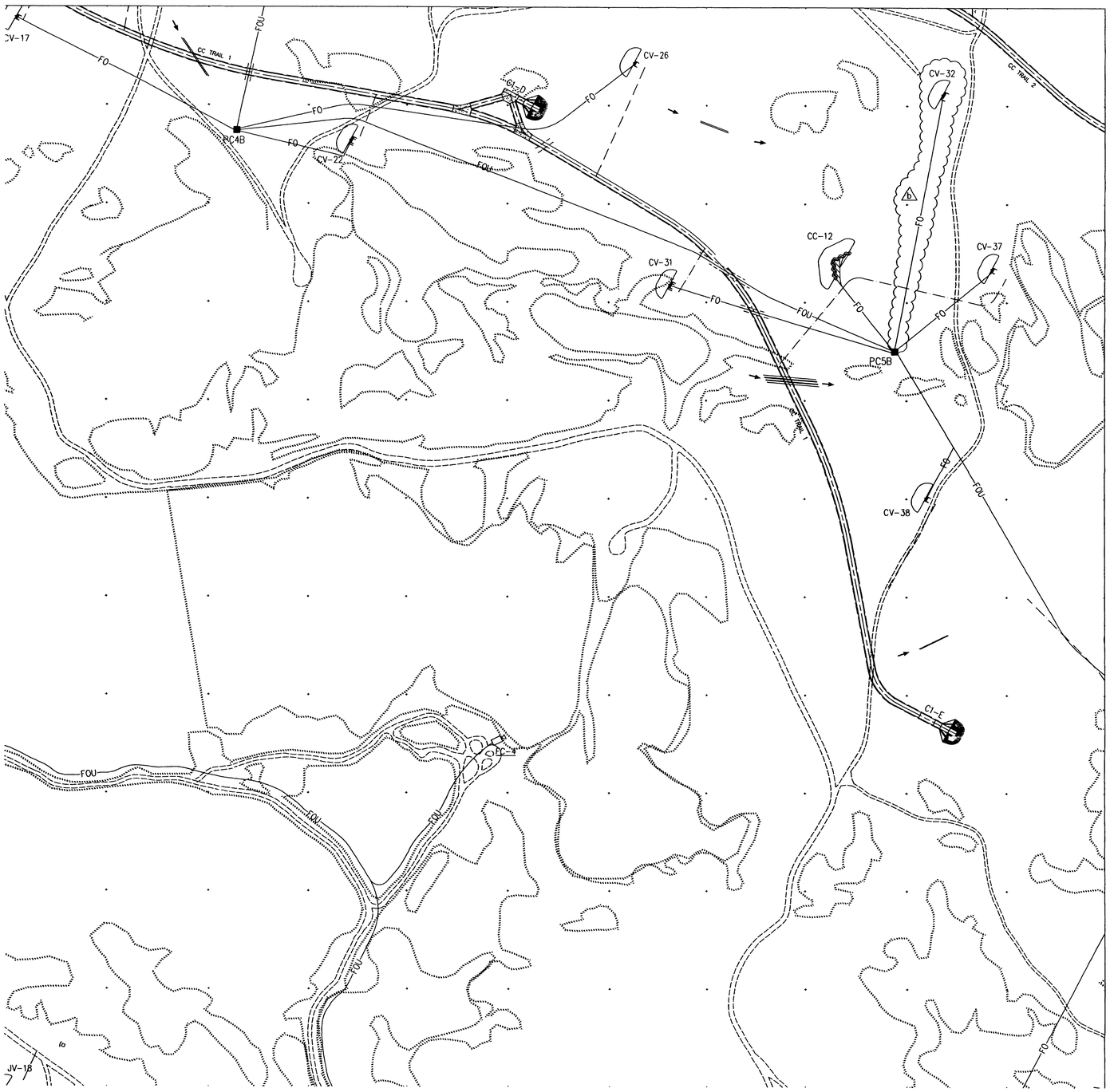

NORTH

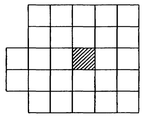

SITE KEY PLAN

NOT TO SCALE

DATA SITE LEGEND

- PC1 ■ POWER CENTER DESIGNATION
- CONCRETE ENCASEMENT REQUIRED UNDER SERVICE ROADS, TRAILS, LOW WATER CROSSINGS, AND CREEK CROSSINGS. CONDUIT SIZES AS REQUIRED FOR CABLE(S).
- —FOU— DIRECT BURIED FIBER OPTIC CABLE TRUNK LINE
- —FO— DIRECT BURIED FIBER OPTIC CABLE
- —UT— DIRECT BURIED TELEPHONE CABLE
- —EUT— EXISTING UNDERGROUND TELEPHONE
- ⊠ COMMUNICATIONS PEDESTAL
- FLIR CAMERA
- ● NEW WOOD POLE – HEIGHT AND CLASS AS INDICATED
- ○ EXISTING WOOD POLE
- CV-1 STATIONARY ARMOR TARGETS (STATS)
- CV-1 FUTURE STATIONARY ARMOR TARGETS (STATS)
- CC-2 STATIONARY INFANTRY TARGETS (SIT)
- ECM-1 EXISTING ARMOR MOVING TARGET
- DEFILADE
- M-01 ARMOR MOVING TARGETS (AMTC)
- PRIMARY TARGET SERVICE ROAD
- TANK TRAILS, CROSSOVERS, ACCESS ROADS
- EXISTING ROAD
- TREE LINE

SCALE: 1:2000 (0 20 40 80)

THE SEAL APPEARING ON THIS DOCUMENT WAS AUTHORIZED BY SAMUEL LEE GULLEY ON AUGUST 6, 2001

SAMUEL LEE GULLEY CERTIFICATE No. 50007 STATE OF FLORIDA PROFESSIONAL ENGINEER

US Army Corps of Engineers
FORT WORTH DISTRICT

POLYENGINEERING, INC.
1820 Boulevard Avenue
Dothan, Alabama 36303
(334) 793-9700 (voice)
(334) 793-9016 (fax)

Mark	Description	Date	Appr.
1	ADDED TARGET, TITLE BLOCK EDIT, ADDED SEAL	AUG 01	SLG

Designed by: Samuel L. Gulley
Drawn by: T. Bolton
Checked by: F. Carbori
Date: 15 July 2001
Sol. No. DACA63-01-B-0007
Contr. No. DACA63-01-C-0016
Reviewed by:
Submitted by: E. Lamar Faulk
File name:
Plot date:
Plot scale: 1:200
Rev.

U.S. ARMY ENGINEER DISTRICT
CORPS OF ENGINEERS
FORT WORTH, TEXAS

POLYENGINEERING, INC.
ENGINEERS & ARCHITECTS
DOTHAN, ALABAMA

FORT HOOD, TEXAS
DIGITAL MULTI-PURPOSE RANGE COMPLEX (DMPRC)
PN 51915 FY 00

ELECTRICAL SITE PLAN
RANGE DATA DISTRIBUTION

Sheet reference number: E-37
Sheet of

Contr. No. DACA63-01-C-0016

22_E37.dwg 8/12/2005 8:37:43 AM

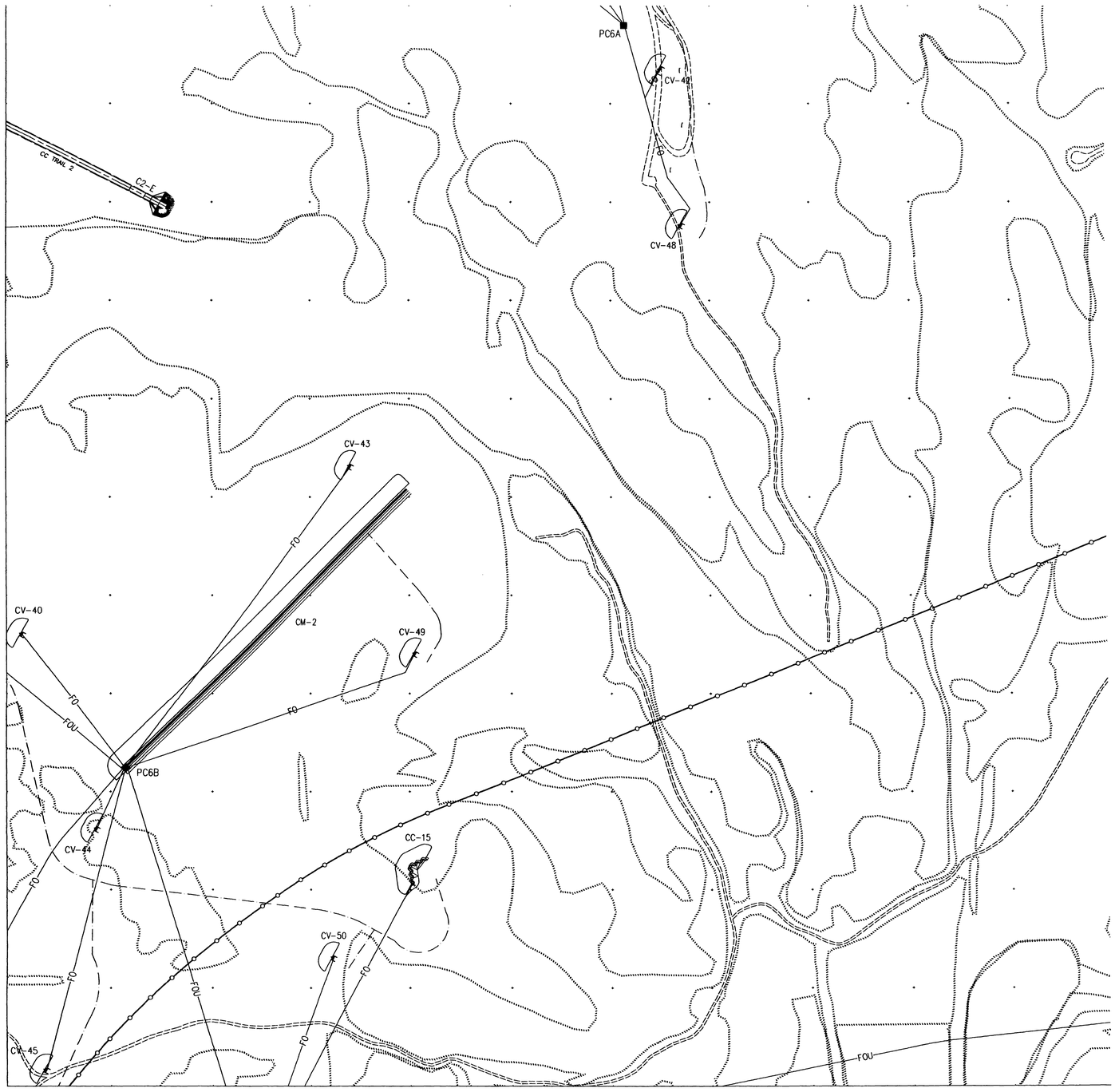

NORTH

SITE KEY PLAN

NOT TO SCALE

DATA SITE LEGEND

- PC1 ■ POWER CENTER DESIGNATION
- CONCRETE ENCASEMENT REQUIRED UNDER SERVICE ROADS, TRAILS, LOW WATER CROSSINGS, AND CREEK CROSSINGS. CONDUIT SIZES AS REQUIRED FOR CABLE(S).
- —FOU— DIRECT BURIED FIBER OPTIC CABLE TRUNK LINE
- —FO— DIRECT BURIED FIBER OPTIC CABLE
- —UT— DIRECT BURIED TELEPHONE CABLE
- —EUT— EXISTING UNDERGROUND TELEPHONE
- ⊠ COMMUNICATIONS PEDESTAL
- FLIR CAMERA
- ● NEW WOOD POLE – HEIGHT AND CLASS AS INDICATED
- ○ EXISTING WOOD POLE
- CV-1 STATIONARY ARMOR TARGETS (STATS)
- CV-1 FUTURE STATIONARY ARMOR TARGETS (STATS)
- CC-2 STATIONARY INFANTRY TARGETS (SIT)
- ECM-1 EXISTING ARMOR MOVING TARGET
- DEFILADE
- M-01 ARMOR MOVING TARGETS (AMTC)
- PRIMARY TARGET SERVICE ROAD
- TANK TRAILS, CROSSOVERS, ACCESS ROADS
- EXISTING ROAD
- TREE LINE

b

0 20 40 80

SCALE: 1:2000

b

THE SEAL APPEARING ON THIS DOCUMENT WAS AUTHORIZED BY SAMUEL LEE GULLEY ON AUGUST 8, 2001

SAMUEL LEE GULLEY CERTIFICATE No. 50007 STATE OF FLORIDA PROFESSIONAL ENGINEER

US Army Corps of Engineers
FORT WORTH DISTRICT

POLYENGINEERING, INC.
1370 Boulmont Avenue
Dothan, Alabama 36303
(334) 793-4700 (voice)
(334) 793-9018 (fax)

Rev.	Date	Description	By
A	AUG 01	TITLE BLOCK EDIT, ADDED SEAL	ELY

Designed by: Samuel L. Gulley
Dwn by: T. Bassett
Ckd by: F. Carlson
Reviewed by:
Submitted by: E. Lamar Faulk
Date: 13 July 2001
Sol. No. DACA63-01-B-0007
Contr. No. DACA63-01-C-0016
File name:
Plot date:
Plot scale: 1:200
Rev:

U.S. ARMY ENGINEER DISTRICT
CORPS OF ENGINEERS
FORT WORTH, TEXAS

POLYENGINEERING, INC.
ENGINEERS & ARCHITECTS
DOTHAN, ALABAMA

FORT HOOD, TEXAS
DIGITAL MULTI-PURPOSE RANGE COMPLEX (DMPRC)
PN 519915

b

ELECTRICAL SITE PLAN
RANGE DATA DISTRIBUTION

Sheet reference number: E-38

Sheet of

b

Contr. No. DACA63-01-C-0016

...\2000-022_E38.dwg 8/12/2005 8:36:55 AM

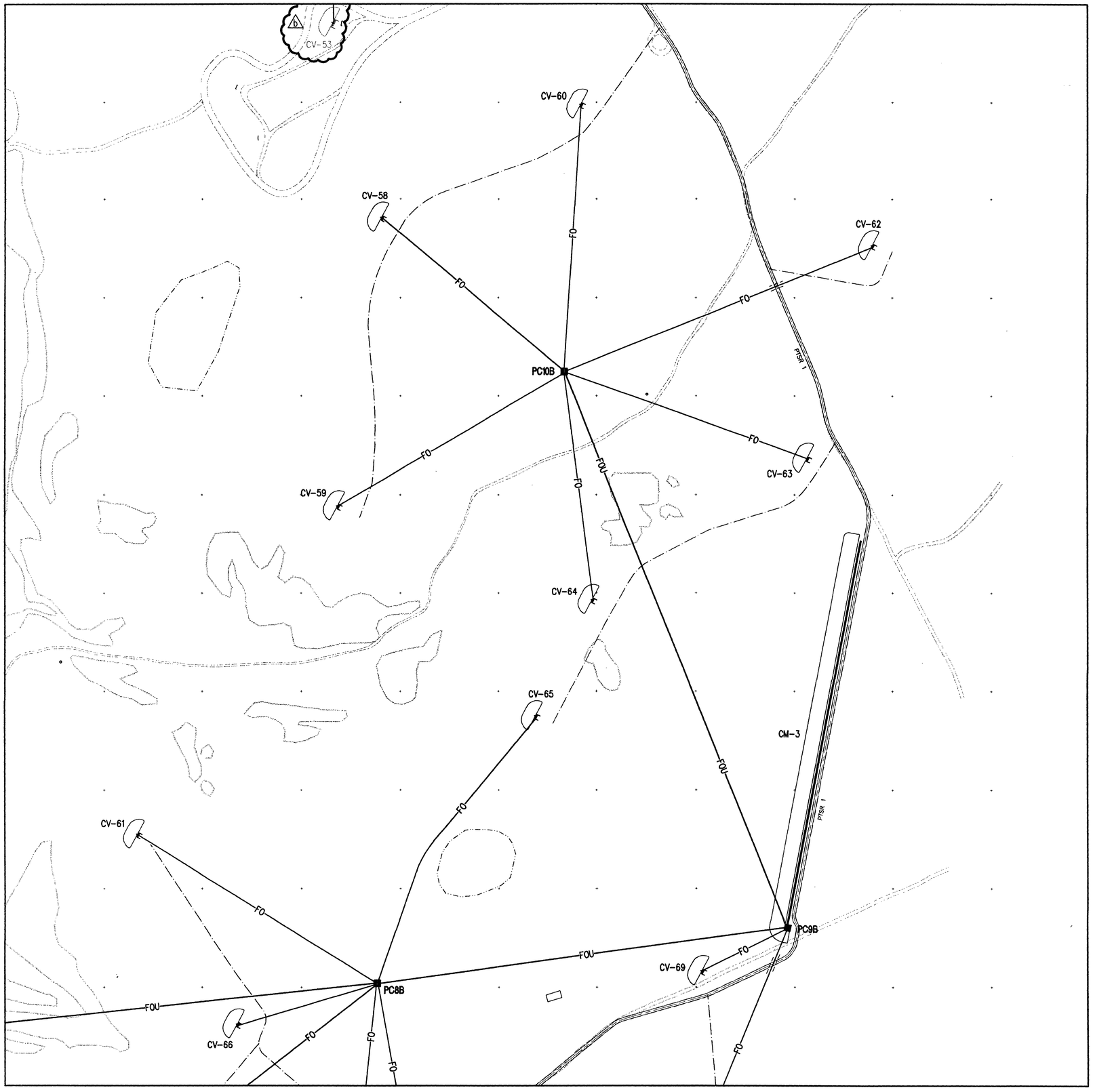

NORTH

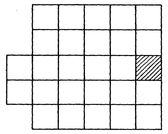

SITE KEY PLAN

NOT TO SCALE

DATA SITE LEGEND

- PC1 ■ POWER CENTER DESIGNATION
- CONCRETE ENCASEMENT REQUIRED UNDER SERVICE ROADS, TRAILS, LOW WATER CROSSINGS, AND CREEK CROSSINGS. CONDUIT SIZES AS REQUIRED FOR CABLE(S).
- —FOU— DIRECT BURIED FIBER OPTIC CABLE TRUNK LINE
- —FO— DIRECT BURIED FIBER OPTIC CABLE
- —UT— DIRECT BURIED TELEPHONE CABLE
- —EUT— EXISTING UNDERGROUND TELEPHONE
- ⊠ COMMUNICATIONS PEDESTAL
- FLIR CAMERA
- ● NEW WOOD POLE – HEIGHT AND CLASS AS INDICATED
- ○ EXISTING WOOD POLE
- CV-1 STATIONARY ARMOR TARGETS (STATS)
- CV-1 FUTURE STATIONARY ARMOR TARGETS (STATS)
- CC-2 STATIONARY INFANTRY TARGETS (SIT)
- ECM-1 EXISTING ARMOR MOVING TARGET
- DEFILADE
- M-01 ARMOR MOVING TARGETS (AMTC)
- PRIMARY TARGET SERVICE ROAD
- TANK TRAILS, CROSSOVERS, ACCESS ROADS
- EXISTING ROAD
- TREE LINE

0 20 40 80
SCALE: 1:2000

THE SEAL APPEARING ON THIS DOCUMENT WAS AUTHORIZED BY SAMUEL LEE GULLEY ON AUGUST 8, 2001

SAMUEL LEE GULLEY
CERTIFICATE NO. 46330
STATE OF FLORIDA
PROFESSIONAL ENGINEER

US Army Corps of Engineers
FORT WORTH DISTRICT

POLYENGINEERING, INC.
ENGINEERS AND ARCHITECTS
POLYENGINEERING, INC.
1950 Redstone Avenue
Dothan, Alabama 36303
(334) 793-2700 (voice)
(334) 793-8010 (fax)

Mark	Description	Date	Appr.
3	ADDED TARGET, TITLE, &LOCK EDIT, ADDED SEAL	AUG 01	SLG

U.S. ARMY ENGINEER DISTRICT
CORPS OF ENGINEERS
FORT WORTH, TEXAS

POLYENGINEERING, INC.
ENGINEERS & ARCHITECTS
DOTHAN, ALABAMA

Designed by: Samuel L. Gulley
Dwn by: T. Bolton
Ckd by: F. Carbari
Reviewed by:
Submitted by: E. Lamar Faulk
Date: 19 July 2001
Rev.
Sol. No. DACA63-01-B-0007
Contr. No. DACA63-01-C-0016
File name:
Plot date:
Plot scale: 1:200

FORT HOOD, TEXAS
DIGITAL MULTI-PURPOSE RANGE COMPLEX (DMPRC)
PN 51915 F 00

ELECTRICAL SITE PLAN RANGE DATA DISTRIBUTION

Sheet reference number: E-39

Sheet of

00683030

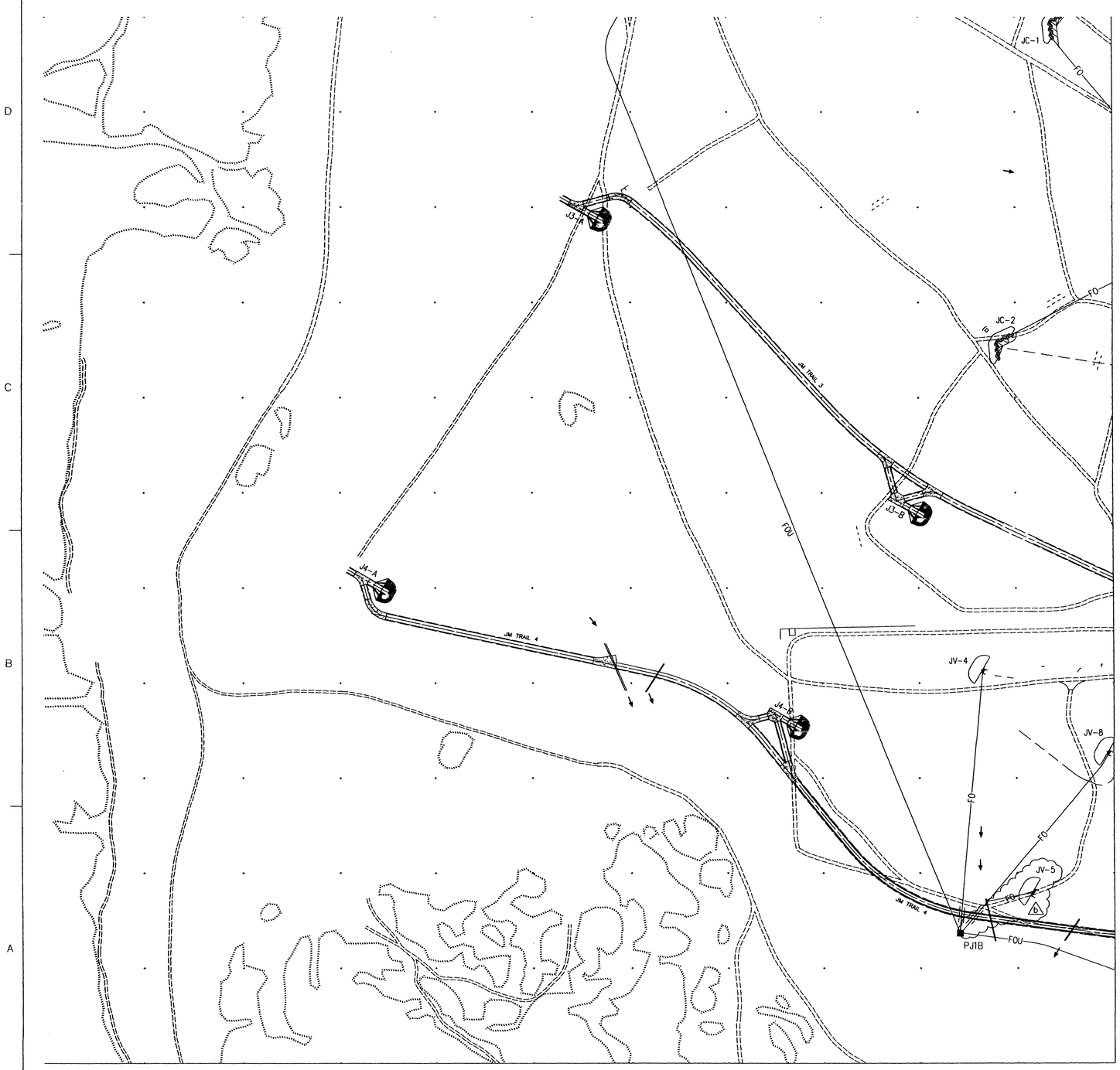

NORTH

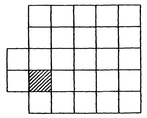

SITE KEY PLAN

NOT TO SCALE

DATA SITE LEGEND

PC1 ■	POWER CENTER DESIGNATION
═══	CONCRETE ENCASEMENT REQUIRED UNDER SERVICE ROADS, TRAILS, LOW WATER CROSSINGS, AND CREEK CROSSINGS. CONDUIT SIZES AS REQUIRED FOR CABLE(S).
—FOU—	DIRECT BURIED FIBER OPTIC CABLE TRUNK LINE
—FO—	DIRECT BURIED FIBER OPTIC CABLE
—UT—	DIRECT BURIED TELEPHONE CABLE
—EUT—	EXISTING UNDERGROUND TELEPHONE
⊠	COMMUNICATIONS PEDESTAL
	FLIR CAMERA
●	NEW WOOD POLE – HEIGHT AND CLASS AS INDICATED
○	EXISTING WOOD POLE
CV-1	STATIONARY ARMOR TARGETS (STATS)
CV-1	FUTURE STATIONARY ARMOR TARGETS (STATS)
CC-2	STATIONARY INFANTRY TARGETS (SIT)
ECM-1	EXISTING ARMOR MOVING TARGET
	DEFILADE
M-01	ARMOR MOVING TARGETS (AMTC)
	PRIMARY TARGET SERVICE ROAD
	TANK TRAILS, CROSSOVERS, ACCESS ROADS
	EXISTING ROAD
	TREE LINE

b

0 20 40 80

SCALE: 1:2000

b

THE SEAL APPEARING ON THIS DOCUMENT WAS AUTHORIZED BY SAMUEL LEE GULLEY ON AUGUST 8, 2001

SAMUEL LEE GULLEY CERTIFICATE No. 50007 STATE OF FLORIDA PROFESSIONAL ENGINEER

US Army Corps of Engineers
FORT WORTH DISTRICT

POLYENGINEERING, INC.
1520 Rucklinod Avenue
Dothan, Alabama 36303
(334) 792-4700 (voice)
(334) 792-9010 (fax)

Mark	Description	Date	Appr.
A3	ADDED TARGET, TITLE BLOCK EDIT, ADDED SEAL	AUG 01	S.G.

Designed by: Samuel L. Gulley
Dwn by: T. Bolton
Ckd by: F. Corbori
Reviewed by:
Submitted by: E. Lamar Faulk
Date: 19 July 2001
Rev.
Sol. No. DACA63-01-B-0007
Contr. No. DACA63-01-C-0016
File name:
Plot date:
Plot scale: 1:200

U.S. ARMY ENGINEER DISTRICT
CORPS OF ENGINEERS
FORT WORTH, TEXAS

POLYENGINEERING, INC.
ENGINEERS & ARCHITECTS
DOTHAN, ALABAMA

FORT HOOD, TEXAS
DIGITAL MULTI-PURPOSE RANGE COMPLEX
PN 51915 FY 00

b

ELECTRICAL SITE PLAN
RANGE DATA DISTRIBUTION

Sheet reference number:
E-41
Sheet of

b

Contr. No. DACA63-01-C-0016

_E41.dwg 8/12/2005 8:36:05 AM

00000850

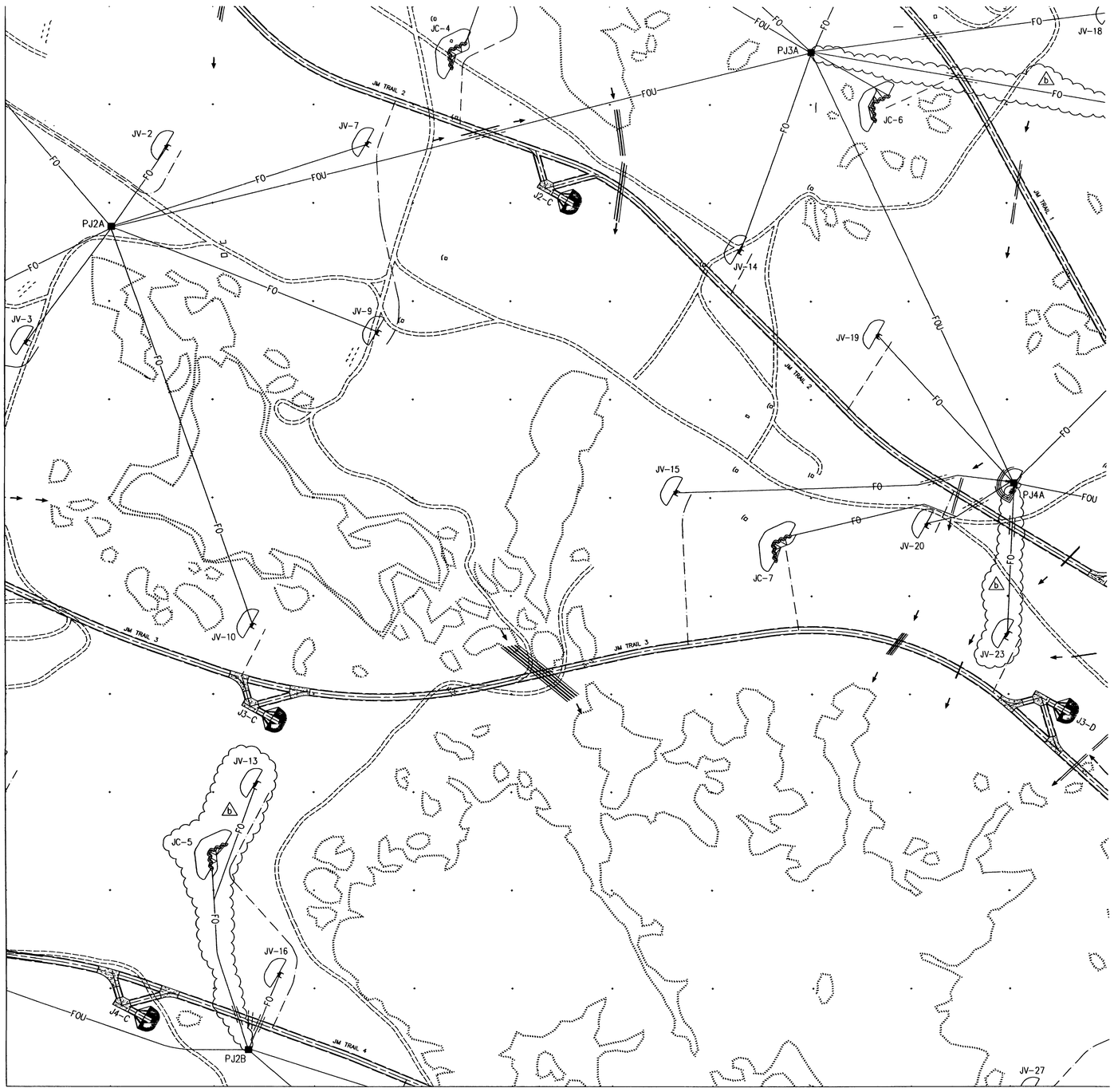

NORTH

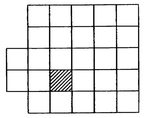

SITE KEY PLAN

NOT TO SCALE

DATA SITE LEGEND

- PC1 ■ POWER CENTER DESIGNATION
- CONCRETE ENCASEMENT REQUIRED UNDER SERVICE ROADS, TRAILS, LOW WATER CROSSINGS, AND CREEK CROSSINGS. CONDUIT SIZES AS REQUIRED FOR CABLE(S).
- —FOU— DIRECT BURIED FIBER OPTIC CABLE TRUNK LINE
- —FO— DIRECT BURIED FIBER OPTIC CABLE
- —UT— DIRECT BURIED TELEPHONE CABLE
- —EUT— EXISTING UNDERGROUND TELEPHONE
- ⊠ COMMUNICATIONS PEDESTAL
- FLIR CAMERA
- ● NEW WOOD POLE – HEIGHT AND CLASS AS INDICATED
- ○ EXISTING WOOD POLE
- CV-1 STATIONARY ARMOR TARGETS (STATS)
- CV-1 FUTURE STATIONARY ARMOR TARGETS (STATS)
- CC-2 STATIONARY INFANTRY TARGETS (SIT)
- ECM-1 EXISTING ARMOR MOVING TARGET
- DEFILADE
- M-01 ARMOR MOVING TARGETS (AMTC)
- PRIMARY TARGET SERVICE ROAD
- TANK TRAILS, CROSSOVERS, ACCESS ROADS
- EXISTING ROAD
- TREE LINE

0 20 40 80

SCALE: 1:2000

THE SEAL APPEARING ON THIS DOCUMENT WAS AUTHORIZED BY SAMUEL LEE GULLEY ON AUGUST 8, 2001

SAMUEL LEE GULLEY CERTIFICATE No. 50007 STATE OF FLORIDA PROFESSIONAL ENGINEER

US Army Corps of Engineers
FORT WORTH DISTRICT

POLYENGINEERING, INC.
1800 Montland Avenue
Dothan, Alabama 36303
(334) 792-4790 (voice)
(334) 793-9016 (fax)

Mark	Description	Date	Appr.
A	ADDED TARGET, TITLE BLOCK EDIT, ADDED SEAL	AUG 01	SLG

Designed by: Samuel L. Gulley
Drn by: T. Bolton
Chd by: F. Carbon
Reviewed by:
Submitted by: E. Lamar Faulk
Date: 19 July 2001
Sol. No. DACA63-01-B-0007
Contr. No. DACA63-01-C-0016
File name:
Plot date:
Plot scale: 1:200
Rev.

U.S. ARMY ENGINEER DISTRICT
CORPS OF ENGINEERS
FORT WORTH, TEXAS

POLYENGINEERING, INC.
ENGINEERS & ARCHITECTS
DOTHAN, ALABAMA

FORT HOOD, TEXAS
DIGITAL MULTI-PURPOSE RANGE COMPLEX (DMPRC)
PN 51915
F: CO
ELECTRICAL SITE PLAN
RANGE DATA DISTRIBUTION

Sheet reference number: E-42

Sheet of

Contr. No. DACA63-01-C-0016

-022_E42.dwg 8/12/2005 8:31:44 AM

00688880

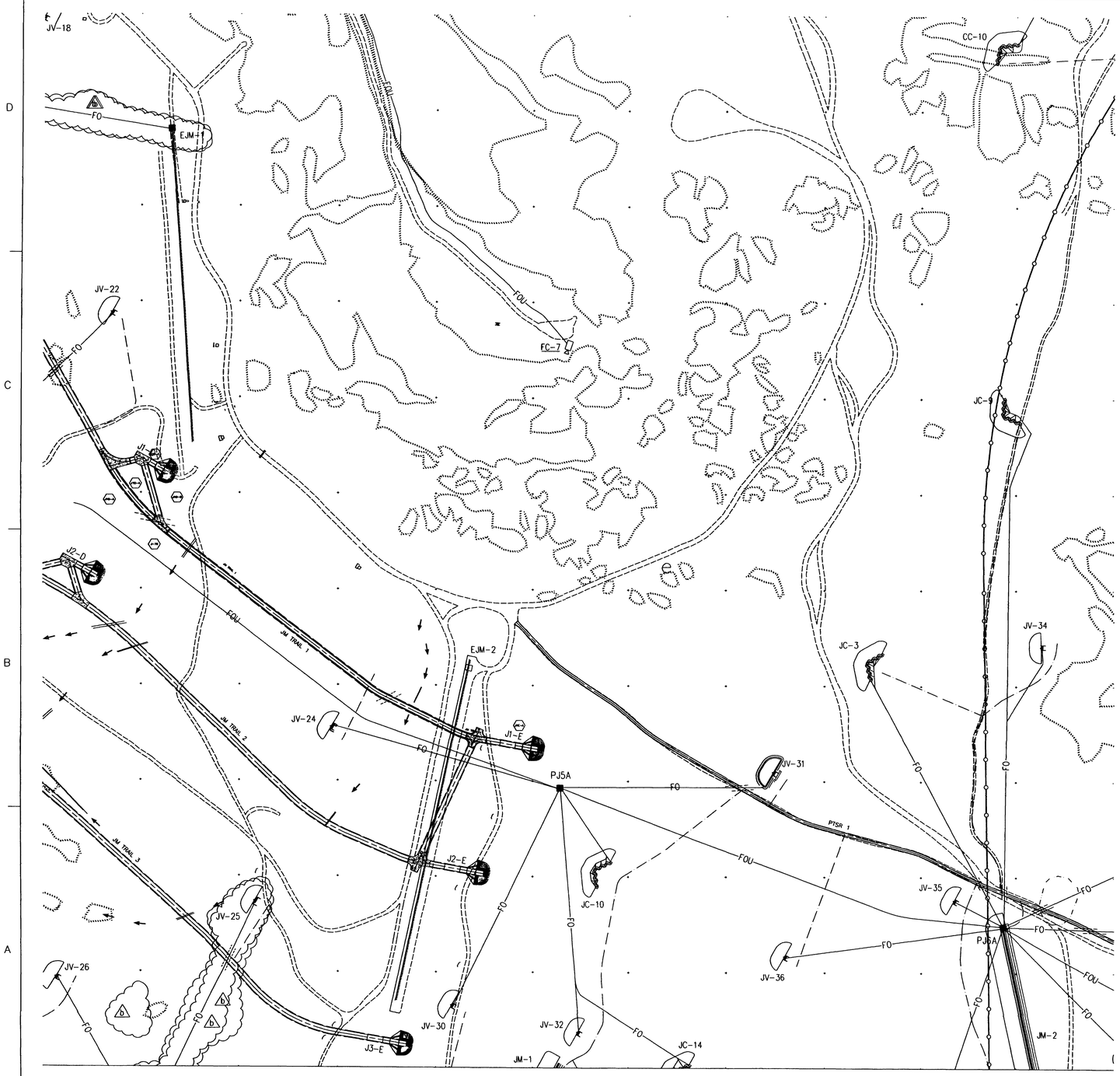

NORTH

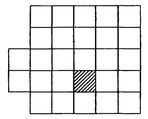

SITE KEY PLAN

NOT TO SCALE

DATA SITE LEGEND

PC1 ■	POWER CENTER DESIGNATION
⧧⧧⧧	CONCRETE ENCASEMENT REQUIRED UNDER SERVICE ROADS, TRAILS, LOW WATER CROSSINGS, AND CREEK CROSSINGS. CONDUIT SIZES AS REQUIRED FOR CABLE(S).
—FOU—	DIRECT BURIED FIBER OPTIC CABLE TRUNK LINE
—FO—	DIRECT BURIED FIBER OPTIC CABLE
—UT—	DIRECT BURIED TELEPHONE CABLE
—EUT—	EXISTING UNDERGROUND TELEPHONE
⊠	COMMUNICATIONS PEDESTAL
▷□	FLIR CAMERA
●	NEW WOOD POLE – HEIGHT AND CLASS AS INDICATED
○	EXISTING WOOD POLE
CV-1	STATIONARY ARMOR TARGETS (STATS)
CV-1	FUTURE STATIONARY ARMOR TARGETS (STATS)
CC-2	STATIONARY INFANTRY TARGETS (SIT)
ECM-1	EXISTING ARMOR MOVING TARGET
	DEFILADE
M-01	ARMOR MOVING TARGETS (AMTC)
	PRIMARY TARGET SERVICE ROAD
	TANK TRAILS, CROSSOVERS, ACCESS ROADS
	EXISTING ROAD
	TREE LINE

0 20 40 80

SCALE: 1:2000

THE SEAL APPEARING ON THIS DOCUMENT WAS AUTHORIZED BY SAMUEL LEE GULLEY ON AUGUST 8, 2001

SAMUEL LEE GULLEY CERTIFICATE No. 50007 STATE OF FLORIDA PROFESSIONAL ENGINEER

US Army Corps of Engineers
FORT WORTH DISTRICT

POLYENGINEERING, INC.
1905 Boulevard Avenue
Dothan, Alabama 36303
(334) 793-1720 (voice)
(334) 793-6815 (fax)

Mark	Description	Date	Appr.
02	MOVED TO AND ENCASEMENT	SEPT 01	S.G.
01	ADDED TARGET	AUG 01	S.G.

U.S. ARMY ENGINEER DISTRICT
CORPS OF ENGINEERS
FORT WORTH, TEXAS

POLYENGINEERING, INC.
ENGINEERS & ARCHITECTS
DOTHAN, ALABAMA

Designed by: Samuel L. Gulley
Dwn by: T. Bolton
Ckd by: F. Carlson
Reviewed by:
Submitted by: E. Lamar Faulk
Date: 19 July 2001
Sol. No. DACA63-01-B-0007
Contr. No. DACA63-01-C-0016
File name: 022_E43.dwg
Plot date:
Plot scale: 1:200
Rev.

FORT HOOD, TEXAS
DIGITAL MULTI-PURPOSE RANGE COMPLEX (DMPRC)
PN 51915 FY 00

ELECTRICAL SITE PLAN
RANGE DATA DISTRIBUTION

Sheet reference number:
E-43
Sheet x of x

Contr. No. DACA63-01-C-0016

022_E43.dwg 8/12/2005 8:26:01 AM

00688370

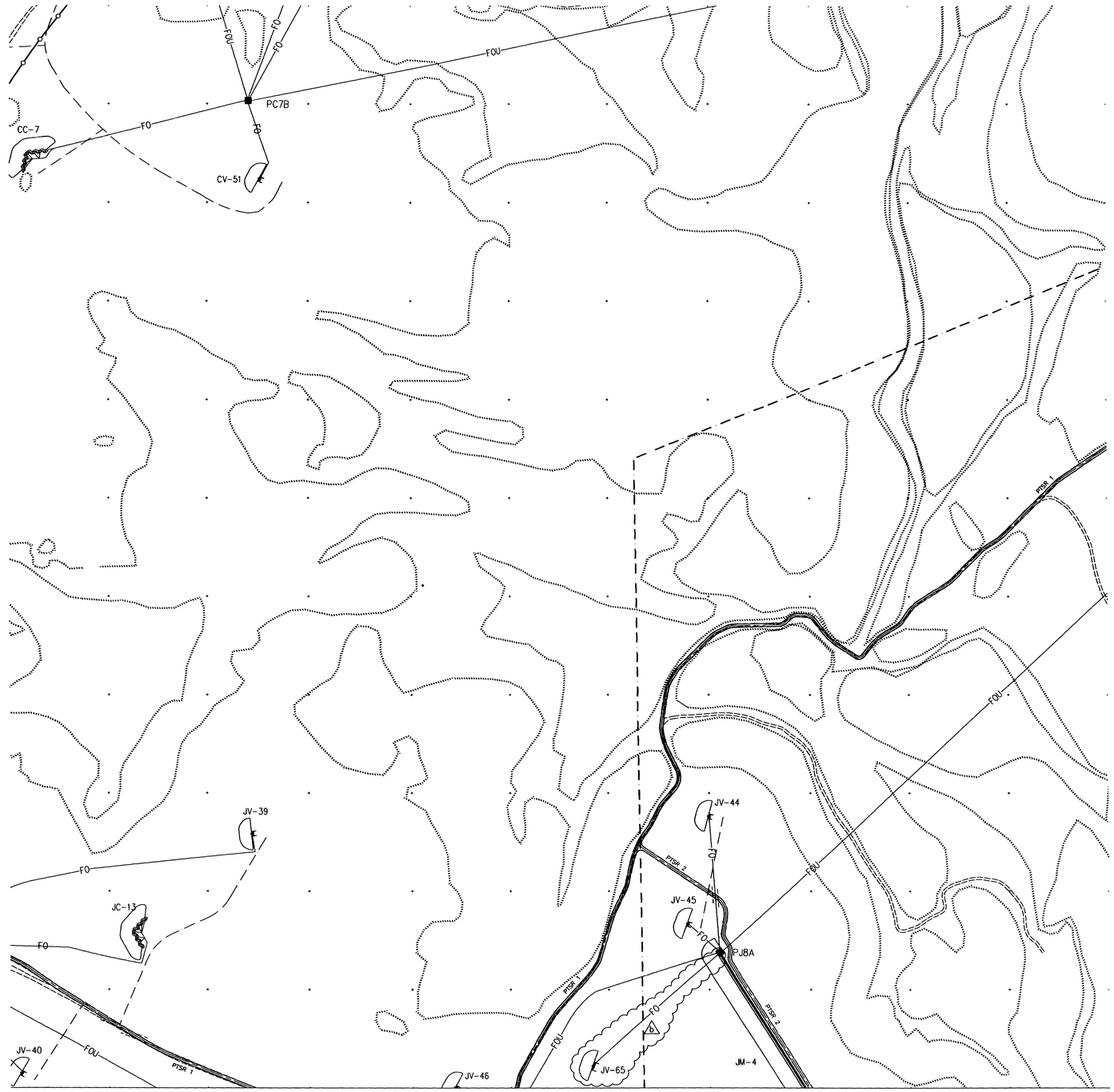

NORTH

SITE KEY PLAN
NOT TO SCALE

DATA SITE LEGEND

- PC1■ POWER CENTER DESIGNATION
- CONCRETE ENCASEMENT REQUIRED UNDER SERVICE ROADS, TRAILS, LOW WATER CROSSINGS, AND CREEK CROSSINGS. CONDUIT SIZES AS REQUIRED FOR CABLE(S).
- —FOU— DIRECT BURIED FIBER OPTIC CABLE TRUNK LINE
- —FO— DIRECT BURIED FIBER OPTIC CABLE
- —UT— DIRECT BURIED TELEPHONE CABLE
- —EUT— EXISTING UNDERGROUND TELEPHONE
- ⊠ COMMUNICATIONS PEDESTAL
- FLIR CAMERA
- ● NEW WOOD POLE – HEIGHT AND CLASS AS INDICATED
- ○ EXISTING WOOD POLE
- CV-1 STATIONARY ARMOR TARGETS (STATS)
- CV-1 FUTURE STATIONARY ARMOR TARGETS (STATS)
- CC-2 STATIONARY INFANTRY TARGETS (SIT)
- ECM-1 EXISTING ARMOR MOVING TARGET
- DEFILADE
- M-01 ARMOR MOVING TARGETS (AMTC)
- PRIMARY TARGET SERVICE ROAD
- TANK TRAILS, CROSSOVERS, ACCESS ROADS
- EXISTING ROAD
- TREE LINE

0 20 40 80
SCALE: 1:2000

THE SEAL APPEARING ON THIS DOCUMENT WAS AUTHORIZED BY SAMUEL LEE GULLEY ON AUGUST 6, 2001

SAMUEL LEE GULLEY CERTIFICATE No. 50007 STATE OF FLORIDA PROFESSIONAL ENGINEER

US Army Corps of Engineers
FORT WORTH DISTRICT

POLYENGINEERING, INC.
1806 Southland Avenue
Dothan, Alabama 36000
(334) 793-1700 (voice)
(334) 793-9016 (fax)

Mark	Description	Date	Appr.
3	ADDED TARGET, TITLE BLOCK CORR. ADDED SEAL	AUG 01	SLG

Date: 19 July 2001 | Rev.
Sol. No. DACA63-01-B-0007
Contr. No. DACA63-01-C-0016
File name:
Project date:
Plot scale: 1:200

Designed by: Samuel L. Gulley
Dwn by: T. Bolton
Ckd by: F. Corbari
Reviewed by:
Submitted by: E. Lamar Faulk

U.S. ARMY ENGINEER DISTRICT
CORPS OF ENGINEERS
FORT WORTH, TEXAS

POLYENGINEERING, INC.
ENGINEERS & ARCHITECTS
DOTHAN, ALABAMA

FORT HOOD, TEXAS
DIGITAL MULTI-PURPOSE RANGE COMPLEX
(DMPRC)
PN 519915
FY 00

ELECTRICAL SITE PLAN
RANGE DATA DISTRIBUTION

Sheet reference number:
E-44
Sheet of

Contr. No. DACA63-01-C-0016

...\2000-022_E44.dwg 8/12/2005 8:24:18 AM

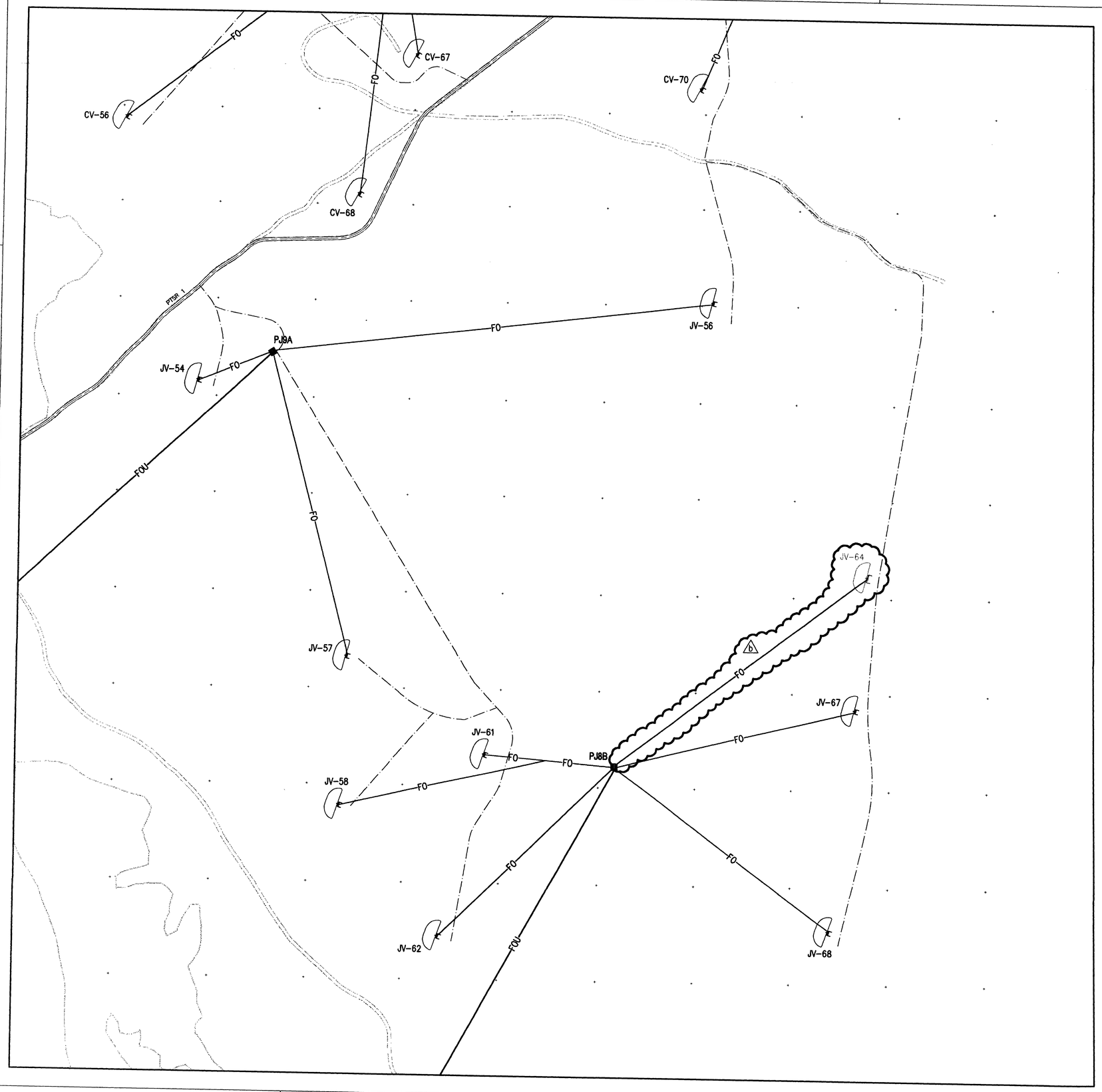

NORTH

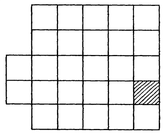

SITE KEY PLAN

NOT TO SCALE

DATA SITE LEGEND

- PC1 — POWER CENTER DESIGNATION
- CONCRETE ENCASEMENT REQUIRED UNDER SERVICE ROADS, TRAILS, LOW WATER CROSSINGS, AND CREEK CROSSINGS. CONDUIT SIZES AS REQUIRED FOR CABLE(S).
- —FOU— DIRECT BURIED FIBER OPTIC CABLE TRUNK LINE
- —FO— DIRECT BURIED FIBER OPTIC CABLE
- —UT— DIRECT BURIED TELEPHONE CABLE
- —EUT— EXISTING UNDERGROUND TELEPHONE
- COMMUNICATIONS PEDESTAL
- FLIR CAMERA
- NEW WOOD POLE – HEIGHT AND CLASS AS INDICATED
- EXISTING WOOD POLE
- CV-1 — STATIONARY ARMOR TARGETS (STATS)
- CV-1 — FUTURE STATIONARY ARMOR TARGETS (STATS)
- CC-2 — STATIONARY INFANTRY TARGETS (SIT)
- ECM-1 — EXISTING ARMOR MOVING TARGET
- DEFILADE
- M-01 — ARMOR MOVING TARGETS (AMTC)
- PRIMARY TARGET SERVICE ROAD
- TANK TRAILS, CROSSOVERS, ACCESS ROADS
- EXISTING ROAD
- TREE LINE

US Army Corps of Engineers
FORT WORTH DISTRICT

POLYENGINEERING, INC.
ENGINEERS AND ARCHITECTS
1062 Redland Avenue
Dothan, Alabama 36303
(334) 793-4700 (voice)
(334) 793-5018 (fax)

Mark	Description	Date	Appr.
A/S	ADDED TARGET, TITLE BLOCK EDIT, ADDED SEAL	AUG 01	SLG

Designed by: Samuel L. Gulley
Dwn by: T. Bolton
Ckd by: F. Corbari
Reviewed by:
Submitted by: E. Lamar Faulk
Date: 19 July 2001
Rev.
Sol. No. DACA63-01-B-0007
Contr. No. DACA63-01-C-0016
File name:
Plot date:
Plot scale: 1:200

U.S. ARMY ENGINEER DISTRICT
CORPS OF ENGINEERS
FORT WORTH, TEXAS

POLYENGINEERING, INC.
ENGINEERS & ARCHITECTS
DOTHAN, ALABAMA

FORT HOOD, TEXAS
DIGITAL MULTI-PURPOSE RANGE COMPLEX (DMPRC)
PN 51915 FOO

ELECTRICAL SITE PLAN
RANGE DATA DISTRIBUTION

b

0 20 40 80
SCALE: 1:2000

THE SEAL APPEARING ON THIS DOCUMENT WAS AUTHORIZED BY SAMUEL LEE GULLEY ON AUGUST 8, 2001

SAMUEL LEE GULLEY
No. 16001
STATE OF FLORIDA
PROFESSIONAL ENGINEER

Sheet reference number:
E-45
Sheet x of x

0066

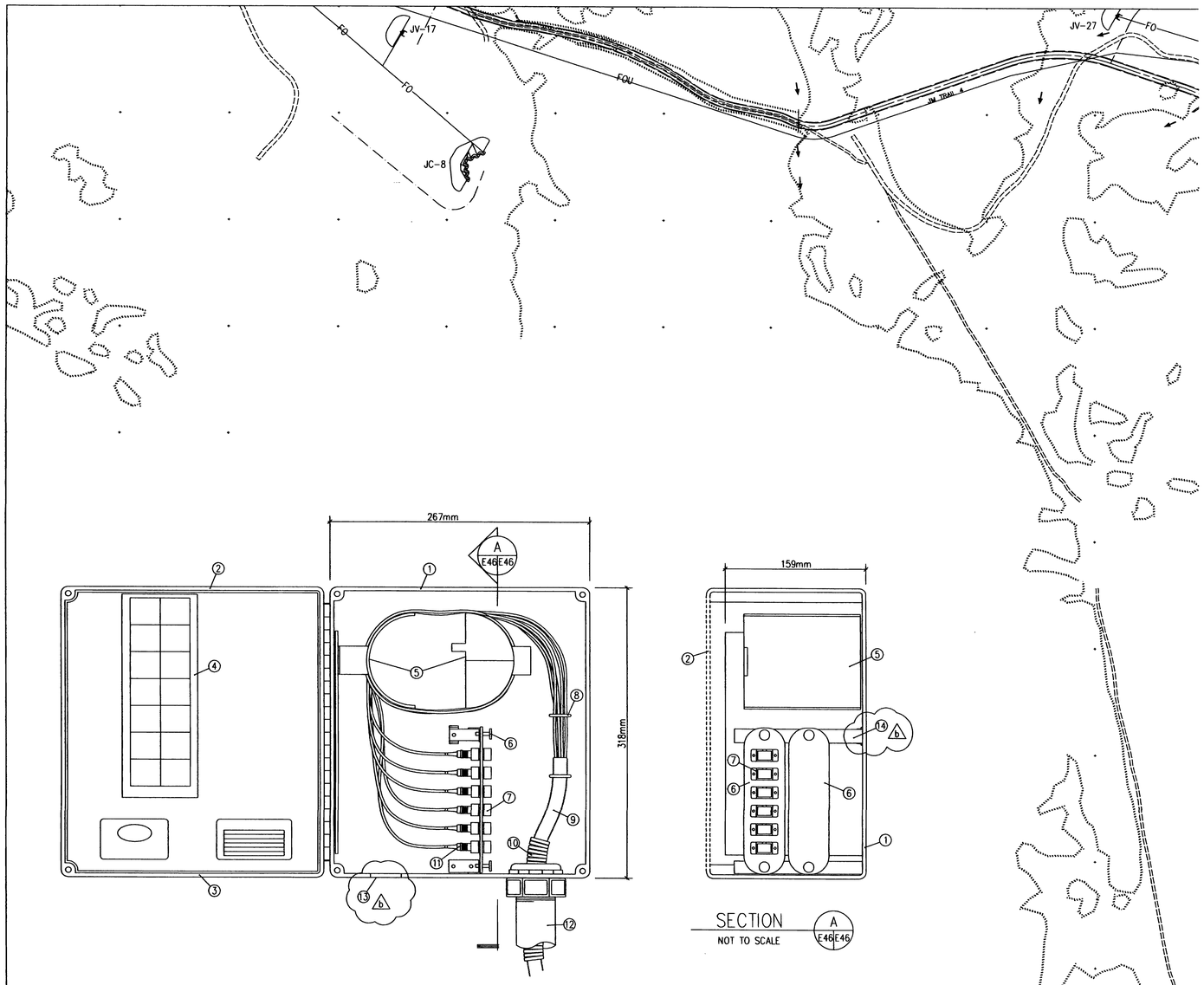

TYPICAL TARGET EMPLACEMENT PATCH PANEL DETAIL

NOT TO SCALE

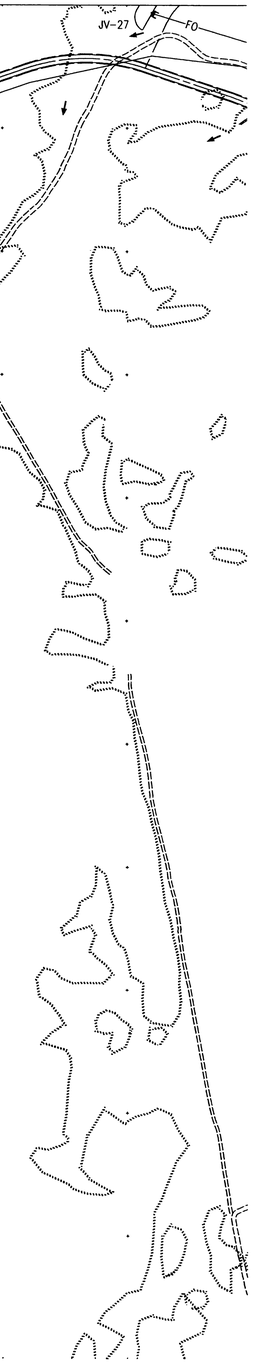

NORTH

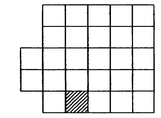

SITE KEY PLAN

NOT TO SCALE

DATA SITE LEGEND

- PC1 ■ POWER CENTER DESIGNATION
- CONCRETE ENCASEMENT REQUIRED UNDER SERVICE ROADS, TRAILS, LOW WATER CROSSINGS, AND CREEK CROSSINGS. CONDUIT SIZES AS REQUIRED FOR CABLE(S).
- —FOU— DIRECT BURIED FIBER OPTIC CABLE TRUNK LINE
- —FO— DIRECT BURIED FIBER OPTIC CABLE
- —UT— DIRECT BURIED TELEPHONE CABLE
- —EUT— EXISTING UNDERGROUND TELEPHONE
- ⊠ COMMUNICATIONS PEDESTAL
- FLIR CAMERA
- ● NEW WOOD POLE – HEIGHT AND CLASS AS INDICATED
- ○ EXISTING WOOD POLE
- CV-1 STATIONARY ARMOR TARGETS (STATS)
- CV-1 FUTURE STATIONARY ARMOR TARGETS (STATS)
- CC-2 STATIONARY INFANTRY TARGETS (SIT)
- ECM-1 EXISTING ARMOR MOVING TARGET
- DEFILADE
- M-01 ARMOR MOVING TARGETS (AMTC)
- PRIMARY TARGET SERVICE ROAD
- TANK TRAILS, CROSSOVERS, ACCESS ROADS
- EXISTING ROAD
- TREE LINE

Key Notes

1. MOLDED FIBERGLASS POLYESTER CHEMICAL AND TEMPERATURE RESISTANT NEMA 4X ENCLOSURE. PROVIDE ENCLOSURE WITH WALL MOUNT BRACKETS AND GROUNDING KIT.
2. HINGED COVER WITH CORROSION-RESISTANT (STAINLESS STEEL) CAPTIVE SCREWS
3. SEAMLESS FOAM-IN-PLACE GASKET FOR WATERTIGHT AND DUST-TIGHT SEAL
4. CABLE IDENTIFICATION DIRECTORY
5. SLACK CABLE STORAGE REEL
6. INJECTION-MOLDED PLASTIC OR SHEET METAL CONNECTOR PANEL FOR FIELD-INSTALLABLE CONNECTORS
7. "SC" TYPE FIBER OPTIC CONNECTOR WITH CERAMIC FERRULE MATERIAL, SINGLE-MODE
8. CABLE FASTENER
9. 6-STRAND SINGLE-MODE ARMORED TYPE FIBER OPTIC CABLE.
10. 25mm PLASTIC INNERDUCT
11. "SC" TYPE FIBER OPTIC CABLE CONNECTOR
12. 50mm CONDUIT WITH WATERTIGHT BOX CONNECTOR AND INSULATED BUSHING
13. 25mm CONDUIT KNOCKOUT FOR VENDER CABLE ENTRY.
14. CONNECTOR PANEL MOUNTING BRACKET. b

b 0 20 40 80
SCALE: 1:2000

b

THE SEAL APPEARING ON THIS DOCUMENT WAS AUTHORIZED BY SAMUEL LEE GULLEY ON AUGUST 8, 2001

SAMUEL LEE GULLEY CERTIFICATE No. 50007 STATE OF FLORIDA PROFESSIONAL ENGINEER

b

US Army Corps of Engineers
FORT WORTH DISTRICT

POLYENGINEERING, INC.
1020 Medical Arcade
Dothan, Alabama 36303
(334) 793-4700 (voice)
(334) 793-8016 (fax)

Mark	Description	Date	Appr.
A	REVISED NOTES AND DETAIL, TITLE BLOCK EDIT, ADDED SEAL	AUG 01	SLG

Designed by: Samuel L. Gulley
Dwn by: T. Bolton
Ckd by: F. Corbari
Reviewed by:
Submitted by: E. Lamar Faulk
Date: 19 July 2001
Sol. No. DACA63-01-B-0007
Contr. No. DACA63-01-C-0016
Rev.
File name:
Plot date:
Plot scale: 1:200

U.S. ARMY ENGINEER DISTRICT CORPS OF ENGINEERS FORT WORTH, TEXAS

POLYENGINEERING, INC. ENGINEERS & ARCHITECTS DOTHAN, ALABAMA

FORT HOOD, TEXAS
DIGITAL MULTI-PURPOSE RANGE COMPLEX (DMPRC)
PN 51915 PHASE 00

ELECTRICAL SITE PLAN
RANGE DATA DISTRIBUTION

Sheet reference number: E-46
Sheet of

Contr. No. DACA63-01-C-0016

-022_E46.dwg 8/12/2005 8:23:10 AM

00686300

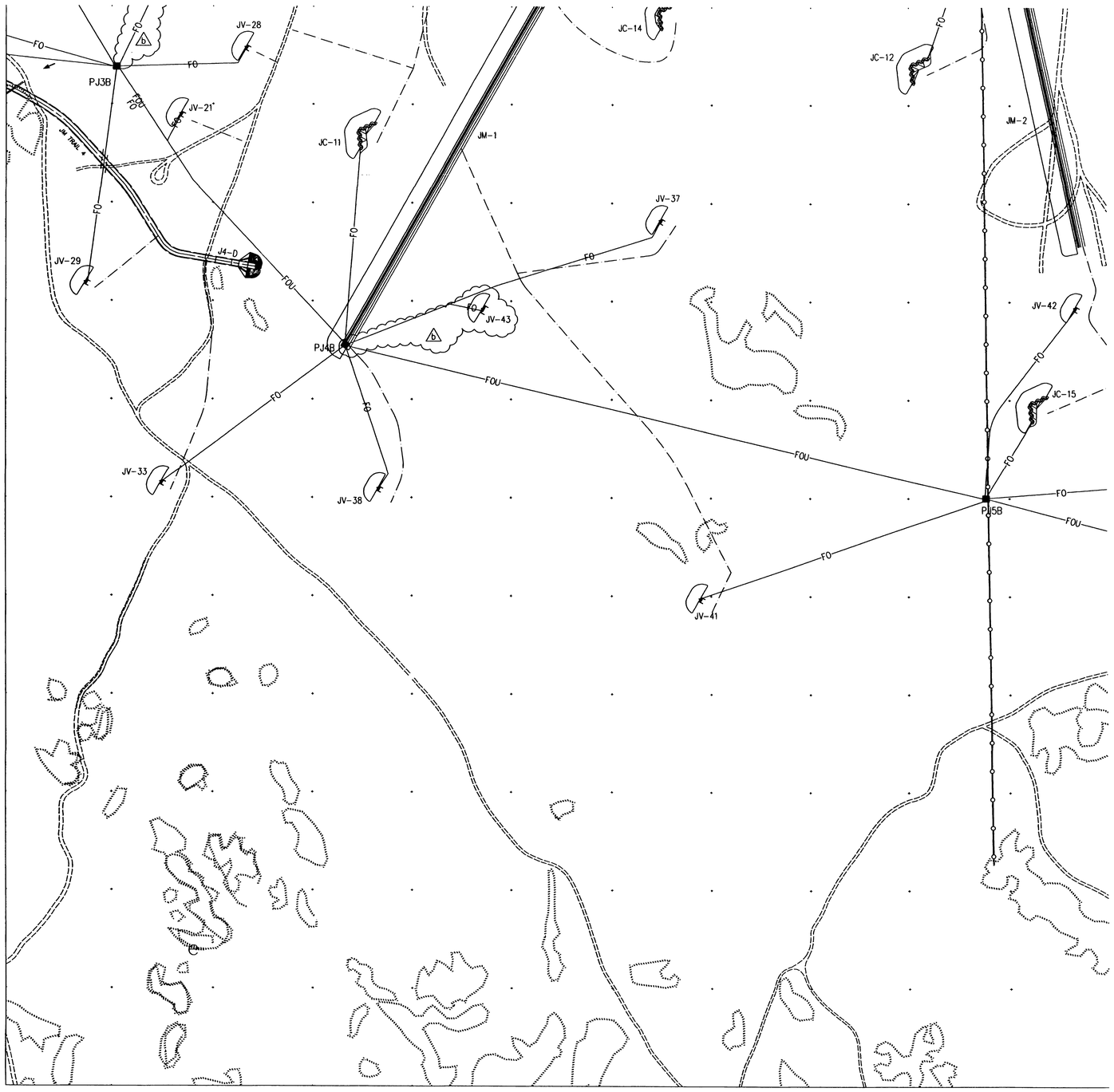

NORTH

SITE KEY PLAN

NOT TO SCALE

DATA SITE LEGEND

- PC1 ■ POWER CENTER DESIGNATION
- CONCRETE ENCASEMENT REQUIRED UNDER SERVICE ROADS, TRAILS, LOW WATER CROSSINGS, AND CREEK CROSSINGS. CONDUIT SIZES AS REQUIRED FOR CABLE(S).
- —FOU— DIRECT BURIED FIBER OPTIC CABLE TRUNK LINE
- —FO— DIRECT BURIED FIBER OPTIC CABLE
- —UT— DIRECT BURIED TELEPHONE CABLE
- —EUT— EXISTING UNDERGROUND TELEPHONE
- ⊠ COMMUNICATIONS PEDESTAL
- FLIR CAMERA
- ● NEW WOOD POLE – HEIGHT AND CLASS AS INDICATED
- ○ EXISTING WOOD POLE
- CV-1 STATIONARY ARMOR TARGETS (STATS)
- CV-1 FUTURE STATIONARY ARMOR TARGETS (STATS)
- CC-2 STATIONARY INFANTRY TARGETS (SIT)
- ECM-1 EXISTING ARMOR MOVING TARGET
- DEFILADE
- M-01 ARMOR MOVING TARGETS (AMTC)
- PRIMARY TARGET SERVICE ROAD
- TANK TRAILS, CROSSOVERS, ACCESS ROADS
- EXISTING ROAD
- TREE LINE

b

0 20 40 80

SCALE: 1:2000

b

THE SEAL APPEARING ON THIS DOCUMENT WAS AUTHORIZED BY SAMUEL LEE GULLEY ON AUGUST 8, 2001

SAMUEL LEE GULLEY CERTIFICATE No. 50007 STATE OF FLORIDA PROFESSIONAL ENGINEER

US Army Corps of Engineers
FORT WORTH DISTRICT

POLYENGINEERING, INC.
1520 Montland Avenue
Dothan, Alabama 36303
(334) 792-4700 (voice)
(334) 792-2018 (fax)

Rev.	Description	Date	Appr.
A	ADDED MARKETS, TITLE BLOCK EDIT, ADDED SEAL	AUG 01	SLG

Designed by: Samuel L. Gulley
Dwn by: T. Bolton
Ckd by: F. Corbari
Reviewed by:
Submitted by: E. Lamar Faulk
Date: 19 July 2001
Sol. No. DACA63-01-B-0007
Contr. No. DACA63-01-C-0018
File name:
Plot date:
Plot scale: 1:200

U.S. ARMY ENGINEER DISTRICT
CORPS OF ENGINEERS
FORT WORTH, TEXAS

POLYENGINEERING, INC.
ENGINEERS & ARCHITECTS
DOTHAN, ALABAMA

FORT HOOD, TEXAS
DIGITAL MULTI-PURPOSE RANGE COMPLEX (DMPRC)
PN 51915
FY 00

b

ELECTRICAL SITE PLAN
RANGE DATA DISTRIBUTION

Sheet reference number:
F-47
Sheet of
b

Contr. No. DACA63-01-C-0018

D-022_E47.dwg 8/12/2005 8:21:30 AM

00688910

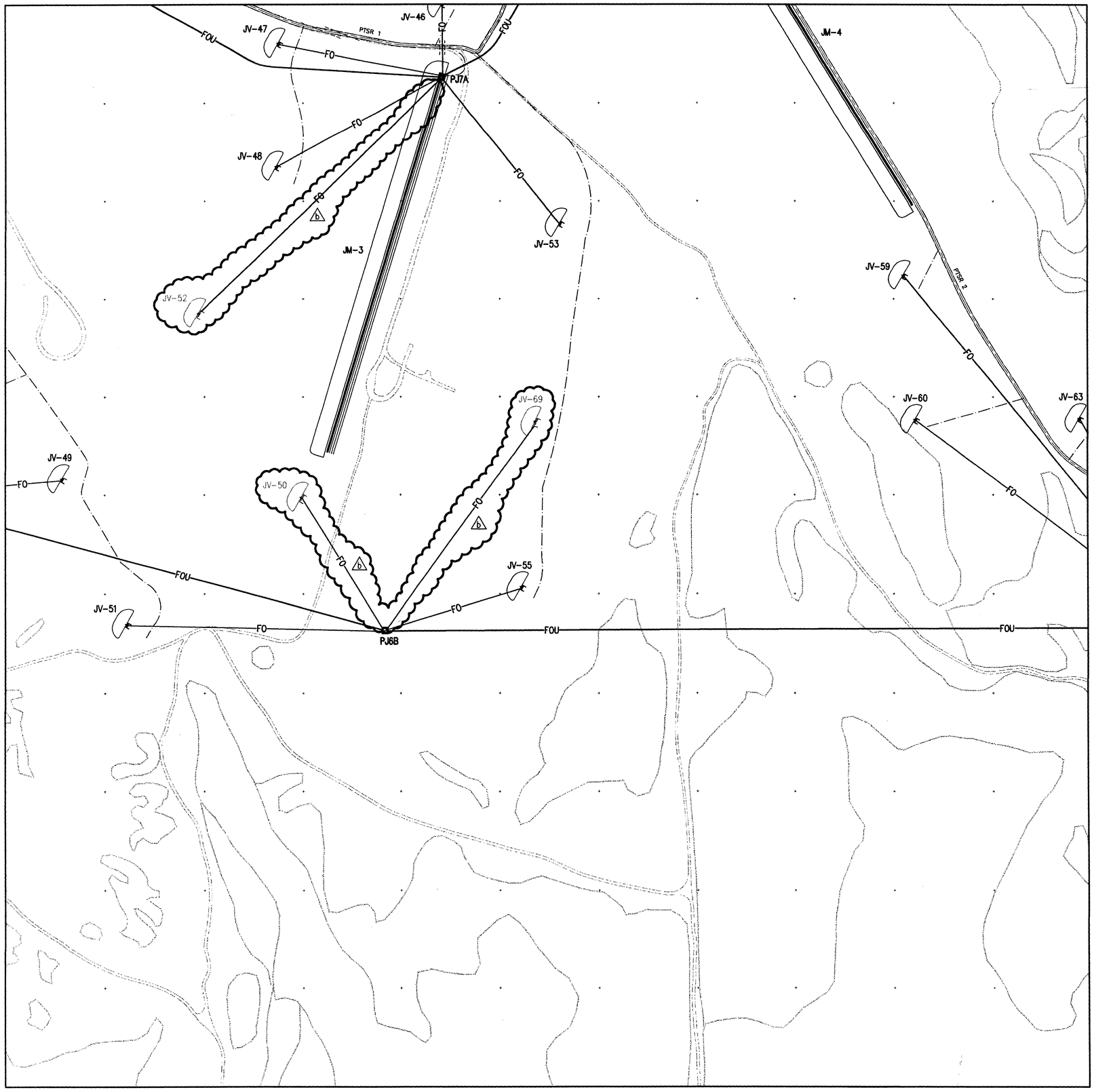

NORTH

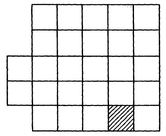

SITE KEY PLAN

NOT TO SCALE

DATA SITE LEGEND

- PC1 ■ POWER CENTER DESIGNATION
- CONCRETE ENCASEMENT REQUIRED UNDER SERVICE ROADS, TRAILS, LOW WATER CROSSINGS, AND CREEK CROSSINGS. CONDUIT SIZES AS REQUIRED FOR CABLE(S).
- —FOU— DIRECT BURIED FIBER OPTIC CABLE TRUNK LINE
- —FO— DIRECT BURIED FIBER OPTIC CABLE
- —UT— DIRECT BURIED TELEPHONE CABLE
- —EUT— EXISTING UNDERGROUND TELEPHONE
- ⊠ COMMUNICATIONS PEDESTAL
- FLIR CAMERA
- ● NEW WOOD POLE – HEIGHT AND CLASS AS INDICATED
- ○ EXISTING WOOD POLE
- CV-1 STATIONARY ARMOR TARGETS (STATS)
- CV-1 FUTURE STATIONARY ARMOR TARGETS (STATS)
- CC-2 STATIONARY INFANTRY TARGETS (SIT)
- ECM-1 EXISTING ARMOR MOVING TARGET
- DEFILADE
- M-01 ARMOR MOVING TARGETS (AMTC)
- PRIMARY TARGET SERVICE ROAD
- TANK TRAILS, CROSSOVERS, ACCESS ROADS
- EXISTING ROAD
- TREE LINE

SCALE: 1:2000 (0, 20, 40, 80)

THE SEAL APPEARING ON THIS DOCUMENT WAS AUTHORIZED BY SAMUEL LEE GULLEY ON AUGUST 8, 2001

SAMUEL LEE GULLEY CERTIFICATE NO. 52001 STATE OF FLORIDA PROFESSIONAL ENGINEER

US Army Corps of Engineers
FORT WORTH DISTRICT

POLYENGINEERING, INC.
1905 Medical Avenue
Dothan, Alabama 36303
(334) 792-4700 (voice)
(334) 792-5016 (fax)

Mark	Description	Date	Appr.
A	ADDED TARGETS, TITLE BLOCK EDIT, ADDED SEAL	AUG 01	SLG

Designed by: Samuel L. Gulley
Dwn by: T. Belton
Ckd by: F. Corbori
Reviewed by:
Submitted by: E. Lamar Faulk
Date: 19 July 2001
Rev.
Sol. No. DACA63-01-B-0007
Contr. No. DACA63-01-C-0016
File name:
Plot date:
Plot scale: 1:200

U.S. ARMY ENGINEER DISTRICT
CORPS OF ENGINEERS
FORT WORTH, TEXAS

POLYENGINEERING, INC.
ENGINEERS & ARCHITECTS
DOTHAN, ALABAMA

FORT HOOD, TEXAS
DIGITAL MULTI-PURPOSE RANGE COMPLEX (DMPRC)
PN 51915 F 00

ELECTRICAL SITE PLAN
RANGE DATA DISTRIBUTION

Sheet reference number: E-48

Sheet of

00688920

NORTH

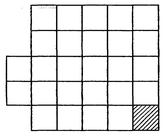

SITE KEY PLAN

NOT TO SCALE

DATA SITE LEGEND

- PC1 ■ POWER CENTER DESIGNATION
- CONCRETE ENCASEMENT REQUIRED UNDER SERVICE ROADS, TRAILS, LOW WATER CROSSINGS, AND CREEK CROSSINGS. CONDUIT SIZES AS REQUIRED FOR CABLE(S).
- —FOU— DIRECT BURIED FIBER OPTIC CABLE TRUNK LINE
- —FO— DIRECT BURIED FIBER OPTIC CABLE
- —UT— DIRECT BURIED TELEPHONE CABLE
- —EUT— EXISTING UNDERGROUND TELEPHONE
- ⊠ COMMUNICATIONS PEDESTAL
- FLIR CAMERA
- ● NEW WOOD POLE – HEIGHT AND CLASS AS INDICATED
- ○ EXISTING WOOD POLE
- CV-1 STATIONARY ARMOR TARGETS (STATS)
- CV-1 FUTURE STATIONARY ARMOR TARGETS (STATS)
- CC-2 STATIONARY INFANTRY TARGETS (SIT)
- ECM-1 EXISTING ARMOR MOVING TARGET
- DEFILADE
- M-01 ARMOR MOVING TARGETS (AMTC)
- PRIMARY TARGET SERVICE ROAD
- TANK TRAILS, CROSSOVERS, ACCESS ROADS
- EXISTING ROAD
- TREE LINE

0 20 40 80
SCALE: 1:2000

THE SEAL APPEARING ON THIS DOCUMENT WAS AUTHORIZED BY SAMUEL LEE GULLEY ON AUGUST 8, 2001

SAMUEL LEE GULLEY
CERTIFICATE No. 55000
STATE OF FLORIDA
PROFESSIONAL ENGINEER

US Army Corps of Engineers
FORT WORTH DISTRICT

POLYENGINEERING, INC.
ENGINEERS & ARCHITECTS
POLYENGINEERING, INC.
1905 Medical Avenue
Dothan, Alabama 36305
(334) 793-7720 (voice)
(334) 793-9112 (fax)

Mark	Description	Date	Appr.
A2	ADDED TARGET, TITLE BLOCK EDIT, ADDED SEAL	AUG 01	SLG

Designed by: Samuel L. Gulley
Dwn by: T. Bolton
Ckd by: F. Corbori
Reviewed by:
Submitted by: E. Lamar Faulk
Date: 19 July 2001
Sol. No. DAC463-01-B-0007
Contr. No. DAC463-01-C-0016
File name:
Plot date:
Plot scale: 1:200
Rev.

U.S. ARMY ENGINEER DISTRICT
CORPS OF ENGINEERS
FORT WORTH, TEXAS

POLYENGINEERING, INC.
ENGINEERS & ARCHITECTS
DOTHAN, ALABAMA

FORT HOOD, TEXAS
DIGITAL MULTI-PURPOSE RANGE COMPLEX (DMPRC)
PN 51915

ELECTRICAL SITE PLAN
RANGE DATA DISTRIBUTION

Sheet reference number:
E-49
Sheet of

00688930

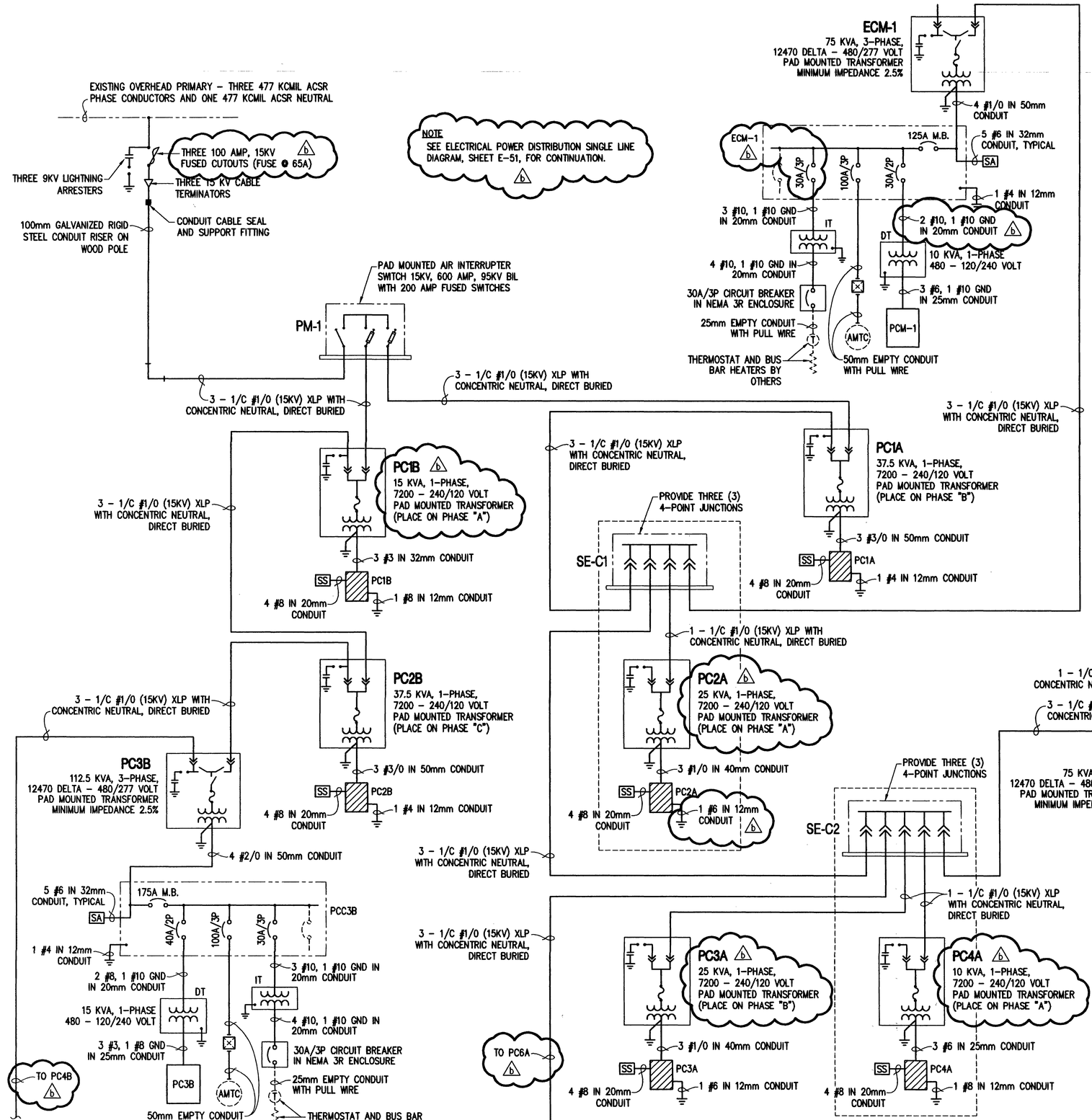

ELECTRICAL LEGEND

- 200 AMP, 15KV LOADBREAK SEPARABLE CONNECTORS – LOOP FEED
- 9 KV LIGHTNING ARRESTERS
- PAD MOUNTED OIL-FILLED TRANSFORMER
- DRYWELL CURRENT LIMITING FUSES

PC-1 POWER CENTER DESIGNATION CONSISTING OF PAD MOUNTED TRANSFORMER AND LOW VOLTAGE DISTRIBUTION EQUIPMENT AS SHOWN

LOADBREAK SEPARABLE CONNECTOR

PC1 — PANELBOARD WITH MAIN BREAKER – 120/240 VOLT, 1-PHASE WITH NEMA 4 ENCLOSURE UNLESS OTHERWISE NOTED

AMTC — ARMORED MOVING TARGET CARRIER (POWER BUS). CONDUCTORS, CONNECTIONS, AND AMTC BUS BARS BY OTHERS.

T — BUS BAR HEATERS AND CONTROLS – CONDUCTOR AND CONNECTIONS BY OTHERS.

DT — DRY TYPE TRANSFORMER WITH WEATHERPROOF ENCLOSURE

PC1A — POWER CENTER DESIGNATION CONSISTING OF PAD MOUNTED TRANSFORMER AND LOW VOLTAGE DISTRIBUTION EQUIPMENT AS SHOWN

IT — ISOLATION TRANSFORMER – 30 KVA, 480 – 480Y/277 VOLT, 3-PHASE, 4 WIRE

MOTOR CONTROLLER BY OTHERS

INDIVIDUALLY MOUNTED CIRCUIT BREAKER

LOOP FEED LOADBREAK OIL-IMMERSED SWITCH – 4-POSITION, 200 AMP, 3-PHASE, 15KV GANG OPERATED

PRIMARY CABLE TERMINATING/SECTIONALIZING ENCLOSURE 3-PHASE, 3-WAY OR 4-WAY AS NOTED, PAD MOUNTED DEAD-FRONT, 200 AMP, 15KV JUNCTIONS IN 12-GAUGE STEEL

NON-FUSIBLE DISCONNECT SWITCH

SS — SURGE SUPPRESSOR – 120/240 VOLT, 1-PHASE, 3 WIRE, GROUND

SA — SURGE SUPPRESSOR – 277/480 VOLT, 3-PHASE, 4 WIRE, GROUND

FUSED DISCONNECT SWITCH

THE SEAL APPEARING ON THIS DOCUMENT WAS AUTHORIZED BY SAMUEL LEE GULLEY ON AUGUST 8, 2001

SAMUEL LEE GULLEY CERTIFICATE No. 39 STATE OF FLORIDA PROFESSIONAL ENGINEER

US Army Corps of Engineers
FORT WORTH DISTRICT

POLYENGINEERING, INC.
1995 Westhead Avenue
Dothan, Alabama 36303
(334) 793-4700 (voice)
(334) 793-4015 (fax)

Mark	Description	Date	Appr.
19	REVISED DIAGRAM, TITLE BLOCK EDIT, ADDED SEAL	AUG 01	SLG

Designed by: Samuel L. Gulley
Dwn by: T. Bolton
Ckd by: F. Corbani
Reviewed by: Scott Faulk
Submitted by: E. Lamar Faulk
Date: 19 July 2001
Sol. No. DACA63-01-B-0007
Contr. No. DACA63-01-C-0016
File name:
Plot date:
Plot scale: NONE
Rev.

U.S. ARMY ENGINEER DISTRICT
CORPS OF ENGINEERS
FORT WORTH, TEXAS

POLYENGINEERING, INC.
ENGINEERS & ARCHITECTS
DOTHAN, ALABAMA

FORT HOOD, TEXAS
DIGITAL MULTI-PURPOSE RANGE COMPLEX (DMPRC)
PN 51915 FY 00

ELECTRICAL POWER DISTRIBUTION
SINGLE LINE DIAGRAM
CLABBER CREEK

Sheet reference number: E-50

Sheet of

00688940

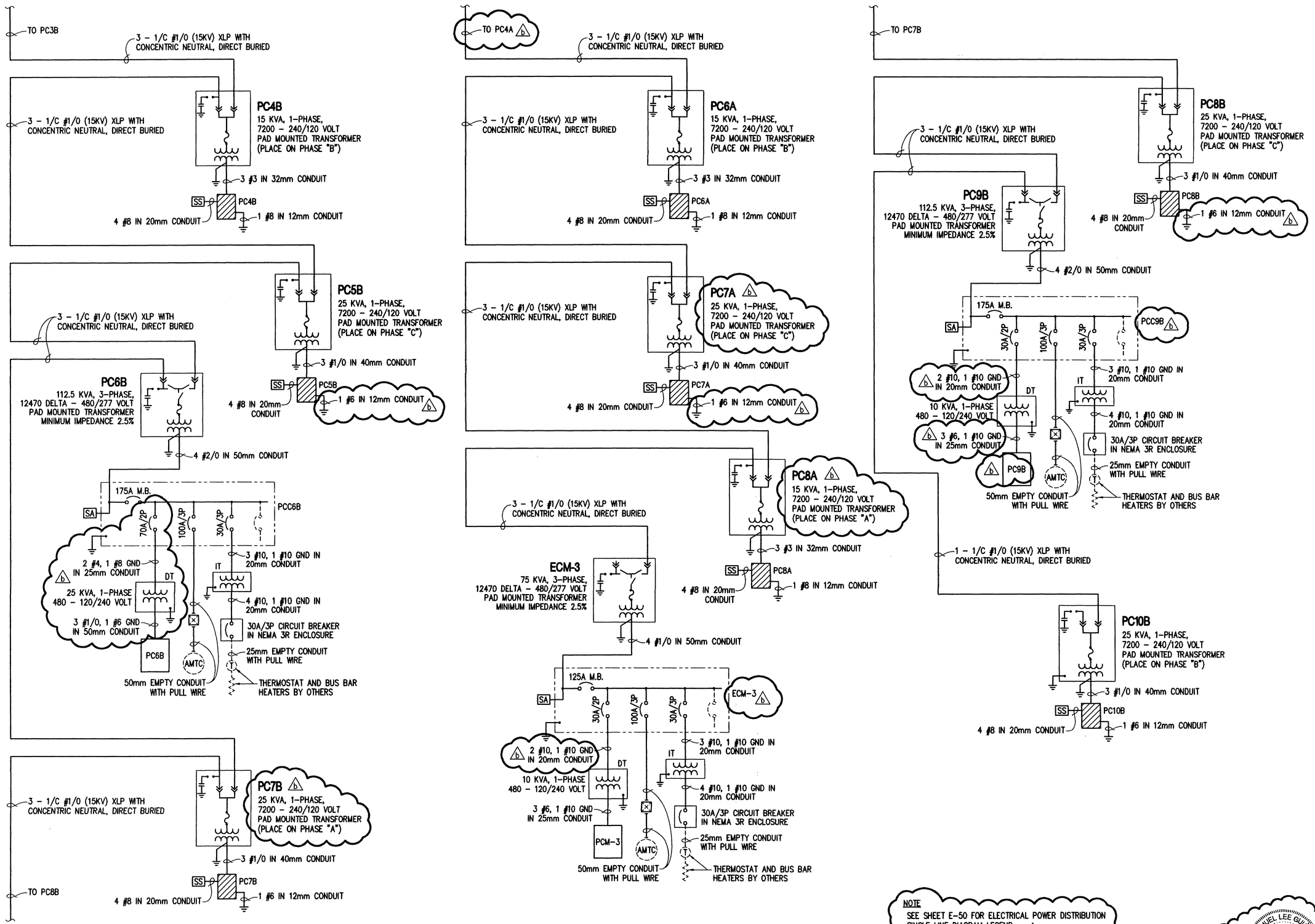

NOTE
SEE SHEET E-50 FOR ELECTRICAL POWER DISTRIBUTION SINGLE LINE DIAGRAM LEGEND. b

THE SEAL APPEARING ON THIS DOCUMENT WAS AUTHORIZED BY SAMUEL LEE GULLEY ON AUGUST 8, 2001

US Army Corps of Engineers
FORT WORTH DISTRICT

POLYENGINEERING, INC.
1550 Bradford Avenue
Dothan, Alabama 36303
(334) 793-4720 (voice)
(334) 793-9018 (fax)

Mark	Description	Date	Appr.
18	REVISED DIAGRAM, TITLE BLOCK EDIT, ADDED SEAL	AUG 01	SLG

Designed by: Samuel L. Gulley
Dwn by: T. Bolton
Ckd by: F. Corbani
Reviewed by: Scott Faulk
Submitted by: E. Lamar Faulk
Date: 19 July 2001
Rev.
Sol. No. DACA63-01-B-0007
Contr. No. DACA63-01-C-0016
File name:
Plot date:
Plot scale: NONE

U.S. ARMY ENGINEER DISTRICT
CORPS OF ENGINEERS
FORT WORTH, TEXAS

POLYENGINEERING, INC.
ENGINEERS & ARCHITECTS
DOTHAN, ALABAMA

FORT HOOD, TEXAS
DIGITAL MULTI-PURPOSE RANGE COMPLEX (DMPRC)
PN 51915 FY 00 b

ELECTRICAL POWER DISTRIBUTION
SINGLE LINE DIAGRAM
CLABBER CREEK

Sheet reference number:
E-51
Sheet of b

ELECTRICAL LEGEND

- 200 AMP, 15KV LOADBREAK SEPARABLE CONNECTORS – LOOP FEED
- 9 KV LIGHTNING ARRESTERS
- PAD MOUNTED OIL-FILLED TRANSFORMER
- DRYWELL CURRENT LIMITING FUSES

PC-1 POWER CENTER DESIGNATION CONSISTING OF PAD MOUNTED TRANSFORMER AND LOW VOLTAGE DISTRIBUTION EQUIPMENT AS SHOWN

LOADBREAK SEPARABLE CONNECTOR

PC1 PANELBOARD WITH MAIN BREAKER – 120/240 VOLT, 1-PHASE WITH NEMA 4 ENCLOSURE UNLESS OTHERWISE NOTED

AMTC ARMORED MOVING TARGET CARRIER (POWER BUS). CONDUCTORS, CONNECTIONS, AND AMTC BUS BARS BY OTHERS.

T BUS BAR HEATERS AND CONTROLS – CONDUCTOR AND CONNECTIONS BY OTHERS.

MOTOR CONTROLLER BY OTHERS

DT DRY TYPE TRANSFORMER WITH WEATHERPROOF ENCLOSURE

PC1A POWER CENTER DESIGNATION CONSISTING OF PAD MOUNTED TRANSFORMER AND LOW VOLTAGE DISTRIBUTION EQUIPMENT AS SHOWN

IT ISOLATION TRANSFORMER – 30 KVA, 480 – 480Y/277 VOLT, 3-PHASE, 4 WIRE

INDIVIDUALLY MOUNTED CIRCUIT BREAKER

LOOP FEED LOADBREAK OIL-IMMERSED SWITCH – 4-POSITION, 200 AMP, 3-PHASE, 15KV GANG OPERATED

PRIMARY CABLE TERMINATING/SECTIONALIZING ENCLOSURE 3-PHASE, 3-WAY OR 4-WAY AS NOTED, PAD MOUNTED DEAD-FRONT, 200 AMP, 15KV JUNCTIONS IN 12-GAUGE STEEL

NON-FUSIBLE DISCONNECT SWITCH

SS SURGE SUPPRESSOR – 120/240 VOLT, 1-PHASE, 3 WIRE, GROUND

SA SURGE SUPPRESSOR – 277/480 VOLT, 3-PHASE, 4 WIRE, GROUND

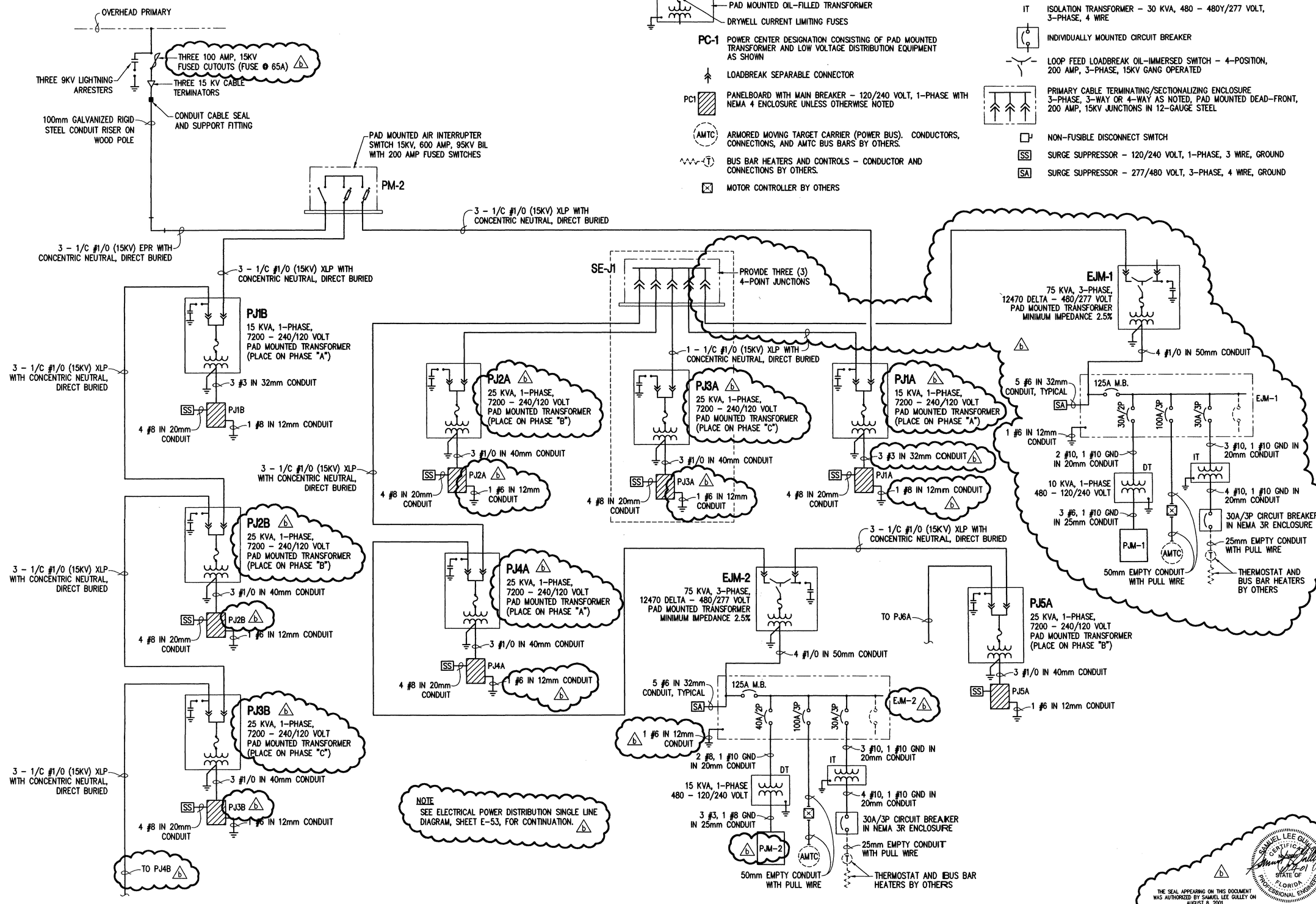

US Army Corps of Engineers
FORT WORTH DISTRICT

POLYENGINEERING, INC.
POLYENGINEERING, INC.
1000 Headland Avenue
Dothan, Alabama 36303
(334) 793-2720 (voice)
(334) 793-9218 (fax)

Mark	Description	Date	Appr.
A3	REVISED DIAGRAM, TITLE BLOCK EDIT, ADDED SEAL	AUG 01	SLG

Designed by: Samuel L. Gulley
Dwn by: T. Bolton
Ckd by: F. Corbari
Reviewed by: Scott Faulk
Submitted by: E. Lamar Faulk
Date: 19 July 2001
Rev.
Sol. No. DACA63-01-B-0007
Contr. No. DACA63-01-C-0016
File name:
Plot date:
Plot scale: NONE

U.S. ARMY ENGINEER DISTRICT
CORPS OF ENGINEERS
FORT WORTH, TEXAS

POLYENGINEERING, INC.
ENGINEERS & ARCHITECTS
DOTHAN, ALABAMA

FORT HOOD, TEXAS
DIGITAL MULTI-PURPOSE RANGE COMPLEX (DMPRC)
PN 51915 P00

ELECTRICAL POWER DISTRIBUTION
SINGLE LINE DIAGRAM
JACK MOUNTAIN

THE SEAL APPEARING ON THIS DOCUMENT WAS AUTHORIZED BY SAMUEL LEE GULLEY ON AUGUST 8, 2001

SAMUEL LEE GULLEY
CERTIFICATE NO. 34201
STATE OF FLORIDA
PROFESSIONAL ENGINEER

Sheet reference number: E-52

Sheet of

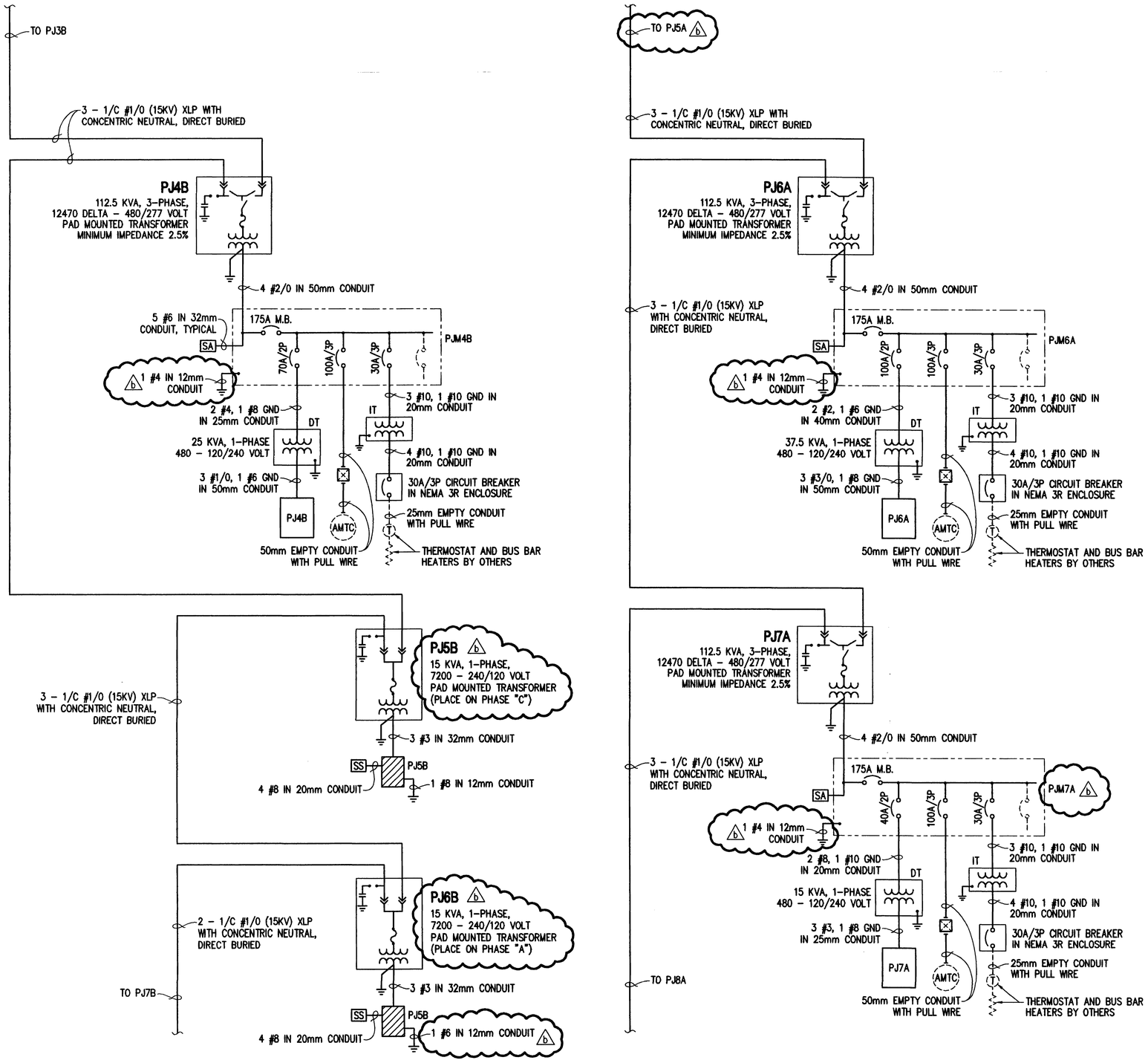

NOTE
SEE ELECTRICAL POWER DISTRIBUTION SINGLE LINE DIAGRAM, SHEET E-54, FOR CONTINUATION.

THE SEAL APPEARING ON THIS DOCUMENT WAS AUTHORIZED BY SAMUEL LEE GULLEY ON AUGUST 8, 2001

SAMUEL LEE GULLEY CERTIFICATE NO. 39001 STATE OF FLORIDA PROFESSIONAL ENGINEER

US Army Corps of Engineers
FORT WORTH DISTRICT

POLYENGINEERING, INC.
1906 Woodland Avenue
Dothan, Alabama 36303
(334) 792-6700 (voice)
(334) 792-5016 (fax)

Rev.	Date	Description	Appr.
A	AUG 01	REVISED DIAGRAM, TITLE BLOCK EDIT, ADDED SEAL	SLG

Designed by: Samuel L. Gulley
Dwn by: T. Bolton
Ckd by: F. Carbon
Reviewed by: Scott Faulk
Submitted by: E. Lamar Faulk
Date: 19 July 2001
Sol. No. DACA63-01-B-0007
Contr. No. DACA63-01-C-0016
File name:
Plot date:
Plot scale: NONE

U.S. ARMY ENGINEER DISTRICT
CORPS OF ENGINEERS
FORT WORTH, TEXAS

POLYENGINEERING, INC.
ENGINEERS & ARCHITECTS
DOTHAN, ALABAMA

FORT HOOD, TEXAS
DIGITAL MULTI-PURPOSE RANGE COMPLEX (DMPRC)
PN 51915 FY 00

ELECTRICAL POWER DISTRIBUTION
SINGLE LINE DIAGRAM
JACK MOUNTAIN

Sheet reference number: E-53
Sheet of

Contr. No. DACA63-01-C-0016

00689370

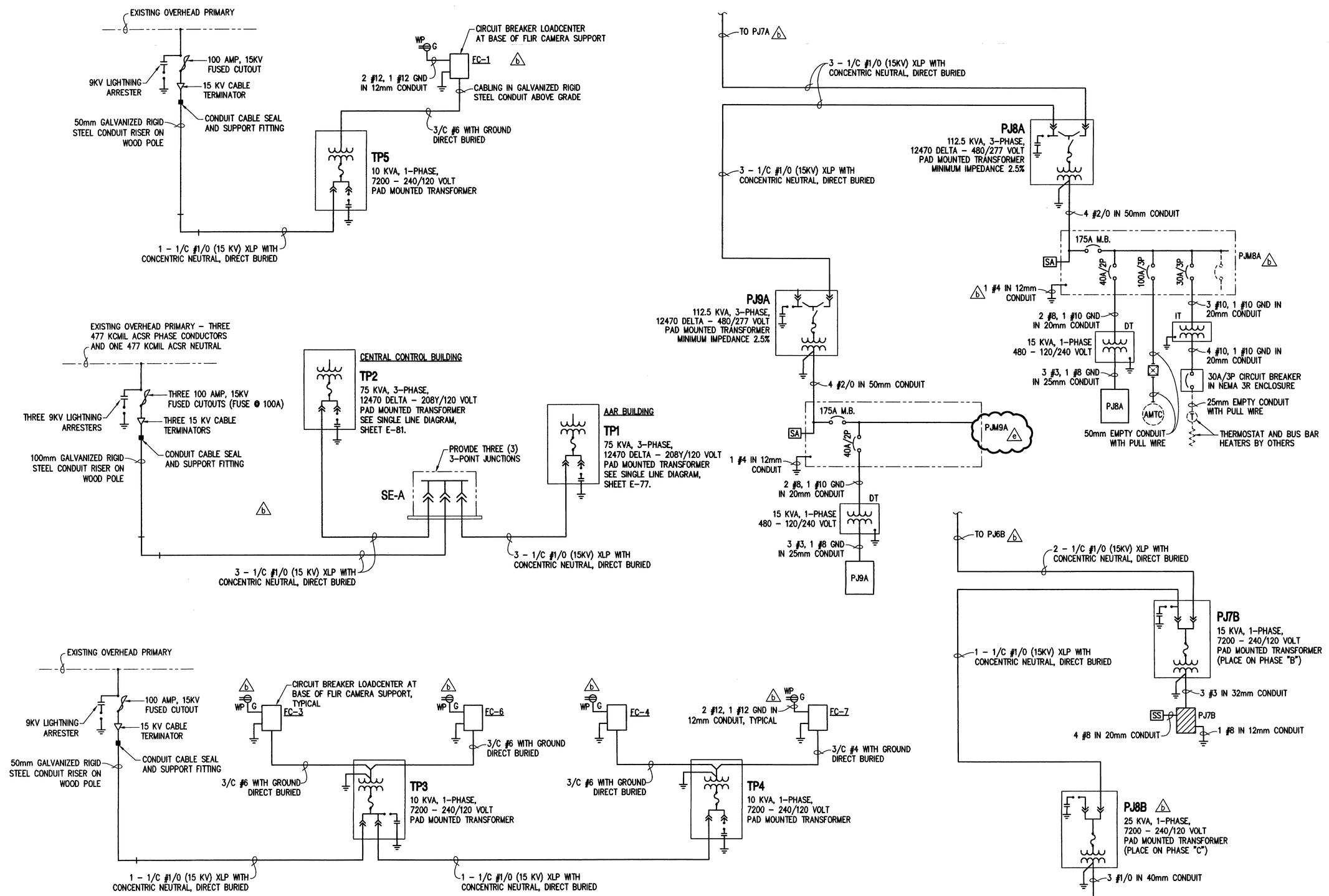

NOTE
SEE SHEET E-52 FOR ELECTRICAL POWER DISTRIBUTION SINGLE LINE DIAGRAM LEGEND.

THE SEAL APPEARING ON THIS DOCUMENT WAS AUTHORIZED BY SAMUEL LEE GULLEY ON AUGUST 8, 2001

SAMUEL LEE GULLEY CERTIFICATE NO. 41 STATE OF FLORIDA PROFESSIONAL ENGINEER

US Army Corps of Engineers
FORT WORTH DISTRICT

POLYENGINEERING, INC.
1956 Headland Avenue
Dothan, Alabama 36303
(334) 793-2720 (voice)
(334) 793-9015 (fax)

Mark	Description	Date	Appr.
1	REVISED DIAGRAM	SEPT. 01	SLG
1	REVISED DIAGRAM	AUG. 01	SLG

Designed by: Samuel L. Gulley
Dwn by: T. Bolton
Ckd by: F. Corbari
Reviewed by: Scott Faulk
Submitted by: E. Lamar Faulk
Date: 19 July 2001
Rev.
Sol. No. DAC463-01-B-0007
Contr. No. DAC463-01-C-0016
File name:
Plot date:
Plot scale: NONE

U.S. ARMY ENGINEER DISTRICT
CORPS OF ENGINEERS
FORT WORTH, TEXAS

POLYENGINEERING, INC.
ENGINEERS & ARCHITECTS
DOTHAN, ALABAMA

FORT HOOD, TEXAS
DIGITAL MULTI-PURPOSE RANGE COMPLEX (DMPRC), FY 00
PN 51915

ELECTRICAL POWER DISTRIBUTION
SINGLE LINE DIAGRAM
JACK MOUNTAIN

Sheet reference number:
E-54
Sheet x of x

Contr. No. DAC463-01-C-0016

00688 J.C

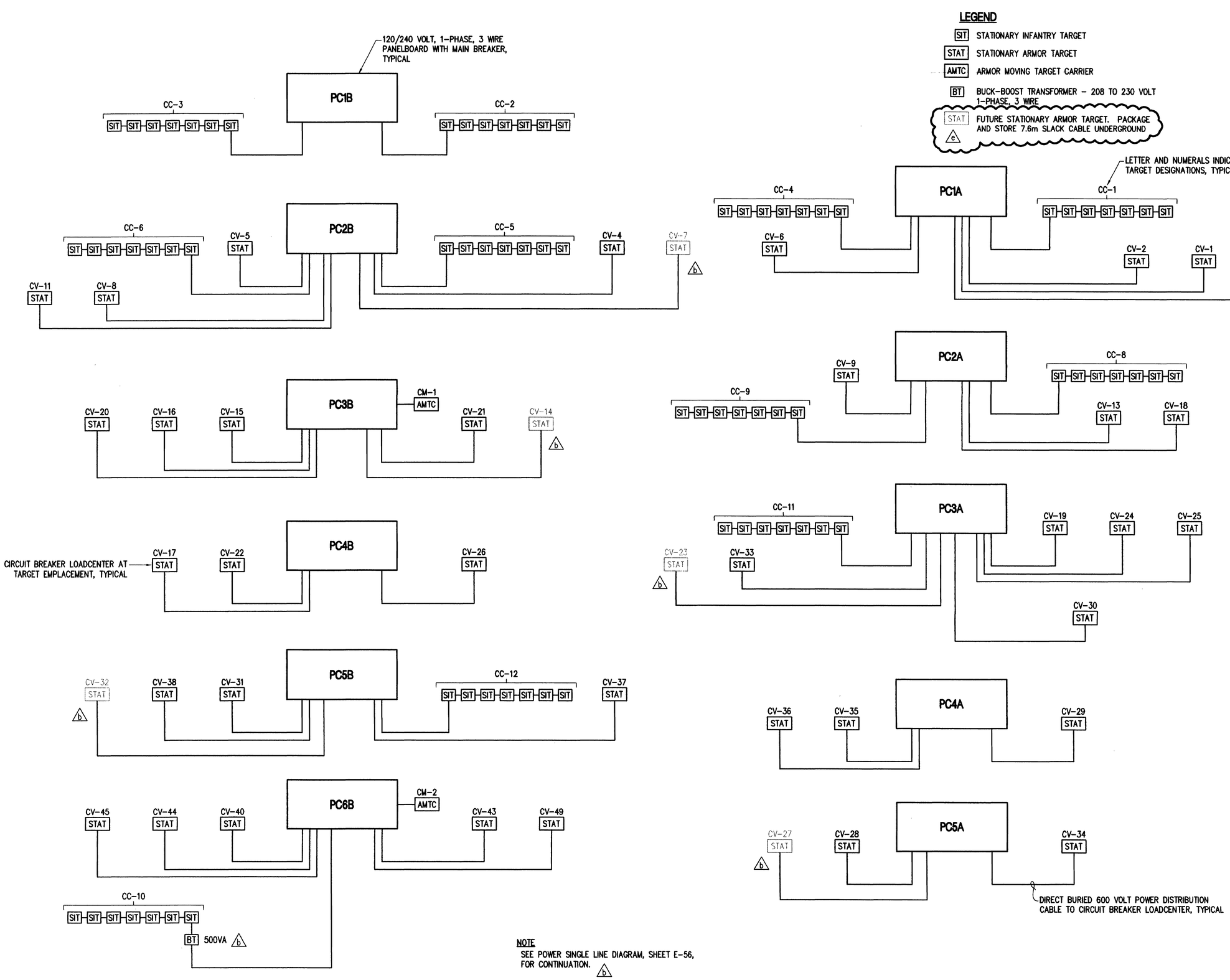

NOTE
SEE POWER SINGLE LINE DIAGRAM, SHEET E-56, FOR CONTINUATION. b

THE SEAL APPEARING ON THIS DOCUMENT WAS AUTHORIZED BY SAMUEL LEE GULLEY ON AUGUST 8, 2001

SAMUEL LEE GULLEY CERTIFICATE 0341 STATE OF FLORIDA PROFESSIONAL ENGINEER

US Army Corps of Engineers
FORT WORTH DISTRICT

POLYENGINEERING, INC.
1950 Bradford Avenue
Dothan, Alabama 36303
(334) 793-2780 (voice)
(334) 793-9018 (fax)

Mark	Description	Date	Appr.
1	REVISED LEGEND	SEPT 01	SLG
2	REVISED NOTE, DIAGRAM AND LEGEND	AUG 01	SLG

Designed by: Samuel L. Gulley
Dwn by: T. Bolton
Ckd by: F. Corbett
Reviewed by: Scott Rook
Submitted by: E. Lamar Faulk
Date: 19 July 2001
Sol. No. DACA63-01-B-0007
Rev.
Contr. No. DACA63-01-C-0016
File name:
Plot date:
Plot scale: NONE

U.S. ARMY ENGINEER DISTRICT
CORPS OF ENGINEERS
FORT WORTH, TEXAS

POLYENGINEERING, INC.
ENGINEERS & ARCHITECTS
DOTHAN, ALABAMA

FORT HOOD, TEXAS
DIGITAL MULTI-PURPOSE RANGE COMPLEX (DMPRC)
PN 51915 FY 00

POWER SINGLE LINE DIAGRAM
CLABBER CREEK

Sheet reference number:
E-55
Sheet x of x

00655

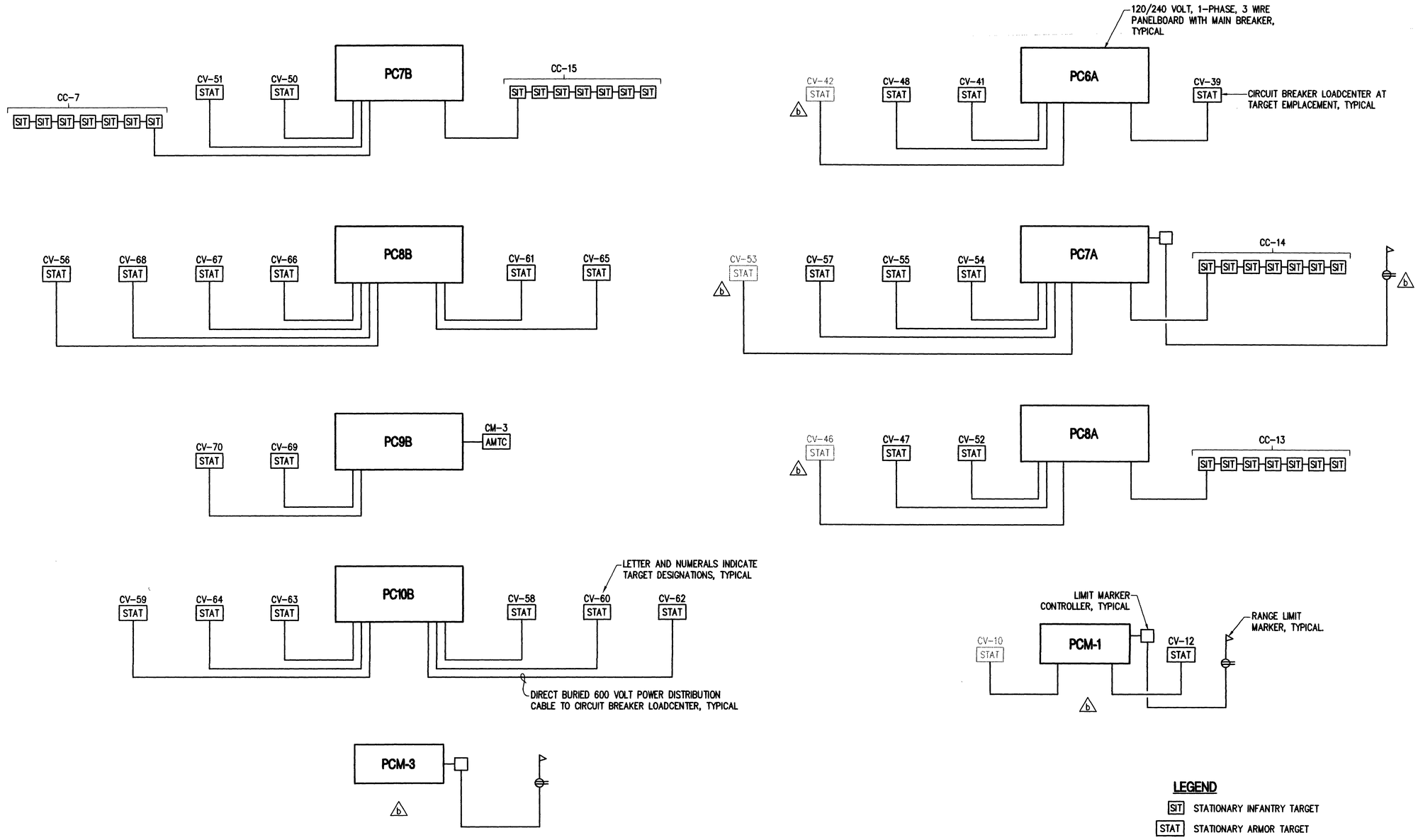

LEGEND

- SIT — STATIONARY INFANTRY TARGET
- STAT — STATIONARY ARMOR TARGET
- AMTC — ARMOR MOVING TARGET CARRIER
- STAT (e) — FUTURE STATIONARY ARMOR TARGET. PACKAGE AND STORE 7.6m SLACK CABLE UNDERGROUND

THE SEAL APPEARING ON THIS DOCUMENT WAS AUTHORIZED BY SAMUEL LEE GULLEY ON AUGUST 8, 2001

SAMUEL LEE GULLEY CERTIFICATE No. 34001 STATE OF FLORIDA PROFESSIONAL ENGINEER

US Army Corps of Engineers
FORT WORTH DISTRICT

POLYENGINEERING, INC.
1555 Headland Avenue
Dothan, Alabama 36303
(334) 793-2700 (voice)
(334) 793-2016 (fax)

Mark	Description	Date	Appr.
1	REVISED LEGEND	SEPT 01	SLG
2	REVISED DIAGRAM	AUG 01	SLG

Designed by: Samuel L. Gulley
Dwn by: T. Belton
Ckd by: F. Carbon
Reviewed by: Scott Faulk
Submitted by: E. Lamar Faulk
Date: 19 July 2001
Rev.
Sol. No. DACA63-01-B-0007
Contr. No. DACA63-01-C-0016
File name:
Plot date:
Plot scale: NONE

U.S. ARMY ENGINEER DISTRICT
CORPS OF ENGINEERS
FORT WORTH, TEXAS

POLYENGINEERING, INC.
ENGINEERS & ARCHITECTS
DOTHAN, ALABAMA

FORT HOOD, TEXAS
DIGITAL MULTI-PURPOSE RANGE COMPLEX (DMPRC)
PN 51915 FY 00

POWER SINGLE LINE DIAGRAM
CLABBER CREEK

Sheet reference number:
E-56
Sheet x of x

Contr. No. DACA63-01-C-0016

00689000

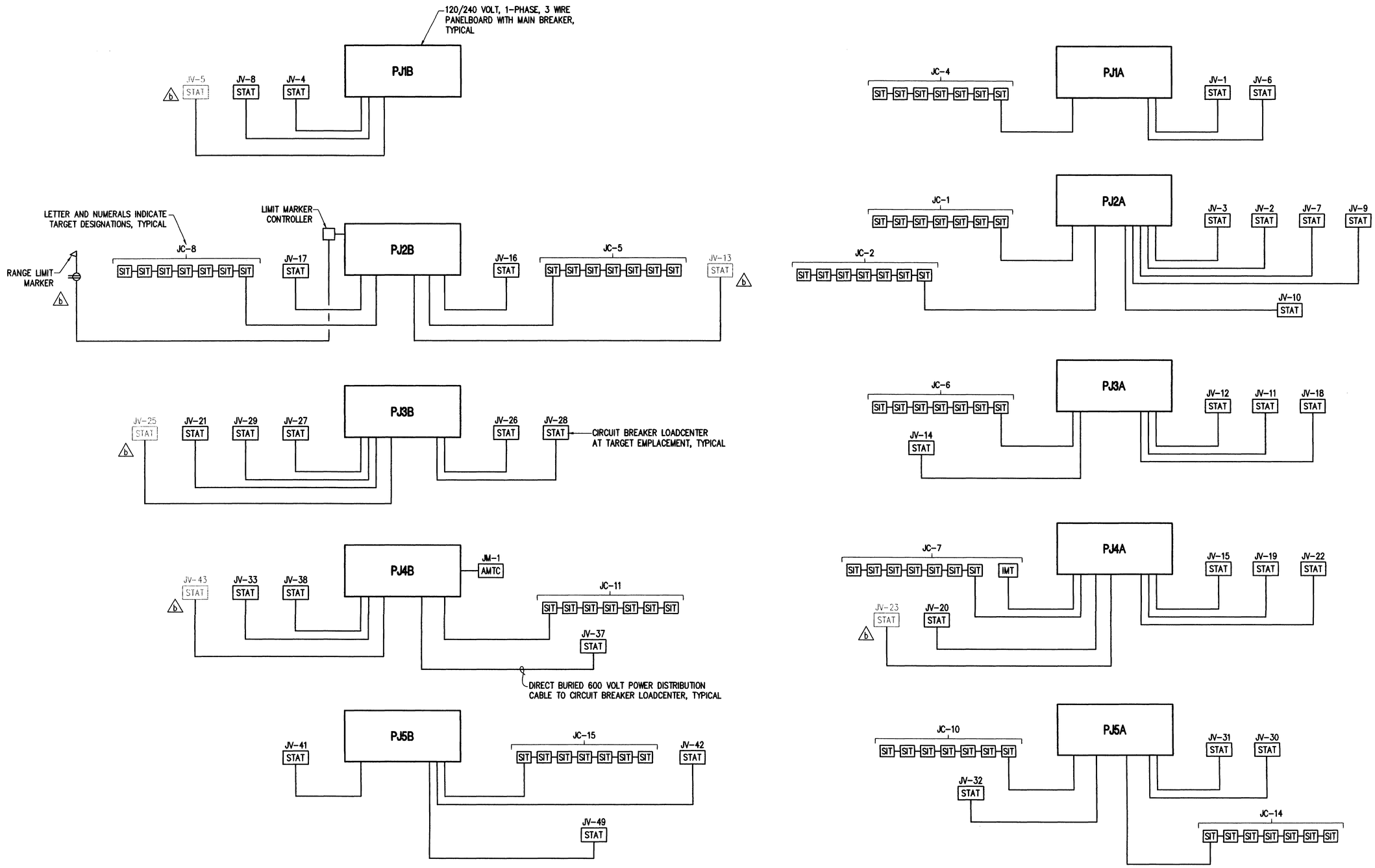

NOTE
SEE POWER SINGLE LINE DIAGRAM, SHEET E-58, FOR CONTINUATION. b

LEGEND

SIT	STATIONARY INFANTRY TARGET
STAT	STATIONARY ARMOR TARGET
AMTC	ARMOR MOVING TARGET CARRIER
STAT e	FUTURE STATIONARY ARMOR TARGET. PACKAGE AND STORE 7.6m SLACK CABLE UNDERGROUND

THE SEAL APPEARING ON THIS DOCUMENT WAS AUTHORIZED BY SAMUEL LEE GULLEY ON AUGUST 8, 2001

SAMUEL LEE GULLEY CERTIFICATE NO. 34101 STATE OF FLORIDA PROFESSIONAL ENGINEER

US Army Corps of Engineers
FORT WORTH DISTRICT

POLYENGINEERING, INC.
1905 Boulevard Avenue
Dothan, Alabama 36303
(334) 792-4700 (voice)
(334) 792-9015 (fax)

Symbol	Description	Date	Appr.
1	REVISED LEGEND	SEPT 01	SLG
2	REVISED DIAGRAM AND NOTE	AUG 01	SLG

Designed by: Samuel L. Gulley
Dwn by: T. Bolton
Ckd by: F. Corbett
Reviewed by: Scott Faulk
Submitted by: E. Lamar Faulk
Date: 19 July 2001
Rev.
Sol. No. DACA63-01-B-0007
Contr. No. DACA63-01-C-0016
File name:
Plot date:
Plot scale: NONE

U.S. ARMY ENGINEER DISTRICT
CORPS OF ENGINEERS
FORT WORTH, TEXAS

POLYENGINEERING, INC.
ENGINEERS & ARCHITECTS
DOTHAN, ALABAMA

FORT HOOD, TEXAS
DIGITAL MULTI-PURPOSE RANGE COMPLEX (DMPRC)
PN 51915 FY 00

POWER SINGLE LINE DIAGRAM
JACK MOUNTAIN

Sheet reference number:
E-57
Sheet x of x

00688010

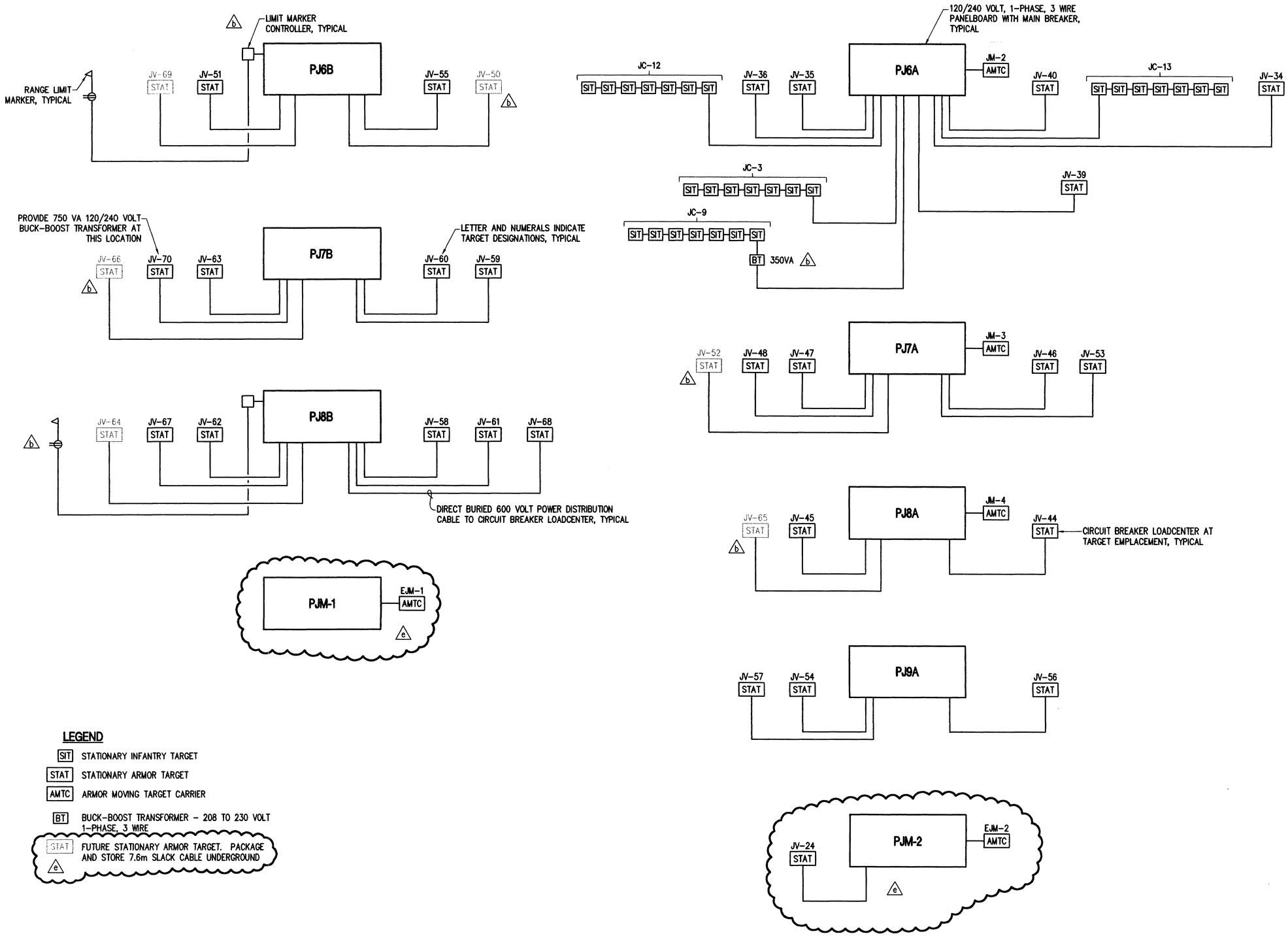

LEGEND

- SIT — STATIONARY INFANTRY TARGET
- STAT — STATIONARY ARMOR TARGET
- AMTC — ARMOR MOVING TARGET CARRIER
- BT — BUCK-BOOST TRANSFORMER - 208 TO 230 VOLT 1-PHASE, 3 WIRE
- STAT (e) — FUTURE STATIONARY ARMOR TARGET. PACKAGE AND STORE 7.6m SLACK CABLE UNDERGROUND

US Army Corps of Engineers
FORT WORTH DISTRICT

POLYENGINEERING, INC.
1505 Boulevard Avenue
Dothan, Alabama 36303
(334) 793-4700 (voice)
(334) 793-9218 (fax)

Mark	Description	Date	Appr.
2	REVISED DIAGRAM AND LEGEND	SEPT 01	SLG
1	REVISED DIAGRAM AND LEGEND	AUG 01	SLG

Designed by: Samuel L. Gulley
Dwn by: T. Bolton
Ckd by: F. Corbori
Reviewed by: Scott Faulk
Submitted by: E. Lamar Faulk
Date: 19 July 2001
Rev.
Sol. No. DACA63-01-B-0007
Contr. No. DACA63-01-C-0016
File name:
Plot date:
Plot scale: NONE

U.S. ARMY ENGINEER DISTRICT
CORPS OF ENGINEERS
FORT WORTH, TEXAS

POLYENGINEERING, INC.
ENGINEERS & ARCHITECTS
DOTHAN, ALABAMA

FORT HOOD, TEXAS
DIGITAL MULTI-PURPOSE RANGE COMPLEX (DMPRC)
PN 51915 FY 00

POWER SINGLE LINE DIAGRAM
JACK MOUNTAIN

Sheet reference number:
E-58
Sheet x of x

SAMUEL LEE GULLEY
CERTIFICATE NO.
STATE OF FLORIDA
PROFESSIONAL ENGINEER

THE SEAL APPEARING ON THIS DOCUMENT WAS AUTHORIZED BY SAMUEL LEE GULLEY ON AUGUST 8, 2001

Contr. No. DACA63-01-C-0016

00689000

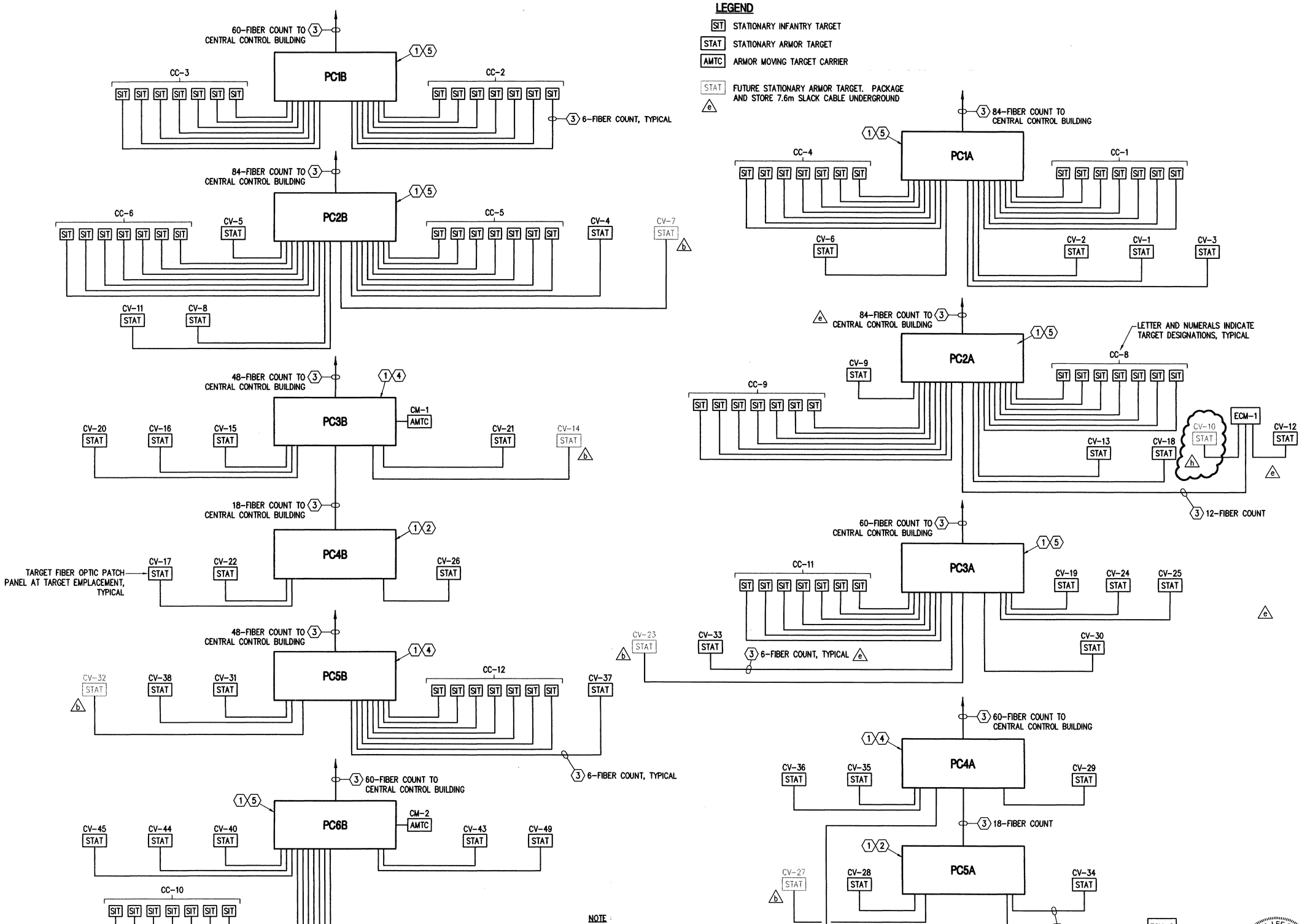

NOTE:
SEE DATA DISTRIBUTION SINGLE LINE DIAGRAM, SHEET E-60, FOR CONTINUATION.

SEE FIBER OPTIC DATA CABLING NOTES ON SHEET E-60.

THE SEAL APPEARING ON THIS DOCUMENT WAS AUTHORIZED BY SAMUEL LEE GULLEY ON AUGUST 8, 2001

US Army Corps of Engineers
FORT WORTH DISTRICT

POLYENGINEERING, INC.
POLYENGINEERING, INC.
1905 Headland Avenue
Dothan, Alabama 36303
(334) 793-4720, (voice)
(334) 793-5018 (fax)

Mark	Description	Date	Appr.
X1	REVISED DIAGRAM	SEPT 01	SLG
X2	REVISED DIAGRAM AND LEGEND	SEPT 01	SLG
X3	REVISED DIAGRAM	AUG 01	SLG

Designed by: Samuel L. Gulley
Dwn by: T. Belton
Ckd by: F. Corbori
Reviewed by: Scott Faulk
Submitted by: E. Lamar Faulk
Date: 19 July 2001
Sol. No. DACA63-01-B-0007
Contr. No. DACA63-01-C-0016
File name:
Plot date:
Plot scale: NONE
Rev.

U.S. ARMY ENGINEER DISTRICT
CORPS OF ENGINEERS
FORT WORTH, TEXAS

POLYENGINEERING, INC.
ENGINEERS & ARCHITECTS
DOTHAN, ALABAMA

FORT HOOD, TEXAS
DIGITAL MULTI-PURPOSE RANGE COMPLEX (DMPRC)
PN 51915
FY 00

DATA DISTRIBUTION
SINGLE LINE DIAGRAM
CLABBER CREEK

Sheet reference number:
E-59
Sheet x of x

Contr. No. DACA63-01-C-0016

00688010

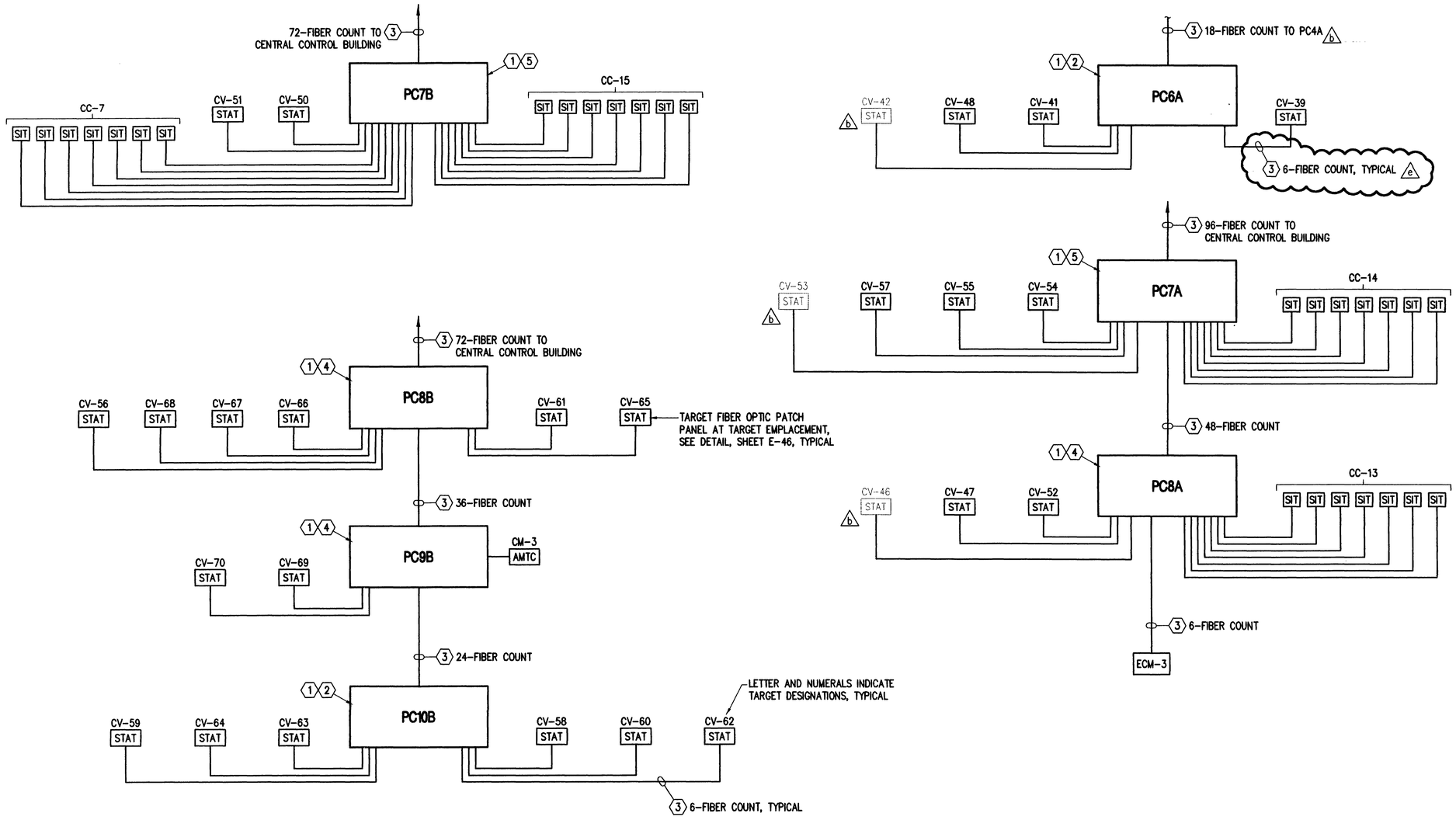

FIBER OPTIC DATA CABLING KEY NOTES

(1) FIBER PATCH PANEL IN A NEMA 4 ENCLOSURE. PROVIDE PANEL WITH "SC" SINGLE-MODE TYPE CONNECTORS AND COUPLERS, SLACK STORAGE SPACE, ROUTING GUIDES, CABLE FASTENERS AND DUAL FIBER PATCH CORDS WITH DUAL "SC" CONNECTORS, EACH END. PROVIDE NUMBER OF CONNECTORS INDICATED.

(3) 8.3/125 MICRON SINGLE-MODE FIBER OPTIC CABLE WITH A TRANSMISSION WINDOW CENTERED AT 1330 AND 1550 NANOMETER WAVELENGTH. CABLE SHALL BE GEL-FILLED, LOOSE-BUFFERED OUTSIDE PLANT DIRECT BURIED TYPE WITH A PLASTIC COATED STEEL ARMOR. TERMINATE ALL FIBERS WITH "SC" COMPATIBLE CONNECTORS. PROVIDE FACTORY FAN-OUT KIT AND FAN-OUT TUBING AT EACH END OF CABLE. PROTECT FAN-OUT WITH SPIRAL WRAPPING. PROVIDE NUMBER OF FIBERS INDICATED ON DIAGRAM.

(2) PROVIDE 1-72 PORT CONNECTOR MODULE.

(4) PROVIDE 2-72 PORT CONNECTOR MODULES.

(5) PROVIDE 3-72 PORT CONNECTOR MODULES.

(6) PROVIDE 4-72 PORT CONNECTOR MODULES.

LEGEND

SIT	STATIONARY INFANTRY TARGET
STAT	STATIONARY ARMOR TARGET
AMTC	ARMOR MOVING TARGET CARRIER
STAT (e)	FUTURE STATIONARY ARMOR TARGET. PACKAGE AND STORE 7.6m SLACK CABLE UNDERGROUND

THE SEAL APPEARING ON THIS DOCUMENT WAS AUTHORIZED BY SAMUEL LEE GULLEY ON AUGUST 8, 2001

SAMUEL LEE GULLEY CERTIFICATE NO. 39001 STATE OF FLORIDA PROFESSIONAL ENGINEER

US Army Corps of Engineers
FORT WORTH DISTRICT

POLYENGINEERING, INC.
1958 Headland Avenue
Dothan, Alabama 36305
(334) 792-4700 (voice)
(334) 792-9218 (fax)

Mark	Description	Date	Appr.
02	REVISED DIAGRAM AND LEGEND	SEPT 01	SLG
01	REVISED DIAGRAM	AUG 01	SLG

Designed by: Samuel L. Gulley
Dwn by: T. Bolton
Ckd by: F. Corbari
Reviewed by: Scott Faulk
Submitted by: E. Lamar Faulk
Date: 19 July 2001
Rev.
Sol. No. DAC63-01-B-0007
Contr. No. DAC63-01-C-0016
File name:
Plot date:
Plot scale: NONE

U.S. ARMY ENGINEER DISTRICT
CORPS OF ENGINEERS
FORT WORTH, TEXAS

POLYENGINEERING, INC.
ENGINEERS & ARCHITECTS
DOTHAN, ALABAMA

FORT HOOD, TEXAS
DIGITAL MULTI-PURPOSE RANGE COMPLEX (DMPRC)
PN 51915 FY 00

DATA DISTRIBUTION
SINGLE LINE DIAGRAM
CLABBER CREEK

Sheet reference number:
E-60
Sheet x of x

00689.0

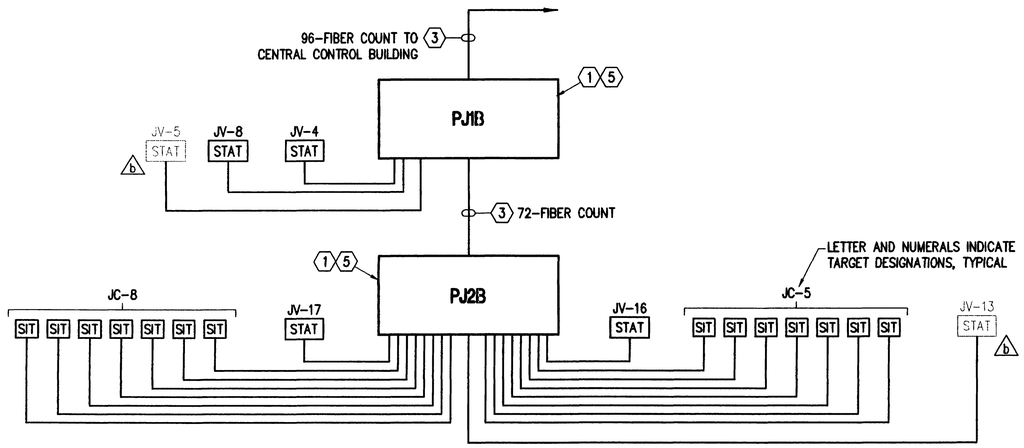

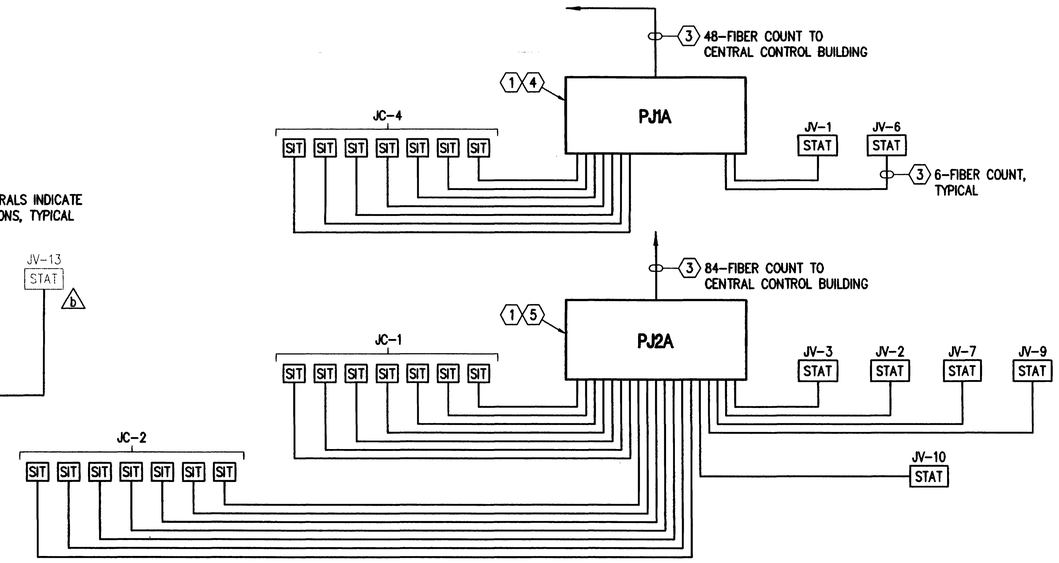

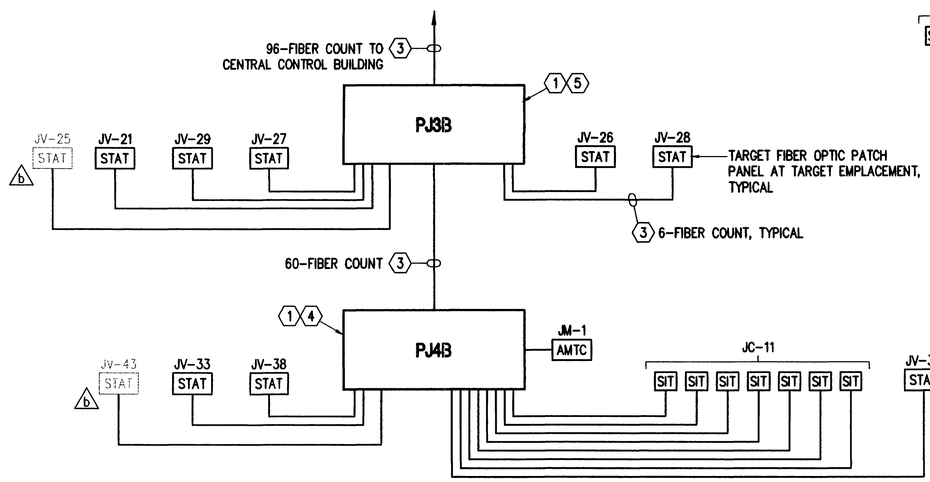

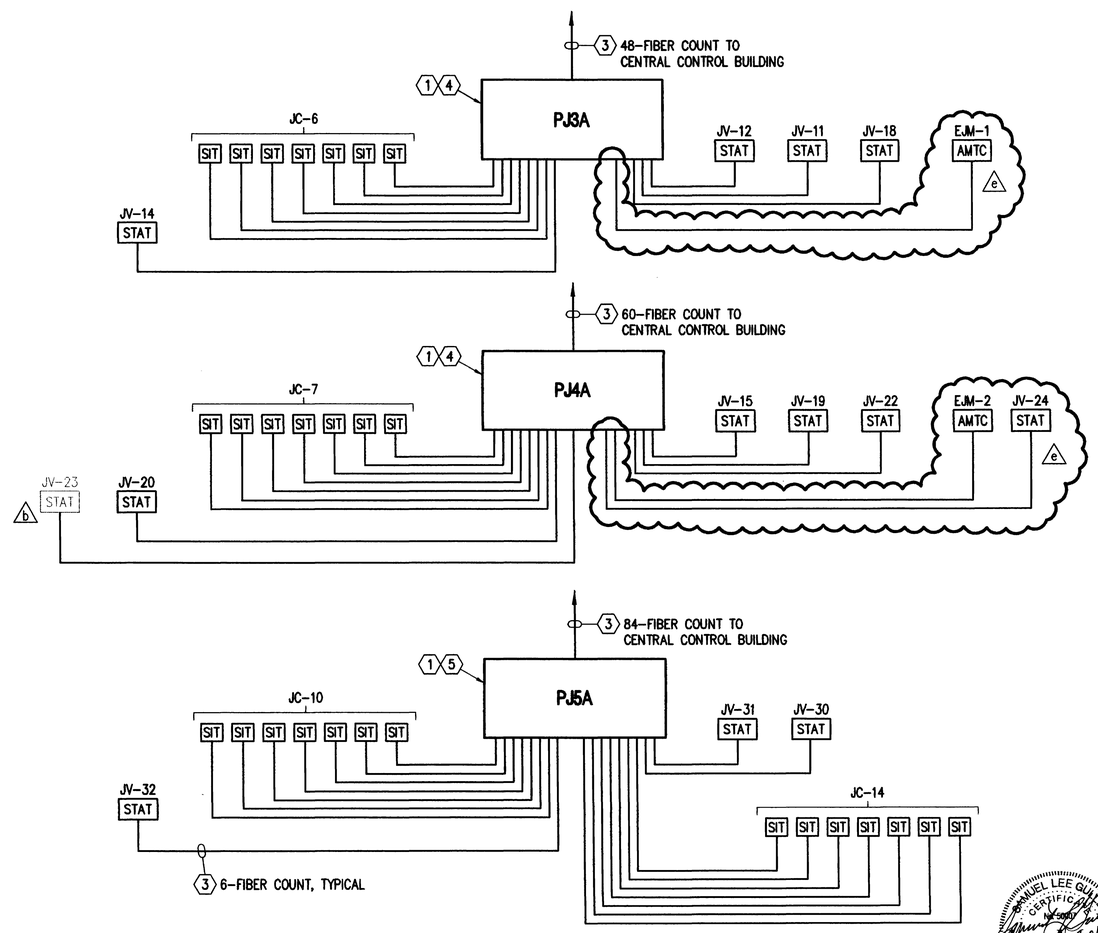

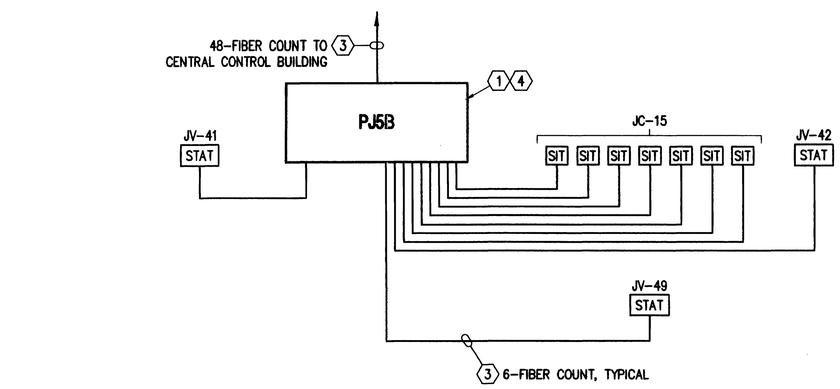

LEGEND

- SIT — STATIONARY INFANTRY TARGET
- STAT — STATIONARY ARMOR TARGET
- AMTC — ARMOR MOVING TARGET CARRIER
- STAT (e) — FUTURE STATIONARY ARMOR TARGET. PACKAGE AND STORE 7.6m SLACK CABLE UNDERGROUND

NOTE

SEE DATA DISTRIBUTION SINGLE LINE DIAGRAM, SHEET E-62, FOR CONTINUATION.

SEE FIBER OPTIC DATA CABLING NOTES ON SHEET E-62.

THE SEAL APPEARING ON THIS DOCUMENT WAS AUTHORIZED BY SAMUEL LEE GULLEY ON AUGUST 8, 2001

SAMUEL LEE GULLEY CERTIFICATE NO. 34 STATE OF FLORIDA PROFESSIONAL ENGINEER

US Army Corps of Engineers
FORT WORTH DISTRICT

POLYENGINEERING, INC.
1956 Bradford Avenue
Dothan, Alabama 36303
(334) 793-4700 (voice)
(334) 793-9218 (fax)

Mark	Description	Date	Appr.
A	REVISED DIAGRAM AND LEGEND	SEPT. 01	SLG
B	REVISED DIAGRAM	AUG 01	SLG

Designed by: Samuel L. Gulley
Dwn by: T. Belton
Ckd by: F. Carbori
Reviewed by: Scott Faulk
Submitted by: E. Lamar Faulk
Date: 19 July 2001
Rev.
Sol. No. DACA63-01-B-0007
Contr. No. DACA63-01-C-0016
File name:
Plot date:
Plot scale: NONE

U.S. ARMY ENGINEER DISTRICT
CORPS OF ENGINEERS
FORT WORTH, TEXAS

POLYENGINEERING, INC.
ENGINEERS & ARCHITECTS
DOTHAN, ALABAMA

FORT HOOD, TEXAS
DIGITAL MULTI-PURPOSE RANGE COMPLEX (DMPRC)
PN 51915 FY 00

DATA DISTRIBUTION
SINGLE LINE DIAGRAM
JACK MOUNTAIN

Sheet reference number:
E-61
Sheet x of x

00688050

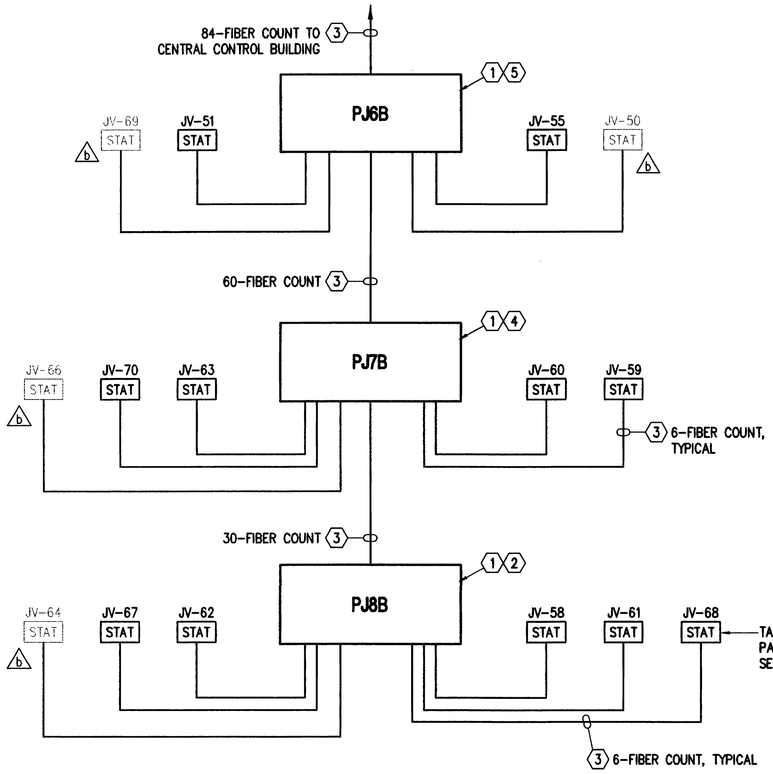

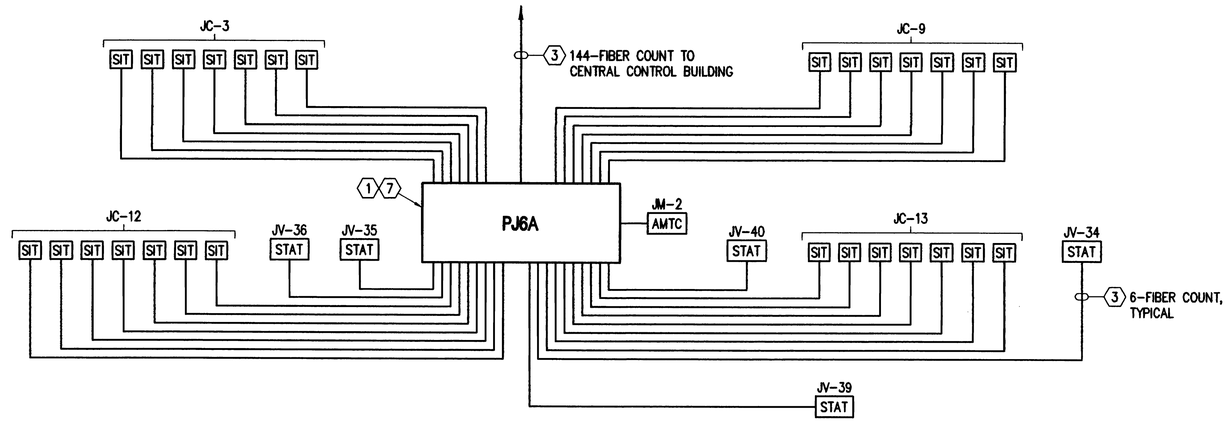

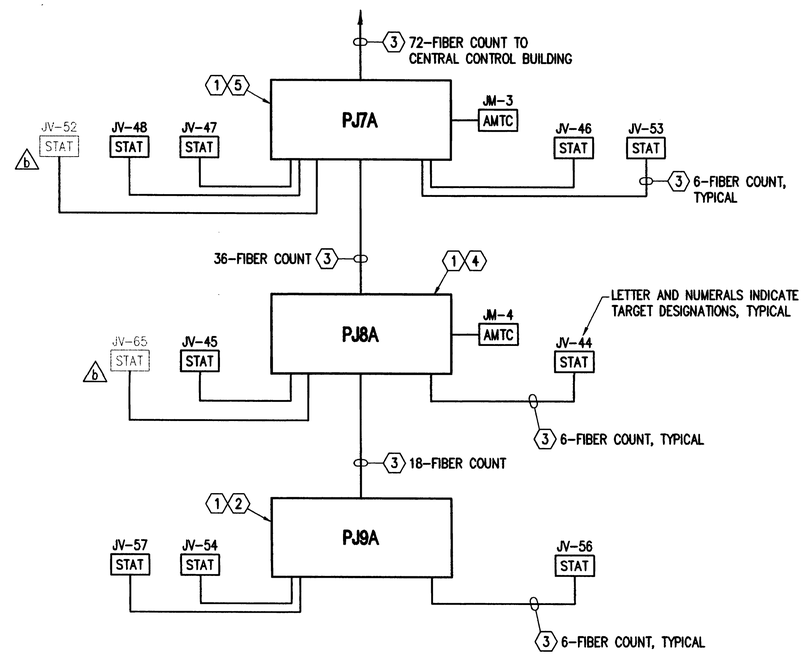

FIBER OPTIC DATA CABLING KEY NOTES

1. FIBER PATCH PANEL IN A NEMA 4 ENCLOSURE. PROVIDE PANEL WITH "SC" SINGLE-MODE TYPE CONNECTORS AND COUPLERS, SLACK STORAGE SPACE, ROUTING GUIDES, CABLE FASTENERS AND DUAL FIBER PATCH CORDS WITH DUAL "SC" CONNECTORS, EACH END. PROVIDE NUMBER OF CONNECTORS INDICATED. TERMINATE ALL FIBERS. (b)

3. 8.3/125 MICRON SINGLE-MODE FIBER OPTIC CABLE WITH A TRANSMISSION WINDOW CENTERED AT 1330 AND 1550 NANOMETER WAVELENGTH. CABLE SHALL BE GEL-FILLED, LOOSE-BUFFERED OUTSIDE PLANT DIRECT BURIED TYPE WITH A PLASTIC COATED STEEL ARMOR. TERMINATE ALL FIBERS WITH "SC" COMPATIBLE CONNECTORS. PROVIDE FACTORY FAN-OUT KIT AND FAN-OUT TUBING AT EACH END OF CABLE. PROTECT FAN-OUT WITH SPIRAL WRAPPING. PROVIDE NUMBER OF FIBERS INDICATED ON DIAGRAM.

2. PROVIDE 1-72 PORT CONNECTOR MODULE.

4. PROVIDE 2-72 PORT CONNECTOR MODULES.

5. PROVIDE 3-72 PORT CONNECTOR MODULES.

6. PROVIDE 4-72 PORT CONNECTOR MODULES.

7. PROVIDE 5-72 PORT CONNECTOR MODULES.

LEGEND

SIT	STATIONARY INFANTRY TARGET
STAT	STATIONARY ARMOR TARGET
AMTC	ARMOR MOVING TARGET CARRIER
STAT (e)	FUTURE STATIONARY ARMOR TARGET. PACKAGE AND STORE 7.6m SLACK CABLE UNDERGROUND

THE SEAL APPEARING ON THIS DOCUMENT WAS AUTHORIZED BY SAMUEL LEE GULLEY ON AUGUST 8, 2001

US Army Corps of Engineers
FORT WORTH DISTRICT

POLYENGINEERING, INC.
2956 Headland Avenue
Dothan, Alabama 36305
(334) 793-4700 (voice)
(334) 793-9018 (fax)

Mark	Description	Date	Appr.
1	REVISED LEGEND	SEPT 01	SLG
2	REVISED DIAGRAM	AUG 01	SLG

Designed by: Samuel L. Gulley
Dwn by: T. Bolton
Ckd by: F. Corbani
Reviewed by: Scott Faulk
Submitted by: E. Lamar Faulk
Date: 19 July 2001
Rev.
Sol. No. DACA63-01-B-0007
Contr. No. DACA63-01-C-0016
File name:
Plot date:
Plot scale: NONE

U.S. ARMY ENGINEER DISTRICT
CORPS OF ENGINEERS
FORT WORTH, TEXAS

POLYENGINEERING, INC.
ENGINEERS & ARCHITECTS
DOTHAN, ALABAMA

FORT HOOD, TEXAS
DIGITAL MULTI-PURPOSE RANGE COMPLEX (DMPRC) FY 00
PN 51915

DATA DISTRIBUTION
SINGLE LINE DIAGRAM
JACK MOUNTAIN

Sheet reference number:
E-62
Sheet x of x

Contr. No. DACA63-01-C-0016

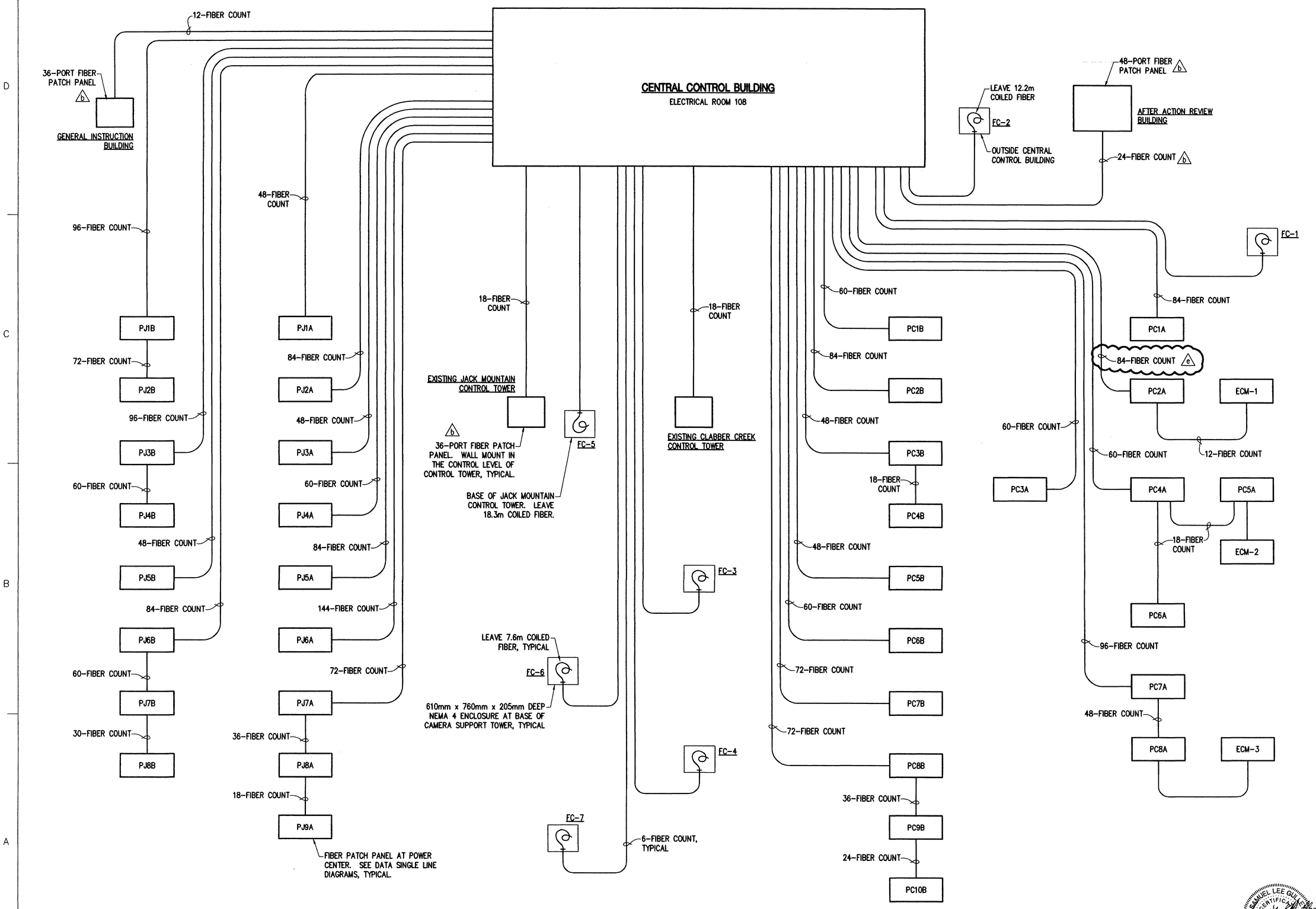

US Army Corps of Engineers
FORT WORTH DISTRICT

POLYENGINEERING, INC.
1905 Ronalind Avenue
Dothan, Alabama 36303
(334) 793-2700 (voice)
(334) 793-9018 (fax)

Mark	Description	Date	Appr.
A	REVISED DIAGRAM	SEPT 01	SLG
B	REVISED DIAGRAM	AUG 01	SLG

Designed by: Samuel L. Gulley
Dwn by: T. Bolton
Ckd by: F. Corbari
Reviewed by: Scott Faulk
Submitted by: E. Lamar Faulk
Date: 19 July 2001
Rev.
Sol. No. DACA63-01-B-0007
Contr. No. DACA63-01-C-0016
File name:
Plot date:
Plot scale: NONE

U.S. ARMY ENGINEER DISTRICT
CORPS OF ENGINEERS
FORT WORTH, TEXAS

POLYENGINEERING, INC.
ENGINEERS & ARCHITECTS
DOTHAN, ALABAMA

FORT HOOD, TEXAS
DIGITAL MULTI-PURPOSE RANGE COMPLEX (DMPRC) FY 00
PN 51915

FIBER OPTIC CABLING
RISER DIAGRAM

Sheet reference number:
E-63
Sheet x of x

SAMUEL LEE GULLEY
CERTIFICATE
STATE OF FLORIDA
PROFESSIONAL ENGINEER

THE SEAL APPEARING ON THIS DOCUMENT WAS AUTHORIZED BY SAMUEL LEE GULLEY ON AUGUST 8, 2001

Contr. No. DACA63-01-C-0016

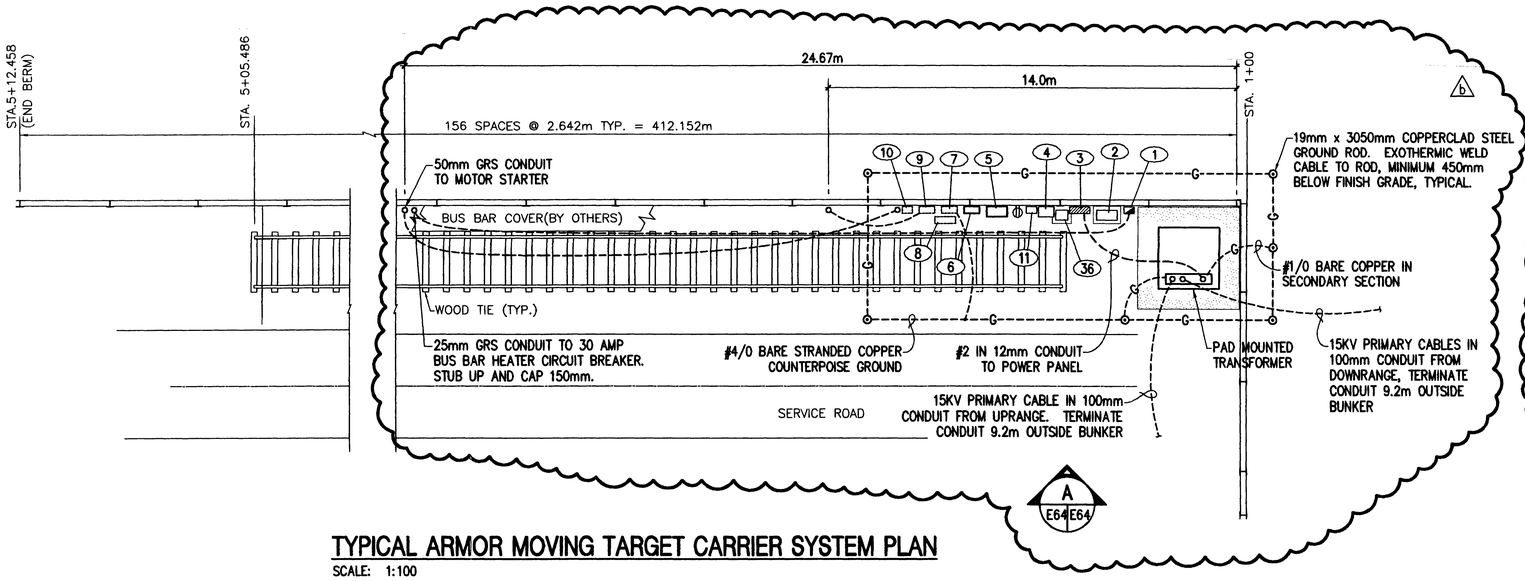

TYPICAL ARMOR MOVING TARGET CARRIER SYSTEM PLAN

SCALE: 1:100

NOTES

1. ALL GROUND CONNECTION SHALL BE EXOTHERMIC WELDED. GROUND RESISTANCE OF THE BUNKER GROUND SYSTEM SHALL BE 5 ohms OR LESS.

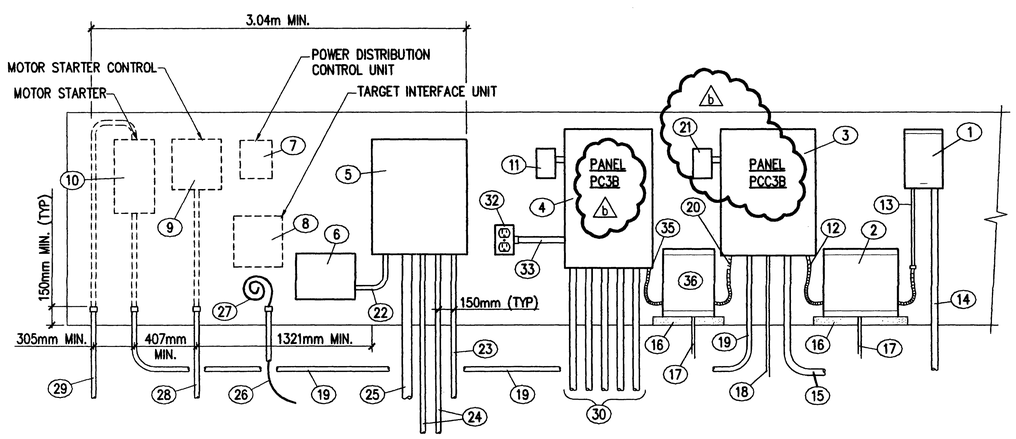

ELEVATION

SCALE 1:25

A
E64 E64

KEY NOTES - AMTC EMPLACEMENT

1. 30 AMP, 3 POLE, 480 VOLT INDIVIDUALLY MOUNTED CIRCUIT BREAKER IN A NEMA 3R ENCLOSURE. CIRCUIT BREAKER SHALL HAVE A MINIMUM SHORT CIRCUIT INTERRUPTING CAPACITY OF 14,000 AMPS RMS SYMMETRICAL.
2. DRY TYPE 3-PHASE OUTDOOR TYPE ISOLATION TRANSFORMER - 30 KVA, 480 VOLT DELTA - 480Y/277 VOLT. MOUNT ON CONCRETE PAD.
3. 480Y/277 VOLT, 3 PHASE, 4 WIRE POWER PANEL WITH A NEMA 3R ENCLOSURE. SEE SHEET E-66, E-67, E-70 AND E-72 FOR INDIVIDUAL POWER PANEL SCHEDULES.
4. 120/240 VOLT, 1 PHASE, 3 WIRE, PANELBOARD WITH A NEMA 3R ENCLOSURE (MINIMUM 20" WIDE). SEE PANEL SCHEDULES, SHEET E-68 THRU E-73 FOR PANELBOARD RATINGS.
5. FIBER OPTIC CABLE PATCH PANEL IN A NEMA 4X ENCLOSURE. SEE DETAIL, SHEET E-40.
6. SEE DETAILS, SHEET E-46. MOUNT ON WALL ABOVE FINISH GRADE TO BOTTOM OF BOX.
7. POWER DISTRIBUTION CONTROL UNIT TO BE PROVIDED BY OTHERS.
8. TARGET INTERFACE UNIT TO BE PROVIDED BY OTHERS.
9. MOTOR STARTER CONTROL TO BE PROVIDED BY OTHERS. (b)
10. MOTOR STARTER TO BE PROVIDED BY OTHERS.
11. CONTROLLER FOR RANGE LIMIT MARKERS (POWER CENTERS PCM-1 AND PCM-3 ONLY).
12. 3 #10 IN 12mm LIQUID TIGHT FLEXIBLE CONDUIT FROM 30 AMP, 3 POLE CIRCUIT BREAKER IN POWER PANEL.
13. 4 #10 IN 12mm CONDUIT.
14. EMPTY 50mm CONDUIT WITH PULL WIRE. STUB UP AT BUNKER WALL AS SHOWN AND CAP FOR BUS BAR HEATERS. EQUIPMENT CONTRACTOR SHALL INSTALL CONDUCTORS AND MAKE FINAL CONNECTION TO BUS BAR HEATERS.
15. CONDUIT AND CONDUCTORS FROM PAD MOUNTED TRANSFORMER FOR MAIN SECONDARY SERVICE FEEDER TO BUNKER. SEE POWER DISTRIBUTION SINGLE LINE DIAGRAMS.
16. 102mm THICK CONCRETE PAD FOR DRY TYPE TRANSFORMER.
17. 1 #8 IN 12mm CONDUIT TRANSFORMER GROUND TO #4/0 BARE STRANDED COPPER COUNTERPOISE.
18. (b) 1 #4 IN 12mm CONDUIT SERVICE GROUND TO #4/0 BARE STRANDED COPPER COUNTERPOISE.
19. EMPTY 50mm CONDUIT WITH PULL WIRE TO MOTOR STARTER LOCATION. CONDUCTORS SHALL BE INSTALLED BY EQUIPMENT CONTRACTOR.
20. 480 VOLT, 1-PHASE PRIMARY FEEDER TO DRY TYPE TRANSFORMER. SEE POWER DISTRIBUTION SINGLE LINE DIAGRAMS.
21. (b) TRANSIENT VOLTAGE SURGE PROTECTION.
22. DATA CABLE IN 25mm CONDUIT.
23. FIBER OPTIC CABLES IN 50mm CONDUIT FROM DOWNRANGE. TERMINATE CONDUIT 9.12m MINIMUM OUTSIDE THE BUNKER WITH AN INSULATING BUSHING. BUSHING.
24. FIBER OPTIC TRUNK CABLE IN 50mm CONDUIT FROM UPRANGE. TERMINATE CONDUIT 9.12m MINIMUM OUTSIDE AMTC EMPLACEMENT.
25. 6 STRAND FIBER OPTIC DATA CABLES IN 100mm CONDUIT WITH INNERDUCT TO TARGET PATCH PANELS AS INDICATED ON THE DATA SYSTEM DISTRIBUTION PLANS. TERMINATE CONDUITS FROM FIBER OPTIC PATCH PANEL BOX 9.12m MINIMUM OUTSIDE AMTC EMPLACEMENT.
26. #4/0 BARE COPPER GROUND IN 50mm PVC CONDUIT TO #4/0 BARE COPPER COUNTERPOISE. STUB-UP INSIDE AMTC EMPLACEMENT SHELTER.
27. COIL 3.04m OF SLACK WIRE.
28. EMPTY 25mm GALVANIZED RIGID STEEL CONDUIT WITH PULL WIRE. STUB-UP AND CAP AS SHOWN ON PLAN, THIS SHEET.
29. EMPTY 50mm GALVANIZED RIGID STEEL CONDUIT WITH PULL WIRE. STUB-UP AND CAP AS SHOWN ON PLAN, THIS SHEET.
30. 50mm CONDUIT AND CABLE FOR 120/240 VOLT, 1-PHASE, 3 WIRE POWER CIRCUITS TO TARGETS. TERMINATE CONDUITS 9.12m MINIMUM OUTSIDE BUNKER WITH INSULATING BUSHINGS. SEE RANGE POWER DISTRIBUTION PLANS FOR CABLE SIZES.
31. NOT USED
32. GROUND FAULT DUPLEX RECEPTACLE IN CAST METAL BOX WITH WEATHERPROOF COVER.
33. (b) 2 #12, 1 #12 GND IN 12mm CONDUIT FROM RECEPTACLE TO PANEL "PC3B".
34. NOT USED
35. (b) 120/240 VOLT, 1-PHASE SECONDARY FEEDER TO PANELBOARD. SEE POWER DISTRIBUTION SINGLE LINE DIAGRAM, SHEET E- .
36. DRY TYPE 1-PHASE OUTDOOR TYPE TRANSFORMER 480 - 120/240 VOLT. MOUNT ON CONCRETE PAD.

(b) 2000 1000 0 1000 2000
SCALE: 1:100

(b) THE SEAL APPEARING ON THIS DOCUMENT WAS AUTHORIZED BY SAMUEL LEE GULLEY ON AUGUST 8, 2001

SAMUEL LEE GULLEY CERTIFICATE No. 37207 STATE OF FLORIDA PROFESSIONAL ENGINEER
8-8-01

US Army Corps of Engineers
FORT WORTH DISTRICT

POLYENGINEERING, INC.
1950 Westland Avenue
Dothan, Alabama 36303
(334) 793-6720 (voice)
(334) 793-9018 (fax)

Mark	Description	Date	Appr.
1	REVISED DRAWING, TITLE BLOCK EDIT, ADDED SEAL	AUG 01	SLG

Date: 19 July 2001 | Rev.
Sol. No. DACA63-01-B-0007
Contr. No. DACA63-01-C-0016
File name:
Plot date:
Plot scale: 1:50

Designed by: Charles D. Brown
Dwn by: D. Burns | Ckd by: F. Corbari
Reviewed by:
Submitted by: E. Lamar Faulk

U.S. ARMY ENGINEER DISTRICT
CORPS OF ENGINEERS
FORT WORTH, TEXAS

POLYENGINEERING, INC.
ENGINEERS & ARCHITECTS
DOTHAN, ALABAMA

FORT HOOD, TEXAS
DIGITAL MULTI-PURPOSE RANGE COMPLEX (DMPRC)
PN 51915 FY 00

TYPICAL ARMOR MOVING TARGET CARRIER SYSTEM

Sheet reference number: E-64
Sheet of

Contr. No. DACA63-01-C-0016

0068

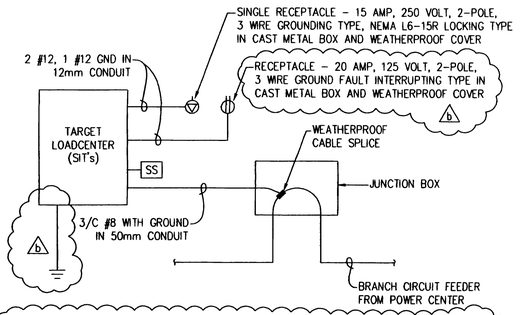

SIT TARGET EMPLACEMENT POWER RISER DIAGRAM

b

NOT TO SCALE

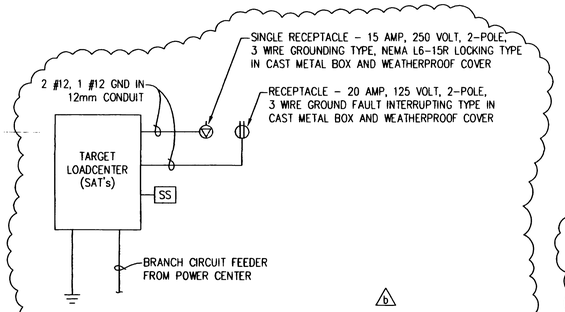

SAT TARGET EMPLACEMENT POWER RISER DIAGRAM

NOT TO SCALE

BREAKER INTERRUPTING CAPACITY 10,000 AMPS SYM.	PANEL SCHEDULE	NEMA 4 ENCLOSURE	BRACED FOR MINIMUM 10,000 AMPS SYM.

SIT TARGET LOADCENTER, 120/240 VOLT AC, 1-PHASE, 3 WIRE, 100 AMP, MAIN LUGS ONLY – SURFACE MOUNTED

EQUIPMENT SERVED	CKT. BKR. TRIP	CKT. BKR. POLE	VA/PHASE A	VA/PHASE B	CKT. No.	CKT. No.	VA/PHASE A	VA/PHASE B	CKT. BKR. POLE	CKT. BKR. TRIP	EQUIPMENT SERVED
THERMAL BLANKET	20	1	150		1	2	350		2	15	TARGET MECHANISM
SPARE BREAKER	20	1			3	4		350			
SPACE ONLY		1			5	6			1		SPACE ONLY

b

	A	B	
TOTAL CONNECTED VOLT – AMPS	500	350	= 850 VA

BREAKER INTERRUPTING CAPACITY 10,000 AMPS SYM.	PANEL SCHEDULE	NEMA 4 ENCLOSURE	BRACED FOR MINIMUM 10,000 AMPS SYM.

SAT TARGET LOADCENTER, 120/240 VOLT AC, 1-PHASE, 3 WIRE, 100 AMP, MAIN LUGS ONLY – SURFACE MOUNTED

EQUIPMENT SERVED	CKT. BKR. TRIP	CKT. BKR. POLE	VA/PHASE A	VA/PHASE B	CKT. No.	CKT. No.	VA/PHASE A	VA/PHASE B	CKT. BKR. POLE	CKT. BKR. TRIP	EQUIPMENT SERVED
THERMAL BLANKET	20	1	650		1	2	1000		2	15	TARGET MECHANISM
SPARE BREAKER	20	1			3	4		1000			
SPACE ONLY		1			5	6			1		SPACE ONLY

b

	A	B	
TOTAL CONNECTED VOLT – AMPS	1650	1000	= 2650 VA

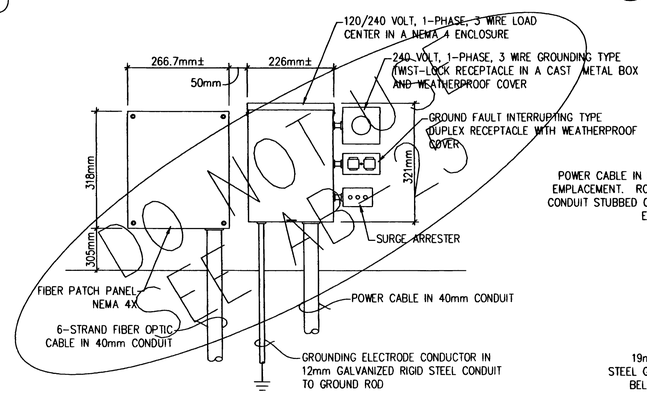

STATIONARY ARMORTARGET ELEVATION (A / E65 E65)

NOT TO SCALE

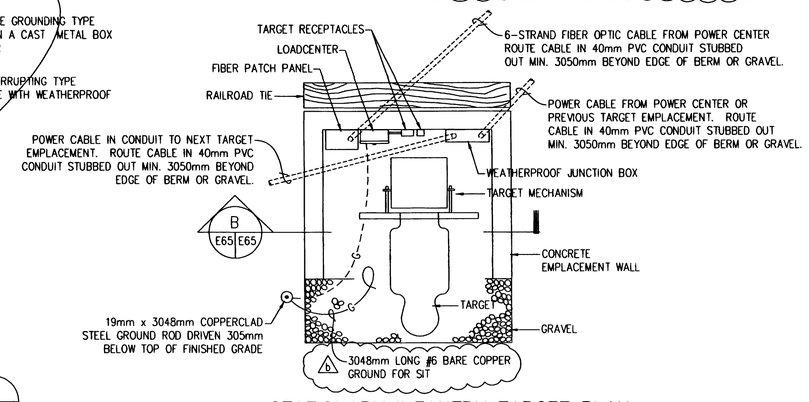

STATIONARY INFANTRY TARGET PLAN

SCALE: 1:20

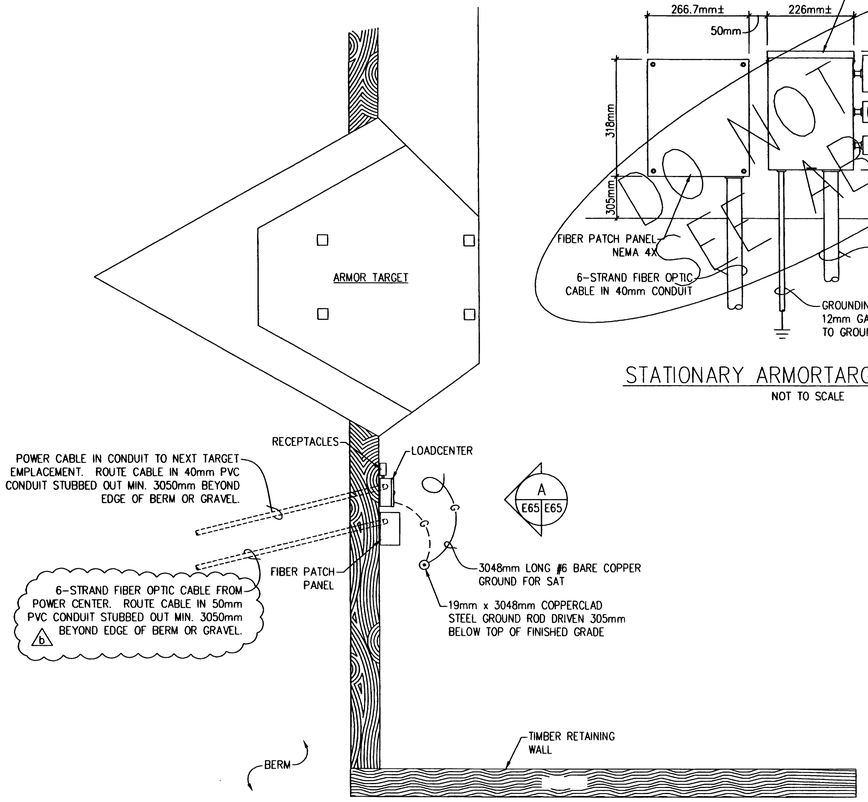

STATIONARY ARMOR TARGET PLAN

SCALE: 1:20

NOTE

GROUND RESISTANCE OF THE TARGET EMPLACEMENT GROUND SYSTEM SHALL BE 5 ohms OR LESS.

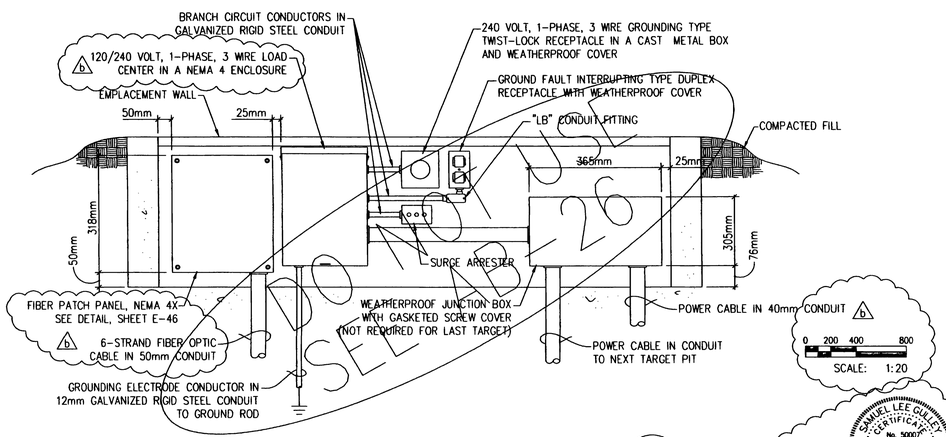

STATIONARY INFANTRY TARGET ELEVATION (B / E65 E65)

NOT TO SCALE

0 200 400 800

SCALE: 1:20

b

THE SEAL APPEARING ON THIS DOCUMENT WAS AUTHORIZED BY SAMUEL LEE GULLEY ON AUGUST 8, 2001

SAMUEL LEE GULLEY CERTIFICATE No. 50007 STATE OF FLORIDA PROFESSIONAL ENGINEER

Sheet reference number: E-65

Sheet of

b

US Army Corps of Engineers FORT WORTH DISTRICT

POLYENGINEERING, INC. 1020 Hartford Avenue Dothan, Alabama 36303 (334) 793-7790 (voice) (334) 793-9516 (fax)

Ch.	Date	App.
1	AUG 01	S.G

TITLE BLOCK EDIT, ADDED SEAL, REVISED DETAILS, ADDED SAT PANEL SCHEDULE AND ADDED RISER DIAGRAM

Designed by: Samuel L. Gulley
Dwn by: T. Bolton
Ckd by: F. Carbori
Reviewed by:
Submitted by: E. Lamar Faulk
Date: 19 July 2001
Sol. No. DACA63-01-B-0007
Contr. No. DACA63-01-C-0016
File name:
Plot date:
Plot scale: 1:20
Rev.

U.S. ARMY ENGINEER DISTRICT CORPS OF ENGINEERS FORT WORTH, TEXAS

POLYENGINEERING, INC. ENGINEERS & ARCHITECTS DOTHAN, ALABAMA

FORT HOOD, TEXAS DIGITAL MULTI-PURPOSE RANGE COMPLEX PN 51915 FY 00

EMPLACEMENT DETAILS

Contr. No. DACA63-01-C-0016

...\2000-022_E65.dwg 8/12/2005 8:19:50 AM

00689090

PANEL SCHEDULE

BREAKER INTERRUPTING CAPACITY 25,000 AMPS SYM. | NEMA 3R ENCLOSURE | BRACED FOR MINIMUM 25,000 AMPS SYM.

PANEL PCC3B , 480Y/277 VOLT AC, 3-PHASE, 4 WIRE, 175 AMP, 3 POLE MAIN BREAKER - SURFACE MOUNTED

EQUIPMENT SERVED	CKT. BKR. TRIP	CKT. BKR. POLE	VA/PHASE A	VA/PHASE B	VA/PHASE C	CKT. No.	CKT. No.	VA/PHASE A	VA/PHASE B	VA/PHASE C	CKT. BKR. POLE	CKT. BKR. TRIP	EQUIPMENT SERVED
PANEL "PC3B"	40	2	5100			1	2	18333			3	100	AMTC
				7000		3	4		18333				
BUS BAR HEATER	30	3			6667	5	6			18333			
			6667			7	8				3		SPACE ONLY
				6667		9	10						
SPACE ONLY		3				11	12						
						13	14				2		SPACE ONLY
						15	16						

TOTAL CONNECTED VOLT - AMPS: A 30,100 | B 32,000 | C 25,000 = 87,100 VA

PANEL SCHEDULE

BREAKER INTERRUPTING CAPACITY 25,000 AMPS SYM. | NEMA 3R ENCLOSURE | BRACED FOR MINIMUM 25,000 AMPS SYM.

PANEL PCC6B , 480Y/277 VOLT AC, 3-PHASE, 4 WIRE, 175 AMP, 3 POLE MAIN BREAKER - SURFACE MOUNTED

EQUIPMENT SERVED	CKT. BKR. TRIP	CKT. BKR. POLE	VA/PHASE A	VA/PHASE B	VA/PHASE C	CKT. No.	CKT. No.	VA/PHASE A	VA/PHASE B	VA/PHASE C	CKT. BKR. POLE	CKT. BKR. TRIP	EQUIPMENT SERVED
PANEL "PC6B"	70	2	9650			1	2	18333			3	100	AMTC
				11050		3	4		18333				
BUS BAR HEATER	30	3			6667	5	6			18333			
			6667			7	8				3		SPACE ONLY
				6667		9	10						
SPACE ONLY		3				11	12						
						13	14				2		SPACE ONLY
						15	16						

TOTAL CONNECTED VOLT - AMPS: A 34,650 | B 36,050 | C 25,000 = 95,700 VA

PANEL SCHEDULE

BREAKER INTERRUPTING CAPACITY 18,000 AMPS SYM. | NEMA 3R ENCLOSURE | BRACED FOR MINIMUM 18,000 AMPS SYM.

PANEL PCC9B , 480Y/277 VOLT AC, 3-PHASE, 4 WIRE, 175 AMP, 3 POLE MAIN BREAKER - SURFACE MOUNTED

EQUIPMENT SERVED	CKT. BKR. TRIP	CKT. BKR. POLE	VA/PHASE A	VA/PHASE B	VA/PHASE C	CKT. No.	CKT. No.	VA/PHASE A	VA/PHASE B	VA/PHASE C	CKT. BKR. POLE	CKT. BKR. TRIP	EQUIPMENT SERVED
PANEL "PC9B"	30	2	3100			1	2	18333			3	100	AMTC
				3700		3	4		18333				
BUS BAR HEATER	30	3			6667	5	6			18333			
			6667			7	8				3		SPACE ONLY
				6667		9	10						
SPACE ONLY		3				11	12						
						13	14				2		SPACE ONLY
						15	16						

TOTAL CONNECTED VOLT - AMPS: A 28,100 | B 28,700 | C 25,000 = 81,800 VA

PANEL SCHEDULE

BREAKER INTERRUPTING CAPACITY 18,000 AMPS SYM. | NEMA 3R ENCLOSURE | BRACED FOR MINIMUM 18,000 AMPS SYM.

PANEL ECM-1 , 480Y/277 VOLT AC, 3-PHASE, 4 WIRE, 125 AMP, 3 POLE MAIN BREAKER - SURFACE MOUNTED

EQUIPMENT SERVED	CKT. BKR. TRIP	CKT. BKR. POLE	VA/PHASE A	VA/PHASE B	VA/PHASE C	CKT. No.	CKT. No.	VA/PHASE A	VA/PHASE B	VA/PHASE C	CKT. BKR. POLE	CKT. BKR. TRIP	EQUIPMENT SERVED
PANEL "PCM-1"	30	2	2050			1	2	18333			3	100	AMTC
				2000		3	4		18333				
BUS BAR HEATER	30	3			6667	5	6			18333			
			6667			7	8				3		SPACE ONLY
				6667		9	10						
SPACE ONLY		3				11	12						
						13	14				2		SPACE ONLY
						15	16						

TOTAL CONNECTED VOLT - AMPS: A 27,050 | B 27,000 | C 25,000 = 79,050 VA

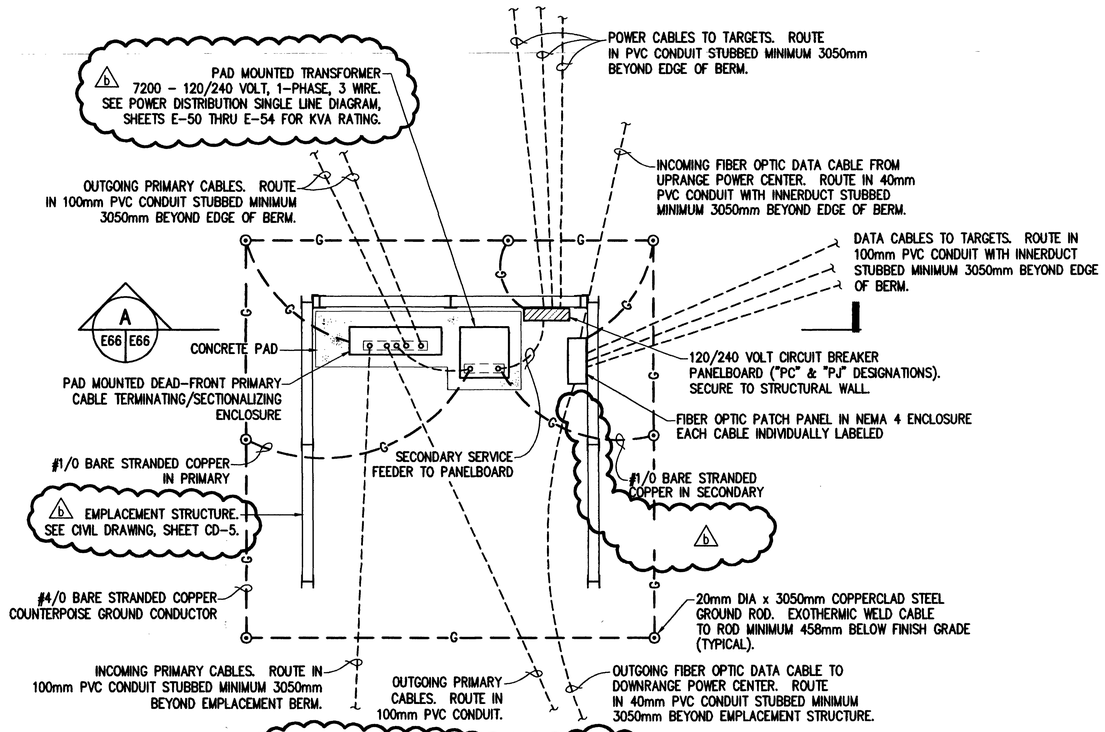

DOWNRANGE POWER CENTER PLAN
POWER CENTERS "PC2A", "PC4A" & "PJ3A"
SCALE: 1:50

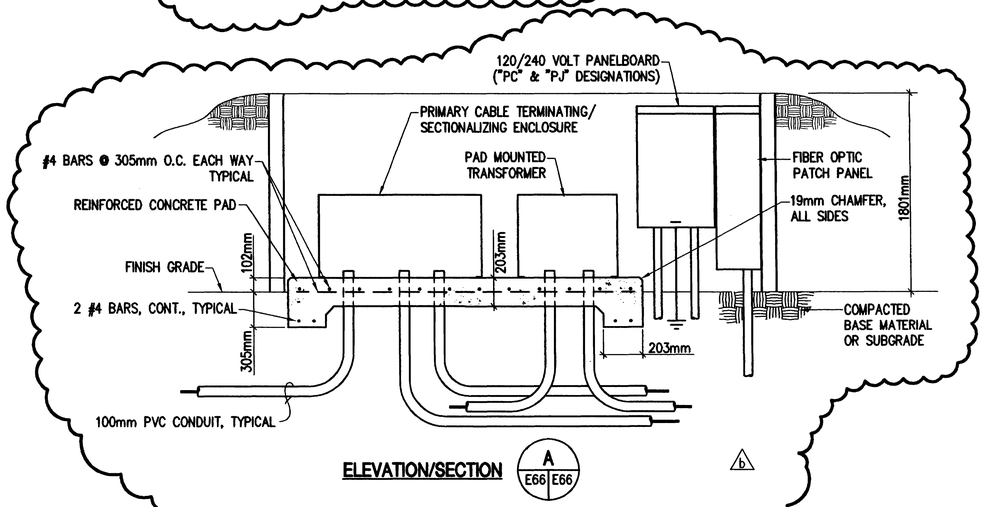

ELEVATION/SECTION A E66 E66

PAD MOUNTED TRANSFORMER/TERMINATING ENCLOSURE PAD
NOT TO SCALE

NOTE
SEE CIVIL DRAWINGS, SHEET CD-5, FOR EMPLACEMENT STRUCTURE.

1000 500 0 500 1000
SCALE: 1:50

THE SEAL APPEARING ON THIS DOCUMENT WAS AUTHORIZED BY SAMUEL LEE GULLEY ON AUGUST 8, 2001

SAMUEL LEE GULLEY CERTIFICATE NO. 0000 STATE OF FLORIDA PROFESSIONAL ENGINEER

US Army Corps of Engineers
FORT WORTH DISTRICT

POLYENGINEERING, INC.
1905 Headland Avenue
Dothan, Alabama 36303
(334) 793-9720 (voice)
(334) 793-9010 (fax)

Mark	Description	Date	Appr.
13	REVISED PANEL SCHEDULES AND DETAILS, TITLE BLOCK EDIT, ADDED SEAL	AUG 01	SLG

Designed by: Samuel L. Gulley
Drwn by: T. Bolton
Ckd by: F. Cortonot
Rev. by: Scott Turk
Submitted by: E. Lamar Faulk
Date: 19 July 2001
Sol. No. DACA63-01-B-0007
Contr. No. DACA63-01-C-0016
File name:
Plot date:
Plot scale: AS SHOWN
Rev.

U.S. ARMY ENGINEER DISTRICT
CORPS OF ENGINEERS
FORT WORTH, TEXAS

POLYENGINEERING, INC.
ENGINEERS & ARCHITECTS
DOTHAN, ALABAMA

FORT HOOD, TEXAS
DIGITAL MULTI-PURPOSE RANGE COMPLEX (DMPRC)
PN 51915 FY00

ELECTRICAL PANEL SCHEDULES
CLABBER CREEK

Sheet reference number: E-66
Sheet of

00689100

PANEL SCHEDULE

BREAKER INTERRUPTING CAPACITY 25,000 AMPS SYM. | NEMA 3R ENCLOSURE | BRACED FOR MINIMUM 25,000 AMPS SYM.

PANEL PJM4B , 480Y/277 VOLT AC, 3-PHASE, 4 WIRE, 175 AMP, 3 POLE MAIN BREAKER - SURFACE MOUNTED

EQUIPMENT SERVED	CKT. BKR. TRIP	CKT. BKR. POLE	VA/PHASE A	VA/PHASE B	VA/PHASE C	CKT. No.	CKT. No.	VA/PHASE A	VA/PHASE B	VA/PHASE C	CKT. BKR. POLE	CKT. BKR. TRIP	EQUIPMENT SERVED
PANEL "PJ4B"	70	2	7000			1	2	18333			3	100	AMTC
				8400		3	4		18333				
BUS BAR HEATER	30	3			6667	5	6			18333			
			6667			7	8				3		SPACE ONLY
				6667		9	10						
SPACE ONLY		3				11	12						
						13	14				2		SPACE ONLY
						15	16						

TOTAL CONNECTED VOLT - AMPS: A 32,000 | B 33,400 | C 25,000 = 90,400 VA

PANEL SCHEDULE

BREAKER INTERRUPTING CAPACITY 25,000 AMPS SYM. | NEMA 3R ENCLOSURE | BRACED FOR MINIMUM 25,000 AMPS SYM.

PANEL PJM6A , 480Y/277 VOLT AC, 3-PHASE, 4 WIRE, 175 AMP, 3 POLE MAIN BREAKER - SURFACE MOUNTED

EQUIPMENT SERVED	CKT. BKR. TRIP	CKT. BKR. POLE	VA/PHASE A	VA/PHASE B	VA/PHASE C	CKT. No.	CKT. No.	VA/PHASE A	VA/PHASE B	VA/PHASE C	CKT. BKR. POLE	CKT. BKR. TRIP	EQUIPMENT SERVED
PANEL "PJ6A"	100	2	18250			1	2	18333			3	100	AMTC
				18900		3	4		18333				
BUS BAR HEATER	30	3			6667	5	6			18333			
			6667			7	8				3		SPACE ONLY
				6667		9	10						
SPACE ONLY		3				11	12						
						13	14				2		SPACE ONLY
						15	16						

TOTAL CONNECTED VOLT - AMPS: A 43,250 | B 43,900 | C 25,000 = 112,150 VA

PANEL SCHEDULE

BREAKER INTERRUPTING CAPACITY 25,000 AMPS SYM. | NEMA 3R ENCLOSURE | BRACED FOR MINIMUM 25,000 AMPS SYM.

PANEL PJM7A , 480Y/277 VOLT AC, 3-PHASE, 4 WIRE, 175 AMP, 3 POLE MAIN BREAKER - SURFACE MOUNTED

EQUIPMENT SERVED	CKT. BKR. TRIP	CKT. BKR. POLE	VA/PHASE A	VA/PHASE B	VA/PHASE C	CKT. No.	CKT. No.	VA/PHASE A	VA/PHASE B	VA/PHASE C	CKT. BKR. POLE	CKT. BKR. TRIP	EQUIPMENT SERVED
PANEL "PJ7A"	40	2	5750			1	2	18333			3	100	AMTC
				6350		3	4		18333				
BUS BAR HEATER	30	3			6667	5	6			18333			
			6667			7	8				3		SPACE ONLY
				6667		9	10						
SPACE ONLY		3				11	12						
						13	14				2		SPACE ONLY
						15	16						

TOTAL CONNECTED VOLT - AMPS: A 30,750 | B 31,350 | C 25,000 = 87,100 VA

PANEL SCHEDULE

BREAKER INTERRUPTING CAPACITY 18,000 AMPS SYM. | NEMA 3R ENCLOSURE | BRACED FOR MINIMUM 18,000 AMPS SYM.

PANEL PJM8A , 480Y/277 VOLT AC, 3-PHASE, 4 WIRE, 175 AMP, 3 POLE MAIN BREAKER - SURFACE MOUNTED

EQUIPMENT SERVED	CKT. BKR. TRIP	CKT. BKR. POLE	VA/PHASE A	VA/PHASE B	VA/PHASE C	CKT. No.	CKT. No.	VA/PHASE A	VA/PHASE B	VA/PHASE C	CKT. BKR. POLE	CKT. BKR. TRIP	EQUIPMENT SERVED
PANEL "PJ8A"	40	2	3100			1	2	18333			3	100	AMTC
				3700		3	4		18333				
BUS BAR HEATER	30	3			6667	5	6			18333			
			6667			7	8				3		SPACE ONLY
				6667		9	10						
SPACE ONLY		3				11	12						
						13	14				2		SPACE ONLY
						15	16						

TOTAL CONNECTED VOLT - AMPS: A 28,100 | B 28,700 | C 25,000 = 81,800 VA

PANEL SCHEDULE

BREAKER INTERRUPTING CAPACITY 18,000 AMPS SYM. | NEMA 3R ENCLOSURE | BRACED FOR MINIMUM 18,000 AMPS SYM.

PANEL PJM9A , 480Y/277 VOLT AC, 3-PHASE, 4 WIRE, 175 AMP, 3 POLE MAIN BREAKER - SURFACE MOUNTED

EQUIPMENT SERVED	CKT. BKR. TRIP	CKT. BKR. POLE	VA/PHASE A	VA/PHASE B	VA/PHASE C	CKT. No.	CKT. No.	VA/PHASE A	VA/PHASE B	VA/PHASE C	CKT. BKR. POLE	CKT. BKR. TRIP	EQUIPMENT SERVED
PANEL "PJ9A"	40	2	3650			1	2				3	100	SPARE BREAKER (b)
				4300		3	4						
(b) SPARE BREAKER	30	3				5	6						
						7	8				3		SPACE ONLY
						9	10						
SPACE ONLY		3				11	12						
						13	14				2		SPACE ONLY
						15	16						

TOTAL CONNECTED VOLT - AMPS: A 3650 | B 4300 | C - = 7950 VA (b)

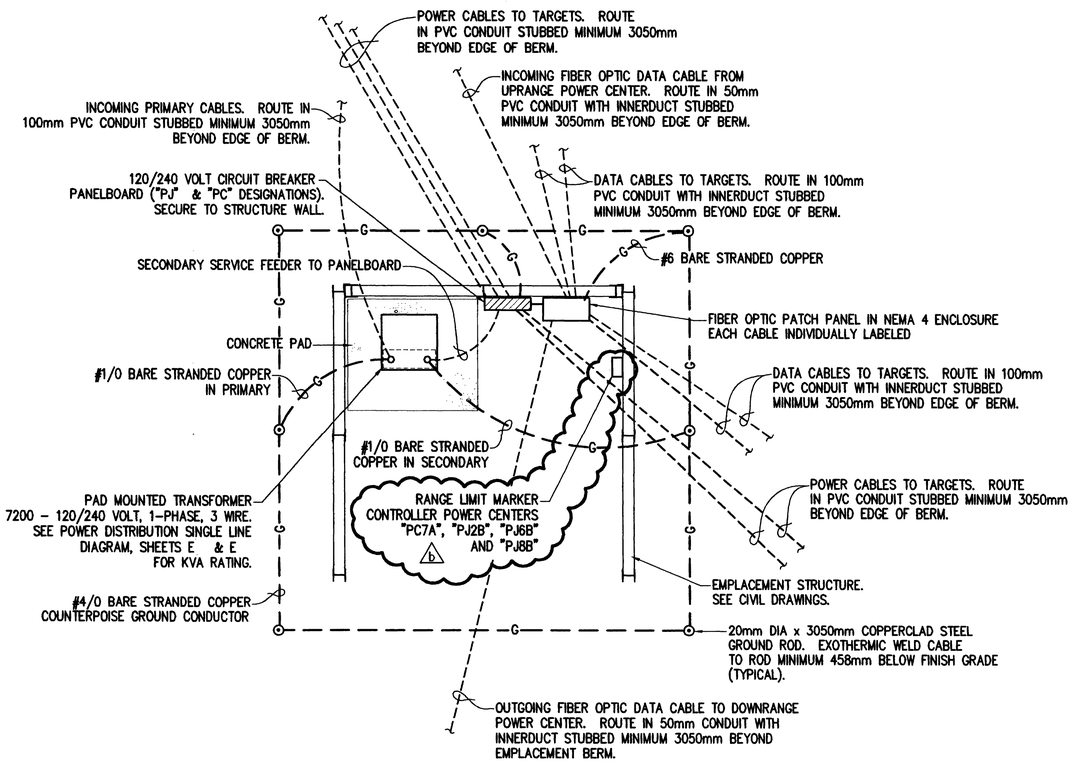

DOWNRANGE POWER CENTER PLAN
POWER CENTERS

SCALE: 1:50

NOTE
SEE CIVIL DRAWINGS, SHEET CD-5, FOR EMPLACEMENT STRUCTURE. (b)

1000 500 0 500 1000
SCALE: 1:50 (b)

THE SEAL APPEARING ON THIS DOCUMENT WAS AUTHORIZED BY SAMUEL LEE GULLEY ON AUGUST 8, 2001

SAMUEL LEE GULLEY CERTIFICATE NO. 37007 STATE OF FLORIDA PROFESSIONAL ENGINEER

US Army Corps of Engineers
FORT WORTH DISTRICT

POLYENGINEERING, INC.
1950 Headland Avenue
Dothan, Alabama 36303
(334) 793-2700 (voice)
(334) 793-3015 (fax)

Mark	Description	Date	Appr.
A	REVISED NOTE AND PANEL SCHEDULE, TITLE BLOCK EDIT, ADDED SEAL	AUG 01	SLG

Rev.

Date: 19 July 2001
Sol. No. DACA63-01-B-0007
Contr. No. DACA63-01-C-0016
Designed by: Samuel L. Gulley
Dwn by: T. Bolton | Ckd by: F. Corbari
Reviewed by: Scott Faulk
Submitted by: E. Lamar Faulk
File name:
Plot date:
Plot scale: AS SHOWN

U.S. ARMY ENGINEER DISTRICT
CORPS OF ENGINEERS
FORT WORTH, TEXAS

POLYENGINEERING, INC.
ENGINEERS & ARCHITECTS
DOTHAN, ALABAMA

FORT HOOD, TEXAS
DIGITAL MULTI-PURPOSE RANGE COMPLEX (DMPRC)
PN 51915 PC 00 (b)

ELECTRICAL PANEL SCHEDULES
JACK MOUNTAIN

Sheet reference number: E-67
Sheet of (b)

Contr. No. DACA63-01-C-0016

BREAKER INTERRUPTING CAPACITY 10,000 AMPS SYM.

PANEL SCHEDULE

NEMA 3R ENCLOSURE — BRACED FOR MINIMUM 10,000 AMPS SYM.

PANEL PC1B , 240/120 VOLT AC, 1-PHASE, 3 WIRE, 80 AMP, 2 POLE MAIN BREAKER – SURFACE MOUNTED

EQUIPMENT SERVED	CKT. BKR. TRIP	CKT. BKR. POLE	VA/PHASE A	VA/PHASE B	CKT. No.	CKT. No.	VA/PHASE A	VA/PHASE B	CKT. BKR. POLE	CKT. BKR. TRIP	EQUIPMENT SERVED
CC-2	35	2	2900		1	2	3050		2	35	CC-3 (SITs)
				3050	3	4		2900			
SPARE BREAKER	35	2			5	6			2	35	SPARE BREAKER
					7	8					
SPACE ONLY		2			9	10			2		SPACE ONLY
					11	12					
SPACE ONLY		2			13	14			2		SPACE ONLY
					15	16					

TOTAL CONNECTED VOLT – AMPS: A 5950, B 5950 = 11,900 VA

BREAKER INTERRUPTING CAPACITY 10,000 AMPS SYM.

PANEL SCHEDULE

NEMA 3R ENCLOSURE — BRACED FOR MINIMUM 10,000 AMPS SYM.

PANEL PC2B , 240/120 VOLT AC, 1-PHASE, 3 WIRE, 200 AMP, 2 POLE MAIN BREAKER – SURFACE MOUNTED

EQUIPMENT SERVED	CKT. BKR. TRIP	CKT. BKR. POLE	VA/PHASE A	VA/PHASE B	CKT. No.	CKT. No.	VA/PHASE A	VA/PHASE B	CKT. BKR. POLE	CKT. BKR. TRIP	EQUIPMENT SERVED
CV-5	35	2	1000		1	2	2900		2	35	CC-5 (SITs)
				1650	3	4		3050			
SPARE BREAKER	35	2			5	6	1650		2	35	CV-4
					7	8		1000			
CV-11	35	2	1000		9	10	1000		2	35	CV-8
				1650	11	12		1650			
CC-7 (SITs)	35	2	2900		13	14			2	35	SPARE BREAKER
				3050	15	16					
CC-6 (SITs)	35	2	3050		17	18			2		SPACE ONLY
				2900	19	20					
SPACE ONLY		2			21	22			2		SPACE ONLY
					23	24					
SPACE ONLY		2			25	26			2		SPACE ONLY
					27	28					

TOTAL CONNECTED VOLT – AMPS: A 13,500, B 14,950 = 28,450 VA

BREAKER INTERRUPTING CAPACITY 10,000 AMPS SYM.

PANEL SCHEDULE

NEMA 3R ENCLOSURE — BRACED FOR MINIMUM 10,000 AMPS SYM.

PANEL PC3B , 240/120 VOLT AC, 1-PHASE, 3 WIRE, 80 AMP, 2 POLE MAIN BREAKER – SURFACE MOUNTED

EQUIPMENT SERVED	CKT. BKR. TRIP	CKT. BKR. POLE	VA/PHASE A	VA/PHASE B	CKT. No.	CKT. No.	VA/PHASE A	VA/PHASE B	CKT. BKR. POLE	CKT. BKR. TRIP	EQUIPMENT SERVED
CV-20	35	2	1000		1	2	1000		2	35	CV-16
				1650	3	4		1650			
CV-15	35	2	1650		5	6			2	35	SPARE BREAKER
				1000	7	8					
AMTC CM-1	20	2	50		9	10	1000		2	35	CV-21
				50	11	12		1650			
LIGHTS	20	1	200		13	14			2	35	SPARE BREAKER
RECEPTACLES	20	1		1000	15	16					
MOTOR STARTER CONTROL	20	1	200		17	18			2		SPACE ONLY
SPACE ONLY		1			19	20					
SPACE ONLY		2			21	22			2		SPACE ONLY
					23	24					

TOTAL CONNECTED VOLT – AMPS: A 5100, B 7000 = 12,100 VA

BREAKER INTERRUPTING CAPACITY 10,000 AMPS SYM.

PANEL SCHEDULE

NEMA 3R ENCLOSURE — BRACED FOR MINIMUM 10,000 AMPS SYM.

PANEL PC4B , 240/120 VOLT AC, 1-PHASE, 3 WIRE, 80 AMP, 2 POLE MAIN BREAKER – SURFACE MOUNTED

EQUIPMENT SERVED	CKT. BKR. TRIP	CKT. BKR. POLE	VA/PHASE A	VA/PHASE B	CKT. No.	CKT. No.	VA/PHASE A	VA/PHASE B	CKT. BKR. POLE	CKT. BKR. TRIP	EQUIPMENT SERVED
CV-17	35	2	1000		1	2	1000		2	35	CV-22
				1650	3	4		1650			
CV-26	35	2	1650		5	6	1650		2	35	CV-21
				1000	7	8		1000			
SPARE BREAKER	35	2			9	10			2	35	SPARE BREAKER
					11	12					
SPACE ONLY		2			13	14			2		SPACE ONLY
					15	16					
SPACE ONLY		2			17	18			2		SPACE ONLY
					19	20					

TOTAL CONNECTED VOLT – AMPS: A 5300, B 5300 = 10,600 VA

BREAKER INTERRUPTING CAPACITY 10,000 AMPS SYM.

PANEL SCHEDULE

NEMA 3R ENCLOSURE — BRACED FOR MINIMUM 10,000 AMPS SYM.

PANEL PC5B , 240/120 VOLT AC, 1-PHASE, 3 WIRE, 150 AMP, 2 POLE MAIN BREAKER – SURFACE MOUNTED

EQUIPMENT SERVED	CKT. BKR. TRIP	CKT. BKR. POLE	VA/PHASE A	VA/PHASE B	CKT. No.	CKT. No.	VA/PHASE A	VA/PHASE B	CKT. BKR. POLE	CKT. BKR. TRIP	EQUIPMENT SERVED
CV-38	35	2	1000		1	2	1650		2	35	CV-31
				1650	3	4		1000			
SPARE BREAKER	35	2			5	6	2900		2	35	CC-12 (SITs)
					7	8		3050			
CV-37	35	2	1000		9	10			2	35	SPARE BREAKER
				1650	11	12					
SPACE ONLY		2			13	14			2		SPACE ONLY
					15	16					
SPACE ONLY		2			17	18			2		SPACE ONLY
					19	20					

TOTAL CONNECTED VOLT – AMPS: A 6550, B 7350 = 13,900 VA

BREAKER INTERRUPTING CAPACITY 10,000 AMPS SYM.

PANEL SCHEDULE

NEMA 3R ENCLOSURE — BRACED FOR MINIMUM 10,000 AMPS SYM.

PANEL PC6B , 240/120 VOLT AC, 1-PHASE, 3 WIRE, 150 AMP, 2 POLE MAIN BREAKER – SURFACE MOUNTED

EQUIPMENT SERVED	CKT. BKR. TRIP	CKT. BKR. POLE	VA/PHASE A	VA/PHASE B	CKT. No.	CKT. No.	VA/PHASE A	VA/PHASE B	CKT. BKR. POLE	CKT. BKR. TRIP	EQUIPMENT SERVED
CV-45	35	2	1000		1	2	1650		2	35	CV-44
				1650	3	4		1000			
CV-40	35	2	1650		5	6	1000		2	35	CV-43
				1000	7	8		1650			
CV-49	35	2	1000		9	10	50		2	20	AMTC CM-2
				1650	11	12		50			
CC-10	35	2	2900		13	14			2	35	SPARE BREAKER
				3050	15	16					
LIGHTS	20	1	200		17	18			2		SPACE ONLY
RECEPTACLES	20	1		1000	19	20					
MOTOR STARTER CONTROL	20	1	200		21	22			2		SPACE ONLY
SPACE ONLY		1			23	24					

TOTAL CONNECTED VOLT – AMPS: A 9650, B 11,050 = 20,700 VA

CAMERA TOWER

BREAKER INTERRUPTING CAPACITY 10,000 AMPS SYM.

PANEL SCHEDULE

NEMA 4 ENCLOSURE — BRACED FOR MINIMUM 10,000 AMPS SYM.

CAMERA LOADCENTER, 120/240 VOLT AC, 1-PHASE, 3 WIRE, 50 AMP, 2 POLE MAIN BREAKER – SURFACE MOUNTED

EQUIPMENT SERVED	CKT. BKR. TRIP	CKT. BKR. POLE	VA/PHASE A	VA/PHASE B	CKT. No.	CKT. No.	VA/PHASE A	VA/PHASE B	CKT. BKR. POLE	CKT. BKR. TRIP	EQUIPMENT SERVED
CAMERA	20	1	1500		1	2			1		SPACE ONLY
SPARE BREAKER	20	1			3	4			1		SPACE ONLY
SPACE ONLY		1			5	6			1		SPACE ONLY

b TOTAL CONNECTED VOLT – AMPS: A 1500, B – = 1500 VA

b THE SEAL APPEARING ON THIS DOCUMENT WAS AUTHORIZED BY SAMUEL LEE GULLEY ON AUGUST 8, 2001

SAMUEL LEE GULLEY, CERTIFICATE NO. 39801, STATE OF FLORIDA, PROFESSIONAL ENGINEER

US Army Corps of Engineers
FORT WORTH DISTRICT

POLYENGINEERING, INC.
POLYENGINEERING, INC.
1956 Headland Avenue
Dothan, Alabama 36305
(334) 793-4720 (voice)
(334) 793-5218 (fax)

Mark	Description	Date	Appr.
A	ADDED CAMERA LOADCENTER, TITLE BLOCK EDIT, ADDED SEAL	AUG 01	SLG

Designed by: Samuel L. Gulley
Dwn by: T. Bolton
Ckd by: F. Corbari
Reviewed by: Scott Faulk
Submitted by: E. Lamar Faulk
Date: 19 July 2001
Rev.
Sol. No. DACA63-01-B-0007
Contr. No. DACA63-01-C-0016
File name:
Plot date:
Plot scale: NONE

U.S. ARMY ENGINEER DISTRICT
CORPS OF ENGINEERS
FORT WORTH, TEXAS

POLYENGINEERING, INC.
ENGINEERS & ARCHITECTS
DOTHAN, ALABAMA

FORT HOOD, TEXAS
DIGITAL MULTI-PURPOSE RANGE COMPLEX
(DMPRC)
PN 51915 FY00

b

ELECTRICAL PANEL SCHEDULES
CLABBER CREEK

Sheet reference number: E-68

Sheet of

b

2068-170

PANEL SCHEDULE

BREAKER INTERRUPTING CAPACITY 10,000 AMPS SYM. | NEMA 3R ENCLOSURE | BRACED FOR MINIMUM 10,000 AMPS SYM.

PANEL PC7B , 240/120 VOLT AC, 1-PHASE, 3 WIRE, 150 AMP, 2 POLE MAIN BREAKER - SURFACE MOUNTED

EQUIPMENT SERVED	CKT. BKR. TRIP	CKT. BKR. POLE	VA/PHASE A	VA/PHASE B	CKT. No.	CKT. No.	VA/PHASE A	VA/PHASE B	CKT. BKR. POLE	CKT. BKR. TRIP	EQUIPMENT SERVED
CV-50	35	2	1000		1	2	1650		2	35	CV-51
				1650	3	4		1000			
CC-15 (SITs)	35	2	2900		5	6	2900		2	35	CC-7
				3050	7	8		3050			
SPARE BREAKER	35	2			9	10			2	35	SPARE BREAKER
					11	12					
SPACE ONLY		2			13	14			2		SPACE ONLY
					15	16					
SPACE ONLY		2			17	18			2		SPACE ONLY
					19	20					
SPACE ONLY		2			21	22			2		SPACE ONLY
					23	24					

TOTAL CONNECTED VOLT - AMPS: A 8450, B 8750 = 17,200 VA

PANEL SCHEDULE

BREAKER INTERRUPTING CAPACITY 10,000 AMPS SYM. | NEMA 3R ENCLOSURE | BRACED FOR MINIMUM 10,000 AMPS SYM.

PANEL PC8B , 240/120 VOLT AC, 1-PHASE, 3 WIRE, 150 AMP, 2 POLE MAIN BREAKER - SURFACE MOUNTED

EQUIPMENT SERVED	CKT. BKR. TRIP	CKT. BKR. POLE	VA/PHASE A	VA/PHASE B	CKT. No.	CKT. No.	VA/PHASE A	VA/PHASE B	CKT. BKR. POLE	CKT. BKR. TRIP	EQUIPMENT SERVED
CV-68	35	2	1000		1	2	1650		2	35	CV-67
				1650	3	4		1000			
CV-66	35	2	1650		5	6	1000		2	35	CV-61
				1000	7	8		1650			
CV-65	35	2	1000		9	10	1650		2	35	CV-56
				1650	11	12		1000			
SPACE ONLY		2			13	14			2		SPACE ONLY
					15	16					
SPACE ONLY		2			17	18			2		SPACE ONLY
					19	20					

TOTAL CONNECTED VOLT - AMPS: A 7950, B 7950 = 15,900 VA

PANEL SCHEDULE

BREAKER INTERRUPTING CAPACITY 10,000 AMPS SYM. | NEMA 3R ENCLOSURE | BRACED FOR MINIMUM 10,000 AMPS SYM.

PANEL PC9B , 240/120 VOLT AC, 1-PHASE, 3 WIRE, 50 AMP, 2 POLE MAIN BREAKER - SURFACE MOUNTED

EQUIPMENT SERVED	CKT. BKR. TRIP	CKT. BKR. POLE	VA/PHASE A	VA/PHASE B	CKT. No.	CKT. No.	VA/PHASE A	VA/PHASE B	CKT. BKR. POLE	CKT. BKR. TRIP	EQUIPMENT SERVED
CV-70	35	2	1650		1	2	1000		2	35	CV-69
				1000	3	4		1650			
AMTC CM-3	20	2	50		5	6			2	35	SPARE BREAKER
				50	7	8					
LIGHTS	20	1	200		9	10			2		SPACE ONLY
RECEPTACLES	20	1		1000	11	12					
MOTOR STARTER CONTROL	20	1	200		13	14			2		SPACE ONLY
SPACE ONLY		1			15	16					

TOTAL CONNECTED VOLT - AMPS: A 3100, B 3700 = 6800 VA

PANEL SCHEDULE

BREAKER INTERRUPTING CAPACITY 10,000 AMPS SYM. | NEMA 3R ENCLOSURE | BRACED FOR MINIMUM 10,000 AMPS SYM.

PANEL PCM-1 , 240/120 VOLT AC, 1-PHASE, 3 WIRE, 50 AMP, 2 POLE MAIN BREAKER - SURFACE MOUNTED

EQUIPMENT SERVED	CKT. BKR. TRIP	CKT. BKR. POLE	VA/PHASE A	VA/PHASE B	CKT. No.	CKT. No.	VA/PHASE A	VA/PHASE B	CKT. BKR. POLE	CKT. BKR. TRIP	EQUIPMENT SERVED
CV-12	35	2	1650		1	2			2	35	SPARE BREAKER
				1000	3	4					
LIGHTS	20	2	200		5	6	200		1	20	MOTOR STARTER CONTROLS
RECEPTACLES	20	2		1000	7	8		1500	1	20	RANGE LIMIT MARKER
AMTC ECM-1	20	2	50		9	10			2		SPACE ONLY
				50	11	12					

(e) (b) TOTAL CONNECTED VOLT - AMPS: A 2100, B 3550 = 5650 VA (e)

PANEL SCHEDULE

BREAKER INTERRUPTING CAPACITY 10,000 AMPS SYM. | NEMA 3R ENCLOSURE | BRACED FOR MINIMUM 10,000 AMPS SYM.

PANEL PC10B , 240/120 VOLT AC, 1-PHASE, 3 WIRE, 150 AMP, 2 POLE MAIN BREAKER - SURFACE MOUNTED

EQUIPMENT SERVED	CKT. BKR. TRIP	CKT. BKR. POLE	VA/PHASE A	VA/PHASE B	CKT. No.	CKT. No.	VA/PHASE A	VA/PHASE B	CKT. BKR. POLE	CKT. BKR. TRIP	EQUIPMENT SERVED
CV-59	35	2	1000		1	2	1650		2	35	CV-64
				1650	3	4		1000			
CV-63	35	2	1650		5	6	1000		2	35	CV-58
				1000	7	8		1650			
CV-60	35	2	1000		9	10	1650		2	35	CV-62
				1650	11	12		1000			
SPARE BREAKER	35	2			13	14			2	35	SPARE BREAKER
					15	16					
SPACE ONLY		2			17	18			2		SPACE ONLY
					19	20					
SPACE ONLY		2			21	22			2		SPACE ONLY
					23	24					

TOTAL CONNECTED VOLT - AMPS: A 7950, B 7950 = 15,900 VA

PANEL SCHEDULE

BREAKER INTERRUPTING CAPACITY 10,000 AMPS SYM. | NEMA 3R ENCLOSURE | BRACED FOR MINIMUM 10,000 AMPS SYM.

PANEL PC1A , 240/120 VOLT AC, 1-PHASE, 3 WIRE, 200 AMP, 2 POLE MAIN BREAKER - SURFACE MOUNTED

EQUIPMENT SERVED	CKT. BKR. TRIP	CKT. BKR. POLE	VA/PHASE A	VA/PHASE B	CKT. No.	CKT. No.	VA/PHASE A	VA/PHASE B	CKT. BKR. POLE	CKT. BKR. TRIP	EQUIPMENT SERVED
CC-1 (SITs)	35	2	2900		1	2	3050		2	35	CC-4 (SITs)
				3050	3	4		2900			
CV-6	35	2	1000		5	6	1000		2	35	CV-2
				1650	7	8		1650			
CV-1	35	2	1650		9	10	1650		2	35	CV-3
				1000	11	12		1000			
SPARE BREAKER	35	2			13	14			2	35	SPARE BREAKER
					15	16					
SPACE ONLY		2			17	18			2		SPACE ONLY
					19	20					
SPACE ONLY		2			21	22			2		SPACE ONLY
					23	24					
SPACE ONLY		2			25	26			2		SPACE ONLY
					27	28					

TOTAL CONNECTED VOLT - AMPS: A 11,250, B 11,250 = 22,500 VA

PANEL SCHEDULE

BREAKER INTERRUPTING CAPACITY 10,000 AMPS SYM. | NEMA 3R ENCLOSURE | BRACED FOR MINIMUM 10,000 AMPS SYM.

PANEL PC2A , 240/120 VOLT AC, 1-PHASE, 3 WIRE, 150 AMP, 2 POLE MAIN BREAKER - SURFACE MOUNTED

EQUIPMENT SERVED	CKT. BKR. TRIP	CKT. BKR. POLE	VA/PHASE A	VA/PHASE B	CKT. No.	CKT. No.	VA/PHASE A	VA/PHASE B	CKT. BKR. POLE	CKT. BKR. TRIP	EQUIPMENT SERVED
CC-9	35	2	2900		1	2	1650		2	35	CV-9
				3050	3	4		1000			
CV-13	35	2	1000		5	6	3050		2	35	CC-8 (SITs)
				1650	7	8		2900			
SPARE BREAKER	35	2			9	10	1000		2	35	CV-18
					11	12		1650			
SPACE ONLY		2			13	14			2	35	SPARE BREAKER
					15	16					
SPACE ONLY		2			17	18			2		SPACE ONLY
					19	20					
SPACE ONLY		2			21	22			2		SPACE ONLY
					23	24					

TOTAL CONNECTED VOLT - AMPS: A 9600, B 10,250 = 19,850 VA

THE SEAL APPEARING ON THIS DOCUMENT WAS AUTHORIZED BY SAMUEL LEE GULLEY ON AUGUST 8, 2001

SAMUEL LEE GULLEY CERTIFICATE NO. 51915 STATE OF FLORIDA PROFESSIONAL ENGINEER

US Army Corps of Engineers FORT WORTH DISTRICT

POLYENGINEERING, INC. CONSULTING ENGINEERS & ARCHITECTS
POLYENGINEERING, INC.
1905 Headland Avenue
Dothan, Alabama 36303
(334) 793-4780 (voice)
(334) 793-8016 (fax)

Mark	Description	Date	Appr.
2	REVISED PANEL SCHEDULE	SEPT 01	SLG
1	REVISED PANEL SCHEDULE	AUG 01	SLG

Designed by: Samuel L. Gulley
Dwn by: T. Bolton
Ckd by: F. Corbari
Reviewed by: Scott Faulk
Submitted by: E. Lamar Faulk
Date: 19 July 2001
Rev.
Sol. No. DACA63-01-B-0007
Contr. No. DACA63-01-C-0016
File name:
Plot date:
Plot scale: NONE

U.S. ARMY ENGINEER DISTRICT CORPS OF ENGINEERS FORT WORTH, TEXAS

POLYENGINEERING, INC. ENGINEERS & ARCHITECTS DOTHAN, ALABAMA

FORT HOOD, TEXAS
DIGITAL MULTI-PURPOSE RANGE COMPLEX (DMPRC) FY 00
PN 51915

ELECTRICAL PANEL SCHEDULES
CLABBER CREEK

Sheet reference number: E-69

Sheet x of x

PANEL SCHEDULE

BREAKER INTERRUPTING CAPACITY 10,000 AMPS SYM. | NEMA 3R ENCLOSURE | BRACED FOR MINIMUM 10,000 AMPS SYM.

PANEL PC3A , 240/120 VOLT AC, 1-PHASE, 3 WIRE, 150 AMP, 2 POLE MAIN BREAKER - SURFACE MOUNTED

EQUIPMENT SERVED	CKT. BKR. TRIP	CKT. BKR. POLE	VA/PHASE A	VA/PHASE B	CKT. No.	CKT. No.	VA/PHASE A	VA/PHASE B	CKT. BKR. POLE	CKT. BKR. TRIP	EQUIPMENT SERVED
CV-19	35	2	1000		1	2	2900		2	35	CC-11 (SITs)
				1650	3	4		3050			
CV-25	35	2	1650		5	6	1000		2	35	CV-24
				1000	7	8		1650			
CV-33	35	2	1000		9	10			2	35	SPARE BREAKER
				1650	11	12					
CV-30	35	2	1650		13	14			2	35	SPARE BREAKER
				1000	15	16					
SPACE ONLY		2			17	18			2	35	SPARE BREAKER
					19	20					
SPACE ONLY		2			21	22			2		SPACE ONLY
					23	24					
SPACE ONLY		2			25	26			2		SPACE ONLY
					27	28					

TOTAL CONNECTED VOLT - AMPS: A 9200, B 10,000 = 19,200 VA

PANEL SCHEDULE

BREAKER INTERRUPTING CAPACITY 10,000 AMPS SYM. | NEMA 3R ENCLOSURE | BRACED FOR MINIMUM 10,000 AMPS SYM.

PANEL PC4A , 240/120 VOLT AC, 1-PHASE, 3 WIRE, 50 AMP, 2 POLE MAIN BREAKER - SURFACE MOUNTED

EQUIPMENT SERVED	CKT. BKR. TRIP	CKT. BKR. POLE	VA/PHASE A	VA/PHASE B	CKT. No.	CKT. No.	VA/PHASE A	VA/PHASE B	CKT. BKR. POLE	CKT. BKR. TRIP	EQUIPMENT SERVED
CV-36	35	2	1000		1	2	1000		2	35	CV-35
				1650	3	4		1650			
CV-29	35	2	1650		5	6			2	35	SPARE BREAKER
				1000	7	8					
SPACE ONLY		2			9	10			2		SPACE ONLY
					11	12					
SPACE ONLY		2			13	14			2		SPACE ONLY
					15	16					

TOTAL CONNECTED VOLT - AMPS: A 3650, B 4300 = 7950 VA

PANEL SCHEDULE

BREAKER INTERRUPTING CAPACITY 10,000 AMPS SYM. | NEMA 3R ENCLOSURE | BRACED FOR MINIMUM 10,000 AMPS SYM.

PANEL PC5A , 240/120 VOLT AC, 1-PHASE, 3 WIRE, 50 AMP, 2 POLE MAIN BREAKER - SURFACE MOUNTED

EQUIPMENT SERVED	CKT. BKR. TRIP	CKT. BKR. POLE	VA/PHASE A	VA/PHASE B	CKT. No.	CKT. No.	VA/PHASE A	VA/PHASE B	CKT. BKR. POLE	CKT. BKR. TRIP	EQUIPMENT SERVED
CV-28	35	2	1000		1	2			2	35	SPARE BREAKER
				1650	3	4					
CV-34	35	2	1650		5	6			2	35	SPARE BREAKER
				1000	7	8					
SPACE ONLY		2			9	10			2		SPACE ONLY
					11	12					
SPACE ONLY		2			13	14			2		SPACE ONLY
					15	16					

TOTAL CONNECTED VOLT - AMPS: A 2650, B 2650 = 5300 VA

PANEL SCHEDULE

BREAKER INTERRUPTING CAPACITY 18,000 AMPS SYM. | NEMA 3R ENCLOSURE | BRACED FOR MINIMUM 18,000 AMPS SYM.

PANEL ECM-2 , 480Y/277 VOLT AC, 3-PHASE, 4 WIRE, 125 AMP, 3 POLE MAIN BREAKER - SURFACE MOUNTED

EQUIPMENT SERVED	CKT. BKR. TRIP	CKT. BKR. POLE	VA/PHASE A	VA/PHASE B	VA/PHASE C	CKT. No.	CKT. No.	VA/PHASE A	VA/PHASE B	VA/PHASE C	CKT. BKR. POLE	CKT. BKR. TRIP	EQUIPMENT SERVED
PANEL "PCM-2"	30	2	400			1	2	18333			3	100	AMTC
				1000		3	4		18333				
BUS BAR HEATER	30	3			6667	5	6			18333			
			6667			7	8				3		SPACE ONLY
				6667		9	10						
SPACE ONLY		3				11	12						
						13	14				2		SPACE ONLY
						15	16						

* LOCKABLE TYPE CIRCUIT BREAKER

TOTAL CONNECTED VOLT - AMPS: A 25,400, B 26,000, C 26,000 = 77,400 VA

PANEL SCHEDULE

BREAKER INTERRUPTING CAPACITY 10,000 AMPS SYM. | NEMA 3R ENCLOSURE | BRACED FOR MINIMUM 10,000 AMPS SYM.

PANEL PC6A , 240/120 VOLT AC, 1-PHASE, 3 WIRE, 80 AMP, 2 POLE MAIN BREAKER - SURFACE MOUNTED

EQUIPMENT SERVED	CKT. BKR. TRIP	CKT. BKR. POLE	VA/PHASE A	VA/PHASE B	CKT. No.	CKT. No.	VA/PHASE A	VA/PHASE B	CKT. BKR. POLE	CKT. BKR. TRIP	EQUIPMENT SERVED
CV-48	35	2	1000		1	2	1000		2	35	CV-41
				1650	3	4		1650			
SPARE BREAKER	35	2			5	6	1650		2	35	CV-39
					7	8		1000			
SPACE ONLY		2			9	10			2	35	SPARE BREAKER
					11	12					
SPACE ONLY		2			13	14			2		SPACE ONLY
					15	16					

TOTAL CONNECTED VOLT - AMPS: A 3650, B 4300 = 7950 VA

PANEL SCHEDULE

BREAKER INTERRUPTING CAPACITY 10,000 AMPS SYM. | NEMA 3R ENCLOSURE | BRACED FOR MINIMUM 10,000 AMPS SYM.

PANEL PC7A , 240/120 VOLT AC, 1-PHASE, 3 WIRE, 150 AMP, 2 POLE MAIN BREAKER - SURFACE MOUNTED

EQUIPMENT SERVED	CKT. BKR. TRIP	CKT. BKR. POLE	VA/PHASE A	VA/PHASE B	CKT. No.	CKT. No.	VA/PHASE A	VA/PHASE B	CKT. BKR. POLE	CKT. BKR. TRIP	EQUIPMENT SERVED
CV-57	35	2	1000		1	2	1000		2	35	CV-55
				1650	3	4		1650			
CV-54	35	2	1650		5	6			2	35	SPARE BREAKER
				1000	7	8					
CC-14 (SITs)	35	2	2900		9	10			2	35	SPARE BREAKER
				3050	11	12					
RANGE LIMIT MARKER	20	1	1500		13	14			2		SPACE ONLY
SPARE BREAKER	20	1			15	16					

TOTAL CONNECTED VOLT - AMPS: A 8050, B 7350 = 15,400 VA

PANEL SCHEDULE

BREAKER INTERRUPTING CAPACITY 10,000 AMPS SYM. | NEMA 3R ENCLOSURE | BRACED FOR MINIMUM 10,000 AMPS SYM.

PANEL PC8A , 240/120 VOLT AC, 1-PHASE, 3 WIRE, 80 AMP, 2 POLE MAIN BREAKER - SURFACE MOUNTED

EQUIPMENT SERVED	CKT. BKR. TRIP	CKT. BKR. POLE	VA/PHASE A	VA/PHASE B	CKT. No.	CKT. No.	VA/PHASE A	VA/PHASE B	CKT. BKR. POLE	CKT. BKR. TRIP	EQUIPMENT SERVED
CV-47	35	2	1000		1	2	1000		2	35	CV-52
				1650	3	4		1650			
SPARE BREAKER	35	2			5	6	2900		2	35	CC-13
					7	8		3050			
SPACE ONLY		2			9	10			2		SPACE ONLY
					11	12					
SPACE ONLY		2			13	14			2		SPACE ONLY
					15	16					

TOTAL CONNECTED VOLT - AMPS: A 4900, B 6350 = 11,250 VA

PANEL SCHEDULE

BREAKER INTERRUPTING CAPACITY 10,000 AMPS SYM. | NEMA 3R ENCLOSURE | BRACED FOR MINIMUM 10,000 AMPS SYM.

PANEL PCM-2 , 240/120 VOLT AC, 1-PHASE, 3 WIRE, 50 AMP, 2 POLE MAIN BREAKER - SURFACE MOUNTED

EQUIPMENT SERVED	CKT. BKR. TRIP	CKT. BKR. POLE	VA/PHASE A	VA/PHASE B	CKT. No.	CKT. No.	VA/PHASE A	VA/PHASE B	CKT. BKR. POLE	CKT. BKR. TRIP	EQUIPMENT SERVED
LIGHTS	20	1	200		1	2	200		1	35	MOTOR STARTER CONTROLS
RECEPTACLES	20	1		1000	3	4			1	35	SPARE BREAKER
SPARE BREAKER	35	2			5	6			2	35	SPARE BREAKER
					7	8					
AMTC ECM-2	20	2	50		9	10			2		SPACE ONLY
				50	11	12					
SPACE ONLY		2			13	14			2		SPACE ONLY
					15	16					

TOTAL CONNECTED VOLT - AMPS: A 450, B 1050 = 1500 VA

THE SEAL APPEARING ON THIS DOCUMENT WAS AUTHORIZED BY SAMUEL LEE GULLEY ON AUGUST 8, 2001

SAMUEL LEE GULLEY CERTIFICATE NO. 0046001 STATE OF FLORIDA PROFESSIONAL ENGINEER

US Army Corps of Engineers FORT WORTH DISTRICT

POLYENGINEERING, INC. 1920 Headland Avenue Dothan, Alabama 36303 (334) 793-4720 (voice) (334) 793-9015 (fax)

Mark	Description	Date	Appr.
2	REVISED PANEL SCHEDULE	SEPT 01	SLG
1	REVISED PANEL SCHEDULE	AUG 01	SLG

Designed by: Samuel L. Gulley | Date: 19 July 2001 | Rev.
Dwn by: T. Belton | Ckd by: T. Corbett | Sol. No. DACA63-01-B-0007
Contr. No. DACA63-01-C-0016
Reviewed by: Scott Faulk | File name:
Submitted by: E. Lamar Faulk | Plot date: | Plot scale: NONE

U.S. ARMY ENGINEER DISTRICT CORPS OF ENGINEERS FORT WORTH, TEXAS

POLYENGINEERING, INC. ENGINEERS & ARCHITECTS DOTHAN, ALABAMA

FORT HOOD, TEXAS DIGITAL MULTI-PURPOSE RANGE COMPLEX (DMPRC) PN 51915 FY 00

ELECTRICAL PANEL SCHEDULES CLABBER CREEK

Sheet reference number: E-70

Sheet x of x

00689140

PANEL SCHEDULE

BREAKER INTERRUPTING CAPACITY 10,000 AMPS SYM. | NEMA 3R ENCLOSURE | BRACED FOR MINIMUM 10,000 AMPS SYM.

PANEL PJ1B , 240/120 VOLT AC, 1-PHASE, 3 WIRE, 80 AMP, 2 POLE MAIN BREAKER - SURFACE MOUNTED

EQUIPMENT SERVED	CKT. BKR. TRIP	CKT. BKR. POLE	VA/PHASE A	VA/PHASE B	CKT. No.	CKT. No.	VA/PHASE A	VA/PHASE B	CKT. BKR. POLE	CKT. BKR. TRIP	EQUIPMENT SERVED
JV-4	35	2	1000		1	2			2	35	SPARE BREAKER
				1650	3	4					
JV-8	35	2	1650		5	6			2		SPACE ONLY
				1000	7	8					
JC-3 (SITs)	35	2	2900		9	10			2		SPACE ONLY
				3050	11	12					
SPACE ONLY		2			13	14			2		SPACE ONLY
					15	16					

TOTAL CONNECTED VOLT - AMPS A 5550 B 5700 = 11,250 VA

PANEL SCHEDULE

BREAKER INTERRUPTING CAPACITY 10,000 AMPS SYM. | NEMA 3R ENCLOSURE | BRACED FOR MINIMUM 10,000 AMPS SYM.

PANEL PJ2B , 240/120 VOLT AC, 1-PHASE, 3 WIRE, 150 AMP, 2 POLE MAIN BREAKER - SURFACE MOUNTED

EQUIPMENT SERVED	CKT. BKR. TRIP	CKT. BKR. POLE	VA/PHASE A	VA/PHASE B	CKT. No.	CKT. No.	VA/PHASE A	VA/PHASE B	CKT. BKR. POLE	CKT. BKR. TRIP	EQUIPMENT SERVED
JV-16	35	2	1000		1	2	3050		2	35	JC-8 (SITs)
				1650	3	4		2900			
JC-5 (SITs)	35	2	2900		5	6	1650		2	35	JV-17
				3050	7	8		1000			
SPARE BREAKER	35	2			9	10			2	35	SPARE BREAKER
					11	12					
SPARE BREAKER	35	2			13	14			2		SPACE ONLY
					15	16					
RANGE LIMIT MARKER	20	1	1500		17	18			2		SPACE ONLY
SPARE BREAKER	20	1			19	20					
SPACE ONLY		2			21	22			2		SPACE ONLY
					23	24					

TOTAL CONNECTED VOLT - AMPS A 10,100 B 8600 = 18,700 VA (b)

PANEL SCHEDULE

BREAKER INTERRUPTING CAPACITY 10,000 AMPS SYM. | NEMA 3R ENCLOSURE | BRACED FOR MINIMUM 10,000 AMPS SYM.

PANEL PJ3B , 240/120 VOLT AC, 1-PHASE, 3 WIRE, 150 AMP, 2 POLE MAIN BREAKER - SURFACE MOUNTED

EQUIPMENT SERVED	CKT. BKR. TRIP	CKT. BKR. POLE	VA/PHASE A	VA/PHASE B	CKT. No.	CKT. No.	VA/PHASE A	VA/PHASE B	CKT. BKR. POLE	CKT. BKR. TRIP	EQUIPMENT SERVED
JV-21	35	2	1650		1	2	1650		2	35	JV-27
				1000	3	4		1000			
JV-29	35	2	1000		5	6	1000		2	35	JV-28
				1650	7	8		1650			
JV-26	35	2	1650		9	10			2	35	SPARE BREAKER
				1000	11	12					
SPARE BREAKER	35	2			13	14			2		SPACE ONLY
					15	16					
SPACE ONLY		2			17	18			2		SPACE ONLY
					19	20					
SPACE ONLY		2			21	22			2		SPACE ONLY
					23	24					

TOTAL CONNECTED VOLT - AMPS A 6950 B 6300 = 13,250 VA

PANEL SCHEDULE

BREAKER INTERRUPTING CAPACITY 10,000 AMPS SYM. | NEMA 3R ENCLOSURE | BRACED FOR MINIMUM 10,000 AMPS SYM.

PANEL PJ4B , 240/120 VOLT AC, 1-PHASE, 3 WIRE, 150 AMP, 2 POLE MAIN BREAKER - SURFACE MOUNTED

EQUIPMENT SERVED	CKT. BKR. TRIP	CKT. BKR. POLE	VA/PHASE A	VA/PHASE B	CKT. No.	CKT. No.	VA/PHASE A	VA/PHASE B	CKT. BKR. POLE	CKT. BKR. TRIP	EQUIPMENT SERVED
JV-33	35	2	1000		1	2	1650		2	35	JV-38
				1650	3	4		1000			
SPARE BREAKER	35	2			5	6	2900		2	35	JC-11 (SITs)
					7	8		3050			
JV-37	35	2	1000		9	10	50		2	20	AMT JM-1
				1650	11	12		50			
SPARE BREAKER	35	2			13	14	200		1	20	LIGHTS
					15	16		1000	1	20	RECEPTACLES
SPACE ONLY		2			17	18	200		1	20	MOTOR STARTER CONTROLS
					19	20			1		SPACE ONLY
SPACE ONLY		2			21	22			2		SPACE ONLY
					23	24					

TOTAL CONNECTED VOLT - AMPS A 7000 B 8400 = 15,400 VA

PANEL SCHEDULE

BREAKER INTERRUPTING CAPACITY 10,000 AMPS SYM. | NEMA 3R ENCLOSURE | BRACED FOR MINIMUM 10,000 AMPS SYM.

PANEL PJ5B , 240/120 VOLT AC, 1-PHASE, 3 WIRE, 80 AMP, 2 POLE MAIN BREAKER - SURFACE MOUNTED

EQUIPMENT SERVED	CKT. BKR. TRIP	CKT. BKR. POLE	VA/PHASE A	VA/PHASE B	CKT. No.	CKT. No.	VA/PHASE A	VA/PHASE B	CKT. BKR. POLE	CKT. BKR. TRIP	EQUIPMENT SERVED
JV-42	35	2	1000		1	2	2900		2	35	JC-15 (SITs)
				1650	3	4		3050			
JV-41	35	2	1650		5	6	1000		2	35	JV-49
				1000	7	8		1650			
SPARE BREAKER	35	2			9	10			2	35	SPARE BREAKER
					11	12					
SPACE ONLY		2			13	14			2		SPACE ONLY
					15	16					
SPACE ONLY		2			17	18			2		SPACE ONLY
					19	20					
SPACE ONLY		2			21	22			2		SPACE ONLY
					23	24					

TOTAL CONNECTED VOLT - AMPS A 6550 B 7350 = 13,900 VA

PANEL SCHEDULE

BREAKER INTERRUPTING CAPACITY 10,000 AMPS SYM. | NEMA 3R ENCLOSURE | BRACED FOR MINIMUM 10,000 AMPS SYM.

PANEL PJ6B , 240/120 VOLT AC, 1-PHASE, 3 WIRE, 80 AMP, 2 POLE MAIN BREAKER - SURFACE MOUNTED

EQUIPMENT SERVED	CKT. BKR. TRIP	CKT. BKR. POLE	VA/PHASE A	VA/PHASE B	CKT. No.	CKT. No.	VA/PHASE A	VA/PHASE B	CKT. BKR. POLE	CKT. BKR. TRIP	EQUIPMENT SERVED
SPARE BREAKER	35	2			1	2	1000		2	35	JV-51
					3	4		1650			
SPARE BREAKER	35	2			5	6	1650		2	35	JV-55
					7	8		1000			
SPARE BREAKER	35	2			9	10			2	35	SPARE BREAKER
					11	12					
RANGE LIMIT MARKER	20	1	1500		13	14			2		SPACE ONLY
SPARE BREAKER	20	1			15	16					

TOTAL CONNECTED VOLT - AMPS A 4150 B 2650 = 6800 VA (b)

PANEL SCHEDULE

BREAKER INTERRUPTING CAPACITY 10,000 AMPS SYM. | NEMA 3R ENCLOSURE | BRACED FOR MINIMUM 10,000 AMPS SYM.

PANEL PJM-1 , 240/120 VOLT AC, 1-PHASE, 3 WIRE, 50 AMP, 2 POLE MAIN BREAKER - SURFACE MOUNTED

EQUIPMENT SERVED	CKT. BKR. TRIP	CKT. BKR. POLE	VA/PHASE A	VA/PHASE B	CKT. No.	CKT. No.	VA/PHASE A	VA/PHASE B	CKT. BKR. POLE	CKT. BKR. TRIP	EQUIPMENT SERVED
SPARE BREAKER	20	1			1	2	200		1	20	MOTOR STARTER CONTROLS
RECEPTACLES	20	1		1000	3	4			1	20	SPARE BREAKER
SPARE BREAKER	35	2			5	6			2	35	SPARE BREAKER
					7	8					
(e) AMTC EJM-1	20	2	50		9	10			2		SPACE ONLY
				50	11	12					

(b) TOTAL CONNECTED VOLT - AMPS A 250 B 1050 = 1300 VA (e)

THE SEAL APPEARING ON THIS DOCUMENT WAS AUTHORIZED BY SAMUEL LEE GULLEY ON AUGUST 8, 2001

SAMUEL LEE GULLEY CERTIFICATE NO. 47017 STATE OF FLORIDA PROFESSIONAL ENGINEER

US Army Corps of Engineers
FORT WORTH DISTRICT

POLYENGINEERING, INC.
1988 Headland Avenue
Dothan, Alabama 36303
(334) 794-2700 (voice)
(334) 794-2016 (fax)

Mark	Description	Date	Appr.
2	REVISED PANEL SCHEDULES	SEPT 01	SLG
1	REVISED PANEL SCHEDULES AND ADDED SCHEDULE PJM-1	AUG 01	SLG

Designed by: Samuel L. Gulley
Dwn by: T. Bolton
Ckd by: F. Corbari
Date: 19 July 2001
Sol. No. DACA63-01-B-0007
Contr. No. DACA63-01-C-0016
Reviewed by: Scott Faulk
Submitted by: E. Lamar Faulk
File name:
Plot date:
Plot scale: NONE
Rev.

U.S. ARMY ENGINEER DISTRICT
CORPS OF ENGINEERS
FORT WORTH, TEXAS

POLYENGINEERING, INC.
ENGINEERS & ARCHITECTS
DOTHAN, ALABAMA

FORT HOOD, TEXAS
DIGITAL MULTI-PURPOSE RANGE COMPLEX (DMPRC)
PN 51915 FY 00

ELECTRICAL PANEL SCHEDULES
JACK MOUNTAIN

Sheet reference number: E-71
Sheet x of x

Contr. No. DACA63-01-C-0016

0068

PANEL SCHEDULE

BREAKER INTERRUPTING CAPACITY 10,000 AMPS SYM. | NEMA 3R ENCLOSURE | BRACED FOR MINIMUM 10,000 AMPS SYM.

PANEL PJ7B , 240/120 VOLT AC, 1-PHASE, 3 WIRE, 80 AMP, 2 POLE MAIN BREAKER - SURFACE MOUNTED

EQUIPMENT SERVED	CKT. BKR. TRIP	CKT. BKR. POLE	VA/PHASE A	VA/PHASE B	CKT. No.	CKT. No.	VA/PHASE A	VA/PHASE B	CKT. BKR. POLE	CKT. BKR. TRIP	EQUIPMENT SERVED
JV-70	35	2	1000		1	2			2	35	SPARE BREAKER
				1650	3	4					
JV-63	35	2	1650		5	6	1000		2	35	JV-60
				1000	7	8		1650			
JV-59	35	2	1000		9	10			2	35	SPARE BREAKER
				1650	11	12					
SPACE ONLY		2			13	14			2		SPACE ONLY
					15	16					
SPACE ONLY		2			17	18			2		SPACE ONLY
					19	20					

TOTAL CONNECTED VOLT - AMPS A 4650 B 5950 = 10,600 VA

PANEL SCHEDULE

BREAKER INTERRUPTING CAPACITY 10,000 AMPS SYM. | NEMA 3R ENCLOSURE | BRACED FOR MINIMUM 10,000 AMPS SYM.

PANEL PJ8B , 240/120 VOLT AC, 1-PHASE, 3 WIRE, 150 AMP, 2 POLE MAIN BREAKER - SURFACE MOUNTED

EQUIPMENT SERVED	CKT. BKR. TRIP	CKT. BKR. POLE	VA/PHASE A	VA/PHASE B	CKT. No.	CKT. No.	VA/PHASE A	VA/PHASE B	CKT. BKR. POLE	CKT. BKR. TRIP	EQUIPMENT SERVED
SPARE BREAKER	35	2			1	2	1650		2	35	JV-62
					3	4		1000			
JV-58	35	2	1650		5	6	1000		2	35	JV-61
				1000	7	8		1650			
JV-68	35	2	1000		9	10	1650		2	35	JV-67
				1650	11	12		1000			
SPARE BREAKER	35	2			13	14			2		SPACE ONLY
					15	16					
RANGE LIMIT MARKER	20	1	1500		17	18			2		SPACE ONLY
SPARE BREAKER	20	1			19	20					

b

TOTAL CONNECTED VOLT - AMPS A 8450 B 6300 = 14,750 VA b

PANEL SCHEDULE

BREAKER INTERRUPTING CAPACITY 10,000 AMPS SYM. | NEMA 3R ENCLOSURE | BRACED FOR MINIMUM 10,000 AMPS SYM.

PANEL PCM-3 , 240/120 VOLT AC, 1-PHASE, 3 WIRE, 50 AMP, 2 POLE MAIN BREAKER - SURFACE MOUNTED

EQUIPMENT SERVED	CKT. BKR. TRIP	CKT. BKR. POLE	VA/PHASE A	VA/PHASE B	CKT. No.	CKT. No.	VA/PHASE A	VA/PHASE B	CKT. BKR. POLE	CKT. BKR. TRIP	EQUIPMENT SERVED
LIGHTS	20	1	200		1	2	200		1	20	MOTOR STARTER CONTROLS
RECEPTACLES	20	1		1000	3	4			1	20	SPARE BREAKER
SPARE BREAKER	35	2			5	6			2	35	SPARE BREAKER
					7	8					
RANGE LIMIT MARKER	20	1	1500		9	10	50		2	20	AMTC ECM-3
SPARE BREAKER	20	1			11	12		50			

b TOTAL CONNECTED VOLT - AMPS A 1950 B 1050 = 3000 VA e

PANEL SCHEDULE

BREAKER INTERRUPTING CAPACITY 18,000 AMPS SYM. | NEMA 3R ENCLOSURE | BRACED FOR MINIMUM 18,000 AMPS SYM.

PANEL ECM-3 , 480Y/277 VOLT AC, 3-PHASE, 4 WIRE, 125 AMP, 3 POLE MAIN BREAKER - SURFACE MOUNTED

EQUIPMENT SERVED	CKT. BKR. TRIP	CKT. BKR. POLE	VA/PHASE A	VA/PHASE B	VA/PHASE C	CKT. No.	CKT. No.	VA/PHASE A	VA/PHASE B	VA/PHASE C	CKT. BKR. POLE	CKT. BKR. TRIP	EQUIPMENT SERVED
b PANEL "PCM-3"	30	2	1900			1	2	18333			3	100	AMTC
				1000		3	4		18333				
BUS BAR HEATER	30	3			6667	5	6			18333			
			6667			7	8				3		SPACE ONLY
				6667		9	10						
SPACE ONLY		3				11	12						
						13	14				2		SPACE ONLY
						15	16						

TOTAL CONNECTED VOLT - AMPS A 26,900 B 26,000 C 25,000 = 77,900 VA b

PANEL SCHEDULE

BREAKER INTERRUPTING CAPACITY 10,000 AMPS SYM. | NEMA 3R ENCLOSURE | BRACED FOR MINIMUM 10,000 AMPS SYM.

PANEL PJ1A , 240/120 VOLT AC, 1-PHASE, 3 WIRE, 80 AMP, 2 POLE MAIN BREAKER - SURFACE MOUNTED

EQUIPMENT SERVED	CKT. BKR. TRIP	CKT. BKR. POLE	VA/PHASE A	VA/PHASE B	CKT. No.	CKT. No.	VA/PHASE A	VA/PHASE B	CKT. BKR. POLE	CKT. BKR. TRIP	EQUIPMENT SERVED
JV-1	35	2	1000		1	2	2900		2	35	JC-4 (SITs)
				1650	3	4		3050			
SPARE BREAKER	35	2			5	6	1650		2	35	JV-6
					7	8		1000			
SPACE ONLY		2			9	10			2	35	SPARE BREAKER
					11	12					
SPACE ONLY		2			13	14			2		SPACE ONLY
					15	16					

TOTAL CONNECTED VOLT - AMPS A 5550 B 5700 = 11,250 VA

PANEL SCHEDULE

BREAKER INTERRUPTING CAPACITY 10,000 AMPS SYM. | NEMA 3R ENCLOSURE | BRACED FOR MINIMUM 10,000 AMPS SYM.

PANEL PJ2A , 240/120 VOLT AC, 1-PHASE, 3 WIRE, 150 AMP, 2 POLE MAIN BREAKER - SURFACE MOUNTED

EQUIPMENT SERVED	CKT. BKR. TRIP	CKT. BKR. POLE	VA/PHASE A	VA/PHASE B	CKT. No.	CKT. No.	VA/PHASE A	VA/PHASE B	CKT. BKR. POLE	CKT. BKR. TRIP	EQUIPMENT SERVED
JV-3	35	2	1000		1	2	2900		2	35	JC-1 (SITs)
				1650	3	4		3050			
JV-7	35	2	1650		5	6	1650		2	35	JV-2
				1000	7	8		1000			
JV-10	35	2	1000		9	10	1000		2	35	JV-9
				1650	11	12		1650			
SPARE BREAKER	35	2			13	14	3050		2	35	JC-2 (SITs)
					15	16		2900			
SPACE ONLY		2			17	18			2	35	SPARE BREAKER
					19	20					
SPACE ONLY		2			21	22			2		SPACE ONLY
					23	24					

TOTAL CONNECTED VOLT - AMPS A 12,250 B 12,900 = 25,150 VA

PANEL SCHEDULE

BREAKER INTERRUPTING CAPACITY 10,000 AMPS SYM. | NEMA 3R ENCLOSURE | BRACED FOR MINIMUM 10,000 AMPS SYM.

PANEL PJ3A , 240/120 VOLT AC, 1-PHASE, 3 WIRE, 150 AMP, 2 POLE MAIN BREAKER - SURFACE MOUNTED

EQUIPMENT SERVED	CKT. BKR. TRIP	CKT. BKR. POLE	VA/PHASE A	VA/PHASE B	CKT. No.	CKT. No.	VA/PHASE A	VA/PHASE B	CKT. BKR. POLE	CKT. BKR. TRIP	EQUIPMENT SERVED
JV-12	35	2	1650		1	2	2900		2	35	JC-6 (SITs)
				1000	3	4		3050			
JV-14	35	2	1000		5	6	1650		2	35	JV-11
				1650	7	8		1000			
SPARE BREAKER	35	2			9	10	1000		2	35	JV-18
					11	12		1650			
SPACE ONLY		2			13	14			2	35	SPARE BREAKER
					15	16					
SPACE ONLY		2			17	18			2		SPACE ONLY
					19	20					

TOTAL CONNECTED VOLT - AMPS A 8200 B 8350 = 16,550 VA

PANEL SCHEDULE

BREAKER INTERRUPTING CAPACITY 25,000 AMPS SYM. | NEMA 3R ENCLOSURE | BRACED FOR MINIMUM 25,000 AMPS SYM.

PANEL EJM-1 , 480Y/277 VOLT AC, 3-PHASE, 4 WIRE, 125 AMP, 3 POLE MAIN BREAKER - SURFACE MOUNTED

EQUIPMENT SERVED	CKT. BKR. TRIP	CKT. BKR. POLE	VA/PHASE A	VA/PHASE B	VA/PHASE C	CKT. No.	CKT. No.	VA/PHASE A	VA/PHASE B	VA/PHASE C	CKT. BKR. POLE	CKT. BKR. TRIP	EQUIPMENT SERVED
PANEL "PJM-1"	30	2	200			1	2	18333			3	100	AMTC
				1000		3	4		18333				
BUS BAR HEATER	30	3			6667	5	6			18333			
			6667			7	8				3		SPACE ONLY
				6667		9	10						
SPACE ONLY		2				11	12						
						13	14				2		SPACE ONLY
SPACE ONLY		2				15	16						
						17	18						

b TOTAL CONNECTED VOLT - AMPS A 25,200 B 26,000 C 25,000 = 76,200 VA

THE SEAL APPEARING ON THIS DOCUMENT WAS AUTHORIZED BY SAMUEL LEE GULLEY ON AUGUST 8, 2001

SAMUEL LEE GULLEY CERTIFICATE NO. 52681 STATE OF FLORIDA PROFESSIONAL ENGINEER

US Army Corps of Engineers FORT WORTH DISTRICT

POLYENGINEERING, INC. ENGINEERS & ARCHITECTS
POLYENGINEERING, INC.
1952 Headland Avenue
Dothan, Alabama 36303
(334) 792-4700 (voice)
(334) 792-9216 (fax)

Mark	Description	Date	Appr.
1	REVISED PANEL SCHEDULE	SEPT 01	SLG
2	REVISED PANEL SCHEDULES AND ADDED SCHEDULE EJM-1	AUG 01	SLG

Designed by: Samuel L. Gulley
Dwn by: T. Belton
Ckd by: F. Corbori
Reviewed by: Scott Faulk
Submitted by: E. Lamar Faulk
Date: 19 July 2001
Rev.
Sol. No. DACA63-01-B-0007
Contr. No. DACA63-01-C-0016
File name:
Plot date:
Plot scale: NONE

U.S. ARMY ENGINEER DISTRICT CORPS OF ENGINEERS FORT WORTH, TEXAS

POLYENGINEERING, INC. ENGINEERS & ARCHITECTS DOTHAN, ALABAMA

FORT HOOD, TEXAS
DIGITAL MULTI-PURPOSE RANGE COMPLEX (DMPRC)
FY 00
PN 51915

ELECTRICAL PANEL SCHEDULES
JACK MOUNTAIN

Sheet reference number: E-72

Sheet x of x

Contr. No. DACA63-01-C-0016

00689 00

PANEL SCHEDULE

BREAKER INTERRUPTING CAPACITY 10,000 AMPS SYM. | NEMA 3R ENCLOSURE | BRACED FOR MINIMUM 10,000 AMPS SYM.

PANEL PJ4A , 240/120 VOLT AC, 1-PHASE, 3 WIRE, 150 AMP, 2 POLE MAIN BREAKER - SURFACE MOUNTED

EQUIPMENT SERVED	CKT. BKR. TRIP	CKT. BKR. POLE	VA/PHASE A	VA/PHASE B	CKT. No.	CKT. No.	VA/PHASE A	VA/PHASE B	CKT. BKR. POLE	CKT. BKR. TRIP	EQUIPMENT SERVED
JV-15	35	2	1000		1	2	2900		2	35	JC-7 (SITs)
				1650	3	4		3050			
JV-22	35	2	1650		5	6	1650		2	35	JV-19
				1000	7	8		1000			
JV-20	35	2	1000		9	10			2	35	SPARE BREAKER
				1650	11	12					
SPACE ONLY		2			13	14			2	35	SPARE BREAKER
					15	16					
SPACE ONLY		2			17	18			2		SPACE ONLY
					19	20					
SPACE ONLY		2			21	22			2		SPACE ONLY
					23	24					

TOTAL CONNECTED VOLT - AMPS A 8200 B 8350 = 16,550 VA

PANEL SCHEDULE

BREAKER INTERRUPTING CAPACITY 10,000 AMPS SYM. | NEMA 3R ENCLOSURE | BRACED FOR MINIMUM 10,000 AMPS SYM.

PANEL PJ5A , 240/120 VOLT AC, 1-PHASE, 3 WIRE, 150 AMP, 2 POLE MAIN BREAKER - SURFACE MOUNTED

EQUIPMENT SERVED	CKT. BKR. TRIP	CKT. BKR. POLE	VA/PHASE A	VA/PHASE B	CKT. No.	CKT. No.	VA/PHASE A	VA/PHASE B	CKT. BKR. POLE	CKT. BKR. TRIP	EQUIPMENT SERVED
JC-14 (SITs)	35	2	2900		1	2	3050		2	35	JC-10 (SITs)
				3050	3	4		2900			
e SPARE BREAKER	35	2			5	6	1650		2	35	JV-31
					7	8		1000			
JV-32	35	2	1000		9	10	1000		2	35	JV-30
				1650	11	12		1650			
SPARE BREAKER	35	2			13	14			2		SPACE ONLY
					15	16					
SPACE ONLY		2			17	18			2		SPACE ONLY
					19	20					

TOTAL CONNECTED VOLT - AMPS A 9600 B 10,250 = 19,850 VA e

PANEL SCHEDULE

BREAKER INTERRUPTING CAPACITY 10,000 AMPS SYM. | NEMA 3R ENCLOSURE | BRACED FOR MINIMUM 10,000 AMPS SYM.

PANEL PJ6A , 240/120 VOLT AC, 1-PHASE, 3 WIRE, 200 AMP, 2 POLE MAIN BREAKER - SURFACE MOUNTED

EQUIPMENT SERVED	CKT. BKR. TRIP	CKT. BKR. POLE	VA/PHASE A	VA/PHASE B	CKT. No.	CKT. No.	VA/PHASE A	VA/PHASE B	CKT. BKR. POLE	CKT. BKR. TRIP	EQUIPMENT SERVED
JC-3	35	2	2900		1	2	2900		2	35	JC-12 (SITs)
				3050	3	4		3050			
JV-36	35	2	1000		5	6	1650		2	35	JV-35
				1650	7	8		1000			
JV-40	35	2	1650		9	10	3050		2	35	JC-9
				1000	11	12		2900			
JC-13 (SITs)	35	2	3050		13	14	1000		2	35	JV-34
				2900	15	16		1650			
JV-39	35	2	1000		17	18	50		2	20	JM-2 (AMTC)
				1650	19	20		50			
SPARE BREAKER	35	2			21	22			2		SPACE ONLY
					23	24					
SPACE ONLY		2			25	26			2		SPACE ONLY
					27	28					

TOTAL CONNECTED VOLT - AMPS A 18,250 B 18,900 = 37,150 VA

PANEL SCHEDULE

BREAKER INTERRUPTING CAPACITY 10,000 AMPS SYM. | NEMA 3R ENCLOSURE | BRACED FOR MINIMUM 10,000 AMPS SYM.

PANEL PJM-2 , 240/120 VOLT AC, 1-PHASE, 3 WIRE, 80 AMP, 2 POLE MAIN BREAKER - SURFACE MOUNTED

EQUIPMENT SERVED	CKT. BKR. TRIP	CKT. BKR. POLE	VA/PHASE A	VA/PHASE B	CKT. No.	CKT. No.	VA/PHASE A	VA/PHASE B	CKT. BKR. POLE	CKT. BKR. TRIP	EQUIPMENT SERVED
SPARE BREAKER	20	1			1	2	200		1	20	MOTOR STARTER CONTROLS
RECEPTACLES	20	1		1000	3	4			1	20	SPARE BREAKER
e JV-24	35	2	1650		5	6			2	35	SPARE BREAKER
				1000	7	8					
SPACE ONLY		2			9	10			2		SPACE ONLY
					11	12					

b TOTAL CONNECTED VOLT - AMPS A 1850 B 2000 = 3850 VA e

PANEL SCHEDULE

BREAKER INTERRUPTING CAPACITY 10,000 AMPS SYM. | NEMA 3R ENCLOSURE | BRACED FOR MINIMUM 10,000 AMPS SYM.

PANEL PJ7A , 240/120 VOLT AC, 1-PHASE, 3 WIRE, 80 AMP, 2 POLE MAIN BREAKER - SURFACE MOUNTED

EQUIPMENT SERVED	CKT. BKR. TRIP	CKT. BKR. POLE	VA/PHASE A	VA/PHASE B	CKT. No.	CKT. No.	VA/PHASE A	VA/PHASE B	CKT. BKR. POLE	CKT. BKR. TRIP	EQUIPMENT SERVED
JV-48	35	2	1000		1	2	1000		2	35	JV-47
				1650	3	4		1650			
JV-46	35	2	1650		5	6	1650		2	35	JV-53
				1000	7	8		1000			
JM-3 (AMTC)	20	2	50		9	10			2	35	SPARE BREAKER
				50	11	12					
SPARE BREAKER	35	2			13	14	200		1	20	LIGHTS
					15	16		1000	1	20	RECEPTACLES
SPACE ONLY		2			17	18	200		1	20	MOTOR STARTER CONTROLS
					19	20			1		SPACE ONLY

TOTAL CONNECTED VOLT - AMPS A 5750 B 6350 = 12,100 VA

PANEL SCHEDULE

BREAKER INTERRUPTING CAPACITY 10,000 AMPS SYM. | NEMA 3R ENCLOSURE | BRACED FOR MINIMUM 10,000 AMPS SYM.

PANEL PJ8A , 240/120 VOLT AC, 1-PHASE, 3 WIRE, 80 AMP, 2 POLE MAIN BREAKER - SURFACE MOUNTED

EQUIPMENT SERVED	CKT. BKR. TRIP	CKT. BKR. POLE	VA/PHASE A	VA/PHASE B	CKT. No.	CKT. No.	VA/PHASE A	VA/PHASE B	CKT. BKR. POLE	CKT. BKR. TRIP	EQUIPMENT SERVED
JV-45	35	2	1000		1	2	1650		2	35	JV-44
				1650	3	4		1000			
JM-4 (AMTC)	20	2	50		5	6			2	35	SPARE BREAKER
				50	7	8					
SPARE BREAKER	35	2			9	10	200		1	20	LIGHTS
					11	12		1000	1	20	RECEPTACLES
SPACE ONLY		2			13	14	200		1	20	MOTOR STARTER CONTROLS
					15	16			1		SPACE ONLY
SPACE ONLY		2			17	18			2		SPACE ONLY
					19	20					

TOTAL CONNECTED VOLT - AMPS A 3100 B 3700 = 6800 VA

PANEL SCHEDULE

BREAKER INTERRUPTING CAPACITY 10,000 AMPS SYM. | NEMA 3R ENCLOSURE | BRACED FOR MINIMUM 10,000 AMPS SYM.

PANEL PJ9A , 240/120 VOLT AC, 1-PHASE, 3 WIRE, 80 AMP, 2 POLE MAIN BREAKER - SURFACE MOUNTED

EQUIPMENT SERVED	CKT. BKR. TRIP	CKT. BKR. POLE	VA/PHASE A	VA/PHASE B	CKT. No.	CKT. No.	VA/PHASE A	VA/PHASE B	CKT. BKR. POLE	CKT. BKR. TRIP	EQUIPMENT SERVED
JV-54	35	2	1000		1	2	1650		2	35	JV-56
				1650	3	4		1000			
SPARE BREAKER	35	2			5	6	1000		2	35	JV-57
					7	8		1650			
SPACE ONLY		2			9	10			1	20	SPARE BREAKER
					11	12			1	20	SPARE BREAKER
SPACE ONLY		2			13	14			1	20	SPARE BREAKER
					15	16			1		SPACE ONLY

b TOTAL CONNECTED VOLT - AMPS A 3650 B 4300 = 7950 VA

PANEL SCHEDULE

BREAKER INTERRUPTING CAPACITY 25,000 AMPS SYM. | NEMA 3R ENCLOSURE | BRACED FOR MINIMUM 25,000 AMPS SYM.

PANEL EJM-2 , 480Y/277 VOLT AC, 3-PHASE, 4 WIRE, 125 AMP, 3 POLE MAIN BREAKER - SURFACE MOUNTED

EQUIPMENT SERVED	CKT. BKR. TRIP	CKT. BKR. POLE	VA/PHASE A	VA/PHASE B	VA/PHASE C	CKT. No.	CKT. No.	VA/PHASE A	VA/PHASE B	VA/PHASE C	CKT. BKR. POLE	CKT. BKR. TRIP	EQUIPMENT SERVED
e PANEL "PJM-2"	40	2	1850			1	2	18333			3	100	AMTC
				2000		3	4		18333				
BUS BAR HEATER	30	3			6667	5	6			18333			
			6667			7	8				3		SPACE ONLY
				6667		9	10						
SPACE ONLY		2				11	12						
						13	14				2		SPACE ONLY
SPACE ONLY		2				15	16						
						17	18						

b TOTAL CONNECTED VOLT - AMPS A 26,850 B 27,000 C 25,000 = 78,850 VA e

THE SEAL APPEARING ON THIS DOCUMENT WAS AUTHORIZED BY SAMUEL LEE GULLEY ON AUGUST 8, 2001

SAMUEL LEE GULLEY CERTIFICATE NO. 37015 STATE OF FLORIDA PROFESSIONAL ENGINEER

US Army Corps of Engineers FORT WORTH DISTRICT

POLYENGINEERING, INC. CONSULTING ENGINEERS SINCE 1979
POLYENGINEERING, INC.
1550 Boulevard Avenue
Dothan, Alabama 36305
(334) 793-6720 (voice)
(334) 793-9215 (fax)

Mark	Description	Date	Appr.
A5	REVISED PANEL SCHEDULES	SEPT 01	SLG
A4	REVISED PANEL SCHEDULE AND ADDED PANEL SCHEDULES PJM-2 & EJM-2	AUG 01	SLG

Designed by: Samuel L. Gulley
Dwn by: T. Bolton | Ckd by: F. Corbari
Reviewed by: Scott Faulk
Submitted by: E. Lamar Faulk
Date: 19 July 2001 | Rev.
Sol. No. DACA63-01-B-0007
Contr. No. DACA63-01-C-0016
File name:
Plot date:
Plot scale: NONE

U.S. ARMY ENGINEER DISTRICT
CORPS OF ENGINEERS
FORT WORTH, TEXAS

POLYENGINEERING, INC.
ENGINEERS & ARCHITECTS
DOTHAN, ALABAMA

FORT HOOD, TEXAS
DIGITAL MULTI-PURPOSE RANGE COMPLEX (DMPRC)
PN 51915 FY 00

ELECTRICAL PANEL SCHEDULES
JACK MOUNTAIN

Sheet reference number: E-73
Sheet x of x

00689170

ELECTRICAL LEGEND - INTERIOR WIRING

Ceiling Outlets

- (A) (2) SURFACE MOUNTED OR SUSPENDED FLUORESCENT FIXTURE AS NOTED, MARK "A", CIRCUIT 2 (TYPICAL)
- 610 X 1220mm FLUORESCENT FIXTURE
- 610 X 1220mm FLUORESCENT FIXTURE WITH EMERGENCY BATTERY PACK UNIT
- INCANDESCENT OR FLUORESCENT FIXTURE AS INDICATED BY MARK NUMBER
- (J) JUNCTION BOX
- RECESSED FLUORESCENT DOWNLIGHT/WASHER
- EXIT LIGHT FIXTURE WITH BATTERY BACKUP

Wall Outlets

- DOUBLE DUPLEX RECEPTACLE – 20 AMP, 125 VOLT, 2 POLE, 3 WIRE GROUNDED TYPE, NEMA 5–20R. MOUNT 1220mm A.F.F.
- DUPLEX RECEPTACLE – 20 AMP, 125 VOLT, 2 POLE, 3 WIRE GROUNDED TYPE, NEMA 5–20R. MOUNT 457mm A.F.F.
- SINGLE RECEPTACLE – 15 AMP, 250 VOLT, 2 POLE, 3 WIRE GROUNDED TYPE, NEMA L6–15R
- DUPLEX RECEPTACLE – 20 AMP, 125 VOLT, 2 POLE, 3 WIRE GROUNDED TYPE, NEMA 5–20R. MOUNT 1220mm A.F.F.
- DUPLEX RECEPTACLE – 20 AMP, 125 VOLT, 2 POLE, 3 WIRE GROUNDED TYPE, NEMA 5–20R. MOUNT 2745mm A.F.F. (b)
- WALL MOUNTED HIGH INTENSITY DISCHARGE OR INCANDESCENT FIXTURE AS NOTED
- EXIT LIGHT FIXTURE WITH BATTERY BACKUP. PROVIDE DIRECTIONAL ARROW INDICATED ON PLAN.

Wall Switches (Unless Otherwise Noted, Mount 1220mm A.F.F.)

- S A.C. TYPE – SINGLE POLE, 20 AMP, 120 VOLT
- S_2 A.C. TYPE – 2 POLE, SINGLE THROW, 20 AMP, 120 VOLT
- S_3 A.C. TYPE – 3–WAY, 20 AMP, 120 VOLT
- (b) S_a WALL SWITCH – CONTROL OUTLET "a", ETC.
- (b) HD FLUORESCENT DIMMER SWITCH , 120 VOLT, 60HZ, 16 AMP, SINGLE POLE COMPATIBLE WITH DIMMING BALLAST, SLIDE–TO–OFF WITH VOLTAGE COMPENSATION, POWER FAILURE MEMORY AND R.F.I. SUPPRESSION

Branch Circuiting (Conduit and Conductors)

- RUN EXPOSED PERPENDICULAR AND PARALLEL TO BUILDING LINES
- RUN CONCEALED UNDER FLOOR OR UNDERGROUND
- RUN CONCEALED IN CEILING OR WALLS
- MP–1 HOMERUN TO PANEL. ANY CIRCUIT WITHOUT FURTHER IDENTIFICATION INDICATES 2 #12, 1 #12 GROUND – 12mm C; 3 #12, 1 #12 GROUND – 12mm C; 4 #12, 1 #12 GROUND – 12mm C; ETC. AS PER NEC. LETTERS AND NUMERALS INDICATE PANEL AND CIRCUIT NUMBER.
- FLEXIBLE CONDUIT CONNECTION
- EMPTY CONDUIT WITH PULL ROPE (b)

Fire Alarm System

- FAC FIRE ALARM CONTROL PANEL
- BAT BATTERY STANDBY
- F PULL STATION – MOUNT 1220mm A.F.F. (b)
- F F COMBINATION HORN/VISUAL ALARM LIGHT – MOUNT 2207mm A.F.F.
- HEAT DETECTOR – CEILING MOUNTED, 57.2°C
- FR FAN SHUTDOWN RELAY
- S CEILING MOUNT SMOKE DETECTOR
- S_A SMOKE DETECTOR UNDER RAISED FLOOR

Telephone/Communications System

- (b) COMMUNICATIONS OUTLET – 119mm SQ. X 53mm DEEP BOX WITH DUAL 8–POSITION MODULAR JACKS. MOUNT 457mm A.F.F. PROVIDE FACEPLATE WITH SPACE FOR DUAL MODULAR JACKS. BLANK OFF EMPTY SPACE ON BOTTOM.
- TBB TELEPHONE BACKBOARD WITH 20mm EXTERIOR GRADE PLYWOOD BACKBOARD WITH TWO COATS INSULATING VARNISH, SIZE AS SHOWN

Lightning Protection System

- AIR TERMINAL
- D DOWNLEAD CONDUCTOR
- L TEE CONNECTION
- L LIGHTNING PROTECTION CONDUCTOR ON ROOF
- G GROUNDING CONDUCTOR
- G BRAZED OR EXOTHERMIC WELDED GROUND CONNECTION
- GROUND ROD
- B L EQUIPMENT BOND

Intrusion Detection System

- IDS MAIN CONTROL UNIT WITH BATTERY BACKUP – MOUNT UNIT IN A NEMA 1 ENCLOSURE WITH HINGED DOOR AND LOCK
- M MOTION DETECTOR
- (b) S SIREN AND STROBE LIGHT – WALL MOUNT 2207mm A.F.F.
- BS BALANCED MAGNETIC DOOR SWITCH
- K SECURE/ACCESS CONTROL

Panels and Power

- POWER PANELBOARD
- LIGHTING PANELBOARD
- (M) MOTOR – SIZE AND CHARACTERISTICS AS NOTED
- MOTOR CONTROLLER
- S_M TOGGLE TYPE MANUAL MOTOR CONTROLLER
- NON–FUSIBLE DISCONNECT SWITCH
- (b) (F) EXHAUST FAN

Miscellaneous

- A.F.F. ABOVE FINISH FLOOR
- WP WEATHERPROOF
- (A) INDICATES FIXTURE MARK IN AREA SHOWN
- C MECHANICALLY HELD LIGHTING CONTACTOR, N.O. WITH 120 VOLT COIL – WALL MOUNT 1220mm A.F.F.
- S CONTACTOR CONTROL STATION 3–POSITION MOMENTARY CONTACT SELECTOR SWITCH – WALL MOUNT 1220mm A.F.F.
- R BUILDING LIGHTING CONTROL PANEL
- G_G GROUND FAULT INTERRUPTING TYPE DUPLEX RECEPTACLE
- H.I.D. HIGH INTENSITY DISCHARGE
- R.L.A. RUN LOAD AMPS
- F.L.A. FULL LOAD AMPS
- COMP. COMPRESSOR
- CABLE TRAY, TROUGH STYLE SOLID BOTTOM (MINIMUM 610mm x 152mm), UNLESS OTHERWISE NOTED
- SA TRANSIENT VOLTAGE SURGE PROTECTION – 150KA/PHASE SURGE CAPACITY – 277/480 VOLT, 3 PHASE, 4 WIRE, WYE. SUPPRESSION VOLTAGE RATING – 800V (L–N, L–G, N–G) AND 1500V (L–L). EXTERNAL MOUNT WITH NEMA 12 ENCLOSURE.
- SP TRANSIENT VOLTAGE SURGE PROTECTION – 150KA/PHASE SURGE CAPACITY – 120/208 VOLT, 3 PHASE, 4 WIRE, WYE. SUPPRESSION VOLTAGE RATING – 400V (L–N, N–G) AND 800V (L–L). EXTERNAL MOUNT WITH NEMA 12 ENCLOSURE. (b)
- SS TRANSIENT VOLTAGE SURGE PROTECTION – 150KA/PHASE SURGE CAPACITY – 120/240 VOLT, 1 PHASE, 3 WIRE. SUPPRESSION VOLTAGE RATING – 400V (L–N, L–G, N–G) AND 800V (L–L). EXTERNAL MOUNT WITH NEMA 12 ENCLOSURE.

LIGHTING FIXTURE SCHEDULE

CONTRACT DRAWING FIXTURE MARK	DWG. NO. 40–06–04		LAMP			FIXTURE VOLTAGE	FIXTURE MOUNTING	REMARKS
	TYPE	SHEET NO	TYPE	NO.	WATTS			
A	PF6	D502262E	FLUOR	2	32	120	CEILING	SEE NOTE 1 BELOW
A3	PF6	D50226E	FLUOR	3	32	120	SUSPENDED	SEE NOTE 1 BELOW
B	SF11	D502038E	INCAN	1	100	120	CEILING	PROVIDE INCANDESCENT IN LIEU OF FLUORESCENT
B1	SF11	D502038E	INCAN	1	100	120	CEILING	SAME AS FIXTURE B EXCEPT PROVIDE RED LENS
C			INCAN	1	150	120	WALL 2440mm A.F.F.	SEE DETAIL, THIS SHEET
C1			INCAN	1	150	120	WALL 2440mm A.F.F.	SIMILAR TO FIXTURE "C" EXCEPT PROVIDE RED LENS
E	XL1	D502057E	LED			120	CEILING	
F4	SF8	D502294E	FLUOR	4	32	120	SURFACE	PROVIDE PARABOLIC LOUVER SIMILAR TO FIXTURE "G3" IN LIEU OF ACRYLIC LENS (b)
G2	RF9	D502272E	FLUOR	2	32	120	RECESSED	SIMILAR TO FIXTURE "G3" TWO LAMP UNIT. SEE NOTE 1 BELOW.
(b) G3	RF12	D502275E	FLUOR	3	32	120	RECESSED	SEE NOTE 1 BELOW
H	SF6	D502292E	FLUOR	2	32	120	CEILING	
D	PF8	D502018E	FLUOR	2	32	120	SURFACE	GASKETED INDUSTRIAL FLUORESCENT FIXTURE WITH COLD WEATHER BALLAST (b)
W	EH5	D502012E	M.H.	1	250	120	WALL 3050mm A.F.F.	
(b) G4	RF12	D502275E	INCAN	4	32	120	RECESSED	SEE NOTE 1 BELOW
R	RF3	D502266E	FLUOR	2	32	120	RECESSED	
RA	RF5	D502268E	FLUOR	2	32	120	RECESSED	

NOTES

1. PROVIDE FIXTURES INDICATED ON FLOOR PLANS WITH EMERGENCY BATTERY PACK UNIT DWG. No. 40–06–04, TYPE "XF1", SHEET No. D502053E. PROVIDE 1–LAMP UNIT FOR 2–LAMP FIXTURES AND 2–LAMP UNITS FOR 3 AND 4–LAMP FIXTURES.

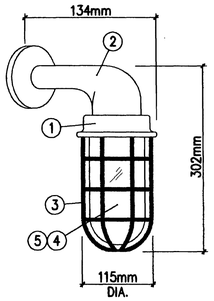

1. COPPER FREE CAST ALUMINUM BODY OF THREADED CONSTRUCTION WITH HEAVY–DUTY MEDIUM BASE PORCELAIN LAMP SOCKET.
2. CAST ALUMINUM WALL PLATE MOUNTING BRACKET
3. COPPER FREE CAST ALUMINUM GUARD TO PROTECT GLOBE
4. CLEAR TEMPERED GLASS GLOBE WITH GASKETED SEAL TO BODY. PROVIDE RED GLOBE FOR FIXTURE MARK "C1".
5. 150 WATT INCANDESCENT LAMP

FIXTURES MARK "C" & "C1"

NOT TO SCALE

(b) THE SEAL APPEARING ON THIS DOCUMENT WAS AUTHORIZED BY SAMUEL LEE GULLEY ON AUGUST 8, 2001

SAMUEL LEE GULLEY CERTIFICATE NO. 41 STATE OF FLORIDA PROFESSIONAL ENGINEER

US Army Corps of Engineers
FORT WORTH DISTRICT

POLYENGINEERING, INC.
1905 Headland Avenue
Dothan, Alabama 36303
(334) 793-4790 (voice)
(334) 793-6016 (fax)

Mark	Description	Date	Appr.
16	REVISED ELECTRICAL LEGEND AND FIXTURE SCHEDULE, TITLE BLOCK EDIT, ADDED SEAL	AUG 01	SLG

Designed by: Samuel L. Gulley
Dwn by: T. Bolton
Ckd by: F. Corbari
Reviewed by: Scott Faulk
Submitted by: E. Lamar Faulk
Date: 19 July 2001
Rev.
Sol. No. DACA63–01–B–0007
Contr. No. DACA63–01–C–0016
File name:
Plot date:
Plot scale: NONE

U.S. ARMY ENGINEER DISTRICT
CORPS OF ENGINEERS
FORT WORTH, TEXAS

POLYENGINEERING, INC.
ENGINEERS & ARCHITECTS
DOTHAN, ALABAMA

FORT HOOD, TEXAS
DIGITAL MULTI–PURPOSE RANGE COMPLEX (DMPRC)
PN 51915
(b) 00

ELECTRICAL LEGEND AND FIXTURE SCHEDULE

Sheet reference number: E–74
Sheet of (b)

Contr. No. DACA63–01–C–0016

00689130

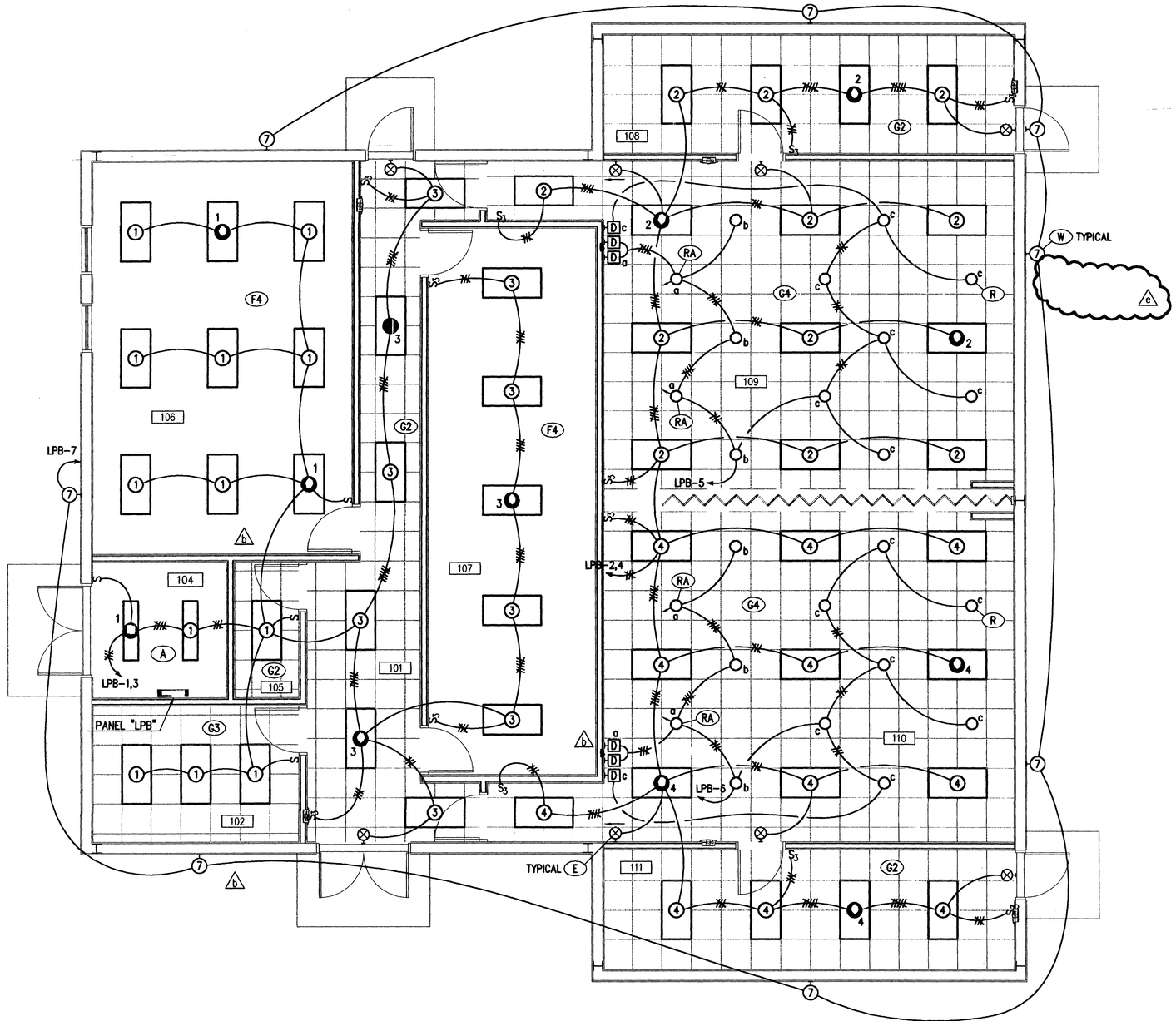

ELECTRICAL FLOOR PLAN - LIGHTING
AFTER ACTION REVIEW BUILDING

SCALE: 1:50

1000 500 0 500 1000

SCALE: 1:50

THE SEAL APPEARING ON THIS DOCUMENT WAS AUTHORIZED BY SAMUEL LEE GULLEY ON AUGUST 8, 2001

SAMUEL LEE GULLEY CERTIFICATE NO. 37 STATE OF FLORIDA PROFESSIONAL ENGINEER

US Army Corps of Engineers
FORT WORTH DISTRICT

POLYENGINEERING, INC.
1920 Boulevard Avenue
Dothan, Alabama 36303
(334) 793-5780 (voice)
(334) 793-5016 (fax)

Mark	Description	Date	Appr.
1	REVISED PLAN	SEPT 01	SLG
2	REVISED PLAN	AUG 01	SLG

Designed by: Samuel L. Gulley
Dwn by: T. Belton
Ckd by: F. Corbari
Reviewed by:
Submitted by: E. Lamar Foulk
Date: 19 July 2001
Rev.
Sol. No. DACA63-01-B-0007
Contr. No. DACA63-01-C-0016
File name:
Plot date:
Plot scale: 1:50

U.S. ARMY ENGINEER DISTRICT
CORPS OF ENGINEERS
FORT WORTH, TEXAS

POLYENGINEERING, INC.
ENGINEERS & ARCHITECTS
DOTHAN, ALABAMA

FORT HOOD, TEXAS
DIGITAL MULTI-PURPOSE RANGE COMPLEX (DMPRC)
PN 51915 FY 00

ELECTRICAL FLOOR PLAN
AFTER ACTION REVIEW BUILDING
LIGHTING

Sheet reference number:
E-75
Sheet x of x

Contr. No. DACA63-01-C-0016

00689160

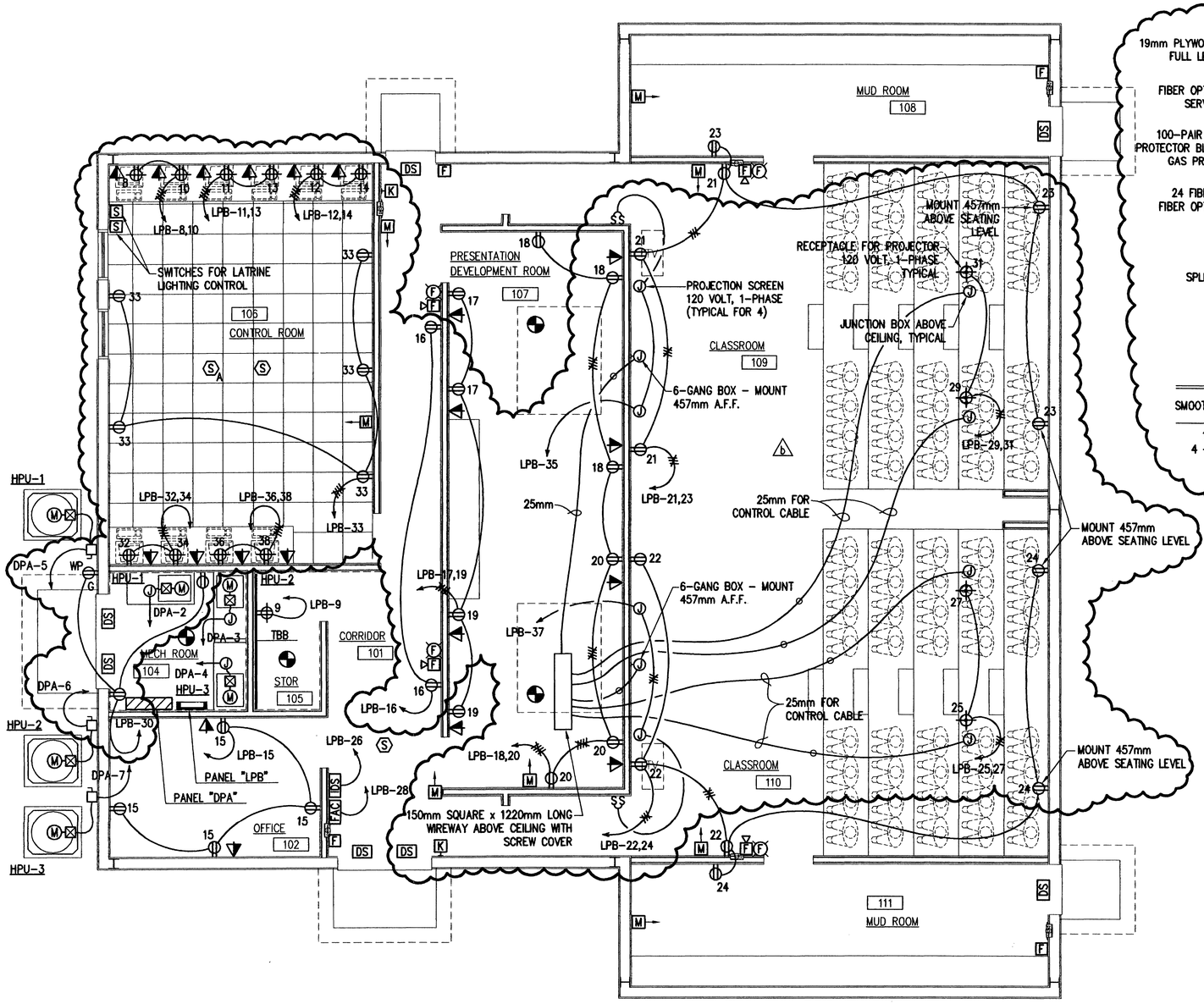

AFTER ACTION REVIEW BUILDING - POWER AND AUXILIARY SYSTEMS

SCALE: 1:50

NOTE

A SEPARATE NEUTRAL CONDUCTOR SHALL BE PROVIDED FOR EACH PHASE CONDUCTOR TO SERVE 120 VOLT RECEPTACLE CIRCUITS. b

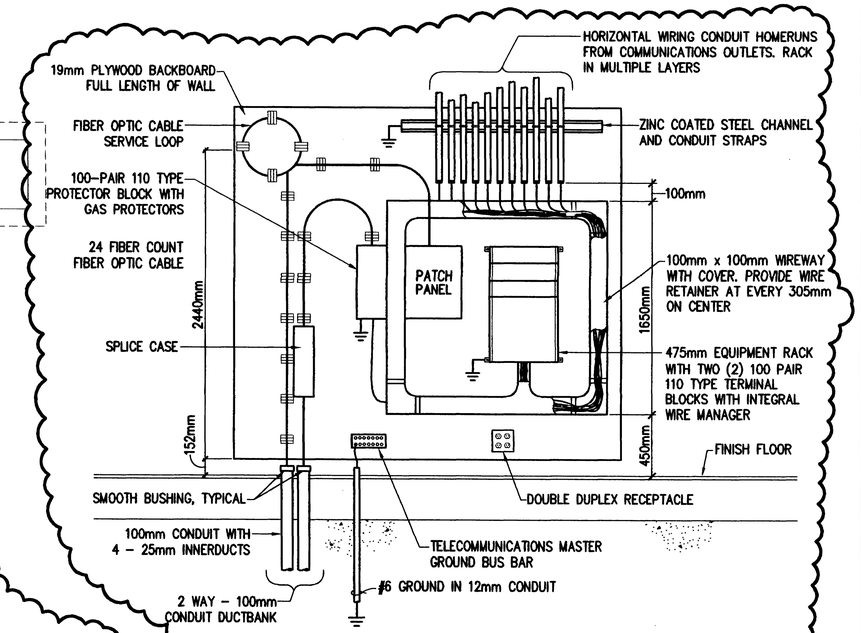

COMMUNICATIONS BACKBOARD ELEVATION AFTER ACTION REVIEW BUILDING

NOT TO SCALE

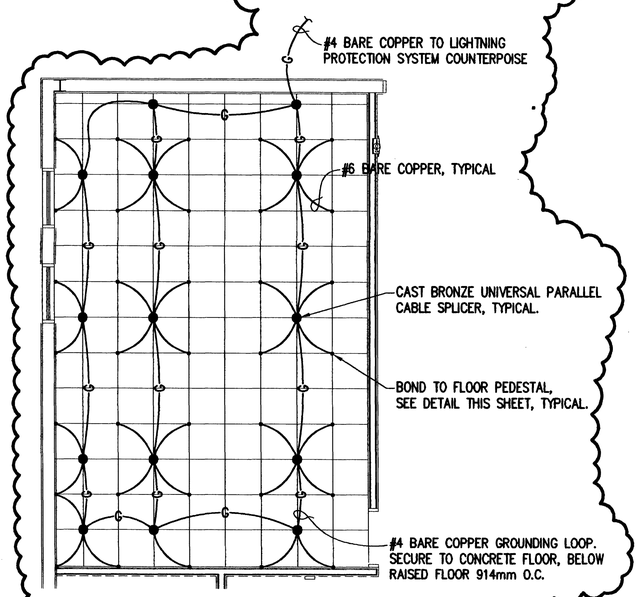

b RAISED FLOOR GROUNDING PLAN

SCALE: 1:50

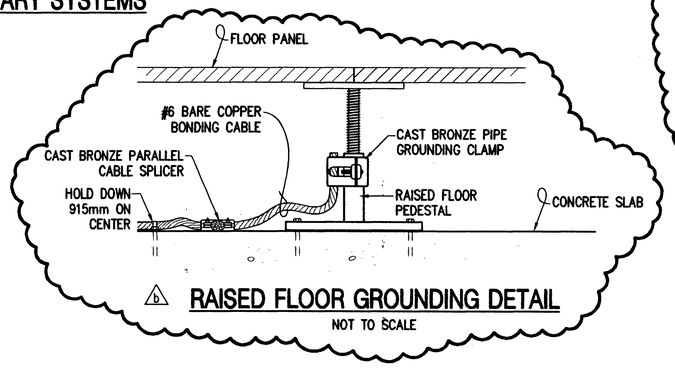

b RAISED FLOOR GROUNDING DETAIL

NOT TO SCALE

1000 500 0 500 1000

SCALE: 1:50

b

THE SEAL APPEARING ON THIS DOCUMENT WAS AUTHORIZED BY SAMUEL LEE GULLEY ON AUGUST 8, 2001

SAMUEL LEE GULLEY CERTIFICATE No. 34001 STATE OF FLORIDA PROFESSIONAL ENGINEER

US Army Corps of Engineers
FORT WORTH DISTRICT

POLYENGINEERING, INC.
1906 Hartford Avenue
Dothan, Alabama 36305
(334) 793-7720 (voice)
(334) 793-9115 (fax)

Mark	Description	Date	Appr.
b	REVISED POWER PLAN AND ADDED DETAILS, TITLE BLOCK EDIT, ADDED SEAL	AUG 01	SLG

Designed by: Samuel L. Gulley	Date: 19 July 2001	Rev.
Dwn by: T. Bolton	Ckd by: F. Corbori	Sol. No. DACA63-01-B-0007
Reviewed by:		Contr. No. DACA63-01-C-0016
Submitted by: E. Lamar Faulk	File name:	Plot date:
	Plot scale: 1:50	

U.S. ARMY ENGINEER DISTRICT
CORPS OF ENGINEERS
FORT WORTH, TEXAS

POLYENGINEERING, INC.
ENGINEERS & ARCHITECTS
DOTHAN, ALABAMA

FORT HOOD, TEXAS
DIGITAL MULTI-PURPOSE RANGE COMPLEX (DMPRC)
PN 51915

b

ELECTRICAL FLOOR PLAN
AFTER ACTION REVIEW BUILDING
POWER AND AUXILIARY SYSTEMS

Sheet reference number:
E-76

Sheet of

b

Contr. No. DACA63-01-C-0016

00689230

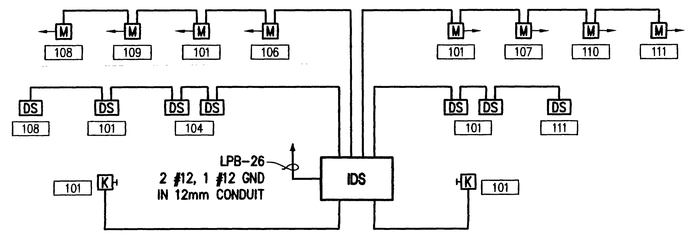

INTRUSION DETECTION SYSTEM RISER DIAGRAM
AFTER ACTION REVIEW BUILDING

NOT TO SCALE

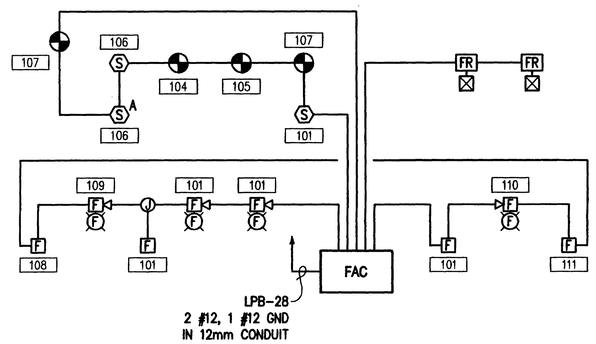

FIRE ALARM SYSTEM RISER DIAGRAM
AFTER ACTION REVIEW BUILDING

NOT TO SCALE

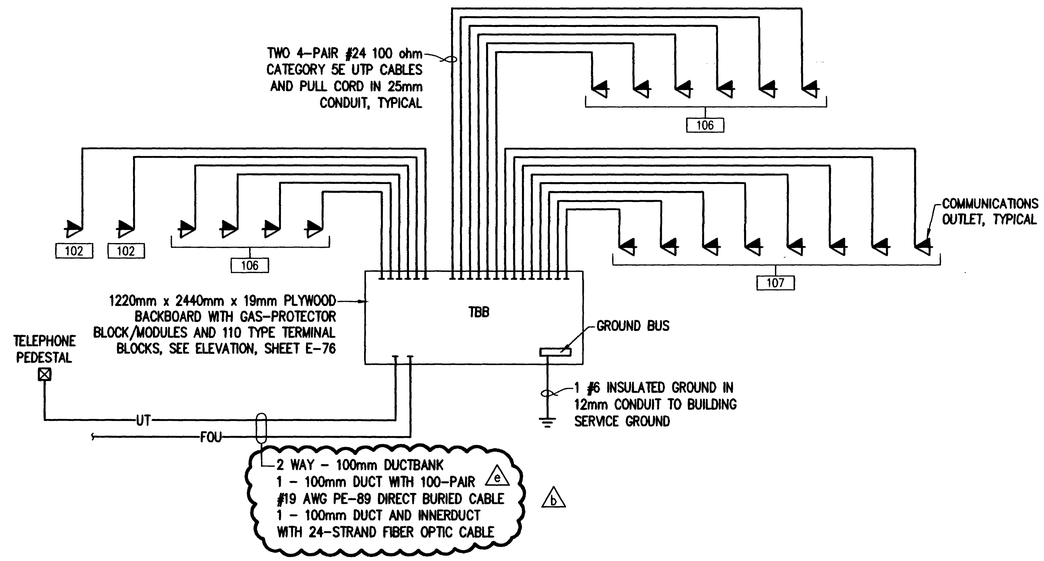

TELECOMMUNICATIONS SYSTEM RISER DIAGRAM
AFTER ACTION REVIEW BUILDING

NOT TO SCALE

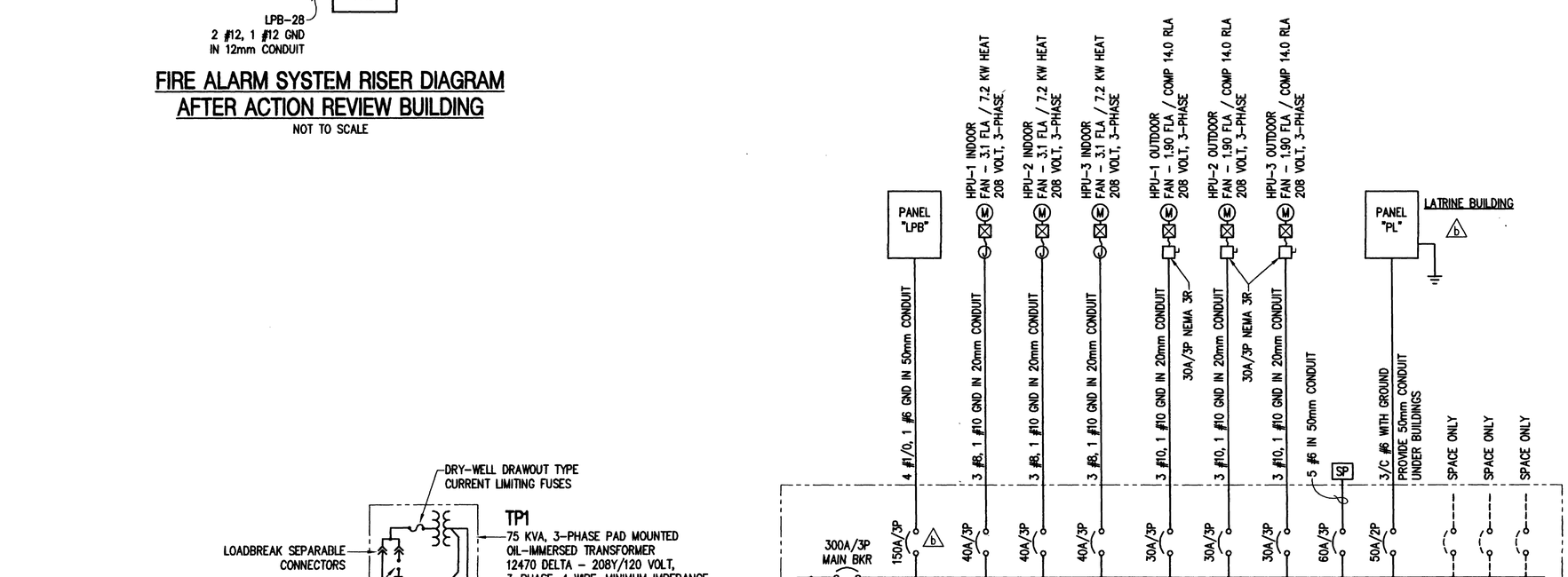

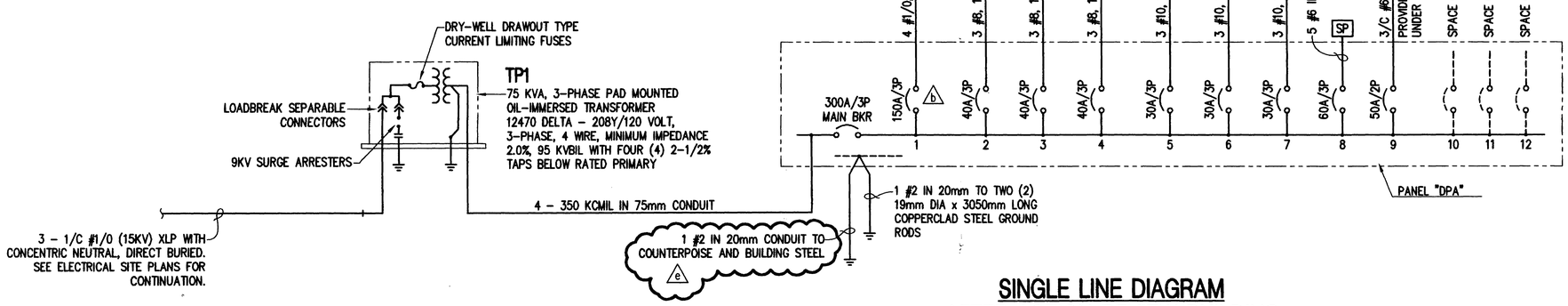

SINGLE LINE DIAGRAM
AFTER ACTION REVIEW BUILDING

NOT TO SCALE

US Army Corps of Engineers
FORT WORTH DISTRICT

POLYENGINEERING, INC.
1205 Hardland Avenue
Dothan, Alabama 36303
(334) 792-4790 (voice)
(334) 792-8018 (fax)

Mark	Description	Date	Appr.
1	REVISED DIAGRAM	SEPT 01	SLG
2	REVISED DIAGRAMS	AUG 01	SLG

U.S. ARMY ENGINEER DISTRICT
CORPS OF ENGINEERS
FORT WORTH, TEXAS

POLYENGINEERING, INC.
ENGINEERS & ARCHITECTS
DOTHAN, ALABAMA

Designed by: Samuel L. Gulley
Dwn by: T. Bolton
Ckd by: F. Carbon
Reviewed by: Scott Faulk
Submitted by: E. Lamar Faulk
Date: 19 July 2001
Rev.
Sol. No. DACA63-01-B-0007
Contr. No. DACA63-01-C-0016
File name:
Plot date:
Plot scale: NONE

FORT HOOD, TEXAS
DIGITAL MULTI-PURPOSE RANGE COMPLEX
(DMPRC)
PN 519915 FY 00

AFTER ACTION REVIEW BUILDING
SINGLE LINE DIAGRAM

Sheet reference number:
E-77
Sheet x of x

SAMUEL LEE GULLEY
CERTIFICATE
No.
STATE OF FLORIDA
PROFESSIONAL ENGINEER

THE SEAL APPEARING ON THIS DOCUMENT WAS AUTHORIZED BY SAMUEL LEE GULLEY ON AUGUST 8, 2001

00689210

After Action Review Building

BREAKER INTERRUPTING CAPACITY 10,000 AMPS SYM.

PANEL SCHEDULE

BRACED FOR MINIMUM 10,000 AMPS SYM.

PANEL "LPB", 208Y/120 VOLT AC, 3-PHASE, 4 WIRE, 225 AMP, MAIN LUGS ONLY - SURFACE MOUNTED

EQUIPMENT SERVED	CKT. BKR. TRIP	CKT. BKR. POLE	VA/PHASE A	VA/PHASE B	VA/PHASE C	CKT. No.	CKT. No.	VA/PHASE A	VA/PHASE B	VA/PHASE C	CKT. BKR. POLE	CKT. BKR. TRIP	EQUIPMENT SERVED
LTG - RMs 102, 104, 105, 106	20	1	1551			1	2	1454			1	20	LTG - RMs 108, 109
LTG - RMs 101, 107	20	1		971		3	4		1454		1	20	LTG - RMs 110, 111
LTG - RM 109	20	1			1116	5	6			1116	1	20	LTG - RM 110
LTG - OUTDOOR	20	1	1770			7	8	840			1	20	RECPs - RM 106
RECP - RM 105	20	1		850		9	10		840		1	20	RECPs - RM 106
RECPs - RM 106	20	1			840	11	12			1200	1	20	RECPs - RM 106
RECPs - RM 106	20	1	840			13	14	840			1	20	RECPs - RM 106
RECPs - RM 102	20	1		720		15	16		360		1	20	RECPs - RM 101
RECPs - RM 107	20	1			1500	17	18			1800	1	20	RECPs - RM 107
RECPs - RM 107	20	1	1500			19	20	1800			1	20	RECPs - RM 107
RECPs - RM 109	20	1		1500		21	22		1500		1	20	RECPs - RM 110
RECPs - RMs 108, 109	20	1			1500	23	24			1500	1	20	RECPs - RMs 110, 111
PROJECTOR - RM 110	20	1	1000			25	26	500			1	*20	IDS CONTROL PANEL
PROJECTOR - RM 110	20	1		1000		27	28		500		1	*20	FIRE ALARM CONTROL PANEL
PROJECTOR - RM 109	20	1			1000	29	30			1000	1	20	RECP - OUTDOOR
PROJECTOR - RM 109	20	1	1000			31	32	840			1	20	RECPs - RM 106
RECPs - RM 106	20	1		900		33	34		840		1	20	RECPs - RM 106
PROJECTION SCREEN	20	1			600	35	36			840	1	20	RECPs - RM 106
PROJECTION SCREEN	20	1	600			37	38	840			1	20	RECPs - RM 106
SPARE BREAKER	20	1				39	40				1	20	SPARE BREAKER
SPARE BREAKER	20	1				41	42				1	20	SPARE BREAKER

* LOCKABLE TYPE CIRCUIT BREAKER

	A	B	C	
b TOTAL CONNECTED VOLT - AMPS	15,375	11,435	14,012	= 40,822 VA

After Action Review Building

BREAKER INTERRUPTING CAPACITY 22,000 AMPS SYM. b

PANEL SCHEDULE (400 AMP) b

BRACED FOR MINIMUM 22,000 AMPS SYM.

PANEL "DPA", 208Y/120 VOLT AC, 3-PHASE, 4 WIRE, 300 AMP, 3-POLE MAIN BREAKER - SURFACE MOUNTED

EQUIPMENT SERVED	CKT. BKR. TRIP	CKT. BKR. POLE	VA/PHASE A	VA/PHASE B	VA/PHASE C	CKT. No.	CKT. No.	VA/PHASE A	VA/PHASE B	VA/PHASE C	CKT. BKR. POLE	CKT. BKR. TRIP	EQUIPMENT SERVED
b PANEL "LPB"	150	3	15375			1	2	2615			3	40	HPU-1 INDOOR
				11435					2615				
					14012					2615			
HPU-2 INDOOR	40	3	2615			3	4	2615			3	40	HPU-3 INDOOR
				2615					2615				
					2615					2615			
HPU-1 OUTDOOR	30	3	1908			5	6	1908			3	30	HPU-2 OUTDOOR
				1908					1908				
					1908					1908			
HPU-3 OUTDOOR	30	3	1908			7	8				3	60	SURGE ARRESTER
				1908									
					1908								
b PANEL "PL"	50	2	2620			9	10				3		SPACE ONLY
				1763									
SPACE ONLY		3				11							
							12				2		SPACE ONLY

	A	B	C	
b TOTAL CONNECTED VOLT - AMPS	31,564	26,767	27,581	= 85,912 VA

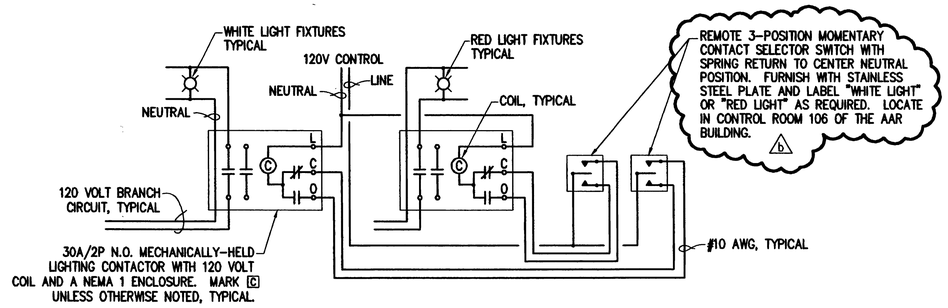

BUILDING EXTERIOR LIGHTING CONTROL SCHEMATIC

NOT TO SCALE

(TYPICAL FOR CONTROL OF RED AND WHITE LIGHTS AT LATRINE)

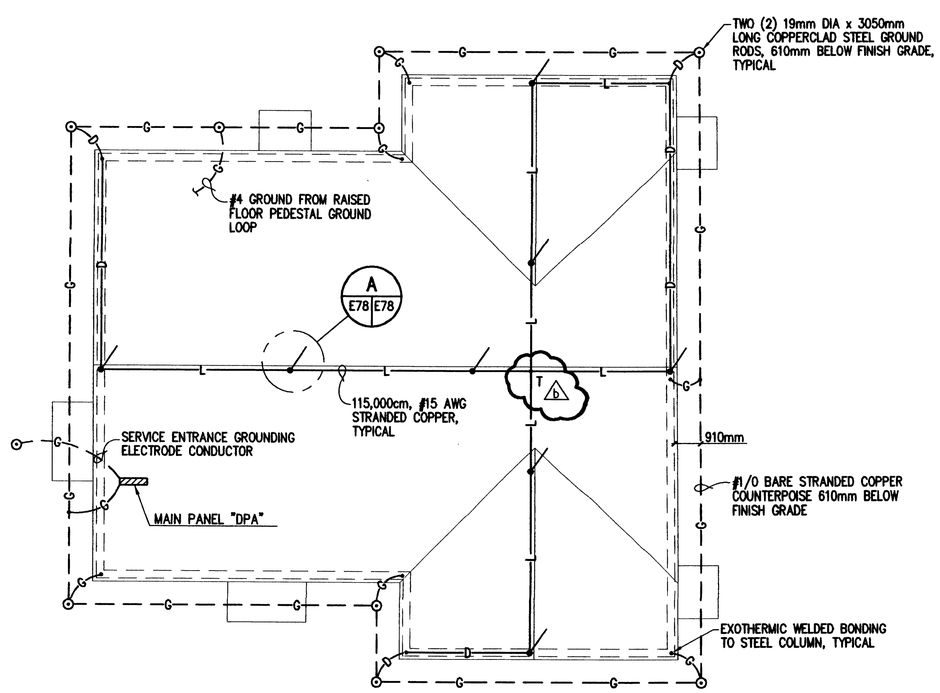

ROOF PLAN - LIGHTNING PROTECTION SYSTEM AFTER ACTION REVIEW BUILDING

SCALE: 1:100

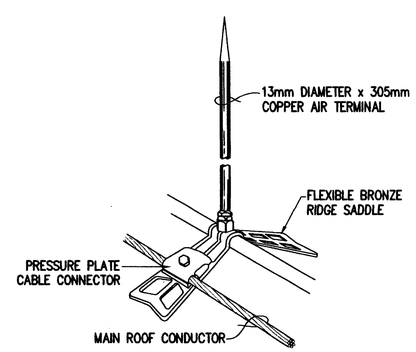

RIDGE MOUNT AIR TERMINAL

NOT TO SCALE

A
E79,E82,E83,E84 E78

2000 1000 0 1000 2000

SCALE: 1:100

b

THE SEAL APPEARING ON THIS DOCUMENT WAS AUTHORIZED BY SAMUEL LEE GULLEY ON AUGUST 8, 2001

SAMUEL LEE GULLEY CERTIFICATE NO. 37001 STATE OF FLORIDA PROFESSIONAL ENGINEER

US Army Corps of Engineers
FORT WORTH DISTRICT

POLYENGINEERING, INC.
ENGINEERS & ARCHITECTS
POLYENGINEERING, INC.
1905 Boothland Avenue
Dothan, Alabama 36303
(334) 793-2790 (voice)
(334) 793-5016 (fax)

Mark	Description	Date	Appr.
1	REVISED FLOOR PLAN AND SCHEDULES, TITLE BLOCK EDIT, ADDED SEAL	AUG 01	SLG

Designed by: Samuel L. Gulley
Dwn by: T. Bolton
Ckd by: F. Corbari
Reviewed by:
Submitted by: E. Lamar Faulk
Date: 19 July 2001
Rev.
Sol. No. DACA63-01-B-0007
Contr. No. DACA63-01-C-0016
File name:
Plot date:
Plot scale: 1:50

U.S. ARMY ENGINEER DISTRICT CORPS OF ENGINEERS FORT WORTH, TEXAS

POLYENGINEERING, INC. ENGINEERS & ARCHITECTS DOTHAN, ALABAMA

FORT HOOD, TEXAS
DIGITAL MULTI-PURPOSE RANGE COMPLEX (DMPRC)
PN 51915 b 00

ELECTRICAL ROOF PLAN
AFTER ACTION REVIEW BUILDING
LIGHTNING PROTECTION

Sheet reference number: E-78

Sheet of b

00689220

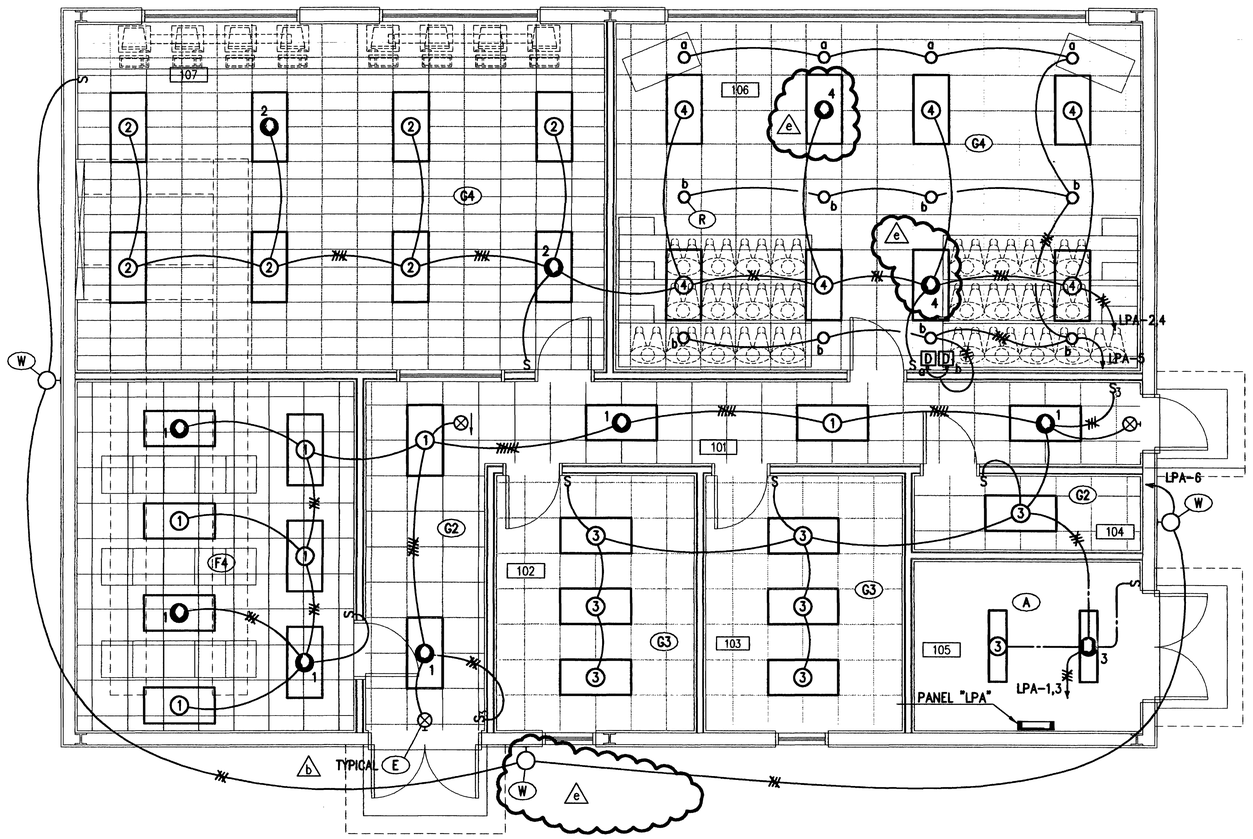

ELECTRICAL FLOOR PLAN - LIGHTING CENTRAL CONTROL BUILDING

SCALE: 1:50

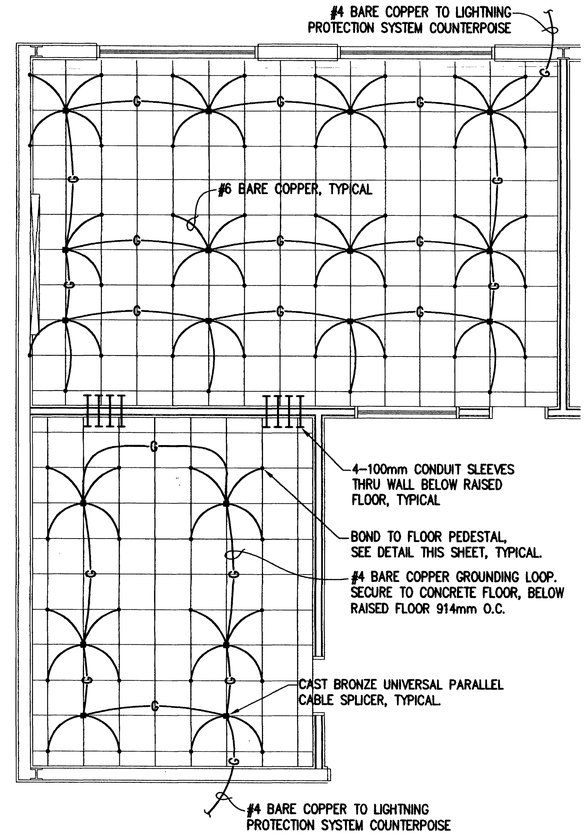

b RAISED FLOOR GROUNDING PLAN

SCALE: 1:50

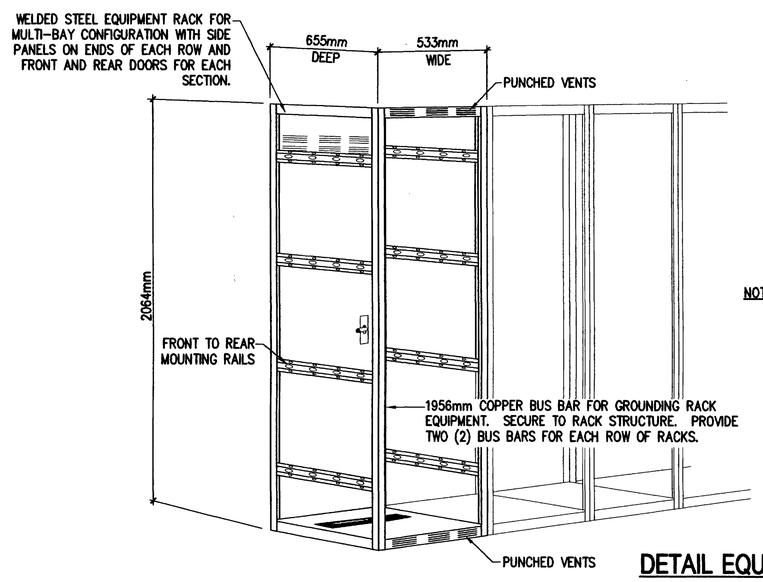

DETAIL EQUIPMENT RACK

NOT TO SCALE

NOTES:

1. PROVIDE EACH ROW OF EQUIPMENT RACKS WITH THREE (3) MULTI-OUTLET POWER STRIPS WITH 6-15AMP, 125 VOLT, 2 POLE, 3 WIRE GROUNDED TYPE DUPLEX RECEPTACLES, POWER CORD AND PLUG AND MOUNTING HARDWARE.
2. EACH ROW OF EQUIPMENT RACKS SHALL BE PROVIDED WITH TWO RECESSED MOUNTING FAN PANELS. EACH PANEL SHALL HAVE TWO 115cfm, 15 WATT, 115 VOLT, 1-PHASE FANS WITH 56.2dba AT 914mm. PROVIDE 1830mm CORD AND PLUG. FANS SHALL BE PROTECTED BY NICKEL CHROME PLATED WIRE GRILLE WITH A 16-GAUGE STEEL WIRE MESH SCREEN.

b

1000 500 0 500 1000

SCALE: 1:50

THE SEAL APPEARING ON THIS DOCUMENT WAS AUTHORIZED BY SAMUEL LEE GULLEY ON AUGUST 8, 2001

SAMUEL LEE GULLEY CERTIFICATE No. STATE OF FLORIDA PROFESSIONAL ENGINEER

US Army Corps of Engineers
FORT WORTH DISTRICT

POLYENGINEERING, INC.
1906 Woodland Avenue
Dothan, Alabama 36303
(334) 793-2750 (Voice)
(334) 793-3015 (Fax)

Mark	Description	Date	Appr.
2	REVISED PLAN	SEPT 01	SLG
3	REVISED PLAN AND ADDED DETAILS	AUG 01	SLG

Designed by: Samuel L. Gulley
Dwn by: T. Bolton
Ckd by: F. Corbari
Reviewed by:
Submitted by: E. Lamar Faulk
Date: 19 July 2001
Rev.
Sol. No. DACA63-01-B-0007
Contr. No. DACA63-01-C-0016
File name:
Plot date:
Plot scale: 1:50

U.S. ARMY ENGINEER DISTRICT
CORPS OF ENGINEERS
FORT WORTH, TEXAS

POLYENGINEERING, INC.
ENGINEERS & ARCHITECTS
DOTHAN, ALABAMA

FORT HOOD, TEXAS
DIGITAL MULTI-PURPOSE RANGE COMPLEX (DMPRC)
PN 51915 FY 00

ELECTRICAL FLOOR PLAN
CENTRAL CONTROL BUILDING
LIGHTING

Sheet reference number:
E-79
Sheet x of x

00689230

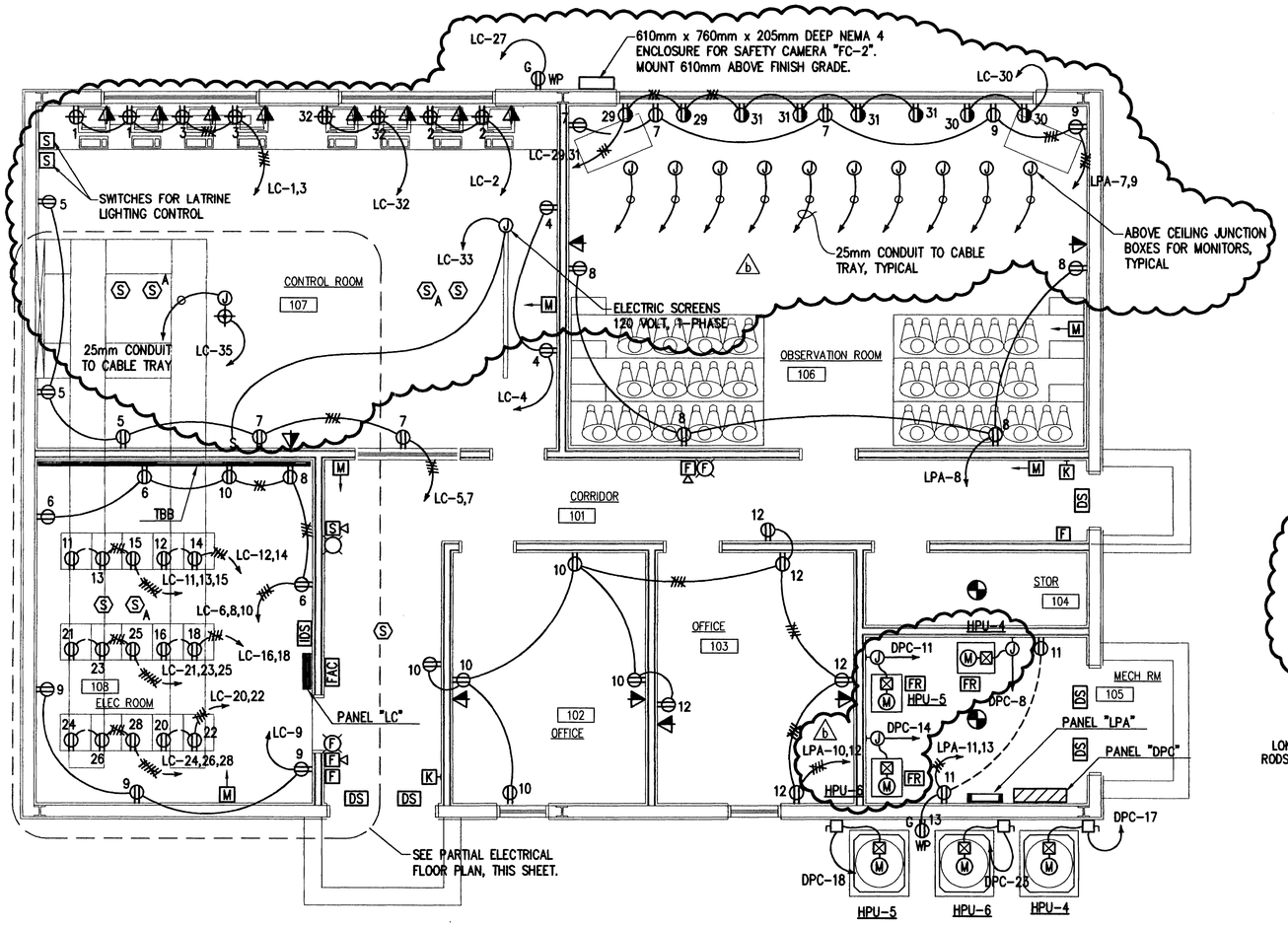

ELECTRICAL FLOOR PLAN - POWER & AUXILIARY SYSTEMS CENTRAL CONTROL BUILDING

SCALE: 1:50

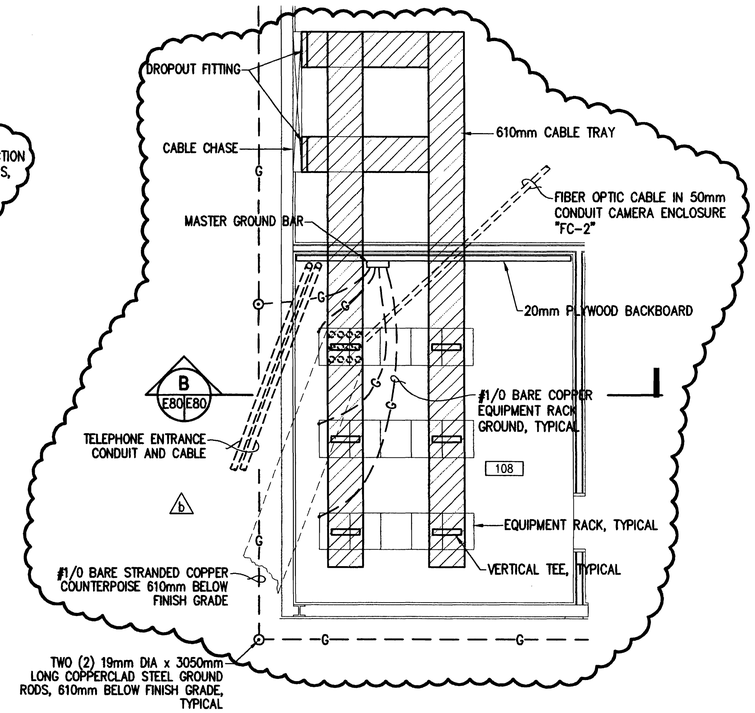

PARTIAL ELECTRICAL FLOOR PLAN - ELEC. ROOM

SCALE: 1:50

NOTE

A SEPARATE NEUTRAL CONDUCTOR SHALL BE PROVIDED FOR EACH PHASE CONDUCTOR TO SERVE 120 VOLT RECEPTACLE CIRCUIT.

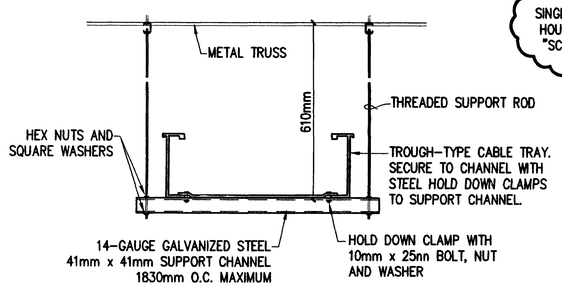

CABLE TRAY MOUNTING DETAIL (D E80|E80)

NOT TO SCALE

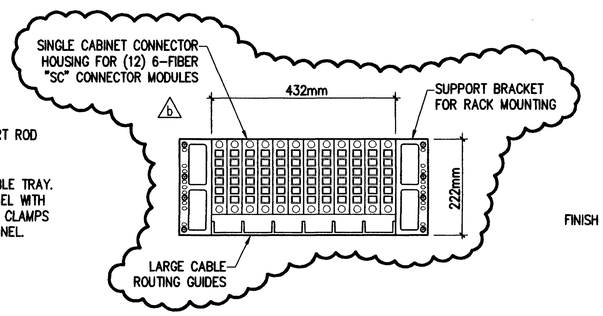

TYPICAL DETAIL FIBER CONNECTOR MODULES (C E80|E80)

NOT TO SCALE

NOTE

PROVIDE (25) 72-FIBER CONNECTOR MODULES WITH "SC" TYPE SINGLE-MODE FIBER CONNECTORS FOR FIBER OPTIC CABLE TRUNK LINES.

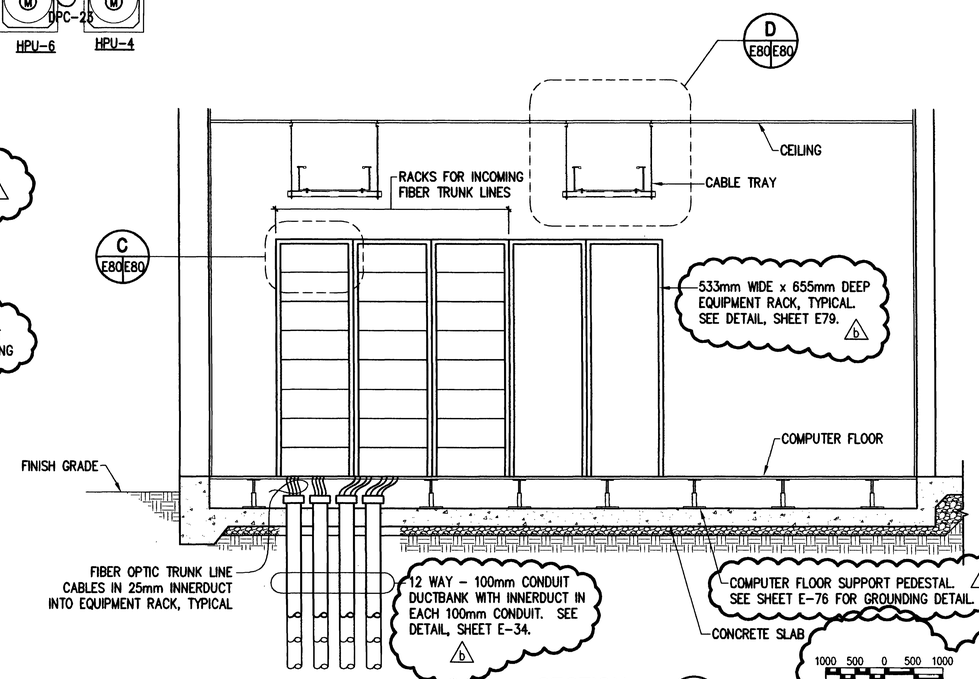

SECTION (B E80|E80)

SCALE: 1:20

1000 500 0 500 1000

SCALE: 1:50

THE SEAL APPEARING ON THIS DOCUMENT WAS AUTHORIZED BY SAMUEL LEE GULLEY ON AUGUST 8, 2001

SAMUEL LEE GULLEY CERTIFICATE No. 34867 STATE OF FLORIDA PROFESSIONAL ENGINEER

US Army Corps of Engineers
FORT WORTH DISTRICT

POLYENGINEERING, INC.
1906 Headland Avenue
Dothan, Alabama 36303
(334) 793-6750 (voice)
(334) 793-6110 (fax)

Mark	Description	Date	Appr.
11	REVISED PLAN, TITLE BLOCK EDIT, ADDED SEAL	AUG 01	SLG

Designed by: Samuel L. Gulley
Dwn by: T. Bolton
Ckd by: F. Corbari
Reviewed by:
Submitted by: E. Lamar Faulk
Date: 19 July 2001
Rev:
Sol. No. DACA63-01-B-0007
Contr. No. DACA63-01-C-0016
File name:
Plot date:
Plot scale: 1:50

U.S. ARMY ENGINEER DISTRICT
CORPS OF ENGINEERS
FORT WORTH, TEXAS

POLYENGINEERING, INC.
ENGINEERS & ARCHITECTS
DOTHAN, ALABAMA

FORT HOOD, TEXAS
DIGITAL MULTI-PURPOSE RANGE COMPLEX (DMPRC)
PN 51915 FC 00

ELECTRICAL FLOOR PLAN
CENTRAL CONTROL BUILDING
POWER AND AUXILIARY SYSTEMS

Sheet reference number: E-80

Sheet of

00689240

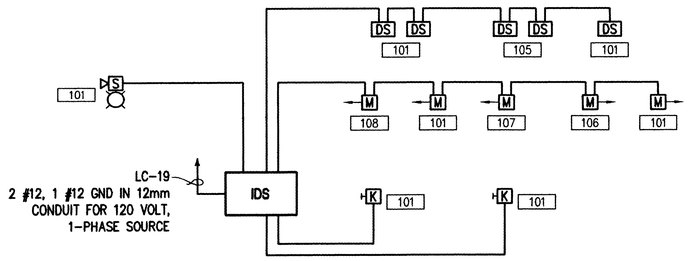

INTRUSION DETECTION SYSTEM RISER DIAGRAM
CENTRAL CONTROL BUILDING

NOT TO SCALE

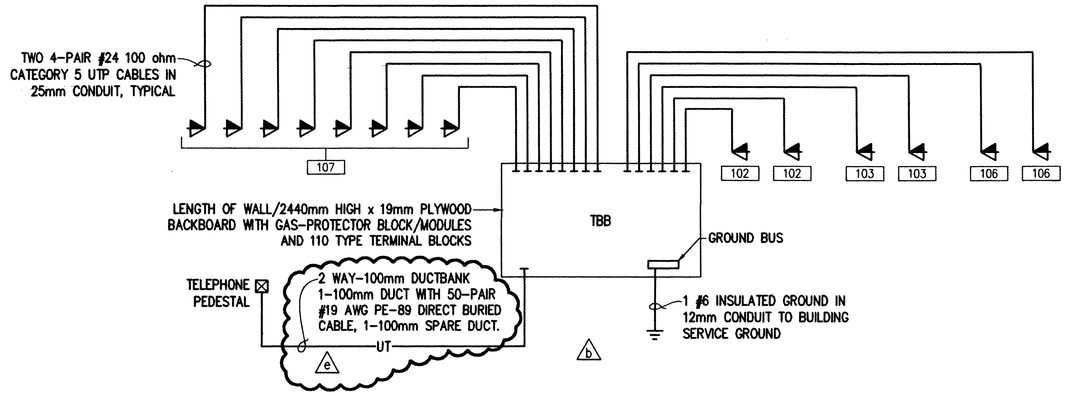

TELEPHONE RISER DIAGRAM
CENTRAL CONTROL BUILDING

NOT TO SCALE

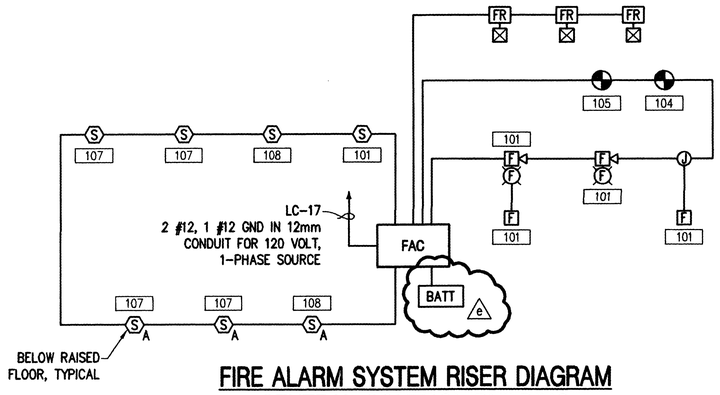

FIRE ALARM SYSTEM RISER DIAGRAM
CENTRAL CONTROL BUILDING

NOT TO SCALE

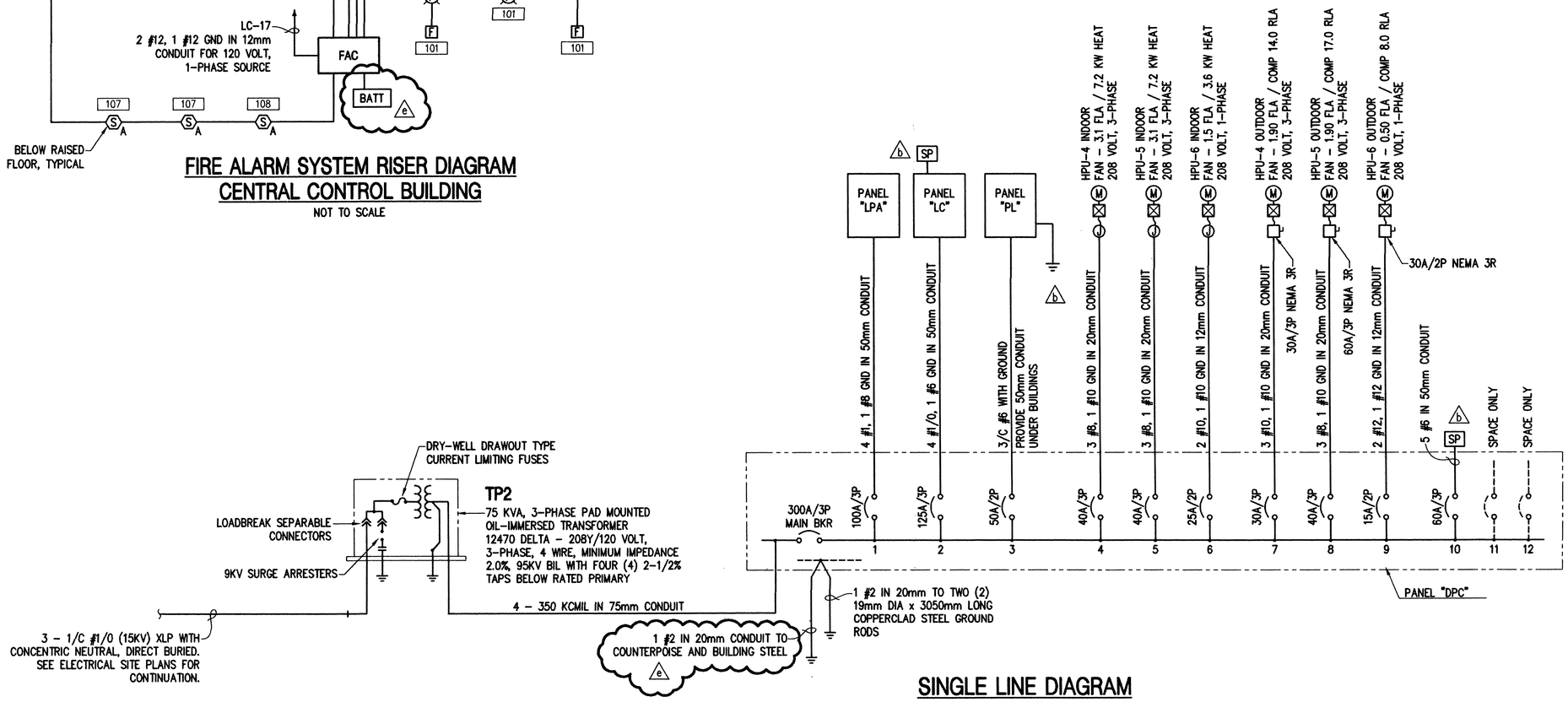

SINGLE LINE DIAGRAM
CENTRAL CONTROL BUILDING

NOT TO SCALE

THE SEAL APPEARING ON THIS DOCUMENT WAS AUTHORIZED BY SAMUEL LEE GULLEY ON AUGUST 8, 2001

SAMUEL LEE GULLEY
CERTIFICATE NO. 41201
STATE OF FLORIDA
PROFESSIONAL ENGINEER

US Army Corps of Engineers
FORT WORTH DISTRICT

POLYENGINEERING, INC.
1800 Medical Park Drive
Dothan, Alabama
(334) 793-4700
(334) 793-2016

Designed by: Samuel L. Gulley	Date: 19 July 2001	Rev.
Dwn by: T. Bolton	Ckd by: F. Corbori	Sol. No. DACA63-01-B-0007
Reviewed by: Scott Faulk		Contr. No. DACA63-01-C-0016

U.S. ARMY ENGINEER DISTRICT
CORPS OF ENGINEERS
FORT WORTH, TEXAS

POLYENGINEERING, INC.

FORT HOOD, TEXAS
DIGITAL MULTI-PURPOSE RANGE COMPLEX (DMPRC)
PN 51913 FY 00

CENTRAL CONTROL BUILDING
SINGLE LINE DIAGRAM

Sheet reference number: E-81

Sheet x of

Central Control Building

BREAKER INTERRUPTING CAPACITY 10,000 AMPS SYM.

PANEL SCHEDULE

BRACED FOR MINIMUM 10,000 AMPS SYM.

PANEL "LPA", 208Y/120 VOLT AC, 3-PHASE, 4 WIRE, 100 AMP, MAIN LUGS ONLY - SURFACE MOUNTED

EQUIPMENT SERVED	CKT. BKR. TRIP	CKT. BKR. POLE	VA/PHASE A	VA/PHASE B	VA/PHASE C	CKT. No.	CKT. No.	VA/PHASE A	VA/PHASE B	VA/PHASE C	CKT. BKR. POLE	CKT. BKR. TRIP	EQUIPMENT SERVED
LTG - RMs 101, 108	20	1	1152			1	2	968			1	20	LTG - RM 107
LTG - RMs 102-105	20	1		740		3	4		968		1	20	LTG - RM 106
LTG - RM 106	20	1			768	5	6			950	1	20	LTG - OUTDOOR
RECPs - RM 106	20	1	1500			7	8	1500			1	20	RECPs - RM 106
RECPs - RM 106	20	1		1500		9	10		900		1	20	RECPs - RMs 101, 102
RECP - RM 105	20	1			360	11	12			900	1	20	RECPs - RMs 101, 103
RECP - OUTDOOR	20	1	1000			13	14				1	20	SPARE BREAKER
SPARE BREAKER	20	1				15	16				1	20	SPARE BREAKER
SPARE BREAKER	20	1				17	18				1	20	SPARE BREAKER
SPARE BREAKER	20	1				19	20				1	20	SPARE BREAKER
SPARE BREAKER	20	1				21	22				1	20	SPARE BREAKER
SPACE ONLY		1				23	24				1		SPACE ONLY
SPACE ONLY		1				25	26				1		SPACE ONLY
SPACE ONLY		1				27	28				1		SPACE ONLY
SPACE ONLY		1				29	30				1		SPACE ONLY
SPACE ONLY		1				31	32				1		SPACE ONLY
SPACE ONLY		1				33	34				1		SPACE ONLY
SPACE ONLY		1				35	36				1		SPACE ONLY

* LOCKABLE TYPE CIRCUIT BREAKER

b TOTAL CONNECTED VOLT - AMPS

A	B	C	
6120	4108	2978	= 13,206 VA

Central Control Building

BREAKER INTERRUPTING CAPACITY 10,000 AMPS SYM.

PANEL SCHEDULE

BRACED FOR MINIMUM 10,000 AMPS SYM.

PANEL "LC", 208Y/120 VOLT AC, 3-PHASE, 4 WIRE, 225 AMP, MAIN LUGS ONLY - SURFACE MOUNTED

EQUIPMENT SERVED	CKT. BKR. TRIP	CKT. BKR. POLE	VA/PHASE A	VA/PHASE B	VA/PHASE C	CKT. No.	CKT. No.	VA/PHASE A	VA/PHASE B	VA/PHASE C	CKT. BKR. POLE	CKT. BKR. TRIP	EQUIPMENT SERVED
RECPs - RM 107	20	1	1500			1	2	1500			1	20	RECPs - RM 107
RECPs - RM 107	20	1		1500		3	4		1200		1	20	RECPs - RM 107
RECPs - RM 107	20	1			1200	5	6			1500	1	20	RECPs - RM 108
RECPs - RM 107	20	1	1200			7	8	1200			1	20	RECPs - RM 108
RECPs - RM 108	20	1		1500		9	10		1200		1	20	RECPs - RM 108
RACK SERVERS	20	1			1100	11	12			660	1	20	RACKMOUNT SERVER
DISTRIBUTION AMPLIFIERS	20	1	1200			13	14	650			1	20	RACKMOUNT SERVER
DISTRIBUTION AMPLIFIERS	20	1		1200		15	16		1680		1	20	COMP. TOWERS
FIRE ALARM CONTROL PANEL	*20	1			500	17	18			500	1	20	EQUIPMENT RACK - RM 108
IDS CONTROL PANEL	*20	1	500			19	20	500			1	20	EQUIPMENT RACK - RM 108
EQUIPMENT RACK - RM 108	20	1		600		21	22		500		1	20	EQUIPMENT RACK - RM 108
EQUIPMENT RACK - RM 108	20	1			600	23	24			500	1	20	EQUIPMENT RACK - RM 108
EQUIPMENT RACK - RM 108	20	1	1000			25	26	500			1	20	EQUIPMENT RACK - RM 108
CAMERA - OUTDOOR	20	1		1500		27	28		500		1	20	EQUIPMENT RACK - RM 108
MONITORS	20	1			1100	29	30			1400	1	20	MONITORS
MONITORS	20	1	1100			31	32	1500			1	20	RECPs - RM 107
PROJECTION SCREEN	20	1		600		33	34				1	20	SPARE BREAKER
PROJECTOR	20	1			1000	35	36				1	20	SPARE BREAKER
SPARE BREAKER	20	1				37	38				1	20	SPARE BREAKER
SPARE BREAKER	20	1				39	40				1	20	SPARE BREAKER
SPARE BREAKER	20	1				41	42				1	20	SPARE BREAKER

* LOCKABLE TYPE CIRCUIT BREAKER

b TOTAL CONNECTED VOLT - AMPS

A	B	C	
12,350	11,980	10,060	= 34,390 VA

Central Control Building

BREAKER INTERRUPTING CAPACITY 22,000 AMPS SYM.

PANEL SCHEDULE

BRACED FOR MINIMUM 22,000 AMPS SYM.

PANEL "DPC", 208Y/120 VOLT AC, 3-PHASE, 4 WIRE, 300 AMP, 3-POLE MAIN BREAKER - SURFACE MOUNTED

EQUIPMENT SERVED	CKT. BKR. TRIP	CKT. BKR. POLE	VA/PHASE A	VA/PHASE B	VA/PHASE C	CKT. No.	CKT. No.	VA/PHASE A	VA/PHASE B	VA/PHASE C	CKT. BKR. POLE	CKT. BKR. TRIP	EQUIPMENT SERVED
PANEL "LPA"	100	3	6120			1	2	12350			3	125	PANEL "LC"
				4108					11980				
					2978					10060			
PANEL "PL"	50	2	2620			3	4	2615			3	40	HPU-4 INDOOR
				1763					2615				
HPU-5 INDOOR	40	3			2615	5				2615			
			2615				6	1956			2	25	HPU-6 INDOOR
				2615					1956				
HPU-4 OUTDOOR	30	3			1908	7	8			2268	3	40	HPU-5 OUTDOOR
			1908					2268					
				1908					2268				
HPU-6 OUTDOOR	15	2			884	9	10				3	60	SURGE ARRESTER
			884										
SPACE ONLY		3				11							
							12				3		SPACE ONLY

TOTAL CONNECTED VOLT - AMPS

A	B	C	
33,336	29,213	23,328	= 85,877 VA

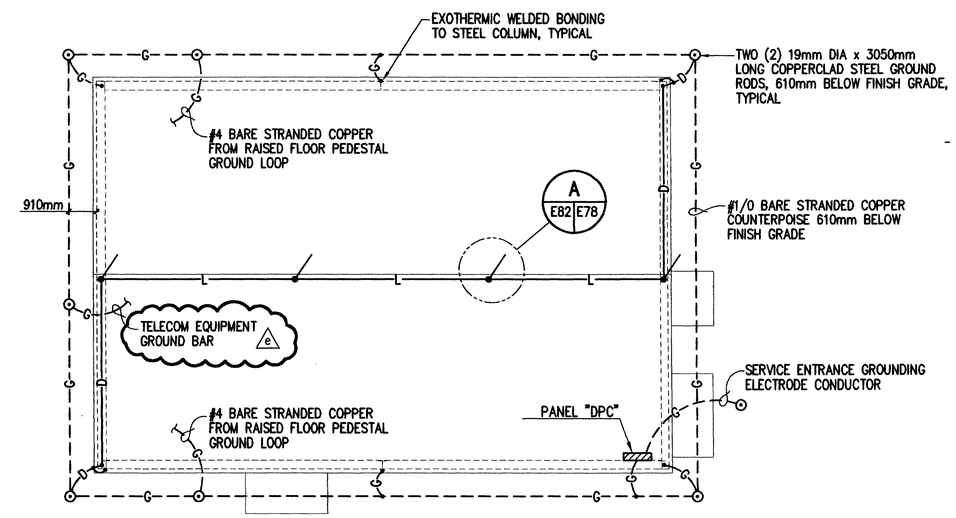

ROOF PLAN - LIGHTNING PROTECTION
CENTRAL CONTROL BUILDING

SCALE: 1:100

2000 1000 0 1000 2000

SCALE: 1:100

THE SEAL APPEARING ON THIS DOCUMENT WAS AUTHORIZED BY SAMUEL LEE GULLEY ON AUGUST 8, 2001

SAMUEL LEE GULLEY CERTIFICATE No. 34101 STATE OF FLORIDA PROFESSIONAL ENGINEER

US Army Corps of Engineers FORT WORTH DISTRICT

POLYENGINEERING, INC. 1950 Bradford Avenue Dothan, Alabama 36303 (334) 792-4700 (voice) (334) 792-9515 (fax)

Mark	Description	Date	Appr.
1	REVISED PLAN	SEPT 01	SLG
2	REVISED PANEL SCHEDULES	AUG 01	SLG

Designed by: Samuel L. Gulley
Dwn by: T. Bolton
Ckd by: F. Corbari
Reviewed by:
Submitted by: E. Lamar Faulk
Date: 19 July 2001
Rev.
Sol. No. DACA63-01-B-0007
Contr. No. DACA63-01-C-0016
File name:
Plot date:
Plot scale: 1:100

U.S. ARMY ENGINEER DISTRICT CORPS OF ENGINEERS FORT WORTH, TEXAS

POLYENGINEERING, INC. ENGINEERS & ARCHITECTS DOTHAN, ALABAMA

FORT HOOD, TEXAS
DIGITAL MULTI-PURPOSE RANGE COMPLEX (DMPRC)
PN 51915 FY 00

ELECTRICAL ROOF PLAN
CENTRAL CONTROL BUILDING
LIGHTNING PROTECTION

Sheet reference number:
E-82
Sheet x of x

00689210

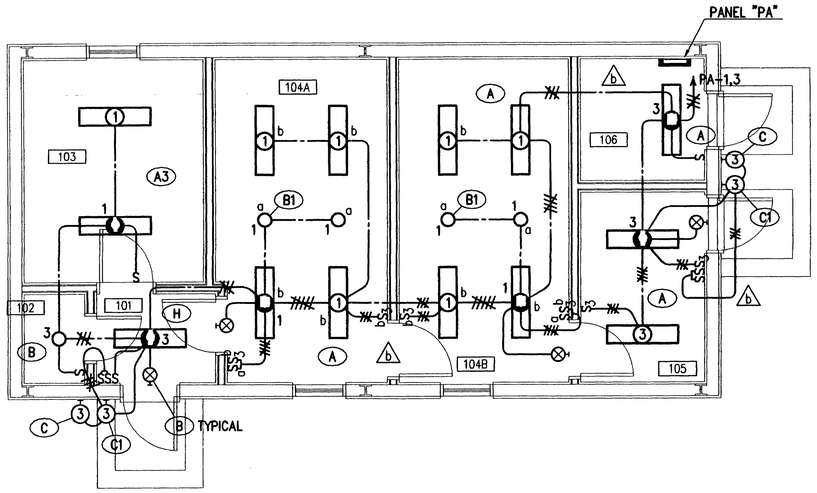

ELECTRICAL FLOOR PLAN - LIGHTING
GENERAL INSTRUCTION BUILDING

SCALE: 1:50

General Instruction Building

BREAKER INTERRUPTING CAPACITY 10,000 AMPS SYM.

PANEL SCHEDULE

BRACED FOR MINIMUM 10,000 AMPS SYM.

PANEL "PA", 120/240 VOLT AC, 1-PHASE, 3 WIRE, 150 AMP MAIN BREAKER - SURFACE MOUNTED

EQUIPMENT SERVED	CKT. BKR. TRIP	CKT. BKR. POLE	VA/PHASE A	VA/PHASE B	CKT. No.	CKT. No.	VA/PHASE A	VA/PHASE B	CKT. BKR. POLE	CKT. BKR. TRIP	EQUIPMENT SERVED
LTG - ROOM 103, 104	20	1	1210		1	2	1680		1	20	RECPs - ROOM 103
LTG - ROOM 102, 101, 105, 106	20	1		944	3	4		1680	1	20	RECPs - ROOM 103
RECPs - ROOM 103	20	1	1000		5	6	720		1	20	RECPs - ROOM 104A, 104B
RECPs - ROOM 103	20	1		1000	7	8		720	1	20	RECPs - ROOM 104, 105, 106
A/C UNIT INDOOR	45	2	4093		9	10	1541		2	25	A/C UNIT OUTDOOR
				4093	11	12		1541			
FIRE ALARM PANEL	*20	1	500		13	14	116		1	20	FLAG POLE
IDS CONTROL PANEL	*20	1		500	15	16			1		SPACE ONLY
SPARE BREAKER	20	1			17	18			1		SPACE ONLY
SPARE BREAKER	20	1			19	20			1		SPACE ONLY
SPARE BREAKER	20	1			21	22			1		SPACE ONLY
SPARE BREAKER	20	1			23	24			1		SPACE ONLY

* LOCKABLE TYPE CIRCUIT BREAKER

TOTAL CONNECTED VOLT - AMPS A 10,860 B 10,478 = 21,338 VA

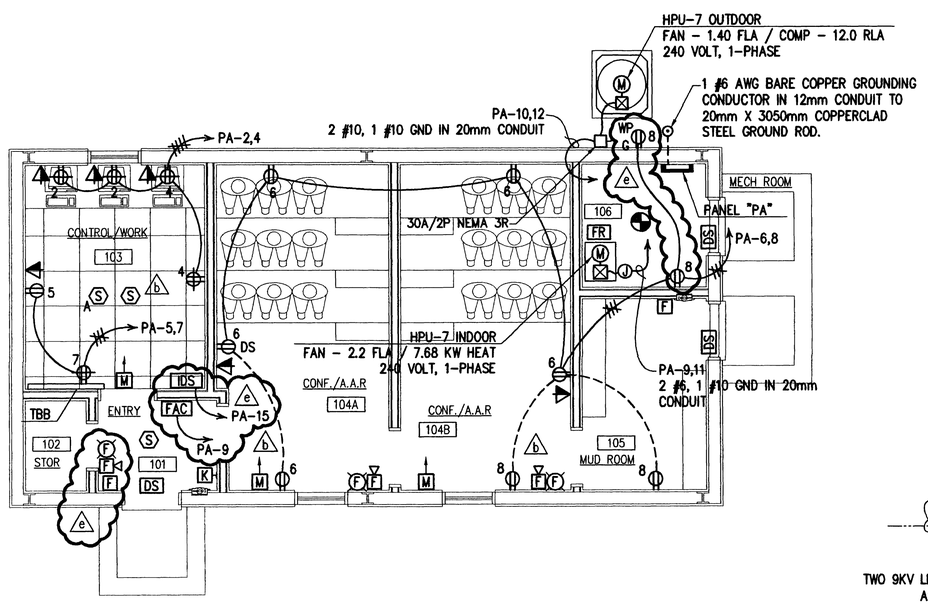

ELECTRICAL FLOOR PLAN - POWER & AUXILIARY SYSTEMS
GENERAL INSTRUCTION BUILDING

SCALE: 1:50

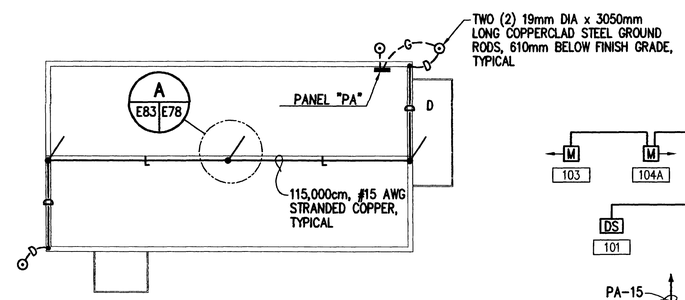

ROOF PLAN - LIGHTNING PROTECTION
GENERAL INSTRUCTION BUILDING

SCALE: 1:100

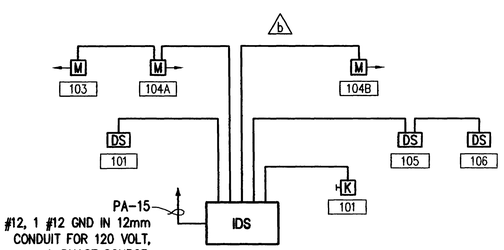

INTRUSION DETECTION SYSTEM RISER DIAGRAM
GENERAL INSTRUCTION BUILDING

NOT TO SCALE

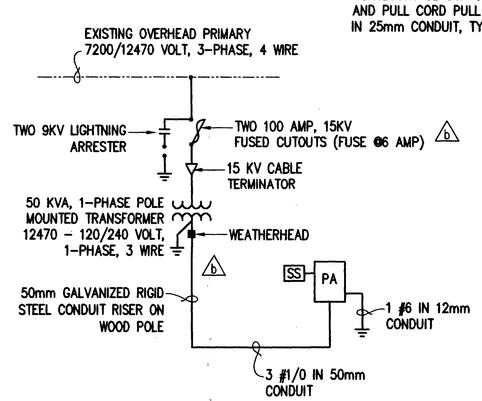

POWER RISER DIAGRAM
GENERAL INSTRUCTION BUILDING

NOT TO SCALE

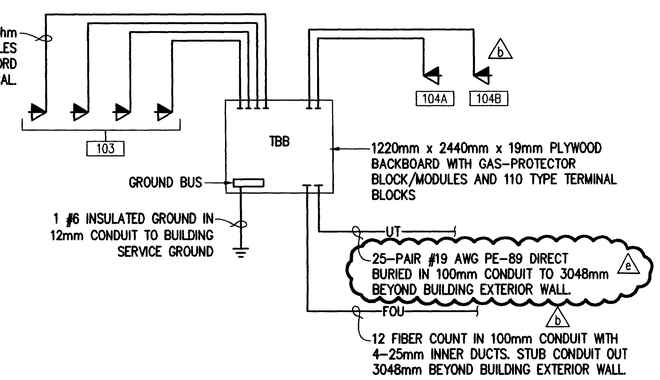

TELECOMMUNICATIONS RISER DIAGRAM
GENERAL INSTRUCTION BUILDING

NOT TO SCALE

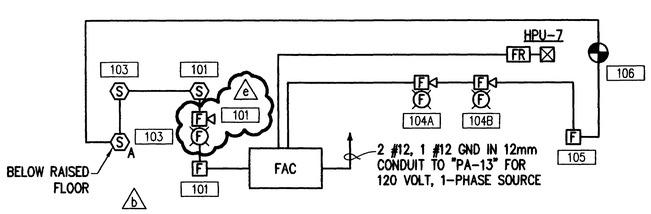

FIRE ALARM SYSTEM RISER DIAGRAM

NOT TO SCALE

1000 500 0 500 1000

SCALE: 1:50

THE SEAL APPEARING ON THIS DOCUMENT WAS AUTHORIZED BY SAMUEL LEE GULLEY ON AUGUST 8, 2001

SAMUEL LEE GULLEY CERTIFICATE No. 34001 STATE OF FLORIDA PROFESSIONAL ENGINEER

US Army Corps of Engineers
FORT WORTH DISTRIC

POLYENGINEERING, INC.
1025 Headland Avenue
Dothan, Alabama 36305
(334) 792-6720 (voice)
(334) 793-9016 (fax)

Rev.	Date	Description
2	SEPT 01	REVISED PLAN
1	AUG 01	REVISED PLAN

Designed by: Samuel L. Gulley
Dwn by: T. Bolton
Ckd by: F. Corbett
Reviewed by:
Submitted by:
Date: 19 July 2001
Sol. No. DACA03-01-B-0007
Contr. No. DACA03-01-C-0016
File name:
Plot date:
Plot scale: 1:50

U.S. ARMY ENGINEER DISTRICT
CORPS OF ENGINEERS
FORT WORTH, TEXAS

POLYENGINEERING, INC.
ENGINEERS & ARCHITECTS
DOTHAN, ALABAMA

FORT HOOD, TEXAS
DIGITAL MULTI-PURPOSE RANGE COMPLEX (DMPRC)
PN 51915 FY 00

ELECTRICAL FLOOR PLAN
GENERAL INSTRUCTION BUILDING

Sheet reference number:
E-83
Sheet x of x

00689270

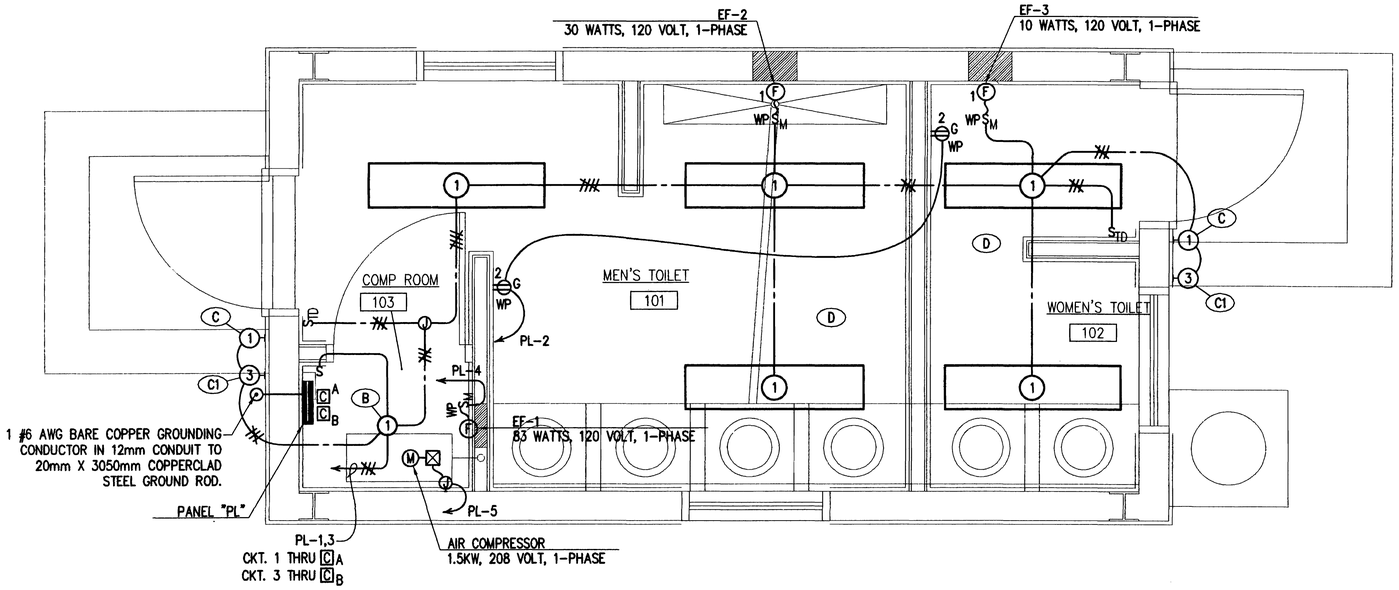

ELECTRICAL FLOOR PLAN - LATRINE BUILDING

SCALE: 1:20

NOTE
ALL WIRING SHALL BE INSTALLED IN GALVANIZED RIGID STEEL OR IMC CONDUIT.

Latrine Building

BREAKER INTERRUPTING CAPACITY 10,000 AMPS SYM.

PANEL SCHEDULE

NEMA 3R ENCLOSURE

BRACED FOR MINIMUM 10,000 AMPS SYM.

PANEL "PL", 120/208 VOLT AC, 1-PHASE, 3 WIRE, 50 AMP MAIN BREAKER - SURFACE MOUNTED

EQUIPMENT SERVED	CKT. BKR. TRIP	CKT. BKR. POLE	VA/PHASE A	VA/PHASE B	CKT. No.	CKT. No.	VA/PHASE A	VA/PHASE B	CKT. BKR. POLE	CKT. BKR. TRIP	EQUIPMENT SERVED
LTG - INTERIOR	20	1	880		1	2	360		1	20	RECPS
LTG - OUTDOOR RED LIGHTS	20	1		300	3	4		83	1	20	EF-1
AIR COMPRESSOR	25	2	1380		5	6	200		1	20	CONTACTOR CONTROL POWER
				1380	7	8			1		SPACE ONLY
SPARE BREAKER	20	1			9	10			1		SPACE ONLY
SPARE BREAKER	20	1			11	12			1		SPACE ONLY

TOTAL CONNECTED VOLT - AMPS A 2620 B 1763 = 4383 VA

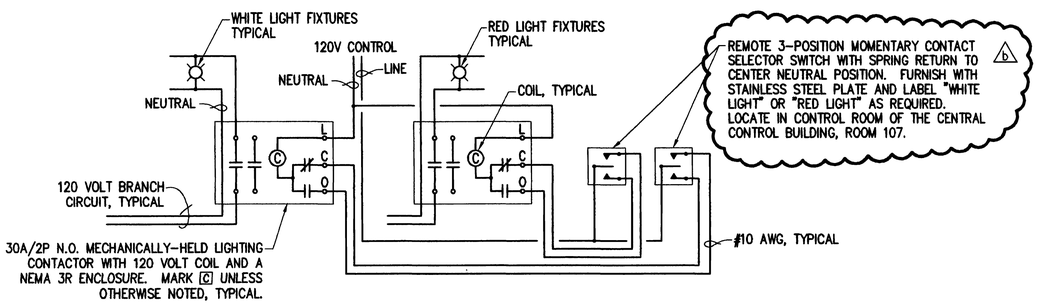

REMOTE 3-POSITION MOMENTARY CONTACT SELECTOR SWITCH WITH SPRING RETURN TO CENTER NEUTRAL POSITION. FURNISH WITH STAINLESS STEEL PLATE AND LABEL "WHITE LIGHT" OR "RED LIGHT" AS REQUIRED. LOCATE IN CONTROL ROOM OF THE CENTRAL CONTROL BUILDING, ROOM 107.

BUILDING EXTERIOR LIGHTING CONTROL SCHEMATIC

NOT TO SCALE

(TYPICAL FOR CONTROL OF RED AND WHITE LIGHTS AT LATRINE)

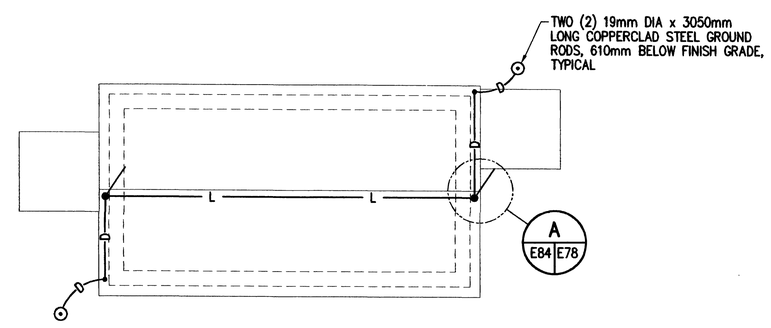

ROOF PLAN - LIGHTNING PROTECTION LATRINE BUILDING

SCALE: 1:100

0 200 400 800

SCALE: 1:20

THE SEAL APPEARING ON THIS DOCUMENT WAS AUTHORIZED BY SAMUEL LEE GULLEY ON AUGUST 8, 2001

SAMUEL LEE GULLEY CERTIFICATE NO. 56560 STATE OF FLORIDA PROFESSIONAL ENGINEER

US Army of Eng FORT WO

POLYENGIN 1005 Hwy Denton, AR (954) 555 (954) 555

Date: 13 July 2001 | Rev.
Sol. No. DACA63-01-B-0007
Designed by: Samuel L. Gulley
Dwn by: T. Bolton
Ckd by: F. Corbari
Contr. No.

U.S. ARMY ENGINEER DISTRICT CORPS OF ENGINEERS FORT WORTH, TEXAS

FORT HOOD, TEXAS DIGITAL MULTI-PURPOSE RANGE COMPLEX PN 51915 FY 00

Sheet

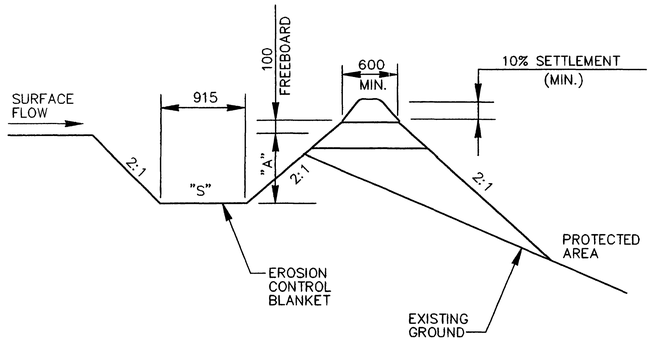

"A" mm	TEMPORARY DIVERSION DITCH NO.	"S"=SLOPE
457	1	0.5%
600	2	0.83%
762	3	0.29%

TEMPORARY DIVERSION DITCH

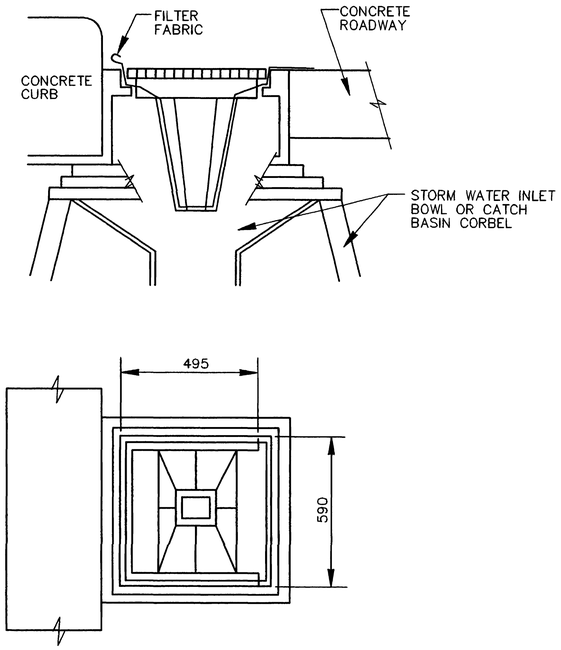

BASKET CURB INLET

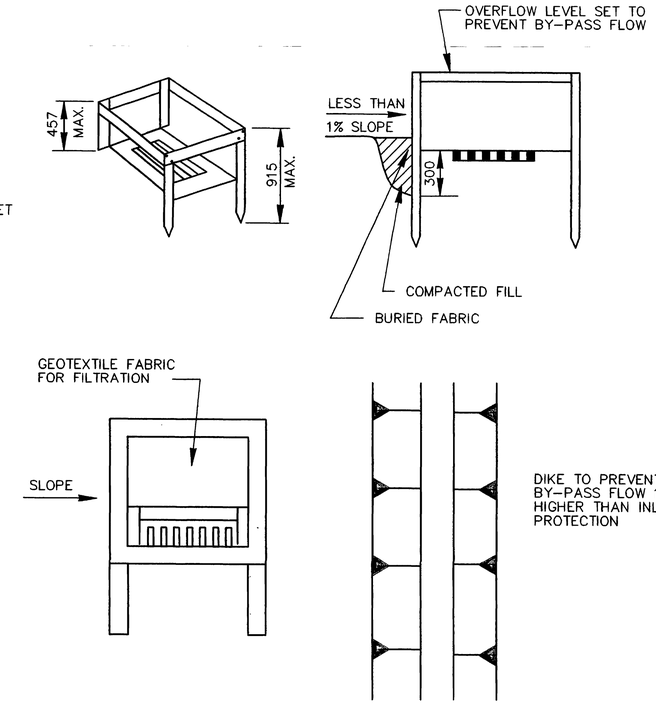

FABRIC DROP INLET PROTECTION

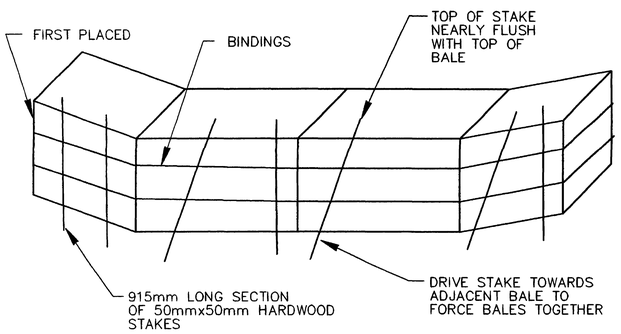

STRAW BALE DAM

WHEN TWO OR MORE ROWS OF BALES ARE INSTALLED, OFFSET EA. ROW BY 1/2 BALE

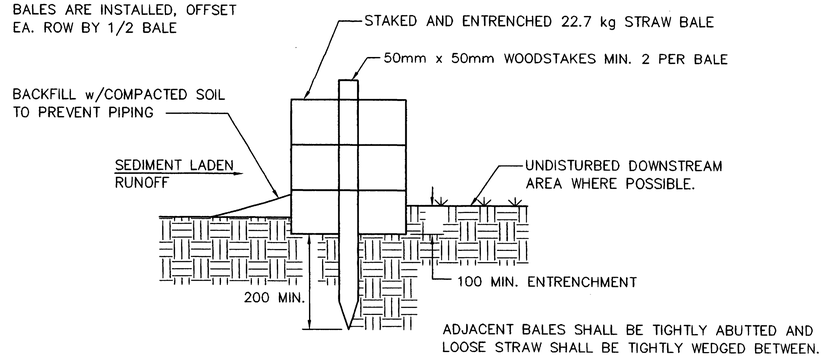

STRAW BALES SHOULD NOT REMAIN IN PLACE MORE THAN 12 MONTHS AFTER INSTALLATION UNLESS IT CAN BE DETERMINED SIGNIFICANT DETERIORATION HAS NOT OCCURRED. WHEN USED AS PERIMETER FILTER, SEDIMENT SHOULD BE REMOVED WHEN MATERIAL IS WITHIN 150 OF THE TOP OF ANY BALE.

TYPICAL INSTALLATION OF STRAW BALES

STATE OF TEXAS
E. LAMAR FAULK
86158
LICENSED
PROFESSIONAL ENGINEER

THE SEAL APPEARING ON THIS DOCUMENT WAS AUTHORIZED BY E. LAMAR FAULK ON AUGUST 8, 2001

NOTE:
ALL DIMENSIONS ARE SHOWN IN MILLIMETERS UNLESS OTHERWISE INDICATED.

US Army Corps of Engineers
FORT WORTH DISTRICT

POLYENGINEERING, INC.
1500 Medical Avenue
Dothan, Alabama 36303
(334) 792-4700 (voice)
(334) 792-9015 (fax)

Mark	Description	Date	Appr.
1	TITLE BLOCK EDIT, ADDED SEAL	AUG 01	ELF

Date: 19 June 2001
Rev.
Sol No. DACA63-01-B-0007
Contr No. DACA63-01-C-0016
File name:
Plot date:
Plot scale: AS SHOWN

Designed by: Rebecca S. Hand
Dwn by: J. Peeden
Ckd by: M. Dixon
Reviewed by: Scott Faulk
Submitted by: E. Lamar Faulk

U.S. ARMY ENGINEER DISTRICT
CORPS OF ENGINEERS
FORT WORTH, TEXAS

POLYENGINEERING, INC.
ENGINEERS & ARCHITECTS
DOTHAN, ALABAMA

FORT HOOD, TEXAS
DIGITAL MULTI-PURPOSE RANGE COMPLEX
PN 51915 FY 01

EROSION CONTROL DETAILS

Sheet reference number:
EC-1
Sheet of

Contr No. DACA63-01-C-0016

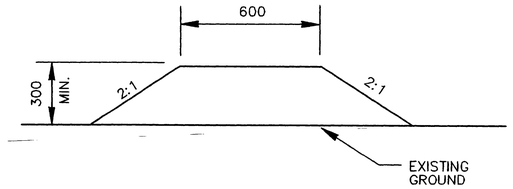

TEMPORARY DIVERSION DIKE

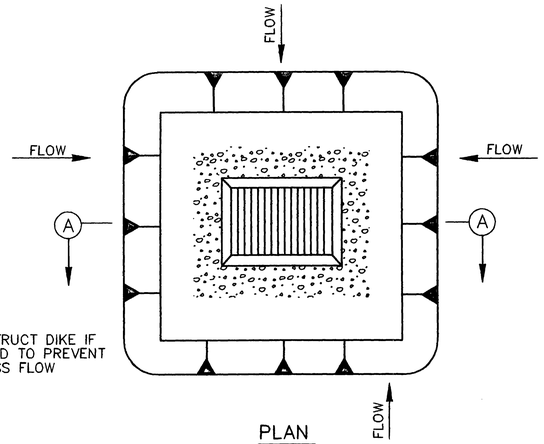

NOTE:
CONSTRUCT DIKE IF NEEDED TO PREVENT BYPASS FLOW

PLAN

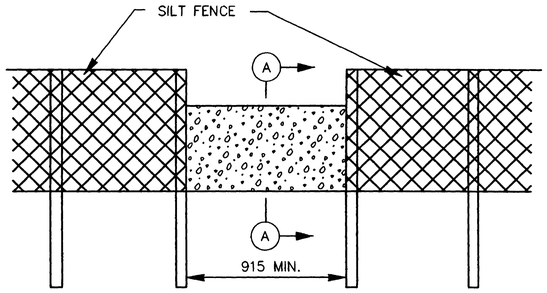

TO BE USED IN THE LOWEST SECTION OF THE SILT FENCE WHERE THERE WILL BE CONCENTRATED FLOW (i.e. OUTLET OF CULVERT UNDER ROAD)

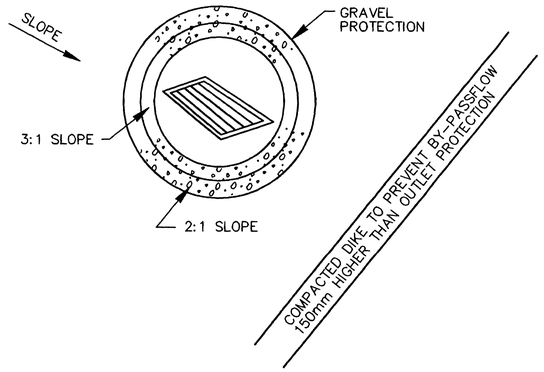

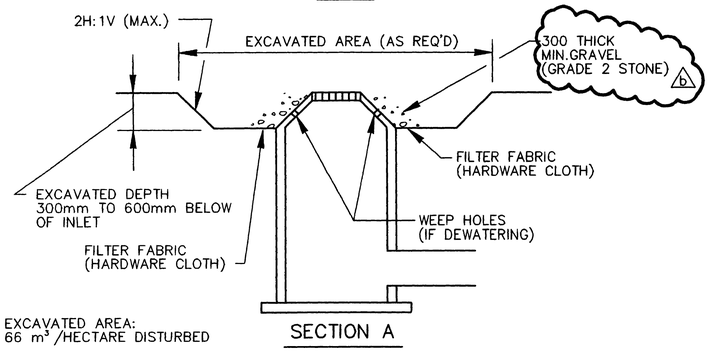

ELEVATED DROP INLET PROTECTION

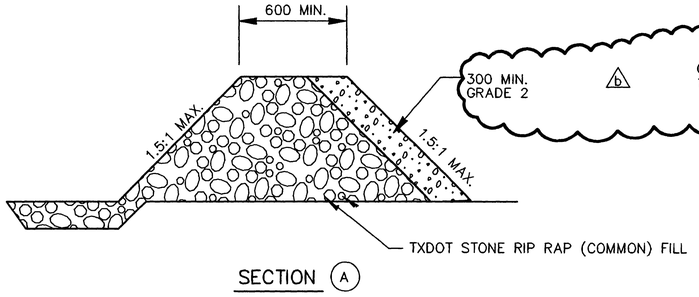

SILT FENCE ROCK OVERFLOW

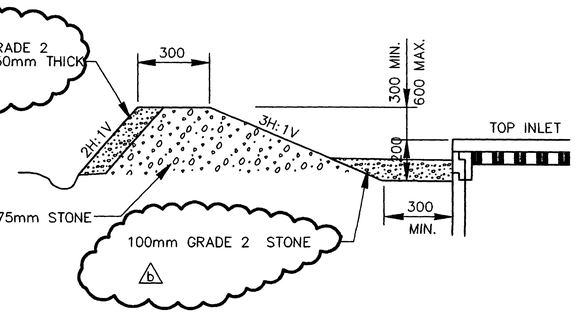

GRAVEL DONUT INLET PROTECTION

b

STATE OF TEXAS
E. LAMAR FAULK
68158
LICENSED
PROFESSIONAL ENGINEER

THE SEAL APPEARING ON THIS DOCUMENT WAS AUTHORIZED BY E. LAMAR FAULK ON AUGUST 8, 2001

NOTE:
ALL DIMENSIONS ARE SHOWN IN MILLIMETERS UNLESS OTHERWISE INDICATED.

US Army Corps of Engineers
FORT WORTH DISTRICT

POLYENGINEERING, INC.
1906 Hazelhurst Avenue
Dothan, Alabama 36303
(334) 793-4700 (voice)
(334) 793-3015 (fax)

Mark	Description	Date	Appr.
4	TITLE BLOCK AND TEXT EDIT, ADDED SEAL	AUG 01	ELF

Date: 19 June 2001 | Rev.
Sol No. DAC-63-01-R-0007
Contr No. DAC63-01-C-0016
Designed by: Rebecca S. Hand
Dwn by: J. Peaden | Ckd by: M. Dixon
Reviewed by: Scott Faulk
Submitted by: E. Lamar Faulk
File name:
Plot date:
Plot scale: AS SHOWN

U.S. ARMY ENGINEER DISTRICT
CORPS OF ENGINEERS
FORT WORTH, TEXAS

POLYENGINEERING, INC.
ENGINEERS & ARCHITECTS
DOTHAN, ALABAMA

FORT HOOD, TEXAS
DIGITAL MULTI-PURPOSE RANGE COMPLEX
(DMPRC) FY 01
PN 51915

b

EROSION CONTROL DETAILS

Sheet reference number:
EC-2
Sheet 1 of X

Contr No. DAC63-01-C-0016

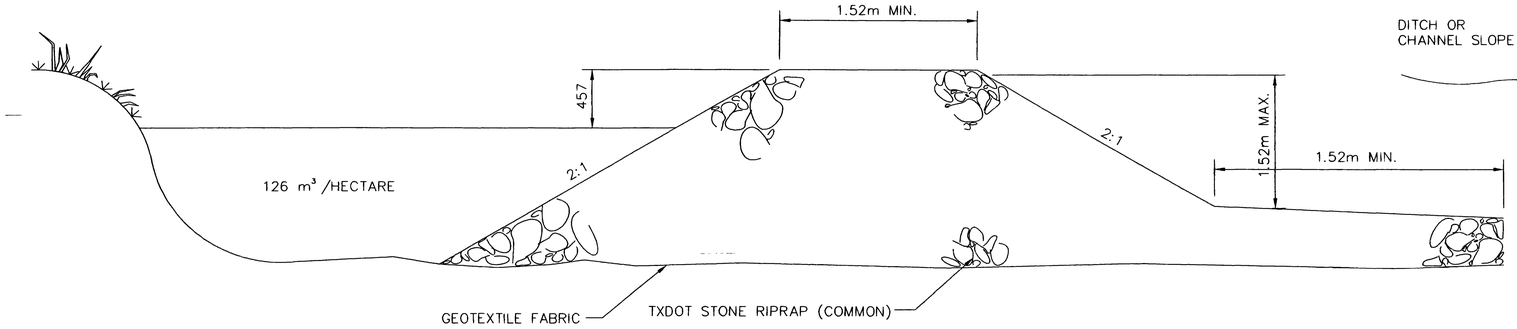

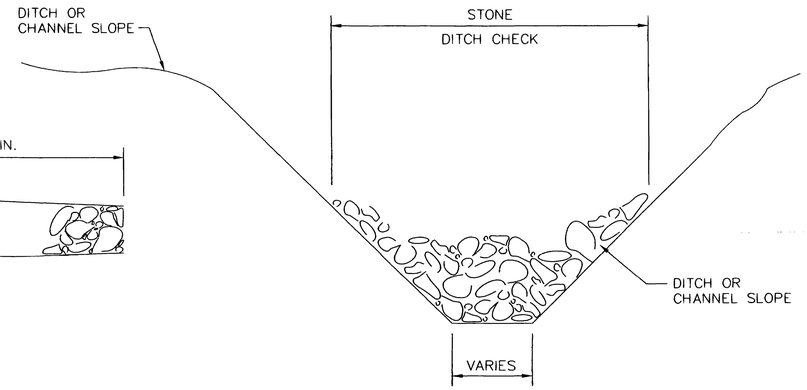

TYPICAL CROSS SECTION

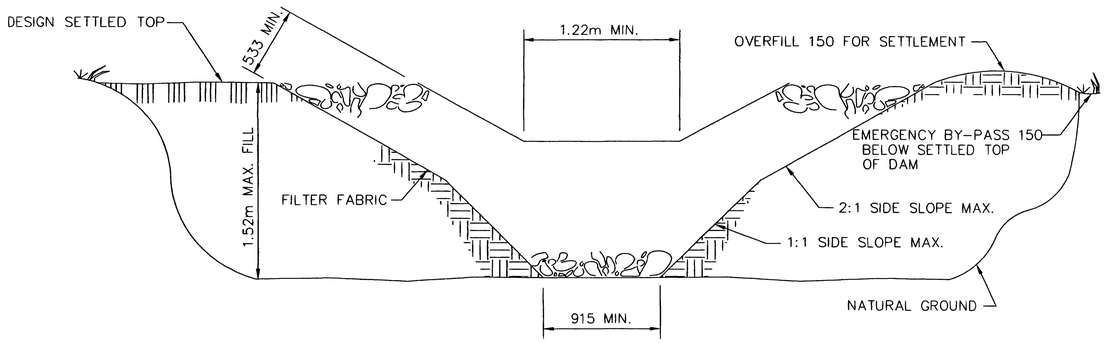

SEDIMENT TRAP

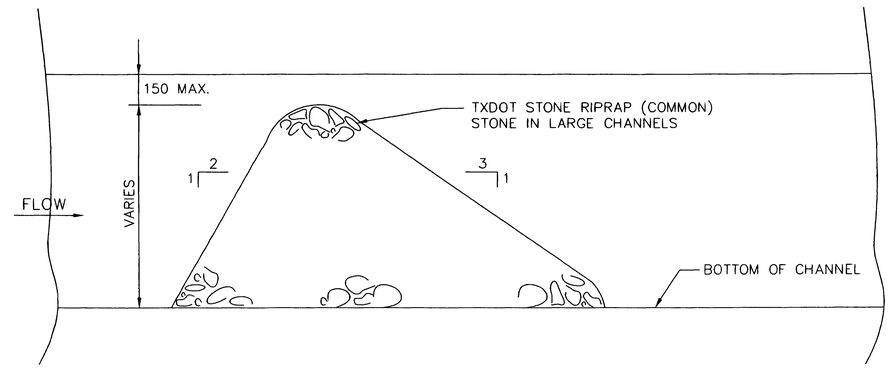

TYPICAL LONGITUDINAL SECTION

TYPICAL STONE DITCH CHECK DETAIL

EROSION CONTROL SCHEDULING

CONSTRUCTION ACTIVITY	SCHEDULE CONSIDERATION
1. CONSTRUCTION ROUTES, EQUIPMENT PARKING AREAS.	INSTALL ALL CONTROL MEASURES PRIOR TO COMMENCING CONSTRUCTION WORK.
2. SEDIMENT FENCES, DAMS AND OUTLET PROTECTION.	CLEAR AND GRUB AREAS OF SITE OR WORK AREA SUFFICIENT TO INSTALL SILT FENCES AND SEDIMENT DAMS AND OUTLET PROTECTION; PROVIDE TEMPORARY OR PERMANENT SEEDING AS REQUIRED.
3. LAND CLEARING & GRUBBING, RUNOFF CONTROL, DIVERSIONS, AND OUTLET PROTECTION.	INSTALL KEY PRACTICES AFTER PRINCIPAL SEDIMENT TRAPS AND BEFORE LAND GRADING. INSTALL ADDITIONAL RUNOFF CONTROL MEASURES DURING GRADING.
4. RUNOFF CONVEYANCE SYSTEM. STABILIZATION CHANNELS, STORM DRAINS, INLET PROTECTION AND OUTLET PROTECTION.	INSTALL PRINCIPLE RUNOFF CONVEYANCE SYSTEM WITH RUNOFF-CONTROL MEASURES. INSTALL REMAINDER OF SYSTEM AFTER GRADING.
5. CONSTRUCTION SITE PREPARATION. CUTTING, FILLING, AND GRADING SEDIMENT DAMS, BARRIERS, DIVERSIONS, SURFACE ROUGHENING.	BEGIN CONSTRUCTION AFTER PRINCIPAL SEDIMENT AND KEY RUNOFF-CONTROL MEASURES ARE INSTALLED. CLEAR BORROW AND DISPOSAL AREAS ONLY AS NEEDED. INSTALL ADDITIONAL CONTROL MEASURES AS CONSTRUCTION PROGRESSES.
7. CONSTRUCTION.	INSTALL NECESSARY EROSION AND SEDIMENTATION CONTROL PRACTICES AS WORK TAKES PLACE.

GENERAL NOTES:

1. WIRE SHALL BE A MIN. OF 813mm IN WIDTH AND SHALL HAVE A MIN. OF 6 WIRES WITH 300 STAY SPACING.
2. GEOTEXTILE FABRIC SHALL BE A MIN. OF 915mm IN WIDTH AND SHALL BE ADEQUATELY FASTENED TO THE WIRE.
3. STEEL POSTS SHALL BE 1.52m IN HEIGHT AND BE OF THE SELF-FASTENER ANGLE STEEL TYPE.
4. WOOD POST SHALL BE A MIN. OF 1.83m IN HEIGHT AND 75mm OR MORE IN DIAMETER. WIRE FABRIC SHALL BE FASTENED TO WOODEN POST WITH NOT LESS THAN NO.9 WIRE STAPLES 38 LONG.
5. MINOR SILT FENCE FOR LOW FLOWS AND GRADES MAY BE INSTALLED WITHOUT WIRE.

MAINTENANCE

1.) THE PROJECT SITE SHALL BE REVIEWED WEEEKLY AND AFTER ANY SIGNIFICANT RAINFALL TO ENSURE SEDIMENT IS NOT TRANSPORTED OFF SITE.

2.) MAINTENANCE REPAIR SHALL BE MADE IMMEDIATELY.

4.) CONTRACTOR SHALL WATER SITE AS NEEDED TO CONTROL DUST.

5.) REMOVE ACCUMULATED SILT TO MAINTAIN EFFECTIVENESS OF EROSION CONTROL MEASURES.

THE SEAL APPEARING ON THIS DOCUMENT WAS AUTHORIZED BY E. LAMAR FAULK ON AUGUST 8, 2001

NOTE:
ALL DIMENSIONS ARE SHOWN IN MILLIMETERS UNLESS OTHERWISE INDICATED.

US Army Corps of Engineers
FORT WORTH DISTRICT

POLYENGINEERING, INC.
1935 Headland Avenue
Dothan, Alabama 36303
(334) 793-4700 (voice)
(334) 793-9015 (fax)

Mark	Description	Date	Appr.
A	CHANGED LOCATION OF CHECK DAMS PER CR M0060	DEC 21	CD
B	TITLE BLOCK EDIT. ADDED SEAL	AUG 01	ELF

Designed by: Rebecca S. Hand
Dwn by: J. Peeden
Ckd by: M. Dixon
Reviewed by: Scott Faulk
Submitted by: E. Lamar Faulk
Date: 19 June 2001
Rev.
Sol No. DACA63-01-B-0007
Contr. No. DACA63-01-C-0016
File name:
Plot date:
Plot scale: AS SHOWN

U.S. ARMY ENGINEER DISTRICT
CORPS OF ENGINEERS
FORT WORTH, TEXAS

POLYENGINEERING, INC.
ENGINEERS & ARCHITECTS
DOTHAN, ALABAMA

FORT HOOD, TEXAS
DIGITAL MULTI-PURPOSE RANGE COMPLEX (DMPRC)
PN 51915 FY 01

EROSION CONTROL DETAILS

Sheet reference number:
EC-3
Sheet 1 of X

Contr No. DACA63-01-C-0016

g 8/11/2005 10:27:39 AM

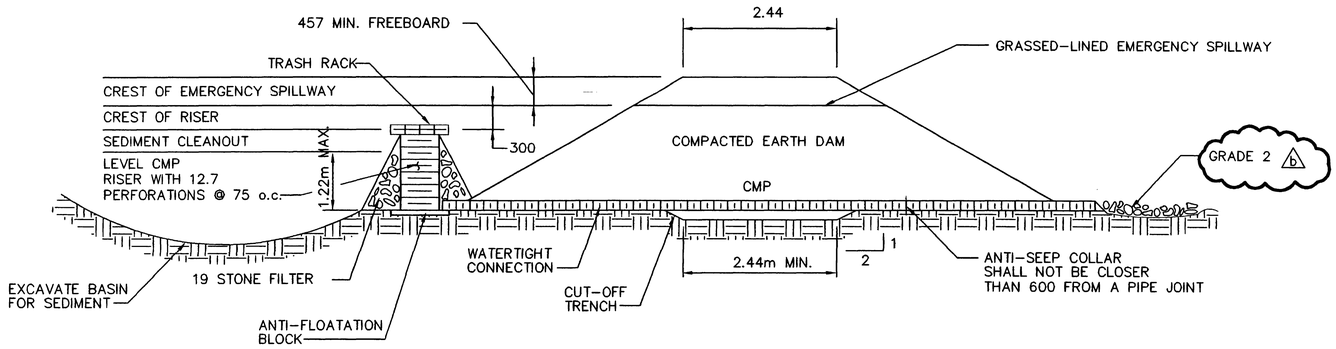

SEDIMENT BASIN DETAIL

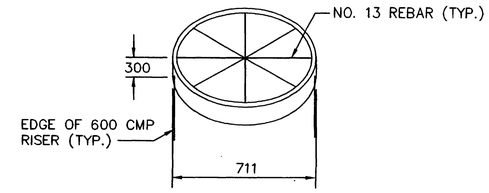

TRASH RACK DETAIL

(SEDIMENT BASIN)

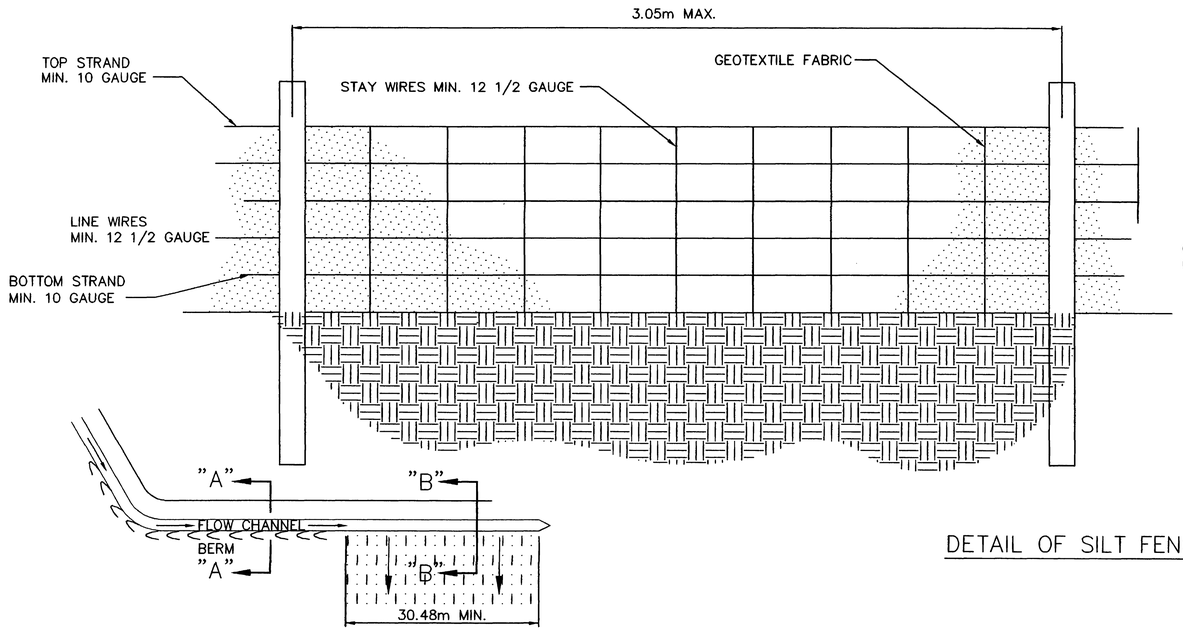

DETAIL OF SILT FENCE

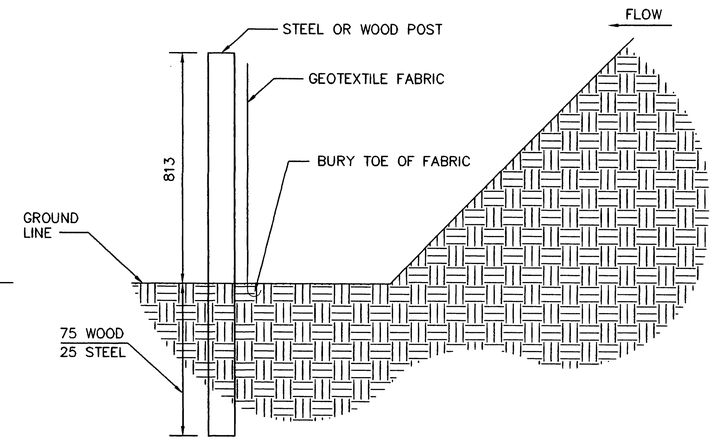

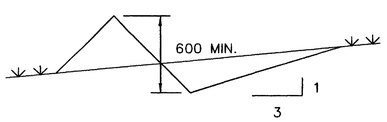

SECTION "A-A"

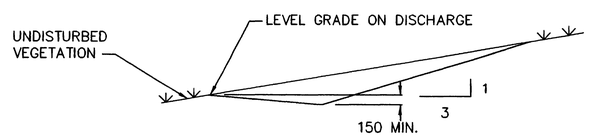

SECTION "B-B"

CHANNEL SHALL BE ADEQUATE FOR ANTICIPATED FLOW

TYPICAL LEVEL SPREADERS

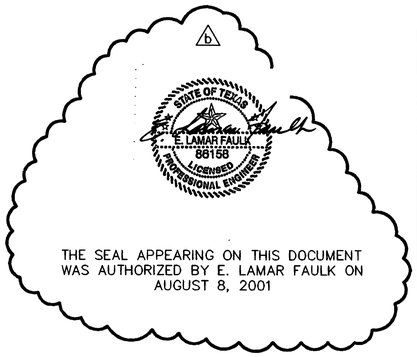

THE SEAL APPEARING ON THIS DOCUMENT WAS AUTHORIZED BY E. LAMAR FAULK ON AUGUST 8, 2001

NOTE:
ALL DIMENSIONS ARE SHOWN IN MILLIMETERS UNLESS OTHERWISE INDICATED.

US Army Corps of Engineers
FORT WORTH DISTRICT

POLYENGINEERING, INC.
1905 Boodhead Avenue
Dothan, Alabama 36303
(334) 793-4700 (voice)
(334) 793-3015 (fax)

Mark	Description	Date	Appr.
2	TITLE BLOCK AND TEXT EDIT, ADDED SEAL	AUG 01	ELF

Designed by: Rebecca S. Hand
Dwn by: J. Peeden
Ckd by: M. Dixon
Reviewed by: Scott Faulk
Submitted by: E. Lamar Faulk
Date: 13 June 2001
Sol No. DACA63-01-B-0007
Contr No. DACA63-01-C-0016
File name:
Plot date:
Plot scale: AS SHOWN
Rev.

U.S. ARMY ENGINEER DISTRICT
CORPS OF ENGINEERS
FORT WORTH, TEXAS

POLYENGINEERING, INC.
ENGINEERS & ARCHITECTS
DOTHAN, ALABAMA

FORT HOOD, TEXAS
DIGITAL MULTI-PURPOSE RANGE COMPLEX
PN 519115

FY 01

EROSION CONTROL DETAILS

Sheet reference number:
EC-4
Sheet 1 of X

Contr No. DACA63-01-C-0016

00689330

NOTES:
1.) SILT FENCES SHALL BE USED AS PERIMETER CONTROLS, LOCATED DOWNSTREAM OF ALL CONSTRUCTION AREAS.
2.) ALL AVAILABLE TIMBER SHOULD BE USED AS BRUSH DAMS AND/OR WOOD CHIPS FOR STABLIZATION OF SOILS.
3.) ALL DISTURBED AREAS WILL BE MULCHED.

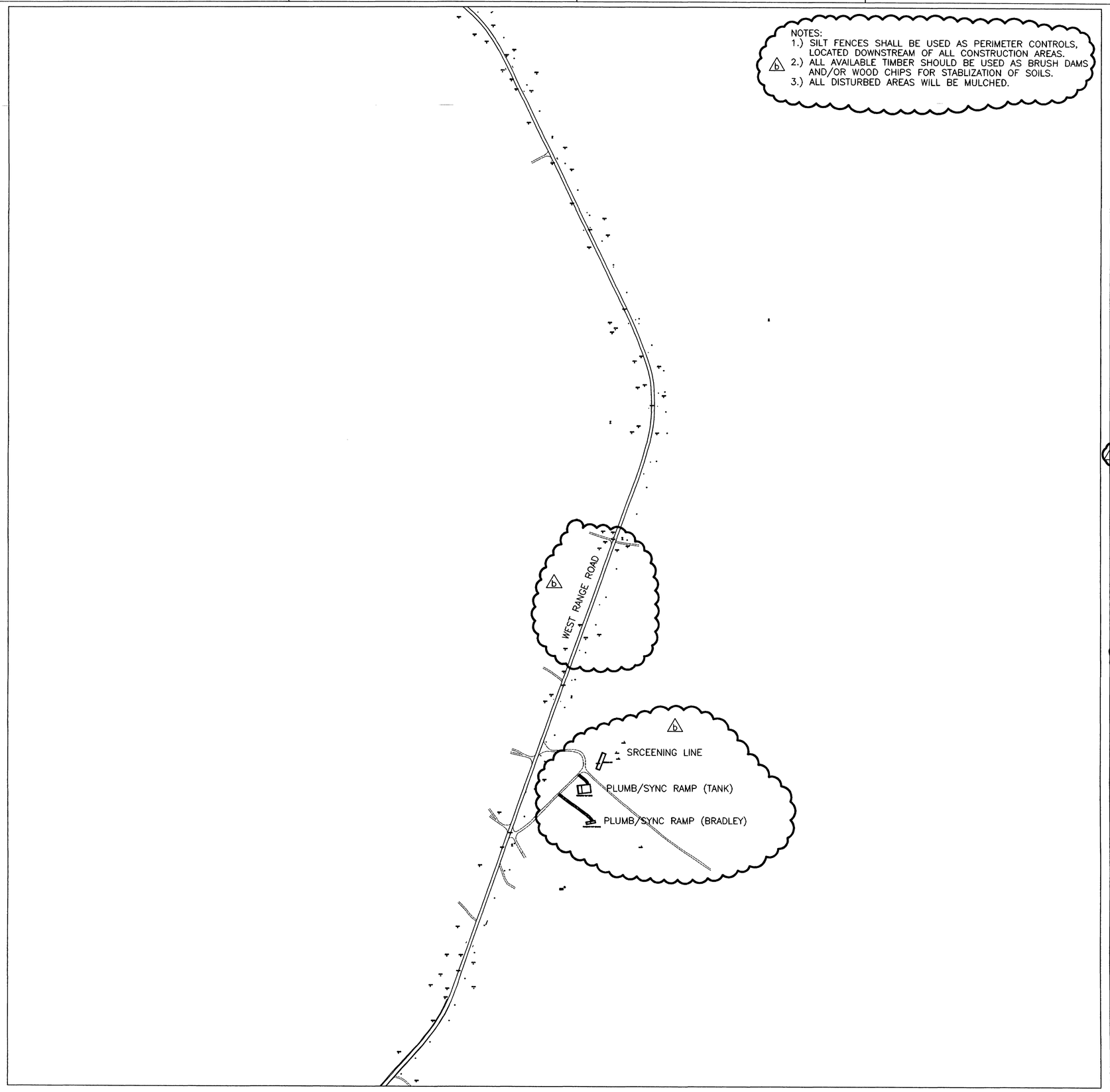

SITE REFERENCE PLAN

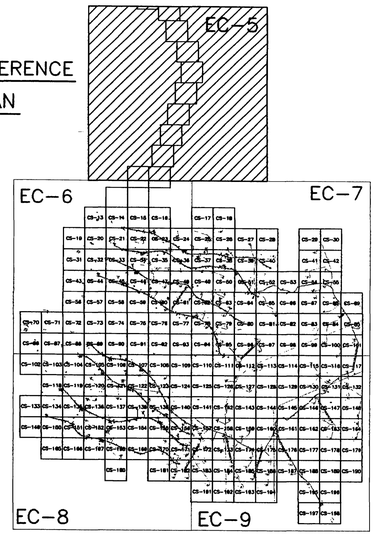

EXISTING LEGEND

- MAJOR CONTOUR (2m INTERVALS)
- MINOR CONTOUR
- CREEK
- EXISTING ROAD
- CHAIN LINK FENCE
- 326.00 SPOT ELEVATION
- ARCHEOLOGICAL SITE
- 59 SURVEY MARKER
- TREELINE
- UTILITY POLE
- EXISTING AMTC (ECM-1)
- STATIONARY ARMOR TARGET
- ELECTRICAL MANHOLES
- EXISTING BUILDINGS

PROPOSED LEGEND

- CV-1, JV-1 SAT
- CC-1, JC-1 SIT
- CM-1, JM-1 AMTC
- C4-B, J4-B DEFILADE
- OLD IMPACT AREA
- OLD IMPACT BUFFER ZONE AREA
- TANK TRAILS
- PRIMARY TARGET SERVICE ROAD
- 266 FINISHED GRADING
- SECONDARY TARGET SERVICE ROADS
- C-34 DRAINAGE PIPE w/ PIPE NO.
- C-100 CURVE NUMBER
- CD CHECK DAMN
- POWER CENTER (PC1A, PJ1A)
- CENTRAL AAR BUILDING — BUILDINGS
- CONCRETE TURNING PADS
- C-28 TURN PAD NUMBER
- B-30 SOIL BORING
- FC-1 CAMERAS
- CL-1 RANGE LIMIT MARKER
- TP-3 TEST PITS
- CT-1, JT-1 TRENCH
- EXISTING TARGET DEMOLITION
- FLAG POLE

STATE OF TEXAS
E. LAMAR FAULK
86158
LICENSED
PROFESSIONAL ENGINEER

THE SEAL APPEARING ON THIS DOCUMENT WAS AUTHORIZED BY E. LAMAR FAULK ON AUGUST 8, 2001

N

GRAPHIC SCALE
100 50 0 50 100
SCALE: 1:5000

US Army Corps of Engineers
FORT WORTH DISTRICT

POLYENGINEERING, INC.
ENGINEERS AND ARCHITECTS
POLYENGINEERING, INC.
1526 Redland Avenue
Dothan, Alabama 36303
(334) 794-4700 (voice)
(334) 794-9018 (fax)

Mark	Description	Date	Appr.
18	TITLE BLOCK EDIT, REVISED LABELS AND NOTES, REVISED LEGEND	AUG 01	ELF

Designed by: Rebecca S. Hand
Dwn by: J. Peeden
Ckd by: M. Dixon
Reviewed by: Scott Faulk
Submitted by: E. Lamar Faulk
Date: 13 June 2001
Sol No. DACA63-01-B-0007
Contr. No. DACA63-01-C-0016
Rev.
File name:
Plot date:
Plot scale: 1:600

U.S. ARMY ENGINEER DISTRICT
CORPS OF ENGINEERS
FORT WORTH, TEXAS

POLYENGINEERING, INC.
ENGINEERS & ARCHITECTS
DOTHAN, ALABAMA

FORT HOOD, TEXAS
DIGITAL MULTI-PURPOSE RANGE COMPLEX (DMPRC)
PN 51915 FY 01

EROSION CONTROL PLAN

Sheet reference number:
EC-5
Sheet of

Contr No. DACA63-01-C-0016

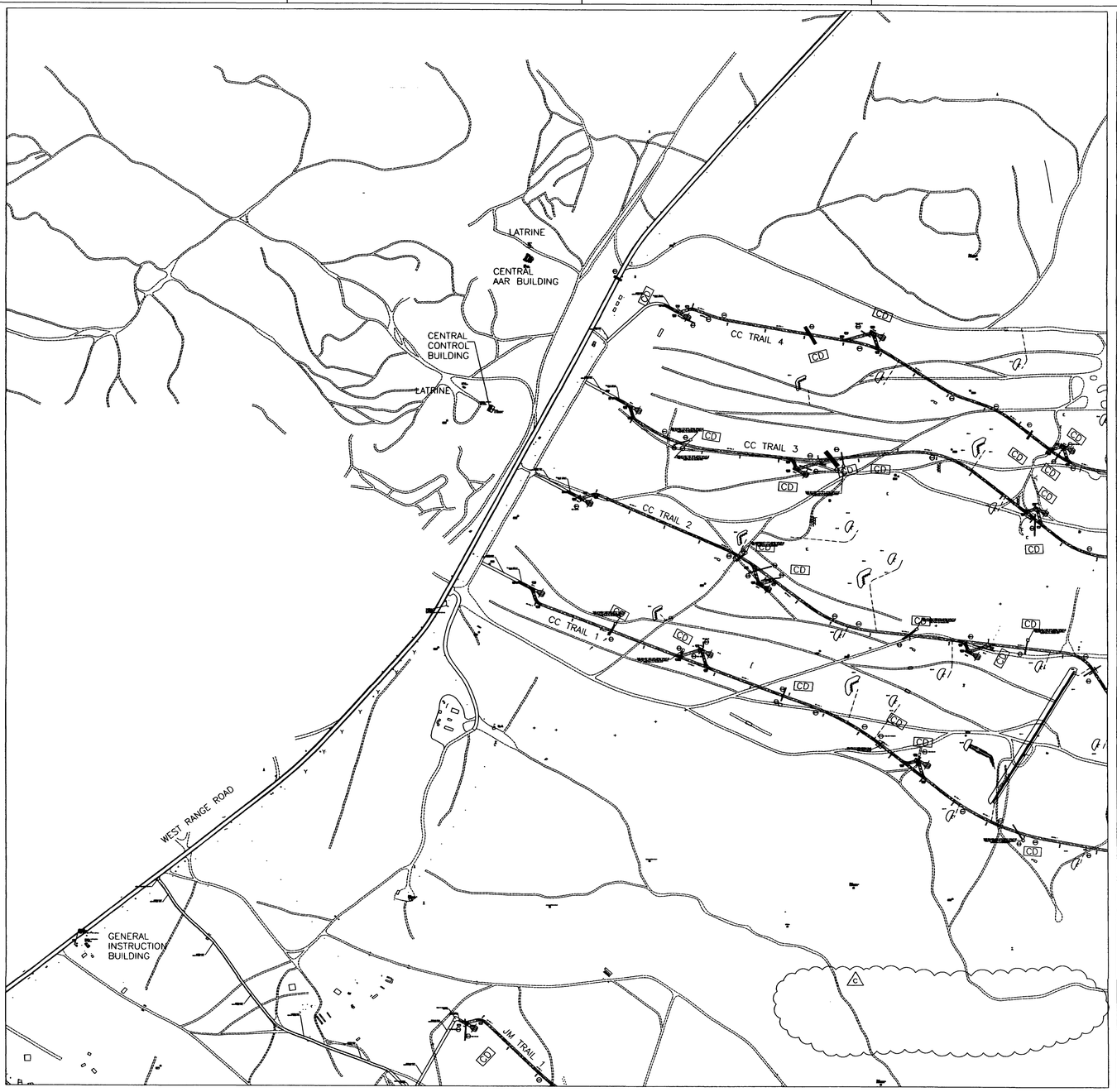

SITE REFERENCE PLAN

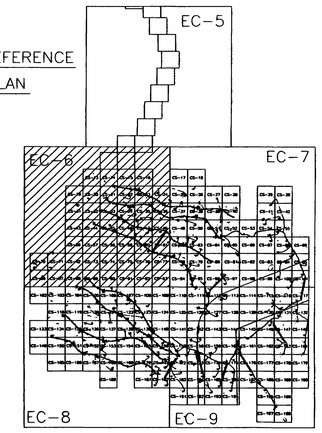

EXISTING LEGEND

- MAJOR CONTOUR (2m INTERVALS)
- MINOR CONTOUR
- CREEK
- EXISTING ROAD
- CHAIN LINK FENCE
- 326.00 X SPOT ELEVATION
- ARCHEOLOGICAL SITE
- 59 SURVEY MARKER
- TREELINE
- UTILITY POLE
- EXISTING AMTC (ECM-1)
- STATIONARY ARMOR TARGET
- ELECTRICAL MANHOLES
- EXISTING BUILDINGS

PROPOSED LEGEND

- CV-1, JV-1 SAT
- CC-1, JC-1 SIT
- CM-1, JM-1 AMTC
- C4-B, J4-B DEFILADE
- OLD IMPACT AREA
- OLD IMPACT BUFFER ZONE AREA
- TANK TRAILS
- PRIMARY TARGET SERVICE ROAD
- FINISHED GRADING
- SECONDARY TARGET SERVICE ROADS
- C-34 DRAINAGE PIPE w/ PIPE NO.
- C-100 CURVE NUMBER
- CD CHECK DAMN
- POWER CENTER (PC1A, PJ1A)
- CENTRAL AAR BUILDING BUILDINGS
- CONCRETE TURNING PADS
- C-28 TURN PAD NUMBER
- B-30 SOIL BORING
- FC-1 CAMERAS
- CL-1 RANGE LIMIT MARKER
- TP-3 TEST PITS
- CT-1, JT-1 TRENCH
- EXISTING TARGET DEMOLITION
- FLAG POLE

STATE OF TEXAS
E. LAMAR FAULK
86158
LICENSED
PROFESSIONAL ENGINEER

THE SEAL APPEARING ON THIS DOCUMENT WAS AUTHORIZED BY E. LAMAR FAULK ON AUGUST 8, 2001

N

GRAPHIC SCALE
100 50 0 50 100
SCALE: 1:5000

US Army Corps of Engineers
FORT WORTH DISTRICT

POLYENGINEERING, INC.
1800 Southeast Avenue
Dothan, Alabama 36305
(334) 793-2700 (voice)
(334) 793-9016 (fax)

Rev.	Description	Date	Appr.
1	CHANGED LOCATION OF CHECK DAMS PER CR MODIFIED TITLE BLOCK EDIT, REVISED LABELS AND NOTES, REVISED LEGEND	AUG 01	ELF
		DEC 21	CO

Designed by: Rebecca S. Hand
Dwn by: J. Pendergraft
Ckd by: M. Dawson
Date: 19 June 2001
Sol. No. DACA63-01-B-0007
Reviewed by: Scott Faulk
Contr. No. DACA63-01-C-0016
Submitted by: E. Lamar Faulk
File name: .
Plot date: .
Plot scale: 1:600

U.S. ARMY ENGINEER DISTRICT
CORPS OF ENGINEERS
FORT WORTH, TEXAS

POLYENGINEERING, INC.
ENGINEERS & ARCHITECTS
DOTHAN, ALABAMA

FORT HOOD, TEXAS
DIGITAL MULTI-PURPOSE RANGE COMPLEX (DMPRC)
PN 51915 FY 01

EROSION CONTROL PLAN

Sheet reference number:
EC-6
Sheet of

Contr. No. DACA63-01-C-0016

..\EC-6.dwg 8/11/2005 10:21:14 AM

SITE REFERENCE PLAN

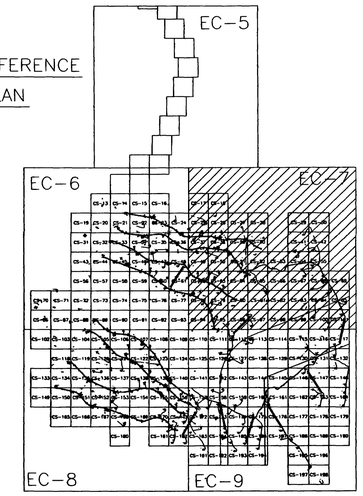

EXISTING LEGEND

- MAJOR CONTOUR (2m INTERVALS)
- MINOR CONTOUR
- CREEK
- EXISTING ROAD
- CHAIN LINK FENCE
- 326.00 X — SPOT ELEVATION
- ARCHEOLOGICAL SITE
- 59 — SURVEY MARKER
- TREELINE
- UTILITY POLE
- EXISTING AMTC (ECM-1)
- STATIONARY ARMOR TARGET
- ELECTRICAL MANHOLES
- EXISTING BUILDINGS

PROPOSED LEGEND

- CV-1, JV-1 — SAT
- CC-1, JC-1 — SIT
- CM-1, JM-1 — AMTC
- C4-B, J4-B — DEFILADE
- POWER CENTER (PC1A, PJ1A)
- CONCRETE TURNING PADS
- B-30 — SOIL BORING
- TP-3 — TEST PITS
- EXISTING TARGET DEMOLITION
- OLD IMPACT AREA
- OLD IMPACT BUFFER ZONE AREA
- TANK TRAILS
- PRIMARY TARGET SERVICE ROAD
- 266 — FINISHED GRADING
- SECONDARY TARGET SERVICE ROADS
- C-34 — DRAINAGE PIPE w/ PIPE NO.
- C-100 — CURVE NUMBER
- CD — CHECK DAMN
- CD — CHECK DAM (REV)
- CENTRAL AAR BUILDING — BUILDINGS
- C-28 — TURN PAD NUMBER
- FC-1 — CAMERAS
- CL-1 — RANGE LIMIT MARKER
- CT-1, JT-1 — TRENCH
- FLAG POLE

STATE OF TEXAS
E. LAMAR FAULK
86158
LICENSED
PROFESSIONAL ENGINEER

THE SEAL APPEARING ON THIS DOCUMENT WAS AUTHORIZED BY E. LAMAR FAULK ON AUGUST 8, 2001

N

GRAPHIC SCALE
100 50 0 50 100
SCALE: 1:5000

US Army Corps of Engineers
FORT WORTH DISTRICT

POLYENGINEERING, INC.
1820 Headland Avenue
Dothan, Alabama 36305
(334) 793-4700 (voice)
(334) 793-9916 (fax)

Symb	Description	Date	Appr.
3	CHANGED LOCATION OF CHECK DAMS PER CR MOD80	DEC 21	CD
2	TITLE BLOCK EDIT, REVISED LABELS AND NOTES, REVISED LEGEND	AUG 01	ELF

Designed by: Rebecca S. Hand
Dwn by: J. Peaden
Ckd by: M. Dixon
Reviewed by: Scott Faulk
Submitted by: E. Lamar Faulk
Date: 19 June 2001
Rev.
Sol No. DACA63-01-B-0007
Contr No. DACA63-01-C-0016
File name:
Plot date:
Plot scale: 1:600

U.S. ARMY ENGINEER DISTRICT
CORPS OF ENGINEERS
FORT WORTH, TEXAS

POLYENGINEERING, INC.
ENGINEERS & ARCHITECTS
DOTHAN, ALABAMA

FORT HOOD, TEXAS
DIGITAL MULTI-PURPOSE RANGE COMPLEX (DMPRC) FY 01
PN 51915

EROSION CONTROL PLAN

Sheet reference number:
EC-7
Sheet of

Contr No. DACA63-01-C-0016

00689360

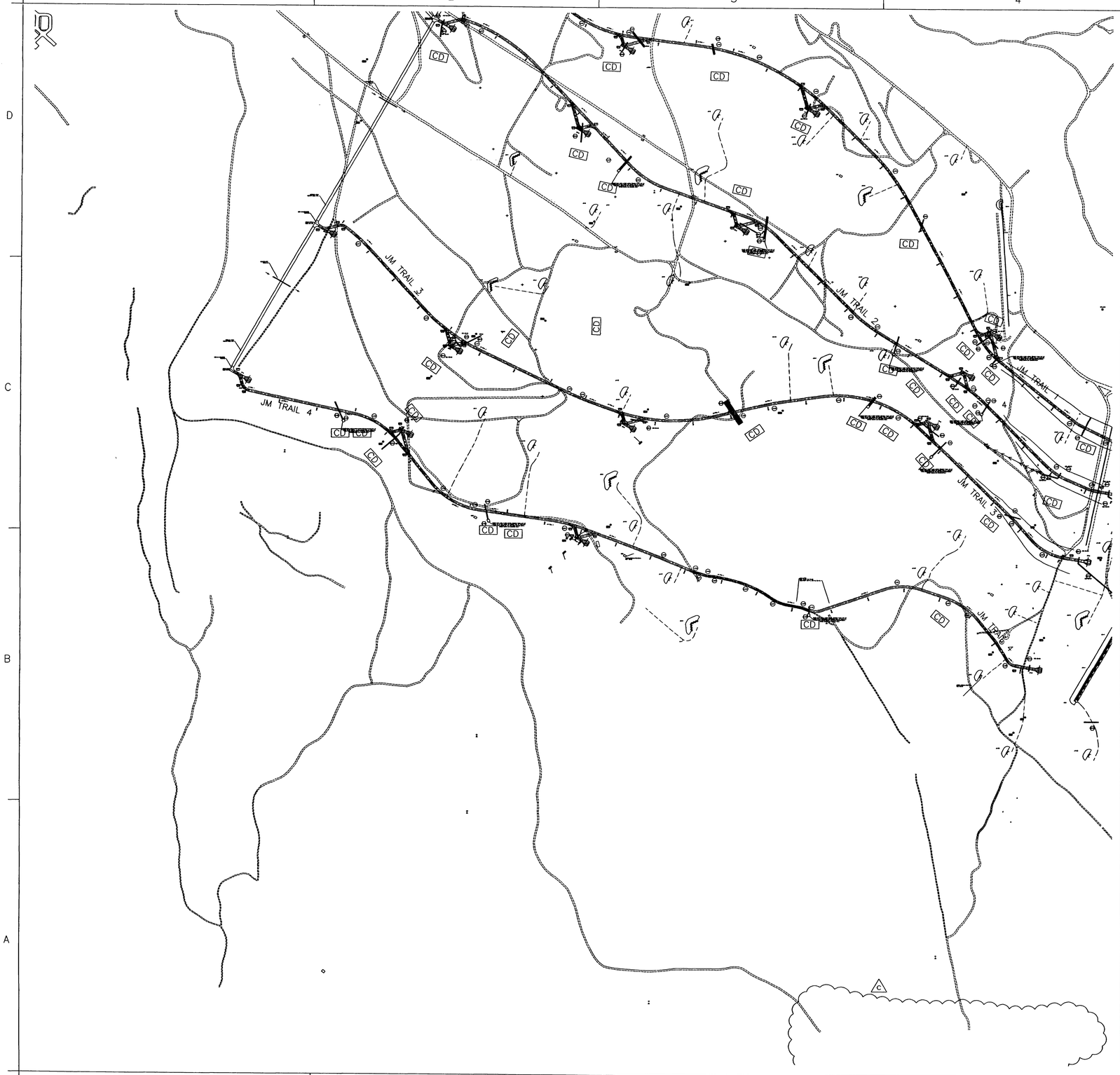

SITE REFERENCE PLAN

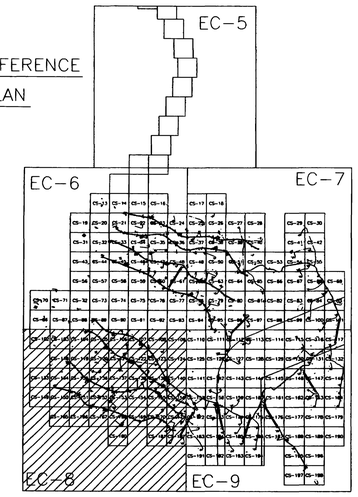

EXISTING LEGEND

- MAJOR CONTOUR (2m INTERVALS)
- MINOR CONTOUR
- CREEK
- EXISTING ROAD
- CHAIN LINK FENCE
- 326.00 X SPOT ELEVATION
- ARCHEOLOGICAL SITE
- 59 SURVEY MARKER
- TREELINE
- UTILITY POLE
- EXISTING AMTC (ECM-1)
- STATIONARY ARMOR TARGET
- ELECTRICAL MANHOLES
- EXISTING BUILDINGS

PROPOSED LEGEND

- CV-1, JV-1 — SAT
- CC-1, JC-1 — SIT
- CM-1, JM-1 — AMTC
- C4-B, J4-B — DEFILADE
- POWER CENTER (PC1A, PJ1A)
- CONCRETE TURNING PADS
- B-30 SOIL BORING
- TP-3 TEST PITS
- EXISTING TARGET DEMOLITION
- OLD IMPACT AREA
- OLD IMPACT BUFFER ZONE AREA
- TANK TRAILS
- PRIMARY TARGET SERVICE ROAD
- 266 FINISHED GRADING
- SECONDARY TARGET SERVICE ROADS
- C-34 DRAINAGE PIPE w/ PIPE NO.
- C-100 CURVE NUMBER
- CD CHECK DAMN
- CENTRAL AAR BUILDING — BUILDINGS
- C-28 TURN PAD NUMBER
- FC-1 CAMERAS
- CL-1 RANGE LIMIT MARKER
- CT-1, JT-1 TRENCH
- FLAG POLE

STATE OF TEXAS — E. LAMAR FAULK — 86158 — LICENSED — PROFESSIONAL ENGINEER

THE SEAL APPEARING ON THIS DOCUMENT WAS AUTHORIZED BY E. LAMAR FAULK ON AUGUST 8, 2001

N

GRAPHIC SCALE

100 50 0 50 100

SCALE: 1:5000

US Army Corps of Engineers
FORT WORTH DISTRICT

POLYENGINEERING, INC.
1920 Reedland Avenue
Dothan, Alabama 36305
(334) 793-4700 (voice)
(334) 793-9015 (fax)

Rev.	Date	Description	By
A	DEC 21	CHANGED LOCATION OF CHECK DAMS PER CR MF080	CD
B	AUG 01	TITLE BLOCK EDIT, REVISED LABELS AND NOTES, REVISED LEGEND	ELF
	2001	Preliminary Submittal	PMF

Designed by: Rebecca S. Hond
Dwn by: J. Peddan
Ckd by: M. Dixon
Reviewed by: Scott Faulk
Submitted by: E. Lamar Faulk

Date: 19 June 2001
Sol No. DACA63-01-B-0007
Contr No. DACA63-01-C-0016
File name:
Plot date:
Plot scale: 1:600

U.S. ARMY ENGINEER DISTRICT
CORPS OF ENGINEERS
FORT WORTH, TEXAS

POLYENGINEERING, INC.
ENGINEERS & ARCHITECTS
DOTHAN, ALABAMA

FORT HOOD, TEXAS
DIGITAL MULTI-PURPOSE RANGE COMPLEX (DMPRC)
PN 51915 FY 01

EROSION CONTROL PLAN

Sheet reference number:
EC-8
Sheet of

Contr No. DACA63-01-C-0016

00689070

8/10/2005 3:02:23 PM

SITE REFERENCE PLAN

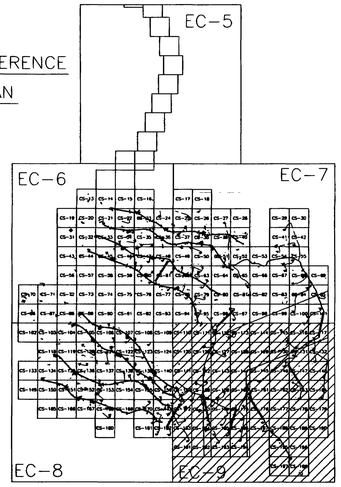

EXISTING LEGEND

- MAJOR CONTOUR (2m INTERVALS)
- MINOR CONTOUR
- CREEK
- EXISTING ROAD
- CHAIN LINK FENCE
- 326.00 X — SPOT ELEVATION
- ARCHEOLOGICAL SITE
- 59 — SURVEY MARKER
- TREELINE
- UTILITY POLE
- EXISTING AMTC (ECM-1)
- STATIONARY ARMOR TARGET
- ELECTRICAL MANHOLES
- EXISTING BUILDINGS

PROPOSED LEGEND

- CV-1, JV-1 — SAT
- CC-1, JC-1 — SIT
- CM-1, JM-1 — AMTC
- C4-B, J4-B — DEFILADE
- POWER CENTER (PC1A, PJ1A)
- CONCRETE TURNING PADS
- B-30 — SOIL BORING
- TP-3 — TEST PITS
- EXISTING TARGET DEMOLITION
- OLD IMPACT AREA
- OLD IMPACT BUFFER ZONE AREA
- TANK TRAILS
- PRIMARY TARGET SERVICE ROAD
- 266 — FINISHED GRADING
- SECONDARY TARGET SERVICE ROADS
- C-34 — DRAINAGE PIPE w/ PIPE NO.
- C-100 — CURVE NUMBER
- CD — CHECK DAMN
- CD — CHECK DAM (REV)
- CENTRAL AAR BUILDING — BUILDINGS
- C-28 — TURN PAD NUMBER
- FC-1 — CAMERAS
- CL-1 — RANGE LIMIT MARKER
- CT-1, JT-1 — TRENCH
- FLAG POLE

STATE OF TEXAS
E. LAMAR FAULK
86158
LICENSED
PROFESSIONAL ENGINEER

THE SEAL APPEARING ON THIS DOCUMENT WAS AUTHORIZED BY E. LAMAR FAULK ON AUGUST 8, 2001

N

GRAPHIC SCALE
100 50 0 50 100
SCALE: 1:5000

US Army Corps of Engineers
FORT WORTH DISTRICT

POLYENGINEERING, INC.
1805 Headland Avenue
Dothan, Alabama 36305
(334) 793-4700 (voice)
(334) 793-9015 (fax)

Mark	Description	Date	Appr.
A	CHANGED LOCATION OF CHECK DAMS PER CR MODIFIED	DEC 21	CD
B	TITLE BLOCK EDIT, REVISED LABELS AND NOTES, REVISED DRAWING SCALE & LEGEND	AUG 01	ELF

Date: 19 June 2001
Rev.
Sol. No. DACA63-01-B-0007
Contr. No. DACA63-01-C-0016
File name:
Plot date:
Plot scale: 1:800

Designed by: Dwayne J. Reeden
Drawn by: J. Reeden
Chkd by: W. Dixon
Reviewed by: Scott Faulk
Submitted by: E. Lamar Faulk

U.S. ARMY ENGINEER DISTRICT
CORPS OF ENGINEERS
FORT WORTH, TEXAS

POLYENGINEERING, INC.
ENGINEERS & ARCHITECTS
DOTHAN, ALABAMA

FORT HOOD, TEXAS
DIGITAL MULTI-PURPOSE RANGE COMPLEX
(DMPRC)
PN 51915 FY 01

EROSION CONTROL PLAN

Sheet reference number:
EC-9
Sheet of

Contr. No. DACA63-01-C-0016

00689330

wg 8/4/2005 1:53:34 PM

DIGITAL MULTI-PURPOSE RANGE COMPLEX FORT HOOD, TEXAS

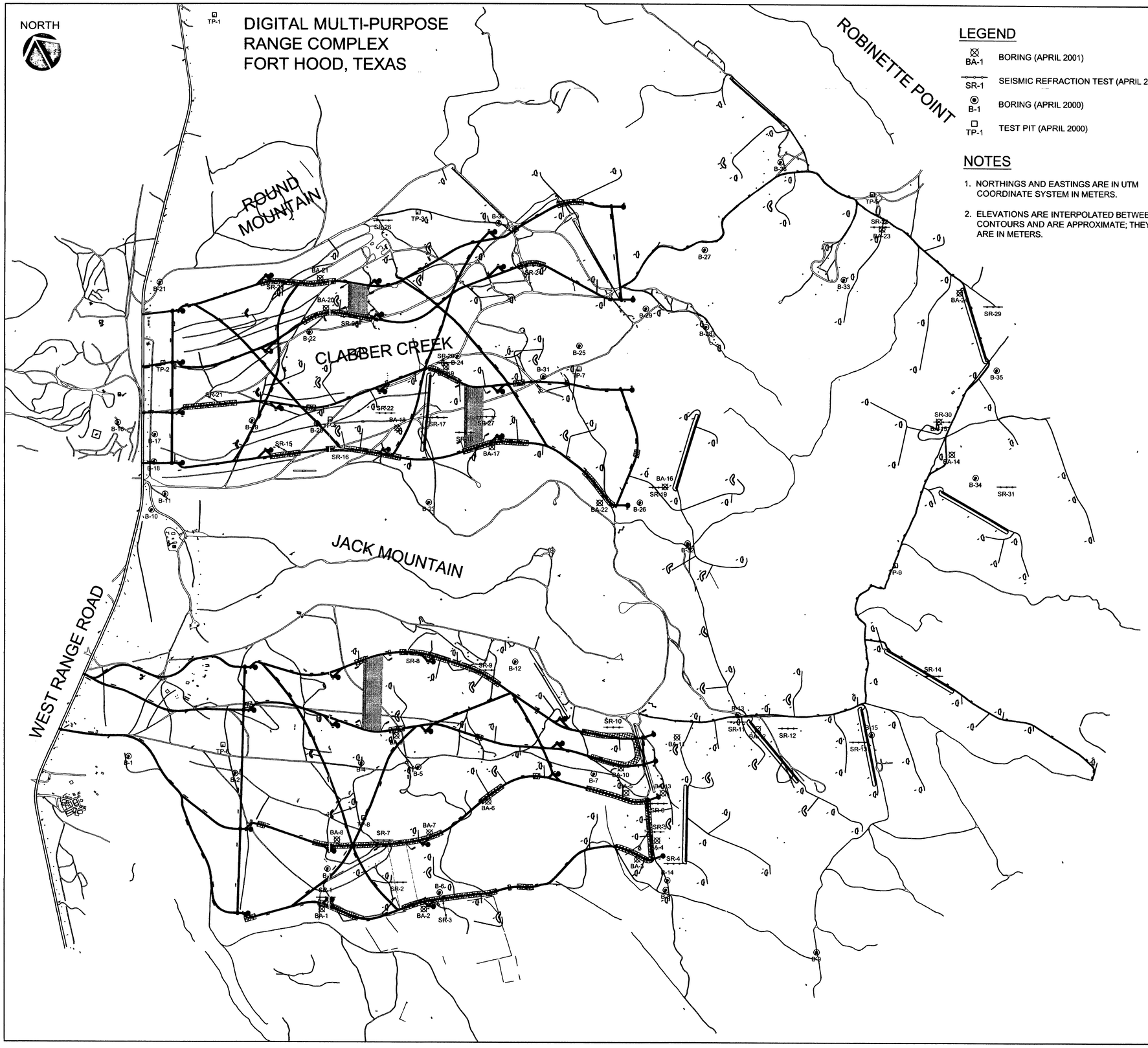

LEGEND

- BA-1 — BORING (APRIL 2001)
- SR-1 — SEISMIC REFRACTION TEST (APRIL 2001)
- B-1 — BORING (APRIL 2000)
- TP-1 — TEST PIT (APRIL 2000)

NOTES

1. NORTHINGS AND EASTINGS ARE IN UTM COORDINATE SYSTEM IN METERS.
2. ELEVATIONS ARE INTERPOLATED BETWEEN CONTOURS AND ARE APPROXIMATE; THEY ARE IN METERS.

FIELD EXPLORATION: APRIL 2001

BOREHOLES	NORTHINGS	EASTINGS	ELEVATIONS
BA-1	3,455,535	616,401	260.75
BA-2	3,455,281	616,882	259.25
BA-3	3,454,983	618,010	252.75
BA-4	3,455,022	618,149	254.00
BA-5	3,455,323	618,125	252.75
BA-6	3,455,625	617,457	247.75
BA-7	3,455,627	617,099	251.00
BA-8	3,455,824	616,644	259.25
BA-9	3,456,168	617,186	257.50
BA-10	3,455,455	618,164	254.75
BA-11	3,455,461	618,503	254.00
BA-12	3,455,297	618,905	249.75
BA-13	3,455,231	618,296	252.75
BA-14	3,456,097	620,495	241.50
BA-15	3,456,284	620,517	244.75
BA-16	3,456,658	619,064	249.75
BA-17	3,457,272	618,351	260.50
BA-18	3,457,600	617,951	271.00
BA-19	3,457,769	618,335	262.00
BA-20	3,458,346	617,916	264.00
BA-21	3,458,500	617,963	266.75
BA-22	3,456,744	618,720	257.00
BA-23	3,457,333	620,731	252.50
BA-24	3,456,844	620,937	248.00

SEISMIC REFRACTION

TESTS	NORTHINGS	EASTINGS	ELEVATIONS
SR-1	3,455,579	616,449	263.00
SR-2	3,455,473	616,824	261.25
SR-3	3,455,207	616,975	234.00
SR-4	3,454,873	618,168	253.75
SR-5	3,455,070	618,160	254.00
SR-6	3,455,195	618,246	253.50
SR-7	3,455,706	616,862	256.00
SR-8	3,456,502	617,465	264.25
SR-9	3,456,245	617,770	264.50
SR-10	3,455,665	618,230	261.50
SR-11	3,455,382	618,823	251.50
SR-12	3,455,226	619,050	250.25
SR-13	3,454,985	619,350	247.25
SR-14	3,455,108	619,858	244.75
SR-15	3,457,778	617,364	278.25
SR-16	3,457,635	617,627	277.50
SR-17	3,457,547	618,168	274.00
SR-18	3,457,408	618,260	269.75
SR-19	3,456,671	619,033	250.50
SR-20	3,457,788	618,345	261.00
SR-21	3,458,185	617,164	279.50
SR-22	3,457,701	617,930	274.75
SR-23	3,458,246	618,007	261.00
SR-24	3,458,027	619,002	254.00
SR-25	3,458,602	617,748	273.50
SR-26	3,458,617	618,399	273.25
SR-27	3,457,430	618,400	263.75
SR-28	3,457,348	620,727	252.75
SR-29	3,456,698	621,060	249.50
SR-30	3,456,272	620,536	244.75
SR-31	3,455,812	620,672	236.75

FIELD EXPLORATION: APRIL 2000

BOREHOLES	NORTHINGS	EASTINGS	ELEVATIONS
B-1	3,456,733	615,885	259.7
B-2	3,456,390	616,337	266.3
B-3	3,455,710	616,527	263.7
B-4	3,456,127	616,952	253.4
B-5	3,455,965	617,211	255.7
B-6	3,455,318	616,999	258.2
B-7	3,455,494	618,023	251.4
B-8	3,454,768	618,067	253.2
B-9	3,454,101	618,625	231.5
B-10	3,457,826	616,600	294.0
B-11	3,457,866	616,703	288.6
B-12	3,456,210	617,932	267.3
B-13	3,455,411	618,845	251.7
B-14	3,454,809	618,099	254.1
B-15	3,454,988	619,429	245.1
B-16	3,458,319	616,657	314.1
B-17	3,458,169	616,802	284.3
B-18	3,458,044	616,730	282.0
B-19	3,457,994	617,288	268.2
B-20	3,457,819	617,583	266.9
B-21	3,458,879	617,207	278.3
B-22	3,458,275	617,780	261.9
B-23	3,457,173	617,915	273.4
B-24	3,457,791	618,417	257.6
B-25	3,457,535	619,017	244.0
B-26	3,456,646	618,908	253.3
B-27	3,457,678	619,842	227.4
B-28	3,457,312	619,657	243.6
B-29	3,457,548	619,421	242.8
B-30	3,458,313	618,940	258.0
B-31	3,457,479	618,771	252.7
B-32	3,456,338	619,031	247.6
B-33	3,457,190	620,428	248.1
B-34	3,455,930	620,549	239.9
B-35	3,456,387	620,917	242.8
B-36	3,457,900	620,418	251.8

TEST PITS	NORTHINGS	EASTINGS	ELEVATIONS
TP-1	3,460,005	618,127	275.6
TP-2	3,458,490	617,020	281.9
TP-3	3,458,567	618,587	263.0
TP-4	3,457,808	617,655	265.9
TP-5	3,457,518	620,771	258.0
TP-6	3,456,554	616,352	265.8
TP-7	3,457,427	618,958	247.0
TP-8	3,455,861	616,825	255.5
TP-9	3,455,717	619,955	221.0

GRAPHIC SCALE

200 100 0 100 200

SCALE: 1:10000

SOURCE: POLYENGINEERING, INC., DOTHAN, ALABAMA

US Army Corps of Engineers
FORT WORTH DISTRICT

POLYENGINEERING, INC.
ENGINEERS AND ARCHITECTS
POLYENGINEERING, INC.
1005 Headland Avenue
Dothan, Alabama 36305
(334) 793-6720 (voice)
(334) 793-5015 (fax)

Mark	Description	Date	Appr.

Date: 19 June 2001
Design file no.
Rev.

Designed by: Rebecca S. Hand
Dwn by: J. Peeden
Ckd by: M. Dixon
Reviewed by: Scott Faulk
Submitted by: E. Lamar Faulk

Drawing code: DACA63-01-C-0016
File name:
Plot driver:
Plot scale: AS SHOWN

U.S. ARMY ENGINEER DISTRICT
CORPS OF ENGINEERS
FORT WORTH, TEXAS

POLYENGINEERING, INC.
ENGINEERS & ARCHITECTS
DOTHAN, ALABAMA

DIGITAL MULTI-PURPOSE RANGE COMPLEX
FORT HOOD, TEXAS
(DMPRC)
PN 51915 FY 00

FIELD TESTING
LOCATION PLAN

Sheet reference number:
F-1
Sheet of

Contr No. DACA63-01-C-0016

00689390

LEGEND

F = FILL
T = TOP SOIL
OB = OVERBURDEN (SEE GENERAL NOTE 4)
SS = SANDSTONE
SH = SHALE
SLS = SILTSTONE
LS = LIMESTONE
CO = COAL
UC = UNDERCLAY
IC = INDURATED CLAY
DOL = DOLOMITE
CON = CONGLOMERATE
OTZ = QUARTZ
RQD = ROCK QUALITY DESIGNATION
NOD = NODULES
GRAV = GRAVEL OR GRAVELLY
LT = LIGHT
DK = DARK
SL = SLIGHTLY
MOD = MODERATELY
MED = MEDIUM
TR = TRACE
HD = HARD
NUM = NUMEROUS
WOR = WEIGHT OF RODS
WOH = WEIGHT OF HAMMER
WT = WEIGHT
VIS = VISCOSITY (MARSH)

WP = WELL POINT
(W) = WEATHERED
W/ = WITH
GR = GRAIN
OCC = OCCASIONAL
BD = BEDDED OR BEDS
INTBD = INTERBEDDED
LAM = LAMINAE
XLYN = CRYSTALLINE
ARGIL = ARGILLACEOUS
V = VERY
BLK = BLACK
BR = BROWN
GRY = GRAY
BLU = BLUE
GRN = GREEN
YEL = YELLOW
OB/P = OPEN BEDDING PLANE
CAL = CALCAREOUS
CARBO = CARBONACEOUS
FREQ = FREQUENT
FOS = FOSSILIFEROUS
CMTD = CEMENTED
MOT = MOTTLED
FRAG = FRAGMENTS

DIAG = DIAGONAL
ALT = ALTERNATING
VERT = VERTICAL
HOR = HORIZONTAL
FRAC = FRACTURE
X=BD = CROSSBEDDING
SP = SHEAR PLANE
V/J = VERTICAL JOINT
JT = JOINT
SOL = SOLUTION
= CAVITY (OPEN OR FILLED)
MICA = MICACEOUS
STY = STYLOLITIC
B/P = BEDDING PLANE
F/W = FREE WATER
H/A = HIGH ANGLE
PIEZ = PIEZOMETER
BOH = BOTTOM OF HOLE
TOR = TOP OF ROCK
ST = STAIN, STAINED
ANG = ANGULAR
RND = ROUNDED
** = X=RAY DIFFRACTION ANALYSIS (SEE GENERAL NOTE 11)

CL = INORGANIC CLAYS OF LOW TO MEDIUM PLASTICITY GRAVELLY CLAYS, SANDY CLAYS, SILTY CLAYS, LEAN CLAYS

CH = INORGANIC SILTS AND ORANIC SILTY CLAYS OF LOW PLASTICITY

METHODS OF EXPLORATION

VEL = SEISMIC
S = SHELBY TUBE OR PISTON SAMPLER
HA = HAND AUGER
A = POWER AUGER
C = CORE BORING
D = DRIVE SAMPLER
F = FISHTAIL
U = UNDISTURBED DENSION
W = WASH BORING
T = TRENCH
TP = TEST PIT
R = ROCK BIT
P = PROBE ROD

SOIL DESCRIPTIVE TERMS / SIZE

BOULDER	> 200mm
COBBLE	75mm–200mm
COARSE GRAVEL	19mm–75mm
FINE GRAVEL	6mm–19mm
COARSE SAND	2 MM TO 6mm
MEDIUM SAND	0.4 MM TO 2 MM
FINE SAND	0.075 MM TO 0.4 MM
TRACE	1 TO 10%
OCCASIONAL	11 TO 35%
AND	36 TO 50%
LAMINAE	0 TO 10 MM
LENSE	10 MM TO 50 MM
BAND	50 MM TO 64mm
LAYER	64mm–150mm

SAMPLE TYPE

DS = DRIVE SAMPLE (STANDARD PENETRATION TEST)
S = UNDISTURBED SHELBY TUBE
A = AUGER
F = FISHTAIL
U = UNDISTURBED DENISON
CU = UNDISTURBED CUBE
C = CORE
J = JAR
BX = BOX (CORE)

CORRELATION OF PENETRATION RESISTANCE (ASTM D 1586) WITH RELATIVE DENSITY AND CONSISTENCY

	PENETRATION RESISTANCE,N Blows per 0.15 meters	RELATIVE DENSITY
	0 – 4	Very Loose
	5 – 10	Loose
SANDS AND	11 – 30	Med Dense
GRAVELS	31 – 50	Dense
	Over 50	Very Dense

	PENETRATION RESISTANCE,N Blows per foot 0.15 meters	
	0 – 2	Very Soft
	3 – 4	Soft
SILTS AND	5 – 8	Med Stiff
CLAYS	9 – 15	Stiff
	16 – 30	Very Stiff
	31+	Hard

TERMS FOR THICKNESS OF ROCK BEDDING

PARTING	< 6mm
BAND	6mm–60mm
THIN BED	60mm–150mm
MEDIUM BED	150mm–300mm
THICK BED	300mm–900mm
MASSIVE	> 900mm

TERMS FOR HARDNESS OF BEDROCK

VERY SOFT OR PLASTIC– CAN BE INDENTED EASILY WITH THUMB.

SOFT– CAN BE SCRATCHED WITH FINGERNAIL.

MODERATELY HARD– CAN BE SCRATCHED EASILY WITH KNIFE; CANNOT BE SCRATCHED WITH FINGERNAIL.

HARD– DIFFICULT TO SCRATCH WITH KNIFE.

VERY HARD– CANNOT BE SCRATCHED WITH KNIFE.

WEATHERING

SEVERE WEATHERING –LOSS OF ROCK COHERANCE, MATERIAL CAN BE REMOVED BY HAND TOOLS. RETAINES SOME EVIDENCE OF ROCK STRUCTURE

MODERATE WEATHERING– MATERIAL MAY BE OXIDIZED BUT MOST PHYSICAL CHARACTERISTIC REMAIN. OCCASIONAL BLOCKS MAY BE REMOVED WITH HAND TOOLS.

SLIGHT WEATHERING – MATERIAL GENERALLY FRESH, WITH VARIOUS DEGREES OF WEATHERING ALONG JOINTS AND BEDDING.

GENERAL NOTES

1. REFUSAL IS DEFINED AS THE POINT BEYOND WHICH FURTHER PENETRATION WAS IMPRACTICAL WITH THE EXPLORATION METHOD USED. SEE "METHODS OF EXPLORATION" THIS SHEET INDICATING MEANS BY WHICH THE BORINGS WERE ADVANCED.

2. WATER ELEVATIONS INDICATED (▽V) IN CORE (C), STANDARD PENETRATION (SPT), FISHTAIL (F), DENISON (U) AND WASH (W) BORINGS MAY HAVE BEEN INFLUENCED BY DRILLING OPERATIONS AND SHOULD NOT BE CONSTRUED AS INDICATING THE TRUE GROUND WATER LEVEL.

3. GROUND WATER LEVELS WILL VARY IN ACCORDANCE WITH RAINFALL AND STREAM STAGES, THEREFORE, ACTUAL LEVEL OF GROUND WATER ON ANY DATE OTHER THAN THAT SHOWN ON THE LOGS MUST BE DETERMINED BY SEPARATE OBSERVATIONS. THE OMISSION OF GROUND WATER ELEVATIONS SHALL NOT NECESSARILY BE CONSTRUED AS INDICATING THE ABSENCE OF GROUND WATER AT A PARTICULAR BORING LOCATION.

4. WHEREVER THE METHOD OF EXPLORATION PRECLUDED THE POSSIBILITY OF RECOVERING SAMPLES ABOVE ROCK, SUITABLE FOR EXAMINATION OR TESTS, THE MATERIAL IS DENOTED AS OVERBURDEN.

5. CLASSIFICATIONS AND PHYSICAL CHARACTERISTICS OF SOIL AND ROCK AS SHOWN ON THE LOGS WERE DETERMINED IN THE FIELD AND LATER SUPPLEMENTED BY ANALYSIS MADE BY THE DISTRICT GEOLOGIST AND THE LABORATORY TECHNICANS.

6. FIELD BOOKS, FIELD LOGS, LABORATORY LOGS (PRESENTING THE RESULTS OF LABORATORY TESTS FOR SHEAR, CONSOLIDATION, PERMEABILITY, ETC, WHEN PERFORMED) AND EDITED LOGS MAY BE VIEWED IN THE OFFICE OF THE DISTRICT ENGINEER. U.S. ARMY ENGINEER DISTRICT, LOUISVILLE, CORPS OF ENGINEERS, FEDERAL OFFICE BUILDING, LOUVILLE, KY..FAILURE OF THE CONTRACTOR TO AVAIL HIMSELF OF THE INFORMATION REPRESENTED BY THE BORING LOGS, INCLUDING LABORATORY TEST RESULTS, SHALL NOT BE GROUNDS FOR A CLAIM THAT THE GOVERNMENT WITHELD INFORMATION ON SUBSURFACE CONDITIONS.

7. THE TERM "LOST WATER" AS SHOWN ON THE LOGS INDICATES A QUANTITY OF DRILLING WATER LOST IN THE DRILL HOLE.

8. DRIVE SAMPLES WERE TAKEN WITH A 35mm I.D.–51mm O.D. X 813mm SPLIT SPOON SAMPLER USING A 63.5kg HAMMER WITH A 762mm DROP, UNLESS OTHERWISE INDICATED ON GRAPHIC LOGS.

9. CORE HOLES WERE COMPLETED BY AN NXM OR NQ WIRE LINE SIZE CORE BARREL WITH DIAMOND BIT, UNLESS OTHERWISEINDICATED ON THE GRAPHIC LOG.

10 WATER CONTENT (WC) AS SHOWN ON GRAPHIC LOG REPRESENTS THE MOISTURE CONTENT OF MATERIAL ON DATE MADE.

11. "X–RAY DIFFRACTION ANALYSIS" PERFORMED ON SAMPLES DENOTED BY DOUBLE ASTERISK.

12 TOP OF GROUND SHOWN ON THE GRAPHIC LOGS IS THE ELEVATION AT THE TIME OF DRILLING. THE ELEVATION MAY HAVE CHANGED SINCE THAT TIME.

13. OPTIMUM MOISTURE WAS OBTAINED BY STANDARD PROCTOR OR CE 55 COMPACTION TESTS IN ACCORDANCE WITH EM 1110–2–1906, APP. VI OR MIL. STD. 621 A METHOD 100; RESPECTIVELY, AS NOTED ON BORING LOG.

14. THE LETTER DESIGNATION USED BEFORE BORING NUMBER INDICATES THE METHOD OF EXPLORATION FOR EXAMPLE: DC=DRIVE SAMPLER AND CORE BORING.

$\frac{\text{DC–10}}{\text{7–26–56}}$ =BORING NO. & DATE MADE

15. GENERAL NOTES 5 AND 6 MAY NOT BE APPLICABLE WHEN EXPLORATION AND TESTING IS PERFORMED BY OTHERS.

US Army Corps of Engineers
FORT WORTH DISTRICT

POLYENGINEERING, INC.
POLYENGINEERING, INC.
1205 Hoadland Avenue
Dothan, Alabama 36303
(334) 793-6700 (voice)
(334) 793-8015 (fax)

Mark	Description	Date	Appr.

Designed by: Rebecca S. Hand
Dwn by: J. Peeden
Ckd by: M. Dixon
Reviewed by: Scott Faulk
Submitted by: E. Lamar Faulk
Date: 19 June 2001
Rev.
Design file no.
Drawing code: DACA63-01-C-0016
File name:
Plot date:
Plot scale: AS SHOWN

U.S. ARMY ENGINEER DISTRICT
CORPS OF ENGINEERS
FORT WORTH, TEXAS

POLYENGINEERING, INC.
ENGINEERS & ARCHITECTS
DOTHAN, ALABAMA

FORT HOOD, TEXAS
DIGITAL MULTI-PURPOSE RANGE COMPLEX (DMPRC)
PN 519115 FY 00

SOIL CLASSIFICATION

Sheet reference number:
F–2
Sheet of

Contr No. DACA63-01-C-0016

00089-00

UNIFIED SOIL CLASSIFICATION
(INCLUDING IDENTIFICATION AND DESCRIPTION)

MAJOR DIVISIONS 1	2		GROUP SYMBOLS 3	TYPICAL NAMES 4	FIELD IDENTIFICATION PROCEDURES (EXCLUDING PARTICLES LARGER THAN 3 INCHES AND BASING FRACTIONS ON ESTIMATED WEIGHTS) 5			LABORATORY CLASSIFICATION CRITERIA 6
COARSE-GRAINED SOILS MORE THAN HALF OF MATERIAL IS LARGER THAN 75um SIEVE SIZE. MORE THAN HALF OF MATERIAL IS SMALLEST PARTICLE VISIBLE TO THE NAKED EYE.	GRAVELS MORE THAN HALF OF COARSE FRACTION IS LARGER THAN 4.75mm SIEVE SIZE.	CLEAN GRAVELS (LITTLE OR NO FINES)	GW	WELL-GRADED GRAVELS, GRAVEL-SAND MIXTURES, LITTLE OF NO FINES.	WIDE RANGE IN GRAIN SIZES AND SUBSTANTIAL AMOUNTS OF ALL INTERMEDIATE PARTICLE SIZES.			$C_U = \frac{D_{60}}{D_{10}}$ GREATER THAN 4 $C_C = \frac{(D_{30})^2}{D_{10} \times D_{60}}$ BETWEEN ONE AND 3
			GP	POORLY-GRADED GRAVELS, GRAVEL-SAND MIXTURES, LITTLE OR NO FINES.	PREDOMINANTLY ONE SIZE OR A RANGE OF SIZES WITH SOME INTERMEDIATE SIZES MISSING.			NOT MEETING ALL GRADATION REQUIREMENTS FOR GW
		GRAVELS WITH FINES (APPRECIABLE AMOUNT OF FINES)	GM	SILTY GRAVELS, GRAVEL-SAND-SILT MIXTURES.	NONPLASTIC FINES OF FINES WITH LOW PLASTICITY (FOR IDENTIFICATION PROCEDURES SEE ML BELOW)			ATTERBERG LIMITS BELOW "A" LINE WITH PI LESS THAN 4
			GC	CLAYEY GRAVELS, GRAVEL-SAND-CLAY MIXTURES.	PLASTIC FINES (FOR IDENTIFICATION PROCEDURES SEE CL BELOW).			ATTERBERG LIMITS ABOVE "A" LINE WITH PI GREATER THAN 7
	SANDS MORE THAN HALF OF COARSE FRACTION IS SMALLER THAN 4.75mm SIEVE SIZE.	CLEAN SANDS (LITTLE OR NO FINES)	SW	WELL-GRADED SANDS, GRAVELLY SANDS, LITTLE OR NO FINES.	WIDE RANGE IN GRAIN SIZE AND SUBSTANTIAL AMOUNTS OF ALL INTERMEDIATE PARTICLE SIZES.			$C_U = \frac{D_{60}}{D_{10}}$ GREATER THAN 6 $C_C = \frac{(D_{30})^2}{D_{10} \times D_{60}}$ BETWEEN ONE AND 3
			SP	POORLY-GRADED SANDS,GRAVELLY SANDS, LITTLE OR NO FINES.	PREDOMINANTLY ONE SIZE OR A RANGE OF SIZES WITH SOME INTERMEDIATE SIZES MISSING.			NOT MEETING ALL GRADATION REQUIREMENTS FOR SW
		SANDS WITH FINES (APPRECIABLE AMOUNT OF FINES)	SM	SILTY SANDS, SAND-SILT MIXTURES.	NONPLASTIC FINES OR FINES WITH PLASTICITY (FOR IDENTIFICATION PROCEDURES SEE ML BELOW).			ATTERBERG LIMITS BELOW "A" LINE WITH PI LESS THAN 4
			SC	CLAYEY SANDS, AND-CLAY MIXTURES.	PLASTIC FINES (FOR IDENTIFICATION PROCEDURES SEE CL BELOW).			ATTERBERG LIMITS ABOVE "A" LINE WITH PI GREATER THAN 7
FINE-GRAINED SOILS MORE THAN HALF OF MATERIAL IS SMALLER THAN 75um SIEVE SIZE. THE NO. 200 SIEVE SIZE IS ABOUT THE SMALLEST PARTICLE VISIBLE TO THE NAKED EYE.	SILTS AND CLAYS LIQUID LIMIT LESS THAN 50				IDENTIFICATION PROCEDURES ON FRACTION SMALLER THAN 425um SIEVE SIZE.			
					DRY STRENGTH (CRUSHING CHARACTERISTICS)	DILATANCY (REACTION TO SHAKING)	TOUGHNESS (CONSISTENCY NEAR PL)	
			ML	INORGANIC SILTS AND VERY FINE SANDS,ROCK FLOUR, SILTY OR CLAYEY FINE SANDS OR CLAYEY SILTS WITH SLIGHT PLASTICITY.	NONE TO SLIGHT	QUICK TO SLOW	NONE	
			CL	INORGANIC CLAYS OF LOW TO MEDIUM PLASTICITY, GRAVELLY CLAYS, SANDY CLAYS, SILTY CLAYS, LEAN CLAYS.	MEDIUM TO HIGH	NONE TO VERY SLOW	MEDIUM	
			OL	ORGANIC SILTS AND ORGANIC SILTY CLAYS OF LOW PLASTICITY.	SLIGHT TO MEDIUM	SLOW	SLIGHT	
	SILTS AND CLAYS LIQUID LIMIT GREATER THAN 50		MH	INORGANIC SILTS, MICACEOUS OR DIATOMACEOUS FINE SANDY OR SILTY SOILS, ELASTIC SILTS.	SLIGHT TO MEDIUM	SLOW TO NONE	SLIGHT TO MEDIUM	
			CH	INORGANIC CLAYS OF HIGH PLASTICITY, FAT CLAYS.	HIGH TO VERY HIGH	NONE	HIGH	
			OH	ORGANIC CLAYS OF MEDIUM TO HIGH PLASITICITY, ORGANIC SILTS.	MEDIUM TO HIGH	NONE TO VERY SLOW	SLIGHT TO MEDIUM	
HIGHLY ORGANIC SOILS			PT	PEAT AND OTHER HIGHLY ORGANIC SOILS.	READILY IDENTIFIED BY COLOR, ODOR, SPONGY FEEL AND FREQUENTLY BY FIBROUS TEXTURE.			

USE GRAIN-SIZE CURVE IN IDENTIFYING THE FRACTIONS AS GIVEN UNDER FIELD IDENTIFICATION.

DETERMINE PERCENTAGES OF GRAVEL AND SAND FROM GRAIN-SIZE CURVE. DEPENDING ON PERCENTAGE OF FINES (FRACTION SMALLER THAN NO. 200 SIEVE SIZE) COARSE-GRAINED SOILS ARE CLASSIFIED AS FOLLOWS:

LESS THAN 5% GW, GP, SW, SP,
NORE THAN 12% GM, GC, SM, SC.
5% TO 12% BORDERLINE CASES REQUIRING USE OF DUAL SYMBOLS.

ABOVE "A" LINE WITH PI BETWEEN 4 AND 7 ARE BORDERLINE CASES REQUIRING USE OF DUAL SYMBOLS.

LIMITS PLOTTING IN HTCHED ZONE WITH PI BETWEEN 4 AND 7 ARE BORDERLINE CASES REQUIRING USE OF DUAL SYMBOLS.

PLASTICITY CHART

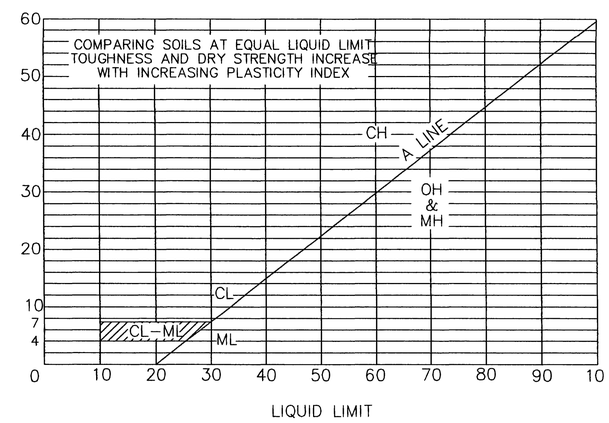

PLASTICITY CHART

FOR LABORATORY CLASSIFICATION OF FINE-GRAINED SOILS

US Army Corps of Engineers
FORT WORTH DISTRICT

POLYENGINEERING, INC.
1906 Woodland Avenue
Dothan, Alabama 36303
(334) 792-4700 (voice)
(334) 792-9016 (fax)

Mark	Description	Date	Appr.

Designed by: Rebecca S. Hand
Dwn by: J. Peaden
Ckd by: M. Dixon
Reviewed by: Scott Faulk
Submitted by: E. Lamar Faulk
Date: 19 June 2001
Rev.
Design file no.
Drawing code: DACA63-01-C-0016
File name:
Plot date:
Plot scale: AS SHOWN

U.S. ARMY ENGINEER DISTRICT
CORPS OF ENGINEERS
FORT WORTH, TEXAS

POLYENGINEERING, INC.
ENGINEERS & ARCHITECTS
DOTHAN, ALABAMA

FORT HOOD, TEXAS
DIGITAL MULTI-PURPOSE RANGE COMPLEX (DMPRC) FY 00
PN 51915

SOIL CLASSIFICATION

Sheet reference number:
F-3
Sheet of

Contr No. DACA63-01-C-0016

00669-10

DEPTH (m)	SOIL CLASSIFICATION AND REMARKS (SEE KEY SYMBOL SHEET FOR EXPLANATION OF SYMBOLS AND ABBREVIATIONS BELOW.)	ELEV (m)	SAMPLES IDENT	TYPE	N-COUNT 1st 0.15m / 2nd 0.15m / 3rd 0.15m
0	LEAN CLAY (CL), very stiff, dark gray, with roots and gravel	259.7			
	- light yellowish gray, with calcareous deposits at 0.3 meter		AU-1		
			SS-2		6-12-11
1	- with weathered limestone at 1.1 meters - hard below 1.1 meters	258.7			
			SS-3		28-26-50/4"
	FAT CLAY (CH), hard, light yellowish brown				
2		257.7			
			SS-4		16-18-21
			SS-5		9-50/3"
3	Borehole Terminated at 3.0 meters	256.7			
4		255.7			
5		254.7			
6		253.7			

LEGEND

Shear Strength by Pocket Penetrometer (psf): 1000 2000 3000 4000 5000

PL (%) NM (%) LL (%)

FINES (%) ▲ SPT (blows/0.3m) ●

10 20 30 40 50 60 70 80 90 100

0 10 20 30 40 50 60 70 80 90 100

SOIL_PP 02022-1.GPJ LAW_GIBB.GDT 11/9/00

DRILLER: JEDI
EQUIPMENT: Truck Mounted Drill Rig
METHOD: Continuous Flight Auger
HOLE DIA.:
REMARKS: Water was not encountered during the drilling operations.
SOUTH OF JACK MOUNTAIN AREA

THIS RECORD IS A REASONABLE INTERPRETATION OF SUBSURFACE CONDITIONS AT THE EXPLORATION LOCATION. SUBSURFACE CONDITIONS AT OTHER LOCATIONS AND AT OTHER TIMES MAY DIFFER. INTERFACES BEWEEN STRATA ARE APPROXIMATE. TRANSITIONS BETWEEN STRATA MAY BE GRADUAL.

SOIL TEST BOREHOLE RECORD

PROJECT: Firing Range Upgrade — BORING NO.: B- 1
COORD N: 3,456,733.1 — Prepared By: P.B.S.
COORD E: 615,885.0 — Checked By: _____
DRILLED: April 6, 2000 — Date: _____
PROJ. NO.: 60120-0-2022 — PAGE 1 OF 1

LAW
LAWGIBB Group Member

DEPTH (m)	SOIL CLASSIFICATION AND REMARKS (SEE KEY SYMBOL SHEET FOR EXPLANATION OF SYMBOLS AND ABBREVIATIONS BELOW.)	ELEV (m)	SAMPLES IDENT	TYPE	N-COUNT 1st 0.15m / 2nd 0.15m / 3rd 0.15m
0	LEAN CLAY (CL), hard, light yellowish gray, with roots and pockets of calcareous nodules	266.3			
	- with calcareous deposits at 0.3 meter		AU-1		
			UD-2		
1		265.3			
			SS-3		50/0"
2		264.3			
			SS-4		50/0"
	Borehole Terminated at 2.3 meters				
3		263.3			
4		262.3			
5		261.3			
6		260.3			

LEGEND

Shear Strength by Pocket Penetrometer (psf): 1000 2000 3000 4000 5000

PL (%) NM (%) LL (%)

FINES (%) ▲ SPT (blows/0.3m) ●

10 20 30 40 50 60 70 80 90 100

0 10 20 30 40 50 60 70 80 90 100

SOIL_PP 02022-1.GPJ LAW_GIBB.GDT 11/9/00

DRILLER: JEDI
EQUIPMENT: Truck Mounted Drill Rig
METHOD: Continuous Flight Auger
HOLE DIA.:
REMARKS: Water was not encountered during the drilling operations.
SOUTH OF JACK MOUNTAIN AREA

THIS RECORD IS A REASONABLE INTERPRETATION OF SUBSURFACE CONDITIONS AT THE EXPLORATION LOCATION. SUBSURFACE CONDITIONS AT OTHER LOCATIONS AND AT OTHER TIMES MAY DIFFER. INTERFACES BEWEEN STRATA ARE APPROXIMATE. TRANSITIONS BETWEEN STRATA MAY BE GRADUAL.

SOIL TEST BOREHOLE RECORD

PROJECT: Firing Range Upgrade — BORING NO.: B- 2
COORD N: 3,456,389.9 — Prepared By: P.B.S.
COORD E: 616,337.0 — Checked By: _____
DRILLED: April 6, 2000 — Date: _____
PROJ. NO.: 60120-0-2022 — PAGE 1 OF 1

LAW
LAWGIBB Group Member

US Army Corps of Engineers
FORT WORTH DISTRICT

POLYENGINEERING, INC.
1996 Redland Avenue
Dothan, Alabama 36303
(334) 793-6700 (voice)
(334) 793-9016 (fax)

Mark	Description	Date	Appr.

Designed by: Rebecca S. Hond
Dwn by: J. Pendon
Ckd by: M. Dixon
Reviewed by: Scott Faulk
Submitted by: E. Lamar Faulk
Date: 19 June 2001
Rev.
Design file no.
Drawing code: DACA63-01-C-0016
File name:
Plot date:
Plot scale: AS SHOWN

U.S. ARMY ENGINEER DISTRICT
CORPS OF ENGINEERS
FORT WORTH, TEXAS

POLYENGINEERING, INC.
ENGINEERS & ARCHITECTS
DOTHAN, ALABAMA

FORT HOOD, TEXAS
DIGITAL MULTI-PURPOSE RANGE COMPLEX (DMPRC)
PN 51915 FY 00

SOIL BORINGS

Sheet reference number: F-4
Sheet of

Contr No. DACA63-01-C-0016

00689470

SOIL CLASSIFICATION AND REMARKS

SEE KEY SYMBOL SHEET FOR EXPLANATION OF SYMBOLS AND ABBREVIATIONS BELOW.

DEPTH (m)	SOIL CLASSIFICATION AND REMARKS	ELEV (m)	IDENT	TYPE	N-COUNT 1st 0.15m / 2nd 0.15m / 3rd 0.15m
0	LEAN CLAY (CL), hard, dark gray, with roots and small calcareous nodules	263.7			
	- dark brown gray, with limestone gravel at 0.3 meter		AU-1		
			SS-2		8-12-27
1	- with large calcareous pockets at 1.1 meters	262.7			
			SS-3		12-19-21
	- with weathered limestone and clay pockets at 1.8 meters				
2		261.7			
			SS-4		28-31-50/6"
	FAT CLAY (CH), hard, yellowish gray, with calcareous deposits				
			SS-5		9-17-26
3	Borehole Terminated at 3.0 meters	260.7			
4		259.7			
5		258.7			
6		257.7			

LEGEND

SAMPLES

PL (%) NM (%) LL (%)

FINES (%)

SPT (blows/0.3m)

10 20 30 40 50 60 70 80 90 100

0 10 20 30 40 50 60 70 80 90 100

DRILLER: JEDI
EQUIPMENT: Truck Mounted Drill Rig
METHOD: Continuous Flight Auger
HOLE DIA.:
REMARKS: Water was not encountered during the drilling operations. SOUTH OF JACK MOUNTAIN AREA

THIS RECORD IS A REASONABLE INTERPRETATION OF SUBSURFACE CONDITIONS AT THE EXPLORATION LOCATION. SUBSURFACE CONDITIONS AT OTHER LOCATIONS AND AT OTHER TIMES MAY DIFFER. INTERFACES BEWEEN STRATA ARE APPROXIMATE. TRANSITIONS BETWEEN STRATA MAY BE GRADUAL.

SOIL TEST BOREHOLE RECORD

PROJECT: Firing Range Upgrade — BORING NO.: B-3
COORD N: 3,455,709.9 — Prepared By: P.B.S.
COORD E: 616,526.9 — Checked By: _____
DRILLED: April 5, 2000 — Date: _____
PROJ. NO.: 60120-0-2022 — PAGE 1 OF 1

LAW
LAWGIBB Group Member

SOIL CLASSIFICATION AND REMARKS

SEE KEY SYMBOL SHEET FOR EXPLANATION OF SYMBOLS AND ABBREVIATIONS BELOW.

DEPTH (m)	SOIL CLASSIFICATION AND REMARKS	ELEV (m)	IDENT	TYPE	N-COUNT 1st 0.15m / 2nd 0.15m / 3rd 0.15m
0	LEAN CLAY (CL), light brown and light gray, with pockets of calcareous nodules	253.4			
	- hard below 0.3 meter		AU-1		
			SS-2		16-16-50/3"
	- weathered limestone deposits below 0.8 meter				
1	- sand seam at 0.9 meter	252.4			
	- with fat clay pockets at 1.1 meters				
			SS-3		48-50/3"
	FAT CLAY (CH), hard, light brown gray, with gravel and large brown sand pockets				
2		251.4			
			SS-4		50/3"
	Borehole Terminated at 2.4 meters				
3		250.4			
4		249.4			
5		248.4			
6		247.4			

LEGEND

SAMPLES

PL (%) NM (%) LL (%)

FINES (%)

SPT (blows/0.3m)

10 20 30 40 50 60 70 80 90 100

0 10 20 30 40 50 60 70 80 90 100

DRILLER: JEDI
EQUIPMENT: Truck Mounted Drill Rig
METHOD: Continuous Flight Auger
HOLE DIA.:
REMARKS: Water was not encountered during the drilling operations. SOUTH OF JACK MOUNTAIN AREA

THIS RECORD IS A REASONABLE INTERPRETATION OF SUBSURFACE CONDITIONS AT THE EXPLORATION LOCATION. SUBSURFACE CONDITIONS AT OTHER LOCATIONS AND AT OTHER TIMES MAY DIFFER. INTERFACES BEWEEN STRATA ARE APPROXIMATE. TRANSITIONS BETWEEN STRATA MAY BE GRADUAL.

SOIL TEST BOREHOLE RECORD

PROJECT: Firing Range Upgrade — BORING NO.: B- 4
COORD N: 3,456,126.9 — Prepared By: P.B.S.
COORD E: 616,952.1 — Checked By: _____
DRILLED: April 6, 2000 — Date: _____
PROJ. NO.: 60120-0-2022 — PAGE 1 OF 1

LAW
LAWGIBB Group Member

US Army Corps of Engineers
FORT WORTH DISTRICT

POLYENGINEERING, INC.
ENGINEERS AND ARCHITECTS
1026 Headland Avenue
Dothan, Alabama 36303
(334) 792-2700 (voice)
(334) 792-8016 (fax)

Mark	Description	Date	Appr.

Designed by: Rebecca S. Hand
Dwn by: J. Peeden
Ckd by: M. Dixon
Reviewed by: Scott Faulk
Submitted by: E. Lamar Faulk
Date: 19 June 2001
Design file no.
Drawing code: DACA63-01-C-0016
File name:
Plot date:
Plot scale: AS SHOWN
Rev.

U.S. ARMY ENGINEER DISTRICT
CORPS OF ENGINEERS
FORT WORTH, TEXAS

POLYENGINEERING, INC.
ENGINEERS & ARCHITECTS
DOTHAN, ALABAMA

FORT HOOD, TEXAS
DIGITAL MULTI-PURPOSE RANGE COMPLEX (DMPRC)
FY 00
PN 51915

SOIL BORINGS

Sheet reference number: F-5
Sheet of

Contr No. DACA63-01-C-0016

SOIL_PP 02022-1.GPJ LAW_GIBB.GDT 11/9/00

0050 - 00

SOIL CLASSIFICATION AND REMARKS

SEE KEY SYMBOL SHEET FOR EXPLANATION OF SYMBOLS AND ABBREVIATIONS BELOW.

DEPTH (m)	SOIL CLASSIFICATION AND REMARKS	ELEV (m)	SAMPLE IDENT	TYPE	N-COUNT 1st 0.15m 2nd 0.15m 3rd 0.15m
0	LEAN CLAY (CL), very stiff, dark gray, with roots, silt pockets and calcareous nodules	255.7			
			AU-1		
	- yellowish gray, with clay pockets and pockets of large calcareous nodules at 0.3 meter		SS-2		9-10-13
1		254.7			
	- hard at 1.1 meters		SS-3		50/4"
	Borehole Terminated at 1.2 meters				
2		253.7			
3		252.7			
4		251.7			
5		250.7			
6		249.7			

LEGEND

PL (%) NM (%) LL (%)
FINES (%)
SPT (blows/0.3m)
10 20 30 40 50 60 70 80 90 100

DRILLER: JEDI
EQUIPMENT: Truck Mounted Drill Rig
METHOD: Continuous Flight Auger
HOLE DIA.:
REMARKS: Water was not encountered during the drilling operations.
SOUTH OF JACK MOUNTAIN AREA

THIS RECORD IS A REASONABLE INTERPRETATION OF SUBSURFACE CONDITIONS AT THE EXPLORATION LOCATION. SUBSURFACE CONDITIONS AT OTHER LOCATIONS AND AT OTHER TIMES MAY DIFFER. INTERFACES BEWEEN STRATA ARE APPROXIMATE. TRANSITIONS BETWEEN STRATA MAY BE GRADUAL.

SOIL TEST BOREHOLE RECORD

PROJECT: Firing Range Upgrade
COORD N: 3,455,965.0
COORD E: 617,210.9
DRILLED: April 5, 2000
PROJ. NO.: 60120-0-2022

BORING NO.: B- 5
Prepared By: P.B.S.
Checked By: _____
Date: _____
PAGE 1 OF 1

LAW
LAWGIBB Group Member

SOIL_PP 02022-1.GPJ LAW_GIBB.GDT 11/9/00

SOIL CLASSIFICATION AND REMARKS

SEE KEY SYMBOL SHEET FOR EXPLANATION OF SYMBOLS AND ABBREVIATIONS BELOW.

DEPTH (m)	SOIL CLASSIFICATION AND REMARKS	ELEV (m)	SAMPLE IDENT	TYPE	N-COUNT 1st 0.15m 2nd 0.15m 3rd 0.15m
0	LEAN CLAY (CL), hard, dark gray, with roots, calcareous nodules and sand pockets	258.2			
			AU-1		
	- white yellowish gray, with calcareous deposits at 0.3 meter		UD-2		
1		257.2			
			SS-3		20-30-38
2		256.2			
			SS-4		11-11-50/6"
	Borehole Terminated at 2.5 meters				
3		255.2			
4		254.2			
5		253.2			
6		252.2			

LEGEND

Shear Strength by Pocket Penetrometer (psf)
1000 2000 3000 4000 5000
PL (%) NM (%) LL (%)
FINES (%) SPT (blows/0.3m)
10 20 30 40 50 60 70 80 90 100

DRILLER: JEDI
EQUIPMENT: Truck Mounted Drill Rig
METHOD: Continuous Flight Auger
HOLE DIA.:
REMARKS: Water was not encountered during the drilling operations.
SOUTH OF JACK MOUNTAIN AREA

THIS RECORD IS A REASONABLE INTERPRETATION OF SUBSURFACE CONDITIONS AT THE EXPLORATION LOCATION. SUBSURFACE CONDITIONS AT OTHER LOCATIONS AND AT OTHER TIMES MAY DIFFER. INTERFACES BEWEEN STRATA ARE APPROXIMATE. TRANSITIONS BETWEEN STRATA MAY BE GRADUAL.

SOIL TEST BOREHOLE RECORD

PROJECT: Firing Range Upgrade
COORD N: 3,455,318.0
COORD E: 616,999.0
DRILLED: April 5, 2000
PROJ. NO.: 60120-0-2022

BORING NO.: B- 6
Prepared By: P.B.S.
Checked By: _____
Date: _____
PAGE 1 OF 1

LAW
LAWGIBB Group Member

SOIL_PP 02022-1.GPJ LAW_GIBB.GDT 11/9/00

US Army Corps of Engineers
FORT WORTH DISTRICT

POLYENGINEERING, INC.
1955 Hoodhead Avenue
Dothan, Alabama 36303
(334) 793-4720 (voice)
(334) 793-5815 (fax)

Mark	Description	Date	Appr.

Designed by: Rebecca S. Hand
Dwn by: J. Pedden
Ckd by: M. Dixon
Reviewed by: Scott Fouik
Submitted by: E. Lamar Faulk
Date: 19 June 2001
Rev.
Design file no.
Drawing code: DACA63-01-C-0016
File name:
Plot date:
Plot scale: AS SHOWN

U.S. ARMY ENGINEER DISTRICT
CORPS OF ENGINEERS
FORT WORTH, TEXAS

POLYENGINEERING, INC.
ENGINEERS & ARCHITECTS
DOTHAN, ALABAMA

FORT HOOD, TEXAS
DIGITAL MULTI-PURPOSE RANGE COMPLEX (DMPRC)
PN 51915 FY 00

SOIL BORINGS

Sheet reference number: F-6
Sheet of

Contr No. DACA63-01-C-0016

00689440

SOIL CLASSIFICATION AND REMARKS

SEE KEY SYMBOL SHEET FOR EXPLANATION OF SYMBOLS AND ABBREVIATIONS BELOW.

DEPTH (m)	SOIL CLASSIFICATION AND REMARKS	ELEV (m)	IDENT	TYPE	N-COUNT 1st 0.15m	N-COUNT 2nd 0.15m	N-COUNT 3rd 0.15m
0	LEAN CLAY (CL), very stiff, dark gray, with roots and calcareous nodules	251.4					
	- yellowish brown, with clay pockets at 0.3 meter		AU-1				
			SS-2		5	8	9
1	Borehole Terminated at 0.9 meter	250.4					
2		249.4					
3		248.4					
4		247.4					
5		246.4					
6		245.4					

LEGEND

SAMPLES

PL (%) NM (%) LL (%)

FINES (%)

SPT (blows/0.3m)

10 20 30 40 50 60 70 80 90 100

0 10 20 30 40 50 60 70 80 90 100

DRILLER: JEDI
EQUIPMENT: Truck Mounted Drill Rig
METHOD: Continuous Flight Auger
HOLE DIA.:
REMARKS: Water was not encountered during the drilling operations. SOUTH OF JACK MOUNTAIN AREA

THIS RECORD IS A REASONABLE INTERPRETATION OF SUBSURFACE CONDITIONS AT THE EXPLORATION LOCATION. SUBSURFACE CONDITIONS AT OTHER LOCATIONS AND AT OTHER TIMES MAY DIFFER. INTERFACES BEWEEN STRATA ARE APPROXIMATE. TRANSITIONS BETWEEN STRATA MAY BE GRADUAL.

SOIL TEST BOREHOLE RECORD

PROJECT: Firing Range Upgrade
COORD N: 3,455,493.8
COORD E: 618,023.1
DRILLED: April 5, 2000
PROJ. NO.: 60120-0-2022

BORING NO.: B- 7
Prepared By: P.B.S.
Checked By: _____
Date: _____
PAGE 1 OF 1

LAW
LAWGIBB Group Member

SOIL CLASSIFICATION AND REMARKS

SEE KEY SYMBOL SHEET FOR EXPLANATION OF SYMBOLS AND ABBREVIATIONS BELOW.

DEPTH (m)	SOIL CLASSIFICATION AND REMARKS	ELEV (m)	IDENT	TYPE	N-COUNT 1st 0.15m	N-COUNT 2nd 0.15m	N-COUNT 3rd 0.15m
0	LEAN CLAY (CL), very stiff, dark gray, with roots, and small calcareous nodules	253.2					
	- yellowish brown, with silt seams and clay pockets at 0.3 meter		AU-1				
			SS-2		9	10	15
1	FAT CLAY (CH), very stiff, light gray and yellowish brown, with calcareous deposits, silt partings, and some slickensides	252.2					
			SS-3		9	11	17
2	- with ferrous nodules at 1.8 meters - hard below 1.8 meters	251.2					
			SS-4		25	44	50/3"
			SS-5		17	19	50/3"
3	Borehole Terminated at 3.0 meters	250.2					
4		249.2					
5		248.2					
6		247.2					

LEGEND

SAMPLES

PL (%) NM (%) LL (%)

FINES (%)

SPT (blows/0.3m)

10 20 30 40 50 60 70 80 90 100

0 10 20 30 40 50 60 70 80 90 100

DRILLER: JEDI
EQUIPMENT: Truck Mounted Drill Rig
METHOD: Continuous Flight Auger
HOLE DIA.:
REMARKS: Water was not encountered during the drilling operations. SOUTH OF JACK MOUNTAIN AREA

THIS RECORD IS A REASONABLE INTERPRETATION OF SUBSURFACE CONDITIONS AT THE EXPLORATION LOCATION. SUBSURFACE CONDITIONS AT OTHER LOCATIONS AND AT OTHER TIMES MAY DIFFER. INTERFACES BEWEEN STRATA ARE APPROXIMATE. TRANSITIONS BETWEEN STRATA MAY BE GRADUAL.

SOIL TEST BOREHOLE RECORD

PROJECT: Firing Range Upgrade
COORD N: 3,454,767.8
COORD E: 618,067.0
DRILLED: April 5, 2000
PROJ. NO.: 60120-0-2022

BORING NO.: B- 8
Prepared By: P.B.S.
Checked By: _____
Date: _____
PAGE 1 OF 1

LAW
LAWGIBB Group Member

US Army Corps of Engineers
FORT WORTH DISTRICT

POLYENGINEERING, INC.
1905 Headland Avenue
Dothan, Alabama 36303
(334) 792-4700 (voice)
(334) 792-5016 (fax)

Mark	Description	Date	Appr.

Date: 19 June 2001
Rev.
Design file no.
Drawing code: DAC453-01-C-0016
File name:
Plot date:
Plot scale: AS SHOWN

Designed by: Rebecca S. Hand
Dwn by: J. Peden
Ckd by: M. Dixon
Reviewed by: Scott Faulk
Submitted by: E. Lamar Faulk

U.S. ARMY ENGINEER DISTRICT
CORPS OF ENGINEERS
FORT WORTH, TEXAS

POLYENGINEERING, INC.
ENGINEERS & ARCHITECTS
DOTHAN, ALABAMA

FORT HOOD, TEXAS
DIGITAL MULTI-PURPOSE RANGE COMPLEX (DMPRC)
PN 51915 FY 00

SOIL BORINGS

Sheet reference number:
F-7
Sheet of

Contr No. DAC453-01-C-0016

00689450

SOIL CLASSIFICATION AND REMARKS

SEE KEY SYMBOL SHEET FOR EXPLANATION OF SYMBOLS AND ABBREVIATIONS BELOW.

DEPTH (m)	SOIL CLASSIFICATION AND REMARKS	ELEV (m)
0	LEAN CLAY (CL), hard, brownish gray, with fat clay pockets, silt seams, roots, and calcareous nodules	231.5
	- with large pockets of calcareous nodules at 0.3 meter	
	Borehole Terminated at 0.8 meter	
1		230.5
2		229.5
3		228.5
4		227.5
5		226.5
6		225.5

LEGEND

SAMPLES

IDENT	TYPE	N-COUNT 1st 0.15m	2nd 0.15m	3rd 0.15m
AU-1				
UD-2				

Shear Strength by Pocket Penetrometer (psf): 1000 2000 3000 4000 5000

PL (%) NM (%) LL (%)

FINES (%) ▲ SPT (blows/0.3m) ●

10 20 30 40 50 60 70 80 90 100

0 10 20 30 40 50 60 70 80 90 100

DRILLER: JEDI
EQUIPMENT: Truck Mounted Drill Rig
METHOD: Continuous Flight Auger
HOLE DIA.:
REMARKS: Water was not encountered during the drilling operations. SOUTH OF JACK MOUNTAIN AREA

THIS RECORD IS A REASONABLE INTERPRETATION OF SUBSURFACE CONDITIONS AT THE EXPLORATION LOCATION. SUBSURFACE CONDITIONS AT OTHER LOCATIONS AND AT OTHER TIMES MAY DIFFER. INTERFACES BEWEEN STRATA ARE APPROXIMATE. TRANSITIONS BETWEEN STRATA MAY BE GRADUAL.

SOIL TEST BOREHOLE RECORD

PROJECT:	Firing Range Upgrade	BORING NO.:	B- 9
COORD N:	3,454,100.9	Prepared By:	P.B.S.
COORD E:	618,624.8	Checked By:	
DRILLED:	April 5, 2000	Date:	
PROJ. NO.:	60120-0-2022	PAGE 1 OF 1	

LAW
LAWGIBB Group Member

SOIL CLASSIFICATION AND REMARKS

SEE KEY SYMBOL SHEET FOR EXPLANATION OF SYMBOLS AND ABBREVIATIONS BELOW.

DEPTH (m)	SOIL CLASSIFICATION AND REMARKS	ELEV (m)
0	LEAN CLAY (CL), very stiff, light grayish brown, with clay pockets	294.0
1	- hard below 1.1 meters	293.0
2	- with limestone gravel and iron staining at 2.6 meters	292.0
3	Borehole Terminated at 3.0 meters	291.0
4		290.0
5		289.0
6		288.0

LEGEND

SAMPLES

IDENT	TYPE	N-COUNT 1st 0.15m	2nd 0.15m	3rd 0.15m
AU-1				
SS-2		5-10-11		
SS-3		5-17-19		
SS-4		8-15-31		
SS-5		8-49-50/3"		

Shear Strength by Pocket Penetrometer (psf): 1000 2000 3000 4000 5000

PL (%) NM (%) LL (%)

FINES (%) ▲ SPT (blows/0.3m) ●

10 20 30 40 50 60 70 80 90 100

0 10 20 30 40 50 60 70 80 90 100

DRILLER: JEDI
EQUIPMENT: Truck Mounted Drill Rig
METHOD: Continuous Flight Auger
HOLE DIA.:
REMARKS: Water was not encountered during the drilling operations. SOUTH OF JACK MOUNTAIN AREA

THIS RECORD IS A REASONABLE INTERPRETATION OF SUBSURFACE CONDITIONS AT THE EXPLORATION LOCATION. SUBSURFACE CONDITIONS AT OTHER LOCATIONS AND AT OTHER TIMES MAY DIFFER. INTERFACES BEWEEN STRATA ARE APPROXIMATE. TRANSITIONS BETWEEN STRATA MAY BE GRADUAL.

SOIL TEST BOREHOLE RECORD

PROJECT:	Firing Range Upgrade	BORING NO.:	B-10
COORD N:	3,457,825.9	Prepared By:	P.B.S.
COORD E:	616,600.0	Checked By:	
DRILLED:	April 3, 2000	Date:	
PROJ. NO.:	60120-0-2022	PAGE 1 OF 1	

LAW
LAWGIBB Group Member

US Army Corps of Engineers
FORT WORTH DISTRICT

POLYENGINEERING, INC.
1856 Bradford Avenue
Dothan, Alabama 36303
(334) 794-4720 (voice)
(334) 794-3016 (fax)

Mark	Description	Date	Appr.

Designed by: Rebecca S. Hand
Dwn by: J. Peaden
Ckd by: M. Dixon
Reviewed by: Scott Faulk
Submitted by: E. Lamar Faulk
Date: 19 June 2001
Rev.
Design file no.
Drawing code: DACA63-01-C-0016
File name:
Plot date:
Plot scale: AS SHOWN

U.S. ARMY ENGINEER DISTRICT
CORPS OF ENGINEERS
FORT WORTH, TEXAS

POLYENGINEERING, INC.
ENGINEERS & ARCHITECTS
DOTHAN, ALABAMA

FORT HOOD, TEXAS
DIGITAL MULTI-PURPOSE RANGE COMPLEX (DMPRC)
FY 00
PN 51915

SOIL BORINGS

Sheet reference number: F-8
Sheet of

Contr No. DACA63-01-C-0016

00689460

SOIL CLASSIFICATION AND REMARKS

SEE KEY SYMBOL SHEET FOR EXPLANATION OF SYMBOLS AND ABBREVIATIONS BELOW.

DEPTH (m)	SOIL CLASSIFICATION AND REMARKS	ELEV (m)	SAMPLE IDENT	TYPE	N-COUNT 1st 0.15m 2nd 0.15m 3rd 0.15m
0	LEAN CLAY (CL), hard, dark gray, with roots and calcareous nodules	288.6			
	- yellowish white gray, with slickensided fat clay pockets at 0.3 meter		AU-1		
			SS-2		15-22-20
1		287.6			
			SS-3		25-46-36
	- with calcareous deposits at 1.8 meters				
2		286.6			
			SS-4		20-26-50/5"
	- grayish brown, with weathered limestone at 2.6 meters				
			SS-5		24-30-50/2"
3	Borehole Terminated at 3.0 meters	285.6			
4		284.6			
5		283.6			
6		282.6			

LEGEND

PL (%) NM (%) LL (%)
FINES (%)
SPT (blows/0.3m)
10 20 30 40 50 60 70 80 90 100

DRILLER: JEDI
EQUIPMENT: Truck Mounted Drill Rig
METHOD: Continuous Flight Auger
HOLE DIA.:
REMARKS: Water was not encountered during the drilling operations. SOUTH OF JACK MOUNTAIN AREA

THIS RECORD IS A REASONABLE INTERPRETATION OF SUBSURFACE CONDITIONS AT THE EXPLORATION LOCATION. SUBSURFACE CONDITIONS AT OTHER LOCATIONS AND AT OTHER TIMES MAY DIFFER. INTERFACES BEWEEN STRATA ARE APPROXIMATE. TRANSITIONS BETWEEN STRATA MAY BE GRADUAL.

SOIL TEST BOREHOLE RECORD

PROJECT: Firing Range Upgrade — BORING NO.: B-11
COORD N: 3,457,865.8 — Prepared By: P.B.S.
COORD E: 616,702.8 — Checked By: _____
DRILLED: April 3, 2000 — Date: _____
PROJ. NO.: 60120-0-2022 — PAGE 1 OF 1

LAW
LAWGIBB Group Member

SOIL CLASSIFICATION AND REMARKS

SEE KEY SYMBOL SHEET FOR EXPLANATION OF SYMBOLS AND ABBREVIATIONS BELOW.

DEPTH (m)	SOIL CLASSIFICATION AND REMARKS	ELEV (m)	SAMPLE IDENT	TYPE	N-COUNT 1st 0.15m 2nd 0.15m 3rd 0.15m
0	LEAN CLAY (CL), hard, dark gray, with silt seams, roots and gravel	267.3			
	- light yellowish brown, with pockets of calcareous nodules at 0.3 meter		AU-1		
			SS-2		12-13-20
1		266.3			
	- with limestone gravel at 1.1 meters - very stiff from 1.1 to 2.6 meters				
			SS-3		8-12-11
2		265.3			
			SS-4		6-8-12
	- with silt seams and weathered limestone at 2.6 meters				
			SS-5		8-12-20
3		264.3			
4		263.3			
			SS-6		6-10-17
	Borehole Terminated at 4.6 meters				
5		262.3			
6		261.3			

LEGEND

PL (%) NM (%) LL (%)
FINES (%)
SPT (blows/0.3m)
10 20 30 40 50 60 70 80 90 100

DRILLER: JEDI
EQUIPMENT: Truck Mounted Drill Rig
METHOD: Continuous Flight Auger
HOLE DIA.:
REMARKS: Water was not encountered during the drilling operations. SOUTH OF JACK MOUNTAIN AREA

THIS RECORD IS A REASONABLE INTERPRETATION OF SUBSURFACE CONDITIONS AT THE EXPLORATION LOCATION. SUBSURFACE CONDITIONS AT OTHER LOCATIONS AND AT OTHER TIMES MAY DIFFER. INTERFACES BEWEEN STRATA ARE APPROXIMATE. TRANSITIONS BETWEEN STRATA MAY BE GRADUAL.

SOIL TEST BOREHOLE RECORD

PROJECT: Firing Range Upgrade — BORING NO.: B-12
COORD N: 3,456,210.1 — Prepared By: P.B.S.
COORD E: 617,932.0 — Checked By: _____
DRILLED: April 6, 2000 — Date: _____
PROJ. NO.: 60120-0-2022 — PAGE 1 OF 1

LAW
LAWGIBB Group Member

US Army Corps of Engineers
FORT WORTH DISTRICT

POLYENGINEERING, INC.
ENGINEERS & ARCHITECTS
1206 Redland Avenue
Dothan, Alabama 36303
(334) 792-4700 (voice)
(334) 792-8016 (fax)

Mark	Description	Date	Appr.

Date: 19 June 2001 — Rev.
Design file no.
Drawing code: DACA63-01-C-0016
File name:
Plot date:
Plot scale: AS SHOWN

Designed by: Rebecca S. Hand
Dwn by: J. Pedden
Ckd by: M. Dixon
Reviewed by: Scott Faulk
Submitted by: E. Lamar Faulk

U.S. ARMY ENGINEER DISTRICT
CORPS OF ENGINEERS
FORT WORTH, TEXAS

POLYENGINEERING, INC.
ENGINEERS & ARCHITECTS
DOTHAN, ALABAMA

FORT HOOD, TEXAS
DIGITAL MULTI-PURPOSE RANGE COMPLEX (DMPRC)
PN 51915 FY 00

SOIL BORINGS

Sheet reference number: F-9
Sheet of

Contr No. DACA63-01-C-0016

00689470

SOIL_PP 02022-1.GPJ LAW_GIBB.GDT 11/9/00

SOIL CLASSIFICATION AND REMARKS

SEE KEY SYMBOL SHEET FOR EXPLANATION OF SYMBOLS AND ABBREVIATIONS BELOW.

DEPTH (m)	SOIL CLASSIFICATION AND REMARKS	ELEV (m)	IDENT	TYPE	N-COUNT 1st 0.15m / 2nd 0.15m / 3rd 0.15m
0	LEAN CLAY (CL), dark gray, with aggregates and silt pockets	251.7			
	- yellowish brown with aggregates at 0.3 meter - hard below 0.3 meter		AU-1		
			SS-2		22-48-50/5"
1		250.7			
	- with weathered limestone at 1.1 meter		SS-3		50/4"
	- with clay pockets at 1.8 meters				
2		249.7	SS-4		50/5"
			SS-5		27-50/3"
3		248.7			
4	- with pockets of calcareous nodules at 4.1 meters	247.7	SS-6		50/3"
	Borehole Terminated at 4.6 meters				
5		246.7			
6		245.7			

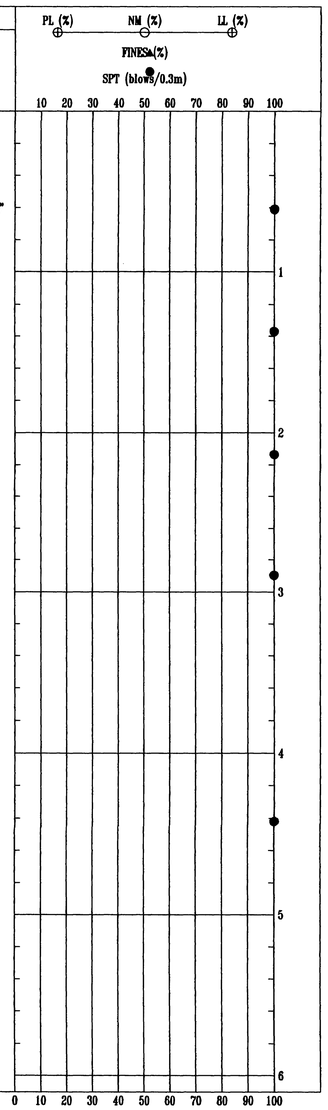

DRILLER: JEDI
EQUIPMENT: Truck Mounted Drill Rig
METHOD: Continuous Flight Auger
HOLE DIA.:
REMARKS: Water was not encountered during the drilling operations. SOUTH OF JACK MOUNTAIN AREA

THIS RECORD IS A REASONABLE INTERPRETATION OF SUBSURFACE CONDITIONS AT THE EXPLORATION LOCATION. SUBSURFACE CONDITIONS AT OTHER LOCATIONS AND AT OTHER TIMES MAY DIFFER. INTERFACES BEWEEN STRATA ARE APPROXIMATE. TRANSITIONS BETWEEN STRATA MAY BE GRADUAL.

SOIL TEST BOREHOLE RECORD

PROJECT: Firing Range Upgrade
BORING NO.: B-13
COORD N: 3,455,410.9
COORD E: 618,844.9
Prepared By: P.B.S.
Checked By: _____
DRILLED: April 6, 2000
Date: _____
PROJ. NO.: 60120-0-2022
PAGE 1 OF 1

LAW
LAWGIBB Group Member

SOIL CLASSIFICATION AND REMARKS

SEE KEY SYMBOL SHEET FOR EXPLANATION OF SYMBOLS AND ABBREVIATIONS BELOW.

DEPTH (m)	SOIL CLASSIFICATION AND REMARKS	ELEV (m)	IDENT	TYPE	N-COUNT 1st 0.15m / 2nd 0.15m / 3rd 0.15m
0	LEAN CLAY (CL), light brown gray and dark gray, with roots and calcareous deposits	254.2			
	SILTY CLAY (CL-ML), hard, light whitish brown, with calcareous deposits		AU-1		
			UD-2		
1		253.2			
			SS-3		
	FAT CLAY (CH), hard, light gray and yellowish brown, with silt partings and calcareous deposits				
2		252.2	SS-4		26-48-50/3"
			SS-5		27-27-30
3		251.2			
	- weathered limestone layer from 3.1 to 3.2 meters				
4	- weathered limestone layer from 4.0 to 4.1meters - light brownish gray at 4.1 meters	250.2	SS-6		18-45-50
	Borehole Terminated at 4.6 meters				
5		249.2			
6		248.2			

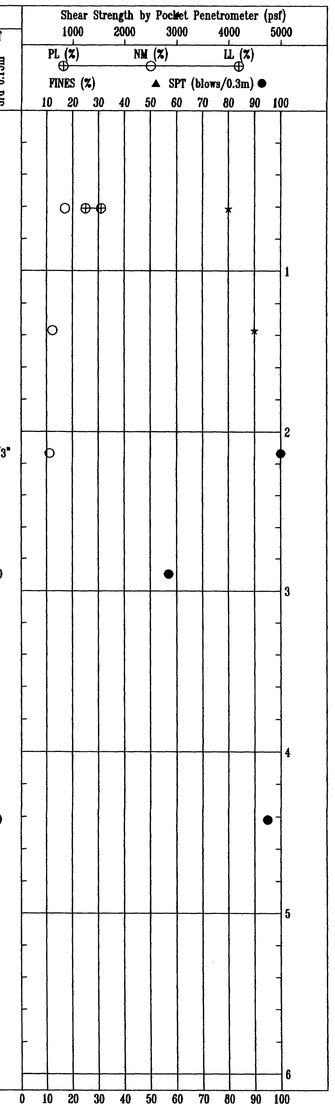

DRILLER: JEDI
EQUIPMENT: Truck Mounted Drill Rig
METHOD: Continuous Flight Auger
HOLE DIA.:
REMARKS: Water was not encountered during the drilling operations. SOUTH OF JACK MOUNTAIN AREA

THIS RECORD IS A REASONABLE INTERPRETATION OF SUBSURFACE CONDITIONS AT THE EXPLORATION LOCATION. SUBSURFACE CONDITIONS AT OTHER LOCATIONS AND AT OTHER TIMES MAY DIFFER. INTERFACES BEWEEN STRATA ARE APPROXIMATE. TRANSITIONS BETWEEN STRATA MAY BE GRADUAL.

SOIL TEST BOREHOLE RECORD

PROJECT: Firing Range Upgrade
BORING NO.: B-14
COORD N: 3,454,808.9
COORD E: 618,099.0
Prepared By: P.B.S.
Checked By: _____
DRILLED: April 6, 2000
Date: _____
PROJ. NO.: 60120-0-2022
PAGE 1 OF 1

LAW
LAWGIBB Group Member

US Army Corps of Engineers
FORT WORTH DISTRICT

POLYENGINEERING, INC.
1600 Rosebud Avenue
Dothan, Alabama 36303
(334) 792-4700 (voice)
(334) 792-9015 (fax)

Mark	Description	Date	Appr.

Designed by: Rebecca S. Hand
Dwn by: J. Reeden
Ckd by: M. Dixon
Reviewed by: Scott Faulk
Submitted by: E. Lamar Faulk
Date: 19 June 2001
Rev.
Design file no.
Drawing code: DACA63-01-C-0016
File name:
Plot date:
Plot scale: AS SHOWN

U.S. ARMY ENGINEER DISTRICT
CORPS OF ENGINEERS
FORT WORTH, TEXAS

POLYENGINEERING, INC.
ENGINEERS & ARCHITECTS
DOTHAN, ALABAMA

FORT HOOD, TEXAS
DIGITAL MULTI-PURPOSE RANGE COMPLEX (DMPRC)
PN 519915 FY 00

SOIL BORINGS

Sheet reference number: F-10
Sheet of

Contr No. DACA63-01-C-0016

SOIL_PP 02022-1.GPJ LAW_GIBB.GDT 11/9/00

00689460

SOIL CLASSIFICATION AND REMARKS

SEE KEY SYMBOL SHEET FOR EXPLANATION OF SYMBOLS AND ABBREVIATIONS BELOW.

Depth (m)	Soil Classification and Remarks	Elev (m)	Sample Ident	Type	N-Count 1st 0.15m	2nd 0.15m	3rd 0.15m
0	LEAN CLAY (CL), very stiff, dark gray and yellowish brown, with roots and calcareous nodules	245.1	AU-1				
			SS-2		11	8	11
1	FAT CLAY (CH), very stiff, light gray and yellowish brown, with limestone gravel	244.1	AU-3				
	- with pockets of calcareous nodules at 1.8 meters						
2		243.1	UD-4				
	- hard below 2.6 meters						
	- weathered limestone at 2.7 meters						
3	- weathered limestone layer from 3 to 3.1 meters	242.1	SS-5		60/6"	-50/3"	
	- weathered limestone layer from 3.7 to 3.8 meters						
4	- weathered limestone layer from 4.0 to 4.2 meters	241.1					
	- yellowish gray, with limestone gravels at 4.3 meters						
	- water was encountered at 4.5 meters						
	Borehole Terminated at 4.6 meters		SS-6		61/3"		
5		240.1					
6		239.1					

Shear Strength by Pocket Penetrometer (psf): 1000 2000 3000 4000 5000

PL (%) NM (%) LL (%)

FINES (%) ▲ SPT (blows/0.3m) ●

10 20 30 40 50 60 70 80 90 100

DRILLER: JEDI
EQUIPMENT: Truck Mounted Drill Rig
METHOD: Continuous Flight Auger
HOLE DIA.:
REMARKS: Water was encountered at 14.8 feet during the drilling operations. SOUTH OF JACK MOUNTAIN AREA

THIS RECORD IS A REASONABLE INTERPRETATION OF SUBSURFACE CONDITIONS AT THE EXPLORATION LOCATION. SUBSURFACE CONDITIONS AT OTHER LOCATIONS AND AT OTHER TIMES MAY DIFFER. INTERFACES BEWEEN STRATA ARE APPROXIMATE. TRANSITIONS BETWEEN STRATA MAY BE GRADUAL.

SOIL TEST BOREHOLE RECORD

PROJECT: Firing Range Upgrade — BORING NO.: B-15
COORD N: 3,454,987.9 — Prepared By: P.B.S.
COORD E: 619,428.9 — Checked By: _____
DRILLED: April 6, 2000 — Date: _____
PROJ. NO.: 60120-0-2022 — PAGE 1 OF 1

LAW
LAWGIBB Group Member

SOIL_PP 02022-1.GPJ LAW_GIBB.GDT 11/9/00

SOIL CLASSIFICATION AND REMARKS

SEE KEY SYMBOL SHEET FOR EXPLANATION OF SYMBOLS AND ABBREVIATIONS BELOW.

Depth (m)	Soil Classification and Remarks	Elev (m)	Sample Ident	Type	N-Count 1st 0.15m	2nd 0.15m	3rd 0.15m
0	LEAN CLAY (CL), dark gray, with silt seams, roots and gravel	314.1	AU-1				
	Borehole Terminated at 0.15 meters						
1		313.1					
2		312.1					
3		311.1					
4		310.1					
5		309.1					
6		308.1					

PL (%) NM (%) LL (%)

FINES (%) SPT (blows/0.3m)

10 20 30 40 50 60 70 80 90 100

DRILLER: JEDI
EQUIPMENT: Truck Mounted Drill Rig
METHOD: Continuous Flight Auger
HOLE DIA.:
REMARKS: Water was not encountered during the drilling operations. CLABBER CREEK AREA

THIS RECORD IS A REASONABLE INTERPRETATION OF SUBSURFACE CONDITIONS AT THE EXPLORATION LOCATION. SUBSURFACE CONDITIONS AT OTHER LOCATIONS AND AT OTHER TIMES MAY DIFFER. INTERFACES BEWEEN STRATA ARE APPROXIMATE. TRANSITIONS BETWEEN STRATA MAY BE GRADUAL.

SOIL TEST BOREHOLE RECORD

PROJECT: Firing Range Upgrade — BORING NO.: B-16
COORD N: 3,458,319.0 — Prepared By: P.B.S.
COORD E: 616,657.0 — Checked By: _____
DRILLED: April 6, 2000 — Date: _____
PROJ. NO.: 60120-0-2022 — PAGE 1 OF 1

LAW
LAWGIBB Group Member

SOIL_PP 02022-1.GPJ LAW_GIBB.GDT 11/9/00

US Army Corps of Engineers
FORT WORTH DISTRICT

POLYENGINEERING, INC.
1986 Hoadland Avenue
Dothan, Alabama 36303
(334) 793-6700 (voice)
(334) 793-0515 (fax)

Mark	Description	Date	Appr.

Designed by: Rebecca S. Hand
Dwn by: J. Peeden
Ckd by: M. Dixon
Reviewed by: Scott Foulk
Submitted by: E. Lamar Foulk
Date: 19 June 2001
Rev.
Design file no.
Drawing code: DACA63-01-C-0016
File name:
Plot date:
Pol. scale: AS SHOWN

U.S. ARMY ENGINEER DISTRICT
CORPS OF ENGINEERS
FORT WORTH, TEXAS

POLYENGINEERING, INC.
ENGINEERS & ARCHITECTS
DOTHAN, ALABAMA

FORT HOOD, TEXAS
DIGITAL MULTI-PURPOSE RANGE COMPLEX (DMPRC)
PN 51915 FY 00

SOIL BORINGS

Sheet reference number: F-11
Sheet of

Contr No. DACA63-01-C-0016

00689490

SOIL CLASSIFICATION AND REMARKS

SEE KEY SYMBOL SHEET FOR EXPLANATION OF SYMBOLS AND ABBREVIATIONS BELOW.

DEPTH (m)	SOIL CLASSIFICATION AND REMARKS	ELEV (m)	SAMPLE IDENT	TYPE	N-COUNT 1st 0.15m / 2nd 0.15m / 3rd 0.15m
0	LEAN CLAY (CL), hard, dark gray, with roots and gravel	284.3			
	- dark gray fat clay layer, with silt pockets at 0.3 meter		AU-1		
			SS-2		15-35-25
1	- very stiff, with calcareous deposits at 1.1 meters	283.3			
			SS-3		6-11-15
2		282.3			
			SS-4		6-15-18
	- weathered limestone at 2.6 meters				
			SS-5		6-24-35
3	Borehole Terminated at 3.0 meters	281.3			
4		280.3			
5		279.3			
6		278.3			

LEGEND

PL (%) NM (%) LL (%) FINES (%) SPT (blows/0.3m)

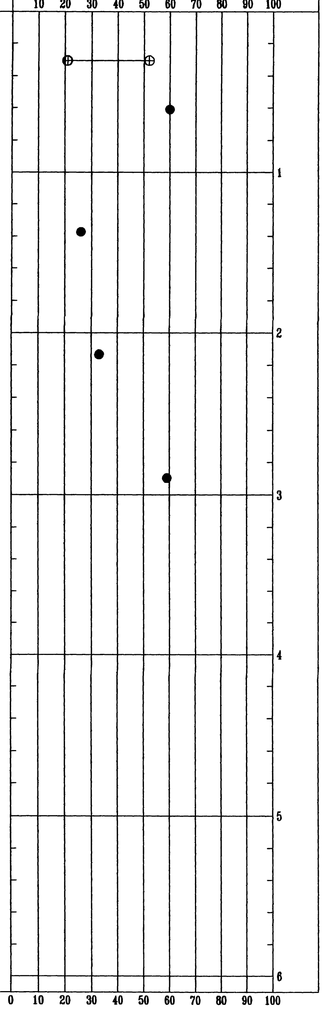

DRILLER: JEDI
EQUIPMENT: Truck Mounted Drill Rig
METHOD: Continuous Flight Auger
HOLE DIA.:
REMARKS: Water was not encountered during the drilling operations. CLABBER CREEK AREA

THIS RECORD IS A REASONABLE INTERPRETATION OF SUBSURFACE CONDITIONS AT THE EXPLORATION LOCATION. SUBSURFACE CONDITIONS AT OTHER LOCATIONS AND AT OTHER TIMES MAY DIFFER. INTERFACES BEWEEN STRATA ARE APPROXIMATE. TRANSITIONS BETWEEN STRATA MAY BE GRADUAL.

SOIL TEST BOREHOLE RECORD

PROJECT: Firing Range Upgrade — BORING NO.: B-17
COORD N: 3,458,169.1 — Prepared By: P.B.S.
COORD E: 616,802.1 — Checked By: _____
DRILLED: April 3, 2000 — Date: _____
PROJ. NO.: 60120-0-2022 — PAGE 1 OF 1

LAW
LAWGIBB Group Member

SOIL CLASSIFICATION AND REMARKS

SEE KEY SYMBOL SHEET FOR EXPLANATION OF SYMBOLS AND ABBREVIATIONS BELOW.

DEPTH (m)	SOIL CLASSIFICATION AND REMARKS	ELEV (m)	SAMPLE IDENT	TYPE	N-COUNT 1st 0.15m / 2nd 0.15m / 3rd 0.15m
0	LEAN CLAY (CL), hard, dark gray, with roots and silt seams	282.0			
			SS-1		2-2-33
1	- light yellowish brown, with silt pockets and ferrous staining at 0.8 meter	281.0			
	- with weathered limestone at 1.4 meters		SS-2		17-20-26
2		280.0			
			SS-3		9-11-25
			SS-4		15-30-50/5"
3	Borehole Terminated at 3.0 meters	279.0			
4		278.0			
5		277.0			
6		276.0			

LEGEND

PL (%) NM (%) LL (%) FINES (%) SPT (blows/0.3m)

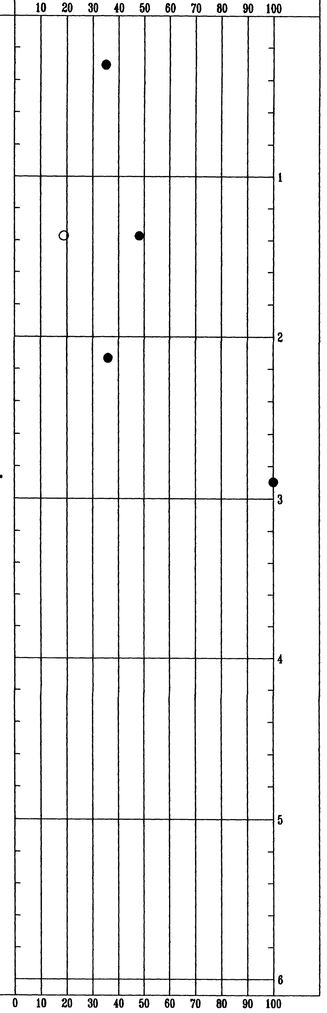

DRILLER: JEDI
EQUIPMENT: Truck Mounted Drill Rig
METHOD: Continuous Flight Auger
HOLE DIA.:
REMARKS: Water was not encountered during the drilling operations. CLABBER CREEK AREA

THIS RECORD IS A REASONABLE INTERPRETATION OF SUBSURFACE CONDITIONS AT THE EXPLORATION LOCATION. SUBSURFACE CONDITIONS AT OTHER LOCATIONS AND AT OTHER TIMES MAY DIFFER. INTERFACES BEWEEN STRATA ARE APPROXIMATE. TRANSITIONS BETWEEN STRATA MAY BE GRADUAL.

SOIL TEST BOREHOLE RECORD

PROJECT: Firing Range Upgrade — BORING NO.: B-18
COORD N: 3,458,044.1 — Prepared By: P.B.S.
COORD E: 616,729.9 — Checked By: _____
DRILLED: April 3, 2000 — Date: _____
PROJ. NO.: 60120-0-2022 — PAGE 1 OF 1

LAW
LAWGIBB Group Member

US Army Corps of Engineers
FORT WORTH DISTRICT

POLYENGINEERING, INC.
1950 Hazelhand Avenue
Dothan, Alabama 36305
(334) 792-5700 (voice)
(334) 792-5018 (fax)

Mark	Description	Date	Appr.

Designed by: Rebecca S. Hand
Dwn by: J. Peeden
Ckd by: M. Dixon
Reviewed by: Scott Faulk
Submitted by: E. Lamar Faulk
Date: 19 June 2001
Rev.
Design file no.
Drawing code: DACA63-01-C-0016
File name:
Plot date:
Plot scale: AS SHOWN

U.S. ARMY ENGINEER DISTRICT
CORPS OF ENGINEERS
FORT WORTH, TEXAS

POLYENGINEERING, INC.
ENGINEERS & ARCHITECTS
DOTHAN, ALABAMA

FORT HOOD, TEXAS
DIGITAL MULTI-PURPOSE RANGE COMPLEX (DMPRC)
PN 51915 FY 00

SOIL BORINGS

Sheet reference number: F-12
Sheet of

Contr No. DACA63-01-C-0016

00689500

DEPTH (m)	SOIL CLASSIFICATION AND REMARKS (SEE KEY SYMBOL SHEET FOR EXPLANATION OF SYMBOLS AND ABBREVIATIONS BELOW.)	ELEV (m)	SAMPLE IDENT	SAMPLE TYPE	N-COUNT (1st 0.15m / 2nd 0.15m / 3rd 0.15m)
0	LEAN CLAY (CL), hard, dark gray, with roots and small calcareous nodules	268.2			
	- with limestone gravel at 0.3 meter		AU-1		
			SS-2		7-12-33
1	- yellowish brown, with weathered limestone at 1.1 meters	267.2			
			SS-3		19-31
2		266.2			
			SS-4		33-50/4"
			SS-5		50/3"
3	Borehole Terminated at 3.0 meters	265.2			
4		264.2			
5		263.2			
6		262.2			

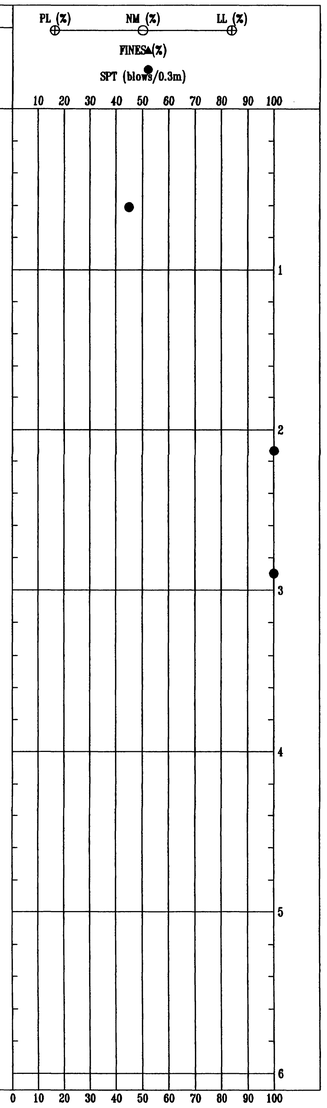

DRILLER: JEDI
EQUIPMENT: Truck Mounted Drill Rig
METHOD: Continuous Flight Auger
HOLE DIA.:
REMARKS: Water was not encountered during the drilling operations. CLABBER CREEK AREA

THIS RECORD IS A REASONABLE INTERPRETATION OF SUBSURFACE CONDITIONS AT THE EXPLORATION LOCATION. SUBSURFACE CONDITIONS AT OTHER LOCATIONS AND AT OTHER TIMES MAY DIFFER. INTERFACES BEWEEN STRATA ARE APPROXIMATE. TRANSITIONS BETWEEN STRATA MAY BE GRADUAL.

SOIL TEST BOREHOLE RECORD

PROJECT: Firing Range Upgrade — BORING NO.: B-19
COORD N: 3,457,994.1 — Prepared By: P.B.S.
COORD E: 617,288.0 — Checked By: _____
DRILLED: April 4, 2000 — Date: _____
PROJ. NO.: 60120-0-2022 — PAGE 1 OF 1

LAW
LAWGIBB Group Member

DEPTH (m)	SOIL CLASSIFICATION AND REMARKS (SEE KEY SYMBOL SHEET FOR EXPLANATION OF SYMBOLS AND ABBREVIATIONS BELOW.)	ELEV (m)	SAMPLE IDENT	SAMPLE TYPE	N-COUNT (1st 0.15m / 2nd 0.15m / 3rd 0.15m)
0	LEAN CLAY (CL), hard, dark gray, with roots and calcareous nodules	266.9			
			UD-1		
1		265.9	UD-2		
2	- with slickensided fat clay pockets at 0.9 meter	264.9			
			SS-3		6-13-18
	- yellowish gray, with silt and limestone gravel at 2.6 meters				
			SS-4		21-30-28
3	Borehole Terminated at 3.0 meters	263.9			
4		262.9			
5		261.9			
6		260.9			

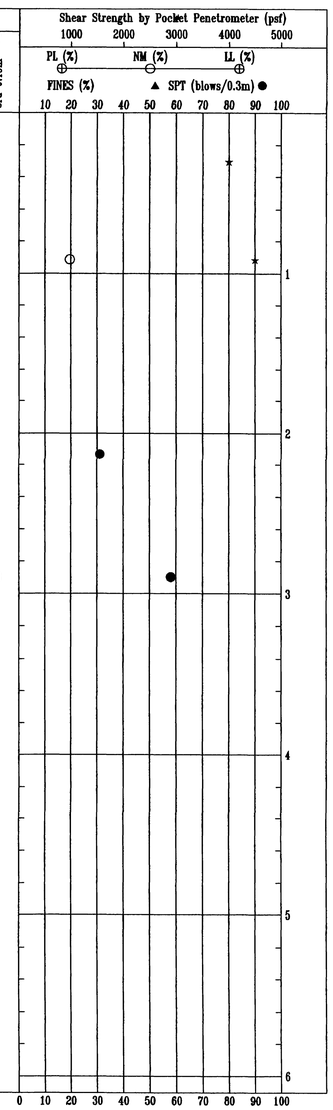

DRILLER: JEDI
EQUIPMENT: Truck Mounted Drill Rig
METHOD: Continuous Flight Auger
HOLE DIA.:
REMARKS: Water was not encountered during the drilling operations. CLABBER CREEK AREA

THIS RECORD IS A REASONABLE INTERPRETATION OF SUBSURFACE CONDITIONS AT THE EXPLORATION LOCATION. SUBSURFACE CONDITIONS AT OTHER LOCATIONS AND AT OTHER TIMES MAY DIFFER. INTERFACES BEWEEN STRATA ARE APPROXIMATE. TRANSITIONS BETWEEN STRATA MAY BE GRADUAL.

SOIL TEST BOREHOLE RECORD

PROJECT: Firing Range Upgrade — BORING NO.: B-20
COORD N: 3,457,818.8 — Prepared By: P.B.S.
COORD E: 617,583.0 — Checked By: _____
DRILLED: April 5, 2000 — Date: _____
PROJ. NO.: 60120-0-2022 — PAGE 1 OF 1

LAW
LAWGIBB Group Member

US Army Corps of Engineers
FORT WORTH DISTRICT

POLYENGINEERING, INC.
1550 Bradford Avenue
Dothan, Alabama 36303
(334) 793-4720 (voice)
(334) 793-9018 (fax)

Mark	Description	Date	Appr.

Designed by: Rebecca S. Hand
Dwn by: J. Peaden
Ckd by: M. Dixon
Reviewed by: Scott Faulk
Submitted by: E. Lamar Faulk
Date: 19 June 2001
Rev.
Design file no.
Drawing code: DACA63-01-C-0016
File name:
Plot date:
Plot scale: AS SHOWN

U.S. ARMY ENGINEER DISTRICT
CORPS OF ENGINEERS
FORT WORTH, TEXAS

POLYENGINEERING, INC.
ENGINEERS & ARCHITECTS
DOTHAN, ALABAMA

FORT HOOD, TEXAS
DIGITAL MULTI-PURPOSE RANGE COMPLEX
PN 51915 FY 00

SOIL BORINGS

Sheet reference number: F-13
Sheet of

Contr No. DACA63-01-C-0016

SOIL_PP 02022-1.GPJ LAW_GIBB.GDT 11/9/00

0068950

SOIL CLASSIFICATION AND REMARKS

SEE KEY SYMBOL SHEET FOR EXPLANATION OF SYMBOLS AND ABBREVIATIONS BELOW.

DEPTH (m)	SOIL CLASSIFICATION AND REMARKS	ELEV (m)	IDENT	TYPE	N-COUNT (1st 0.15m / 2nd 0.15m / 3rd 0.15m)
0	LEAN CLAY (CL), hard, dark gray, with roots and gravel	278.3			
	- yellowish brown at 0.3 meter		AU-1		
			SS-2		50/5"
1		277.3			
			SS-3		7-10-25
	- with weathered limestone at 1.8 meters				
2		276.3			
			SS-4		22-50/4"
			SS-5		50/2"
3	Borehole Terminated at 3.0 meters	275.3			
4		274.3			
5		273.3			
6		272.3			

LEGEND

SAMPLES

PL (%) NM (%) LL (%)

FINES (%)

SPT (blows/0.3m)

10 20 30 40 50 60 70 80 90 100

0 10 20 30 40 50 60 70 80 90 100

DRILLER: JEDI
EQUIPMENT: Truck Mounted Drill Rig
METHOD: Continuous Flight Auger
HOLE DIA.:
REMARKS: Water was not encountered during the drilling operations. CLABBER CREEK AREA

THIS RECORD IS A REASONABLE INTERPRETATION OF SUBSURFACE CONDITIONS AT THE EXPLORATION LOCATION. SUBSURFACE CONDITIONS AT OTHER LOCATIONS AND AT OTHER TIMES MAY DIFFER. INTERFACES BEWEEN STRATA ARE APPROXIMATE. TRANSITIONS BETWEEN STRATA MAY BE GRADUAL.

SOIL TEST BOREHOLE RECORD

PROJECT: Firing Range Upgrade
COORD N: 3,458,878.9
COORD E: 617,206.9
DRILLED: April 3, 2000
PROJ. NO.: 60120-0-2022

BORING NO.: B-21
Prepared By: P.B.S.
Checked By: _____
Date: _____
PAGE 1 OF 1

LAW
LAWGIBB Group Member

SOIL CLASSIFICATION AND REMARKS

SEE KEY SYMBOL SHEET FOR EXPLANATION OF SYMBOLS AND ABBREVIATIONS BELOW.

DEPTH (m)	SOIL CLASSIFICATION AND REMARKS	ELEV (m)	IDENT	TYPE	N-COUNT (1st 0.15m / 2nd 0.15m / 3rd 0.15m)
0	LEAN CLAY (CL), very stiff, dark gray, with gravel	261.9			
	- yellowish brown at 0.3 meters		AU-1		
			SS-2		5-7-15
1		260.9			
			SS-3		6-11-20
	- light brown, with limestone gravel at 1.8 meters - hard below 1.8 meters				
2		259.9			
			SS-4		11-22-22
	- with pockets of calcareous nodules at 2.6 meters				
			SS-5		15-30-32
3	Borehole Terminated at 3.0 meters	258.9			
4		257.9			
5		256.9			
6		255.9			

LEGEND

SAMPLES

PL (%) NM (%) LL (%)

FINES (%)

SPT (blows/0.3m)

10 20 30 40 50 60 70 80 90 100

0 10 20 30 40 50 60 70 80 90 100

DRILLER: JEDI
EQUIPMENT: Truck Mounted Drill Rig
METHOD: Continuous Flight Auger
HOLE DIA.:
REMARKS: Water was not encountered during the drilling operations. CLABBER CREEK AREA

THIS RECORD IS A REASONABLE INTERPRETATION OF SUBSURFACE CONDITIONS AT THE EXPLORATION LOCATION. SUBSURFACE CONDITIONS AT OTHER LOCATIONS AND AT OTHER TIMES MAY DIFFER. INTERFACES BEWEEN STRATA ARE APPROXIMATE. TRANSITIONS BETWEEN STRATA MAY BE GRADUAL.

SOIL TEST BOREHOLE RECORD

PROJECT: Firing Range Upgrade
COORD N: 3,458,275.1
COORD E: 617,779.9
DRILLED: April 4, 2000
PROJ. NO.: 60120-0-2022

BORING NO.: B-22
Prepared By: P.B.S.
Checked By: _____
Date: _____
PAGE 1 OF 1

LAW
LAWGIBB Group Member

US Army Corps of Engineers
FORT WORTH DISTRICT

POLYENGINEERING, INC.
1906 Hardland Avenue
Dothan, Alabama 36303
(334) 793-4720 (voice)
(334) 793-5018 (fax)

Mark	Description	Date	Appr.

Date: 19 June 2001 | Rev.
Design file no.
Drawing code: DACA63-01-C-0016
File name:
Plot date:
Plot scale: AS SHOWN

Designed by: Rebecca S. Hand
Drn by: J. Peaden | Ckd by: M. Dixon
Reviewed by: Scott Faulk
Submitted by: E. Lamar Faulk

U.S. ARMY ENGINEER DISTRICT
CORPS OF ENGINEERS
FORT WORTH, TEXAS

POLYENGINEERING, INC.
ENGINEERS & ARCHITECTS
DOTHAN, ALABAMA

FORT HOOD, TEXAS
DIGITAL MULTI-PURPOSE RANGE COMPLEX (DMPRC)
PN 51915 FY 00

SOIL BORINGS

Sheet reference number: F-14
Sheet of

Contr No. DACA63-01-C-0016

SOIL_PP 02022-1.GPJ LAW_GIBB.GDT 11/9/00

00689520

SOIL CLASSIFICATION AND REMARKS

SEE KEY SYMBOL SHEET FOR EXPLANATION OF SYMBOLS AND ABBREVIATIONS BELOW.

DEPTH (m)	SOIL CLASSIFICATION AND REMARKS	ELEV (m)	IDENT	TYPE	N-COUNT (1st 0.15m / 2nd 0.15m / 3rd 0.15m)
0	LEAN CLAY (CL), very stiff, dark brownish gray, with silt seams, roots and gravel	273.4			
	- with fat clay pockets and calcareous nodules at 0.3 meters		AU-1		
			SS-2		6-9-15
1	- yellowish brown, with silt pockets below 1.1 meters	272.4			
			SS-3		11-15-14
2	- stiff at 1.8 meters	271.4			
			SS-4		5-5-7
3	Borehole Terminated at 3.0 meters	270.4	SS-5		11-12-16
4		269.4			
5		268.4			
6		267.4			

LEGEND

SAMPLES

PL (%) NM (%) LL (%)

FINES(%)

SPT (blows/0.3m)

10 20 30 40 50 60 70 80 90 100

0 10 20 30 40 50 60 70 80 90 100

DRILLER: JEDI
EQUIPMENT: Truck Mounted Drill Rig
METHOD: Continuous Flight Auger
HOLE DIA.:
REMARKS: Water was not encountered during the drilling operations. CLABBER CREEK AREA

THIS RECORD IS A REASONABLE INTERPRETATION OF SUBSURFACE CONDITIONS AT THE EXPLORATION LOCATION. SUBSURFACE CONDITIONS AT OTHER LOCATIONS AND AT OTHER TIMES MAY DIFFER. INTERFACES BEWEEN STRATA ARE APPROXIMATE. TRANSITIONS BETWEEN STRATA MAY BE GRADUAL.

SOIL TEST BOREHOLE RECORD

PROJECT: Firing Range Upgrade — BORING NO.: B-23
COORD N: 3,457,173.0 — Prepared By: P.B.S.
COORD E: 617,914.9 — Checked By: _____
DRILLED: April 4, 2000 — Date: _____
PROJ. NO.: 60120-0-2022 — PAGE 1 OF 1

LAW
LAWGIBB Group Member

SOIL CLASSIFICATION AND REMARKS

SEE KEY SYMBOL SHEET FOR EXPLANATION OF SYMBOLS AND ABBREVIATIONS BELOW.

DEPTH (m)	SOIL CLASSIFICATION AND REMARKS	ELEV (m)	IDENT	TYPE	N-COUNT (1st 0.15m / 2nd 0.15m / 3rd 0.15m)
0	LEAN CLAY (CL), hard, dark gray, with roots and small calcareous nodules	257.6			
	- fat clay layer at 0.3 meters		AU-1		
			SS-2		8-20-33
1	- with pockets of fat clay and calcareous nodules at 1.1 meters	256.6			
			SS-3		20-17-25
2	- weathered limestone at 1.8 meters	255.6			
			SS-4		45-50/2"
3	Borehole Terminated at 3.0 meters	254.6	SS-5		50/1"
4		253.6			
5		252.6			
6		251.6			

LEGEND

SAMPLES

PL (%) NM (%) LL (%)

FINES(%)

SPT (blows/0.3m)

10 20 30 40 50 60 70 80 90 100

0 10 20 30 40 50 60 70 80 90 100

DRILLER: JEDI
EQUIPMENT: Truck Mounted Drill Rig
METHOD: Continuous Flight Auger
HOLE DIA.:
REMARKS: Water was not encountered during the drilling operations. CLABBER CREEK AREA

THIS RECORD IS A REASONABLE INTERPRETATION OF SUBSURFACE CONDITIONS AT THE EXPLORATION LOCATION. SUBSURFACE CONDITIONS AT OTHER LOCATIONS AND AT OTHER TIMES MAY DIFFER. INTERFACES BEWEEN STRATA ARE APPROXIMATE. TRANSITIONS BETWEEN STRATA MAY BE GRADUAL.

SOIL TEST BOREHOLE RECORD

PROJECT: Firing Range Upgrade — BORING NO.: B-24
COORD N: 3,457,791.1 — Prepared By: P.B.S.
COORD E: 618,416.9 — Checked By: _____
DRILLED: April 4, 2000 — Date: _____
PROJ. NO.: 60120-0-2022 — PAGE 1 OF 1

LAW
LAWGIBB Group Member

US Army Corps of Engineers
FORT WORTH DISTRICT

POLYENGINEERING, INC.
1905 Medical Avenue
Dothan, Alabama 36305
(334) 793-4720 (voice)
(334) 793-9015 (fax)

Mark	Description	Date	Appr.

Designed by: Rebecca S. Hand
Dwn by: J. Peaden
Ckd by: M. Dixon
Date: 19 June 2001
Rev:
Design file no.
Drawing code: DACA63-01-C-0016
File name:
Plot date:
Plot scale: AS SHOWN
Reviewed by: Scott Faulk
Submitted by: E. Lamar Faulk

U.S. ARMY ENGINEER DISTRICT
CORPS OF ENGINEERS
FORT WORTH, TEXAS

POLYENGINEERING, INC.
ENGINEERS & ARCHITECTS
DOTHAN, ALABAMA

FORT HOOD, TEXAS
DIGITAL MULTI-PURPOSE RANGE COMPLEX
PN 51915 FY 00

SOIL BORINGS

Sheet reference number: F-15
Sheet of

00689530

SOIL CLASSIFICATION AND REMARKS

SEE KEY SYMBOL SHEET FOR EXPLANATION OF SYMBOLS AND ABBREVIATIONS BELOW.

DEPTH (m)	SOIL CLASSIFICATION AND REMARKS	ELEV (m)	SAMPLE IDENT	SAMPLE TYPE	N-COUNT (1st 0.15m, 2nd 0.15m, 3rd 0.15m)
0	LEAN CLAY (CL), hard, dark gray, with roots and small calcareous nodules	244.0	AU-1		
	- dark brownish gray fat clay layer, with weathered limestone at 0.3 meter		SS-2		8-17-22
1		243.0	SS-3		50/2"
2	Borehole Terminated at 1.8 meters	242.0			
3		241.0			
4		240.0			
5		239.0			
6		238.0			

LEGEND

PL (%) NM (%) LL (%)
FINES▲(%)
SPT (blows●/0.3m)
10 20 30 40 50 60 70 80 90 100

DRILLER: JEDI
EQUIPMENT: Truck Mounted Drill Rig
METHOD: Continuous Flight Auger
HOLE DIA.:
REMARKS: Water was not encountered during the drilling operations. CLABBER CREEK AREA

THIS RECORD IS A REASONABLE INTERPRETATION OF SUBSURFACE CONDITIONS AT THE EXPLORATION LOCATION. SUBSURFACE CONDITIONS AT OTHER LOCATIONS AND AT OTHER TIMES MAY DIFFER. INTERFACES BEWEEN STRATA ARE APPROXIMATE. TRANSITIONS BETWEEN STRATA MAY BE GRADUAL.

SOIL TEST BOREHOLE RECORD

PROJECT: Firing Range Upgrade
COORD N: 3,457,535.1
COORD E: 619,017.1
DRILLED: April 4, 2000
PROJ. NO.: 60120-0-2022

BORING NO.: B-25
Prepared By: P.B.S.
Checked By: _____
Date: _____
PAGE 1 OF 1

LAW
LAWGIBB Group Member

SOIL_PP 02022-1.GPJ LAW_GIBB.GDT 11/9/00

SOIL CLASSIFICATION AND REMARKS

SEE KEY SYMBOL SHEET FOR EXPLANATION OF SYMBOLS AND ABBREVIATIONS BELOW.

DEPTH (m)	SOIL CLASSIFICATION AND REMARKS	ELEV (m)	SAMPLE IDENT	SAMPLE TYPE	N-COUNT (1st 0.15m, 2nd 0.15m, 3rd 0.15m)
0	LEAN CLAY (CL), hard, grayish brown, with silt pockets and calcareous nodules	253.3			
			AU-1		
			SPT-2		6-26-25
1	- hard, with fragments of weathered limestone at 1.1 meters	252.3			
			SPT-3		37-50/2"
2	Borehole Terminated at 1.5 meters	251.3			
3		250.3			
4		249.3			
5		248.3			
6		247.3			

LEGEND

PL (%) NM (%) LL (%)
FINES▲(%)
SPT (blows●/0.3m)
10 20 30 40 50 60 70 80 90 100

DRILLER: JEDI
EQUIPMENT: Truck Mounted Drill Rig
METHOD: Continuous Flight Auger
HOLE DIA.:
REMARKS: Water was not encountered during the drilling operations. CLABBER CREEK AREA

THIS RECORD IS A REASONABLE INTERPRETATION OF SUBSURFACE CONDITIONS AT THE EXPLORATION LOCATION. SUBSURFACE CONDITIONS AT OTHER LOCATIONS AND AT OTHER TIMES MAY DIFFER. INTERFACES BEWEEN STRATA ARE APPROXIMATE. TRANSITIONS BETWEEN STRATA MAY BE GRADUAL.

SOIL TEST BOREHOLE RECORD

PROJECT: Firing Range Upgrade
COORD N: 3,456,646.0
COORD E: 618,908.0
DRILLED: April 5, 2000
PROJ. NO.: 60120-0-2022

BORING NO.: B-26
Prepared By: P.B.S.
Checked By: _____
Date: _____
PAGE 1 OF 1

LAW
LAWGIBB Group Member

SOIL_PP 02022-1.GPJ LAW_GIBB.GDT 11/9/00

US Army Corps of Engineers
FORT WORTH DISTRICT

POLYENGINEERING, INC.
1806 Boulland Avenue
Dothan, Alabama 36303
(334) 792-4700 (voice)
(334) 792-5015 (fax)

Mark	Description	Date	Appr.

Rev.

Date: 19 June 2001
Design file no.
Drawing code: DACA63-01-C-0016
File name:
Plot date:
Plot scale: AS SHOWN

Designed by: Rebecca S. Hand
Dwn by: J. Pasden
Ckd by: M. Dixon
Reviewed by: Scott Faulk
Submitted by: E. Lamar Faulk

U.S. ARMY ENGINEER DISTRICT
CORPS OF ENGINEERS
FORT WORTH, TEXAS

POLYENGINEERING, INC.
ENGINEERS & ARCHITECTS
DOTHAN, ALABAMA

FORT HOOD, TEXAS
DIGITAL MULTI-PURPOSE RANGE COMPLEX
PN 51915 FY 00

SOIL BORINGS

Sheet reference number:
F-16
Sheet of

00689540

SOIL CLASSIFICATION AND REMARKS

SEE KEY SYMBOL SHEET FOR EXPLANATION OF SYMBOLS AND ABBREVIATIONS BELOW.

Depth (m)	Elev (m)	Soil classification and remarks
0	227.4	LEAN CLAY (CL), very stiff, dark gray, with roots and gravel
		- light gray brown, with silt pockets below 0.3 meter
1	226.4	- hard below 1.1 meters
2	225.4	
3	224.4	Borehole Terminated at 3.0 meters
4	223.4	
5	222.4	
6	221.4	

Legend: Lean clay (CL) — Borehole terminated

Ident	Type	N-count (1st 0.15m – 2nd 0.15m – 3rd 0.15m)
AU-1		
SS-2		10-10-9
SS-3		14-30-50/5"
SS-4		35-50/3"
SS-5		50/3"

Samples: PL (%) — NM (%) — LL (%); FINES (%); SPT (blows/0.3m)

DRILLER: JEDI
EQUIPMENT: Truck Mounted Drill Rig
METHOD: Continuous Flight Auger
HOLE DIA.:
REMARKS: Water was not encountered during the drilling operations. CLABBER CREEK AREA

THIS RECORD IS A REASONABLE INTERPRETATION OF SUBSURFACE CONDITIONS AT THE EXPLORATION LOCATION. SUBSURFACE CONDITIONS AT OTHER LOCATIONS AND AT OTHER TIMES MAY DIFFER. INTERFACES BEWEEN STRATA ARE APPROXIMATE. TRANSITIONS BETWEEN STRATA MAY BE GRADUAL.

SOIL TEST BOREHOLE RECORD

PROJECT: Firing Range Upgrade — BORING NO.: B-27
COORD N: 3,457,678.0 — Prepared By: P.B.S.
COORD E: 619,841.9 — Checked By: _____
DRILLED: April 4, 2000 — Date: _____
PROJ. NO.: 60120-0-2022 — PAGE 1 OF 1

LAW
LAWGIBB Group Member

SOIL_PP 02022-1.GPJ LAW_GIBB.GDT 11/9/00

SOIL CLASSIFICATION AND REMARKS

SEE KEY SYMBOL SHEET FOR EXPLANATION OF SYMBOLS AND ABBREVIATIONS BELOW.

Depth (m)	Elev (m)	Soil classification and remarks
0	243.6	LEAN CLAY (CL), hard, yellowish gray, with silt seams and calcareous deposits
1	242.6	- layer of weathered limestone from 1.7 to 1.8 meters
2	241.6	FAT CLAY (CH), hard, light brownish gray, with gravel and silt seams
		- with pockets of limestone nodules at 2.6 meters
3	240.6	- layer of weathered limestone from 2.9 to 3.1 meters
4	239.6	Borehole Terminated at 4.6 meters
5	238.6	
6	237.6	

Legend: Lean clay (CL) — Fat clay (CH)

Ident	Type	N-count (1st 0.15m – 2nd 0.15m – 3rd 0.15m)
AU-1		
SS-2		26-27-29
SS-3		21-50/4"
SS-4		17-50/4"
SS-5		50/4"

Samples: PL (%) — NM (%) — LL (%); FINES (%); SPT (blows/0.3m)

DRILLER: JEDI
EQUIPMENT: Truck Mounted Drill Rig
METHOD: Continuous Flight Auger
HOLE DIA.:
REMARKS: Water was not encountered during the drilling operations. CLABBER CREEK AREA

THIS RECORD IS A REASONABLE INTERPRETATION OF SUBSURFACE CONDITIONS AT THE EXPLORATION LOCATION. SUBSURFACE CONDITIONS AT OTHER LOCATIONS AND AT OTHER TIMES MAY DIFFER. INTERFACES BEWEEN STRATA ARE APPROXIMATE. TRANSITIONS BETWEEN STRATA MAY BE GRADUAL.

SOIL TEST BOREHOLE RECORD

PROJECT: Firing Range Upgrade — BORING NO.: B-28
COORD N: 3,457,312.0 — Prepared By: P.B.S.
COORD E: 619,656.9 — Checked By: _____
DRILLED: April 6, 2000 — Date: _____
PROJ. NO.: 60120-0-2022 — PAGE 1 OF 1

LAW
LAWGIBB Group Member

SOIL_PP 02022-1.GPJ LAW_GIBB.GDT 11/9/00

US Army Corps of Engineers
FORT WORTH DISTRICT

POLYENGINEERING, INC.
ENGINEERS AND ARCHITECTS
1906 Westland Avenue
Dothan, Alabama 36305
(334) 793-7720 (voice)
(334) 793-9018 (fax)

Mark	Description	Date	Appr.

Designed by: Rebecca S. Hand
Dwn by: J. Peaden — Ckd by: M. Dixon
Reviewed by: Scott Faulk
Submitted by: E. Lamar Faulk
Date: 19 June 2001 — Rev.
Design file no.
Drawing code: DACA63-01-C-0016
File name:
Plot date:
Plot scale: AS SHOWN

U.S. ARMY ENGINEER DISTRICT
CORPS OF ENGINEERS
FORT WORTH, TEXAS

POLYENGINEERING, INC.
ENGINEERS & ARCHITECTS
DOTHAN, ALABAMA

FORT HOOD, TEXAS
DIGITAL MULTI-PURPOSE RANGE COMPLEX (DMPRC)
PN 51915 FY 00
SOIL BORINGS

Sheet reference number: F-17
Sheet of

00689550

DEPTH (m)	SOIL CLASSIFICATION AND REMARKS (SEE KEY SYMBOL SHEET FOR EXPLANATION OF SYMBOLS AND ABBREVIATIONS BELOW.)	ELEV (m)	IDENT	TYPE	N-COUNT 1st 0.15m / 2nd 0.15m / 3rd 0.15m	PL (%) NM (%) LL (%) FINES (%) SPT (blows/0.3m)
0	LEAN CLAY (CL), very stiff, dark gray, with roots and gravel	242.8				
	- yellowish brown, with pockets of calcareous nodules at 0.3 meters		AU-1			
			SS-2		5-7-10	
1		241.8				
	- hard, with calcareous deposits at 1.1 meters					
			SS-3		11-19-20	
	- yellowish brown and gray at 1.8 meters					
2		240.8				
			SS-4		3-12-15	
			SS-5		50/5"	
3		239.8				
4	- with weathered limestone at 4.1 meters	238.8	SS-6		50/6"	
	Borehole Terminated at 4.6 meters					
5		237.8				
6		236.8				

LEGEND

SPT (blows/0.3m) 0 10 20 30 40 50 60 70 80 90 100

DRILLER: JEDI
EQUIPMENT: Truck Mounted Drill Rig
METHOD: Continuous Flight Auger
HOLE DIA.:
REMARKS: Water was not encountered during the drilling operations. CLABBER CREEK AREA

THIS RECORD IS A REASONABLE INTERPRETATION OF SUBSURFACE CONDITIONS AT THE EXPLORATION LOCATION. SUBSURFACE CONDITIONS AT OTHER LOCATIONS AND AT OTHER TIMES MAY DIFFER. INTERFACES BEWEEN STRATA ARE APPROXIMATE. TRANSITIONS BETWEEN STRATA MAY BE GRADUAL.

SOIL TEST BOREHOLE RECORD

PROJECT: Firing Range Upgrade — BORING NO.: B-29
COORD N: 3,458,462.3 — Prepared By: P.B.S.
COORD E: 618,744.3 — Checked By: _____
DRILLED: April 6, 2000 — Date: _____
PROJ. NO.: 60120-0-2022 — PAGE 1 OF 1

LAW
LAWGIBB Group Member

DEPTH (m)	SOIL CLASSIFICATION AND REMARKS (SEE KEY SYMBOL SHEET FOR EXPLANATION OF SYMBOLS AND ABBREVIATIONS BELOW.)	ELEV (m)	IDENT	TYPE	N-COUNT 1st 0.15m / 2nd 0.15m / 3rd 0.15m	Shear Strength by Pocket Penetrometer (psf) 1000 2000 3000 4000 5000; PL (%) NM (%) LL (%) FINES (%) ▲ SPT (blows/0.3m) ●
0	LEAN CLAY (CL), hard, light gray and light yellowish gray, with calcareous gravel and silt seams	258.0				
			UD-1			
1	- with fat clay pockets, shells and mica lenses at 1.1 meters	257.0				
			SS-2		46-50/1"	
2		256.0				
	- yellowish brown limestone gravel with silt pockets at 2.7 meters					
3	LIMESTONE, dark gray	255.0	RC-3			
			RC-4			
4		254.0				
	Borehole Terminated at 4.6 meters					
5		253.0				
6		252.0				

LEGEND

SPT (blows/0.3m) 0 10 20 30 40 50 60 70 80 90 100

DRILLER: JEDI
EQUIPMENT: Truck Mounted Drill Rig
METHOD: Continuous Flight Auger
HOLE DIA.:
REMARKS: Water was not encountered during the drilling operations. CLABBER CREEK AREA

THIS RECORD IS A REASONABLE INTERPRETATION OF SUBSURFACE CONDITIONS AT THE EXPLORATION LOCATION. SUBSURFACE CONDITIONS AT OTHER LOCATIONS AND AT OTHER TIMES MAY DIFFER. INTERFACES BEWEEN STRATA ARE APPROXIMATE. TRANSITIONS BETWEEN STRATA MAY BE GRADUAL.

SOIL TEST BOREHOLE RECORD

PROJECT: Firing Range Upgrade — BORING NO.: B-30
COORD N: 3,458,312.9 — Prepared By: P.B.S.
COORD E: 618,940.0 — Checked By: _____
DRILLED: April 6, 2000 — Date: _____
PROJ. NO.: 60120-0-2022 — PAGE 1 OF 1

LAW
LAWGIBB Group Member

US Army Corps of Engineers
FORT WORTH DISTRICT

POLYENGINEERING, INC.
1906 Woodland Avenue
Dothan, Alabama 36303
(334) 793-6790 (voice)
(334) 793-9015 (fax)

Mark	Description	Date	Appr.

Date: 19 June 2001 — Rev.
Designed by: Rebecca S. Hand
Dwn by: J. Peaden — Ckd by: M. Dixon
Reviewed by: Scott Foulk
Submitted by: E. Lamar Foulk
Drawing code: DACA63-01-C-0016
File name:
Plot date:
Plot scale: AS SHOWN

U.S. ARMY ENGINEER DISTRICT
CORPS OF ENGINEERS
FORT WORTH, TEXAS

POLYENGINEERING, INC.
ENGINEERS & ARCHITECTS
DOTHAN, ALABAMA

FORT HOOD, TEXAS
DIGITAL MULTI-PURPOSE RANGE COMPLEX (DMPRC)
PN 51915 FY 00
SOIL BORINGS

Sheet reference number: F-18
Sheet of

Contr No. DACA63-01-C-0016

00689560

SOIL_PP 02022-1.GPJ LAW_GIBB.GDT 11/9/00

SOIL CLASSIFICATION AND REMARKS

SEE KEY SYMBOL SHEET FOR EXPLANATION OF SYMBOLS AND ABBREVIATIONS BELOW.

DEPTH (m)	SOIL CLASSIFICATION AND REMARKS	ELEV (m)	SAMPLE IDENT	TYPE	N-COUNT 1st 0.15m / 2nd 0.15m / 3rd 0.15m
0	LEAN CLAY (CL), hard, dark gray, with roots and gravel	252.7			
	- with calcareous deposits at 0.3 meter		AU-1		
			SS-2		16-20-17
1	- yellowish brown, with silt pockets and weathered limestone at 1.1 meters	251.7			
			SS-3		36-50/4"
2		250.7			
			SS-4		50/5"
3		249.7			
			SS-5		50/3"
4		248.7			
			SS-6		50/4"
5		247.7			
6	Borehole Terminated at 4.6 meters	246.7			

LEGEND

PL (%) NM (%) LL (%) FINES(%) SPT (blows/0.3m)

DRILLER: JEDI
EQUIPMENT: Truck Mounted Drill Rig
METHOD: Continuous Flight Auger
HOLE DIA.:
REMARKS: Water was not encountered during the drilling operations. CLABBER CREEK AREA

THIS RECORD IS A REASONABLE INTERPRETATION OF SUBSURFACE CONDITIONS AT THE EXPLORATION LOCATION. SUBSURFACE CONDITIONS AT OTHER LOCATIONS AND AT OTHER TIMES MAY DIFFER. INTERFACES BEWEEN STRATA ARE APPROXIMATE. TRANSITIONS BETWEEN STRATA MAY BE GRADUAL.

SOIL TEST BOREHOLE RECORD

PROJECT: Firing Range Upgrade
COORD N: 3,457,479.0
COORD E: 618,770.8
DRILLED: April 6, 2000
PROJ. NO.: 60120-0-2022

BORING NO.: B-31
Prepared By: P.B.S.
Checked By: _____
Date: _____
PAGE 1 OF 1

LAW
LAWGIBB Group Member

SOIL_PP 02022-1.GPJ LAW_GIBB.GDT 11/9/00

SOIL CLASSIFICATION AND REMARKS

SEE KEY SYMBOL SHEET FOR EXPLANATION OF SYMBOLS AND ABBREVIATIONS BELOW.

DEPTH (m)	SOIL CLASSIFICATION AND REMARKS	ELEV (m)	SAMPLE IDENT	TYPE	N-COUNT 1st 0.15m / 2nd 0.15m / 3rd 0.15m
0	LEAN CLAY (CL), very stiff, dark gray, with roots, small calcareous nodules, and fat clay pockets	247.6			
			AU-1		
			UD-2		
	Borehole Terminated at 0.6 meter				
1		246.6			
2		245.6			
3		244.6			
4		243.6			
5		242.6			
6		241.6			

Shear Strength by Pocket Penetrometer (psf): 1000 2000 3000 4000 5000

LEGEND

PL (%) NM (%) LL (%) FINES (%) ▲ SPT (blows/0.3m) ●

DRILLER: JEDI
EQUIPMENT: Truck Mounted Drill Rig
METHOD: Continuous Flight Auger
HOLE DIA.:
REMARKS: Water was not encountered during the drilling operations. SOUTH OF ROBINETTE POINT AREA

THIS RECORD IS A REASONABLE INTERPRETATION OF SUBSURFACE CONDITIONS AT THE EXPLORATION LOCATION. SUBSURFACE CONDITIONS AT OTHER LOCATIONS AND AT OTHER TIMES MAY DIFFER. INTERFACES BEWEEN STRATA ARE APPROXIMATE. TRANSITIONS BETWEEN STRATA MAY BE GRADUAL.

SOIL TEST BOREHOLE RECORD

PROJECT: Firing Range Upgrade
COORD N: 3,456,337.8
COORD E: 619,030.8
DRILLED: April 5, 2000
PROJ. NO.: 60120-0-2022

BORING NO.: B-32
Prepared By: P.B.S.
Checked By: _____
Date: _____
PAGE 1 OF 1

LAW
LAWGIBB Group Member

SOIL_PP 02022-1.GPJ LAW_GIBB.GDT 11/9/00

US Army Corps of Engineers
FORT WORTH DISTRICT

POLYENGINEERING, INC.
1956 Headland Avenue
Dothan, Alabama 36305
(334) 792-4700 (voice)
(334) 792-9016 (fax)

Mark	Description	Date	Appr.

Designed by: Rebecca S. Hund
Dwn by: J. Preston
Ckd by: M. Dixon
Reviewed by: Scott Faulk
Submitted by: E. Lamar Faulk
Date: 19 June 2001
Rev.
Design file no.
Drawing code: DWG/AS-01-C-0016
Title:
Plot date:
Plot scale: AS SHOWN

U.S. ARMY ENGINEER DISTRICT
CORPS OF ENGINEERS
FORT WORTH, TEXAS

POLYENGINEERING, INC.
ENGINEERS & ARCHITECTS
DOTHAN, ALABAMA

FORT HOOD, TEXAS
DIGITAL MULTI-PURPOSE RANGE COMPLEX (DMPRC)
PN 51915 FY 00

SOIL BORINGS

Sheet reference number: F-19
Sheet of

00689570

DEPTH (m)	SOIL CLASSIFICATION AND REMARKS SEE KEY SYMBOL SHEET FOR EXPLANATION OF SYMBOLS AND ABBREVIATIONS BELOW.	LEGEND	ELEV (m)	SAMPLES IDENT	TYPE	N-COUNT 1st 0.15m 2nd 0.15m 3rd 0.15m	PL (%) NM (%) LL (%) FINES(%) SPT (blows/0.3m) 10 20 30 40 50 60 70 80 90 100
0	LEAN CLAY (CL), hard, dark gray, with gravel and roots		248.1				
	- grayish brown, with silt seams and limestone gravel at 0.3 meter			AU-1			
				SS-2		8-30-50/2"	
1	Borehole Terminated at 0.9 meter		247.1				
2			246.1				
3			245.1				
4			244.1				
5			243.1				
6			242.1				

0 10 20 30 40 50 60 70 80 90 100

DRILLER: JEDI
EQUIPMENT: Truck Mounted Drill Rig
METHOD: Continuous Flight Auger
HOLE DIA.:
REMARKS: Water was not encountered during the drilling operations. SOUTH OF ROBINETTE POINT AREA

THIS RECORD IS A REASONABLE INTERPRETATION OF SUBSURFACE CONDITIONS AT THE EXPLORATION LOCATION. SUBSURFACE CONDITIONS AT OTHER LOCATIONS AND AT OTHER TIMES MAY DIFFER. INTERFACES BEWEEN STRATA ARE APPROXIMATE. TRANSITIONS BETWEEN STRATA MAY BE GRADUAL.

SOIL TEST BOREHOLE RECORD

PROJECT: Firing Range Upgrade
COORD N: 3,457,189.7
COORD E: 620,427.7
DRILLED: April 4, 2000
PROJ. NO.: 60120-0-2022

BORING NO.: B-33
Prepared By: P.B.S.
Checked By: _____
Date: _____
PAGE 1 OF 1

LAW
LAWGIBB Group Member

DEPTH (m)	SOIL CLASSIFICATION AND REMARKS SEE KEY SYMBOL SHEET FOR EXPLANATION OF SYMBOLS AND ABBREVIATIONS BELOW.	LEGEND	ELEV (m)	SAMPLES IDENT	TYPE	N-COUNT 1st 0.15m 2nd 0.15m 3rd 0.15m	Shear Strength by Pocket Penetrometer (psf) 1000 2000 3000 4000 5000 PL (%) NM (%) LL (%) FINES (%) SPT (blows/0.3m) 10 20 30 40 50 60 70 80 90 100
0	LEAN CLAY (CL), very stiff, dark gray, with roots and gravel		239.9				
	- yellowish gray, with shells and pockets of calcareous nodules at 0.3 meter			AU-1			
				SS-2		6-9-11	
1	- hard, with gravel and fat clay pockets at 1.1 meter		238.9				
				UD-3			
2	FAT CLAY (CH), hard, yellowish gray, with silt seams and large pockets of calcareous nodules		237.9	SS-4		13-30-50/3"	
	- layer of weathered limestone from 2.1 to 2.2 meters						
3	- light gray and yellowish brown at 2.6 meters		236.9	SS-5		22-19-23	
4	- slickensided at 4.1 meters		235.9				
				SS-6		9-50/1"	
5			234.9				
6	Borehole Terminated at 4.6 meters		233.9				

0 10 20 30 40 50 60 70 80 90 100

DRILLER: JEDI
EQUIPMENT: Truck Mounted Drill Rig
METHOD: Continuous Flight Auger
HOLE DIA.:
REMARKS: Water was not encountered during the drilling operations. SOUTH OF ROBINETTE POINT AREA

THIS RECORD IS A REASONABLE INTERPRETATION OF SUBSURFACE CONDITIONS AT THE EXPLORATION LOCATION. SUBSURFACE CONDITIONS AT OTHER LOCATIONS AND AT OTHER TIMES MAY DIFFER. INTERFACES BEWEEN STRATA ARE APPROXIMATE. TRANSITIONS BETWEEN STRATA MAY BE GRADUAL.

SOIL TEST BOREHOLE RECORD

PROJECT: Firing Range Upgrade
COORD N: 3,455,930.0
COORD E: 620,548.7
DRILLED: April 5, 2000
PROJ. NO.: 60120-0-2022

BORING NO.: B-34
Prepared By: P.B.S.
Checked By: _____
Date: _____
PAGE 1 OF 1

LAW
LAWGIBB Group Member

US Army Corps of Engineers
FORT WORTH DISTRICT

POLYENGINEERING, INC.
1800 Rosebud Avenue
Dothan, Alabama 36305
(334) 793-4700 (voice)
(334) 793-9018 (fax)

Mark	Description	Date	Appr.

Designed by: Rebecca S. Hand
Dwn by: J. Peeden
Ckd by: M. Dixon
Reviewed by: Scott Faulk
Submitted by: E. Lamar Faulk
Date: 19 June 2001
Rev.
Design file no.
Drawing code: DACA63-01-C-0016
File name:
Plot scale: AS SHOWN
Plot date:

U.S. ARMY ENGINEER DISTRICT
CORPS OF ENGINEERS
FORT WORTH, TEXAS

POLYENGINEERING, INC.
ENGINEERS & ARCHITECTS
DOTHAN, ALABAMA

FORT HOOD, TEXAS
DIGITAL MULTI-PURPOSE RANGE COMPLEX (DMPRC)
PN 519115 FY 00

SOIL BORINGS

Sheet reference number:
F-20
Sheet of

Contr No. DACA63-01-C-0016

00669380

SOIL_PP 02022-1.GPJ LAW_GIBB.GDT 11/9/00

SOIL CLASSIFICATION AND REMARKS

SEE KEY SYMBOL SHEET FOR EXPLANATION OF SYMBOLS AND ABBREVIATIONS BELOW.

Depth (m)	Elev (m)	Description
0	242.8	LEAN CLAY (CL), hard, dark gray, with silt pockets, roots and gravel
		- yellowish gray, with large pockets of calcareous nodules
1	241.8	- yellowish gray and light brown at 1.1 meters
		- light yellowish brown at 1.8 meters
2	240.8	
		- with fat clay pockets at 2.6 meters
3	239.8	
4	238.8	
5	237.8	Borehole Terminated at 4.6 meters
6	236.8	

Ident	Type	1st 0.15m	2nd 0.15m	3rd 0.15m
AU-1				
SS-2		11	35	42
SS-3		25	50	1"
SS-4		8	50	2"
SS-5		50	3"	
SS-6		50	3"	

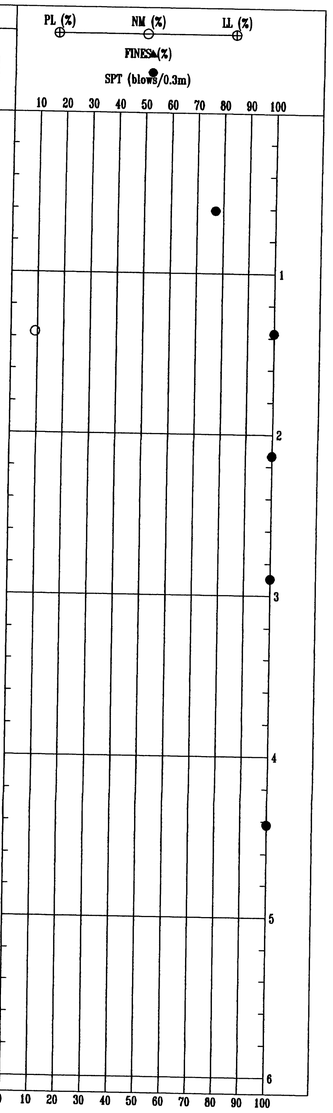

SOIL_PP 02022-1.GPJ LAW_GIBB.GDT 11/9/00

DRILLER: JEDI
EQUIPMENT: Truck Mounted Drill Rig
METHOD: Continuous Flight Auger
HOLE DIA.:
REMARKS: Water was not encountered during the drilling operations. SOUTH OF ROBINETTE POINT AREA

THIS RECORD IS A REASONABLE INTERPRETATION OF SUBSURFACE CONDITIONS AT THE EXPLORATION LOCATION. SUBSURFACE CONDITIONS AT OTHER LOCATIONS AND AT OTHER TIMES MAY DIFFER. INTERFACES BEWEEN STRATA ARE APPROXIMATE. TRANSITIONS BETWEEN STRATA MAY BE GRADUAL.

SOIL TEST BOREHOLE RECORD

PROJECT: Firing Range Upgrade
COORD N: 3,456,386.9
COORD E: 620,916.9
DRILLED: April 5, 2000
PROJ. NO.: 60120-0-2022

BORING NO.: B-35
Prepared By: P.B.S.
Checked By: _____
Date: _____
PAGE 1 OF 1

LAW
LAWGIBB Group Member

SOIL CLASSIFICATION AND REMARKS

SEE KEY SYMBOL SHEET FOR EXPLANATION OF SYMBOLS AND ABBREVIATIONS BELOW.

Depth (m)	Elev (m)	Description
0	251.8	LEAN CLAY (CL), hard, light gray and brownish gray, with silt seams, roots and gravel
1	250.8	
2	249.8	FAT CLAY (CH), hard, light brownish gray, with gravel and silt seams
3	248.8	
4	247.8	- light whitish gray, with weathered limestone at 4.1 meters
5	246.8	Borehole Terminated at 4.6 meters
6	245.8	

Ident	Type	1st 0.15m	2nd 0.15m	3rd 0.15m
AU-1				
UD-2				
SS-3		50	0"	
SS-4		50	3"	
SS-5		50	3"	
SS-6		50	2"	

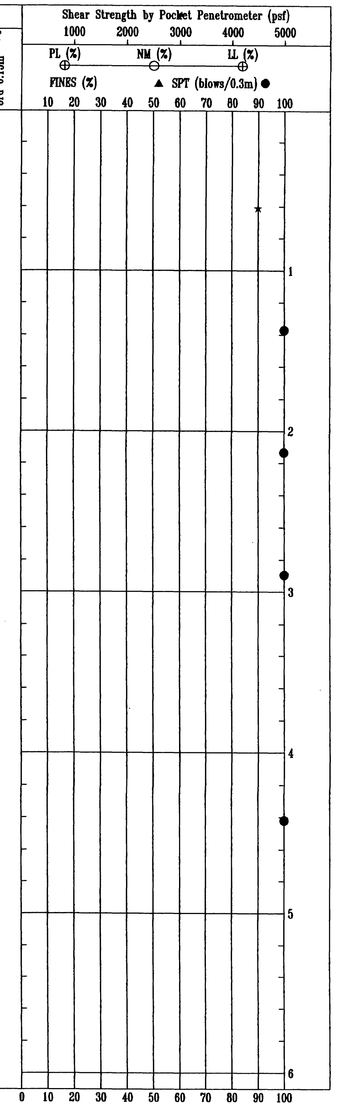

SOIL_PP 02022-1.GPJ LAW_GIBB.GDT 11/9/00

DRILLER: JEDI
EQUIPMENT: Truck Mounted Drill Rig
METHOD: Continuous Flight Auger
HOLE DIA.:
REMARKS: Water was not encountered during the drilling operations. SOUTH OF ROBINETTE POINT AREA

THIS RECORD IS A REASONABLE INTERPRETATION OF SUBSURFACE CONDITIONS AT THE EXPLORATION LOCATION. SUBSURFACE CONDITIONS AT OTHER LOCATIONS AND AT OTHER TIMES MAY DIFFER. INTERFACES BEWEEN STRATA ARE APPROXIMATE. TRANSITIONS BETWEEN STRATA MAY BE GRADUAL.

SOIL TEST BOREHOLE RECORD

PROJECT: Firing Range Upgrade
COORD N: 3,457,899.9
COORD E: 620,418.0
DRILLED: April 6, 2000
PROJ. NO.: 60120-0-2022

BORING NO.: B-36
Prepared By: P.B.S.
Checked By: _____
Date: _____
PAGE 1 OF 1

LAW
LAWGIBB Group Member

US Army Corps of Engineers
FORT WORTH DISTRICT

POLYENGINEERING, INC.
ENGINEERS & ARCHITECTS
1956 Redland Avenue
Dothan, Alabama 36303
(334) 793-4700 (voice)
(334) 793-3615 (fax)

Mark	Description	Date	Appr.

Designed by: Rebecca S. Hand
Dwn by: J. Peeden
Ckd by: M. Dixon
Reviewed by: Scott Faulk
Submitted by: E. Lamar Faulk
Date: 19 June 2001
Rev.
Design file no.
Drawing code: DACA63-01-C-0016
File name:
Plot date:
Plot scale: AS SHOWN

U.S. ARMY ENGINEER DISTRICT
CORPS OF ENGINEERS
FORT WORTH, TEXAS

POLYENGINEERING, INC.
ENGINEERS & ARCHITECTS
DOTHAN, ALABAMA

FORT HOOD, TEXAS
DIGITAL MULTI-PURPOSE RANGE COMPLEX (DMPRC)
PN 51915 FY 00

SOIL BORINGS

Sheet reference number: F-21
Sheet of

00689590

SOIL CLASSIFICATION AND REMARKS

SEE KEY SYMBOL SHEET FOR EXPLANATION OF SYMBOLS AND ABBREVIATIONS BELOW.

DEPTH (m)	SOIL CLASSIFICATION AND REMARKS	ELEV (m)
0	LEAN CLAY (CL), stiff, dark gray, with roots and gravel	260.8
1	FAT CLAY (CH), stiff to very stiff, light yellowish brown and gray, with calcareous deposit - with ferrous nodules at 1.2 meters - with gravel at 1.25 meters	259.8
2	LIMESTONE, highly weathered, light reddish brown, thinly bedded, very poor quality, with cemented gravel and clay interbedded	258.8
3	Borehole Terminated at 3.2 meters	257.8
4		256.8
5		255.8
6		254.8
7		253.8
8		252.8
9		251.8

SAMPLES

IDENT	TYPE	BLOW COUNTS 1st 0.15m / 2nd 0.15m / 3rd 0.15m	RQD %REC
UD-1			
UD-2			
UD-3			
SPT-4		50/0.10 m	
RC-5			0/22

Pocket Penetrometer (psf): 1000 2000 3000 4000 5000

PL (%) NM (%) LL (%)

FINES (%) ▲ SPT (blows/0.3m) ●

10 20 30 40 50 60 70 80 90 100

0 10 20 30 40 50 60 70 80 90 100

SOIL_PP_WITH_ROCK 1-2571.GPJ LAW_GIBB.GDT 5/17/01

DRILLER: Total Support Services, Inc.
EQUIPMENT: Truck Mounted Drill Rig
METHOD: Continuous Flight Auger and Rock Coring
HOLE DIA.:
REMARKS: Water was not encountered during drilling operations.
LOCATED IN SOUTH OF JACK MOUNTAIN AREA

THIS RECORD IS A REASONABLE INTERPRETATION OF SUBSURFACE CONDITIONS AT THE EXPLORATION LOCATION. SUBSURFACE CONDITIONS AT OTHER LOCATIONS AND AT OTHER TIMES MAY DIFFER. INTERFACES BEWEEN STRATA ARE APPROXIMATE. TRANSITIONS BETWEEN STRATA MAY BE GRADUAL.

SOIL TEST BOREHOLE RECORD

PROJECT: Ft. Hood - Firing Range
COORD N: 3,455,535.0
COORD E: 616,401.0
DRILLED: April 5, 2001
PROJ. NO.: 60121-1-2571

BORING NO.: BA-1
Prepared By: P.S.
Checked By:
Date:

PAGE 1 OF 1

LAW
LAWGIBB Group Member

SOIL CLASSIFICATION AND REMARKS

SEE KEY SYMBOL SHEET FOR EXPLANATION OF SYMBOLS AND ABBREVIATIONS BELOW.

DEPTH (m)	SOIL CLASSIFICATION AND REMARKS	ELEV (m)
0	LEAN CLAY (CL), very stiff to hard, dark gray and yellowish brown, with roots and gravel - with yellowish brown and gray fat clay pockets at 0.6 meters	259.3
1		258.3
2	FAT CLAY (CH), hard, yellowish brown and light gray, with limestone gravel and shell fragments LIMESTONE, highly weathered, light reddish brown, thinly bedded, very poor quality, with cemented gravel and shell, and clay interbedded	257.3
3	Borehole Terminated at 3.4 meters	256.3
4		255.3
5		254.3
6		253.3
7		252.3
8		251.3
9		250.3

SAMPLES

IDENT	TYPE	BLOW COUNTS 1st 0.15m / 2nd 0.15m / 3rd 0.15m	RQD %REC
UD-1			
UD-2			
UD-3			
SPT-4		44-50/0.05 m	
RC-5			0/56

Pocket Penetrometer (psf): 1000 2000 3000 4000 5000

PL (%) NM (%) LL (%)

FINES (%) ▲ SPT (blows/0.3m) ●

10 20 30 40 50 60 70 80 90 100

0 10 20 30 40 50 60 70 80 90 100

SOIL_PP_WITH_ROCK 1-2571.GPJ LAW_GIBB.GDT 5/17/01

DRILLER: Total Support Services, Inc.
EQUIPMENT: Truck Mounted Drill Rig
METHOD: Continuous Flight Auger and Rock Coring
HOLE DIA.:
REMARKS: Water was not encountered during drilling operations.
LOCATED IN SOUTH OF JACK MOUNTAIN AREA

THIS RECORD IS A REASONABLE INTERPRETATION OF SUBSURFACE CONDITIONS AT THE EXPLORATION LOCATION. SUBSURFACE CONDITIONS AT OTHER LOCATIONS AND AT OTHER TIMES MAY DIFFER. INTERFACES BEWEEN STRATA ARE APPROXIMATE. TRANSITIONS BETWEEN STRATA MAY BE GRADUAL.

SOIL TEST BOREHOLE RECORD

PROJECT: Ft. Hood - Firing Range
COORD N: 3,455,281.0
COORD E: 616,882.0
DRILLED: April 4, 2001
PROJ. NO.: 60121-1-2571

BORING NO.: BA-2
Prepared By: P.S.
Checked By:
Date:

PAGE 1 OF 1

LAW
LAWGIBB Group Member

US Army Corps of Engineers
FORT WORTH DISTRICT

POLYENGINEERING, INC.
1995 Reshland Avenue
Dothan, Alabama 36303
(334) 792-4700 (voice)
(334) 793-9216 (fax)

Mark	Description	Date	Appr.

Designed by: Rebecca S. Hand
Dwn by: J. Paulsen
Ckd by: M. Dixon
Reviewed by: Scott Faulk
Submitted by: E. Lamar Faulk
Date: 19 June 2001
Rev.
Design file no.
Drawing code: DsCAD-01-C-0016
File name:
Plot scale: AS SHOWN
Plot scale: AS SHOWN

U.S. ARMY ENGINEER DISTRICT
CORPS OF ENGINEERS
FORT WORTH, TEXAS

POLYENGINEERING, INC.
ENGINEERS & ARCHITECTS
DOTHAN, ALABAMA

FORT HOOD, TEXAS
DIGITAL MULTI-PURPOSE RANGE COMPLEX
(DMPRC)
PN 51915 FY 00

SOIL BORINGS

Sheet reference number:
F-22
Sheet of

00689000

SOIL CLASSIFICATION AND REMARKS

SEE KEY SYMBOL SHEET FOR EXPLANATION OF SYMBOLS AND ABBREVIATIONS BELOW.

DEPTH (m)	SOIL CLASSIFICATION AND REMARKS	ELEV (m)	SAMPLE IDENT	TYPE	BLOW COUNTS 1st 0.15m 2nd 0.15m 3rd 0.15m / RQD %REC
0	LEAN CLAY (CL), firm, dark gray, with roots and gravel	252.7			
			UD-1		
	FAT CLAY (CH), very stiff to hard, yellowish brown and gray, with gravel and calcareous deposit				
1		251.7	UD-2		
			UD-3		
	- with gravel and cobble deposit at 1.7 meters - shaly clay formation below 1.8 meters				
2		250.7	SPT-4		50-50/0.06 m
	- highly calcareous shaly clay with shell fragments and gravel at 2.6 meters				
3		249.7	SPT-5		16-35-42
4	- with gravel layer at 3.9 meters	248.7	SPT-6		37-50/0.14 m
5	- with gravel deposit at 5.2 meters	247.7	SPT-7		28-25-26
			UD-8		
6	Borehole Terminated at 5.9 meters	246.7			
7		245.7			
8		244.7			
9		243.7			

Pocket Penetrometer (psf): 1000 2000 3000 4000 5000

PL (%) NM (%) LL (%)

FINES (%) ▲ SPT (blows/0.3m) ●

10 20 30 40 50 60 70 80 90 100

0 10 20 30 40 50 60 70 80 90 100

SOIL_PP_WTH_ROCK 1-2571.GPJ LAW_GIBB.GDT 5/17/01

DRILLER: Total Support Services, Inc.
EQUIPMENT: Truck Mounted Drill Rig
METHOD: Continuous Flight Auger
HOLE DIA.:
REMARKS: Water was not encountered during drilling operations.
LOCATED IN SOUTH OF JACK MOUNTAIN AREA

THIS RECORD IS A REASONABLE INTERPRETATION OF SUBSURFACE CONDITIONS AT THE EXPLORATION LOCATION. SUBSURFACE CONDITIONS AT OTHER LOCATIONS AND AT OTHER TIMES MAY DIFFER. INTERFACES BEWEEN STRATA ARE APPROXIMATE. TRANSITIONS BETWEEN STRATA MAY BE GRADUAL.

SOIL TEST BOREHOLE RECORD

PROJECT: Ft. Hood - Firing Range — BORING NO.: BA-3
COORD N: 3,454,983.0 — Prepared By: P.S.
COORD E: 618,010.0 — Checked By: _____
DRILLED: April 5, 2001 — Date: _____
PROJ. NO.: 60121-1-2571 — PAGE 1 OF 1

LAW
LAWGIBB Group Member

SOIL CLASSIFICATION AND REMARKS

SEE KEY SYMBOL SHEET FOR EXPLANATION OF SYMBOLS AND ABBREVIATIONS BELOW.

DEPTH (m)	SOIL CLASSIFICATION AND REMARKS	ELEV (m)	SAMPLE IDENT	TYPE	BLOW COUNTS 1st 0.15m 2nd 0.15m 3rd 0.15m / RQD %REC
0	LEAN CLAY (CL), stiff, dark gray, with roots and gravel	254.0			
			UD-1		
	- yellowish brown and gray, with gravel deposit at 0.6 meters				
1		253.0	UD-2		
	- shaly clay formation at 1.2 meters - hard at 1.2 meters		UD-3		
	FAT CLAY (CH), hard, yellowish brown and gray, with shale formation and pockets of calcareous deposit		SPT-4		50/0.11 m-37-37
2		252.0			
	- highly weathered clayey shale formation below 2.4 meters		SPT-5		22-35-26
3		251.0			
	- highly weathered limestone deposit at 3.7 meters				
4		250.0	SPT-6		50/0.14 m-50/0.06 m
			UD-7		
5	- with ferrous stains and slickensides at 5.5 meters	249.0			
			UD-8		
6	Borehole Terminated at 6.1 meters	248.0			
7		247.0			
8		246.0			
9		245.0			

Pocket Penetrometer (psf): 1000 2000 3000 4000 5000

PL (%) NM (%) LL (%)

FINES (%) ▲ SPT (blows/0.3m) ●

10 20 30 40 50 60 70 80 90 100

0 10 20 30 40 50 60 70 80 90 100

SOIL_PP_WTH_ROCK 1-2571.GPJ LAW_GIBB.GDT 5/17/01

DRILLER: Total Support Services, Inc.
EQUIPMENT: Truck Mounted Drill Rig
METHOD: Continuous Flight Auger
HOLE DIA.:
REMARKS: Water was not encountered during drilling operations.
LOCATED IN SOUTH OF JACK MOUNTAIN AREA

THIS RECORD IS A REASONABLE INTERPRETATION OF SUBSURFACE CONDITIONS AT THE EXPLORATION LOCATION. SUBSURFACE CONDITIONS AT OTHER LOCATIONS AND AT OTHER TIMES MAY DIFFER. INTERFACES BEWEEN STRATA ARE APPROXIMATE. TRANSITIONS BETWEEN STRATA MAY BE GRADUAL.

SOIL TEST BOREHOLE RECORD

PROJECT: Ft. Hood - Firing Range — BORING NO.: BA-4
COORD N: 3,455,022.0 — Prepared By: P.S.
COORD E: 618,149.0 — Checked By: _____
DRILLED: April 5, 2001 — Date: _____
PROJ. NO.: 60121-1-2571 — PAGE 1 OF 1

LAW
LAWGIBB Group Member

US Army Corps of Engineers
FORT WORTH DISTRICT

POLYENGINEERING, INC.
1906 Headland Avenue
Dothan, Alabama 36305
(334) 792-5720 (voice)
(334) 792-2815 (fax)

Mark	Description	Date	Appr.

Designed by: Rebecca S. Hand
Dwn by: J. Peeden
Ckd by: M. Dixon
Reviewed by: Scott Faulk
Submitted by: E. Lamar Faulk
Date: 19 June 2001
Design file no.
Drawing code: DACA63-01-C-0016
File name:
Plot date:
Plot scale: AS SHOWN
Rev.

U.S. ARMY ENGINEER DISTRICT
CORPS OF ENGINEERS
FORT WORTH, TEXAS

POLYENGINEERING, INC.
ENGINEERS & ARCHITECTS
DOTHAN, ALABAMA

FORT HOOD, TEXAS
DIGITAL MULTI-PURPOSE RANGE COMPLEX
PN 5191915 FY 00

SOIL BORINGS

Sheet reference number:
F-23
Sheet of

Contr No. DACA63-01-C-0016

006890:0

SOIL CLASSIFICATION AND REMARKS

SEE KEY SYMBOL SHEET FOR EXPLANATION OF SYMBOLS AND ABBREVIATIONS BELOW.

DEPTH (m)	ELEV (m)	SOIL CLASSIFICATION AND REMARKS
0	252.7	LEAN CLAY (CL), very stiff, dark gray, with roots and gravel
		- with perched water at 0.6 meters
1	251.7	FAT CLAY (CH), hard, yellowish brown and light gray, highly calcareous, with calcareous nodules and shell fragments
		- slickensided and clayey shale formation at 1.2 meters
2	250.7	- with limestone deposit at 1.8 meters
3	249.7	
4	248.7	- highly weathered clayey shale formation below 4.3 meters
5	247.7	
6	246.7	- very stiff at 6.1 meters
7	245.7	
		Borehole Terminated at 7.6 meters
8	244.7	
9	243.7	

SAMPLES

IDENT	TYPE	BLOW COUNTS 1st 0.15 / 2nd 0.15 / 3rd 0.15	RQD %REC
UD-1			
UD-2			
UD-3			
UD-4			
SPT-5			34-18-23
UD-6			
UD-7			
UD-8			

Pocket Penetrometer (psf) 1000 2000 3000 4000 5000

PL (%) NM (%) LL (%)

FINES (%) ▲ SPT (blows/0.3m) ●

10 20 30 40 50 60 70 80 90 100

0 10 20 30 40 50 60 70 80 90 100

SOIL_PP_WITH_ROCK 1-2571.GPJ LAW_GIBB.GDT 5/17/01

DRILLER: Total Support Services, Inc.
EQUIPMENT: Truck Mounted Drill Rig
METHOD: Continuous Flight Auger
HOLE DIA.:
REMARKS: Water was not encountered during drilling operations. LOCATED IN SOUTH OF JACK MOUNTAIN AREA

THIS RECORD IS A REASONABLE INTERPRETATION OF SUBSURFACE CONDITIONS AT THE EXPLORATION LOCATION. SUBSURFACE CONDITIONS AT OTHER LOCATIONS AND AT OTHER TIMES MAY DIFFER. INTERFACES BEWEEN STRATA ARE APPROXIMATE. TRANSITIONS BETWEEN STRATA MAY BE GRADUAL.

SOIL TEST BOREHOLE RECORD

PROJECT: Ft. Hood - Firing Range
COORD N: 3,455,323.0
COORD E: 618,125.0
DRILLED: April 5, 2001
PROJ. NO.: 60121-1-2571

BORING NO.: BA-5
Prepared By: P.S.
Checked By:
Date:
PAGE 1 OF 1

LAW
LAWGIBB Group Member

SOIL CLASSIFICATION AND REMARKS

SEE KEY SYMBOL SHEET FOR EXPLANATION OF SYMBOLS AND ABBREVIATIONS BELOW.

DEPTH (m)	ELEV (m)	SOIL CLASSIFICATION AND REMARKS
0	247.8	LEAN CLAY (CL), dark gray, with roots and gravel
		- yellowish brown, with silt and weathered limestone at 0.15 meters
		- hard below 0.15 meters
		LIMESTONE, moderately weathered, light brownish gray, thinly bedded, very poor quality, with clay interbedded
1	246.8	
2	245.8	
		- gray, with cemented shell interbedded below 8 feet
3	244.8	
		Borehole Terminated at 3.4 meters
4	243.8	
5	242.8	
6	241.8	
7	240.8	
8	239.8	
9	238.8	

SAMPLES

IDENT	TYPE	BLOW COUNTS 1st 0.15 / 2nd 0.15 / 3rd 0.15	RQD %REC
AU-1			
SPT-2		30-50/0.03 m	
RC-3		20 / 71	
RC-4		18 / 92	

PL (%) NM (%) LL (%)

FINES (%) ● SPT (blows/0.3m)

10 20 30 40 50 60 70 80 90 100

0 10 20 30 40 50 60 70 80 90 100

SOIL_PP_WITH_ROCK 1-2571.GPJ LAW_GIBB.GDT 5/17/01

DRILLER: Total Support Services, Inc.
EQUIPMENT: Truck Mounted Drill Rig
METHOD: Continuous Flight Auger and Rock Coring
HOLE DIA.:
REMARKS: Water was not encountered during drilling operations. LOCATED IN SOUTH OF JACK MOUNTAIN AREA

THIS RECORD IS A REASONABLE INTERPRETATION OF SUBSURFACE CONDITIONS AT THE EXPLORATION LOCATION. SUBSURFACE CONDITIONS AT OTHER LOCATIONS AND AT OTHER TIMES MAY DIFFER. INTERFACES BEWEEN STRATA ARE APPROXIMATE. TRANSITIONS BETWEEN STRATA MAY BE GRADUAL.

SOIL TEST BOREHOLE RECORD

PROJECT: Ft. Hood - Firing Range
COORD N: 3,455,625.0
COORD E: 617,457.0
DRILLED: April 4, 2001
PROJ. NO.: 60121-1-2571

BORING NO.: BA-6
Prepared By: P.S.
Checked By:
Date:
PAGE 1 OF 1

LAW
LAWGIBB Group Member

US Army Corps of Engineers
FORT WORTH DISTRICT

POLYENGINEERING, INC.
1926 Hazelhurst Avenue
Dothan, Alabama 36303
(334) 793-4700 (voice)
(334) 793-8016 (fax)

Mark	Description	Date	Appr.

Designed by: Rebecca S. Hand
Dwn by: J. Peedom
Ckd by: M. Dixon
Reviewed by: Scott Faulk
Submitted by: E. Lamar Faulk
Date: 19 June 2001
Rev.
Design file no.
Drawing code: DACA63-01-C-0016
File name:
Plot date:
Plot scale: AS SHOWN

U.S. ARMY ENGINEER DISTRICT
CORPS OF ENGINEERS
FORT WORTH, TEXAS

POLYENGINEERING, INC.
ENGINEERS & ARCHITECTS
DOTHAN, ALABAMA

FORT HOOD, TEXAS
DIGITAL MULTI-PURPOSE RANGE COMPLEX (DMPRC)
PN 51915 FY 00

SOIL BORINGS

Sheet reference number: F-24
Sheet of

Contr No. DACA63-01-C-0016

00689620

SOIL CLASSIFICATION AND REMARKS

SEE KEY SYMBOL SHEET FOR EXPLANATION OF SYMBOLS AND ABBREVIATIONS BELOW.

DEPTH (m)	SOIL CLASSIFICATION AND REMARKS	ELEV (m)	SAMPLE IDENT	TYPE	CHUNK 1st 0.15m / 2nd 0.15m / 3rd 0.15m	RQD %REC
0	LEAN CLAY (CL), hard, dark gray, with roots and gravel	251.0	UD-1			
	- yellowish brown and gray, with fat clay pockets at 0.6 meters					
1		250.0	SPT-2			50/0.03 m
			SPT-3			0.13 m
	FAT CLAY (CH), hard, yellowish brown and gray, with gravel					
	- calcareous gravel interbedded at 1.8 meters		SPT-4			5-25-50/0.05 m
2		249.0				
	- light reddish brown, with silt below 2.4 meters		SPT-5			50/0.14 m
3		248.0				
	- highly weathered limestone deposit at 3.5 meters		SPT-6			50/0.13 m
4		247.0				
	- with highly weathered clayey shale formation at 4.4 meters		SPT-7			50/0.14 m
5	Borehole Terminated at 4.9 meters	246.0				
6		245.0				
7		244.0				
8		243.0				
9		242.0				

LEGEND

Pocket Penetrometer (psf): 1000 2000 3000 4000 5000

PL (%) NM (%) LL (%)

FINES (%) ▲ SPT (blows/0.3m) ●

10 20 30 40 50 60 70 80 90 100

0 10 20 30 40 50 60 70 80 90 100

SOIL_PP_NTHL_ROCK 1-2571.GPJ LAW_GIBB.GDT 5/17/01

DRILLER: Total Support Services, Inc.
EQUIPMENT: Truck Mounted Drill Rig
METHOD: Continuous Flight Auger
HOLE DIA.:
REMARKS: Water was not encountered during drilling operations. LOCATED IN SOUTH OF JACK MOUNTAIN AREA

THIS RECORD IS A REASONABLE INTERPRETATION OF SUBSURFACE CONDITIONS AT THE EXPLORATION LOCATION. SUBSURFACE CONDITIONS AT OTHER LOCATIONS AND AT OTHER TIMES MAY DIFFER. INTERFACES BEWEEN STRATA ARE APPROXIMATE. TRANSITIONS BETWEEN STRATA MAY BE GRADUAL.

SOIL TEST BOREHOLE RECORD

PROJECT: Ft. Hood - Firing Range
BORING NO.: BA-7
COORD N: 3,455,627.0
COORD E: 617,099.0
DRILLED: April 4, 2001
PROJ. NO.: 60121-1-2571
Prepared By: P.S.
Checked By:
Date:
PAGE 1 OF 1

LAW
LAWGIBB Group Member

SOIL CLASSIFICATION AND REMARKS

SEE KEY SYMBOL SHEET FOR EXPLANATION OF SYMBOLS AND ABBREVIATIONS BELOW.

DEPTH (m)	SOIL CLASSIFICATION AND REMARKS	ELEV (m)	SAMPLE IDENT	TYPE	CHUNK 1st 0.15m / 2nd 0.15m / 3rd 0.15m	RQD %REC
0	LEAN CLAY (CL), stiff, dark gray, with roots, shell fragments, and fat clay pockets	259.3	UD-1			
	FAT CLAY (CH), stiff to very stiff, yellowish brown and gray, with gravel					
1		258.3	UD-2			
	- highly weathered clayey shale formation below 1.2 meters		UD-3			
2		257.3	UD-4			
	- perched water encountered at 2.1 meters		UD-5			
3	LIMESTONE, highly weathered, light reddish brown, laminated, very poor quality, with cemented gravel and interbedded fat clay	256.3	SPT-6			50/0.03 m
			RC-7			0/10
4		255.3				
	- thinly bedded, poor quality below 4.4 meters		RC-8			27/77
5	Borehole Terminated at 5.3 meters	254.3				
6		253.3				
7		252.3				
8		251.3				
9		250.3				

LEGEND

Pocket Penetrometer (psf): 1000 2000 3000 4000 5000

PL (%) NM (%) LL (%)

FINES (%) ▲ SPT (blows/0.3m) ●

10 20 30 40 50 60 70 80 90 100

0 10 20 30 40 50 60 70 80 90 100

SOIL_PP_NTHL_ROCK 1-2571.GPJ LAW_GIBB.GDT 5/17/01

DRILLER: Total Support Services, Inc.
EQUIPMENT: Truck Mounted Drill Rig
METHOD: Continuous Flight Auger and Rock Coring
HOLE DIA.:
REMARKS: Water was not encountered during drilling operations. LOCATED IN SOUTH OF JACK MOUNTAIN AREA

THIS RECORD IS A REASONABLE INTERPRETATION OF SUBSURFACE CONDITIONS AT THE EXPLORATION LOCATION. SUBSURFACE CONDITIONS AT OTHER LOCATIONS AND AT OTHER TIMES MAY DIFFER. INTERFACES BEWEEN STRATA ARE APPROXIMATE. TRANSITIONS BETWEEN STRATA MAY BE GRADUAL.

SOIL TEST BOREHOLE RECORD

PROJECT: Ft. Hood - Firing Range
BORING NO.: BA-8
COORD N: 3,455,824.0
COORD E: 616,644.0
DRILLED: April 5, 2001
PROJ. NO.: 60121-1-2571
Prepared By: P.S.
Checked By:
Date:
PAGE 1 OF 1

LAW
LAWGIBB Group Member

US Army Corps of Engineers
FORT WORTH DISTRICT

POLYENGINEERING, INC.
1956 Headland Avenue
Dothan, Alabama 36305
(334) 793-6760 (voice)
(334) 793-6016 (fax)

Mark	Description	Date	Appr.

Designed by: Rebecca S. Hand
Dwn by: J. Peeden
Ckd by: M. Dixon
Reviewed by: Scott Faulk
Submitted by: E. Lamar Faulk
Date: 19 June 2001
Rev.
Design file no.
Drawing code: DACA63-01-C-0016
File name:
Plot date:
Plot scale: AS SHOWN

U.S. ARMY ENGINEER DISTRICT
CORPS OF ENGINEERS
FORT WORTH, TEXAS

POLYENGINEERING, INC.
ENGINEERS & ARCHITECTS
DOTHAN, ALABAMA

FORT HOOD, TEXAS
DIGITAL MULTI-PURPOSE RANGE COMPLEX (DMPRC) FY 00
PN 51915

SOIL BORINGS

Sheet reference number:
F-25
Sheet of

Contr No. DACA63-01-C-0016

00689530

SOIL CLASSIFICATION AND REMARKS

SEE KEY SYMBOL SHEET FOR EXPLANATION OF SYMBOLS AND ABBREVIATIONS BELOW.

Depth (m)	Description	Elev (m)
0	LEAN CLAY (CL), very stiff, dark gray, with roots, gravel and fat clay pockets	257.5
1	FAT CLAY (CH), hard, yellowish brown and gray, with gravel - highly calcareous, with silt, shell fragments at 1.2 meters	256.5
2		255.5
3	- weathered limestone interbedded, with highly weathered clayey shale formation below 2.7 meters	254.5
4		253.5
5		252.5
6	Borehole Terminated at 5.5 meters	251.5
7		250.5
8		249.5
9		248.5

SAMPLES

Ident	Type	1st 0.15m / 2nd 0.15m / 3rd 0.15m (Blows/0.15m)	RQD %REC
UD-1			
SPT-2		50/0.13 m	
SPT-3		22-38-50/0.13 m	
SPT-4		50-50/0.13 m	
SPT-5		50/0.13 m-50/0.02 m	
SPT-6		18-16-24	
SPT-7		50/0.13 m	

Pocket Penetrometer (psf): 1000, 2000, 3000, 4000, 5000

PL (%) ⊕ NM (%) ○ LL (%) ⊕

FINES (%) ▲ SPT (blows/0.3m) ●

10 20 30 40 50 60 70 80 90 100

0 10 20 30 40 50 60 70 80 90 100

SOIL_PP_NTVL_ROCK 1-2571.GPJ LAW_GIBB.GDT 5/17/01

DRILLER: Total Support Services, Inc.
EQUIPMENT: Truck Mounted Drill Rig
METHOD: Continuous Flight Auger
HOLE DIA.:
REMARKS: Water was not encountered during drilling operations. LOCATED IN SOUTH OF JACK MOUNTAIN AREA

THIS RECORD IS A REASONABLE INTERPRETATION OF SUBSURFACE CONDITIONS AT THE EXPLORATION LOCATION. SUBSURFACE CONDITIONS AT OTHER LOCATIONS AND AT OTHER TIMES MAY DIFFER. INTERFACES BEWEEN STRATA ARE APPROXIMATE. TRANSITIONS BETWEEN STRATA MAY BE GRADUAL.

SOIL TEST BOREHOLE RECORD

PROJECT: Ft. Hood - Firing Range
COORD N: 3,456,168.0
COORD E: 617,186.0
DRILLED: April 5, 2001
PROJ. NO.: 60121-1-2571

BORING NO.: BA-9
Prepared By: P.S.
Checked By:
Date:
PAGE 1 OF 1

LAW
LAWGIBB Group Member

SOIL CLASSIFICATION AND REMARKS

SEE KEY SYMBOL SHEET FOR EXPLANATION OF SYMBOLS AND ABBREVIATIONS BELOW.

Depth (m)	Description	Elev (m)
0	LEAN CLAY (CL), very stiff, dark gray, with roots and gravel - stiff, light gray and yellowish brown, with fat clay pockets at 0.6 meters	254.7
1	FAT CLAY (CH), very stiff to hard, yellowish brown and gray - with calcareous deposit at 1.2 meters	253.7
2		252.7
3	- highly weathered clayey shale formation below 3.5 meters	251.7
4	- with weathered limestone interbedded at 4.4 meters	250.7
5		249.7
6	Borehole Terminated at 6.1 meters	248.7
7		247.7
8		246.7
9		245.7

SAMPLES

Ident	Type	1st 0.15m / 2nd 0.15m / 3rd 0.15m (Blows/0.15m)	RQD %REC
UD-1			
UD-2			
UD-3			
SPT-4		18-20-22	
SPT-5		18-8-50/0.13 m	
SPT-6		50/0.13 m	
SPT-7		50/0.05 m	
SPT-8		3-38-50/0.13 m	

Pocket Penetrometer (psf): 1000, 2000, 3000, 4000, 5000

PL (%) ⊕ NM (%) ○ LL (%) ⊕

FINES (%) ▲ SPT (blows/0.3m) ●

10 20 30 40 50 60 70 80 90 100

0 10 20 30 40 50 60 70 80 90 100

SOIL_PP_NTVL_ROCK 1-2571.GPJ LAW_GIBB.GDT 5/17/01

DRILLER: Total Support Services, Inc.
EQUIPMENT: Truck Mounted Drill Rig
METHOD: Continuous Flight Auger
HOLE DIA.:
REMARKS: Water was encountered at 1.2 meters during drilling operations and remained appoximately at the same level after 15 minutes. LOCATED IN SOUTH OF JACK MOUNTAIN AREA

THIS RECORD IS A REASONABLE INTERPRETATION OF SUBSURFACE CONDITIONS AT THE EXPLORATION LOCATION. SUBSURFACE CONDITIONS AT OTHER LOCATIONS AND AT OTHER TIMES MAY DIFFER. INTERFACES BEWEEN STRATA ARE APPROXIMATE. TRANSITIONS BETWEEN STRATA MAY BE GRADUAL.

SOIL TEST BOREHOLE RECORD

PROJECT: Ft. Hood - Firing Range
COORD N: 3,455,455.0
COORD E: 618,164.0
DRILLED: April 4, 2001
PROJ. NO.: 60121-1-2571

BORING NO.: BA-10
Prepared By: P.S.
Checked By:
Date:
PAGE 1 OF 1

LAW
LAWGIBB Group Member

US Army Corps of Engineers
FORT WORTH DISTRICT

POLYENGINEERING, INC.
1905 Woodland Avenue
Dothan, Alabama 36305
(334) 793-4700 (voice)
(334) 793-8015 (fax)

Mark	Description	Date	Appr.

Designed by: Rebecca S. Hand
Dwn by: J. Peaden
Ckd by: M. Dixon
Reviewed by: Scott Faulk
Submitted by: E. Lamar Faulk
Date: 19 June 2001
Rev.
Design file no.
Drawing code: DACA63-01-C-0016
File name:
Plot date:
Plot scale: AS SHOWN

U.S. ARMY ENGINEER DISTRICT
CORPS OF ENGINEERS
FORT WORTH, TEXAS

POLYENGINEERING, INC.
ENGINEERS & ARCHITECTS
DOTHAN, ALABAMA

FORT HOOD, TEXAS
DIGITAL MULTI-PURPOSE RANGE COMPLEX
PN 51915
FY 00

SOIL BORINGS

Sheet reference number: F-26
Sheet of

Contr No. DACA63-01-C-0016

00689640

SOIL CLASSIFICATION AND REMARKS

SEE KEY SYMBOL SHEET FOR EXPLANATION OF SYMBOLS AND ABBREVIATIONS BELOW.

Depth (m)	Elev (m)	Description
0	254.0	LEAN CLAY (CL), very stiff to hard, dark gray, with roots and gravel
		- yellowish brown, with shaly clay formation below 0.5 meters
1	253.0	LIMESTONE, highly weathered, yellowish gray, very thinly bedded, very poor quality, with clay interbedded
2	252.0	
3	251.0	
4	250.0	Borehole Terminated at 4.1 meters
5	249.0	
6	248.0	
7	247.0	
8	246.0	
9	245.0	

LEGEND

SAMPLES

Ident	Type	1st 0.15m	2nd 0.15m	3rd 0.15m	RQD %REC
UD-1					
UD-2					
RC-3					0/20
RC-4					0/24

Pocket Penetrometer (psf): 1000 2000 3000 4000 5000

PL (%) NM (%) LL (%)

FINES (%) ▲ SPT (blows/0.3m) ●

10 20 30 40 50 60 70 80 90 100

0 10 20 30 40 50 60 70 80 90 100

SOIL_PP_RTTR_ROCK 1-2571.GPJ LAW_GIBB.GDT 5/17/01

DRILLER: Total Support Services, Inc.
EQUIPMENT: Truck Mounted Drill Rig
METHOD: Continuous Flight Auger and Rock Coring
HOLE DIA.:
REMARKS: Water was not encountered during drilling operations. LOCATED IN SOUTH OF JACK MOUNTAIN AREA

THIS RECORD IS A REASONABLE INTERPRETATION OF SUBSURFACE CONDITIONS AT THE EXPLORATION LOCATION. SUBSURFACE CONDITIONS AT OTHER LOCATIONS AND AT OTHER TIMES MAY DIFFER. INTERFACES BEWEEN STRATA ARE APPROXIMATE. TRANSITIONS BETWEEN STRATA MAY BE GRADUAL.

SOIL TEST BOREHOLE RECORD

PROJECT: Ft. Hood - Firing Range
BORING NO.: BA-11
COORD N: 3,455,461.0
COORD E: 618,503.0
DRILLED: April 4, 2001
PROJ. NO.: 60121-1-2571
Prepared By: P.S.
Checked By:
Date:
PAGE 1 OF 1

LAW
LAWGIBB Group Member

SOIL CLASSIFICATION AND REMARKS

SEE KEY SYMBOL SHEET FOR EXPLANATION OF SYMBOLS AND ABBREVIATIONS BELOW.

Depth (m)	Elev (m)	Description
0	249.8	LEAN CLAY (CL), stiff, dark gray, with roots, gravel and fat clay pockets
		FAT CLAY (CH), dark gray, with roots and calcareous nodules
1	248.8	- stiff from 0.6 meters to 1.5 meters
		- yellowish brown and gray below 1.2 meters
		- calcareous deposit at 1.5 meters
		- very stiff from 1.5 meters to 2.9 meters
2	247.8	
		- perched water encountered at 2.6 meters
3	246.8	
4	245.8	
		- hard below 4.3 meters
5	244.8	
6	243.8	- weathered limestone deposit at 5.8 meters
		Borehole Terminated at 6.1 meters
7	242.8	
8	241.8	
9	240.8	

LEGEND

SAMPLES

Ident	Type	1st 0.15m	2nd 0.15m	3rd 0.15m	RQD %REC
UD-1					
UD-2					
UD-3					
UD-4					
UD-5					
SPT-6		50/0.15 m	50/0.15 m	50/0.06 m	
UD-7					
UD-8					

Pocket Penetrometer (psf): 1000 2000 3000 4000 5000

PL (%) NM (%) LL (%)

FINES (%) ▲ SPT (blows/0.3m) ●

10 20 30 40 50 60 70 80 90 100

0 10 20 30 40 50 60 70 80 90 100

SOIL_PP_RTTR_ROCK 1-2571.GPJ LAW_GIBB.GDT 5/17/01

DRILLER: Total Support Services, Inc.
EQUIPMENT: Truck Mounted Drill Rig
METHOD: Continuous Flight Auger
HOLE DIA.:
REMARKS: Water was not encountered during drilling operations. LOCATED IN SOUTH OF JACK MOUNTAIN AREA

THIS RECORD IS A REASONABLE INTERPRETATION OF SUBSURFACE CONDITIONS AT THE EXPLORATION LOCATION. SUBSURFACE CONDITIONS AT OTHER LOCATIONS AND AT OTHER TIMES MAY DIFFER. INTERFACES BEWEEN STRATA ARE APPROXIMATE. TRANSITIONS BETWEEN STRATA MAY BE GRADUAL.

SOIL TEST BOREHOLE RECORD

PROJECT: Ft. Hood - Firing Range
BORING NO.: BA-12
COORD N: 3,455,297.0
COORD E: 618,905.0
DRILLED: April 6, 2001
PROJ. NO.: 60121-1-2571
Prepared By: P.S.
Checked By:
Date:
PAGE 1 OF 1

LAW
LAWGIBB Group Member

US Army Corps of Engineers
FORT WORTH DISTRICT

POLYENGINEERING, INC.
1990 Headland Avenue
Dothan, Alabama 36305
(334) 793-6750 (voice)
(334) 793-9218 (fax)

Mark	Description	Date	Appr.

Designed by: Rebecca S. Hand
Dwn by: J. Peeden
Ckd by: M. Dixon
Reviewed by: Scott Faulk
Submitted by: E. Lamar Faulk
Date: 19 June 2001
Rev.
Design file no.
Drawing code: DACA63-01-C-0016
File name:
Plot date:
Plot scale: AS SHOWN

U.S. ARMY ENGINEER DISTRICT
CORPS OF ENGINEERS
FORT WORTH, TEXAS

POLYENGINEERING, INC.
ENGINEERS & ARCHITECTS
DOTHAN, ALABAMA

FORT HOOD, TEXAS
DIGITAL MULTI-PURPOSE RANGE COMPLEX (DMPRC) FY 00
PN 51915

SOIL BORINGS

Sheet reference number:
F-27
Sheet of

Contr No. DACA63-01-C-0016

00689630

SOIL CLASSIFICATION AND REMARKS

SEE KEY SYMBOL SHEET FOR EXPLANATION OF SYMBOLS AND ABBREVIATIONS BELOW.

DEPTH (m)	SOIL CLASSIFICATION AND REMARKS	ELEV (m)	SAMPLE IDENT	TYPE	1st 0.15m / 2nd 0.15m / 3rd 0.15m (BLOW COUNTS)	RQD %REC
0	LEAN CLAY (CL), stiff, dark gray, with roots and gravel	252.7	UD-1			
	FAT CLAY (CH), very stiff to hard, dark gray, with calcareous nodules - with roots and ferrous nodules at 0.6 meters		UD-2			
1	- with calcareous deposit at 1.1 meters - yellowish brown and gray, with shell fragments below 1.2 meters - stiff at 1.2 meters	251.7	UD-3			
2	- highly weathered clayey shale formation below 1.8 meters	250.7	UD-4			
	- perched water encountered at 2.6 meters					
3		249.7	SPT-5		34-50/0.09 m	
4		248.7				
			UD-6			
5		247.7				
	- weathered limestone interbedded at 5.6 meters					
6	Borehole Terminated at 6.1 meters	246.7	UD-7			
7		245.7				
8		244.7				
9		243.7				

Pocket Penetrometer (psf): 1000, 2000, 3000, 4000, 5000

PL (%) ⊕ NM (%) ○ LL (%) ⊕

FINES (%) ▲ SPT (blows/0.3m) ●

0 10 20 30 40 50 60 70 80 90 100

DRILLER: Total Support Services, Inc.
EQUIPMENT: Truck Mounted Drill Rig
METHOD: Continuous Flight Auger
HOLE DIA.:
REMARKS: Water was not encountered during drilling operations. LOCATED IN SOUTH OF JACK MOUNTAIN AREA

THIS RECORD IS A REASONABLE INTERPRETATION OF SUBSURFACE CONDITIONS AT THE EXPLORATION LOCATION. SUBSURFACE CONDITIONS AT OTHER LOCATIONS AND AT OTHER TIMES MAY DIFFER. INTERFACES BEWEEN STRATA ARE APPROXIMATE. TRANSITIONS BETWEEN STRATA MAY BE GRADUAL.

SOIL TEST BOREHOLE RECORD

PROJECT: Ft. Hood - Firing Range
COORD N: 3,455,231.0
COORD E: 618,296.0
DRILLED: April 6, 2001
PROJ. NO.: 60121-1-2571

BORING NO.: BA-13
Prepared By: P.S.
Checked By:
Date:
PAGE 1 OF 1

LAW
LAWGIBB Group Member

SOIL CLASSIFICATION AND REMARKS

SEE KEY SYMBOL SHEET FOR EXPLANATION OF SYMBOLS AND ABBREVIATIONS BELOW.

DEPTH (m)	SOIL CLASSIFICATION AND REMARKS	ELEV (m)	SAMPLE IDENT	TYPE	1st 0.15m / 2nd 0.15m / 3rd 0.15m (BLOW COUNTS)	RQD %REC
0	LEAN CLAY (CL), stiff, dark gray, with roots and calcareous nodules	241.5	UD-1			
	- with light yellowish brown gravel deposit interbedded at 0.75 meters		UD-2			
1	FAT CLAY (CH), very stiff to hard, light gray and yellowish brown, with pockets of calcareous nodules - perched water encountered at 1.2 meters	240.5	SPT-3		22-9-9	
2	- with silt seams at 1.8 meters	239.5	SPT-4		3-15-16	
	- with gravel deposit at 2.6 meters					
3		238.5	SPT-5		20-50/0.03 m	
4	- with slickensides and highly weathered clayey shale formation at 3.7 meters	237.5	SPT-6		26-18-50	
5	Borehole Terminated at 5.0 meters	236.5	SPT-7		20-50/0.05 m	
6		235.5				
7		234.5				
8		233.5				
9		232.5				

Pocket Penetrometer (psf): 1000, 2000, 3000, 4000, 5000

PL (%) ⊕ NM (%) ○ LL (%) ⊕

FINES (%) ▲ SPT (blows/0.3m) ●

0 10 20 30 40 50 60 70 80 90 100

DRILLER: Total Support Services, Inc.
EQUIPMENT: Truck Mounted Drill Rig
METHOD: Continuous Flight Auger
HOLE DIA.:
REMARKS: Water was not encountered during drilling operations. LOCATED IN SOUTH OF ROBINETTE POINT AREA

THIS RECORD IS A REASONABLE INTERPRETATION OF SUBSURFACE CONDITIONS AT THE EXPLORATION LOCATION. SUBSURFACE CONDITIONS AT OTHER LOCATIONS AND AT OTHER TIMES MAY DIFFER. INTERFACES BEWEEN STRATA ARE APPROXIMATE. TRANSITIONS BETWEEN STRATA MAY BE GRADUAL.

SOIL TEST BOREHOLE RECORD

PROJECT: Ft. Hood - Firing Range
COORD N: 3,456,097.0
COORD E: 620,495.0
DRILLED: April 4, 2001
PROJ. NO.: 60121-1-2571

BORING NO.: BA-14
Prepared By: P.S.
Checked By:
Date:
PAGE 1 OF 1

LAW
LAWGIBB Group Member

US Army Corps of Engineers
FORT WORTH DISTRICT

POLYENGINEERING, INC.
1905 Headland Avenue
Dothan, Alabama 36305
(334) 793-6720 (voice)
(334) 793-9015 (fax)

Mark	Description	Date	Appr.

Designed by: Rebecca S. Hand
Dwn by: J. J. Fresden
Ckd by: M. Dixon
Reviewed by: Scott Faulk
Submitted by: E. Lamar Faulk
Date: 19 June 2001
Rev:
Design file no.
Drawing code: DACA63-01-C-0016
File name:
Plot date:
Plot scale: AS SHOWN

U.S. ARMY ENGINEER DISTRICT
CORPS OF ENGINEERS
FORT WORTH, TEXAS

POLYENGINEERING, INC.
ENGINEERS & ARCHITECTS
DOTHAN, ALABAMA

FORT HOOD, TEXAS
DIGITAL MULTI-PURPOSE RANGE COMPLEX (DMPRC)
PN 51915
FY 00

SOIL BORINGS

Sheet reference number: F-28
Sheet of

Contr No. DACA63-01-C-0016

00689660

SOIL CLASSIFICATION AND REMARKS

SEE KEY SYMBOL SHEET FOR EXPLANATION OF SYMBOLS AND ABBREVIATIONS BELOW.

Depth (m)	Elev (m)	Description
0	244.8	LEAN CLAY (CL), very stiff to hard, dark gray, with roots and gravel - yellowish brown fat clay pockets, with silt at 0.6 meters
2	242.8	LIMESTONE, highly to moderately weathered, light gray, thinly bedded, very poor quality, interbedded with clay layers
4.6	240.2	Borehole Terminated at 4.6 meters

Legend: LEAN CLAY (CL); LIMESTONE

SAMPLES

Ident	Type	Blows (1st 0.15m / 2nd 0.15m / 3rd 0.15m)	RQD / %REC
UD-1	Undisturbed		
UD-2	Undisturbed		
RC-3	Rock Core		0 / 42
RC-4	Rock Core		11 / 100

Pocket Penetrometer (psf): 1000, 2000, 3000, 4000, 5000

PL (%) ⊕ NM (%) ○ LL (%) ⊕

FINES (%) ▲ SPT (blows/0.3m) ●

Elev (m): 244.8, 243.8, 242.8, 241.8, 240.8, 239.8, 238.8, 237.8, 236.8, 235.8

Depth (m): 0, 1, 2, 3, 4, 5, 6, 7, 8, 9

SOIL_PP_NTFL_ROCK 1-2571.GPJ LAW_GIBB.GDT 5/17/01

DRILLER: Total Support Services, Inc.
EQUIPMENT: Truck Mounted Drill Rig
METHOD: Continuous Flight Auger and Rock Coring
HOLE DIA.:
REMARKS: Water was not encountered during drilling operations. LOCATED IN SOUTH OF ROBINETTE POINT AREA

THIS RECORD IS A REASONABLE INTERPRETATION OF SUBSURFACE CONDITIONS AT THE EXPLORATION LOCATION. SUBSURFACE CONDITIONS AT OTHER LOCATIONS AND AT OTHER TIMES MAY DIFFER. INTERFACES BEWEEN STRATA ARE APPROXIMATE. TRANSITIONS BETWEEN STRATA MAY BE GRADUAL.

SOIL TEST BOREHOLE RECORD

PROJECT: Ft. Hood - Firing Range
BORING NO.: BA-15
COORD N: 3,456,284.0
COORD E: 620,517.0
DRILLED: April 4, 2001
PROJ. NO.: 60121-1-2571
Prepared By: P.S.
Checked By:
Date:
PAGE 1 OF 1

LAW
LAWGIBB Group Member

SOIL CLASSIFICATION AND REMARKS

SEE KEY SYMBOL SHEET FOR EXPLANATION OF SYMBOLS AND ABBREVIATIONS BELOW.

Depth (m)	Elev (m)	Description
0	249.8	LEAN CLAY (CL), stiff to very stiff, dark gray, with roots and gravel
1.5	248.3	FAT CLAY (CH), yellowish brown and light gray, with limestone gravel - firm at 1.5 meters - calcareous deposit at 2.0 meters - hard below 2.0 meters - interbedded gravel layer at 2.1 meters - highly weathered clayey shale formation below 2.3 meters
4.6	245.2	Borehole Terminated at 4.6 meters

Legend: LEAN CLAY (CL); FAT CLAY (CH)

SAMPLES

Ident	Type	Blows (1st 0.15m / 2nd 0.15m / 3rd 0.15m)	RQD / %REC
UD-1	Undisturbed		
UD-2	Undisturbed		
UD-3	Undisturbed		
SPT-4	Split Spoon	50/0.13 m-50	
UD-5	Undisturbed		
UD-6	Undisturbed		

Pocket Penetrometer (psf): 1000, 2000, 3000, 4000, 5000

PL (%) ⊕ NM (%) ○ LL (%) ⊕

FINES (%) ▲ SPT (blows/0.3m) ●

Elev (m): 249.8, 248.8, 247.8, 246.8, 245.8, 244.8, 243.8, 242.8, 241.8, 240.8

Depth (m): 0, 1, 2, 3, 4, 5, 6, 7, 8, 9

SOIL_PP_NTFL_ROCK 1-2571.GPJ LAW_GIBB.GDT 5/17/01

DRILLER: Total Support Services, Inc.
EQUIPMENT: Truck Mounted Drill Rig
METHOD: Continuous Flight Auger
HOLE DIA.:
REMARKS: Water was encountered at 1.2 meters during drilling operations and remained approximately at the same level after 15 minutes. LOCATED IN CLABBER CREEK AREA

THIS RECORD IS A REASONABLE INTERPRETATION OF SUBSURFACE CONDITIONS AT THE EXPLORATION LOCATION. SUBSURFACE CONDITIONS AT OTHER LOCATIONS AND AT OTHER TIMES MAY DIFFER. INTERFACES BEWEEN STRATA ARE APPROXIMATE. TRANSITIONS BETWEEN STRATA MAY BE GRADUAL.

SOIL TEST BOREHOLE RECORD

PROJECT: Ft. Hood - Firing Range
BORING NO.: BA-16
COORD N: 3,456,658.0
COORD E: 619,064.0
DRILLED: April 5, 2001
PROJ. NO.: 60121-1-2571
Prepared By: P.S.
Checked By:
Date:
PAGE 1 OF 1

LAW
LAWGIBB Group Member

US Army Corps of Engineers
FORT WORTH DISTRICT

POLYENGINEERING, INC.
1905 Roadhead Avenue
Dothan, Alabama 36303
(334) 793-6700 (voice)
(334) 793-6015 (fax)

Mark	Description	Date	Appr.

Designed by: Rebecca S. Hand
Drawn by: J.J. Powell
Chkd by: M. Dixon
Reviewed by: Scott Foulk
Submitted by: E. Lamar Foulk
Date: 19 June 2001
Rev.
Design file no.
Drawing code: DACA63-01-C-0016
File name:
Plot date:
Plot scale: AS SHOWN

U.S. ARMY ENGINEER DISTRICT
CORPS OF ENGINEERS
FORT WORTH, TEXAS

POLYENGINEERING, INC.
ENGINEERS & ARCHITECTS
DOTHAN, ALABAMA

FORT HOOD, TEXAS
DIGITAL MULTI-PURPOSE RANGE COMPLEX (DMPRC)
PN 51915 FY 00

SOIL BORINGS

Sheet reference number: F-29
Sheet of

Contr No. DACA63-01-C-0016

00689670

SOIL CLASSIFICATION AND REMARKS

SEE KEY SYMBOL SHEET FOR EXPLANATION OF SYMBOLS AND ABBREVIATIONS BELOW.

DEPTH (m)	SOIL CLASSIFICATION AND REMARKS	ELEV (m)
0	LEAN CLAY (CL), stiff, grayish brown, with roots and gravel	260.5
	– hard, gray, with highly weathered limestone below 0.6 meters	
1	LIMESTONE, highly weathered, gray, very thinly bedded, very poor quality, with shaly clay interbedded	259.5
2	– highly weathered, thinly bedded, poor quality below 2.4 meters	258.5
3		257.5
4	Borehole Terminated at 3.9 meters	256.5
5		255.5
6		254.5
7		253.5
8		252.5
9		251.5

SAMPLES

IDENT	TYPE	1st 0.15m	2nd 0.15m	3rd 0.15m	RQD %REC
UD-1					
SPT-2					50/0.10 m
RC-3					0/20
RC-4					0/5
RC-5					38/78

Pocket Penetrometer (psf) 1000 2000 3000 4000 5000

PL (%) NM (%) LL (%)

FINES (%) ▲ SPT (blows/0.3m) ●

10 20 30 40 50 60 70 80 90 100

DRILLER: Total Support Services, Inc.
EQUIPMENT: Truck Mounted Drill Rig
METHOD: Continuous Flight Auger and Rock Coring
HOLE DIA.:
REMARKS: Water was not encountered during drilling operations. LOCATED IN CLABBER CREEK AREA

THIS RECORD IS A REASONABLE INTERPRETATION OF SUBSURFACE CONDITIONS AT THE EXPLORATION LOCATION. SUBSURFACE CONDITIONS AT OTHER LOCATIONS AND AT OTHER TIMES MAY DIFFER. INTERFACES BEWEEN STRATA ARE APPROXIMATE. TRANSITIONS BETWEEN STRATA MAY BE GRADUAL.

SOIL TEST BOREHOLE RECORD

PROJECT: Ft. Hood - Firing Range
COORD N: 3,457,272.0
COORD E: 618,351.0
DRILLED: April 2, 2001
PROJ. NO.: 60121-1-2571

BORING NO.: BA-17
Prepared By: P.S.
Checked By:
Date:
PAGE 1 OF 1

LAW
LAWGIBB Group Member

SOIL CLASSIFICATION AND REMARKS

SEE KEY SYMBOL SHEET FOR EXPLANATION OF SYMBOLS AND ABBREVIATIONS BELOW.

DEPTH (m)	SOIL CLASSIFICATION AND REMARKS	ELEV (m)
0	LEAN CLAY (CL), stiff, dark gray, with roots and calcareous nodules	271.0
	– with gravel and yellowish gray silt pockets at 0.3 meters	
	– yellowish gray lean clay, with calcareous fat clay pockets at 0.6 meters	
1		270.0
	– with gravel at 1.2 meters	
	– hard at 1.2 meters	
	– firm, moist clay layer at 1.8 meters	
2		269.0
	FAT CLAY (CH), light gray and grayish brown, with calcareous nodules and gravel	
	– stiff at 2.4 meters	
3	– highly weathered clayey shale formation below 2.9 meters	268.0
	– hard below 3.4 meters	
4		267.0
5		266.0
	Borehole Terminated at 5.2 meters	
6		265.0
7		264.0
8		263.0
9		262.0

SAMPLES

IDENT	TYPE	1st 0.15m	2nd 0.15m	3rd 0.15m	RQD %REC
UD-1					
UD-2					
UD-3					
UD-4					
UD-5					
SPT-6					50/0.06 m
SPT-7					13-38-49
SPT-8					11-25-32

Pocket Penetrometer (psf) 1000 2000 3000 4000 5000

PL (%) NM (%) LL (%)

FINES (%) ▲ SPT (blows/0.3m) ●

10 20 30 40 50 60 70 80 90 100

DRILLER: Total Support Services, Inc.
EQUIPMENT: Truck Mounted Drill Rig
METHOD: Continuous Flight Auger
HOLE DIA.:
REMARKS: Water was not encountered during drilling operations. LOCATED IN CLABBER CREEK AREA

THIS RECORD IS A REASONABLE INTERPRETATION OF SUBSURFACE CONDITIONS AT THE EXPLORATION LOCATION. SUBSURFACE CONDITIONS AT OTHER LOCATIONS AND AT OTHER TIMES MAY DIFFER. INTERFACES BEWEEN STRATA ARE APPROXIMATE. TRANSITIONS BETWEEN STRATA MAY BE GRADUAL.

SOIL TEST BOREHOLE RECORD

PROJECT: Ft. Hood - Firing Range
COORD N: 3,457,600.0
COORD E: 617,951.0
DRILLED: April 2, 2001
PROJ. NO.: 60121-1-2571

BORING NO.: BA-18
Prepared By: P.S.
Checked By:
Date:
PAGE 1 OF 1

LAW
LAWGIBB Group Member

US Army Corps of Engineers
FORT WORTH DISTRICT

POLYENGINEERING, INC.
1905 Headland Avenue
Dothan, Alabama 36305
(334) 793-4700 (voice)
(334) 793-6015 (fax)

Mark	Description	Date	Appr.

Designed by: Rebecca S. Hand
Dwn by: J. Peaden
Ckd by: M. Dixon
Reviewed by: Scott Faulk
Submitted by: E. Lamar Faulk
Date: 19 June 2001
Rev.
Design file no.
Drawing code: DACA63-01-C-0016
File name:
Plot date:
Plot scale: AS SHOWN

U.S. ARMY ENGINEER DISTRICT
CORPS OF ENGINEERS
FORT WORTH, TEXAS

POLYENGINEERING, INC.
ENGINEERS & ARCHITECTS
DOTHAN, ALABAMA

FORT HOOD, TEXAS
DIGITAL MULTI-PURPOSE RANGE COMPLEX
DAMOPRO FY 00
PN 51915

SOIL BORINGS

Sheet reference number: F-30
Sheet of

Contr No. DACA63-01-C-0016

00689680

SOIL_PP_WITH_ROCK 1-2571.GPJ LAW_GIBB.GDT 5/17/01

SOIL CLASSIFICATION AND REMARKS

SEE KEY SYMBOL SHEET FOR EXPLANATION OF SYMBOLS AND ABBREVIATIONS BELOW.

DEPTH (m)	ELEV (m)	SAMPLE IDENT	SAMPLE TYPE	CHUNK 1st 0.15m / 2nd 0.15m / 3rd 0.15m	RQD %REC
0	262.0				
		UD-1			
		UD-2			
1	261.0				
		UD-3			
2	260.0				
		UD-4			
		UD-5			
3	259.0				
		SPT-6			
4	258.0	RC-7			18/80
5	257.0				
6	256.0				
7	255.0				
8	254.0				
9	253.0				

LEAN CLAY (CL), stiff, to hard, dark gray, with roots and gravel

- yellowish brown, with silt and calcareous deposit below 0.6 meters

- with fat clay pockets at 1.5 meters

- highly weathered clayey shale formation at 3.0 meters

LIMESTONE, moderately weathered, gray, thinly bedded, very poor quality

Borehole Terminated at 5.2 meters

Pocket Penetrometer (psf): 1000, 2000, 3000, 4000, 5000

PL (%) ⊕ — NM (%) ○ — LL (%) ⊕

FINES (%) ▲ SPT (blows/0.3m) ●

10 20 30 40 50 60 70 80 90 100

0 10 20 30 40 50 60 70 80 90 100

DRILLER: Total Support Services, Inc.
EQUIPMENT: Truck Mounted Drill Rig
METHOD: Continuous Flight Auger and Rock Coring
HOLE DIA.:
REMARKS: Water was not encountered during drilling operations. LOCATED IN CLABBER CREEK AREA

THIS RECORD IS A REASONABLE INTERPRETATION OF SUBSURFACE CONDITIONS AT THE EXPLORATION LOCATION. SUBSURFACE CONDITIONS AT OTHER LOCATIONS AND AT OTHER TIMES MAY DIFFER. INTERFACES BEWEEN STRATA ARE APPROXIMATE. TRANSITIONS BETWEEN STRATA MAY BE GRADUAL.

SOIL TEST BOREHOLE RECORD

PROJECT: Ft. Hood - Firing Range
COORD N: 3,457,769.0
COORD E: 618,335.0
DRILLED: April 2, 2001
PROJ. NO.: 60121-1-2571

BORING NO.: BA-19
Prepared By: P.S.
Checked By:
Date:
PAGE 1 OF 1

LAW
LAWGIBB Group Member

SOIL CLASSIFICATION AND REMARKS

SEE KEY SYMBOL SHEET FOR EXPLANATION OF SYMBOLS AND ABBREVIATIONS BELOW.

DEPTH (m)	ELEV (m)	SAMPLE IDENT	SAMPLE TYPE	CHUNK 1st 0.15m / 2nd 0.15m / 3rd 0.15m	RQD %REC
0	264.0				
		UD-1			
1	263.0	UD-2			
		SPT-3		36-46-50/0.13 m	
2	262.0	SPT-4		50/0.15 m	
		RC-5			23/88
3	261.0				
4	260.0	RC-6			19/64
5	259.0				
6	258.0				
7	257.0				
8	256.0				
9	255.0				

LEAN CLAY (CL), very stiff, light yellowish gray and grayish brown, with silt gravel and calcareous deposits

- with gravel deposit at 0.6 meters

- with fat clay pockets and shell fragments at 1.8 meters

LIMESTONE, highly weathered, light gray, thinly bedded, very poor quality

Borehole Terminated at 5.1 meters

Pocket Penetrometer (psf): 1000, 2000, 3000, 4000, 5000

PL (%) ⊕ — NM (%) ○ — LL (%) ⊕

FINES (%) ▲ SPT (blows/0.3m) ●

10 20 30 40 50 60 70 80 90 100

0 10 20 30 40 50 60 70 80 90 100

DRILLER: Total Support Services, Inc.
EQUIPMENT: Truck Mounted Drill Rig
METHOD: Continuous Flight Auger and Rock Coring
HOLE DIA.:
REMARKS: Water was not encountered during drilling operations. LOCATED IN CLABBER CREEK AREA

THIS RECORD IS A REASONABLE INTERPRETATION OF SUBSURFACE CONDITIONS AT THE EXPLORATION LOCATION. SUBSURFACE CONDITIONS AT OTHER LOCATIONS AND AT OTHER TIMES MAY DIFFER. INTERFACES BEWEEN STRATA ARE APPROXIMATE. TRANSITIONS BETWEEN STRATA MAY BE GRADUAL.

SOIL TEST BOREHOLE RECORD

PROJECT: Ft. Hood - Firing Range
COORD N: 3,458,346.0
COORD E: 617,916.0
DRILLED: April 3, 2001
PROJ. NO.: 60121-1-2571

BORING NO.: BA-20
Prepared By: P.S.
Checked By:
Date:
PAGE 1 OF 1

LAW
LAWGIBB Group Member

US Army Corps of Engineers
FORT WORTH DISTRICT

POLYENGINEERING, INC.
1500 Headland Avenue
Dothan, Alabama 36305
(334) 792-2790 (voice)
(334) 793-9018 (fax)

Mark	Description	Date	Appr.

Designed by: Rebecca S. Hand
Drawn by: J. Reuben M. Dixon
Ckd by:
Reviewed by: Scott Faulk
Submitted by: E. Lamar Faulk
Date: 19 June 2001
Rev.
Design file no.
Drawing code: DACA63-01-C-0016
File name:
Plot date:
Plot scale: AS SHOWN

U.S. ARMY ENGINEER DISTRICT
CORPS OF ENGINEERS
FORT WORTH, TEXAS

POLYENGINEERING, INC.
ENGINEERS & ARCHITECTS
DOTHAN, ALABAMA

FORT HOOD, TEXAS
DIGITAL MULTI-PURPOSE RANGE COMPLEX
PN 51915 FY 00

SOIL BORINGS

Sheet reference number:
F-31
Sheet of

Contr No. DACA63-01-C-0016

00689690

SOIL CLASSIFICATION AND REMARKS

SEE KEY SYMBOL SHEET FOR EXPLANATION OF SYMBOLS AND ABBREVIATIONS BELOW.

DEPTH (m)	SOIL CLASSIFICATION AND REMARKS	ELEV (m)
0	LEAN CLAY (CL), very stiff to hard, dark gray, with silt seams and gravel	266.7
	- light yellowish gray below 0.6 meters	
1	- with fat clay pockets, shell fragments below 1.2 meters	265.7
2	FAT CLAY (CH), very stiff to hard, light gray and grayish brown, with gravel, calcareous nodules and highly weathered clayey shale formation	264.7
3		263.7
4		262.7
	Borehole Terminated at 4.6 meters	
5		261.7
6		260.7
7		259.7
8		258.7
9		257.7

SAMPLES

IDENT	TYPE	1st 0.15m	2nd 0.15m	3rd 0.15m	RQD %REC
UD-1					
UD-2					
UD-3					
UD-4					
SPT-5					50/0.10 m
SPT-6					50/0.05 m
SPT-7					50/0.13 m
SPT-8					50/0.11 m

Pocket Penetrometer (psf): 1000, 2000, 3000, 4000, 5000

PL (%) ⊕ NM (%) ○ LL (%) ⊕

FINES (%) ▲ SPT (blows/0.3m) ●

10 20 30 40 50 60 70 80 90 100

0 10 20 30 40 50 60 70 80 90 100

DRILLER: Total Support Services, Inc.
EQUIPMENT: Truck Mounted Drill Rig
METHOD: Continuous Flight Auger
HOLE DIA.:
REMARKS: Water was not encountered during drilling operations. LOCATED IN CLABBER CREEK AREA

THIS RECORD IS A REASONABLE INTERPRETATION OF SUBSURFACE CONDITIONS AT THE EXPLORATION LOCATION. SUBSURFACE CONDITIONS AT OTHER LOCATIONS AND AT OTHER TIMES MAY DIFFER. INTERFACES BEWEEN STRATA ARE APPROXIMATE. TRANSITIONS BETWEEN STRATA MAY BE GRADUAL.

SOIL TEST BOREHOLE RECORD

PROJECT: Ft. Hood - Firing Range
BORING NO.: BA-21
COORD N: 3,458,500.0
COORD E: 617,963.0
DRILLED: April 3, 2001
PROJ. NO.: 60121-1-2571
Prepared By: P.S.
Checked By:
Date:
PAGE 1 OF 1

LAW
LAWGIBB Group Member

SOIL CLASSIFICATION AND REMARKS

SEE KEY SYMBOL SHEET FOR EXPLANATION OF SYMBOLS AND ABBREVIATIONS BELOW.

DEPTH (m)	SOIL CLASSIFICATION AND REMARKS	ELEV (m)
0	LEAN CLAY (CL), stiff to hard, dark gray, with roots and gravel	257.0
	- yellowish brown, with fat clay pockets and silt seams at 0.6 meters	
1		256.0
	- highly weathered limestone layer at 1.2 meters - light yellowish gray below 1.2 meters	
2	FAT CLAY (CH), hard, light gray and grayish brown, with calcareous nodules	255.0
	- highly weathered clayey shale formation at 2.4 meters	
3		254.0
4		253.0
	Borehole Terminated at 4.6 meters	
5		252.0
6		251.0
7		250.0
8		249.0
9		248.0

SAMPLES

IDENT	TYPE	1st 0.15m	2nd 0.15m	3rd 0.15m	RQD %REC
UD-1					
UD-2					
UD-3					
SPT-4					50/0.13 m
SPT-5					50/0.09 m
SPT-6					50/0.03 m

Pocket Penetrometer (psf): 1000, 2000, 3000, 4000, 5000

PL (%) ⊕ NM (%) ○ LL (%) ⊕

FINES (%) ▲ SPT (blows/0.3m) ●

10 20 30 40 50 60 70 80 90 100

0 10 20 30 40 50 60 70 80 90 100

DRILLER: Total Support Services, Inc.
EQUIPMENT: Truck Mounted Drill Rig
METHOD: Continuous Flight Auger
HOLE DIA.:
REMARKS: Water was not encountered during drilling operations. LOCATED IN CLABBER CREEK AREA

THIS RECORD IS A REASONABLE INTERPRETATION OF SUBSURFACE CONDITIONS AT THE EXPLORATION LOCATION. SUBSURFACE CONDITIONS AT OTHER LOCATIONS AND AT OTHER TIMES MAY DIFFER. INTERFACES BEWEEN STRATA ARE APPROXIMATE. TRANSITIONS BETWEEN STRATA MAY BE GRADUAL.

SOIL TEST BOREHOLE RECORD

PROJECT: Ft. Hood - Firing Range
BORING NO.: BA-22
COORD N: 3,456,744.0
COORD E: 618,720.0
DRILLED: April 2, 2001
PROJ. NO.: 60121-1-2571
Prepared By: P.S.
Checked By:
Date:
PAGE 1 OF 1

LAW
LAWGIBB Group Member

US Army Corps of Engineers
FORT WORTH DISTRICT

POLYENGINEERING, INC.
1950 Southland Avenue
Dothan, Alabama 36305
(334) 793-2720 (voice)
(334) 793-5016 (fax)

Mark	Description	Date	Appr.

Designed by: Rebecca S. Hond
Dwn by: J. Peeden
Ckd by: M. Dixon
Reviewed by: Scott Faulk
Submitted by: E. Lamar Faulk
Date: 19 June 2001
Rev.
Design file no.
Drawing code: DACA63-01-C-0016
File name:
Plot date:
Plot scale: AS SHOWN

U.S. ARMY ENGINEER DISTRICT
CORPS OF ENGINEERS
FORT WORTH, TEXAS

POLYENGINEERING, INC.
ENGINEERS & ARCHITECTS
DOTHAN, ALABAMA

FORT HOOD, TEXAS
DIGITAL MULTI-PURPOSE RANGE COMPLEX (DMPRC)
PN 51915 FY 00

SOIL BORINGS

Sheet reference number: F-32
Sheet of

Contr No. DACA63-01-C-0016

00689700

SOIL CLASSIFICATION AND REMARKS

SEE KEY SYMBOL SHEET FOR EXPLANATION OF SYMBOLS AND ABBREVIATIONS BELOW.

Depth (m)	Elev (m)	Soil Classification and Remarks
0	252.0	LEAN CLAY (CL), stiff, dark gray, with roots and gravel
		FAT CLAY (CH), very stiff to hard, light grayish brown and gray, with calcareous nodules
1	251.0	- with slickensides and shell fragments at 1.2 meters
2	250.0	- highly weathered clayey shale formation below 2.3 meters
3	249.0	
4	248.0	Borehole Terminated at 4.0 meters
5	247.0	
6	246.0	
7	245.0	
8	244.0	
9	243.0	

SAMPLES

Ident	Type	1st 0.15m	2nd 0.15m	3rd 0.15m	RQD %REC
UD-1					
UD-2					
UD-3					
UD-4					
SPT-5					35-33-32
SPT-6					50/0.04 m

Pocket Penetrometer (psf): 1000 2000 3000 4000 5000

PL (%) NM (%) LL (%)

FINES (%) ▲ SPT (blows/0.3m) ●

10 20 30 40 50 60 70 80 90 100

SOIL_PP_WITH_ROCK 1-2571.GPJ LAW_GIBB.GDT 5/17/01

DRILLER: Total Support Services, Inc.
EQUIPMENT: Truck Mounted Drill Rig
METHOD: Continuous Flight Auger
HOLE DIA.:
REMARKS: Water was not encountered during drilling operations. LOCATED IN SOUTH OF ROBINETTE POINT AREA

THIS RECORD IS A REASONABLE INTERPRETATION OF SUBSURFACE CONDITIONS AT THE EXPLORATION LOCATION. SUBSURFACE CONDITIONS AT OTHER LOCATIONS AND AT OTHER TIMES MAY DIFFER. INTERFACES BEWEEN STRATA ARE APPROXIMATE. TRANSITIONS BETWEEN STRATA MAY BE GRADUAL.

SOIL TEST BOREHOLE RECORD

PROJECT: Ft. Hood - Firing Range
COORD N: 3,457,333.0
COORD E: 620,731.0
DRILLED: April 3, 2001
PROJ. NO.: 60121-1-2571

BORING NO.: BA-23
Prepared By: P.S.
Checked By: _____
Date: _____
PAGE 1 OF 1

LAW
LAWGIBB Group Member

SOIL CLASSIFICATION AND REMARKS

SEE KEY SYMBOL SHEET FOR EXPLANATION OF SYMBOLS AND ABBREVIATIONS BELOW.

Depth (m)	Elev (m)	Soil Classification and Remarks
0	248.0	LEAN CLAY (CL), very stiff to hard, dark gray, with roots and gravel
1	247.0	- light gray and yellowish brown, with calcareous nodules and fat clay pockets below 0.6 meters
2	246.0	- with silt seams and weathered limestone gravel at 2.4 meters
3	245.0	LIMESTONE, highly weathered, light brown gray, very thinly bedded, very poor quality, with cemented gravel and interbedded fat clay layers
4	244.0	
5	243.0	Borehole Terminated at 4.6 meters
6	242.0	
7	241.0	
8	240.0	
9	239.0	

SAMPLES

Ident	Type	1st 0.15m	2nd 0.15m	3rd 0.15m	RQD %REC
UD-1					
SPT-2					25-18-26
SPT-3					50/0.10 m
SPT-4					50/0.08 m
RC-5					0/40

Pocket Penetrometer (psf): 1000 2000 3000 4000 5000

PL (%) NM (%) LL (%)

FINES (%) ▲ SPT (blows/0.3m) ●

10 20 30 40 50 60 70 80 90 100

SOIL_PP_WITH_ROCK 1-2571.GPJ LAW_GIBB.GDT 5/17/01

DRILLER: Total Support Services, Inc.
EQUIPMENT: Truck Mounted Drill Rig
METHOD: Continuous Flight Auger and Rock Coring
HOLE DIA.:
REMARKS: Water was not encountered during drilling operations. LOCATED IN SOUTH OF ROBINETTE POINT AREA

THIS RECORD IS A REASONABLE INTERPRETATION OF SUBSURFACE CONDITIONS AT THE EXPLORATION LOCATION. SUBSURFACE CONDITIONS AT OTHER LOCATIONS AND AT OTHER TIMES MAY DIFFER. INTERFACES BEWEEN STRATA ARE APPROXIMATE. TRANSITIONS BETWEEN STRATA MAY BE GRADUAL.

SOIL TEST BOREHOLE RECORD

PROJECT: Ft. Hood - Firing Range
COORD N: 3,456,844.0
COORD E: 620,937.0
DRILLED: April 4, 2001
PROJ. NO.: 60121-1-2571

BORING NO.: BA-24
Prepared By: P.S.
Checked By: _____
Date: _____
PAGE 1 OF 1

LAW
LAWGIBB Group Member

US Army Corps of Engineers
FORT WORTH DISTRICT

POLYENGINEERING, INC.
1005 Hoadland Avenue
Dothan, Alabama 36305
(334) 793-4700 (voice)
(334) 793-9516 (fax)

Mark	Description	Date	Appr.
A	ADDED CORRECT CHARTS	SEPT 01	ELF

Date: 19 June 2001 | Rev.
Sol No. DACA63-01-B-0007
Contr No. DACA63-01-C-0016
Designed by: Rebecca S. Hand
Dwn by: J. Peeden | Ckd by: M. Dixon
Reviewed by: Scott Faulk
Submitted by: E. Lamar Faulk
File name:
Plot date:
Plot scale: AS SHOWN

U.S. ARMY ENGINEER DISTRICT
CORPS OF ENGINEERS
FORT WORTH, TEXAS

POLYENGINEERING, INC.
ENGINEERS & ARCHITECTS
DOTHAN, ALABAMA

FORT HOOD, TEXAS
DIGITAL MULTI-PURPOSE RANGE COMPLEX (DMPRC)
PN 51915 FY 01

SOIL BORINGS

Sheet reference number: F-33
Sheet of

Contr No. DACA63-01-C-0016

00689710

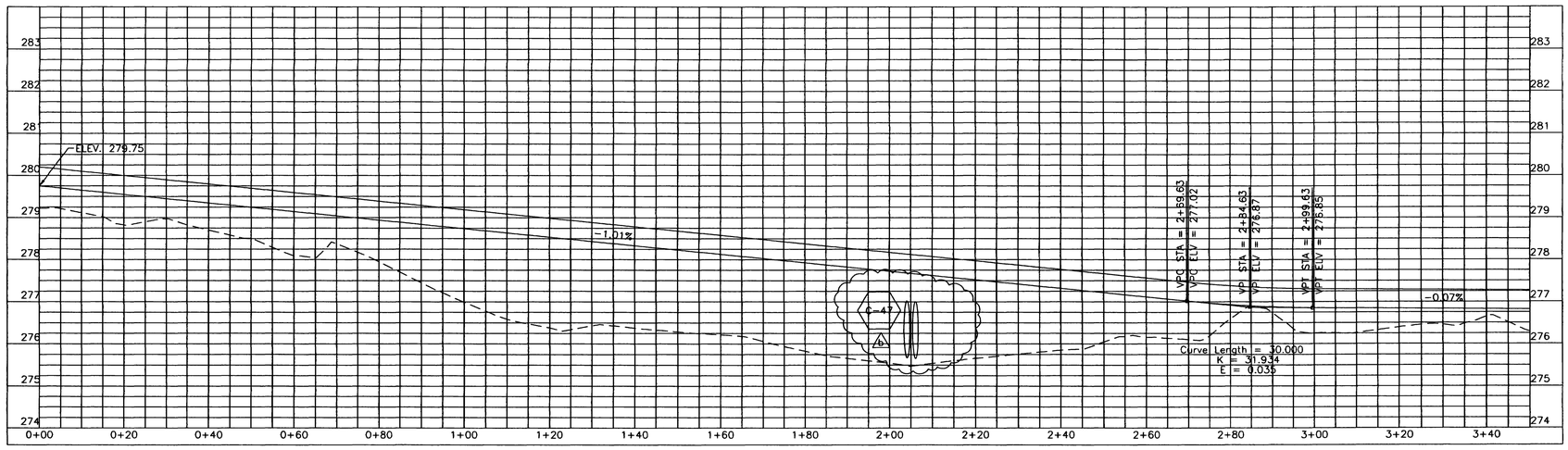

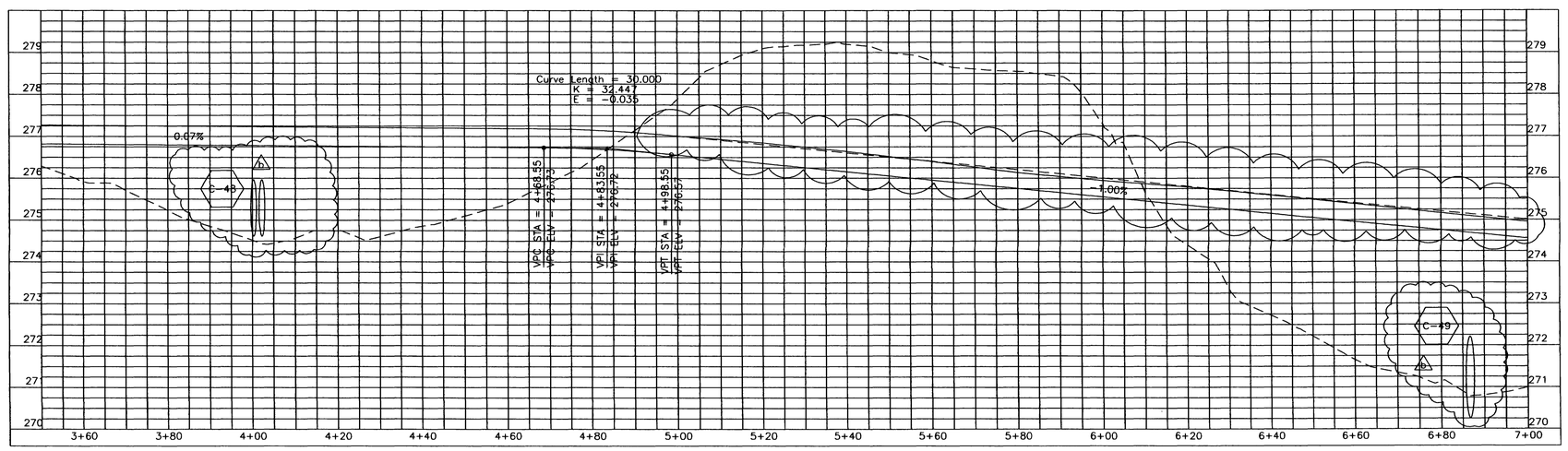

US Army Corps of Engineers
FORT WORTH DISTRICT

POLYENGINEERING, INC.
1888 Southland Avenue
Dothan, Alabama 36303
(334) 793-2799 (voice)
(334) 793-9016 (fax)

Mark	Description	Date	Appr.
1	REVISIONS TO CULVERTS AND TOP OF BLOCK END NOTED SEAL	JAN 01	DJF

Date: 19 June 2001
Rev.
FSF No.
Contract No. DACA63-01-B-0007
Drawing No. DACA63-01-C-0016
Sheet No.
File name:
Plot date:
Plot scale: AS SHOWN

Designed by: Rebecca S. Hand
Dwn by: A. Pearson
Ckd by: M. Stone
Reviewed by: Scott Faulk
Submitted by: E. Lamar Faulk

U.S. ARMY ENGINEER DISTRICT
CORPS OF ENGINEERS
FORT WORTH, TEXAS

POLYENGINEERING, INC.
ENGINEERS & ARCHITECTS
DOTHAN, ALABAMA

FORT HOOD, TEXAS
DIGITAL MULTI-PURPOSE TRAINING COMPLEX
PN 51915
FY 01

CLABBER CREEK
PROFILES
TRAIL 1

STATE OF TEXAS
E. LAMAR FAULK
86158
LICENSED
PROFESSIONAL ENGINEER

THE SEAL APPEARING ON THIS DOCUMENT WAS AUTHORIZED BY E. LAMAR FAULK ON AUGUST 8, 2001

LEGEND
- EXISTING GRADE
- TOP OF SUBGRADE
- TOP BASE
- PROPOSED TOP BASE
- ACTUAL TOP BASE

GRAPHIC SCALE
10 5 0 5 10
SCALE: 1:500 HORZ.
1 .5 0 .5 1
SCALE: 1:50 VERT.

Sheet reference number:
CP-1
Sheet of

Contr. No. DACA63-01-C-0016

twg 8/12/2005 7:48:07 AM

00689720