# EXHIBIT U - Gate Design

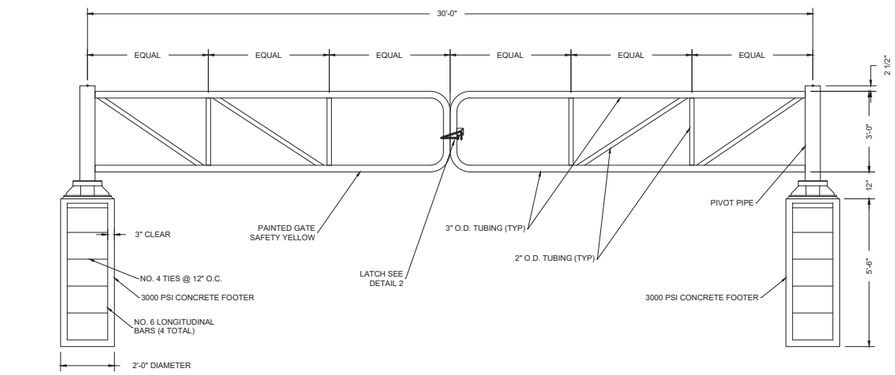


1 TUBULAR GATE DETAIL
L = 30 FEET
NO SCALE

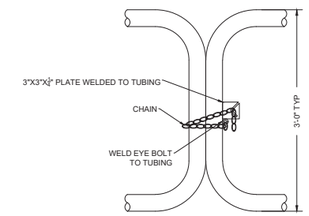


2 LATCH DETAIL
NO SCALE

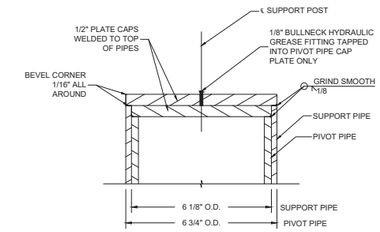


7 PIVOT PIPE TOP DETAIL
NO SCALE

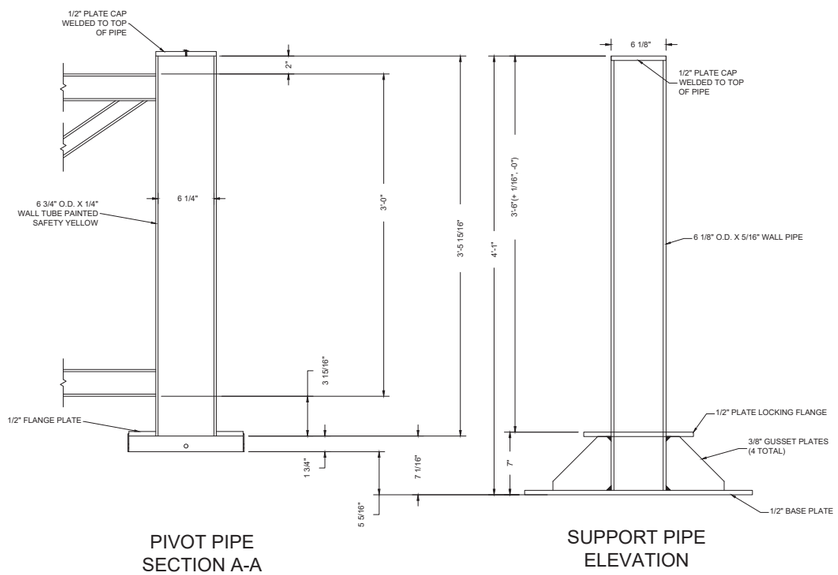


PIVOT PIPE SECTION A-A

SUPPORT PIPE ELEVATION

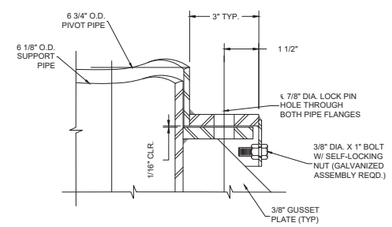


5 DETAIL
NO SCALE

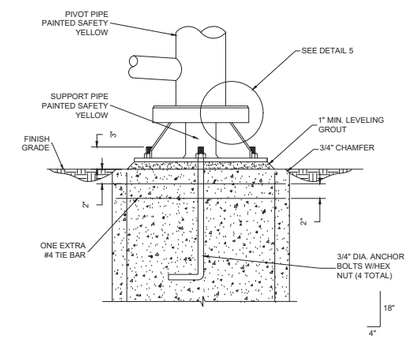


6 SUPPORT PIPE ANCHOR DETAIL
NO SCALE

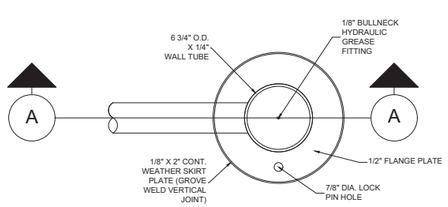


PLAN

3 PIVOT PIPE DETAIL
NO SCALE

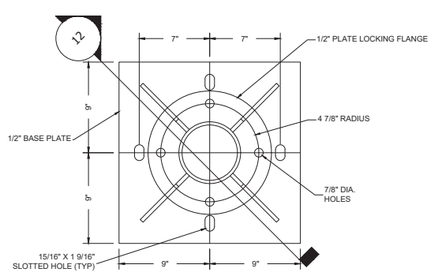


PLAN

4 SUPPORT PIPE DETAIL
NO SCALE

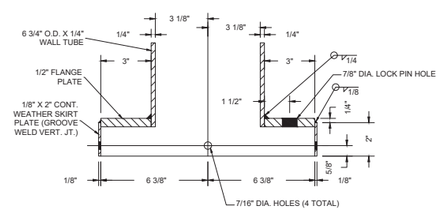


8 PIVOT PIPE BASE DETAIL
NO SCALE

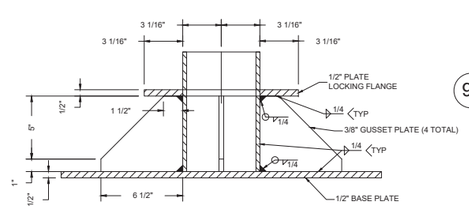


10 SUPPORT PIPE SECTION
NO SCALE

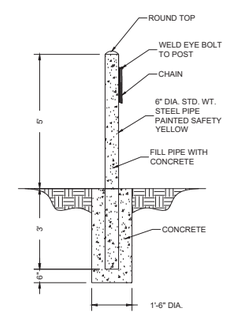


9 GUARD POST DETAIL
NO SCALE

GATE NOTES:

1. CONTRACTOR SHALL PROVIDE AND INSTALL TWO DOUBLE-SWING GATES AT 30' WIDE CENTER OF POST TO CENTER OF POST
2. 3" O.D. TUBING SHALL HAVE 1/4" THICK WALL, TUBING SHALL BE WELDED MOISTURE TIGHT TO PIVOT PIPE AT CENTERLINE OF SUPPORT ASSEMBLY.
3. 2" O.D. TUBING SHALL HAVE 1/4" THICK WALL, TUBING SHALL BE WELDED MOISTURE TIGHT TO 3" O.D. TUBING ON L AS SHOWN.
4. SUPPORT PIPE SHALL BE MACHINE TURNED TO 6 1/8" O.D. X 5/16" WALL FROM A 6 1/4" O.D. X 3/8" WALL TUBE.
5. ALL TUBING SHALL BE COLD DRAWN SEAMLESS STEEL.
6. ALL WELDS SHALL BE 1/4" UNLESS OTHERWISE NOTED.
7. GATE ASSEMBLIES SHALL BE HOT-DIP GALVANIZED.
8. LOCK PIN SHALL BE 3/4" DIAMETER DRAWBAR PIN WITH 4" USABLE LENGTH (2 REQUIRED), LOCK PIN SHALL BE SECURED TO PIVOT PIPE WITH SAFETY SNAP CHAIN.
9. INSTALL GALVANIZED EYE BOLTS WITH 1/4" PROOF COIL CHAIN AND SAFETY SNAP ON GUARD POST TO SECURE GATE LEAF WHEN IN THE OPEN POSITION.

| SYMBOL | DESCRIPTION | DATE | APPR. |
|---|---|---|---|
| | | | |

REVISIONS

DESIGNED BY: VRS
DATE:
DRAWN BY:
SCALE: NONE
CHECKED BY:
DRAWING CODE:
PROJECT ENGINEER/ARCHITECT
DATE

GATE DETAIL

SHEET REFERENCE NUMBER:
X-101

# EXHIBIT U - Gate Design