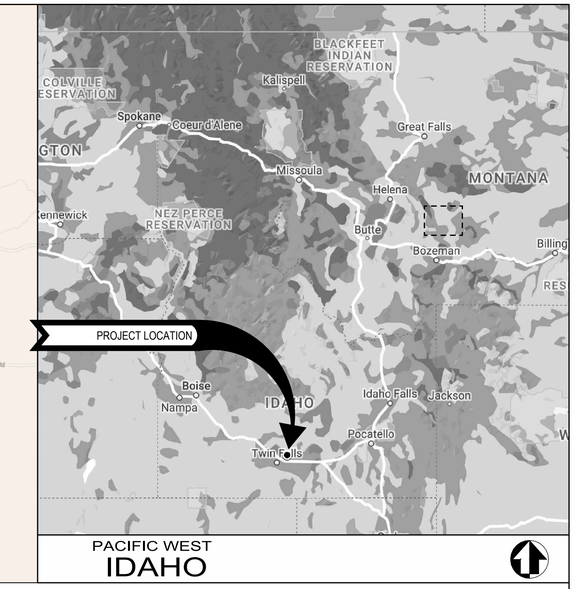

MINIDOKA NATIONAL HISTORIC SITE

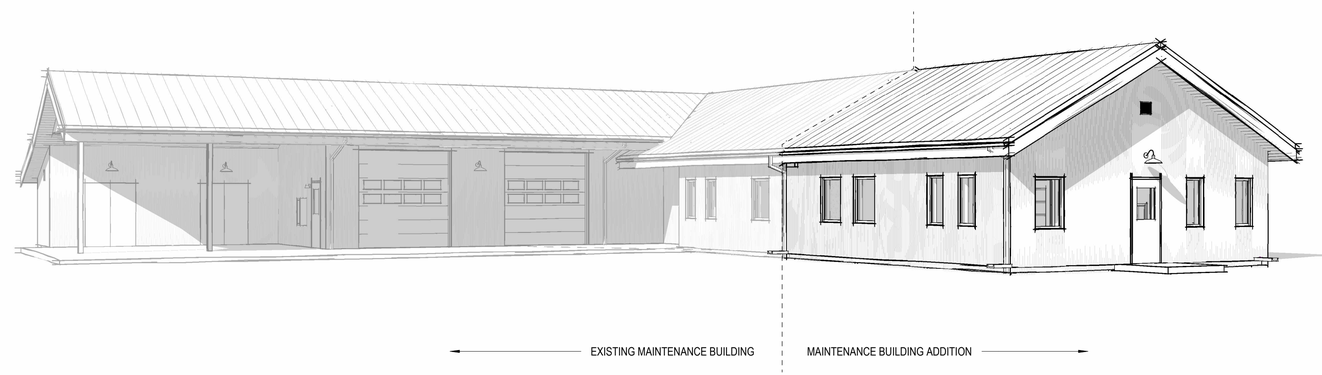

PERSPECTIVE VIEW FOR REFERENCE ONLY

8/7/2026 3:56:40 PM C:\Users\bcook\AppData\Local\Autodesk\Revit\Autodesk Revit 2026\CollaborationCache\LQTJECRCLQB88DWS\314b03b6-7328-4131-bba2-9d56630df132b\50685115-1cb2-492a-965b-7be79cd0b00.rvt

ANDERSON HALLAS ARCHITECTS, PC - 140P2019D0016

PRIME / ARCH:
ANDERSON HALLAS, PC
GOLDEN, CO
80401

CIVIL:
OTAK
REDMOND, WA
98052

ELECTRICAL:
AE DESIGN
DENVER, CO
80202

STRUCTURAL:
JVA
BOULDER, CO 80302

MECHANICAL / PLUMBING:
360 ENGINEERING
GOLDEN, CO
80403

Mark	Sheet	REVISION	Date	Initial
1	-	ADDENDUM 1 - BID QUESTIONS	08/10/2026	BC/CR

QUALITY DESIGN CERTIFICATION

- ☐ Prepared in Accordance with design Development (Title I) _____ Drawing No.
- OR
- ☐ Variance from Design Development (Title I) Approved by Superintendent on _____ Date
- OR
- ☐ Construction Drawing Not Preceded by Design Development (Title I)

Project Manager _____ Date _____

FINAL CONSTRUCTION DOCUMENTS

UNITED STATES
DEPARTMENT OF THE INTERIOR

NATIONAL PARK SERVICE
DENVER SERVICE CENTER

TITLE OF DRAWING
MIIN MAINTENANCE BUILDING ADDITION

LOCATION WITHIN PARK
MINIDOKA
NAME OF PARK
MINIDOKA NATIONAL HISTORIC SITE

REGION	COUNTY	STATE
PACIFIC WEST	JEROME	IDAHO

DRAWING NO.

PMIS/PKG NO.
XXXXXX

SHEET
1 OF 54

GENERAL ABBREVIATIONS

#	POUND(S) or NUMBER
&	AND
(S)	SEALANT
(T)	TEMPERED
<	ANGLE
<E>	EXISTING
<N>	NEW
@	AT
A/V	AUDIO VISUAL
ABA	ARCHITECTURAL BARRIERS ACT
ABV	ABOVE
ACM	ASBESTOS CONTAINING MATERIAL
ACT	ACOUSTICAL CEILING TILE
ADD	ADDENDUM
ADJ	ADJACENT or ADJUSTABLE
AFF	ABOVE FINISHED FLOOR
AHU	AIR HANDLING UNIT
AL	ALUMINUM
ALT	ALTERNATE
APPROX	APPROXIMATE(LY)
ARCH	ARCHITECTURAL
ASPH	ASPHALT
B.O.	BOTTOM OF
BLDG	BUILDING
BLKG	BLOCKING
BR	BACKER ROD
BTWN	BETWEEN
CAB	CABINET
CJ	CONTROL JOINT
CL	CENTERLINE
CLG	CEILING
CLR	CLEAR
CMU	CONCRETE MASONRY UNIT
CO	CONTRACTING OFFICER
COL	COLUMN
CONC	CONCRETE
CONST	CONSTRUCTION
CONT	CONTINUOUS
CORR	CORRIDOR
CPT	CARPET
CT	CERAMIC TILE
CTBB	CEMENTITIOUS TILE BACKER BOARD
CTR	CENTER
DBL	DOUBLE
DEMO	DEMOLITION
DET	DETAIL
DF	DRINKING FOUNTAIN
DIAM	DIAMETER
DIM	DIMENSION
DN	DOWN
DS	DOWNSPOUT
E	EAST
EA	EACH
EG	FOR EXAMPLE
ELEC	ELECTRICAL
ELEV	ELEVATION
EMER	EMERGENCY
ENGR	ENGINEER
EQ	EQUAL
EQP	EQUIPMENT
ETR	EXISTING TO REMAIN
EW	EAST WEST
EXT	EXTERIOR
F.O.	FACE OF
FACP	FIRE ALARM CONTROL PANEL
FD	FLOOR DRAIN
FDN	FOUNDATION
FE	FIRE EXTINGUISHER
FEC	FIRE EXTINGUISHER CABINET
FIN	FINISH(ED)
FIXT	FIXTURE
FLR	FLOOR(ING)
FP	FIRE PROTECTION
FRP	FIBERGLASS REINFORCED PANEL(ING)
FT	FEET
FTG	FOOTING
FURR	FURRING
GA	GAUGE OR GYPSUM ASSOCIATION
GALV	GALVANIZED
GC	GENERAL CONTRACTOR
GD	GRADE
GL	GLASS or GLAZING
GND	GROUND
GRT	GROUT
GWB	GYPSUM WALLBOARD
HAZMAT	HAZARDOUS MATERIAL
HDR	HEADER
HDW	HARDWARE
HM	HOLLOW METAL
HORIZ	HORIZONTAL
HT	HEIGHT
HVAC	HEATING, VENTILATION and AIR CONDITIONING
IBC	INTERNATIONAL BUILDING CODE
ID	INSIDE DIAMETER
INCL.	INCLUDING
INFO	INFORMATION
INS	INSULATION or INSULATED
INT	INTERIOR
JT	JOINT
LAV	LAVATORY
LIN	LINOLEUM
LS	LANDSCAPE
MATL	MATERIAL
MAX	MAXIMUM
MECH	MECHANICAL
MEP	MECHANICAL, ELECTRICAL and PLUMBING
MFG	MANUFACTURING
MFR	MANUFACTURER
MIN	MINIMUM
MISC	MISCELLANEOUS
MO	MASONRY OPENING
MTD	MOUNTED
MTL	METAL
N	NORTH
NA	NOT APPLICABLE
NH	NON-HALOGENATED
NIC	NOT IN CONTRACT
NO.	NUMBER
NOM	NOMINAL
NS	NORTH SOUTH
NTS	NOT TO SCALE
OC	ON CENTER
OD	OUTSIDE DIAMETER
OH	OPPOSITE HAND
OPNG	OPENING
OPP	OPPOSITE
OSB	ORIENTED STRAND BOARD
OTE	OPEN TO EXISTING
OTS	OPEN TO STRUCTURE
OVH	OVERHANG
PLAM	PLASTIC LAMINATE
PLAS	PLASTER
PLUMB	PLUMBING
PT	PAINT
PTD	PAINTED
PWD	PLYWOOD
RAD	RADIUS
RB	RUBBER BASE
RCP	REFLECTED CEILING PLAN
RD	ROOF DRAIN
RE:	REFER TO or REFERENCE
REINF	REINFORCED
RELOC	RELOCATED
REQ	REQUIRED
REV	REVISE, REVISED or REVISION
RM	ROOM
RO	ROUGH OPENING
RR	RESTROOM(S)
RS	ROUGH SAWN
S	SOUTH
SCHED	SCHEDULE
SF	SQUARE FEET
SHTG	SHEATHING
SIM	SIMILAR
SOG	SLAB ON GRADE
SPEC	SPECIFICATION(S)
SQ	SQUARE
SS	STAINLESS STEEL
STD	STANDARD
STL	STEEL
STN	STAIN
STRUC	STRUCTURE or STRUCTURAL
T&G	TONGUE AND GROOVE
T.O.	TOP OF
TD	THRESHOLD
TYP	TYPICAL
U.O.N.	UNLESS OTHERWISE NOTED
VCT	VINYL COMPOSITION TILE
VERT	VERTICAL
VIF	VERIFY IN FIELD
VIN	VINYL
VR	VAPOR RETARDER
W	WEST
W/	WITH
W/O	WITHOUT
WC	WATER CLOSET
WD	WOOD

SYMBOLS

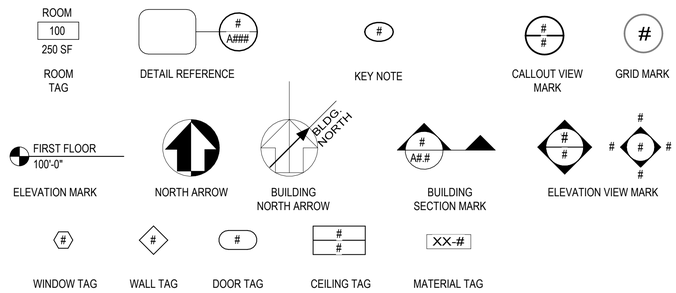

GENERAL NOTES

1. DO NOT SCALE DRAWINGS
2. ALL DIMENSIONS ARE TO FACE OF STRUCTURE UNLESS OTHERWISE NOTED. ALL DIMENSIONS INDICATING REQUIRED CLEARANCES ARE TO FACE OF FINISH UNLESS OTHERWISE NOTED.
3. THE CONTRACTOR SHALL BE RESPONSIBLE FOR FAMILIARIZING THEMSELVES WITH THE CONTRACT DOCUMENTS, VERIFYING FIELD CONDITIONS AND DIMENSIONS, AND CONFIRMING THAT THE WORK MAY BE ACCOMPLISHED AS SHOWN PRIOR TO PROCEEDING WITH CONSTRUCTION. CONTRACTOR SHALL NOTIFY C.O. IN WRITING OF ANY DISCREPANCY WITHIN THE CONTRACT DOCUMENTS AND REQUEST CLARIFICATION PRIOR TO PROCEEDING WITH CONSTRUCTION.
4. SHOULD THERE BE ANY QUESTIONS CONCERNING THE CONTRACT DOCUMENTS, EXISTING CONDITIONS, AND/OR DESIGN INTENT, THE CONTRACTOR SHALL BE RESPONSIBLE FOR OBTAINING A CLARIFICATION FROM THE C.O. PRIOR TO PROCEEDING WITH THE WORK, OR RELATED WORK IN QUESTION.
5. THE CONTRACTOR SHALL BE RESPONSIBLE FOR FAMILIARIZING THEMSELVES WITH THE PROJECT SCOPE OF WORK, SCHEDULE, AND DEADLINES. THE CONTRACTOR SHALL BE RESPONSIBLE FOR ADVISING THE C.O. OF ALL ITEMS REQUIRING A LONG LEAD TIME UPON NOTICE TO PROCEED THAT WILL AFFECT THE SCHEDULE, AND SHALL SUBMIT ORDER CONFIRMATIONS AND DELIVERY DATES FOR THE ITEMS IN QUESTION TO THE C.O.
6. INSTALL ALL MANUFACTURED ITEMS, MATERIALS, AND EQUIPMENT IN STRICT ACCORDANCE WITH THE MANUFACTURER'S RECOMMENDED SPECIFICATIONS, EXCEPT WHERE THE CONTRACT DOCUMENTS ARE MORE STRINGENT. ANY MISCELLANEOUS ITEMS OR MATERIALS NOT SPECIFICALLY NOTED, BUT REQUIRED FOR PROPER INSTALLATION SHALL BE FURNISHED AND INSTALLED BY THE CONTRACTOR. THE CONTRACTOR SHALL FURNISH TO THE C.O. ALL WARRANTIES AND GUARANTEES REQUIRED AT THE CONCLUSION OF THE PROJECT.

CONTRACT LINE ITEMS (CLIN)

CONTRACT LINE NO. 1:

ENVELOPE AND SYSTEMS CONSTRUCTION

THIS ITEM CONSISTS OF ALL WORK ASSOCIATED WITH SITE PREPARATION, FOUNDATION, CONCRETE SLAB, EXTERIOR WALL CONSTRUCTION, EXTERIOR DOOR AND WINDOW INSTALLATION, AND ALL ROOFING WORK TO ENSURE A WEATHERTIGHT BUILDING ENVELOPE. THIS ITEM ALSO INCLUDES ROUGH-IN DISTRIBUTION INSTALLATION OF BUILDING SYSTEMS - ELECTRICAL, DATA, AND MECHANICAL.

CONTRACT LINE ITEM NO. 2:

INTERIOR CONSTRUCTION AND SYSTEMS

THIS ITEM CONSISTS OF ALL WORK ASSOCIATED WITH FINISHING THE INTERIOR OF THE SPACE. INTERIOR PARTITIONS, FINISHES, AND DOORS ARE ALSO INCLUDED. FINISHING OF SYSTEM'S INSTALLATIONS - LOUVERS, COVER PLATES, ETC. IS ALSO INCLUDED AFTER INTERIOR GYPSUM WALLBOARD IS COMPLETE. EXTERIOR PENETRATIONS SHOULD BE MINIMIZED AND PATCHED TO ENSURE A WEATHERTIGHT ASSEMBLY.

SHEET INDEX

SHEET #	SUB SHEET	TITLE OF SHEET
GENERAL		
1	G000	COVER SHEET
2	G001	GENERAL NOTES AND INDEX
3	G100	CODE ANALYSIS
4	G110	CODE PLAN
5	G120	ACCESSIBILITY
6	G200	ENERGY ANALYSIS & ASSEMBLIES
CIVIL		
7	C010	EXISTING CONDITIONS
8	C100	SITE PLAN
9	C200	GRADING PLAN
10	C300	CIVIL DETAILS
ARCHITECTURAL		
11	AD01	OVERALL FLOOR PLAN - DEMO
12	A101	ENLARGED PLANS
13	A102	ENLARGED FINISH PLANS
14	A301	BUILDING AND WALL SECTIONS
15	A401	ENLARGED EXTERIOR ELEVATIONS
16	A501	DOOR AND WINDOW SCHEDULE, TYPES
17	A502	DOOR DETAILS
18	A601	EXTERIOR DETAILS
19	A602	EXTERIOR DETAILS
STRUCTURAL		
20	S001	STRUCTURAL GENERAL NOTES
21	S002	STRUCTURAL GENERAL NOTES
22	S003	STRUCTURAL BBREVIATIONS & SYMBOLS
23	S100	FOUNDATION & ROOF FRAMING PLANS
24	S501	SCHEDULES AND TYPICAL DETAILS
25	S502	FOUNDATION DETAILS
26	S503	FRAMING DETAILS
27	S510	TYPICAL COLD-FORM STEEL DETAILS
28	S511	TYPICAL COLD-FORM STEEL DETAILS
MECHANICAL		
29	M001	MECHANICAL COVER SHEET
30	M002	MECHANICAL COM CHECK
31	M003	MECHANICAL COM CHECK
32	M004	MECHANICAL COM CHECK
33	M101	MECHANICAL PLAN
34	M501	MECHANICAL SCHEDULES
35	M601	MECHANICAL DETAILS
ELECTRICAL		
36	E000	ELECTRICAL COVER SHEET
37	E001	ELECTRICAL COVER SHEET
38	E111	ELECTRICAL POWER PLAN
39	E112	ELECTRICAL POWER PLAN - ENLARGED
40	E211	ELECTRICAL LIGHTING PLAN - ENLARGED
41	E600	ELECTRICAL ONE -LINE DIAGRAM
42	E710	ELECTRICAL PANEL SCHEDULES
43	E720	ELECTRICAL PANEL SCHEDULES
44	E800	ELECTRICAL LIGHTING SCHEDULES
45	E900	ELECTRICAL LIGHTING COMPLIANCE
46	E901	ELECTRICAL LIGHTING COMPLIANCE
FIRE ALARM		
47	FA111	FIRE ALARM PLAN
TECHNOLOGY		
48	T000	TECHNOLOGY COVER SHEET
49	T001	TECHNOLOGY RESPONSIBILITY MATRIX
50	T200	TECHNOLOGY FLOOR PLAN
51	T201	TECHNOLOGY FLOOR PLAN - ENLARGED
52	T300	TECHNOLOGY CEILING PLAN - ENLARGED
53	T500	TECHNOLOGY SCHEDULES
54	T600	TECHNOLOGY DETAILS

LICENSED ARCHITECT
8-10-2026
ELIZABETH HALLAS
AR-985880
STATE OF IDAHO

A/E FIRM:	DESIGNED:	SUB SHEET NO.	TITLE OF SHEET	DRAWING NO.
PRIME: ANDERSON HALLAS ARCHITECTS, PC GOLDEN, CO	BC	G001	GENERAL NOTES AND INDEX	XXX / XXX
	CADD: BC / DM			PMIS/PKG NO. XXXXXX
	TECH REVIEW: EH / CR		MIIN MAINTENANCE BUILDING ADDITION	SHEET 2 OF 54
	DATE: 03/20/2026		MINIDOKA NATIONAL HISTORIC SITE	

8/7/2026 3:56:44 PM C:\Users\bcook\AppData\Local\Autodesk\Revit\Autodesk Revit 2026\CollaborationCache\LQTJECRCLQB88DWS\314b0366-7328-4131-bba2-9d5630df132b\50685115-1cb2-492a-965b-7be7f9cd0b00.rvt

CODE SUMMARY

REFER TO INDIVIDUAL DISCIPLINE SHEETS FOR ADDITIONAL CODE INFORMATION.

ADDRESS: 428 HUNT ROAD, JEROME, ID 83338
AHJ: NATIONAL PARK SERVICE, PACIFIC WEST REGION
CLIMATE ZONE: 5B PER 2024 IECC
SEISMIC DESIGN CATEGORY: C
RISK CATEGORY: II

PROJECT DESCRIPTION
THE SCOPE OF THE PROJECT INCLUDES AN **827 S.F. ADDITION** TO AN <E> MAINTENANCE BUILDING AT MINIDOKA NATIONAL HISTORIC SITE. THE <N> ADDITION TO INCLUDE SIX OFFICES, WITH ASSOCIATED SYSTEMS.

APPLICABLE CODES AND STANDARDS
2024 INTERNATIONAL BUILDING CODE (IBC)
2024 INTERNATIONAL ENERGY CONSERVATION CODE (IECC)
2024 INTERNATIONAL FIRE CODE (IFC)
2020 NFPA 70 - NATIONAL ELECTRICAL CODE (NEC)
NATIONAL FIRE PROTECTION ASSOCIATION (NFPA) STANDARDS
ARCHITECTURAL BARRIERS ACT ACCESSIBILITY STANDARDS (ABAAS)
DIRECTOR'S ORDER 28: CULTURAL RESOURCE MANAGEMENT
DIRECTOR'S ORDER 58: STRUCTURAL FIRE MANAGEMENT
DENVER SERVICE CENTER WORKFLOWS

USE & OCCUPANCY CLASSIFICATION - IBC CHAPTER 3

OCCUPANCY CLASSIFICATION:
B BUSINESS (OFFICE) PER IBC §304.1
F-1 MODERATE-HAZARD FACTORY INDUSTRIAL (WOODWORKING) PER IBC §306.2
S-1 MODERATE-HAZARD STORAGE PER IBC §311.3

* SMALLER STORAGE AREAS ARE CONSIDERED ACCESSORY TO B OCCUPANCY PER IBC §311.1.1

NO CHANGE IN OCCUPANCY OF EXISTING SPACES.
NEW ADDITION IS B OCCUPANCY.

GENERAL BUILDING HEIGHTS & AREAS - IBC CHAPTER 5
BUILDING HEIGHT §504

ALLOWABLE BUILDING HEIGHT (TABLE 504.3), AND NUMBER OF STORIES (TABLE 504.4)

B, F, S OCCUPANCY		
VB CONSTRUCTION TYPE (NON SPRINKLERED)	ALLOWABLE	ACTUAL
BUILDING HEIGHT NUMBER OF STORIES	40' 1 STORIES *	18' 1 STORIES

* MAX ALLOWABLE HEIGHT IS 1 STORIES FOR F-1 AND S-1 OCCUPANCY, WHICH IS MOST RESTRICTIVE

EQUIPMENT PLATFORMS PER §505.3
SHALL NOT BE CONSIDERED AS PORTION OF THE FLOOR BELOW AND SHALL NOT CONTRIBUTE TO EITHER THE BUILDING AREA OR NUMBER OF STORIES AS REGULATED BY §503.1

AREA LIMITATION PER §505.3.1, AGGREGATE AREA OF ALL EQUIPMENT PLATFORMS WITHIN A ROOM SHALL NOT BE GREATER THAN 2/3 OF THE AREA OF THE ROOM IN WHICH THEY ARE LOCATED

SHOP AREA 501*.66 = 330 SF
EQUIPMENT PLATFORM 292 SF < 330 SF

ALLOWABLE BUILDING AREA (TABLE 506.2)

OCCUPANCY GROUP(S) & CONSTRUCTION TYPE	ALLOWABLE BUILDING AREA	ACTUAL BUILDING AREA (PER FLOOR)
B, F-1, S-1; TYPE VB	8,500 SF	+/- 2,502 SF (EXISTING) **+/- 827 SF (ADDITION)** +/- 3,329 SF (TOTAL PROPOSED AREA)

MIXED OCCUPANCIES IBC §508
EACH PORTION OF THE BUILDING SHALL BE INDIVIDUALLY CLASSIFIED AND WHERE A BUILDING CONTAINS MORE THAN ONE OCCUPANCY GROUP, THE BUILDING OR PORTION SHALL FOLLOW IBC §508.

ACCESSORY OCCUPANCIES ARE OCCUPANCIES THAT ARE ANCILLARY TO THE MAIN OCCUPANCY OF THE MAIN BUILDING (B) AND SHALL NOT OCCUPY MORE THAN 10% OF THE BUILDING AREA OF THE STORY IN WHICH THEY ARE LOCATED, PER IBC §508.2.3

NON-SEPARATED OCCUPANCIES PER IBC §508.3.2
PROJECT SHALL UTILIZE MOST RESTRICTIVE OCCUPANCY FOR MAXIMUM ON ALLOWABLE BUILDING AREA, HEIGHT AND NUMBER OF STORIES.

REQUIRED SEPARATION OF OCCUPANCIES PER TABLE 508.4
NO SEPARATION REQUIRED BETWEEN B, F-1 AND S-1 OCCUPANCIES

1 HR FIRE SEPARATION PROVIDED BETWEEN OCCUPANCIES AS VOLUNTARY CONTROL AREAS.

TYPES OF CONSTRUCTION - IBC CHAPTER 6
CONSTRUCTION CLASSIFICATION: VB PER IBC §602.5

FIRE-RESISTANCE RATING REQUIREMENTS FOR BUILDING ELEMENTS (HOURS) PER TABLE 601

	TYPE VB	
BUILDING ELEMENT	REQUIRED	PROVIDED
Primary structural frame [f] (see Section 202)	0	0
Bearing walls EXT [e, f] Interior	 0 0	 0 0
Nonbearing walls and partitions EXT	Re: Table 705.5	NA
Nonbearing walls and partitions INT[g]	0	0
Floor construction and secondary members (see Section 202)	0	0
Roof construction and secondary members (see Section 202)	0	0

FIRE AND SMOKE PROTECTION FEATURES - IBC CHAPTER 7

FIRE-RESISTANCE RATING REQUIREMENTS FOR EXT WALLS BASED ON FIRE SEPARATION DISTANCE PER TABLE 705.5

FIRE SEPARATION DISTANCE = X (feet)	TYPE OF CONSTRUCTION	F-1, S-1 OCCUPANCY GROUP	
		REQUIRED	PROVIDED
X < 5 [b]	ALL	2	NA
5 ≤ X < 10	IA OTHERS	2 1	NA
10 ≤ X < 30	IA, IB IIB, VB OTHERS	1 0 1	NA
X ≥ 30	ALL	0	0

THE PROPOSED WORK COMPLIES WITH TABLE 705.8 OPENINGS. THERE ARE NO OTHER STRUCTURES WITHIN 30' OF THE <N> BUILDING AND THEREFORE NO LIMIT TO THE NUMBER OF UNPROTECTED OPENINGS AND NO RATING REQUIREMENTS FOR EXT WALLS.

PROPOSED INTERIOR RATED WALLS NOT CODE REQUIRED.

INTERIOR FINISHES - IBC CHAPTER 8
THE INTERIOR WALL AND CEILING FINISHES IN ROOMS AND CORRIDORS SHALL BE FINISHES TESTED BY AN APPROVED TESTING AGENCY AND SHALL COMPLY WITH IBC §803 AND TABLE 803.13 (CLASS C OR BETTER FINISH MATERIALS)

FIRE PROTECTIVE SYSTEMS - IBC CHAPTER 9
AUTOMATIC SPRINKLER SYSTEM NOT REQUIRED PER IBC §903.2.4 (GROUP F-1), §903.2.9 (GROUP S-1) OR PER TABLE 903.2.11.6.

- GROUP F-1 FIRE AREA LESS THAN 12,000 SF AND ONLY 1 STORY, AND WOODWORKING OPERATIONS ARE LESS THAN 2,500 SF PER §903.2.4.1.
- GROUP S-1 FIRE AREA LESS THAN 12,000 SF AND STORAGE OF COMMERCIAL MOTOR VEHICLES IS LESS THAN 5,000 SF.

PORTABLE FIRE EXTINGUISHERS TO BE PROVIDED PER IBC §906
- PROVIDE CLASS A FIRE HAZARD (ORDINARY HAZARD OCCUPANCY) PORTABLE FIRE EXTINGUISHERS
- PORTABLE FIRE EXTINGUISHERS SHALL BE INSTALLED IN CONSPICUOUS LOCATIONS ALONG NORMAL PATHS OF TRAVEL.
- MAXIMUM TRAVEL DISTANCE TO ANY FIRE EXTINGUISHER SHALL BE 75 FEET MAX AND 11,250 SF MAX FLOOR AREA PER TABLE 906.3(1)

FIRE ALARM AND DETECTION SYSTEMS TO BE PROVIDED PER §907
- RE FIRE ALARM DRAWINGS

MEANS OF EGRESS - IBC CHAPTER 10
RE: SHEET G110 CODE PLAN

HEADROOM PER IBC §1003.3.1
80" MINIMUM OVER ANY WALKING SURFACE

DESIGN OCCUPANT LOAD - TABLE 1004.5

FUNCTION OF SPACE:	BUSINESS*	INDUSTRIAL	STORAGE / MECH
FLOOR AREA PER OCCUPANT:	150 SF GROSS	100 SF GROSS	300 SF GROSS

*SMALLER STORAGE AREAS ARE CONSIDERED ACCESSORY TO B OCCUPANCY PER IBC §311.1.1

GROUND LEVEL
<E> BUSINESS 8 OCC
<E> INDUSTRIAL 5 OCC
<E> STORAGE /MECH 4 OCC
<NEW ADDITION> BUSINESS 6 OCC

EQUIPMENT PLATFORM
<E> STORAGE/MECH 1 OCC

BUILDING TOTAL 18 OCCUPANTS ORIGINAL BUILDING + **6 OCCUPANTS AT NEW ADDITION = 24 TOTAL**

MEANS OF EGRESS SIZING PER IBC §1005
WHERE MULTIPLE MEANS OF EGRESS ARE REQUIRED, THEY SHALL BE SIZED SUCH THAT IN THE EVENT ONE OF THE MEANS OF EGRESS IS LOST, THEN THE REMAINING MEANS OF EGRESS SHALL NOT REDUCE THE AVAILABLE CAPACITY TO LESS THAN 50 PERCENT OF THE REQUIRED CAPACITY.

OTHER EGRESS COMPONENT SIZING (.2" PER OCCUPANT)
TOTAL OCCUPANTS 24 X .2" = 4.8" WIDTH REQUIRED (DEFAULTS TO 32")
36" EGRESS WIDTH PROVIDED

DOOR ENCROACHMENT: WHEN FULLY OPEN, DOORS SHALL NOT REDUCE THE REQUIRED MEANS OF EGRESS WIDTH BY MORE THAN 7". DOORS IN ANY POSITION SHALL NOT REDUCE THE REQUIRED WIDTH BY MORE THAN ONE-HALF.

NUMBER OF EXITS AND EXIT ACCESS DOORWAYS PER IBC §1006
TWO EXITS REQUIRED FROM ANY SPACE WHERE OCCUPANT LOAD EXCEEDS VALUES IN TABLE 1006.2.1 PER 1006.2.1

SPACES WITH ONE EXIT OR EXIT ACCESS DOORWAY PER TABLE 1006.2.1

OCCUPANCY	MAX OCC LOAD	MAXIMUM COMMON PATH OF TRAVEL (WITHOUT SPRINKLER SYSTEM, OL < 30)
B OCC	49	100 FT
F OCC	49	75 FT
S OCC	29	100 FT

MINIMUM NUMBER OF EXITS PER IBC §1006.3.3
TOTAL OCCUPANT LOAD = 24
REQUIRED NUMBER OF EXITS = 2
PROVIDED NUMBER OF EXITS = 4

ONE (1) ADDITIONAL EXIT PROVIDED AT NEW ADDITION.

EXIT AND EXIT ACCESS DOORWAY CONFIGURATION PER IBC §1007
WHERE TWO EXITS ARE REQUIRED, THEY SHALL BE PLACED A DISTANCE APART EQUAL TO NOT LESS THAN ONE-HALF OF THE LENGTH OF THE MAXIMUM OVERALL DIAGONAL DIMENSION OF THE BUILDING OR AREA TO BE SERVED MEASURED IN A STRAIGHT LINE BETWEEN THEM.

REQUIRED MIN EXIT SEPARATION DISTANCE: 106'-0" / 2 = 53'-0"
EXIT SEPARATION PROVIDED: 74'-2"

ACCESSIBLE MEANS OF EGRESS PER IBC §1009
ACCESSIBLE SPACES SHALL BE PROVIDED WITH NOT LESS THAN ONE ACCESSIBLE MEANS OF EGRESS. WHERE MORE THAN ONE MEANS OF EGRESS ARE REQUIRED FROM ANY ACCESSIBLE SPACE, EACH ACCESSIBLE PORTION OF THE SPACE SHALL BE SERVED BY NOT LESS THAN TWO ACCESSIBLE MEANS OF EGRESS PER SECTION 1009.1.

ACCESSIBLE MEANS OF EGRESS PROVIDED = 3

CONTINUITY PER IBC §1009.2
EACH REQUIRED ACCESSIBLE MEANS OF EGRESS SHALL BE CONTINUOUS TO A PUBLIC WAY

SIZE OF DOORS PER §1010.1
MINIMUM CLEAR WIDTH: 32"
BUILDING DOORS COMPLY WITH MINIMUM CLEAR DOOR WIDTH OF 32"

EXIT ACCESS TRAVEL DISTANCE - TABLE 1017.2
B / S OCCUPANCY, WITHOUT SPRINKLER SYSTEM: 200'-0"
ACTUAL MAXIMUM TRAVEL DISTANCE 56'-6" (EXISTING)

ACCESSIBILITY - IBC CHAPTER 11
ACCESSIBLE ROUTE PER IBC §1104

ACCESSIBLE ENTRANCES PER IBC §1105.1
PUBLIC ENTRANCES: AT LEAST 60 PERCENT OF ALL PUBLIC ENTRANCES SHALL BE ACCESSIBLE. THREE ACCESSIBLE BUILDING ENTRIES PROVIDED, RE: CODE PLANS.

SIGNAGE PER IBC §1112
SIGNS: REQUIRED ACCESSIBLE ELEMENTS SHALL BE IDENTIFIED BY THE INTERNATIONAL SYMBOL OF ACCESSIBILITY AT THE LOCATIONS LISTED IN SECTION 1112.1

SIGNS IDENTIFYING TOILET OR BATHING ROOMS: SIGNAGE AND PICTOGRAMS IDENTIFYING TOILET ROOMS AND BATHING ROOMS SHALL BE VISUAL CHARACTERS, RAISED CHARACTERS AND BRAILLE COMPLYING WITH ICC A117.1 AND IN ACCORDANCE WITH SECTION 1112.2.

DIRECTIONAL SIGNAGE: DIRECTIONAL SIGNAGE INDICATING THE ROUTE TO THE NEAREST LIKE ACCESSIBLE ELEMENT SHALL INCLUDE THE INTERNATIONAL SYMBOL OF ACCESSIBILITY AND BE PROVIDED AT THE LOCATIONS LISTED IN SECTION 1112.3

OTHER SIGNS: SIGNAGE INDICATING SPECIAL ACCESSIBILITY PROVISIONS SHALL BE PROVIDED IN EACH DOOR TO AN EXIT DISCHARGE IN ACCORDANCE WITH SECTION PER SECTION 1112.4.

GENERAL ACCESSIBILITY NOTES
THE DETAILS AND NOTES PROVIDED WITHIN THESE DOCUMENTS REPRESENT ONLY A PORTION OF THE REQUIREMENTS SET FORTH BY FEDERAL LAW, STATE LAW, CITY AND COUNTY LAW AND THE BUILDING CODE FOR ACCESSIBILITY REQUIREMENTS.

CONTRACTORS MUST REVIEW ALL ACCESSIBILITY REQUIREMENTS AS PRESENTED IN THESE CONSTRUCTION DOCUMENTS AND THE REFERENCES HEREIN PRIOR TO STARTING ANY CONSTRUCTION.

FOR SITE ACCESSIBILITY REQUIREMENTS AND ALL SITE ACCESSIBILITY DETAILING, RE CIVIL.

STRUCTURAL DESIGN - CHAPTER 16
§1613 EARTHQUAKE LOADS

SITE SEISMIC CLASSIFICATION
OCCUPANCY & RISK CATEGORY II
SITE CLASS D
SEISMIC DESIGN CATEGORY C (JEROME COUNTY MINIMUM REQUIREMENT)

PLUMBING FIXTURES - CHAPTER 29
§2902.1 - MINIMUM NUMBER OF FIXTURES SHALL BE PROVIDED FOR THE TYPE OF OCCUPANCY AND IN THE MINIMUM NUMBERS PER TABLE 2902.1

NO CHANGE TO EXISTING PLUMBING FIXTURE COUNT REQUIRED:

WATER CLOSETS:
BUSINESS OCCUPANCY: (14 TOTAL BUSINESS OCCUPANTS)
1 PER 25 FOR FIRST 50 AND 1 PER 50 FOR THE REMAINDER EXCEEDING 50 = 0.56 REQUIRED

SHOP/ INDUSTRIAL OCCUPANCY: (5 TOTAL STORAGE OCCUPANTS)
1 PER 100 = 0.01 REQUIRED

STORAGE OCCUPANCY: (4 TOTAL STORAGE OCCUPANTS)
1 PER 100 = 0.04 REQUIRED

TOTAL REQUIRED = 0.56 + 0.01 + 0.04 = 0.61 (1)
1 <E> WATER CLOSET PROVIDED (IN 1 SINGLE USER RESTROOM)

LAVATORIES:
BUSINESS OCCUPANCY: (14 TOTAL BUSINESS OCCUPANTS)
1 PER 40 FOR THE FIRST 80 AND 1 PER 80 FOR THE REMAINDER EXCEEDING 80 = 0.35 REQUIRED

SHOP/ INDUSTRIAL OCCUPANCY: (5 TOTAL STORAGE OCCUPANTS)
1 PER 100 = 0.01 REQUIRED

STORAGE OCCUPANCY: (4 TOTAL STORAGE OCCUPANTS)
1 PER 100 = 0.04 REQUIRED

TOTAL REQUIRED = 0.35 + 0.01 + 0.04 = 0.40 (1)
1 <E> LAVATORY IS PROVIDED (IN 1 SINGLE USER RESTROOM)

DRINKING FOUNTAINS:
BUSINESS OCCUPANCY: (14 TOTAL BUSINESS OCCUPANTS)
1 PER 100 = 0.14 REQUIRED

SHOP/ INDUSTRIAL OCCUPANCY: (5 TOTAL STORAGE OCCUPANTS)
1 PER 100 = 0.05 REQUIRED

STORAGE OCCUPANCY: (4 TOTAL STORAGE OCCUPANTS)
1 PER 1000 = 0.004 REQUIRED

TOTAL REQUIRED: 0.14 + 0.05 + 0.004 = 0.194 (1)
2 <E> DRINKING FOUNTAINS PROVIDED

SERVICE SINKS:
SERVICE SINKS REQUIRED = 1
SERVICE SINKS PROVIDED = 1 (EXISTING)

* PER IBC 2024 2902.2 EXCEPTIONS 4,5, SEPARATE FACILITIES PER GENDER NOT REQUIRED.

LICENSED ARCHITECT
3-20-2026
ELIZABETH HALLAS
AR-985880
STATE OF IDAHO

A/E FIRM:	DESIGNED:	SUB SHEET NO.	TITLE OF SHEET	DRAWING NO.
PRIME: ANDERSON HALLAS ARCHITECTS, PC GOLDEN, CO	BC CADD BC / DM TECH REVIEW: EH / CR DATE: 03/20/2026	G100	CODE ANALYSIS MIIN MAINTENANCE BUILDING ADDITION MINIDOKA NATIONAL HISTORIC SITE	xx / xx PMIS/PKG NO. XXXXXX SHEET 3 OF 54

3/19/2026 1:26:34 PM Autodesk Docs://2025-560 MIIN Maintenance Bldg Addition/2025560 NPS MIIN Addition - v26.rvt

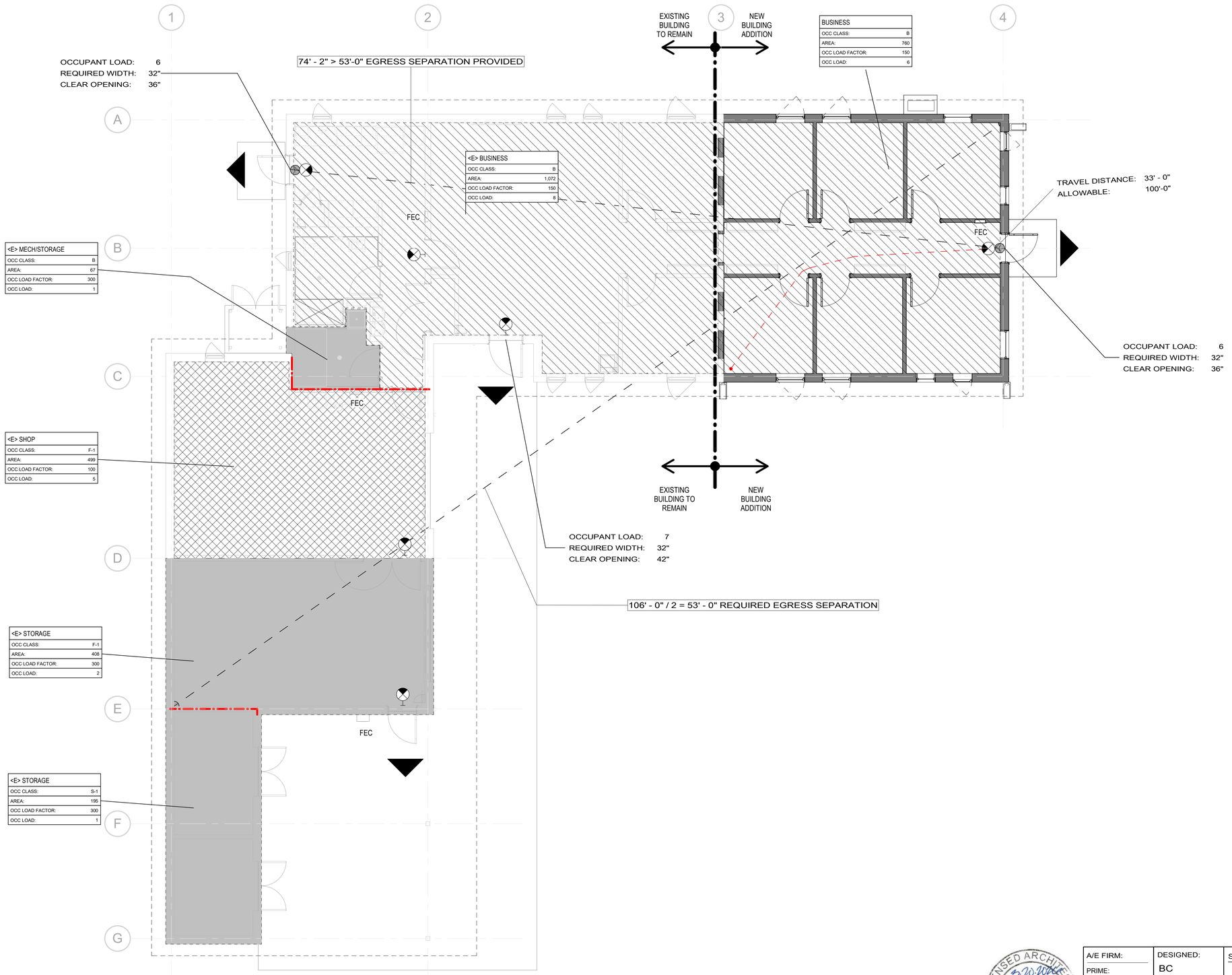

LEGEND

- BUSINESS OCC (1:150)
- INDUSTRIAL OCC (1:100)
- STORAGE/MECH OCC (1:300)
- EXIT
- PATH OF TRAVEL
- REQUIRED EXIT SEPARATION
- 1-HR FIRE RATED WALL
- FEC — FIRE EXTINGUISHER CABINET
- DELINEATION OF BASE SCOPE AND OPTION 01 SCOPE OF WORK
- WALL MOUNTED EXIT SIGNAGE

BLDG. NORTH

SCALE: (A) 8 0 8 16 SCALE OF FEET

1 G110 CODE PLAN - FIRST FLOOR
SCALE (A)

LICENSED ARCHITECT 3-20-2026 ELIZABETH HALLAS AR-985880 STATE OF IDAHO

A/E FIRM:	DESIGNED:	SUB SHEET NO.	TITLE OF SHEET	DRAWING NO.
PRIME: ANDERSON HALLAS ARCHITECTS, PC GOLDEN, CO	BC	G110	CODE PLAN	XX / XX
	DRAWN: BC / DM			PMIS/PKG NO. XXXXXX
	TECH REVIEW: EH / CR		MIIN MAINTENANCE BUILDING ADDITION MINIDOKA NATIONAL HISTORIC SITE	SHEET 4 OF 54
	DATE: 03/20/2026			

3/19/2026 1:26:35 PM Autodesk Docs://2025-560 MIIN Maintenance Bldg Addition/2025560 NPS MIIN Addition - v26.rvt

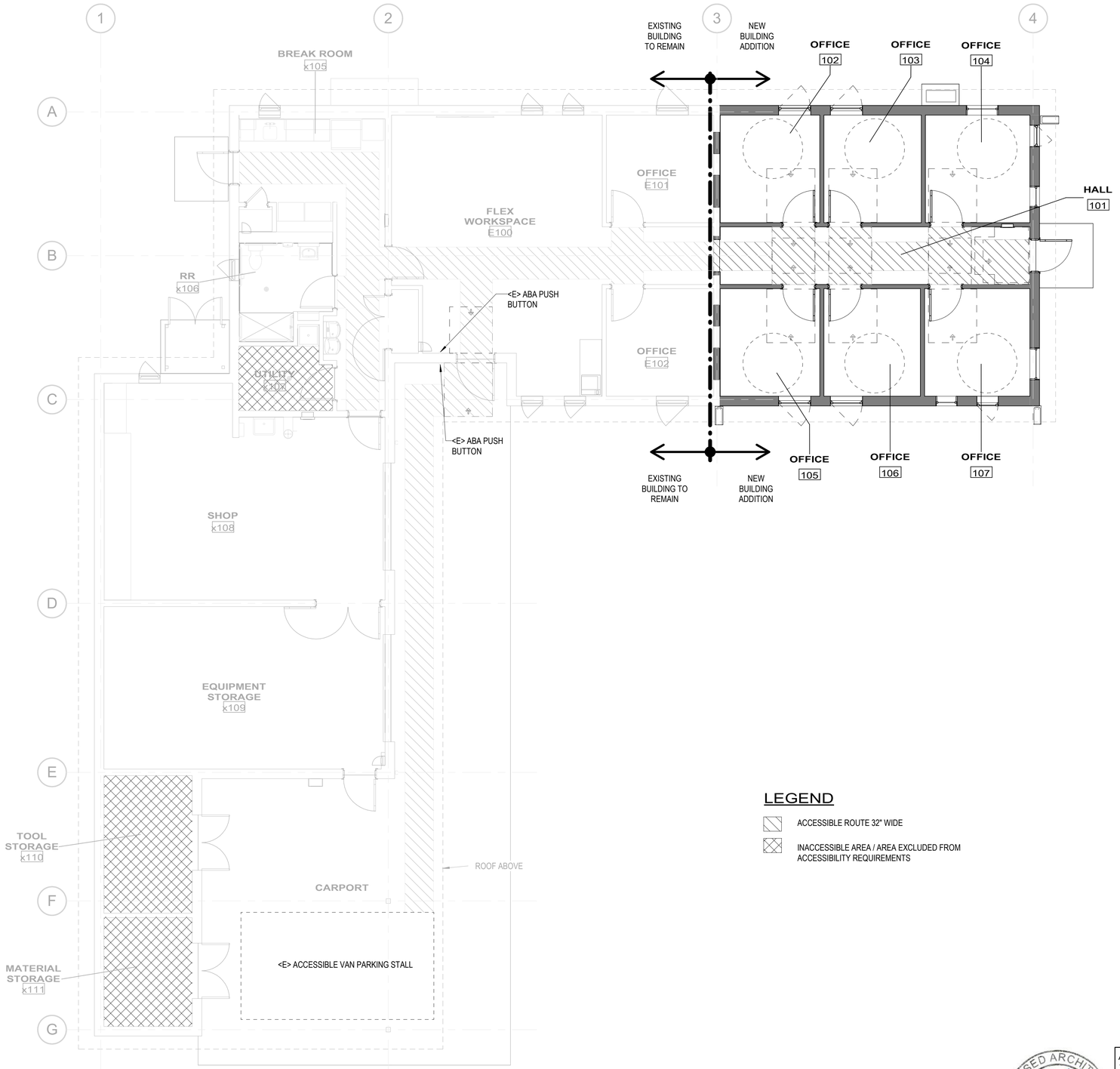

1 G120 ACCESSIBILITY PLAN
SCALE A

ABAAS SIGNAGE

REFER TO SPECIFICATION FOR OTHER SIGNAGE REQUIREMENTS, ALL SIGNS SHALL MEET REQUIREMENTS OF ABAAS

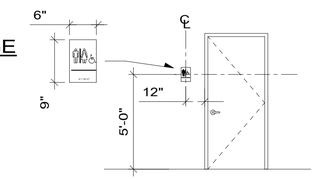

ACCESSIBILITY LEGEND

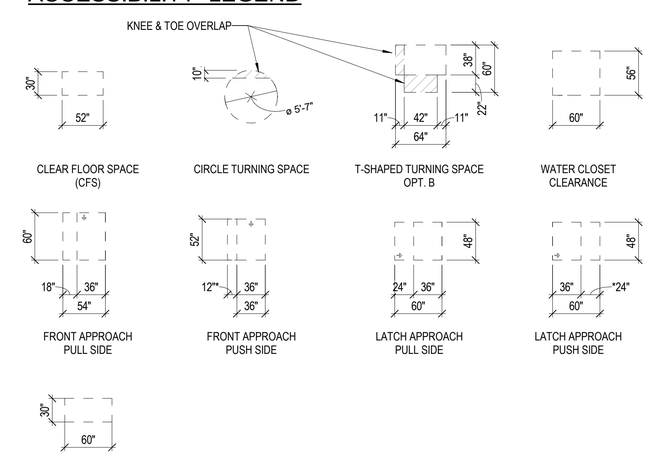

* = SIDE CLEARANCE ONLY REQUIRED IF BOTH CLOSER AND LATCH ARE PROVIDED

LEGEND

- ACCESSIBLE ROUTE 32" WIDE
- INACCESSIBLE AREA / AREA EXCLUDED FROM ACCESSIBILITY REQUIREMENTS

BLDG. NORTH

SCALE: A 8 0 8 16
SCALE OF FEET

LICENSED ARCHITECT
ELIZABETH HALLAS
AR-985880
STATE OF IDAHO
3/20/2026

A/E FIRM:	DESIGNED:	SUB SHEET NO.	TITLE OF SHEET	DRAWING NO.
PRIME: ANDERSON HALLAS ARCHITECTS, PC GOLDEN, CO	BC	G120	ACCESSIBILITY	XX / XX
	CADD: BC / DM			PMIS/PKG NO. XXXXXX
	TECH REVIEW: EH / CR		MIIN MAINTENANCE BUILDING ADDITION MINIDOKA NATIONAL HISTORIC SITE	SHEET 5 OF 54
	DATE: 03/20/2026			

3/19/2026 1:26:36 PM Autodesk Docs://2025-560 MIIN Maintenance Bldg Addition/2025560 NPS MIIN Addition - v26.rvt

WALL TYPES AND ASSEMBLIES

INTERIOR PARTITIONS

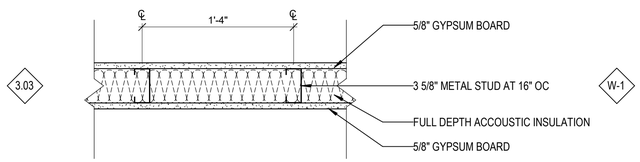

EXTERIOR ASSEMBLIES

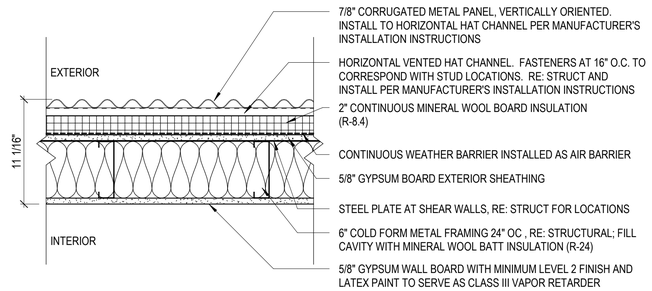

NOTE: WHEN THE WEATHER BARRIER IS INSTALLED AS AN AIR BARRIER, ALL SEAMS AND PENETRATIONS SHALL BE TAPED AND SEALED.

ROOF ASSEMBLIES

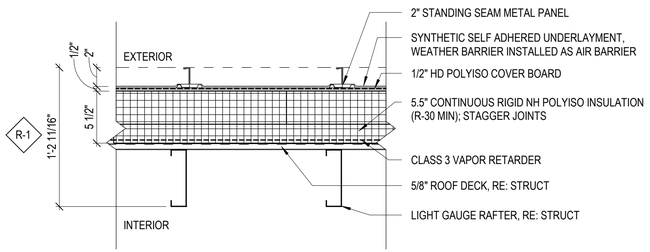

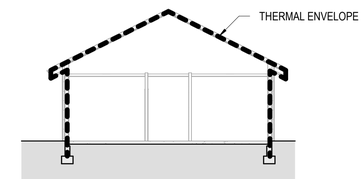

2 G200 NS AT OPEN OFFICE - THERMAL ENVELOPE
SCALE (B)

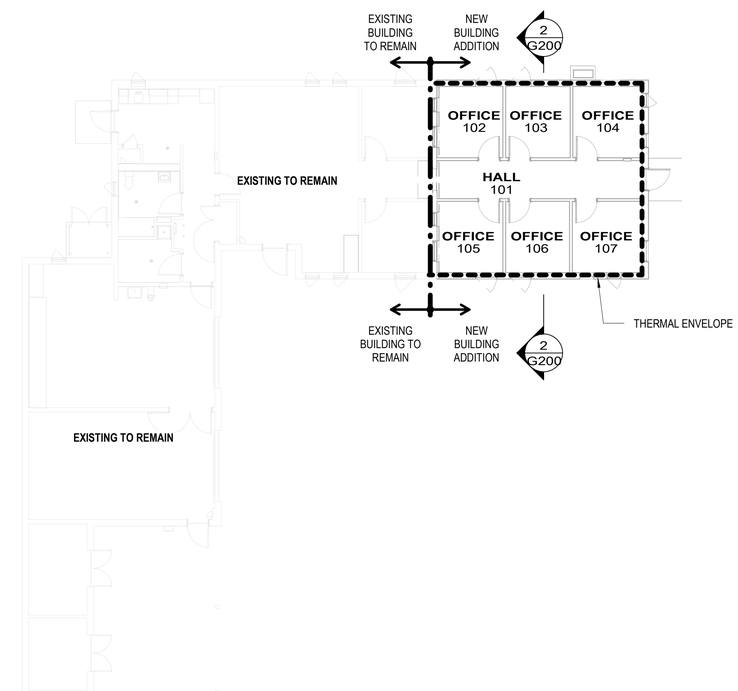

1 G200 THERMAL ENVELOPE KEY PLAN AT ADDITION
SCALE (A)

ENERGY CODE ANALYSIS

APPLICABLE CODE: 2024 IECC	
COMPLIANCE PATH: PRESCRIPTIVE PATH, U-FACTOR METHOD	
CODE SECTION	
C301	CLIMATE ZONE 5B - THE PROJECT IS LOCATED IN JEROME COUNTY, IDAHO
TABLE C402.1.2	OPAQUE THERMAL ENVELOPE MINIMUM U-VALUE ASSEMBLY — REQUIRED — PROVIDED ROOF - INSULATION ABOVE DECK — 0.032 (R-30) — 0.032 (R-30) WALL - METAL FRAME — 0.055 (R-20 + R-9 CI) — 0.052 (R-24 + R-8.4 CI, STUDS 24" OC) UNHEATED SLAB ON GRADE* — F-0.52 (R-15 FOR 24" BELOW) — R-15 FOR 24" BELOW OPAQUE SWINGING DOORS (NFRC-100) — 0.037 — 0.037 *AT BUILDING PERIMETER/FOUNDATION. REFER TO SECTION C402.2.4 FOR ALLOWABLE INSTALLATION CONFIGURATIONS. REFER TO ASSEMBLIES FOR ACTUAL THERMAL VALUES.
TABLE C402.5	BUILDING THERMAL ENVELOPE FENESTRATION MAXIMUM U-FACTOR FIXED FENESTRATION — 0.34 OPERABLE FENESTRATION — 0.45 DOOR ENTRANCES — 0.63
TABLE C402.5	FENESTRATION MAX SHGC REQUIREMENT FENESTRATION U-FACTOR — MAXIMUM SHGC ORIENTATION — FIXED — OPERABLE PF<0.2 — 0.38 — 0.33 0.2<PF<0.5 — 0.46 — 0.40 0.5<0.5 — 0.61 — 0.53 PF (PROJECTION FACTOR)=A/B A = DISTANCE MEASURED HORIZ FROM GLAZING TO EDGE OF OVERHANG B = DISTANCE MEASURED VERTICALLY FROM BOTTOM OF GLAZING TO UNDERSIDE OF OVERHANG
C402.6.1	AIR BARRIERS: CONTINUOUS AIR BARRIER TO BE PROVIDED, REFER TO ASSEMBLIES AND DETAILS FOR MORE INFORMATION
C406	ADDITIONAL EFFICIENCY CREDIT REQUIREMENTS: PER C502 ADDITIONS LESS THAN 1,000 SF ARE EXEMPT. **(827 SF ADDITION < 1,000SF)**

SCALE: (B) 10 0 10 20 SCALE OF FEET
SCALE: (A) 10 0 4 8 20 SCALE OF FEET
BLDG. NORTH

LICENSED ARCHITECT ELIZABETH HALLAS AR-985880 STATE OF IDAHO

A/E FIRM: PRIME: ANDERSON HALLAS ARCHITECTS, PC GOLDEN, CO	DESIGNED: BC CADD: BC / DM TECH REVIEW: EH / CR DATE: 03/20/2026	SUB SHEET NO. G200	TITLE OF SHEET: ENERGY ANALYSIS & ASSEMBLIES MIIN MAINTENANCE BUILDING ADDITION MINIDOKA NATIONAL HISTORIC SITE

DRAWING NO. XX / XX
PMIS/PKG NO. XXXXXX
SHEET 6 OF 54

3/19/2026 1:26:37 PM Autodesk Docs://2025-560 MIIN Maintenance Bldg Addition/2025560 NPS MIIN Addition - v26.rvt

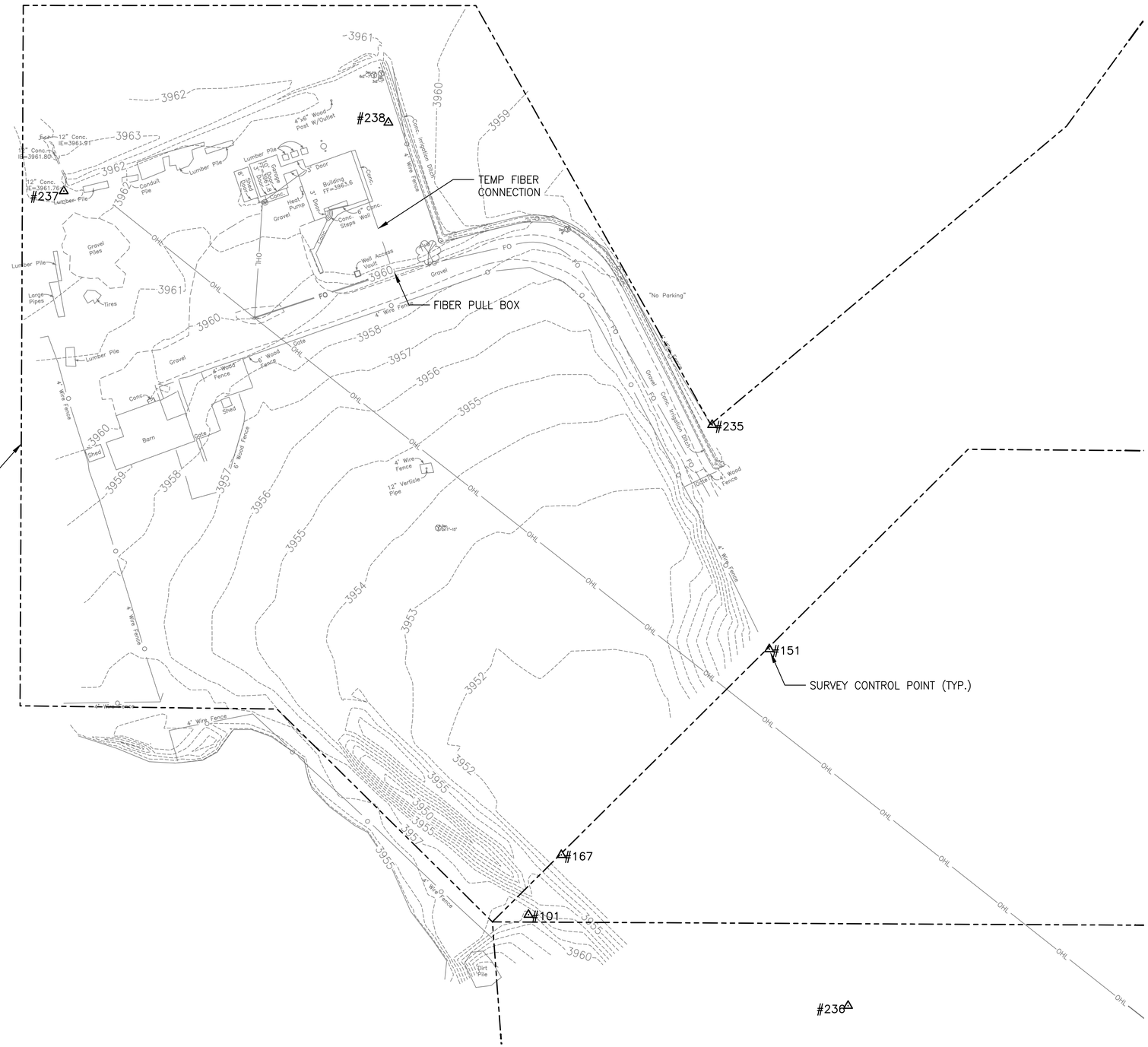

PROJECT COORDINATES AND ELEVATIONS:

PROJECT COORDINATES ARE IDAHO STATE PLANE, CENTRAL ZONE, NAD83(2011), SCALED TO GROUND, BASED ON EXISTING CONTROL POINTS PROVIDED BY NPS FROM PRIOR WORK AT THE SITE.

PROJECT ELEVATIONS ARE NAVD88, BASED ON EXISTING CONTROL POINTS PROVIDED BY NPS FROM PRIOR WORK AT THE SITE.

UNITS IN US SURVEY FEET.

SURVEY CONTROL POINTS

#101
Found Dept. of Interior Brass Disk.
N=368,833.196
E=1,572,984.828
EL=3,959.66

#151
Found Dept. of Interior Brass Disk.
N=369,017.616
E=1,573,152.008
EL=3,965.26

#167
Found Dept. of Interior Brass Disk.
N=368,874.749
E=1,573,007.602
EL=3,952.10

#235
Found Dept. of Interior Brass Disk.
N=369,173.268
E=1,573,112.334
EL=3,954.94

#236
Set 5/8"x30" Iron Rod W/Red Plastic Cap Marked "Otak Control".
N=368,770.000
E=1,573,206.731
EL=3,964.11

#237
Set 5/8"x30" Iron Rod W/Red Plastic Cap Marked "Otak Control".
N=369,335.613
E=1,572,662.087
EL=3,963.46

#238
Set 5/8"x30" Iron Rod W/Red Plastic Cap Marked "Otak Control".
N=369,383.208
E=1,572,887.505
EL=3,961.48

LEGEND

- SURVEY CONTROL POINT
- HB — HOSE BIB
- SEPTIC TANK ACCESS
- ELECTRIC METER
- UTILITY POLE
- GUY ANCHOR
- LINE CONTINUES
- DECIDUOUS TREE
- X 4800.00 — SPOT ELEVATION
- FENCE LINE
- OHL — OVERHEAD UTILITY LINE
- 50 — MAJOR (5') CONTOUR LINE WITH ELEVATION
- 51 — MINOR (1') CONTOUR LINE WITH ELEVATION
- APPROXIMATE PROPERTY BOUNDARY

40' 0' 40' 80'
SCALE IN FEET

PROFESSIONAL ENGINEER LICENSED 8181200 STATE OF IDAHO EMILY A. MAGGIO

DESIGNED: EM	SUB SHEET NO.	TITLE OF SHEET	DRAWING NO.
CADD: EM	C010	EXISTING CONDITIONS	---
TECH REVIEW: EM/KK		MIIN MAINTENANCE BUILDING	PMIS/PKG NO. ------
DATE: 03/20/2026		MINIDOKA NATIONAL HISTORIC SITE	SHEET 7 OF 54

Plotted: Aug 06, 2026 - 2:44pm emily.maggio G:\PROJECT\32900\32919A\05 Documents\Working Files\CIVIL\MIIN Addition\CIVIL Sheets\EXISTING CONDITIONS_MIIN-2.dwg Layout Name: EXISTING CONDITIONS

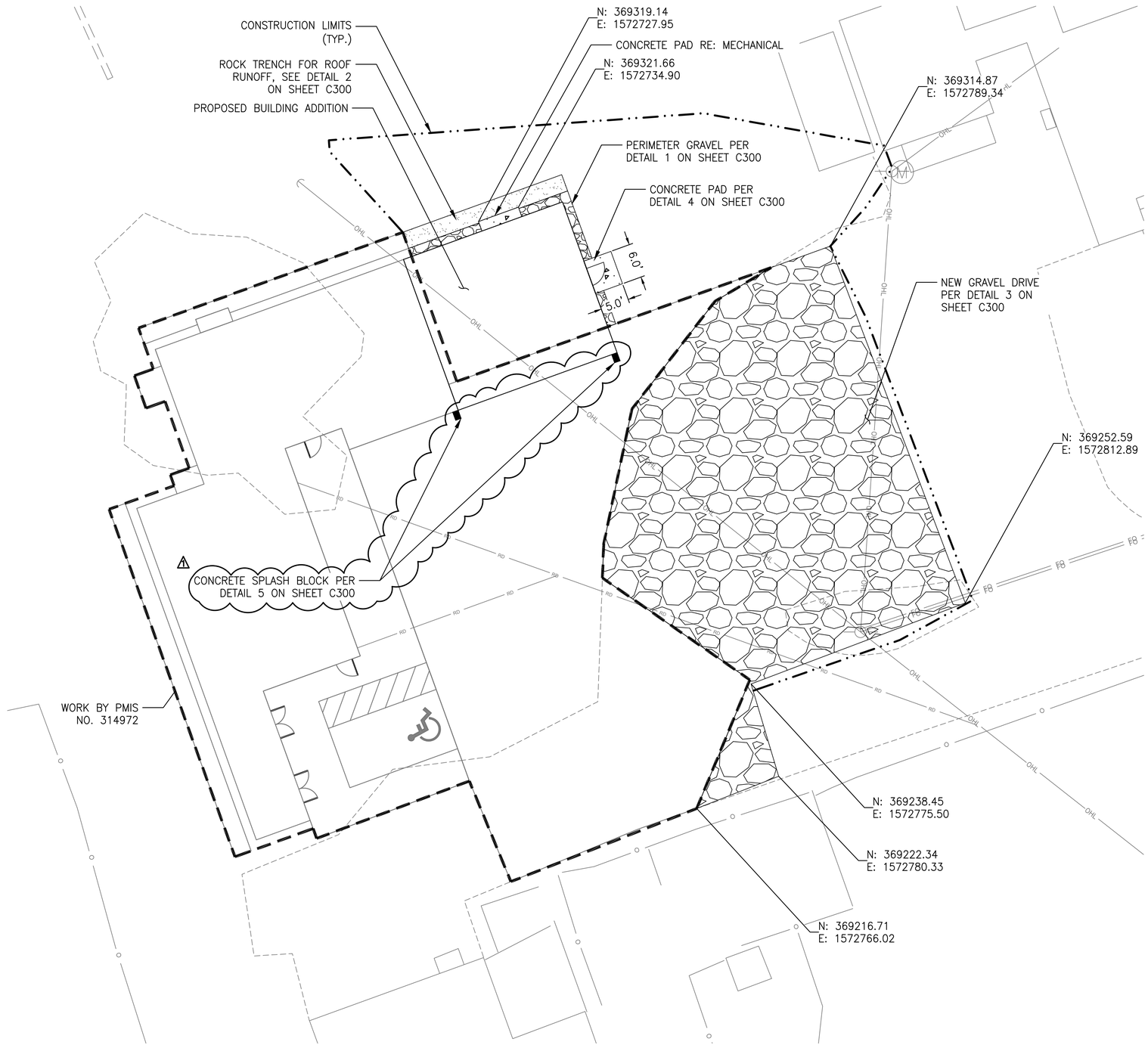

LEGEND

- CONCRETE PAD
- PERIMETER GRAVEL
- ROCK TRENCH
- GRAVEL DRIVE

GENERAL NOTES

1. COVER DISTURBED AREA WITH MINIMUM 6" TOPSOIL FROM NEW BUILDING LOCATION.
2. PARK WILL REVEGETATE AREA.
3. IMPORT FILL SHALL BE CLEAN AND WEED FREE. MATERIAL SOURCE SHALL BE DETERMINED IN CONSULTATION WITH THE PARK. PARK SHALL BE NOTIFIED OF MATERIAL SOURCE AND ALLOWED TIME TO INSPECT. ANY SITE CERTIFICATIONS MUST INCLUDE LIST OF SPECIES PRESENT AND HOW OFTEN MATERIAL IS TREATED FOR WEEDS.
4. ANY IMPORTED TOPSOIL MATERIALS SHALL BE CLEAN AND WEED FREE AND THE MATERIALS SOURCE DETERMINED IN CONSULTATION WITH THE PARK. ANY SITE CERTIFICATIONS MUST INCLUDE A LIST OF SPECIES PRESENT AT THE MATERIAL SOURCE LOCATION. PARK SHALL BE NOTIFIED OF MATERIAL SOURCE AND ALLOWED TIME TO INSPECT.

10' 0' 10' 20'
SCALE IN FEET

PROFESSIONAL ENGINEER LICENSED 8181200 STATE OF IDAHO EMILY A. MAGGIO

DESIGNED:	SUB SHEET NO.	TITLE OF SHEET	DRAWING NO.
EM	C100	SITE PLAN	---
CADD: EM			PMIS/PKG NO.
TECH REVIEW: EM/KK		MIIN MAINTENANCE BUILDING	SHEET
DATE: 03/20/2026		MINIDOKA NATIONAL HISTORIC SITE	8 OF 54

Plotted: Aug 06, 2026 – 8:00pm emily.maggio O:\PROJECT\32900\32919A\05 Documents\Working Files\OHL\MIIN Addition\OHL Sheets\SITE PLAN_MIIN-2.dwg Layout Name: SITE PLAN

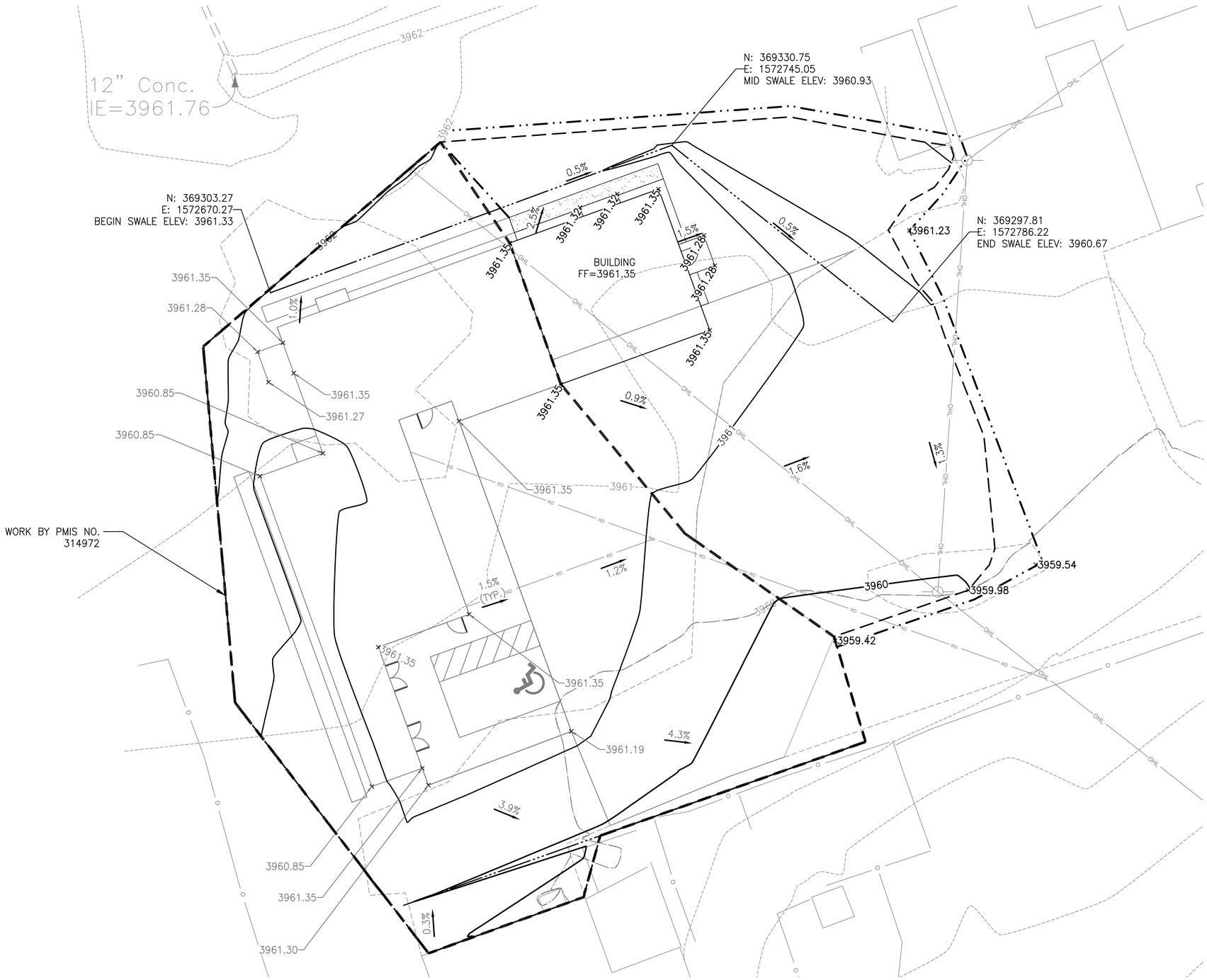

GRADING LEGEND

- GRADING LIMITS
- GRADE BREAK
- 3960 PROPOSED 5' CONTOUR
- 3957 PROPOSED 1' CONTOUR
- × 3961.19 SPOT ELEVATION

10' 0' 10' 20'
SCALE IN FEET

PROFESSIONAL ENGINEER LICENSED 8181200 STATE OF IDAHO EMILY A. MAGGIO

DESIGNED:	SUB SHEET NO.	TITLE OF SHEET	DRAWING NO.
EM	C200	GRADING PLAN	xx / xx
CADD: EM			PMIS/PKG NO. XXXXXX
TECH REVIEW: EM/KK		MIIN MAINTENANCE BUILDING	SHEET 9 OF 54
DATE: 03/20/2026		MINIDOKA NATIONAL HISTORIC SITE	

Plotted: Mar 13, 2026 – 1:48pm emily.maggio O:\PROJECT\32900\32919A\05 Documents\Working Files\CIVIL\MIIN Addition\CIVIL Sheets\GRADING PLAN_MIIN-2.dwg Layout Name: GRADING PLAN

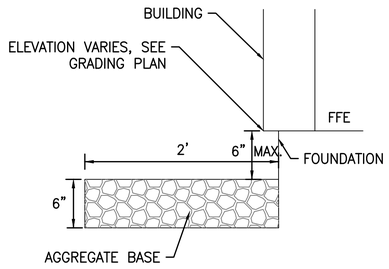

1 C300 PERIMETER GRAVEL
NTS

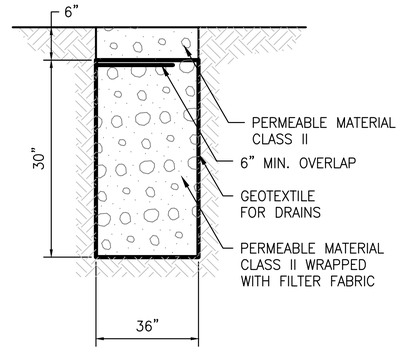

2 C300 ROCK TRENCH
NTS

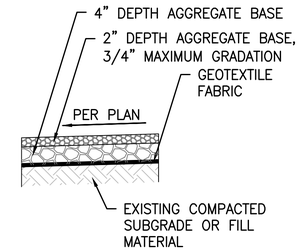

3 C300 GRAVEL DRIVE
NTS

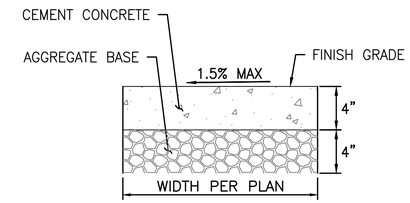

4 C300 CONCRETE PAD
NTS

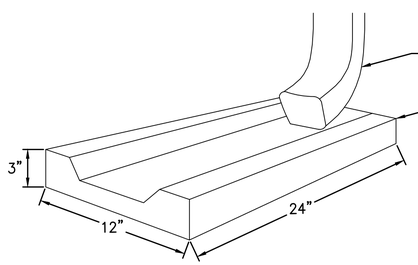

5 C300 CONCRETE SPLASH BLOCK
NTS

PROFESSIONAL ENGINEER LICENSED 8181200 STATE OF IDAHO EMILY A. MAGGIO

DESIGNED:	SUB SHEET NO.	TITLE OF SHEET	DRAWING NO.
EM	C300	CIVIL DETAILS	---
CADD: EM		MIIN MAINTENANCE BUILDING	PMIS/PKG NO.
TECH REVIEW: EM/KK		MINIDOKA NATIONAL HISTORIC SITE	SHEET 10 OF 54
DATE: 03/20/2026			

Plotted: Aug 06, 2026 – 5:46pm emily.maggio O:\PROJECT\32900\329194\05 Documents\Working Files\CIVIL\MIIN Addition\CIVIL Sheets\CIVIL DETAILS_MIIN-2.dwg Layout Name: Details

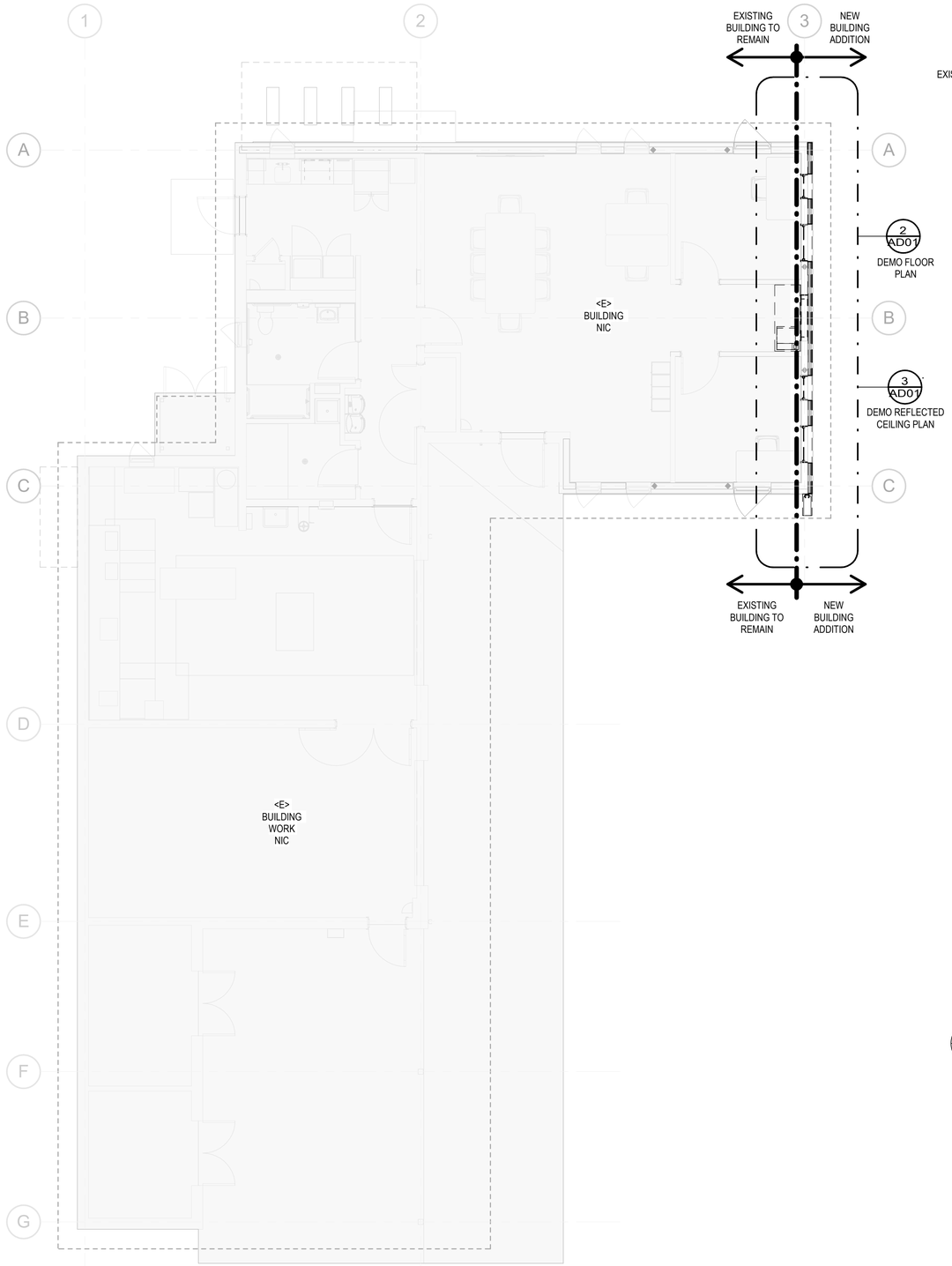

1 AD01 OVERALL FLOOR PLAN - DEMO
SCALE A

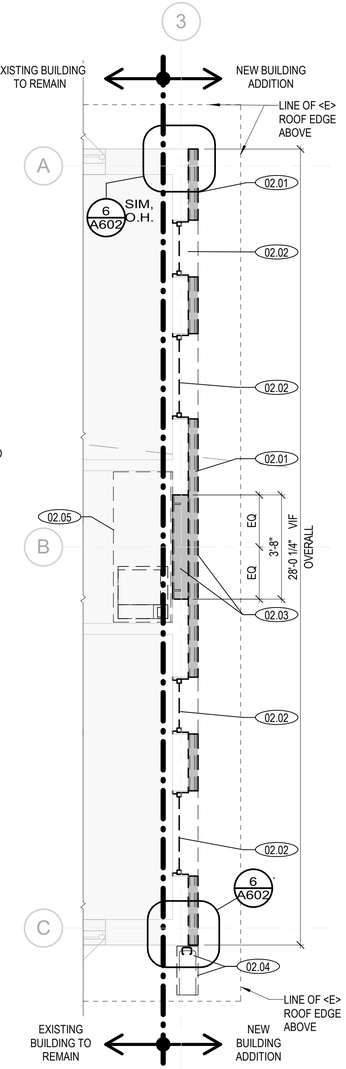

2 AD01 ENLARGED FLOOR PLAN - DEMO
SCALE B

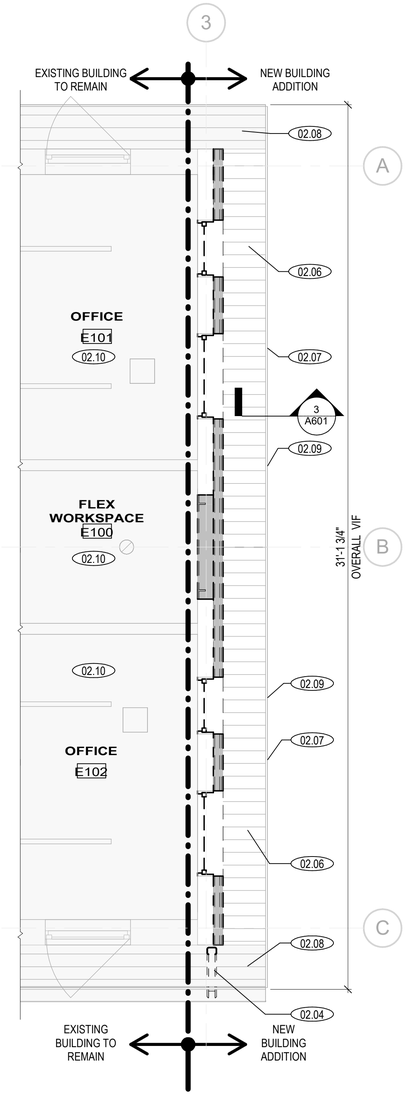

3 AD01 ENLARGED REFLECTED CEILING PLAN - DEMO
SCALE A

GENERAL NOTES

1. REFER TO INDIVIDUAL DISCIPLINES FOR FULL SCOPE OF WORK.
2. VERIFY ALL DIMENSIONS IN FIELD.
3. REVEGETATION BY PARK.

KEYNOTES ADDITION

02.01	REMOVE <E> MTL FINISH, EXTERIOR INSULATION BACK TO <E> STUDS, <E> STUDS TO REMAIN AS-IS, PROTECT INTERIOR FINISH IN PLACE FROM DAMAGE DURING CONSTRUCTION.
02.02	REMOVE AND SALVAGE <E> WINDOW, STORE ON SITE FOR REUSE IN ADDITION. SEE NEW ADDITION FLOOR PLAN AND WINDOW SCHEDULE FOR ADDITIONAL INFORMANTION.
02.03	REMOVE PORTION OF <E> WALL ASSEMBLY, AND SILL PLATE, REFRAME TO MEET <N> OPENING REQUIREMENTS, RE: NEW ADDITION FLOOR PLAN.
02.04	REMOVE AND SALVAGE <E> DOWNSPOUT AND SPLASHBLOCK, STORE ON SITE FOR REUSE. REFER TO NEW ADDITION FLOOR PLAN FOR ADDITIONAL INFORMATION.
02.05	REMOVE AND SALVAGE <E> CASEWORK, RETURN TO PARK, PULL BACK AND CAP <E> UTILITIES IN THIS AREA.
02.06	REMOVE <E> MTL SOFFIT, <E> ROOF STRUCTURE TO REMAIN.
02.07	REMOVE <E> MTL FASCIA.
02.08	<E> AREA OF MTL SOFFT TO REMAIN, V.I.F. IF <E> MTL SOFFIT WILL CONNECT TO <N> MTL SOFFIT WITH SEAMLESS TRANSITION BETWEEN <E> MTL SOFFIT AND <N> MTL SOFFIT.
02.09	AT ROOF ABOVE, REMOVE <E> ROOF EDGE CLOSER.
02.10	<E> CEILING, PROTECT IN PLACE

LEGEND

= REMOVE AND SALVAGE <E> WINDOWS FOR REUSE, INCLUDING INTERIOR WD STOOL AND SURROUNDING WD TRIM

EXT. / INT. = <E> EXTERIOR PORTION OF WALL TO BE REMOVED, <E> INTERIOR FINISH AND STUD TO REMAIN

= <E> WALL / OR PORTION OF WALL TO REMAIN, UNLESS NOTED, PROTECT IN PLACE

= <E> ELEMENT TO BE REMOVED

= AREA OF BUILDING NIC

SCALE: B — 2 0 3 6 — SCALE OF FEET

SCALE: A — 4 0 4 8 12 — SCALE OF FEET

BLDG. NORTH

LICENSED ARCHITECT ELIZABETH HALLAS AR-985880 STATE OF IDAHO 3-20-2026

A/E FIRM: PRIME: ANDERSON HALLAS ARCHITECTS, PC GOLDEN, CO	DESIGNED: BC CADD: BC / DM TECH REVIEW: EH / CR DATE: 03/20/2026	SUB SHEET NO. AD01	TITLE OF SHEET: OVERALL FLOOR PLAN - DEMO MIIN MAINTENANCE BUILDING ADDITION MINIDOKA NATIONAL HISTORIC SITE	DRAWING NO. xx / xx PMIS/PKG NO. XXXXXX SHEET 11 OF 54

3/19/2026 1:26:39 PM Autodesk Docs://2025-560 MIIN Maintenance Bldg Addition/2025560 NPS MIIN Addition - v26.rvt

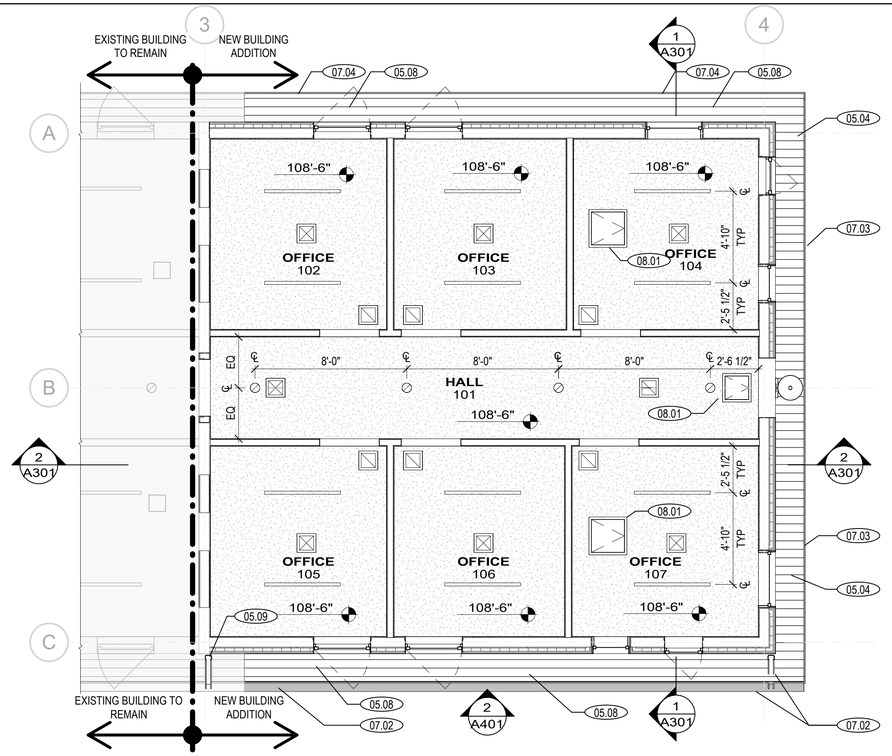

2 A101 ENLARGED REFLECTED CEILING PLAN AT ADDITION

SCALE (A)

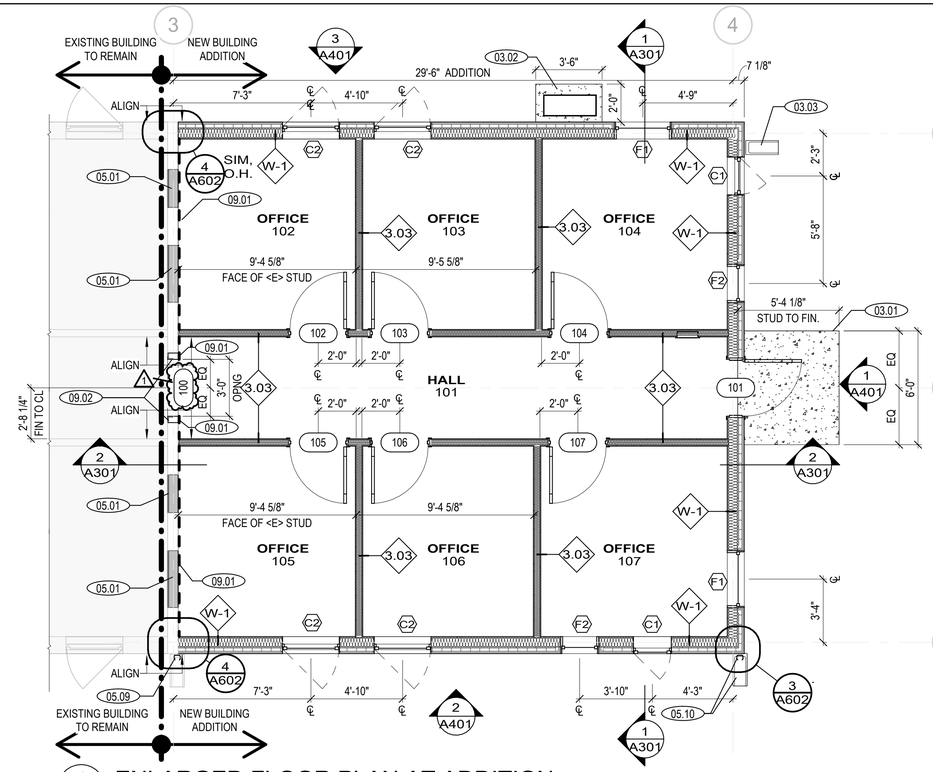

1 A101 ENLARGED FLOOR PLAN AT ADDITION

SCALE (A)

GENERAL NOTES

1. REFER TO ABAAS MOUNTING HEIGHTS FOR INFO ON MOUNTING LOCATIONS
2. REFER TO OTHER DISCIPLINES FOR FULL SCOPE OF THE WORK.
3. REFER TO SHEET G200 FOR ASSEMBLY INFORMATION.

KEYNOTES AT ADDITION

03.01	PROVIDE <N> 5" THICK CONCRETE PAD AT ENTRY, TOP OF PAD NOT TO EXCEED 2% SLOPE IN ANY DIRECTION. RE: STRUCTURAL
03.02	PROVIDE <N> 4" THICK MECHANICAL CONCRETE PAD, COORDINATE WITH MECH FOR CORRECT SIZE AND LOCATION, RE: MECH.
03.03	<N> INSTALL CONCRETE SPLASHBLOCK, CORRDINATE LOCATION WITH CONDENSATE DRAIN, RE: MECH
05.01	AT <E> WALL OPENING (AT REMOVED WINDOWS) IN-FILL OPENING WITH <N> MTL STUD FRAMING. AND MINERAL WOOL ACUSTIC BATT INSULATION, FULL DEPTH OF WALL CAVITY INSTALL <N> GWB FINISH (TO MATCH <E> ADJACENT GWB) AT <E> BUILDING SIDE OF WALL, ENSURE SMOOTH AND SEAMLESS TRANSITION BETWEEN <N> AND <E> GWB FINISH. PROVIDE <N> PAINTED WALL FINISH FOR ENTIRE WALL FLOOR TO CEILING ABOVE.
05.04	INSTALL <N> MTL SOFFIT AT UNDERSIDE OF <N> ROOF STRUCTURE, RE: STRUC
05.05	<N> MTL RIDGE CAP AND ROOF EDGE AT <N> ADDITION ROOF.
05.07	INSTALL <E> SALVAGED ROOF EDGE CLOSER AT <N> ROOF OUTRIGGER LOCATION
05.08	<N> METAL SOFFIT PANEL, TO MATCH <E> MTL SOFFIT AT <E> BUILDING.
05.09	INSTALL <E> SALVAGED MTL DOWNSPOUT UPON COMPLETION OF THE INSTALLATION OF EXTERIOR FINISHS.
05.10	INSTALL <N> DOWNPOUT AND SPLASH BLOCK TO MATCH <E> AT <E> BUILDING.
07.02	<N> PREFINISHED HALF-ROUND GUTTER AND DOWNSPOUT, FINISH TO MATCH STANDING SEAM ROOF AND <E> GUTTER AND DOWNSPOUT AT <E> BUILDING, REMOVE AND SALVAGED <E> END CAP, FOR REUSE AT <N> END OF GUTTER, PROVIDE 6" MIN. OVER LAP WITH SEALANT BETWEEN <N> AND <E>, PROVIDE WATER TIGHT CONNECTION BETEEN <E> AND <N> GUTTER.
07.03	INSTALL <N> MTL FASCIA TO MATCH <E> AT <N> ROOF OUTRIGGER.
07.04	INSTALL <N> PREFINISHED MTL FASCIA AT <N> ROOF OUTRIGGER.
08.01	INSTALL <N> 24" x 24" ACCESS PANEL IN <N> CEILING, COORDINATE ACCESS LOCATIONS WITH MECHANICAL UNITS IN ATTIC ABOVE, RE: MECH.
09.01	INSTALL <N> 5/8" GWB FINISH FROM FLOOR TO ROOF STRUCTURE ABOVE, TO <E> STUD FRAMING, RE: FINISH SCHEDULE.
09.02	AT <N> OPENING, PROVIDE <N> GWB AT JAMB, AND HEAD RETURN. PROVIDE SEAMLESS TRANSITION BETWEEN <E> AND <N> WALL FINISH, PROVIDE <N> PAINTED FINISH FOR ENTIRE WALL (BOTH SIDES OF <N> OPENING) AT <E> SIDE OF BUILDING ADDITION. PROVIDE (4) 3"x3"X48" AFF CORNER PROTECTION AT ALL CORNERS OF <N> OPENING.

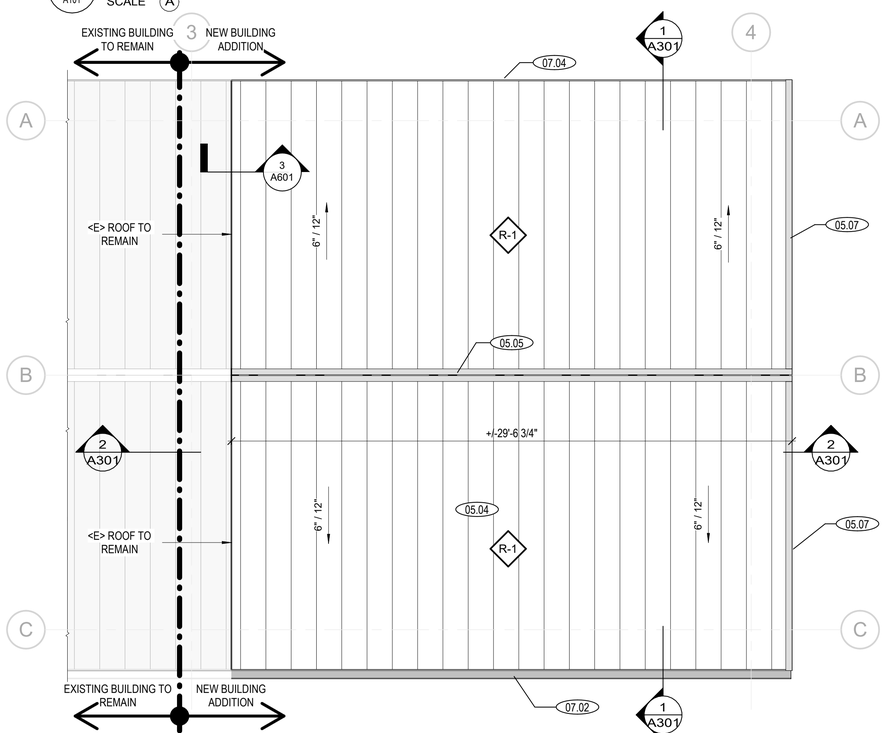

3 A101 ENLARGED ROOF PLAN AT ADDITION

SCALE (A)

LEGEND

- = <N> DOOR AND FRAME, RE: DOOR SCHEDULE
- = <N> EXTERIOR WALL, REFER TO WALL TYPE ASSEMBLIES, G200
- = <N> INTERIOR WALL, REFER TO WALL TYPE ASSEMBLIES, G200
- = <N> WALL IN-FILL AT <E> WALL OPENING
- = AREA OF <E> BUILDING - NIC
- = <N> CONCRETE , RE: CIVIL DRAWINGS FOR ADDITIONAL INFORMATION
- = <N> 1/2" GWB FINISH ON STRUCTURAL CEILING JOIST.
- = <N> LINEAR LIGHT FIXTURE, RE: ELECTRICAL FOR ADDITION INFORMATION
- = <N> RECESSED CEILING LIGHT FIXTURE, RE: ELECTRICAL DRAWINGS FOR ADDITIONAL I INFORMATION
- = <N> EXTERIOR LIGHT FIXTURE, RE: ELECTRICAL DRAWINGS FOR ADDITIONAL I INFORMATION
- = <N> MECHANICAL ACCESS PANEL, RE: MECHANICAL DRAWINGS FOR ADDITIONAL I INFORMATION
- = <N> RETURN AIR, RE: MECHANICAL DRAWINGS FOR ADDITIONAL I INFORMATION
- = <N> SUPPLY AIR, RE: MECHANICAL DRAWINGS FOR ADDITIONAL I INFORMATION
- = <N> MTL ROOF FINISH TO MATCH <E> ADJACENT ROOF FINISH
- = <E> MTL ROOF FINISH TO REMAIN

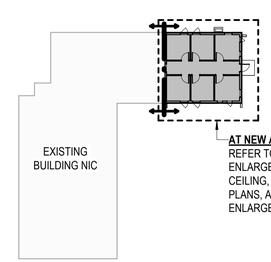

AT NEW ADDITION: REFER TO A101 FOR ENLARGED FLOOR, CEILING, AND ROOF PLANS, AND A102 FOR ENLARGED FINISH PLAN

OVERALL KEY PLAN

N.T.S.

BLDG. NORTH

SCALE: (A) 4 0 4 8 SCALE OF FEET

LICENSED ARCHITECT ELIZABETH HALLAS AR-985880 STATE OF IDAHO 3-10-2026

A/E FIRM: PRIME: ANDERSON HALLAS ARCHITECTS, PC GOLDEN, CO	DESIGNED: BC CADD: BC / DM TECH REVIEW: EH / CR DATE: 03/20/2026	SUB SHEET NO. A101	TITLE OF SHEET ENLARGED PLANS MIIN MAINTENANCE BUILDING ADDITION MINIDOKA NATIONAL HISTORIC SITE	DRAWING NO. XXX XXX PMIS/PKG NO. XXXXXX SHEET 12 OF 54

8/7/2026 3:56:52 PM C:\Users\bcook\AppData\Local\Autodesk\Autodesk\Revit\Autodesk Revit 2026\CollaborationCache\LQTJECRCLQB88DWS\314b0366-7328-4131-bba2-9d5630df132b\50685b5-1cb2-492a-965b-7be7f9cd0b00.rvt

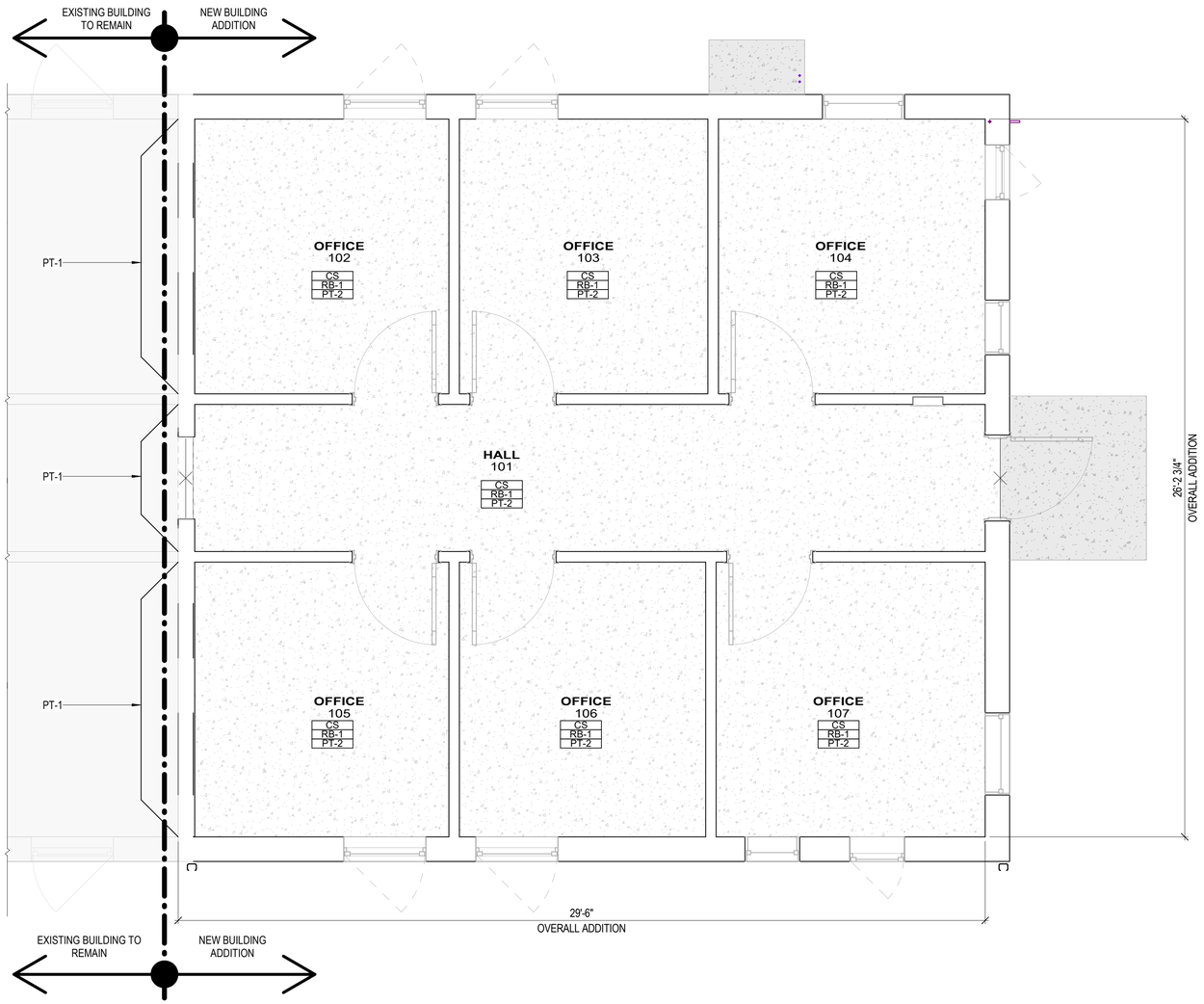

1 A102 ENLARGED FINISH PLAN AT ADDITION

SCALE (A)

GENERAL NOTES

1. ALL FLOOR FINISHES TO EXTEND UNDER CASEWORK AND EQUIPMENT
2. FOR ALL FLOOR FINISHES, PREPARE SUBSTRATE PER MANUFACTURER'S RECOMMENDATIONS.
3. ALL DOOR AND WINDOW TRIM TO BE PRIMED AND PAINTED TO MATCH ROOM WALL FINISH, PT-4.

LEGEND

= THRESHOLD TRANSITION STRIP

= AREA OF <E> BUILDING - NIC

= <N> CONCRETE SEALED (CS)

= <N> CONCRETE NON-SEALED (NCS)

ROOM SCHEDULE

ROOM	ROOM NAME	FLOOR MATERIAL	WALL BASE	PRIMARY	CEILING
101	HALL	CS	RB-1	PT-1	PT-2
102	OFFICE	CS	RB-1	PT-1	PT-2
103	OFFICE	CS	RB-1	PT-1	PT-2
104	OFFICE	CS	RB-1	PT-1	PT-2
105	OFFICE	CS	RB-1	PT-1	PT-2
106	OFFICE	CS	RB-1	PT-1	PT-2
107	OFFICE	CS	RB-1	PT-1	PT-2

INTERIOR FINISH SCHEDULE

DESCRIPTION		NOTE
PT-1	WALL PAINT, TYP	
PT-2	CEILING PAINT, TYP	
PT-4	DOOR AND WINDOW TRIM PAINT	
CS	SEALED CONCRETE	
NCS	NON-SEALED CONCRETE	
RB-1	RUBBER BASE	4 IN

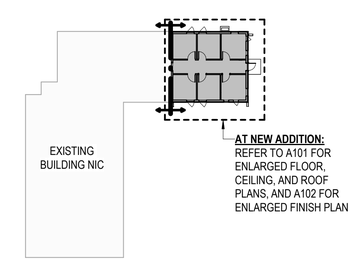

OVERALL KEY PLAN

N.T.S.

SCALE: (A)

2 0 3 6

SCALE OF FEET

BLDG. NORTH

LICENSED ARCHITECT ELIZABETH HALLAS AR-985880 STATE OF IDAHO 3-20-2026

A/E FIRM:	DESIGNED:	SUB SHEET NO.	TITLE OF SHEET	DRAWING NO.
PRIME: ANDERSON HALLAS ARCHITECTS, PC GOLDEN, CO	BC	A102	ENLARGED FINISH PLANS	XX / XX
	CADD: BC / DM			PMIS/PKG NO. XXXXXX
	TECH REVIEW: EH / CR		MIIN MAINTENANCE BUILDING ADDITION MINIDOKA NATIONAL HISTORIC SITE	SHEET 13 OF 54
	DATE: 03/20/2026			

3/19/2026 1:26:43 PM Autodesk Docs://2025-560 MIIN Maintenance Bldg Addition/2025560 NPS MIIN Addition - v26.rvt

Autodesk Docs://2025-560 MIIN Maintenance Bldg Addition/2025560 NPS MIIN Addition - v26.rvt
3/19/2026 1:26:46 PM

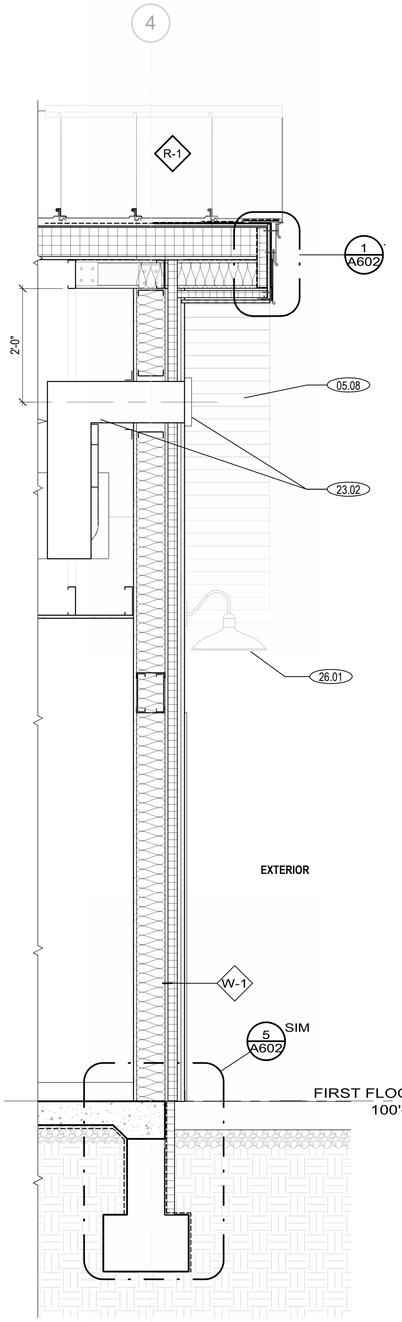

4 A301 BUILDING ADDITION TYP WALL SECTION AT RAKE
SCALE A

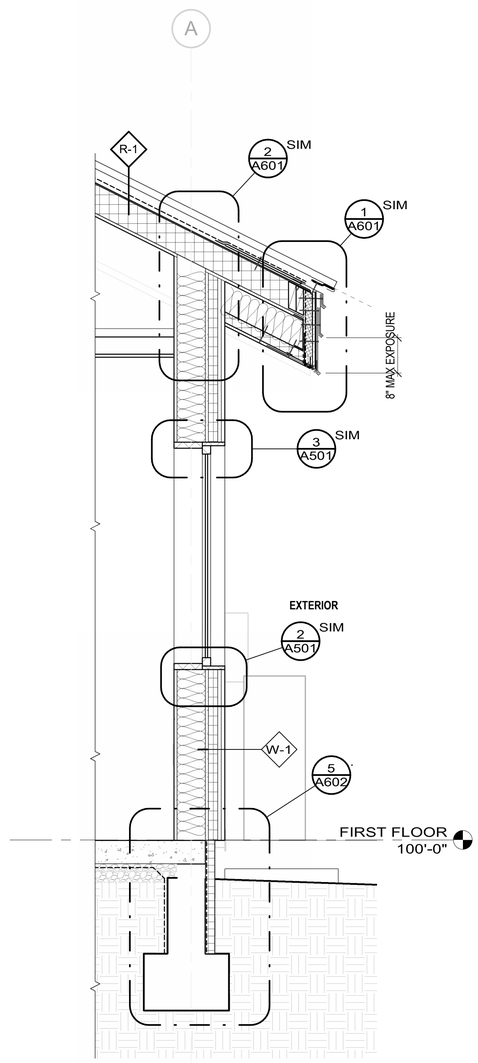

3 A301 WALL SECTION - NORTH
SCALE A

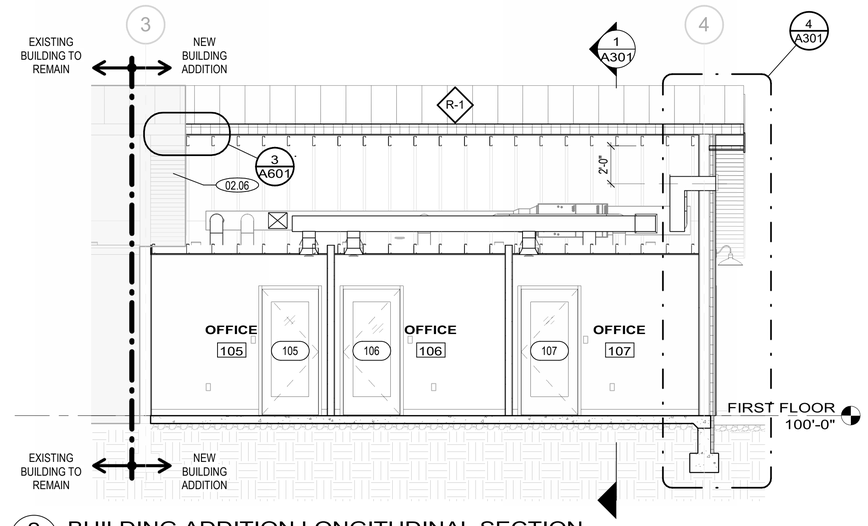

2 A301 BUILDING ADDITION LONGITUDINAL SECTION
SCALE A

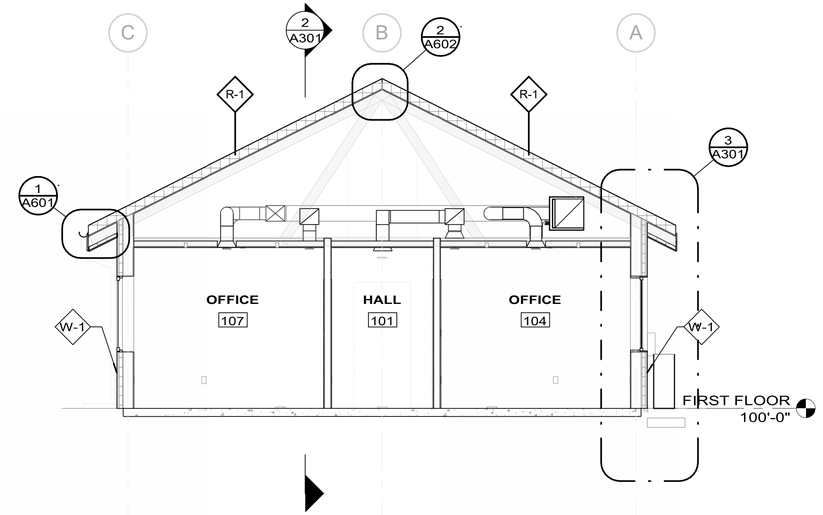

1 A301 BUILDING ADDITION TRANSVERSE SECTION1
SCALE A

GENERAL NOTES

1. REFER TO INDIVIDUAL DISCIPLINES FOR FULL SCOPE OF WORK.
2. REFER TO WINDOW AND DOOR SCHEDULE FOR DIMS AND MORE INFORMATION.
3. REFER TO G001 GENERAL NOTES AND INDEX FOR SYMBOL INFORMATION.
4. REFER TO SHEET G210 FOR ASSEMBLY INFORMATION.

LEGEND

= STANDING SEAM METAL ROOF FLASHING FINISH TO MATCH, RE : R1 ROOF ASSEMBLY G200

= AREA OF <E> BUILDING - NIC

KEYNOTES	
02.06	REMOVE <E> MTL SOFFIT, <E> ROOF STRUCTURE TO REMAIN.
05.08	<N> METAL SOFFIT PANEL, TO MATCH <E> MTL SOFFIT AT <E> BUILDING.
23.02	PREFINISHED METAL LOUVER, RE: MECH
26.01	<N> LIGHT FIXTURE TO MATCH <E> LIGHT FIXTURE AT <E> BUILDING, RE: ELEC

SCALE: B 1 0 1 2 3 SCALE OF FEET

SCALE: A 4 0 4 8 SCALE OF FEET

LICENSED ARCHITECT
3-20-2026
ELIZABETH HALLAS
AR-985880
STATE OF IDAHO

A/E FIRM:	DESIGNED:	SUB SHEET NO.	TITLE OF SHEET	DRAWING NO.
PRIME: ANDERSON HALLAS ARCHITECTS, PC GOLDEN, CO	BC	A301	BUILDING AND WALL SECTIONS	XX / XX
	CADD: BC / DM		MIIN MAINTENANCE BUILDING ADDITION	PMIS/PKG NO. XXXXXX
	TECH REVIEW: EH / CR		MINIDOKA NATIONAL HISTORIC SITE	SHEET 14 OF 54
	DATE: 03/20/2026			

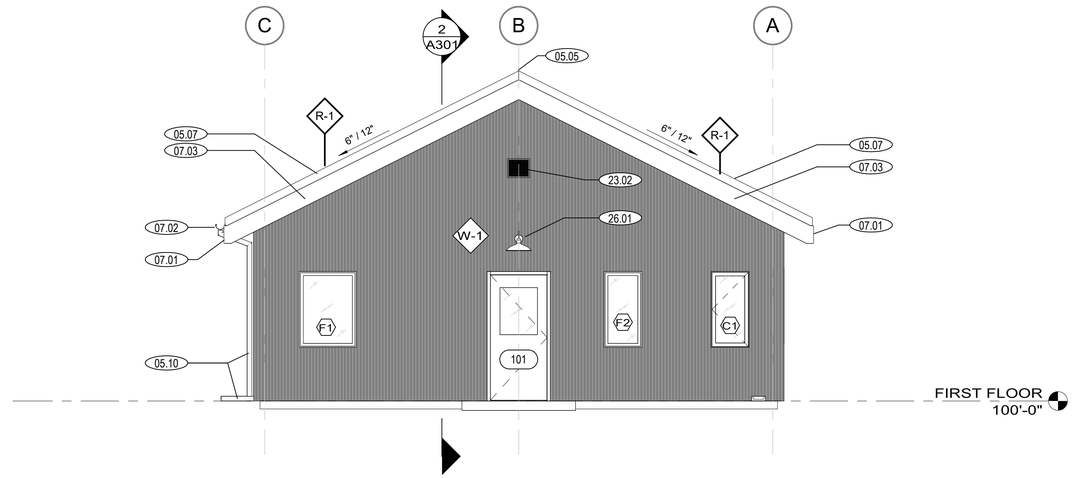

1 A401 ENLARGED EAST ELEVATION
SCALE A

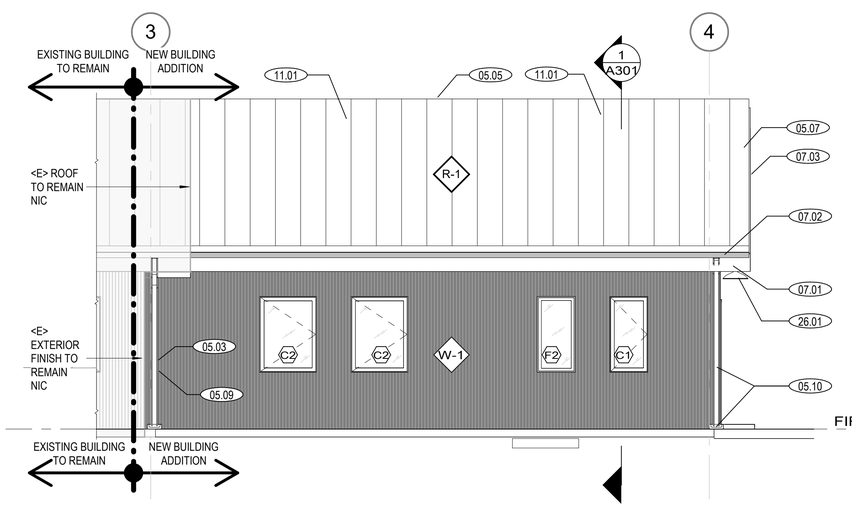

2 A401 ENLARGED SOUTH ELEVATION
SCALE A

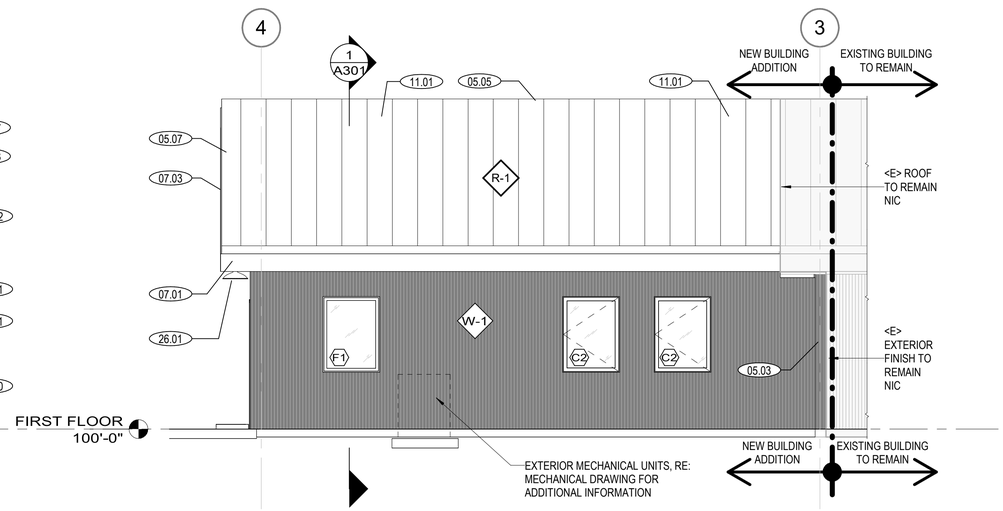

3 A401 ENLARGED NORTH ELEVATION
SCALE A

GENERAL NOTES

1. REFER TO INDIVIDUAL DISCIPLINES FOR FULL SCOPE OF WORK.
2. REFER TO WINDOW AND DOOR SCHEDULE FOR DIMS AND MORE INFORMATION.
3. REFER TO G001 GENERAL NOTES AND INDEX FOR SYMBOL INFORMATION.
4. REFER TO SHEET G210 FOR ASSEMBLY INFORMATION.

LEGEND

= CORRUGATED METAL SIDING - VERTICALLY ORIENTED

= STANDING SEAM METAL ROOF FLASHING FINISH TO MATCH

= AREA OF <E> BUILDING NIC

KEYNOTES

05.03	AT <E> EXTERIOR MTL FINISH, PROVIDE A 6"MIN OVERLAP BETEEWN N> AND <E> EXTERIOR MTL FINISH, PROVIDE <N> SEALANT BEWTEEN <N> AND <E> PANELS FOR ENTIRE LENGTH OF EXTERIOR MTL PANEL.
05.05	<N> MTL RIDGE CAP AND ROOF EDGE AT <N> ADDITION ROOF.
05.07	INSTALL <E> SALVAGED ROOF EDGE CLOSER AT <N> ROOF OUTRIGGER LOCATION
05.09	INSTALL <E> SALVAGED MTL DOWNSPOUT UPON COMPLETION OF THE INSTALLATION OF EXTERIOR FINISHS.
05.10	INSTALL <N> DOWNPOUT AND SPLASH BLOCK TO MATCH <E> AT <E> BUILDING.
07.01	<N> PREFINISHED METAL FLASHING, FINISH TO MATCH STANDING SEAM ROOF, RE: DETAILS.
07.02	<N> PREFINISHED HALF-ROUND GUTTER AND DOWNSPOUT, FINISH TO MATCH STANDING SEAM ROOF AND <E> GUTTER AND DOWNSPOUT AT <E> BUILDING, REMOVE AND SALVAGED <E> END CAP, FOR REUSE AT <N> END OF GUTTER, PROVIDE 6" MIN. OVER LAP WITH SEALANT BETWEEN <N> AND <E>, PROVIDE WATER TIGHT CONNECTION BETEEN <E> AND <N> GUTTER.
07.03	INSTALL <N> MTL FASCIA TO MATCH <E> AT <N> ROOF OUTRIGGER.
11.01	<N> ROOFTOP HORIZONTAL FALL ARREST SYSTEM WITH PERMANENT ANCHORS EA SIDE OF RIDGE. ANCHORS TO BE NO LESS THAN 6-FT FROM EDGE OF ROOF AND FASTENED TO RAFTERS, COORDINATE WITH ROOFING INSTALL, SEAL AND DETAIL PENETRATIONS PER ROOFING MFR STANDARD DETAILS, RE: STRUCT
23.02	PREFINISHED METAL LOUVER, RE: MECH
26.01	<N> LIGHT FIXTURE TO MATCH <E> LIGHT FIXTURE AT <E> BUILDING, RE: ELEC

SCALE: A 8 0 8 16
SCALE OF FEET

LICENSED ARCHITECT 3-20-2026 ELIZABETH HALLAS AR-985880 STATE OF IDAHO

A/E FIRM: PRIME: ANDERSON HALLAS ARCHITECTS, PC GOLDEN, CO	DESIGNED: BC	SUB SHEET NO. A401	TITLE OF SHEET ENLARGED EXTERIOR ELEVATIONS
	CADD: BC / DM		MIIN MAINTENANCE BUILDING ADDITION
	TECH REVIEW: EH / CR		MINIDOKA NATIONAL HISTORIC SITE
	DATE: 03/20/2026		

DRAWING NO. XX / XX
PMIS/PKG NO. XXXXXX
SHEET 15 OF 54

3/19/2026 1:26:47 PM Autodesk Docs://2025-560 MIIN Maintenance Bldg Addition/2025560 NPS MIIN Addition - v26.rvt

C:\Users\bcook\AppData\Local\Autodesk\Autodesk Revit\Autodesk Revit 2026\CollaborationCache\LQTJECRCLQB88DWS\314b0366-7328-4131-bba2-9d5630df132b\50685\b5-1cb2-492a-965b-7be7f9cd0b00.rvt
8/7/2026 3:56:57 PM

DOOR SCHEDULE AT ADDITION

NUMBER	ROOM LOCATION NAME	ROOM LOCATION NUMBER	INTERIOR / EXTERIOR	FRAME TYPE	DOOR TYPE	DOOR MATERIAL	GLAZING	SIZE THICKNESS	SIZE WIDTH	SIZE HEIGHT	DETAILS HEAD DETAIL	DETAILS JAMB DETAIL	DETAILS THRESHOLD DETAIL	HARDWARE SET	COMMENTS
100	HALL	101	INT	-	-	-	-	-	3'-0"	6'-8"	-	-	-	-	<N> WALL OPENING TO CONNECT TO <E> BUILDING, RE: A101
101	HALL	101	EXT	HM	A	HM/GL	GL-2	1 3/4"	3'-0"	6'-8"	3/A502	2/A502	1/A502	01	
102	OFFICE	102	INT	HM	B	WD/GL	GL-2	1 3/4"	3'-0"	6'-8"	6/A502	5/A502	4/A502	02	SN
103	OFFICE	103	INT	HM	B	WD/GL	GL-2	1 3/4"	3'-0"	6'-8"	6/A502	5/A502	4/A502	02	SN
104	OFFICE	104	INT	HM	B	WD/GL	GL-2	1 3/4"	3'-0"	6'-8"	6/A502	5/A502	4/A502	02	SN
105	OFFICE	105	INT	HM	B	WD/GL	GL-2	1 3/4"	3'-0"	6'-8"	6/A502	5/A502	4/A502	02	SN
106	OFFICE	106	INT	HM	B	WD/GL	GL-2	1 3/4"	3'-0"	6'-8"	6/A502	5/A502	4/A502	02	SN
107	OFFICE	107	INT	HM	B	WD/GL	GL-2	1 3/4"	3'-0"	6'-8"	6/A502	5/A502	4/A502	02	SN

MATERIAL AND COMMENT KEY

HM/GL	HOLLOW METAL, PRIMED AND PAINTED - TEMPERED GLAZING
WD/GL	WOOD FINISH, STAINED - TEMPERED GLAZING
SN	PROVIDE ROOM SIGNAGE AT EXTERIOR SIDE OF DOOR 12" FROM LATCH SIDE OF DOOR TO CENTER OF SIGNAGE AND 60" AFF TO CENTER OF SIGNAGE

DOOR GENERAL NOTES

1. VERIFY IN FIELD ALL DIMENSIONS FOR ROUGH OPENINGS.
2. PROVIDE NEW DOOR SWEEPS AND WEATHER STRIPPING AT ALL EXTERIOR DOORS.
3. PAINT ALL DOOR AND INTERIOR WINDOW TRIM, RE: FINISH SCHEDULE.
4. PROVIDE CLEAR STAIN AT ALL INTERIOR WOOD DOORS.
5. DOOR ELEVATIONS DISPLAY EXTERIOR ELEVATION U.O.N.
6. ALL GLAZING IN OPERABLE DOORS TO BE TEMPERED, RE: SPECIFICATIONS

WINDOW GENERAL NOTES

1. VERIFY IN FIELD ALL DIMENSIONS FOR ROUGH OPENINGS.
2. PAINT ALL INTERIOR WINDOW TRIM SURROUND, RE: FINISH SCHEDULE.
3. EXTERIOR WINDOW TRIM TO BE SELECTED FROM MANUFACTURER STANDARD OPTIONS.
4. PROVIDE INSECT SCREENS AT ALL OPERABLE WINDOWS.
5. SEPARATE ALL DISSIMILAR MATERIALS.
6. WINDOW ELEVATIONS DISPLAY EXTERIOR ELEVATION U.O.N.

DOOR PANEL TYPES

N.T.S

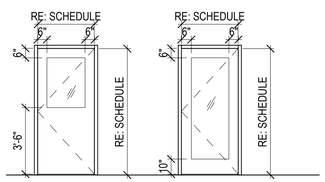

TYPE A
HALF LITE
PANEL

TYPE B
FULL LITE
PANEL

FRAME TYPES

N.T.S

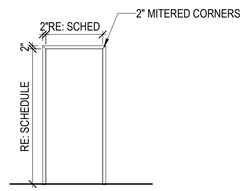

HM
HOLLOW METAL
FRAME

WINDOW SCHEDULE AT ADDITION

ROOM NUMBER	EXISTING / NEW	WINDOW TYPE	WIDTH	HEIGHT	HEAD HEIGHT	DETAILS HEAD	DETAILS JAMB	DETAILS SILL	COMMENTS
102	NEW	C2	3'-0"	4'-0"	7'-0"	3/A501	4/A501	2/A501	
103	NEW	C2	3'-0"	4'-0"	7'-0"	3/A501	4/A501	2/A501	
104	EXISTING / SALVAGED	F2	2'-0"	4'-0"	6'-10"	3/A501	4/A501	2/A501	INSTALL SALVAGED WINDOW
104	EXISTING / SALVAGED	F1	3'-0"	4'-0"	7'-0"	3/A501	4/A501	2/A501	INSTALL SALVAGED WINDOW
104	NEW	C1	2'-0"	4'-0"	6'-10"	3/A501 SIM	4/A501 SIM	2/A501 SIM	
105	NEW	C2	3'-0"	4'-0"	7'-0"	3/A501	4/A501	2/A501	
106	NEW	C2	3'-0"	4'-0"	7'-0"	3/A501	4/A501	2/A501	
107	EXISTING / SALVAGED	F1	3'-0"	4'-0"	6'-10"	3/A501	4/A501	2/A501	INSTALL SALVAGED WINDOW
107	NEW	C1	2'-0"	4'-0"	7'-0"	3/A501 SIM	4/A501 SIM	2/A501 SIM	
107	EXISTING / SALVAGED	F2	2'-0"	4'-0"	7'-0"	3/A501	4/A501	2/A501	INSTALL SALVAGED WINDOW

WINDOW TYPES

N.T.S

CASEMENT WINDOW

<E> FIXED WINDOW

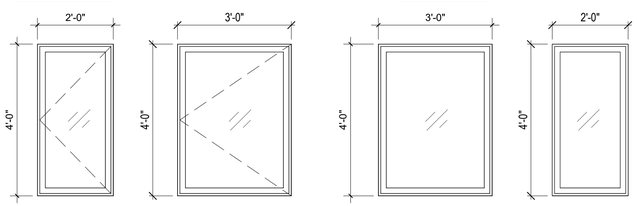

TYPE C1 TYPE C2 TYPE F1 TYPE F2

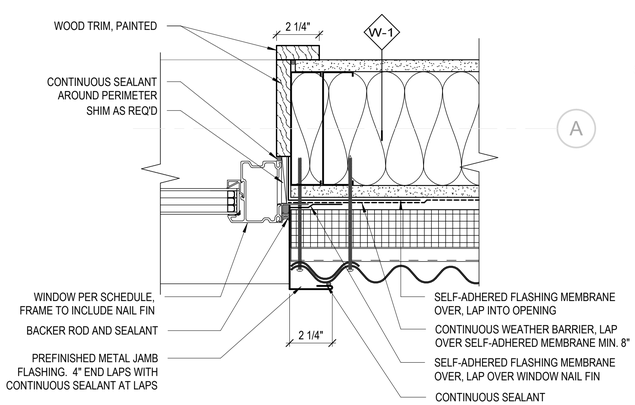

4 A501 FIXED WINDOW, JAMB TYP
SCALE (B)

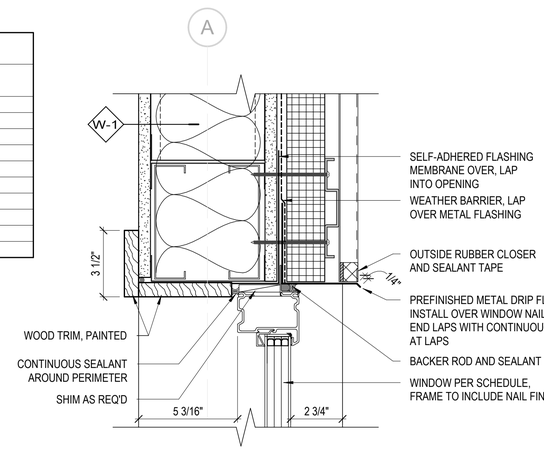

3 A501 CASEMENT WINDOW HEAD, TYP
SCALE (B)

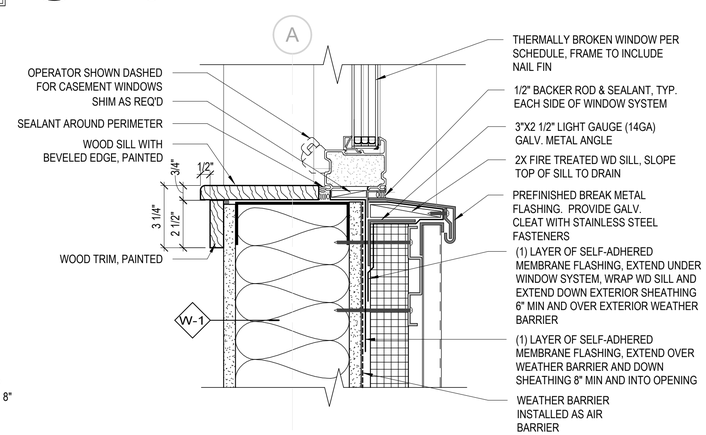

2 A501 FIXED WINDOW SILL, TYP
SCALE (B)

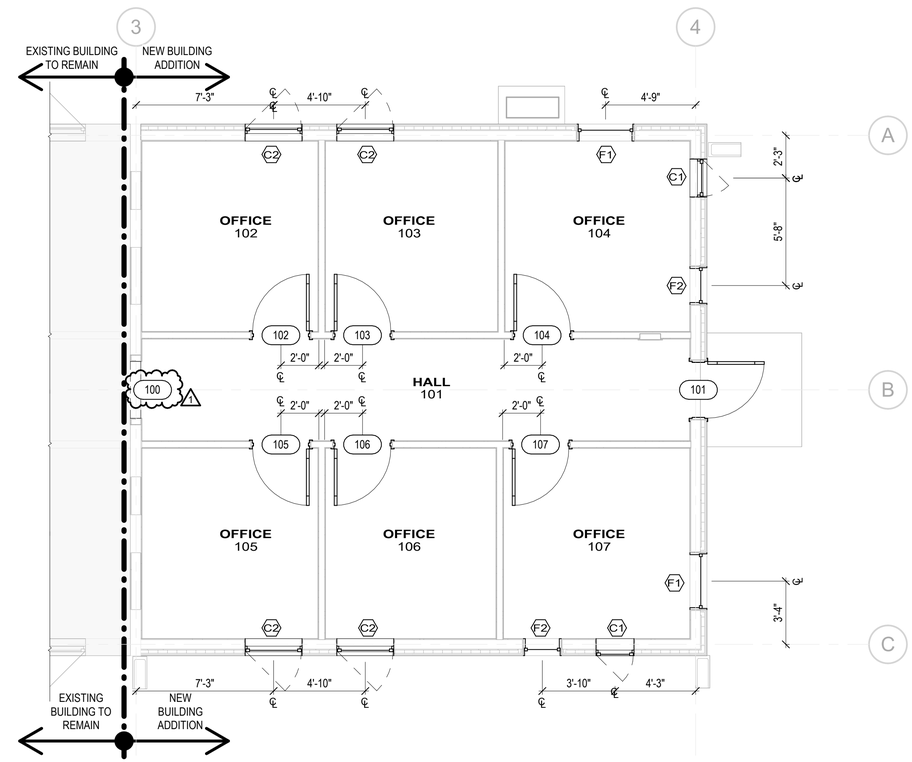

1 A501 ENLARGED DOOR AND WINDOW KEY PLAN AT ADDITION
SCALE (A)

SCALE: (B) 6 3 0 6 SCALE OF INCHES

SCALE: (A) 4 0 4 8 SCALE OF FEET

BLDG. NORTH

LICENSED ARCHITECT
8-10-2026
ELIZABETH HALLAS
AR-985880
STATE OF IDAHO

A/E FIRM:	DESIGNED:	SUB SHEET NO.	TITLE OF SHEET	DRAWING NO.
PRIME: ANDERSON HALLAS ARCHITECTS, PC GOLDEN, CO	BC	A501	DOOR AND WINDOW SCHEDULE, TYPES	XXX XXX
	DRAWN: BC / DM		MIIN MAINTENANCE BUILDING ADDITION	PMIS/PKG NO. XXXXXX
	TECH REVIEW: EH / CR		MINIDOKA NATIONAL HISTORIC SITE	SHEET 16 OF 54
	DATE: 03/20/2026			

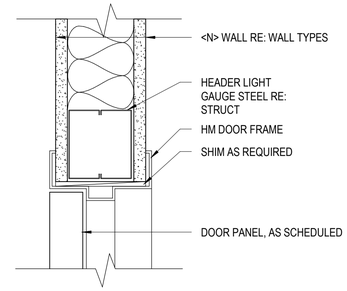

6 A502 DOOR HEAD - INTERIOR STUD WALL, TYP
SCALE A

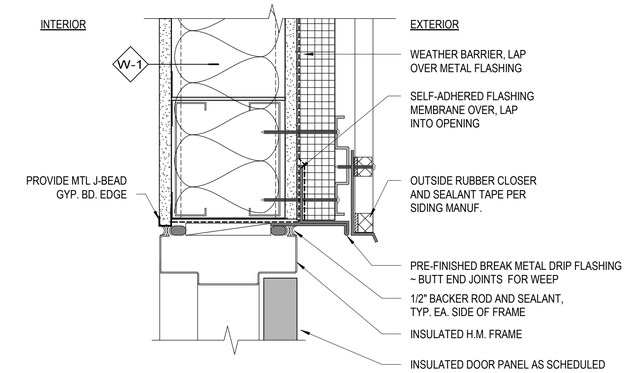

3 A502 DOOR HEAD - EXTERIOR HM, TYP
SCALE A

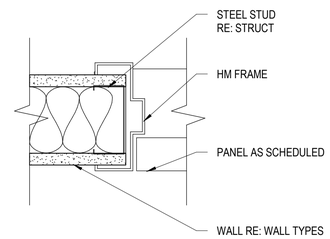

5 A502 DOOR JAMB - INTERIOR STUD WALL, TYP
SCALE A

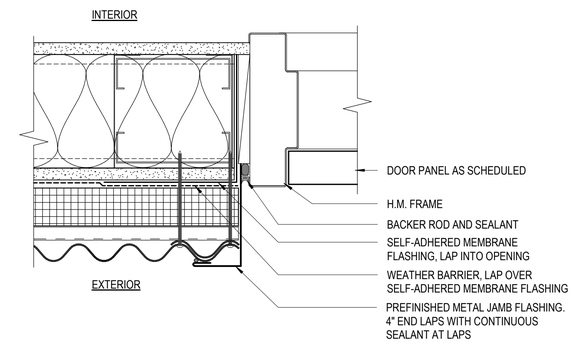

2 A502 DOOR JAMB - EXTERIOR HM, TYP
SCALE A

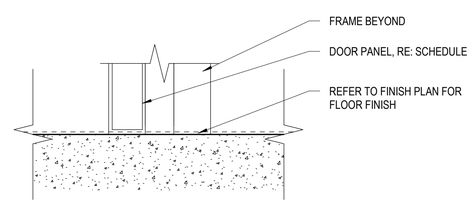

*REFER TO DOOR HARDWARE SPECIFICATIONS FOR DOOR HARDWARE REQUIREMENTS

4 A502 THRESHOLD - INTERIOR DOOR, TYP
SCALE A

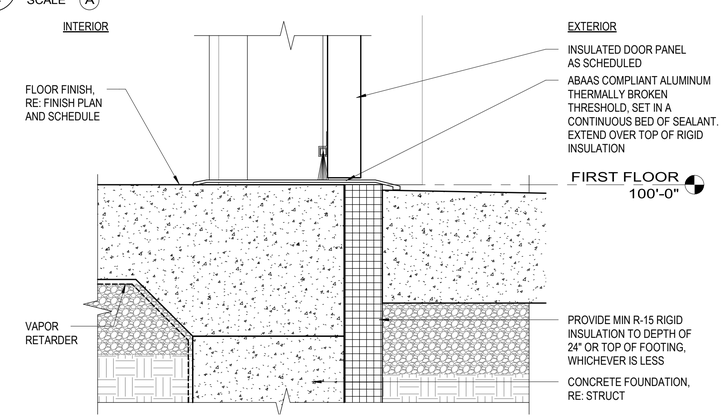

1 A502 DOOR SILL - EXTERIOR HM
SCALE A

SCALE: A 6 3 0 6
SCALE OF INCHES

LICENSED ARCHITECT
3-20-2026
ELIZABETH HALLAS
AR-985880
STATE OF IDAHO

A/E FIRM:	DESIGNED:	SUB SHEET NO.	TITLE OF SHEET	DRAWING NO.
PRIME: ANDERSON HALLAS ARCHITECTS, PC GOLDEN, CO	BC	A502	DOOR DETAILS	XX / XX
	CADD BC / DM			PMIS/PKG NO. XXXXXX
	TECH REVIEW: EH / CR		MIIN MAINTENANCE BUILDING ADDITION MINIDOKA NATIONAL HISTORIC SITE	SHEET 17 OF 54
	DATE: 03/20/2026			

3/19/2026 1:26:50 PM Autodesk Docs://2025-560 MIIN Maintenance Bldg Addition/2025560 NPS MIIN Addition - v26.rvt

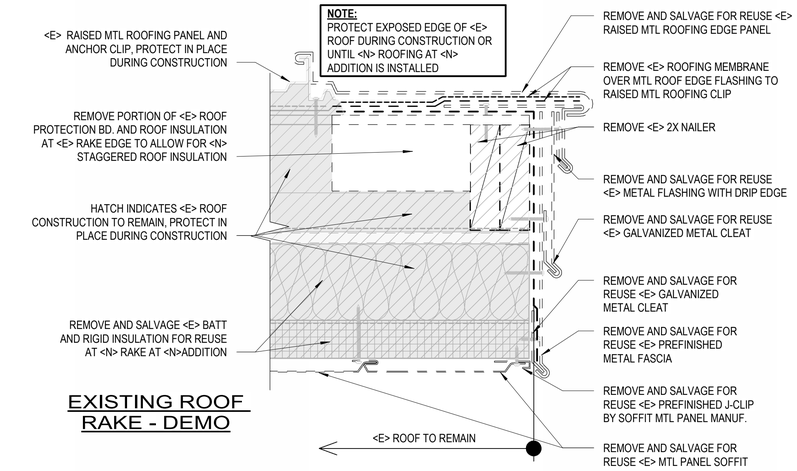

EXISTING ROOF RAKE - DEMO

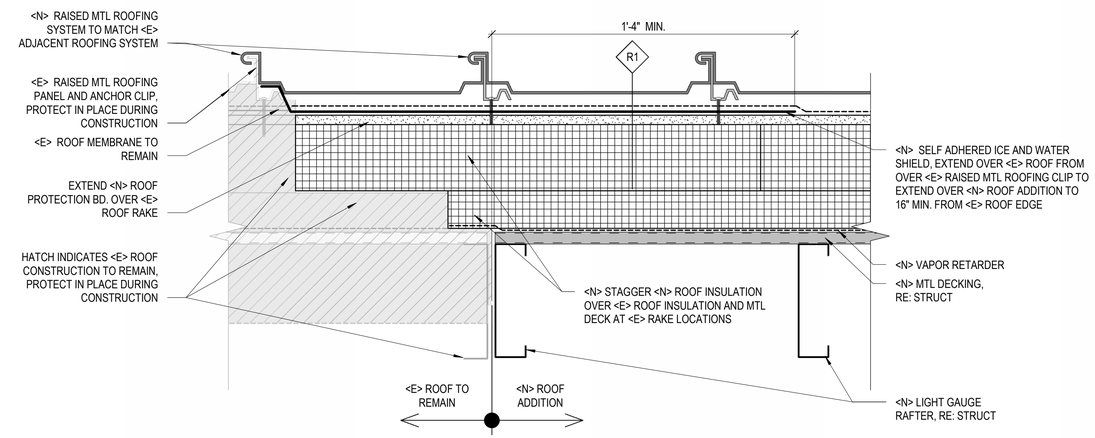

EXISTING / NEW ROOF ADDITION - CONNECTION

3 A601 SECTION DETAIL - EXISTING ROOF RAKE - NEW ROOF ADDITION

SCALE (A)

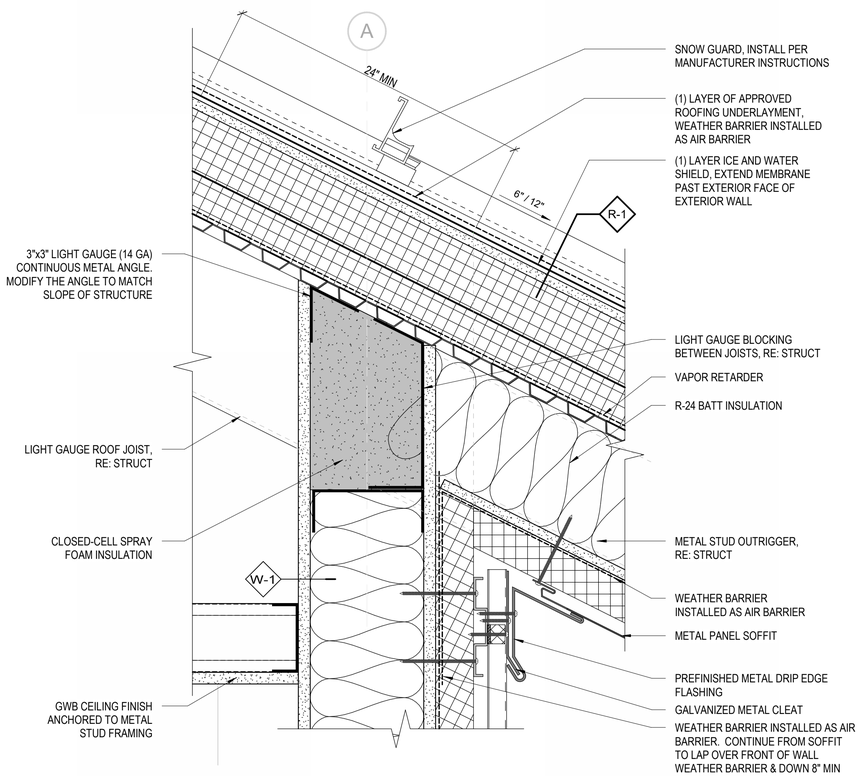

2 A601 SECTION DETAIL - EXTERIOR WALL TO ROOF

SCALE (A)

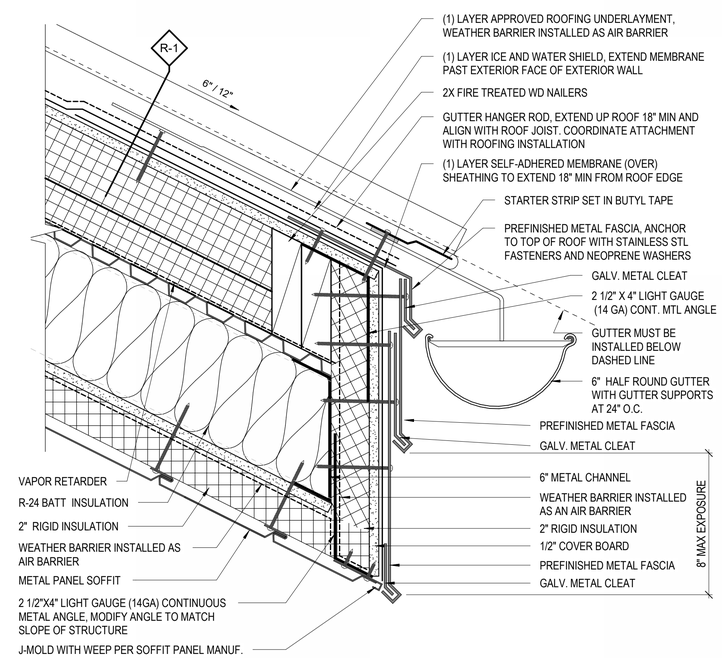

1 A601 SECTION DETAIL, EAVE W/ GUTTER TYP

SCALE (A)

SCALE: (A) 6 3 0 6 SCALE OF INCHES

NOTE: WHEN THE WEATHER BARRIER IS INSTALLED AS AN AIR BARRIER, ALL SEAMS AND PENETRATIONS SHALL BE TAPED AND SEALED.

LICENSED ARCHITECT 3-20-2026 ELIZABETH HALLAS AR-985880 STATE OF IDAHO

A/E FIRM:	DESIGNED:	SUB SHEET NO.	TITLE OF SHEET	DRAWING NO.
PRIME: ANDERSON HALLAS ARCHITECTS, PC GOLDEN, CO	BC	A601	EXTERIOR DETAILS	XX / XX
	CADD BC / DM			PMIS/PKG NO. XXXXXX
	TECH REVIEW: EH / CR		MIIN MAINTENANCE BUILDING ADDITION MINIDOKA NATIONAL HISTORIC SITE	SHEET 18 OF 54
	DATE: 03/20/2026			

3/19/2026 1:26:51 PM Autodesk Docs://2025-560 MIIN Maintenance Bldg Addition/2025560 NPS MIIN Addition - v26.rvt

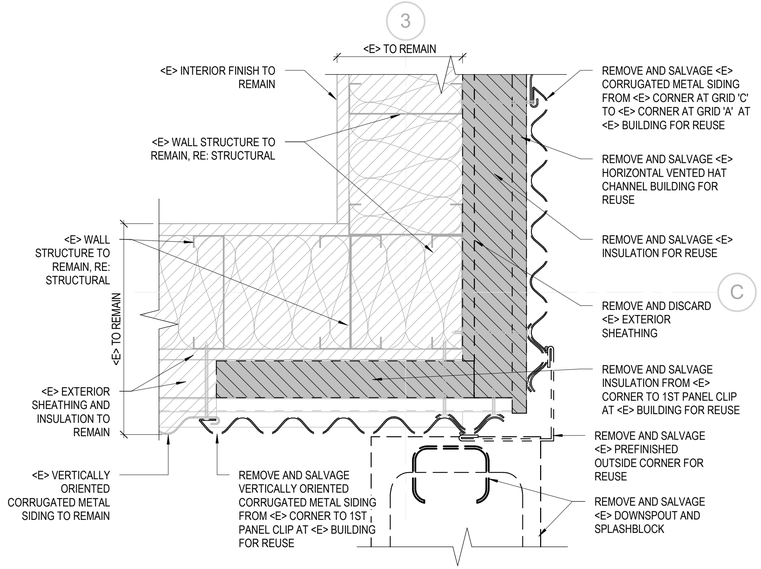

6 A602 PLAN DETAIL - EXISTING CORNER
SCALE A

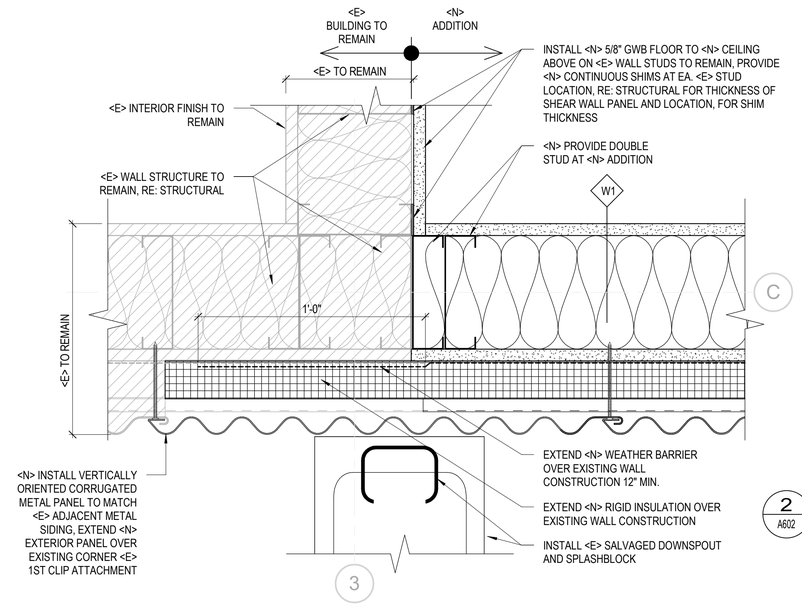

4 A602 PLAN DETAIL - NEW ADDITION CONNECTION
SCALE A

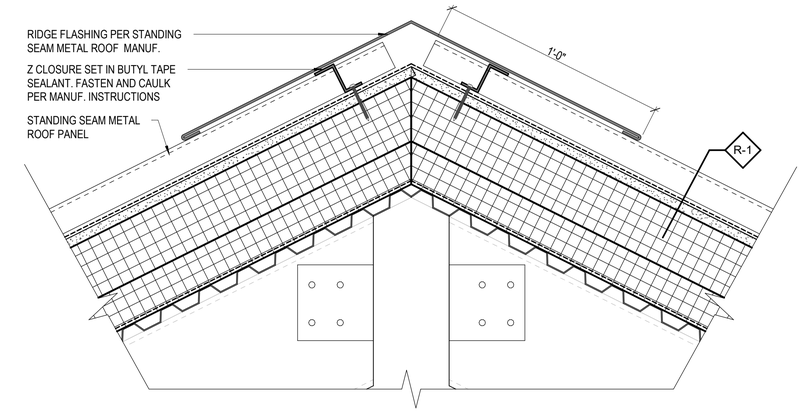

2 A602 STANDING SEAM METAL ROOF AT RIDGE
SCALE A

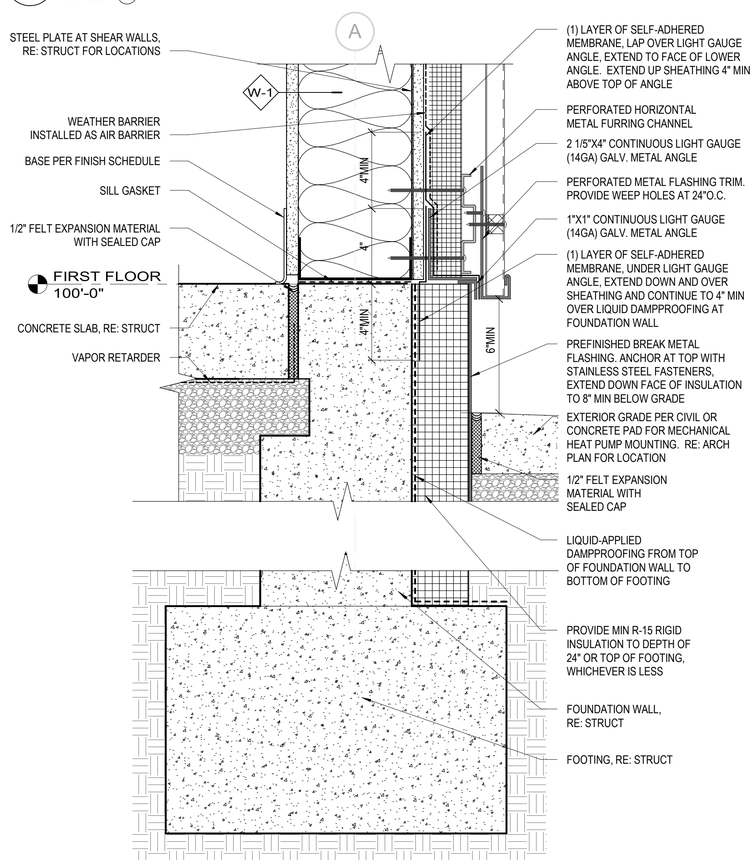

5 A602 SECTION DETAIL - BASE OF WALL AT GRADE
SCALE A

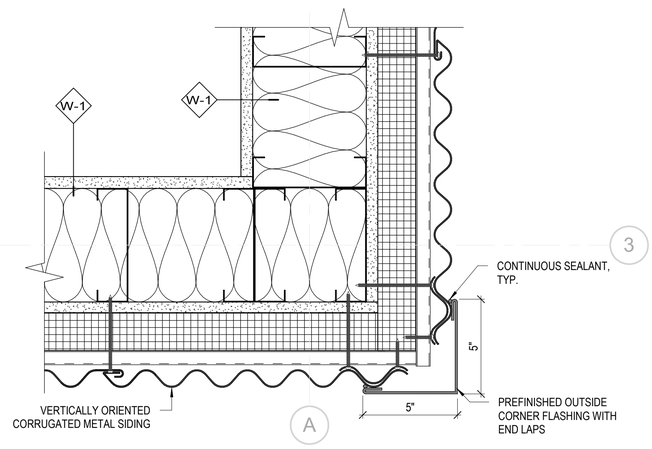

3 A602 PLAN DETAIL - EXTERIOR CORNER WITHOUT DOWNSPOUT
SCALE A

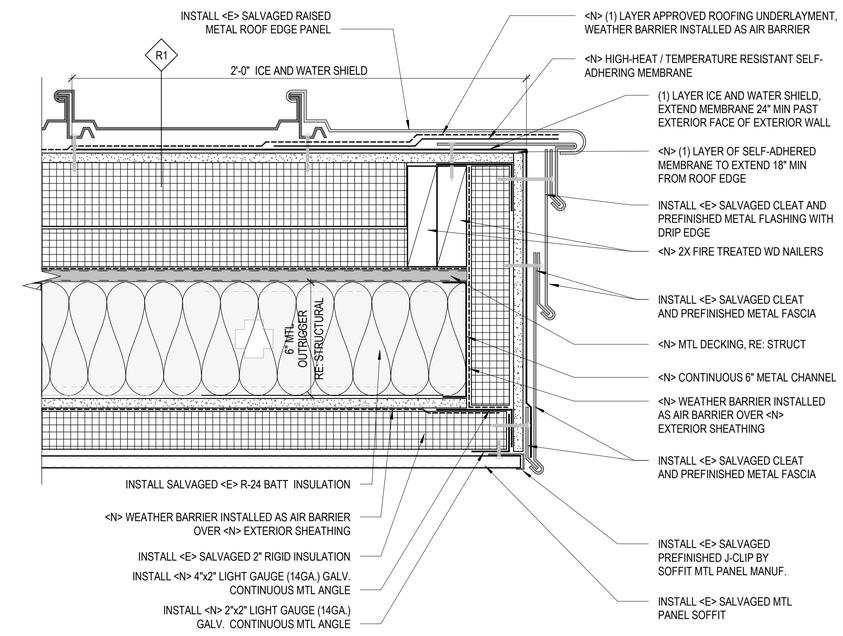

1 A602 SECTION DETAIL - ROOF RAKE
SCALE A

SCALE: A 6 3 0 6 SCALE OF INCHES

NOTE: WHEN THE WEATHER BARRIER IS INSTALLED AS AN AIR BARRIER, ALL SEAMS AND PENETRATIONS SHALL BE TAPED AND SEALED.

LICENSED ARCHITECT 3-20-2026 ELIZABETH HALLAS AR-985880 STATE OF IDAHO

A/E FIRM:	DESIGNED:	SUB SHEET NO.	TITLE OF SHEET	DRAWING NO.
PRIME: ANDERSON HALLAS ARCHITECTS, PC GOLDEN, CO	BC	A602	EXTERIOR DETAILS	XX / XX
	CADD BC / DM			PMIS/PKG NO. XXXXXX
	TECH REVIEW: EH / CR		MIIN MAINTENANCE BUILDING ADDITION MINIDOKA NATIONAL HISTORIC SITE	SHEET 19 OF 54
	DATE: 03/20/2026			

3/19/2026 1:26:53 PM Autodesk Docs://2025-560 MIIN Maintenance Bldg Addition/2025560 NPS MIIN Addition - v26.rvt

STRUCTURAL GENERAL NOTES

DESIGN LOADS:

1. AUTHORITY HAVING JURISDICTION: UNITED STATES GOVERNMENT
2. DESIGN LOADS BASED ON: 2024 INTERNATIONAL BUILDING CODE (IBC), ASCE 7-22, AND REFERENCED DOCUMENTS
3. RISK CATEGORY: II STANDARD
4. SITE LOCATION:
   - A. ELEVATION 3,960 FT
   - B. COORDINATES 42.6797 N, 114.2527 W
5. ROOF LOADS
   - A. ROOF DEAD LOAD (INCLUDES 5 PSF ALLOWANCE FOR FUTURE PV) — 22 PSF (16 PSF TOP CHORD, 6 PSF BOTTOM CHORD)
   - B. ROOF LIVE LOAD — 20 PSF, 300 LBS
   - C. ATTIC LIVE LOAD — 20 PSF
   - D. GROUND SNOW LOAD, Pg — 49 PSF (ULTIMATE)
   - E. GROUND SNOW LOAD, Pg_{ASD} — 34 PSF (ALLOWABLE)
   - F. FLAT-ROOF SNOW LOAD, Pf — 41.2 PSF (ULTIMATE)
   - G. SNOW EXPOSURE FACTOR, Ce — 1.0
   - H. THERMAL FACTOR, Ct — 1.2
   - I. WINTER WIND PARAMETER, W2 — 0.25
6. WIND:
   - A. BASIC DESIGN WIND SPEED, V, (3-SECOND GUST) — 115 MPH (JEROME COUNTY MINIMUM REQUIREMENT)
   - B. ALLOWABLE STRESS DESIGN WIND SPEED, V_{ASD}, (3-SECOND GUST) — 90 MPH (JEROME COUNTY MINIMUM REQUIREMENT)
   - C. INTERNAL PRESSURE COEFFICIENT — ±0.55 (PARTIALLY ENCLOSED)
   - D. WIND EXPOSURE — C
   - E. AIR DENSITY COEFFICIENT — 0.87
   - F. COMPONENTS AND CLADDING ULTIMATE DESIGN WIND PRESSURES
     1. WALLS:
        - a. WITHIN 3 FEET OF CORNERS — +32.9 PSF -41.4 PSF
        - b. AWAY FROM CORNERS — +32.9 PSF -35.0 PSF
     2. ROOFS (SEE ASCE 7 FIGURE 30.3-2B, a = 3 FEET)
        - a. ZONE 1 & 2e — +24.4 PSF -43.5 PSF
        - b. ZONE 2n, 2r & 3e — +24.4 PSF -64.7 PSF
        - c. ZONE 3r — +24.4 PSF -75.3 PSF
     3. OVERHANGS (SEE ASCE 7 FIGURE 30.3-2B, a = 3 FEET):
        - a. ZONE 1 & 2e — +24.4 PSF -55.2 PSF
        - b. ZONE 2n & 2r — +24.4 PSF -76.4 PSF
        - c. ZONE 3e — +24.4 PSF -82.8 PSF
        - d. ZONE 3r — +24.4 PSF -87.0 PSF
     4. PRESSURES MAY BE REDUCED FOR EFFECTIVE WIND AREAS LARGER THAN 10 SQUARE FEET, BUT NOT BELOW 16 PSF.
     5. ALLOWABLE WIND PRESSURE (ASD) MAY BE DETERMINED BY MULTIPLYING THE ULTIMATE PRESSURE BY 0.6.
7. SEISMIC:
   - A. SPECTRAL RESPONSE ACCELERATION PARAMETERS
     1. SHORT PERIOD
        - a. S_S — 0.18g
        - b. S_{DS} — 0.21g
     2. ONE SECOND
        - a. S_1 — 0.074g
        - b. S_{D1} — 0.14g
   - B. SOILS SITE CLASS — D
   - C. SEISMIC IMPORTANCE FACTOR — 1.0
   - D. SEISMIC DESIGN CATEGORY — C (JEROME COUNTY MINIMUM REQUIREMENT)
   - E. BASIC SEISMIC-FORCE-RESISTING SYSTEM — STEEL SYSTEMS NOT SPECIFICALLY DETAILED FOR SEISMIC RESISTANCE
   - F. DESIGN BASE SHEAR — 0.069W KIPS
   - G. SEISMIC RESPONSE COEFFICIENT, C_S — 0.069
   - H. RESPONSE MODIFICATION COEFFICIENT, R — 3
   - I. ANALYSIS PROCEDURE — EQUIVALENT LATERAL FORCE (ELF)

FOUNDATION DESIGN:

1. REFER TO SOILS REPORT #501559002 BY NINYO & MOORE, DATED MARCH 23, 2022
2. GEOTECHNICAL ENGINEER SPECIAL INSPECTOR (EMPLOYED BY THE CONTRACTOR) SHALL VERIFY SOIL CONDITIONS AND TYPES DURING EXCAVATION AND PRIOR TO PLACEMENT OF FORMWORK OR CONCRETE.
3. MINIMUM FROST DEPTH SHALL BE 2'-0" BELOW EXTERIOR GRADE.

FOOTINGS:

1. DESIGN OF FOOTINGS IS BASED ON A MAXIMUM ALLOWABLE BEARING PRESSURE OF 2,000 PSF
2. BEAR ON 12" OR MORE OF COMPACTED STRUCTURAL FILL. EXTERIOR FOOTINGS SHALL BEAR BELOW FROST DEPTH.

REINFORCED CONCRETE:

1. DESIGN IS BASED ON ACI 318 "BUILDING CODE REQUIREMENTS FOR STRUCTURAL CONCRETE" BY THE AMERICAN CONCRETE INSTITUTE (ACI).
2. CONCRETE WORK SHALL CONFORM TO ACI 301 "STANDARD SPECIFICATIONS FOR STRUCTURAL CONCRETE."
3. STRUCTURAL CONCRETE SHALL HAVE THE FOLLOWING PROPERTIES:

INTENDED USE	EXPOSURE CLASS	f'c, PSI 28 DAYS	MAX W/CM RATIO	MAXIMUM AGGREGATE	SLUMP, INCHES (+/- 1")	AIR CONTENT PERCENT (+/- 1.5%)	CEMENT TYPE	ADMIXTURES / COMMENTS
FOOTINGS	F0-S0-W0-C1	3000	0.52	3/4" STONE	5	N/A	I/II	15% MIN, 25% MAX FLY ASH
STEM WALLS	F2-S0-W0-C1	4500	0.45	3/4" STONE	4	6%	I/II	15% MIN, 25% MAX FLY ASH
INTERIOR SLAB ON GRADE	F0-S0-W0-C0	4000	0.45	3/4" STONE	4	N/P	I/II	15% MIN, 25% MAX FLY ASH
EXTERIOR SLAB ON VOID	F3-S0-W1-C2	5000	0.40	3/4" STONE	4	6%	I/II	15% MIN, 25% MAX FLY ASH

4. CONCRETE MIX TABLE NOTES:
   - A. SLUMP VALUES INDICATED ARE SUGGESTED BASED ON USE AND TYPICAL PLACEMENT METHODS. CONTRACTOR MAY ADJUST SLUMP AS NECESSARY FOR FIELD CONDITONS AND INSTALLATION METHOD USED PROVIDED REMAINING REQUIREMENTS ARE MET.
   - B. AIR CONTENT:
     - a. N/P: AIR ENTRAINING ADMIXTURES NOT PERMITTED, ENTRAPPED AIR ONLY
     - b. N/A: NOT APPLICABLE, NO STRUCTURAL AIR CONTENT REQUIREMENTS
   - C. GENERAL CONTRACTOR TO COORDINATE CONCRETE MOISTURE LEVEL AND ANTICIPATED MOISTURE MITIGATION PROCEDURES WITH CONCRETE SUPPLIER/MIX DESIGNER AND OTHER AFFECTED SUBCONTRACTORS (INCLUDING BUT NOT LIMITED TO FLOORING) TO ADDRESS ALL POTENTIAL SCHEDULE AND INSTALLATION CONFLICTS.
5. DETAILING, FABRICATION, AND PLACEMENT OF REINFORCING STEEL SHALL BE IN ACCORDANCE WITH ACI 315 "DETAILS AND DETAILING OF CONCRETE REINFORCEMENT."
6. WELDED WIRE FABRIC SHALL CONFORM TO ASTM A1064.
7. REINFORCING BARS SHALL CONFORM TO ASTM A615, GRADE 60, EXCEPT BARS SHOWN TO BE FIELD-BENT SHALL BE ASTM A706, GRADE 60.
8. BARS TO BE WELDED SHALL CONFORM TO ASTM A706.
9. UNLESS NOTED OTHERWISE ON THE STRUCTURAL DRAWINGS, LAP BARS PER THE CONCRETE LAP SPLICE SCHEDULE.
10. AT CORNERS AND INTERSECTIONS, MAKE HORIZONTAL BARS CONTINUOUS OR PROVIDE MATCHING CORNER BARS FOR EACH LAYER OF REINFORCEMENT.
11. TRIM OPENINGS IN WALLS AND SLABS WITH (2) #5 FOR EACH LAYER OF REINFORCEMENT, FULLY DEVELOPED BY EXTENSION OR HOOK.
12. IN CONTINUOUS MEMBERS, SPLICE TOP BARS AT MID-SPAN AND SPLICE BOTTOM BARS OVER SUPPORTS.
13. FORM INTERMITTENT SHEAR KEYS AT ALL CONSTRUCTION JOINTS AND AS SHOWN ON THE STRUCTURAL DRAWINGS.
14. EXCEPT AS NOTED ON THE DRAWINGS, CONCRETE PROTECTION FOR REINFORCEMENT IN CAST-IN-PLACE CONCRETE SHALL BE AS FOLLOWS:
    - A. CAST AGAINST AND PERMANENTLY EXPOSED TO EARTH: 3"
      1. EXPOSED TO EARTH OR WEATHER:
         - a. #6 THROUGH #18 BARS 2"
         - b. #5 BAR, W31 OR D31 WIRE, AND SMALLER 1-1/2"
    - B. NOT EXPOSED TO WEATHER OR IN CONTACT WITH GROUND:
      1. SLABS: 3/4"
15. ANCHOR RODS FOR COLUMN BASE PLATES SHALL BE PLACED WITH SETTING TEMPLATES.

POST-INSTALLED ANCHORS

1. ALL CAST IN PLACE ANCHORS DESIGNED IN ACCORDANCE WITH ACI 318.
2. POST-INSTALLED ANCHORS SHALL ONLY BE USED WHERE SPECIFIED ON THE CONSTRUCTION DOCUMENTS. THE CONTRACTOR SHALL OBTAIN APPROVAL FROM THE CONTRACTING OFFICER PRIOR TO INSTALLING POST-INSTALLED ANCHORS IN PLACE OF MISSING OR MISPLACED CAST-IN-PLACE ANCHORS.
3. CARE SHALL BE TAKEN IN PLACING POST-INSTALLED ANCHORS TO AVOID CONFLICTS WITH EXISTING REBAR. EXISTING REINFORCING BARS SHALL NOT BE CUT UNLESS APPROVED BY THE CONTRACTING OFFICER.
4. ALL ANCHORS MUST BE INSTALLED IN STRICT ACCORDANCE WITH THE MANUFACTURER'S PRINTED INSTALLATION INFORMATION (MPII) IN CONJUNCTION WITH EDGE DISTANCE, SPACING, AND EMBEDMENT DEPTH AS INDICATED ON THE DRAWINGS. HOLES SHALL BE DRILLED AND CLEANED IN ACCORDANCE WITH THE MPII.
5. SUBSTITUTION REQUESTS, FOR PRODUCTS OTHER THAN THOSE SPECIFIED, SHALL BE SUBMITTED BY THE CONTRACTOR TO THE CONTRACTING OFFICER.
6. THE CONTRACTOR SHALL ARRANGE FOR A MANUFACTURER'S FIELD REPRESENTATIVE TO PROVIDE INSTALLATION TRAINING FOR ALL PRODUCTS TO BE USED, PRIOR TO THE ANCHOR INSTALLATION. A RECORD OF TRAINING SHALL BE KEPT ON SITE AND MADE AVAILABLE TO THE CONTRACTING OFFICER/ SPECIAL INSPECTOR AS REQUESTED.
7. ADHESIVE ANCHORS INSTALLED IN HORIZONTAL TO VERTICALLY OVERHEAD ORIENTATION THAT SUPPORT SUSTAINED TENSION LOADS SHALL BE DONE BY A CERTIFIED ANCHOR INSTALLER (AAI) AS CERTIFIED THROUGH ACI/CRSI (ACI 318 17.8.2.2). PROOF OF CURRENT CERTIFICATION SHALL BE SUBMITTED TO THE CONTRACTING OFFICER FOR APPROVAL PRIOR TO COMMENCEMENT OF INSTALLATION.
8. ADHESIVE ANCHORS MUST BE INSTALLED IN CONCRETE AGED A MINIMUM OF 21 DAYS (ACI 318 17.1.2)
9. ALL POST INSTALLED ANCHORS SHALL BE INSTALLED IN DRY HOLES THAT HAVE BEEN DRILLED, CLEANED, AND PREPARED IN STRICT ACCORDANCE WITH THE MANUFACTURER'S PRINTED INSTALLATION INFORMATION AND THE RESPECTIVE ICC-ES EVALUATION REPORTS.
10. PROVIDE SPECIAL INSPECTION (EMPLOYED BY THE CONTRACTOR) FOR ALL MECHANICAL AND ADHESIVE ANCHORS PER THE APPLICABLE BUILDING CODE AND PER THE CURRENT ICC-ES REPORT (IBC TABLE 1705.3 NOTE B).

CONCRETE POST INSTALLED ANCHORS			
ANCHOR TYPE	DEWALT	HILTI	SIMPSON
EXPANSION	POWER-STUD+ SD2 (ICC ESR-2502)	KWIK BOLT TZ2 (ICC ESR-4266)	STRONG-BOLT 2 (ICC ESR-3037)
CONCRETE SCREW	SCREW-BOLT+ (ICC ESR 3889)	KWIK HUS-EZ (ICC ESR-3027)	TITEN HD (ICC ESR 2713)
ADHESIVE	AC200+ (ICC ESR-4027)	HIT-HY 200 (ICC ESR-3187)	AT-XP (UES ER-263)

STRUCTURAL STEEL:

1. STRUCTURAL STEEL SHALL BE DETAILED, FABRICATED, AND ERECTED IN ACCORDANCE WITH THE "SPECIFICATION FOR STRUCTURAL STEEL BUILDINGS" (AISC 360) AND THE "CODE OF STANDARD PRACTICE FOR STEEL BUILDINGS AND BRIDGES" (AISC 303) BY THE AMERICAN INSTITUTE OF STEEL CONSTRUCTION (AISC).
2. PLATES SHALL CONFORM TO ASTM A36, 36 KSI YIELD.
3. WELDING SHALL BE DONE BY A CERTIFIED WELDER IN ACCORDANCE WITH THE AISC DOCUMENTS LISTED ABOVE, THE AMERICAN WELDING SOCIETY (AWS) D1.1: STRUCTURAL WELDING CODE, AND THE RECOMMENDATIONS FOR USE OF WELD 70 KSI ELECTRODES.

STEEL DECKING:

1. STEEL ROOF DECK SHALL BE MANUFACTURED AND ERECTED IN ACCORDANCE WITH THE STANDARD DECK SPECIFICATIONS AND THE "MANUAL OF CONSTRUCTION WITH STEEL DECK" AS PREPARED BY THE STEEL DECK INSTITUTE (SDI).
2. ROOF DECK SHALL BE CONNECTED TO SUPPORTING MEMBERS AND INTERCONNECTED AS NOTED ON THE STRUCTURAL DRAWINGS.
3. DIAPHRAGM CAPACITY OR WELDING PATTERNS, SCREW PATTERNS, AND DETAILS SHALL BE AS INDICATED ON THE STRUCTURAL DRAWINGS.

STRUCTURAL DRAWING LIST	
S001	GENERAL NOTES
S002	GENERAL NOTES
S003	ABBREVIATIONS & SYMBOLS
S100	FOUNDATION & ROOF FRAMING PLANS
S501	SCHEDULES AND TYPICAL DETAILS
S502	FOUNDATION DETAILS
S503	FRAMING DETAILS
S510	TYPICAL COLD-FORMED STEEL DETAILS
S511	TYPICAL COLD-FORMED STEEL DETAILS

PROFESSIONAL ENGINEER LICENSED 17128 STATE OF IDAHO PAUL J HAUSE
March 13, 2026

DESIGNED: CDT
CADD: DJM/CDT/KM
TECH REVIEW: PJH
DATE: 03/20/2026

SUB SHEET NO. S001

TITLE OF SHEET: GENERAL NOTES

MIIN MAINTENANCE BUILDING ADDITION
MINIDOKA NATIONAL HISTORIC SITE

DRAWING NO. XX / XX
PMIS/PKG NO. XXXXXX
SHEET 20 OF 54

3/13/2026 3:39:11 PM Autodesk Docs://2025-560 MIIN Maintenance Bldg Addition/260011. STR NPS MIIN JVA Structural S26.rvt

COLD-FORMED STEEL FRAMING:

1. COLD-FORMED STEEL FRAMING SHALL CONFORM TO THE "NORTH AMERICAN SPECIFICATION FOR THE DESIGN OF COLD-FORMED STEEL STRUCTURAL MEMBERS" (AISI S100), THE "CODE OF STANDARD PRACTICE FOR COLD-FORMED STEEL FRAMING" (AISI S202) AND THE " NORTH AMERICAN STANDARD FOR COLD-FORMED STEEL STRUCTURAL FRAMING (AISI S240) BY THE AMERICAN IRON AND STEEL INSTITUTE (AISI).
2. ALL COLD-FORMED STEEL FRAMING (STUDS, JOISTS, TRACK, RAFTERS, BRACING, AND BRIDGING) SHALL BE GALVANIZED G-60 SHEET STEEL CONFORMING TO ASTM A1003.
3. STUDS AND JOISTS 54 MILS (16 GAUGE) AND HEAVIER SHALL BE 50 KSI YIELD. 43 MILS (18 GAUGE) AND LIGHTER SHALL BE 33 KSI YIELD UNLESS NOTED.
4. THE COLD-FORMED STEEL FRAMING SHOWN ON THESE DRAWINGS HAS BEEN DESIGNED. PROVIDE COLD-FORMED STEEL FRAMING AS DETAILED. ALTERNATE DESIGNS MAY BE CONSIDERED PROVIDED THEY ARE SUBMITTED ALONG WITH CALCULATIONS. ALTERNATE DRAWINGS AND CALCULATIONS WHICH ARE SUBMITTED MUST BE PREPARED BY A STRUCTURAL ENGINEER WITH CURRENT REGISTRATION IN THE STATE OF IDAHO.
5. ALL COLD-FORMED STEEL CONNECTIONS SHALL BE WELDED, SCREWED OR POWER FASTENED AS INDICATED ON THESE DRAWINGS.
   A. ALL WELDED CONNECTIONS SHALL BE PERFORMED IN ACCORDANCE WITH THE LATEST EDITION OF THE AWS D1.3 SPECIFICATION FOR WELDING SHEET STEEL IN STRUCTURES. ALL WELDING SHALL BE PERFORMED BY AWS CERTIFIED WELDERS. ALL WELDS SHALL BE CLEANED AND COATED WITH RUST INHIBITIVE ZINC PAINT. THE MINIMUM WELD LENGTH SHALL BE 1" FOR COLD-FORMED STEEL TO COLD-FORMED STEEL CONNECTIONS. INDICATED WELDING IS BASED ON 60 KSI ELECTRODES.
   B. SCREWS INDICATED IN THE DRAWINGS SHALL BE ASTM C1513 SELF-DRILLING SELF-TAPPING SCREWS UNLESS NOTED OTHERWISE. SCREWS SHALL BE SPACED A MINIMUM OF 3/4" BETWEEN ADJACENT SCREWS AND 1/2" FROM METAL EDGES.
   C. ALL POWER ACTUATED FASTENERS (PAF'S) INDICATED IN THE DRAWINGS SHALL BE 0.157" DIAMETER AND SHALL BE INSTALLED IN ACCORDANCE WITH THE MANUFACTURER'S INSTRUCTIONS.
      a. PROVIDE PAF'S FOR COLD-FORMED STEEL CONNECTIONS TO CONCRETE SUPPORTS WHERE INDICATED. UNLESS NOTED OTHERWISE, PAF'S IN CONCRETE SHALL BE SPACED 3" MINIMUM BETWEEN ADJACENT PAF'S AND 3" MINIMUM FROM CONCRETE EDGES. MINIMUM PAF EMBEDMENT IN CONCRETE SHALL BE 1 1/4".
      b. PROVIDE PAF'S FOR COLD-FORMED STEEL CONNECTIONS TO STRUCTURAL STEEL SUPPORTS WHERE INDICATED. UNLESS NOTED OTHERWISE, PAF'S IN STEEL SHALL BE SPACED 1 1/2" MINIMUM BETWEEN ADJACENT PAF'S AND 1/2" MINIMUM FROM STEEL EDGES. THE PAF POINT SHALL BE DRIVEN THROUGH THE BACK OF THE STRUCTURAL STEEL MEMBER.
6. COLD-FORMED STEEL CONNECTORS CALLED OUT IN THE DRAWINGS ARE SIMPSON STRONG-TIE CODE-APPROVED PRODUCTS AS USED FOR BASIS OF DESIGN. ALTERNATE PRODUCTS MAY BE USED THAT HAVE EQUAL OR GREATER SALIENT CHARACTERISTICS, INCLUDING SAME OR GREATER ALLOWABLE STRESS DESIGN CAPACITIES AND SAME INTENDED USE AS WELL AS SIMILAR BASIC GEOMETRIC PROPERTIES. NOTE THAT EXACT SIZE, GAGE, AND FASTENER SIZE/COUNT NEED NOT MATCH UNLESS SUCH CHARACTERISTICS ARE SPECIFICALLY NOTED. CONTRACTORS SHALL COMPARE SPECIFIED BASIS OF DESIGN PRODUCTS USING THE LATEST EDITION OF SIMPSON STRONG-TIES'S CATALOG TO PROPOSED PRODUCTS TO BE SUBMITTED TO CONTRACTING OFFICER FOR APPROVAL.
7. FASTEN COLD-FORMED STEEL TRACKS TO STUDS WITH (1) #10 SCREW EACH FLANGE AT EACH STUD. SQUARELY SEAT WALL STUDS AGAINST TOP AND BOTTOM TRACKS WITH GAP NOT EXCEEDING 1/16" BETWEEN THE END OF STUD AND THE WEB OF THE TRACK.
8. FASTEN COLD-FORMED STEEL TRACKS TO CONCRETE OR STEEL SUPPORTS WITH PAF'S AT 1'-4" MAXIMUM SPACING (8" MAXIMUM SPACING AT SHEARWALLS) UNLESS NOTED OTHERWISE. PROVIDE (2) PAF'S AT ALL JAMB STUDS.
9. PROVIDE TAUT COLD-FORMED STEEL FLAT STRAP BRIDGING AT 4'-0" MAXIMUM SPACING FOR WALLS STUDS AND AT MIDSPAN FOR RAFTERS AND JOISTS.
10. WHERE PUNCHOUTS ARE WITHIN 8" OF COLD-FORMED STEEL MEMBER ENDS, INSTALL UNPUNCHED TRACK STIFFENERS WITH (8) #10 SDST SCREWS TO THE MEMBER AS INDICATED.
11. PARALLEL COLD-FORMED STEEL MEMBERS IN CONTACT SHALL HAVE (2) #10 SCREWS @ 1'-4" MAX ALONG EACH CONTACT EDGE IN THE FIELD OF THE MEMBER.
12. ALL COLD-FORMED STEEL FRAMING MEMBERS SHALL BE CUT SQUARELY FOR ATTACHMENT TO PERPENDICULAR MEMBERS OR SLOPE CUT AS REQUIRED FOR AN ANGULAR FIT AGAINST ABUTTING MEMBERS. FIELD CUTTING OF COLD-FORMED STEEL FRAMING MEMBERS SHALL BE DONE BY SAWING OR SHEARING. TORCH CUTTING OF COLD-FORMED STEEL MEMBERS IS NOT PERMITTED.
13. INSTALL COLD-FORMED STEEL FRAMING MEMBERS IN ONE PIECE LENGTHS UNLESS SPLICE CONNECTIONS ARE INDICATED FOR TRACK OR TENSION MEMBERS.
14. REFER TO THE ARCHITECTURAL DRAWINGS FOR ALL DIMENSIONS PERTAINING TO THE COLD-FORMED STEEL FRAMING THAT ARE NOT INDICATED ON THESE DRAWINGS.
15. THESE DRAWINGS DO NOT INCLUDE DESIGN AND DETAILING FOR THE INTERIOR NON-STRUCTURAL COLD-FORMED STEEL FRAMING.
16. THE SSMA PRODUCT IDENTIFICATION CODES ARE USED TO LABEL MEMBERS ON THE DRAWINGS: [MEMBER DEPTH IN 1/100 INCHES] [STYLE] [FLANGE WIDTH IN 1/100 INCHES] [MATERIAL THICKNESS IN MILS] [YIELD STRENGTH KSI]

STYLE	SECTION	THICKNESS (MILS)	REFERENCE ONLY GAUGE NO.
S	STUD OR JOIST	33	20 - STRUCTURAL
T	TRACK	43	18
U	CHANNEL	54	16
F	FURRING CHANNEL	68	14
		97	12

PRE-ENGINEERED COLD-FORMED STEEL TRUSSES:

1. COLD-FORMED STEEL TRUSS DESIGN FOR THIS PROJECT IS A PERFORMANCE BASED, DELEGATED DESIGN. THE CONTRACTOR SHALL SUBMIT SHOP DRAWINGS AND CALCULATIONS FOR REVIEW PRIOR TO FABRICATION. CALCULATIONS SHALL BE PERFORMED BY A STRUCTURAL ENGINEER WITH CURRENT REGISTRATION IN THE STATE OF IDAHO.
2. TRUSSES SHALL BE DESIGNED TO SUPPORT THE FULL DEAD LOADS AND THE SUPERIMPOSED DESIGN LOADS NOTED ABOVE AND ON THE DRAWINGS.
3. TRUSSES SHALL BE DESIGNED, FABRICATED AND ERECTED IN ACCORDANCE WITH IBC SECTION 2211.
4. ALL PRE-ENGINEERED GABLE END TRUSSES SHALL BE DESIGNED FOR WIND FORCES PERPENDICULAR TO THE TRUSS.
5. ALL PRE-ENGINEERED TRUSSES SHALL BE FABRICATED SUCH THAT THEY INCORPORATE ALL ROOF PLANES. AT CONTRACTOR'S OPTION, STANDARD SHAPE TRUSSES MAY BE USED IN CONJUNCTION WITH OVERFRAMING UNLESS NOTED OTHERWISE.
6. FULL HEIGHT BLOCKING SHALL BE PLACED BETWEEN TRUSSES AT ALL SUPPORTS.
7. CROSS BRIDGING DESIGN SHALL BE PROVIDED BY TRUSS MANUFACTURER AS REQUIRED FOR LATERAL EFFECTS.
8. TRUSS MEMBERS AND COMPONENTS SHALL NOT BE CUT, NOTCHED, DRILLED, SPLICED OR OTHERWISE ALTERED IN ANY WAY WITHOUT WRITTEN APPROVAL OF A REGISTERED DESIGN PROFESSIONAL.
9. THE FABRICATOR SHALL DETERMINE TRUSS WEB ARRANGEMENTS AND MEMBER FORCES UNLESS NOTED OTHERWISE.
10. TRUSS TO TRUSS CONNECTIONS SPECIFIED SHALL BE BY TRUSS SUPPLIER, UNLESS SPECIFICALLY NOTED ON THE DRAWINGS.
11. TRUSS FABRICATOR SHALL SPECIFY ALL ROOF TRUSS BRACING AND BRIDGING.
12. DEFLECTION LIMITS FOR TRUSSES SHALL NOT EXCEED THE FOLLOWING DEFLECTION CRITERIA:
    A. ROOF LIVE LOAD = L/360
    B. ROOF TOTAL LOAD = L/240 (1" MAXIMUM)

SHOP DRAWINGS:

1. THE STRUCTURAL DRAWINGS ARE COPYRIGHTED AND SHALL NOT BE COPIED FOR USE AS ERECTION PLANS OR SHOP DETAILS. USE OF JVA'S ELECTRONIC FILES AS THE BASIS FOR SHOP DRAWINGS REQUIRES PRIOR APPROVAL BY JVA, A SIGNED RELEASE OF LIABILITY BY THE GENERAL CONTRACTOR AND/OR HIS SUBCONTRACTORS, AND DELETION OF JVA'S NAME AND LOGO FROM ALL SHEETS SO USED.
2. THE GENERAL CONTRACTOR SHALL SUBMIT IN WRITING ANY REQUESTS TO MODIFY THE STRUCTURAL DRAWINGS OR PROJECT SPECIFICATIONS.
3. ALL SHOP AND ERECTION DRAWINGS SHALL BE CHECKED AND STAMPED (AFTER HAVING BEEN CHECKED) BY THE GENERAL CONTRACTOR PRIOR TO SUBMISSION FOR CONTRACTING OFFICER'S REVIEW; SHOP DRAWING SUBMITTALS NOT CHECKED BY THE GENERAL CONTRACTOR PRIOR TO SUBMISSION TO THE CONTRACTING OFFICER WILL BE RETURNED WITHOUT REVIEW.
4. FURNISH ELECTRONIC VERSION (PDF) OF SHOP AND ERECTION DRAWINGS TO THE CONTRACTING OFFICER FOR REVIEW PRIOR TO FABRICATION FOR:
   A. CONCRETE MIX DESIGNS
   B. CONCRETE REINFORCING STEEL
   C. CONCRETE SLAB ON GRADE CONTROL JOINT LAYOUT
   D. STEEL ROOF DECK
   E. COLD-FORMED STEEL FRAMING
   F. PRE-ENGINEERED COLD-FORMED STEEL TRUSSES
5. SUBMIT IN A TIMELY MANNER TO PERMIT 10 WORKING DAYS FOR REVIEW BY THE CONTRACTING OFFICER.
6. SHOP DRAWINGS SUBMITTED FOR REVIEW DO NOT CONSTITUTE "REQUEST FOR CHANGE IN WRITING" UNLESS SPECIFIC SUGGESTED CHANGES ARE CLEARLY MARKED. IN ANY EVENT, CHANGES MADE BY MEANS OF THE SHOP DRAWING SUBMITTAL PROCESS BECOME THE RESPONSIBILITY OF THE ONE INITIATING THE CHANGE.

SPECIAL INSPECTIONS:

1. FOR THE DETAILED LIST OF REQUIRED INSPECTIONS, REFER TO THE "STATEMENT OF STRUCTURAL TESTS AND SPECIAL INSPECTIONS" CONTAINED IN SECTION 01 40 00 QUALITY REQUIREMENTS OF THE SPECIFICATIONS. THE FOLLOWING SPECIAL INSPECTIONS AND TESTING LIST IS SHOWN HERE FOR REFERENCE ONLY AND SHALL BE PERFORMED BY A QUALIFIED SPECIAL INSPECTOR, EMPLOYED BY THE CONTRACTOR, IN ACCORDANCE WITH CHAPTER 17 OF THE IBC:
   A. SECTION 1704 SPECIAL INSPECTIONS, CONTRACTOR RESPONSIBILITY, AND STRUCTURAL OBSERVATIONS AND THE FOLLOWING SUB-SECTIONS:
      1. 1704.2 SPECIAL INSPECTIONS AND TESTS
      2. 1704.3 STATEMENT OF SPECIAL INSPECTIONS
   B. SECTION 1705 REQUIRED VERIFICATION AND INSPECTION AND THE FOLLOWING SUB-SECTIONS:
      1. 1705.1.1 SPECIAL CASES (POST-INSTALLED ANCHORS)
      2. 1705.2 STEEL CONSTRUCTION
      3. 1705.3 CONCRETE CONSTRUCTION
      4. 1705.6 SOILS
2. THE SPECIAL INSPECTOR SHALL BE A QUALIFIED PERSON WHO SHALL DEMONSTRATE COMPETENCE, TO THE SATISFACTION OF THE CONTRACTING OFFICER, FOR INSPECTION OF THE PARTICULAR TYPE OF CONSTRUCTION OR OPERATION REQUIRING SPECIAL INSPECTION. THE APPROVED INSPECTOR MUST BE INDEPENDENT FROM THE CONTRACTOR RESPONSIBLE FOR THE WORK BEING INSPECTED.
3. DUTIES AND RESPONSIBILITIES OF THE SPECIAL INSPECTOR SHALL BE TO INSPECT AND/OR TEST THE WORK OUTLINED ABOVE AND WITHIN THE STATEMENT OF SPECIAL INSPECTIONS IN ACCORDANCE WITH CHAPTER 17 OF THE IBC FOR CONFORMANCE WITH THE APPROVED CONSTRUCTION DOCUMENTS.
4. ALL DISCREPANCIES SHALL BE BROUGHT TO THE IMMEDIATE ATTENTION OF THE CONTRACTING OFFICER FOR CORRECTION.
5. PER SECTION 1704.2.4 THE SPECIAL INSPECTOR SHALL FURNISH REGULAR REPORTS TO THE CONTRACTING OFFICER. PROGRESS REPORTS FOR CONTINUOUS INSPECTION SHALL BE FURNISHED WEEKLY. INDIVIDUAL REPORTS OF PERIODIC INSPECTIONS SHALL BE FURNISHED WITHIN ONE WEEK OF INSPECTION DATES. THE REPORTS SHALL NOTE UNCORRECTED DEFICIENCIES, CORRECTION OF PREVIOUSLY REPORTED DEFICIENCIES, AND CHANGES TO THE APPROVED CONSTRUCTION DOCUMENTS AUTHORIZED BY THE CONTRACTING OFFICER.
6. THE SPECIAL INSPECTOR SHALL SUBMIT A FINAL SIGNED REPORT WITHIN 10 DAYS OF THE FINAL SPECIAL INSPECTION STATING WHETHER THE WORK REQUIRING SPECIAL INSPECTION WAS, TO THE BEST OF THE INSPECTOR'S KNOWLEDGE, IN CONFORMANCE WITH THE APPROVED CONSTRUCTION DOCUMENTS AND THE APPLICABLE WORKMANSHIP PROVISIONS OF THE IBC. WORK NOT IN COMPLIANCE SHALL BE NOTED IN THE REPORT.
7. EXCEPT AS NOTED, THE SPECIAL INSPECTIONS OUTLINED ABOVE ARE IN ADDITION TO, AND BEYOND THE SCOPE OF, PERIODIC STRUCTURAL OBSERVATIONS AS DEFINED IN SECTION 1704.5.

STRUCTURAL ERECTION AND BRACING REQUIREMENTS:

1. THE CONSTRUCTION DRAWINGS ILLUSTRATE AND DESCRIBE THE COMPLETED STRUCTURE WITH ELEMENTS IN THEIR FINAL POSITIONS, PROPERLY SUPPORTED, CONNECTED, AND/OR BRACED.
2. THE CONSTRUCTION DRAWINGS ILLUSTRATE TYPICAL AND REPRESENTATIVE DETAILS TO ASSIST THE GENERAL CONTRACTOR. DETAILS SHOWN APPLY AT ALL SIMILAR CONDITIONS UNLESS OTHERWISE INDICATED. ALTHOUGH DUE DILIGENCE HAS BEEN APPLIED TO MAKE THE DRAWINGS AS COMPLETE AS POSSIBLE, NOT EVERY DETAIL IS ILLUSTRATED AND NOT EVERY EXCEPTIONAL CONDITION IS ADDRESSED.
3. ALL PROPRIETARY CONNECTIONS AND ELEMENTS SHALL BE INSTALLED IN ACCORDANCE WITH THE MANUFACTURERS' RECOMMENDATIONS.
4. ALL WORK SHALL BE ACCOMPLISHED IN A WORKMANLIKE MANNER AND IN ACCORDANCE WITH THE APPLICABLE CODES AND LOCAL ORDINANCES.
5. THE GENERAL CONTRACTOR IS RESPONSIBLE FOR COORDINATION OF ALL WORK, INCLUDING LAYOUT AND DIMENSION VERIFICATION, MATERIALS COORDINATION, SHOP DRAWING REVIEW, AND THE WORK OF SUBCONTRACTORS. ANY DISCREPANCIES OR OMISSIONS DISCOVERED IN THE COURSE OF THE WORK SHALL BE IMMEDIATELY REPORTED TO THE CONTRACTING OFFICER FOR RESOLUTION.
6. CONTINUATION OF WORK WITHOUT NOTIFICATION OF DISCREPANCIES RELIEVES THE CONTRACTING OFFICER FROM ALL CONSEQUENCES.
7. UNLESS OTHERWISE SPECIFICALLY INDICATED, THE CONSTRUCTION DRAWINGS DO NOT DESCRIBE METHODS OF CONSTRUCTION.
8. THE GENERAL CONTRACTOR, IN THE PROPER SEQUENCE, SHALL PERFORM OR SUPERVISE ALL WORK NECESSARY TO ACHIEVE THE FINAL COMPLETED STRUCTURE, AND TO PROTECT THE STRUCTURE, WORKMEN, AND OTHERS DURING CONSTRUCTION. SUCH WORK SHALL INCLUDE, BUT NOT BE LIMITED TO TEMPORARY BRACING, SHORING FOR CONSTRUCTION EQUIPMENT, SHORING FOR EXCAVATION, FORMWORK, SCAFFOLDING, SAFETY DEVICES AND PROGRAMS OF ALL KINDS, SUPPORT AND BRACING FOR CRANES AND OTHER ERECTION EQUIPMENT.
9. TEMPORARY BRACING SHALL REMAIN IN PLACE UNTIL ALL FLOORS, WALLS, ROOFS AND ANY OTHER SUPPORTING ELEMENTS ARE IN PLACE.
10. THE CONTRACTING OFFICER BEARS NO RESPONSIBILITY FOR THE ABOVE ITEMS, AND OBSERVATION VISITS TO THE SITE DO NOT IN ANY WAY INCLUDE INSPECTIONS OF THESE ITEMS.

PRECAUTIONARY NOTES ON STRUCTURAL BEHAVIOR:

1. INTERIOR ARCHITECTURAL FINISH DETAILING MUST ACCOMMODATE THE RELATIVE DIFFERENTIAL MOVEMENTS OF SUPPORTING STRUCTURAL ELEMENTS.
2. WHERE THE ROOF FRAMING ELEMENT SPANS ARE LONG, APPLIED LOADING WILL NATURALLY CAUSE SUBSTANTIAL DEFLECTION. INTERIOR ELEMENTS HUNG FROM THE ROOF STRUCTURE WILL DEFLECT WITH THE ROOF.
3. EXTERIOR/PERIMETER AND INTERIOR ARCHITECTURAL FINISH DETAILS SHOULD ALLOW FOR RELATIVE MOVEMENTS BETWEEN ELEMENTS WITH DIFFERENT SUPPORT CONDITIONS.

DEFERRED SUBMITTALS:

1. PORTIONS OF THE STRUCTURE HAVE ELEMENTS OF PROPRIETARY DESIGN AND FABRICATION, WHICH SHALL BE SUBMITTED BY THE SUPPLIER FOR APPROVAL AFTER AWARD OF CONTRACT.
2. THESE ITEMS SHALL CONFORM TO THE LOAD, CAPACITY, SIZE, GEOMETRY, CONNECTION, AND SUPPORT CRITERIA NOTED ON THE STRUCTURAL DRAWINGS.
3. SHOP DRAWINGS AND CALCULATIONS SHALL BE PREPARED BY AN ENGINEER REGISTERED IN THE STATE OF IDAHO. FINAL SHOP DRAWING SUBMITTALS SHALL BE STAMPED AND SIGNED.
4. FURNISH DEFERRED SUBMITTALS FOR:
   A. PRE-ENGINEERED COLD-FORMED STEEL TRUSSES
   B. FALL PROTECTION SYSTEM LAYOUT AND DESIGN
5. SUBMITTALS WILL BE REVIEWED BY THE CONTRACTING OFFICER FOR COMPLIANCE WITH THE SPECIFIED DESIGN REQUIREMENTS.
6. DEFERRED SUBMITTAL ITEMS SHALL NOT BE INSTALLED UNTIL THEIR DESIGN CALCULATIONS AND DRAWINGS HAVE BEEN REVIEWED BY THE CONTRACTING OFFICER.

FIELD VERIFICATION OF EXISTING CONDITIONS:

1. THE GENERAL CONTRACTOR SHALL THOROUGHLY INSPECT AND SURVEY THE EXISTING STRUCTURE TO VERIFY CONDITIONS THAT AFFECT THE WORK SHOWN ON THE DRAWINGS.
2. THE GENERAL CONTRACTOR SHALL REPORT ANY VARIATIONS OR DISCREPANCIES TO THE CONTRACTING OFFICER BEFORE PROCEEDING.

PROFESSIONAL ENGINEER LICENSED 17126 STATE OF IDAHO PAUL J HAUSER
March 13, 2026

DESIGNED: CDT
CADD: DJM/CDT/KM
TECH REVIEW: PJH
DATE: 03/20/2026

SUB SHEET NO. S002

TITLE OF SHEET
GENERAL NOTES

MIIN MAINTENANCE BUILDING ADDITION
MINIDOKA NATIONAL HISTORIC SITE

DRAWING NO. XX / XX
PMIS/PKG NO. XXXXXX
SHEET 21 OF 54

3/13/2026 3:39:11 PM Autodesk Docs://2025-560 MIIN Maintenance Bldg Addition/260011. STR NPS MIIN JVA Structural S26.rvt

ABBREVIATIONS KEY

(E)	EXISTING
(N)	NEW
(R)	REMOVE
@	ON CENTER SPACING
AB	ANCHOR ROD (BOLT)
ADDL	ADDITIONAL
ADJ	ADJUSTABLE
AESS	ARCH EXPOSED STRUCTURAL STEEL
AFF	ABOVE FINISHED FLOOR
ALT	ALTERNATE
AMT	AMOUNT
ANCH	ANCHOR, ANCHORAGE
APPROX	APPROXIMATE
ARCH	ARCHITECT, -URAL
ATR	ALL THREAD ROD
AVG	AVERAGE
BC	BOTTOM OF CONCRETE
BL	BRICK LEDGE
BLDG	BUILDING
BLK	BLOCK
BLKG	BLOCKING
BM	BEAM
BOT	BOTTOM
BRG	BEARING
BW	BOTTOM OF WALL
CB	COUNTERBORE
CF	CUBIC FOOT
CFS	COLD FORMED STEEL
CG	CENTER OF GRAVITY
CIP	CAST-IN-PLACE
CJ	CONSTRUCTION JOINT, CONTROL JOINT
CJP	COMPLETE JOINT PENETRATION
CL	CENTER LINE
CLG	CEILING
CLR	CLEAR
CLSM	CONTROLLED LOW STRENGTH MATERIAL
CM	CONSTRUCTION MANAGER, -MENT
CMU	CONCRETE MASONRY UNIT
COL	COLUMN
COM	COMMON
COMB	COMBINATION
CONC	CONCRETE
CONN	CONNECTION
CONT	CONTINUOUS, CONTINUE

COORD	COORDINATE, COORDINATION
CS	COUNTERSINK
CTR	CENTER
CY	CUBIC YARD
DAB	DEFORMED ANCHOR BAR
DET	DETAIL
DEV	DEVELOP
DIAG	DIAGONAL
DIM	DIMENSION
DL	DEAD LOAD
DN	DOWN
DP	DRILLED PIER
DT	DOUBLE TEE
DWG	DRAWING
DWL	DOWEL
E-E	END TO END
E-W	EAST TO WEST
EA	EACH
ECC	ECCENTRIC
EF	EACH FACE
EJ	EXPANSION JOINT
EL	ELEVATION
ELEC	ELECTRIC, ELECTRICAL
EMBED	EMBEDMENT
ENGR	ENGINEER
EQ	EQUAL
EQUIP	EQUIPMENT
EQUIV	EQUIVALENT
ES	EACH SIDE
EST	ESTIMATE
EXC	EXCAVATE
EXP	EXPANSION
EXT	EXTERIOR
F-F	FACE TO FACE
FD	FLOOR DRAIN
FDN	FOUNDATION
FF	FINISHED FLOOR, FAR FACE
FIG	FIGURE
FL	FLUSH
FLG	FLANGE
FLR	FLOOR
FO	FACE OF
FP	FULL PENETRATION
FS	FOOTING STEP, FAR SIDE
FTG	FOOTING

GA	GAGE, GAUGE
GALV	GALVANIZED
GC	GENERAL CONTRACTOR
GEN	GENERAL
GL	GLUED LAMINATED, GLULAM
GND	GROUND
GR	GRADE
GT	GIRDER TRUSS
GYP BD	GYPSUM BOARD
HAS	HEADED ANCHOR STUD
HDG	HOT-DIP GALVANIZED
HDR	HEADER
HORIZ	HORIZONTAL
HP	HIGH POINT
HT	HEIGHT
IBC	INTERNATIONAL BUILDING CODE
ID	INSIDE DIAMETER
IEBC	INTERNATIONAL EXISTING BUILDING CODE
IF	INSIDE FACE
INT	INTERIOR, INTERMEDIATE
IT	INVERTED TEE
JB	JOIST BEARING
JST	JOIST
JT	JOINT
K	KIPP (1,000 LBS)
LGS	LIGHT GAGE STEEL
LL	LIVE LOAD
LLH	LONG LEG HORIZONTAL
LLV	LONG LEG VERTICAL
LOC	LOCATION
LP	LOW POINT
LSL	LAMINATED STRAND LUMBER
LT	LIGHT
LVL	LAMINATED VENEER LUMBER
MACH	MACHINE
MASY	MASONRY
MATL	MATERIAL
MAX	MAXIMUM
MB	MACHINE BOLT
MECH	MECHANICAL
MEZZ	MEZZANINE
MFR	MANUFACTURE, -ER, -ED
MIN	MINIMUM
ML	MICROLLAM (TRUS-JOIST BRAND LVL)

MO	MASONRY OPENING
MTL	METAL
N-S	NORTH TO SOUTH
NF	NEAR FACE
NIC	NOT IN CONTRACT
NS	NEAR SIDE
NTS	NOT TO SCALE
OCJ	OSHA COLUMN JOIST
OD	OUTSIDE DIAMETER
OF	OUTSIDE FACE
OH	OPPOSITE HAND
OPNG	OPENING
OPP	OPPOSITE
OSB	ORIENTED STRAND BOARD
PAF	POWDER ACTUATED FASTENER
PC	PRECAST
PCF	POUNDS PER CUBIC FOOT
PE	PRE-ENGINEERED
PEN	PENETRATION
PERP	PERPENDICULAR
PJP	PARTIAL JOINT PENETRATION
PL	PLATE
PLF	POUND PER LINEAR FOOT
PNL	PANEL
PP	PANEL POINT
PS	PRESTRESSED
PSF	POUNDS PER SQUARE FOOT
PSI	POUNDS PER SQUARE INCH
PSL	PARALLEL STRAND LUMBER
PT	POST TENSIONED, PRESSURE TREATED
PTN	PARTITION
PWD	PLYWOOD
QTY	QUANTITY
R	RADIUS
RE	REFERENCE, REFER TO
RECT	RECTANGLE
REINF	REINFORCE, -ED, -ING
REQ	REQUIRED
REQMT	REQUIREMENT
RET	RETAINING
RM	ROOM
RMO	ROUGH MASONRY OPENING
RO	ROUGH OPENING
SC	SLIP-CRITICAL
SCH	SCHEDULE

SDST	SELF-DRILLING/SELF-TAPPING
SECT	SECTION
SF	SQUARE FEET, SUB-FLOOR
SHT	SHEET
SHTG	SHEATHING
SIM	SIMILAR
SLH	SHORT LEG HORIZONTAL
SLRS	SEISMIC LOAD-RESISTING SYSTEM
SLV	SHORT LEG VERTICAL
SOG	SLAB ON GRADE
SP	SPACES, SPACED
SPEC	SPECIFICATIONS
SQ	SQUARE
SSR	SHEAR STUD RAIL
ST	SNUG-TIGHT
STD	STANDARD
STIFF	STIFFENER
STL	STEEL
STRUCT	STRUCTURE, -AL
SUPT	SUPPORT
SY	SQUARE YARD
SYM	SYMMETRICAL
T&B	TOP AND BOTTOM
T&G	TOUNGE AND GROOVE
TB	TOP OF BEAM
TC	TOP OF CONCRETE
TCA	TORQUE-CONTROLLED ANCHOR
TD	TOP OF DECK
THD	THREAD
THK	THICK, -NESS
TJ	TOP OF JOIST
TL	TOTAL LOAD
TPG	TOPPING
TRANS	TRANSVERSE
TW	TOP OF WALL
TYP	TYPICAL
ULT	ULTIMATE
UNO	UNLESS OTHERWISE NOTED
VERT	VERTICAL
VIF	VERIFY IN FIELD
WP	WORK POINT
WT	WEIGHT
WTS	WELDED THREADED STUD
WWF	WELDED WIRE FABRIC
XS	EXTRA STRONG
XSECT	CROSS SECTION
XXS	DOUBLE EXTRA STRONG

	DIRECTION OF DECK SPAN
GRID	GRID DESIGNATION
X	REVISION
	CIP CONCRETE
	EARTH
FX.X	ISOLATED SPREAD FOOTING MARK
FXX	SPREAD FOOTING MARK
XX:12	ROOF SLOPE

XXX'-X	TOP OF CONCRETE ELEVATION
[XXX'-X]	TOP OF BEAM ELEVATION
(XXX'-X)	TOP OF FOOTING ELEVATION
XXX'-X	TOP OF FLOOR ELEVATION
CXX	COLUMN STARTING AT THIS LEVEL
B	COLUMN STOPPING BELOW THIS LEVEL, SEE FRAMING PLAN AT NEXT LOWER LEVEL

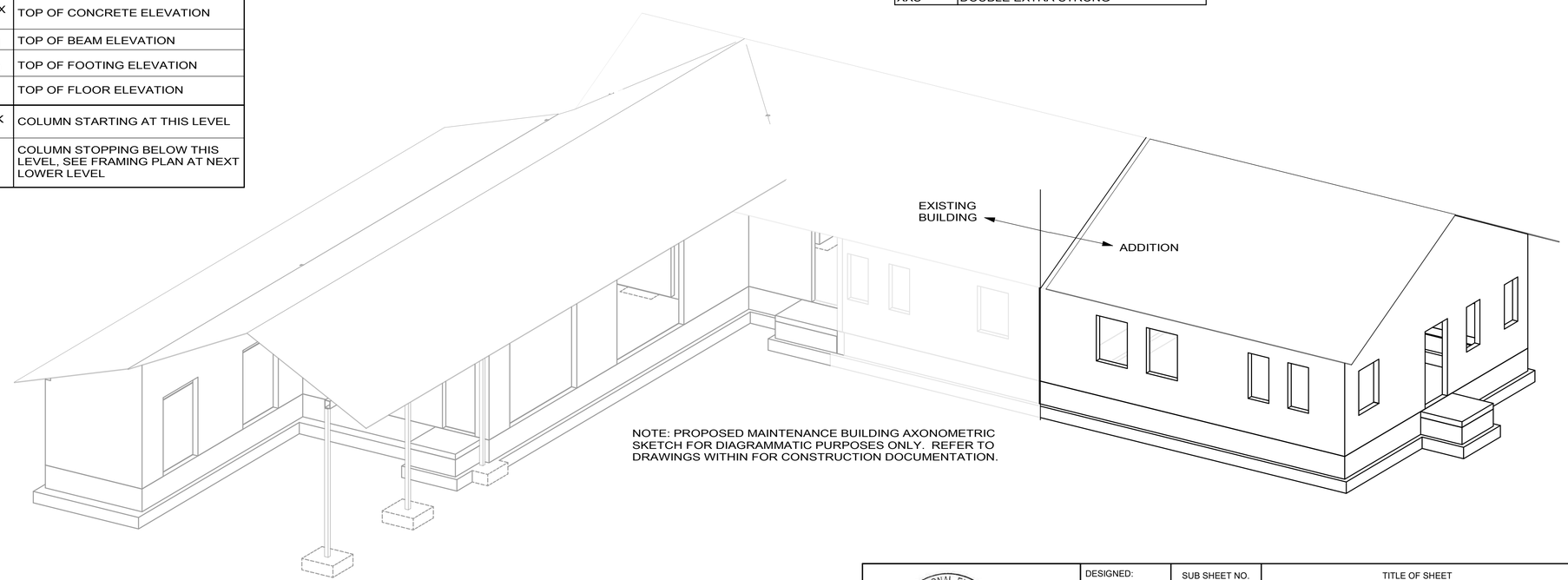

NOTE: PROPOSED MAINTENANCE BUILDING AXONOMETRIC SKETCH FOR DIAGRAMMATIC PURPOSES ONLY. REFER TO DRAWINGS WITHIN FOR CONSTRUCTION DOCUMENTATION.

PROFESSIONAL ENGINEER LICENSED 17126 STATE OF IDAHO PAUL J HAUSER
March 13, 2026

DESIGNED: CDT
CADD: DJM/CDT/KM
TECH REVIEW: PJH
DATE: 03/20/2026

SUB SHEET NO. S003

TITLE OF SHEET
ABBREVIATIONS & SYMBOLS

MIIN MAINTENANCE BUILDING ADDITION
MINIDOKA NATIONAL HISTORIC SITE

DRAWING NO. XX / XX
PMIS/PKG NO. XXXXXX
SHEET 22 OF 54

3/13/2026 3:39:12 PM Autodesk Docs://2025-560 MIIN Maintenance Bldg Addition/260011. STR NPS MIIN JVA Structural S26.rvt

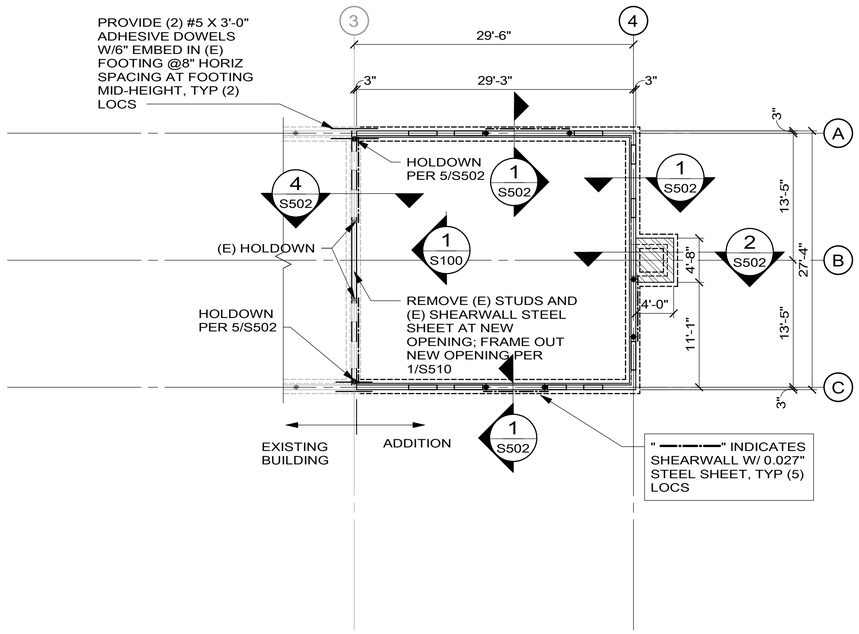

FOUNDATION PLAN

- ELEVATION 100'-0" = TOP OF MAIN INTERIOR FLOOR SLAB, SEE CIVIL FOR USGS ELEVATION
- TOP OF PERIMETER/EXTERIOR FOOTING = 98'-0"
- TOP OF CONCRETE STEM WALL ELEVATION = 100'-0" AT EXTERIOR STUD WALLS. STEP DOWN TO 99'-4" AT DOOR OPENINGS. ALIGN STEP W/ DOOR JAMB, SEE ARCH.
- WALL FOOTINGS ARE TYP F18, TYPICAL UNLESS NOTED OTHERWISE
- ◆ INDICATES HOLDOWN AT END OF SHEARWALL, SEE 3/S502 AND 1/S510 UNO

TYPICAL INTERIOR SLAB ON GRADE:
5" THICK CONCRETE SLAB ON UNDISTURBED NATURAL SOILS OR COMPACTED STRUCTURAL FILL PER SOILS REPORT; REINFORCE SLAB W/ #4 @ 16", EA WAY, AT MID-DEPTH; ADD (2) #4 x 4'-0" DIAGONAL BARS AT MID-DEPTH OF SLAB AT ALL RE-ENTRANT CORNERS PER 7/S501. PROVIDE SAWCUT OR FORMED CONTROL JOINTS, PER 6/S501, @ 12'-0± IN EACH DIRECTION. JOINTS SHALL BE CONTINUOUS, NOT STAGGERED OR OFFSET. ASPECT RATIO SHALL BE A MAXIMUM OF 1.5 TO 1.

FIELD VERIFICATION:
- (E) INDICATES EXISTING CONSTRUCTION
- ALL DIMENSIONS AND CONDITIONS SHALL BE FIELD VERIFIED BY CONTRACTOR
- IF DIMENSIONS AND CONDITIONS DIFFER FROM THOSE SHOWN ON DRAWINGS, NOTIFY CONTRACTING OFFICER
- SEE PMIS/PKG NO. 314972 DRAWINGS DATED 05/23/2024 FOR INFORMATION ABOUT THE EXISTING STRUCTURE.

INDICATES 6" MINIMUM SLAB ON 4" VOID AT EXTERIOR STOOPS REINFORCED W/ #5 @ 12" EA WAY AT MID-DEPTH, SEE CIVIL FOR SLOPE

INTERIOR NON-STRUCTURAL PARTITION NOTE:
INTERIOR NON-STRUCTURAL PARTITION WALLS BEARING ON SLAB ON GRADE SHALL HAVE A MINIMUM 2" VERTICAL SLIP JOINT LOCATED AT THE TOP OR BOTTOM OF WALL. VERTICAL JOINTS SHALL ALSO BE PROVIDED WHERE PARTITIONS INTERSECT ELEMENTS FOUNDED ON FOUNDATION SUPPORTED ELEMENTS (STEM WALLS, GRADE BEAM, ETC)

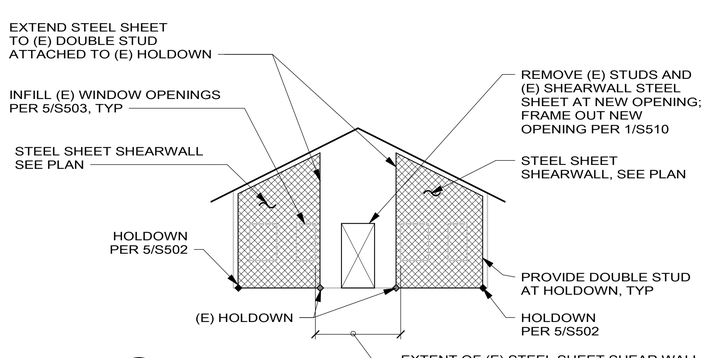

1 S100 ELEVATION
SCALE Ⓐ

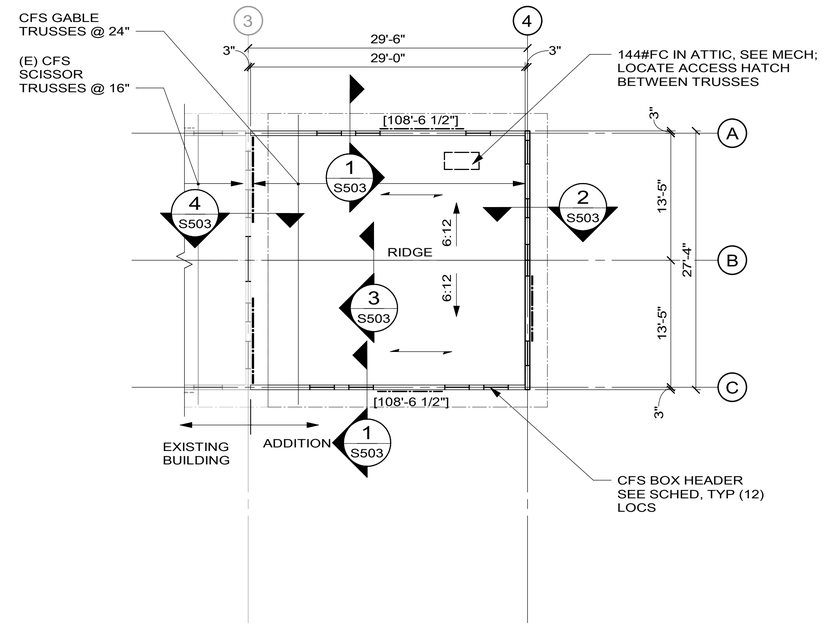

ROOF FRAMING PLAN

- ELEVATION 100'-0" = TOP OF MAIN LEVEL INTERIOR FLOOR SLAB
- TOP OF STEEL ELEVATION NOTED THUS: [XXX'-X"]
- [SL] INDICATES SLOPING BEAM

TYPICAL ROOF DECK:
0.6" DEEP x 24 GAGE GRADE 80 GALVANIZED STEEL DECK (TYPE 0.6C-36) W/ #12 SDST SCREWS @ 6" (36/7) AT INTERMEDIATE SUPPORTS, PERIMETER BLOCKING, & EDGES AND #12 SDST SCREWS @ 12" AT SIDELAP CONNECTIONS. STEEL DECK SHALL BE CONTINUOUS OVER THREE OR MORE SUPPORTS WITH ENDS LAPPED

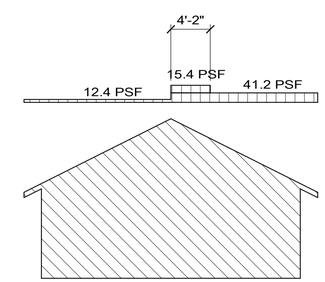

TYPICAL GABLE ROOF
UNBALANCED ULTIMATE SNOW LOADS

SCALE: Ⓐ 8 0 8 16
SCALE OF FEET

BLDG. NORTH

PROFESSIONAL ENGINEER LICENSED 17126 STATE OF IDAHO PAUL J HAUSE — March 13, 2026	DESIGNED: CDT CADD DJM/CDT/KM TECH REVIEW: PJH DATE: 03/20/2026	SUB SHEET NO. S100	TITLE OF SHEET FOUNDATION & ROOF FRAMING PLANS MIIN MAINTENANCE BUILDING ADDITION MINIDOKA NATIONAL HISTORIC SITE

DRAWING NO. XX / XX
PMIS/PKG NO. XXXXXX
SHEET 23 OF 54

3/13/2026 3:39:12 PM Autodesk Docs://2025-560 MIIN Maintenance Bldg Addition/260011. STR NPS MIIN JVA Structural S26.rvt

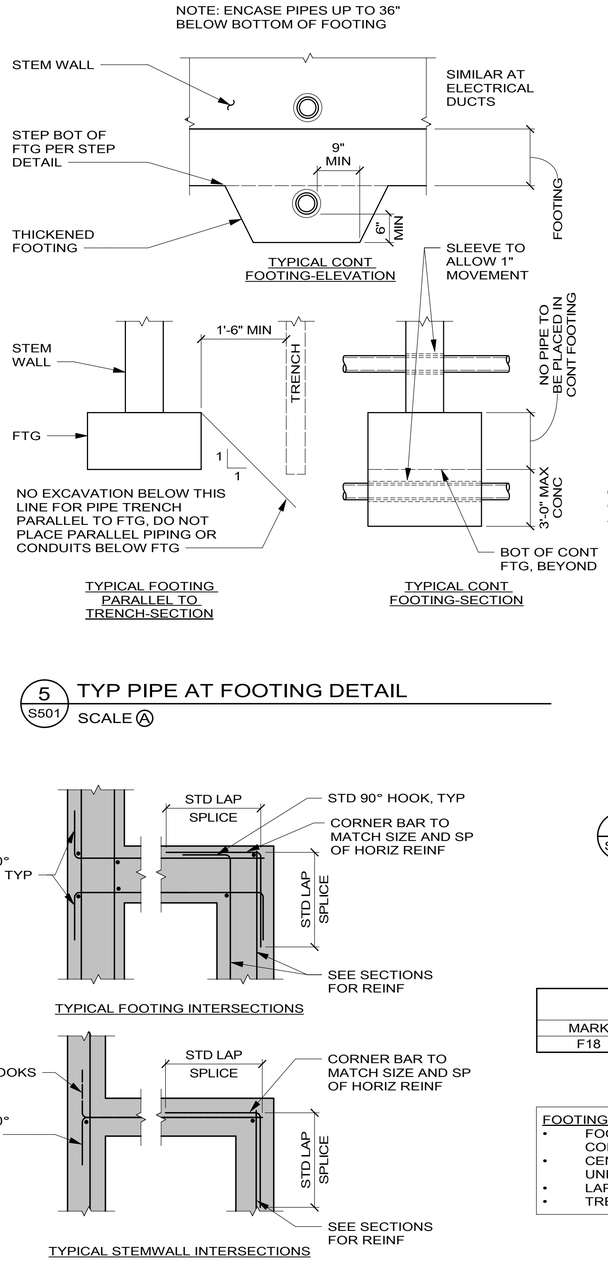

5 S501 TYP PIPE AT FOOTING DETAIL
SCALE Ⓐ

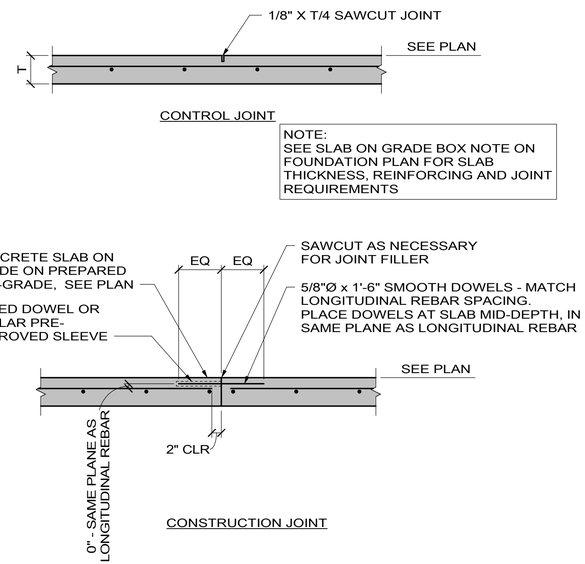

NOTE:
SEE SLAB ON GRADE BOX NOTE ON FOUNDATION PLAN FOR SLAB THICKNESS, REINFORCING AND JOINT REQUIREMENTS

6 S501 TYP INTERIOR SLAB ON GRADE JOINTS
SCALE Ⓐ

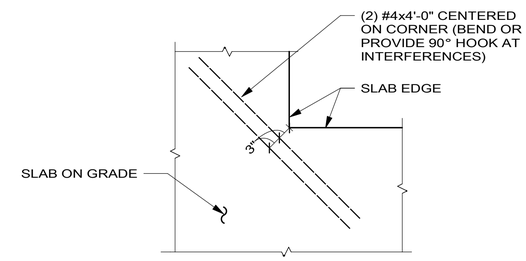

7 S501 TYP RE-ENTRANT CORNER REINF
NO SCALE

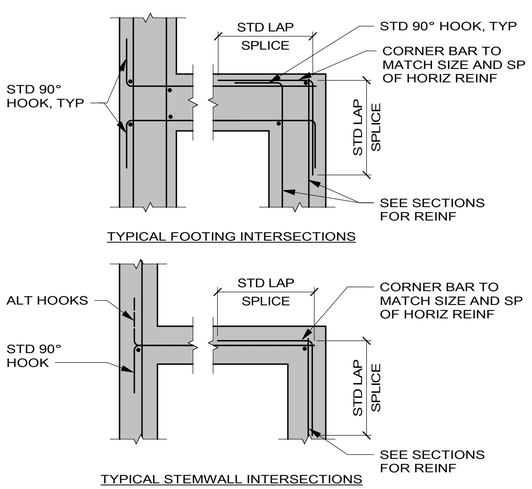

1 S501 TYP CONC WALL CORNER & INT REINF
SCALE Ⓐ

FOOTING SCHEDULE				
MARK	WIDTH	LENGTH	THICKNESS	REINFORCING
F18	1'-6"		1'-0"	(2) #5 CONT BOT

FOOTING NOTES:
- FOOTINGS SHALL BE PLACED ON 1'-0" DEPTH MINIMUM COMPACTED ENGINEERED FILL PER SOILS REPORT
- CENTER FOOTINGS UNDER STEMWALLS & PILASTERS, TYPICAL UNLESS NOTED OTHERWISE
- LAPPED BOARD FORMING NOT ALLOWED
- TRENCH FORMING NOT ALLOWED

2 S501 FOOTING SCHEDULE
NO SCALE

TYPICAL CONCRETE REINFORCING LAP LENGTHS (UNO)							
BAR SIZE	TYPE	Fc = 3000 PSI (TOP)	Fc = 3000 PSI (OTHER)	Fc = 4000 PSI (TOP)	Fc = 4000 PSI (OTHER)	Fc = 5000 PSI (TOP)	Fc = 5000 PSI (OTHER)
#3	EMBED	22	17	19	15	17	13
#3	LAP	28	22	24	19	22	17
#4	EMBED	29	22	25	19	22	17
#4	LAP	37	29	32	25	29	22
#5	EMBED	36	28	31	24	28	22
#5	LAP	47	36	40	31	36	28
#6	EMBED	43	33	37	29	33	26
#6	LAP	56	43	48	37	43	33
#7	EMBED	63	48	54	42	49	37
#7	LAP	81	63	70	54	63	49
#8	EMBED	72	55	62	48	55	43
#8	LAP	93	72	80	62	72	55

NOTES:
1. TOP BARS ARE HORIZONTAL BARS WITH MORE THAN 12 INCHES OF FRESH CONCRETE CAST BELOW BAR
2. TABULATED VALUES ARE BASED ON GRADE 60 NON-EPOXY-COATED REINFORCING BARS AND NORMAL WEIGHT CONCRETE
3. VALUES ARE IN INCHES

3 S501 CONC REINF LAP SPLICE SCHEDULE
NO SCALE

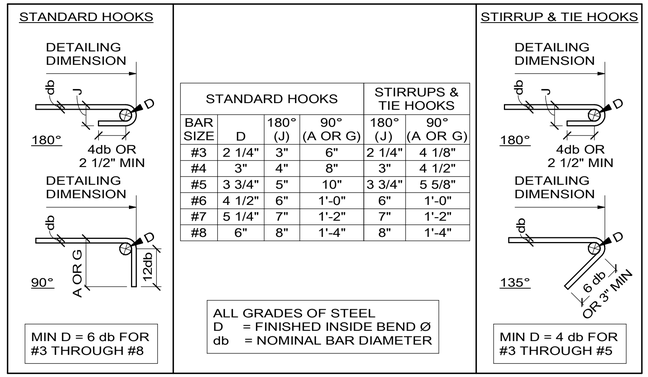

STANDARD HOOKS				STIRRUPS & TIE HOOKS	
BAR SIZE	D	180° (J)	90° (A OR G)	180° (J)	90° (A OR G)
#3	2 1/4"	3"	6"	2 1/4"	4 1/8"
#4	3"	4"	8"	3"	4 1/2"
#5	3 3/4"	5"	10"	3 3/4"	5 5/8"
#6	4 1/2"	6"	1'-0"	6"	1'-0"
#7	5 1/4"	7"	1'-2"	7"	1'-2"
#8	6"	8"	1'-4"	8"	1'-4"

ALL GRADES OF STEEL
D = FINISHED INSIDE BEND Ø
db = NOMINAL BAR DIAMETER

4 S501 CONC REINF HOOK SCHEDULE
NO SCALE

SCALE: Ⓐ 1 0 1 2 3
SCALE OF FEET

PROFESSIONAL ENGINEER LICENSED 17126 STATE OF IDAHO PAUL J HAUSER
March 13, 2026

DESIGNED: CDT	SUB SHEET NO.	TITLE OF SHEET	DRAWING NO.
CADD DJM/CDT/KM	S501	SCHEDULES AND TYPICAL DETAILS	XX / XX
TECH REVIEW: PJH		MIIN MAINTENANCE BUILDING ADDITION MINIDOKA NATIONAL HISTORIC SITE	PMIS/PKG NO. XXXXXX
DATE: 03/20/2026			SHEET 24 OF 54

3/13/2026 3:39:12 PM Autodesk Docs://2025-560 MIIN Maintenance Bldg Addition/260011. STR NPS MIIN JVA Structural S26.rvt

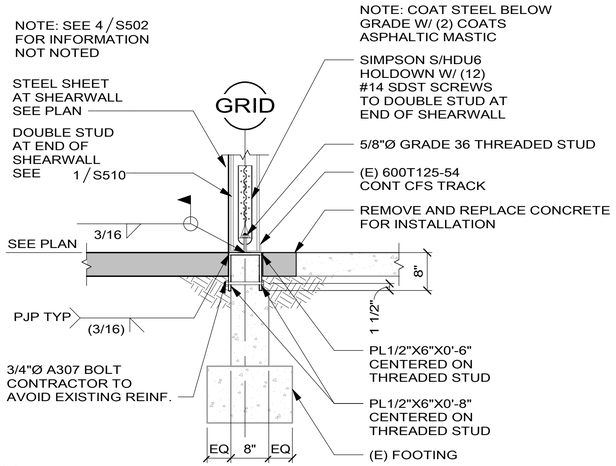

5 S502 SECTION
SCALE Ⓐ

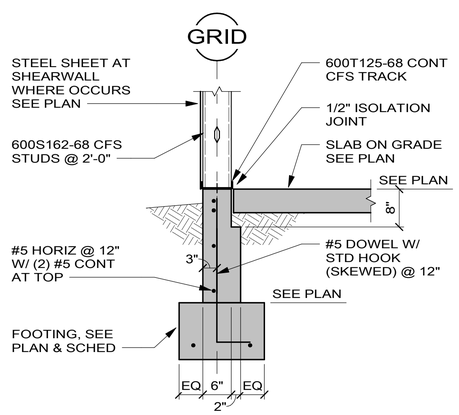

1 S502 SECTION
SCALE Ⓐ

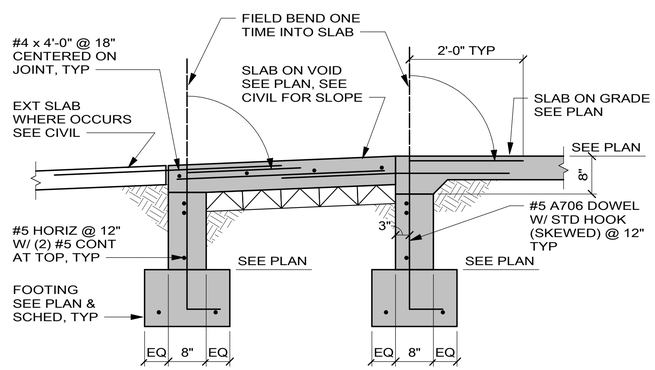

2 S502 SECTION
SCALE Ⓐ

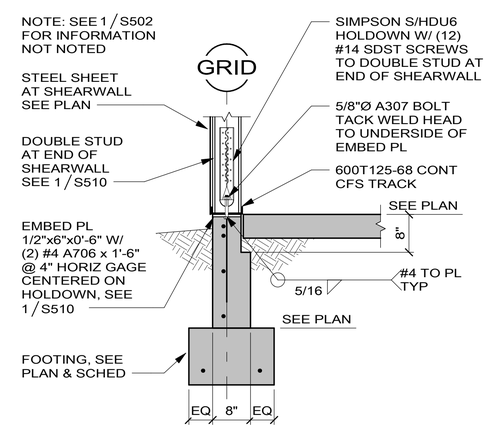

3 S502 SECTION
SCALE Ⓐ

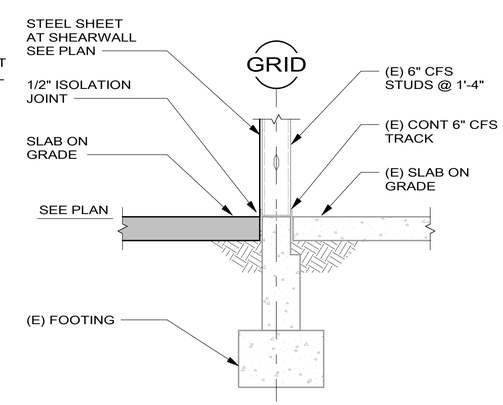

4 S502 SECTION
SCALE Ⓐ

SCALE: Ⓐ 8 0 8 16
SCALE OF FEET

PROFESSIONAL ENGINEER LICENSED 17126 STATE OF IDAHO PAUL J HAUSER
March 13, 2026

DESIGNED:	CDT
CADD	DJM/CDT/KM
TECH REVIEW:	PJH
DATE:	03/20/2026
SUB SHEET NO.	S502
TITLE OF SHEET	FOUNDATION DETAILS
	MIIN MAINTENANCE BUILDING ADDITION MINIDOKA NATIONAL HISTORIC SITE
DRAWING NO.	XX / XX
PMIS/PKG NO.	XXXXXX
SHEET	25 OF 54

3/13/2026 3:39:12 PM Autodesk Docs://2025-560 MIIN Maintenance Bldg Addition/260011. STR NPS MIIN JVA Structural S26.rvt

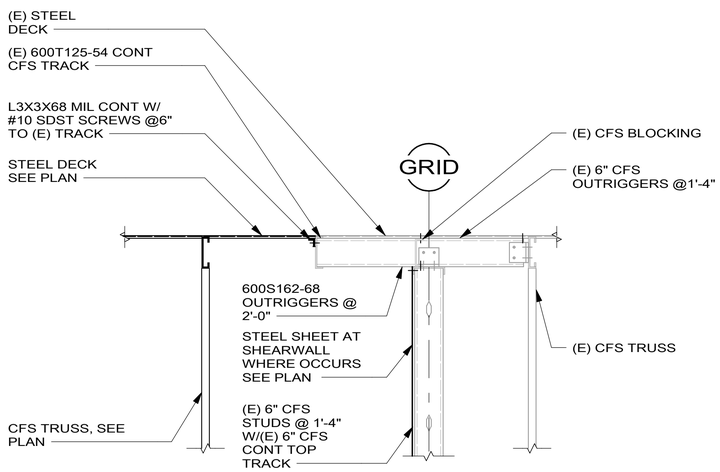

4 S503 SECTION
SCALE A

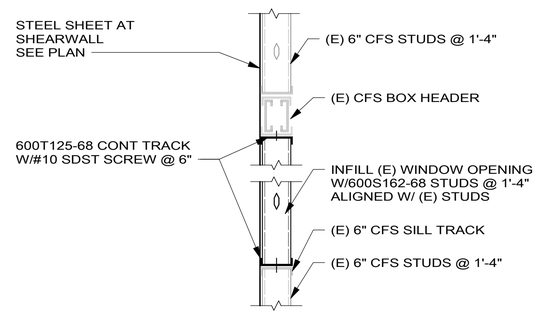

5 S503 SECTION
SCALE A

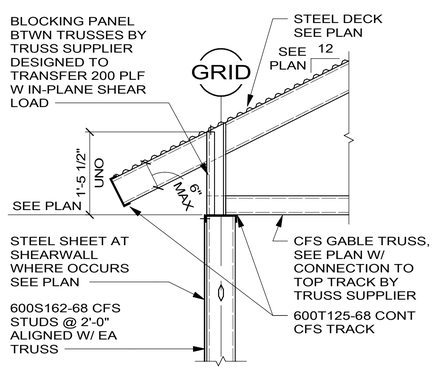

1 S503 SECTION
SCALE A

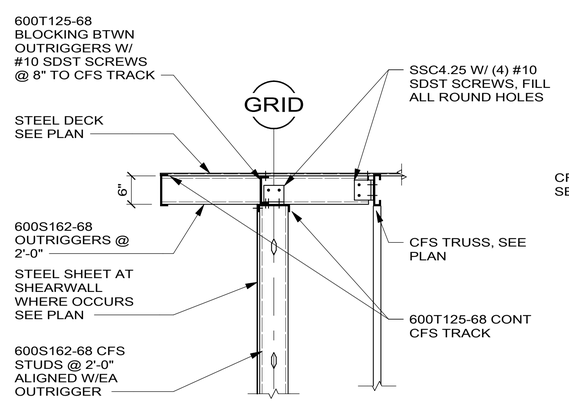

2 S503 SECTION
SCALE A

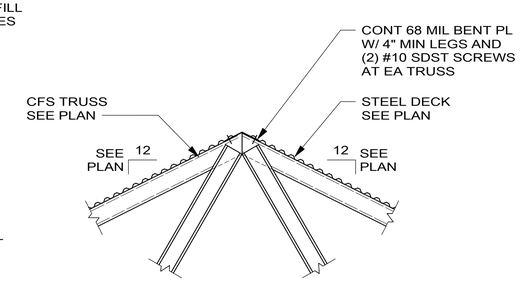

3 S503 SECTION
SCALE A

SCALE: A
8 0 8 16
SCALE OF FEET

PROFESSIONAL ENGINEER LICENSED 17126 STATE OF IDAHO PAUL J HAUSER
March 13, 2026

DESIGNED: CDT	SUB SHEET NO.	TITLE OF SHEET	DRAWING NO.
CADD DJM/CDT/KM	S503	FRAMING DETAILS	XX / XX
TECH REVIEW: PJH			PMIS/PKG NO. XXXXXX
DATE: 03/20/2026		MIIN MAINTENANCE BUILDING ADDITION MINIDOKA NATIONAL HISTORIC SITE	SHEET 26 OF 54

3/13/2026 3:39:12 PM Autodesk Docs://2025-560 MIIN Maintenance Bldg Addition/260011. STR NPS MIIN JVA Structural S26.rvt

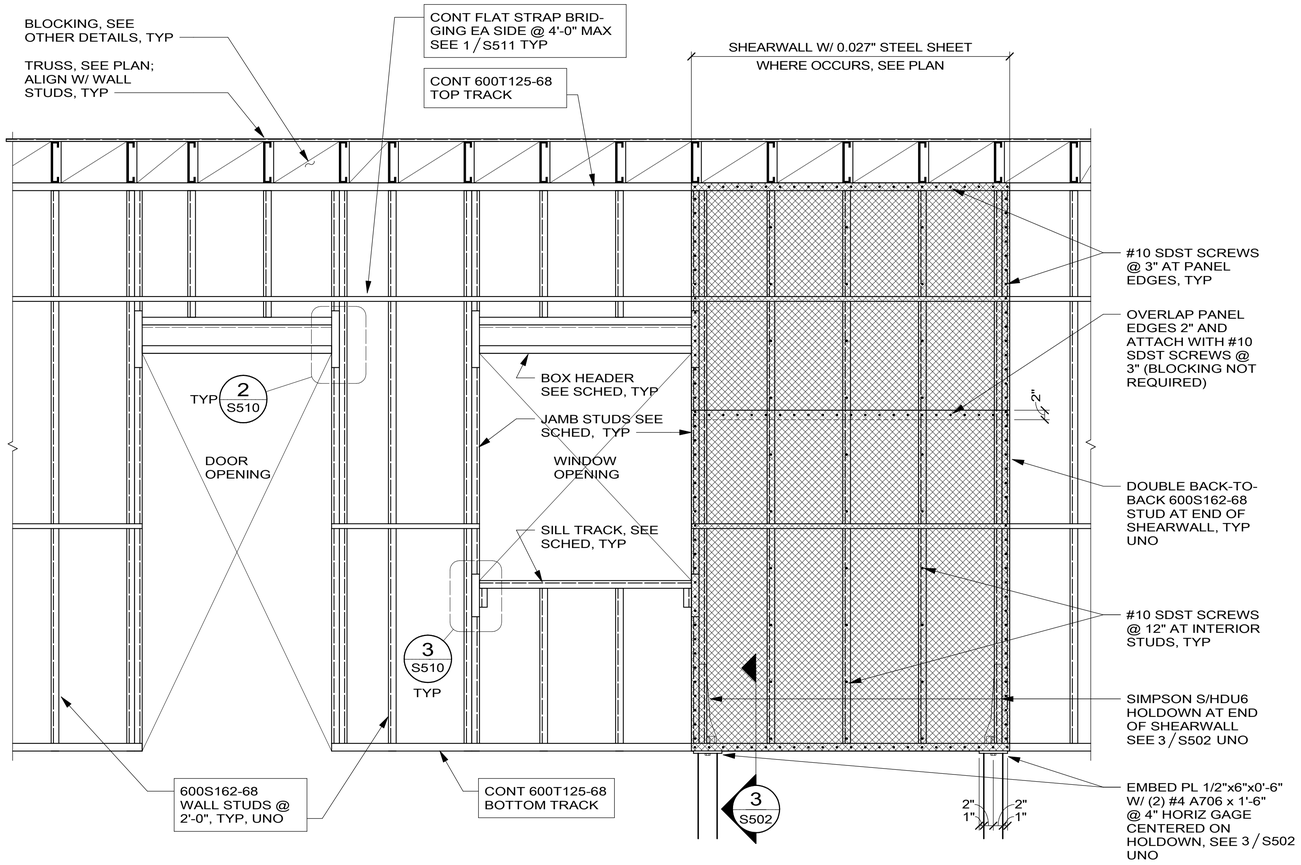

COLD-FORMED STEEL FRAMED WALL OPENING ASSEMBLIES				
OPENING WIDTH	JAMB STUDS	BOX HEADER	SILL	COMMENTS
<5'-4"	(2) 600S162-68	BOX BEAM: (2) 600T125-68 + (2) 600S162-68 (VERT)	(1) 600T125-54	

TYPICAL BOX BEAM HEADER

ASSEMBLY AS NOTED IN SCHEDULE. FASTEN W/ #10 SDST SCREWS @ 12" EACH FLANGE, AS SHOWN

NOTES:
- THIS DETAIL IS APPLICABLE UNLESS OTHERWISE NOTED IN SECTIONS
- SEE GENERAL NOTES FOR CONNECTION OF TRACKS TO STUDS AND FOR CONNECTION OF TRACKS TO CONCRETE OR STEEL SUPPORTS

1 S510 TYP COLD-FORMED STEEL WALL FRAMING

NO SCALE

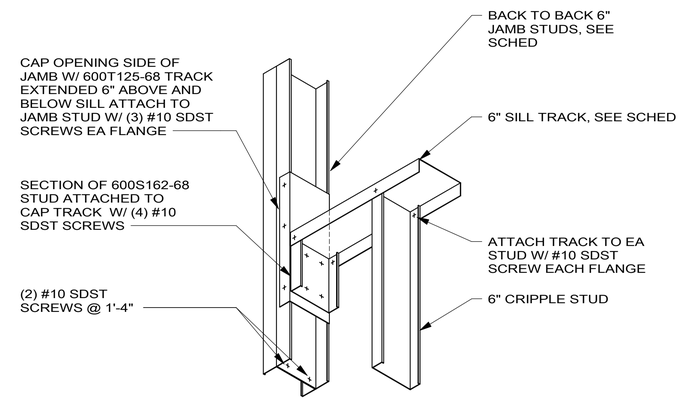

3 S510 TYP SILL TO JAMB CONNECTION

NO SCALE

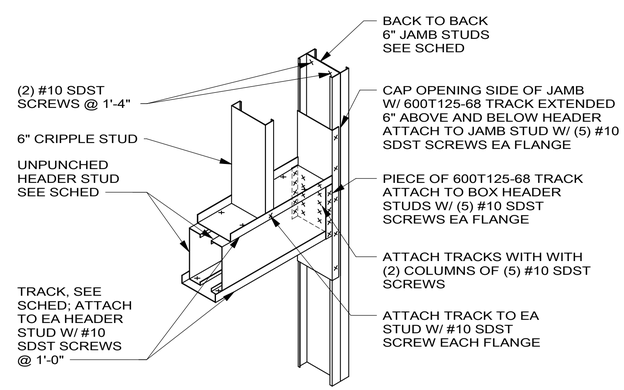

2 S510 TYP BOX HEADER CONSTRUCTION

NO SCALE

PROFESSIONAL ENGINEER LICENSED 17126 STATE OF IDAHO PAUL J HAUSE
March 13, 2026

DESIGNED: CDT
CADD: DJM/CDT/KM
TECH REVIEW: PJH
DATE: 03/20/2026

SUB SHEET NO. S510

TITLE OF SHEET
TYPICAL COLD-FORMED STEEL DETAILS

MIIN MAINTENANCE BUILDING ADDITION
MINIDOKA NATIONAL HISTORIC SITE

DRAWING NO. XX / XX
PMIS/PKG NO. XXXXXX
SHEET 27 OF 54

3/13/2026 3:39:12 PM Autodesk Docs://2025-560 MIIN Maintenance Bldg Addition/260011. STR NPS MIIN JVA Structural S26.rvt

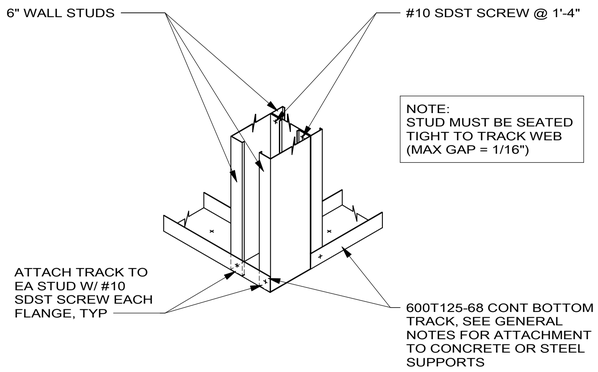

4 S511 TYP WALL CORNER

NO SCALE

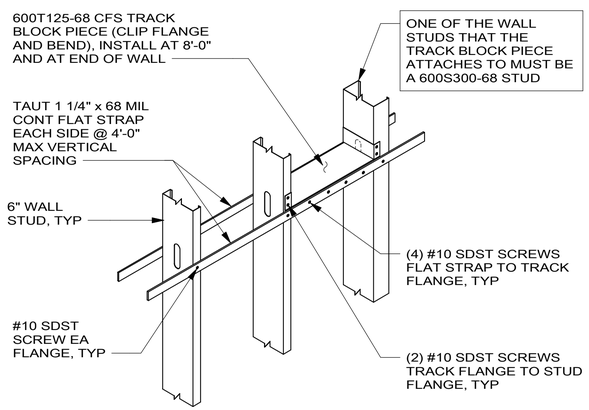

1 S511 TYP WALL BRIDGING

NO SCALE

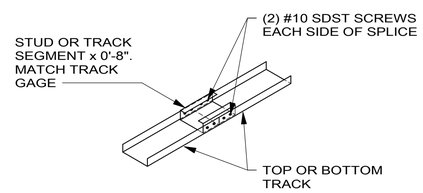

2 S511 TYP HORIZ TRACK SPLICE

NO SCALE

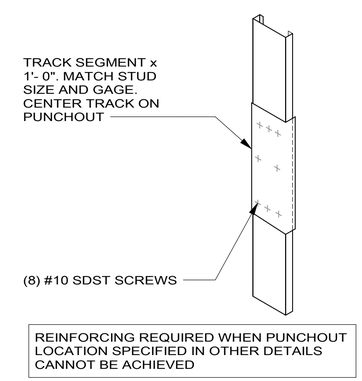

3 S511 TYP STUD PUNCHOUT REINFORCING

NO SCALE

PROFESSIONAL ENGINEER LICENSED 17126 STATE OF IDAHO PAUL J HAUSE

March 13, 2026

DESIGNED:	CDT
CADD	DJM/CDT/KM
TECH REVIEW:	PJH
DATE:	03/20/2026
SUB SHEET NO.	S511
TITLE OF SHEET	TYPICAL COLD-FORMED STEEL DETAILS
	MIIN MAINTENANCE BUILDING ADDITION MINIDOKA NATIONAL HISTORIC SITE
DRAWING NO.	XX / XX
PMIS/PKG NO.	XXXXXX
SHEET	28 OF 54

3/13/2026 3:39:12 PM Autodesk Docs://2025-560 MIIN Maintenance Bldg Addition/260011. STR NPS MIIN JVA Structural S26.rvt

MECHANICAL NOTES

I. GENERAL

- ALL WORK SHALL BE IN ACCORDANCE WITH SMACNA STANDARDS AND SPECIFICATIONS, AND AUTHORITY HAVING JURISDICTION.
- THESE DRAWINGS ARE DIAGRAMMATIC IN NATURE AND NOT INTENDED TO SHOW ALL TRANSITIONS, OFFSETS, ETC. CONTRACTOR SHALL FIELD VERIFY EXISTING CONDITIONS AND PROVIDE ALL NECESSARY FITTINGS TO COMPLETE THE INTENT OF THE DRAWINGS. ANY DISCREPANCIES BETWEEN DRAWINGS AND FIELD CONDITIONS SHALL BE REPORTED TO THE CONTRACTING OFFICER FOR RESOLUTION. PENDING WRITTEN APPROVAL BY CONTRACTING OFFICER, CONTRACTOR MAY LOCATE MECHANICAL EQUIPMENT DIFFERENTLY THAN SHOWN ON DRAWINGS DUE TO CONFLICTS, AS LONG AS FUNCTION AND/OR APPEARANCE ARE NOT AFFECTED.
- COORDINATE SPACE REQUIREMENTS, SUPPORTS, AND INSTALLATION OF MECHANICAL WORK, WHICH ARE INDICATED DIAGRAMMATICALLY ON THE DRAWINGS. FOLLOW ROUTING SHOWN FOR PIPES AND DUCTS AS CLOSELY AS PRACTICABLE; PLACE RUNS PARALLEL WITH LINES OF BUILDING. UTILIZE SPACES EFFICIENTLY TO MAXIMIZE ACCESSIBILITY FOR OTHER INSTALLATIONS, FOR MAINTENANCE, AND FOR REPAIRS.
- COMPLY WITH MANUFACTURER'S INSTRUCTIONS INCLUDING EACH STEP IN SEQUENCE. SHOULD MANUFACTURERS' INSTRUCTIONS CONFLICT WITH THE DRAWINGS REQUEST CLARIFICATION FROM THE CONTRACTING OFFICER BEFORE PROCEEDING.
- DUCT SIZES ARE INSIDE DIMENSION.
- CONTRACTOR SHALL REVIEW THESE DOCUMENTS CAREFULLY. CONTRACTOR SHALL CONTACT THE CONTRACTING OFFICER, FOR RESOLUTION OF ANY DISCREPANCIES, OMISSIONS, OR CLARIFICATIONS, BEFORE BID DATE. IN THE EVENT THAT AN INTERPRETATION OF BID DOCUMENTS IS NECESSARY AFTER THE BID DATE, THE DECISION OF THE CONTRACTING OFFICER SHALL BE FINAL AND BINDING.
- PRODUCT DELIVERY, STORAGE, AND HANDLING: PROVIDE EQUIPMENT AND PERSONNEL TO HANDLE PRODUCTS BY METHODS TO PREVENT DAMAGE. PROMPTLY INSPECT SHIPMENTS TO ENSURE THAT PRODUCTS ARE UNDAMAGED. STORE AND PROTECT PRODUCTS IN ACCORDANCE WITH MANUFACTURERS' INSTRUCTIONS.
- THE CONTRACTOR IS RESPONSIBLE FOR THE COSTS OF ALL CHANGE ORDERS, WHICH THE CONTRACTING OFFICER HAS NOT APPROVED IN WRITING PRIOR TO THE EXECUTION OF THE ASSOCIATED WORK.
- IN THE CASE OF A CONFLICT, UNLESS OTHERWISE NOTED, KEYNOTES ON MECHANICAL PLANS SHALL SUPERCEDE ANY GENERAL NOTES ON THE PLANS.
- CONTRACTOR SHALL COORDINATE WORK WITH OTHER TRADES AND NOTIFY THE CONTRACTING OFFICER IF ANY CONFLICTS OCCUR.
- THERMOSTAT LOCATIONS TO BE COORDINATED WITH CONTRACTING OFFICER. THERMOSTAT HEIGHTS SHALL BE 48" AFF TO MATCH LIGHTSWITCH HEIGHTS AND INSTALLED TO MEET ICC A117.1. CONTRACTOR TO CALIBRATE ALL THERMOSTATS SHOWN ON THIS PLAN.
- PROVIDE VOLUME DAMPERS AT ALL DIFFUSER TAKEOFFS.
- ALL TAKEOFFS, RUNOUTS, AND FLEX DUCTWORK TO DIFFUSERS SHALL BE THE SAME SIZE AS DIFFUSER INLET UNLESS OTHERWISE NOTED.
- THERMOSTAT CONTROL LINES SHALL BE SUPPORTED AT INTERVALS NOT TO EXCEED 4'-0".
- PROVIDE EXTERNAL INSULATION ON ALL NEW RIGID ROUND DUCTWORK.
- PROVIDE ACCESS DOORS IN DUCTWORK AS REQUIRED FOR ACCESS TO FIRE DAMPERS, FIRE/SMOKE DAMPERS, OR ANY OTHER MECHANICAL EQUIPMENT REQUIRING MAINTENANCE OF SERVICE.
- ALL PIPE AND DUCT PENETRATIONS THROUGH RATED WALLS SHALL BE SEALED PER 2024 IBC.

ABBREVIATIONS

AD	ACCESS DOOR
AFF	ABOVE FINISHED FLOOR
AP	ACCESS PANEL
AVG	AVERAGE
BTUH	BRITISH THERMAL UNIT PER HOUR
CFM	CUBIC FEET PER MINUTE
CW	COLD WATER
DB	DRY BULB
DN	DOWN
D	DRAIN
(E)	EXISTING
EA	EXHAUST AIR
EAT	ENTERING AIR TEMPERATURE
F	FAHRENHEIT
FLA	FULL LOAD AMPS
FPM	FEET PER MINUTE
FT	FEET
G.C.	GENERAL CONTRACTOR
ID	INSIDE DIAMETER
IN	INCHES
KW	KILOWATT
LAT	LEAVING AIR TEMPERATURE
M	MOTORIZED DAMPER
M.C.	MECHANICAL CONTRACTOR
NA	NOT APPLICABLE
NC	NORMALLY CLOSED
NIC	NOT IN CONTRACT
NO	NORMALLY OPEN
OA	OUTSIDE AIR
OAT	OUTSIDE AIR TEMPERATURE
RPM	REVOLUTIONS PER MINUTE
SA	SUPPLY AIR
SP	STATIC PRESSURE
T&P	TYPICAL
TYP.	TEMPERATURE AND PRESSURE
V	VENT, VOLTS
VD	VOLUME DAMPER
WB	WET BULB
W	WATT, WASTE
W/	WITH
W/O	WITHOUT
ESP	EXTERNAL STATIC PRESSURE
RL	REFRIGERANT LIQUID
RS	REFRIGERANT SUCTION
EFF	EFFICIENCY
EER	ENERGY EFFICIENCY RATIO
SEER	SEASONAL ENERGY EFFICIENCY RATIO
HSPF	HEATING SEASONAL PERFORMANCE FACTOR

VENTILATION AND AIR CONDITIONING SYMBOLS

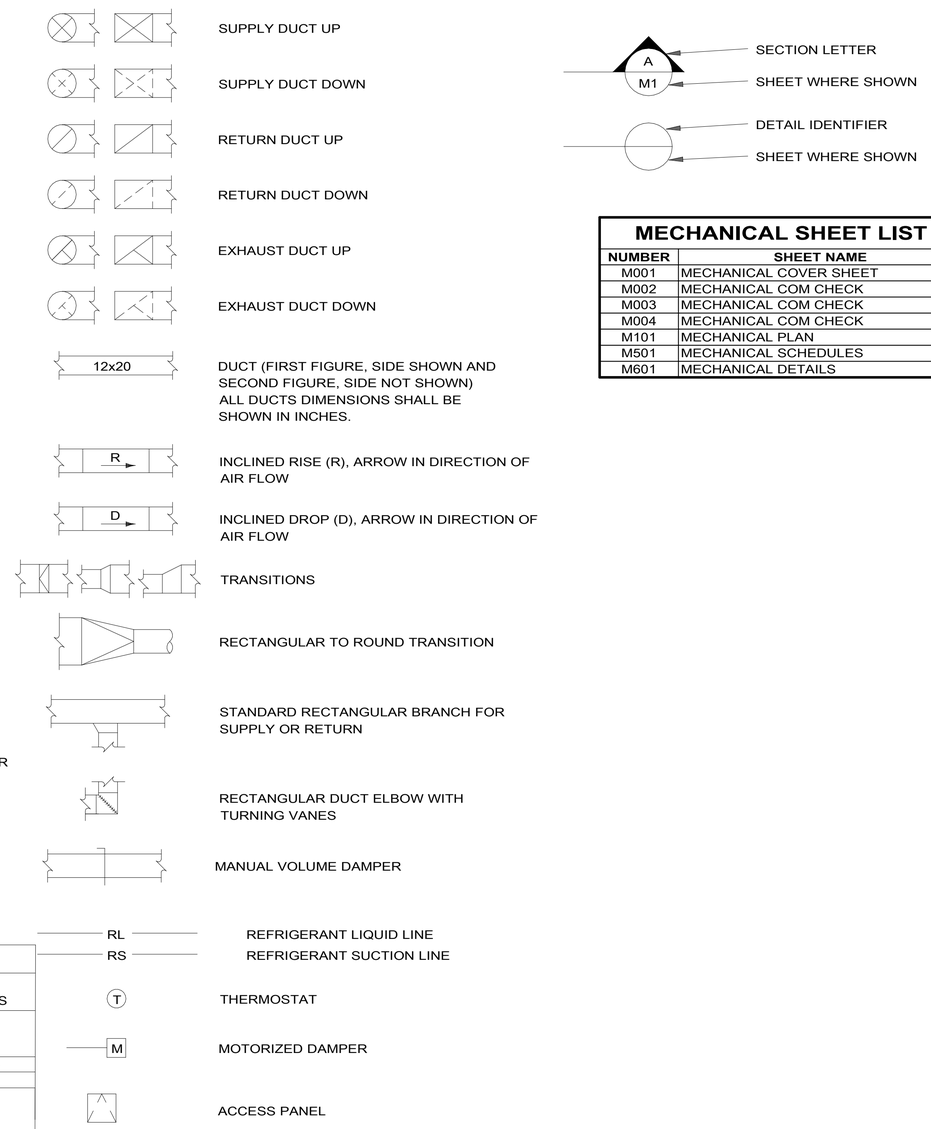

MECHANICAL SHEET LIST

NUMBER	SHEET NAME
M001	MECHANICAL COVER SHEET
M002	MECHANICAL COM CHECK
M003	MECHANICAL COM CHECK
M004	MECHANICAL COM CHECK
M101	MECHANICAL PLAN
M501	MECHANICAL SCHEDULES
M601	MECHANICAL DETAILS

OUTSIDE AIR CALCULATION (CALCULATIONS BASED ON IMC TABLE 403.3)

ROOM NAME	ROOM #	ROOM TYPE	SQUARE FEET	OCCUPANT LOAD	OA CFM/	OA	AIR DIST.	OA	OA PROVIDED	OA REQUIRED
		PER TABLE 6-1		#/1000 SF	PERSON	CFM/SF	EFFECTIVENESS	PERCENTAGE	CFM	CFM
Office Addition (FC-3)	101 - 107	Office spaces	714	6	5	0.06	0.8	8%	95	91.1

ASHRAE 15 REFRIGERANT CALCULATIONS

System Information					Space Information (See space volume table)		Effective Dispersal Volume Charge (Maximum allowable refrigerant charge)					NOTES
System Name	System Type	Refrigerant	Refrigerant Type	Refrigerant Charge (lbs)	Space Tag(s)	Total Volume (ft3)	EDVC - RCL (lbs)	EDVC - RCL ADJ. FOR ALTITUDE (lbs)	RCL COMPLIANT?	EDVC - LFL (lbs)	LFL COMPLIANT?	
FCU-3/CU-3	Split	R-454B	A2L	9.8	A	3,575	11.1	10.0	YES	78.7	YES	1,2,3
FCU-3/CU-3	Split	R-454B	A2L	9.8	B	5,363	16.6	15.0	YES	118.0	YES	2,3

NOTES:
1 SPACE VOLUME INCLUDES OVERHEAD ATTIC SPACE AS SHOWN ON PLAN.
2 CALCULATIONS ARE BASED ON ASHRAE 15-2024 AND COMPLY WITH THE 2024 INTERNATIONAL MECHANICAL CODE, SECTION 1101.1.1.
3 CALCULATIONS ARE ADJUSTED FOR ALTITUDE EQUAL TO 4000 FEET ABOVE SEA LEVEL.

SPACE VOLUME TABLE

Space Tag	Space Description	Area (SQ FT)	Height (FT)	Total Volume (CU FT)
A	Attic Space	715	5	3,575
B	101 - 107	715	8	5.363

PROFESSIONAL ENGINEER LICENSED 7471754 03/16/2026 STATE OF IDAHO ALEXANDRA M ZIMMERMAN

DESIGNED: MD	SUB SHEET NO.	TITLE OF SHEET	DRAWING NO.
CADD MD	M001	MECHANICAL COVER SHEET	XX / XX
TECH REVIEW: AMZ		MIIN MAINTENANCE BUILDING ADDITION MINIDOKA NATIONAL HISTORIC SITE	PMIS/PKG NO. XXXXXX
DATE: 03/20/2026			SHEET 29 OF 54

3/13/2026 6:42:27 AM Autodesk Docs://2025-560 MIIN Maintenance Bldg Addition/22-105F - NPS IDAHO MIIN Addition - MP - R26.rvt

COMcheck-Web™

Compliance Certificate

Project Information

Energy Code:	2024 IECC
Project Title:	NPS MIIN
Location:	Jerome, Idaho
Climate Zone:	5b
Project Type:	Addition
Project No:	83731
All Electric:	false
Is Renewable:	false
Has Battery:	false
Has Charger:	false
Has Heat Pump	false

Construction Site: **Owner/Agent:** **Designer/Contractor:**

Notes:

Renewable energy

Number of Floors:	1
Area of Three Largest Floors:	0
Proposed Capacity:	0
Required Capacity:	0
Proposed Off-site Energy:	0
Required Off-site Energy:	0
Exception:	None

Renewables Pass

Building Area

Description	Floor Area
1-Office - S (Office) : Nonresidential	280
2-Office - N (Office) : Nonresidential	434

Mechanical Compliance Certificate

Project Information

Energy Code:	2024 IECC
Project Title:	NPS MIIN
Location:	Jerome, Idaho
Climate Zone:	5b
Project Type:	Addition

Construction Site: **Owner/Agent:** **Designer/Contractor:**

Mechanical Systems List

Quantity	Component	Description
HVAC Systems		
1	CU-3/FC-3 (Single Zone):	Split System Heat Pump Heating Mode: Capacity = 36 kBtu/h, Proposed Efficiency = 9.10 HSPF2, Required Efficiency = 7.50 HSPF2 Cooling Mode: Capacity = 30 kBtu/h, Proposed Efficiency = 15.20 SEER2, Required Efficiency = 14.30 SEER2 Proposed Part Load Efficiency = 0.00 , Required Part Load Efficiency = 0.00

Mechanical Compliance Statement

Compliance Statement: The proposed mechanical design represented in this document is consistent with the building plans, specifications, and other calculations submitted with this permit application. The proposed mechanical systems have been designed to meet the 2024 IECC requirements in COMcheckWeb and to comply with any applicable mandatory requirements listed in the Inspection Checklist.

Name - Title	Signature	Date
Matt Krueger - Project Engineer	Matt Krueger Digitally signed by Matt Krueger DN: cn=Matt Krueger, o=Lombard Bryan Engineering, ou=E, email=Matt@lbengineering.com, c=US Date: 2026.03.12 07:28:36-06'00'	03/12/2026

Inspection Checklist

Energy Code: 2024 IECC

Requirements: 86% were addressed directly in the COMcheck software

Text in the "Comments/Assumptions" column is provided by the user in the COMcheck Requirements screen. For each requirement, the user certifies that a code requirement will be met and how that is documented, or that an exception is being claimed. Where compliance is itemized in a separate table, a reference to that table is provided.

Plan Review

Section # & Req.ID	Plan Review	Complies?	Comments/Assumptions
C105.2 [PR2][1]	Plans, specifications, and/or calculations provide all information with which compliance can be determined for the mechanical and service water heating systems and document where exceptions to the standard are claimed. Load calculations per acceptable engineering standards and handbooks. Hot water system sized per manufacturer's sizing guide.	☐ Complies ☐ Does Not Comply ☐ Not Observable ☐ Not Applicable	**Location on plans/spec:** N/A

Additional Comments/Assumptions:

1	High Impact (Tier 1)	2	Medium Impact (Tier 2)	3	Low Impact (Tier 3)

PROFESSIONAL ENGINEER LICENSED 7471754 03/16/2026 STATE OF IDAHO ALEXANDRA M ZIMMERMAN

DESIGNED: MD CADD MD TECH REVIEW: AMZ DATE: 03/20/2026	SUB SHEET NO. M002	TITLE OF SHEET MECHANICAL COM CHECK MIIN MAINTENANCE BUILDING ADDITION MINIDOKA NATIONAL HISTORIC SITE	DRAWING NO. XX / XX PMIS/PKG NO. XXXXXX SHEET 30 OF 54

3/13/2026 6:42:27 AM Autodesk Docs://2025-560 MIIN Maintenance Bldg Addition/22-105F - NPS IDAHO MIIN Addition - MP - R26.rvt

Footing / Foundation Inspection

Section # & Req.ID	Footing / Foundation Inspection	Complies?	Comments/Assumptions
C403.14.2, C403.14.3 [FO7][1]	Snow/ice melting system and freeze protection systems have sensors and controls configured to limit service for pavement temperature above 50F and outdoor temperature above 40F.	☐ Complies ☐ Does Not Comply ☐ Not Observable ☐ Not Applicable	**Exception:** Requirement does not apply.

Additional Comments/Assumptions:

1	High Impact (Tier 1)	2	Medium Impact (Tier 2)	3	Low Impact (Tier 3)

Plumbing Rough-In Inspection

Section # & Req.ID	Plumbing Rough-In Inspection	Complies?	Comments/Assumptions
C404.5, C404.5.1, C404.5.2 [PL1][1]	Heated water supply piping conforms to pipe length and volume requirements. Refer to section details.	☐ Complies ☐ Does Not Comply ☐ Not Observable ☐ Not Applicable	**Exception:** Requirement does not apply.

Additional Comments/Assumptions:

1	High Impact (Tier 1)	2	Medium Impact (Tier 2)	3	Low Impact (Tier 3)

Mechanical Rough-In Inspection

Section # & Req.ID	Mechanical Rough-In Inspection	Complies?	Comments/Assumptions
C403.3 [ME1][1]	HVAC equipment efficiency verified.	☐ Complies ☐ Does Not Comply ☐ Not Observable ☐ Not Applicable	*See the Mechanical Systems list for values*
C403.12.3, C403.12.3.1, C403.12.3.2 [ME13][1]	Refrigerated display cases, walk-in coolers or walk-in freezers served by remote compressors and remote condensers not located in a condensing unit, have fan-powered condensers that comply with Sections C403.12.3.1 and refrigeration compressor systems that comply with C403.12.3.2..	☐ Complies ☐ Does Not Comply ☐ Not Observable ☐ Not Applicable	**Exception:** Requirement does not apply.
C403.14.1 [ME14][1]	Systems that heat outside the building envelope are radiant heat systems controlled by an occupancy sensing device or timer switch.	☐ Complies ☐ Does Not Comply ☐ Not Observable ☐ Not Applicable	**Exception:** Requirement does not apply.
C403.13.1, C403.13.2 [ME15][1]	HVAC ducts and plenums insulated in accordance with C403.13.1 and constructed in accordance with C403.13.3, verification may need to occur during Foundation Inspection.	☐ Complies ☐ Does Not Comply ☐ Not Observable ☐ Not Applicable	**Exception:** Factory-installed as part of HVAC equipment.
C403.13.3 [ME16][1]	HVAC piping insulation insulated in accordance with Table C403.13.3. Insulation exposed to weather is protected from damage and is provided with shielding from solar radiation.	☐ Complies ☐ Does Not Comply ☐ Not Observable ☐ Not Applicable	**Location on plans/spec:** 230719
C403.2.2 [ME18][1]	Natural or mechanical ventilation is provided in accordance with International Mechanical Code Chapter 4. Mechanical ventilation has capability to reduce outdoor air supply to minimum per IMC Chapter 4.	☐ Complies ☐ Does Not Comply ☐ Not Observable ☐ Not Applicable	**Location on plans/spec:** M001
C403.4.1.3 [ME24][1]	Where thermostatic control setpoints are adjustable by occupants or HVAC operators, the adjustments are independent for heating and cooling setpoint.	☐ Complies ☐ Does Not Comply ☐ Not Observable ☐ Not Applicable	**Location on plans/spec:** M601
C403.4.1.5 [ME26][1]	Heating for vestibules and air curtains with integral heating include automatic controls that shut off the heating system when outdoor air temperatures > 45F. Vestibule heating and cooling systems controlled by a thermostat in the vestibule with heating setpoint <= 60F and cooling setpoint >= 80F.	☐ Complies ☐ Does Not Comply ☐ Not Observable ☐ Not Applicable	**Exception:** Requirement does not apply.
C403.9 [ME3][1]	Large diameter fans where installed shall be tested and labeled in accordance with AMCA 230 and meet efficacy requirements of Table C403.9.	☐ Complies ☐ Does Not Comply ☐ Not Observable ☐ Not Applicable	**Exception:** Requirement does not apply.

Section # & Req.ID	Mechanical Rough-In Inspection	Complies?	Comments/Assumptions
C403.4.3.3.2 [ME32][1]	Closed-circuit cooling tower within heat pump loop have either automatic bypass valve or lower leakage positive closure dampers. Open-circuit tower within heat pump loop have automatic valve to bypass all heat pump water flow around the tower. Open- or closed-circuit cooling towers used in conjunction with a separate heat exchanger have heat loss by shutting down the circulation pump on the cooling tower loop. Open- or closed circuit cooling towers have a separate heat exchanger to isolate the cooling tower from the heat pump loop, and heat loss is controlled by shutting down the circulation pump on the cooling tower loop.	☐ Complies ☐ Does Not Comply ☐ Not Observable ☐ Not Applicable	**Exception:** Requirement does not apply.
C403.4.7 [ME35][1]	Doors or operable openings from conditioned space to outdoors > 40 sq ft contain automatic controls interlocked with the heating and cooling system.	☐ Complies ☐ Does Not Comply ☐ Not Observable ☐ Not Applicable	**Location on plans/spec:** N/A - no doors > 40 sq ft
C403.4.8.1 [ME36][1]	Dehumidification controls do not use mechanical cooling to reduce humidity < 60% or a dew point < 55F	☐ Complies ☐ Does Not Comply ☐ Not Observable ☐ Not Applicable	**Exception:** Requirement does not apply.
C403.4.8.2 [ME37][1]	Humidity controls do not use fossil fuel or electricity for a humidity > 30% in warmest zone.	☐ Complies ☐ Does Not Comply ☐ Not Observable ☐ Not Applicable	**Exception:** Requirement does not apply.
C403.4.8.3 [ME38][1]	Zones served by systems with both humidification and dehumification prevent simultaneous operation.	☐ Complies ☐ Does Not Comply ☐ Not Observable ☐ Not Applicable	**Exception:** Requirement does not apply.
C403.5.5 [ME45][1]	Fault detection and diagnostics installed with air-cooled unitary DX units or VRF units having economizers.	☐ Complies ☐ Does Not Comply ☐ Not Observable ☐ Not Applicable	**Exception:** Requirement does not apply.
C403.7.1 [ME56][1]	Demand control ventilation provided for spaces >250 ft2 and >15 people/1000 ft2 occupant density and served by systems with air side economizer, auto modulating outside air damper control, or design airflow >3,000 cfm.	☐ Complies ☐ Does Not Comply ☐ Not Observable ☐ Not Applicable	**Exception:** Requirement does not apply.
C403.7.2 [ME57][1]	Enclosed parking garage ventilation has separate ventilation systems for each section, can reduce airflow < 0.05 cfm/sq ft of floor area and >20% of design capacity.	☐ Complies ☐ Does Not Comply ☐ Not Observable ☐ Not Applicable	**Exception:** Requirement does not apply.
C403.7.4 [ME59][1]	Exhaust air energy recovery on systems meeting Table C403.7.4(1) and C403.7.4(2).	☐ Complies ☐ Does Not Comply ☐ Not Observable ☐ Not Applicable	**Exception:** Requirement does not apply.
C403.7.5 [ME60][1]	Kitchen exhaust systems comply with replacement air and conditioned supply air limitations, and satisfy hood rating requirements and maximum exhaust rate criteria. Type I exhaust hoods contain demand control kitchen ventilation with > 50% reduction in exhaust.	☐ Complies ☐ Does Not Comply ☐ Not Observable ☐ Not Applicable	**Exception:** Requirement does not apply.

PROFESSIONAL ENGINEER LICENSED 7471754 03/16/2026 STATE OF IDAHO ALEXANDRA M ZIMMERMAN

DESIGNED: MD	SUB SHEET NO.	TITLE OF SHEET	DRAWING NO. XX / XX
CADD: MD	M003	MECHANICAL COM CHECK	PMIS/PKG NO. XXXXXX
TECH REVIEW: AMZ		MIIN MAINTENANCE BUILDING ADDITION MINIDOKA NATIONAL HISTORIC SITE	SHEET 31 OF 54
DATE: 03/20/2026			

3/13/2026 6:42:27 AM Autodesk Docs://2025-560 MIIN Maintenance Bldg Addition/22-105F - NPS IDAHO MIIN Addition - MP - R26.rvt

Section # & Req.ID	Mechanical Rough-In Inspection	Complies?	Comments/Assumptions
C403.7.6 [ME61][1]	HVAC systems serving guestrooms in Group R-1 buildings with > 50 guestrooms: Each guestroom is provided with controls that automatically manage temperature setpoint and ventilation (see sections C403.7.6.1 and C403.7.6.2).	☐ Complies ☐ Does Not Comply ☐ Not Observable ☐ Not Applicable	**Exception:** Requirement does not apply.
C403.7.8, C403.7.8.1 [ME63][1]	Classrooms, training rooms, conference and multipurpose rooms, lounges, enclosed offices, open office areas and corridors contain occupied standby ventilation controls.	☐ Complies ☐ Does Not Comply ☐ Not Observable ☐ Not Applicable	**Exception:** Requirement does not apply.
C403.8.1 [ME64][1]	HVAC fan systems at design conditions do not exceed allowable fan system motor nameplate hp or fan system bhp.	☐ Complies ☐ Does Not Comply ☐ Not Observable ☐ Not Applicable	*See the Mechanical Systems list for values* **Location on plans/spec:** M501
C403.8.3 [ME66][1]	Fans have a fan energy index (FEI) >= 1.00. Variable volume fans will have an FEI >= 0.95.	☐ Complies ☐ Does Not Comply ☐ Not Observable ☐ Not Applicable	**Exception:** Single fans with motor nameplate horsepower of <= 1 hp or 0.89 kW.
C403.15 [ME69][1]	Dehumidification systems for plant growth and maintenance are tested in accordance with DOE 10 CFR 430, has on-site heat recovery > 75% of dehumidification energy or ha a solid or liquid desiccant.	☐ Complies ☐ Does Not Comply ☐ Not Observable ☐ Not Applicable	**Exception:** Requirement does not apply.
C403.16 [ME70][1]	Service water pressure boost systems contain pressure sensors for pump control, no devices used to reduce pressure and booster pumps do not operate when there is no service water flow.	☐ Complies ☐ Does Not Comply ☐ Not Observable ☐ Not Applicable	**Exception:** Requirement does not apply.
C403.17 [ME71][1]	Clean water pumps achieve a pump energy index (PEI) <= 1.0.	☐ Complies ☐ Does Not Comply ☐ Not Observable ☐ Not Applicable	**Exception:** Requirement does not apply.
C408.2.2.1 [ME73][1]	Air outlets and zone terminal devices have means for air balancing.	☐ Complies ☐ Does Not Comply ☐ Not Observable ☐ Not Applicable	**Exception:** Fans with fan motors of 1 hp (0.74 kW) or less.

Additional Comments/Assumptions:

1	High Impact (Tier 1)	2	Medium Impact (Tier 2)	3	Low Impact (Tier 3)

Rough-In Electrical Inspection

Section # & Req.ID	Rough-In Electrical Inspection	Complies?	Comments/Assumptions
C405.7 [EL3][1]	Low-voltage dry-type distribution electric transformers meet the minimum efficiency requirements of Table C405.6.	☐ Complies ☐ Does Not Comply ☐ Not Observable ☐ Not Applicable	
C405.8 [EL4][1]	Electric motors meet the minimum efficiency requirements of Tables C405.7(1) through C405.7(4). Efficiency verified through certification under an approved certification program or the equipment efficiency ratings shall be provided by motor manufacturer (where certification programs do not exist).	☐ Complies ☐ Does Not Comply ☐ Not Observable ☐ Not Applicable	
C405.10 [EL1][1]	Total voltage drop across the combination of feeders and branch circuits <= 5%.	☐ Complies ☐ Does Not Comply ☐ Not Observable ☐ Not Applicable	
C405.10.1, C405.10.2 [EL5][1]	Escalators and moving walks comply with ASME A17.1/CSA B44 and have automatic controls configured to reduce speed to the minimum permitted speed in accordance with ASME A17.1/CSA B44 or applicable local code when not conveying passengers.	☐ Complies ☐ Does Not Comply ☐ Not Observable ☐ Not Applicable	
C405.12, C405.12.1 [EL6][1]	50% of 15/20 amp receptacles installed in enclosed offices, conference rooms, copy rooms, break rooms, classrooms and workstations and > 25% of branch circuit feeders for modular furniture will have automatic receptacle control in accordance with C405.11.1.	☐ Complies ☐ Does Not Comply ☐ Not Observable ☐ Not Applicable	

Additional Comments/Assumptions:

1	High Impact (Tier 1)	2	Medium Impact (Tier 2)	3	Low Impact (Tier 3)

Final Inspection

Section # & Req.ID	Final Inspection	Complies?	Comments/Assumptions
C403.1.1 [FI12][1]	HVAC systems and equipment design loads calculated in accordance with ANSI/ASHRAE/ACCA Standard 183 or by an approved equivalent computational procedure	☐ Complies ☐ Does Not Comply ☐ Not Observable ☐ Not Applicable	**Location on plans/spec:** Will provide upon request.
C403.3.1 [FI13][1]	HVAC systems and equipment capacity does not exceed calculated loads.	☐ Complies ☐ Does Not Comply ☐ Not Observable ☐ Not Applicable	**Location on plans/spec:** Will provide upon request.
C403.4.1 [FI14][1]	Heating and cooling to each zone is controlled by a thermostat control. Minimum one humidity control device per installed humidification/dehumidification system.	☐ Complies ☐ Does Not Comply ☐ Not Observable ☐ Not Applicable	**Location on plans/spec:** M101
C403.4.1.1 [FI15][1]	Heat pump controls prevent supplemental electric resistance heat from coming on when not needed.	☐ Complies ☐ Does Not Comply ☐ Not Observable ☐ Not Applicable	**Location on plans/spec:** M601
C403.4.1.2 [FI16][1]	Thermostatic controls have a 5 °F deadband.	☐ Complies ☐ Does Not Comply ☐ Not Observable ☐ Not Applicable	**Location on plans/spec:** M601
C403.4.1.4 [FI17][1]	Temperature controls have setpoint overlap restrictions.	☐ Complies ☐ Does Not Comply ☐ Not Observable ☐ Not Applicable	**Location on plans/spec:** M601
C403.4.2 [FI18][1]	Each zone equipped with setback controls using automatic time clock or programmable control system.	☐ Complies ☐ Does Not Comply ☐ Not Observable ☐ Not Applicable	**Location on plans/spec:** M601
C403.4.2.1, C403.4.2.2 [FI19][1]	Automatic Controls: Setback to 55 °F (heat) and 85 ° F (cool); 7-day clock, 2-hour occupant override, 10-hour backup	☐ Complies ☐ Does Not Comply ☐ Not Observable ☐ Not Applicable	**Location on plans/spec:** M601
C405.15.1, C405.15.2 [FI25][1]	Buildings in climate zones 0 - 7 comply with the on-site and/or off-site renewable energy requirements of Section C405.15.	☐ Complies ☐ Does Not Comply ☐ Not Observable ☐ Not Applicable	**Exception:** Requirement does not apply.
C408.1.1 [FI58][1]	Building operations and maintenance documents will be provided to the owner. Documents will cover manufacturers' information, specifications, programming procedures and means of illustrating to owner how building, equipment and systems are intended to be installed, maintained, and operated.	☐ Complies ☐ Does Not Comply ☐ Not Observable ☐ Not Applicable	
C408.2.1 [FI59][1]	Commissioning plan developed by registered design professional or approved agency.	☐ Complies ☐ Does Not Comply ☐ Not Observable ☐ Not Applicable	**Exception:** Requirement does not apply.

Section # & Req.ID	Final Inspection	Complies?	Comments/Assumptions
C408.2.3.1 [FI60][1]	HVAC equipment, systems and system-to-system relationships have been tested to ensure proper operation.	☐ Complies ☐ Does Not Comply ☐ Not Observable ☐ Not Applicable	**Location on plans/spec:** M501
C408.2.3.2 [FI74][1]	HVAC and service water heating control systems have been tested to ensure proper operation, calibration and adjustment of controls.	☐ Complies ☐ Does Not Comply ☐ Not Observable ☐ Not Applicable	**Location on plans/spec:** N/A
C408.2.4 [FI61][1]	Preliminary commissioning report completed and certified by registered design professional or approved agency.	☐ Complies ☐ Does Not Comply ☐ Not Observable ☐ Not Applicable	**Location on plans/spec:** N/A
C408.2.5 [FI75][1]	Furnished HVAC as-built drawings submitted within 90 days of system acceptance.	☐ Complies ☐ Does Not Comply ☐ Not Observable ☐ Not Applicable	
C408.2.5.1 [FI62][1]	An air and/or hydronic system balancing report is provided for HVAC systems.	☐ Complies ☐ Does Not Comply ☐ Not Observable ☐ Not Applicable	**Location on plans/spec:** 230593
C408.2.5.2 [FI76][1]	Final commissioning report due to building owner within 90 days of receipt of certificate of occupancy.	☐ Complies ☐ Does Not Comply ☐ Not Observable ☐ Not Applicable	**Location on plans/spec:** N/A
C408.3.2.2 [FI77][1]	Furnished O&M instructions for systems and equipment to the building owner or designated representative.	☐ Complies ☐ Does Not Comply ☐ Not Observable ☐ Not Applicable	
C408.3.2.2 [FI63][1]	Furnished O&M manuals for HVAC systems within 90 days of system acceptance.	☐ Complies ☐ Does Not Comply ☐ Not Observable ☐ Not Applicable	

Additional Comments/Assumptions:

1	High Impact (Tier 1)	2	Medium Impact (Tier 2)	3	Low Impact (Tier 3)

PROFESSIONAL ENGINEER LICENSED 7471754 03/16/2026 STATE OF IDAHO ALEXANDRA M ZIMMERMAN

DESIGNED: MD CADD: MD TECH REVIEW: AMZ DATE: 03/20/2026	SUB SHEET NO. M004	TITLE OF SHEET MECHANICAL COM CHECK MIIN MAINTENANCE BUILDING ADDITION MINIDOKA NATIONAL HISTORIC SITE	DRAWING NO. XX / XX PMIS/PKG NO. XXXXXX SHEET 32 OF 54

3/13/2026 6:42:28 AM Autodesk Docs://2025-560 MIIN Maintenance Bldg Addition/22-105F - NPS IDAHO MIIN Addition - MP - R26.rvt

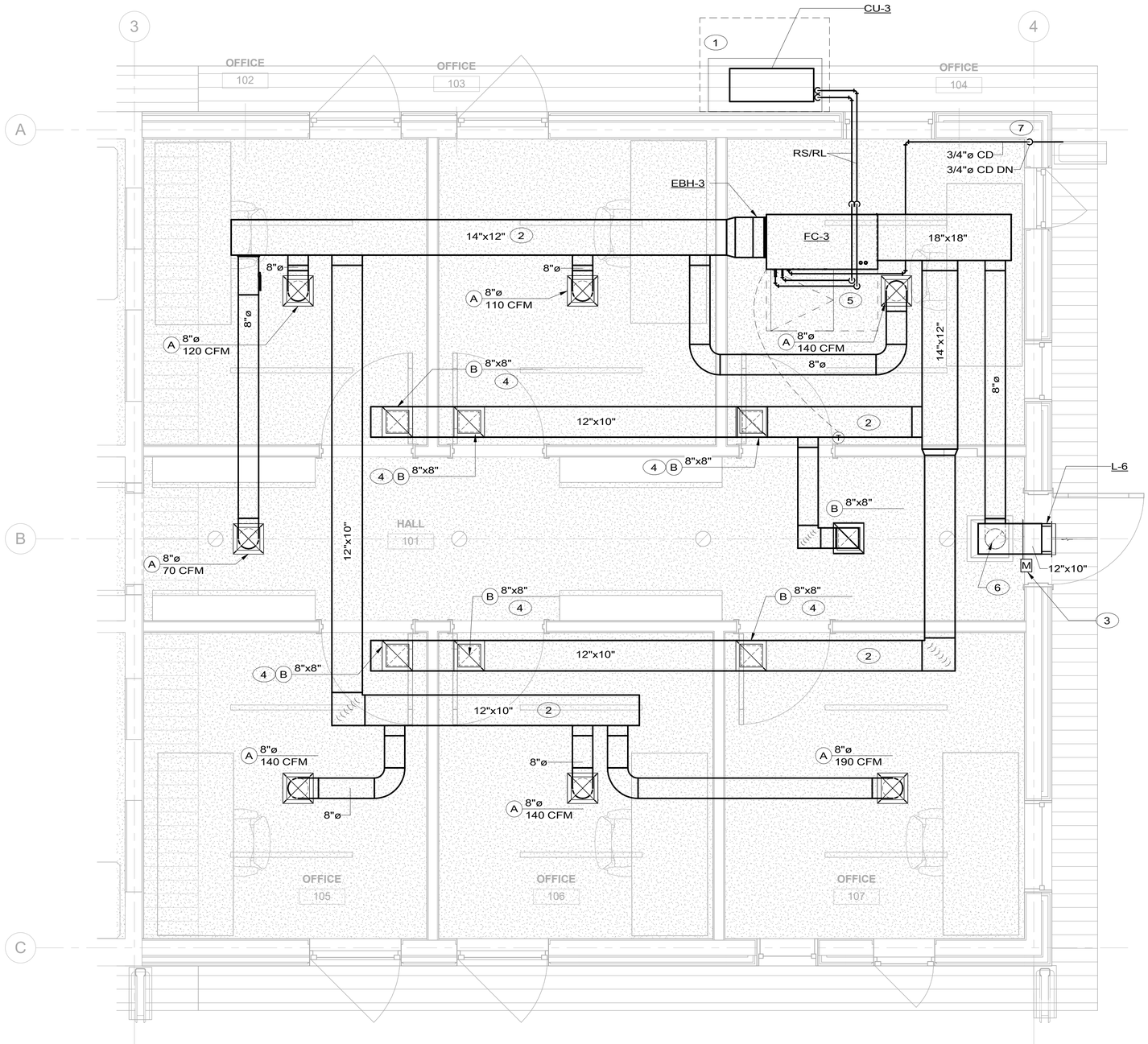

1 M101 MECHANICAL PLAN
SCALE D

GENERAL NOTES:

1. SCOPE SHOWN IS IN ADDITION TO THE EXISTING MECHANICAL SYSTEMS WITHIN THE (E) MAINTENANCE BUILDING (RE: KEYPLAN). ALL EXISTING MECHANICAL SCOPE IS TO REMAIN AS-IS.

2. INSTALL THE BOTTOM OF EQUIPMENT REQUIRING ACCESS (FC, MOTORIZED DAMPER, ETC.) WITHIN 24" OF THE CEILING FOR EASE OF FUTURE MAINTENANCE.

KEYNOTES: (#)

1. PROVIDE CONCRETE PAD, SEE CIVIL DRAWINGS AND SPECIFICATIONS. PROVIDE MANUFACTURER'S 18" EQUIPMENT STANDS FOR OUTDOOR UNITS.

2. ROUTE DUCT MAIN THROUGH SCISSOR TRUSSES ABOVE FINISHED CEILING.

3. MOTORIZED DAMPER TO REMAIN CLOSED DURING UNOCCUPIED HOURS.

4. INSTALL CEILING DIFFUSER BELOW DUCT MAIN.

5. 24"x24" ACCESS PANEL FOR FC.

6. PROVIDE OUTSIDE AIR PLENUM OFF LOUVER. TAP INTO BOTTOM OF PLENUM WITH OUTSIDE AIR DUCT, PROVIDE MOTORIZED DAMPER AND BALANCING DAMPER IN DUCT, BOTH ACCESSIBLE FROM 18"x18" ACCESS PANEL.

7. CONDENSATE TO ROUTE TIGHT TO WALL AS SHOWN AND GRAVITY DRAIN OUT OF BUILDING. PIPE IS TO STUB OUT PAST EXTERIOR BY 1". COVER CONDENSATE DRAIN WITH BUG SCREEN.

SCALE D 2 0 2 4
SCALE OF FEET

BLDG. NORTH

PROFESSIONAL ENGINEER LICENSED 7471754 03/16/2026 STATE OF IDAHO ALEXANDRA M ZIMMERMAN

DESIGNED: MD	SUB SHEET NO.	TITLE OF SHEET MECHANICAL PLAN	DRAWING NO. XX / XX
CADD MD	M101		PMIS/PKG NO. XXXXXX
TECH REVIEW: AMZ		MIIN MAINTENANCE BUILDING ADDITION MINIDOKA NATIONAL HISTORIC SITE	SHEET 33 OF 54
DATE: 03/20/2026			

3/16/2026 8:04:35 AM Autodesk Docs://2025-560 MIIN Maintenance Bldg Addition/22-105F - NPS IDAHO MIIN Addition - MP - R26.rvt

ELECTRIC HEAT SCHEDULE / SALIENT CHARACTERISTICS

GENERAL						ELECTRICAL			PHYSICAL				
TAG	BASIS OF DESIGN MANUFACTURER	BASIS OF DESIGN MODEL	LOCATION	CONFIGURATION	AIR FLOW [CFM]	VOLTAGE [V]	PHASE	POWER [KW]	DEPTH [IN]	WIDTH [IN]	HEIGHT [IN]	WEIGHT [LBS]	REMARKS
EBH-3	MITSUBISHI	EH08-SVZ-S	ATTIC	FCU-MOUNTED	910	240	1	8.00	21-1/4	17	6	14.0	1,2,3,4

NOTES:
1. PROVIDE SEPARATE CIRCUIT; DO NOT POWER FROM OUTDOOR UNIT.
2. MOUNT DIRECTLY TO OUTLET OF FAN COIL UNIT.
3. ENABLE BACKUP HEAT TO RUN WHEN OUTDOOR TEMPERATURES FALL BELOW -13°F, OR IF HEAT PUMP FAILS.
4. MANUFACTURER LISTED AS BASIS OF DESIGN OR APPROVED EQUAL.

LOUVER SCHEDULE / SALIENT CHARACTERISTICS

GENERAL						PERFORMANCE				PHYSICAL				NOTES
TAG	BASIS OF DESIGN MANUFACTURER	BASIS OF DESIGN MODEL	FINISH	LOCATION	SERVICE	AIRFLOW [CFM]	FREE AREA [SF]	FACE VELOCITY [FT/MIN]	PRESSURE DROP [IN. W.C.]	HEIGHT [IN]	WIDTH [IN]	DEPTH [IN]	WEIGHT [LBS]	
L-6	GREENHECK	ESD-435	PAINTED	SOUTH HALLWAY WALL	OA INTAKE	95	0.2	532	0.05	10	12	4	3	1,2,3,4,5

NOTES:
1. PROVIDE WITH STAINLESS STEEL BIRDSCREEN
2. PROVIDE WITH 2 COATS OF KYNAR PAINT. REFER TO ARCHITECTURAL PLANS AND SPECIFICATIONS FOR COLOR SELECTION.
3. PROVIDE WITH EXTENDED SILL, FLANGED FRAME, AND WELDED CONSTRUCTION
4. PROVIDE MOTORIZED DAMPER CONTROLLED BY TIME CLOCK SUCH THAT DAMPER IS ONLY OPEN DURING OCCUPIED HOURS.
5. MANUFACTURER LISTED AS BASIS OF DESIGN OR APPROVED EQUAL.

GRILLES, REGISTERS, AND DIFFUSERS SCHEDULE / SALIENT CHARACTERISTICS

TAG	BASIS OF DESIGN MANUFACTURER	BASIS OF DESIGN MODEL	SERVICE	MATERIAL	FACE SIZE	FINISH	REMARKS
A	PRICE	SPD	SUPPLY	STEEL	12" x 12"	POWDER COATED	1,2,3
B	PRICE	PDDR	RETURN	STEEL	12" x 12"	POWDER COATED	1,3

NOTES:
1. PROVIDE WITH PLASTER MOUNTING FRAME, INCLUDE MOUNTING CLIPS.
2. PROVIDE WITH CABLE-OPERATED BALANCING DAMPER IN SUPPLY BRANCH DUCT. LOCATE DAMPER NO LESS THAN 5'-0" FROM DIFFUSER. MOUNT DAMPER ADJUSTER IN DIFFUSER FACE.
3. MANUFACTURER LISTED AS BASIS OF DESIGN OR APPROVED EQUAL.

CONDENSING UNIT SCHEDULE / SALIENT CHARACTERISTICS

GENERAL							ELECTRICAL						PHYSICAL DATA		NOTES
TAG	BASIS OF DESIGN MANUFACTURER	BASIS OF DESIGN MODEL	COOLING CAPACITY [MBH]	HEATING CAPACITY [MBH]	COP	EER2	VOLTAGE [V]	PHASE	FREQ. [HZ]	MCA [A]	MOCP [A]	SCCR [kA]	D x W x H [IN]	WEIGHT [LBS]	
CU-3	MITSUBISHI	SUZ-KA36NAHZ	36	30.4	3.2	10.5	230	1	60	29	48	5	14 x 43 x 53	258	1,2,3,4,5,6,7

NOTES:
1. PROVIDE WITH FIELD-MOUNTED DISCONNECT BY E.C.
2. PROVIDE ALUMINUM JACKETING FOR ALL EXTERIOR REFRIGERANT PIPING.
3. ALL REFRIGERANT PIPING, INCLUDING VALVES, FITTINGS, AND CONNECTIONS, TO BE PROVIDED AND ROUTED PER MANUFACTURER'S RECOMENDATIONS.
4. PROVIDE WITH LOW AMBIENT KIT FOR PERFORMANCE DOWN TO -13°F.
5. ASSOCIATED INDOOR UNIT IS POWERED BY THE OUTDOOR UNIT.
6. PROVIDE WITH 18" STAND, SNOW/HAIL GUARD, AND 20W PANEL HEATER.
7. MANUFACTURER LISTED AS BASIS OF DESIGN OR APPROVED EQUAL.

FAN COIL UNIT SCHEDULE / SALIENT CHARACTERISTICS

GENERAL				SUPPLY FAN DATA		ELECTRICAL				COIL DATA				NOTES
TAG	BASIS OF DESIGN MANUFACTURER	BASIS OF DESIGN MODEL	LOCATION	TOTAL AIRFLOW [CFM]	ESP [IN. W.C.]	VOLTAGE [V]	PHASE	FREQUENCY [HZ]	MCA [A]	SERVICE	EAT DB [DEG. F]	LAT DB [DEG. F]	CAPACITY [MBH]	
FC-3	MITSUBISHI	SVZ-KP36NA	SUSPENDED IN ATTIC	910	0.8	230	1	60	4.1	HEATING	64.8	90.0	30.4	1,2,3,4
										COOLING	77.3	55.0	26.1	

NOTES:
1. PROVIDE WITH FITLER BOX FOR MERV 8 FILTERS.
2. MOUNT EQUIPMENT ON SPRING ISOLATORS.
3. PROVIDE WITH AUXILIARY HEAT RELAY KIT TO ENERGIZE BACKUP ELECTRIC HEAT COILS. BASIS OF DESIGN MODEL: MITSUBISHI CN24.
4. MANUFACTURER LISTED AS BASIS OF DESIGN OR APPROVED EQUAL.

PROFESSIONAL ENGINEER LICENSED 7471754 03/16/2026 STATE OF IDAHO ALEXANDRA M ZIMMERMAN

DESIGNED: MD
CADD: MD
TECH REVIEW: AMZ
DATE: 03/20/2026

SUB SHEET NO. M501

TITLE OF SHEET
MECHANICAL SCHEDULES

MIIN MAINTENANCE BUILDING ADDITION
MINIDOKA NATIONAL HISTORIC SITE

DRAWING NO. XX / XX
PMIS/PKG NO. XXXXXX
SHEET 34 OF 54

3/13/2026 6:42:29 AM Autodesk Docs://2025-560 MIIN Maintenance Bldg Addition/22-105F - NPS IDAHO MIIN Addition - MP - R26.rvt

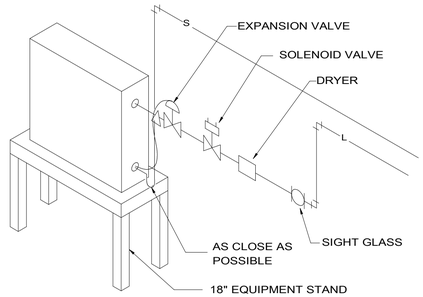

3 M601 DX COIL PIPING
SCALE: NTS

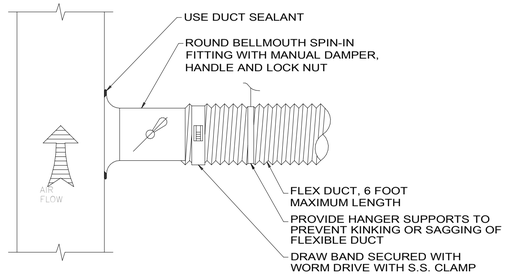

1 M601 ROUND DUCT TAKE-OFF DETAIL
SCALE: NTS

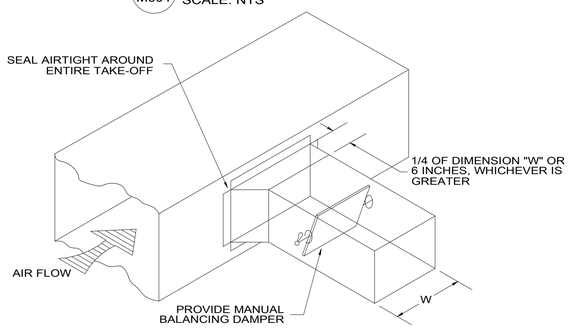

4 M601 45° DUCT TAKE-OFF DETAIL
SCALE: NTS

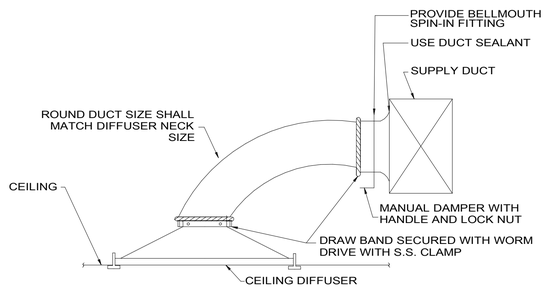

2 M601 DIFFUSER CONNECTION DETAIL
SCALE: NTS

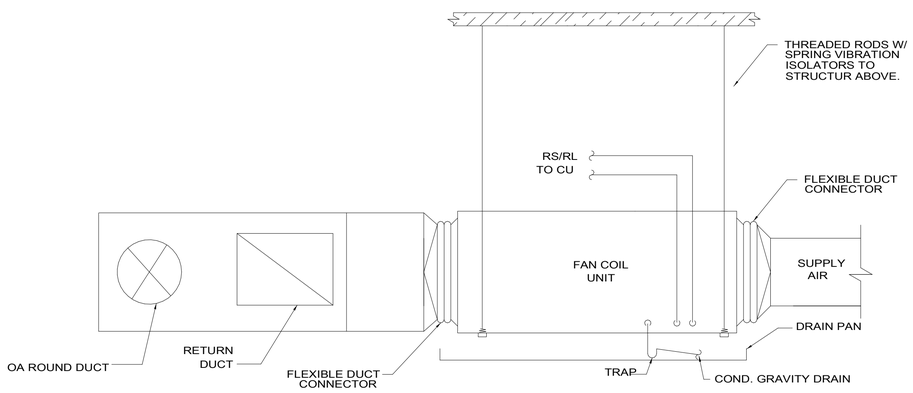

NOTES
1. PROVIDE MINIMUM OF 36" CLEARANCE ON CONTROL PANEL SIDE OF UNIT TO ACCESS FILTERS, MOTORS, COILS, ETC.
2. AUX. DRAIN PAN SHALL BE 3" LARGER (ALL 4 SIDES) THAN FAN COIL UNIT, AND SHALL BE 3" DEEP. TOP EDGE SHALL BE HEMMED. FABRICATE FROM 18 GA. GALVANIZED STEEL, SEAL WATERTIGHT.
3. PROVIDE FLOAT SWITCH IN AUX. DRAIN PAN, WIRED TO SHUT DOWN FAN COIL UNIT.

5 M601 SUSPENDED HORIZONTAL FAN COIL UNIT DETAIL
SCALE: NTS

CONTROL SEQUENCE OF OPERATIONS

7-DAY PROGRAMMABLE THERMOSTATS SHALL CONTROL ALL FAN COIL UNITS.

SPACE SETPOINTS
OCCUPIED:
HEATING: 70°F (ADJ.)
COOLING: 75°F (ADJ.)

UNOCCUPIED:
HEATING: 55°F (ADJ.)
COOLING: 85°F (ADJ.)

INDOOR FAN COIL UNIT (FC-3) AND OUTDOOR CONDENSING UNIT (CU-3):
UNITS SHALL BE ENABLED WITH THEIR ASSOCIATED OUTDOOR CONDENSING UNITS VIA THERMOSTAT TO PROVIDE HEATING OR COOLING TO THE SPACES DURING ALL OCCUPIED HOURS.

WITH A CALL FOR HEATING OR COOLING, THE OUTDOOR FAN AND COMPRESSOR SHALL ENERGIZE TO RUN AT LOWEST DEMAND. IF THIS DOES NOT SATISFY DEMAND, THE SYSTEM SHALL RAMP UP UNTIL IT SATISFIES THE DEMAND. AFTER MEETING THE HIGHER DEMAND, THE UNIT SHALL RETURN TO LOWER CAPACITY UNTIL THE DEMAND IS SATISFIED OR UNTIL THE DEMAND INCREASES.

WITH A CALL FOR HEATING OR COOLING, THE INDOOR UNIT SHALL BE ENABLED WITH THE ASSOCIATED OUTDOOR UNIT VIA INTERNAL CONTROLS TO PROVIDE HEATING OR COOLING.

THE INDOOR UNIT SHALL BE SUPPLIED WITH A MANUFACTURER COMPATIBLE EXTERNAL HEATER ADAPTER, EQUAL TO RELAY KIT CN24 TO ENABLE THE ELECTRIC AUXILIARY HEATER (EBH-3) DURING TIMES OF EXTREME COLD WHEN THE OUTDOOR UNIT CANNOT OPERATE IN HEATING MODE. SUPPLEMENTAL HEAT SHALL BE LOCKED OUT FROM OPERATION WHEN THE OUTSIDE AIR TEMPERATURE IS HIGH ENOUGH FOR THE HEAT PUMP ALONE TO ACHIEVE SPACE SET POINT. UTILIZE CONTROL EQUAL TO ETC-211000-MIT.

WHEN THERE IS NOT A CALL FOR HEATING OR COOLING, THE FAN SHALL OPERATE CONTINUOUSLY DURING OCCUPIED HOURS FOR PROPER VENTILATION.

INTAKE LOUVER MOTORIZED DAMPERS (L-6):
THE MOTORIZED DAMPER SERVING L-6, RESPONSIBLE FOR SPACE VENTILATION INTAKE, SHALL BE CONTROLLED BY TIMECLOCK TO REMAIN FULLY OPEN DURING OCCUPIED HOURS. THE DAMPER SHALL REMAIN CLOSED DURING UNOCCUPIED HOURS.

PROFESSIONAL ENGINEER LICENSED 7471754 03/16/2026 STATE OF IDAHO ALEXANDRA M ZIMMERMAN

DESIGNED:	MD
CADD	MD
TECH REVIEW:	AMZ
DATE:	03/20/2026
SUB SHEET NO.	M601
TITLE OF SHEET	MECHANICAL DETAILS
	MIIN MAINTENANCE BUILDING ADDITION MINIDOKA NATIONAL HISTORIC SITE
DRAWING NO.	xx / xx
PMIS/PKG NO.	XXXXXX
SHEET	35 OF 54

3/13/2026 6:42:29 AM Autodesk Docs://2025-560 MIIN Maintenance Bldg Addition/22-105F - NPS IDAHO MIIN Addition - MP - R26.rvt

COVERSHEET NOTES

1. THE CONTRACTOR SHALL PROVIDE ALL LABOR AND MATERIAL NECESSARY FOR A COMPLETE AND FUNCTIONING ELECTRICAL SYSTEM.
2. MATERIALS AND INSTALLATION SHALL COMPLY WITH CODES, LAWS AND ORDINANCES OF FEDERAL GOVERNING BODIES HAVING JURISDICTION. CODES FOR THIS SCOPE OF WORK INCLUDE THE 2024 IBC, IFC, IEBC AND IECC, 2020 NEC, AND NFPA 914.
3. MATERIALS AND EQUIPMENT SHALL BE LISTED AND/OR LABELED BY U.L., ETL, CSA OR ANOTHER RECOGNIZED TESTING LAB.
4. ALL WORK REQUIRED FOR THE INSTALLATION AS SHOWN ON DRAWINGS INCLUDING LABOR, EQUIPMENT AND MATERIALS SHALL BE IN STRICT COMPLIANCE WITH THE BUILDING STANDARDS, EXCEPT AS NOTED OTHERWISE.
5. THE CONTRACTOR SHALL SECURE AND PAY FOR ALL PERMITS, GOVERNMENTAL FEES, TAXES AND LICENSES NECESSARY FOR THE PROPER EXECUTION AND COMPLETION OF THE ELECTRICAL WORK.
6. THE CONTRACTOR SHALL PREPARE AND SUBMIT TO GOVERNMENTAL AGENCIES AND UTILITY COMPANIES SHOP DRAWINGS, WHICH ARE REQUIRED BY THESE AGENCIES, FOR THEIR APPROVAL.
7. ALL MATERIALS, AND EQUIPMENT SHALL BE ERECTED, INSTALLED, CONNECTED, CLEANED, ADJUSTED, TESTED, CONDITIONED, AND PLACED IN SERVICE IN ACCORDANCE WITH THE MANUFACTURER'S DIRECTIONS AND RECOMMENDATIONS.
8. ALL MATERIAL, EQUIPMENT, WIRING DEVICES, ETC. SHALL BE NEW, UNLESS SPECIFICALLY INDICATED AS EXISTING TO BE REUSED.
9. THE CONTRACTOR SHALL PROVIDE NEW TYPE WRITTEN PANEL DIRECTORIES FOR ALL EXISTING PANELS WITH NEW CIRCUITS. PANELBOARD SHALL BE MARKED WHERE THE SOURCE OF POWER SUPPLY ORIGINATES.
10. DO NOT SHARE NEUTRAL CONDUCTORS FOR MULTIWIRE BRANCH CIRCUITS. WHERE THE E.C. PROPOSES THE USE OF SHARED NEUTRAL CONDUCTORS OR SHARED NEUTRAL CONDUCTORS ARE REQUIRED (SUCH AS POWERED FURNITURE SYSTEMS), HANDLE TIES SHALL BE PROVIDED ON THE CIRCUIT BREAKERS, WITH SHARED NEUTRALS, SUCH THAT IT WILL SIMULTANEOUSLY DISCONNECT ALL UNGROUNDED CONDUCTORS. ALL HANDLE TIES ARE REQUIRED TO BE INDICATED ON THE PANELBOARD SHOP DRAWINGS.
11. SHOULD ACTUAL FIELD CONDITIONS REQUIRE INDICATED CIRCUIT DESIGNATIONS TO VARY, INDICATE THE CIRCUIT NUMBER USED ON THE "AS-BUILT" DRAWINGS.
12. ALL SERVICE EQUIPMENT SHALL BE LEGIBLY MARKED IN THE FIELD BY THE ELECTRICAL CONTRACTOR WITH THE MAXIMUM AVAILABLE FAULT CURRENT AS INDICATED WITHIN THESE DOCUMENTS. THE FIELD MARKING(S) SHALL COMPLY WITH ELECTRICAL SPECIFICATIONS FOR READABILITY AND DURABILITY.
13. TYPE AC CABLING IS NOT PERMITTED UNDER ANY CIRCUMSTANCES. ALL NEW CIRCUITS SHALL HAVE A GROUND WIRE INSTALLED.
14. PER NPS REQUIREMENTS, ALL WIRING MUST BE INSTALLED IN CONDUIT (MINIMUM SIZE 3/4").
15. ELECTRICAL CONTRACTOR SHALL PROVIDE ALL SPECIAL OUTLET BOXES THAT MAY BE REQUIRED TO ENCLOSE RECEPTACLES.
16. EACH SWITCH, LIGHT, RECEPTACLE AND OTHER MISCELLANEOUS DEVICE SHALL BE PROVIDED WITH A GALVANIZED OR PRESSED STEEL OUTLET BOX OF THE KNOCKOUT TYPE, OF NOT LESS THAN NO. 14 U.S. GAUGE STEEL. CONDUITS SHALL BE FASTENED WITH LOCKNUTS AND BUSHINGS AND ALL UNUSED KNOCKOUTS MUST BE LEFT SEALED. THERE MUST BE SUFFICIENT ROOM FOR WIRES AND BUSHINGS AND DEEP BOXES SHALL BE INSTALLED WHERE REQUIRED. BOXES SHALL BE SECURELY AND ADEQUATELY SUPPORTED.
17. ALL EXPOSED CONDUIT SHALL BE CONCEALED TO THE GREATEST EXTENT POSSIBLE, AND SHALL BE INSTALLED PARALLEL AND CLOSE TO STRUCTURAL MEMBERS. GENERAL CONTRACTOR SHALL PAINT CONDUIT TO MATCH ADJACENT FINISHES.
18. ALL FACE PLATE AND DEVICE COLORS SHALL MATCH EXISTING.
19. PROVIDE LUMINARIES SHOWN AS SHADED WITH EMERGENCY BATTERY BACKUP. EMERGENCY LUMINARIES SHALL SENSE UNSWITCHED POWER TO THE SPACE AND OPERATED AUTOMATICALLY UPON LOSS OF NORMAL POWER. CONNECT THE EMERGENCY BATTERY BACKUP TO THE UN-SWITCHED LEG OF THE LIGHTING CIRCUIT INDICATED.
20. ALL DIMMED LIGHTING CIRCUITS ARE TO RECEIVE DEDICATED NEUTRALS. DO NOT SHARE NEUTRALS ON DIMMED LIGHTING CIRCUITS.
21. PROVIDE CONTRACTING OFFICER WITH A COMPLETE LISTING OF ALL LAMPS UTILIZED ON THE PROJECT INCLUDING MANUFACTURER AND CATALOG INFORMATION. PROVIDE A SUGGESTED SOURCE, INCLUDING CONTACT NAME AND PHONE NUMBER, FOR REORDERING.
22. THE CONTRACTOR SHALL VERIFY THE CEILING TYPE BEFORE ORDERING LIGHTING FIXTURES.
23. ROUGH-IN FOR MECHANICAL EQUIPMENT SHALL ONLY OCCUR AFTER MECHANICAL EQUIPMENT SUBMITTALS ARE THOROUGHLY REVIEWED FOR CHANGES. NOTIFY CONTRACTING OFFICER OF ANY DISCREPANCIES.
24. THE POWER AND CONTROL REQUIREMENTS FOR ALL EQUIPMENT CONNECTIONS SHALL BE CONFIRMED WITH APPROVED SHOP DRAWINGS PRIOR TO ELECTRICAL ROUGH-IN. FINAL POWER REQUIREMENTS, DIMENSIONED ROUGH-IN LOCATIONS, LOW VOLTAGE SYSTEM CONNECTIONS, ETC. SHALL BE CONFIRMED AND MODIFIED AS REQUIRED.
25. ALL DEVICES IN OR ABOVE COUNTERS SHALL HAVE LOCATIONS AND MOUNTING HEIGHTS CONFIRMED WITH ARCHITECTURAL ELEVATIONS & CONTRACTING OFFICER PRIOR TO ROUGH-IN. ANY ADJUSTMENTS TO MOUNTING HEIGHTS REQUIRED BY LACK OF COORDINATION WILL BE AT THE CONTRACTOR'S EXPENSE.
26. ALL EXISTING ELECTRICAL SERVICES NOT SPECIFICALLY INDICATED TO BE REMOVED OR ALTERED SHALL REMAIN AS THEY PRESENTLY EXIST.
27. IDENTIFY EACH RECEPTACLE WITH PANELBOARD IDENTIFICATION AND CIRCUIT NUMBER. USE HOT, STAMPED, OR ENGRAVED MACHINE PRINTING WITH BLACK-FILLED LETTERING ON FACE OF PLATE, AND DURABLE WIRE MARKERS OR TAGS INSIDE OUTLET BOXES.
28. UNLESS OTHERWISE NOTED, ALL GFCI RECEPTACLES SHALL HAVE TEST/RESET SWITCHES INTEGRAL TO RECEPTACLE DEVICE.

PROFESSIONAL ENGINEER LICENSED 17050 03/13/2026 STATE OF IDAHO JON E BROOKS

DESIGNED: ANW, TW CADD: ANW, TW TECH REVIEW: MRS, KMD DATE: 03/20/2026	SUB SHEET NO. E000	TITLE OF SHEET ELECTRICAL COVER SHEET MIIN MAINTENANCE BUILDING ADDITION MINIDOKA NATIONAL HISTORIC SITE	DRAWING NO. xx / xx PMIS/PKG NO. XXXXXX SHEET 36 OF 54

3/13/2026 10:39:18 AM Autodesk Docs://2025-560 MIIN Maintenance Bldg Addition/5854.02 - NPS MIIN - Electrical - E26.rvt

DISTRIBUTION AND RACEWAY

- MDC — MAIN DISTRIBUTION CENTER (MDC)
- SURFACE MTD PANELBOARD
- RECESSED PANELBOARD
- T — TRANSFORMER
- BRANCH CIRCUIT HOMERUN
- CONDUIT CONCEALED IN FLOOR OR UNDERGROUND
- CONDUIT EXPOSED OR CONCEALED IN WALL OR CEILING
- RACEWAY UP
- RACEWAY DOWN
- CAPPED CONDUIT
- CURRENT TRANSFORMER
- CIRCUIT BREAKER SWITCH
- FUSED SWITCH
- GROUNDING ELECTRODE CONDUCTOR
- M — METER
- GFP — GROUND FAULT PROTECTION

LIGHTING FIXTURES

- A a 1 — LUMINAIRE TYPE, REFERENCING LUMINAIRE SCHEDULE TYPICAL ALL FIXTURES. SUBSCRIPT, IF SHOWN, REFERENCES WALL SWITCH OR RELAY/ZONE CONTROL
- WALL MOUNTED LUMINAIRE
- SURFACE OR PENDANT MOUNTED LUMINAIRE
- RECESSED LUMINAIRE
- RECESSED DOWNLIGHT LUMINAIRE
- SURFACE CEILING LUMINAIRE
- PENDANT LUMINAIRE
- ARROW INDICATES DIRECTIONAL LUMINAIRE
- MONOPOINT LUMINAIRE
- SURFACE OR PENDANT TRACK LUMINAIRE
- LED TAPE LUMINAIRE
- EXIT LUMINAIRE - SHADED INDICATES FACE / DIRECTIONAL ARROWS AS SHOWN BATTERY PACK EMERGENCY LUMINAIRE
- HATCH INDICATES EMERGENCY LUMINAIRE
- STEP LIGHT TYPE LUMINAIRE
- IN-GRADE UPLIGHT
- BOLLARD OR POST TOP LUMINAIRE
- EXTERIOR AREA LIGHT

WIRING DEVICES

- DUPLEX RECEPTACLE
- FOUR PLEX RECEPTACLE
- SINGLE RECEPTACLE
- COMBO RECEPTACLE/SWITCH
- SWITCHED DUPLEX RECEPTACLE
- EMERGENCY POWERED DUPLEX RECEPTACLE
- SPECIAL PURPOSE RECEPTACLE
- FLOOR MOUNTED SPECIAL PURPOSE RECEPTACLE
- FLOOR MOUNTED RECEPTACLE DUPLEX/QUAD
- CLG CLG — CEILING MOUNTED RECEPTACLE DUPLEX/QUAD
- SR — SURFACE RACEWAY
- JUNCTION BOX
- WALL MOUNTED J-BOX
- FLOOR MOUNTED JUNCTION BOX
- MOLDED CASE CIRCUIT BREAKER IN ENCLOSURE
- NON-FUSED DISCONNECT SWITCH
- FUSED DISCONNECT SWITCH
- MAGNETIC CONTROLLER (STARTER)
- HP — MOTOR
- TC — TIME CLOCK
- PC — PHOTOCELL
- $TO — THERMAL OVERLOAD SWITCH
- $ — SINGLE POLE SWITCH, LINE VOLTAGE
- $3 — 3-WAY SWITCH, LINE VOLTAGE
- $4 — 4-WAY SWITCH, LINE VOLTAGE
- $K — KEY OPERATED SWITCH
- $D — DIMMER SWITCH, LINE VOLTAGE
- X — LIGHTING CONTROL DEVICE, REFER TO DETAILS FOR CONTROL INTENT

ABBREVIATIONS AND SYMBOLS

A	AMPERE(S)
AC	ABOVE COUNTER
AFF	ABOVE FINISHED FLOOR
AFG	ABOVE FINISHED GRADE
AHJ	AUTHORITY HAVING JURISDICTION
AIC	AMPERES INTERRUPTING CAPACITY
ATS	AUTOMATIC TRANSFER SWITCH
BFF	BELOW FINISHED FLOOR
C	CONDUIT
CATV	CABLE TELEVISION
CB	CIRCUIT BREAKER
CT	CURRENT TRANSFORMER
DISC	DISCONNECT
DW	DISHWASHER
DWG(S)	DRAWING(S)
(E)	EXISTING TO REMAIN
EC	ELECTRICAL CONTRACTOR
EF	EXHAUST FAN
(ER)	EXISTING TO BE RELOCATED
EM	EMERGENCY
EPO	EMERGENCY POWER OFF
EWC	ELECTRIC WATER COOLER
F	FUSE
FLA	FULL LOAD AMPS
FS	SPRINKLER FLOW SWITCH
G	GROUND
GC	GENERAL CONTRACTOR
GD	GARBAGE DISPOSAL
GFI	GROUND FAULT CIRCUIT INTERRUPTER
GFP	GROUND FAULT PROTECTION
HP	HORSEPOWER
IDF	INTERMEDIATE DISTRIBUTION FACILITY
IG	ISOLATED GROUND
ISC	SHORT CIRCUIT CURRENT
KVA	KILOVOLT AMPERE(S)
KW	KILOWATT(S)
LTG	LIGHTING
MCA	MINIMUM CIRCUIT AMPERE(S)
MCB	MAIN CIRCUIT BREAKER
MDP	MAIN DISTRIBUTION CENTER
MDF	MAIN DISTRIBUTION FACILITY
MLO	MAIN LUGS ONLY
MTS	MANUAL TRANSFER SWITCH
MW	MICROWAVE
NC	NORMALLY CLOSED
NL	NIGHT LIGHT - SEE GENERAL NOTES
NO	NORMALLY OPEN
OAE	OR APPROVED EQUAL
OH	OVERHEAD
P	POLE
PART	PARTIAL CIRCUIT
PH	PHASE
PNL	PANEL
RCPT	RECEPTACLE
REF	REFRIGERATOR
(R)	EXISTING TO BE REMOVED
(RL)	RELOCATED LOCATION
SPD	SURGE PROTECTION DEVICE
TC	TIMECLOCK
TS	SPRINKLER TAMPER SWITCH
UC	UNDER COUNTER/CABINET
UG	UNDERGROUND
UON	UNLESS OTHERWISE NOTED
V	VOLT(S)
W	WATT(S) OR WIRE
WG	WIRE GUARD
WP	WEATHERPROOF
XFMR	TRANSFORMER

- X X — MECHANICAL EQUIPMENT SCHEDULE NOTATION
- X — DETAIL NOTE
- X — DELTA REVISION NOTE
- X — ELECTRICAL WIRE SIZE
- X — LIGHTING SEQUENCE OF OPERATIONS TAG, REFER TO DETAILS FOR CONTROL INTENT

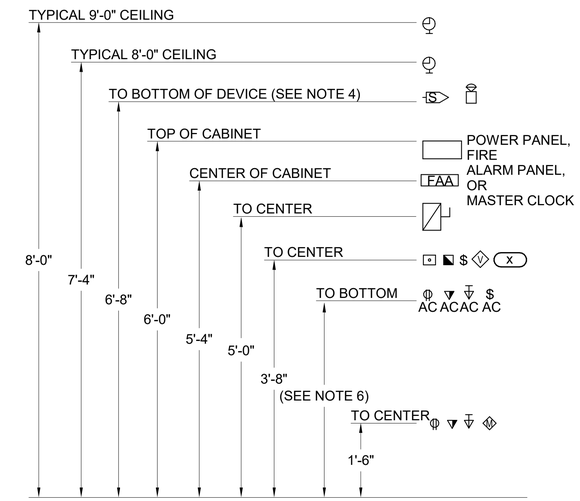

NOTES:

1. WHERE MULTIPLE LINE VOLTAGE DEVICES ARE SHOWN ADJACENT TO EACH OTHER, THEY ARE ALL TO SHARE THE SAME JUNCTION BOX, UP TO FOUR GANGS.
2. WHERE MORE THAN FOUR DEVICES ARE SHOWN ADJACENT TO EACH OTHER, DEVICES ARE TO STACK VERTICALLY ABOVE ONE ANOTHER IN TWO ROWS IN AS SMALL OF GANG BOXES AS POSSIBLE. I.E. SIX DEVICES WILL USE TWO THREE GANG BOXES, FIVE DEVICES WILL USE ONE THREE GANG AND ONE TWO GANG BOX.
3. SEPARATELY GANGED DEVICES ARE NOT ALLOWED TO BE INSTALLED ADJACENT TO ONE ANOTHER HORIZONTALLY WITHIN THE SAME STUD BAY.
4. AUDIBLE/VISUAL FIRE ALARM DEVICES SHOWN ARE TO BE MOUNTED AT 90" OR 6" BELOW CEILING, WHICHEVER IS LOWER. ABAAS STROBES TO BE MOUNTED AT 80" AFF OR 6" BELOW CEILING, WHICHEVER IS LOWER.
5. MAXIMUM ELEVATION FOR ALL LOAD CENTER CIRCUIT BREAKERS SHALL NOT EXCEED 48" AFF, WITHIN DWELLING UNITS.
6. THE E.C. SHALL REFER TO ARCHITECTURAL ELEVATIONS TO COORDINATE ALL COUNTER HEIGHTS. ALL "AC" DEVICES SHALL HAVE BOTTOM OF BACK-BOX MOUNTED 4" ABOVE THE BACK/SIDE SPLASH.

LIGHTNING PROTECTION SYSTEM NOTES

ELECTRICAL CONTRACTOR SHALL PROVIDE PRICING TO EXPAND THE EXISTING LIGHTNING PROTECTION SYSTEM FOR THE MAINTENANCE BUILDING ADDITION WITH AN UNDERWRITER'S LABORATORIES LISTED MASTER C LABEL. REFER TO PERFORMANCE SPECIFICATION SECTION 26 4113 FOR SYSTEM REQUIREMENTS. COORDINATE ALL GROUND ROD LOCATIONS ON ROOF WITH CONTRACTING OFFICER WHILE DEVELOPING SUBMITTALS. COORDINATE ALL DOWN CONDUCTOR LOCATIONS WITH CONTRACTING OFFICER AND MANUFACTURER DURING SUBMITTALS. SUBMITTALS REQUIRE FULL ROOF PLANS WITH ALL AIR TERMINALS (AND ALL OTHER EQUIPMENT) TO BE INDICATED FOR REVIEW PRIOR TO SUBMITTAL APPROVAL.

PROFESSIONAL ENGINEER LICENSED 17050 03/13/2026 STATE OF IDAHO JON E BROOKS

DESIGNED: ANW, TW CADD ANW, TW TECH REVIEW: MRS, KMD DATE: 03/20/2026	SUB SHEET NO. E001	TITLE OF SHEET ELECTRICAL COVER SHEET MIIN MAINTENANCE BUILDING ADDITION MINIDOKA NATIONAL HISTORIC SITE	DRAWING NO. XX / XX PMIS/PKG NO. XXXXXX SHEET 37 OF 54

3/13/2026 10:39:18 AM Autodesk Docs://2025-560 MIIN Maintenance Bldg Addition/5854.02 - NPS MIIN - Electrical - E26.rvt

1 E111 ELECTRICAL POWER PLAN - OVERALL
SCALE A

POWER GENERAL NOTES

A	UNLESS OTHERWISE NOTED, ALL CIRCUIT NUMBERS INDICATED ON THIS SHEET SHALL REFER TO CIRCUIT ORIGINATING IN PANELBOARDS BASED UPON THE FOLLOWING CONVENTION, (THIS SHEET ONLY): O-# = CIRCUIT TO PANEL 'O' WS-# = CIRCUIT TO PANEL 'WS'
B	120V, 20A FEEDS 1. EC SHALL UTILIZE #12 CU FOR DISTANCES LESS THAN 150 FEET. 2. EC SHALL UTILIZE #10 CU FOR DISTANCES BETWEEN 150 AND 200 FEET. 3. EC SHALL UTILIZE #8 CU FOR DISTANCES BETWEEN 250 AND 400 FEET. 4. EC SHALL UTILIZE #6 CU FOR DISTANCES GREATER THAN 400 FEET.
C	REFER TO MECHANICAL SCHEDULE AND NOTES ON SHEET E700 FOR EQUIPMENT CONNECTION AND ADDITIONAL INFORMATION ON MECHANICAL EQUIPMENT.

KEYNOTE LEGEND

KEY VALUE	KEYNOTE TEXT
1	EXISTING HEAT TRACE CONTROL PANEL.

SCALE: A 8 0 8 16
SCALE OF FEET

BLDG. NORTH

PROFESSIONAL ENGINEER LICENSED 17050 03/13/2026 STATE OF IDAHO JON E BROOKS

DESIGNED: ANW, TW CADD ANW, TW TECH REVIEW: MRS, KMD DATE: 03/20/2026	SUB SHEET NO. E111	TITLE OF SHEET ELECTRICAL POWER PLAN MIIN MAINTENANCE BUILDING ADDITION MINIDOKA NATIONAL HISTORIC SITE	DRAWING NO. XX / XX PMIS/PKG NO. XXXXXX SHEET 38 OF 54

3/13/2026 10:39:19 AM Autodesk Docs://2025-560 MIIN Maintenance Bldg Addition/5854.02 - NPS MIIN - Electrical - E26.rvt

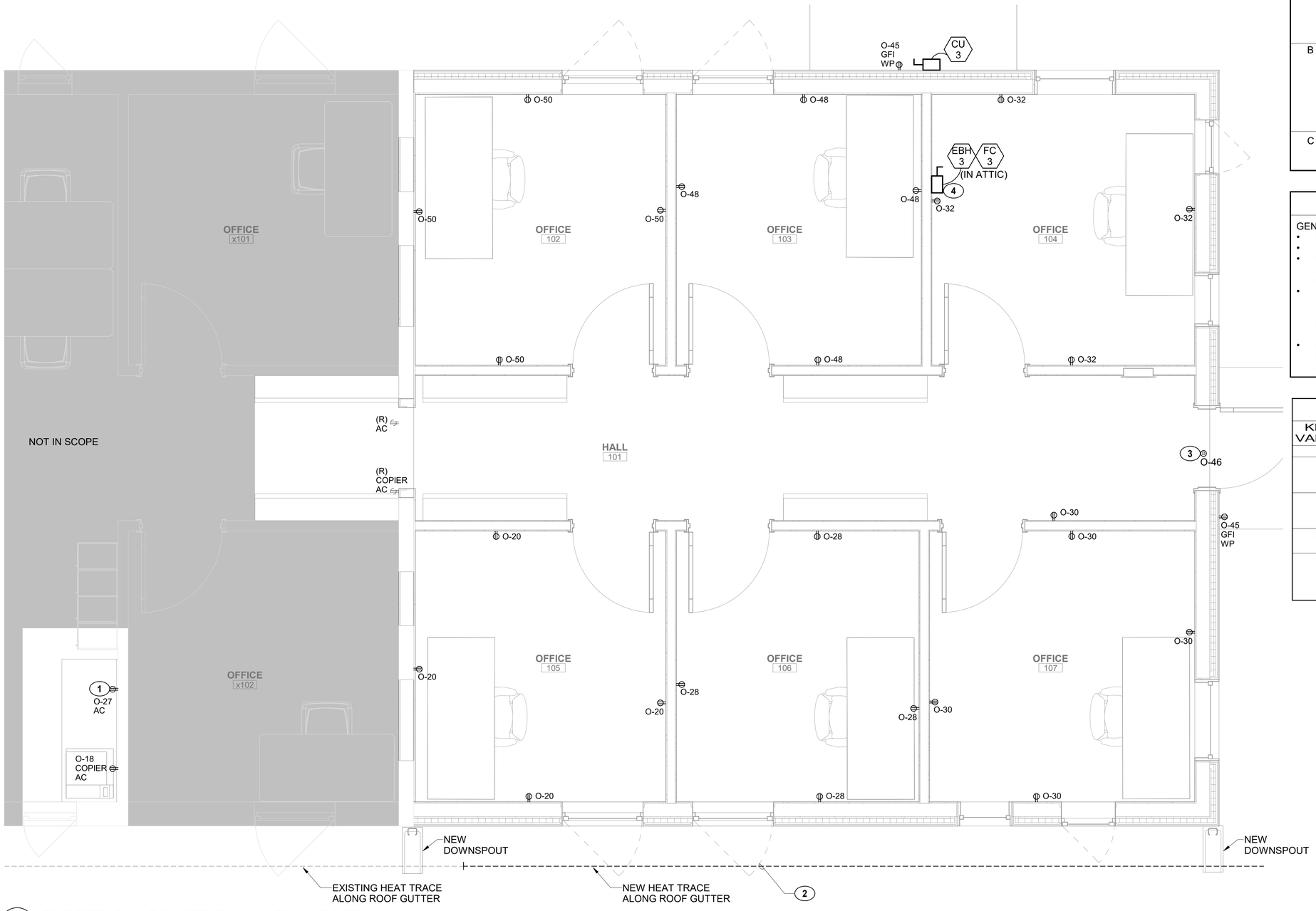

1 E112 ELECTRICAL POWER PLAN - ENLARGED

SCALE A

POWER GENERAL NOTES

A	UNLESS OTHERWISE NOTED, ALL CIRCUIT NUMBERS INDICATED ON THIS SHEET SHALL REFER TO CIRCUIT ORIGINATING IN PANELBOARDS BASED UPON THE FOLLOWING CONVENTION, (THIS SHEET ONLY): O-# = CIRCUIT TO PANEL 'O' WS-# = CIRCUIT TO PANEL 'WS'
B	120V, 20A FEEDS 1. EC SHALL UTILIZE #12 CU FOR DISTANCES LESS THAN 150 FEET. 2. EC SHALL UTILIZE #10 CU FOR DISTANCES BETWEEN 150 AND 200 FEET. 3. EC SHALL UTILIZE #8 CU FOR DISTANCES BETWEEN 250 AND 400 FEET. 4. EC SHALL UTILIZE #6 CU FOR DISTANCES GREATER THAN 400 FEET.
C	REFER TO MECHANICAL SCHEDULE AND NOTES ON SHEET E700 FOR EQUIPMENT CONNECTION AND ADDITIONAL INFORMATION ON MECHANICAL EQUIPMENT.

HEAT TRACE SYSTEM

GENERAL SUMMARY OF SYSTEM COMPONENTS ARE AS FOLLOWS:

- SELF-REGULATING HEATING CABLE WITH 12 W/FT OUTPUT.
- TIE INTO EXISTING POWER DISTRIBUTION CENTER LOCATED IN HALL 104.
- PROVIDE CABLE STRAPS, POWER CONNECTION KITS, SPLICE KITS, HANGER KITS, TEE KITS, END SEAL KITS, AND ALL ASSOCIATED COMPONENTS AS REQUIRED FOR A COMPLETE SYSTEM.
- APPROXIMATE CABLE LENGTHS:
  1. GUTTERS - APPROXIMATELY 30FT X 2 FOR PARALLEL RUN, 60 FT TOTAL.
  2. DOWNSPOUT - QTY. 2 - APPROXIMATELY 14FT OF CABLING EACH, 28 FT TOTAL.
- COORDINATE FINAL RECOMMENDED CABLE LENGTHS WITH SELECTED MANUFACTURER AND ARCHITECTURAL ROOF PLANS. PROVIDE ADDITIONAL CABLING FOR CONNECTION KITS.

KEYNOTE LEGEND

KEY VALUE	KEYNOTE TEXT
1	EC SHALL RELOCATE EXISTING RECEPTACLE TO THE ABOVE COUNTER LOCATION SHOWN. EXTEND EXISTING CIRCUIT TO NEW DEVICE LOCATION.
2	EXTEND EXISTING ICE MELT HEAT TRACE SYSTEM FOR THE BUILDING NORTH EXTERIOR GUTTERS. REFER TO HEAT TRACE SYSTEM GENERAL NOTES FOR SYSTEM GENERAL SUMMARY.
3	PROVIDE 120V, 20A CONNECTION TO MOTORIZED DAMPER FOR MECHANICAL LOUVER L-6.
4	ELECTRICAL DISCONNECT SHALL BE INSTALLED WITHIN ATTIC SPACE NEAR EBH-3 IN AN ACCESSIBLE LOCATION. CONFIRM FINAL MOUNTING LOCATION WITH CONTRACTING OFFICE PRIOR TO ROUGH-IN.

SCALE: A 2 0 2 4 SCALE OF FEET

BLDG. NORTH

PROFESSIONAL ENGINEER LICENSED 17050 03/13/2026 STATE OF IDAHO JON E. BROOKS

DESIGNED: ANW, TW CADD ANW, TW TECH REVIEW: MRS, KMD DATE: 03/20/2026	SUB SHEET NO. E112	TITLE OF SHEET ELECTRICAL POWER PLAN - ENLARGED MIIN MAINTENANCE BUILDING ADDITION MINIDOKA NATIONAL HISTORIC SITE	DRAWING NO. XX / XX PMIS/PKG NO. XXXXXX SHEET 39 OF 54

3/13/2026 10:39:20 AM Autodesk Docs://2025-560 MIIN Maintenance Bldg Addition/5854.02 - NPS MIIN - Electrical - E26.rvt

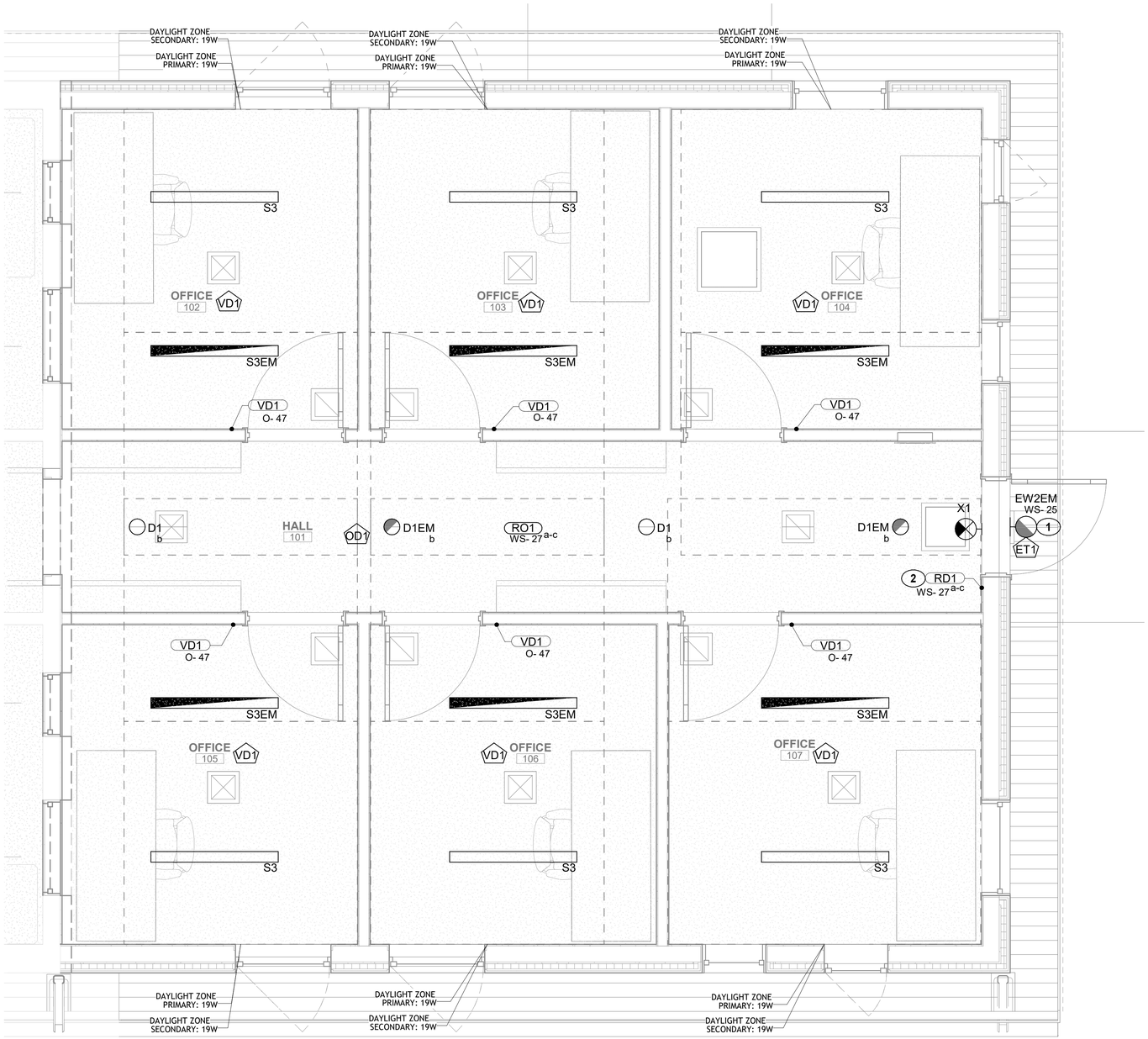

1 E211 ELECTRICAL LIGHTING PLAN - ENLARGED

SCALE A

LIGHTING GENERAL NOTES

A	ALL FIXTURES WITH HATCHING AND/OR DESIGNATED AS 'EM' SHALL BE PROVIDED WITH INTEGRAL BATTERY BACKUP, UNLESS OTHERWISE INDICATED. BATTERY SHALL ENGAGE ONLY AFTER COMPLETE LOSS OF POWER TO THE CIRCUIT.
B	CIRCUIT ALL EMERGENCY LIGHTING AND EXIT SIGNS TO NEAREST LINE VOLTAGE CIRCUIT, AHEAD OF ALL SWITCH LEGS.
C	UNLESS OTHERWISE NOTED, ALL CIRCUIT NUMBER INDICATED ON THIS SHEET SHALL REFER TO CIRCUIT ORIGINATING IN PANELBOARDS OR RELAY PANELS BASED ON THE FOLLOWING CONVENTION, (THIS SHEET ONLY): O-# = CIRCUIT TO PANEL 'O' WS-# = CIRCUIT TO PANEL 'WS'

KEYNOTE LEGEND

KEY VALUE	KEYNOTE TEXT
1	NEW EXTERIOR WALL SCONCE SHALL BE CONNECTED TO EXISTING EXTERIOR SCONCE CIRCUIT AND TIED INTO EXISTING INVERTER FOR EMERGENCY BATTERY BACKUP.
2	EC SHALL EXTEND CIRCUIT FROM EXISTING DOWNLIGHTS IN THE FLEX WORKSPACE HALL TO THE NEW DOWNLIGHTS IN HALL 101. ALL DOWNLIGHTS IN THE HALL SHALL BE CONNECTED TO SWITCHLEG 'B'. NEW WALL STATION 'RD1' SHALL BE PROGRAMMED TO MATCH EXISTING BUTTON STATIONS. SWITCHLEGS 'A' AND 'C' ARE EXISTING TO REMAIN AND NOT IN THIS SCOPE OF WORK.

LIGHTING CONTROLS NAMING CONVENTION

SYSTEM TYPE:
- **N** = NETWORKED
- **R** = ROOM CONTROLLER
- **W** = WIRELESS

- THE ABSENCE OF LETTERS UNDER 'SYSTEM TYPE' INDICATES A WIRED STANDALONE SYSTEM
- THE ABSENCE OF 'W' MEANS THE SYSTEM IS WIRED

SENSOR TYPE:
- **O** = OCCUPANCY
- **V** = VACANCY
- **P** = PHOTOCELL

DEVICES:
- **D** = DIMMER
- **S** = SWITCH
- **H** = HUB
- **U** = UNIQUE DEVICE TYPE

NUMBERING:
- **1,2,3..** = QUANTITY AS REQUIRED FOR DIFFERENT HARDWARE, DEVICE CHARACTERISTICS, OR MOUNTING CONDITIONS.

SCALE: A 2 0 2 4 SCALE OF FEET

BLDG. NORTH

PROFESSIONAL ENGINEER LICENSED 17050 03/13/2026 STATE OF IDAHO JON E BROOKS

DESIGNED: ANW, TW CADD ANW, TW TECH REVIEW: MRS, KMD DATE: 03/20/2026	SUB SHEET NO. E211	TITLE OF SHEET ELECTRICAL LIGHTING PLAN - ENLARGED MIIN MAINTENANCE BUILDING ADDITION MINIDOKA NATIONAL HISTORIC SITE	DRAWING NO. xx / xx PMIS/PKG NO. XXXXXX SHEET 40 OF 54

3/13/2026 10:39:20 AM Autodesk Docs://2025-560 MIIN Maintenance Bldg Addition/5854.02 - NPS MIIN - Electrical - E26.rvt

MECHANICAL EQUIPMENT GENERAL NOTES

A	REFER TO MECHANICAL PLANS FOR SPECIFIC EQUIPMENT LOCATIONS AND REQUIREMENTS.
B	PRIOR TO ROUGH-IN, COORDINATE ALL MECHANICAL EQUIPMENT POWER AND CONNECTION REQUIREMENTS WITH MECHANICAL CONTRACTOR'S FINAL SHOP DRAWINGS.
C	PROVIDE ALL 120V CONTROL WIRING, REFER TO SPECIFICATIONS FOR FURTHER CONTROL WIRING CLARIFICATION.
D	EXTERIOR DISCONNECT SWITCHES ARE TO BE PROVIDED AS NEMA 3R EQUIPMENT UNLESS OTHERWISE NOTED.
E	PROVIDE WEATHERPROOF 120 VOLT GFCI RECEPTACLES WITHIN 25' OF ALL ROOFTOP HEATING, VENTILATING, AND AIR CONDITIONING EQUIPMENT. CIRCUIT TO SPARE CIRCUIT ON NEAREST 120V PANELBOARD OR AS INDICATED ON PLANS.
F	PROVIDE DUCT DETECTION ON ALL RETURN AIR SYSTEMS OF 2,000 CFM OR GREATER, AND FOR ALL SUPPLY AIR SYSTEMS 15,000 CFM OR GREATER, INCLUDING THOSE SYSTEMS SERVING MULTIPLE FLOORS. PROVIDE ADDITIONAL DUCT DETECTORS AND INSTALL REMOTE INDICATOR LIGHTS AS REQUIRED BY LOCAL AUTHORITY HAVING JURISDICTION.
G	EC TO PROVIDE HAND/OFF/AUTO STARTERS FOR ALL MOTORS WHEN NOT INDICATED AS TO BE PROVIDED BY THE MECHANICAL CONTRACTOR ON THE MECHANICAL PLANS. SIZE OF STARTER TO BE BASED UPON SIZE OF MOTOR HORSEPOWER INDICATED.

MECHANICAL EQUIPMENT SPECIFIC NOTES

1	UNIT IS LOCATED WITHIN ATTIC. ASSOCIATED DISCONNECT SHALL BE LOCATED IN ACCESSIBLE LOCATION WITHIN ATTIC. COORDINATE MOUNTING LOCATION WITH CONTRACTING OFFICER PRIOR TO INSTALLATION.
2	OUTDOOR UNIT SHALL SUPPLY POWER TO INDOOR UNIT. EC SHALL PROVIDE EXACT WIRE SIZE, TYPE, AND FINAL CONNECTION REQUIREMENTS TO INDOOR UNIT PER MANUFACTURER REQUIREMENTS FOR COMPLETE AND FUNCTIONAL SYSTEM.

MECHANICAL EQUIPMENT SCHEDULE

		EQUIPMENT DESCRIPTION	LOAD	ELECTRICAL	MOCP/ MFS	FEEDER	DISCONNECT	PANEL	CIRCUIT	NOTES
CU	3	CONDENSING UNIT	29 MCA	240 V/1-6960 VA	35A	2#8, 1#10G, 1"C	60A/2P	WS	49,51	2
EBH	3	ELECTRIC BACK-UP HEATER	8.00 KW	240 V/1-8000 VA	50A	2#6, 1#10G, 1"C	60A/2P	WS	45,47	1
FC	3	FAN COIL UNIT	4.1 MCA	240 V/1-984 VA	--	--	--	WS	49,51	2

GENERAL NOTES	
A.	ALL EQUIPMENT SHOWN ON ELECTRICAL ONE-LINE DIAGRAM IS EXISTING TO REMAIN, SHOWN FOR INFORMATIONAL PURPOSES ONLY.

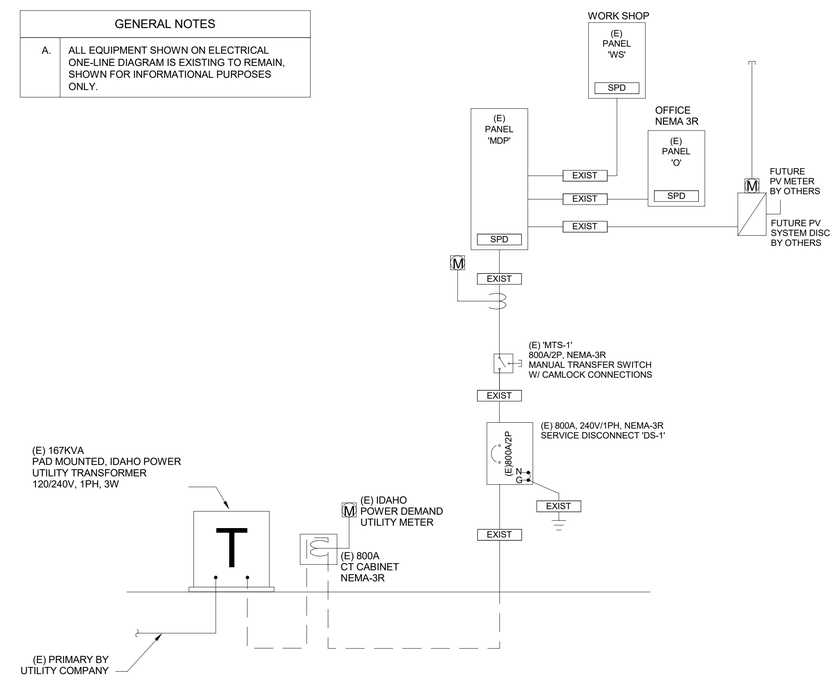

1 E600 EXISTING ONE-LINE DIAGRAM
N.T.S.

PROFESSIONAL ENGINEER LICENSED 17050 03/13/2026 STATE OF IDAHO JON E BROOKS

DESIGNED:	SUB SHEET NO.	TITLE OF SHEET	DRAWING NO.
ANW, TW	E600	ELECTRICAL ONE-LINE DIAGRAM	XX / XX
CADD: ANW, TW		MIIN MAINTENANCE BUILDING ADDITION	PMIS/PKG NO. XXXXXX
TECH REVIEW: MRS, KMD		MINIDOKA NATIONAL HISTORIC SITE	SHEET 41 OF 54
DATE: 03/20/2026			

3/13/2026 10:39:20 AM Autodesk Docs://2025-560 MIIN Maintenance Bldg Addition/5854.02 - NPS MIIN - Electrical - E26.rvt

PANEL: MDP

LOCATION: EXTERIOR WEST
SUPPLY FROM: DS-1
MOUNTING: Surface
ENCLOSURE: NEMA 3R

VOLTS: 120/240 Single
PHASES: 1
WIRES: 3

A.I.C. RATING: 22K AIC
MAINS TYPE: MCB
MAINS RATING: 800 A
MCB RATING: 800 A

Notes:
EXISTING

CKT	CCT TYPE	LOAD DESCRIPTION	TRIP	POLES	A		B		C		POLES	TRIP	LOAD DESCRIPTION	CCT TYPE	CKT
1	L; E;...	PANEL O (N2)	250	2	28190	34300					2	400	PANEL WS (N1)	L; E;...	2
3	--	--	--	--			26490	33781			--	--	--	--	4
5	--	BUSSED SPACE	--	1	--	3600					2	20	EXTERIOR EV CHARGER (FUTURE)	E	6
7	--	BUSSED SPACE	--	1			--	3600			--	--	--	--	8
9	--	BUSSED SPACE	--	1	--	--					1	--	BUSSED SPACE	--	10
11	--	BUSSED SPACE	--	1			--	--			1	--	BUSSED SPACE	--	12
13	--	BUSSED SPACE	--	1	--	--					1	--	BUSSED SPACE	--	14
15	--	BUSSED SPACE	--	1			--	--			1	--	BUSSED SPACE	--	16
17	--	BUSSED SPACE	--	1	--	--					1	--	BUSSED SPACE	--	18
19	--	BUSSED SPACE	--	1			--	--			1	--	BUSSED SPACE	--	20
21	--	BUSSED SPACE	--	1	--	--					1	--	BUSSED SPACE	--	22
23	--	BUSSED SPACE	--	1			--	--			1	--	BUSSED SPACE	--	24
				Total Load:	66090 VA		63871 VA		0 VA						
				Total Amps:	551 A		532 A		0 A						

LEGEND

CCT TYPE:	LOAD	DEMAND LOAD	PANEL TOTALS	
LIGHTING:	1811 VA	2264 VA		
RECEPTACLE:	22980 VA	16490 VA	**TOTAL CONN. LOAD:**	129960 VA
MOTOR:	4908 VA	5202 VA	**TOTAL EST. LOAD:**	124216 VA
EQUIPMENT:	100263 VA	100263 VA	**TOTAL CONN.:**	542 A
KITCH EQUIP:	Not Computed	Not Computed	**TOTAL EST. DEMAND:**	518 A

NOTES:
N1. EXISTING LOAD ON EXISTING CIRCUIT BREAKER.
N2. NEW LOAD ON EXISTING CIRCUIT BREAKER.

PANEL: O

LOCATION: EXTERIOR WEST
SUPPLY FROM: MDP
MOUNTING: Surface
ENCLOSURE: NEMA 3R

VOLTS: 120/240 Single
PHASES: 1
WIRES: 3

A.I.C. RATING: 22K AIC
MAINS TYPE: MLO
MAINS RATING: 250 A
MCB RATING: N/A

Notes:
EXISTING PANEL.

CKT	CCT...	LOAD DESCRIPTION	TRIP	POLES	CB TYPE	A		B		CB TYPE	POLES	TRIP	LOAD DESCRIPTION	CCT...	CKT
1	R	RCPT - OFFICE 102 (N1)	20	1		720	6000				2	80	EWH-1 - UTILITY 107 (N1)	E	2
3	R	RCPT - OFFICE 101 (N1)	20	1				720	6000		--	--	--	--	4
5	R	RCPT - FLEX 100 (N1)	20	1		1260	2500				2	30	EBH-1 - HALL 104 (N1)	E	6
7	R	RCPT - IT 103 (N1)	20	1				360	2500		--	--	--	--	8
9	R	RCPT - HALL 104, UTILITY (N1)	20	1		720	4000				2	45	EBH-2 - UTILITY 107 (N1)	E	10
11	R	RCPT - EWC - HALL 104 (N1)	20	1				360	4000		--	--	--	--	12
13	R	RCPT - AC - BREAK RM (N1)	20	1		180	900			GFCI	2	30	RECPT - DRYER - BREAK (N1)	E	14
15	R	RCPT - WASHER - BREAK (N1)	20	1	GFCI			900	900		--	--	--	--	16
17	E	RCPT - REF - BREAK RM (N1)	20	1		900	1200				1	20	RCPT - COPIER - FLEX (N2)	R	18
19	R	RCPT - AC - BREAK RM (N1)	20	1				180	720		1	20	RCPT - OFFICE 105 (N2)	R	20
21	R	RCPT - AC - BREAK RM (N1)	20	1		180	104				2	15	CF-1 - FLEX 100 (N1)	E	22
23	--	SPARE (N1)	20	1				0	104		--	--	--	--	24
25	R	RCPT - EWC - HALL 104 (N1)	20	1		360	200				1	20	ADA DOOR OPERATOR (N1)	E	26
27	R	RCPT - FLEX 100 (N1)	20	1				1080	720		1	20	RCPT - OFFICE 106 (N2)	R	28
29	E	RCPT - MW - BREAK RM (N1)	20	1	GFCI	1200	900				1	20	RCPT - OFFICE 107 (N2)	R	30
31	R	RCPT - RR 106 (N1)	20	1				360	720		1	20	RCPT - OFFICE 104 (N2)	R	32
33	R	RCPT - EXTERIOR (N1)	20	1		1080	180				1	15	EF-1 - RR 106 (N1)	M	34
35	M	RCPT - DISPOSAL - BREAK (N1)	20	1				1176	200		1	15	RCP-1 - UTILITY 107 (N1)	E	36
37	E	FACP - FLEX 100 (N1)	20	1		500	144				1	15	EF-2 - UTILITY 107 (N1)	M	38
39	R	RCPT - IT 103 (N1)	20	1				360	2049		2	35	CU-1 (N1)	E	40
41	E	CU-2 (N1)	25	2		1633	2049				--	--	--	--	42
43	--	--	--	--				1633	500		1	20	DAMPER - BREAK ROOM (N1)	E	44
45	R	RCPT - EXTERIOR (N2)	20	1		360	200				1	20	L-6 DAMPER (N2)	E	46
47	L	LTG - INTERIOR ADDITION (N2)	20	1				228	720		1	20	RCPT - OFFICE 103 (N2)	R	48
49	--	SPARE (N1)	20	1		0	720				1	20	RCPT - OFFIC 102 (N2)	R	50
51	--	SPARE (N1)	20	1				0	--		1	--	BUSSED SPACE	--	52
53	--	SPARE (N1)	20	1		0	--				1	--	BUSSED SPACE	--	54
55	--	SPARE (N1)	20	1				0	--		1	--	BUSSED SPACE	--	56
57	--	SPARE (N1)	20	1		0	--				1	--	BUSSED SPACE	--	58
59	--	SPARE (N1)	20	1				0	--		1	--	BUSSED SPACE	--	60
				Total Load:		28190 VA		26490 VA							
				Total Amps:		235 A		221 A							

CB TYPE LEGEND
GFCI: 5mA GROUND FAULT CIRCUIT INTERRUPTER
GFEP: 30mA GROUND FAULT PROTECTION FOR EQUIPMENT
AFCI: ARC FAULT CIRCUIT INTERRUPTER
CAFCI: COMBINATION ARC FAULT & 5mA GROUND FAULT CIRCUIT INTERRUPTER
HC(-ON/OFF): HANDLE CLAMP FOR LOCKIN... ON/OFF POSITION
HT#: HANDLE TIE WITH GROUPING #
ST: SHUNT TRIP
LOCK: PERMANENTLY LOCKABLE BREAKER

CIRCUIT PHASE CODE LEGEND
N1. EXISTING LOAD ON EXISTING CIRCUIT...
N2. NEW LOAD ON EXISTING CIRCUIT BREAKER.
N3. NEW LOAD ON NEW CIRCUIT BREAKER. CIRCUIT BREAKER AND AIC RATING TO MATCH EXISTING.

CCT TYPE:	LOAD	DEMAND LOAD	PANEL TOTALS	
LIGHTING:	228 VA	285 VA		
RECEPTACLE:	14880 VA	12440 VA	**TOTAL CONN. LOAD:**	54680 VA
MOTOR:	1500 VA	1794 VA	**TOTAL EST. LOAD:**	52591 VA
EQUIPMENT:	38072 VA	38072 VA	**TOTAL CONN.:**	228 A
KITCH EQUIP:	Not Computed	Not Computed	**TOTAL EST. DEMAND:**	219 A

NOTES:

PROFESSIONAL ENGINEER LICENSED 17050 03/13/2026 STATE OF IDAHO JON E BROOKS

DESIGNED: ANW, TW	SUB SHEET NO.	TITLE OF SHEET	DRAWING NO. XX / XX
CADD: ANW, TW	E710	ELECTRICAL PANEL SCHEDULES	PMIS/PKG NO. XXXXXX
TECH REVIEW: MRS, KMD		MIIN MAINTENANCE BUILDING ADDITION	SHEET 42 OF 54
DATE: 03/20/2026		MINIDOKA NATIONAL HISTORIC SITE	

3/13/2026 10:39:21 AM Autodesk Docs://2025-560 MIIN Maintenance Bldg Addition/5854.02 - NPS MIIN - Electrical - E26.rvt

3/13/2026 10:39:21 AM Autodesk Docs://2025-560 MIIN Maintenance Bldg Addition/5854.02 - NPS MIIN - Electrical - E26.rvt

PANEL: WS

LOCATION: EXTERIOR WEST
SUPPLY FROM: MDP
MOUNTING: Surface
ENCLOSURE: Type 1

VOLTS: 120/240 Single
PHASES: 1
WIRES: 3

A.I.C. RATING: 18K AIC
MAINS TYPE: MLO
MAINS RATING: 400 A
MCB RATING: 1 A

Notes:
EXISTING PANEL

CKT	CCT...	LOAD DESCRIPTION	TRIP	POLES	CB TYPE	A		B		CB TYPE	POLES	TRIP	LOAD DESCRIPTION	CCT...	CKT
1	E; M	EF-5 - STORAGE 109 (N1)	15	1		980	800			GFCI	2	30	RCPT - EQUIP - SHOP 108 (N1)	E	2
3	M	EF-3 - SHOP 108 (N1)	15	1				180	800		--	--	--	--	4
5	M	OVERHEAD DR - STOR 109 (N1)	20	1		1176	800			GFCI	2	30	RCPT - EQUIP - SHOP 108 (N1)	E	6
7	--	SPARE (N1)	20	1				0	800		--	--	--	--	8
9	R	RCPT - SHOP 108 (N1)	20	1		720	800			GFCI	2	30	RCPT - EQUIP - SHOP 108 (N1)	E	10
11	M	EF-4 - STORAGE 109 (N1)	15	1				180	800		--	--	--	--	12
13	R	RCPT - STORAGE 110 (N1)	20	1		540	800			GFCI	2	30	RCPT - EQUIP - SHOP 108 (N1)	E	14
15	R	RCPT - SHOP 108 (N1)	20	1				1080	800		--	--	--	--	16
17	R	RCPT - CORD REEL - SHOP...	20	1		720	800			GFCI	2	30	RCPT - EQUIP - SHOP 108 (N1)	E	18
19	R	RCPT - SHOP 108 (N1)	20	1				1080	800		--	--	--	--	20
21	M	OVERHEAD DOOR - SHOP (N1)	20	1		1176	5280				2	80	DC-1 - EXTERIOR (N1)	E	22
23	R	RCPT - SHOP 108 (N1)	20	1				1080	5280		--	--	--	--	24
25	L	LTG - EXTERIOR (N2)	20	1		232	0				1	20	SPARE (N1)	--	26
27	L	LTG - INTERIOR (N2)	20	1				1352	0		1	20	SPARE (N1)	--	28
29	R	RCPT - STORAGE 109 (N1)	20	1		1080	0				1	20	SPARE (N1)	--	30
31	R	RCPT - STORAGE 109 (N1)	20	1				1080	2880		2	30	EUH-3 - STORAGE 109 (N1)	E	32
33	E	TC - STORAGE 109 (N1)	20	1		500	2880				--	--	--	--	34
35	M	EXHAUST FAN EF-6 (N1)	20	1				216	1668		2	20	EUH-4 - STORAGE 111 (N1)	E	36
37	R	RCPT - EXT CARPORT (N1)	20	1		180	1668				--	--	--	--	38
39	R	RCPT - STORAGE 111 (N1)	20	1				540	1248		2	20	EUH-1 - SHOP 108 (N1)	E	40
41	E	EUH-5 - TOOL STOR 110 (N1)	20	2		1248	1248				--	--	--	--	42
43	--	--	--	--				1248	1248		2	20	EUH-2 - STORAGE 109 (N1)	E	44
45	E	EBH-3 (N3)	50	2		4000	1248				--	--	--	--	46
47	--	--	--	--				4000	104		2	15	CF-2 - SHOP 108 (N1)	E	48
49	E	CU-3, FC-3 (N3)	35	2		3972	104				--	--	--	--	50
51	--	--	--	--				3972	0		1	20	SPARE (N1)	--	52
53	--	SPARE (N1)	20	1		0	0				1	20	SPARE (N1)	--	54
55	--	BUSSED SPACE	--	1				--	0		1	20	SPARE (N1)	--	56
57	--	BUSSED SPACE	--	1		--	1348			GFEP	2	40	HEAT TRACE CONTROLLER...	E	58
59	--	BUSSED SPACE	--	1				--	1348		--	--	--	--	60
				Total Load:		34300 VA		33781 VA							
				Total Amps:		286 A		282 A							

CB TYPE LEGEND

GFCI: 5mA GROUND FAULT CIRCUIT INTERRUPTER
GFEP: 30mA GROUND FAULT PROTECTION FOR EQUIPMENT
AFCI: ARC FAULT CIRCUIT INTERRUPTER
CAFCI: COMBINATION ARC FAULT & 5mA GROUND FAULT CIRCUIT INTERRUPTER
HC(-ON/OFF): HANDLE CLAMP FOR LOCKIN... ON/OFF POSITION
HT#: HANDLE TIE WITH GROUPING #
ST: SHUNT TRIP
LOCK: PERMANENTLY LOCKABLE BREAKER

CIRCUIT PHASE CODE LEGEND

N1. EXISTING LOAD ON EXISTING CIRCUIT...
N2. NEW LOAD ON EXISTING CIRCUIT BREAKER.
N3. NEW LOAD ON NEW CIRCUIT BREAKER. CIRCUIT BREAKER AND AIC RATING TO MATCH EXISTING.

CCT TYPE:	LOAD	DEMAND LOAD	PANEL TOTALS	
LIGHTING:	1584 VA	1979 VA		
RECEPTACLE:	8100 VA	8100 VA	**TOTAL CONN. LOAD:**	68080 VA
MOTOR:	3408 VA	3702 VA	**TOTAL EST. LOAD:**	68769 VA
EQUIPMENT:	54991 VA	54991 VA	**TOTAL CONN.:**	284 A
KITCH EQUIP:	Not Computed	Not Computed	**TOTAL EST. DEMAND:**	287 A

NOTES:

PROFESSIONAL ENGINEER LICENSED 17050 03/13/2026 STATE OF IDAHO JON E BROOKS

DESIGNED: ANW, TW	SUB SHEET NO.	TITLE OF SHEET	DRAWING NO. xx / xx
CADD ANW, TW	E720	ELECTRICAL PANEL SCHEDULES	PMIS/PKG NO. XXXXXX
TECH REVIEW: MRS, KMD		MIIN MAINTENANCE BUILDING ADDITION	SHEET 43 OF 54
DATE: 03/20/2026		MINIDOKA NATIONAL HISTORIC SITE	

LIGHTING CONTROL NOTES

	GENERAL CONTROL NOTES
G1	THE LIGHTING CONTROL SYSTEM CONSISTS OF THE FOLLOWING: a. STAND-ALONE CONTROLS b. ROOM CONTROLLER CONTROLS
G2	ALTERNATE MANUFACTURER'S WILL BE REVIEWED ACCORDING TO THE NOTES PROVIDED IN THE LIGHTING FIXTURE SCHEDULE.
G3	ALL WIRING DIAGRAMS WITHIN THESE DRAWINGS ARE PROVIDED TO COMMUNICATE THE DESIGN INTENT. SYSTEM SHALL BE WIRED ACCORDING TO THE APPROVED SHOP DRAWINGS.
G4	ALL STRUCTURED CABLE WIRING IS INTENDED TO BE CONTROL MANUFACTURER APPROVED STANDARD STRUCTURED CABLING, UNLESS OTHERWISE NOTED. EC SHALL PROVIDE ALL CABLING WITHIN THE LIGHTING CONTROL SYSTEM.
G5	ALL MANUALLY DIMMED LIGHT LOADS SHALL BE CAPABLE OF DIMMING LIGHTS TO OFF SETTING. DIMMING COMPATIBILITY BETWEEN THE CONTROLS AND LIGHT FIXTURES SHALL BE COORDINATED BY THE EC TO ENSURE THAT LIGHTING IS ABLE TO DIM TO LEVEL NOTED ON LIGHTING FIXTURE SCHEDULE.
G6	LIGHTING CONTROL SYSTEM SHALL INCLUDE A MINIMUM OF (4) HOURS OF MANUFACTURER'S REPRESENTATIVE TIME ON SITE FOR SYSTEM CHECK-OUT AND CONTRACTING OFFICER TRAINING. ELECTRICAL CONTRACTOR SHALL VIDEO RECORD TRAINING SESSION AND PROVIDE COPY OF VIDEO TO CONTRACTING OFFICER AS PART OF PROJECT COMPLETION SUBMITTALS.
G7	ALL DIGITAL SWITCHES FOR OVERRIDE CONTROL OF LIGHTING CONTROL SYSTEM(S) SHALL HAVE A MAXIMUM SETTING OF 2 HOURS PER ASHRAE REQUIREMENTS.
G8	FINAL OCCUPANCY AND DAYLIGHT SENSOR LOCATION SHALL BE PROVIDED BY MANUFACTURER AND LOCATED PER APPROVED SHOP DRAWINGS AND DEVICE REQUIREMENTS. LOCATIONS INDICATED IN THESE DRAWINGS SHALL BE REVIEWED AND ALTERED AS NECESSARY FOR CORRECT OPERATION BY MANUFACTURER. IF OPERATIONS OF SENSORS DOES NOT MEET THE INTENT OUTLINED IN THESE DOCUMENTS THE MANUFACTURER REPRESENTATIVE SHALL PROVIDE FIELD RECTIFICATION SERVICES AS NECESSARY IN ORDER TO RECONFIGURE SYSTEM TO MEET OUTINED INTENT.
	STANDALONE LIGHTING CONTROL GENERAL NOTES
S1	APPROVED STANDALONE LIGHTING CONTROLS TO BE PROVIDED BY ONE OF THE FOLLOWING PRE-APPROVED MANUFACTURERS AS A BASIS OF DESIGN: a. LEVITON
	ROOM CONTROLLER GENERAL NOTES
R1	APPROVED ROOM CONTROLLER LIGHTING CONTROLS TO BE PROVIDED BY ONE OF THE FOLLOWING PRE-APPROVED MANUFACTURERS AS A BASIS OF DESIGN: a. LEVITON (CRESTRON)
R2	REFER TO ELECTRICAL LIGHTING LAYOUTS FOR LAYOUT OF DEVICES CONNECTED TO ROOM CONTROLLERS. ROOM CONTROLLER COMPONENTS ARE INDICATED IN THE "LIGHTING CONTROL DEVICE" SCHEDULE, THESE COMPONENTS START WITH THE DESIGNATION 'R'.
R3	ROOM CONTROLLER HEAD END EQUIPMENT LOCATIONS ARE INDICATED IN SPACES, HOWEVER DRAWINGS ARE DIAGRAMMATIC AND EXACT QUANTITY OF ROOM CONTROLLER HEAD END EQUIPMENT PIECES VARIES FROM MANUFACTURER TO MANUFACTURER BASED ON DIMMING UTILIZATION, QUANTITY OF RELAYS, NUMBER OF INPUT DEVICES, QUANTITY OUTPUT ZONES AND RECEPTACLE CONTROL.

LIGHTING FIXTURE SCHEDULE

TYPE	DESCRIPTION	BASIS OF DESIGN MANUFACTURER	BASIS OF DESIGN CATALOG NUMBER	VOLTAGE	LAMP QUAN.	LAMP WATTAGE	LAMP / CCT / CRI	MAX WATTAGE	LUMEN OUTPUT	DIMMING	FIXTURE FINISH	LOCATION	BOF/RFD/OFH	NOTES
D1	6" APERATURE LED RECESSED DOWNLIGHT	COOPER LIGHTING, OR APPROVED EQUAL	BAA-LD6C-20-90-35-D010-W-0-H, OR APPROVED EQUAL	120V	1	20 W	LED / 3500K / 80 CRI	20 VA	2300 LM	0-10V - 1%	WHITE	RECESSED CEILING	0-6.5" RFD	--
D1EM	6" APERATURE LED RECESSED DOWNLIGHT WITH 90 MINUTE EMERGENCY BATTERY	COOPER LIGHTING, OR APPROVED EQUAL	BAA-LD6C-20-90-35-D010-W-0-H-IEM7, OR APPROVED EQUAL	120V	1	20 W	LED / 3500K / 80 CRI	20 VA	2300 LM	0-10V - 1%	WHITE	RECESSED CEILING	0-6.5" RFD	--
S3	4' LONG SURFACE MOUNTED LINEAR	COOPER LIGHTING, OR APPROVED EQUAL	BAA-S124RDS-C-575-80-35-JB-4F0-1-U-DD-F-W, OR APPROVED EQUAL	120V	1	19 W	LED / 3500K / 80 CRI	19 VA	2300 LM	0-10V - 10%	WHITE	SURFACE CEILING	0'-5.1" OFH	--
S3EM	4' LONG SURFACE MOUNTED LINEAR	COOPER LIGHTING, OR APPROVED EQUAL	BAA-S124RDS-C-575-80-35-JB-4F0-1-B2-U-DD-F-W, OR APPROVED EQUAL	120V	1	19 W	LED / 3500K / 80 CRI	19 VA	2300 LM	0-10V - 10%	WHITE	SURFACE CEILING	0'-5.1" OFH	--
X1	EMERGENCY EXIT SIGN, LED WITH INTEGRAL BATTERY	COOPER LIGHTING, OR APPROVED EQUAL	BAA-APX7-G, OR APPROVED EQUAL	120V	1	1 W	LED	1 VA	--	--	WHITE / GREEN	SURFACE WALL	0'-7.1875" OFH	--
EW2EM	14" DIAMETER HEAVY DUTY EXTERIOR LED WALL MOUNTED FIXTURE WITH GOOSENECK STYLE ARM, CONNECTED TO EMERGENCY INVERTER	TROY RLM, OR APPROVED EQUAL	RH14-LED1827-BK-FG-2-SL23-TBZ, OR APPROVED EQUAL	120V	1	18 W	LED / 2700K / 80 CRI	18 VA	1265 LM	SWITCHING	BRONZE	SURFACE WALL	8'-6" BOF	--

LIGHTING CONTROL DEVICES

TYPE	DESCRIPTION
ROOM CONTROLLED COMPONENTS	
RD1	ROOM CONTROLLER MANUAL DIMMER, EC SHALL COORDINATE MINIMUM LEVEL FOR DIMMING WITH THAT NOTED ON LUMINAIRE FIXTURE SCHEDULE
RO1	ROOM CONTROLLER, CEILING MOUNT OCCUPANCY SENSOR
STANDALONE CONTROL SYSTEMS	
VD1	WALLSWITCH MOUNT, VACANCY SENSOR WITH MANUAL DIMMER

LIGHTING FIXTURE GENERAL NOTES

A	ALL LED LAMPS TO BE 3500K COLOR TEMPERATURE AND A MINIMUM OF 82CRI, UNLESS NOTED OTHERWISE. ALL REFLECTOR LAMPS TO BE PROVIDED AS WIDE FLOOD DISTRIBUTION, UNLESS NOTED OTHERWISE.
B	ALL FIXTURES INDICATED IN THE SCHEDULE ARE BASIS OF DESIGN AND APPROVED EQUALS WILL BE ALLOWED.

LIGHTING FIXTURE SPECIFIC NOTES

1	CONFIRM MOUNTING HEIGHT WITH CONTRACTING OFFICER PRIOR TO INSTALLATION.

LIGHTING SEQUENCE OF OPERATION

CONTROL SEQUENCE	ON	OFF	SENSOR TYPE	TIME OUT	DIMMING	CONTROLLED RECEPTACLE	DAYLIGHT HARVESTING	TARGET ILLUMINANCE (FC)	NOTES
ET1	TIMECLOCK AUTOMATIC ON 30 MINUTES PRIOR TO SUNSET	TIMECLOCK AUTOMATIC OFF 30 MINUTES AFTER SUNRISE	NONE	N/A	SWITCHING	NO	NO	--	FIXTURES SHALL TURN OFF 1 HOUR AFTER THE CLOSE OF BUSINESS AND TURN OF 1 HOUR PRIOR TO BUSINESS OPEN.
OD1	AUTOMATIC ON TO 50% OUTPUT	AUTOMATIC OFF	OCCUPANCY	15 MINUTES	0-10V DIMMING	NO	NO	--	
VD1	MANUAL ON	AUTOMATIC OFF	VACANCY	15 MINUTES	0-10V DIMMING	NO	NO	--	

LIGHTING CONTROLS NAMING CONVENTION

SYSTEM TYPE:
- **N** = NETWORKED
- **R** = ROOM CONTROLLER
- **W** = WIRELESS

- THE ABSENCE OF LETTERS UNDER 'SYSTEM TYPE' INDICATES A WIRED STANDALONE SYSTEM
- THE ABSENCE OF 'W' MEANS THE SYSTEM IS WIRED

SENSOR TYPE:
- **O** = OCCUPANCY
- **V** = VACANCY
- **P** = PHOTOCELL

DEVICES:
- **D** = DIMMER
- **S** = SWITCH
- **H** = HUB
- **U** = UNIQUE DEVICE TYPE

NUMBERING:
1,2,3.. = QUANTITY AS REQUIRED FOR DIFFERENT HARDWARE, DEVICE CHARACTERISTICS, OR MOUNTING CONDITIONS.

PROFESSIONAL ENGINEER LICENSED 17050 08/10/2026 STATE OF IDAHO JON E BROOKS

DESIGNED: ANW, TW CADD: ANW, TW TECH REVIEW: MRS, KMD DATE: 03/20/2026	SUB SHEET NO. E800	TITLE OF SHEET ELECTRICAL LIGHTING SCHEDULES MIIN MAINTENANCE BUILDING ADDITION MINIDOKA NATIONAL HISTORIC SITE	DRAWING NO. PMIS/PKG NO. SHEET 44 OF 54

8/6/2026 2:29:07 PM Autodesk Docs://2025-560 MIIN Maintenance Bldg Addition/5854.02 - NPS MIIN - Electrical - E26.rvt

COM*check* Software Version COMcheckWeb

Interior Lighting Compliance Certificate

Project Information

Energy Code: 90.1 (2016) Standard
Project Title: 5854.01 - NPS MIIN Maintenance Addition
Project Type: Addition

Construction Site:
Minidoka, Idaho

Owner/Agent:

Designer/Contractor:
AE Design
1900 Wazee St Suite #205
Denver, Colorado 80202
303617628 8
awilson@aedesign-inc.com

Allowed Interior Lighting Power

A Area Category	B Floor Area (ft2)	C Allowed Watts / ft2	D Allowed Watts
1-Office	757	0.79	598
		Total Allowed Watts =	598

Proposed Interior Lighting Power

A Fixture ID : Description / Lamp / Wattage Per Lamp / Ballast	B Lamps/ Fixture	C # of Fixture	D Fixture Watt.	E (C X D)
1-Office				
LED: D1/D1EM: RECESSED DOWNLIGHT: Other:	1	4	20	80
LED: S3/S3EM: SURFACE MOUNTED LINEAR: Other:	1	12	19	228
			Total Proposed Watts =	308

Interior Lighting PASSES: Design 48% better than code

Interior Lighting Compliance Statement

Compliance Statement: The proposed interior lighting design represented in this document is consistent with the building plans, specifications, and other calculations submitted with this permit application. The proposed interior lighting systems have been designed to meet the 90.1 (2016) Standard requirements in COM*check* Version COMcheckWeb and to comply with any applicable mandatory requirements listed in the Inspection Checklist.

Allie Wilson - Project Designer — Name - Title
Allie Wilson — Signature
03/11/2026 — Date

COM*check* Software Version COMcheckWeb

Exterior Lighting Compliance Certificate

Project Information

Energy Code: 90.1 (2016) Standard
Project Title: 5854.01 - NPS MIIN Maintenance Addition
Project Type: Addition
Exterior Lighting Zone 1 (Developed area in national or state park (LZ1))

Construction Site:
Minidoka, Idaho

Owner/Agent:

Designer/Contractor:
AE Design
1900 Wazee St Suite #205
Denver, Colorado 80202
303617628 8
awilson@aedesign-inc.com

Allowed Exterior Lighting Power

A Area/Surface Category	B Quantity	C Allowed Watts /	D Tradable Wattage	E Allowed Watts (B X C)
Pedestrian and vehicular entrances and exits	3 ft of door	14	Yes	42
			Total Tradable Watts (a) =	42
			Total Allowed Watts =	42
			Total Allowed Supplemental Watts (b) =	350

(a) Wattage tradeoffs are only allowed between tradable areas/surfaces.
(b) A supplemental allowance equal to 350 watts may be applied toward compliance of both non-tradable and tradable areas/surfaces.

Proposed Exterior Lighting Power

A Fixture ID : Description / Lamp / Wattage Per Lamp / Ballast	B Lamps/ Fixture	C # of Fixture	D Fixture Watt.	E (C X D)
Pedestrian and vehicular entrances and exits (3 ft of door width): Tradable Wattage				
LED: WE2EM: Other:	1	1	18	18
			Total Tradable Proposed Watts =	18

Exterior Lighting PASSES: Design 95% better than code

Exterior Lighting Compliance Statement

Compliance Statement: The proposed exterior lighting design represented in this document is consistent with the building plans, specifications, and other calculations submitted with this permit application. The proposed exterior lighting systems have been designed to meet the 90.1 (2016) Standard requirements in COM*check* Version COMcheckWeb and to comply with any applicable mandatory requirements listed in the Inspection Checklist.

Allie Wilson - Project Designer — Name - Title
Allie Wilson — Signature
03/11/2026 — Date

COM*check* Software Version COMcheckWeb

Inspection Checklist

Energy Code: 90.1 (2016) Standard

Requirements: 85.0% were addressed directly in the COM*check* software

Text in the "Comments/Assumptions" column is provided by the user in the COMcheck Requirements screen. For each requirement, the user certifies that a code requirement will be met and how that is documented, or that an exception is being claimed. Where compliance is itemized in a separate table, a reference to that table is provided.

Section # & Req.ID	Plan Review	Complies?	Comments/Assumptions
4.2.2, 8.4.1.1, 8.4.1.2, 8.7 [PR6][2]	Plans, specifications, and/or calculations provide all information with which compliance can be determined for the electrical systems and equipment and document where exceptions are claimed. Feeder connectors sized in accordance with approved plans and branch circuits sized for maximum drop of 3%.	☐Complies ☐Does Not ☐Not Observable ☐Not Applicable	Requirement will be met.
4.2.2, 9.4.3, 9.7 [PR4][1]	Plans, specifications, and/or calculations provide all information with which compliance can be determined for the interior lighting and electrical systems and equipment and document where exceptions to the standard are claimed. Information provided should include interior lighting power calculations, wattage of bulbs and ballasts, transformers and control devices.	☐Complies ☐Does Not ☐Not Observable ☐Not Applicable	Requirement will be met.
9.7 [PR8][1]	Plans, specifications, and/or calculations provide all information with which compliance can be determined for the exterior lighting and electrical systems and equipment and document where exceptions to the standard are claimed. Information provided should include exterior lighting power calculations, wattage of bulbs and ballasts, transformers and control devices.	☐Complies ☐Does Not ☐Not Observable ☐Not Applicable	

Additional Comments/Assumptions:

1	High Impact (Tier 1)	2	Medium Impact (Tier 2)	3	Low Impact (Tier 3)

PROFESSIONAL ENGINEER LICENSED 17050 03/13/2026 STATE OF IDAHO JON E BROOKS

DESIGNED: ANW, TW	SUB SHEET NO.	TITLE OF SHEET	DRAWING NO.
CADD ANW, TW	E900	ELECTRICAL LIGHTING COMPLIANCE	XX / XX
TECH REVIEW: MRS, KMD		MIIN MAINTENANCE BUILDING ADDITION	PMIS/PKG NO. XXXXXX
DATE: 03/20/2026		MINIDOKA NATIONAL HISTORIC SITE	SHEET 45 OF 54

3/13/2026 10:39:24 AM Autodesk Docs://2025-560 MIIN Maintenance Bldg Addition/5854.02 - NPS MIIN - Electrical - E26.rvt

Section # & Req.ID	Rough-In Electrical Inspection	Complies?	Comments/Assumptions
8.4.2 [EL10][2]	At least 50% of all 125 volt 15- and 20-Amp receptacles are controlled by an automatic control device.	☐Complies ☐Does Not ☐Not Observable ☐Not Applicable	**Exception:** Requirement does not apply.
8.4.3 [EL11][2]	New buildings have electrical energy use measurement devices installed. Where tenant spaces exist, each tenant is monitored separately. In buildings with a digital control system the energy use is transmitted to to control system and displayed graphically.	☐Complies ☐Does Not ☐Not Observable ☐Not Applicable	Requirement will be met.
9.4.1.1 [EL1][2]	Automatic control requirements prescribed in Table 9.6.1, for the appropriate space type, are installed. Mandatory lighting controls (labeled as 'REQ') and optional choice controls (labeled as 'ADD1' and 'ADD2') are implemented.	☐Complies ☐Does Not ☐Not Observable ☐Not Applicable	Requirement will be met.
9.4.1.1 [EL2][2]	Independent lighting controls installed per approved lighting plans and all manual controls readily accessible and visible to occupants.	☐Complies ☐Does Not ☐Not Observable ☐Not Applicable	Requirement will be met.
9.4.1.1f [EL13][1]	Daylight areas under skylights and roof monitors that have more than 150 W combined input power for general lighting are controlled by photocontrols.	☐Complies ☐Does Not ☐Not Observable ☐Not Applicable	Requirement will be met.
9.4.1.4 [EL3][2]	Automatic lighting controls for exterior lighting installed.	☐Complies ☐Does Not ☐Not Observable ☐Not Applicable	
9.4.1.3 [EL4][1]	Separate lighting control devices for specific uses installed per approved lighting plans.	☐Complies ☐Does Not ☐Not Observable ☐Not Applicable	Requirement will be met.
9.6.2 [EL8][1]	Additional interior lighting power allowed for special functions per the approved lighting plans and is automatically controlled and separated from general lighting.	☐Complies ☐Does Not ☐Not Observable ☐Not Applicable	Requirement will be met.

Additional Comments/Assumptions:

1	High Impact (Tier 1)	2	Medium Impact (Tier 2)	3	Low Impact (Tier 3)

Section # & Req.ID	Final Inspection	Complies?	Comments/Assumptions
8.7.1 [FI16][3]	Furnished as-built drawings for electric power systems within 30 days of system acceptance.	☐Complies ☐Does Not ☐Not Observable ☐Not Applicable	Requirement will be met.
8.7.2 [FI17][3]	Furnished O&M instructions for systems and equipment to the building owner or designated representative.	☐Complies ☐Does Not ☐Not Observable ☐Not Applicable	Requirement will be met.
9.2.2.3 [FI18][1]	Interior installed lamp and fixture lighting power is consistent with what is shown on the approved lighting plans, demonstrating proposed watts are less than or equal to allowed watts.	☐Complies ☐Does Not ☐Not Observable ☐Not Applicable	*See the Interior Lighting fixture schedule for values.*
9.4.2 [FI19][1]	Exterior lighting power is consistent with what is shown on the approved lighting plans, demonstrating proposed watts are less than or equal to allowed watts.	☐Complies ☐Does Not ☐Not Observable ☐Not Applicable	*See the Exterior Lighting fixture schedule for values.*
9.4.4 [FI20][1]	At least 75% of all permanently installed lighting fixtures in dwelling units have >= 55 lm/W efficacy or a >= 45 lm/W total luminaire efficacy.	☐Complies ☐Does Not ☐Not Observable ☐Not Applicable	**Exception:** Requirement does not apply.

Additional Comments/Assumptions:

1	High Impact (Tier 1)	2	Medium Impact (Tier 2)	3	Low Impact (Tier 3)

PROFESSIONAL ENGINEER LICENSED 17050 03/13/2026 STATE OF IDAHO JON E BROOKS

DESIGNED: ANW, TW	SUB SHEET NO.	TITLE OF SHEET	DRAWING NO. xx / xx
CADD ANW, TW	E901	ELECTRICAL LIGHTING COMPLIANCE	PMIS/PKG NO. XXXXXX
TECH REVIEW: MRS, KMD		MIIN MAINTENANCE BUILDING ADDITION	SHEET
DATE: 03/20/2026		MINIDOKA NATIONAL HISTORIC SITE	46 OF 54

3/13/2026 10:39:26 AM Autodesk Docs://2025-560 MIIN Maintenance Bldg Addition/5854.02 - NPS MIIN - Electrical - E26.rvt

3/13/2026 10:39:26 AM Autodesk Docs://2025-560 MIIN Maintenance Bldg Addition/5854.02 - NPS MIIN - Electrical - E26.rvt

FIRE ALARM

FACP	FIRE ALARM CONTROL PANEL
FAA	FIRE ALARM ANNUNCIATOR
FA-RPS	FIRE ALARM REMOTE POWER SUPPLY
C	CONTROL MODULE
M	MONITOR MODULE
	MANUAL PULLDOWN STATION
S	WALL MOUNTED ABAAS STROBE
	ABAAS HORN OR SPEAKER WITH STROBE
	MINI HORN / STROBE
MH	ELECTROMAGNETIC DOOR HOLD OPEN
FS	SPRINKLER FLOW SWITCH
TS	SPRINKLER TAMPER SWITCH
T	THERMAL DETECTOR
S	PHOTOELECTRIC SMOKE DETECTOR
	DUCT SMOKE DETECTOR, SUPPLY OR RETURN
TS	REMOTE INDICATING LIGHT (TEST SWITCH)
D	120V. MOTORIZED SMOKE DAMPER
RA	RESCUE ASSISTANCE PHONE
F	FIRE FIGHTERS PHONE JACK
MAP	FIRE ALARM GRAPHIC MAP

FIRE ALARM GENERAL NOTES

A	FINAL LAYOUT AND QUANTITY OF ALL FIRE ALARM DEVICES SUBJECT TO APPROVAL OF AUTHORITY HAVING JURISDICTION.

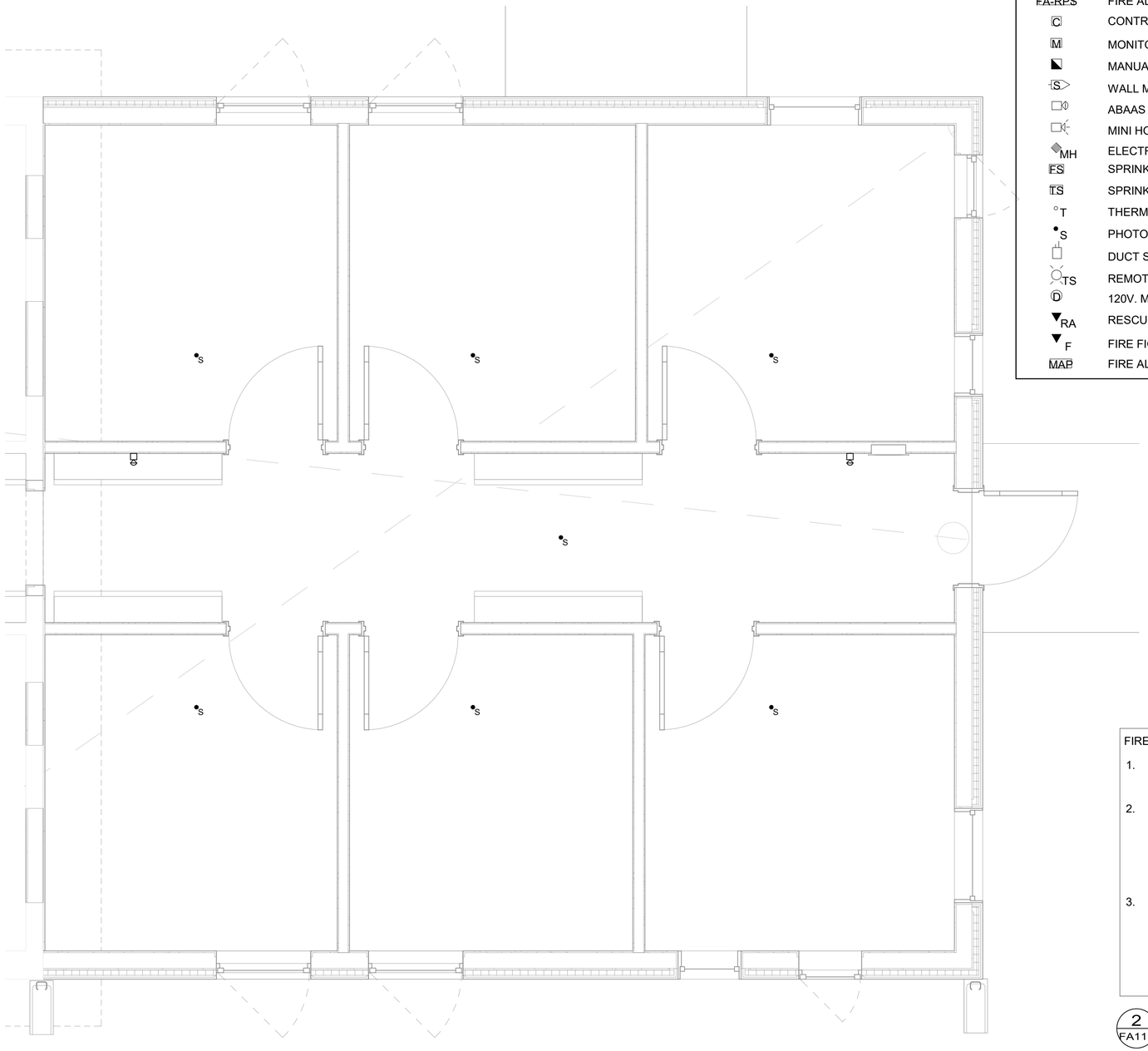

1 FA111 FIRE ALARM PLAN
SCALE A

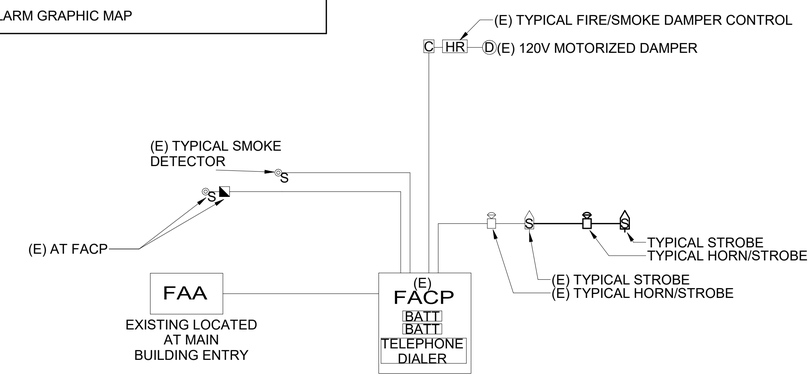

FIRE ALARM GENERAL NOTES:

1. THIS IS AN EXISTING FULLY ADDRESSABLE SYSTEM WITH EACH DEVICE HAVING A DISTINCT 'ADDRESS'.
2. PROVIDE NON-POWER LIMITING, PLENUM RATED WIRING. INSTALL IN EMT WHERE WIRING IS ROUTED THROUGH HAZARDOUS LOCATIONS, EXPOSED STRUCTURAL CEILINGS, AND INACCESSIBLE CEILINGS. ALL RACEWAY COMPONENTS SHALL BE PAINTED RED.
3. PROVIDE DUCT DETECTION FOR ALL AIR-HANDLING EQUIPMENT OPERATING WITH A RETURN CAPACITY EXCEEDING 2000CFM, SUPPLY CAPACITY EXCEEDING 15,000CFM WITH COMMON DUCT SERVING MULTIPLE FLOORS, AND ADDITIONALLY AS REQUIRED BY LOCAL CODES.
4. PROVIDE 120V CIRCUIT AND LOW-VOLTAGE FIRE ALARM CONTROL CIRCUIT TO ALL SMOKE DAMPERS. COORDINATE LOCATIONS WITH MECHANICAL CONTRACTOR PRIOR TO BID.
5. COORDINATE ALL SEQUENCING OF OPERATIONS WITH DENVER SERVICE CENTER.
6. ALL DEVICES INSTALLED IN DAMP, WET OR EXTERIOR LOCATIONS SHALL BE FURNISHED WITH WP HOUSINGS.
7. SYSTEM SHALL TRANSMIT REQUIRED FIRE ALARM SIGNALS TO CENTRAL MONITORING AGENCY VIA DIALER PROVIDED IN FIRE ALARM CONTROL PANEL.
8. THE ELECTRICAL CONTRACTOR SHALL INCLUDE IN HIS BID AN ADDITIONAL 10% SPARE STROBES AND HORN/STROBES, INCLUDING INSTALLATION, AS MAY BE REQUIRED BY AHJ.

2 FA111 FIRE ALARM RISER DIAGRAM
N.T.S.

SCALE: A 2 0 2 4
SCALE OF FEET

BLDG. NORTH

PROFESSIONAL ENGINEER LICENSED 17050 03/13/2026 STATE OF IDAHO JON E BROOKS

DESIGNED: ANW, TW	SUB SHEET NO.	TITLE OF SHEET	DRAWING NO.
CADD ANW, TW	FA111	FIRE ALARM PLAN	XX / XX
TECH REVIEW: MRS, KMD		MIIN MAINTENANCE BUILDING ADDITION	PMIS/PKG NO. XXXXXX
DATE: 03/20/2026		MINIDOKA NATIONAL HISTORIC SITE	SHEET 47 OF 54

DISTRIBUTION & RACEWAY

- CONDUIT CONCEALED IN FLOOR OR UNDERGROUND
- CONDUIT EXPOSED OR CONCEALED IN WALL OR CEILING
- RACEWAY UP
- RACEWAY DOWN
- CONDUIT WITH CAPPING
- CONDUIT WITH BUSHING
- CONDUIT WITH CONTINUATION
- LADDER RACK — LENGTH AS INDICATED ON DRAWINGS
- CABLE TRAY — LENGTH AS INDICATED ON DRAWINGS
- MDF OR IDF BOUNDARY
- XX — PATHWAY/JUNCTION/OUTLET BOX
  - HH HANDHOLE
  - PB PULL BOX
- XX# — (HAND HOLE WILL BE SPECIFIED IN SCHEDULE) (PULL BOX WILL BE SPECIFIED IN SCHEDULE)

PATHWAY/JUNCTION/OUTLET BOX
(XX = TYPE, # = IDENTIFIER)

TELECOMMUNICATIONS LEGEND

- #-# — TYPICAL TELECOMMUNICATION SYMBOLS WHERE FIRST (OR SINGLE) '#' DENOTES THE NUMBER OF NETWORK CABLES TO BE PROVIDED AT THE DEVICE, AND THE SECOND '#' DENOTES THE NUMBER OF VOICE CABLES TO BE PROVIDED AT THE DEVICE.
- XXX — 'XXX' REFERENCES A CABLE DEFINED IN THE EQUIPMENT SCHEDULES. REFER TO SCHEDULE KEY VALUES FOR CABLE REFERENCE AND ASSOCIATED REQUIREMENTS.
- TELECOMMUNICATION OUTLET
- CABLE TELEVISION (CATV) OUTLET
- FLOOR MOUNTED TELECOMMUNICATION/CATV OUTLET
- FLOOR MOUNTED INTEGRATED POWER / TELECOM OUTLET
- CLG — CEILING MOUNTED TELECOMMUNICATION/CATV OUTLET
- WALL MOUNTED WIRELESS ACCESS POINT (WAP) OUTLET
- CEILING MOUNTED WIRELESS ACCESS POINT (WAP) OUTLET

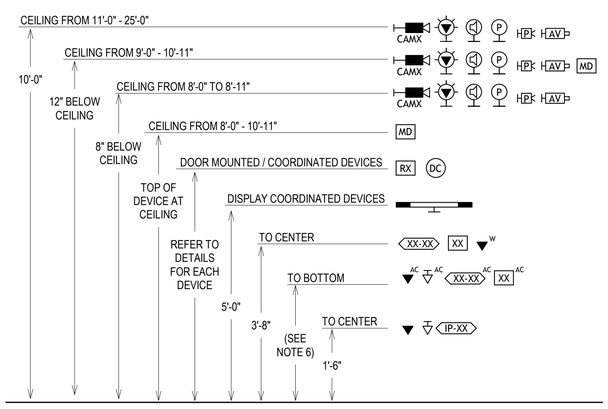

NOTES:

1. HEIGHTS INDICATED ON LEGEND REPRESENT THE CENTERLINE MOUNTING HEIGHT OF THE DEVICE'S BACKBOX/MOUNTING EQUIPMENT, UNLESS OTHERWISE NOTED.
2. NOT ALL CAMERA VERSIONS OUR SHOWN. THE SINGLE LENS CAMERA SHOWN SHALL REPRESENT THE MOUNTING HEIGHTS FOR ALL SECURITY CAMERAS, UNLESS OTHERWISE NOTED.
3. NOT ALL SYMBOL VARIATIONS ARE. FOR DEVICES WHERE THE 'SYSTEM CABLING' VERSION OF SYMBOL IS DEFINED, THE HIEGHT REQUIREMENTS SHALL BE APPLIED TO THE 'BUILDING NETWORK CABLING' VERSION AS WELL.
4. AUDIOVISUAL DEVICE SYMBOL SHOWN SHALL REPRESENT ALL AUDIOVISUAL DEVICE SUBSCRIPTS WITHIN THE SYMBOL UNLESS A DEVICE IS SPECIFICALLY CALLED OUT FOR A DIFFERENT HEIGHT ON THE LEGEND OR ON THE PLAN SHEETS.
5. WALL MOUNTED SECURITY DEVICE SYMBOL SHOWN SHALL REPRESENT ALL WALL MOUNTED SECURITY DEVICE SUBSCRIPTS WITHIN THE SYMBOL UNLESS A DEVICE IS SPECIFICALLY CALLED OUT FOR A DIFFERENT HEIGHT ON THE LEGEND OR ON THE PLAN SHEETS.
6. THE E.C. SHALL REFER TO ARCHITECTURAL ELEVATIONS TO COORDINATE ALL COUNTER HEIGHTS. ALL "AC" DEVICES SHALL HAVE BOTTOM OF BACK-BOX MOUNTED 4" ABOVE THE BACK/SIDE SPLASH.

1 / T000 TECHNOLOGY DEVICE MOUNTING HEIGHTS
N.T.S.

ABBREVIATIONS AND SYMBOLS

AC	ABOVE COUNTER MOUNTED
ADA	AMERICANS WITH DISABILITIES ACT
AFF	ABOVE FINISHED FLOOR
AFG	ABOVE FINISHED GRADE
AHJ	AUTHORITY HAVING JURISDICTION
ALS	ASSISTIVE LISTENING SYSTEM
AV	AUDIO VIDEO
AVC	AUDIO VIDEO CONTRACTOR COORDINATED
BGM	BACKGROUND MUSIC
C	CONDUIT
CATV	COMMUNITY ACCESS TELEVISION
CCTV	CLOSED CIRCUIT TELEVISION
CH	CHANNEL ROUTED, MOUNTED, TERMINATED
CLG	CEILING MOUNTED
CPU	CENTRAL PROCESSING UNIT
DM	DESK MOUNTED
DSP	DIGITAL SIGNAL PROCESSOR
DVD	DIGITAL VIDEO DISC/VERSATILE DISC
(E)	EXISTING TO REMAIN
EC	ELECTRICAL CONTRACTOR COORDINATED
ELEV	ELEVATOR CONTRACTOR COORDINATED
(ER)	EXISTING TO BE RELOCATED
FFE	FIXTURES, FURNITURE, AND EQUIPMENT
FB	FLOOR BOX MOUNTED
FC	FIRE ALARM CONTRACTOR COORDINATED
FF	FURNITURE FEEDTHROUGH
FM	FREQUENCY MODULATION
FPD	FLAT PANEL DISPLAY
GAS	GAS SERVICE / METER COORDINATED
GC	GENERAL CONTRACTOR COORDINATED
GPC	GENERAL PURPOSE COMPUTER
IR	INFRARED
IT	INFORMATION TECHNOLOGY
J	JUNCTION BOX
LAN	LOCAL AREA NETWORK
LIGH	LIGHTING CONTROL COORDINATED
LCD	LIQUID CRYSTAL DISPLAY
LTG	LIGHTING
MATV	MASTER ANTENNA TELEVISION
M	MULLION MOUNTED
MC	MECHANICAL CONTRACTOR COORDINATED
(N)	NEW
OAE	OR APPROVED EQUAL
OH	OVERHEAD
PA	PUBLIC ADDRESS
PC	PERSONAL COMPUTER
PDP	PLASMA DISPLAY PANEL
PH	PHASE
PT	POKE THROUGH MOUNTED
RCPT	RECEPTACLE
(R)	EXISTING TO BE REMOVED
RF	RADIO FREQUENCY
(RL)	RELOCATED LOCATION
RU	RACK UNIT (TIA/EIA RACK)
SC	SECURITY CONTRACTOR COORDINATED
SPC	SPRINKLER CONTROL CONTRACTOR COORDINATED
TO	TELECOMMUNICATIONS OUTLET
TC	TELECOMMUNICATIONS CONTRACTOR COORDINATED
TV	TELEVISION
UC	UNDER COUNTER/CABINET MOUNTED
UG	UNDERGROUND
UHF	ULTRA HIGH FREQUENCY
UON	UNLESS OTHERWISE NOTED
UPS	UNINTERRUPTIBLE POWER SUPPLY.
USB	UNIVERSAL SERIAL BUS
VHF	VERY HIGH FREQUENCY
VP	VIDEO PROJECTOR
W	WALL PHONE
WAN	WIDE AREA NETWORK
WG	WIREGUARD
WP	WEATHERPROOF OR WATERPROOF
+XX"	MOUNTING HEIGHT OF 'XX' INCHES
X	DETAIL NOTE
X	REVISION (DELTA) TAG
REF: '#'/'T###'	REFERENCE TO VIEW '#' ON SHEET 'T###'

PROJECT GENERAL NOTES

1. THE WORK DESCRIBED HEREIN SHALL BE REVIEWED, COORDINATED, AND FACILITATED BY ALL CONTRACTORS; THIS INCLUDES, BUT IS NOT LIMITED TO THE COMMUNICATIONS, SECURITY, LOW VOLTAGE, AV, ELECTRICAL, AND GENERAL CONTRACTORS. FURTHERMORE, ALL WORK SHALL BE COORDINATED WITH THE CONTRACTING OFFICER TO SCHEDULE THE SEQUENCE OF ALL WORK.
2. THESE DRAWINGS ARE DIAGRAMMATIC IN NATURE; NOT ALL EQUIPMENT, PARTS, OR ANCILLARY PIECES ARE SHOWN FOR A COMPLETE SYSTEM. CONTRACTORS ARE RESPONSIBLE FOR FURNISHING, INSTALLING, AND SUCCESSFULLY TESTING FULLY FUNCTIONING AND COMPLETE SYSTEMS, UNLESS OTHERWISE NOTED.
3. DEVICES SHOWN ON PLAN ARE DIAGRAMMATIC. THE PRECISE LOCATION OF DEVICES SHALL BE COORDINATED WITH THE FINAL ARCHITECTURAL DRAWINGS AND APPROVED VENDOR SHOP DRAWINGS PRIOR TO ROUGH-IN. EXACT DEVICE LOCATIONS SHALL ALLOW FOR COORDINATED, PRE-DRYWALL RELOCATION, WITHIN A 10-FOOT RADIUS AT NO CHARGE TO THE CONTRACTING OFFICER.
4. ALL WORK SHOWN HEREIN SHALL BE ASSUMED TO BE RESPONSIBILITY OF THE CONTRACTOR, UNLESS OTHERWISE NOTED. REFER TO RESPONSIBILITY MATRIX FOR FURTHER CLARIFICATION AND DELINEATION OF CONSTRUCTION RESPONSIBILITIES.
5. EACH CONTRACTOR SHALL BE RESPONSIBLE FOR COORDINATING WITH ALL OTHER TRADES AND THEIR ASSOCAITED DRAWINGS/SPECIFICATIONS.
6. CONTRACTORS SHALL MAINTAIN AN UPDATED DOCUMENT SET CONTAINING THE MOST RECENT CONSTRUCTION DOCUMENTS, ALL FIELD AND/OR DOCUMENT CHANGES, AND UPDATED 'AS BUILT' DRAWINGS THROUGHOUT CONSTRUCTION.
7. ALL MATERIAL AND EQUIPMENT SHALL BE ERECTED, INSTALLED, CONNECTED, CLEANED, ADJUSTED, TESTED, CONDITIONED, AND PLACED IN SERVICE IN ACCORDANCE WITH THE MANUFACTURER'S DIRECTIONS AND RECOMMENDATIONS.
8. ALL CUTTING, DRILLING, AND PATCHING OF MASONRY, STEEL, OR IRON WORK BELONGING TO THE BUILDING MUST BE COORDINATED WITH ELECTRICAL, GENERAL, AND STRUCTURAL CONTRACTOR, AS WELL AS THE CONTRACTING OFFICER. UNDER NO CIRCUMSTANCES MAY STRUCTURAL WORK BE CUT UNLESS WRITTEN INSTRUCTION IS PROVIDED BY CONTRACTING OFFICER.
9. ALL MATERIAL, EQUIPMENT, WIRING DEVICES, CABLING, ETC. SHALL BE NEW, UNLESS SPECIFICALLY INDICATED OTHERWISE.
10. PULL BOXES AND HANDHOLES SHALL NOT BE INSTALLED IN PLACE OF CONDUIT BENDS. CONTRACTOR SHALL INSTALL PULL BOXES AND HANDHOLES IN STRAIGHT SECTIONS OF CONDUIT.
11. ALL CONDUITS AND SLEEVES DESIGNATED FOR COMMUNICATIONS USE SHALL BE FIRE RATED TO MATCH OR EXCEED THE PENETRATED MATERIAL. ALL PENETRATIONS OF FIRE-RATED ASSEMBLIES SHALL BE FIRE-STOPPED WITH AN APPROVED SYSTEM AND SHALL COMPLY WITH UL 1479 OR UL 2079. THE F&T RATING OF THE FIRE-STOP SYSTEM SHALL NOT BE LESS THAN THE FIRE-RESISTIVE RATING OF THE ASSEMBLY PENETRATED. THIS SHALL INCLUDE PENETRATIONS INTO AND THROUGH WALLS, FLOORS, CEILINGS, AND ROOFS PER CODE AND AHJ.
12. THE ENTIRE CABLE PLANT SHALL BE TESTED AND CERTIFIED BY CONTRACTOR AS DETERMINED BY BICSI, NEC, AND TIA/EIA STANDARDS AT A MINIMUM, UNLESS OTHERWISE SPECIFIED.
13. ALL TELECOMMUNIATIONS SYSTEMS CONDUITS WHICH ARE INTERIOR, EXPOSED IN THE EXTERIOR, OR WITHIN A TUNNEL SYSTEM SHALL BE METALLIC CONDUIT AS INDICATED IN SPECIFICATIONS. UNDER NO CIRCUMSTANCES SHALL FLEXIBLE CONDUIT BE UTILIZED FOR PATHWAYS. ALL CONDUITS SHALL BE, AT MINIMUM, 1 INCH IN TRADE SIZE, UNLESS SPECIFICALLY AND OTHERWISE NOTED. WHEN CONDUIT IS EXPOSED, COORDINATE WITH CONTRACTING OFFICER FOR CONDUIT COLOR AND/OR PAINTING REQUIREMENTS.
14. ALL TELECOMMUNICATIONS SYSTEMS CONDUITS WHICH ARE UNDERGROUND SHALL BE RIGID POLYVINYL CHLORIDE CONDUIT (PVC), UNLESS OTHERWISE NOTED. REFER TO SPECIFICATIONS FOR MORE INFORMATION.
15. NO MORE THAN TWO (2) 90-DEGREE BENDS (OR A TOTAL OF 180-DEGREES) MAY BE INSTALLED BETWEEN PULLBOXES, HANDHOLES, OR PULL POINTS. A 4 INCH SQUARE, 2-1/8 INCH DEEP BACKBOX SHALL BE PROVIDED AND INSTALLED AS A PULL BOX FOR 1 INCH CONDUIT PATHWAYS, UNLESS OTHERWISE NOTED. FOR ALL OTHER PATHWAYS, REFER TO DRAWINGS AND SPECIFICATIONS FOR PULL BOX SIZE REQUIREMENTS.
16. FOR INTERIOR SPACES, NO MORE THAN 100 FEET OF PATHWAY MAY BE INSTALLED BETWEEN PULLBOXES OR PULL POINTS.
17. FOR EXTERIOR PATHWAY, NO MORE THAN 500 FEET OF PATHWAY MAY BE INSTALLED BETWEEN HANDHOLES OR PULL POINTS.
18. ALL MANUFACTURER CABLE BEND RADIUS REQUIREMENTS SHALL BE OBSERVED AND PROTECTED DURING THE INSTALLATION OF CABLING. FOR 2 INCH (TRADE SIZE) CONDUITS OR LESS, CONDUITS BEND RADIUS SHALL BE A MINIMUM OF 6 TIMES THE CONDUIT DIAMETER. FOR CONDUITS GREATER THAN 2 INCHES (TRADE SIZE), CONDUIT BEND RADIUS SHALL BE A MINIMUM OF 10 TIMES THE CONDUIT DIAMETER. ALL CONDUIT BENDS SHALL BE "SWEEPING" TYPE, NO BEND FITTINGS ARE PERMITTED.
19. FOR LOCATIONS WHERE BOTH POWER AND NETWORK OUTLETS ARE TO BE INSTALLED, NETWORK OUTLETS SHALL BE IMMEDIATELY ADJACENT AND ORTHOGONAL TO THE POWER OUTLET, UNLESS OTHERWISE NOTED. THE CONTRACTOR SHALL ENSURE THAT ALL NETWORK OUTLET LOCATIONS AND POWER OUTLET LOCATIONS ARE COORDINATED TO BE ADJACENT TO EACH OTHER WITH PROPER SPACING PER ARCHITECTURAL ELEVATIONS AND/OR NOTES.
20. BACK-TO-BACK MOUNTED OUTLETS IN WALLS ARE NOT PERMITTED, BOXES SHALL MAINTAIN A MINIMUM OF 12-INCHES OF SEPARATION. IN CASES WHERE OUTLET BOXES IN ADJACENT ROOMS ARE IN THE SAME STUD CAVITY, PROVIDE A LAYER OF EXPANDABLE SPRAY FOAM INSULATION AROUND EACH BOX CAVITY. FOR ALL OUTLETS/BACKBOXES INSTALLED INTO ACOUSTICALLY-RATED PARTITIONS (TYPICALLY OFFICES, CONFERENCE ROOM, CLASSROOMS, PRESENTATION SPACES, ETC.), PROVIDE ACOUSTICAL OUTLET BACKER PUTTY AND/OR PUTTY PADS. ACOUSTICAL RATING SHALL BE MAINTAINED PER ASTM C919 AND ASTM E497, AND BE TESTED TO UL 263 (ASTM E119) AND UL 1479 (ASTM E814) STANDARDS. WHEN INSTALLED INTO FIRE-RATED WALLS, PROVIDE FIRE-RATED PUTTY TO COVER THE BACK OF EACH OUTLET.
21. ALL CABLING SHALL BE SUPPORTED BY DEDICATED INFRASTRUCTURE AND EQUIPMENT. THIS INCLUDES CABLE TRAY, CONDUIT, AND MAUNFACTURED SLEEVES. CABLE SHALL NOT BE SUPPORTED BY OTHER TRADE'S EQUIPMENT OR ARCHITECTURAL ELEMENTS. THIS INCLUDES, BUT IS NOT LIMITED TO, HVAC DUCTS, PIPING, ELECTRICALLY DEDICATED CONDUIT, CEILING TILE/GRID, ETC.
22. CABLE TRAY, CONDUIT, SLEEVES, PENETRATIONS, AND ANY OTHER PATHWAYS USED FOR ROUTING TELECOMMUNICATIONS (NETWORK/VOICE/CATV) CABLING SHALL BE DEDICATED TO TELECOMMUNICATION CABLING. NO OTHER TRADE, SERVICE, OR SYSTEM SHALL UTILIZE SAME PATHWAY.
23. CABLE TRAY SHALL ONLY BE INSTALLED WHERE INDICATED AND ABOVE ACCESSIBLE CEILINGS. EXPOSED OR NON-ACCESSIBLE CABLING IS NOT ACCEPTABLE; CONDUIT PATHWAY SHALL BE PROVIDED AND INSTALLED FOR ROUTING OF CABLING FROM EACH OUTLET BACK TO THE NEAREST CABLE TRAY OR TELECOMMUNICATION SPACE. CONDUIT SHALL BE UTILIZED FOR CABLE ROUTING THROUGH NON-ACCESSIBLE CEILINGS, OPEN CEILING ENVIRONMENTS, AND/OR HIGH CEILING ENVIRONMENTS WHERE THE CABLE IS BELOW THE CEILING, UNLESS OTHERWISE NOTED.
24. ALL INTERIOR CABLING SHALL BE PLENUM RATED UNLESS SPECIFICALLY AND OTHERWISE NOTED.
25. ALL BACKBOX INSTALLATIONS SHALL BE COORDINATED TO ENSURE THAT MUD RING/EXTENSION RING IS MOUNTED FLUSH WITH WALL SURFACE TO ALLOW PROPER MOUNTING OF FACEPLATE(S).
26. FOR ALL OPEN ENDED CONDUIT NOT TERMINATED INTO A BOX OR ENLCOSURE, CONTRACTOR SHALL PROVIDE AND INSTALL A NYLON BUSHING AND CONDUIT END.
27. A PULL STRING SHALL BE PROVIDED FOR ALL CONDUIT PATHWAYS. FOR EXTERIOR PATHWAYS, PULL STRING SHALL BE MULE TAPE WITH A MINIMUM TENSION STRENGTH OF 2200 LBS. FOR INTERIOR PATHWAYS, A STRING OR MULE TAPE WITH A MINIMUM TENSION STRENGTH OF 200 LBS. SHALL BE INSTALLED. ALL PULL STRINGS SHALL BE TIED OFF WITH 3 FEET OF SLACK ON EACH END.

PROFESSIONAL ENGINEER LICENSED 17050 03/13/2026 STATE OF IDAHO JON E BROOKS

DESIGNED: ANW, TW	SUB SHEET NO.	TITLE OF SHEET	DRAWING NO. XX / XX
CADD: ANW, TW	T000	TECHNOLOGY COVER SHEET	PMIS/PKG NO. XXXXXX
TECH REVIEW: MRS, KMD		MIIN MAINTENANCE BUILDING ADDITION	SHEET 48 OF 54
DATE: 03/20/2026		MINIDOKA NATIONAL HISTORIC SITE	

3/13/2026 10:39:26 AM Autodesk Docs://2025-560 MIIN Maintenance Bldg Addition/5854.02 - NPS MIIN - Electrical - E26.rvt

SECURITY LEGEND

'CAMX' DEFINES THE CAMERA TYPE. REFER TO SCHEDULES FOR MORE INFORMATION. EACH CAMERA SHALL RECEIVE ONE (1) BUILDING NETWORK CONNECTION.

CEILING-MOUNTED | WALL-MOUNTED

- SINGLE LENSE CAMERA
- DUAL LENSE CAMERA
- TRIPLE LENSE CAMERA
- QUAD LENSE CAMERA
- MOTION DETECTOR - DIRECTIONAL
- MOTION DETECTOR - OMNI-DIRECTIONAL

WALL-MOUNTED
POLE-MOUNTED
CORNER-MOUNTED

SECURITY DEVICE - REFER TO SPECIAL SYMBOLS LEGEND. 'XX' DENOTES THE DEVICE DESCRIPTION FROM REFERENCE BELOW.

WALL MOUNTED SECURITY DEVICES

CR	CARD READER DEVICE
KP	KEYPAD ACCESS DEVICE
CK	CARD READER / KEYPAD COMBINATION DEVICE
BM	BIOMETRIC COMBINATION DEVICE
IC	INTERCOM (REMOTE)
IM	INTERCOM (MASTER)
DU	DURESS BUTTON
RX	REQUEST-TO-EXIT DEVICE
KI	KEYPAD INTERFACE - INTRUSION SYSTEM
DB	DOOR BELL

CEILING MOUNTED SECURITY DEVICES

DC	DOOR CONTACT
MD	MOTION DETECTOR

MATRIX OF CONSTRUCTION RESPONSIBILITIES

THE RESPONSIBILITIES LISTED HEREIN ARE PROVIDED AS A RECOMMENDATION AND DO NOT SUPERSEDE OR REPLACE ANY CONTRACTS, OR OTHERWISE DEFINED RESPONSIBILITIES, BETWEEN THE DESIGNATED PARTIES. IN ADDITION, THE INFORMATION IS MEANT TO INDICATE GENERAL RESPONSIBILITY FOR A SCOPE OF WORK AND IN NO WAY DISALLOWS THE RESPONSIBLE PARTY TO SUBCONTRACT THE SCOPE.

RESPONSIBLE PARTY	GENERAL CONTRACTOR		ELECTRICAL CONTRACTOR		TELECOM CONTRACTOR		LOW VOLTAGE CONTRACTOR		AUDIO-VISUAL CONTRACTOR		SECURITY CONTRACTOR		CONTRACTING OFFICER		NOTES
SCOPE OF WORK	FURNISH	INSTALL	FURNISH	INSTALL	FURNISH	INSTALL	FURNISH	INSTALL	FURNISH	INSTALL	FURNISH	INSTALL	FURNISH	INSTALL	
BUDGET OF WORK	GC		GC		GC		GC		GC		GC		FFE		
DEMOLITION															
GENERAL															8
INTERIOR INFRASTRUCTURE															
INTERIOR CONDUIT PATHWAY			X	X											
BACKBOX / JUNCTION BOX			X	X											
J-HOOK / SLING					X	X									
SLEEVE / CONDUIT PENETRATIONS			X	X	X	X									6, 7
TELECOMMUNICATIONS															
HORIZONTAL CABLING SYSTEM (NETWORK, VOICE, CATV)					X	X									
FACEPLATE / JACK / SURFACE MOUNT BOX					X	X									
PATCH CABLE (INTERIOR TO TELECOMMUNICATIONS ROOM)					X									X	
PATCH CABLE (END DEVICE / OUTLET)					X	X		X		X		X		X	2
LABELING					X	X									
WIRELESS ACCESS POINT (WAP)													X	X	
PERIPHERAL EQUIPMENT (PHONE, PRINTER, PC, ETC.)													X	X	
SECURITY - INTRUSION DETECTION (ID)															
MOTION SENSOR											X	X			

NOTES:

1. CONTRACTOR SHALL COORDINATE WITH CONTRACTING OFFICER REGARDING TIMELINE OF INSTALLATION AND REQUIREMENTS FOR INSTALLATION TO ENSURE A TIMLEY INSTALLATION.

2. THE PARTY RESPONSIBLE FOR INSTALLING THE END DEVICE (PC, CAMERA, WAP, ETC.) SHALL BE RESPONSIBLE FOR INSTALLING THE END-OF-RUN PATCH CABLE. AFTER INSTALLATION, VERIFICATION OF OPERABILITY IS REQUIRED.

3. THE ELECTRICAL CONTRACTOR SHALL i) EXTEND THE BUILDING GROUND TO EACH TELECOMMUNICATION SPACE ii) PROVIDE AND INSTALL THE BUSBAR(S), GROUNDING CABLES, AND ASSOCIATED EQUIPMENT, iii) AND ENSURE EACH TELECOMMUNICATION SPACE HAS PROPER ACCESS TO BUILDING GROUND THROUGH THE LOCAL BUSBAR AS SHOWN IN THE DRAWINGS.

4. FOR ALL DEVICES, EQUIPMENT, PATHWAY, AND OTHER SUCH MATERIAL REQUIRED TO BE GROUNDED, THE CONTRACTOR/PARTY, WITH WHICH THE DEVICE, EQUIPMENT, PATHWAY OR OTHER SUCH MATERIAL WAS INSTALLED BY, SHALL BE RESPONSIBLE FOR ITS PROPER BONDING AND GROUNDING.

5. THE ELECTRICAL CONTRACTOR SHALL BE RESPONSIBLE FOR THE PROVISION AND INSTALLATION OF ALL FLOOR BOXES AND POKE THROUGHS, AS WELL AS ALL CONDUIT/PATHWAY REQUIREMENTS PERTAINING TO IT, REGARDLESS IF THERE IS POWER CABLING INCLUDED AT DEVICE. THE TELECOM CONTRACTOR SHALL COORDINATE WITH DRAWINGS AND ELECTRICAL CONTRACTOR TO ENSURE LOW VOLTAGE INFRASTRUCTURE AND CABLING REQUIREMENTS ARE MET AND SHALL PROVIDE AND INSTALL ALL CABLING AND FACEPLATE/TERMINATION EQUIPMENT PERTAINING TO DEVICE.

6. FOR ALL PENETRATIONS SHOWN IN DRAWINGS, THE ELECTRICAL CONTRACTOR SHALL PROVIDE AND INSTALL. THE ELECTRICAL CONTRACTOR SHALL ENSURE THE EXTERIOR OF EACH PENETRATION IS FIRE-RATED TO MATCH OR EXCEED THE PENETRATED SURFACE.

7. ALL PENETRATIONS NOT SHOWN ON DRAWINGS, BUT REQUIRED FOR CABLING INSTALLATION, SHALL BE PROVIDED AND INSTALLED BY THE CABLING INSTALLATION CONTRACTOR/TEAM. FOR FIRE-RATED PENETRATIONS, THE CABLE INSTALLATION CONTRACTOR/TEAM SHALL ENSURE THE EXTERIOR OF EACH PENETRATION IS FIRE-RATED TO MATCH OR EXCEED THE PENETRATED SURFACE. AFTER ALL CABLING IS INSTALLED, TESTED, AND ACCEPTED, THE INTERIOR OF EACH PENETRATION SHALL BE FIRE-RATED TO MATCH OR EXCEED THE PENETRATED MATERIAL AS WELL.

8. IT IS ACCEPTABLE FOR THE CONTRACTOR TO REUSE AN EXISTING DEVICE WITH CONTRACTING OFFICER APPROVAL. COORDINATE WITH THE CONTRACTING OFFICER PRIOR TO ANY NEW DEVICE PROCUREMENT TO RECORD ALL DEVICES THAT MAY BE REUSED. FOR ALL DEVICES SCHEDULED FOR REUSE THAT REPLACE AN ITEM SCHEDULED FOR NEW, A CREDIT SHALL BE GIVEN TO THE CONTRACTING OFFICER FOR ITEM REPLACEMENT.

9. THIS SCOPE IS DETERMINED TO BE EXISTING TO REMAIN AND SHALL BE UTILIZED THROUGH COORDINATION WITH CONTRACTING OFFICER AND OTHER TRADES.

PROFESSIONAL ENGINEER LICENSED 17050 08/10/2026 STATE OF IDAHO JON E BROOKS

DESIGNED: ANW, TW	SUB SHEET NO.	TITLE OF SHEET	DRAWING NO.
CADD: ANW, TW	T001	TECHNOLOGY RESPONSIBILITY MATRIX	PMIS/PKG NO.
TECH REVIEW: MRS, KMD		MIIN MAINTENANCE BUILDING ADDITION	SHEET
DATE: 03/20/2026		MINIDOKA NATIONAL HISTORIC SITE	49 OF 54

8/6/2026 2:29:08 PM Autodesk Docs://2025-560 MIIN Maintenance Bldg Addition/5854.02 - NPS MIIN - Electrical - E26.rvt

TECHNOLOGY GENERAL NOTES

1.	CONTRACTOR SHALL REFER TO LEGEND, NOTES, SCHEDULES, DETAILS, AND SPECIFICATIONS FOR MORE INFORMATION.
2.	TELECOM BOUNDARIES REPRESENT THE AREA SERVED BY THE CORRESPONDING TELECOM ROOM AND/OR CONSOLIDATION POINT. ALL NETWORK CABLING SHALL HOMERUN TO, AND ORIGINATE FROM, THE ASSOCIATED ROOM/POINT.
3.	DEVICE LOCATIONS SHOWN SHALL BE COORDINATED WITH ARCHITECTURAL ELEMENTS, FURNITURE, AND OTHER TRADES FOR FINAL INSTALLATION LOCATION.
4.	CABLING SHALL BE ENCLOSED IN CONDUIT FROM TELECOMMUNICATION ROOM TO EACH DEVICE/OUTLET. NO CABLING SHALL BE VISIBLE OR EXPOSED OUTSIDE OF A TELECOMMUNICATION ROOM/RACK.
5.	NO MORE THAN 100 FEET OF PATHWAY MAY BE INSTALLED BETWEEN PULL POINTS.
6.	ALL CONDUIT BENDS SHALL THE "SWEEPING" TYPE AND IN ACCORDANCE WITH THE BEND RADIUS REQUIREMENTS SPECIFIED IN PROJECT GENERAL NOTES. NO "BEND" OR "ELBOW" FITTINGS ARE PERMITTED UNLESS SPECIFICALLY NOTED.

KEYNOTE LEGEND

KEY VALUE	KEYNOTE TEXT
1	CONTRACTOR SHALL ADD A 48-PORT PATCH PANEL (CP2) TO DATA RACK IN THIS LOCATION FOR OFFICE EXPANSION.

SCALE: A

8 0 8 16

SCALE OF FEET

BLDG. NORTH

1 / T200 TECHNOLOGY FLOOR PLAN - OVERALL

SCALE A

PROFESSIONAL ENGINEER LICENSED 17050 03/13/2026 STATE OF IDAHO JON E BROOKS

DESIGNED: ANW, TW	SUB SHEET NO.	TITLE OF SHEET	DRAWING NO.
CADD: ANW, TW	T200	TECHNOLOGY FLOOR PLAN	XX / XX
TECH REVIEW: MRS, KMD		MIIN MAINTENANCE BUILDING ADDITION	PMIS/PKG NO. XXXXXX
DATE: 03/20/2026		MINIDOKA NATIONAL HISTORIC SITE	SHEET 50 OF 54

3/13/2026 10:39:27 AM Autodesk Docs://2025-560 MIIN Maintenance Bldg Addition/5854.02 - NPS MIIN - Electrical - E26.rvt

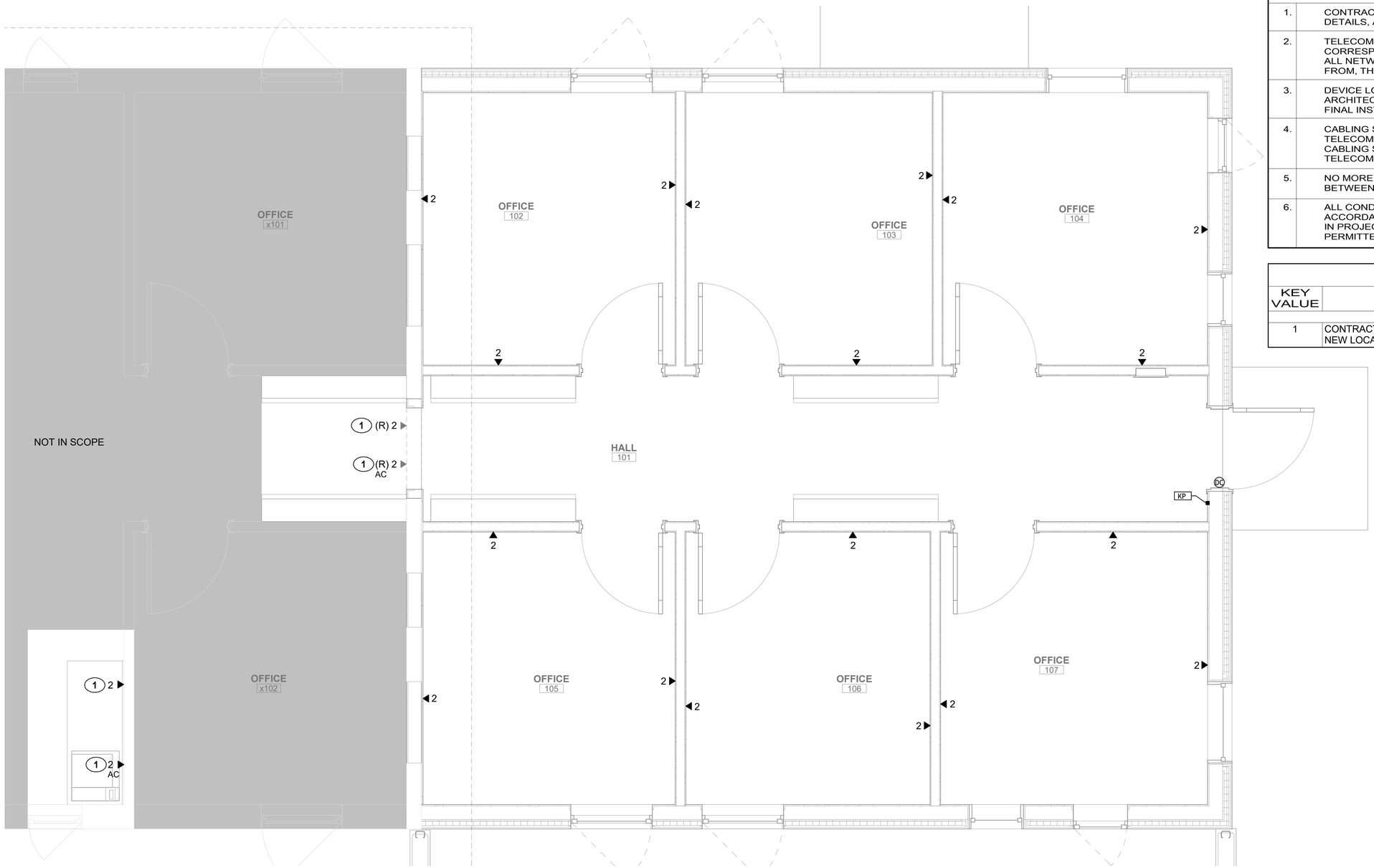

TECHNOLOGY GENERAL NOTES

1.	CONTRACTOR SHALL REFER TO LEGEND, NOTES, SCHEDULES, DETAILS, AND SPECIFICATIONS FOR MORE INFORMATION.
2.	TELECOM BOUNDARIES REPRESENT THE AREA SERVED BY THE CORRESPONDING TELECOM ROOM AND/OR CONSOLIDATION POINT. ALL NETWORK CABLING SHALL HOMERUN TO, AND ORIGINATE FROM, THE ASSOCIATED ROOM/POINT.
3.	DEVICE LOCATIONS SHOWN SHALL BE COORDINATED WITH ARCHITECTURAL ELEMENTS, FURNITURE, AND OTHER TRADES FOR FINAL INSTALLATION LOCATION.
4.	CABLING SHALL BE ENCLOSED IN CONDUIT FROM TELECOMMUNICATION ROOM TO EACH DEVICE/OUTLET. NO CABLING SHALL BE VISIBLE OR EXPOSED OUTSIDE OF A TELECOMMUNICATION ROOM/RACK.
5.	NO MORE THAN 100 FEET OF PATHWAY MAY BE INSTALLED BETWEEN PULL POINTS.
6.	ALL CONDUIT BENDS SHALL THE "SWEEPING" TYPE AND IN ACCORDANCE WITH THE BEND RADIUS REQUIREMENTS SPECIFIED IN PROJECT GENERAL NOTES. NO "BEND" OR "ELBOW" FITTINGS ARE PERMITTED UNLESS SPECIFICALLY NOTED.

KEYNOTE LEGEND

KEY VALUE	KEYNOTE TEXT
1	CONTRACTOR SHALL RELOCATE EXISTING DATA DEVICE AND CABLE TO NEW LOCATION.

1 / T201 TECHNOLOGY FLOOR PLAN - ENLARGED
SCALE A

SCALE: A 2 0 2 4
SCALE OF FEET

BLDG NORTH

PROFESSIONAL ENGINEER LICENSED 17050 03/13/2026 STATE OF IDAHO JON E BROOKS

DESIGNED: ANW, TW CADD ANW, TW TECH REVIEW: MRS, KMD DATE: 03/20/2026	SUB SHEET NO. T201	TITLE OF SHEET TECHNOLOGY FLOOR PLAN - ENLARGED MIIN MAINTENANCE BUILDING ADDITION MINIDOKA NATIONAL HISTORIC SITE	DRAWING NO. XX / XX PMIS/PKG NO. XXXXXX SHEET 51 OF 54

3/13/2026 10:39:27 AM Autodesk Docs://2025-560 MIIN Maintenance Bldg Addition/5854.02 - NPS MIIN - Electrical - E26.rvt

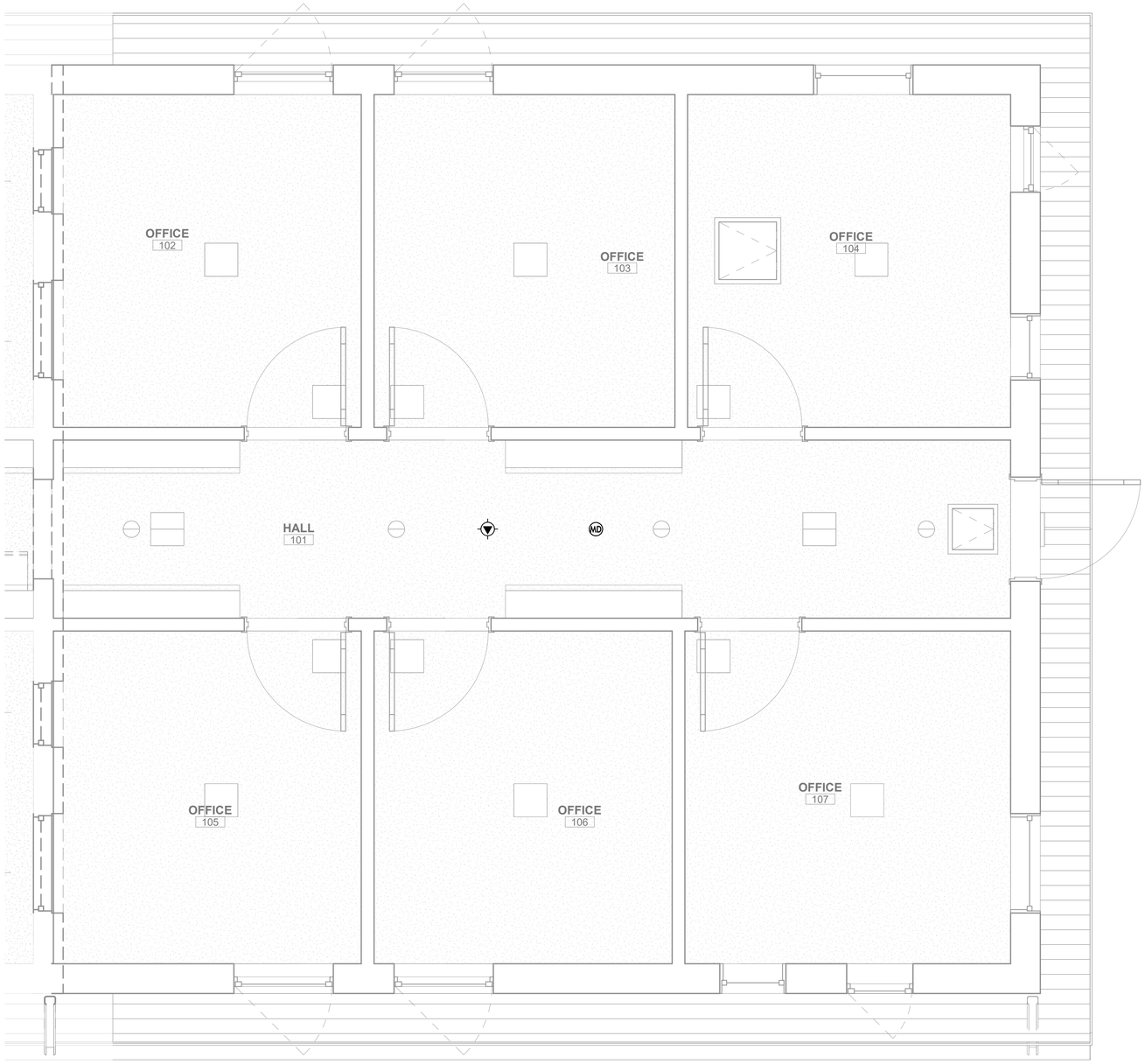

1 T300 TECHNOLOGY CEILING PLAN - ENLARGED
SCALE A

TECHNOLOGY GENERAL NOTES

1.	CONTRACTOR SHALL REFER TO LEGEND, NOTES, SCHEDULES, DETAILS, AND SPECIFICATIONS FOR MORE INFORMATION.
2.	TELECOM BOUNDARIES REPRESENT THE AREA SERVED BY THE CORRESPONDING TELECOM ROOM AND/OR CONSOLIDATION POINT. ALL NETWORK CABLING SHALL HOMERUN TO, AND ORIGINATE FROM, THE ASSOCIATED ROOM/POINT.
3.	DEVICE LOCATIONS SHOWN SHALL BE COORDINATED WITH ARCHITECTURAL ELEMENTS, FURNITURE, AND OTHER TRADES FOR FINALL INSTALLATION LOCATION.
4.	CABLING SHALL BE ENCLOSED IN CONDUIT IN FROM TELECOMMUNICATION ROOM TO EACH DEVICE/OUTLET. NO CABLING SHALL BE VISIBLE OR EXPOSED OUTSIDE OF A TELECOMMUNICATION ROOM/RACK.
5.	ALL CONDUIT PATHWAY ROUTED FROM A BACKBOX, FLOOR BOX, JUNCTION BOX, OR POKE THROUGH SHALL BE ROUTED TO NEAREST ACCESSIBLE CEILING.
6.	NO MORE THAN 100 FEET OF PATHWAY MAY BE INSTALLED BETWEEN PULL POINTS.
7.	ALL CONDUIT BENDS SHALL THE "SWEEPING" TYPE AND IN ACCORDANCE WITH THE BEND RADIUS REQUIREMENTS SPECIFIED IN PROJECT GENERAL NOTES. NOT "BEND" OR "ELBOW" FITTINGS ARE PERMITTED UNLESS SPECIFICALLY NOTED.

SCALE: A 2 0 2 4
SCALE OF FEET

BLDG. NORTH

PROFESSIONAL ENGINEER LICENSED 17050 03/13/2026 STATE OF IDAHO JON E BROOKS

DESIGNED: ANW, TW CADD ANW, TW TECH REVIEW: MRS, KMD DATE: 03/20/2026	SUB SHEET NO. T300	TITLE OF SHEET TECHNOLOGY CEILING PLAN - ENLARGED MIIN MAINTENANCE BUILDING ADDITION MINIDOKA NATIONAL HISTORIC SITE	DRAWING NO. XX / XX PMIS/PKG NO. XXXXXX SHEET 52 OF 54

3/13/2026 10:39:27 AM Autodesk Docs://2025-560 MIIN Maintenance Bldg Addition/5854.02 - NPS MIIN - Electrical - E26.rvt

EQUIPMENT SCHEDULES INFORMATION
ALL COMPONENTS SHOWN HEREIN SHALL BE CONSIDERED AS 'BASIS OF DESIGN'. THEY ARE SHOWN TO INDICATE GENERAL FUNCTION AND APPLICATION. IT IS ACCEPTABLE TO PROVIDE/SUBMIT COMPONENTS DETERMINED TO BE 'APPROVED EQUAL'.

COPPER CONNECTIVITY

KEY	DESCRIPTION	MANUFACTURER	PART NUMBER	COMMENTS
CC2	CAT 6A CABLE, PLENUM, UTP	COMMSCOPE	CS44P	
CJ2	CAT 6A JACK	COMMSCOPE	UKJ10G	
CW4	4-PORT FACEPLATE, LABELED	COMMSCOPE	2111039-x	FINISH SHALL MATCH COLOR OF POWER RECEPTACLE DEVICE FACEPLATES
CW5	1-PORT WALL PHONE FACEPLATE	SEE COMMENTS	M10LWSP	
CW7	SURFACE MOUNT BOX, (BISCUIT), PLENUM, 2 PORT	COMMSCOPE	SMB-2P-xxx PLENUM	WIRELESS ACCESSS POINT LOCATIONS
CP2	CAT 6A PATCH PANEL, 48 PORTS, 2RU, BLACK, FLAT	COMMSCOPE	UNP-6A-DM-2U-48	

COPPER PATCH CORDS

SYSTEM	AREA	CATEGORY	QUANTITY	LENGTH (FT)	COLOR	MANUFACTURER	PART NUMBER	COMMENTS
NETWORK	IT ROOM	CAT6A	1 PER PATCH PORT	1	BLUE	COMMSCOPE	UC1AAA2	
	PREMISE		1 PER OUTLET PORT	7	BLUE	COMMSCOPE	UC1AAA2	PLENUM RATED WHEN ABOVE CEILING
WIRELESS ACCESS POINT (WAP)	IT ROOM	CAT6A	1 PER PATCH PORT	1	GREEN	COMMSCOPE	UC1AAA2	
	PREMISE		1 PER OUTLET PORT	10	GREEN	COMMSCOPE	UC1AA22	PLENUM RATED

HORIZONTAL CABLE MATRIX

SYSTEM	CABLE KEY	CABLE COLOR	JACK KEY	JACK COLOR	COMMENTS
NETWORK	CC2	BLUE	CJ2	BLUE	
WIRELESS ACCESS POINT (WAP)	CC2	GREEN	CJ2	GREEN	

SECURITY - INTRUSION DETECTION SYSTEM (IDS)

KEY	DESCRIPTION	MANUFACTURER	PART NUMBER	COMMENTS
MD	MOTION DETECTOR - CEILING MOUNT, 360 DEGREE	BOSCH	DS9360	
DC	DOOR CONTACT (POSITION SWITCH), CONCEALED MOUNT	GE INTERLOGIX	2767-L	1
KP	SECURITY KEYPAD	HONEYWELL	MATCH EXISTING	

PROFESSIONAL ENGINEER LICENSED 17050 08/10/2026 STATE OF IDAHO JON E BROOKS

DESIGNED: ANW, TW	SUB SHEET NO.	TITLE OF SHEET	DRAWING NO.
CADD ANW, TW	T500	TECHNOLOGY SCHEDULES	PMIS/PKG NO.
TECH REVIEW: MRS, KMD		MIIN MAINTENANCE BUILDING ADDITION	SHEET 53 OF 54
DATE: 03/20/2026		MINIDOKA NATIONAL HISTORIC SITE	

8/6/2026 2:29:08 PM Autodesk Docs://2025-560 MIIN Maintenance Bldg Addition/5854.02 - NPS MIIN - Electrical - E26.rvt

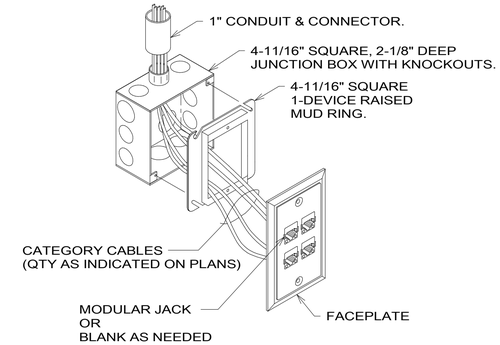

SYMBOL: ▼ ▽ CR IM KP

1 T600 TECHNOLOGY SYSTEMS OUTLETS AND CONDUIT

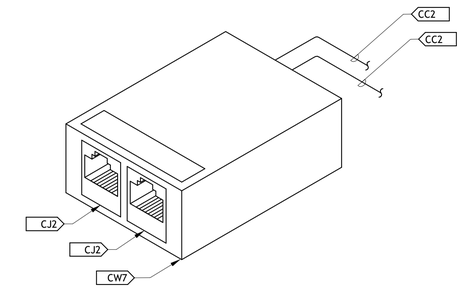

SYMBOL:

2 T600 2 PORT SURFACE MOUNT BOX

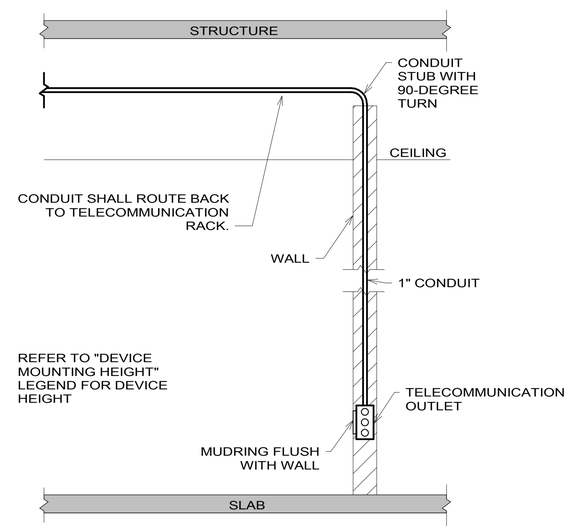

3 T600 TELECOMMUNICATIONS OUTLET ROUTING - ABOVE CEILING

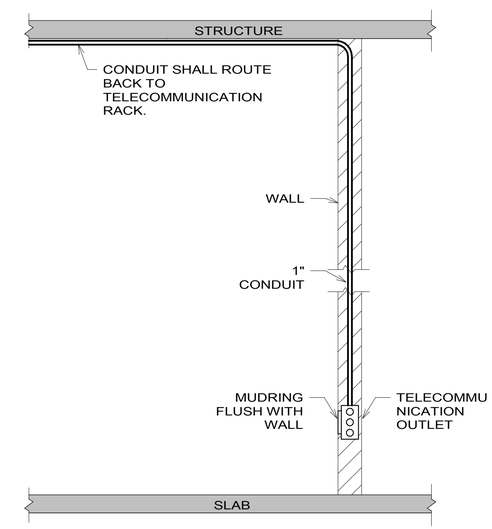

4 T600 TELECOMMUNICATIONS OUTLET ROUTING - OPEN CEILING

PROFESSIONAL ENGINEER LICENSED 17050 03/13/2026 STATE OF IDAHO JON E BROOKS

DESIGNED: ANW, TW CADD ANW, TW TECH REVIEW: MRS, KMD DATE: 03/20/2026	SUB SHEET NO. T600	TITLE OF SHEET TECHNOLOGY DETAILS MIIN MAINTENANCE BUILDING ADDITION MINIDOKA NATIONAL HISTORIC SITE	DRAWING NO. XX / XX PMIS/PKG NO. XXXXXX SHEET 54 OF 54

3/13/2026 10:39:27 AM Autodesk Docs://2025-560 MIIN Maintenance Bldg Addition/5854.02 - NPS MIIN - Electrical - E26.rvt