MAINTENANCE BUILDING ADDITION

MINIDOKA HISTORIC SITE

IDAHO

PROJECT SPECIFICATIONS

FRIENDS OF MINIDOKA

&

NATIONAL PARK SERVICE

100% CONSTRUCTION DOCUMENTS

MARCH 20, 2026

TABLE OF CONTENTS

SEALS PAGE

DIVISION 01

01 11 00 SUMMARY OF WORK
01 26 01 CONTRACT MODIFICATION PROCEDURES
01 27 00 DEFINITION OF CONTRACT LINE ITEMS
01 31 00 PROJECT MANAGEMENT & COORDINATION
01 32 16 CONSTRUCTION SCHEDULE
01 32 33 PHOTOGRAPHIC DOCUMENTATION
01 33 23 SUBMITTAL PROCEDURES
- SUBMITTAL LIST

01 35 13.22 ARCHEOLOGICAL PROTECTION
01 35 23 SAFETY REQUIREMENTS
01 40 00 QUALITY REQUIREMENTS
- DAILY REPORT TEMPLATE
- ACCESSIBILITY INSPECTION REPORT FORM
- SOSTSI

01 42 00 REFERENCE STANDARDS
01 50 00 TEMPORARY FACILITIES AND CONTROLS
01 57 19.11 INDOOR AIR QUALITY MANAGEMENT
01 57 19.12 NOISE AND ACOUSTICS MANAGEMENT
01 57 23 UNDER AN ACRE STORM WATER POLLUTION PREVENTION
01 67 00 PRODUCT REQUIREMENTS
01 73 40 EXECUTION
01 74 19 CONSTRUCTION WASTE MANAGEMENT AND DISPOSAL
- WASTE MANAGEMENT PLAN WORKSHEET

01 77 00 CLOSEOUT PROCEDURES
01 78 23 OPERATION AND MAINTENANCE DATA
- O&M SPREADSHEET

01 79 00 DEMONSTRATION AND TRAINING
01 81 13 SUSTAINABLE DESIGN REQUIREMENTS FOR NON-LEED PROJECTS

DIVISION 03

03 20 00 CONCRETE REINFORCING
03 30 00 CAST-IN-PLACE CONCRETE

DIVISION 05

05 31 00 STEEL DECKING
05 40 00 COLD-FORMED METAL FRAMING
05 44 00 COLD-FORMED METAL TRUSSES

DIVISION 07

07 11 13	MODIFIED BITUMINOUS DAMPPROOFING
07 21 00	THERMAL INSULATION
07 25 00	WEATHER BARRIERS
07 26 00	VAPOR RETARDERS
07 41 13.16	STANDING SEAM METAL ROOF PANELS
07 42 13.13	FORMED METAL WALL PANELS
07 42 93	SOFFIT PANELS
07 62 00	SHEET METAL FLASHING
07 92 00	JOINT SEALANTS

DIVISION 08

08 11 13	HOLLOW METAL DOORS AND FRAMES
08 14 16	FLUSH WOOD DOORS
08 31 13	ACCESS DOORS AND FRAMES
08 54 13	FIBERGLASS WINDOWS
08 71 11	DOOR HARDWARE
08 80 00	GLAZING

DIVISION 09

09 29 00	GYPSUM BOARD
09 65 13	RESILIENT BASE AND ACCESSORIES
09 91 13	EXTERIOR PAINTING
09 91 24	INTERIOR PAINTING

DIVISION 10

10 14 23.16	ROOM IDENTIFICATION PANEL SIGNAGE

DIVISION 23

23 05 00	COMMON WORK RESULTS FOR HVAC
23 05 17	SLEEVES AND SLEEVE SEALS FOR HVAC PIPING
23 05 18	ESCUTCHEONS FOR HVAC PIPING
23 05 29	HANGERS AND SUPPORTS FOR HVAC PIPING AND EQUIPMENT
23 05 48	VIBRATION CONTROLS FOR HVAC
23 05 53	IDENTIFICATION FOR HVAC PIPING AND EQUIPMENT
23 05 93	TESTING, ADJUSTING, AND BALANCING FOR HVAC
23 07 13	DUCT INSULATION
23 07 19	HVAC PIPING INSULATION
23 09 23.12	CONTROL DAMPERS
23 23 00	REFRIGERANT PIPING
23 31 13	METAL DUCTS
23 33 00	AIR DUCT ACCESSORIES
23 37 13	DIFFUSERS, REGISTERS, AND GRILLES
23 81 26	SPLIT-SYSTEM AIR-CONDITIONERS

DIVISION 26

26 05 00	COMMON WORK RESULTS FOR ELECTRICAL
26 05 19	LOW VOLTAGE ELECTRICAL POWER CONDUCTORS AND CABLES
26 05 29	HANGERS AND SUPPORTS FOR ELECTRICAL SYSTEMS
26 05 33	RACEWAY AND BOXES FOR ELECTRICAL SYSTEMS
26 05 53	IDENTIFICATION FOR ELECTRICAL SYSTEMS
26 09 23	LIGHTING CONTROL DEVICES
26 27 26	WIRING DEVICES
26 51 00	LIGHTING FIXTURES

DIVISION 27

27 00 10	SUPPLEMENTAL REQUIREMENTS FOR COMMUNICATIONS
27 05 28	PATHWAYS FOR COMMUNICATIONS SYSTEMS
27 05 29	HANGERS AND SUPPORTS FOR COMMUNICATIONS SYSTEMS
27 05 44	SLEEVES AND SLEEVE SEALS FOR COMMUNICATIONS PATHWAYS AND CABLING
27 05 53	IDENTIFICATION FOR COMMUNICATIONS SYSTEMS
27 15 13	COMMUNICATIONS COPPER HORIZONTAL CABLING

DIVISION 28

28 31 11	DIGITAL, ADDRESSABLE FIRE-ALARM SYSTEM – PERFORMANCE SPECIFICATION

DIVISION 31

31 10 00	SITE CLEARING
31 20 00	EARTH MOVING
31 25 00	EROSION AND SEDIMENT CONTROL

DIVISION 32

32 13 20	SITE CONCRETE
32 15 00	AGGREGATE SURFACING

APPENDICES

A - 2022.03.23 MIIN GEOTECHNICAL EVALUATION PROVIDED BY NPS.
B – 2024.05.23 MIIN MAINTENANCE BUILDING CONSTRUCTION DRAWINGS PROVIDED BY ANDERSON HALLAS ARCHITECTS.

SEALS PAGE

Civil Engineer PROFESSIONAL ENGINEER LICENSED 8181200 STATE OF IDAHO EMILY A. MAGGIO Divisions 31, 32	**Structural** PROFESSIONAL ENGINEER LICENSED 17126 STATE OF IDAHO PAUL J HAUSE March 13, 2026 Division 03 and 05
Architect LICENSED ARCHITECT 3.20.2026 ELIZABETH HALLAS AR-985880 STATE OF IDAHO Divisions 07-10	**Mechanical Engineer** PROFESSIONAL ENGINEER LICENSED 7471754 03/16/2026 STATE OF IDAHO ALEXANDRA M ZIMMERMAN Division 23
Electrical Engineer PROFESSIONAL ENGINEER LICENSED 17050 03/17/2026 STATE OF IDAHO JON E BROOKS Divisions 26, 27, 28	

SECTION 01 11 00 - SUMMARY OF WORK

PART 1 - GENERAL

1.1 SUMMARY

A. Section includes the following:

1. Work Covered by Contract Documents
2. Contractor Use of Site
3. Public Use of Site
4. Occupancy Requirements for Buildings
5. Conduct of Operations
6. Work Restrictions
7. Special Construction Requirements
8. Soils Investigation Report
9. Additional Reports

1.2 WORK COVERED BY CONTRACT DOCUMENTS

A. Project Location: Minidoka National Historic Site, Jerome, Idaho.

B. The Work consists of:

1. Construction of a +/-830 SF addition to the Maintenance Building. The addition shall match the construction and materiality of the existing building: metal frame over concrete spread footings. Building includes metal framing and metal panel exterior wall and roof finishes. Interior spaces consist of six offices with interior hallway. New ducted HVAC will be installed. Existing electrical system and tele/data will be extended to support the added spaces noted. Site excavation and drainage is included. Revegetation is excluded.

C. Project will be constructed under a single prime contract.

1.3 CONTRACTOR USE OF SITE

A. General: Contractor shall have limited use of site for construction operations. Limit use of premises to areas within the Construction limits indicated on drawings. Do not disturb portions of Project site beyond areas in which the Work is indicated.

1. Adjacent pasture to the south may be available for additional staging, confirm with Contracting Officer. Refer to area indicated on staging plan.

B. Storage of Materials: Confine storage of materials to within the Project Limits indicated on the drawings.

C. Parking: Confine parking to within the Project Limits indicated on the drawings.

D. Stockpiling: Confine stockpiling to staging area shown on plans.

E. Preservation of Natural Features:

1. Prevent damage to natural surroundings. Restore damaged areas, repairing or replacing damaged trees and plants, at no additional expense to the Government.
2. Provide temporary barriers to protect existing trees and plants and root zones.
3. Do not remove, injure, or destroy trees or other plants without prior approval. Consult with Contracting Officer (CO) and remove agreed-on roots and branches that interfere with construction.
4. Do not fasten ropes, cables, or guys to existing trees.
5. Carefully supervise excavating, grading, filling, and other construction operations near trees to prevent damage.
6. Topsoil to be obtained from a clean source, screened, and void of any invasive weeds. Revegetated areas shall be inspected by the Contractor for invasive weeds and treated if weeds are present.

F. Preservation of Site Features:

1. Prevent damage to existing historic Barn, wire fencing, and wood fencing along south side of Project Work Limits.

G. Driveways and Entrances: Keep driveways and entrances serving premises clear and available to Government employees, and emergency vehicles at all times. Do not use for parking or storage of materials.

1. Schedule deliveries to minimize use of driveways and entrances.
2. Schedule deliveries to minimize space and time requirements for storage of materials and equipment on-site.

H. Construction Camp: Establishment of a camp within park will not be permitted.

I. Hauling Restrictions: Comply with legal load restrictions in hauling of materials. Load restrictions on park roads are identical to state load restrictions with such additional regulations as may be imposed by the Park Superintendent. Information regarding rules and regulations for vehicular traffic on park roads may be obtained from the Office of the Park Superintendent. A special permit will not relieve Contractor of liability for damage which may result from moving of equipment.

J. Bridge Restrictions: Identify jurisdictions, load restrictions, permit requirements, time and calendar restrictions as outlined.

1.4 PUBLIC USE OF SITE

A. The area will be closed to the public during construction.

B. Contractor shall conduct his operations to ensure the least inconvenience to public. Road closures are not permitted.

1.5 OCCUPANCY REQUIREMENTS FOR BUILDINGS

A. Existing Buildings

1. Partial Government Occupancy: Government will occupy the existing maintenance building during entire construction period. Cooperate with Government during construction operations to minimize conflicts and facilitate Government usage. Perform Work so as not to interfere with Government's operations. Maintain existing exits, unless otherwise indicated.

   a. Maintain access to existing walkways, corridors, and other adjacent occupied or used facilities. Do not close or obstruct walkways or other occupied or used facilities without written permission from Contracting Officer.

   b. Utilities to remain functional throughout duration of construction with limited, planned downtime coordinated with the Contracting Officer.

1.6 CONDUCT OF OPERATIONS

A. Contractor shall conduct his operations in conformance with rules and regulations promulgated by the Secretary of the Interior for the National Park Service, and applicable park rules and regulations prescribed by Park Superintendent.

B. Work on Saturdays, Sundays, Federal holidays or at night may not be performed unless stated in the Work Restrictions below or without prior consent from the Contracting Officer. Submit requests 3 business/calendar days in advance of the work to the Contracting Officer for approval.

C. No signs or advertisements (except those specified herein) shall be displayed on the construction site or within the park unless approved by the Contracting Officer.

1.7 WORK RESTRICTIONS

A. On-Site Work Hours: Work shall be generally performed during normal business working hours of ½ hour after sunrise to ½ hour before sunset, Monday through Friday, except when otherwise indicated.

1. Weekend Hours: ½ hour after sunrise to ½ hour before sunset

2. No noise restrictions.

B. Existing Utilities

1. Existing Utilities: Notify Contracting Officer and utility companies of proposed locations and times for excavation. Utilities to remain functional throughout duration of construction with limited, planned downtime coordinated with the Contracting Officer.
2. Contractor shall be responsible for locating and preventing damage to known utilities. If damage occurs, repair utility at no additional expense to the Government.
3. If damage occurs to an unknown utility, repair utility. An equitable adjustment will be made in accordance with the Changes clause of the contract.

C. Existing Utility Interruptions: Do not interrupt utilities serving facilities occupied by Government or others unless permitted under the following conditions and then only after arranging to provide temporary utility services according to requirements indicated:

1. Notify Contracting Officer not less than five business days in advance of proposed utility interruptions.
2. Do not proceed with utility interruptions without Contracting Officer's written permission.
3. Hours and length of Utility Shutdowns: Coordinate with Contracting Officer.

D. Nonsmoking Building/Tobacco Use/Vaping: Smoking is not permitted within building or within 25 feet of entrances, operable windows, or outdoor air intakes. Tobacco use and vaping is restricted to areas outside of 25 feet of all buildings' doors, windows, and outdoor air intakes. Contractor shall provide butt collection devices and designate a location within the staging area for smoking that is at least 25 feet from any building entrance, window, or air intake.

1.8 SPECIAL CONSTRUCTION REQUIREMENTS

A. Project Website: A project website administered by NPS will be used for purposes of managing communication and documents during construction stage.

1. See Section 01 31 00 "Project Management and Coordination" for requirements on using Project Website.

B. Construction is not permitted in the summer of 2026 due to the Minidoka Pilgrimage. Exact 2026 dates are to be determined and coordinated by the Contracting Officer.

1.9 SOILS INVESTIGATION REPORT

A. The report Geotechnical Evaluation MIIN Robison Maintenance Building, Minidoka National Historic Site, March 23, 2022, by Ninyo & Moore is within an appendix with this package.

B. In case of conflict between report and drawings or specifications, the drawings and specifications govern.

1.10 ADDITIONAL REPORTS

A. The 2024 Construction Drawings for the Maintenance Building have been provided as a reference. These are not as-built drawings and conditions in the field shall be verified by the contractor.

PART 2 - PRODUCTS (Not Used)

PART 3 - EXECUTION (Not Used)

END OF SECTION 01 11 00

SECTION 01 26 01 – CONTRACT MODIFICATION PROCEDURES

PART 1 - GENERAL

1.1 SUMMARY

A. Section consists of administrative and procedural requirements for contract modifications.

1.2 DEFINITIONS AND ALLOWANCES

A. Home Office Overhead: Costs incurred in support of all of a contractor's projects and not attributable to a specific job. The cost for home office overhead is only allowed as a percentage of all direct work excluding profit. The following items represent allowable home office overhead costs identified in Part 31 of the Federal Acquisition Regulation (FAR):

1. Rent
2. Utilities
3. Furnishings
4. Office equipment
5. Executive and management staff not exclusively assigned to the project
6. Support, accounting, and administrative staff
7. Preparation of cost proposals, estimating, and schedule analyses connected with Modifications
8. Estimating and preconstruction services
9. Mortgage costs
10. Real estate and corporate taxes
11. Automobile maintenance and travel costs for home office personnel
12. Home office insurances i.e. structure, automotive, umbrella, flood, etc.
13. Depreciation of equipment and other assets
14. Home office supplies (paper, staples, etc.)
15. Legal services
16. Accounting and data processing
17. Professional fees/registration

B. General Conditions (Field Office Overhead): Management and administrative costs incurred on site for the designated project. Costs associated with preparation of modifications will not be allowed. Costs for these items are to be included only in the general conditions of the modification estimate. Only in the case of a contract time extension are additional general conditions included in modifications. The following items, if applicable, are considered allowable costs for calculating General Conditions:

1. Project Manager (PM), Assistant Project Manager
2. Superintendent, Assistant Superintendent
3. Quality Control, Safety Officer, Environmental Manager, etc.
4. Engineers
5. Travel, lodging, and per diem (as established by Federal Travel Regulations)
6. Scheduling

7. Field Office Trailers and associated temporary utilities
8. Field office supplies

    a. Mailing and couriers
    b. Reproduction costs
    c. Storage
    d. Phones
    e. Computers
    f. Copiers

9. Personal vehicles i.e. Superintendent Pickup trucks

C. General Requirements: Costs directly associated with the project and are necessary to perform the actual work of the modification. These costs shall be shown as direct costs in the estimate. The following items, if applicable, are considered allowable costs for calculating General Requirements:

1. Hoisting
2. Material handling
3. Temporary fencing
4. Port-a-lets
5. Trash removal, dumpsters
6. Barricades
7. Small tools
8. Safety supplies
9. Scaffolding
10. Daily cleaning
11. Traffic control
12. Temporary signage
13. Temporary heating and power

D. Personnel Costs: Costs included in the modification must only be for General Conditions staff and workers actually present and working on project site. Modification costs for salaried workers are only allowed within the structure of a 40-hour week and no overtime or holiday pay will be allowed.

1. Worker Hourly Rates are costs directly associated with the individual worker and consist of the following:

    a. Base Rate: The hourly rate paid directly to the worker
    b. Labor Burden: Employer payments of all applicable burdens; includes insurance and taxes the business must pay on behalf of the worker to government entities and educational forums, such as:

        1) Social Security
        2) Medicare
        3) Workers Compensation – Policy and company calculation to be made available.
        4) Federal Unemployment Tax Act (FUTA) - Cap Rate and percentage to be proportionally allocated over one year.
        5) State Unemployment Tax Act (SUTA) - Cap Rate and percentage to be proportionally allocated over one year.

6) Union agreement costs - Other costs required under an enforceable collective bargaining agreement.

c. Fringe Benefits: Various non-wage compensations provided to employees such as:

1) Health Care Insurance Premiums
2) Cell Phone
3) Clothing
4) 401K and Pensions
5) Vehicle allowances
6) Gas allowance
7) Life insurance premiums
8) Disability insurance
9) Other Fringe Benefits required under an enforceable collective bargaining agreement

E. Bonuses or Deferred Compensation: No Bonus or Deferred Compensation will be allowed within any components of pricing including Home Office Overhead, General Conditions, General Requirements, Hourly Worker Rates, or the direct costs of work.

F. General Liability Insurance: An insurance policy that protects Contractor from claims resulting from bodily injury or property damage to a third party. Include as a separate line item within all modification proposals and provide a current insurance quote upon request.

G. Performance and Payment Bonds: A performance bond is a surety bond issued by an insurance company or bank to guarantee satisfactory completion of a project. The Payment Bond guarantees the Contractor will pay the labor and material costs incurred. Banks and Insurance companies charge a premium for individual project based on a sliding scale related to the size of the project. Include as a separate line item in modification proposals and provide current company bonding rates upon request.

H. Builder's Risk Insurance: Covers the contractor's loss due to fire, high winds, or other natural forces. Not reimbursed by the National Park Service (NPS) and shall not be included in modification proposals.

1.3 MODIFICATION PROPOSAL PRICING REQUIREMENTS

A. General:

1. Proposal be received in the format and within the time frame specified in the Request for Proposal (RFP) letter. Costs or delays resulting from failure of contractor to submit within the time frame specified will not be compensable.
2. Proposal shall be detailed with itemized lists of equipment, materials, labor, production rates, overhead, profit, and bond markup for each item. Labor costs must be itemized by craft and hourly rate, including Fringe Benefits and Labor Burden. If the costs of Fringe Benefits and Labor Burden are not itemized, it is assumed they are included in the hourly rate shown, or contractor is not requesting reimbursement. Contractor may utilize the government provided Contractor Estimate Form, or their own form, provided that it contains the same information and level of detail as the Government's form.

3. Requests for extensions of contract time as a result of change must be justified with a Time Impact Analysis (TIA). Refer to Section 01 32 16 "Construction Schedule", for time impact analysis requirements. TIA and associated costs shall be received with the proposal by the date shown within the Request for Proposal letter. Contractor's failure to submit within the specified time frame will be construed as the Contractor waiving right for additional time and no time extension will be allowed.
4. All supporting documentation used to justify the proposed modification will be made available to the Contracting Officer (CO) upon request.
5. Contractor shall review and approve all subcontractor/supplier pricing in detail for proper format, scope, production rates, and pricing prior to submission to NPS. All delay costs associated with not reviewing and approving subcontractor/supplier pricing will be borne by the Contractor.
6. All pricing and production rates within the estimate must be based on fair and reasonable pricing and cannot include built-in contingency.

B. Labor:

1. Contractor shall estimate cost of labor by itemizing each craft involved, indicating worker hourly rate (base rate + labor burden + fringe benefits) for each and itemizing hours required for each craft directly engaged in modification work. Any work proposed requiring overtime work or premium pay shall be itemized separately. Rates shall be in accordance with the Davis-Bacon Act as incorporated herein. Labor Burden may include payroll taxes, Social Security, unemployment insurances, workers compensation insurance, Federal Insurance Contributions Act (FICA), FUTA, and other direct costs resulting from Federal, State or local laws.
2. Itemize labor costs for equipment operators separate from equipment costs.
3. Labor cost for foremen shall only be costs for related work required for the modification.

C. Materials:

1. Estimated cost for materials shall include quotes from multiple sources. Material prices shall include applicable fees and credits, including but not limited to, sales tax, freight and delivery charges, and tax rebates.
2. No markup shall be applied to any material provided by NPS.

D. Equipment:

1. Equipment used for the project must be appropriately sized for work being performed.
2. Do not include costs for "miscellaneous tools and equipment", in your proposal for a replacement value of $500 or less. Costs shown in excess of $500 shall be broken out separately.
3. Regardless of ownership, rates to be used in determining equipment rental costs shall be the lowest cost from one of the following sources:

   a. United States (U.S.) Army Corps of Engineers, Ownership and Operating Expense Schedule (use latest edition and applicable region)
   b. Construction Blue Book
   c. Local equipment rental rates, documented by actual invoice charges, or itemized vendor quotes.

4. Estimated equipment rates shall include operating costs of all fuel, oil, lubrication, supplies, small tools, necessary attachments, ground engaging components, tires and tracks, routine repairs and maintenance (cost of major repair and overhaul is not allowed per Federal Acquisition Regulation (FAR) 31.105(d)(2)), depreciation, storage, insurance, and all incidentals. Mobilization, if applicable, may be included for equipment solely used on the modification work but must be listed separately.
5. Estimate full rate for equipment only for duration that equipment will be utilized to accomplish work of the modification.
6. Standby unit rates used in accordance with paragraph 1.3, D, 2, above. If the U.S. Army Corp of Engineers is utilized then their standby rates prevail. If Bluebook or local equipment pricing is accepted, then 1/2 of equipment costs minus any operating costs, major repair and overhaul will be accepted.
7. If equipment is in standby mode due solely to a documented NPS delay, established standby rate shall apply from the first day of the delay.
8. Equipment not used and on job site for up to five consecutive days may be classified at standby rates, provided the equipment is or has been used solely to perform work on the modification and will be necessary to complete additional modification work. Equipment still on the jobsite but not in use after five consecutive days will not be considered in the modification pricing.
9. Requests for compensation for equipment stand by time must be justified, documented and itemized separately.
10. The estimated timeframe (daily, weekly, monthly) for use of the equipment must reflect the lowest cost to the Government.

E. Establishment and Application of Overhead and Profit Percentages:

1. Home Office Overhead and Profit (OH&P) shall be applied to direct costs only. Profit shall not be applied to overhead amounts; and overhead shall not be applied to profit. Home office overhead shall contain only allowable, allocable, and reasonable costs per the contract documents and FAR Part 31. Profit percentages are based on risk factors found in FAR Part 31which have been applied to the specific type of work included in this project. Negotiated rates shall not exceed the following percentages for OH&P for contractor self-performed work:

   Overhead……10%
   Profit……6.00%

2. Total aggregate limit of markup (OH&P) for Contractor and Subcontractors on modification work shall not exceed 25%. The NPS will not be responsible for allocation of percentages between contractor and subcontractors at any tier.
3. If Contractors form a partnership, partnership may only receive home office overhead and profit in same amount as an individual Contractor (refer to paragraph 1.3,E,1 above). It is the responsibility of the partners to decide on division of revenue.
4. Combined Increases and Decreases: On proposals involving both increases and decreases in the Contract Price, overhead and profit mark-ups are required on net increases and deducted on net decreases.
5. At no time can profit be calculated on Overhead or itself, it must be calculated on direct costs of work only.

PART 2 - PRODUCTS

PART 3 - EXECUTION

END OF SECTION 012601

SECTION 01 27 00 – DEFINITION OF CONTRACT LINE ITEMS

PART 1 - GENERAL

1.1 SUMMARY

A. Section explains in general, what is and is not included in a contract line item, and limits or cut-off points where one item ends and another begins.

B. If no contract line item exists for a portion of work, include costs in a related item.

PART 2 - PRODUCTS (Not Used)

PART 3 - EXECUTION

3.1 LIST OF CONTRACT LINE ITEMS

A. Contract Line Item Number 01, Envelope and Systems Construction

1. This item consists of all work associated with site preparation, foundation, concrete slab, exterior wall construction, exterior door and window installation, and all roofing work to ensure a weathertight building envelope. This item also includes rough-in distribution installation of building systems – electrical, data, and mechanical.
2. Measurement for payment will be by percentage of work completed in the previous month.
3. Payment will be made at the contract lump sum.

B. Contract Line Item Number 02, Interior Construction and Systems

1. This item consists of all work associated with finishing the interior of the space. Interior partitions, finishes, and doors are also included. Finishing of system's installations – louvers, cover plates, etc. is also included after interior gypsum wallboard is complete. Exterior penetrations should be minimized and patched to ensure a weathertight assembly.
2. Measurement for payment will be by percentage of work completed in the previous month.
3. Payment will be made at the contract lump sum.

END OF SECTION 01 27 00

SECTION 01 31 00 - PROJECT MANAGEMENT AND COORDINATION

PART 1 - GENERAL

1.1 SUMMARY

A. Section includes administrative provisions for coordinating construction operations on Project including, but not limited to, the following:

1. Definitions
2. Construction Coordination
3. Submittals
4. Coordination Drawings
5. Requests for Information (RFIs)
6. NPS/DSC Project Website
7. Project Meetings
8. Environmental Coordination
9. Emergency Procedures
10. Permits

B. Related Requirements:

1. Section 01 32 16 "Construction Schedule" for preparing and submitting Contractor's construction schedule.
2. Section 01 73 40 "Execution" for procedures for coordinating general installation and field-engineering services, including establishment of benchmarks and control points.
3. Section 01 77 00 "Closeout Procedures" for coordinating closeout of the Contract.

1.2 DEFINITIONS

A. Agency with Jurisdiction
B. Construction Permits – Contractor Provided

1.3 CONSTRUCTION COORDINATION

A. Coordination: Coordinate construction operations included in different Sections of Specifications to ensure efficient and orderly installation of each part of the Work. Coordinate construction operations, included in different Sections, which depend on each other for proper installation, connection, and operation.
1. All existing utilities shall remain in place for operation of the Maintenance Building during construction of the addition.
2. Limit disturbance to existing building and staff.

3. Schedule construction operations in sequence required to obtain best results where installation of one part of the Work depends on installation of other components, before or after its own installation.

4. Coordinate installation of different components with other Contractors to ensure maximum accessibility for required maintenance, service, and repair.
5. Make provisions to accommodate items scheduled for later installation.
6. Where availability of space is limited, coordinate installation of different components to ensure maximum performance and accessibility for required maintenance, service, and repair of components, including mechanical and electrical.
7. Properly plan construction operations to include permit requirements. Allow enough time to execute permit provisions to maintain work schedule, site visits, inspections, and reporting deadlines.

B. Prepare memoranda for distribution to each party involved, outlining special procedures required for coordination. Include such items as required notices, reports, and list of attendees at meetings.

C. Administrative Procedures: Coordinate scheduling and timing of required administrative procedures with other construction activities and activities of other contractors to avoid conflicts and to ensure orderly progress of the Work. Such administrative activities include, but are not limited to:

1. Preparation of Contractor's Construction Schedule
2. Preparation of the Schedule of Values
3. Installation and removal of temporary facilities and controls
4. Delivery and processing of submittals
5. Progress meetings
6. Permit requirements
7. Pre-installation conferences
8. Project closeout activities
9. Commissioning activities

1.4 SUBMITTALS

A. Coordination Drawings: Prepare Coordination Drawings if limited space availability necessitates maximum utilization of space for efficient installation of different components or if coordination is required for installation of products and materials fabricated by separate entities.

1. Content: Project-specific information, drawn accurately to scale. Do not base Coordination Drawings on reproductions of Contract Documents or standard printed data. Include following information, as applicable:

a. Indicate functional and spatial relationships of components of architectural, structural, civil, mechanical, and electrical systems.
b. Indicate dimensions shown on Contract Drawings and make specific note of dimensions that appear to be in conflict with submitted equipment and minimum clearance requirements. Provide alternate sketches to Contracting Officer (CO) for resolution of such conflicts.
c. Indicate space requirements for routine maintenance and anticipated replacement of components during the life of the installation.
d. Show location and size of access doors required for access to concealed dampers, valves, and controls.
e. Indicate required installation sequences.

2. Refer to individual Sections for Coordination Drawing requirements for Work in those Sections.
3. Follow **NPS DSC Electronic Drawing Standards.** See CAD/BIM (Computer Aided Design/Building Information Modeling) & Drafting Standards page > **DSC Requirements** section.

B. Coordination Drawing Organization: Organize coordination drawings as follows:

1. Floor Plans and Reflected Ceiling Plans: Show architectural, structural, mechanical, plumbing, fire-alarm, and electrical elements. Show locations of visible ceiling-mounted devices relative to acoustical ceiling grid. Supplement plan drawings with section drawings where required to adequately represent the Work.
2. Plenum Space: Indicate sub-framing for support of ceiling and wall systems, mechanical and electrical equipment, and related Work. Locate components within ceiling plenum to accommodate layout of light fixtures indicated on Drawings. Indicate areas of conflict between light fixtures and other components.
3. Structural Penetrations: Indicate penetrations and openings required for all disciplines.
4. Slab Edge and Embedded Items: Indicate slab edge locations and sizes and locations of embedded items for metal fabrications, sleeves, anchor bolts, bearing plates, angles, door floor closers, slab depressions for floor finishes, curbs and housekeeping pads, and similar items.
5. Mechanical Work:

    a. Sizes and bottom elevations of ductwork, and conduit runs, including insulation, bracing, flanges, and support systems.
    b. Dimensions of major components, such as dampers, valves, diffusers, access doors, and electrical distribution equipment.

6. Electrical Work:

    a. Runs of vertical and horizontal conduit 1-1/4 inches in diameter and larger.
    b. Light fixture, exit light, emergency battery pack, smoke detector, and other fire-alarm locations.
    c. Panel board, switch board, switchgear, transformer, busway, generator, and motor control center locations.
    d. Location of pull boxes and junction boxes, dimensioned from column center lines.

7. Review: Contracting Officer will review coordination drawings to confirm Work is being coordinated; details of coordination are Contractor's responsibility. If Contracting Officer determines coordination drawings are not prepared in scope or detail, or are otherwise deficient, Contracting Officer will inform Contractor, who shall make changes and resubmit.
8. Coordination Drawing Prints: Prepare coordination drawing prints according to requirements in Section 01 33 23 "Submittal Procedures."

C. Coordination Digital Data Files: Prepare coordination digital data files according to:

1. File Preparation Format: Same digital data software program, version, and operating system as original Drawings.
2. File Submittal Format: Submit or post coordination drawing files using Portable Document Format (PDF) file format.

3. Contracting Officer will furnish Contractor one set of digital data files (AutoCad.dwg) of Drawings for use in preparing coordination digital data files.

    a. Contracting Officer makes no representations as to accuracy or completeness of digital data files as they relate to Drawings.
    b. Digital Data Software Program: Drawings are available in AutoCad.dwg.

D. Division 1 documents:

1. Letter designating Project Superintendent
2. Construction Schedule
3. A Comprehensive Schedule of Values
4. Accident Prevention Plan
5. A List of Subcontractors for this project
6. Written statements from Subcontractors certifying compliance with applicable labor standard clauses.
7. Certificates of Insurance and Standard Form SF1413 for Contactor and all Subcontractors
8. Waste Management Plan
9. Natural features Protection Plan (including but not limited to tree protection)
10. Quality Control Plan
11. Under-an-Acre Storm Water Pollution Prevention Plan (UPPP).
12. Indoor Air Quality (IAQ) Management Plan
13. Contractors Commissioning Plan
14. Deferred submittals/inspections
15. List of Required Construction Permits. Include the following information for each permit:
    a. Name of Permit
    b. Agency(ies) with Jurisdiction issuing the permit
    c. Information required from Government to complete permit application

E. Provide items listed to Contracting Officer at least one week prior to Pre-Construction Conference, or as directed by Contracting Officer.
1. Failure to submit items may result in:
    a. Construction conference may be cancelled, Notice to Proceed may not be issued, and Contracting Officer will consider other contractual remedies.
    b. Work shall not commence until written Notice to Proceed has been issued and Certificates of Insurance and SF1413 documents are received for Contractor and all Subcontractors.

1.5 REQUESTS FOR INFORMATION (RFIs)

A. General: Immediately on discovery of the need for additional information or interpretation of Contract Documents, Contractor shall prepare and submit an RFI utilizing form created on NPS/DSC management software-website.

1. Contracting Officer will not respond to RFIs submitted by other entities controlled by Contractor.
2. Coordinate and submit RFIs in a prompt manner to avoid delays in the work.

B. Content of RFI: Include detailed, legible description of item needing information or interpretation and the following:

1. RFI number, numbered sequentially
2. Date
3. RFI subject
4. Specification Section number and title and related paragraphs, as appropriate.
5. Drawing number and detail references, as appropriate.
6. Field dimensions and conditions, as appropriate.
7. Contractor's suggested resolution: If Contractor's suggested resolution impacts Contract Time or Contract Sum, Contractor shall state impact in RFI.
8. Contractor's signature
9. Requested date for response
10. Attachments: Include sketches, descriptions, measurements, photos, Product Data, Shop Drawings, coordination drawings, and other information necessary to fully describe items needing interpretation.

    a. Include dimensions, thicknesses, structural grid references, and details of affected materials, assemblies, and attachments on attached sketches.

C. RFI Form: Complete RFI Form on NPS/DSC Project Website as follows:

1. Enter general information at the top of the form.
2. Under the "Action" section at the bottom of the form, select "Question" then select "CMR" in drop-down of "Send to" box.
3. Enter details of question and attach related documents.
4. Select "Submit Form" at bottom of page.

D. Contracting Officer’s Action: Contracting Officer will review each RFI, determine action required, and respond. Contracting Officer will determine critical nature of each RFI and issue response accordingly.

1. The following are not considered to be RFIs and will receive no action:

    a. Requests for approval of submittals.
    b. Requests for approval of substitutions.
    c. Requests for approval of Contractor's means and methods.
    d. Requests for coordination information already indicated in Contract Documents.
    e. Requests for adjustments in Contract Time or Contract Sum.
    f. Requests for interpretation of Architect's actions on submittals.
    g. Incomplete RFIs or inaccurately prepared RFIs.

2. Contracting Officer's action may include a request for additional information; time for response will date from time of receipt of additional information.
3. Contracting Officer's action on RFIs may result in need for a change to Contract Time or Contract Sum. All contract changes will be processed following terms and conditions of contract.

1.6 PROJECT WEB SITE

A. Government provided management software website, ProjectTeam (https://gov.projectteam.com/User#/user-login):

1. Project directory
2. Project correspondence
3. Daily Reports
4. Meeting agendas and minutes
5. Contract modifications forms and logs
6. RFI form and processing
7. Task and issue management
8. Special Inspections/testing
9. Photo documentation
10. Baseline schedule, schedule updates and calendar management
11. Submittal form and processing
12. Payment coordination documentation
13. Drawing and specification document hosting, viewing, and updating
14. Online document collaboration
15. Reminder and tracking functions
16. Archiving functions
17. Notification of submittal and RFI statuses and current responsible party
18. Permits and addendums

B. Some documents are not suitable to be shared using the NPS/DSC management software website. Documents containing Personal Identifying Information (PII) (i.e. certified payrolls) shall not be shared using NPS/DSC management software website and shall be coordinated with Project team as appropriate.

C. Submit to Contracting Officer a list of employees who will need access to the website. Users will receive an invitation to register from Department of Interior (DOI). Once registered on DOI website, user will be given access to NPS/DSC management software website.

D. All users will be required to have the following software packages:

1. Internet Explorer version 7 or later.
2. Adobe Acrobat Professional (Pro) version 9 or later.

1.7 PROJECT MEETINGS

A. Preconstruction Conference: Before start of construction, Contracting Officer will arrange an on-site meeting with Contractor. Meeting agenda will include the following as a minimum:

1. Roles & Responsibilities / Lines of Authority
2. Park rules and regulations
3. Limit disturbance to existing building and staff.
4. Jobsite Safety
5. Resolution of comments on required Division 1 documents
6. Coordination of Subcontractors
7. Labor law application
8. Modifications
9. Payments to Contractor
10. Payroll reports
11. Contract time
12. Liquidated damages

13. Contractor Performance Evaluation
14. Display of Hotline posters
15. Notice to proceed
16. Correspondence procedures
17. NPS/DSC Project website
18. Acceptance/rejection of work
19. Natural features prevention plan
20. Progress meetings
21. Submittal procedures
22. NPS Final Accessibility Inspection
23. Environmental requirements
24. Permit requirements
25. As-constructed drawings/operation and maintenance (O&M) manuals.
26. Saturday, Sunday, holiday and night work.
27. Reference materials
28. Value engineering
29. Schedule of Values

B. Progress Meetings: Contracting Officer will schedule weekly meetings with Contractor.

1. Attendees: In addition to Government Representatives, each Contractor, Subcontractor, supplier, and other entity concerned with current progress or involved in planning, coordination, or performance of future activities shall be represented. Participants at meeting shall be familiar with Project and authorized to conclude matters relating to the Work.
2. Agenda: Review and correct or approve minutes of previous progress meeting. Review other items of significance that could affect progress. Meeting agenda will include:

    a. Approval of minutes of previous meetings
    b. Submittal status
    c. Review of off-site fabrication and delivery schedules.
    d. Requests for information (RFI) and other issues.
    e. Modifications
    f. Work in progress and projected.
        1) Status of required inspections (Special Inspections, Accessibility, etc.)
        2) Limit disturbance to existing building and staff.
    g. Inspections of work in progress and projected (Special inspections, Accessibility, etc.)
    h. Construction Schedule update (provide updated Critical Path Method (CPM)).
    i. Status of Project Record Drawings and O&M manuals.
    j. Other business relating to work.
    k. Permit requirements

C. Preinstallation Conferences: Conduct at Project site before each construction activity that requires coordination with other construction.

1. Attendees: Installer and representatives of manufacturers and fabricators involved in or affected by installation and its coordination or integration with other materials and installations that have preceded or will follow, shall attend meeting. Advise Contracting Officer of scheduled meeting dates.

2. Agenda: Review progress of other construction activities and preparations for particular activity under consideration, including requirements for:

    a. Contract Documents
    b. Options
    c. Related RFIs
    d. Related Change Orders
    e. Purchases
    f. Deliveries
    g. Submittals
    h. Review of mockups
    i. Possible conflicts
    j. Compatibility requirements
    k. Time schedules
    l. Weather limitations
    m. Manufacturer's written instructions
    n. Warranty requirements
    o. Compatibility of materials
    p. Acceptability of substrates
    q. Temporary facilities and controls
    r. Space and access limitations
    s. Regulations of agency(ies) with jurisdiction
    t. Testing and inspecting requirements
    u. Installation procedures
    v. Coordination with other work
    w. Required performance results
    x. Protection of adjacent work
    y. Protection of construction and personnel

3. Record significant conference discussions, agreements, and disagreements, including required corrective measures and actions.
4. Reporting: Distribute minutes of meeting to each party present and to other parties requiring information.
5. Do not proceed with installation if conference cannot be successfully concluded. Initiate whatever actions are necessary to resolve impediments to performance of Work and reconvene conference at earliest feasible date.

1.8 ENVIRONMENTAL COORDINATION

A. Contractor's Environmental Manager: Designate on-site party responsible for overseeing Contractor's conformance to environmental goals for project and implementing procedures for environmental protection.

1. Qualifications: Minimum 3 years Construction experience on projects of similar size and scope; with environmental procedures similar to this project; familiar with environmental regulations applicable to construction operations.
2. Responsibilities: Responsibilities shall include:

    a. Compliance with applicable Federal, State, and local environmental regulations, including maintaining required documentation.

b. Implementation of Waste Management Plan (WMP).
c. Implementation of Indoor Air Quality (IAQ) Management Plan.
d. Implementation of Under-an-Acre Storm Water Pollution Prevention Plan (UPPP).
e. Present overview of environmental issues and summarize site specific procedures relating to management plans at Preconstruction conference.
f. Training for Contractor personnel in accordance with position requirements.
g. Monitoring and documentation of environmental procedures.

B. Perform project quality control in accordance with requirements specified in Related Sections, including:

1. Quality Requirements
2. Regulatory Requirements
3. Indoor Air Quality (IAQ) Management
4. Noise and Acoustics Management
5. Under-an-Acre Storm Water Pollution Prevention Environmental Management
6. Construction Waste Management

C. Contractor's Environmental Training Program: Contractor shall provide environmental training for workers performing work on project site. Training shall include:

1. Overview of environmental issues related to building industry.
2. Overview of environmental issues related to Project.
3. Review of site-specific procedures and management plans:

a. Construction Waste Management
b. Indoor Air Quality (IAQ) Management
c. Noise and Acoustics Management
d. Under-an-Acre Storm Water Pollution Prevention

4. Pollution Prevention (P2) practices: Submit evidence of P2 training
5. Compliance with environmental regulations: As specified in Regulatory Requirements. Submit Contractor 40 CFR (Code of Federal Regulations) employee training records upon request of Contracting Officer.

D. Provide documentation for environmental procedures as specified herein and in accordance with approved Waste Management Plan, IAQ Management Plan, and Under-an-Acre Storm Water Pollution Prevention Plan.

1.9 EMERGENCY PROCEDURES

A. In the event of an emergency, Contractor shall call 911 and immediately notify the Park Safety Officer. Contractor shall also notify the CO within 24 hours of any emergency contact.
1. Park Safety Officer, EMT: Metney Jensen, office (208)527-1325, cell phone (208)490-2060

2. Outside Agency Resource List:

EMERGENCY RESPONSE	911
Jerome County Sheriff (non-emergency)	(208) 324-1911

Friends of Minidoka Executive Director Robin Achilles	(206) 227-7302
Minidoka Pilgrimage Planning Committee Erin Shigaki	(718) 909-5687
POISON CONTROL	1-800-222-1222
Idaho Dept. of Fish and Game	(208) 324-4359
Animal Control Officer (Jerome Police Dept.)	(208) 324-4328

1.10 PERMITS

A. General:

1. Permits and Responsibilities: Contractor shall, without additional expense to the Government, be responsible for obtaining necessary licenses and permits, and for complying with Federal, State and municipal laws, codes, and regulations applicable to the performance of the work. Contractor shall also be responsible for damages to persons or property that occur as a result of Contractor's fault or negligence; and for materials delivered and work performed until completion and acceptance of the work.
2. For the purpose of this contract, Contractor will not be considered an agent of the Government. Contractor shall comply with appropriate Federal, State and local laws.

B. Coordination with Agency(ies) with Jurisdiction Issuing Permits

1. Coordination: Contact the Agency(ies) with Jurisdiction as needed and sufficiently in advance to avoid delaying work: Coordinate meetings, reporting requirements, inspections, and other requirements.

C. Administrative Procedures:

1. Coordinate scheduling and timing of required administrative provisions of project permits with Agency(ies) with Jurisdiction, Construction Manager, and Park to avoid conflicts.
2. Supply needed information to Agency(ies) with Jurisdiction issuing permits, pay fees required and provide material needed to comply with permit's conditions and provisions.
3. Upload permits to NPS/DSC management software website when permits are obtained.

PART 2 - PRODUCTS (Not Used)

PART 3 - EXECUTION (Not Used)

END OF SECTION 01 31 00

SECTION 01 32 16 – CONSTRUCTION SCHEDULE

PART 1 - GENERAL

1.1 SUMMARY

A. Section consists of Construction Schedule requirements including:

1. Schedule of Values
2. Construction Schedule Requirements.
3. Construction Schedule Updates.
4. Time Impact Analysis.

B. Purpose: The Construction Schedule ensures adequate planning, coordination, scheduling, and reporting during execution of the work by the Contractor. It shall assist the Contractor and Contracting Officer (CO) in monitoring the progress of the work, evaluating proposed changes, and processing Contractor's monthly progress payments. It shall include the dates in the contract, phases, milestones, occupancies, holidays, weather consideration, a critical path, and the requirements of this section.

1.2 DEFINITIONS

A. Activity: A discrete part of a project identified for planning, scheduling, monitoring, and controlling the construction project. Activities included in a construction schedule consume time and resources.

1. Critical activities are activities on the critical path. They start and finish on the planned early start and finish times.
2. Predecessor Activity: An activity that precedes another activity in the network.
3. Successor Activity: An activity that follows another activity in the network.

B. Cost Loading: Allocation of the Schedule of Values for completion of an activity as scheduled. The sum of costs for all activities must equal the total Contract Sum, unless otherwise approved by the Contracting Officer.

C. Critical Path Method (CPM): Method of planning and scheduling a construction project where activities are arranged based on activity relationships. Network calculations determine when activities can be performed and the critical path of Project.

D. Critical Path: Longest connected chain of interdependent activities through the network schedule that establishes minimum overall Project duration and contains no float.

E. Float: Measure of leeway in starting and completing an activity.

1. Float: Not for the exclusive use or benefit of the Government or Contractor but is jointly owned.
2. Free Float: Amount of time an activity can be delayed without adversely affecting the early start of the successor activity.

3. Total Float: Measure of leeway in starting or completing an activity without adversely affecting planned Project completion date.

F. Resource Loading: Allocation of manpower and equipment necessary for completion of an activity as scheduled.

G. Fragnet: A partial or fragmentary network that breaks down activities into smaller activities for greater detail.

1.3 SUBMITTALS

A. Electronic Copies: Schedules and reports submitted shall be posted on the NPS/DSC management software website in native electronic file formats. The intent of the Government is to limit the number of printed reports to those determined by the project team as essential.

B. Schedule of Values: After contract award and before Pre-Construction conference, submit schedule of dollar values based on Contract Price Schedule.

C. Construction Baseline Schedule: After contract award and before Pre-Construction conference, submit electronic copy of baseline schedule, large enough to show entire schedule for entire construction period. Utilize Schedule of Values in preparation of Construction Baseline Schedule.

D. Critical Path Method (CPM) Reports: Concurrent with CPM schedule, submit electronic copy of the following computer-generated reports. For each activity, include activity number, activity description, cost and resource loading, original duration, remaining duration, early start date, early finish date, late start date, late finish date, and total float in calendar days.

1. Activity Report: List of activities sorted by activity number and then early start date, or actual start date if known.
2. Logic Report: List of predecessor and successor tasks for activities sorted in ascending order by activity number and then early start date, or actual start date if known.
3. Total Float Report: List of activities sorted in ascending order of total float.

E. Construction Schedule Updates: On or before 7th day preceding progress payment request date, submit estimates of percent completion of each schedule activity and necessary supporting data. Provide two paper copies.

F. Construction Schedule Revisions and Time Impact Analysis: For each Construction Schedule revision, submit electronic copy of a Time Impact Analysis. Incorporate a Fragmentary Network (Fragnet) into currently accepted Construction Schedule that demonstrating how Contractor proposes to incorporate a modification, change, delay, or Contractor request.

1.4 QUALITY ASSURANCE

A. Contractor shall meet with Contracting Officer on day of the preconstruction conference to go over:

1. Review software limitations, content and format for reports.
2. Verify availability of qualified personnel needed to develop and update schedule.

3. Discuss constraints.
4. Review delivery dates for Government-furnished products.
5. Review schedule for work of separate Government contracts.
6. Review time required for review of submittals and re-submittals.
7. Review requirements for tests and inspections by independent testing and inspecting agencies.
8. Review time required for completion and startup procedures.
9. Review time required for obtaining and activating permits.
10. Review and finalize list of construction activities to be included in schedule.
11. Review baseline schedule comments, resolve issues and progress on incorporating them
12. Review procedures for updating schedule.
13. Discuss reporting requirements and establish protocol for naming and transmitting electronic schedules.

B. Contractor's Schedule Representative: Before the preconstruction conference, designate an authorized representative to be responsible for preparing and maintaining the Construction Schedule. Submit resume outlining qualifications of Scheduler to Contracting Officer for acceptance. Scheduler shall have prepared and maintained at least 5 previous schedules of similar size and complexity similar to this Contract, demonstrating proficiency of using scheduling software. Authorized representative will be responsible for preparing the Baseline Schedule, required updates, revisions, Time Impact Analyses, and reports.

1.5 COORDINATION

A. Coordinate preparation and processing of schedules and reports with performance of construction activities and with scheduling and reporting of separate Contractors.

B. Coordinate Construction Baseline Schedule with Schedule of Values, list of subcontracts, Submittals Schedule, progress reports, payment requests, and other required schedules and reports.

1. In developing Construction Baseline Schedule, ensure Subcontractor’s work at all tiers, and prime Contractor’s work, is included and coordinated.
2. Secure time commitments for performing critical elements of work from parties involved.
3. Coordinate each construction activity in network with other activities and schedule in proper sequence.

PART 2 - PRODUCTS

2.1 SCHEDULE OF VALUES

A. Breakdown each lump-sum item into component work activities used in the schedule for which progress payments may be requested. Work activities broken out within schedule of values shall be integrated into and made a logical part of the construction baseline schedule. Total costs for the component work activities shall equal contract price for that lump-sum item. Contracting Officer may request data to verify accuracy of dollar values. Include mobilization, general condition costs, overhead and profit in the total dollar value of unit price items and in the

component work activities for each lump-sum item. Do not include mobilization, general condition costs, overhead or profit as a separate item.

B. Do not break down unit price items. Use only the contract price for unit price items.

C. Total cost of all items shall equal the contract price. The Schedule of Values will form the basis for progress payments and the Construction Schedule.

2.2 CONSTRUCTION SCHEDULE REQUIREMENTS

A. Construction Baseline Schedule: Prepare Construction Baseline Schedule using a computerized, cost and resource-based, time-scaled Critical Path Method network analysis diagram for the Work.

1. Develop and finalize Construction Baseline Schedule so it can be accepted for use no later than 30 days after date established for the Notice of Award.

   a. Failure to include any work item required for performance of this Contract shall not excuse Contractor from completing work within applicable completion dates, regardless of Governments acceptance of schedule.

2. Establish procedures for monitoring and updating Construction Baseline Schedule and for reporting progress. Coordinate procedures with progress meeting and payment request dates.

B. Construction Baseline Schedule Preparation: Prepare a list of all activities required to complete the Work. Using preliminary Critical Path Method network diagram, prepare a skeleton network to identify probable critical paths.

1. Activities: Indicate estimated duration, sequence requirements, and relationship of each activity in relation to other activities.
2. Critical Path Activities: Identify critical path activities, including those for interim completion dates. Scheduled start and completion dates shall be consistent with Contract milestone dates.
3. Processing: Process data to produce output data on a computer-drawn, time-scaled network. Revise data, reorganize activity sequences, and reproduce as often as necessary to produce the Critical Path Method schedule within the limitations of the Contract Time.
4. Show sequence and interdependence of activities required for completion of work. Ensure work sequences are logical and Construction Baseline Schedule shows a coordinated plan of the work.
5. Resource loading of each activity shall include personnel by labor category and equipment type and capacity proposed to complete the activity in duration shown.
6. Consider seasonal weather conditions in planning and scheduling work influenced by high and low ambient temperatures, wind, or precipitation to ensure completion of work within contract time.
7. Time Frame: Proposed duration assigned to each activity shall be Contractor's best estimate of time required to complete activity considering the scope and resources planned for activity.

a. An early finish date may be shown but the late finish date shall be same date as last day of contract period. An early completion schedule shall contain:

1) Insert an activity titled "Project Float" as a successor to last activity in early project completion schedule network.
2) Add a milestone titled "Contract End Date" as a successor to the activity "Project Float".
3) Add duration to the activity "Project Float" as required so the milestone "Contract End Date" equals the last day of Contract Period.

b. Contract completion date shall not be changed by submission of a schedule that shows an early completion date.
c. Contractor shall limit use of lead or lag duration's between schedule activities.
d. Project Calendars: Develop and incorporate the following calendars:

1) Administrative Calendar: Include calendar based on a 7-day week to be used on activities based on calendar days. Apply this calendar to administrative tasks or other tasks not affected by non-working days (Federal Holidays, weather, etc.).
2) Project Calendar: Include calendar based on planned work week for the project. Include Federal Holidays, weekends, and non-workdays indicated in contract documents. Apply this calendar to activities not anticipated to be affected by weather. Be clear when identifying number of work days in work week.
3) Weather Calendar: Utilize Project Calendar and show anticipated normal downtime related to weather as non-working time. Weather days shall be based on data for local area from a reliable source like the National Oceanic and Atmospheric Administration (NOAA), National Park Service records, or source acceptable to Contracting Officer. Apply this calendar to activities anticipated to be affected by weather.

e. Activity Duration: Define so no activity is longer than 15 days, except for non-construction activities including mobilization, shop drawings and submittals, fabrication and delivery of materials and equipment.
f. Procurement Activities: Include procurement process activities for long lead items and major items, requiring a cycle of more than 60 calendar days, as separate activities in the schedule. Procurement cycle activities can include submittals, approvals, purchasing, fabrication, and delivery.

g. Submittal Review Time: Include review and re-submittal times indicated. Coordinate submittal review times in Construction Baseline Schedule.
h. Startup and Testing Time: Include not less than 14 days for startup and testing and commissioning activities.
i. Substantial Completion: Allow time for Government administrative procedures necessary for certification of Substantial Completion. (For more information, refer to Specification 01 77 00 "Closeout Procedures.")

8. Constraints: Include constraints and work restrictions indicated in Contract Documents and as follows in schedule and show how the sequence of Work is affected.

a. Phasing: Arrange list of activities on schedule by phase.

b. Work under More Than One Contract: Include a separate activity for each contract.
c. Work Restrictions: Show effect of the following on the schedule:

1) Coordination with existing construction
2) Limitations of continued occupancies
3) Uninterruptible services
4) Partial occupancy before Substantial Completion
5) Use of premises restrictions
6) Provisions for future construction
7) Seasonal variations
8) Environmental control
9) Permit provisions

d. Work Stages: Indicate important stages of construction for each major portion of the Work.

1) Subcontract awards
2) Submittals
3) Purchases
4) Mockups
5) Fabrication
6) Sample testing
7) Deliveries
8) Installation
9) Tests and inspections
10) Adjusting
11) Curing
12) Building flush-out.
13) Building commissioning activities.

9. Milestones: Include milestones indicated in Contract Documents in schedule, including, but not limited to, Notice to Proceed, Substantial Completion and the following interim milestone:

a. Completion of new building: Provide 3 weeks notice for park staff to move into new building. 1 week is required for park staff to move into new building and then existing building demolition may commence.

C. Joint Review, Revision, and Acceptance:

1. Within seven calendar days of receiving Contractor's proposed Construction Baseline Schedule, Contracting Officer shall review initial Construction Baseline Schedule.
2. Within seven calendar days after review, Contractor shall revise and resubmit Construction Baseline Schedule in accordance with comments presented from review.
3. In the event the Contractor fails to define any element of work, activity, or logic, and the Contracting Officer review does not detect this omission or error, such omission or error, when discovered by Contractor or Contracting Officer, shall be corrected by Contractor within seven calendar days and shall not affect contract period.
4. Upon acceptance of the Construction Baseline Schedule, Contracting Officer saves schedule as a baseline and updates on a monthly basis. Construction schedule update will be used to evaluate Contractor's monthly applications for payment based upon information developed at monthly Construction Schedule update meeting.

D. Cost Correlation: In the heading of the schedule, provide a cost correlation line, indicating planned and actual costs. On the line, show dollar volume of Work performed as of dates used to prepare payment requests.

1. Contractor shall assign cost to construction activities on Construction Baseline Schedule. Costs shall not be assigned to submittal activities unless specified otherwise but may, with Contracting Officer's approval, be assigned to fabrication and delivery activities. Costs shall be included for testing and commissioning activities, operation and maintenance manuals, punch list activities, Project Record Documents, and demonstration and training (if applicable).
2. Each activity cost shall reflect an accurate value based on the Contract Price Schedule.
3. Total cost assigned to activities shall equal total Contract Price.

E. Recovery Schedule: When periodic schedule update indicates Work is 15 or more calendar days behind current accepted schedule, a separate recovery schedule indicating means by which Contractor intends to regain compliance with the schedule shall also be submitted. Indicate changes to working hours, working days, crew sizes, and equipment required to achieve compliance, and date by which recovery shall be accomplished.

F. Computer Software: Prepare schedules using a program developed specifically to manage construction schedules.

1. Use Microsoft Project or Primavera, for Windows 10 (Windows 7 and newer.)

PART 3 - EXECUTION

3.1 CONSTRUCTION SCHEDULE UPDATES

A. Progress Meeting Updates: Provide a three week look-ahead schedule, derived from the currently accepted schedule, before each weekly progress meeting. Utilize look-ahead schedule to facilitate and take notes on discussions held during progress meeting.

B. Monthly Schedule Updates:

1. General: Update Construction Schedule on monthly basis to reflect construction progress and activities throughout entire contract period and until project substantial completion. The status date of each schedule update shall be the 7th day preceding the progress payment request date.
2. Procedure: Contractor shall meet with Contracting Officer each month at Construction Schedule update meeting to review progress made through the status date of the Construction Schedule update, including dates activities were started or completed and percentage of work completed on each activity started or completed.
3. Reports: Concurrent schedule revisions, prepare tabulated reports showing:

a. Identification of activities that have changed
b. Changes in early and late start dates
c. Changes in early and late finish dates
d. Changes in activity durations in workdays
e. Changes in the critical path

f. Changes in total float or slack time
g. Changes in the Contract Time

4. Narrative: Report shall include a brief description of actual progress made during update period; actual and potential delaying activities; impediments to progress; issues related to inclement weather; progress toward established milestones and project float. Report shall include a brief description of work anticipated to be performed in the next month. Minor revisions to the schedule should be identified for evaluation and acceptance or rejection.
5. As Work progresses, indicate Actual Completion percentage for each activity.
6. If schedule update shows a late finish date after contract completion date, include:

   a. Known delays
   b. Actions to get back on schedule
   c. Pending modifications
   d. Impediments or constraints affecting progress

7. Progress Payments: Monthly updating of the currently accepted Construction Schedule shall be an integral part of the process upon which progress payments will be made. If Contractor fails to provide schedule updates or revisions, a portion of the monthly payment may be retained until corrections have been made.

C. Distribution: Distribute copies of accepted schedule to Contracting Officer, Contracting Officers Representative, Construction Management Representative, Subcontractors, testing and inspecting agencies, and other parties identified by Contractor with a need-to-know schedule responsibility.

1. Post copies in Project meeting rooms and temporary field offices.
2. When revisions are made, distribute updated schedules to same parties and post in same locations. Delete parties from distribution when they have completed their assigned portion of the Work.

D. Construction Schedule Revisions:

1. Required Revisions: If, as a result of the monthly schedule update, it appears the currently accepted Construction Schedule no longer represents actual prosecution and progress of the work, Contracting Officer will request, and Contractor shall submit, a revision to the Construction Schedule. Contractor may also request reasonable revisions to currently accepted Construction Schedule in event the Contractor's planning for the work is revised. If Contractor desires to make changes, Contractor shall notify Contracting Officer in writing, stating reason for proposed revision. Accepted revisions shall be incorporated into currently accepted Construction Schedule for next monthly schedule update.
2. Procedure: If revision to currently accepted Construction Schedule is contemplated, Contractor or Contracting Officer shall advise the other in writing at least seven calendar days prior to next monthly schedule update meeting, describing revision and reasons for the revision. Government-requested revisions will be presented in writing to the Contractor, who shall respond in writing within seven calendar days.
3. Reports: Concurrent with making revisions to schedule, prepare tabulated reports showing:

   a. Identification of activities changed
   b. Changes in early and late start dates
   c. Changes in early and late finish dates
   d. Changes in activity durations in workdays

e. Changes in critical path
f. Changes in total float or slack time

3.2 TIME IMPACT ANALYSIS FOR CONTRACT MODIFICATIONS CHANGES DELAYS AND CONTRACTOR REQUESTS:

1. Requirements: When contract modifications or changes are initiated, delays experienced, or Contractor desires to revise currently accepted Construction Schedule, Contractor shall submit to Contracting Officer a written time impact analysis illustrating the influence of modification, change, delay, or Contractor request on contract time.
2. Time Extensions: Activity delays, resulting in a late completion date projection, shall not automatically mean an extension of contract time is warranted or due to Contractor. It is possible a modification, change, or delay will not affect existing critical path activities or cause non-critical activities to become critical. A modification, change, or delay may result in absorbing a part of available total float that may exist within an activity chain of the Schedule, not causing any effect on contract time. Time extensions will be granted in accordance with terms of contract.
3. Extension of contract time will be granted only to the extent the equitable time adjustments to activity or activities affected by modification, change, or delay exceeds total (positive or zero) float available on a particular activity.
4. Procedure: Each time impact analysis shall be submitted within time period stated in a request for proposal, or time period designated under the clauses entitled Changes or Default. In cases where Contractor does not submit a written request for extension of time and a time impact analysis within the designated time, it is mutually agreed that the particular modification, change, delay, or Contractor request does not require an extension of the contract time. Upon acceptance, time impact analysis shall be incorporated into currently accepted Construction Schedule at next monthly schedule update.
5. Contract Modifications: Prepare time-impact analysis using fragnets to demonstrate effect of proposed change on overall Construction Schedule for each proposed contract modification concurrent with submission.

END OF SECTION 01 32 16

SECTION 01 32 33 – PHOTO DOCUMENTATION

PART 1 - GENERAL

1.1 SUMMARY

A. Section includes administrative and procedural requirements for:

1. Existing condition images
2. Periodic construction images

B. See Section 01 77 00 "Closeout Procedures" for a complete listing of closeout documents.

C. See Section 01 79 00 "Demonstration and Training" for submitting videotapes of demonstration of equipment and training of National Park Service (NPS) personnel.

1.2 SUBMITTALS

A. Construction Images: Submit images electronically within 7 days of taking the image. Include:

1. Date, time and number (sequentially number all images) in filename.
2. Description of vantage point, indicating location, direction (by compass point), and elevation or story of construction.
3. Submit digital images exactly as originally recorded in digital camera, without alteration, or modifications using image-editing software.

B. Closeout: Submit complete set of digital image electronic files as a Project Record Document**.** Submit on Digital Video Disc (DVD).

1. Provide index as separate file on Disc. List each image as a file name with number, date, and time. Include description and or vantage point image was taken.
2. Submit images that have the same aspect ratio as the sensor, un-cropped.

PART 2 - PRODUCTS

2.1 FORMAT REQUIREMENTS

A. Images: Provide sRGB (standard Red Green Blue) color images in JPEG (Joint Photographic Experts Group) format. Minimum sensor size of 8 megapixels, and at image resolution of not less than 3200 by 2400, and 300 dpi (dots per inch) uploaded to Project Website.

PART 3 - EXECUTION

3.1 CONSTRUCTION IMAGES

A. General: Take digital images using the maximum range of depth of field, in-focus, to clearly show the Work. No blurry or out-of-focus areas accepted.

1. Maintain index with each set of Construction images and identify the number, date, time, and description for each.
2. Maintain one set of images accessible in field office at Project site available for reference.

B. Existing Condition Images: Before starting construction, take color digital images of Project site and surrounding properties, including existing items to remain during construction, from different vantage points.

1. Flag construction limits before recording construction images.
2. Take 8 separate images to show existing conditions adjacent to property before starting Work.
3. Take 8 separate images of existing buildings either on or adjoining property to accurately record physical conditions at start of construction.

C. Periodic Construction Images: Take 20 color, digital images weekly, with timing each month adjusted to coincide with cutoff date associated with each Application for Payment. Select vantage points to show status of construction and progress since last images were taken.

D. Additional Images: Contracting Officer may issue requests for additional images.

1. Three days advance, where feasible.
2. In emergency situations, take additional images within 24 hours of request.
3. Additional images include, but are not limited to:

a. Immediate follow-up when on-site events result in construction damage or losses.
b. Fabrication locations away from Project site.
c. Substantial Completion of a major phase or component of Work.
d. Extra record images at time of final acceptance.

END OF SECTION 01 32 33

SECTION 01 33 23 - SUBMITTAL PROCEDURES

PART 1 - GENERAL

1.1 SUMMARY

A. Section includes administrative and procedural requirements for submitting Shop Drawings, Product Data, Samples, and other submittals.

1.2 DEFINITIONS

A. Action Submittals: Written, graphic information, and physical samples that require Government's responsive action.

B. Informational Submittals: Written information that does not require Government's responsive action. Submittals may be rejected for not complying with requirements.

C. File Transfer Protocol (FTP): Communications protocol that enables transfer of files to and from another computer over a network and that serves as the basis for standard Internet protocols. An FTP site is a portion of a network located outside of network firewalls within which internal and external users are able to access files.

D. Portable Document Format (PDF): An open standard file format licensed by Adobe Systems used for representing documents in a device-independent and display resolution-independent fixed-layout document format.

1.3 GENERAL SUBMITTAL PROCEDURES

A. General: Prepare and submit submittals required by individual Specification Sections and in some cases as requested in drawings. Types of submittals are indicated in individual specific sections.

1. Contracting Officer (CO) reserves right to require submittals in addition to those called for in individual sections.

B. Coordination: Coordinate preparation and processing of submittals with performance of construction activities. Review for legibility, accuracy, completeness, and compliance with Contract Documents.

1. Coordinate submittal with fabrication, purchasing, testing, delivery, other submittals, and related activities that require sequential activity.
2. Coordinate transmittal of different types of submittals for related parts of Work so processing will not be delayed because of need for concurrent review coordination.

a. Contracting Officer reserves right to withhold action on a submittal requiring coordination with other submittals until related submittals are received.

C. Submittal List: Submittal list is attached to the end of this Specification Section. The intent is to provide an overall summary of submittal requirements. The requirements of individual Specification Sections and terms and conditions of the Contract still apply regardless of what is shown on submittal list.

D. Processing Time: Allow time for submittal review, including time for re-submittals, as follows. Time for review shall commence when e-mail notification is received by Contracting Officer (or designee) indicating submittal has been posted on NPS management software website and is ready for review. When Contracting Officer has completed review, e-mail notification will be sent to Contractor indicating submittal has been processed. No extension of Contract Time will be authorized because of failure to transmit submittals in advance of Work to permit processing, including re-submittals.

1. Action Submittals

   a. Initial Review: Allow 30days for initial review of each submittal. Allow additional time if coordination with subsequent submittals is required.
   b. Re-submittal Review: Allow 10 days for review of each re-submittal.

2. Informational submittals

   a. Review: Allow 10 days for review of each submittal.

E. Approved Equals:

1. For each item proposed as an "approved equal," submit supporting data, including:

   a. Drawings and samples as appropriate.
   b. Comparison of the characteristics of the proposed item with that specified.
   c. Changes required in other elements of the work because of the substitution.
   d. Name, address, and telephone number of vendor.
   e. Manufacturer’s literature regarding installation, operation, and maintenance, including schematics for electrical and hydraulic systems, lubrication requirements, and parts lists. Describe availability of maintenance service, and state source of replacement materials.

2. A request for approval constitutes a representation that Contractor:

   a. Has investigated the proposed item and determined that it is equal or superior in all respects to that specified.
   b. Will provide the same warranties for the proposed item as for the item specified.
   c. Has determined that the proposed item is compatible with interfacing items.
   d. Will coordinate installation of an approved item and make changes required in other elements of the work because of the substitution.
   e. Waives claims for additional expenses that may be incurred as a result of the substitution.

F. Electronic Submittals: Identify and incorporate information in each electronic submittal file as follows:

1. Transmittal Form (CM-16): All submittals shall be transmitted using National Park Service Transmittal Form (CM-16). The form can be downloaded from the DSC Workflows website's Submittal Review page and completed on the NPS/DSC management software website. No action will be taken on a submittal item unless accompanied by this Transmittal Form.

    a. Complete the general information at the top of form.
    b. Provide all required information based on submittal type
    c. Attach all related documents.
    d. Sign the Contractor section at bottom of the Transmittal Form (CM-16).

2. Physical samples: Complete Transmittal Form (CM-16) on the NPS/DSC management software website as described above. Deliver physical sample to the Contracting Officer (or designee) on site for processing. All comments and actions will be documented on the Transmittal Form (CM-16) on the NPS/DSC management software website.

G. Identification: Submittal number or other unique identifier, including revision identifier.

1. Submittal number shall use a sequential number (e.g. .001). Re-submittals shall include alphabetic suffix after another decimal point (e.g. .001.A).

H. Re-submittals: Make re-submittals using same process used with initial submittal.

1. Note date and content of previous submittal.
2. Note date and content of revision in the title block on the Transmittal Form (CM-16) and clearly indicate extent of revision.
3. Re-submit submittals until they are marked "No Exceptions Taken" or "Reviewed with notations".

I. Distribution: Furnish copies of final submittals to manufacturers, subcontractors, suppliers, fabricators, installers, and others as necessary for performance of construction activities.

J. Use for Construction: Use only final submittals with mark indicating "No Exceptions Taken" or "Reviewed with notations". Ensure notations have been incorporated and, at a minimum, keep one copy of final approved submittal on site for use during construction.

1.4 CONTRACTOR'S USE OF CAD/BIM FILES

A. General: At Contractor's written request, copies of CAD (Computer Aided Design)/BIM (Building Information Modeling) files will be provided to Contractor for Contractor's use in connection with Project, subject to:

1. Files provided as is; no format or other changes to files or changes to objects in the drawing will be done by the Government

2. Contractor responsible for verifying conditions in the field versus files provided by the Government.
3. Waiver for use to be signed by Contractor.

PART 2 - PRODUCTS

2.1 ACTION SUBMITTALS

A. Product Data: Collect information into a single submittal for each element of construction and type of product or equipment.

1. If information must be specially prepared for submittal because standard printed data are not suitable for use, submit as Shop Drawings, not as Product Data.
2. Mark each submittal to show which products and options are applicable.
3. As applicable, include:

a. Manufacturer's product specifications.
b. Manufacturer's installation instructions: When Contract Documents require compliance with manufacturer's printed instructions, provide one complete set of instructions to Contracting Officer and keep another complete set of instructions at the project site until substantial completion.
c. Manufacturer's catalog cuts: Submit only pertinent pages; mark each page of standard printed data to identify specific products proposed for use.
d. Wiring diagrams showing factory-installed wiring.
e. Printed performance curves.
f. Operational range diagrams.
g. Compliance with specified referenced standards.
h. Testing by recognized testing agency.

4. Submit product data in PDF (portable document format) file format before or concurrent with samples.

B. Shop Drawings: Prepare Project-specific information, drawn accurately to scale. Do not base Shop Drawings on reproductions of the Contract Documents or standard printed data

1. Preparation: Fully illustrate requirements in Contract Documents. As applicable, include:

a. Dimensions
b. Identification of products
c. Fabrication and installation drawings
d. Roughing-in and setting diagrams
e. Wiring diagrams showing field-installed wiring, including power, signal, and control wiring
f. Shopwork manufacturing instructions
g. Templates and patterns
h. Schedules
i. Notation of coordination requirements
j. Notation of dimensions established by field measurement
k. Relationship to adjoining construction clearly indicated
l. Seal and signature of professional engineer if specified
m. Wiring Diagrams: Differentiate between manufacturer-installed and field-installed wiring

2. Submit shop drawings as PDF electronic file

C. Samples: Submit Samples for review of kind, color, pattern, and texture for a check of these characteristics with other elements and for a comparison of these characteristics between submittal and actual component as delivered and installed.

1. Transmit Samples that contain multiple, related components such as accessories together in one submittal package.
2. Complete and post the Transmittal Form (CM-16) on the NPS/DSC management software website for processing and documentation of action on submitted samples.
3. Identification: Attach label on unexposed side of Samples that includes:

    a. Generic description of Sample
    b. Product name and name of manufacturer
    c. Sample source
    d. Submittal Number and title of appropriate Specification Section

4. Disposition: Maintain sets of approved Samples at Project site, available for quality-control comparisons throughout course of construction activity. Sample sets may be used to determine final acceptance of construction associated with each set.
5. Samples for Initial Selection: Submit manufacturer's color charts consisting of units or sections of units showing full range of colors, textures, and patterns available.

    a. Number of Samples: Submit two full set(s) of available choices where color, pattern, texture, or similar characteristics are required to be selected from manufacturer's product line. Contracting Officer will return with options selected.

6. Samples for Verification: Submit full-size units or Samples of size indicated, prepared from same material to be used for the Work, cured and finished in manner specified, and physically identical with material or product proposed for use, and that show full range of color and texture variations expected. Samples include: partial sections of manufactured or fabricated components; small cuts or containers of materials; complete units of repetitively used materials; swatches showing color, texture, and pattern; color range sets; and components used for independent testing and inspection.

    a. Number of Samples: Submit one sets of Samples. Contracting Officer will retain three Sample sets; remainder will be returned. Retain Sample set as a Project Record Sample.

D. Construction Materials: Contractor is encouraged to submit products made out of recycled or environmentally responsible material. Every effort will be made by National Park Service to approve these materials.

2.2 INFORMATIONAL SUBMITTALS

A. General: Prepare and submit Informational Submittals required by individual Specification Sections.

1. Post informational submittals as PDF electronic files directly to the NPS management software website.

2. Certificates and Certifications: Provide a notarized statement with signature of entity responsible for preparing certification. Certificates and certifications shall be signed by officer or other individual authorized to sign documents on behalf of that entity.
3. Informational submittals that do not comply with requirements specified in Contract Documents will be rejected and one copy will be returned.

B. Coordination Drawings: Comply with requirements specified in Section 01 31 00 "Project Management and Coordination."

C. Contractors Construction Schedule: Comply with requirements specified in Section 01 32 16 "Construction Schedule."

D. Accident Prevention Plan: Comply with requirements specified in Section 01 35 23 "Safety Requirements."

E. Schedule of Values: Comply with requirements specified in Section 01 32 16 "Construction Schedule."

F. Waste Recycling Plan: Comply with requirements specified in Section 01 74 19 "Construction Waste Management and Disposal."

G. Quality Control Plan: Comply with requirements specified in Section 01 40 00 "Quality Requirements."

H. Storm Water Pollution Prevention Plan: Comply with requirements specified in Section 01 57 23 "Temporary Storm Water Pollution Prevention" and storm water permit requirements identified in Section 01 31 00 "Project Management and Coordination."

I. Indoor Air Quality Management Plan: Comply with requirements specified in Section 01 57 19.11 "Indoor Air Quality Management."

J. Qualification Data: Prepare written information demonstrating capabilities and experience of firm or person. Include lists of completed projects with project names and addresses, names and addresses of architects and owners, and other information specified.

K. Welding Certificates: Prepare written certification that welding procedures and personnel comply with Contract Documents. Submit record of Welding Procedure Specification (WPS) and Procedure Qualification Record (PQR) on American Welding Society (AWS) forms. Include names of firms and personnel certified.

L. Installer Certificates: Prepare written statements on manufacturer's letterhead certifying Installer complies with Contract Documents and, where required, is authorized by manufacturer for this specific Project.

M. Manufacturer Certificates: Prepare written statements on manufacturer's letterhead certifying manufacturer complies with Contract Documents. Include evidence of manufacturing experience where required.

N. Product Certificates: Prepare written statements on manufacturer's letterhead certifying product complies with Contract Documents.

O. Material Certificates: Prepare written statements on manufacturer's letterhead certifying material complies with Contract Documents.

P. Material Test Reports: Prepare reports written by a qualified testing agency, on testing agency's standard form, indicating and interpreting test results of material for compliance with requirements in Contract Documents.

Q. Product Test Reports: Prepare written reports indicating current product produced by manufacturer complies with requirements in Contract Documents. Base reports on evaluation of tests performed by manufacturer and witnessed by a qualified testing agency, or on comprehensive tests performed by a qualified testing agency.

R. Research/Evaluation Reports: Prepare written evidence, from a model code organization acceptable to authorities having jurisdiction, that product complies with building code in effect for Project.

S. Preconstruction Test Reports: Prepare reports written by a qualified testing agency, on testing agency's standard form, indicating and interpreting results of tests performed before installation of product, for compliance with performance requirements in Contract Documents.

T. Compatibility Test Reports: Prepare reports written by a qualified testing agency, on testing agency's standard form, indicating and interpreting results of compatibility tests performed before installation of product. Include written recommendations for primers and substrate preparation needed for adhesion.

U. Field Test Reports: Prepare reports written by a qualified testing agency, on testing agency's standard form, indicating and interpreting results of field tests performed either during installation of product or after product is installed in its final location, for compliance with requirements in Contract Documents.

V. Maintenance Data: Prepare written and graphic instructions and procedures for operation and normal maintenance of products and equipment. Comply with requirements specified in Section 01 78 23 "Operation and Maintenance Data."

W. Design Data: Prepare written and graphic information, including: performance and design criteria, list of applicable codes and regulations, and calculations. Include list of assumptions and other performance and design criteria and a summary of loads. Include load diagrams if applicable. Provide name and version of software, if any, used for calculations. Include page numbers.

X. Manufacturer's Instructions: Prepare written or published information documenting manufacturer's recommendations, guidelines, and procedures for installing or operating a product or equipment. Include name of product and name, address, and telephone number of manufacturer.

Y. Manufacturer's Field Reports: Prepare written information documenting factory-authorized service representative's tests and inspections. As applicable, include:

1. Statement on condition of substrates and their acceptability for installation of product.
2. Summary of installation procedures being followed, compliance with requirements and, if not, what corrective action was taken.

3. Results of operational and other tests and a statement of whether observed performance complies with the requirements.

Z. Permit Compliance Products: Prepare required information for compliance with permit provisions. Products include written notification of project startup, suspension, and completion of work; photo documentation of site conditions; reports; and drawings.

PART 3 - EXECUTION

3.1 CONTRACTOR'S REVIEW

A. Review each submittal and check for coordination with other Work of Contract and for compliance with Contract Documents. Note corrections and field dimensions.

3.2 CONTRACTING OFFICER'S ACTION

A. General: Submittals will be disapproved without technical review if identification information is missing, not filled in, or if placed on back of submittal; an incorrect format of submittals is provided; transmittal form is incorrectly filled out; submittals are not coordinated; or submittals do not show evidence of Contractor's approval.

1. Any work done or orders for materials or services placed before approval shall be at Contractor's own risk.

B. Action Submittals: Contracting Officer will review each submittal, generate comments on corrections or modifications required, and indicate appropriate action on the Transmittal Form (CM-16). Submittal will be marked as defined below:
1. NO EXCEPTIONS TAKEN: Submittal appears to conform to design requirements, but contractor is still responsible for all aspects of construction.
2. REVIEWED WITH NOTATIONS: Minor corrections or clarifications required. Comments are clear and no further review is required. Contractor shall address review comments when proceeding with the work.
3. DISAPPROVED - RESUBMIT: Rejected as not in accordance with the contract or as requiring major corrections or clarifications. Contracting Officer will identify reasons for disapproval. Contractor shall revise and resubmit with changes clearly identified.

C. Informational Submittals: Contracting Officer will review each submittal and will either accept or reject it.

D. Partial submittals are not acceptable, will be considered non-responsive, and will be returned without review.

END OF SECTION 01 33 23

Submittal List with Review Estimate Template

National Park Service (NPS) - Denver Service Center (DSC) | 1-27-21

SUBMITTAL LIST

Park Acronym/Project Management Information System (PMIS) Number: MIIN

Project Title: Maintenance Building Addition

ACTION SUBMITTAL REVIEW ESTIMATE

(Complete this portion for Architect / Engineer (A/E) construction service task order negotiation.)

SUBMITTAL			REQUIREMENTS								ARCHITECT / ENGINEER REVIEW TIME						
			INFORMATIONAL				ACTION										
SPECIFICATION SECT	PARAGRAPH NUMBE	DESCRIPTION	CERTIFICATIONS OR LABORATORY TESTS	REPORTS OR CALCULATIONS OR PLAN	MANUFACTURER DATA AND INSTRUCTIONS	OTHER	SAMPLES	SHOP DRAWINGS	MANUFACTURER DATA AND INSTRUCTIONS	OTHER	ARCHITECT	CIVIL ENGINEER	STRUCTURAL ENGIN	MECHANICAL ENGINE	ELECTRICAL ENGINE	PROJECT MANAGER COORDINATION	LANDSCAPE ARCHITI
01 31 00	1.4.B	Coordination Drawings								X							
01 31 00	1.4.C	Coordination Digital Data Files				X											
01 31 00	1.4.D	Division 1 documents				X											
01 32 16	1.3.A	Electronic Copies				X											
01 32 16	1.3.B	Schedule of Values				X											
01 32 16	1.3.C	Construction Baseline Schedule				X											
01 32 16	1.3.D	Critical Path Method (CPM) Reports				X											
01 32 16	1.3.E	Construction Schedule Updates				X											
01 32 16	1.3.F	Construction Schedule Revisions and Time Impact Analysis				X											
01 32 33	1.2.A	Construction Images				X											
01 32 33	1.2.B	Closeout				X											
01 35 13.22	1.3.A	Daily Work Schedule		X													
01 35 23	1.3.A	Accident Prevention Plan (APP):		X													
01 35 23A	1.3.A	Worker Qualifications				X											
01 35 23A	1.3.B	Work Plan		X													
01 40 00	1.4.A	Quality Control Plan		X													
01 40 00	1.4.B	Qualification Data	X														
01 40 00	1.4.C	Contractor Quality Control (CQC) Daily Reports		X													
01 40 00	1.4.D	Test Reports		X													
01 40 00	1.4.E	Accessibility Inspection Report		X													
01 40 00	1.4.F	Off-Site Inspection Reports: Submit prior to shipment		X													
01 40 00	1.4.H	Permits, Licenses, and Certificates	X														
01 57 19.11	1.4.A	Indoor Air Quality (IAQ) Management Plan		X													
01 57 19.11	1.4.B	Product Data			X												
01 57 19.11	1.4.C	Inspection and Test Reports		X													
01 57 23	1.3.A	A.After contract award and before pre-construction conference, prepare and submit: 1.A SWPPP showing SWPPP satisfies Federal and State NPDES permit requirements. 2.A UPPP in conformance with NPS guidelines and adherence to applicable construction storm water management practices.								X							
01 57 23	1.3.B	UPPP Inspection Schedule		X													
01 57 23	1.3.C	Erosion Control Products		X													
01 57 23	2.1	Under-an-Acre Pollution Prevention Plan							X								
01 67 00	1.3	Record Submittals-Sustainable Design Close-out Documentation			X												
01 73 40	1.2.A	Certificates	X														
01 73 40	1.2.B	Landfill Receipts				X											
01 73 40	1.2.C	Certified Surveys	X														

SUBMITTAL LIST

Park Acronym/Project Management Information System (PMIS) Number: MIIN

Project Title: Maintenance Building Addition

ACTION SUBMITTAL REVIEW ESTIMATE

(Complete this portion for Architect / Engineer (A/E) construction service task order negotiation.)

SUBMITTAL			REQUIREMENTS								ARCHITECT / ENGINEER REVIEW TIME						
			INFORMATIONAL				ACTION										
SPECIFICATION SECT	PARAGRAPH NUMBE	DESCRIPTION	CERTIFICATIONS OR LABORATORY TESTS	REPORTS OR CALCULATIONS OR PLAN	MANUFACTURER DATA AND INSTRUCTIONS	OTHER	SAMPLES	SHOP DRAWINGS	MANUFACTURER DATA AND INSTRUCTIONS	OTHER	ARCHITECT	CIVIL ENGINEER	STRUCTURAL ENGIN	MECHANICAL ENGINE	ELECTRICAL ENGINE	PROJECT MANAGER COORDINATION	LANDSCAPE ARCHITI
01 73 40	1.2.D	Quantity Surveys		X													
01 74 19	1.4.A	Waste Management Plan		X													
01 74 19	1.4.B	Progress Documentation		X													
01 74 19	1.4.C	Waste Reduction Calculations		X													
01 74 19	1.4.D	Records of Donations				X											
01 74 19	1.4.E	Records of Sales				X											
01 74 19	1.4.F	Recycling and Processing Facility Records				X											
01 74 19	1.4.G	Landfill and Incinerator Disposal Records				X											
01 74 19	1.4.H	Qualification Data			X												
01 74 19	1.4.I	Statement of Refrigerant Recovery				X											
01 74 19	1.4.J	Progress payment requirements		X													
01 74 19	1.4.K	Closeout Submittals								X							
01 81 13	1.3.B.1	Recycled Content of Materials			X												
01 81 13	1.3.B.2	Certified Wood	X														
01 81 13	1.3.B.3	Construction Indoor Air Quality (IAQ) Management Plan – During Construction		X													
01 81 13	1.3.B.4	Construction IAQ Management Plan – Before Occupancy		X													
01 81 13	1.3.B.5	Low Emitting Materials - Adhesives and Sealants			X												
01 81 13	1.3.B.6	Low Emitting Materials - Paints and Coatings			X												
01 81 13	1.3.B.7	Low Emitting Materials - Flooring			X												
01 81 13	1.3.B.8	Biopreferred Products		X													
03 10 00	1.4.A	Product Data							X								
03 20 00	1.3.A	Product Data							X								
03 20 00	1.3.B	Shop Drawings: Comply with ACI SP-066						X									
03 20 00	1.4.A	Welding certificates	X														
03 20 00	1.4.B	Material Test Reports	X														
03 30 00	1.5.A	Product Data							X								
03 30 00	1.5.B	Design Mixtures							X								
03 30 00	1.5.C	Shop Drawings - Construction Joint Layout						X									
03 30 00	1.5.D	Concrete Schedule								X							
03 30 00	1.6.A	Qualification Data	X														
03 30 00	1.6.B	Material Certificates	X														
03 30 00	1.6.C	Material Test Reports		X													
03 30 00	1.6.D	Floor surface flatness and levelness measurements report, indicating compliance with specified tolerances.		X													
03 30 00	1.6.E	Research Reports		X													
03 30 00	1.6.F	Preconstruction Test Reports: For each mix design.		X													
03 30 00	1.6.G	Minutes of preinstallation conference				X											
05 31 00	1.3.A	Product Data							X								
05 31 00	1.3.B	Shop Drawings						X									
05 31 00	1.4.A	Product Certificates	X														

SUBMITTAL LIST

Park Acronym/Project Management Information System (PMIS) Number: MIIN

Project Title: Maintenance Building Addition

ACTION SUBMITTAL REVIEW ESTIMATE

(Complete this portion for Architect / Engineer (A/E) construction service task order negotiation.)

SUBMITTAL			REQUIREMENTS								ARCHITECT / ENGINEER REVIEW TIME						
			INFORMATIONAL				ACTION										
SPECIFICATION SECT	PARAGRAPH NUMBE	DESCRIPTION	CERTIFICATIONS OR LABORATORY TESTS	REPORTS OR CALCULATIONS OR PLAN	MANUFACTURER DATA AND INSTRUCTIONS	OTHER	SAMPLES	SHOP DRAWINGS	MANUFACTURER DATA AND INSTRUCTIONS	OTHER	ARCHITECT	CIVIL ENGINEER	STRUCTURAL ENGIN	MECHANICAL ENGINI	ELECTRICAL ENGINE	PROJECT MANAGER COORDINATION	LANDSCAPE ARCHITI
05 31 00	1.4.B	Research Reports		X													
05 40 00	1.4.A	Product Data							X								
05 40 00	1.4.B	Shop Drawings for Cold-Formed Metal Framing						X									
05 40 00	1.5.A	Welding certificates	X														
05 40 00	1.5.B	Product Certificates	X														
05 40 00	1.5.C	Product Test Reports		X													
05 44 00	1.4.A	Product Data							X								
05 44 00	1.4.B	Shop Drawings for Cold-Formed Metal Trusses						X									
05 44 00	1.4.C	Delegated-Design Submittal								X							
05 44 00	1.4.D	Welding certificates	X														
05 44 00	1.4.D	Product Test Reports		X													
07 11 13	1.2	Product Data							X								
07 21 00	1.2.A	Product Data							X								
07 21 00	1.2.B	Installer Qualification								X							
07 21 00	1.2.C	Post installation inspection report and data.								X							
07 21 00	1.2.B	Installer's Certification	X														
07 21 00	1.2.C	Product Test Reports		X													
07 21 00	1.2.D	Research Reports		X													
07 25 00	1.2.A	Product Data							X								
07 25 00	1.2.B	Shop Drawings						X									
07 25 00	1.2.C	Post inspection data and photographs								X							
07 26 00	1.2.A	Product Data							X								
07 26 00	1.2.B	Installer Qualification								X							
07 26 00	1.2.C	Shop Drawings						X									
07 26 00	1.2.D	Samples					X										
07 26 00	1.2.E	Sample Warranty															
07 26 00	1.2.F	Post installation photographic documentation								X							
07 26 00	1.3.A	Product Test Reports		X													
07 41 13.16	1.4.A	Product Data							X								
07 41 13.16	1.4.B	Shop Drawings						X									
07 41 13.16	1.4.C	Calculations								X							
07 41 13.16	1.4.D	Samples for Initial Selection					X										
07 41 13.16	1.4.E	Samples for Verification					X										
07 41 13.16	1.5.A	Qualification Data			X												
07 41 13.16	1.5.B	Product Test Reports		X													
07 41 13.16	1.5.C	Field quality-control reports		X													
07 41 13.16	1.5.D	Sample Warranties			X												
07 41 13.16	1.7C	Mock-ups								X							
07 42 13.13	1.4.A	Product Data							X								
07 42 13.13	1.4.B	Shop Drawings						X									

SUBMITTAL LIST

Park Acronym/Project Management Information System (PMIS) Number: MIIN

Project Title: Maintenance Building Addition

ACTION SUBMITTAL REVIEW ESTIMATE

(Complete this portion for Architect / Engineer (A/E) construction service task order negotiation.)

SUBMITTAL			REQUIREMENTS								ARCHITECT / ENGINEER REVIEW TIME						
			INFORMATIONAL				ACTION										
SPECIFICATION SECT	PARAGRAPH NUMBE	DESCRIPTION	CERTIFICATIONS OR LABORATORY TESTS	REPORTS OR CALCULATIONS OR PLAN	MANUFACTURER DATA AND INSTRUCTIONS	OTHER	SAMPLES	SHOP DRAWINGS	MANUFACTURER DATA AND INSTRUCTIONS	OTHER	ARCHITECT	CIVIL ENGINEER	STRUCTURAL ENGIN	MECHANICAL ENGINI	ELECTRICAL ENGINE	PROJECT MANAGER COORDINATION	LANDSCAPE ARCHITI
07 42 13.13	1.4.C	Calculations								X							
07 42 13.13	1.4.D	Samples for Initial Selection					X										
07 42 13.13	1.4.E	Samples for Verification					X										
07 42 13.13	1.5.A	Qualification Data:		X													
07 42 13.13	1.5.B	Product Test Reports:		X													
07 42 13.13	1.5.C	Field quality-control reports		X													
07 42 13.13	1.5.D	Sample Warranties:				X											
07 42 13.13	1.6.C	Mock-ups								X							
07 42 93	1.3.A	Product Data							X								
07 42 93	1.3.B	Product Data Submittals							X								
07 42 93	1.3.C	Shop Drawings						X									
07 42 93	1.3.D	Samples for Initial Selection					X										
07 42 93	1.3.E	Samples for Verification					X										
07 42 93	1.4.A	Qualification Data	X														
07 42 93	1.4.B	Product Test Reports		X													
07 42 93	1.4.C	Sample Warranties				X											
07 62 00	1.3.A	Product Data							X								
07 62 00	1.3.B	Shop Drawings						X									
07 62 00	1.3.C	Samples					X										
07 62 00	1.3.D	Samples for Initial Selection					X										
07 62 00	1.3.E	Samples for Verification					X										
07 62 00	1.4.A	Certificates	X														
07 62 00	1.4.B	Product Test Reports		X													
07 62 00	1.4.C	Research Reports		X													
07 62 00	1.4.D	Qualification Statements	X														
07 62 00	1.4.E	Sample warranties				X											
07 62 00	1.7	Mock-ups								X							
07 72 53	1.2.A	Product Data							X								
07 72 53	1.2.B	Shop Drawings						X									
07 72 53	1.2.C	Samples					X										
07 72 53	1.2.D	Delegated Design Submittals								X							
07 72 53	1.3.A	Qualification Data:				X											
07 72 53	1.3.B	Product Test Reports:		X													
07 92 00	1.3.A	Product Data							X								
07 92 00	1.3.B	Samples for Initial Selection					X										
07 92 00	1.3.C	Samples for Verification					X										
07 92 00	1.3.D	Joint-Sealant Schedule								X							
07 92 00	1.4.A	Preconstruction Laboratory Test Schedule				X											
07 92 00	1.4.B	Preconstruction Laboratory Test Reports		X													
07 92 00	1.4.C	Preconstruction Field-Adhesion-Test Reports		X													

SUBMITTAL LIST

Park Acronym/Project Management Information System (PMIS) Number: MIIN

Project Title: Maintenance Building Addition

ACTION SUBMITTAL REVIEW ESTIMATE

(Complete this portion for Architect / Engineer (A/E) construction service task order negotiation.)

SUBMITTAL			REQUIREMENTS								ARCHITECT / ENGINEER REVIEW TIME						
			INFORMATIONAL				ACTION										
SPECIFICATION SECT	PARAGRAPH NUMBE	DESCRIPTION	CERTIFICATIONS OR LABORATORY TESTS	REPORTS OR CALCULATIONS OR PLAN	MANUFACTURER DATA AND INSTRUCTIONS	OTHER	SAMPLES	SHOP DRAWINGS	MANUFACTURER DATA AND INSTRUCTIONS	OTHER	ARCHITECT	CIVIL ENGINEER	STRUCTURAL ENGIN	MECHANICAL ENGINI	ELECTRICAL ENGINE	PROJECT MANAGER COORDINATION	LANDSCAPE ARCHITI
07 92 00	1.4.D	Field Quality-Control Reports		X													
07 92 00	1.4.E	Sample warranties				X											
07 92 00	1.7	Mock-ups								X							
08 11 13	1.5.A	Product Data							X								
08 11 13	1.5.B	Product Data Submittals							X								
08 11 13	1.5.C	Shop Drawings						X									
08 11 13	1.5.D	Product Schedule								X							
08 11 13	1.6.A	Product Test Reports		X													
08 11 13	1.6.B	Oversize Construction Certification	X														
08 11 13	1.6.C	Field quality-control reports		X													
08 14 16	1.3.A	Product Data							X								
08 14 16	1.3.B	Product Data Submittals							X								
08 14 16	1.3.C	Sustainable Design Submittals								X							
08 14 16	1.3.D	Shop Drawings						X									
08 14 16	1.3.E	Samples for Initial Selection					X										
08 14 16	1.3.F	Samples for Verification					X										
08 14 16	1.4.A	Qualification Data				X											
08 14 16	1.4.B	Field quality-control reports		X													
08 14 16	1.4.C	Sample Warranty				X											
08 31 13	1.2.A	Product Data							X								
08 31 13	1.2.B	Samples					X										
08 31 13	1.2.C	Product Schedule								X							
08 31 13	1.2.D	Shop Drawings						X									
08 54 13	1.4.A	Product Data							X								
08 54 13	1.4.B	Shop Drawings						X									
08 54 13	1.4.C	Samples					X										
08 54 13	1.4.D	Samples for Initial Selection					X										
08 54 13	1.4.E	Samples for Verification					X										
08 54 13	1.4.F	Glass Samples					X										
08 54 13	1.4.G	Product Schedule:								X							
08 54 13	1.5.A	Qualification Data				X											
08 54 13	1.5.B	Product Test Reports		X													
08 54 13	1.5.C	Field quality-control reports.		X													
08 54 13	1.5.D	Sample Warranties: For manufacturer's warranties.				X											
08 71 11	1.03.B.1	Product Data							X								
08 71 11	1.03.B.2	Riser and Wiring Diagrams								X							
08 71 11	1.03.B.3	Door Hardware Schedule								X							
08 71 11	1.03.B.4	Keying Schedule								X							
08 71 11	1.03.C.1	Qualification Data	X														
08 71 11	1.03.C.2	Product Data			X												

SUBMITTAL LIST

Park Acronym/Project Management Information System (PMIS) Number: MIIN

Project Title: Maintenance Building Addition

ACTION SUBMITTAL REVIEW ESTIMATE

(Complete this portion for Architect / Engineer (A/E) construction service task order negotiation.)

SUBMITTAL			REQUIREMENTS								ARCHITECT / ENGINEER REVIEW TIME						
			INFORMATIONAL				ACTION										
SPECIFICATION SECT	PARAGRAPH NUMBE	DESCRIPTION	CERTIFICATIONS OR LABORATORY TESTS	REPORTS OR CALCULATIONS OR PLAN	MANUFACTURER DATA AND INSTRUCTIONS	OTHER	SAMPLES	SHOP DRAWINGS	MANUFACTURER DATA AND INSTRUCTIONS	OTHER	ARCHITECT	CIVIL ENGINEER	STRUCTURAL ENGIN	MECHANICAL ENGINI	ELECTRICAL ENGINE	PROJECT MANAGER COORDINATION	LANDSCAPE ARCHITI
08 71 11	1.03.D	Closeout Submittals								X							
08 80 00	1.5.A	Product Data							X								
08 80 00	1.5.B	Glass Samples					X										
08 80 00	1.5.C	Glazing Accessory Samples					X										
08 80 00	1.5.D	Glazing Schedule								X							
08 80 00	1.5.E	Delegated Design Submittal:								X							
08 80 00	1.6.A	Qualification Data				X											
08 80 00	1.6.B	Product Certificates:	X														
08 80 00	1.6.C	Product Test Reports		X													
08 80 00	1.6.D	Preconstruction adhesion and compatibility test report.		X													
08 80 00	1.6.E	Sample Warranties: For special warranties.				X											
09 29 00	1.3.A	Product Data							X								
09 29 00	1.3.B	Shop Drawings						X									
09 29 00	1.3.C	Samples:					X										
09 65 13	1.2.A	Product Data							X								
09 65 13	1.2.B	Samples					X										
09 65 13	1.2.C	Samples for Verification					X										
09 91 13	1.3.A	Product Data							X								
09 91 13	1.3.B	Samples					X										
09 91 13	1.3.C	Samples for Initial Selection								X							
09 91 13	1.3.D	Samples for Verification					X										
09 91 24	1.3.A	Product Data							X								
09 91 24	1.3.B	Samples for Verification					X										
09 91 24	1.3.C	Product List								X							
09 93 01	1.2.A	Product Data							X								
09 93 01	1.2.B	Samples for Initial Selection					X										
09 93 01	1.2.C	Samples for Verification					X										
09 93 01	1.2.D	Product List:								X							
09 93 01	1.4	Mock-ups								X							
10 14 23.16	1.4.A	Product Data							X								
10 14 23.16	1.4.B	Shop Drawings						X									
10 14 23.16	1.4.C	Samples for Initial Selection					X										
10 14 23.16	1.4.D	Samples for Verification					X										
10 14 23.16	1.4.E	Product Schedule								X							
10 14 23.16	1.5.A	Qualification Data				X											
10 14 23.16	1.5.B	Sample Warranty				X											
23 05 17		Sleeves and Sleeve Seals for HVAC Piping															
	1.3A	Product Data							X								
23 05 18		Escutcheons for HVAC Piping															
	1.2A	Product Data							X								

SUBMITTAL LIST

Park Acronym/Project Management Information System (PMIS) Number: MIIN

Project Title: Maintenance Building Addition

ACTION SUBMITTAL REVIEW ESTIMATE

(Complete this portion for Architect / Engineer (A/E) construction service task order negotiation.)

SUBMITTAL			REQUIREMENTS								ARCHITECT / ENGINEER REVIEW TIME						
			INFORMATIONAL				ACTION										
SPECIFICATION SECT	PARAGRAPH NUMBE	DESCRIPTION	CERTIFICATIONS OR LABORATORY TESTS	REPORTS OR CALCULATIONS OR PLAN	MANUFACTURER DATA AND INSTRUCTIONS	OTHER	SAMPLES	SHOP DRAWINGS	MANUFACTURER DATA AND INSTRUCTIONS	OTHER	ARCHITECT	CIVIL ENGINEER	STRUCTURAL ENGIN	MECHANICAL ENGINI	ELECTRICAL ENGINE	PROJECT MANAGER COORDINATION	LANDSCAPE ARCHITI
23 05 29		Hangers and Supports for HVAC Piping and Equipment															
	1.3A	Product Data							X								
	1.3B	Shop Drawings						X									
	1.3C	Delegated Design Submittal							X								
	1.4A	Welding Certificates	X														
23 05 48		Vibration and Seismic Controls for HVAC															
	1.2A	Product Data							X								
	1.2B	Shop Drawings						X									
	1.2C	Delegated Design Submittal							X								
	1.3A	Coordination Drawings				X											
	1.3B	Welding Certificates	X														
	1.3C	Field Quality Control Reports		X													
23 05 53		Identification for HVAC Piping and Equipment															
	1.2A	Product Data							X								
	1.4B	Certified TAB Reports		X													
23 07 03		Duct Insulation															
	1.2A	Product Data							X								
	1.2B	Shop Drawings						X									
	1.3A	Field Quality Control Reports		X													
23 08 00		Commissioning of HVAC															
	1.5A	Start-Up Plan		X													
23 09 23.12		Control Dampers															
	1.2A	Product Data							X								
	1.2B	Shop Drawings						X									
	1.3A	Coordination Drawings				X											
	1.4A	Operation and Maintenance Data			X												
23 23 00		Refrigerant Piping															
	1.2A	Product Data							X								
	1.2B	Shop Drawings						X									
	1.3A	Field Quality Control Reports		X													
	1.4A	Operation and Maintenance Data			X												
23 31 13		Metal Ducts															
	1.3A	Product Data							X								
	1.3B	Welding Certificates	X														
23 37 13		Diffusers, Registers, and Grilles															
	1.2A	Product Data							X								
	1.2B	Samples					X										
23 81 26		Split System Air Conditioners															
	1.2A	Product Data							X								
26 05 19	1.3.A	Product Data							X								

SUBMITTAL LIST

Park Acronym/Project Management Information System (PMIS) Number: MIIN

Project Title: Maintenance Building Addition

ACTION SUBMITTAL REVIEW ESTIMATE

(Complete this portion for Architect / Engineer (A/E) construction service task order negotiation.)

SUBMITTAL			REQUIREMENTS								ARCHITECT / ENGINEER REVIEW TIME						
			INFORMATIONAL				ACTION										
SPECIFICATION SECT	PARAGRAPH NUMBE	DESCRIPTION	CERTIFICATIONS OR LABORATORY TESTS	REPORTS OR CALCULATIONS OR PLAN	MANUFACTURER DATA AND INSTRUCTIONS	OTHER	SAMPLES	SHOP DRAWINGS	MANUFACTURER DATA AND INSTRUCTIONS	OTHER	ARCHITECT	CIVIL ENGINEER	STRUCTURAL ENGIN	MECHANICAL ENGINI	ELECTRICAL ENGINE	PROJECT MANAGER COORDINATION	LANDSCAPE ARCHITI
26 05 29	1.5	Product data for each type of product indicated							X								
26 05 29	1.5	Shop Drawings						X									
26 05 33	1.4.A	Product Data							X								
26 05 33.1	1.2	Product data for each type of product indicated							X								
26 05 33.1	1.2	Schedules for electric heating cables		X													
26 05 33.1	1.2	Shop Drawings						X									
26 05 33.1	1.2	Wiring Diagrams			X												
26 05 33.1	1.2	O&M Data			X												
26 05 33.1	1.2	Manufacturer's Installation and Operation Guide			X												
26 05 33.1	1.2	Warranties			X												
26 05 53	1.3.A	Product Data							X								
26 05 53	1.3.B	Identification Schedule		X													
26 09 23	1.4.A	Product Data							X								
26 09 23	1.4.B	Shop Drawings						X									
26 09 23	1.4.C	O&M Data			X												
26 27 26	1.4.A	Product Data							X								
26 27 26	1.4	O&M Data			X												
26 41 13	1.4.A	Product Data							X								
26 41 13	1.4.B	Shop Drawings						X									
26 41 13	1.4.C	Qualification Data	X														
26 41 13	1.4.D	Roof Adhesive Certification	X														
26 41 13	1.4.E	Field Inspection Reports		X													
26 51 00	1.4.A	Product Data							X								
26 51 00	1.4.B	Qualification Data	X														
26 51 00	1.4.C	O&M Data			X												
26 51 00	1.4.D	Warranties			X												
27 05 28	1.4.A	Product Data							X								
27 05 28	1.4.B	Shop Drawings						X									
27 05 28	1.4.C	Coordination Drawings		X													
27 05 29	1.3.A	Product Data							X								
27 05 44	1.3.A	Product Data							X								
27 05 44	1.4.A	Coordination Drawings		X													
27 05 44	1.5.A	O&M Data			X												
27 05 53	1.3.A	Product Data							X								
27 15 13	1.4.A	Product Data							X								
27 15 13	1.4.B	Shop Drawings						X									
27 15 13	1.4.C	Identification Schedule		X													
27 15 13	1.5.A	Qualification Data	X														
27 15 13	1.5.B	Field Quality Control Reports		X													
27 15 13	1.5.C	Factory Test Reports		X													

SUBMITTAL LIST

Park Acronym/Project Management Information System (PMIS) Number: MIIN

Project Title: Maintenance Building Addition

ACTION SUBMITTAL REVIEW ESTIMATE

(Complete this portion for Architect / Engineer (A/E) construction service task order negotiation.)

SUBMITTAL			REQUIREMENTS								ARCHITECT / ENGINEER REVIEW TIME						
			INFORMATIONAL				ACTION										
SPECIFICATION SEC	PARAGRAPH NUMBE	DESCRIPTION	CERTIFICATIONS OR LABORATORY TESTS	REPORTS OR CALCULATIONS OR PLAN	MANUFACTURER DATA AND INSTRUCTIONS	OTHER	SAMPLES	SHOP DRAWINGS	MANUFACTURER DATA AND INSTRUCTIONS	OTHER	ARCHITECT	CIVIL ENGINEER	STRUCTURAL ENGIN	MECHANICAL ENGINI	ELECTRICAL ENGINE	PROJECT MANAGER COORDINATION	LANDSCAPE ARCHITI
27 15 13	1.5.D	Cable Testing Plan		X													
27 15 13	1.6.A	O&M Data			X												
27 15 13	1.6.B	Warranties			X												
27 15 13	1.6.C	Identification Schedule		X													
27 15 13	1.6.D	Extra Material				X											
28 31 11	1.6.B	Product Data							X								
28 31 11	1.6.C	Shop Drawings						X									
28 31 11	1.6.D	Delegated-Design Submittal		X													
28 31 11	1.6.E	Qualification Data	X														
28 31 11	1.6.F	Field Quality Control Report		X													
31 10 00	1.5.A.1	Permits for transport and disposal of debris.				X											
31 10 00	1.5.A.2	Demolition procedures and operational sequence				X											
31 20 00	1.5.A	Delivery Tickets	X														
31 20 00	1.5.B	Product Data							X								
31 20 00	1.5.C	Material Test Reports	X														
31 20 00	1.5.D	Compaction test results	X														
31 20 00	1.5.E	Pre-excavation Photographs or Videotape				X											
31 20 00	1.5.F	Weed Free Certificate	x														
32 13 20	1.4.A	Product Data							X								
32 13 20	1.4.B	Design Mixtures							X								
32 13 20	1.4.C	Steel Reinforcement Shop Drawings						X									
32 13 20	1.4.D	Qualification Data	X														
32 13 20	1.4.E	Material Certificates	X														
32 13 20	1.4.F	Material Test Reports		X													
32 13 20	1.4.G	Field quality-control reports		X													
32 15 00	1.4.A	Product Data							X								
32 15 00	1.4.B	Material Test Reports		X													
32 15 00	1.4.C	Compaction Test Results		X													
32 15 00	1.4.D	Weed Free Certificate	X														

SECTION 01 35 13.22 – ARCHEOLOGICAL PROTECTION

PART 1 - GENERAL

1.1 SUMMARY

A. Section consists of protecting archeological resources contained in soil deposits.

B. The site is considered a non-sensitive area, but all ground disturbing work must be observed by an archeological monitor as if it were. An archeological monitor will be provided by the Government.

1.2 DEFINITIONS

A. Archeological Resources: Archeological resources are physical evidences of past human activity, including evidences of effects of that activity on the environment. Archeological resources represent both prehistoric and historic time periods, found above and below ground and under water.

B. Archeologically Sensitive Areas: Areas having potential to contain significant (National Register eligible) archeological resources. If National Register eligible or listed archeological resources could not be avoided, an appropriate mitigation strategy would be developed in consultation with state historic preservation officer and, if necessary, associated American Indian tribes.

C. Non-sensitive Areas: Areas with little potential of containing significant (National Register eligible) archeological resources.

D. Archeological Monitor: Representative of Government or Contractor hired qualified personnel approve by the Contracting Officer designated to oversee construction activities that could disturb archeological resources (Refer Contract Line Item No. 06).

E. Archeological Resources Protection Act (ARPA) of 1979 (Public Law (P.L.) 96-95; 93 United States Statues at Large (Stat.) 712): defines archeological resources as any material remains of past human life or activities that are of archeological interest and at least 100 years old; Section 4 of the statute describes the requirements that must be met before Federal authorities can issue a permit to excavate or remove any archeological resource on Federal or Indian lands; the curatorial requirements of artifacts, and other materials excavated or removed.

1.3 SUBMITTALS

A. Daily Work Schedule: Detail construction work in archeologically sensitive areas. Submit to Contracting Officer (CO) 30 days before start of ground disturbing site work.

1.4 QUALITY ASSURANCE

A. Archaeology Monitor shall meet Professional Qualification Standards per the Secretary of Interior's Standards for Archeology.

B. At least one week before on-site work begins, Contractor shall meet with Contracting Officer and Archeological Monitor to discuss Daily Work Schedule, equipment, and special methods used in archeologically sensitive areas. Contractor shall ensure approved Daily Work Schedule is followed throughout construction.

PART 2 - PRODUCTS

2.1 DAILY WORK SCHEDULE

A. Daily Work Schedule is required for work occurring within archeologically sensitive areas. Include all work that is to occur within the area and key the schedule to the drawings to include:

1. Starting and ending dates of ground-disturbing construction.
2. Locations of temporary facilities, such as barriers, field offices, staging areas, sanitary facilities, borrow pits, and haul and access roads.
3. Types of construction, such as clearing, topsoil stripping, structure or trench excavation, landscaping, and post construction clean-up.
4. Methods and equipment used for each type of construction.
5. Plan for relocating work in the event of temporary work stoppages at each archeologically sensitive area

PART 3 - EXECUTION

3.1 BARRICADES

A. Comply with requirements specified in Section 01 50 00 "Temporary Facilities and Controls."

3.2 OBSERVATION

A. Archeological Monitor will observe ground-disturbing site work, including construction of temporary facilities, at archeologically sensitive areas, from a safe location mutually agreed on by Contractor and Monitor. As new ground is broken, Monitor will examine excavated materials, using construction layout centerline and perimeter staking as a reference point to record locations of findings.

3.3 DISCOVERY OF RESOURCES

A. If Archeological Monitor discovers resources, immediate relocation of work to a non-sensitive area may be required for Monitor to identify and document resources and, if necessary, develop appropriate mitigation plan. While Archeological Monitor is documenting resources in sensitive areas, Contractor shall relocate work to non-sensitive areas where monitoring is not normally required.

B. If resources are discovered while Archeological Monitor is absent, stop work immediately and report the discovery to the Contracting Officer.

3.4 WORK STOPPAGE

A. Contractor shall plan, schedule, and execute work to prevent stoppages at one area from stopping all work at construction site.

END OF SECTION 01 35 13.22

SECTION 01 35 23 - SAFETY REQUIREMENTS

PART 1 - GENERAL

1.1 SUMMARY

A. Section includes establishing an effective accident prevention program and providing a safe working environment for personnel and visitors.

1.2 CONDITIONS PRESENT FOR PROJECT

1.3 SUBMITTALS

A. Accident Prevention Plan (APP): Submit APP after contract award and before Pre-Construction conference. Contracting Officer (CO) will review proposed APP. If APP requires any revisions or corrections, Contractor shall resubmit Plan within 10 days. No progress payments will be made until the APP is accepted.

1.4 QUALITY ASSURANCE

A. Comply with contract clauses "Accident Prevention" and "Permits and Responsibilities." In case of conflicts between Federal, State, and local safety and health requirements, the most stringent shall apply. Onsite equipment shall meet 29 CFR 1926 (Code of Federal Regulations) (Occupational Safety and Health Administration (OSHA)) requirements. Failure to comply with requirements of this section and related sections may result in suspension of work.

B. Site Safety Supervisor:

1. Designate authorized onsite representative for preparation and maintenance of the APP.
2. Shall be responsible for:

a. Implementation and enforcement of the APP
b. Daily safety inspections
c. Conducting and documenting weekly and monthly safety meetings
d. Review of safety requirements at progress meetings
e. Compilation and maintenance of Safety Data Sheets (SDS) and safety reference materials
f. Tracking and resolution of safety violations
g. Site personnel and visitor compliance with site safety and health requirements and APP
h. Investigation and reporting of accidents and injuries

C. Qualifications of Employees:

1. Physically and able to perform their assigned duties in a safe manner.

2. Do not allow employees whose ability or alertness is impaired because of prescription or illegal drug use, fatigue, illness, intoxication, or other conditions that may expose themselves or others to injury to perform work.
3. Provide operating instructions for equipment. Operators of vehicles, hoisting equipment, and hazardous plant equipment shall be able to understand signs, signals, operating instructions, and be fully capable of operating such equipment. Retain copies of operator licenses and certifications onsite.

1.5 ACCIDENT REPORTING

A. Reportable Accidents: Defined as: death, occupational disease, and/or traumatic injury to employees or the public; fires; and/or property damage by accident in excess of $100.

1. Notify Contracting Officer immediately in the event of a reportable accident.
2. Fill out and forward an Accident/Property Damage Report Form (CM-22) to Contracting Officer within 7 days of a reportable accident. Obtain form from Contracting Officer.

1.6 RESOURCES

A. COVID-19 (Coronavirus Disease 2019) information provided below is not intended to provide a complete analysis of requirements for Contractor and is provided as a courtesy.
1. Coronoavirus.gov
2. Occupational Safety and Health Administration (United States Department of Labor) - COVID-19
3. Center for Disease Control (CDC)
   a. Get the Facts About Coronavirus
   b. What Construction Workers Need to Know about COVID-19
4. Federal Emergency Management Agency (FEMA) - Coronavirus (COVID-19) Response
5. National Park Service (NPS) - NPS Public Health Update

PART 2 - PRODUCTS

2.1 ACCIDENT PREVENTION PLAN (APP)

A. APP shall be written to comply with OSHA and project requirements (generic plan is not acceptable) including but not limited to:

1. Name and qualifications of supervisor responsible to carry out program.
2. Weekly and monthly safety meetings shall be documented with topics and attendees.
3. First aid and rescue procedures.
4. Job Hazard Analysis (JHA) for each major phase. List of hazards associated and methods proposed to provide for property protection and safety of the public, National Park Service personnel, and Contractor's employees. Include initial and continuing training.
5. Planning for possible emergency situations, as detailed in Article 1.2. Such planning shall take nature of construction, site conditions, and degree of exposure of persons and property into consideration.
6. Infectious Disease Preparedness:

a. Contractors are responsible for their employees' safety and the safety of job site visitors during the performance of this contract. We encourage Contractors to follow guidance from the Department of Labor (DOL), Occupational Safety and Health Administration (OSHA), the Centers for Disease Control and Prevention (CDC), and all other applicable local, city, and state mandates. We encourage Contractors to develop policies for infection prevention and an Infectious Disease Preparedness and Response Plan.
b. To the extent appropriate, Contractors should include the protective health and safety measures they intend to implement in any accident prevention or safety submittals required under this contract. These plans should contain preventive measures the Contractor intends to follow while performing work on government property as well as responsive and corrective actions to be taken if an employee exhibits symptoms or tests positive for contagion.
c. Upon contract award, Contractors should communicate with Contracting Officer regarding Contractor decisions and actions to protect the health and safety of workers for the duration of contract performance under which pandemic conditions exist.

2.2 FIRST AID FACILITIES

A. Provide adequate facilities for number of employees and appropriate to construction hazards.

2.3 PERSONNEL PROTECTIVE EQUIPMENT (PPE)

A. Selection shall conform to OSHA Subpart E.

PART 3 - EXECUTION

3.1 DAILY SAFETY INSPECTIONS

A. Conduct daily safety inspections and maintain daily safety reports which include:
1. Area/operation inspected
2. Date of inspection
3. Identified hazards
4. Corrective actions taken

3.2 EMERGENCY INSTRUCTIONS

A. Post telephone numbers and reporting instructions for ambulance, physician, hospital, fire department, and police in conspicuous locations at work site.

3.3 FIRE AND LIFE SAFETY

A. Comply with requirements of National Fire Protection Association (NFPA) 241 (Standard for Safeguarding Construction, Alteration, and Demolition Operations).

3.4 HAZARDOUS MATERIALS

A. Hazardous materials: Explosive, flammable, poisonous, corrosive, oxidizing, irritating, or otherwise harmful substances that could cause death or injury.

B. Store hazardous materials in accordance with manufacturer's and OSHA Subpart D requirements. Maintain Safety Data Sheets (SDS) for each chemical readily available on site.

1. Immediately report spills of hazardous materials to the Park.
2. Maintain a spill emergency response kit.
3. Train employees how to respond to a spill and use emergency response kit.

3.5 PROTECTIVE EQUIPMENT

A. Inspect personal protective equipment daily and maintain in a serviceable condition. Clean, sanitize, and repair personal items as appropriate before issuing to another individual.

3.6 SAFETY MEETINGS

A. As a minimum, conduct one weekly 15-minute "toolbox" safety meeting conducted by a foreman or supervisor and attended by construction personnel at worksite. Topics shall coincide with work scheduled for following week. Document and submit meeting minutes to Contracting Officer within one day after meeting.

B. Conduct monthly safety meetings for personnel, contractors, and subcontractors performing work on the site. Notify Contracting Officer of meeting dates and times. Meetings shall be used to: review effectiveness of Contractor's safety effort; resolve current health and safety problems; provide a forum for planning safe construction activities, and for updating Accident Prevention Plan. Contracting Officers Representative will attend meetings and enter results of meetings into the daily log.

3.7 HARD HATS AND PROTECTIVE EQUIPMENT AREAS

A. A hard hat use area shall be designated by Contractor. Hard hat area shall be posted by Contractor in a manner satisfactory to Contracting Officer.

B. It is Contractor's responsibility to require persons working on or visiting site to wear hard hats and PPE in good repair at all times. As a minimum, maintain three hard hats and other APP required equipment.

3.8 TRAINING

A. First Aid: Provide training to personnel to ensure prompt and efficient first aid.

B. Hazardous Material: Train and instruct each employee exposed to hazardous material in safe and approved methods of handling and storage.

END OF SECTION 01 35 23

SECTION 01 40 00 - QUALITY REQUIREMENTS

PART 1 - GENERAL

1.1 SUMMARY

A. Section includes administrative and procedural requirements for quality assurance and quality control.

B. Testing and inspecting services are required to verify compliance with requirements specified or indicated. These services do not relieve Contractor of responsibility for compliance with Contract Document requirements. Quality of work shall be responsibility of the Contractor.

1. Specified tests, inspections, and related actions do not limit Contractor's other quality assurance and control procedures that facilitate compliance with Contract Document requirements.

C. See Divisions 2 through 49 Sections for specific test and inspection requirements.

1.2 DEFINITIONS

A. Quality Assurance Services: Activities, actions, and procedures performed before and during execution of the work to guard against defects and deficiencies and substantiate that proposed construction will comply with requirements.

B. Quality Control Services: Tests, inspections, procedures, and related actions during and after execution of the work to evaluate actual products incorporated into the work and completed construction comply with requirements.

C. Preconstruction Testing: Tests and inspections performed specifically for project before products and materials are incorporated into work to verify performance or compliance with specified criteria.

D. Product Testing: Tests and inspections performed by a Nationally Recognized Testing Laboratory (NRTL), a National Voluntary Laboratory Accreditation Program (NVLAP), or a testing agency qualified to conduct product testing, to establish product performance and compliance with industry standards.

E. Source Quality Control Testing: Tests and inspections performed at the source, i.e., plant, mill, factory, or shop.

F. Field Quality Control Testing: Tests and inspections performed on-site for installation of work and for completed work.

G. Testing Agency or Laboratory: Entity engaged to perform specific tests, inspections, or both. Testing laboratory shall mean the same as testing agency.

H. Installer/Applicator/Erector: Contractor or another entity engaged by Contractor as an employee, Subcontractor, or Sub-subcontractor, to perform a particular construction operation, including installation, erection, application, and similar operations.

1. Using a term such as "carpentry" does not imply certain construction activities must be performed by accredited or unionized individuals of a corresponding generic name, such as "carpenter." It also does not imply that requirements specified apply exclusively to trades people of corresponding generic name.

1.3 CONFLICTING REQUIREMENTS

A. Reference Standards: If compliance with two or more standards is specified and standards establish different or conflicting requirements for minimum quality levels, comply with most stringent requirement. Refer uncertainties and requirements that are different, but apparently equal, to Contracting Officer before proceeding.

B. Minimum Quality Levels: Quality level shown or specified shall be minimum provided or performed. Actual installation may comply exactly with minimum quality specified, or it may exceed minimum within reasonable limits. To comply with requirements, indicated numeric values are minimum or maximum, as appropriate, for the context of requirements. Refer uncertainties to Contracting Officer before proceeding.

1.4 SUBMITTALS

A. Quality Control Plan:

1. After contract award and before Pre-Construction conference, submit a written Contractor Quality Control (CQC) plan.
2. If plan requires revisions or corrections, Contractor shall resubmit plan within 10 days.
3. Government reserves the right to require changes in plan during contract period as necessary to obtain the quality specified.
4. No change in the approved plan may be made without written concurrence by Contracting Officer.

B. Qualification Data: For testing agencies specified in "Quality Assurance" Article to demonstrate their capabilities and experience. Include proof of qualifications in form of a recent report on inspection of testing agency by a recognized authority.

C. Contractor Quality Control (CQC) Daily Reports: Submit showing inspections and tests on first workday following date covered by report. Quality Control Supervisor shall utilize DSC Forms.

1. Review Construction Management Representative (CMR) Daily report if applicable and reconcile any differences prior to posting.

D. Test Reports

1. Test reports shall be completed by person performing test.
2. Submit Daily Test Information Sheets with Quality Control Daily Reports.
3. Submit failing test results and proposed remedial actions within four hours of noted deficiency.

4. Submit three copies of complete test results no later than one calendar day after test was performed.

E. Accessibility Inspection Report:

1. Fill out applicable sections of the Accessibility Inspection Report and attach to Contractor Quality Control Daily Report.
2. Utilize attached Accessibility Inspection form to document compliance with Architectural Barriers Act Accessibility Standards (ABAAS).
3. Inspect at various stages of construction as needed to ensure finished product meets standards.
4. Submit report no later than one calendar day after inspection was performed.

F. Off-Site Inspection Reports: Submit prior to shipment.

G. If Contractor Quality Control plan and Quality Control Daily Reports are not submitted as specified, Contracting Officer may retain payments until such time plan(s) is/are accepted and implemented, or may retain payments for work completed on days with no Quality Control Daily Reports.

H. Permits, Licenses, and Certificates: For National Park Service (NPS) records, submit copies of permits, licenses, certifications, inspection reports, releases, jurisdictional settlements, notices, receipts for fee payments, judgments, correspondence, records, and similar documents, established for compliance with standards and regulations bearing on performance of work.

1.5 QUALITY ASSURANCE

A. General: Qualifications paragraphs in this Article establish minimum qualification levels required; individual Specification Sections specify additional requirements.

B. Contractors Quality Control Staff:

1. Contractor's Quality Control Supervisor may also perform other duties.
2. Contractor's designated Quality Control Supervisor shall be on the project site whenever contract work is in progress.
3. Contractor's job supervisory staff may be used to assist Quality Control Supervisor supplemented, as necessary, by additional certified testing technicians.

C. Installer Qualifications: Firm or individual experienced in installing, erecting, or assembling work similar in material, design, and extent indicated for Project, whose work has resulted in construction with a record of successful in-service performance.

D. Manufacturer Qualifications: Firm experienced in manufacturing products or systems similar to those indicated for Project and with a record of successful in-service performance, as well as sufficient production capacity to produce required units.

E. Fabricator Qualifications: Firm experienced in producing products similar to those indicated for Project and with a record of successful in-service performance, as well as sufficient production capacity to produce required units.

F. Professional Engineer Qualifications: Professional engineer legally qualified to practice in jurisdiction where Project is located and is experienced in providing engineering services of kind indicated (including Structural Tests and Special Inspections (STSI)). Engineering services are defined as those performed for installations of system, assembly, or products similar to those indicated for Project in material, design, and extent.

G. Specialists: Certain sections of the Specifications require that specific construction activities shall be performed by entities who are recognized experts in those operations. Specialists shall satisfy qualification requirements indicated and shall be engaged for activities indicated.

1. Requirement for specialists shall not supersede building codes and regulations governing Work.

H. Testing Agency Qualifications: A Nationally Recognized Testing Laboratory (NRTL), a National Voluntary Laboratory Accreditation Program (NVLAP), or an independent agency with experience and capability to conduct testing and inspecting indicated, according to ASTM E 329; and with additional qualifications specified in individual Sections; and where required by Contract, is acceptable to Contracting Officer.

1. Nationally Recognized Testing Laboratory (NRTL): Nationally recognized testing laboratory according to 29 CFR 1910.7 (Code of Federal Regulations).
2. National Voluntary Laboratory Accreditation Program (NVLAP): Testing agency accredited according to National Institute of Standards and Technology's (NIST) National Voluntary Laboratory Accreditation Program.
3. Measuring devices, laboratory equipment, and instruments shall be calibrated at established intervals against certified standards in accordance with NIST requirements. Measuring and testing devices shall be made available for use by Government for verification tests.

I. Factory-Authorized Service Representative Qualifications: Authorized representative of manufacturer who is trained and approved by manufacturer to inspect installation of manufacturer's products similar in material, design, and extent to those indicated for Project.

1.6 QUALITY CONTROL

A. Contractor is responsible for testing and inspections, including Structural Tests and Special Inspections (STSI), as identified in attached STSI. Inspect and test work as needed to ensure quality of materials, workmanship, construction, finish, and functional performance are in compliance with applicable specifications, drawings, and those required by the Building Code.

1. Engage qualified testing agency to perform quality-control services.
2. Submit appropriate report for each quality-control service.
3. Testing and inspecting requested by Contractor and not required by Contract Documents are Contractor's responsibility.
4. Contracting Officer may designate test locations.

B. Manufacturer's Field Services: Where indicated, engage factory-authorized service representative to inspect field-assembled components and equipment installation, including service connections. Report results in writing.

C. Re-testing/Re-inspecting: Regardless of whether original tests or inspections were Contractor's responsibility, provide quality-control services, including retesting and re-inspecting, for construction of replaced work that failed to comply with Contract Documents.

D. Testing Agency Responsibilities: Cooperate with NPS and Contractor in performance of duties. Provide qualified personnel to perform required tests and inspections.

1. Notify Contracting Officer and Contractor promptly of irregularities or deficiencies observed in work during performance of services.
2. Determine location from which test samples will be taken and in which in-situ tests are conducted.
3. Conduct and interpret tests and inspections, State in each report whether tested and inspected work complies with or deviates from requirements.
4. Submit 3 copies of certified written report of each test, inspection, and similar quality-control service through Contractor.
5. Do not release, revoke, alter, or increase Contract Document requirements or approve or accept any portion of Work.

E. Associated Services: Cooperate with agencies performing required tests, inspections, and similar quality-control services, and provide reasonable auxiliary services as requested. Notify agency sufficiently in advance of operations to permit assignment of personnel. Provide:

1. Access to Work.
2. Incidental labor and facilities necessary to facilitate tests and inspections.
3. Adequate quantities of representative samples of materials that require testing and inspecting. Assist agency in obtaining samples.
4. Facilities for storage and field curing of test samples.
5. Delivery of samples to testing agencies.
6. Preliminary design mix proposed for material mixes that require control by testing agency.
7. Security and protection for samples and testing and inspecting equipment at Project site.

F. Coordination: Coordinate sequence of activities to accommodate required quality assurance and control services with minimum delay and to avoid removing and replacing construction to accommodate testing and inspecting.

1. Schedule times for tests, inspections, obtaining samples, and similar activities.

PART 2 - PRODUCTS

2.1 QUALITY CONTROL PLAN

A. Quality Control Plan shall include:

1. List of personnel responsible for quality control and assigned duties. Include each person's qualifications. Include alternate(s) and qualifications.
2. Copy of letter of direction to Contractor's Quality Control Supervisor(s) outlining assigned duties and authorities designated by principal or owner.
3. Names, qualifications / accreditations, and descriptions of laboratories to perform sampling and testing, and samples of proposed report forms from laboratories.

4. Methods of performing, documenting, and enforcing quality control of work including Contractor report forms and acknowledgment of NPS forms.
5. Methods of monitoring and controlling environmental pollution and contamination as required by regulations and laws.
6. Specific discussion regarding mockups, off-site visits, receiving inspections, manufacturers representation, startup requirements, and other aspects of performance specific to Project.
7. Provisions for substantial completion(s) and final inspection(s) per Contract.

PART 3 - EXECUTION

3.1 OFF-SITE CONTROL

A. Items fabricated or assembled off-site shall be inspected for quality control at place of fabrication.

3.2 ON-SITE CONTROL

A. Notification:

1. Notify Contracting Officer at least 48 hours in advance of preparatory phase meeting.
2. Notify Contracting Officer at least 24 hours in advance of initial and follow-up phases.

B. Preparatory Phase: Perform before beginning each feature of work.

1. Review control submittal requirements with personnel directly responsible for quality assurance and quantity control of the work. As a minimum, Contractor's Quality Control Supervisor and foreman responsible for feature of work shall be in attendance.
2. Review applicable specifications sections and drawings related to feature of work.
3. Ensure copies of referenced standards related to sampling, testing, and execution for feature of work are available on site.
4. Ensure provisions have been made for field control testing.
5. Examine work area to ensure preliminary work has been completed.
6. Verify field dimensions and advise Contracting Officer of discrepancies with contract documents.
7. Ensure necessary equipment and materials are at project site and they comply with approved shop drawings and submittals.
8. Document preparatory phase activities and discussions on Contractor's Quality Control Daily Report.

C. Initial Phase:

1. As soon as work begins, inspect and test representative portion of particular feature of work for quality of workmanship.
2. Review control testing procedures to ensure compliance with contract requirements.
3. Document initial phase activities and discussions on Contractor's Quality Control Daily Report. Exact location of initial phase shall be indicated for future reference and comparison with follow-up phases.

D. Follow-Up Phase: Inspect and test as work progresses to ensure compliance with contract requirements until completion of work.

E. Additional Preparatory and Initial Phases: Additional preparatory and initial phases may be required on same feature of work for following reasons:

1. Quality of on-going work is unacceptable.
2. Changes in quality control staff, on-site production supervision, or work crew.
3. Work on particular feature of work is resumed after substantial period of inactivity.

3.3 DOCUMENTATION

A. Maintain Quality Control Daily Reports, Daily Test Report Information Sheets, and Accessibility Inspection Reports of quality control activities and tests. (Download from DSC Workflows website > Forms/Templates/Samples/Guidelines page > Construction Forms section.)

B. Quality Control Daily Reports shall not be substituted for other written reports required under clauses of contract, such as Disputes, Differing Site Conditions, or Changes.

C. Quality Control Daily Reports shall accurately portray all work and materials. The materials shall match the materials as approved from the Construction Documents (CD) requirements. Combustible/flammable materials shall be documented as well.

3.4 ENFORCEMENT

A. Contractor shall stop work on any item or feature pending satisfactory correction of deficiency noted by quality control staff or Contracting Officer.

3.5 REPAIR AND PROTECTION

A. General: On completion of testing, inspecting, sample taking, and similar services, repair damaged construction and restore substrates and finishes.

1. Provide materials and comply with installation requirements specified in other Specification Sections. Restore patched areas and extend restoration into adjoining areas with durable seams as invisible as possible.

B. Protect construction exposed by or for quality-control service activities.

C. Repair and protection are Contractor's responsibility, regardless of the assignment of responsibility for quality-control services.

END OF SECTION 01 40 00

Construction Management Representative (CMR) & Contractor Quality Control (CQC) Daily Report

National Park Service (NPS) - Denver Service Center (DSC) | 2-6-18

REPORT NUMBER		PROJECT MANAGEMENT INFORMATION SYSTEM NUMBER (PMIS No.):	

PROJECT	CONTRACT NUMBER	DATE
PARK	CONTRACTOR	CMR REPORTING

WEATHER (Rain, Snow, Cloudy, Windy)	MOISTURE AMOUNT (INCHES)	TEMPERATURE		WEATHER DELAY	DESCRIBE WEATHER DELAYED WORK	GROUND CONDITIONS (Dry, Damp, Wet, Frozen)
		MAXIMUM	MINIMUM	Yes ☐ No ☐		

PRIME CONTRACTOR:

EMPLOYEES BY JOB CATEGORIES	NUMBER	HOURS	EQUIPMENT ON JOB (Include model, manufacture, size, year.)	NUMBER OF UNITS	EQUIPMENT HOURS WORKING		
					YES	STANDBY	MOBILIZED/ DEMOBILIZED DATE
Project Manager (PM)							
Superintendent							
Quality Control Officer							
Safety Officer							
Laborers							

MATERIALS DELIVERED	QUANTITY	OFFICIAL VISITORS

WORK PERFORMED BY PRIME: (Include detail description per each activity including location, quantities, and production.)

SPECIFIC INSPECTIONS: (Inspections performed, results, and corrective actions, and Primes and Subprimes.)

TESTING:

Was any testing performed today YES / NO. (Complete and attach Test Report Information Sheets.)

☐ ☐

Type and Location of Testing:

SUBCONTRACTOR(S):	**PMIS Number:**		**Date:**	

SUBCONTRACTOR NAME

EMPLOYEES BY JOB CATEGORIES	NUMBER	HOURS	EQUIPMENT ON JOB (Include model, manufacturer, size, and year.)	NUMBER OF UNITS	EQUIPMENT HOURS WORKING			
					YES	STANDBY	MOBILIZED/ DEMOBILIZED DATE	

MATERIALS DELIVERED	QUANTITY	EQUIPMENT MOBILIZIED/DEMOBILIZED

WORK PERFORMED BY SUBCONTRACTOR: Include detail description per each activity. Include location, quantity, and production.

SUBCONTRACTOR NAME

EMPLOYEES BY JOB CATEGORIES	NUMBER	HOURS	EQUIPMENT ON JOB (Include model, manufacturer, size, and year.)	NUMBER OF UNITS	EQUIPMENT HOURS WORKING			
					YES	STANDBY	MOBILIZED/ DEMOBILIZED DATE	

MATERIALS DELIVERED	QUANTITY	EQUIPMENT MOBILIZIED/DEMOBILIZED

WORK PERFORMED BY SUBCONTRACTOR: Include detail description per each activity. Include location, quantity, and production.

SUBCONTRACTOR NAME

EMPLOYEES BY JOB CATEGORIES	NUMBER	HOURS	EQUIPMENT ON JOB (Include model, manufacturer, size, and year.)	NUMBER OF UNITS	EQUIPMENT HOURS WORKING			
					YES	STANDBY	MOBILIZED/ DEMOBILIZED DATE	

MATERIALS DELIVERED	QUANTITY	EQUIPMENT MOBILIZIED/DEMOBILIZED

WORK PERFORMED BY SUBCONTRACTOR: Include detail description per each activity. Include location, quantity, and production.

SUBCONTRACTOR(S):	PMIS Number:		Date:	

SUBCONTRACTOR NAME

EMPLOYEES BY JOB CATEGORIES	NUMBER	HOURS	EQUIPMENT ON JOB (Include model, manufacturer, size, and year.)	NUMBER OF UNITS	EQUIPMENT HOURS WORKING			
					YES	STANDBY	MOBILIZED/ DEMOBILIZED DATE	

MATERIALS DELIVERED	QUANTITY	EQUIPMENT MOBILIZIED/DEMOBILIZED

WORK PERFORMED BY SUBCONTRACTOR: Include detail description per each activity. Include location, quantity, and production.

SUBCONTRACTOR NAME

EMPLOYEES BY JOB CATEGORIES	NUMBER	HOURS	EQUIPMENT ON JOB (Include model, manufacturer, size, and year.)	NUMBER OF UNITS	EQUIPMENT HOURS WORKING			
					YES	STANDBY	MOBILIZED/ DEMOBILIZED DATE	

MATERIALS DELIVERED	QUANTITY	EQUIPMENT MOBILIZIED/DEMOBILIZED

WORK PERFORMED BY SUBCONTRACTOR: Include detail description per each activity. Include location, quantity, and production.

SUBCONTRACTOR NAME

EMPLOYEES BY JOB CATEGORIES	NUMBER	HOURS	EQUIPMENT ON JOB (Include model, manufacturer, size, and year.)	NUMBER OF UNITS	EQUIPMENT HOURS WORKING			
					YES	STANDBY	MOBILIZED/ DEMOBILIZED DATE	

MATERIALS DELIVERED	QUANTITY	EQUIPMENT MOBILIZIED/DEMOBILIZED

WORK PERFORMED BY SUBCONTRACTOR: Include detail description per each activity. Include location, quantity, and production.

PMIS Number:		Date:	

CRITICAL POINT/MILESTONE OBSERVATIONS *(Describe item inspected, observations, problems, and action items.)*

DESCRIPTION OF WORK BEING MONITORED ON A TIME AND MATERIAL BASIS AND WHY

BREAKDOWN OF TIME AND MATERIAL WORK PERFORMED

Location:

Labor:

Equipment:

Material:

Production Rates:

STATUS OF GOVERNMENT FURNISHED SERVICES AND/OR SUPPLIES

SAFETY COMMENTS

Accidents / Lost Time:

Incidents:

First Aid Administered:

Other:

DIFFICULTIES WITH CONSTRUCTION CONTRACTOR

UNFORESEEN DEVELOPMENTS *(Describe conditions, action taken, person contacted, and recommended actions.)*

CONSTRUCTION DEFICIENCIES OR RE-TESTING REQUIRED

OTHER COMMENTS

CERTIFICATION

For Construction Management Representative (CMR): I certify the above report is complete and correct and that I, or my authorized representative, have inspected all work performed this day by the Prime Contractor and each Subcontractor and determined all materials, equipment, and workmanship are in strict compliance with plans and specifications except as may be noted above.

I certify that I or my authorized representative have reviewed and reconciled all differences between this daily report and the Construction Contractors. In the event a discrepancy is found, the Construction Contractor was notified and an acceptable revision was completed and resubmitted by either or both parties within this document. If unable to agree with the Construction Contractor, explain nature of disagreement in "Other Comments" above as needed.

For Contractor's Representative: I certify that the above report is complete and correct and that I, or my authorized representative, have inspected all work performed this day by the Prime Contractor and each Subcontractor and determined that all materials, equipment, and workmanship are in strict compliance with the plans and specifications except as may be noted above. I have reconciled all differences found when comparing this CQC daily diary with the CMR's daily diary. All unresolved issues are described under "Other Comments" above.

SIGNATURE	TITLE:

PMIS Number:		Date:	

ADDITIONAL COMMENTS OR INFORMATION (***Describe item inspected, observations, problems, and action items.)***

PMIS Number:		Date:	

IMAGES IN SUPPORT OF REPORT INFORMATION

INSPECTION CHECKLIST

National Park Service
Parks Planning Facilities and Lands, Building Code Official
Building_code@nps.gov

Review	Required	Signature of Inspector	Date Approved
Footing & Foundation			
Concrete Slab, Foundation Wall & Under Floor	X		
Lowest Floor Elevation (in flood areas)			
Underground			
Roof Framing	X		
Wall Framing	X		
Wall Close-In	X		
Ceiling Close-In	X		
Life Safety	X		
Fire & Smoke Resistant Penetrations			
Fire Protection	X		
Fire Alarm	X		
Lath & Gypsum Board	X		
Accessibility	X		
Underground Plumbing	X		
Rough Plumbing	X		
Underground Electrical	X		
Rough Electrical	X		
Mechanical	X		
Energy Efficiency	X		
Elevator			
Waterproofing	X		
Other:			
Other:			
Other:			
Other:			
Other:			
Other:			
Final Inspection:			
Fire/Life Safety	X		
Electrical	X		
Mechanical	X		
Plumbing	X		
Accessibility	X		

INSPECTION CHECKLIST

National Park Service
Parks Planning Facilities and Lands, Building Code Official
Building_code@nps.gov

INSTRUCTIONS:

DESIGN

- Architect/Engineer (A/E) shall indicate if a listed inspection is required.
- If additional inspections are required, the A/E shall indicate under "Other" on the form.
- All required inspections are based on the 2024 International Code Council (ICC) codes and 2023 National Fire Protection Association (NFPA) 70.

CONSTRUCTION SOLICITATION

- Completed checklist shall be included with the construction solicitation and construction contract as part of the Construction Documents.

CONSTRUCTION

- Checklist shall be the official record for construction inspection approval or disapproval.
- Inspectors will sign-off on this form when inspections are complete and approved.
- Final inspection approval is required prior to issuance of Certificate of Occupancy. Original completed form shall be submitted with the request. Copies will be sent to the contractor, Contracting Officer, Contracting Officer's Representative and Construction Management Representative.

Questions regarding this form shall be directed to the Building Code Official at building_code@nps.gov

July 15, 2024
Version #1

Universal Design & Accessibility Scoping for Buildings & Sites

(Architectural Barriers Act (ABA) Accessibility Standards)

National Park Service (NPS) - Denver Service Center (DSC) | 10-25-24

Use for facilities, buildings (new and existing), parking and drop-off areas, and sites (walks, ramps, plazas, lawns, etc.). Complete where applicable. For checkboxes, N/A=not applicable.

Park: Minidoka National Historic Site

Project Title: Maintenance Building Addition

PMIS Number: N/A
(Project Management Information System)

Prepared By: Click or tap here to enter text.

Date: Click or tap to enter a date.

Programs and Activities at this Building/Site (existing and proposed)

Site Programs	Amenities	Building Programs	Interpretive Programs
☐ Car Parking	☐ Benches/Seating	☐ Visitor Use Building	☐ Information Desk
☐ Bus Parking	☐ Restrooms	☐ Historic Building	☐ Brochures/Handouts
☐ Recreational Vehicle (RV) Parking	☐ Family Restrooms	☐ Maintenance Building	☐ Audiovisual Programs
☐ Employee Parking	☐ Employee Restrooms	☐ Museum	☐ Exhibits
☐ Building Entrance	☐ Public Telephones	☐ Theater	☐ Interactive Exhibits
☐ Drop-off Area	☐ Drinking Fountains	☐ First Aid/Wellness Room	☐ Large Scale Map
☐ Alternate Transportation	☐ Vending Machines	☐ Information Desk	☐ Tactile Map
☐ Bus/Shuttle Stop	☐ Concessions-Food	☐ Visitor Lodging	☐ Guided Tours
☐ Service Area	☐ Concessions-Ticketing	☐ Employee Housing	☐ Educational Programs
☐ Walks	☐ Gift Shop	☐ Conference Rooms	☐ Museum Objects
☐ Shelters	☐ Bookstore	☐ Office Space	☐ Waysides
☐ Seating/Gathering Space	☐ Trash/Recycling	☐ Kitchen/Break Room	☐ Special Events
☐ Cultural Landscape	☐ Bicycle Racks/Rental	☐ Elevator	☐ Self-Guided Walks
☐ Other:	☐ Other:	☐ Other:	☐ Other:
☐ Other:	☐ Other:	☐ Other:	☐ Other:
☐ Other:	☐ Other:	☐ Other:	☐ Other:
☐ Other:	☐ Other:	☐ Other:	☐ Other:
☐ Other:	☐ Other:	☐ Other:	☐ Other:
☐ Other:	☐ Other:	☒ Other:	☐ Other:

Universal Design

The design of products and environments to be usable by all people, to the greatest extent possible, without the need for adaptation or specialized design. A human-centered design with all users in mind.

1. **The Principles of Universal Design** (North Carolina State University (NCSU) > Center for Universal Design) - Utilize throughout the design process to provide a facility usable by all.

   1. ☐Yes ☐No ☐N/A **Principle 1: Equitable Use**
      The design is useful and marketable to people with diverse abilities. Is the same means of use provided for all users, identical whenever possible, equivalent when not?
   2. ☐Yes ☐No ☐N/A **Principle 2: Flexibility in Use**
      Does the design accommodate a wide range of individual preferences and abilities? Is a choice of method provided?
   3. ☐Yes ☐No ☐N/A **Principle 3: Simple and Intuitive Use**
      Use of the design is easy to understand, regardless of the user's experience, knowledge, language skills, or current concentration level.
   4. ☐Yes ☐No ☐N/A **Principle 4: Perceptible Information**
      Does the design communicate necessary information effectively to the user, regardless of ambient conditions or the user's sensory abilities?
   5. ☐Yes ☐No ☐N/A **Principle 5: Tolerance for Error**
      Is there a tolerance for error? Does the design minimize hazards and adverse consequences of accidental or unintended actions?
   6. ☐Yes ☐No ☐N/A **Principle 6: Low Physical Effort**
      Does the design require low physical effort? Can the design be used efficiently and comfortably and with a minimum of fatigue?
   7. ☐Yes ☐No ☐N/A **Principle 7: Size and Space for Approach and Use**
      Is there appropriate size and space provided for approach, reach, manipulation, and use regardless of user's body size, posture, or mobility? Is there adequate space provided for using assistive devices or personal assistance?

2. DSC Universal Design Best Practice Requirements

*If requirement cannot be met, describe reason for departure and accommodations provided.

a. ☐Yes ☐No* ☐N/A **Integrated Pedestrian Routes**
   Project is designed for all users to follow the same routes through the facility and site. Describe any departure:
   Click or tap here to enter text.

b. ☐Yes ☐No* ☐N/A **Level Entrance**
   Project is designed with no steps at primary entrances (visitor and employee). Staired secondary routes can be included on sloped sites. Describe any departure:
   Click or tap here to enter text.

c. ☐Yes ☐No* ☐N/A **Covered Entry**
   Project provides a covered entry and roof drains away from entry walk and entrance. Describe any departure:
   Click or tap here to enter text.

d. ☐Yes ☐No* ☐N/A **Closed-in Parking and Drop-off**
Distance from drop-off and closest accessible parking space (car and RV/Bus) to accessible entrance of facility is 200 feet or less. Describe any departure:
Click or tap here to enter text.

e. ☐Yes ☐No* ☐N/A **Power Assist Entrance Doors**
Visitor use buildings provide power assist door openers on main accessible entrances. Describe any departure:
Click or tap here to enter text.

f. ☐Yes ☐No* ☐N/A **Accessibility Plans**
Provide accessibility plans to identify project universal design and accessibility goals. Include site plan with accessible parking and accessible routes with slope requirements; floorplans with accessible features, accessible routes, turning space, maneuvering space and reach ranges shown.
Click or tap here to enter text.

ABA Accessibility Standards - Chapter 2 Scoping Requirements

3. F202 Existing Buildings and Facilities

Renovations and additions including historic facilities.

a. ☐Yes ☐No ☐N/A F202.2.1 Accessible Route
b. ☐Yes ☐No ☐N/A F202.2.3 Toilet and Bathing Facilities
c. ☐Yes ☐No ☐N/A F202.3.1 Prohibited Reduction in Access
d. ☐Yes ☐No ☐N/A **Entrances to Existing Facilities**
If project is a historic building, is the accessible route the same as the general public route? If not, does the accessible route rejoin the general route quickly and intuitively?
e. ☐Yes ☐No ☐N/A **Exception**
The only exceptions used for qualified historic buildings and facilities are 1 accessible route to 1 accessible entrance (instead of standard 60% of entrances), at least 1 accessible floor in a multi-story building, and no less than 1 toilet room for each sex complying with 603 or 1 unisex toilet room.
f. ☐Yes ☐No ☐N/A **State Historic Preservation Officer (SHPO) Concurrence**
If any of these exceptions are taken, is there a concurrence memo from the SHPO? F202.5 - These exceptions apply only when the State Historic Preservation Officer agrees that compliance with requirements for the specific element would threaten or destroy the historic significance of the building or facility.

4. F203 General Exceptions

Facility spaces not required to comply with ABA Accessibility Standards requirements. A project element meets 1 of the following exceptions.

a. ☐Yes ☐No ☐N/A F203.4 Raised Areas
b. ☐Yes ☐No ☐N/A F203.5 Limited Access Spaces
c. ☐Yes ☐No ☐N/A F203.6 Machinery Spaces
d. ☐Yes ☐No ☐N/A F203.7 Single Occupant Structures

5. F205 Operable Parts

a. ☐Yes ☐No ☐N/A **Hardware**
Door, window, restroom and furnishing hardware, levers, knobs, openers, etc., can be operated with 1 hand and do not require tight grasping, pinching, or twisting of the wrist; are designed between 15 inches minimum and 48 inches maximum above the finished floor. The force required to operate hardware is 5 pounds maximum.

b. ☐Yes ☐No ☐N/A **Operable Parts**
Light switches, electrical outlets, appliance controls, window blind controls, etc., are designed between 15 inches minimum and 48 inches maximum above the finished floor. The force required to activate operable parts is 5 pounds maximum.

6. F206 Accessible Routes

a. ☐Yes ☐No ☐N/A F206.2.2 Within a Site
b. ☐Yes ☐No ☐N/A F206.2.3 Multi-Story Buildings and Facilities
c. ☐Yes ☐No ☐N/A F206.2.3 > Exception 1
d. ☐Yes ☐No ☐N/A F206.2.3 > Exception 6
e. ☐Yes ☐No ☐N/A F206.3 Location
f. ☐Yes ☐No ☐N/A F206.4 Entrances

7. F206.5 Doors, Doorways and Gates

a. ☐Yes ☐No ☐N/A **Clear Floor Space on Both Sides of Accessible Doors**
Accessible doors are designed to have adequate clear floor space meeting **Figure 404.2.4.1** in section 404.2.4.1 Swinging Doors and Gates.

b. ☐Yes ☐No ☐N/A F206.5.1 Entrances
c. ☐Yes ☐No ☐N/A F206.5.2 Rooms and Spaces

8. F207 Accessible Means of Egress

a. ☐Yes ☐No ☐N/A F207.1 General
The accessible egress route is shown on code plan.

b. ☐Yes ☐No ☐N/A **Areas of Refuge**
This project includes areas of refuge complying with International Building Code (IBC) that serve as a part of the accessible means of egress. The accessible egress route is shown on code plan.

c. ☐Yes ☐No ☐N/A F207.2 Platform Lifts

9. F208 Parking Spaces

Newly constructed parking facilities shall provide accessible parking spaces in accordance with Table F208.2. Where a parking facility provides separate types of parking spaces (car, recreational vehicle, bus, drop- off/unloading, etc.), Table F208.2 shall apply to each separate type of parking space provided.

Parking Spaces: Refer to **Table F208.2** under F208.2 Minimum Number.

Total number of parking spaces provided: Click or tap here to enter text.
Number of accessible parking spaces provided (including van spaces): Click or tap here to enter text.
Number of van accessible parking spaces provided: Click or tap here to enter text.
Number of RV/bus accessible parking spaces provided: Click or tap here to enter text.

a. ☐Yes ☐No ☐N/A F208.2 Minimum Number
b. ☐Yes ☐No ☐N/A F208.2.4 Van Parking Spaces
c. ☐Yes ☐No ☐N/A F208.3 Location
d. ☐Yes ☐No ☐N/A **Oversized Vehicle Location**
Accessible oversized parking spaces for recreational vehicles (RVs) and buses are located on the shortest accessible route from the oversized vehicle parking facility to an accessible entrance. Accessible spaces are 200 feet or less from entrance.
e. ☐Yes ☐No ☐N/A **Employee Parking Location**
Accessible employee parking spaces are located on the shortest accessible route from the employee parking area to an accessible employee entrance. Accessible spaces are 200 feet or less from entrance.
f. ☐Yes ☐No ☐N/A **Dispersed Locations**
Where parking serves more than 1 accessible entrance or program, accessible parking spaces are dispersed and located on the shortest accessible route (200 feet or less) to the accessible entrances or program.

10. F209 Passenger Loading Zones and Bus Stops

a. ☐Yes ☐No ☐N/A 503 Passenger Loading Zones

11. F211 Drinking Fountains

a. ☐Yes ☐No ☐N/A F211.2 Minimum Number

12. F213 Toilet Facilities and Bathing Facilities

a. ☐Yes ☐No ☐N/A F213.3.1 Toilet Compartments
b. ☐Yes ☐No ☐N/A **1109.2.1 (IBC) Unisex toilet rooms**
In assembly and mercantile occupancies, an accessible unisex toilet room is provided where an aggregate of 6 or more male and female water closets is required.
c. ☐Yes ☐No ☐N/A F213.3.3 Urinals
d. ☐Yes ☐No ☐N/A F213.3.4 Lavatories
e. ☐Yes ☐No ☐N/A F213.3.5 Mirrors
f. ☐Yes ☐No ☐N/A F213.3.6 Bathing Facilities
g. ☐Yes ☐No ☐N/A F213.3.7 Coat Hooks and Shelves

13. F215 Fire Alarm Systems

a. ☐Yes ☐No ☐N/A F215.2 Public and Common Use Areas
b. ☐Yes ☐No ☐N/A F215.3 Employee Work Areas
c. ☐Yes ☐No ☐N/A F215.4 Transient Lodging
d. ☐Yes ☐No ☐N/A F215.5 Residential Dwelling Units

14. F216 Signs

a. ☐Yes ☐No ☐N/A F216.2 Designations

b. ☐Yes ☐No ☐N/A F216.4 Means of Egress

c. ☐Yes ☐No ☐N/A F216.4.1 Exit Doors
d. ☐Yes ☐No ☐N/A F216.4.2 Areas of Refuge
e. ☐Yes ☐No ☐N/A F216.4.3 Directional Signs

f. ☐Yes ☐No ☐N/A F216.5 Parking

g. ☐Yes ☐No ☐N/A F216.5 Parking > Exception 1

h. ☐Yes ☐No ☐N/A F216.6 Entrances

i. ☐Yes ☐No ☐N/A F216.10 Assistive Listening Systems

15. F219 Assistive Listening Systems

a. ☐Yes ☐No ☐N/A F219.2 Required Systems
b. ☐Yes ☐No ☐N/A F219.3 Receivers

16. F221 Assembly Areas and Outdoor Seating Areas

Number of Wheelchair Spaces in Assembly Areas: Refer to **Table F221.2.1.1** under F221.2.1.1 General Seating.

Number of seats in assembly area (theater or seating area, bench length/24 inches): Click or tap here to enter text.
Minimum number of required wheelchair spaces in aseembly area: Click or tap here to enter text.
Number of seats in exterior seating area: Click or tap here to enter text.
Minimum number of required wheelchair spaces in exterior seating area: Click or tap here to enter text.

a. ☐Yes ☐No ☐N/A F221.1 General

b. ☐Yes ☐No ☐N/A F221.2.1 Number and Location

c. ☐Yes ☐No ☐N/A F221.2.2 Integration

d. ☐Yes ☐No ☐N/A F221.2.3 Lines of Sight and Dispersion

e. ☐Yes ☐No ☐N/A F221.2.3.1 Horizontal Dispersion
F221.2.3.2 Vertical Dispersion

f. ☐Yes ☐No ☐N/A F221.3 Companion Seats

g. ☐Yes ☐No ☐N/A F221.4 Designated Aisle Seats

h. ☐Yes ☐No ☐N/A F221.5 Lawn Seating

i. ☐Yes ☐No ☐N/A Exterior Seating Areas
Site seating areas accommodating 4 or more persons (2 benches or more) provide integrated wheelchair seating.

17. F226 Dining Surfaces and Work Surfaces

a. ☐Yes ☐No ☐N/A F226.1 General
b. ☐Yes ☐No ☐N/A F226.2 Dispersion

18. F229 Windows

a. ☐Yes ☐No ☐N/A F229.1 General

b. ☐Yes ☐No ☐N/A **Window Coverings**

Window coverings, blinds, etc. provided in accessible rooms or spaces are designed to be operable at accessible reach ranges (308) less than 48 inches above floor, allow adequate clear floor space for operation and comply with 309.

19. Notes

Click or tap here to enter text.

Statement of Structural Tests and Special Inspections

National Park Service (NPS) - Denver Service Center (DSC)

Park: MIIN

Project Management Information System (PMIS) Number:

Project Name: MIIN Maintenance Building Addition

Structural Engineering Firm: JVA, Inc.

This Statement of Structural Tests and Special Inspections is being submitted as required by Chapter 17 of the **2024 International Building Code** (IBC 2024). It includes the following:

1. Seismic requirements
2. Wind requirements
3. Qualification Requirements for Inspectors and Testing Technicians
4. Listing of Required Structural Tests and Special Inspections

The Construction Contractor's Quality Control Supervisor will provide copies of all special inspection reports and associated documentation to the Contracting Officer (CO). The Construction Contractor will be required to correct all deficiencies discovered in the Special Inspection and Structural Testing program.

Prepared By: Paul J. Hause, PE _____
(Type or print name)

Signature: _____ Date: _____

Stamped by Professional Engineer (PE) or Structural Engineer (SE)

Seismic and Wind Requirements

Seismic Requirements, IBC 2024 Section 1704.3.2

Description of seismic-force-resisting system and designated seismic systems subject to special inspections:

Cold-formed steel light-frame diaphragms and shearwalls designed and constructed in accordance with the provisions of IBC Section 2206.1.1.

Per IBC Section 1704.2, special inspections and tests are not required for portions of structures designed and constructed in accordance with the cold-formed steel light-frame construction provisions of Section 2206.1.1.

Wind Requirements, IBC 2024 Section 1704.3.3

Description of wind-force-resisting system and designated wind systems subject to special inspections:

Cold-formed steel light-frame diaphragms and shearwalls designed and constructed in accordance with the provisions of IBC Section 2206.1.1.

Per IBC Section 1704.2, special inspections and tests are not required for portions of structures designed and constructed in accordance with the cold-formed steel light-frame construction provisions of Section 2206.1.1.

Instructions:

1. Under Listing of Required Structural Tests and Special Inspections:
    a. **Required?** - Place an **X** for all Special Inspections and Tests required for this project.
    b. **Required Qualifications** - Provide qualifications for the special inspector, using the Qualification Requirements for Inspector and Testing Technicians list below, for all required Structural Tests and Special Inspections.
    c. **Continuous** - If marked with an **X**, continuous special inspection shall be as defined in Chapter 2, IBC 2024.
    d. **Periodic** - If marked with an **X**, provide the minimum number of tests, i.e. 20% of all field welds, or the amount of work to be inspected (e.g. 10% of all wall surfaces).
2. Attach completed Statement of Structural Tests and Special Inspections to the end of NPS DSC Division 1 Specifications **Section 01 40 00 Quality Requirements**.

Qualification Requirements for Inspectors and Testing Technicians

PE/SE	Structural Engineer – licensed PE or SE specializing in the design of buildings and structures
PE/GE	Geotechnical Engineer – licensed PE specializing in soil mechanics and foundations
EIT	Engineer-In-Training – graduate engineer who has passed the Fundamentals of engineering examination

American Concrete Institute (ACI) Certification

ACI-CCSI	Concrete Construction Special Inspector
ACI-LTT	Concrete Laboratory Testing Technician Level 1 or 2
ACI-STT	Concrete Strength Testing Technician
ACI-FTT	Concrete Field Testing Technician – Grade I

American Society of Non-Destructive Testing (ASNT) Certification

Non-Destructive Testing Technician – Level II or III

American Welding Society (AWS) Certification

AWS-CWI	Certified Welding Inspector

Exterior Design Institute (EDI) Certification

EDI-EIFS	Certified EIFS inspector

International Code Council (ICC) Certification

ICC-PCSI	Prestressed Concrete Special Inspector
ICC-RCSI	Reinforced Concrete Special Inspector
ICC-SSI	Soils Special Inspector
ICC-SFSI	Spray-applied Fireproofing Special Inspector
ICC-SMSI	Structural Masonry Special Inspector
ICC-SSBSI	Structural Steel and Bolting Special Inspector
ICC-SWSI	Structural Welding Special Inspector

National Institute for Certification in Engineering Technologies (NICET) Certification

NICET-CT	Concrete Technician – Levels I, II, III and IV
NICET-GET	Geotechnical Engineering Technician - Levels I, II, III and IV
NICET-ST	Soils Technician - Levels I, II, III and IV

Other

Listing of Required Structural Tests and Special Inspections

Required?	Structural Test or Special Inspection	Required Qualifications	Continuous	Periodic	Frequency of Periodic Test or Inspection
	Structural Steel (IBC 2024 Section 1705.2; American Institute of Steel Construction: AISC 360-22 Chapter N, AISC 341-22 Chapter J)				
	Prior to Welding (AISC 360-22 Table C-N5.4-1)				
x	1. Welder qualification records and continuity records.	AWS-CWI ICC-SWSI	X		
x	2. Welding procedure specifications (WPS) available.	AWS-CWI ICC-SWSI	X		
x	3. Manufacturer certifications for welding consumables available.	AWS-CWI ICC-SWSI	X		
x	4. Material identification (type/grade).	AWS-CWI ICC-SWSI		X	At project startup
x	5. Welder identification system.	AWS-CWI ICC-SWSI		X	At project startup
	6. Fit-up of groove welds (including joint geometry).	AWS-CWI ICC-SWSI			
x	a. Joint preparation.			X	50% of welds
x	b. Dimensions (alignment, root opening, root face, bevel).			X	50% of welds
x	c. Cleanliness (condition of steel surfaces).			X	50% of welds
x	d. Tacking (tack weld quality and location).			X	50% of welds
x	e. Backing type and fit (if applicable).			X	50% of welds
	7. Fit-up of CJP (complete joint penetration) groove welds of HSS (hollow structural sections) T-, Y- and K-joints without backing (including joint geometry).				
x	a. Joint preparation.			X	50% of welds
x	b. Dimensions (alignment, root opening, root face, bevel).			X	50% of welds
x	c. Cleanliness (condition of steel surfaces).			X	50% of welds

Required?	Structural Test or Special Inspection	Required Qualifications	Continuous	Periodic	Frequency of Periodic Test or Inspection
x	d. Tacking (tack weld quality and location).			X	50% of welds
x	8. Configuration and finish of access holes.	AWS-CWI ICC-SWSI		X	50% of welds
	9. Fit-up of fillet welds.				
x	a. Dimensions (alignment, gaps at root).			X	50% of welds
x	b. Cleanliness (condition of steel surfaces).			X	50% of welds
x	c. Tacking (tack weld quality and location).			X	50% of welds
x	10. Check welding equipment.	AWS-CWI ICC-SWSI		X	When onsite
	During Welding (AISC 360-22 Table C-N5.4-2)				
	1. Control and handling of welding consumables	AWS-CWI ICC-SWSI			
x	a. Packaging.			X	50% of welds
x	b. Exposure control.			X	50% of welds
	2. No welding over cracked tack welds.	AWS-CWI ICC-SWSI		X	50% of welds
	3. Environmental conditions.	AWS-CWI ICC-SWSI			
x	a. Wind speed within limits.			X	50% of welds
x	b. Precipitation and temperature.			X	50% of welds
	4. WPS followed.	AWS-CWI ICC-SWSI			
x	a. Settings on welding equipment.			X	50% of welds
x	b. Travel speed.			X	50% of welds
x	c. Selected welding materials.			X	50% of welds
x	d. Shielding gas type/flow rate.			X	50% of welds
x	e. Preheat applied.			X	50% of welds

Required?	Structural Test or Special Inspection	Required Qualifications	Continuous	Periodic	Frequency of Periodic Test or Inspection
x	f. Interpass temperature maintained (minimum/maximum).			X	50% of welds
x	g. Proper position (F, V, H, OH).			X	50% of welds
x	h. Intermix of filler metals avoided unless approved (AISC 341-22 Section J7).			X	50% of welds
x	5. Use of qualified welders.	AWS-CWI ICC-SWSI	X		
	6. Welding techniques.	AWS-CWI ICC-SWSI			
x	a. Interpass and final cleaning.			X	50% of welds
x	b. Each pass within profile limitations.			X	50% of welds
x	c. Each pass meets quality requirements.			X	50% of welds
x	7. Placement and installation of headed stud anchors.		X		
	After Welding (AISC 360-22 Table C-N5.4-3)				
x	1. Welds cleaned.	AWS-CWI ICC-SWSI		X	50% of welds
x	2. Size, length and location of welds.	AWS-CWI ICC-SWSI	X		
	3. Welds meet visual acceptance criteria.	AWS-CWI ICC-SWSI			
x	a. Crack prohibition.		X		
x	b. Weld/base-metal fusion.		X		
x	c. Crater cross section.		X		
x	d. Weld profiles.		X		
x	e. Weld size.		X		
x	f. Undercut.		X		
x	g. Porosity.		X		

Required?	Structural Test or Special Inspection	Required Qualifications	Continuous	Periodic	Frequency of Periodic Test or Inspection
x	4. Arc strikes.	AWS-CWI ICC-SWSI	X		
x	5. k-area.	AWS-CWI ICC-SWSI	X		
x	6. Weld access holes in rolled heavy shapes and built-up heavy shapes.	AWS-CWI ICC-SWSI	X		
x	7. Backing removed and weld tabs removed (if required).	AWS-CWI ICC-SWSI	X		
x	8. Repair activities.	AWS-CWI ICC-SWSI	X		
x	9. Document acceptance or rejection of welded joint or member.	AWS-CWI ICC-SWSI	X		
x	10. No prohibited welds have been added without the approval of the EOR (Engineer of Record).		X		
x	11. Placement of reinforcing or contouring fillet welds (if required) (AISC 341-22 Table J7.1).	AWS-CWI ICC-SWSI	X		
	Nondestructive Testing (AISC 360-22 Section N5 and AISC 341-22 Section J7)				
x	1. Risk Category II Structures - Perform Ultrasonic Testing on 10% of CJP groove welds in butt, T- and corner joints subject to transversely applied tension loading, in materials 5/16 inch thick or greater.	AWS-CWI ICC-SWSI		X	10% of welds
	2. Risk Category III or IV Structures - Perform Ultrasonic Testing on all CJP groove welds subject to transversely applied tension loading in butt, T- and corner joints, in materials 5/16 inch thick or greater.		X		
	3. Access Holes - Perform Magnetic Particle Testing or Liquid Penetrant Testing when the flange thickness exceeds 1.5 inches for rolled shapes, or when the web thickness exceeds 1.5 inches for built-up shapes.		X		
	4. Welded Joints Subject to Fatigue - Perform testing per AISC 360-22 Section N5c.		X		
	Nondestructive Testing (AISC 341-22 Section J7)				
	Column Splice and Column to Base Plate PJP Groove Weld (AISC 341-22 Section J7 2b)				

Required?	Structural Test or Special Inspection	Required Qualifications	Continuous	Periodic	Frequency of Periodic Test or Inspection
	1. Perform Ultrasonic Testing on 100% of PJP (partial-joint-penetration) groove welds in column splices and column to base plate welds.		X		
	2. CJP Groove weld.		X		
	3. Lamellar tearing.		X		
	4. Beam cope and access hole.		X		
	5. Reduced beam section repair.		X		
	6. Weld tab removal.		X		
	Prior to Bolting (AISC 360-22 Table C-N5.6-1)				
	These inspections are not required for snug-tight joints.				
x	1. Manufacturer's certifications available for fastener materials.	ICC-SSBSI	X		
x	2. Fasteners marked in accordance with ASTM requirements.	ICC-SSBSI		X	50% of bolts
x	3. Correct fasteners selected for the joint detail (grade, type, bolt length if threads are to be excluded from shear plane).	ICC-SSBSI		X	50% of bolts
x	4. Correct bolting procedure selected for joint detail.			X	
x	5. Connecting elements, including the appropriate faying surface condition and hole preparation, if specified, meet applicable requirements.	ICC-SSBSI		X	50% of bolts
x	6. Pre-installation verification testing by installation personnel observed and documented for fastener assemblies and methods used.	ICC-SSBSI		X	50% of bolts
x	7. Protected storage provided for bolts, nuts, washers and other fastener components.	ICC-SSBSI		X	50% of bolts
	During Bolting (AISC 360-22 Table C-N5.6-2)				
	These inspections are not required for snug-tight joints.				
	These inspections are not required for pretensioned joints and slip-critical joints, when the installer is using the turn-of-nut method with matchmarking				

Required?	Structural Test or Special Inspection	Required Qualifications	Continuous	Periodic	Frequency of Periodic Test or Inspection
	techniques, the direct-tension-indicator method, or the twist-off-type tension control bolt method.				
x	1. Fastener assemblies, of suitable condition, placed in all holes and washers (if required) are positioned as required.	ICC-SSBSI		X	50% of bolts
	2. Joint brought to the snug-tight condition prior to the pretensioning operation.	ICC-SSBSI		X	50% of bolts
	3. Fastener component not turned by the wrench prevented from rotating.	ICC-SSBSI		X	50% of bolts
	4. Fasteners are pretensioned in accordance with the RCSC (Resource Council on Structural Connections) Specification, progressing systematically from the most rigid point toward the free edges.	ICC-SSBSI		X	50% of bolts
	After Bolting (AISC 360-22 Table C-N5.6-3)				
x	Document acceptance or rejection of bolted connections.	ICC-SSBSI	X		
	Galvanized Structural Steel Main Members (AISC 360-22 Section N5.7)				
	Inspect per AISC 360-22 Section N5.7.			X	
	Other Inspection Tasks (AISC 360-22 Section N5.8 and AISC 341-22 Section J9)				
x	1. Verify compliance of fabricated steel with the details shown on the approved shop drawings.	PE/SE		X	50% and at least one of each unique condition
x	2. Verify compliance of the erected steel frame with the details shown on the approved erection drawings, including braces, stiffeners, member locations and joint details.	PE/SE		X	50% and at least one of each unique condition
	3. Anchor rods and other embedments support structural steel.				
x	a. Verify the diameter, grade, type and length of the anchor rod or embedded item.	ACI-CCSI		X	50% and at least one of each unique condition
x	b. Verify the extent or depth of embedment into the concrete.			X	50% and at least one of each unique condition

Required?	Structural Test or Special Inspection	Required Qualifications	Continuous	Periodic	Frequency of Periodic Test or Inspection
	4. RBS (reduce beam section) requirements, if applicable. (AISC 341-22 Table J9.1)				
	a. Contour and finish.			X	
	b. Dimensional tolerances.			X	
	5. Protected zone - no holes or unapproved attachments made by fabricator or erector, as applicable. (AISC 341-22 Table J9.1)	PE/SE		X	100% of SCBF protected zones
	Inspection of H-Piles (AISC 341-22 Section J11)				
	1. Protected zone - no holes or unapproved attachments made by the responsible contractor, as applicable. (AISC 341-22 Table J11.1)			X	None in go-by
	Structural Stainless Steel (IBC 2024 1705.2.2)				
	1. Special inspections and nondestructive testing in accordance with AISC 370-21.			X	
	Cold-formed Steel Deck (IBC 2024 1705.2.3)				
x	2. Special inspections in accordance with QA/QC-2022 Standard for Quality control (QC) and Quality assurance (QA) for Installation of Steel Deck.			X	
	Open-Web Steel Joists and Joist Girders (IBC 2024 Table 1705.2.4)				
	1. Installation of open-web steel joists and joist girders.				
	a. End connections - welding or bolted.			X	
	b. Bridging - horizontal or diagonal.				
	1. Standard bridging.			X	
	2. Bridging that differs from the SJI (Steel Joist Institute) specifications listed in Section 2207.1.			X	
	Inspection of Composite Structures Prior to Concrete Placement (AISC 341-22 Table J10.1)				

Required?	Structural Test or Special Inspection	Required Qualifications	Continuous	Periodic	Frequency of Periodic Test or Inspection
	1. Material identification of reinforcing steel (Type/Grade).			X	
	2. Determination of carbon equivalent for reinforcing steel other than ASTM A706.			X	
	3. Proper reinforcing steel size, spacing and orientation.			X	
	4. Reinforcing steel has not been rebent in the field.			X	
	5. Reinforcing steel has been tied and supported as required.			X	
	6. Required reinforcing steel clearances have been provided.			X	
	7. Composite member has required size.			X	
	Inspection of Composite Structures During Concrete Placement (AISC 341-22 Table J10.2)				
	1. Concrete: Material identification (mix design, compressive strength, maximum large aggregate size, maximum slump).			X	
	2. Limits on water added at the truck or pump.			X	
	3. Proper placement techniques to limit segregation.			X	
	Inspection of Composite Structures After Concrete Placement (AISC 341-22 J10)				
	1. Achievement of minimum specified concrete compressive strength.			X	
	Cold-formed Steel Trusses Spanning 60-feet or Greater (IBC 2024 Section 1705.2.45)				
	1. Verify temporary installation restraint/bracing installed in accordance with the approved shop drawings.			X	
	2. Verify permanent individual truss member restraint/bracing installed in accordance with the approved shop drawings.			X	
	Metal Building Systems (IBC 2024 Section 1705.2.6 - Inspect per Structural Steel requirements above as applicable plus requirements in IBC 2024 Table 1705.2.6)				

Required?	Structural Test or Special Inspection	Required Qualifications	Continuous	Periodic	Frequency of Periodic Test or Inspection
	1. Installation of rafter/beam flange braces and column flange braces.			X	
	2. Installation of purlins and girts, including specified lapping.			X	
	3. Purlin and girt restraint/bridging/bracing.			X	
	4. Installation of X-bracing, tightened to remove any sag.			X	
	Concrete Construction (IBC 2024 Section 1705.3)				
x	1. Inspect reinforcing steel, including prestressing tendons, and verify placement.	ACI-CCSI ICC-RCSI		X	Prior to each pour
	2. Inspection of reinforcing steel welding	ACI-CCSI ICC-RCSI			50% of welds
	a. Verify weldability of reinforcing bars other than ASTM A706.			X	
	b. Inspect welding of reinforcement for special moment frames, boundary elements of special structural walls and coupling beams.		X		
	c. Inspect welded reinforcement splices.		X		
	d. Inspect welding of primary tension reinforcement in corbels.		X		
	e. Inspect single pass fillet welds, maximum 5/16 inch.			X	
	f. Inspect all other weds.			X	
x	3. Inspection of anchors cast in concrete.	ACI-CCSI ICC-RCSI		X	Prior to each pour
	4. Inspection of anchors post-installed in hardened concrete members.	ACI-CCSI ICC-RCSI			
x	a. Adhesive anchors installed in horizontally or upwardly inclined orientations to resist sustained tension load.	ACI-CCSI ICC-RCSI	X		
x	b. Mechanical anchors and adhesive anchors not defined in 4a.	ACI-CCSI ICC-RCSI		X	50% of anchors

Required?	Structural Test or Special Inspection	Required Qualifications	Continuous	Periodic	Frequency of Periodic Test or Inspection
x	5. Verify use of approved design mix.	ACI-CCSI ICC-RCSI		X	Prior to each pour
x	6. Prior to placement fabricate specimens for strength tests, perform slump and air content tests, and determine the temperature of the concrete.	ACI-CCSI ICC-RCSI	X		
x	7. Inspect concrete and shotcrete placement for proper application techniques.	ACI-CCSI ICC-RCSI	X		
x	8. Inspect for maintenance of specified curing temperature and techniques.	ACI-CCSI ICC-RCSI		X	After each pour
	9. Inspection of prestressed concrete:				
	a. Application of prestressing forces.		X		
	b. Grouting of bonded prestressing tendons in the seismic-force-resisting system.		X		
	10. Erection of precast structural members.			X	
	11. For precast concrete diaphragm connections or reinforcement at joints classified as moderate or high deformability elements (MDE or HDE) in structures assigned to Seismic Design Category C, D, E, or F, inspect such connections and reinforcement in the field for:				
	a. Installation of the embedded parts.		X		
	b. Completion of the continuity of reinforcement across joints.		X		
	c. Completion of connections in the field.		X		
	12. Inspect installation tolerances of precast concrete diaphragm connections for compliance with ACI 550.5 (American Concrete Institute).			X	
	13. Verification of in-situ concrete strength, prior to stressing of tendons in post-tensioned concrete and prior to removal of shores and forms from beams and structural slabs.			X	
x	14. Inspection formwork for shape, location and dimensions of the concrete member being formed.	ACI-CCSI ICC-RCSI		X	Prior to each pour

Required?	Structural Test or Special Inspection	Required Qualifications	Continuous	Periodic	Frequency of Periodic Test or Inspection
	Masonry Construction (IBC 2024 Section 1705.4)				
	1. Inspect masonry construction in accordance with IBC 2024 Section 1705.4 and TMS 402-22 and TMS 602-22 (The Masonry Society).				
	Level 1 Quality Assurance				
	Verification Requirements:				
	1. Prior to construction, verification of compliance of submittals.			X	
	Level 2 Quality Assurance				
	Verification Requirements:				
	1. Prior to construction, verification of compliance submittals.	ICC-SMSI		X	Prior to each lift
	2. Prior to construction, verification of f'_m and f'_{AAC} except where specifically exempted by the code.	ICC-SMSI		X	Prior to each lift
	3. During construction, verification of slump flow and Visual Stability Index (VSI) when self-consolidating grout is delivered to the project site in accordance with TMS 602-22 Specification Article 1.5 & 1.6.A.			X	
	Inspection Tasks:				
	1. As masonry construction begins, verify the following are in compliance:				
	a. Proportions of site-prepared mortar.			X	
	b. Grade and size of prestressing tendons and anchorages.			X	
	c. Grade, type and size or reinforcement, connectors, anchor bolts, and prestressing tendons and anchorages.				
	d. Prestressing technique.			X	
	e. Properties of thin-bed mortar for AAC (autoclaved aerated concrete) masonry.		X	X	Continuous inspection is required for the

Required?	Structural Test or Special Inspection	Required Qualifications	Continuous	Periodic	Frequency of Periodic Test or Inspection
					first 5000 square feet of AAC masonry. Periodic inspection is required after the first 5000 square feet of AAC masonry.
	f. Sample panel construction.			X	
	2. Prior to grouting, verify the following are in compliance:				
	a. Grout space.			X	
	b. Placement of prestressing tendons and anchorages.			X	
	c. Placement of reinforcement, connectors, and anchor bolts.			X	
	d. Proportions of site-prepared grout and prestressing grout for bonded tendons.			X	
	3. Verify the compliance of the following during construction:				
	a. Materials and procedures with the approved submittals.			X	
	b. Placement of masonry units and mortar joint construction.			X	
	c. Size and location of structural members.			X	
	d. Type, size and location of anchors, including other details of anchorage of masonry to structural members, frames, or other construction.			X	
	e. Welding of reinforcement.		X		
	f. Preparation, construction and protection of masonry during cold weather (temperature below 40 degrees Fahrenheit) or hot weather (temperature above 90 degrees Fahrenheit).			X	

Required?	Structural Test or Special Inspection	Required Qualifications	Continuous	Periodic	Frequency of Periodic Test or Inspection
	g. Application and measurement of prestressing force.		X		
	h. Placement of grout and prestressing grout for bonded tendons is in compliance.		X		
	i. Placement of AAC masonry units and construction of thin-bed mortar joints.		X	X	Continuous inspection is required for the first 5000 square feet of AAC masonry. Periodic inspection is required after the first 5000 square feet of AAC masonry.
	4. Observe preparation of grout specimens, mortar specimens and/or prisms.			X	
	Level 3 Quality Assurance				
	Verification Requirements:				
	1. Prior to construction, verification of compliance of submittals.			X	
	2. Prior to construction, verification of f'_m and f'_{AAC} except where specifically exempted by the Code.			X	
	3. During construction, verification of Slump flow and Visual Stability Index (VSI) when self-consolidating grout is delivered to the project site in accordance with TMS 602-22 Specification Article 1.5 & 1.6.A.			X	
	4. During construction, verification of f'_m and f'_{AAC} for every 5000 square feet.			X	
	5. During construction, verification of proportions of materials as delivered to the project site for premixed or preblended mortar, prestressing grout, and grout other than self-consolidating grout.			X	
	Inspection Tasks:				

Required?	Structural Test or Special Inspection	Required Qualifications	Continuous	Periodic	Frequency of Periodic Test or Inspection
	1. As masonry construction begins, verify the following are in compliance:				
	a. Proportions of site-prepared mortar.			X	
	b. Grade and size of reinforcement, connectors, anchor bolts, and prestressing tendons and anchorages.			X	
	c. Grade, type and size or reinforcement, connectors, anchor bolts, and prestressing tendons and anchorages.			X	
	d. Prestressing technique.			X	
	e. Properties of thin-bed mortar for AAC (autoclaved aerated concrete) masonry.		X		
	f. Sample panel construction.		X		
	2. Prior to grouting, verify the following are in compliance:				
	a. Grout space		X		
	b. Placement of prestressing tendons and anchorages.			X	
	c. Placement of reinforcement, connectors, and anchor bolts.		X		
	d. Proportions of site-prepared grout and prestressing grout for bonded tendons.			X	
	3. Verify compliance of the following during construction:				
	a. Materials and procedures with the approved submittals.			X	
	b. Placement of masonry units and mortar joint construction.			X	
	c. Size and location of structural members.			X	
	d. Type, size and location of anchors, including other details of anchorage of masonry to structural members, frames, or other construction.		X		
	e. Welding of reinforcement.		X		

Required?	Structural Test or Special Inspection	Required Qualifications	Continuous	Periodic	Frequency of Periodic Test or Inspection
	f. Preparation, construction and protection of masonry during cold weather (temperature below 40 degrees Fahrenheit) or hot weather (temperature above 90 degrees Fahrenheit).			X	
	g. Application and measurement of prestressing force.		X		
	h. Placement of grout and prestressing grout for bonded tendons is in compliance.		X		
	i. Placement of AAC masonry units and construction of thin-bed mortar joints.		X		
	4. Observe preparation of grout specimens, mortar specimens and/or prisms.		X		
	Wood Construction (IBC 2024 Section 1705.5)				
	1. Inspect prefabricated wood structural elements in accordance with Section 1704.2.5.	PE/SE		X	50% and one of each unique condition
	2. High load diaphragms:				
	a. Verify sheathing grade and thickness.			X	
	b. Verify nominal size of framing members at adjoining panel edges.			X	
	c. Verify nail or staple diameter and length.			X	
	d. Verify number of fastener lines.			X	
	e. Verify spacing between fasteners in each line and at panel edges.			X	
	3. Shearwalls:	**PE/SE**			
	a. Verify sheathing grade and thickness.			X	50% and one of each unique condition
	b. Verify nominal size of framing members at adjoining panel edges.			X	50% and one of each unique condition

Required?	Structural Test or Special Inspection	Required Qualifications	Continuous	Periodic	Frequency of Periodic Test or Inspection
	c. Verify nail or staple diameter and length.			X	50% and one of each unique condition
	d. Verify number of fastener lines.			X	
	e. Verify spacing between fasteners in each line and at panel edges.			X	50% and one of each unique condition
	f. Location and size of holdowns.			X	100%
	4. Verify nailing, bolting, anchoring and fastening of:	PE/SE			
	a. Drag struts and collectors.			X	100%
	b. Braces.			X	
	c. Hold-downs.			X	100%
	5. Metal-plate-connected wood trusses spanning 60 feet or greater:				
	a. Verify temporary installation restraint/bracing installed in accordance with the approved shop drawings.			X	
	b. Verify permanent individual truss member restraint/bracing installed in accordance with the approved shop drawings.			X	
	Mass Timber Construction (IBC 2024 Section 1705.5.3) Mass timber elements in Types IV-A, IV-B and IV-C:				
	1. Inspection of anchorage and connections of mass timber construction to timber deep foundation systems.			X	
	2. Inspect erection of mass timber construction.			X	
	3. Inspection of connections where installation methods are required to meet design loads.			X	
	4. Threaded fasteners:				

Required?	Structural Test or Special Inspection	Required Qualifications	Continuous	Periodic	Frequency of Periodic Test or Inspection
	a. Verify use of proper installation equipment.			X	
	b. Verify use of pre-drilled holes where required.			X	
	c. Inspect screws, including diameter, length, head type, spacing, installation angle and depth.			X	
	5. Adhesive anchors installed in horizontal or upwardly inclined orientation to resist sustained tension loads.		X		
	6. Adhesive anchors not defined in preceding cell.			X	
	7. Bolted connections.			X	
	8. Concealed connections.			X	
	Soils (IBC 2024 Section 1705.6)				
x	1. Verify materials below shallow foundations are adequate to achieve the required bearing capacity.	PE/GE		X	Once after excavation
x	2. Verify excavations are extended to proper depth and have reached proper material.	PE/GE		X	Once prior to pour
x	3. Perform classification and testing of compacted fill materials.	PE/GE		X	Once for each batch
x	4. During fill placement, verify use of proper materials and procedure in accordance with the provisions of the approved geotechnical report. Verify densities and lift thicknesses during placement and compaction of compacted fill.	PE/GE	X		
x	5. Prior to placement of compacted fill, inspect subgrade and verify that site has been prepared properly.	PE/GE		X	Once prior to backfilling
	Driven Deep Foundation Elements (IBC 2024 Section 1705.7)				
	1. Verify element materials, sizes and lengths comply with the requirements.		X		

Required?	Structural Test or Special Inspection	Required Qualifications	Continuous	Periodic	Frequency of Periodic Test or Inspection
	2. Determine capacities of test elements and conduct additional load tests when required. Refer to project specifications.		X		
	3. Inspect driving operations and maintain complete and accurate records for each element.		X		
	4. Verify element locations and plumbness.		X		
	a. Verify type and size of hammer.		X		
	b. Record number of blows per foot of penetration.		X		
	c. Determine required penetration to achieve specified capacity.		X		
	d. Record pile tip and butt elevations.		X		
	e. Document any damage to any foundation element.		X		
	5. For steel piling, perform additional inspection in accordance with Section 1705.2 and AISC 341-16, Table J11.1.				
	6. For concrete elements and concrete-filled elements, perform additional inspections in accordance with Section 1705.3.				
	7. For specialty elements, perform additional inspections as determined by the registered design professional in responsible charge as required in the project specifications.				
	Cast-in-Place Deep Foundation (IBC 2024 Section 1705.8)				
	1. Inspect drilling operations and maintain complete and accurate records for each element.		X		
	2. Verify element locations and plumbness.		X		
	a. Verify element diameter.		X		
	b. Verify bell diameter (if applicable).		X		
	c. Verify element lengths.		X		

Required?	Structural Test or Special Inspection	Required Qualifications	Continuous	Periodic	Frequency of Periodic Test or Inspection
	d. Verify embedment depth into bedrock (if applicable).		X		
	e. Verify adequate end-bearing strata capacity.		X		
	f. Record concrete or grout volumes.		X		
	3. For concrete elements, perform tests and additional inspections in accordance with Section 1705.3.				
	Helical Piles (IBC 2024 Section 1705.9)				
	1. Verify pile locations.		X		
	a. Verify installation equipment used.		X		
	b. Verify pile dimensions.		X		
	c. Verify tip elevations.		X		
	d. Verify final depth.		X		
	e. Verify final installation torque.		X		
	f. Other data as required by the project specifications.		X		
	Fabricated Items (IBC 2024 Section 1705.11)				
	1. Inspect fabricated items in accordance with Section 1704.2.5.		X		
	Wind Resistance (IBC 2024 Section 1705.12)				
	1. Provide inspections when required by Section 1705.12.				
	Seismic Resistance (IBC 2024 Section 1705.13)				
	1. Provide inspections when required by Section 1705.13.	PE/SE			

Required?	Structural Test or Special Inspection	Required Qualifications	Continuous	Periodic	Frequency of Periodic Test or Inspection
	Testing and Qualification for Seismic Resistance (IBC 2024 Section 1705.14)				
	1. Test and qualify seismic resistance in accordance with IBC 2024 Section 1705.14 and the project specifications.	AWS-CWI ICC-SWSI			
	Sprayed Fire-Resistive Materials (IBC 2024 Section 1705.15)				
	1. Inspect sprayed fire-resistant materials in accordance with IBC 2024 Section 1705.15 and the project specifications.				
	Intumescent Fire-Resistive Materials (IBC 2024 Section 1705.16)				
	1. Perform inspections in accordance with AWCI 12-B (Association of the Wall and Ceiling Industry) and IBC 2024 Section 1705.16.			X	
	Exterior Insulation and Finish Systems (EIFS) (IBC 2024 Section 1705.17)				
	1. Perform inspections in accordance with project specifications and IBC 2024 Section 1705.17.			X	
	Fire-Resistant Penetrations and Joints (IBC 2024 Section 1705.18)				
	1. Perform inspections in accordance with project specifications and IBC 2024 Section 1705.18.			X	
	Smoke Control (IBC 2024 Section 1705.19)				
	1. Perform testing in accordance with project specifications and IBC 2024 Section 1705.19.				
	Sealing of Mass Timber (IBC 2024 Section 1705.20)				

Required?	Structural Test or Special Inspection	Required Qualifications	Continuous	Periodic	Frequency of Periodic Test or Inspection
	1. Perform testing in accordance with project specifications and IBC 2024 Section 1705.20.				

SECTION 01 42 00 – REFERENCE STANDARDS

PART 1 - GENERAL

1.1 ENVIRONMENTAL DEFINITIONS

A. Definitions pertaining to sustainable development: As defined in ASTM E2114 and as specified herein.

B. Biobased Materials: As defined in the Farm Security and Rural Investment Act, for purposes of Federal procurement of biobased products, "biobased" means a "commercial or industrial product (other than food or feed) that is composed, in whole or in significant part, of biological products or renewable domestic agricultural materials (including plant, animal, and marine materials) or forestry materials." Biobased materials also include fuels, chemicals, building materials, or electric power or heat produced from biomass as defined by The Biomass Research and Development Act of 2000.

1. Biobased content: Amount of biobased carbon in the material or product as a percentage of weight (mass) of total organic carbon in the material or product.

C. Chain-of-Custody: Process whereby a product or material is maintained under physical possession or control during its entire life cycle.

D. Deconstruction: Disassembly of buildings for purpose of recovering materials.

E. DFE (Design for the Environment): A technique that includes elements of resource conservation and pollution prevention as applied in various product sectors. A technique that incorporates approaches which are part of product (or assembly) concept, need and design. Considerations involve material selection, material and energy efficiency, reuse, maintainability and design for disassembly and recyclability. Refer to International Organization for Standardization (ISO) Guide 64 for additional clarification.

F. Environmentally preferable products: Products and services that have a lesser or reduced effect on the environment in comparison to conventional products and services. Refer to EPA's Final Guidance on Environmentally Preferable Purchasing Program.

G. Non-Renewable Resource: A resource that exists in a fixed amount that cannot be replenished on a human time scale. Non-renewable resources have potential for renewal only by geological, physical, and chemical processes taking place over of millions of years. Examples include iron ore, coal, and oil.

H. Perpetual Resource: A resource that is virtually inexhaustible on a human time scale. Examples include solar energy, tidal energy, and wind energy.

I. Recycled Content Materials: Products that contain pre-consumer or post-consumer materials as all or part of their feedstock. Recycled content claim shall be consistent Federal Trade Commission (FTC) Guide for Use of Environmental Marketing Claims.

J. Renewable Resource: A resource that is grown, naturally replenished, or cleansed, at a rate which exceeds depletion of the usable supply of that resource. A renewable resource can be exhausted if improperly managed. However, a renewable resource can last indefinitely with proper stewardship. Examples include trees in forests, grasses in grasslands, and fertile soil.

1.2 QUALITY ASSURANCE

A. Applicability of Standards: Unless the Contract Documents include more stringent requirements, applicable construction industry standards have the same force and effect as if bound or copied directly into Contract Documents to the extent referenced. Such standards are made a part of Contract Documents by reference.

B. Publication Dates: Comply with standards in effect as of date of Contract Documents, unless otherwise indicated.

C. Conflicting Requirements: Where compliance with two or more standards is specified, and standards may establish different or conflicting requirements for minimum quantities or quality levels, comply with most stringent requirement. Refer uncertainties and requirements that are different, but apparently equal, to Contracting Officer (CO) for decision before proceeding.

1.3 INDUSTRY STANDARDS

A. Applicability of Standards: Unless Contract Documents include more stringent requirements, applicable construction industry standards have same force and effect as if bound or copied directly into Contract Documents to the extent referenced. Such standards are made a part of Contract Documents by reference.

B. Publication Dates: Comply with standards in effect as of date of Contract Documents unless otherwise indicated.

C. Copies of Standards: Each entity engaged in construction on Project should be familiar with industry standards applicable to its construction activity. Copies of applicable standards are not bound with Contract Documents.

1. Where copies of standards are needed to perform a required construction activity, obtain copies directly from publication source.

1.4 ABBREVIATIONS AND ACRONYMS

A. Industry Organizations: Where abbreviations and acronyms are used in Specifications or other Contract Documents, they shall mean the recognized name of the entities found in Section 01 42 00 Sources for Reference Publications, Unified Facilities Guide Specifications (UFGS) (accessible via Masters website > Downloads section > click on UFGS Master (WBDG Website). Names, telephone numbers, and websites are subject to change and are believed to be accurate and up-to-date as of date of Contract Documents.

XX EXAMPLE Association (The)
www.EXAMPLE.org

B. Code Agencies: Where abbreviations and acronyms are used in Specifications or other Contract Documents, they shall mean the recognized name of the entities in following list. Names, telephone numbers, and websites are subject to change and are believed to be accurate and up-to-date as of date of Contract Documents.

DIN	Deutsches Institut fur Normung e.V. www.din.de	49 30 2601-3003
IAPMO	International Association of Plumbing and Mechanical Officials www.iapmo.org	(909) 472-4100
ICC	International Code Council www.iccsafe.org	(888) 422-7233
ICC-ES	ICC Evaluation Service, Inc. icc-es.org	(800) 423-6587 (562) 699-0543

C. Federal Government Agencies: Where abbreviations and acronyms are used in Specifications or other Contract Documents, they shall mean the recognized name of the entities in following list. Names, and websites are subject to change and are believed to be accurate and up-to-date as of date of Contract Documents.

ABA & ABAAS United States Access Board	Architectural Barriers Act (ABA) Architectural Barriers Act Accessibility Standards (ABAAS) www.access-board.gov
CoE	Army Corps of Engineers www.usace.army.mil
CPSC	Consumer Product Safety Commission www.cpsc.gov
DOC	Department of Commerce www.commerce.gov
DOE	Department of Energy www.energy.gov
EPA	Environmental Protection Agency www.epa.gov
FCC	Federal Communications Commission www.fcc.gov
GSA	General Services Administration www.gsa.gov

LBL	Lawrence Berkeley National Laboratory www.lbl.gov
NCHRP	National Cooperative Highway Research Program (See TRB (Transportation Resource Board))
NIST	National Institute of Standards and Technology www.nist.gov
OSHA	Occupational Safety & Health Administration www.osha.gov
PHS	U.S. Department of Health and Human Services www.hhs.gov
RUS	Rural Utilities Service (See USDA (Department of Agriculture))
SD	State Department www.state.gov
USDA	Department of Agriculture www.usda.gov
USP	U.S. Pharmacopeia www.usp.org
USPS	Postal Service www.usps.com

D. Standards and Regulations: Where abbreviations and acronyms are used in Specifications or other Contract Documents, they shall mean the recognized name of the standards and regulations in following list. Names, telephone numbers, and websites are subject to change and are believed to be accurate and up-to-date as of date of Contract Documents.

ABAAS	Architectural Barriers Act Accessibility Standards www.access-board.gov
CFR	Code of Federal Regulations Available from Government Printing Office www.govinfo.gov/app/collection/cfr
FED-STD	Federal Standard (See FS (Federal Specification))
FS	Federal Specification Available from Department of Defense Single Stock Point www.dsp.dla.mil/Specs-Standards/ Available from General Services Administration www.gsa.gov

Available from National Institute of Building Sciences
www.nibs.org

FTMS Federal Test Method Standard
(See FS (Federal Specification))

UFAS Uniform Federal Accessibility Standards
Available from Access Board
www.access-board.gov/guidelines-and-standards/buildings-and-sites/about-the-aba-standards/ufas
*(UFAS is **only** for housing projects per Fair Housing Act. See also the Fair Housing Act Design Manual, www.huduser.gov/portal/publications/destech/fairhousing)*

1.5 ENVIRONMENTAL REFERENCE STANDARDS

A. American Society of Heating Refrigerating and Air Conditioning Engineers (ASHRAE):
- **ASHRAE 52.2,** *Method of Testing General Ventilation Air Cleaning Devices for Removal Efficiency by Particle Size*
- **ASHRAE 55,** *Thermal Environmental Conditions for Human Occupancy*
- **ASHRAE 62.1,** *Ventilation for Acceptable Indoor Air Quality*
- **ASHRAE/IESNA 90.1,** *Energy Standard for Buildings, Except Low-Rise Residential Buildings*

B. American Society for Testing and Materials International (ASTM):
- A478 Standard Specification for Chromium-Nickel Stainless Steel Weaving and Knitting Wire
- A580/A580M Standard Specification for Stainless Steel Wire
- A653/A653M Standard Specification for Steel Sheet, Zinc-Coated (Galvanized) or Zinc-Iron Alloy-Coated (Galvannealed) by the Hot-Dip Process
- B813 Standard Specification for Liquid and Paste Fluxes for Soldering of Copper and Copper Alloy Tube
- C1240 Standard Specification for Silica Fume Used in Cementitious Mixtures
- C128 Standard Test Method for Density, Relative Density (Specific Gravity), and Absorption of Fine Aggregate
- C131 Standard Test Method for Resistance to Degradation of Small-Size Coarse Aggregate by Abrasion and Impact in the Los Angeles Machine
- C1338 Standard Test Method for Determining Fungi Resistance of Insulation Materials and Facings
- C136 Standard Test Method for Sieve Analysis of Fine and Coarse Aggregates
- C1371 Standard Test Method for Determination of Emittance of Materials Near Room Temperature Using Portable Emissometers
- C1549 Standard Test Method for Determination of Solar Reflectance Near Ambient Temperature Using a Portable Solar Reflectometer
- C289 Standard Test Method for Potential Alkali-Silica Reactivity of Aggregates (Chemical Method)
- C311 Test Methods for Sampling and Testing Fly Ash or Natural Pozzolans for Use as a Mineral Admixture in Portland-Cement Concrete
- C33 Standard Specification for Concrete Aggregates

- C593 Standard Specification for Fly Ash and Other Pozzolans for Use With Lime
- C595 Standard Specification for Blended Hydraulic Cements
- C618 Standard Specification for Coal Fly Ash and Raw or Calcined Natural Pozzolan for Use as a Mineral Admixture in Concrete
- C989 Standard Specification for Ground Granulated Blast-Furnace Slag for Use in Concrete and Mortars
- D1557 Standard Test Methods for Laboratory Compaction Characteristics of Soil Using Modified Effort (56,000 foot pound force per cubic foot (ft-lbf/ft3) (2,700 kilonewton meter per cubic meter (kN-m/m3))
- D198 Standard Test Methods of Static Tests of Lumber in Structural Sizes
- D2103 Standard Specification for Polyethylene Film and Sheeting
- D217 Standard Test Methods for Cone Penetration of Lubricating Grease
- D2369 Standard Test Method for Volatile Content of Coatings
- D3273 Standard Test Method for Resistance to Growth of Mold on the Surface of Interior Coatings in an Environmental Chamber
- D3786 Standard Test Method for Hydraulic Bursting Strength of Textile Fabrics-Diaphragm Bursting Strength Tester Method
- D3792 Standard Test Method for Water Content of Coatings by Direct Injection Into a Gas Chromatograph
- D3864 Standard Guide for Continual On-Line Monitoring Systems for Water Analysis
- D3960 Standard Practice for Determining Volatile Organic Compound (VOC) Content of Paints and Related Coatings
- D4017 Standard Test Method for Water in Paints and Paint Materials by Karl Fischer Method
- D4263 Standard Test Method for Indicating Moisture in Concrete by the Plastic Sheet Method
- D4444 Standard Test Methods for Use and Calibration of Hand-Held Moisture Meters
- D4552 Standard Practice for Classifying Hot-Mix Recycling Agents
- D4716 Test Method for Determining the (In-plane) Flow Rate per Unit Width and Hydraulic Transmissivity of a Geosynthetic Using a Constant Head
- D4840 Standard Guide for Sampling Chain-of-Custody Procedures
- D4887 Standard Test Method for Preparation of Viscosity Blends for Hot Recycled Bituminous Materials
- D5106 Standard Specification for Steel Slag Aggregates for Bituminous Paving Mixtures
- D5116 Standard Guide for Small-Scale Environmental Chamber Determinations of Organic Emissions from Indoor Materials/Products
- D5199 Standard Test Method for Measuring the Nominal Thickness of Geosynthetics
- D5268 Standard Specification for Topsoil Used for Landscaping Purposes
- D5359 Standard Specification for Glass Cullet Recovered from Waste for Use in Manufacture of Glass Fiber
- D5505 Standard Practice for Classifying Emulsified Recycling Agents
- D5509 Standard Practice for Exposing Plastics to a Simulated Compost Environment
- D5512 Standard Practice for Exposing Plastics to a Simulated Compost Environment Using an Externally Heated Reactor
- D5957 Standard Guide for Flood Testing Horizontal Waterproofing Installations
- D5603 Standard Classification for Rubber Compounding Materials—Recycled Vulcanizate Particulate Rubber
- D5663 Standard Guide for Validating Recycled Content in Packaging Paper and Paperboard

- D5759 Standard Guide for Characterization of Coal Fly Ash and Clean Coal Combustion Fly Ash for Potential Uses
- D5792 Standard Practice for Generation of Environmental Data Related to Waste Management Activities: Development of Data Quality Objectives
- D5834 Standard Guide for Source Reduction Reuse, Recycling, and Disposal of Solid and Corrugated Fiberboard (Cardboard)
- D5851 Standard Guide for Planning and Implementing a Water Monitoring Program
- D5852 Standard Test Method for Erodibility Determination of Soil in the Field or in the Laboratory by the Jet Index Method
- D6002 Standard Guide for Assessing the Compostability of Environmentally Degradable Plastics
- D6006 Standard Guide for Assessing Biodegradability of Hydraulic Fluid
- D6007 Standard Test Method for Determining Formaldehyde Concentration in Air from Wood Products Using a Small Scale Chamber
- D6046 Standard Classification of Hydraulic Fluids for Environmental Impact
- D6081 Standard Practice for Aquatic Toxicity Testing of Lubricants: Sample Preparation and Results Interpretation
- D6108 Standard Test Method for Compressive Properties of Plastic Lumber and Shapes
- D6109 Standard Test Methods for Flexural Properties of Unreinforced and Reinforced Plastic Lumber
- D6112 Standard Test Methods for Compressive and Flexural creep and Creep-Rupture of Plastic Lumber and Shapes
- D6117 Standard Test Methods for Mechanical Fasteners In Plastic Lumber and Shapes
- D6155 Standard Specification for Nontraditional Coarse Aggregates for Bituminous Paving Mixtures
- D6245 Standard Guide for Using Indoor Carbon Dioxide Concentrations to Evaluate Indoor Air Quality and Ventilation
- D6261 Standard Specification for Extruded and Compression Molded Basic Shapes Made from Thermoplastic Polyester (TPES)
- D6262 Standard Specification for Extruded, Compression Molded, and Injection Molded Basic Shapes of Poly(aryl ether ketone) (PAEK)
- D6270 Standard Practice for Use of Scrap Tires in Civil Engineering Applications
- D6329 Standard Guide for Developing Methodology for Evaluating the Ability of Indoor Materials to Support Microbial Growth Using Static Environmental Chambers
- D6330 Standard Practice for Determination of Volatile Organic Compounds (Excluding Formaldehyde) Emissions from Wood-Based Panels Using Small Environmental Chambers Under Defined Test Conditions
- D6345 Standard Guide for Selection of Methods for Active, Integrative Sampling of Volatile Organic Compounds in Air
- D6400 Standard Specification for Compostable Plastics
- D6629 Standard Guide for Selection of Methods for Estimating Soil Loss by Erosion
- D6886 Standard Test Method for Speciation of the Volatile Organic Compounds (VOCs) in Low VOC Content Waterborne Air-Dry Coatings by Gas Chromatography
- D696 Standard Test Method for Coefficient of Linear Thermal Expansion of Plastics Between -30°C and 30°C With a Vitreous Silica Dilatometer
- D698 Standard Test Methods for Laboratory Compaction Characteristics of Soil Using Standard Effort (12,400 ft-lbf/ft3 (600 kN-m/m3))
- D7186 Standard Practice for Quality Assurance Observation of Roof Construction and Repair

- E1105 Standard Test Method for Field Determination of Water Penetration of Installed Exterior Windows, Skylights, Doors, and Curtain Walls by Uniform or Cyclic Static Air Pressure Difference
- E1333 Standard Test Method for Determining Formaldehyde Concentrations in Air and Emission Rates from Wood Products Under Defined Test Conditions Using a Large Chamber
- E1433 Standard Guide for Selection of Standards on Environmental Acoustics
- E1609 Standard Guide for Development and Implementation of a Pollution Prevention Program
- E1686 Standard Guide for Selection of Environmental Noise Measurements and Criteria
- E1780 Standard Guide for Measuring Outdoor Sound Received from a Nearby Fixed Source
- E1827 Standard Test Methods for Determining Airtightness of Buildings Using an Orifice Blower Door
- E1861 Standard Guide for Use of Coal Combustion By-Products in Structural Fills
- E1918 Standard Test Method for Measuring Solar Reflectance of Horizontal and Low-Sloped Surfaces in the Field
- E1971 Standard Guide for Stewardship for the Cleaning of Commercial and Institutional Buildings
- E1980 Standard Practice for Calculating Solar Reflectance Index of Horizontal and Low-Sloped Opaque Surfaces
- E1991 Standard Guide for Environmental Life Cycle Assessment of Building Materials/Products
- E2114 Standard Terminology for Sustainability Relative to the Performance of Buildings
- E2128 Standard Guide for Evaluating Water Leakage of Building Walls
- E2129 Standard Practice for Data Collection for Sustainability Assessment of Building Products
- E241 Standard Guide for Limiting Water-Induced Damage to Buildings
- E2432 Standard Guide for General Principles of Sustainability Relative to Buildings
- E408 Standard Test Methods for Total Normal Emittance of Surfaces Using Inspection-Meter Techniques
- E413 Standard Classification for Rating Sound Insulation
- E477 Standard Test Method for Measuring Acoustical and Airflow Performance of Duct Liner Materials and Prefabricated Silencers
- E648 Standard Test Method for Critical Radiant Flux of Floor-Covering Systems Using a Radiant Heat Energy Source
- E779 Standard Test Method for Determining Air Leakage Rate by Fan Pressurization
- E781 Standard Practice for Evaluating Absorptive Solar Receiver Materials When Exposed to Conditions Simulating Stagnation in Solar Collectors With Cover Plates
- E782 Standard Practice for Exposure of Cover Materials for Solar Collectors to Natural Weathering Under Conditions Simulating Operational Mode
- E823 Standard Practice for Nonoperational Exposure and Inspection of a Solar Collector
- E881 Standard Practice for Exposure of Solar Collector Cover Materials to Natural Weathering Under Conditions Simulating Stagnation Mode
- E90 Standard Test Method for Laboratory Measurement of Airborne Sound Transmission Loss of Building Partitions and Elements
- E903 Standard Test Method for Solar Absorptance, Reflectance, and Transmittance of Materials Using Integrating Spheres

- F1869 Standard Test Method for Measuring Moisture Vapor Emission Rate of Concrete Subfloor Using Anhydrous Calcium Chloride
- F2170 Standard Test Method for Determining Relative Humidity in Concrete Floor Slabs Using in situ Probes

C. Center for Resource Solutions
- Green-e program

D. Environmental Protection Agency (EPA):
- **Comprehensive Procurement Guidelines**
- **ENERGY STAR**
- **Environmentally Preferable Purchasing Program Final Guidance**
- **GreenScapes program**
- **Heat Island Initiative**
- **Indoor Air Quality Building Education and Assessment Model (I-BEAM)**
- **National Environmental Performance Track**
- **Pollution Prevention (P2)**
- **Product Stewardship Program**
- **Significant New Alternatives Policy (SNAP) Program**

E. Federal Trade Commission:
- **Guide for the Use of Environmental Marketing Claims**

F. Forest Stewardship Council:
- **Chain-Of-Custody**
- **Forest Management**

G. Green Building Initiative (GBI):
- **Green Globes - US**

H. Green Seal:
- **GC-03 Anti-Corrosive Paints**
- **GC-12 Occupancy Sensors**
- **GS-05 Compact Fluorescent Lamps**
- **GS-11 Paints**
- **GS-13 Windows**
- **GS-14 Window Films**
- **GS-36 Commercial Adhesives**
- **GS-37 Industrial & Institutional Cleaners**

I. International Iron and Steel Institute:
- **CO2 Breakthrough Program**

J. International Organization of Standardization:
- **Guide 64; Guide for Inclusion of Environmental Aspects in Product Standards**
- **14001 Environmental management systems – Specification with guidance for use**
- **14004 Environmental Management Systems – General Guidelines on Principles, Systems and Supporting Techniques**
- **14020 Environmental labels and declarations – General principles**

- **14024 Environmental labels and declarations – Type I environmental labelling - Principles and procedures**
- **14040 Environmental management – Life cycle assessment – Principles and framework**

K. National Institute of Building Sciences:
- **MOIST program for transfer of heat and moisture**
- **Whole Building Design Guide**

L. National Institute of Standards and Technology:
- **BEES (Building for Environmental and Economic Sustainability) Lifecycle Decision Support Tool**

M. Sheet Metal and Air Conditioning Contractors' National Association (SMACNA):
- **IAQ Guidelines for Occupied Buildings Under Construction**

N. Southcoast Air Quality Management District:
- **1168 Adhesive And Sealant Applications**

O. US Composting Council:
- Seal of Testing Assurance Program

P. US Department of Agriculture:
- **Biobased Products – Definitions and Descriptions**

PART 2 - PRODUCTS (Not Used)

PART 3 - EXECUTION (Not Used)

END OF SECTION 01 42 00

SECTION 01 50 00 - TEMPORARY FACILITIES AND CONTROLS

PART 1 - GENERAL

1.1 SUMMARY

A. Section includes requirements for temporary utilities, support facilities, and security and protection facilities.

1.2 DEFINITIONS

A. Permanent Enclosure: As determined by Contracting Officer (CO), permanent or temporary roofing is complete, insulated, and weathertight; exterior walls are insulated and weathertight; and openings are closed with permanent construction or substantial temporary closures.

1.3 USE CHARGES

A. General: Cost or use charges for temporary facilities shall be included in Contract Sum as required.

B. Water Service: Non-potable Water from existing water well is available for use without metering and without payment of use charges. Provide connections and extensions of services as required for construction operations with any additional permit costs. Contractor must provide potable water for use.

C. Electric Power Service: Electric power from existing system is available for use with metering and with payment of use charges. Provide connections and extensions of services as required for construction operations with any additional permit costs.

1.4 QUALITY ASSURANCE

A. Electric Service: Comply with National Electrical Contractors Association (NECA), National Electrical Manufacturers Association (NEMA), and Underwriter Laboratories (UL) standards and regulations for temporary electric service. Install service to comply with National Fire Protection Association (NFPA) 70.

B. Environmental Protection: Provide environmental protection as required by agency(ies) with jurisdiction and as indicated in Contract Documents. Coordinate with requirements of the following:

1. Regulatory Requirements
2. Indoor Air Quality (IAQ) Management
3. Noise and Acoustics Management
4. Environmental Management
5. Construction Waste Management

C. Accessible Temporary Egress: Comply with applicable provisions in the United States (U.S.) Architectural & Transportation Barriers Compliance Board's Architectural Barriers Act Accessibility Standard (ABAAS) Accessibility Guidelines.

1.5 PROJECT CONDITIONS

A. Temporary Use of Permanent Facilities: Installer of each permanent service shall assume responsibility for operation, maintenance, and protection of each permanent service during its use as a construction facility before NPS acceptance, regardless of previously assigned responsibilities.
   1. Coordination of continued use of utilities to the Maintenance Building is critical. Coordinate necessary downtimes with CO.

PART 2 - PRODUCTS

2.1 MATERIALS

A. Temporary materials may be new or used, but must be adequate in capacity for required usage, must not create unsafe conditions, and must not violate requirements of applicable codes and standards.

B. Pavement: Comply with Division 32 Section "Site Concrete".

C. Chain-Link Fencing: Minimum 2 inch, 0.148 inch thick, galvanized steel, chain-link fabric fencing; minimum 6 feet high with galvanized steel pipe posts; minimum 2-3/8 inch OD (outside diameter) line posts and 2-7/8 inch OD corner and pull posts, with 1-5/8 inch OD top rails.

D. Portable Chain-Link Fencing: Minimum 2 inch, 9-gage, galvanized steel, chain-link fabric fencing; minimum 6 feet high with galvanized steel pipe posts; minimum 2-3/8 inch OD line posts and 2-7/8 inch OD corner and pull posts, with 1-5/8 inch OD top and bottom rails. Provide concrete or galvanized steel bases for supporting posts.

E. Barrier Tape: Yellow tape Imprinted with "CAUTION: CONSTRUCTION AREA, minimum 2" tall lettering, weather-resistant 3 mil. low density polyethylene film product.

F. Lumber and Plywood: Comply with requirements in Division 06 Section "Rough Carpentry".

G. Gypsum Board: Minimum 1/2 inch thick by 48 inches wide by maximum available lengths; regular-type panels with tapered edges. Comply with ASTM C 36/C 36M.

H. Insulation: Unfaced mineral-fiber blanket, manufactured from glass, slag wool, or rock wool; with maximum flame-spread and smoke-developed indexes of 25 and 50, respectively.

I. Polyethylene Sheet: Reinforced, fire-resistive sheet, 10 mil minimum thickness, with flame-spread rating of 15 or less per ASTM E 84 and passing NFPA 701 Test Method 2.

J. Dust-Control Adhesive-Surface Walk-off Mats: Provide mats minimum 36 by 60 inches.

2.2 TEMPORARY FACILITIES

A. Field Offices, General: Prefabricated or mobile units with serviceable finishes, temperature controls, and foundations adequate for normal loading.

B. Storage and Fabrication Sheds: Temporary weather tight sheds or other covered facilities for storage of materials subject to weather damage. Number and size of structures shall be subject to Contracting Officer's approval.

C. Toilets: Sufficiently lighted and ventilated toilet facilities in weatherproof, sight proof, ABAAS accessible, sturdy enclosures with privacy locks.

1. Provide separate toilet facilities for men and women.

2.3 EQUIPMENT

A. Fire Extinguishers: Portable, UL rated; with class and extinguishing agent as required by locations and classes of fire exposures.

B. Heating, Ventilation, and Air Conditioning (HVAC) Equipment: Unless Contracting Officer authorizes use of permanent HVAC system, provide vented, self-contained, liquid-propane-gas or fuel-oil heaters with individual space thermostatic control.

1. Use of gasoline-burning space heaters, open-flame heaters, or salamander-type heating units is prohibited.
2. Heating Units: Listed and labeled for type of fuel being consumed, by a testing agency acceptable to agency(ies) with jurisdiction, and marked for intended use.
3. Permanent HVAC System: If Owner authorizes use of permanent HVAC system for temporary use during construction, provide filter with Minimum Efficiency Reporting Value (MERV) of 8 at each return air grille in system and remove at end of construction.

C. Direct Digital Control (DDC) Internet Connection: Furnish, install and maintain a high-speed connection (Digital Subscriber Line (DSL) or similar) between the project's DDC system and the internet through a Contractor furnished internet service provider. Contractor is responsible for maintenance of this connection and costs associated with internet service provider through warranty period of this contract. Upon completion of warranty period, service shall be transferable to the Government at which time future costs for connection will no longer be the responsibility of Contractor.

PART 3 - EXECUTION

3.1 INSTALLATION, GENERAL

A. Locate facilities within project limits.

1. Locate facilities to limit site disturbance and as directed by the Contracting Officer.

B. Provide each facility ready for use when needed to avoid delay. Do not remove until facilities are no longer needed or are replaced by authorized use of completed permanent facilities.

3.2 TEMPORARY UTILITY INSTALLATION

A. General: Install temporary service or connect to existing service.
   1. Arrange with utility company, NPS, and existing users for time when service can be interrupted, if necessary, to make connections for temporary services. Acquire necessary permits. Coordination of continued use of utilities to the Maintenance Building is critical. Coordinate necessary downtimes with CO.

B. Storm Sewers and Drainage: Provide temporary utilities or connect to existing service to remove effluent lawfully.

C. Non-potable water for construction is available from existing site well. Install piping and connections as required.

D. Potable water is not available on site. Furnish cool, potable water for construction personnel in locations convenient to work stations.

E. Sanitary Facilities: Provide temporary toilets, and wash facilities for use by construction personnel.

   1. Place in approved locations secluded from public observation and convenient to work stations. Relocate as work progress requires.
   2. Maintain and clean toilet facilities at least weekly.
   3. Completely remove sanitary facilities on completion of work.

F. Heating and Cooling: Provide temporary heating and cooling required by construction activities for curing or drying of completed installations or for protecting installed construction from adverse effects of low temperatures or high humidity. Select equipment that will not have a harmful effect on completed installations or elements being installed.

   1. Use of permanent heating and cooling system will not be allowed without written authorization from Contracting Officer. When the permanent heating and cooling system is approved for use as temporary heating and cooling, pay costs until final acceptance. Permanent heating and cooling system shall be sufficiently complete, including controls, to permit safe operation
   2. Provide and maintain adequate approved facilities, as required for safety and construction requirements, during the work. Provide ample clearance around stoves, heaters, chimney and vent connections to prevent ignition of combustible material
   3. Install and maintain temporary filters when air handing equipment is used for temporary heating and cooling. Install new filters before final acceptance in addition to any extra sets of filters required. Clean coils as determined by Contracting Officer.
   4. Warranties for equipment used for temporary heating and cooling shall start on date of Final Acceptance.

G. Ventilation and Humidity Control: Provide temporary ventilation required by construction activities for curing or drying of completed installations or for protecting installed construction from adverse effects of high humidity. Select equipment that will not have a harmful effect on completed installations or elements being installed. Coordinate ventilation requirements to produce ambient condition required and minimize energy consumption.

H. Electric Power Service: Use of existing electric power service will be permitted, as long as equipment is maintained in a condition acceptable to NPS.
   1. When temporary connections are removed, connect to new utility services.

I. Lighting: Provide temporary lighting with local switching that provides adequate illumination for construction operations, observations, inspections, and traffic conditions.

   1. Install and operate temporary lighting that fulfills security and protection requirements without operating entire system.

J. Telephone Service: No telephone service is available on site for Contractor's use.

3.3 SUPPORT FACILITIES INSTALLATION

A. General: Comply with the following:

   1. Provide incombustible construction for offices, shops, and sheds located within construction area or within 50 feet of building lines. Comply with NFPA 241.
   2. Maintain support facilities until near Substantial Completion. Remove structures, equipment, and furnishings, and terminate services after punch list is 100 percent completed or when directed by Contracting Officer. Personnel remaining after Substantial Completion will be permitted to use permanent facilities, under conditions acceptable to Contracting Officer.

B. Traffic Controls: Erect and maintain barricades, lights, danger signals, and warning signs in accordance with Manual on Uniform Traffic Control Devices (MUTCD), Part IV, latest edition.

   1. Protect existing site improvements to remain including curbs, pavement, and utilities.
   2. Maintain access for fire-fighting equipment and access to fire hydrants.
   3. Illuminate barricades and obstructions at night; keep safety lights burning from sunset to sunrise.
   4. Adequately barricade and post open cuts in or adjacent to thoroughfares.
   5. Protect pedestrian traffic by guardrails or fences.
   6. When pedestrian traffic is detoured onto a roadway, provide temporary walkways with protection as required at ends and overhead. For walkways, use lumber running parallel to direction of traffic movement and provide ramps at changes of elevation.
   7. Cover pipes, hoses, and power lines crossing sidewalks and walkways with troughs using beveled edge boards.
   8. Install Barrier Tape where directed by Contracting Officer. Keep a minimum of two rolls on site.

C. Parking: Parking areas for construction personnel shall be located within project limits.

D. Dewatering Facilities and Drains: Comply with requirements of the agency(ies) with jurisdiction. Maintain Project site, excavations, and construction free of water.

   1. Dispose of rainwater in lawful manner that will not result in flooding Project or adjoining properties nor endanger permanent Work or temporary facilities.
   2. Remove snow and ice as required to minimize accumulations.

E. Waste Disposal Facilities: Provide waste-collection containers in sizes adequate to handle waste from construction operations. Comply with requirements of agency(ies) with jurisdiction.

F. Lifts and Hoists: Provide facilities necessary for hoisting materials and personnel.

1. Truck cranes and similar devices used for hoisting materials are considered "tools and equipment" and not temporary facilities.

3.4 SECURITY AND PROTECTION FACILITIES INSTALLATION

A. Environmental Protection: Provide protection, operate temporary facilities, and conduct construction in ways and by methods that comply with environmental regulations and minimize possible air, waterway, and subsoil contamination or pollution or other undesirable effects.

B. Cleaning of Equipment: Contractor shall ensure prior to moving on to Project Area, equipment, is free of soil, seeds, vegetative matter, or other debris that could contain or hold seeds. Ensure equipment has been pressure washed and is free of exotic species. Equipment shall be considered free of soil, seeds, and other debris when visual inspection does not disclose such material. Disassembly of equipment components or specialized inspection tools are not required.

C. Temporary Erosion and Sedimentation Control: Refer to Section 01 57 23 "Under and Acre Pollution Prevention".

D. Tree and Plant Protection: Refer to Section 01 11 00 "Summary of Work".

E. Pest Control: Follow NPS requirements to minimize attraction and harboring of rodents, roaches, and other pests and perform extermination and control procedures at regular intervals so Project will be free of pests and residues at Substantial Completion. Perform control operations lawfully, using environmentally safe materials.

F. Site Enclosure Fence: Before construction operations begin, furnish and install chain link fencing to prevent people and animals from easily entering site except by entrance gates.

1. Extent of Fence: As indicated on Drawings.
2. Locate vehicular gates to avoid interference with traffic on public thoroughfares.
3. Locate pedestrian entrance gates as required to provide controlled personnel entry.
4. Maintain security by limiting number of keys and restricting distribution to authorized personnel. Provide Contracting Officer with one set of keys.

G. Security Enclosure and Lockup: Install substantial temporary enclosure around partially completed areas of construction. Provide lockable entrances to prevent unauthorized entrance, vandalism, theft, and similar violations of security.

H. Barricades, Warning Signs, and Lights: Comply with requirements of agency(ies) with jurisdiction for erecting structurally adequate barricades, including warning signs and lighting.

I. Temporary Enclosures: Provide temporary enclosures for protection of construction, in progress and completed, from exposure, foul weather, other construction operations, and similar activities. Provide temporary weathertight enclosure for building exterior.

1. Where heating or cooling is needed and permanent enclosure is not complete, insulate temporary enclosures.

J. Temporary Fire Protection: Install and maintain temporary fire-protection facilities of types needed to protect against reasonably predictable and controllable fire losses. Comply with NFPA 241.

1. Responsible Person: Capable and qualified person shall be placed in charge of fire protection. Responsibilities shall include locating and maintaining fire protective equipment and establishing and maintaining safe torch cutting and welding procedures.
2. Tobacco Use, Smoking, and Vaping: Smoking within buildings or temporary storage sheds is prohibited.
3. Supervise welding operations, combustion-type temporary heating units, and similar sources of fire ignition according to requirements of NPS. Check with Park; many require "burn permits" for welding.
4. Develop and supervise overall fire-prevention and -protection program for personnel at Project Site. Review needs with local fire department and establish procedures to be followed. Instruct personnel in methods and procedures. Post warnings and information.
5. Hazard Control: Take necessary precautions to prevent fire during construction. Do not store flammable or combustible liquids in existing buildings. Provide adequate ventilation during use of volatile or noxious substances. Ensure cleanup procedures and storage requirements are followed at close of every work session.
6. Spark Arresters: Equip gasoline or diesel powered equipment used during periods of potential fire hazards or in potential forest and grass fire locations with spark arresters approved by United States Department of Agriculture (USDA) Forest Service.

    a. Written determinations of periods and areas of potential fire hazard will be issued by Contracting Officer.

7. Buildings: Furnish a minimum of one extinguisher for each 1,500 square feet of area or major fraction thereof.

    a. Travel distance from any work station to nearest extinguisher shall not exceed 75 feet.

8. Vehicles and Equipment: Provide one extinguisher on each vehicle or piece of equipment.
9. Service and Refueling Areas: Locate areas a minimum of 50 feet from buildings. Shut down equipment before refueling.
10. Use and storage of batteries on site shall be per manufacturer’s instructions and coordinated with other site operations.

3.5 OPERATION, TERMINATION, AND REMOVAL

A. Supervision: Enforce strict discipline in use of temporary facilities. Minimize waste and abuse, limit availability of temporary facilities to essential and intended uses.

B. Maintenance: Maintain facilities in good operating condition until removal.

1. Maintain operation of temporary enclosures, heating, cooling, humidity control, ventilation, and similar facilities on 24-hour basis where required to achieve indicated results and avoid possibility of damage.

C. Temporary Facility Changeover: Do not change over from using temporary security and protection facilities to permanent facilities until Substantial Completion.

D. Termination and Removal: Remove each temporary facility when need for its service has ended, when it has been replaced by authorized use of a permanent facility, or no later than Substantial Completion. Complete or, if necessary, restore permanent construction that may have been delayed because of interference with temporary facility. Repair damaged Work, clean exposed surfaces, and replace construction that cannot be satisfactorily repaired.

1. Materials and facilities that constitute temporary facilities are property of Contractor. NPS reserves right to take possession of Project identification signs.
2. At Substantial Completion, clean and renovate permanent facilities used during construction period.

END OF SECTION 01 50 00

SECTION 01 57 19.11 – INDOOR AIR QUALITY MANAGEMENT

PART 1 - GENERAL

1.1 SUMMARY

A. Section includes:

1. Special requirements for Indoor Air Quality (IAQ) management during construction operations for occupied building.

a. Control of emissions during construction.
b. Moisture control during construction.

2. Procedures for testing baseline IAQ. Baseline IAQ requirements, specify maximum indoor pollutant concentrations for acceptance of the facility.

1.2 DEFINITIONS

A. Definitions pertaining to sustainable development: As defined in ASTM E2114.

B. Adequate ventilation: Ventilation, including air circulation and air changes, required to cure materials, dissipate humidity, and prevent accumulation of particulates, dust, fumes, vapors, or gases.

C. Hazardous Materials: Any material regulated as a hazardous material in accordance with 49 CFR 173 (Code of Federal Regulations), requires a Material Safety Data Sheet (MSDS) in accordance with 29 CFR 1910.1200, or which during end use, treatment, handling, storage, transportation or disposal meets or has components which meet or have the potential to meet the definition of a Hazardous Waste in accordance with 40 CFR 261. Throughout this specification, hazardous material includes hazardous chemicals.

1. Hazardous materials include pesticides, biocides, and carcinogens as listed by recognized authorities, such as the Environmental Protection Agency (EPA) and the International Agency for Research on Cancer (IARC).

D. Indoor Air Quality (IAQ): Composition and characteristics of air in an enclosed space that affect occupants of that space. Indoor air quality of a space refers to relative quality of air in a building with respect to contaminants and hazards and is determined by the level of indoor air pollution and other characteristics of the air, including impact on thermal comfort such as air temperature, relative humidity and air speed.

E. Interior final finishes: Materials and products exposed to interior occupied spaces; including flooring, wall covering, finish carpentry, and ceilings.

F. Packaged dry products: Materials and products installed in dry form delivered in manufacturer's packaging; including carpets, resilient flooring, ceiling tiles, and insulation.

G. Wet products: Materials and products installed in wet form, including paints, sealants, adhesives, special coatings, and materials which require curing.

1.3 QUALITY ASSURANCE

A. Inspection and Testing Lab Qualifications: Minimum of 5 years of experience in performing types of testing specified herein.

1.4 SUBMITTALS

A. Indoor Air Quality (IAQ) Management Plan: After award and before Pre-construction conference, prepare and submit IAQ Management Plan, including:

1. Procedures for control of emissions during construction.

    a. Identify schedule for application of interior finishes: Identify each interior finish that generates odors, moisture, or vapors or is susceptible to adsorption of odors and vapors. Indicate air handling zone, sequence of application, and curing times.
    b. Identify potential sources of odor and dust.
    c. Identify construction activities likely to produce odor or dust.
    d. Identify areas of project potentially affected, especially occupied areas.
    e. Evaluate potential problems by severity and describe methods of control.
    f. Describe construction ventilation to be provided, including type and duration of ventilation, use of permanent Heating HVAC systems, types of filters and schedule for replacement of filters.
    g. Describe cleaning and dust control procedures.
    h. Describe coordination with commissioning procedures.

2. Procedures for moisture control during construction.

    a. Identify porous materials and absorptive materials.
    b. Identify schedule for inspection of stored and installed porous and absorptive materials.

3. Revise and resubmit Plan as required by Contracting Officer (CO).

    a. Approval of Contractor's Plan will not relieve the Contractor of responsibility for compliance with applicable environmental regulations.

B. Product Data:

1. Submit product data for filtration media used during construction and during operation. Include Minimum Efficiency Reporting Value (MERV).
2. Material Safety Data Sheets (MSDS): Submit MSDSs for inclusion in Operation and Maintenance Manual for:

    a. Adhesives
    b. Floor and wall patching/leveling materials
    c. Caulking and sealants

d. Insulating materials
e. Paint
f. Lubricants
g. Cleaning products

C. Inspection and Test Reports:

1. Moisture control inspections
2. Moisture content testing
3. Moisture penetration testing
4. Microbial Growth testing

PART 2 - PRODUCTS (Not Used)

PART 3 - EXECUTION

3.1 IAQ MANAGEMENT - EMISSIONS CONTROL

A. During construction operations, follow the recommendations in SMACNA IAQ Guidelines for Occupied Buildings under Construction.

B. HVAC Protection:

1. Seal return registers during construction operations.
2. Provide temporary exhaust during construction operations.
3. To greatest extent possible, isolate and/or shut down return side of HVAC system during construction. When ventilation system must be operational during construction activities, provide temporary filters at air inlets (returns) and at locations for filters prescribed in the design.
4. Contractor shall bear cost of cleaning required due to failure to protect ducts and equipment from construction dust.

C. Source Control: Provide low and zero VOC materials as specified.

D. Pathway Interruption: Isolate areas of work to prevent contamination of clean or occupied spaces. Provide pressure differentials and/or physical barriers to protect clean or occupied spaces.

E. Housekeeping: During construction, maintain project and building products and systems to prevent contamination of building spaces.

F. Temporary Ventilation: For materials/products that generally require ventilation for off gassing, provide an ACH (air changes per hour) of 1.5 or more and as follows:

1. Provide minimum 48-hour pre-ventilation of packaged dry products prior to installation. Remove from packaging and ventilate in a secure, dry, well-ventilated space free from strong contaminant sources and residues. Provide a temperature range of 60 degrees Fahrenheit minimum to 90-degree Fahrenheit maximum continuously during ventilation period. Do not ventilate within limits of Work unless otherwise approved by Contracting Officer.

2. Provide adequate ventilation during and after installation of interior wet products and interior final finishes.
3. Provide filtration media with a Minimum Efficiency Reporting Value (MERV) of 8 as determined by ASHRAE 52.2 during construction**.** Coordinate with work of Division 23 (15), Heating Ventilating and Air Conditioning (HVAC).

G. Scheduling: Schedule construction operations involving wet products prior to packaged dry products to the greatest extent possible.

H. Flush-Out: After construction ends, prior to occupancy and with all interior finishes installed, perform a building flush-out by supplying a total air volume of 14,000 cubic feet. of outdoor air per square feet of floor area while maintaining an internal temperature of at least 60 degrees Fahrenheit and relative humidity no higher than 60%.

1. Obtain Contracting Officers concurrence that construction is complete enough before beginning flush-out.
2. If additional construction involving materials that produce particulates or any of specified contaminants is conducted during or after flush-out, then flush-out process must be restarted.
3. Install new HVAC filtration media in locations identified to have permanent filtration in contract documents after completion of flush-out and before occupancy or further testing.

3.2 IAQ MANAGEMENT - MOISTURE CONTROL

A. Housekeeping:

1. Keep materials dry. Protect stored on-site and installed absorptive materials from moisture damage.
2. Verify installed materials and products are dry prior to sealing and weatherproofing building envelope.
3. Store interior absorptive materials only after building envelope is sealed and weatherproofed.

B. Inspections: Document and report results of inspections; state whether or not inspections indicate satisfactory conditions.

1. Examine materials for dampness as they arrive. If acceptable to Contracting Officer, dry damp materials completely prior to installation; otherwise, reject materials that arrive damp.
2. Examine materials for mold as they arrive and reject materials that arrive contaminated with mold.
3. Inspect stored and installed absorptive materials regularly for dampness and mold growth. Inspect after each rain event.

    a. If stored or installed absorptive materials become wet, notify Contracting Officer. Inspect for damage. If acceptable to the Contracting Officer, dry completely prior to closing in assemblies; otherwise, remove (in accordance with the Waste Management Plan) and replace with new materials.
4. Site drainage: Verify final grades of site work and landscaping drain surface water and ground water away from building.

5. Weatherproofing: Inspect moisture control materials as they are being installed. Include:

    a. Air barrier: Verify air barrier is installed without punctures and/or other damage. Verify air barrier is sealed completely.
    b. Flashing: Verify correct shingling of flashing for roof, walls, windows, doors, and other penetrations.
    c. Vapor Barrier: Verify vapor barrier is installed in accordance with Contract documents.
    d. Insulation layer: Verify insulation is installed without voids.
    e. Roofing: In accordance with ASTM D7186 Standard Practice for Quality Assurance Observation of Roof Construction and Repair.
6. HVAC: Inspect HVAC to verify:

    a. condensate pans are sloped and plumbed correctly;
    b. access panels are installed to allow for inspection and cleaning of coils and ductwork downstream of coils;
    c. ductwork and return plenums are air sealed;
    d. duct insulation is installed and sealed; and
    e. chilled water line and refrigerant line insulation are installed and sealed.]

C. Schedule:

1. Schedule work such that absorptive materials, such as porous insulations, paper-faced gypsum board, ceiling tile, and finish flooring, are not installed until they can be protected from rain and construction-related water.
2. Weather-proof as quickly as possible. Schedule installation of moisture-control materials, including but not limited to air barriers, flashing, exterior sealants and roofing, at earliest possible time.

D. Testing for Moisture Content: Test moisture content of porous materials and absorptive materials to ensure they are dry before sealing them into an assembly. Document and report results of testing. Where tests are not satisfactory, dry materials and retest. If satisfactory results cannot be obtained with retest, remove and replace with new materials.

1. Concrete: Moisture test prior to finish flooring application as specified in Division 9 (9).

2. Wood: Moisture test as per ASTM D4444 - Standard Test Methods for Use and Calibration of Hand-Held Moisture Meters; unless otherwise indicated acceptable upper limits for wood products are less than 20% at center of piece; less than 15% at surface.

E. Testing for Moisture Penetration:

1. Windows: Test as per ASTM E1105 Test Method for Field Determination of Water Penetration of Installed Exterior Windows, Skylights, Doors, and Curtain Walls by Uniform or Cyclic Static Air Pressure Difference; unless otherwise indicated, acceptable upper limits are no leakage for 15 minutes.
2. Horizontal Waterproofing (not roofing): Test as per ASTM D5957 Standard Guide for Flood Testing Horizontal Waterproofing Installations; acceptable upper limits are no leakage for 15 minutes.
3. Exterior Walls:

a. Air tightness of the enclosure test: ASTM E779 Standard Test Method for Determining Air Leakage Rate by Fan Pressurization or ASTM E1827 Standard Test Methods for Determining Air tightness of Buildings Using an Orifice Blower Door; acceptable upper limits are 0.25 CFM/sf or less at 50 Pascal's.
b. Water Leakage: Review as per ASTM E2128 Standard Guide for Evaluating Water Leakage of Building Walls.

END OF SECTION 01 57 19.11

SECTION 01 57 19.12 – NOISE AND ACOUSTICS MANAGEMENT

PART 1 - GENERAL

1.1 SUMMARY

A. Section includes:

1. Special requirements for noise and acoustics management during construction operations.

1.2 DEFINITIONS

A. Ambient noise level: The total noise associated with a given environment, being usually a composite of normal or existing sounds from all sources near and far, excluding the noise source at issue.

B. Daytime: The hours from 7 A.M. to 9 P.M. on weekdays and 9 A.M. to 9 P.M. on weekends and holidays.

C. Nighttime: All non-daytime hours.

D. Property line: The real or imaginary line along the ground surface and its vertical extension, which separates real property owned or controlled by one person from contiguous real property owned or controlled by another person or from any public right-of-way or from any public space.

E. Receiving noise area: Any real property where people live or work and where noise is heard, excluding the project or source area.

PART 2 - PRODUCTS (Not Used)

PART 3 - EXECUTION

3.1 NOISE MANGEMENT

A. Noise Control: Perform construction operations to minimize noise. Perform noise-producing work in less sensitive hours of the day or week as directed by the Contracting Officer CO).

B. Repetitive and/or intermittent, high-level noise: Permitted only during Daytime.

1. Do not exceed the following dB(A) limitations at 50 feet:

Sound Level in dB(A)	Time Duration of Impact Noise
70	More than 12 minutes in any hour
80	More than 3 minutes in any hour

2. Maximum permissible construction equipment noise levels at 50 feet:

EARTHMOVING	dB(A)	MATERIALS HANDLING	dB(A)
Front Loaders	75	Concrete Mixers	75
Backhoes	75	Concrete Pumps	75
Dozers	75	Cranes	75
Tractors	75	Derricks Impact	75
Scrapers	80	Pile Drivers	95
Graders	75	Jack Hammers	75
Trucks	75	Rock Drills	80
Pavers, Stationary	80	Pneumatic Tools	80
Pumps	75	Saws	75
Generators	75	Vibrators	75
Compressors	75		

C. Ambient Noise:

1. Maximum noise levels (dB (decibel)) for receiving noise area at property line shall be as follows:

   a. Residential receiving area
      Daytime: 65 dB
      Nighttime: 45 dB

   b. Commercial/Industrial receiving area
      Daytime: 67 dB
      Nighttime: 65 dB

   c. In the event the existing local ambient noise level exceeds the maximum allowable receiving noise level (dB), the receiving noise level maximum for construction operations shall be adjusted as follows:

   d. Residential receiving area: Maximum 3 additional dB above the local ambient as measured at property line.

   e. Commercial/Industrial receiving area: Maximum 5 additional dB above the local ambient as measured at the property line.

3.2 FIELD QUALITY CONTROL

A. Assess potential effects of construction noise on facility occupants in accordance with ASTM E1686 and as follows:

1. Ambient noise measurement: Measure at property line at a height of at least four (4) feet above the immediate surrounding surface. Average the ambient noise level over a period of at least 15 minutes.
2. Ambient noise measurement at urban sites: Conduct during morning peak traffic hour between 7 A.M. and 9 A.M. and afternoon peak traffic hour between 4 P.M. and 6 P.M. In addition, conduct a 24-hour measurement at the proposed project site to document the noise pattern throughout the day. Adjust and weight for seasonal and climatic variations.

B. Monitor noise produced from construction operations in accordance with ASTM E1780.

END OF SECTION 01 57 19.12

SECTION 01 57 23 - UNDER-AN-ACRE POLLUTION PREVENTION

PART 1 - GENERAL

1.1 SUMMARY

A. National Park Service (NPS) Standards and Guidelines require water quality be protected to ensure compliance with Organic Act. Contractor shall prepare an Under-An-Acre Pollution Prevention Plan (UPPP) for each project resulting in less than 1 acre of soil disturbance or not otherwise subject to requirements of NPDES program. (UPPP Guideline)

1.2 DEFINITIONS

A. Definitions pertaining to sustainable development: As defined in ASTM E2114.

B. Environmental Pollution and Damage: The presence of chemical, physical, or biological elements or agents which adversely affect human health or welfare; unfavorably alter ecological balances; or degrade utility of the environment for aesthetic, cultural, or historical purposes.

C. National Pollution Discharge Elimination System (NPDES) Phase I: Regulates discharges from construction sites that disturb 5 acres or more.

D. NPDES Phase II: Regulations expand existing General Permit requirements under Phase I to include and regulate discharges from construction sites that disturb land equal to or greater than one (1) acre and less than 5 acres, known as Small Construction Activity.

E. UPPP: Developed and implemented pollution prevention plan (including stormwater management measures, if needed) to protect environment from pollutants on construction projects with less than one acre of disturbance in conformance with NPS guidelines.

1.3 SUBMITTALS

A. After contract award and before pre-construction conference, prepare and submit:
   1. A UPPP in conformance with NPS guidelines and adherence to applicable construction storm water management practices.

B. Inspection Schedule: Submit schedule for inspection and monitoring of storm water pollution prevention measures.

C. Erosion Control Products: Submit manufacturer's product information and installation recommendations for silt fence, filter fabric, erosion control blanket, straw bales, and other materials proposed for use on this project.

1.4 QUALITY ASSURANCE

A. Contractor shall prepare and submit a plan to Contracting Officer (CO) for review and concurrence.

B. Orientation Meeting: Contractor shall be responsible for arranging and conducting Pollution Prevention meeting/briefing to inform parties scheduled to be on-site during project of measures to be implemented for proper pollution prevention and control (may be included as part of Pre-Construction Meeting).

   1. Installation of silt fences, storm drain protection, and other forms of pollution prevention controls shall not begin until after this meeting has occurred.

C. Pollution Prevention Manager: Contractor shall designate Pollution Prevention Manager who will be responsible for implementation, inspection, maintenance, and amendments to approved plan.

   1. Pollution Prevention Manager shall be familiar with UPPP procedures and Best Management Practices (BMPs) and shall ensure emergency procedures and plan are updated as needed and available for inspection.

   2. When changes in approved plan are required, Pollution Prevention Manager shall prepare and certify an amendment and submit to Contracting Officer for review and concurrence.

PART 2 - PRODUCTS

2.1 UNDER-AN-ACRE POLLUTION PREVENTION PLAN

A. Provide UPPP which conforms to NPS requirements (utilize UPPP template) and include:
   1. Responsible Parties
   2. General Information: Project Scope, Project Details, Site Information, and Spill Prevention
   3. Standards and Constraints
   4. Project Scheduling
   5. Known Data on Soil and Fill
   6. Activities with Potential to Generate Sediment
   7. Activities and Materials with Potential to Pollute Storm Water
   8. Management and Reporting BMPs
   9. Waste Management BMPs
   10. Non-Storm Water Pollution Control BMPs
   11. Soil Stabilization BMPs
   12. Sediment Control BMPs
   13. Other Pollution Control BMPs
   14. References
   15. Preparer's Certification
   16. Appendices: Contact Information, Pollution Prevention Control Map or Sheet(s), Standard Installation Specifications for each BMP, and Blank forms.

PART 3 - EXECUTION

3.1 ENVIRONMENTAL PROTECTION

A. Protection of Natural Resources: Comply with applicable regulations and these specifications. Preserve natural resources within project boundaries and outside limits of work performed under this Contract in their existing condition or restore to an equivalent or improved condition as approved by Contracting Officer.

B. Construction Zone: Arrange construction activities to minimize pollution (i.e., erosion, trash, etc.) to maximum practical extent.

1. Clearing, excavation, and grading shall be limited to those areas of project site necessary for construction. Minimize area exposed and unprotected.
2. Clearly mark and delineate limits of work activities.
3. Equipment shall not be allowed to operate outside limits of work or to disturb existing vegetation.
4. Excavation and grading shall be completed during dry season to maximum extent possible.
5. Material shall be stored away from locations where water is present to greatest extent practicable.

3.2 REGULATORY REQUIREMENTS

A. Contracting Officer Notification: Contractor shall notify Contracting Officer in writing and by telephone of these events:

1. Erosion and sediment control meeting/briefing.
2. Following installation of required sediment control structures.
3. Prior to removal of or modification to sediment control structures.
4. Prior to removal of sediment control structures.

3.3 UNDER-AN_ACRE POLLUTION PREVENTION PLAN

A. Review and Acceptance: Contractor and Contracting Officer will jointly review draft Plan and agree to needed revisions. Contractor shall incorporate revisions, sign, and submit final Plan to Contracting Officer. Final Plan will be the document enforced on the project.

1. Accepted Plan will describe and ensure implementation of practices to be used to reduce pollutants in storm water discharges.
2. Contractor shall maintain current copy of Plan and associated records and forms at jobsite throughout duration of project.
3. Plan shall be available for public inspection and inspection and use of Contracting Officer.
4. Approval of Contractor's Plan will not relieve Contractor of responsibility for compliance with applicable environmental regulations.

B. Implementation: Implement Plan as required throughout construction period and maintain erosion control elements in proper working order.

1. Do not perform clearing and grubbing or earthwork until Plan has been implemented.

3.4 SITE INSPECTIONS AND PLAN REVISIONS

A. Inspections: Contractor and Contracting Officer will perform a weekly inspection onsite.

1. Inspection shall include disturbed areas not completely stabilized, areas used for storage of materials, locations where vehicles enter or exit site, and other erosion and sediment controls included in the Plan.
2. Inspections shall be documented.
3. Inspection forms shall be retained onsite in Plan notebook throughout construction period.

B. Plan Revisions: It may be necessary to revise Plan during construction to make necessary improvements, revisions, or to respond to unforeseen conditions noted during construction or site inspections.

1. Plan shall specify mechanism whereby revisions may be proposed by Contractor or Contracting Officer.
2. Contractor and Contracting Officer will jointly review each revision to Plan before changes incorporated and implemented. Contractor will then provide revised copy of Plan to Contracting Officer.
3. Accepted modifications will be implemented within 7 calendar days following date of inspection when deficiencies or necessary corrections are first noted.

C. Negligence: Provide additional temporary erosion and pollution controls made necessary by Contractor's errors or negligence at no additional cost to Government.

3.5 HOUSEKEEPING AND SITE MANAGEMENT

A. Store materials onsite in conformance to Federal, state, local, and manufacturer's regulations and specifications. Use Best Management Practices to minimize risk of materials coming into contact with environmental conditions (i.e. water and wind) that could disperse them.

B. Manage solid waste in conformance to Federal, state, and local regulations. Best Management Practices should be used to minimize risk of materials coming into contact with environmental conditions (i.e. water and wind) that could disperse them.

C. Manage hazardous waste (including contaminated soil) in conformance to Federal, state, local and NPS regulations and guidelines.

3.6 EROSION CONTROL MEASURES

A. Erosion control measures shall consist of Best Management Practices for storm water discharges, including silt fencing, barrier protectors, straw bales, temporary soil retention blankets, excelsior drainage filters, sediment traps and berms.

B. Berms and excelsior drainage filters shall be used to form sediment traps and control run-on and run-off into other areas, including creeks, streams, marshes, access roads, well areas, and staging areas.

C. Erosion control measures shall be used to contain only direct precipitation in construction zone. Contained water shall be allowed to percolate into ground or drain slowly through drainage filter sediment traps.

D. Earthen sediment traps or holding ponds shall not be used unless accepted by Contracting Officer.

E. Reduce runoff velocity and direct surface runoff around and away from fuel containment, storage, and borrow areas.

F. Divert surface runoff around and away from cut and fill slopes.

G. Place drainage filters around catch basins to create sediment traps to control run-off from construction area.

H. Excess water used for dust control shall be contained within demolition areas by erosion control measures.

I. Contractor shall prevent deposition of materials onto paved areas. Contractor shall inspect paved areas for deposited materials weekly and remove materials immediately.

J. Furnish, install, maintain, and operate necessary control measures and other equipment necessary to prevent erosion as described in approved UPPP.

K. Before work begins, sufficient equipment shall be available on site to assure operation and adequacy of erosion control system can be maintained.

3.7 MAINTENANCE OF TEMPORARY FACILITIES

A. Ensure erosion and sediment control structures remain effective throughout excavation and grading operations. Relocate structures as necessary.

B. Inspect control structures after each significant rainfall. Promptly repair breaches which occur.

C. Contractor shall remove entrapped sediment from behind excelsior drainage filter after each storm.

3.8 REPORTING

A. If a discharge occurs or if project receives written notice or order from regulatory agency, Contractor shall immediately notify Contracting Officer and shall file written report to Agency(ies) with Jurisdiction within 7 days of discharge event, notice, or order. Corrective measures shall be implemented immediately following discharge, notice, or order. The report to the Agency(ies) with Jurisdiction shall contain:

1. Date, time, location, nature of operation, and type of discharge, including cause or nature of notice or order.
2. Best Management Practices deployed before discharge event, or prior to receiving notice or order.

3. Date of deployment and type of Best Management Practices deployed after discharge event, or after receiving notice or order, including additional Best Management Practices installed or planned to reduce or prevent re-occurrence.
4. An implementation and maintenance schedule for affected Best Management Practices.

3.9 SEDIMENT DISPOSAL

A. Sediment excavated from temporary sediment control structures shall be disposed on site with general fill, or with topsoil. Sediment shall be allowed to dry out as required before reuse.

B. Contractor shall place sediment removed from traps and other structures where it will not enter a storm drain or watercourse and where it will not immediately reenter the basin.

3.10 REMOVAL OF TEMPORARY POLLUTION CONTROL MEASURES

A. Temporary control measures shall be removed with permission of Contracting Officer within 20 working days after final acceptance of project, and/or once grading is complete and slopes have stabilized.

END OF SECTION 01 57 23

SECTION 01 67 00 - PRODUCT REQUIREMENTS

PART 1 - GENERAL

1.1 SUMMARY

A. Section includes administrative and procedural requirements for selection of products for use in Project; product delivery, storage, and handling; manufacturers' standard warranties on products; special warranties; and environmental requirements.

1.2 DEFINITIONS

A. Products: Items purchased for incorporating into Work, whether purchased for Project or taken from previously purchased stock. The term "product" includes "material," "equipment," "system," and terms of similar intent.

1. Named Products: Items identified by manufacturer's product name, including make or model number or other designation shown or listed in manufacturer's published product literature, current as of date of Contract Documents.
2. New Products: Items that have not previously been incorporated into another project or facility, except that products consisting of recycled-content materials are allowed, unless explicitly stated otherwise. Products salvaged or recycled from other projects are not considered new products.
3. Comparable Product: Product demonstrated and approved through submittal process, or where indicated as a product substitution, to have indicated qualities related to type, function, dimension, in-service performance, physical properties, appearance, and other characteristics that equal or exceed those of specified product.

B. Definitions pertaining to sustainable development: As defined in ASTM E2114.

C. Biobased Materials: As defined in Farm Security and Rural Investment Act, for purposes of Federal procurement of biobased products, "biobased" means a "commercial or industrial product (other than food or feed) composed, in whole or in significant part, of biological products or renewable domestic agricultural materials (including plant, animal, and marine materials) or forestry materials." Biobased materials also include fuels, chemicals, building materials, or electric power or heat produced from biomass as defined by The Biomass Research and Development Act of 2000.

1. Biobased content: Amount of biobased carbon in material or product as a percentage of weight (mass) of total organic carbon in material or product.

D. Chain-of-Custody: Process whereby a product or material is maintained under physical possession or control during its entire life cycle.

E. Environmentally preferable products: Products and services with lesser or reduced effect on the environment in comparison to conventional products and services. Refer to Environmental

Protection Agency's (EPA) Final Guidance on Environmentally Preferable Purchasing for more information.

F. Stewardship: Responsible use and management of resources in support of sustainability.

G. Sustainability: Maintenance of ecosystem components and functions for future generations.

1. Recycled Content Materials: Products containing pre-consumer or post-consumer materials as all or part of their feedstock. Recycled content claim shall be consistent with International Organization for Standardization (ISO) 140001 Standard for the Use of Environmental Marketing Claims.
2. Rapidly Renewable Material: Material made from plants typically harvested within a ten-year cycle.
3. Regional Materials: Materials manufactured and extracted, harvested, or recovered within a radius of 500 miles from Project location.

1.3 SUBMITTALS

A. Record Submittals as specified in – Sustainable Design Close-Out Documentation, submit:

1. Affirmative Procurement Reporting Form. Submit on form in Appendix A of this Section, or similar form as approved by Contracting Officer (CO).
2. Submit environmental data in accordance with Table 1 of ASTM E2129 for these products:

a. Finish Carpentry
b. Building Insulation
c. Roofing
d. Joint Sealers
e. Wood Doors
f. Windows
g. Gypsum Board
h. Wall Coverings
i. Paints & Coatings
j. HVAC equipment
k. Plumbing
l. Lighting equipment

.Material Safety Data Sheets (MSDS): For each product required by OSHA to have a MSDS, submit an MSDS. MSDS shall be prepared within the previous five years**.** Include information for MSDS Sections 1 to 16 in accordance with ANSI Z400.1 and as follows:

a. Section 1: Chemical Product and Company Identification
b. Section 2: Composition/Information on Ingredients
c. Section 3: Hazards Identification
d. Section 4: First Aid Measures
e. Section 5: Fire Fighting Measures
f. Section 6: Accidental Release Measures
g. Section 7: Handling and Storage
h. Section 8: Exposure Controls/Person Protection
i. Section 9: Physical and Chemical Properties

j. Section 10: Stability and Reactivity Data

k. Section 11: Toxicological Information. Include data used to determine the hazards cited in Section 3. Identify acute data, carcinogenicity, reproductive effects, and target organ effects. Provide written description of the process used in evaluating chemical hazards relative to preparation of the MSDS.

l. Section 12: Ecological Information. Include data regarding environmental impacts during raw materials acquisition, manufacture, and use. Include data regarding environmental impacts in event of accidental release.

m. Section 13: Disposal Considerations. Include data regarding proper disposal of the chemical. Include information regarding recycling and reuse. Indicate whether or not product is considered to be "hazardous waste" according to United States EPA Hazardous Waste Regulations 40 CFR 261 (Code of Federal Regulations).

n. Section 14: Transportation Information. Identify hazard class for shipping.

o. Section 15: Regulatory Information. Identify federal, state, and local regulations applicable to the material.

p. Section 16: Other Information. Include additional information relative to recycled content, biobased content, and other information regarding environmental and health impacts. Identify the date MSDS was prepared.

4. Chain of Custody: Submit chain-of-custody documentation for sustainable forestry for these products:

   a. Rough Carpentry
   b. Wood Doors

1.4 QUALITY ASSURANCE

A. Compatibility of Options: If Contractor is given option of selecting between two or more products for use on Project, product selected shall be compatible with products previously selected, even if previously selected products were also options.

1.5 PRODUCT DELIVERY, STORAGE, AND HANDLING

A. Deliver, store, and handle products using means and methods that prevent damage, deterioration, and loss, including theft. Comply with manufacturer's written instructions.

B. Delivery and Handling:

1. Schedule delivery to minimize long-term storage at Project site and prevent overcrowding of construction spaces.
2. Coordinate delivery with installation time to ensure minimum holding time for items that are flammable, hazardous, easily damaged, or sensitive to deterioration, theft, and other losses.
3. Deliver products to Project site in undamaged condition; in manufacturer's original sealed container or other packaging system; complete with labels and instructions for handling, storing, unpacking, protecting, and installing.
4. Inspect products on delivery to ensure compliance with Contract Documents. Ensure products are undamaged and properly protected.
5. Obtain materials in biodegradable or recyclable/reusable packaging which uses minimum amount of packaging possible.

C. Storage:

1. Allow for inspection and measurement of quantity or counting of units.
2. Store materials in manner to not endanger Project structure.
3. Store products subject to damage by the elements, under cover in weather tight enclosure above ground, with ventilation adequate to prevent condensation.
4. Store cementitious products and materials on elevated platforms.
5. Store foam plastic from exposure to sunlight, except to extent necessary for period of installation and concealment.
6. Comply with product manufacturer's written instructions for temperature, humidity, ventilation, and weather-protection requirements for storage.
7. Protect stored products from damage and liquids from freezing.
8. Store loose granular materials in well-drained area on solid surfaces to prevent mixing with foreign matter.

1.6 PACKAGING

A. Where Contractor has option to provide one of listed products or equal, preference shall be given to products with minimal packaging and easily recyclable packaging as defined in ASTM D5834.

B. Maximize use of source reduction and recycling procedures outlined in ASTM D5834.

C. Provide minimum 40 percent post-consumer recycled content and minimum 100 percent recovered fiber content of industrial paperboard in accordance with EPA's Comprehensive Procurement Guidelines and ASTM D5663.

D. Provide minimum 10 percent post-consumer recycled content and minimum 10 percent recovered fiber content of carrier board in accordance with EPA's Comprehensive Procurement Guidelines and ASTM D5663.

E. Provide minimum 20 percent post-consumer recycled content and minimum 40 percent recovered fiber content of brown papers (e.g., wrapping papers and bags) in accordance with EPA's Comprehensive Procurement Guidelines and ASTM D5663.

1.7 ENVIRONMENTALLY PREFERABLE PRODUCTS

A. Provide environmentally preferable products to greatest extent possible.

1. To greatest extent possible, provide products and materials with a lesser or reduced effect on the environment considering raw materials acquisition, production, manufacturing, packaging, distribution, reuse, operation, maintenance, and/or disposal of the product.
2. Eliminate use of ozone depleting compounds during and after construction where alternative environmentally preferable products are available, consistent with either Montreal Protocol and Title VI or Clean Air Act Amendments of 1990, or equivalent overall air quality benefits that take into account life cycle impacts.
3. Use products meeting or exceeding EPA's recycled content recommendations for EPA-designated products. Use materials with recycled content such that the sum of post-consumer recycled content plus one-half of the pre-consumer content constitutes at least 10% (based on cost) of total value of the materials in project.

1.8 PRODUCT WARRANTIES

A. Warranties specified in other Sections shall be in addition to, and run concurrent with, other warranties required by Contract Documents. Manufacturer's disclaimers and limitations on product warranties do not relieve Contractor of obligations under requirements of Contract Documents.

1. Manufacturer's Warranty: Preprinted written warranty published by individual manufacturer for product specifically endorsed by manufacturer to Owner.
2. Special Warranty: Written warranty required by or incorporated into Contract Documents, either to extend time limit provided by manufacturer's warranty or to provide more rights for Owner.

B. Special Warranties: Prepare written document containing appropriate terms and identification, ready for execution. Submit draft for approval before final execution.

1. Manufacturer's Standard Form: Modified to include Project-specific information and properly executed.
2. Specified Form: When specified forms are included with Specifications, prepare written document using appropriate form properly executed.
3. Refer to Divisions 2 through 49 Sections for specific content requirements and particular requirements for submitting special warranties.

C. Submittal Time: Comply with requirements in Section 01 77 00 "Closeout Procedures."

PART 2 - PRODUCTS

2.1 PRODUCT SELECTION PROCEDURES

A. General Product Requirements: Provide products to comply with Contract Documents, undamaged and, unless otherwise indicated, new at time of installation.

1. Provide products complete with accessories, trim, finish, fasteners, and other items needed for a complete installation and indicated use and effect.
2. Standard Products: If available, and unless custom products or nonstandard options are specified, provide standard products of types produced and used successfully in similar situations on other projects.
3. Government reserves right to limit selection to products with warranties not in conflict with requirements of Contract Documents.
4. Where products are accompanied by term "as selected," Contracting Officer will make selection.
5. Where products are accompanied by term "match sample," sample to be matched is Governments.
6. Descriptive, performance, and reference standard requirements in Specifications establish "salient characteristics" of products.

B. Product Selection Procedures:

1. Product: Where Specifications name single product and manufacturer, provide named product that complies with requirements or approved equal.
2. Manufacturer/Source: Where Specifications name single manufacturer or source, provide product by named manufacturer or source that complies with requirements or approved equal.
3. Products: Where Specifications include list of names of both products and manufacturers, provide one of the products listed that complies with requirements or approved equal.
4. Manufacturers: Where Specifications include list of manufacturers' names, provide a product by one of the manufacturers listed that complies with requirements or approved equal.
5. Available Products: Where Specifications include list of names of both products and manufacturers, provide one of the products listed, or an unnamed product, that complies with requirements. Comply with provisions in Part 2 "Comparable Products" Article for consideration of an unnamed product.
6. Available Manufacturers: Where Specifications include list of manufacturers, provide a product by one of the manufacturers listed, or an unnamed manufacturer, that complies with requirements. Comply with provisions in Part 2 "Comparable Products" Article for consideration of an unnamed product.
7. Product Options: Where Specifications indicate sizes, profiles, and dimensional requirements on Drawings are based on a specific product or system, provide specified product, system, or approved equal.
8. Basis-of-Design Product: Where Specifications name product and include a list of manufacturers, provide specified product or a comparable product by one of the other named manufacturers, or approved equal. Drawings and Specifications indicate sizes, profiles, dimensions, and other characteristics based on the product named.
9. Visual Matching Specification: Where Specifications require matching an established Sample, select product that complies with requirements and matches Architect's sample. Contracting Officers decision will be final on whether a proposed product matches.

    a. If no product available within specified category matches and complies with other specified requirements, comply with provisions in Part 2 "Product Substitutions" Article for proposal of product.

10. Visual Selection Specification: Where Specifications include phrase "as selected from manufacturer's colors, patterns, textures" or a similar phrase, select a product that complies with other specified requirements.

    a. Standard Range: Where Specifications include phrase "standard range of colors, patterns, textures" or similar phrase, Contracting Officer will select color, pattern, density, or texture from manufacturer's product line that does not include premium items.
    b. Full Range: Where Specifications include phrase "full range of colors, patterns, textures" or similar phrase, Contracting Officer will select color, pattern, density, or texture from manufacturer's product line that includes both standard and premium items.

2.2 COMPARABLE PRODUCTS

A. Conditions: Contracting Officer will consider Contractor's request for comparable product when the following conditions are satisfied. If following conditions are not satisfied, Contracting

Officer will return requests without action, except to record noncompliance with these requirements:

1. Evidence proposed product does not require revisions to Contract Documents, that it is consistent with Contract Documents and will produce indicated results and is compatible with other portions of Work.
2. Detailed comparison of significant qualities of proposed product with those named in Specifications. Significant qualities include attributes such as performance, weight, size, durability, visual effect, and specific features and requirements indicated.
3. Evidence proposed product provides specified warranty.
4. List of similar installations for completed projects with project names and addresses and names and addresses of architects and owners, if requested.
5. Samples, if requested.

PART 3 - EXECUTION

3.1 PROTECTION AFTER INSTALLATION

A. Provide adequate coverings as necessary to protect installed materials from damage resulting from natural elements, traffic, and subsequent construction. Remove when no longer needed.

END OF SECTION 01 67 00

AFFIRMATIVE PROCUREMENT REPORTING FORM
Recycled Content Materials & Biobased Content Materials

Project Name: _____ Project Number: _____

Contractor Name: _____ License Number: _____

Contractor Address: _____

Product	Total $ value provided	Total $ value with recycled content Pre-consumer	Total $ value with recycled content Post-consumer	Total $ value with biobased content	Exempted indicate 1,2,3,4	Comments
Compost						
Concrete with slag cement						
Concrete with low cement content						
Building Insulation						
Rock Wool						
Cellulose						
Perlite Comp Board						
Plastic Rigid Foam						
Glass Fiber Reinforced Foam						
Phenolic Rigid Foam						
Paint						
Reprocessed Latex Paint White & Light Colors						
Reprocessed Latex Dark Colors						
Consolidated Latex Paint						
Other						

CERTIFICATION

I hereby certify the information provided herein is accurate and that the requisition/procurement of all materials listed on this form comply with current EPA standards for recycled/recovered materials content. The following exemptions may apply to the non-procurement of recycled/recovered content materials:

1. The product does not meet appropriate performance standards.
2. The product is not available within a reasonable time frame.
3. The product is not available competitively (from two or more sources).
4. The product is only available at an unreasonable price (compared with a comparable non-recycled content product.)

Signature: _____ Date: _____

END OF
AFFIRMATIVE PROCUREMENT REPORTING FORM
Recycled Content Materials & Biobased Content Materials

SECTION 01 73 40 - EXECUTION

PART 1 - GENERAL

1.1 SUMMARY

A. Section includes general procedural requirements governing execution of Work including:

1. Coordination with utility service providers
2. Construction layout
3. Field engineering and surveying
4. General installation of products
5. Progress cleaning
6. Starting and adjusting
7. Protection of installed construction
8. Correction of the Work

1.2 SUBMITTALS

A. Certificates: Submit certificate signed by land surveyor certifying location and elevation of improvements comply with requirements.

B. Landfill Receipts: Submit copy of receipts issued by landfill facility, licensed to accept hazardous materials, for hazardous waste disposal.

C. Certified Surveys: Submit two copies signed by land surveyor.

D. Quantity Surveys: Submit two copies showing quantities of work performed and actual construction completed in place.

1.3 QUALITY ASSURANCE

A. Land Surveyor Qualifications: Professional land surveyor legally qualified to practice in jurisdiction where Project is located and-is experienced in providing land-surveying services of kind indicated.

PART 2 - PRODUCTS (Not Used)

PART 3 - EXECUTION

3.1 EXAMINATION

A. Existing Conditions: Existence and location of site improvements and other construction indicated as existing are not guaranteed.

1. Before beginning work, investigate and verify the existence and location of mechanical and electrical systems and other construction affecting the Work.

2. Before construction, verify the location and points of connection of utility services.

B. Existing Utilities: Existence and location of underground and other utilities and construction indicated as existing are not guaranteed. Before beginning sitework, investigate and verify existence and location of underground utilities and other construction affecting Work.

1. Before construction, verify location and invert elevation at points of connection of sanitary sewer, storm sewer, and water-service piping; and underground electrical services.
2. Furnish location data for work related to Project that must be performed by public utilities serving Project site.
3. Coordination of continued use of utilities to the Maintenance Building is critical. Coordinate necessary downtimes with CO.

C. Acceptance of Conditions: Examine substrates, areas, and conditions, with Installer or Applicator present where indicated, for compliance with requirements for installation tolerances and other conditions affecting performance. Record observations.

1. Verify compatibility with and suitability of substrates, including compatibility with existing finishes or primers.
2. Examine roughing-in for mechanical and electrical systems to verify actual locations of connections before equipment and fixture installation.
3. Examine walls, floors, and roofs for suitable conditions where products and systems are to be installed.
4. Proceed with installation only after unsatisfactory conditions have been corrected. Proceeding with the Work indicates acceptance of surfaces and conditions.

3.2 COORDINATION WITH UTILITY SERVICE PROVIDERS

1. Coordination with Utility Service Providers: Contact following Utility Service providers, sufficiently in advance to avoid delaying the work, to coordinate Contractor's portion of Work, testing requirements, inspections, etc. Coordination of continued use of utilities to the Maintenance Building is critical. Coordinate necessary downtimes with CO.

2. Electrical: Service Contact: Contact Idaho Power to coordinate Electrical service requirements.

3. Water Service Contact: Contact Park to coordinate Water service requirements.

4. Wastewater Service Contact: Contact Park to coordinate Wastewater service requirements.

5. Telecommunication Service Contact: Contact Park to coordinate Telecommunication service requirements.

3.3 PREPARATION

A. Field Measurements: Take field measurements as required to fit Work properly. Recheck measurements before installing each product. Where portions of Work are indicated fit to other

construction, verify dimensions of other construction by field measurements before fabrication. Coordinate fabrication schedule with construction progress to avoid delaying Work.

B. Space Requirements: Verify space requirements and dimensions of items shown diagrammatically on Drawings.

C. Review of Contract Documents and Field Conditions: Immediately on discovery of need for clarification of the Contract Documents caused by differing field conditions outside control of Contractor, submit request for information to Contracting Officer in accordance with Section 01 31 00 "Project Management and Coordination."

3.4 CONSTRUCTION LAYOUT

A. Verification: Verify layout information shown on Drawings, in relation to the existing benchmarks before proceeding to lay out Work. Notify Contracting Officer promptly if discrepancies are discovered.

B. General: Engage a land surveyor to lay out Work using accepted surveying practices.

1. Maintain existing benchmarks 235, 237, and 238.
2. Establish dimensions within tolerances indicated. Do not scale Drawings to obtain required dimensions.
3. Inform installers of lines and levels to which they must comply.
4. Check location, level and plumb, of every major element as Work progresses.
5. Notify Contracting Officer when deviations from required lines and levels exceed allowable tolerances.

C. Site Improvements: Locate and lay out site improvements, including pavements, grading, fill and topsoil placement, utility slopes, and invert elevations.

D. Building Lines and Levels: Locate and lay out control lines and levels for structures, building foundations, column grids, and floor levels, including those required for mechanical and electrical work. Transfer survey markings and elevations for use with control lines and levels. Level foundations and piers from two or more locations.

E. Record Log: Maintain log of layout control work. Record deviations from required lines and levels. Include beginning and ending dates and times of surveys, weather conditions, name and duty of each survey party member, and types of instruments and tapes used. Make log available for review by National Park Service (NPS).

3.5 FIELD ENGINEERING

A. Reference Points: Locate existing permanent benchmarks, control points, and similar reference points before beginning Work. Preserve and protect permanent benchmarks and control points during construction operations. Controls destroyed by Contractor will be replaced by Contractor at their expense.

1. Existing Monuments: All benchmarks, land corners, and triangulation points, established by other surveys, existing within construction area shall be preserved. If existing monuments interfere with Work, secure written permission before removing them.

B. Benchmarks: Maintain existing benchmarks and control points.

C. Certified Survey: On completion of foundation walls, major site improvements, and other work requiring field-engineering services, prepare a certified survey showing dimensions, locations, angles, and elevations of construction and sitework.

3.6 INSTALLATION

A. General: Locate Work and components of Work accurately in correct alignment and elevation, as indicated.

1. Make vertical work plumb and make horizontal work level.
2. Where space is limited, install components to maximize space available for maintenance and ease of removal for replacement.
3. Conceal pipes, ducts, and wiring in finished areas, unless otherwise indicated.

B. Comply with manufacturer's written instructions and recommendations for installing products in applications indicated.

C. Install products at the time and under conditions for best possible results. Maintain conditions required for product performance until Substantial Completion.

D. Conduct construction operations so no part of the Work is subjected to damaging operations or loading in excess of that expected during normal conditions of occupancy.

E. Tools and Equipment: Do not use tools or equipment that produce harmful noise levels.

F. Templates: Obtain and distribute to parties involved templates for work specified to be factory prepared and field installed. Check Shop Drawings of other work to confirm adequate provisions are made for locating and installing products to comply with indicated requirements.

G. Anchors and Fasteners: Provide anchors and fasteners as required to anchor each component securely in place, accurately located and aligned with other portions of Work.

1. Mounting Heights: Where mounting heights are not indicated, mount components at heights directed by Contracting Officer.
2. Allow for building movement, thermal expansion, and contraction.
3. Coordinate installation of anchorages. Furnish setting drawings, templates, and directions for installing anchorages, including sleeves, concrete inserts, anchor bolts, and items with integral anchors to be embedded in concrete or masonry. Deliver to Project site in time for installation.

H. Joints: Make joints of uniform width. Where joint locations in exposed work are not indicated, arrange joints for best visual effect. Fit exposed connections together to form hairline joints.

I. Hazardous Materials: Use products, cleaners, and installation materials not considered hazardous.

J. Quantity surveys: Shall be conducted, and data derived from these surveys shall be used in computing quantities of work performed and actual construction completed and in place.

1. Contractor shall conduct original and final surveys and surveys for any periods for which progress payments are requested. These surveys shall be conducted under direction of a representative of the Contracting Officer, unless Contracting Officer waives requirement in a specific instance. Government shall make such computations as are necessary to determine quantities of work performed or finally in place. Contractor shall make computations based on surveys for any periods for which progress payments are requested.
2. Promptly upon completing a survey, Contractor shall furnish originals of field notes and other records relating to survey or layout of Work to Contracting Officer. Contractor shall retain copies of all such material furnished to Contracting Officer.

3.7 PROGRESS CLEANING

A. General: Clean Project site, work areas, and common areas daily. Coordinate progress cleaning for joint-use areas where more than one Installer has worked. Enforce requirements strictly. Dispose of materials lawfully.

1. Comply with requirements in National Fire Protection Association (NFPA) 241 for removal of combustible waste materials and debris at the end of every work session.
2. Do not hold materials more than 7 days during normal weather or 3 days if the temperature is expected to rise above 80 degrees Fahrenheit.
3. Containerize hazardous and unsanitary waste materials separately from other waste. Mark containers appropriately and dispose of legally, according to regulations.

B. Site: Maintain Project site free of waste materials and debris.

C. Work Areas: Clean areas where work is in progress to level of cleanliness necessary for proper execution of Work.

1. Remove liquid spills promptly.
2. Where dust would impair proper execution of Work, broom-clean or vacuum entire work area, as appropriate.
3. Contractor shall provide progress cleaning that minimizes sources of food, water, and harborage available to pests.

D. InstalledWork: Keep installed work clean. Clean installed surfaces according to written instructions of manufacturer or fabricator of product installed, using only cleaning materials specifically recommended. If specific cleaning materials are not recommended, use cleaning materials not hazardous to health or property and will not damage exposed surfaces.

1. Utilize non-toxic cleaning materials and methods.

a. Comply with Green Seal Standard (GS) 37 for general purpose cleaning and bathroom cleaning.
b. Use natural cleaning materials where feasible. Natural cleaning materials include:

1) Abrasive cleaners: substitute 1/2 lemon dipped in borax.

2) Ammonia: substitute vinegar, salt and water mixture, or baking soda and water.
3) Disinfectants: substitute 1/2 cup borax in gallon water.
4) Drain cleaners: substitute 1/4 cup baking soda and 1/4 cup vinegar in boiling water.
5) Upholstery cleaners: substitute dry cornstarch.

E. Concealed Spaces: Remove debris from concealed spaces before enclosing the space.

F. Exposed Surfaces in Finished Areas: Clean exposed surfaces and protect from damage and deterioration at time of Substantial Completion.

G. Waste Disposal: Do not bury or burn waste materials on-site. Do not wash waste materials down sewers or into waterways.

H. Clean and protect construction in progress and adjoining materials already in place during handling and installation. Apply protective covering where required to ensure protection from damage or deterioration at Substantial Completion.

I. Clean and provide maintenance on completed construction as frequently as necessary through remainder of the construction period. Adjust and lubricate operable components to ensure operability without damaging effects.

J. Limiting Exposures: Supervise construction operations so that no part of construction completed or in progress, is subject to harmful, dangerous, damaging, or deleterious exposure during construction period.

K. Final Cleaning: At completion of Work, remove remaining waste materials, rubbish, tools, equipment, machinery and surplus materials. Clean exposed surfaces and leave Project clean and ready for occupancy.

1. Provide final cleaning in accordance with ASTM E1971.

3.8 STARTING AND ADJUSTING

A. Start equipment and operating components to confirm proper operation. Remove malfunctioning units, replace with new units, and retest.

B. Adjust operating components for proper operation without binding. Adjust equipment for proper operation.

C. Test each piece of equipment to verify proper operation. Test and adjust controls and safeties. Replace damaged and malfunctioning controls and equipment.

D. Manufacturer's Field Service: If factory-authorized service representative is required to inspect field-assembled components and equipment installation, comply with qualification requirements in Section 01 40 00 "Quality Requirements."

3.9 PROTECTION OF INSTALLED CONSTRUCTION

A. Provide final protection and maintain conditions that ensure installed Work is without damage or deterioration at time of Substantial Completion.

B. Comply with manufacturer's written instructions for temperature and relative humidity.

3.10 CORRECTION OF THE WORK

A. Repair or remove and replace defective construction. Restore damaged substrates and finishes.

1. Repairing includes replacing defective parts, refinishing damaged surfaces, touching up with matching materials, and properly adjusting operating equipment.

B. Restore permanent facilities used during construction to specified condition.

C. Remove and replace damaged surfaces exposed to view if surfaces cannot be repaired without visible evidence of repair.

D. Repair components that do not operate properly. Remove and replace operating components that cannot be repaired.

E. Remove and replace chipped, scratched, and broken glass or reflective surfaces.

END OF SECTION 01 73 40

SECTION 01 74 19 - CONSTRUCTION WASTE MANAGEMENT AND DISPOSAL

PART 1 - GENERAL

1.1 SUMMARY

A. Section includes administrative and procedural requirements for:

1. Recycling nonhazardous demolition and construction waste.
2. Disposing of nonhazardous demolition and construction waste.

1.2 DEFINITIONS

A. Construction Waste: Building and site improvement materials and other solid waste resulting from construction, remodeling, renovation, or repair operations. Construction waste includes packaging.

B. Demolition Waste: Building and site improvement materials resulting from demolition or selective demolition operations.

C. Solid Waste: Garbage, debris, sludge, or other discharged material (except hazardous waste) including solid, liquid, semisolid, or contained gaseous materials resulting from domestic, industrial, commercial, mining, or agricultural operations.

D. Debris: Non-hazardous solid waste generated during construction, demolition, or renovation of a structure which exceeds 2.5 inch particle size that is: a manufactured object; plant or animal matter; or natural geologic material (e.g. cobbles and boulders). A mixture of debris and other material such as soil or sludge is also subject to regulation as debris if mixture is comprised primarily of debris by volume, based on visual inspection.

E. Disposal: Removal off-site of demolition and construction waste and subsequent sale, recycling, reuse, or deposit in landfill or incinerator acceptable to authorities having jurisdiction.

F. Environmental Pollution and Damage: Presence of chemical, physical, or biological elements or agents which adversely affect human health or welfare; unfavorably alter ecological balances; or degrade utility of environment for aesthetic, cultural, or historical purposes.

G. Garbage: Refuse and scraps resulting from preparation, cooking, dispensing, and consumption of food.

H. Hazardous Materials: Material regulated as a hazardous material in accordance with 49 CFR 173 (Code of Federal Regulations), requires a Material Safety Data Sheet (MSDS) in accordance with 29 CFR 1910.1200, or which during end use, treatment, handling, storage, transportation or disposal meets or has components which meet or have potential to meet the definition of Hazardous Waste in accordance with 40 CFR 261.

I. Recycle: Recovery of demolition or construction waste for subsequent processing in preparation for reuse.

J. Salvage: Recovery of demolition or construction waste and subsequent sale or reuse in another facility.

K. Single-use plastic products: Plastic items intended to be disposed of immediately after use, including plastic and polystyrene food and beverage containers, bottles, straws, cups, cutlery, and disposable plastic bags.

1.3 PERFORMANCE REQUIREMENTS

A. General: Project shall minimize creation of construction, deconstruction, and demolition waste to protect and restore natural habitat and resources. Minimize factors contributing to waste such as over packaging, improper storage, ordering error, poor planning, breakage, mishandling, single-use plastic products, and contamination. A Waste Management Plan shall be developed to ensure that existing site and building materials are reused or recycled. Minimize waste disposal in landfills.

B. Recycle Requirements: Develop waste management plan resulting in end-of-Project rates for recycling of 50 percent by weight of total waste generated by the Work. The following waste categories, at a minimum, shall be diverted from a landfill:

1. Land clearing debris (chipped debris can be used on site for mulch or erosion control)
2. Clean dimensional wood, palettes
3. Plywood, OSB (oriented strand board), and particle board
4. Concrete (can be ground and used for fill on site)
5. Cardboard, paper, packaging, newsprint
6. Metals (from banding, stud trim, piping, rebar, roofing, other trim, steel, iron, galvanized sheet steel, stainless steel, aluminum, copper, zinc, lead, brass, and bronze)
7. Gypsum drywall - unpainted
8. Non-hazardous paint and paint cans
9. Beverage containers: Aluminum, glass, and plastic containers
10. Insulation
11. Ductwork
12. Wiring
13. Other mixed construction and demolition waste as appropriate.

C. If waste materials encountered during deconstruction/demolition or construction phase are found to contain lead, asbestos, polychlorinated biphenyls (PCBs), (such as fluorescent lamp ballasts), or other harmful substances, they are to be handled and removed in accordance with local, state, and federal laws and requirements concerning hazardous waste.

D. Existing items and material to be removed during deconstruction/demolition phase shall be reused in construction phase of the Project. Items that cannot be reused shall be recycled. Items considered for reuse must be in refurbishable condition and must meet quality standards set forth in these specifications. Contractor shall ensure quality of the item(s) in question will meet or exceed accepted industry or trade standards for first quality commercial grade application. During construction, deconstruction, or demolition Contracting Officer (CO) may designate other objects or materials for reuse.

1.4 SUBMITTALS

A. Waste Management Plan: After award of contract and prior to scheduled Pre-Construction Conference, Contractor shall submit a draft Waste Management Plan to Contracting Officer for approval. Submit electronic copy of plan. Revise and resubmit Plan as required by Contracting Officer. Approval of Contractor's Plan will not relieve Contractor of responsibility for compliance with applicable environmental regulations.

B. Progress Documentation: Supplemental to Waste Management Plan, document solid waste disposal, diversion, and cost/revenue analysis and submit completed worksheet on a monthly basis. See Project Waste Management Plan Worksheet Sample, attached to the end of the Division 1 Specifications, and report totals to date for column headings.

C. Waste Reduction Calculations: Before request for Substantial Completion, submit electronic copy of calculated end-of-Project rates for recycling and disposal as a percentage of total waste generated by the Work.

D. Records of Donations: Indicate receipt and acceptance of salvageable waste donated to individuals and organizations. Indicate whether organization is tax exempt.

E. Records of Sales: Indicate receipt and acceptance of salvageable waste sold to individuals and organizations. Indicate whether organization is tax exempt.

F. Recycling and Processing Facility Records: Indicate receipt and acceptance of recyclable waste by recycling and processing facilities licensed to accept them. Include manifests, weight tickets, receipts, and invoices.

G. Landfill and Incinerator Disposal Records: Indicate receipt and acceptance of waste by landfills and incinerator facilities licensed to accept them. Include manifests, weight tickets, receipts, and invoices.

H. Qualification Data: For Waste Management Coordinator

I. Statement of Refrigerant Recovery: Signed by refrigerant recovery technician responsible for recovering refrigerant, stating refrigerant that was present was recovered and recovery was performed according to Environmental Protection Agency (EPA) regulations. Include name and address of technician and date refrigerant was recovered.

J. Progress payment requirements:

1. With each Application for payment, submit an updated Project Waste Management Plan worksheet for solid waste disposal and diversion.
2. With each Application for Payment, submit manifests, weight tickets, receipts, and invoices specifically identifying the Project and waste material.

K. Closeout Submittals

1. With Closeout Submittals, submit a summary of a Project Waste Management Plan worksheet for solid waste disposal and diversion.

1.5 QUALITY ASSURANCE

A. Waste Management Coordinator Qualifications: Experienced firm, with record of successful waste management coordination of projects with similar requirements, that employs a LEED™-Accredited Professional, certified by USGBC, as waste management coordinator.

B. Regulatory Requirements: Comply with hauling and disposal regulations of authorities having jurisdiction.

C. Waste Management Meeting: Conduct separate meeting or cover in Pre-Construction Conference and comply with requirements in Section 01 31 00 "Project Management and Coordination." Review methods and procedures related to waste management including:

1. Review and discuss waste management plan including responsibilities of Waste Management Coordinator.
2. Review requirements for documenting quantities of each type of waste and its disposition.
3. Review and finalize procedures for materials separation and verify availability of containers and bins needed to avoid delays.
4. Review procedures for periodic waste collection and transportation to recycling and disposal facilities.
5. Review procedures for reduction of single-use plastic products on site.
6. Review waste management requirements for each trade.

PART 2 - PRODUCTS

2.1 WASTE MANAGEMENT PLAN

A. General: Develop plan consisting of waste identification and waste reduction work plan. Include separate sections in plan for demolition and construction waste**.** Indicate quantities by weight or volume but use same units of measure throughout waste management plan.

B. Waste Identification: Indicate anticipated types and quantities of demolition, site-clearing and construction waste generated by the Work. Include estimated quantities and assumptions for estimates.

C. Waste Reduction Work Plan: List each type of waste and whether it will be salvaged, recycled, or disposed of in landfill or incinerator. Include points of waste generation, total quantity of each type of waste, quantity for each means of recovery, and handling and transportation procedures.

1. Salvaged Materials for Reuse: For materials salvaged and reused in Project, describe methods for preparing salvaged materials before incorporation into the Work.
2. Salvaged Materials for Sale: For materials sold to individuals and organizations, include list of names, addresses, and telephone numbers.
3. Salvaged Materials for Donation: For materials donated to individuals and organizations, include list of names, addresses, and telephone numbers.
4. Recycled Materials: Include list of local receivers and processors and type of recycled materials each will accept. Include names, addresses, and telephone numbers.
5. Disposed Materials: Indicate how and where materials will be disposed of. Include name, address, and telephone number of each landfill and incinerator facility.

6. Handling and Transportation Procedures: Include method used for separating recyclable waste including sizes of containers, container labeling, and designated location on Project site where materials separation will be located.
7. Reduction of single-use plastic products: Include methods for water distribution to include bottle refilling stations if available for personnel.

D. Cost/Revenue Analysis: Indicate total cost of waste disposal as if there was no waste management plan and net additional cost or net savings resulting from implementing waste management plan. Include:

1. Landfill tip fees per ton.
2. If diverted, tip fee savings from landfill diversion.
3. Costs of recycling, salvage, or reuse.
4. Revenue from recycling, salvage, or reuse.
5. Total cost or savings from diversion. (Calculate by using tip fee savings and subtracting costs of recycling or adding revenue from recycling.)

PART 3 - EXECUTION

3.1 PLAN IMPLEMENTATION

A. General: Implement waste management plan as approved by Contracting Officer. Provide handling, containers, storage, signage, transportation, and other items as required to implement waste management plan during entire duration of Contract.

B. Waste Management Coordinator: Engage waste management coordinator responsible for implementing, monitoring, and reporting status of waste management work plan. Coordinator shall be present at Project site full time for duration of Project.

C. Contractor shall establish contacts with local recycling and reuse companies to set up lines of responsibility. Contractor shall be responsible for coordination in terms of identifying materials, pickup schedules, and standard quality for recycled materials.

D. Training: Train workers, subcontractors, and suppliers on proper waste management procedures, as appropriate for the Work occurring at Project site.

1. Distribute waste management plan to everyone concerned within three days of submittal return.
2. Distribute waste management plan to entities when they begin work on-site. Review plan procedures and locations established for salvage, recycling, and disposal.

E. Site Access and Temporary Controls: Conduct waste management operations to ensure minimum interference with roads, streets, walks, walkways, and other adjacent occupied and used facilities.

F. Separation facilities:

1. Contractor shall designate and Contracting Officer shall approve specific area or areas to facilitate separation of materials for potential reuse, salvage, recycling, and return.

2. Place waste and recycling bins near each other, and close to point of waste generation but out of traffic pattern.
3. Keep recycling and waste bin areas neat, clean, and clearly marked in order to avoid co-mingling of materials.
4. Protect bins during non-working hours from off-site contamination.
5. Check garbage dumpsters periodically for recyclables being thrown away and undocumented materials that could be recycled.

G. Materials handling procedures: Material to be recycled shall be protected from contamination and shall be handled, stored, and transported in a manner that meets requirements set by designated facilities for acceptance. Establish defined area for operations of each trade, especially woodcutting so off-cuts are kept in one area and can be sorted by dimension for future reuse.

3.2 RECYCLING DEMOLITION AND CONSTRUCTION WASTE, GENERAL

A. General: Recycle paper and beverage containers used by on-site workers.

B. Recycling Receivers and Processors: Local contacts to be provided by Government.

C. Recycling Incentives: Revenues, savings, rebates, tax credits, and other incentives received for recycling waste materials shall accrue to Contractor.

D. Procedures: Separate recyclable waste from other waste materials, trash, and debris. Separate recyclable waste by type at Project site to maximum extent practical.

1. Provide appropriately marked containers or bins for controlling recyclable waste until removed from Project site. Include list of acceptable and unacceptable materials at each container and bin.

    a. Inspect containers and bins for contamination and remove contaminated materials if found.

2. Stockpile processed materials on-site without intermixing with other materials. Place, grade, and shape stockpiles to drain surface water. Cover to prevent windblown dust.
3. Stockpile materials away from construction area. Do not store within drip line of remaining trees.
4. Store components off ground and protect from weather.
5. Remove recyclable waste off Government property and transport to recycling receiver or processor.

3.3 RECYCLING DEMOLITION WASTE

A. Concrete: Remove reinforcement and other metals from concrete and sort with other metals.

B. Wood Materials: Sort and stack members according to size, type, and length. Separate lumber, engineered wood products, panel products, and treated wood materials.

C. Metals: Separate metals by type.

1. Structural Steel: Stack members according to size, type of member, and length.

2. Remove and dispose of bolts, nuts, washers, and other rough hardware.

D. Gypsum Board: Stack large clean pieces on wood pallets and store in a dry location. Remove edge trim and sort with other metals. Remove and dispose of fasteners.

E. Conduit: Reduce conduit to straight lengths and store by type and size.

F. Electronic Products: Ensure non-usable electronic products are reused, donated, sold, or recycled using environmentally sound management practices at end of life.

3.4 RECYCLING CONSTRUCTION WASTE

A. Packaging:

1. Cardboard and Boxes: Break down packaging into flat sheets. Bundle and store in dry location.
2. Polystyrene Packaging: Separate and bag materials.
3. Pallets: As much as possible, require deliveries using pallets to remove pallets from Project site. For pallets that remain on-site, break down pallets into component wood pieces and comply with requirements for recycling wood.
4. Crates: Break down crates into component wood pieces and comply with requirements for recycling wood.

B. Site-Clearing Wastes: Chip brush, branches, and trees at landfill facility.

C. Wood Materials:

1. Clean Cut-Offs of Lumber: Grind or chip into small pieces.
2. Clean Sawdust: Bag sawdust not containing painted or treated wood.

D. Gypsum Board: Stack large clean pieces on wood pallets and store in dry location.

1. Clean Gypsum Board: Grind scraps of clean gypsum board using small mobile chipper or hammer mill. Screen out paper after grinding.

3.5 DISPOSAL OF WASTE

A. General: Except for items or materials to be salvaged, recycled, or otherwise reused, remove waste materials from Project site and legally dispose in landfill or incinerator acceptable to authorities having jurisdiction.

1. Except as otherwise specified, do not allow waste materials to accumulate on-site.
2. Remove and transport debris in manner preventing spillage on adjacent surfaces and areas.

B. Burning: Do not burn waste materials.

C. Burning: Burning of waste materials allowed only at designated areas on Government property, provided required permits are obtained. Provide full-time monitoring for burning materials until fires are extinguished.

D. Disposal: Transport waste materials off Government property and legally dispose of them.

END OF SECTION 01 74 19

Project Waste Management Plan Worksheet Sample

National Park Service (NPS) - Denver Service Center (DSC) | 10-13-21

	A	B	C	D	E	F	G	H	I	J
Material	**Quantity Recycled (in tons)**	**Quantity Salvaged or Reused (in tons)**	**A + B = Total Quantity Diverted from Landfill**	**Quantity to Landfill (in tons)**	**C + D = Total Quantity Generated (in tons)**	**Tip Fee/Ton at Landfill**	**C x F = Tip Fee Savings resulting from Landfill Diversion**	**Cost of Recycling (R), Salvage (S), or Reuse (Re)** (Specify R, S, or Re)	**Revenue from Recycling (R), Salvage (S), or Reuse (Re)** (Specify R, S, or Re)	**G - H + I = Total Cost (-) or Savings (+) from Diversion**
Asphalt/Concrete										
Brick/Masonry/Tile										
Building Materials (doors, windows, fixtures, shingles, lumber, insulation, sheet goods, etc.)										
Carpet										
Carpet Padding, Foam Only										
Cardboard										
Ceiling Tile										
Drywall										
Glass										
Scrap Metal Aluminum										
Copper										
Steel										
Unpainted Wood & Pallets										
Yard Trimmings, Brush, Trees, Stumps, etc.										
Garbage/Trash										
Other										
Column Totals										
	Total Quantity Recycled	Total Quantity Reused or Salvaged	Total Quantity Diverted from Landfill	Total Quantity to Landfill	Total Quantity Generated		Tip Fee Savings from Diversion	Total Cost of Recycling, Salvage, or Reuse	Revenue from Recycling, Salvage, or Reuse	Total Cost (-) or Savings (+) from Diversion

Percentage Diverted = _____ (C divided by E from Column Totals). Should meet 60% diversion goal.

SECTION 01 77 00 - CLOSEOUT PROCEDURES

PART 1 - GENERAL

1.1 SUMMARY

A. Section includes administrative and procedural requirements for contract closeout, including:

1. Project Record Drawings
2. Closeout Submittals
3. Substantial Completion and Final Inspection
4. Permit Closure and Transfer
5. Final Acceptance of the Work
6. Warranties

1.2 PROJECT RECORD DRAWINGS

A. Maintain one complete full-size set of contract drawings and one full-size set of vendor-supplied drawings. Clearly mark changes, deletions, and additions using National Park Service (NPS) drafting standards to show actual construction conditions. Show additions in red, deletions in green and special instructions in blue.

B. Keep record drawings current. Make record drawings available to Contracting Officer (CO) for inspection at the time of monthly progress payment requests. If project record drawings are not current, Contracting Officer may retain an appropriate amount of progress payment.

C. Submit complete record drawings on completion of total project. Include shop drawings, sketches, and additional drawings to be included in final set, with clear instructions showing the location of these drawings.

1.3 CLOSEOUT SUBMITTALS

A. A list of closeout requirements has been attached at the end of the Division 1 Specifications for your convenience. The intent is to provide an overall summary of requirements and not a comprehensive list. Terms and conditions of the contract require satisfaction of requirements of individual specification sections regardless of what is shown on the list. Submit the following before requesting final inspection:

1. Specific warranties, guarantees, workmanship bonds, final certifications, and similar documents.
2. NPS required forms for occupancy, Fire Alarm acceptance, and other similar forms or certificates.
3. Project Record Documents, operation and maintenance manuals, final completion construction digital images uploaded to Protect Teams website with index and descriptions, and similar final record information.
4. Environmental Record Documents: As specified in Divisions as follows:

a. IAQ Management Plan: As specified in Section 01 57 19.11 - Indoor Air Quality (IAQ) Management.
b. Product Data for filtration media: As specified in Section 01 57 19.11 - Indoor Air Quality (IAQ) Management.
c. Moisture Control inspections and reports: As specified in Section 01 57 19.11 - Indoor Air Quality (IAQ) Management.
d. Material Safety Data Sheet (MSDS) Data: As specified in Section 01 57 19.11 - Indoor Air Quality (IAQ) Management.
e. Final Summary of Solid Waste Disposal and Diversion: As specified in Section 01 74 19 - Construction Waste Management.

5. Posted Operating Instructions: As specified in individual sections. Furnish operating instructions attached to or posted adjacent to equipment. Include wiring diagrams, control diagrams, control sequence, start-up, adjustment, operation, lubrication, shut-down, safety precautions, procedures in the event of equipment failure, and other items of instruction recommended by manufacturer.
6. Deliver tools, spare parts, extra materials, and similar items to location designated by Contracting Officer. Label with manufacturer's name and model number where applicable.

   a. Special Tools: One set of special tools required to operate, adjust, dismantle, or repair equipment. Special tools are those not normally found in possession of mechanics or maintenance personnel.

7. Keys and Keying Schedule: Submit keys including duplicates. Wire keys for each lock securely together. Tag and plainly mark with lock number, equipment identification, or panel or switch number, and indicate location, building, and room name or number.
8. Make final changeover of permanent locks and deliver keys to Contracting Officer. Advise Park personnel of changeover in security provisions.
9. Approved pre-functional checklists and functional performance testing reports from commissioning documentation.

   a. Equipment start-up requires coordination with commissioning process. Refer to Division 23 requirements. Equipment shall not be "temporarily" started for commissioning.

10. Test and balance report.
11. Terminate and remove temporary facilities, mockups, construction tools, and similar elements from Project site, complete final cleaning requirements, including touchup painting.
12. Touch up and repair and restore marred exposed finishes to eliminate visual defects.
13. Instruct NPS personnel in operation, adjustment, and maintenance of products, equipment, and systems. Submit demonstration and training videos.

1.4 FINAL INSPECTION, SUBSTANTIAL COMPLETION AND ACCEPTANCE PROCEDURES

A. Request final inspection in writing when project or designated portion of project is substantially complete. Contracting Officer will proceed with inspection within 10 days of receipt of written request or will advise Contractor of items that prevent project from being substantially complete.

B. If work is determined substantially complete, following final inspection, Contracting Officer will prepare Punch List and issue a Letter of Substantial Completion.

C. If work is not determined substantially complete following final inspection, Contracting Officer will notify Contractor in writing. Contractor shall request new final inspection after completing work. Re-inspection costs may be charged against Contractor in accordance with Inspection of Construction contract clause.

D. Contractor shall complete Punch List within 30 calendar days, documented weather permitting.
   1. Prior to requesting final inspection:

E. If Contractor completes items of work on Punch List and contractually required items, Contracting Officer will issue Letter of final acceptance of work.

F. If Contractor fails to complete work within the time frame, Contracting Officer may correct work with an appropriate reduction in contract price or charge for re-inspection costs in accordance with Inspection of Construction contract clause.

1.5 PERMIT CLOSURE AND TRANSFER

A. When work covered by the permits is complete, create list of tasks required to close or transfer permits to Park. Submit to Contracting Officer for approval.

B. After substantial completion and Punch List completion, permits shall be closed and documented by Agency(ies) with Jurisdiction for the permit.

C. If responsibility for permits is to be transferred to Park, Park shall be informed of permit provisions completed and responsibilities transferring to Park staff.

1.6 WARRANTIES

A. Submittal Time: Submit written warranties on request of Contracting Officer for designated portions of Work where commencement of warranties other than date of Substantial Completion is indicated.

B. Organize warranty documents into an orderly sequence based on table of contents of Project Manual.

   1. Bind warranties and bonds in heavy-duty, 3-ring, vinyl-covered, loose-leaf binders, thickness as necessary to accommodate contents, and sized to receive 8-1/2 by 11 inch paper.
   2. Provide heavy paper dividers with plastic-covered tabs for each separate warranty. Mark tab to identify product or installation. Provide typed description of product or installation, including name of product and name, address, and telephone number of Installer.
   3. Identify each binder on front and spine with typed or printed title "WARRANTIES," Project name, and name of Contractor.
   4. Warranty Electronic File: Scan warranties and bonds and assemble complete warranty and bond submittal package into a single indexed electronic PDF (portable document format)

file with links enabling navigation to each item. Provide bookmarked table of contents at beginning of document.

C. Provide additional copies of each warranty in operation and maintenance manuals.

PART 2 - PRODUCTS

2.1 MATERIALS

A. See Division 1 Specification Section "Execution" for information on cleaning agents.

PART 3 - EXECUTION

3.1 FINAL CLEANING

A. General: Conduct final cleaning and waste-removal operations to comply with local laws and ordinances and Federal and local environmental and antipollution regulations.

B. Cleaning: Employ experienced workers or professional cleaners for final cleaning. Clean each surface or unit to condition expected in an average commercial building cleaning and maintenance program. Comply with manufacturer's written instructions.

1. Complete following cleaning operations before requesting inspection for certification of Substantial Completion for entire Project or for a portion of Project:

    a. Clean Project site, yard, and grounds, in areas disturbed by construction activities, including landscape development areas, of rubbish, waste material, litter, and other foreign substances.
    b. Sweep paved areas broom clean. Remove petrochemical spills, stains, and other foreign deposits.
    c. Rake grounds that are neither planted nor paved to smooth, even-textured surface.
    d. Remove tools, construction equipment, machinery, and surplus material from Project site.
    e. Remove snow and ice to provide safe access to building.
    f. Clean exposed exterior and interior hard-surfaced finishes to dirt-free condition, free of stains, films, and foreign substances. Avoid disturbing natural weathering of exterior surfaces. Restore reflective surfaces to original condition.
    g. Remove debris and surface dust from limited access spaces, including roofs, plenums, shafts, trenches, equipment vaults, manholes, attics, and similar spaces.
    h. Sweep concrete floors broom clean in unoccupied spaces.
    i. Vacuum carpet and similar soft surfaces, removing debris and excess nap; shampoo, soil or stains remain.
    j. Clean transparent materials, including mirrors and glass in doors and windows. Remove glazing compounds and vision-obscuring materials. Replace chipped or broken glass and transparent materials. Polish mirrors and glass.
    k. Remove labels that are not permanent.

l. Touch up, repair, and restore marred, exposed finishes and surfaces. Replace finishes and surfaces that cannot be satisfactorily repaired or restored or that already show evidence of repair or restoration.

1) Do not paint over "UL" (Underwriters Laboratories) and similar labels, including mechanical and electrical nameplates.

m. Wipe surfaces of mechanical and electrical equipment and similar equipment. Remove excess lubrication, paint and mortar droppings, and other foreign substances.

n. Replace parts subject to unusual operating conditions.

o. Clean plumbing fixtures to sanitary condition, free of stains, including stains resulting from water exposure.

p. Replace disposable air filters and clean permanent air filters. Clean exposed surfaces of diffusers, registers, and grills.

q. Clean light fixtures, lamps, globes, and reflectors to function with full efficiency. Replace burned-out and noticeably dimmed bulbs, and defective or noisy starters in fluorescent and mercury vapor fixtures to comply with requirements for new fixtures.

r. Leave Project clean and ready for occupancy.

C. Pest Control: Engage experienced, licensed exterminator to make a final inspection and rid project of rodents, insects, and other pests. Provide Government with report.

D. Waste Disposal: Comply with requirements of Section 01 74 19 "Construction Waste Management and Disposal."

END OF SECTION 01 77 00

SECTION 01 78 23 - OPERATION AND MAINTENANCE DATA

PART 1 - GENERAL

1.1 SUMMARY

A. Section includes administrative and procedural requirements for preparing operation and maintenance manuals, including:
   1. Adjust list below to suit Project.

   2. Manuals, general
   3. Emergency manuals
   4. Operation manuals for systems, subsystems, and equipment
   5. Maintenance manuals for care and maintenance of systems and equipment

B. See Divisions 2 through 49 Sections for additional operation and maintenance manual requirements for Work in those Sections.

1.2 SUBMITTALS

A. Manual: Submit one electronic copy at least 15 days before final inspection. Contracting Officer (CO) will return copy or edit version with comments within 15 days of receipt.

B. Format: Submit operations and maintenance manuals in following format:

   1. PDF (portable document format) electronic file. Assemble each manual into composite electronically indexed file. Submit on digital media acceptable to Contracting Officer.

      a. Name each indexed document file in composite electronic index with applicable item name. Include a complete electronically linked operation and maintenance directory.
      b. Enable inserted reviewer comments on draft submittals.

   2. Hard copy manual: In accordance with Part 2 of this Section.

   3. Correct or modify each manual to comply with Contracting Officers comments. Submit 2 copies of each corrected manual within 10 days of receipt of Contracting Officers comments.

PART 2 - PRODUCTS

2.1 MANUALS, GENERAL

A. Organization: Unless otherwise indicated, organize manual into separate sections for each system and subsystem, and separate sections for each piece of equipment not part of a system. Manual shall contain title page, table of contents, and manual contents.

B. Title Page: Enclose title page in transparent plastic sleeve. Include:1.
   1. Revise list below to suit Project.

   2. Project Title
   3. Location
   4. Park
   5. Contract Number
   6. Prime Contractors Name and Address
   7. Date of Substantial Completion
   8. Binder Volume Number

C. Table of Contents: List each product included in manual, identified by product name, indexed to content of the volume, and cross-referenced to Specification Section number in Project Manual.

D. Manual Contents: Organize into sets of manageable size. Arrange contents alphabetically by system, subsystem, and equipment. Assemble instructions for subsystems, equipment, and components of one system into a single binder if needed.

   1. Binders: White, commercial quality, hard back, 3-ring, vinyl-covered, loose-leaf binders, in thickness necessary to accommodate contents, sized to hold 8-1/2 by 11 inch paper; with clear plastic window sleeve on front and spine to hold label describing contents and pockets inside covers to hold folded oversize sheets.

      a. Cover Sheet: Identify binders on front and spine, with project title, location, park, contract number, prime contractor's name and address, date of substantial completion, and binder volume number. Insert cover sheet into clear plastic view pocket on front of binder. Insert sheet into clear plastic view pocket on spine with title "OPERATION AND MAINTENANCE MANUAL," Project title or name, and subject matter of contents. Indicate volume number for multiple-volume sets.

   2. Data: Fill binders to no more than 75 percent of capacity. Punch holes shall not obscure any data. When contents of a single tabbed section cover more than one item, provide colored paper sheets to separate the data for each item.

      a. Manufacturers' Data: Provide originals for color or copyrighted data. Black and white data may be originals or clean, good quality reproductions. No copies produced by facsimile transmission and sheets with stamps, such as submittal approval stamps. Include only sheets that apply to items installed; cross out inapplicable data.
      b. Vendor Furnished As-Built Drawings: Maximum 24 inch by 36 inch sheets with minimum character or lettering size of 1/8 inch. Reduced-size reproductions may be provided instead of full-size drawings if reproductions are clear and legible. If reduced-size drawings are used, identify as "REDUCED SIZE" and provide graphic scales, if applicable.
      c. Custom Data: Data supplemented by drawings and schematics necessary to describe systems adequately.
      d. Equipment Data Sheet: Data, using form at end of this section.
      e. Schedules: Schedules reflecting final, as-installed conditions.
      f. Poorly reproduced or illegible data will be rejected.

3. Dividers: Divider sheets with Mylar reinforced edges and pre-printed numbered tabs aligned with numbers and title lines on index sheet. Include typed list of products and major components of equipment included in section on each divider, cross-referenced to Specification Section number and title of Project Manual.
4. Protective Plastic Sleeves: Transparent plastic sleeves designed to enclose diagnostic software diskettes for computerized electronic equipment.
5. Drawings: Attach reinforced, punched binder tabs on drawings and bind with text.

    a. If oversize drawings are necessary, fold drawings to same size as text pages and use as foldouts.
    b. If drawings are too large to be used as foldouts, fold and place drawings in labeled envelopes and bind envelopes in rear of manual. At appropriate locations in manual, insert typewritten pages indicating drawing titles, descriptions of contents, and drawing locations.

2.2 EMERGENCY MANUALS

A. Include emergency information that must be immediately available during emergency situations to protect life and property and to minimize disruptions to building occupants.

B. Content: Organize manual into separate section for type of emergency, emergency instructions, and emergency procedures.

C. Type of Emergency: Where applicable for each type of emergency indicated below, include instructions and procedures for each system, subsystem, piece of equipment, and component for fire, power failure, water outage, equipment failure.

D. Emergency Instructions: Describe and explain warnings, trouble indications, error messages, and similar codes and signals. Include responsibilities of National Park Service (NPS) operating personnel for notification of Installer, supplier, and manufacturer to maintain warranties.

E. Emergency Procedures: Include instructions on stopping, shutdown instructions for each type of emergency, operating instructions for conditions outside normal operating limits, and required sequences for electric or electronic systems.

2.3 OPERATION AND MAINTENANCE MANUALS

A. Include information needed for daily operations, maintenance, and management of systems and equipment.

B. Operation Requirements

1. Content: In addition to requirements in Section, include operation data required in individual Specification Sections and equipment descriptions, operating standards, operating procedures, operating logs, wiring and control diagrams, and license requirements.
2. Descriptions: Include:
    a. Revise list below to suit Project.

b. Product name and model number
c. Manufacturer's name
d. Equipment identification with serial number of each component
e. Equipment function
f. Operating characteristics
g. Limiting conditions
h. Performance curves
i. Engineering data and tests
j. Complete nomenclature and number of replacement parts

3. Operating Procedures: Include start-up, break-in, and control procedures; stopping and normal shutdown instructions; routine, normal, seasonal, and weekend operating instructions; and required sequences for electric or electronic systems.
4. Systems and Equipment Controls: Describe sequence of operation, and diagram controls as installed.
5. Piped Systems: Diagram piping as installed and identify color-coding where required for identification.

C. Maintenance Requirements for Systems and Equipment

1. Content: For each system, subsystem, and piece of equipment not part of a system, include source information, manufacturers' maintenance documentation, maintenance procedures, maintenance and service schedules, spare parts list and source information, maintenance service contracts, and warranty and bond information, and equipment data sheets as described below.
2. Source Information: List each system, subsystem, and piece of equipment included in manual, identified by product name and arranged to match manual's table of contents. For each product, list name, address, and telephone number of Installer or supplier and maintenance service agent, and cross-reference Specification Section number and title in Project Manual.
3. Manufacturers' Maintenance Documentation: Manufacturers' maintenance documentation including maintenance instructions, drawings and diagrams for maintenance, nomenclature of parts and components, and recommended spare parts for each component part or piece of equipment:
4. Maintenance Procedures: Test and inspection instructions, troubleshooting guide, disassembly instructions, and adjusting instructions, and demonstration and training videotape if available**,** detailing essential maintenance and environmental procedures.
5. Maintenance and Service Schedules: Service and lubrication requirements, list of required lubricants for equipment, and separate schedules for preventive and routine maintenance and service with standard time allotment.
6. Spare Parts List and Source Information: Lists of replacement and repair parts, with parts identified and cross-referenced to manufacturers' maintenance documentation and local sources of maintenance materials and related services.
7. Warranties and Bonds: Copies of warranties and bonds and lists of circumstances and conditions that affect validity of warranties or bonds.

2.4 PRODUCT MAINTENANCE MANUAL

A. Content: Organize manual into separate section for each product, material, and finish. Include source information, product information, maintenance procedures, repair materials and sources, and warranties and bonds, as described below.

B. Source Information: List each product included in manual identified by product name and arranged to match manual's table of contents. For each product, list name, address, and telephone number of Installer or supplier and maintenance service agent, and cross-reference Specification Section number and title in Project Manual.

C. Product Information: Include:
   1. Revise list below to suit Project.

   2. Product name and model number
   3. Manufacturer's name
   4. Color, pattern, and texture
   5. Material and chemical composition
   6. Reordering information for specially manufactured products

D. Environmental Requirements

   1. Identify environmentally preferable products incorporated into Project. Include: product model; manufacturer’s name, address, phone, and website; and local technical representative.
   2. The marking system indicated below is intended to provide assistance in identification of products for making subsequent decisions as to handling, recycling, or disposal.

      a. Verify plastic products to be incorporated into Project are labeled in accordance with ASTM D1972. Where products are not labeled, provide product data indicating polymeric information in Operation and Maintenance Manual.

         1) Type 1: Polyethylene Terephthalate (PET, PETE)
         2) Type 2: High Density Polyethylene (HDPE)
         3) Type 3: Vinyl (Polyvinyl Chloride or PVC)
         4) Type 4: Low Density Polyethylene (LDPE)
         5) Type 5: Polypropylene (PP)
         6) Type 6: Polystyrene (PS)
         7) Type 7: Other. Use of this code indicates that package in question is made with a resin other than the six listed above or is made of more than one resin listed above and used in a multi-layer combination.

      b. Describe maintenance procedures associated with environmentally preferable materials and systems. Provide cleaning recommendations in accordance with ASTM E1971 and approved Integrated Pest Management (IPM) plan.

         1) Include potential environmental impacts of recommended maintenance procedures and materials.
         2) Include potential indoor air quality impacts of recommended maintenance procedures and materials.

3) Changes to material properties of a plastic within a compost unit can affect degradation of other materials and resulting composition and appearance of composed material. Edit below to suit location and project.
4) Where proposed maintenance procedures incorporate composting of plastics, assess potential effect of each type of plastic to be included in composting process in accordance with ASTM D5509 or ASTM D6002
5) Identify special maintenance agreements. Maintenance agreements are standard practice in the building industry. Take-back programs refer to programs in which product manufacturer "takes-back" scrap material and/or packaging associated with its product. Green leasing is a new, but dramatic shift in traditional perspective of leased equipment. Under a green lease, the product manufacturer is responsible for the disposition of the product. Thus, when the customer no longer requires use of particular product or requires an updated model, manufacturer is obligated to reclaim and refurbish or disassemble for recycling as appropriate. This approach necessitates revision of administrative services. It also requires basic redesign of products in order to allow for future disassembly and upgrade. This has potential to be cost effective for manufacturers and customers alike. It is also extremely resource efficient. Following are examples, edit accordingly.

c. Material Safety Data Sheets (MSDS): Include MSDSs as specified.

3. Develop environmental management programs for facility as follows:

a. Waste management program: Develop in accordance with ASTM E1609. Maximize use of source reduction and recycling procedures outlined in ASTM D5834.
b. Indoor Air Quality (IAQ) management program: Provide for evaluation of indoor Carbon Dioxide concentrations in accordance with ASTM D6245. Provide for evaluation of VOCs (volatile organic compounds) in indoor air in accordance with ASTM D6345.
c. Water management program: Develop water monitoring program for surface and ground water on project site in accordance with ASTM D5851 and consistent with water management program utilized during construction operations.

E. Maintenance Procedures: Include manufacturer's written recommendations and inspection procedures, types of cleaning agents, methods of cleaning, schedule for cleaning and maintenance, and repair instructions.

F. Repair Materials and Sources: Include lists of materials and local sources of materials and related services.

G. Warranties and Bonds: Include copies of warranties and bonds and lists of circumstances and conditions that affect validity of warranties or bonds.

2.5 SYSTEMS AND EQUIPMENT MAINTENANCE MANUALS

A. Content: For each system, subsystem, and piece of equipment not part of a system, include source information, manufacturers' maintenance documentation, maintenance procedures, maintenance and service schedules, spare parts list and source information, maintenance service contracts, and warranty and bond information, as described below.

B. Revise "Source Information" paragraph below to suit Project. For simple projects that require few manuals, this information may be included on title page.

C. Source Information: List each system, subsystem, and piece of equipment included in manual, identified by product name and arranged to match manual's table of contents. For each product, list name, address, and telephone number of Installer or supplier and maintenance service agent, and cross-reference Specification Section number and title in Project Manual and drawing or schedule designation or identifier where applicable.

D. Manufacturers' Maintenance Documentation: Manufacturers' maintenance documentation including the following information for each component part or piece of equipment:

1. Standard maintenance instructions and bulletins.
2. Drawings, diagrams, and instructions required for maintenance, including disassembly and component removal, replacement, and assembly.
3. Identification and nomenclature of parts and components.
4. List of items recommended to be stocked as spare parts.

E. Maintenance Procedures: Include the following and items detailing essential maintenance procedures:

1. Test and inspection instructions
2. Troubleshooting guide
3. Precautions against improper maintenance
4. Disassembly; component removal, repair, and replacement; and reassembly instructions
5. Aligning, adjusting, and checking instructions
6. Demonstration and training video recording

F. Maintenance and Service Schedules: Include service and lubrication requirements, list of required lubricants for equipment, and separate schedules for preventive and routine maintenance and service with standard time allotment.

1. Scheduled Maintenance and Service: Tabulate actions for daily, weekly, monthly, quarterly, semiannual, and annual frequencies.
2. Maintenance and Service Record: Include manufacturers' forms for recording maintenance.

G. Spare Parts List and Source Information: Include lists of replacement and repair parts, with parts identified and cross-referenced to manufacturers' maintenance documentation and local sources of maintenance materials and related services.

H. Retain "Maintenance Service Contracts" paragraph below if service contracts are specified for systems, subsystems, or equipment.

I. Maintenance Service Contracts: Include copies of maintenance agreements with name and telephone number of service agent.

J. "Warranties and Bonds" paragraph below provides information if product fails. For specific products, additional information may be necessary.

K. Warranties and Bonds: Include copies of warranties and bonds and lists of circumstances and conditions that affect validity of warranties or bonds.

1. Include procedures and required notifications for warranty claims.

PART 3 - EXECUTION

3.1 GENERAL

A. At start of project, begin accumulating operation and maintenance data and initiate index. Install and index data in binders within 30 days after delivery of items. As custom written data and test results are produced, add to operation and maintenance data file.

B. Operation and Maintenance requirements referenced in the paragraph below are listed on the Closeout and Operation & Maintenance (O&M) Requirements template.

C. List of Operation and Maintenance requirements has been attached at end of the Division 1 Specifications for your convenience. Intent is to provide an overall summary of requirements and not a comprehensive list. Terms and conditions of the contract require satisfaction of requirements of individual specification sections regardless of what is shown on the list.

D. Keep operation and maintenance data current. Make operation and maintenance binders available to Contracting Officer for inspection at time of monthly progress payment requests. If operation and maintenance binders are not current, Contracting Officer may retain an appropriate amount of the progress payment.

3.2 MANUAL PREPARATION

A. Manual Types

1. Emergency Manual: Assemble complete set of emergency information indicating procedures for use by emergency personnel and by NPS operating personnel for types of emergencies indicated.
2. Product Maintenance Manual: Assemble complete set of maintenance data indicating care and maintenance of each product, material, and finish incorporated into Work.
3. Operation and Maintenance Manuals: Assemble complete set of operation and maintenance data indicating operation and maintenance of each system, subsystem, and piece of equipment not part of a system.

B. Products requiring manufacturer's operation and maintenance data should be listed under a closeout submittal paragraph in Part 1 of applicable individual sections

C. Manual Contents: Including:

1. Manufacturers' Data: Where manuals contain manufacturers' standard printed data, include only sheets pertinent to product or component installed. Mark sheet to identify product or component incorporated into Work. If data include more than one item in a tabular format, identify each item using appropriate references from Contract Documents. Identify data applicable to Work and delete references to information not applicable.

D. In most cases, manufacturer's prepared data will adequately cover equipment and control functions. However, for packaged or custom designed equipment systems (for example, a complex Heating, Ventilation, and Air Conditioning (HVAC) system or telemetry alarm system), a further description may be needed. List systems requiring custom written data in Part 1 of the applicable individual sections. If no custom written data is required, delete paragraph below.

1. Custom Written Data: For data not in manufacturer's standard literature, provide text, drawings, and schematics specifically applicable to installed systems. Include step-by-step descriptions of operating procedures; identification of individual components and their functions; descriptions of how system components relate to one another and operate together to accomplish a common process or function; and sequence of operation for system control circuits. For seasonally operated systems, provide start-up and shutdown instructions.
2. Equipment Data Sheets: For each item of equipment included in operation and maintenance data, provide Equipment Data Sheet using form at the end of this section. For equipment consisting of a driven machine and a driver (for example, a pump and a motor), equipment data shall cover both the driven machine and the driver. For similar type equipment (for example, multiple exhaust fans of the same model and type), provide a single equipment data sheet with an attached schedule listing individual equipment items.

E. List required drawings in Closeout Submittals article of applicable individual sections; also request installation drawings under the Submittals article to help ensure the adequacy of the final as-builts. Examples of systems requiring as-built drawings include Heating, Ventilation, and Air Conditioning (HVAC) controls, fire or security alarm systems, sprinkler system, and stand-by generator control system. If as-built drawings are not required, delete paragraph and subparagraphs below.

1. Vendor Furnished As-Built Drawings: Provide for each electrical and each mechanical control system.

    a. For each control system, provide control circuit schematic drawings. Identify each wire and terminal block number. Show terminal numbers on control devices. Show control wires and devices remote from control panel.
    b. For each control panel, provide general arrangement drawing showing location of each control component and terminal block on the panel front and interior. Include materials list of panel-mounted control components as well as field-installed control components remote from the panel, identifying components, manufacturer, model number, and initial set points or sensing ranges of devices where applicable.
    c. For packaged equipment systems, provide general arrangement drawings showing interrelationships of the various items of equipment and components.
    d. In addition to control wiring schematic, provide power wiring schematic drawing showing power flow to each motor. Identify each power conductor. Show over-current protection and motor starting devices.

F. Comply with Section 01 77 00 "Closeout Procedures" for schedule for submitting operation and maintenance documentation.

END OF SECTION 01 78 23

EQUIPMENT DATA SHEET

Equipment Item: _____ Designation: _____ Function: _____ Location: _____ Project: _____ Model Number: _____ Serial Number: _____	
Manufacturer Address and Phone:	Supplier Address and Phone:
Preventive Maintenance Tasks:	
Nameplate Data:	
Spare Parts Furnished and Other Information:	

Closeout and Operation & Maintenance (O&M) Requirements **Template**

National Park Service (NPS) - Denver Service Center (DSC) | 1-27-21

Topic	Specification Section	Requirement	Submittal Date	Completed	Received by Park
	01 77 00 1.3	Project Record Documents, operation and maintenance manuals, final completion construction digital images recorded on CD-R (compact disc-recordable) or DVD-R (digital video disc-recordable) with index and descriptions, and similar final record information.			
	27 00 10	Record Documentation			
	28 31 11	Record Documentation			
System	01 79 00	Instruction Program			
	01 79 00	Demonstration and Training Video:			
Tools Spare Parts Equipment	01 77 00 1.3	Deliver tools, spare parts, extra materials, and similar items to location designated by Contracting Officer. Label with manufacturer's name and model number where applicable.			
Extra Stock	08 71 00	Extra Stock Material			
	09 65 13	Extra Stock Material			
	09 91 13	Extra Stock Material			
	09 91 24	Extra Stock Material			
	10 14 23.16	Extra Stock Material			
	27 15 13	Faceplates, Jacks			
	28 31 11	Extra Stock Material			
Reports	01 32 33 1.2.B	Closeout - digital image electronic files			
	01 67 00 1.3.A	Record Submittals as specified in – Sustainable Design Close-Out Documentation			
	01 74 19 1.4.L	Closeout Submittals: Project Waste Management Plan			
	01 77 00 1.3	NPS required forms for occupancy, Fire Alarm acceptance, and other similar forms or certificates.			
	01 77 00 1.3	Approved pre-functional checklists and functional performance testing reports from commissioning documentation.			
	01 77 00 1.3	Test and balance report.			
	01 77 00 1.3	Environmental Record Documents			
	230593	HVAC (heating, ventilation & air conditioning) Test and balance report.			
	26 41 13	Field Inspection Report			
	27 15 13	Field quality-control test reports			
	27 15 13	Factory Test Reports			
	28 31 11	Field quality-control test reports			
	32 13 20	CQC Accessibility Inspection Report			
Keys & Keying Schedule	01 77 00 1.3	Keys and Keying Schedule			
	01 77 00 1.3	Make final changeover of permanent locks and deliver keys to Contracting Officer.			
O&M Data Warranties Guarantees	01 77 00 1.3	Specific warranties, guarantees, workmanship bonds, final certifications, and similar documents.			
	01 77 00 1.3	Posted Operating Instructions			
	01 77 00 1.3	Terminate and remove temporary facilities, mockups, construction tools, and similar elements from Project site, complete final cleaning requirements, including touchup painting.			
	01 77 00 1.3	Touch up and repair and restore marred exposed finishes to eliminate visual defects.			
	01 77 00 1.3	Instruct NPS personnel in operation, adjustment, and maintenance of products, equipment, and systems.			
	01 78 23	Manuals, General			
	01 78 23	Emergency Manuals			
	01 78 23	Operation and Maintenance Manuals			

Topic	Specification Section	Requirement	Submittal Date	Completed	Received by Park
	01 78 23	Product Maintenance Manuals			
	01 78 23	Systems and Equipment Maintenance Manuals			
	07 41 13.16	Maintenance Data: For metal panels to include in maintenance manuals			
	07 41 13.16	Special Galvalume Substrate Warranty			
	07 41 13.16	Special Warranty on Panel Finishes			
	07 41 13.16	Special Watertightness Warranty:			
	07 41 13.16	Special Installer Warranty			
	07 42 13.13	Maintenance Data: For metal panels to include in maintenance manuals.			
	07 42 13.13	Galvalume Substrate Warranty			
	07 42 13.13	Special Warranty on Panel Finishes			
	07 42 93	Maintenance Data: For metal panels to include in maintenance manuals.			
	07 42 93	Special Warranty			
	07 42 93	Special Warranty on Panel Finishes			
	07 62 00	Maintenance Data: For sheet metal flashing and trim, and its accessories.			
	07 62 00	Special Warranty on Finishes			
	07 92 00	Manufacturers' special warranties.			
	07 92 00	Installer's special warranties.			
	08 14 16	Special warranties			
	08 14 16	Quality Standard Compliance Certificates: AWI Quality Certification certificates.			
	08 54 13	Manufacturer's warranties.			
	08 71 00	Operations and Maintenance Data			
	08 71 00	Manufacturer's Warranty.			
	08 80 00	Manufacturer's special warranties			
	09 65 13	Manufacturer's Warranty.			
	10 14 23.16	Maintenance Data: For signs to include in maintenance manuals			
	10 14 23.16	Special Warranty			
	230923	O&M data for control dampers.			
	232300	O&M data for refrigerant valves and piping specialties.			
	233300	O&M data for air duct accessories.			
	238126	O&M data for split heat pump air conditioning systems. Split heat pump air conditioning systems with seven year warranty on compressor, five year warranty on parts, and one year warranty on labor.			
	26 05 33.1	O&M Data, Product Information, Warranties			
	26 05 53	Identification Schedule			
	26 09 23	Operation and maintenance data.			
	26 27 26	Operation and maintenance data.			
	26 51 00	Operation and maintenance data.			
	26 51 00	Special Warranties			
	27 05 44	Operation and maintenance data.			
	27 15 13	Operation and maintenance data.			
	27 15 13	Warranty Information			
	27 15 13	Identification Schedule			
	28 31 11	Operation and maintenance data.			

SECTION 01 79 00 - DEMONSTRATION AND TRAINING

PART 1 - GENERAL

1.1 SUMMARY

A. Section includes administrative and procedural requirements for instructing National Park Service (NPS) personnel, including:
   1. Adjust list below to suit Project.

   2. Demonstration of operation of systems, subsystems, and equipment.
   3. Training in operation and maintenance of systems, subsystems, and equipment, including environmental considerations.
   4. Demonstration and training video.

B. See Divisions 2 through 49 Sections for specific requirements for demonstration and training for products in those Sections.

1.2 GENERAL REQUIRMENTS

A. Demonstration and Training requirements referenced in the paragraph below are listed on the Closeout and Operation & Maintenance (O&M) Requirements template.

B. List of System Demonstration and Training requirements has been attached at end of Division 1 Specifications for your convenience. Intent is to provide overall summary of requirements and not a comprehensive list. Terms and conditions of contract still require satisfaction of requirements of individual specification sections regardless of what is shown on list.

1.3 SUBMITTALS

A. Instruction Program: Submit one copy of outline of instructional program for demonstration and training, including schedule of proposed dates, times, length of instruction time, and instructors' names for each training module. Include learning objective and outline for each training module.

   1. For each training session, Contractor shall submit for approval a proposed outline of subjects to be covered. Training shall not be conducted until outline is approved.

B. Demonstration and Training Video: Submit two copies of each DVD (digital video disc) for training sessions within 14 days of end of each training module.

   1. Label each DVD with date of demonstration or training, instructor's name, and provide an index of contents. Index shall list start and end time of each subject covered during training session. Sequence of training subjects shall follow sequence listed in approved training outline or as actually conducted.

1.4 QUALITY ASSURANCE

A. Facilitator Qualifications: Firm or individual experienced in training or educating maintenance personnel in training program similar in content and extent for this Project, and whose work has resulted in training or education with a record of successful learning performance.

B. Instructor Qualifications: Factory-authorized service representative, complying with requirements in Section 01 40 00 "Quality Requirements," experienced in operation and maintenance procedures and training.

C. Coordinate content of training modules with content of approved emergency, operation, and maintenance manuals. Do not submit instruction program until operation and maintenance data has been reviewed and approved by Contracting Officer (CO).

PART 2 - PRODUCTS

2.1 INSTRUCTION PROGRAM

A. Program Structure: Develop instruction program that includes individual training modules for each system and equipment not part of a system, as required by individual Specification Sections, and:

1. Environmental Topics

    a. Overview of environmental issues related to building industry.
    b. Overview of environmental issues related to Project.
    c. Review of site-specific procedures and management plans implemented during construction:

        1) Regulatory Requirements
        2) Indoor Air Quality (IAQ) Management
        3) Noise and Acoustics Management
        4) Environmental Management
        5) Construction Waste Management

    d. Review of site-specific procedures and management plans to be implemented during operation and maintenance.

        1) Include review of environmentally related aspects of Operations and Maintenance Manual.
        2) Integrated Pest Management (IPM)

B. Training Modules: Develop a learning objective and teaching outline for each module. Include description of specific skills and knowledge that participant is expected to master. For each module, include instruction for:

1. Basis of System Design, Operational Requirements, and Criteria: Include system and equipment descriptions, operating standards, regulatory requirements, equipment function, operating characteristics, limiting conditions, and performance curves.

2. Documentation: Review emergency, operations, and maintenance manuals; Project Record Documents; identification systems; warranties and bonds; and maintenance service agreements.
3. Emergencies: Instructions on stopping; shutdown instructions; operating instructions for conditions outside normal operating limits; instructions on meaning of warnings, trouble indications, and error messages; and required sequences for electric or electronic systems.
4. Operations: Startup, break-in, control, and safety procedures; stopping and normal shutdown instructions; routine, normal, seasonal, and weekend operating instructions; operating procedures for emergencies and equipment failure; and required sequences for electric or electronic systems.
5. Adjustments: Alignments and checking, noise, vibration, economy, and efficiency adjustments.
6. Troubleshooting: Diagnostic instructions and test and inspection procedures.
7. Maintenance: Inspection procedures, types of cleaning agents, methods of cleaning, procedures for preventive and routine maintenance, and instruction on use of special tools.
8. Repairs: Diagnosis, repair, and disassembly instructions; instructions for identifying parts; and review of spare parts needed for operation and maintenance.

PART 3 - EXECUTION

3.1 INSTRUCTION

A. Facilitator: Engage qualified facilitator to prepare instruction program and training modules, to coordinate instructors, and to coordinate between Contractor and Contracting Officer for number of participants, instruction times, and location.

B. Engage qualified instructors to instruct NPS personnel to adjust, operate, and maintain systems, subsystems, and equipment not part of a system.

C. Scheduling: Provide instruction at mutually agreed on times. For equipment that requires seasonal operation, provide similar instruction at start of each season.

1. Schedule training with NPS through Contracting Officer with at least seven days' advance notice.
2. Conduct training sessions after equipment or system has been accepted and turned over to Government. Coordinate with commissioning requirements.
3. Coordinate with Integrated pest management requirements. Refer to specifications section and approved IPM plan.
4. Individual sections specify duration of training required. If no duration is listed, provide training of sufficient duration to adequately cover subjects.

3.2 DEMONSTRATION AND TRAINING VIDEO

A. General: Engage qualified commercial photographer to record demonstration and training video. Record each training module separately. Include classroom instructions and demonstrations, board diagrams, and other visual aids, but not student practice.

1. At beginning of training module, record each chart containing learning objective and lesson outline.

B. Video Format: Digital Video Disc (DVD).

C. Video Recording: Record sessions with high resolution equipment. Instructor's voice shall be clearly audible and understandable on DVD. Utilize supplemental microphone worn by instructor.

D. Narration: Describe scenes on video by audio narration by microphone while video is recorded. Include description of items being viewed. Describe vantage point, indicating location, direction (by compass point), and elevation or story of construction.

1. DVDs with poor video or audio quality will be rejected and training recorded again.

END OF SECTION 01 79 00

SECTION 01 81 13 - SUSTAINABLE DESIGN REQUIREMENTS FOR NON-LEED™ PROJECTS

PART 1 - GENERAL

1.1 SUMMARY

A. Section includes general requirements and procedures for compliance with Federal Sustainability requirements. This project is not seeking Leadership in Energy & Environmental Design (LEED™) certification but shall comply with applicable Federal Sustainability requirements. Requirements include laws (Executive Orders (EO) and regulations), management policies, building codes and standards, Federal directives, and National Park Service (NPS) guidelines.

B. Many Federal requirements can be achieved only through intelligent and integrated design of the project and are beyond control of the Contractor. Certain requirements relate to the products and procedures used for construction, therefore, full cooperation of the Contractor and Subcontractors is essential to successful compliance with Federal requirements.

C. Contractors shall familiarize themselves with relevant requirements and provide necessary information and instruction to subcontractors and installers.

1. Some requirements involve quantifying percentages by weight; these require careful recordkeeping and reporting by Contractor.
2. See Denver Service Center (DSC) Workflows Sustainability Standards for a list of Federal Sustainability requirements. Applicable Federal Sustainability requirements are also summarized on the project's NPS Project Sustainability Checklist. Contractor is responsible for ensuring the elements in the NPS Project Sustainability Checklist, identified by the Architect/Engineer (A/E) team, are incorporated into the construction of the project.

D. Related Sections:

1. See Divisions 1 through 49 Sections for sustainability requirements specific to work of each of these Sections.

1.2 DEFINITIONS

A. Chain-of-Custody Certificates: Certificates signed by manufacturers certifying wood used to make products was obtained from forests certified by a Forest Stewardship Council (FSC)-accredited certification body to comply with FSC Standard STD-01-001, "FSC Principles and Criteria for Forest Stewardship." Certificates shall include evidence manufacturer is certified for chain of custody by an FSC-accredited certification body.

B. LEED™: Leadership in Energy & Environmental Design. Sustainability rating system developed by United States Green Building Council (USGBC).

C. Rapidly Renewable Materials: Materials made from plants typically harvested within 10-year or shorter cycle. Rapidly renewable materials include products made from bamboo, cotton, flax, jute, straw, sunflower seed hulls, vegetable oils, or wool.

D. Recycled Content: Recycled content value of a material assembly shall be determined by weight.

1. "Post-consumer" material: Waste material generated by households or by commercial, industrial, and institutional facilities in their role as end users of product, which can no longer be used for intended purpose.
2. "Pre-consumer" material: Material diverted from waste stream during manufacturing process. Reutilization of materials such as rework, regrind, or scrap generated in a process and capable of being reclaimed within the same process that generated it is excluded.

E. Biopreferred Products: Commercial or industrial products (other than food or feed) composed in whole, or in significant part, of biological products, renewable agricultural materials (including plant, animal, and marine materials), or forestry materials and includes biobased intermediate ingredients or feedstocks.

1.3 FEDERAL SUSTAINABILITY DOCUMENTATION SUBMITTALS

A. Most of Federal sustainability documentation submittals are aggregations of submittals already required in relevant technical specifications. They are mentioned here to ensure they are collected and organized together to efficiently document compliance with sustainability requirements.

B. Provide preliminary submittals to NPS indicating how the following Federal requirements will be met:

1. Recycled Content: List of specified/proposed materials with recycled content. Indicate cost, post-consumer recycled content, and pre-consumer recycled content for each product having recycled content.

2. Certified Wood: Product data and/or chain-of-custody certificates for products containing certified wood. Include statement indicating cost for each certified wood product.

3. Construction Indoor Air Quality (IAQ) Management Plan – During Construction:

a. Construction indoor-air-quality management plan.
b. Product data for temporary filtration media.
c. Product data for filtration media used during occupancy.
d. Construction Documentation: Six photographs at three different times during construction period, along with brief description of the Sheet Metal and Air Conditioning Contractors' National Association (SMACNA) approach employed, documenting implementation of indoor-air-quality management measures, such as protection of ducts and on-site stored or installed absorptive materials.

4. Construction IAQ Management Plan – Before Occupancy:

a. Signed statement describing building air flush-out procedures including dates when flush-out was started and completed and statement filtration media was replaced after flush-out.

b. Product data for filtration media used during flush-out and during occupancy.

5. Low Emitting Materials - Adhesives and Sealants: Product data for adhesives and sealants used inside weatherproofing system indicating Volatile Organic Compound (VOC) content of each product used. Indicate VOC content in g/L (grams per liter) calculated according to 40 CFR 59 Subpart D (Code of Federal Regulations).
6. Low Emitting Materials - Paints and Coatings: Product data for paints and coatings used inside weatherproofing system indicating VOC content of each product used. Indicate VOC content in g/L calculated according to 40 CFR 59 Subpart D.
7. Low Emitting Materials - Flooring: Product data for products containing composite wood or agrifiber products or wood glues indicating they do not contain urea-formaldehyde resin.
8. Biopreferred Products: Provide list of bio-based products used on project.

PART 2 - PRODUCTS

2.1 RECYCLED CONTENT OF MATERIALS

A. Recycled Content: Provide building materials with recycled content such that post-consumer recycled content plus one-half of pre-consumer recycled content constitutes a minimum of 10 percent of cost of materials used for Project.

1. Determine cost of post-consumer recycled content by dividing weight of post-consumer recycled content in item by total weight of item and multiplying by cost of item.
2. Determine cost of pre-consumer recycled content of an item by dividing weight of pre-consumer recycled content in item by total weight of item and multiplying by cost of item.
3. Do not include mechanical and electrical components, and specialty items such as equipment in calculation.

2.2 BIOPREFERRED PRODUCTS

A. Use bio-based products found on United States Department of Agriculture (USDA) Biopreferred Products list where applicable on project.

2.3 LOW-EMITTING MATERIALS

A. For applications inside the weatherproofing system, use adhesives and sealants that comply with VOC content limits in Specification Divisions 2 through 49.

B. For field applications inside the weatherproofing system, use paints and coatings that comply with VOC content limits in Specification Divisions 2 through 49.

C. Do not use composite wood or agrifiber products or adhesives that contain urea-formaldehyde resin.

PART 3 - EXECUTION

3.1 MEASUREMENT AND VERIFICATION

A. Coordinate with Divisions 2 through 49 for project requirements regarding installation of building level metering equipment to measure energy, water, and electric usage.

3.2 INDOOR-AIR-QUALITY MANAGEMENT

A. Coordinate with Section 01 57 19.11 "Indoor Air Quality Management" for managing indoor air quality during construction and prior to occupancy.

END OF SECTION 01 81 13.13

SECTION 03 20 00 - CONCRETE REINFORCING

PART 1 - GENERAL

1.1 RELATED DOCUMENTS

A. Drawings and general provisions of the Contract, including General and Supplementary Conditions and Division 01 Specification Sections, apply to this Section.

1.2 SUMMARY

A. Section Includes:

1. Steel reinforcement bars.
2. Welded-wire reinforcement.

B. Related Requirements:

1. Section 03 30 00 "Cast-In-Place Concrete" for preinstallation meeting, joint and field quality control requirements.

1.3 ACTION SUBMITTALS

A. Product Data: For the following:

1. Each type of steel reinforcement.
2. Bar supports.
3. Mechanical splice couplers.

B. Shop Drawings: Comply with ACI SP-066:

1. Include placing drawings that detail fabrication, bending, and placement.
2. Include bar sizes, lengths, materials, grades, bar schedules, stirrup spacing, bent bar diagrams, bar arrangement, location of splices, lengths of lap splices, details of mechanical splice couplers, tie spacing, and supports for concrete reinforcement.

1.4 INFORMATIONAL SUBMITTALS

A. Welding certificates.

1. Reinforcement To Be Welded: Welding procedure specification in accordance with AWS D1.4/D1.4M

B. Material Test Reports: For the following, from a qualified testing agency:

1. Steel Reinforcement:

a. For reinforcement to be welded, mill test analysis for chemical composition and carbon equivalent of the steel in accordance with ASTM A706.

2. Mechanical splice couplers.

1.5 QUALITY ASSURANCE

A. Welding Qualifications: Qualify procedures and personnel in accordance with AWS D1.4/D 1.4M.

1.6 DELIVERY, STORAGE, AND HANDLING

A. Steel Reinforcement: Deliver, store, and handle steel reinforcement to prevent bending and damage.

1. Store reinforcement to avoid contact with earth.

PART 2 - PRODUCTS

2.1 STEEL REINFORCEMENT

A. Reinforcing Bars: ASTM A615, Grade 60, deformed.

B. Low-Alloy Steel Reinforcing Bars: ASTM A706, deformed.

C. Headed-Steel Reinforcing Bars: ASTM A970.

D. Plain-Steel Welded-Wire Reinforcement: ASTM A1064, plain, fabricated from as-drawn steel wire into flat sheets.

2.2 REINFORCEMENT ACCESSORIES

A. Joint Dowel Bars: ASTM A615, Grade 60, plain-steel bars, cut true to length with ends square and free of burrs.

B. Bar Supports: Bolsters, chairs, spacers, and other devices for spacing, supporting, and fastening reinforcing bars and welded-wire reinforcement in place.

1. Manufacture bar supports from steel wire, plastic, or precast concrete in accordance with CRSI's "Manual of Standard Practice," of greater compressive strength than concrete and as follows:

a. For concrete surfaces exposed to view, where legs of wire bar supports contact forms, use CRSI Class 1 plastic-protected steel wire, all-plastic bar supports, or CRSI Class 2 stainless steel bar supports.

C. Mechanical Splice Couplers: ACI 318 Type 1, same material of reinforcing bar being spliced.

D. Steel Tie Wire: ASTM A1064, annealed steel, not less than 0.0508 inch in diameter. Finish: plain.

2.3 FABRICATING REINFORCEMENT

A. Fabricate steel reinforcement according to CRSI's "Manual of Standard Practice."

PART 3 - EXECUTION

3.1 PREPARATION

A. Protection of In-Place Conditions:

1. Do not cut or puncture vapor retarder.
2. Repair damage and reseal vapor retarder before placing concrete.

B. Clean reinforcement of loose rust and mill scale, earth, ice, and other foreign materials that reduce bond to concrete.

3.2 INSTALLATION OF STEEL REINFORCEMENT

A. Comply with CRSI's "Manual of Standard Practice" for placing and supporting reinforcement.

B. Accurately position, support, and secure reinforcement against displacement.

1. Locate and support reinforcement with bar supports to maintain minimum concrete cover.
2. Do not tack weld crossing reinforcing bars.

C. Preserve clearance between bars of not less than 1 inch, not less than one bar diameter, or not less than 1-1/3 times size of large aggregate, whichever is greater.

D. Provide concrete coverage in accordance with ACI 318.

E. Set wire ties with ends directed into concrete, not toward exposed concrete surfaces.

F. Splices: Lap splices as indicated on Drawings.

1. Bars indicated to be continuous, and all vertical bars shall be lapped not less than 36 bar diameters at splices, or 24 inches, whichever is greater, unless otherwise indicated on Drawings.
2. Stagger splices in accordance with ACI 318.
3. Mechanical Splice Couplers: Install in accordance with manufacturer's instructions.
4. Weld reinforcing bars in accordance with AWS D1.4/D 1.4M, where indicated on Drawings.

G. Install welded-wire reinforcement in longest practicable lengths.

1. Support welded-wire reinforcement in accordance with CRSI "Manual of Standard Practice."

    a. For reinforcement less than W4.0 or D4.0, continuous support spacing shall not exceed 12 inches.

2. Lap edges and ends of adjoining sheets at least one wire spacing plus 2 inches for plain wire and 8 inches for deformed wire.
3. Offset laps of adjoining sheet widths to prevent continuous laps in either direction.
4. Lace overlaps with wire.

3.3 JOINTS

A. Comply with Section 03 30 00 “Cast-In-Place Concrete”.

3.4 INSTALLATION TOLERANCES

A. Comply with ACI 117.

3.5 FIELD QUALITY CONTROL

A. Special Inspections: All Special Inspections are the responsibility of the Contractor. Engage a qualified special inspector to perform special inspections and prepare special inspection reports.

B. Special inspections:

1. Steel-reinforcement placement.
2. Steel-reinforcement mechanical splice couplers.
3. Steel-reinforcement welding.

END OF SECTION 03 20 00

SECTION 03 30 00 - CAST-IN-PLACE CONCRETE

PART 1 - GENERAL

1.1 RELATED DOCUMENTS

A. Drawings and general provisions of the Contract, including General and Supplementary Conditions and Division 01 Specifications, apply to this Section.

1.2 SUMMARY

A. Section includes:

1. Cast-in-place concrete, including concrete materials, mixture design, placement procedures, and finishes.

B. Related Requirements:

1. Section 03 10 00 "Concrete Forming and Accessories" for form-facing materials.
2. Section 03 20 00 "Concrete Reinforcing" for steel reinforcement.

1.3 DEFINITIONS

A. Cementitious Materials: Portland cement alone or in combination with one or more of the following: blended hydraulic cement, fly ash, slag cement, other pozzolans, and silica fume; materials subject to compliance with requirements.

B. Water/Cement Ratio (w/cm): The ratio by weight of water to cementitious materials.

1.4 PREINSTALLATION MEETINGS

A. Preinstallation Conference: Conduct conference at Project site.

1. At least 35 days prior to submitting design mixes, conduct a meeting to review detailed requirements for preparing concrete design mixes and to determine procedures for satisfactory concrete operations. Review requirements for submittals, status of coordinating work, and availability of materials. Establish preliminary work progress schedules and procedures for material inspection, testing, and certification. Require representatives of each entity directly concerned with cast-in-place concrete to attend, including the following:

a. Contractor's superintendent.
b. Independent testing agency responsible for field quality control of concrete design mixtures.
c. Ready-mix concrete manufacturer.
d. Concrete subcontractor.

2. Review the following:

   a. Special inspection and testing and inspecting agency procedures for field quality control.
   b. Construction joints, control joints, isolation joints, and joint-filler strips.
   c. Vapor retarder installation.
   d. Anchor rod and anchorage device installation tolerances.
   e. Steel reinforcement installation.
   f. Cold and hot weather concreting procedures.
   g. Concrete finishes and finishing.
   h. Curing procedures.
   i. Forms and form-removal limitations.
   j. Methods for achieving specified floor and slab flatness and levelness.
   k. Floor and slab flatness and levelness measurements.
   l. Concrete repair procedures.
   m. Concrete protection.

1.5 ACTION SUBMITTALS

A. Product Data: For each of the following.

1. Portland cement.
2. Fly ash.
3. Slag cement.
4. Blended hydraulic cement.
5. Performance-based hydraulic cement
6. Aggregates.
7. Admixtures:

   a. Include limitations of use, including restrictions on cementitious materials, supplementary cementitious materials, air entrainment, aggregates, temperature at time of concrete placement, relative humidity at time of concrete placement, curing conditions, and use of other admixtures.

8. Vapor retarders.
9. Curing materials.
10. Joint fillers.
11. Repair materials.

B. Design Mixtures: For each concrete mixture, include the following:

1. Mixture identification.
2. Minimum 28-day compressive strength.
3. Durability exposure class.
4. Maximum w/cm.
5. Slump limit.
6. Air content.
7. Nominal maximum aggregate size.
8. Indicate amounts of mixing water to be withheld for later addition at Project site if permitted.

9. Intended placement method.
10. Submit alternate design mixtures when characteristics of materials, Project conditions, weather, test results, or other circumstances warrant adjustments.

C. Shop Drawings:

1. Construction Joint Layout: Indicate proposed construction joints required to construct the structure.

a. Location of construction joints is subject to approval of the Contracting Officer.

D. Concrete Schedule: For each Intended Use class of concrete indicated in the drawings, include the following:

1. Intended Use class designation.
2. Location within Project.
3. Exposure Class designation.
4. Formed Surface Finish designation and final finish.
5. Final finish for floors.
6. Curing process.

1.6 INFORMATIONAL SUBMITTALS

A. Qualification Data: For the following:

1. Installer: Include copies of applicable ACI certificates.
2. Ready-mixed concrete manufacturer.

B. Material Certificates: For each of the following, signed by manufacturers:

1. Cementitious materials.
2. Admixtures.
3. Curing compounds.
4. Bonding agents.
5. Adhesives.
6. Vapor retarders.
7. Joint-filler strips.
8. Repair materials.

C. Material Test Reports: For the following, from a qualified testing agency:

1. Portland cement.
2. Fly ash.
3. Slag cement.
4. Blended hydraulic cement.
5. Performance-based hydraulic cement.
6. Aggregates.
7. Admixtures.

D. Floor surface flatness and levelness measurements report, indicating compliance with specified tolerances.

E. Research Reports:

1. For concrete admixtures in accordance with ICC's Acceptance Criteria AC198.
2. For sheet vapor retarder, showing compliance with ICC AC380.

F. Preconstruction Test Reports: For each mix design.

G. Minutes of preinstallation conference.

1.7 QUALITY ASSURANCE

A. Installer Qualifications: A qualified installer who employs Project personnel qualified as an ACI-certified Flatwork Technician and Finisher and a supervisor who is a certified ACI Flatwork Concrete Finisher/Technician or an ACI Concrete Flatwork Technician.

1. Post-Installed Concrete Anchors Installers: ACI-certified Adhesive Anchor Installer.

B. Ready-Mixed Concrete Manufacturer Qualifications: A firm experienced in manufacturing ready-mixed concrete products that complies with ASTM C94 requirements for production facilities and equipment.

1. Manufacturer certified in accordance with NRMCA's "Certification of Ready Mixed Concrete Production Facilities."

1.8 DELIVERY, STORAGE, AND HANDLING

A. Comply with ASTM C94 and ACI 301.

1.9 FIELD CONDITIONS

A. Cold-Weather Placement: Comply with ACI 301 and ACI 306.1 and as follows.

1. Protect concrete work from physical damage or reduced strength that could be caused by frost, freezing actions, or low temperatures.
2. When average high and low temperature is expected to fall below 40 deg F for three successive days, maintain delivered concrete mixture temperature within the temperature range required by ACI 301.
3. Do not use frozen materials or materials containing ice or snow.
4. Do not place concrete in contact with surfaces less than 35 deg F, other than reinforcing steel.
5. Do not use calcium chloride, salt, or other materials containing antifreeze agents or chemical accelerators unless otherwise specified and approved in mixture designs.

B. Hot-Weather Placement: Comply with ACI 301 and ACI 305.1, and as follows:

1. Maintain concrete temperature at time of discharge to not exceed 95 deg F.

2. Fog-spray forms, steel reinforcement, and subgrade just before placing concrete. Keep subgrade uniformly moist without standing water, soft spots, or dry areas.

PART 2 - PRODUCTS

2.1 CONCRETE, GENERAL

A. ACI Publications: Comply with the following unless modified by requirements in the Contract Documents.

1. ACI 301, “Specifications for Structural Concrete.”
2. ACI 117, “Specifications for Tolerances for Concrete Construction and Materials.”
3. Concrete Reinforcing Steel Institute (CRSI) “ Manual of Standard Practice.”
4. ACI 318, “Building Code Requirements for Structural Concrete and Commentary.”

2.2 CONCRETE MATERIALS

A. Source Limitations:

1. Obtain all concrete mixtures from a single ready-mixed concrete manufacturer for entire Project.
2. Obtain each type or class of cementitious material of the same brand from the same manufacturer's plant.
3. Obtain aggregate from single source.
4. Obtain each type of admixture from single source from single manufacturer.

B. Cementitious Materials:

1. Portland Cement: ASTM C150 Type I/II.
2. Fly Ash: ASTM C618, Class C or F.
3. Slag Cement: ASTM C989, Grade 100 or 120.
4. Blended Hydraulic Cement: ASTM C595, Type IL, portland-limestone cement.
5. Performance-Based Hydraulic Cement: ASTM C1157: Type GU, general use.

C. Normal-Weight Aggregates: ASTM C33, Class 3S coarse aggregate or better, graded. Provide aggregates from a single source.

1. Alkali-Silica Reaction: Comply with one of the following:

a. Expansion Result of Aggregate: Not more than 0.04 percent at one-year when tested in accordance with ASTM C1293.
b. Expansion Results of Aggregate and Cementitious Materials in Combination: Not more than 0.10 percent at an age of 16 days when tested in accordance with ASTM C1567.
c. Alkali Content in Concrete: Not more than 4 lb./cu. yd. for moderately reactive aggregate or 3 lb./cu. yd. for highly reactive aggregate, when tested in accordance with ASTM C1293 and categorized in accordance with ASTM C1778, based on alkali content being calculated in accordance with ACI 301.

2. Maximum Coarse-Aggregate Size: 3/4 inch nominal unless noted otherwise on Drawings.
3. Fine Aggregate: Free of materials with deleterious reactivity to alkali in cement.

D. Air-Entraining Admixture: ASTM C260.

E. Chemical Admixtures: Certified by manufacturer to be compatible with other admixtures that do not contribute water-soluble chloride ions exceeding those permitted in hardened concrete. Do not use calcium chloride or admixtures containing calcium chloride.

1. Water-Reducing Admixture: ASTM C494, Type A.
2. Retarding Admixture: ASTM C494, Type B.
3. Water-Reducing and -Retarding Admixture: ASTM C494, Type D.
4. High-Range, Water-Reducing Admixture: ASTM C494, Type F.
5. High-Range, Water-Reducing and -Retarding Admixture: ASTM C494, Type G.
6. Plasticizing and Retarding Admixture: ASTM C1017, Type II.

F. Water and Water Used to Make Ice: ASTM C94, potable.

2.3 VAPOR RETARDERS

A. Sheet Vapor Retarder, Class A: ASTM E1745, Class A; not less than 10 mils thick. Include manufacturer's recommended adhesive or pressure-sensitive tape.

2.4 CURING MATERIALS

A. Evaporation Retarder: Waterborne, monomolecular film forming, manufactured for application to fresh concrete.

B. Absorptive Cover: AASHTO M 182, Class 2, burlap cloth made from jute or kenaf, weighing approximately 9 oz./sq. yd. when dry.

C. Moisture-Retaining Cover: ASTM C171, polyethylene film burlap-polyethylene sheet.

1. Color:

a. Ambient Temperature Below 50 deg F: Black.
b. Ambient Temperature between 50 deg F and 85 deg F: Any color.
c. Ambient Temperature Above 85 deg F: White.

D. Curing Paper: 8-feet-wide paper, consisting of two layers of fibered kraft paper laminated with double coating of asphalt.

E. Water: Potable or complying with ASTM C1602.

F. Clear, Waterborne, Membrane-Forming, Dissipating Curing Compound: ASTM C309, Type 1, Class B, certified by curing compound manufacturer to not interfere with bonding of floor covering.

G. Clear, Waterborne, Membrane-Forming, Nondissipating Curing Compound: ASTM C309, Type 1, Class B, certified by curing compound manufacturer to not interfere with bonding of floor covering.

2.5 RELATED MATERIALS

A. Expansion- and Isolation-Joint-Filler Strips: ASTM D1751, asphalt-saturated cellulosic fiber or ASTM D1752, cork or self-expanding cork.

B. Bonding Agent: ASTM C1059, Type II, nonredispersible, acrylic emulsion or styrene butadiene.

C. Epoxy Bonding Adhesive: ASTM C881, two-component epoxy resin, capable of humid curing and bonding to damp surfaces, of class suitable for application temperature and of grade and class to suit requirements, and as follows:

1. Types IV and V, load bearing, for bonding hardened or freshly mixed concrete to hardened concrete.

2.6 REPAIR MATERIALS

A. Repair Underlayment: Cement-based, polymer-modified, self-leveling product that can be applied in thicknesses from 1/8 inch and that can be feathered at edges to match adjacent floor elevations.

1. Cement Binder: ASTM C150 portland cement or hydraulic or blended hydraulic cement, as defined in ASTM C219.
2. Primer: Product of underlayment manufacturer recommended for substrate, conditions, and application.
3. Aggregate: Well-graded, washed gravel, 1/8 to 1/4 inch or coarse sand, as recommended by underlayment manufacturer.
4. Compressive Strength: Not less than 4100 psi at 28 days when tested in accordance with ASTM C109.

B. Repair Overlayment: Cement-based, polymer-modified, self-leveling product that can be applied in thicknesses from 1/4 inch and that can be filled in over a scarified surface to match adjacent floor elevations.

1. Cement Binder: ASTM C150 portland cement or hydraulic or blended hydraulic cement, as defined in ASTM C219.
2. Primer: Product of topping manufacturer recommended for substrate, conditions, and application.
3. Aggregate: Well-graded, washed gravel, 1/8 to 1/4 inch or coarse sand as recommended by topping manufacturer.
4. Compressive Strength: Not less than 5000 psi at 28 days when tested in accordance with ASTM C109.

2.7 CONCRETE MIXTURES, GENERAL

A. Prepare design mixtures for each type and strength of concrete, proportioned on the basis of laboratory trial mixture or field test data, or both, in accordance with ACI 301.

1. Use a qualified testing agency for preparing and reporting proposed mixture designs, based on laboratory trial mixtures.

B. Design concrete mixtures to provide concrete with the properties indicated on the Drawings.

C. Cementitious Materials: Limit percentage, by weight, of cementitious materials other than portland cement in concrete as follows:

1. Fly Ash or Other Pozzolans: 25 percent by mass.
2. Slag Cement: 50 percent by mass.
3. Total of Fly Ash or Other Pozzolans, and Slag Cement: 50 percent by mass, with fly ash or pozzolans not exceeding 25 percent by mass.
4. Total of Fly Ash or Other Pozzolans: 35 percent by mass with fly ash or pozzolans not exceeding 25 percent by mass.

D. Admixtures: Use admixtures in accordance with manufacturer's written instructions.

1. Use water-reducing, high-range water-reducing, or plasticizing admixture in concrete, as required, for placement and workability.
2. Use water-reducing and -retarding admixture when required by high temperatures, low humidity, or other adverse placement conditions.
3. Use water-reducing admixture in pumped concrete, and concrete with a w/cm below 0.50.

2.8 CONCRETE MIXING

A. Ready-Mixed Concrete: Measure, batch, mix, and deliver concrete in accordance with ASTM C94 , and furnish batch ticket information.

B. Project-Site Mixing: Not permitted.

PART 3 - EXECUTION

3.1 EXAMINATION

A. Verification of Conditions:

1. Before placing concrete, verify that installation of concrete forms, accessories, and reinforcement, and embedded items is complete and that required inspections have been performed.
2. Do not proceed until unsatisfactory conditions have been corrected.

3.2 PREPARATION

A. Provide reasonable auxiliary services to accommodate field testing and inspections, acceptable to testing agency, including the following:

1. Daily access to the Work.
2. Incidental labor and facilities necessary to facilitate tests and inspections.
3. Secure space for storage, and initial curing of test samples, including source of water and continuous electrical power at Project site during site curing period for test samples.
4. Security and protection for test samples and for testing and inspection equipment at Project site.

3.3 INSTALLATION OF EMBEDDED ITEMS

A. Place and secure anchorage devices and other embedded items required for adjoining Work that is attached to or supported by cast-in-place concrete.

1. Use setting drawings, templates, diagrams, instructions, and directions furnished with items to be embedded.
2. Install anchor rods, accurately located, to elevations required and complying with tolerances in Section 7.5 of ANSI/AISC 303.

3.4 INSTALLATION OF VAPOR RETARDER

A. Sheet Vapor Retarders: Place, protect, and repair sheet vapor retarder in accordance with ASTM E1643 and manufacturer's written instructions.

1. Install vapor retarder with longest dimension parallel with direction of concrete pour.
2. Face laps away from exposed direction of concrete pour.
3. Lap vapor retarder over footings and grade beams not less than 6 inches, sealing vapor retarder to concrete.
4. Lap joints 6 inches and seal with manufacturer's recommended tape.
5. Terminate vapor retarder at the top of floor slabs, grade beams, and pile caps, sealing entire perimeter to floor slabs, grade beams, foundation walls, or pile caps.
6. Seal penetrations in accordance with vapor retarder manufacturer's instructions.
7. Protect vapor retarder during placement of reinforcement and concrete.

    a. Repair damaged areas by patching with vapor retarder material, overlapping damages area by 6 inches on all sides, and sealing to vapor retarder.

3.5 JOINTS

A. Construct joints true to line, with faces perpendicular to surface plane of concrete.

B. Construction Joints: Coordinate with floor slab pattern and concrete placement sequence.

1. Install so strength and appearance of concrete are not impaired, at locations indicated on Drawings or as approved by Contracting Officer.
2. Place joints perpendicular to main reinforcement.

a. Continue reinforcement across construction joints unless otherwise indicated.
b. Do not continue reinforcement through sides of strip placements of floors and slabs.

3. Form keyed joints as indicated. Embed keys at least 1-1/2 inches into concrete.
4. Locate joints for beams, slabs, joists, and girders at third points of spans. Offset joints in girders a minimum distance of twice the beam width from a beam-girder intersection.
5. Locate horizontal joints in walls and columns at underside of floors, slabs, beams, and girders and at the top of footings or floor slabs.
6. Space vertical joints in walls as indicated. Unless otherwise indicated on Drawings, locate vertical joints beside piers integral with walls, near corners, and in concealed locations where possible.
7. Use a bonding agent at locations where fresh concrete is placed against hardened or partially hardened concrete surfaces unless noted otherwise.
8. Use epoxy-bonding adhesive at locations where fresh concrete is placed against hardened or partially hardened concrete surfaces for beams, slabs, joists, and girders.

C. Control Joints in Slabs-on-Ground: Form weakened-plane control joints, sectioning concrete into areas as indicated. Construct control joints for a depth equal to at least one-fourth of concrete thickness as follows:

1. Grooved Joints: Form control joints after initial floating by grooving and finishing each edge of joint to a radius of 1/8 inch. Repeat grooving of control joints after applying surface finishes. Eliminate groover tool marks on concrete surfaces.
2. Sawed Joints: Form control joints with power saws equipped with shatterproof abrasive or diamond-rimmed blades. Cut 1/8-inch-wide joints into concrete when cutting action does not tear, abrade, or otherwise damage surface and before concrete develops random cracks.

D. Isolation Joints in Slabs-on-Ground: After removing formwork, install joint-filler strips at slab junctions with vertical surfaces, such as column pedestals, foundation walls, grade beams, and other locations, as indicated.

1. Extend joint-filler strips full width and depth of joint, terminating flush with finished concrete surface unless otherwise indicated on Drawings.
2. Install joint-filler strips in lengths as long as practicable. Where more than one length is required, lace or clip sections together.

E. Doweled Joints:

1. Install dowel bars and support assemblies at joints where indicated on Drawings.
2. Lubricate or asphalt coat one-half of dowel bar length to prevent concrete bonding to one side of joint.

3.6 CONCRETE PLACEMENT

A. Before placing concrete, verify that installation of formwork, reinforcement, vapor retarder, and embedded items is complete and that required inspections are completed.

1. Immediately prior to concrete placement, inspect vapor retarder for damage and deficient installation, and repair defective areas.
2. Provide continuous inspection of vapor retarder during concrete placement and make necessary repairs to damaged areas as Work progresses.

B. Notify Contracting Officer, testing and inspection agencies 24 hours prior to commencement of concrete placement.

C. Before test sampling and placing concrete, water may be added at Project site, subject to limitations of ACI 301, but not to exceed the amount indicated on the concrete delivery ticket.

1. Do not add water to concrete after adding high-range water-reducing admixtures to mixture.

D. Deposit concrete continuously in one layer or in horizontal layers of such thickness that no new concrete is placed on concrete that has hardened enough to cause seams or planes of weakness.

1. If a section cannot be placed continuously, provide construction joints as indicated.
2. Deposit concrete to avoid segregation.
3. Deposit concrete in horizontal layers of depth not to exceed formwork design pressures and in a manner to avoid inclined construction joints.
4. Consolidate placed concrete with mechanical vibrating equipment in accordance with ACI 301.

a. Do not use vibrators to transport concrete inside forms.
b. Insert and withdraw vibrators vertically at uniformly spaced locations to rapidly penetrate placed layer and at least 6 inches into preceding layer.
c. Do not insert vibrators into lower layers of concrete that have begun to lose plasticity.
d. At each insertion, limit duration of vibration to time necessary to consolidate concrete, and complete embedment of reinforcement and other embedded items without causing mixture constituents to segregate.

E. Deposit and consolidate concrete for floors and slabs in a continuous operation, within limits of construction joints, until placement of a panel or section is complete.

1. Do not place concrete floors and slabs in a checkerboard sequence.
2. Consolidate concrete during placement operations, so concrete is thoroughly worked around reinforcement and other embedded items and into corners.
3. Maintain reinforcement in position on chairs during concrete placement.
4. Screed slab surfaces with a straightedge and strike off to correct elevations.
5. Level concrete, cut high areas, and fill low areas.
6. Slope surfaces uniformly to drains where required.
7. Begin initial floating using bull floats or darbies to form a uniform and open-textured surface plane, before excess bleedwater appears on the surface.
8. Do not further disturb slab surfaces before starting finishing operations.

3.7 FINISHING FORMED SURFACES

A. As-Cast Surface Finishes:

1. ACI 301 Surface Finish SF-2.0: As-cast concrete texture imparted by form-facing material, arranged in an orderly and symmetrical manner with a minimum of seams.

    a. Patch voids larger than 3/4 inch wide or 1/2 inch deep.
    b. Remove projections larger than 1/4 inch.
    c. Patch tie holes.
    d. Surface Tolerance: ACI 117 Class B.
    e. Locations: Apply to concrete surfaces exposed to public view, to receive a rubbed finish, or to be covered with a coating or covering material applied directly to concrete.

B. Related Unformed Surfaces:

1. At tops of walls, horizontal offsets, and similar unformed surfaces adjacent to formed surfaces, strike off smooth and finish with a color and texture matching adjacent formed surfaces.
2. Continue final surface treatment of formed surfaces uniformly across adjacent unformed surfaces unless otherwise indicated.

3.8 FINISHING FLOORS AND SLABS

A. Comply with ACI 302.1R recommendations for screeding, restraightening, and finishing operations for concrete surfaces. Do not wet concrete surfaces.

B. Float Finish:

1. When bleedwater sheen has disappeared and concrete surface has stiffened sufficiently to permit operation of specific float apparatus, consolidate concrete surface with power-driven floats or by hand floating if area is small or inaccessible to power-driven floats.
2. Repeat float passes and restraightening until surface is left with a uniform, smooth, granular texture and complies with ACI 117 tolerances for conventional concrete.
3. Apply float finish to surfaces to receive trowel finish.

C. Trowel Finish:

1. After applying float finish, apply first troweling and consolidate concrete by hand or power-driven trowel.
2. Continue troweling passes and restraighten until surface is free of trowel marks and uniform in texture and appearance.
3. Grind smooth any surface defects that would telegraph through applied coatings or floor coverings.
4. Do not add water to concrete surface.
5. Do not apply hard-troweled finish to concrete, which has a total air content greater than 3 percent.
6. Apply a trowel finish to surfaces exposed to view or to be covered with resilient flooring, carpet, ceramic or quarry tile set over a cleavage membrane, paint, or another thin-film-finish coating system.
7. Finish surfaces to the following tolerances, in accordance with ASTM E1155, for a randomly trafficked floor surface:

a. Slabs on Ground:

1) Specified overall values of flatness, F_F 35; and of levelness, F_L 25; with minimum local values of flatness, F_F 24; and of levelness, F_L 17.

D. Broom Finish: Apply a broom finish to exterior concrete stoop slabs.

1. Immediately after float finishing, slightly roughen trafficked surface by brooming with fiber-bristle broom perpendicular to main traffic route.
2. Coordinate required final finish with Contracting Officer before application.

3.9 INSTALLATION OF MISCELLANEOUS CONCRETE ITEMS

A. Filling In:

1. Fill in holes and openings left in concrete structures after Work of other trades is in place unless otherwise indicated.
2. Mix, place, and cure concrete, as specified, to blend with in-place construction.
3. Provide other miscellaneous concrete filling indicated or required to complete the Work.

B. Equipment Bases and Foundations:

1. Coordinate sizes and locations of concrete bases with actual equipment provided.
2. Construct concrete bases 6 inches high unless otherwise indicated on Drawings,-and extend base not less than 6 inches in each direction beyond the maximum dimensions of supported equipment unless otherwise indicated on Drawings, or unless required for seismic anchor support.
3. Minimum Compressive Strength: 4000 psi at 28 days.
4. Install dowel rods to connect concrete base to concrete floor. Unless otherwise indicated, install dowel rods on 18-inch centers around the full perimeter of concrete base.
5. For supported equipment, install epoxy-coated anchor bolts that extend through concrete base and anchor into structural concrete substrate.
6. Prior to pouring concrete, place and secure anchorage devices.

   a. Use setting drawings, templates, diagrams, instructions, and directions furnished with items to be embedded.
   b. Cast anchor-bolt insert into bases.
   c. Install anchor bolts to elevations required for proper attachment to supported equipment.

3.10 CONCRETE CURING

A. Protect freshly placed concrete from premature drying and excessive cold or hot temperatures.

1. Comply with ACI 301 and ACI 306.1 for cold weather protection during curing.
2. Comply with ACI 301 and ACI 305.1 for hot-weather protection during curing.
3. Maintain moisture loss no more than 0.2 lb/sq. ft. x h, calculated in accordance with ACI 305.1, before and during finishing operations.

B. Curing Formed Surfaces: Comply with ACI 308.1 as follows:

1. Cure formed concrete surfaces, including underside of beams, supported slabs, and other similar surfaces.
2. If forms remain during curing period, moist cure after loosening forms.
3. If removing forms before end of curing period, continue curing for remainder of curing period, as follows:

    a. Continuous Fogging: Maintain standing water on concrete surface until final setting of concrete.
    b. Continuous Sprinkling: Maintain concrete surface continuously wet.
    c. Absorptive Cover: Pre-dampen absorptive material before application; apply additional water to absorptive material to maintain concrete surface continuously wet.
    d. Water-Retention Sheeting Materials: Cover exposed concrete surfaces with sheeting material, taping, or lapping seams.
    e. Membrane-Forming Curing Compound: Apply uniformly in continuous operation by power spray or roller in accordance with manufacturer's written instructions.

        1) Recoat areas subject to heavy rainfall within three hours after initial application.
        2) Maintain continuity of coating and repair damage during curing period.

C. Curing Unformed Surfaces: Comply with ACI 308.1 as follows:

1. Begin curing immediately after finishing concrete.
2. Concrete Floors:

    a. Interior floors to Receive Floor Coverings Specified in Other Sections: Contractor has option of the following:

        1) Absorptive Cover: As soon as concrete has sufficient set to permit application without marring concrete surface, install prewetted absorptive cover over entire area of floor.

            a) Lap edges and ends of absorptive cover not less than 12 inches.
            b) Maintain absorptive cover water saturated, and in place, for duration of curing period, but not less than seven days.

        2) Moisture-Retaining-Cover Curing: Cover concrete surfaces with moisture-retaining cover for curing concrete, placed in widest practicable width, with sides and ends lapped at least 12 inches, and sealed by waterproof tape or adhesive.

            a) Immediately repair any holes or tears during curing period, using cover material and waterproof tape.
            b) Cure for not less than seven days.

        3) Ponding or Continuous Sprinkling of Water: Maintain concrete surfaces continuously wet for not less than seven days, utilizing one, or a combination of, the following:

            a) Water.

b) Continuous water-fog spray.

b. Floors to Receive Curing Compound:

1) Apply uniformly in continuous operation by power spray or roller in accordance with manufacturer's written instructions.
2) Recoat areas subjected to heavy rainfall within three hours after initial application.
3) Maintain continuity of coating, and repair damage during curing period.
4) Removal: After curing period has elapsed, remove curing compound without damaging concrete surfaces by method recommended by curing compound manufacturer unless manufacturer certifies curing compound does not interfere with bonding of floor covering used on Project.

3.11 TOLERANCES

A. Conform to ACI 117.

3.12 JOINT FILLING

A. Prepare, clean, and install joint filler in accordance with manufacturer's written instructions.

1. Defer joint filling until concrete has aged at least six months.
2. Do not fill joints until construction traffic has permanently ceased.

B. Remove dirt, debris, saw cuttings, curing compounds, and sealers from joints; leave contact faces of joints clean and dry.

C. Overfill joint, and trim joint filler flush with top of joint after hardening.

3.13 CONCRETE SURFACE REPAIRS

A. Defective Concrete:

1. Repair and patch defective areas when approved by Contracting Officer.
2. Remove and replace concrete that cannot be repaired and patched to Contracting Officer’s approval.

B. Patching Mortar: Mix dry-pack patching mortar, consisting of 1 part portland cement to 2-1/2 parts fine aggregate passing a No. 16 sieve, using only enough water for handling and placing.

C. Repairing Formed Surfaces: Surface defects include color and texture irregularities, cracks, spalls, air bubbles, honeycombs, rock pockets, fins and other projections on the surface, and stains and other discolorations that cannot be removed by cleaning.

1. Immediately after form removal, cut out honeycombs, rock pockets, and voids more than 1/2 inch in any dimension to solid concrete.

a. Limit cut depth to 3/4 inch.

b. Make edges of cuts perpendicular to concrete surface.
c. Clean, dampen with water, and brush-coat holes and voids with bonding agent.
d. Fill and compact with patching mortar before bonding agent has dried.
e. Fill form-tie voids with patching mortar or cone plugs secured in place with bonding agent.

2. Repair defects on surfaces exposed to view by blending white portland cement and standard portland cement, so that, when dry, patching mortar matches surrounding color.

a. Patch a test area at inconspicuous locations to verify mixture and color match before proceeding with patching.
b. Compact mortar in place and strike off slightly higher than surrounding surface.

3. Repair defects on concealed formed surfaces that will affect concrete's durability and structural performance as determined by Contracting Officer.

D. Repairing Unformed Surfaces:

1. Test unformed surfaces, such as floors and slabs, for finish, and verify surface tolerances specified for each surface.

a. Correct low and high areas.
b. Test surfaces sloped to drain for trueness of slope and smoothness; use a sloped template.

2. Repair finished surfaces containing surface defects, including spalls, popouts, honeycombs, rock pockets, crazing, and cracks in excess of 0.01 inch wide or that penetrate to reinforcement or completely through unreinforced sections regardless of width, and other objectionable conditions.
3. After concrete has cured at least 14 days, correct high areas by grinding.
4. Correct localized low areas during, or immediately after, completing surface-finishing operations by cutting out low areas and replacing with patching mortar.

a. Finish repaired areas to blend into adjacent concrete.

5. Correct other low areas scheduled to receive floor coverings with a repair underlayment.

a. Prepare, mix, and apply repair underlayment and primer in accordance with manufacturer's written instructions to produce a smooth, uniform, plane, and level surface.
b. Feather edges to match adjacent floor elevations.

6. Correct other low areas scheduled to remain exposed with repair topping.

a. Cut out low areas to ensure a minimum repair topping depth of 1/4 inch to match adjacent floor elevations.
b. Prepare, mix, and apply repair topping and primer in accordance with manufacturer's written instructions to produce a smooth, uniform, plane, and level surface.

7. Repair defective areas, except random cracks and single holes 1 inch or less in diameter, by cutting out and replacing with fresh concrete.

    a. Remove defective areas with clean, square cuts, and expose steel reinforcement with at least a 3/4-inch clearance all around.
    b. Dampen concrete surfaces in contact with patching concrete and apply bonding agent.
    c. Mix patching concrete of same materials and mixture as original concrete, except without coarse aggregate.
    d. Place, compact, and finish to blend with adjacent finished concrete.
    e. Cure in same manner as adjacent concrete.

8. Repair random cracks and single holes 1 inch or less in diameter with patching mortar.

    a. Groove top of cracks and cut out holes to sound concrete, and clean off dust, dirt, and loose particles.
    b. Dampen cleaned concrete surfaces and apply bonding agent.
    c. Place patching mortar before bonding agent has dried.
    d. Compact patching mortar and finish to match adjacent concrete.
    e. Keep patched area continuously moist for at least 72 hours.

E. Perform structural repairs of concrete, subject to Contracting Officer's approval, using epoxy adhesive and patching mortar.

F. Repair materials and installation not specified above may be used, subject to Contracting Officer’s approval.

3.14 FIELD QUALITY CONTROL

A. Special Inspections and Tests: All Special Inspections and Tests are the responsibility of the Contractor. Engage a qualified special inspection and testing agency to perform inspections and tests and prepare inspection and testing reports.

1. Testing agency to be responsible for providing curing container for composite samples on Site.
2. Testing agency to immediately report to Contracting Officer, Contractor, and concrete manufacturer any failure of Work to comply with Contract Documents.
3. Testing agency to report results of tests and inspections, in writing, to Contracting Officer, Contractor, and concrete manufacturer within 48 hours of inspections and tests.

    a. Test reports to include reporting requirements of ASTM C31, ASTM C39, and ACI 301, including the following as applicable to each test and inspection:

        1) Project name.
        2) Name of testing agency.
        3) Names and certification numbers of field and laboratory technicians performing inspections and testing.
        4) Name of concrete manufacturer.
        5) Date and time of inspection, sampling, and field testing.
        6) Date and time of concrete placement.

7) Location in Work of concrete represented by samples.
8) Date and time sample was obtained.
9) Truck and batch ticket numbers.
10) Design compressive strength at 28 days.
11) Concrete mixture designation, proportions, and materials.
12) Field test results.
13) Information on storage and curing of samples before testing, including curing method and maximum and minimum temperatures during initial curing period.
14) Type of fracture and compressive break strengths at seven days and 28 days.

B. Batch Tickets: For each load delivered, submit three copies of batch delivery ticket to testing agency, indicating quantity, mix identification, admixtures, design strength, aggregate size, design air content, design slump at time of batching, and amount of water that can be added at Project site.

C. Inspections: Perform special inspections in accordance with Chapter 17 of the International Building Code, latest adoption, and as indicated on the Drawings.

D. Concrete Tests: Testing of composite samples of fresh concrete obtained in accordance with ASTM C 172 to be performed in accordance with the following requirements:

1. Testing Frequency: Obtain one composite sample for each day's pour of each concrete mixture exceeding 5 cu. yd., but less than 25 cu. yd., plus one set for each additional 50 cu. yd. or fraction thereof.

   a. When frequency of testing provides fewer than five compressive-strength tests for each concrete mixture, testing to be conducted from at least five randomly selected batches or from each batch if fewer than five are used.

2. Slump: ASTM C143:

   a. One test at point of placement for each composite sample, but not less than one test for each day's pour of each concrete mixture.
   b. Perform additional tests when concrete consistency appears to change.

3. Air Content: ASTM C231 pressure method, for normal-weight concrete.

   a. One test for each composite sample, but not less than one test for each day's pour of each concrete mixture.

4. Concrete Temperature: ASTM C1064:

   a. One test hourly when air temperature is 40 deg F and below or 80 deg F and above, and one test for each composite sample.

5. Compression Test Specimens: ASTM C31:

   a. Cast and laboratory cure five 6-inch by 12-inch or 4-inch by 8-inch cylinder specimens for each composite sample.

6. Compressive-Strength Tests: ASTM C39.

    a. Test one set of two laboratory-cured specimens at seven days and one set of two laboratory-cured specimens at 28 days. Hold fifth specimen for 56 day break pending results of earlier tests.
    b. A compressive-strength test to be the average compressive strength from a set of two specimens obtained from same composite sample and tested at age indicated.
7. Strength of each concrete mixture will be satisfactory if every average of any three consecutive compressive-strength tests equals or exceeds specified compressive strength, and no compressive-strength test value falls below specified compressive strength by more than 500 psi if specified compressive strength is 5000 psi, or no compressive strength test value is less than 10 percent of specified compressive strength if specified compressive strength is greater than 5000 psi.
8. Nondestructive Testing: Impact hammer, sonoscope, or other nondestructive device may be permitted by Contracting Officer but will not be used as sole basis for approval or rejection of concrete.
9. Additional Tests:

    a. Testing and inspecting agency to make additional tests of concrete when test results indicate that slump, air entrainment, compressive strengths, or other requirements have not been met, as directed by Contracting Officer.
    b. Testing and inspecting agency may conduct tests to determine adequacy of concrete by cored cylinders complying with ASTM C42 or by other methods as directed by Contracting Officer.

        1) Acceptance criteria for concrete strength to be in accordance with ACI 301, Section 1.6.6.3.

10. Additional testing and inspecting, at Contractor's expense, will be performed to determine compliance of replaced or additional work with specified requirements.
11. Correct deficiencies in the Work that test reports and inspections indicate do not comply with the Contract Documents.

E. Measure floor and slab flatness and levelness in accordance with ASTM E1155 within 48 hours of completion of floor finishing and promptly report test results to Contracting Officer.

3.15 PROTECTION

A. Protect concrete surfaces as follows:

1. Protect from petroleum stains.
2. Diaper hydraulic equipment used over concrete surfaces.
3. Prohibit vehicles from interior concrete slabs.
4. Prohibit use of pipe-cutting machinery over concrete surfaces.
5. Prohibit placement of steel items on concrete surfaces.
6. Prohibit use of acids or acidic detergents over concrete surfaces.

END OF SECTION 03 30 00

SECTION 05 31 00 - STEEL DECKING

PART 1 - GENERAL

1.1 RELATED DOCUMENTS

A. Drawings and general provisions of the Contract, including General and Supplementary Conditions and Division 01 Specification Sections, apply to this Section.

1.2 SUMMARY

A. Section Includes:

1. Roof and floor deck.

1.3 ACTION SUBMITTALS

A. Product Data: For the following:

1. Roof and floor deck.

B. Shop Drawings:

1. Include layout and types of deck panels, anchorage details, reinforcing channels, pans, cut deck openings, special jointing, accessories, and attachments to other construction.

1.4 INFORMATIONAL SUBMITTALS

A. Product Certificates: For each type of steel deck.

B. Research Reports: For steel deck, from ICC-ES.

1.5 DELIVERY, STORAGE, AND HANDLING

A. Protect steel deck from corrosion, deformation, and other damage during delivery, storage, and handling.

B. Stack steel deck on platforms or pallets and slope to provide drainage. Protect with a waterproof covering and ventilate to avoid condensation.

PART 2 - PRODUCTS

2.1 PERFORMANCE REQUIREMENTS

A. AISI Specifications: Comply with calculated structural characteristics of steel deck according to AISI's "North American Specification for the Design of Cold-Formed Steel Structural Members."

B. Fire-Resistance Ratings: Comply with ASTM E119; testing by a qualified testing agency. Identify products with appropriate markings of applicable testing agency.

2.2 ROOF AND FLOOR DECK

A. Roof and Floor Deck: Fabricate panels, without top-flange stiffening grooves, to comply with "SDI Specifications and Commentary for Steel Roof Deck," in SDI Publication No. 31, and with the following:

1. Galvanized-Steel Sheet: ASTM A653, Structural Steel (SS), Grade 80, G60 zinc coating.
2. Deck Profile: As indicated.
3. Profile Depth: As indicated.
4. Design Uncoated-Steel Thickness: As indicated.
5. Span Condition: As indicated.
6. Side Laps: Overlapped.

2.3 ACCESSORIES

A. Provide manufacturer's standard accessory materials for deck that comply with requirements indicated.

B. Mechanical Fasteners: Corrosion-resistant, self-drilling, self-threading screws.

C. Side-Lap Fasteners: Corrosion-resistant, hexagonal washer head; self-drilling, carbon-steel screws, No. 10 minimum diameter.

D. Miscellaneous Sheet Metal Deck Accessories: Steel sheet, minimum yield strength of 33,000 psi, not less than 0.0359-inch design uncoated thickness, of same material and finish as deck; of profile indicated or required for application.

E. Galvanizing Repair Paint: ASTM A780.

PART 3 - EXECUTION

3.1 EXAMINATION

A. Examine supporting frame and field conditions for compliance with requirements for installation tolerances and other conditions affecting performance of the Work.

B. Proceed with installation only after unsatisfactory conditions have been corrected.

3.2 INSTALLATION, GENERAL

A. Install deck panels and accessories according to applicable specifications and commentary in SDI Publication No. 31, manufacturer's written instructions, and requirements in this Section.

B. Locate deck bundles to prevent overloading of supporting members.

C. Place deck panels on supporting frame and adjust to final position with ends accurately aligned and bearing on supporting frame before being permanently fastened. Do not stretch or contract side-lap interlocks.

D. Place deck panels flat and square and fasten to supporting frame without warp or deflection.

E. Cut and neatly fit deck panels and accessories around openings and other work projecting through or adjacent to deck.

F. Provide additional reinforcement and closure pieces at openings as required for strength, continuity of deck, and support of other work.

G. Locate mechanical fasteners and install according to deck manufacturer's written instructions.

3.3 INSTALLATION OF ROOF AND FLOOR DECK

A. Fasten deck panels to steel supporting members with self-drilling, self-threading screws as indicated.

B. Side-Lap and Perimeter Edge Fastening: Fasten side laps and perimeter edges of panels between supports with self-drilling, self-threading screws as indicated.

C. End Bearing: Install deck ends over supporting frame with a minimum end bearing of 1-1/2 inches, with end joints as follows:

1. End Joints: Lapped 2 inches minimum or butted at Contractor's option.

D. Miscellaneous Roof-Deck Accessories: Install ridge and valley plates, finish strips, end closures, and reinforcing channels according to deck manufacturer's written instructions. Mechanically fasten to substrate to provide a complete deck installation.

3.4 REPAIR

A. Galvanizing Repairs: Prepare and repair damaged galvanized coatings on both surfaces of deck with galvanized repair paint according to ASTM A780 and manufacturer's written instructions.

3.5 FIELD QUALITY CONTROL

A. Testing Agency: All Testing and Inspections are the responsibility of the Contractor. Engage a qualified testing agency to perform tests and inspections.

B. Field welds will be subject to inspection.

C. Prepare test and inspection reports.

END OF SECTION 05 31 00

SECTION 05 40 00 - COLD-FORMED METAL FRAMING

PART 1 - GENERAL

1.1 RELATED DOCUMENTS

A. Drawings and general provisions of the Contract, including General and Supplementary Conditions and Division 01 Specification Sections, apply to this Section.

1.2 SUMMARY

A. Section Includes:

1. Load-bearing wall framing.
2. Floor joist framing.
3. Roof rafter framing.

1.3 PREINSTALLATION MEETINGS

A. Preinstallation Conference: Conduct conference at Project site.

1.4 ACTION SUBMITTALS

A. Product Data: For the following:

1. Cold-formed steel framing materials.
2. Load-bearing wall framing.
3. Floor joist framing.
4. Roof-rafter framing.
5. Post-installed anchors.
6. Power-actuated anchors.
7. Sill sealer gasket.

B. Shop Drawings:

1. Include layout, spacings, sizes, thicknesses, and types of cold-formed steel framing; fabrication; and fastening and anchorage details, including mechanical fasteners.
2. Indicate reinforcing channels, opening framing, supplemental framing, strapping, bracing, bridging, splices, accessories, connection details, and attachment to adjoining work.

1.5 INFORMATIONAL SUBMITTALS

A. Welding certificates.

B. Product Certificates: For each type of code-compliance certification for studs and tracks.

C. Product Test Reports: For each listed product, for tests performed by manufacturer and witnessed by a qualified testing agency or performed by a qualified testing agency.

1. Steel sheet.
2. Expansion anchors.
3. Power-actuated anchors.
4. Mechanical fasteners.
5. Miscellaneous structural clips and accessories.

1.6 QUALITY ASSURANCE

A. Product Tests: Mill certificates or data from a qualified independent testing agency, or in-house testing with calibrated test equipment, indicating steel sheet complies with requirements, including base-metal thickness, yield strength, tensile strength, total elongation, chemical requirements, and metallic-coating thickness.

B. Code-Compliance Certification of Studs and Tracks: Provide documentation that framing members are certified according to the product-certification program of the Certified Steel Stud Association, the Steel Framing Industry Association, or the Steel Stud Manufacturers Association.

C. Welding Qualifications: Qualify procedures and personnel according to the following:

1. AWS D1.1/D1.1M, "Structural Welding Code - Steel."
2. AWS D1.3/D1.3M, "Structural Welding Code - Sheet Steel."

PART 2 - PRODUCTS

2.1 COLD FORMED-METAL FRAMING STANDARDS

A. AISI Publications: Comply with AISI S100, AISI S202 and AISI S240 unless modified by requirement in the Contract Documents.

B. Fire-Resistance Ratings: Comply with ASTM E119; testing by a qualified testing agency. Identify products with appropriate markings of applicable testing agency.

1. Indicate design designations from UL's "Fire Resistance Directory" or from the listings of another qualified testing agency acceptable to authorities having jurisdiction.

2.2 COLD-FORMED STEEL FRAMING MATERIALS

A. Steel Sheet: ASTM A1003, Structural Grade, Type H, metallic coated, of grade and coating designation as follows:

1. Grade: ST33H for 43 mils (18 gage) and lighter, ST50H for 54 mils (16 gage) and heavier.

2. Coating: G60, A60, AZ50, or GF30.

B. Steel Sheet for Clips: ASTM A653, structural steel, zinc coated.

2.3 LOAD-BEARING WALL FRAMING

A. Steel Studs: Manufacturer's standard C-shaped steel studs, of web depths indicated, punched, with stiffened flanges.

B. Steel Track: Manufacturer's standard U-shaped steel track, of web depths indicated, unpunched, with straight flanges.

C. Steel Box or Back-to-Back Headers: Manufacturer's standard C-shapes used to form header beams, of web depths indicated, unpunched, with stiffened flanges

2.4 FLOOR JOIST FRAMING

A. Steel Joists: Manufacturer's standard C-shaped steel joists, of web depths indicated, punched with standard holes, with stiffened flanges.

B. Steel Joist Track: Manufacturer's standard U-shaped steel joist track, of web depths indicated, unpunched, with unstiffened flanges.

2.5 ROOF-RAFTER FRAMING

A. Steel Rafters: Manufacturer's standard C-shaped steel sections, of web depths indicated, punched with standard holes, with stiffened flanges.

B. Steel Joist Track: Manufacturer's standard U-shaped steel joist track, of web depths indicated, unpunched, with unstiffened flanges.

2.6 FRAMING ACCESSORIES

A. Fabricate steel-framing accessories from ASTM A1003, Structural Grade, Type H, metallic coated steel sheet, of same grade and coating designation used for framing members.

B. Provide accessories of manufacturer's standard thickness and configuration, unless otherwise indicated, as follows:

1. Supplementary framing.
2. Bracing, bridging, and solid blocking.
3. Web stiffeners.
4. Anchor clips.
5. End clips.
6. Foundation clips.
7. Joist hangers and end closures.
8. Hole-reinforcing plates.
9. Backer plates.

2.7 ANCHORS, CLIPS, AND FASTENERS

A. Steel Shapes and Clips: ASTM A36, zinc coated by hot-dip process according to ASTM A123.

B. Anchor Bolts: ASTM F1554, Grade 36, threaded carbon-steel headless bolts, with encased end threaded, carbon-steel nuts, and flat, hardened-steel washers; zinc coated by hot-dip process according to ASTM A153, Class C or mechanically deposition according to ASTM B695, Class 50.

C. Post-Installed Anchors: Fastener systems with bolts of same basic metal as fastened metal, if visible, unless otherwise indicated; with working capacity greater than or equal to the design load, according to an evaluation report acceptable to authorities having jurisdiction, based on ICC-ES AC193 or ICC-ES AC308 as appropriate for the substrate.

D. Power-Actuated Anchors: Fastener systems with working capacity greater than or equal to the design load, according to an evaluation report acceptable to authorities having jurisdiction, based on ICC-ES AC70.

E. Mechanical Fasteners: ASTM C1513, corrosion-resistant-coated, self-drilling, self-tapping, steel drill screws.

1. Head Type: Low-profile head beneath sheathing; manufacturer's standard elsewhere.

F. Welding Electrodes: Comply with AWS standards.

2.8 MISCELLANEOUS MATERIALS

A. Galvanizing Repair Paint: ASTM A780, MIL-P-21035B or SSPC-Paint 20.

B. Nonmetallic, Nonshrink Grout: Factory-packaged, nonmetallic, noncorrosive, nonstaining grout, complying with ASTM C1107, and with a fluid consistency and 30-minute working time.

C. Shims: Load-bearing, high-density, multimonomer, nonleaching plastic; or cold-formed steel of same grade and metallic coating as framing members supported by shims.

D. Sill Sealer Gasket: Closed-cell neoprene foam, 1/4 inch thick, selected from manufacturer's standard widths to match width of bottom track or rim track members as required.

2.9 FABRICATION

A. Fabricate cold-formed steel framing and accessories plumb, square, and true to line, and with connections securely fastened, according to referenced AISI's specifications and standards, manufacturer's written instructions, and requirements in this Section.

1. Fabricate framing assemblies using jigs or templates.
2. Cut framing members by sawing or shearing; do not torch cut.
3. Fasten cold-formed steel framing members by welding, screw fastening, clinch fastening, pneumatic pin fastening, or riveting as standard with fabricator. Wire tying of framing members is not permitted.

a. Comply with AWS D1.3/D1.3M requirements and procedures for welding, appearance and quality of welds, and methods used in correcting welding work.
b. Locate mechanical fasteners and install as indicated, with screws penetrating joined members by no fewer than three exposed screw threads.

4. Fasten other materials to cold-formed steel framing by welding, bolting, pneumatic pin fastening, or screw fastening, as indicated.

B. Reinforce, stiffen, and brace framing assemblies to withstand handling, delivery, and erection stresses. Lift fabricated assemblies by means that prevent damage or permanent distortion.

C. Tolerances: Fabricate assemblies level, plumb, and true to line to a maximum allowable variation of 1/8 inch in 10 feet and as follows:

1. Spacing: Space individual framing members no more than plus or minus 1/8 inch from plan location. Cumulative error shall not exceed minimum fastening requirements of sheathing or other finishing materials.
2. Squareness: Fabricate each cold-formed steel framing assembly to a maximum out-of-square tolerance of 1/8 inch.

PART 3 - EXECUTION

3.1 EXAMINATION

A. Examine substrates, areas, conditions, and abutting structural framing for compliance with requirements for installation tolerances and other conditions affecting performance of the Work.

B. Proceed with installation only after unsatisfactory conditions have been corrected.

3.2 PREPARATION

A. Install load-bearing shims or grout between the underside of load-bearing wall bottom track and the top of foundation wall or slab at locations with a gap larger than 1/4 inch to ensure a uniform bearing surface on supporting concrete or masonry construction.

B. Install sill sealer gasket at the underside of wall bottom track or rim track and at the top of foundation wall or slab at stud or joist locations.

3.3 INSTALLATION, GENERAL

A. Cold-formed steel framing may be shop or field fabricated for installation, or it may be field assembled.

B. Install cold-formed steel framing according to AISI S202, AISI S204, and manufacturer's written instructions unless more stringent requirements are indicated.

C. Install cold-formed steel framing and accessories plumb, square, and true to line, and with connections securely fastened.

1. Cut framing members by sawing or shearing; do not torch cut.
2. Fasten cold-formed steel framing members by welding, screw fastening, clinch fastening, or riveting. Wire tying of framing members is not permitted.

    a. Comply with AWS D1.3/D1.3M requirements and procedures for welding, appearance and quality of welds, and methods used in correcting welding work.
    b. Locate mechanical fasteners, install as indicated, and comply with requirements for spacing, edge distances, and screw penetration.

D. Install framing members in one-piece lengths unless splice connections are indicated for track or tension members.

E. Install temporary bracing and supports to secure framing and support loads equal to those for which structure was designed. Maintain braces and supports in place, undisturbed, until entire integrated supporting structure has been completed and permanent connections to framing are secured.

F. Install insulation, specified in Division 7 in framing-assembly members, such as headers, sills, boxed joists, and multiple studs at openings, that are inaccessible on completion of framing work.

G. Fasten hole-reinforcing plate over web penetrations that exceed size of manufacturer's approved or standard punched openings.

3.4 INSTALLATION OF LOAD-BEARING WALL FRAMING

A. Install continuous top and bottom tracks sized to match studs. Align tracks accurately and securely anchor at corners and ends, and at spacings as follows:

    1. Anchor Spacing: As indicated.

B. Squarely seat studs against top and bottom tracks, with gap not exceeding 1/8 inch between the end of wall-framing member and the web of track.

    1. Fasten both flanges of studs to top and bottom tracks.

C. Align studs vertically where floor framing interrupts wall-framing continuity. Where studs cannot be aligned, continuously reinforce track to transfer loads.

D. Align floor and roof framing over studs.. Where framing cannot be aligned, continuously reinforce track to transfer loads.

E. Anchor studs abutting structural columns or walls, including masonry walls, to supporting structure.

F. Install headers over wall openings wider than stud spacing. Locate headers above openings. Fabricate headers of compound shapes indicated or required to transfer load to supporting studs, complete with clip-angle connectors, web stiffeners, or gusset plates.

    1. Frame wall openings with not less than a double stud at each jamb of frame. Fasten jamb members together to uniformly distribute loads.

2. Install tracks and jack studs above and below wall openings. Anchor tracks to jamb studs with clip angles or by welding, and space jack studs same as full-height wall studs.

G. Install supplementary framing, blocking, and bracing in stud framing indicated to support fixtures, equipment, services, casework, heavy trim, furnishings, and similar work requiring attachment to framing.

1. If type of supplementary support is not indicated, comply with stud manufacturer's written recommendations and industry standards in each case, considering weight or load resulting from item supported.

H. Install horizontal bridging in stud system, spaced vertically as indicated on Drawings. Fasten at each stud intersection.

1. Channel Bridging: Cold-rolled steel channel, welded or mechanically fastened to webs of punched studs with a minimum of two screws into each flange of the clip angle for framing members up to 6 inches deep.
2. Strap Bridging: Combination of flat, taut, steel sheet straps of width and thickness indicated and stud-track solid blocking of width and thickness to match studs. Fasten flat straps to stud flanges, and secure solid blocking to stud webs or flanges.
3. Bar Bridging: Proprietary bridging bars installed according to manufacturer's written instructions.

I. Install miscellaneous framing and connections, including supplementary framing, web stiffeners, clip angles, continuous angles, anchors, and fasteners, to provide a complete and stable wall-framing system.

3.5 INSTALLATION OF JOIST FRAMING

A. Install perimeter joist track sized to match joists. Align and securely anchor or fasten track to supporting structure at corners, ends, and spacings indicated.

B. Install joists bearing on supporting frame, level, straight, and plumb; adjust to final position, brace, and reinforce. Fasten joists to both flanges of joist track.

1. Install joists over supporting frame with a minimum end bearing of 1-1/2 inches.
2. Reinforce ends and bearing points of joists with web stiffeners, end clips, joist hangers, steel clip angles, or steel-stud sections.

C. Space joists as indicated on Drawings.

D. Frame openings with built-up joist headers, consisting of joist and joist track or another combination of connected joists if indicated.

E. Install bridging at intervals indicated. Fasten bridging at each joist intersection as follows:

1. Joist-Track Solid Bridging: Joist-track solid blocking of width and thickness indicated, secured to joist webs.

2. Combination Bridging: Combination of flat, taut, steel sheet straps of width and thickness indicated and joist-track solid blocking of width and thickness indicated. Fasten flat straps to bottom flange of joists and secure solid blocking to joist webs.

F. Secure joists to load-bearing interior walls to prevent lateral movement of bottom flange.

G. Install miscellaneous joist framing and connections, including web stiffeners, closure pieces, clip angles, continuous angles, hold-down angles, anchors, and fasteners, to provide a complete and stable joist-framing assembly.

3.6 INSTALLATION TOLERANCES

A. Install cold-formed steel framing level, plumb, and true to line to a maximum allowable tolerance variation of 1/8 inch in 10 feet and as follows:

1. Space individual framing members no more than plus or minus 1/8 inch from plan location. Cumulative error shall not exceed minimum fastening requirements of sheathing or other finishing materials.

3.7 REPAIR

A. Galvanizing Repairs: Prepare and repair damaged galvanized coatings on fabricated and installed cold-formed steel framing with galvanized repair paint according to ASTM A780 and manufacturer's written instructions.

3.8 FIELD QUALITY CONTROL

A. Testing: All Testing and Inspections are the Responsibility of the Contractor. Engage a qualified independent testing and inspecting agency to perform field tests and inspections and prepare test reports.

B. Field and shop welds will be subject to testing and inspecting.

C. Testing agency will report test results promptly and in writing to Contracting Officer and Contractor.

D. Cold-formed steel framing will be considered defective if it does not pass tests and inspections.

E. Additional testing and inspecting, at Contractor's expense, will be performed to determine compliance of replaced or additional work with specified requirements.

3.9 PROTECTION

A. Provide final protection and maintain conditions, in a manner acceptable to manufacturer and Installer, that ensure that cold-formed steel framing is without damage or deterioration at time of Substantial Completion.

END OF SECTION 05 40 00

SECTION 05 44 00 - COLD-FORMED METAL TRUSSES

PART 1 - GENERAL

1.1 RELATED DOCUMENTS

A. Drawings and general provisions of the Contract, including General and Supplementary Conditions and Division 01 Specification Sections, apply to this Section.

1.2 SUMMARY

A. Section Includes:

1. Roof trusses.

B. Related Requirements:
1. Section 05 40 00 "Cold-Formed Metal Framing" for cold-formed steel studs, joists, and rafters.

1.3 PREINSTALLATION MEETINGS

A. Preinstallation Conference: Conduct conference at Project site.

1.4 ACTION SUBMITTALS

A. Product Data: For the following:

1. Cold-formed steel truss materials.
2. Mechanical fasteners.

B. Shop Drawings:

1. Include layout, spacings, sizes, thicknesses, and types of cold-formed steel trusses; fabrication; and fastening and anchorage details, including mechanical fasteners.
2. Indicate reinforcing channels, opening framing, supplemental framing, strapping, bracing, bridging, splices, accessories, connection details, and attachment to adjoining work.

C. Delegated-Design Submittal: For cold-formed steel trusses.

1.5 INFORMATIONAL SUBMITTALS

A. Welding certificates.

B. Product Test Reports: For each listed product, for tests performed by manufacturer and witnessed by a qualified testing agency or performed by a qualified testing agency.

1. Steel sheet.
2. Mechanical fasteners.
3. Miscellaneous structural clips and accessories.

1.6 QUALITY ASSURANCE

A. Product Tests: Mill certificates or data from a qualified independent testing agency, or in-house testing with calibrated test equipment, indicating steel sheet complies with requirements, including base-metal thickness, yield strength, tensile strength, total elongation, chemical requirements, and metallic-coating thickness.

B. Welding Qualifications: Qualify procedures and personnel according to the following:

1. AWS D1.1/D1.1M, "Structural Welding Code - Steel."
2. AWS D1.3/D1.3M, "Structural Welding Code - Sheet Steel."

PART 2 - PRODUCTS

2.1 PERFORMANCE REQUIREMENTS

A. Delegated Design: Engage a qualified professional engineer, as defined in Section 01 40 00 "Quality Requirements," to design cold-formed steel trusses.

B. Structural Performance: Provide cold-formed steel trusses capable of withstanding design loads within limits and under conditions indicated.

1. Design Loads: As indicated on Drawings.
2. Deflection Limits: Design trusses to withstand design loads without deflections greater than the following:

   a. Floor Trusses: Vertical deflection of 1/480 for live loads and l/360 for total loads of the span.
   b. Roof Trusses: Vertical deflection of 1/360 of the span.
   c. Scissor Roof Trusses: Horizontal deflection of 1/4 inch at reactions.

3. Design trusses to provide for movement of truss members located outside the insulated building envelope without damage or overstressing, sheathing failure, connection failure, undue strain on fasteners and anchors, or other detrimental effects when subject to a maximum ambient temperature change of 120 deg F.

C. Cold-Formed Steel Truss Standards: Unless more stringent requirements are indicated, trusses shall comply with the following:
1. Roof Trusses: AISI S210.

D. Fire-Resistance Ratings: Comply with ASTM E119; testing by a qualified testing agency. Identify products with appropriate markings of applicable testing agency.

1. Indicate design designations from UL or from the listings of another qualified testing agency acceptable to authorities having jurisdiction.

2.2 COLD-FORMED STEEL TRUSS MATERIALS

A. Steel Sheet: ASTM A1003, Structural Grade, Type H, metallic coated, of grade and coating designation as follows:

1. Grade: As required by structural performance.
2. Coating: G60, A60, AZ50, or GF30.

2.3 ROOF TRUSSES

A. Roof Truss Members: Manufacturer's standard steel sections.

2.4 TRUSS ACCESSORIES

A. Fabricate steel-truss accessories from steel sheet, ASTM A1003, Structural Grade, Type H, metallic coated steel sheet, of same grade and coating designation used for truss members.

B. Provide accessories of manufacturer's standard thickness and configuration unless otherwise indicated.

2.5 ANCHORS, CLIPS, AND FASTENERS

A. Steel Shapes and Clips: ASTM A36, zinc coated by hot-dip process according to ASTM A123.

B. Mechanical Fasteners: ASTM C1513, corrosion-resistant-coated, self-drilling, self-tapping steel drill screws.

1. Head Type: Low-profile head beneath sheathing; manufacturer's standard elsewhere.

C. Welding Electrodes: Comply with AWS standards.

2.6 MISCELLANEOUS MATERIALS

A. Galvanizing Repair Paint: ASTM A780.

B. Shims: Load-bearing, high-density multimonomer, nonleaching plastic; or cold-formed steel of same grade and metallic coating as truss members supported by shims.

2.7 FABRICATION

A. Fabricate cold-formed steel trusses and accessories plumb, square, and true to line, and with connections securely fastened, according to referenced AISI's specifications and standards, manufacturer's written instructions, and requirements in this Section.

1. Fabricate trusses using jigs or templates.
2. Cut truss members by sawing or shearing; do not torch cut.
3. Fasten cold-formed steel truss members by welding, screw fastening, clinch fastening, pneumatic pin fastening, or riveting as standard with fabricator.

    a. Comply with AWS D1.3/D1.3M requirements and procedures for welding, appearance and quality of welds, and methods used in correcting welding work.

4. Fasten other materials to cold-formed steel trusses by welding, bolting, pneumatic pin fastening, or screw fastening, as indicated.

B. Reinforce, stiffen, and brace trusses to withstand handling, delivery, and erection stresses. Lift fabricated trusses by means that prevent damage or permanent distortion.

C. Tolerances: Fabricate assemblies level, plumb, and true to line to a maximum allowable variation of 1/8 inch in 10 feet and as follows:

1. Spacing: Space individual truss members no more than plus or minus 1/8 inch from plan location. Cumulative error shall not exceed minimum fastening requirements of sheathing or other finishing materials.
2. Squareness: Fabricate each cold-formed steel truss to a maximum out-of-square tolerance of 1/8 inch.

PART 3 - EXECUTION

3.1 EXAMINATION

A. Examine substrates, areas, conditions, and abutting trusses and framing for compliance with requirements for installation tolerances and other conditions affecting performance of the Work.

B. Proceed with installation only after unsatisfactory conditions have been corrected.

3.2 INSTALLATION

A. Install bridge, and brace cold-formed steel trusses according to AISI S202 and S240, and manufacturer's written instructions unless more stringent requirements are indicated.

1. Coordinate with wall framing to align webs of bottom chords and load-bearing studs or continuously reinforce track to transfer loads to structure.
2. Anchor trusses securely at all bearing points.
3. Install continuous bridging and permanently brace trusses as indicated on Shop Drawings and designed according to CFSEI's Technical Note 551e, "Design Guide: Permanent Bracing of Cold-Formed Steel Trusses."

B. Install cold-formed steel trusses and accessories true to line and location, and with connections securely fastened.

1. Erect trusses with plane of truss webs plumb and parallel to each other. Align and accurately position trusses at required spacings.

2. Erect trusses without damaging truss members or connections.
3. Fasten cold-formed steel trusses by welding or mechanical fasteners.

    a. Comply with AWS D1.3/D1.3M requirements and procedures for welding, appearance and quality of welds, and methods used in correcting welding work.
    b. Locate mechanical fasteners, install according to Shop Drawings, and comply with requirements for spacing, edge distances, and screw penetration.

C. Install temporary bracing and supports to secure trusses and support loads equal to those for which structure was designed. Maintain braces and supports in place, undisturbed, until entire integrated supporting structure has been completed and permanent connections to trusses are secured.

D. Truss Spacing: As indicated on Drawings.

E. Do not alter, cut, or remove truss members or connections of trusses.

3.3 ERECTION TOLERANCES

A. Install cold-formed steel trusses level, plumb, and true to line to a maximum allowable tolerance variation of 1/8 inch in 10 feet and as follows:

1. Space individual trusses no more than plus or minus 1/8 inch from plan location. Cumulative error shall not exceed minimum fastening requirements of sheathing or other finishing materials.

3.4 REPAIR

A. Galvanizing Repairs: Prepare and repair damaged galvanized coatings on fabricated and installed cold-formed steel trusses with galvanized repair paint according to ASTM A780 and manufacturer's written instructions.

3.5 FIELD QUALITY CONTROL

A. Special Inspections: All Inspections are the responsibility of the Contractor. Engage a qualified special inspector to perform special inspections.

B. Cold-formed metal trusses will be considered defective if they do not pass inspections.

C. Prepare inspection reports.

3.6 PROTECTION

A. Provide final protection and maintain conditions, in a manner acceptable to manufacturer and Installer, that ensure that cold-formed steel trusses are without damage or deterioration at time of Substantial Completion..

END OF SECTION 05 44 00

SECTION 07 11 13 - BITUMINOUS DAMPPROOFING

PART 1 - GENERAL

1.1 SUMMARY

A. Section Includes:
1. Cold-applied, emulsified-asphalt dampproofing at foundations.

B. Related Requirements:
1. Section 03 30 00 "Cast-in-Place Concrete" for vapor retarders under slabs-on-grade.

1.2 ACTION SUBMITTALS

A. Product Data: For each type of product.

1.3 FIELD CONDITIONS

A. Weather Limitations: Proceed with application only when existing and forecasted weather conditions permit dampproofing to be performed according to manufacturers' written instructions.

PART 2 - PRODUCTS

2.1 COLD-APPLIED, EMULSIFIED-ASPHALT DAMPPROOFING

A. Trowel Coats: ASTM D1227, Type II, Class 1.

B. Fibered Brush and Spray Coats: ASTM D1227, Type II, Class 1.

C. Brush and Spray Coats: ASTM D1227, Type III, Class 1.

2.2 AUXILIARY MATERIALS

A. Furnish auxiliary materials recommended in writing by dampproofing manufacturer for intended use and compatible with bituminous dampproofing.

PART 3 - EXECUTION

3.1 EXAMINATION

A. Examine substrates, areas, and conditions, with Applicator present, for compliance with requirements for surface smoothness, maximum surface moisture content, and other conditions affecting performance of the Work.

B. Proceed with application only after substrate construction and penetrating work have been completed and unsatisfactory conditions have been corrected.

3.2 PREPARATION

A. Clean, prepare, and treat substrates according to manufacturer's written instructions. Provide clean, dust-free, and dry substrates for dampproofing application.

B. Mask or otherwise protect adjoining exposed surfaces from being stained, spotted, or coated with dampproofing. Prevent dampproofing materials from entering and clogging weep holes and drains.

C. Clean substrates of projections and substances detrimental to dampproofing work; fill voids, seal joints, and remove bond breakers if any.

D. Apply patching compound to patch and fill tie holes, honeycombs, reveals, and other imperfections.

3.3 INSTALLATION, GENERAL

A. Comply with manufacturer's written instructions for dampproofing application, cure time between coats, and drying time before backfilling unless otherwise indicated.
   1. Apply dampproofing to provide continuous plane of protection.
   2. Apply additional coats if recommended in writing by manufacturer or to achieve a smooth surface and uninterrupted coverage.

B. Where dampproofing footings and foundation walls, apply from finished-grade line to top of footing; extend over top of footing and down a minimum of 6 inches over outside face of footing.
   1. Extend dampproofing 12 inches onto intersecting walls and footings, but do not extend onto surfaces exposed to view when Project is completed.
   2. Install flashings and corner protection stripping at internal and external corners, changes in plane, construction joints, cracks, and where indicated as "reinforced," by embedding an 8-inch- wide strip of asphalt-coated glass fabric in a heavy coat of dampproofing. Dampproofing coat for embedding fabric is in addition to other coats required.

3.4 INSTALLATION OF COLD-APPLIED, EMULSIFIED-ASPHALT DAMPPROOFING

A. Concrete Foundations and Parged Masonry Foundation Walls: Apply two brush or spray coats at not less than 1.5 gal./100 sq. ft. for first coat and 1 gal./100 sq. ft. for second coat.

B. Unexposed Face of Concrete Retaining Walls: Apply one brush or spray coat at not less than 1.25 gal./100 sq. ft.

C. Unexposed Face of Masonry Retaining Walls: Apply primer and one brush or spray coat at not less than 1.25 gal./100 sq. ft.

3.5 PROTECTION

A. Correct dampproofing that does not comply with requirements; repair substrates and reapply dampproofing.
B. Protect from damage when backfilling.

END OF SECTION 07 11 13

SECTION 07 21 00 - THERMAL INSULATION

PART 1 - GENERAL

1.1 SUMMARY

A. Section Includes:

1. Polyisocyanurate foam-plastic board insulation at roof.
2. Mineral-wool blanket insulation at wall cavities.
3. Mineral-wool board insulation at exterior frame and foundation walls.
4. Fluid-applied acrylic insulation coating.
5. Accessories, including close cell spray foam insulation for voids and penetrations.

1.2 ACTION SUBMITTALS

A. Product Data: For each type of product.

B. Installer qualifications for over 10 years on commercial installations.

C. Post installation inspection report and data.

1.3 INFORMATIONAL SUBMITTALS

A. Installer's Certification: Listing type, manufacturer, and R-value of insulation installed in each element of the building thermal envelope.

1. Sign, date, and post the certification in a conspicuous location on Project site.

B. Product Test Reports: For each product, for tests performed by a qualified testing agency.

C. Research Reports: For foam-plastic insulation, from ICC-ES.

1.4 DELIVERY, STORAGE, AND HANDLING

A. Protect insulation materials from physical damage and from deterioration due to moisture, soiling, and other sources. Store inside and in a dry location. Comply with manufacturer's written instructions for handling, storing, and protecting during installation.

B. Protect foam-plastic board insulation as follows:

1. Do not expose to sunlight except to necessary extent for period of installation and concealment.
2. Protect against ignition at all times. Do not deliver foam-plastic board materials to

Project site until just before installation time.

3. Quickly complete installation and concealment of foam-plastic board insulation in each area of construction.

1.5 QUALITY CONTROL

A. Contractor to submit inspection report as an action submittal to CO.

PART 2 - PRODUCTS

2.1 MINERAL-WOOL BOARD INSULATION

A. Mineral-Wool Board Insulation, Type IVB: ASTM C612, Type IVB; unfaced.

1. Product suitable cavity wall and rainscreen applications.
2. Thickness: As required to meet minimum R-values indicated on drawings.
3. Flame-Spread Index: 0 when tested in accordance with ASTM E84.
4. Nominal Density: 4.3 lb/cu. ft..
5. Moisture Sorption: 0.03% by volume when tested in accordance to ASTM C1104.
6. Linear Shrinkage: 0.7% @ 1200 degrees Fahrenheit when tested in accordance with ASTM C356.

2.2 PERFORMANCE REQUIREMENTS

A. Surface-Burning Characteristics: Maximum flame-spread and smoke-developed indexes less than Class A, 25 and 450 when tested in accordance with ASTM E84.

B. Fire-Resistance Ratings: Comply with ASTM E119 or UL 263; testing by a qualified testing agency. Identify products with appropriate markings of applicable testing agency.

1. Indicate design designations from UL's "Fire Resistance Directory" or from listings of another qualified testing agency.

C. Fire Propagation Characteristics: Passes NFPA 285 testing as part of an approved assembly.

D. Labeling: Provide identification of mark indicating R-value of each piece of insulation 12 inches and wider in width.

E. Thermal-Resistance Value (R-Value): R-value as indicated on Drawings in accordance with ASTM C518.

F. Recycled Content: Postconsumer recycled content plus one-half of preconsumer recycled content not less than 10 percent.

2.3 MINERAL-WOOL BLANKET INSULATION THERMAL AND ACOUSTIC

A. Mineral-Wool Blanket Insulation, Unfaced: ASTM C665, Type I (blankets without membrane facing); consisting of fibers; passing ASTM E136 for combustion characteristics.

1. Flame-Spread Index: 0 when tested in accordance with ASTM E84.
2. Smoke Developed Index: 0 when tested in accordance with ASTM E84.
3. Density: >2lbs/cu. ft. when tested in accordance to ASTM C167.
4. Thickness: As required to meet minimum R-values indicated on drawings and to fully fill cavities.
5. Friction fit between steel studs.

    a. Exterior wall application for thermal and fire resistance purposes.
    b. Interior wall application for fire resistance and acoustical purposes.

2.4 POLYISOCYANURATE FOAM

A. Non-halogenated Rigid Polyiso Insulation: Flat closed-cell polyisocyanurate (polyiso) foam core integrally bonded to inorganic coated glass facers, Type II, Class 2 in accordance with ASTM C1289.

1. Fully adhered system.
2. Tensile Strength (ASTM D1623): greater than 730 pounds per square foot (35 kPa).
3. Smoke Development (ASTM E84 10 minutes): 50-170.
4. Flame Spread (ASTM E84 10 minutes): 40-60.
5. Water Vapor Transmission (ASTM E96): less than 4.0 perm (228.8ng/(Pa•s•m2)).
6. Water Absorption (ASTM C209): less than 1.5 percent. and Water Absorption (ASTM D2842): less than 3.5 percent.
7. Compressive Strength (ASTM D1621): 20 pounds per square inch (140 kPa) or 25 pounds per square inch (172 kPa).
8. Dimensional Stability (ASTM D2126): less than 2 percent.

B. High Density Polyiso Insulation Cover Board: high-density closed-cell polyisocyanurate foam core bonded on each side to glass-reinforced felt (GRF), Type II, Class 1, Grade 3 in accordance with ASTM C1289.

1. Mechanically attached system.
2. Compressive Strength: 80 psi when tested in accordance with ASTM D1621.
3. Moisture Vapor Permeance: <1.5 perms when tested in accordance with ASTM E96.
4. Water Absorption: <3% volume when tested in accordance with ASTM C1763.

2.5 FLUID-APPLIED ACRYLIC INSULATION COATING

A. Fluid-applied, thermal insulating coating utilizing aerogel particles that bods to the substrate.

1. Thermal Conductivity (ASTM C518 at 77°F): 0.0356 W/m-°K or 0.2468 BTU-in/ft²-hr-°F (R value at one inch equals 4.1)
2. Flame Spread (ASTM E84): Class A
3. Smoke Developed (ASTM E84): Class A
4. Finish: matte
5. Low VOC
6. Thickness: Varies; 30.0 to 50.0 mils (762 to 1270 microns) per coat, as recommended by manufacturer.
7. Primer as recommended by manufacturer

2.6 INSULATION FASTENERS

A. Insulation Fastener Accessories: Provide double-pointed weld pins, lagging pins, quilting pins, duct liner pins, insulation hangers, specialty washers, special caps, j-hooks, capacitor discharge annular weld pins, capacitor discharge acoustical lagging pins, and other accessory materials that are recommended in writing by insulation fastener manufacturer to produce complete insulation supports.

2.7 ACCESSORIES

A. Insulation for Miscellaneous Voids:

1. Spray Polyurethane Foam Insulation: ASTM C1029, Type II, closed cell, with maximum flame-spread and smoke-developed indexes of 75 and 450, respectively, per ASTM E84.

B. Miscellaneous Application Accessories:

1. Adhesive for Bonding Insulation: Product compatible with insulation and air and water barrier materials, and with demonstrated capability to bond insulation securely to substrates without damaging insulation and substrates.

PART 3 - EXECUTION

3.1 PREPARATION

A. Clean substrates of substances that are harmful to insulation, including removing projections capable of puncturing insulation or vapor retarders, or those that interfere with insulation attachment.

3.2 INSTALLATION, GENERAL

A. Comply with insulation manufacturer's written instructions applicable to products, applications and applicable codes.

B. Install insulation that is undamaged, dry, and unsoiled and that has not been left exposed

to ice, rain, or snow at any time.

C. Install insulation with manufacturer's R-value label exposed after insulation is installed.

D. Extend insulation to envelop entire area to be insulated. Fit tightly around obstructions and fill voids with insulation. Remove projections that interfere with placement.

E. Provide sizes to fit applications and selected from manufacturer's standard thicknesses, widths, and lengths. Apply single layer of insulation units unless multiple layers are otherwise shown or required to make up total thickness or to achieve R-value.

3.3 INSTALLATION OF FOUNDATION WALL INSULATION

A. Butt panels together for tight fit.

B. Anchor Installation: Install board insulation on concrete substrates by adhesively attached, spindle-type insulation anchors as follows:

1. Fasten insulation anchors to concrete substrates with insulation anchor adhesive in accordance with anchor manufacturer's written instructions.
2. Space anchors in accordance with insulation manufacturer's written instructions for insulation type, thickness, and application.
3. Apply insulation standoffs to each spindle to create cavity width indicated on Drawings between concrete substrate and insulation.
4. After adhesive has dried, install board insulation by pressing insulation into position over spindles and securing it tightly in place with insulation-retaining washers, taking care not to compress insulation.
5. Where insulation will not be covered by other building materials, apply capped washers to tips of spindles.

C. Adhesive Installation: Install with adhesive or press into tacky waterproofing or dampproofing in accordance with manufacturer's written instructions.

3.4 INSTALLATION OF CAVITY-WALL INSULATION

A. Mineral-Wool Board Insulation: Install insulation fasteners 4 inches from each corner of board insulation, at center of board, and as recommended by manufacturer.

1. Fit courses of insulation between obstructions, with edges butted tightly in both directions, and with faces flush.
2. Press units firmly against inside substrates.

3.5 INSTALLATION OF INSULATION IN FRAMED CONSTRUCTION

A. Blanket Insulation: Install in cavities formed by framing members in accordance with the following requirements:

1. Use insulation widths and lengths that fill the cavities formed by framing members. If more than one length is required to fill the cavities, provide lengths

that will produce a snug fit between ends.

2. Place insulation in cavities formed by framing members to produce a friction fit between edges of insulation and adjoining framing members.
3. Maintain 3-inch clearance of insulation around recessed lighting fixtures not rated for or protected from contact with insulation.
4. For metal-framed wall cavities where cavity heights exceed 96 inches, support unfaced blankets mechanically and support faced blankets by taping flanges of insulation to flanges of metal studs.

B. Miscellaneous Voids: Install insulation in miscellaneous voids and cavity spaces where required to prevent gaps in insulation using the following materials:

1. Detailing Foam Insulation for Voids: Apply in accordance with manufacturer's written instructions.

C. Spray-Applied Cellulosic Insulation: Apply spray-applied insulation in accordance with manufacturer's written instructions.

1. Do not apply insulation until installation of pipes, ducts, conduits, wiring, and electrical outlets in walls is completed and windows, electrical boxes, and other items not indicated to receive insulation are masked.
2. After insulation is applied, make flush with face of studs by using method recommended by insulation manufacturer.

3.6 INSTALLATION OF BOARD INSULATION

A. Install board insulation in accordance with manufacturer's written instructions per project applications and conditions.

3.7 INSPECTION

A. Contractor shall commence inspection to confirm insulation installation complies with manufacturer’s installation instructions and IECC requirements for continuous insulation. Observations, measurements, and other notes shall be recorded as digital images, product literature, drawings and sketches, etc. to communicate conditions, especially items not in compliance with IECC. Submit report to CO within 24 hours of commencing inspection with plan of action to remedy any items not in compliance.

3.8 PROTECTION

A. Protect installed insulation from damage due to harmful weather exposures, physical abuse, and other causes.

B. Provide temporary coverings or enclosures where insulation is subject to abuse and cannot be concealed and protected by permanent construction immediately after installation.

END OF SECTION 07 21 00

SECTION 07 25 00 - WEATHER BARRIERS

PART 1 - GENERAL

1.1 SUMMARY

A. Section Includes:
   1. Building paper at exterior walls.
   2. Flexible flashing accessories.

1.2 ACTION SUBMITTALS

A. Product Data:
   1. Building paper at exterior walls.
   2. Flexible flashing accessories.

B. Shop Drawings: Show details of building paper at terminations, openings, and penetrations. Show details of flexible flashing applications.

C. Post inspection data and photographs for documentation of installation as per manufacturer's instructions.

PART 2 - PRODUCTS

2.1 BUILDING PAPER

A. Weather Barrier installed as air barrier (at all exterior wall assemblies):
   1. Air penetration resistance: <.001 cfm/sf @75 Pa when tested in accordance with ASTM E2178
   2. Water penetration resistance: 280 cm when tested in accordance with AATCC 127
   3. Water vapor transmission: 28 perms when tested in accordance with ASTM E05.
   4. Up to 9 months of allowable UV exposure.
   5. Surface burning characteristics: Class A, ASTM E84

2.2 FLEXIBLE FLASHING

A. Butyl Rubber Flashing: Composite, self-adhesive, flashing product consisting of a pliable, butyl rubber compound, bonded to a high-density polyethylene film, aluminum foil, or spunbonded polyolefin to produce an overall thickness of not less than 0.040 inch.
   1. Flame Propagation Test: Materials and construction to be as tested in accordance with NFPA 285.

B. Primer for Flexible Flashing: Product recommended in writing by flexible flashing manufacturer for substrate.

C. Nails and Staples: Product recommended in writing by flexible flashing manufacturer and complying with ASTM F1667.

PART 3 - EXECUTION

3.1 INSTALLATION OF BUILDING PAPER

A. Cover exposed exterior surface of sheathing with building paper securely fastened to framing immediately after sheathing is installed.

B. Cover sheathing with building paper as follows:
   1. Cut back paper 1/2 inch on each side of the break in supporting members at expansion- or control-joint locations.
   2. Apply paper to cover vertical flashing with a minimum 4-inch overlap unless otherwise indicated.
   3. Tape all seams per manufacturer’s approved recommendations.

C. Installation shall be per manufacturer's approved recommendations.

3.2 INSTALLATION OF FLEXIBLE FLASHING

A. Apply flexible flashing where indicated to comply with manufacturer's written instructions.
   1. Prime substrates as recommended by flashing manufacturer.
   2. Lap seams and junctures with other materials at least 4 inches except that at flashing flanges of other construction, laps need not exceed flange width.
   3. Lap flashing over water-resistive barrier at bottom and sides of openings.
   4. Lap water-resistive barrier over flashing at heads of openings.
   5. After flashing has been applied, roll surfaces with a hard rubber or metal roller to ensure that flashing is completely adhered to substrates.

3.3 INSPECTION REPORT

A. Contractor shall commence inspection to confirm weather barrier installation complies with manufacturer’s installation instructions and IECC requirements for continuous barrier. Observations, measurements, and other notes shall be recorded as digital images, product literature, drawings and sketches, etc. to communicate conditions, especially items not in compliance with IECC. Submit report to CO within 24 hours of commencing inspection with plan of action to remedy any items not in compliance.

END OF SECTION 07 25 00

SECTION 07 26 00 - VAPOR RETARDERS

PART 1 - GENERAL

1.1 SUMMARY

A. Section Includes:

1. Self-adhered polyethylene vapor retarder for roof

B. Related Requirements:

1. Section 03 30 00 "Cast-in-Place Concrete" for under-slab vapor retarders.
2. Section 07 21 00 “Thermal Insulation”

C. References

1. ICC/ES ESR 1708 - AC48 Roof Underlayment for Use in Severe Climate Areas
2. Air Barrier Association of America - ABAA D-115-010 (2013), Section 5.5

1.2 ACTION SUBMITTALS

A. Product Data:

1. Self-adhered polypropylene vapor retarder

B. Installer qualifications for over 10 years on commercial installations.

C. Shop Drawings: Provide manufacturers standard installation details, certified product test results as applicable to materials, installation instructions and approved shop drawings for the roof system specified.

D. Provide samples of roof underlayment and associated fasteners for verification of quality.

E. Sample Warranty

F. Post installation photographic documentation prior to concealment.

1.3 INFORMATIONAL SUBMITTALS

A. Product Test Reports: For each product, for tests performed by a qualified testing agency.

1.4 DELIVERY, STORAGE AND HANDLING

A. Packing, Shipping, Handling and Unloading: Deliver materials with identification labels intact. Schedule deliveries to avoid construction delays but minimize jobsite storage.

B. Storage and protection: Store materials protected from exposure to harmful weather conditions and direct sunlight. As recommended by manufacturer, store materials at a temperature between 40 degrees F and 100 degrees (4.4 – 38 degrees C). If exposed to lower temperatures restore materials to 40 degree F (-6.66 degree C) minimum temperature before application.

1.5 WARRANTY

A. Upon original pre-installation of final roof system, specified underlayment will not materially deteriorate from exposure to sunlight for 12 months.

B. Upon installation of final roof system, specified underlayment will not allow water to penetrate the roofing substrate due to decomposition beneath the primary roof and wall covering. Provide a 50 year limited warranty.

PART 2 - PRODUCTS

A. POLYETHYLENE VAPOR RETARDER

1. Self-adhered vapor retarder at roof deck: High tensile strength polyethylene woven core fabric

a. Thickness: 32 mils.
b. With a high strength synthetic butyl co- polymer adhesive layer on bottom side containing no VOC's
c. Class 3 vapor retarder
d. Water Vapor Permeance: Maximum 0.03 perms when tested in accordance with ASTM E96.

2.2 ACCESSORIES

A. Vapor-Retarder Tape: Pressure-sensitive tape of type recommended by vapor-retarder manufacturer for sealing joints and penetrations in vapor retarder.

B. Adhesive for Vapor Retarders: Product recommended by vapor-retarder manufacturer and has demonstrated capability to bond vapor retarders securely to substrates indicated.

PART 3 - EXECUTION

3.1 PREPARATION

A. Clean substrates of substances that are harmful to vapor retarders, including removing

projections capable of puncturing vapor retarders.

3.2 INSTALLATION OF VAPOR RETARDERS

A. Place vapor retarders on side of construction indicated on Drawings.

B. Extend vapor retarders to extremities of areas to protect from vapor transmission. Secure vapor retarders in place with adhesives, vapor retarder fasteners, or other anchorage system as recommended by manufacturer. Extend vapor retarders to cover miscellaneous voids in insulated substrates, including those filled with loose-fiber insulation.

C. Seal vertical joints in vapor retarders over framing by lapping no fewer than two studs and sealing with vapor-retarder tape according to vapor-retarder manufacturer's written instructions. Locate all joints over framing members or other solid substrates.

D. Seal joints caused by pipes, conduits, electrical boxes, and similar items penetrating vapor retarders with vapor-retarder tape to create an airtight seal between penetrating objects and vapor retarders.

E. Repair tears or punctures in vapor retarders immediately before concealment by other work. Cover with vapor-retarder tape or another layer of vapor retarders.

F. Submit photographic documentation of installation to CO prior to concealing with other work

3.3 PROTECTION

A. Protect vapor retarders from damage until concealed by permanent construction.

END OF SECTION 07 26 00

SECTION 07 41 13.16 - STANDING-SEAM METAL ROOF PANELS

PART 1 - GENERAL

1.1 RELATED DOCUMENTS

A. Drawings and general provisions of the Contract, including General and Supplementary Conditions and Division 01 Specification Sections, apply to this Section.

1.2 SUMMARY

A. Section includes standing-seam metal roof panels to match existing adjacent.

B. Related Sections:

1. Section 07 42 93 "Soffit Panels" for metal panels used in horizontal soffit applications.

2. Section 07 62 00 “Sheet Metal Flashing and Trim” for penetrations through roof panels, gutters, and downspouts.

1.3 PREINSTALLATION MEETINGS

A. Preinstallation Conference: Conduct conference at Project Site.

1. Meet with Contracting Officer, metal panel Installer, metal panel manufacturer's representative, structural-support Installer, and installers whose work interfaces with or affects metal panels, including installers of roof accessories and roof-mounted equipment.
2. Review and finalize construction schedule and verify availability of materials, Installer's personnel, equipment, and facilities needed to make progress and avoid delays.
3. Review methods and procedures related to metal panel installation, including manufacturer's written instructions.
4. Examine support conditions for compliance with requirements, including alignment between and attachment to structural members.
5. Review structural loading limitations of deck during and after roofing.
6. Review flashings, special details, drainage, penetrations, equipment curbs, and condition of other construction that affect metal panels.
7. Review governing regulations and requirements for insurance, certificates, and tests and inspections if applicable.
8. Review temporary protection requirements for metal panel systems during and after installation.
9. Review procedures for repair of metal panels damaged after installation.
10. Document proceedings, including corrective measures and actions required, and furnish copy of record to each participant.

1.4 ACTION SUBMITTALS

A. Product Data: For each type of product.

1. Include construction details, material descriptions, dimensions of individual components and profiles, and finishes for each type of panel and accessory.

B. Shop Drawings:

1. Include fabrication and installation layouts of metal panels; details of edge conditions, joints, panel profiles, corners, anchorages, attachment system, trim, flashings, closures, and accessories; and special details.
2. Accessories: Include details of the flashing, trim, and anchorage systems, at a scale of not less than 3 inches per 12 inches (1:5).

C. Calculations:

1. Include calculations with registered engineer seal, verifying roof panel and attachment method resist wind pressures imposed on it pursuant to applicable building codes.

D. Samples for Initial Selection: For each type of metal panel indicated with factory-applied color finishes.

1. Include similar Samples of trim and accessories involving color selection.

E. Samples for Verification: For each type of exposed finish required, prepared on Samples of size indicated below.

1. Metal Panels: 12 inches (305 mm) long by actual panel width. Include clips, fasteners, closures, and other metal panel accessories.

1.5 INFORMATIONAL SUBMITTALS

A. Qualification Data: For Manufacturer and Installer.

B. Product Test Reports: For each product, for tests performed by a qualified testing agency.

C. Field quality-control reports.

D. Sample Warranties: For special warranties.

1.6 CLOSEOUT SUBMITTALS

A. Maintenance Data: For metal panels to include in maintenance manuals.

1.7 QUALITY ASSURANCE

A. Manufacturer Qualifications: Company specializing in architectural sheet metal products for over 15 years on commercial installations.

B. Installer Qualifications: An entity that employs installers and supervisors who are trained and approved by manufacturer and with no less than 10 years of experience with metal roofing installations.

C. Mockups: Build mockups to verify selections made under Sample submittals and to demonstrate aesthetic effects and set quality standards for fabrication and installation.

1. Build mockup of typical roof area and eave, including fascia, and soffit as shown on Drawings; approximately 48 inches square by full thickness, including attachments, underlayment, and accessories.

2. Approval of mockups does not constitute approval of deviations from the Contract Documents contained in mockups unless Contracting Officer specifically approves such deviations in writing.
3. Approved mockups may become part of the completed Work if undisturbed at time of Substantial Completion.

1.8 DELIVERY, STORAGE, AND HANDLING

A. Deliver components, metal panels, and other manufactured items so as not to be damaged or deformed. Package metal panels for protection during transportation and handling.

B. Unload, store, and erect metal panels in a manner to prevent bending, warping, twisting, and surface damage.

C. Stack metal panels horizontally on platforms or pallets, covered with suitable weathertight and ventilated covering. Store metal panels to ensure dryness, with positive slope for drainage of water. Do not store metal panels in contact with other materials that might cause staining, denting, or other surface damage.

D. Retain strippable protective covering on metal panels until installation. Remove as panels are being installed. Verify film is not left on installed panels.

1.9 FIELD CONDITIONS

A. Weather Limitations: Proceed with installation only when existing and forecasted weather conditions permit assembly of metal panels to be performed according to manufacturers' written instructions and warranty requirements.

1.10 COORDINATION

A. Coordinate sizes and locations of roof penetrations with actual equipment provided.

B. Coordinate metal panel installation with rain drainage work, flashing, trim, construction of soffits, and other adjoining work to provide a leakproof, secure, and noncorrosive installation.

1.11 WARRANTY

A. Special Warranty on Panel Finishes: Manufacturer's standard form in which manufacturer agrees to repair finish or replace metal panels that show evidence of deterioration of factory-applied finishes within specified warranty period.

1. Exposed Panel Finish: Deterioration includes, but is not limited to, the following:

   a. Color fading more than 5 Hunter units when tested according to ASTM D 2244.
   b. Chalking in excess of a No. 8 rating when tested according to ASTM D 4214.
   c. Cracking, chipping, peeling, or failure of paint to adhere to bare metal.

2. Finish Warranty Period: 20 years from date of Substantial Completion.

B. Special Watertightness Warranty: Manufacturer's standard form in which manufacturer agrees to repair or replace standing-seam metal roof panel assemblies that fail to remain watertight, including leaks, within specified warranty period.

1. Warranty Period: 20 years from date of Substantial Completion.
2. Shop drawings must be provided to, reviewed, and approved by panel manufacturer prior to panel system installation.
3. Inspections by panel system manufacturer technical representative are required. Perform first inspection when underlayment and flashing are in place and second inspection when the roof is complete.

C. Special Installer Warranty: Furnish a written warranty signed by the Panel Applicator guaranteeing materials and workmanship for watertightness of the roofing system, flashings, penetrations, and against all leaks.

1. Warranty Period: Two years from date of Substantial Completion.

PART 2 - PRODUCTS

2.1 PERFORMANCE REQUIREMENTS

A. Solar Reflectance Index (SRI): Three-year-aged SRI not less than 32 or initial SRI not less than 39 when calculated according to ASTM E 1980, based on testing identical products by a qualified testing agency.

B. Energy Performance: Provide roof panels that are listed on the EPA/DOE's ENERGY STAR "Roof Product List" for low-slope roof products.

C. Structural Performance: Provide metal panel systems capable of withstanding the effects of the following loads, based on testing according to ASTM E 1592:

1. Wind Loads: As indicated on Drawings.
2. Other Design Loads: As indicated on Drawings
3. Deflection Limits: For wind loads, no greater than 1/180 of the span.

4. Test-Pressure Difference: 15 lbf/sq. ft. (718.2 Pa).

D. Hydrostatic Head Resistance: No water penetration when tested according to ASTM E2140.

E. Wind-Uplift Resistance: Provide metal roof panel assemblies that comply with UL 580 for wind-uplift-resistance class indicated.

1. Uplift Rating: UL 90.

F. Thermal Movements: Allow for thermal movements from ambient and surface temperature changes by preventing buckling, opening of joints, overstressing of components, failure of joint sealants, failure of connections, and other detrimental effects. Base calculations on surface temperatures of materials due to both solar heat gain and nighttime-sky heat loss.

1. Temperature Change (Range): 120 deg F (67 deg C), ambient; 180 deg F (100 deg C), material surfaces.

2.2 STANDING-SEAM METAL ROOF PANELS

A. General: Provide factory-formed metal roof panels designed to be installed by lapping and interconnecting raised side edges of adjacent panels with joint type indicated and mechanically attaching panels to supports using concealed clips in side laps. Include clips, cleats, pressure plates, and accessories required for weathertight installation.

1. Steel Panel Systems: Unless more stringent requirements are indicated, comply with ASTM E 1514.
2. Aluminum Panel Systems: Unless more stringent requirements are indicated, comply with ASTM E 1637.

B. Match Existing Adjacent: Basis of Design: Vertical-Rib, Seamed-Joint, Standing-Seam Metal Roof Panels R-1: Formed with vertical ribs at panel edges and a flat pan between ribs; designed for sequential installation by mechanically attaching panels to supports using concealed clips located under one side of panels, engaging opposite edge of adjacent panels, and mechanically seaming panels together.

1. Metallic-Coated Steel Sheet: Aluminum-zinc alloy-coated steel sheet complying with ASTM A 792/A 792M, Class AZ50 (Class AZM150) coating designation; structural quality. Prepainted by the coil-coating process to comply with ASTM A 755/A 755M.

   a. Nominal Thickness: 0.029 inch.
   b. Exterior Finish: Two-coat fluoropolymer
   c. Painted materials shall have a removable plastic film to protect the paint during roll forming, shipping and handling.
   d. Color: As selected by Contracting Officer from manufacturer's full range, including premium. Basis of design: Berridge Dark Bronze.
   e. 2" mechanical lock

2. Clips: Continuous with vinyl weatherseal insert to accommodate thermal movement.
   a. Material: 0.064-inch nominal thickness, zinc coated (galvanized) base with 0.033 inch stainless-steel top.

3. Joint Type: Single folded.

4. Panel Coverage: 16 inches.
5. Panel Height: 2.0 inches.

2.3 UNDERLAYMENT MATERIALS

A. Self-Adhering, High-Temperature Underlayment: Provide self-adhering, cold-applied, sheet underlayment, a minimum of 40 mils thick, consisting of slip-resistant, polyethylene-film top surface laminated to a layer of butyl or SBS-modified asphalt adhesive, with release-paper backing. Provide primer when recommended by underlayment manufacturer.

1. Thermal Stability: Stable after testing at 240 deg F (116 deg C); ASTM D 1970.
2. Low-Temperature Flexibility: Passes after testing at minus 20 deg F (29 deg C); ASTM D 1970.
3. Installed as air barrier.

2.4 MISCELLANEOUS MATERIALS

A. Miscellaneous Metal Subframing and Furring: ASTM A 792/A 792M, Class AZ50 (Class AZM150) coating designation unless otherwise indicated. Provide manufacturer's standard sections as required for support and alignment of metal panel system.

B. Panel Accessories: Provide components required for a complete, weathertight panel system including trim, copings, fasciae, mullions, sills, corner units, clips, flashings, sealants, gaskets, fillers, closure strips, and similar items. Match material and finish of metal panels unless otherwise indicated.

1. Closures: Provide closures at eaves and ridges, fabricated of same metal as metal panels.
2. Backing Plates: Provide metal backing plates at panel end splices, fabricated from material recommended by manufacturer.

C. Flashing and Trim: Provide flashing and trim formed from same material as metal panels as required to seal against weather and to provide finished appearance. Locations include, but are not limited to, eaves, rakes, corners, bases, framed openings, ridges, fasciae, and fillers. Finish flashing and trim with same finish system as adjacent metal panels.

D. Panel Fasteners: Zinc-coated steel, corrosion resisting steel, zinc cast head, or nylon capped steel, type and size as approved for the applicable loading requirements.

E. Panel Sealants: Provide sealant type recommended by manufacturer that are compatible with panel materials, are nonstaining, and do not damage panel finish.

1. Joint Sealant: Silicone sealant; of type, grade, class, and use classifications required to seal joints in metal panels and remain weathertight; and as recommended in writing by metal panel manufacturer.

2.5 FABRICATION

A. General: Fabricate and finish metal panels and accessories at the factory, by manufacturer's standard procedures and processes, as necessary to fulfill indicated performance requirements

demonstrated by laboratory testing. Comply with indicated profiles and with dimensional and structural requirements.

B. On-Site Fabrication: Subject to compliance with requirements of this Section, metal panels may be fabricated on-site using factory set, non-adjustable, portable roll-forming equipment if panels are of same profile and warranted by manufacturer to be equal to factory-formed panels. Fabricate according to equipment manufacturer's written instructions and to comply with details shown.

C. Provide panel profile, including major ribs and intermediate stiffening ribs, if any, for full length of panel.

D. Sheet Metal Flashing and Trim: Fabricate flashing and trim to comply with manufacturer's recommendations and recommendations in SMACNA's "Architectural Sheet Metal Manual" that apply to design, dimensions, metal, and other characteristics of item indicated.

1. Form exposed sheet metal accessories that are without excessive oil canning, buckling, and tool marks and that are true to line and levels indicated, with exposed edges folded back to form hems.
2. Sealed Joints: Form nonexpansion, but movable, joints in metal to accommodate sealant and to comply with SMACNA standards.
3. Fabricate cleats and attachment devices from same material as accessory being anchored or from compatible, noncorrosive metal recommended in writing by metal panel manufacturer.

a. Size: As recommended by SMACNA's "Architectural Sheet Metal Manual" or metal panel manufacturer for application, but not less than thickness of metal being secured.

2.6 FINISHES

A. Protect mechanical and painted finishes on exposed surfaces from damage by applying a strippable, temporary protective covering before shipping.

B. Appearance of Finished Work: Variations in appearance of abutting or adjacent pieces are acceptable if they are within one-half of the range of approved Samples. Noticeable variations in same piece are unacceptable. Variations in appearance of other components are acceptable if they are within the range of approved Samples and are assembled or installed to minimize contrast.

C. Steel Panels and Accessories:
1. Three-Coat Fluoropolymer: AAMA 621. Fluoropolymer finish containing not less than 70 percent polyvinylidene fluoride (PVDF) resin by weight in both color coat and clear topcoat. Prepare, pretreat, and apply coating to exposed metal surfaces to comply with coating and resin manufacturers' written instructions.

PART 3 - EXECUTION

3.1 EXAMINATION

A. Examine substrates, areas, and conditions, with Installer present, for compliance with requirements for installation tolerances, metal panel supports, and other conditions affecting performance of the Work.

1. Examine primary and secondary roof framing to verify that rafters, purlins, angles, channels, and other structural panel support members and anchorages have been installed within alignment tolerances required by metal roof panel manufacturer.
2. Examine solid roof sheathing to verify that sheathing joints are supported by framing or blocking and that installation is within flatness tolerances required by metal roof panel manufacturer.

a. Verify that air- or water-resistive barriers have been installed over sheathing or backing substrate to prevent air infiltration or water penetration.

B. Examine roughing-in for components and systems penetrating metal panels to verify actual locations of penetrations relative to seam locations of metal panels before installation.

C. Proceed with installation only after unsatisfactory conditions have been corrected.

3.2 PREPARATION

A. Miscellaneous Supports: Install subframing, furring, and other miscellaneous panel support members and anchorages according to ASTM C 754 and metal panel manufacturer's written recommendations.

3.3 UNDERLAYMENT INSTALLATION

A. Self-Adhering Sheet Underlayment: Apply primer if required by manufacturer. Comply with temperature restrictions of underlayment manufacturer for installation. Apply at locations indicated on Drawings, wrinkle free, in shingle fashion to shed water, and with end laps of not less than 6 inches staggered 24 inches between courses. Overlap side edges not less than 36 inches. Roll laps with roller. Cover underlayment within 14 days or as directed by the underlayment product manufacturer.

1. Apply over the entire roof surface.

B. Flashings: Install flashings to cover underlayment to comply with requirements specified in Section 07 62 00 "Sheet Metal Flashing and Trim."

3.4 METAL PANEL INSTALLATION

A. General: Install metal panels according to manufacturer's written instructions in orientation, sizes, and locations indicated. Install panels perpendicular to supports unless otherwise

indicated. Anchor metal panels and other components of the Work securely in place, with provisions for thermal and structural movement.

1. Shim or otherwise plumb substrates receiving metal panels to be level to 1/4 inch in 20 ft.
2. Flash and seal metal panels at perimeter of all openings. Do not begin installation until air- or water-resistive barriers and flashings that will be concealed by metal panels are installed.
3. Locate and space fastenings in uniform vertical and horizontal alignment.
4. Install flashing and trim as metal panel work proceeds.
5. Panels should be continuous without end laps.
6. Align bottoms of metal panels and fasten.
7. Provide weathertight escutcheons for pipe- and conduit-penetrating panels.

B. Fasteners:

1. Steel Panels: Use stainless-steel fasteners for surfaces exposed to the exterior; use galvanized-steel fasteners for surfaces exposed to the interior.
2. Aluminum Panels: Use stainless-steel fasteners for surfaces exposed to the exterior; use stainless-steel fasteners for surfaces exposed to the interior.

C. Anchor Clips: Anchor metal roof panels and other components of the Work securely in place, using manufacturer's approved fasteners according to manufacturers' written instructions.

D. Metal Protection: Where dissimilar metals contact each other or corrosive substrates, protect against galvanic action as recommended in writing by metal panel manufacturer.

E. Standing-Seam Metal Roof Panel Installation: Fasten metal roof panels to supports with concealed clips at each standing-seam joint at location, spacing, and with fasteners recommended in writing by manufacturer.

1. Install clips to supports with self-tapping fasteners.
2. Install pressure plates, if required, at locations indicated in manufacturer's written installation instructions.
3. Seamed Joint: Crimp standing seams with manufacturer-approved, motorized seamer tool so clip, metal roof panel, and factory-applied vinyl weatherseal are completely engaged.

F. Accessory Installation: Install accessories with positive anchorage to building and weathertight mounting, and provide for thermal expansion. Coordinate installation with flashings and other components.

1. Install components required for a complete metal panel system including trim, copings, corners, seam covers, flashings, sealants, gaskets, fillers, and similar items. Provide types indicated by metal roof panel manufacturers; or, if not indicated, types recommended by metal roof panel manufacturer.

G. Flashing and Trim: Comply with performance requirements, manufacturer's written installation instructions, and SMACNA's "Architectural Sheet Metal Manual." Provide concealed fasteners where possible, and set units true to line and level as indicated. Install work with laps, joints, and seams that will be permanently watertight and weather resistant.

1. Install exposed flashing and trim that is without buckling and tool marks, and that is true to line and levels indicated, with exposed edges folded back to form hems. Install sheet metal flashing and trim to fit substrates and achieve waterproof and weather-resistant performance.
2. Expansion Provisions: Provide for thermal expansion of exposed flashing and trim.

H. Pipe Flashing: Form flashing around pipe penetration and metal roof panels. Fasten and seal to metal roof panels as recommended by manufacturer.

3.5 FIELD QUALITY CONTROL

A. Manufacturer's Field Service: Engage a factory-authorized service representative to test and inspect metal roof panel installation, including accessories. Report results in writing.

B. Remove and replace applications of metal roof panels where tests and inspections indicate that they do not comply with specified requirements.

C. Additional tests and inspections, at Contractor's expense, are performed to determine compliance of replaced or additional work with specified requirements.

D. Prepare test and inspection reports.

3.6 CLEANING AND PROTECTION

A. Remove temporary protective coverings and strippable films, if any, as metal panels are installed, unless otherwise indicated in manufacturer's written installation instructions. On completion of metal panel installation, clean finished surfaces as recommended by metal panel manufacturer. Maintain in a clean condition during construction.

B. Replace metal panels that have been damaged or have deteriorated beyond successful repair by finish touchup or similar minor repair procedures.

END OF SECTION 07 41 13.16

SECTION 07 42 13.13 - FORMED METAL WALL PANELS

PART 1 - GENERAL

1.1 SUMMARY

A. Section Includes:
1. Concealed-fastener, lap-seam metal wall panels.
2. Accessory trim at corners, windows, and doors.

B. Related Sections:
1. Section 07 25 00 “Weather Barriers”
2. Section 07 42 93 "Soffit Panels" for metal panels used in horizontal soffit applications.
3. Section 07 62 00 “Sheet Metal Flashing”

1.2 PREINSTALLATION MEETINGS

A. Preinstallation Conference: Conduct conference at Project Site.

1. Meet with Contracting Officer, metal panel Installer, metal panel manufacturer's representative, structural-support Installer, and installers whose work interfaces with or affects metal panels, including installers of doors, windows, and louvers.
2. Review and finalize construction schedule and verify availability of materials, Installer's personnel, equipment, and facilities needed to make progress and avoid delays.
3. Review methods and procedures related to metal panel installation, including manufacturer's written instructions.
4. Examine support conditions for compliance with requirements, including alignment between and attachment to structural members.
5. Review flashings, special siding details, wall penetrations, openings, and condition of other construction that affect metal panels.
6. Review governing regulations and requirements for insurance, certificates, and tests and inspections if applicable.
7. Review temporary protection requirements for metal panel assembly during and after installation.
8. Review of procedures for repair of metal panels damaged after installation.
9. Document proceedings, including corrective measures and actions required, and furnish copy of record to each participant.

1.3 ACTION SUBMITTALS

A. Product Data: For each type of product.

1. Include construction details, material descriptions, dimensions of individual components and profiles, and finishes for each type of panel and accessory.

B. Shop Drawings:

1. Include fabrication and installation layouts of metal panels; details of edge conditions, joints, panel profiles, corners, anchorages, attachment system, trim, flashings, closures, and accessories; and special details.
2. Accessories: Include details of the flashing, trim, and anchorage systems, at a scale of not less than 3" = 1'-0" (1:5).

C. Calculations:

1. Include calculations with registered engineer seal, verifying wall panel and attachment method resist wind pressures imposed on it pursuant to applicable building codes.

D. Samples for Initial Selection: For each type of metal panel indicated with factory-applied finishes.

1. Include Samples of trim and accessories involving color selection.

E. Samples for Verification: For each type of exposed finish, prepared on Samples of size indicated below:

1. Metal Panels: 12 inches long by actual panel width. Include fasteners, closures, and other metal panel accessories.

1.4 INFORMATIONAL SUBMITTALS

A. Qualification Data: For Installer and Manufacturer.

B. Product Test Reports: For each product, for tests performed by a qualified testing agency.

C. Field quality-control reports.

D. Sample Warranties: For special warranties.

1.5 CLOSEOUT SUBMITTALS

A. Maintenance Data: For metal panels to include in maintenance manuals.

1.6 QUALITY ASSURANCE

A. Installer Qualifications: An entity that employs installers and supervisors who are trained and approved by manufacturer for over 15 years on commercial installations.

B. Manufacturer Qualifications: Company specializing in Architectural Sheet Metal Products.

C. Mockups: Build mockups to verify selections made under Sample submittals and to demonstrate aesthetic effects and set quality standards for fabrication and installation.

1. Build mockup of typical metal panel assembly including corner, soffits, supports, attachments, and accessories.

2. Water-Spray Test: Conduct water-spray test of metal panel assembly mockup, testing for water penetration according to AAMA 501.2.
3. Approval of mockups does not constitute approval of deviations from the Contract Documents contained in mockups unless Contracting Officer specifically approves such deviations in writing.
4. Subject to compliance with requirements, approved mockups may become part of the completed Work if undisturbed at time of Substantial Completion.

1.7 DELIVERY, STORAGE, AND HANDLING

A. Deliver components, metal panels, and other manufactured items so as not to be damaged or deformed. Package metal panels for protection during transportation and handling.

B. Unload, store, and erect metal panels in a manner to prevent bending, warping, twisting, and surface damage.

C. Stack metal panels horizontally on platforms or pallets, covered with suitable weathertight and ventilated covering. Store metal panels to ensure dryness, with positive slope for drainage of water. Do not store metal panels in contact with other materials that might cause staining, denting, or other surface damage.

D. Remove strippable protective covering on metal panels as panels are being installed. Do not leave the film on installed panels.

1.8 FIELD CONDITIONS

A. Weather Limitations: Proceed with installation only when existing and forecasted weather conditions permit assembly of metal panels to be performed according to manufacturers' written instructions and warranty requirements.

1.9 COORDINATION

A. Coordinate metal panel installation with rain drainage work, flashing, trim, construction of soffits, and other adjoining work to provide a leakproof, secure, and noncorrosive installation.

1.10 WARRANTY

A. Galvalume Substrate Warranty: Manufacturer's standard form in which manufacturer agrees to repair or replace components of metal panel systems that fail in materials or workmanship within specified warranty period.

1. Failures include, but are not limited to, the following:

   a. Structural failures including rupturing or perforating.
   b. Deterioration of metals and other materials beyond normal weathering.

2. Warranty Period: 20 years and 6 months from date of Substantial Completion.

B. Special Warranty on Panel Finishes: Manufacturer's standard form in which manufacturer agrees to repair finish or replace metal panels that show evidence of deterioration of factory-applied finishes within specified warranty period.

1. Exposed Panel Finish: Deterioration includes, but is not limited to, the following:

a. Color fading more than 5 Hunter units when tested according to ASTM D 2244.
b. Chalking in excess of a No. 8 rating when tested according to ASTM D 4214.
c. Cracking, chipping, peeling, or failure of paint to adhere to bare metal.

2. Finish Warranty Period: 20 years from date of Substantial Completion.

PART 2 - PRODUCTS

2.1 PERFORMANCE REQUIREMENTS

A. Structural Performance: Provide metal panel systems capable of withstanding the effects of the following loads:

1. Wind Loads: As indicated on Drawings.
2. Deflection Limits: For wind loads, no greater than 1/180 of the span.

2.2 CONCEALED-FASTENER, LAP-SEAM METAL WALL PANELS

A. General: Provide factory-formed metal panels designed to be field assembled by lapping and interconnecting side edges of adjacent panels and mechanically attaching through panel to supports using concealed fasteners in side laps. Include accessories required for weathertight installation.

B. Wide-Reveal-Joint, Concealed-Fastener Metal Wall Panels: Formed with vertical panel edges and corrugated profile between panel edges, resulting in a wide reveal joint between panels.

1. Metallic-Coated Steel Sheet: Aluminum-zinc alloy-coated steel sheet complying with ASTM A 792/A 792M, Class AZ50 coating designation; structural quality. Prepainted by the coil-coating process to comply with ASTM A 755/A 755M.

a. Nominal Thickness: 0.029 inch.
b. Exterior Finish: Two-coat fluoropolymer
c. Color: As selected by Contracting Officer from manufacturer’s full range, including premium. Basis of design: Sierra Tan at wall panels and trim, Dark Bronze at door and window trim.

2. Panel Coverage: 32 inches.
3. Panel Height: 0.875 inches.

2.3 MISCELLANEOUS MATERIALS

A. Miscellaneous Metal Subframing and Furring: ASTM A 792/A 792M, Class AZ50 (Class AZM150) aluminum-zinc-alloy coating designation unless otherwise indicated. Provide manufacturer's standard sections as required for support and alignment of metal panel system.

B. Panel Accessories: Provide components required for a complete, weathertight panel system including trim, copings, fasciae, mullions, sills, corner units, clips, flashings, sealants, gaskets, fillers, closure strips, and similar items. Match material and finish of metal panels unless otherwise indicated.

1. Closures: Provide closures at eaves and rakes, fabricated of same metal as metal panels.
2. Backing Plates: Provide metal backing plates at panel end splices, fabricated from material recommended by manufacturer.
3. Closure Strips: Closed-cell, expanded, cellular, rubber or crosslinked, polyolefin-foam or closed-cell laminated polyethylene; minimum 1-inch-thick, flexible closure strips; cut or premolded to match metal panel profile. Provide closure strips where indicated or necessary to ensure weathertight construction.

C. Flashing and Trim: Provide flashing and trim formed from same material as metal panels as required to seal against weather and to provide finished appearance. Locations include, but are not limited to, bases, drips, sills, jambs, corners, endwalls, framed openings, rakes, fasciae, parapet caps, soffits, reveals, and fillers. Finish flashing and trim with same finish system as adjacent metal panels.

D. Panel Fasteners: Self-tapping screws designed to withstand design loads. Provide exposed fasteners with heads matching color of metal panels by means of factory-applied coating. Provide EPDM or PVC sealing washers for exposed fasteners.

E. Panel Sealants: Provide sealant type recommended by manufacturer that are compatible with panel materials, are nonstaining, and do not damage panel finish.

1. Sealant Tape: Pressure-sensitive, 100 percent solids, gray polyisobutylene compound sealant tape with release-paper backing. Provide permanently elastic, nonsag, nontoxic, nonstaining tape 1/2 inch wide and 1/8 inch thick.
2. Joint Sealant: ASTM C 920; elastomeric polyurethane or silicone sealant; of type, grade, class, and use classifications required to seal joints in metal panels and remain weathertight; and as recommended in writing by metal panel manufacturer.
3. Butyl-Rubber-Based, Solvent-Release Sealant: ASTM C 1311.

2.4 FABRICATION

A. General: Fabricate and finish metal panels and accessories at the factory, by manufacturer's standard procedures and processes, as necessary to fulfill indicated performance requirements demonstrated by laboratory testing. Comply with indicated profiles and with dimensional and structural requirements.

B. Provide panel profile, including major ribs and intermediate stiffening ribs, if any, for full length of panel.

C. Sheet Metal Flashing and Trim: Fabricate flashing and trim to comply with manufacturer's recommendations and recommendations in SMACNA's "Architectural Sheet Metal Manual" that apply to design, dimensions, metal, and other characteristics of item indicated.

1. Form exposed sheet metal accessories that are without excessive oil canning, buckling, and tool marks and that are true to line and levels indicated, with exposed edges folded back to form hems.
2. Seams for Aluminum: Fabricate nonmoving seams with flat-lock seams. Form seams and seal with epoxy seam sealer. Rivet joints for additional strength.
3. Seams for Other Than Aluminum: Fabricate nonmoving seams in accessories with flat-lock seams. Tin edges to be seamed, form seams, and solder.
4. Sealed Joints: Form nonexpansion, but movable, joints in metal to accommodate sealant and to comply with SMACNA standards.
5. Conceal fasteners and expansion provisions where possible. Exposed fasteners are not allowed on faces of accessories exposed to view.
6. Fabricate cleats and attachment devices from same material as accessory being anchored or from compatible, noncorrosive metal recommended in writing by metal panel manufacturer.

    a. Size: As recommended by SMACNA's "Architectural Sheet Metal Manual" or metal wall panel manufacturer for application but not less than thickness of metal being secured.

2.5 FINISHES

A. Protect mechanical and painted finishes on exposed surfaces from damage by applying a strippable, temporary protective covering before shipping.

B. Appearance of Finished Work: Variations in appearance of abutting or adjacent pieces are acceptable if they are within one-half of the range of approved Samples. Noticeable variations in same piece are not acceptable. Variations in appearance of other components are acceptable if they are within the range of approved Samples and are assembled or installed to minimize contrast.

C. Steel Panels and Accessories:
1. Three-Coat Fluoropolymer: AAMA 621. Fluoropolymer finish containing not less than 70 percent polyvinylidene fluoride (PVDF) resin by weight in both color coat and clear topcoat. Prepare, pretreat, and apply coating to exposed metal surfaces to comply with coating and resin manufacturers' written instructions.

D. Aluminum Panels and Accessories:
1. Three-Coat Fluoropolymer: AAMA 621. Fluoropolymer finish containing not less than 70 percent polyvinylidene fluoride (PVDF) resin by weight in both color coat and clear topcoat. Prepare, pretreat, and apply coating to exposed metal surfaces to comply with coating and resin manufacturers' written instructions.

PART 3 - EXECUTION

3.1 EXAMINATION

A. Examine substrates, areas, and conditions, with Installer present, for compliance with requirements for installation tolerances, metal panel supports, and other conditions affecting performance of the Work.

1. Examine wall framing to verify that girts, angles, channels, studs, and other structural panel support members and anchorage have been installed within alignment tolerances required by metal wall panel manufacturer.
2. Examine wall sheathing to verify that sheathing joints are supported by framing or blocking and that installation is within flatness tolerances required by metal wall panel manufacturer.

    a. Verify that air- or water-resistive barriers have been installed over sheathing or backing substrate to prevent air infiltration or water penetration.

B. Examine roughing-in for components and systems penetrating metal panels to verify actual locations of penetrations relative to seam locations of metal panels before installation.

C. Proceed with installation only after unsatisfactory conditions have been corrected.

3.2 PREPARATION

A. Miscellaneous Supports: Install subframing, furring, and other miscellaneous panel support members and anchorages according to ASTM C 754 and metal panel manufacturer's written recommendations.

3.3 METAL PANEL INSTALLATION

A. General: Install metal panels according to manufacturer's written instructions in orientation, sizes, and locations indicated. Install panels perpendicular to supports unless otherwise indicated. Anchor metal panels and other components of the Work securely in place, with provisions for thermal and structural movement.

1. Shim or otherwise plumb substrates receiving metal panels.
2. Flash and seal metal panels at perimeter of all openings. Fasten with self-tapping screws. Do not begin installation until air- or water-resistive barriers and flashings that will be concealed by metal panels are installed.
3. Install screw fasteners in predrilled holes.
4. Locate and space fastenings in uniform vertical and horizontal alignment.
5. Install flashing and trim as metal panel work proceeds.
6. Locate panel splices over, but not attached to, structural supports. Stagger panel splices and end laps to avoid a four-panel lap splice condition.
7. Align bottoms of metal panels and fasten with blind rivets, bolts, or self-tapping screws. Fasten flashings and trim around openings and similar elements with self-tapping screws.
8. Provide weathertight escutcheons for pipe- and conduit-penetrating panels.

B. Fasteners:

1. Steel Panels: Use stainless-steel fasteners for surfaces exposed to the exterior; use galvanized-steel fasteners for surfaces exposed to the interior.
2. Aluminum Panels: Use stainless-steel fasteners for surfaces exposed to the exterior; use stainless-steel fasteners for surfaces exposed to the interior.

C. Metal Protection: Where dissimilar metals contact each other or corrosive substrates, protect against galvanic action as recommended in writing by metal panel manufacturer.

D. Lap-Seam Metal Panels: Fasten metal panels to supports with fasteners at each lapped joint at location and spacing recommended by manufacturer.

1. Lap ribbed or fluted sheets one full rib. Apply panels and associated items true to line for neat and weathertight enclosure.
2. Provide metal-backed washers under heads of exposed fasteners bearing on weather side of metal panels.
3. Locate and space exposed fasteners in uniform vertical and horizontal alignment. Use proper tools to obtain controlled uniform compression for positive seal without rupture of washer.
4. Install screw fasteners with power tools having controlled torque adjusted to compress washer tightly without damage to washer, screw threads, or panels. Install screws in predrilled holes.
5. Flash and seal panels with weather closures at perimeter of all openings.

E. Accessory Installation: Install accessories with positive anchorage to building and weathertight mounting and provide for thermal expansion. Coordinate installation with flashings and other components.

1. Install components required for a complete metal panel system including trim, copings, corners, seam covers, flashings, sealants, gaskets, fillers, closure strips, and similar items. Provide types indicated by metal wall panel manufacturer; or, if not indicated, provide types recommended by metal panel manufacturer.

F. Flashing and Trim: Comply with performance requirements, manufacturer's written installation instructions, and SMACNA's "Architectural Sheet Metal Manual." Provide concealed fasteners where possible and set units true to line and level as indicated. Install work with laps, joints, and seams that are permanently watertight.

1. Install exposed flashing and trim that is without buckling and tool marks, and that is true to line and levels indicated, with exposed edges folded back to form hems. Install sheet metal flashing and trim to fit substrates and achieve waterproof performance.
2. Expansion Provisions: Provide for thermal expansion of exposed flashing and trim. Space movement joints at a maximum of 10 feet with no joints allowed within 24 inches of corner or intersection. Where lapped expansion provisions cannot be used or would not be sufficiently waterproof, form expansion joints of intermeshing hooked flanges, not less than 1 inch deep, filled with mastic sealant (concealed within joints).

3.4 FIELD QUALITY CONTROL

A. Testing Agency: Engage a qualified testing agency to perform tests and inspections.

B. Water-Spray Test: After installation, test area of assembly as directed by Contracting Officer for water penetration according to AAMA 501.2.

C. Manufacturer's Field Service: Engage a factory-authorized service representative to test and inspect completed metal wall panel installation, including accessories.

D. Remove and replace metal wall panels where tests and inspections indicate that they do not comply with specified requirements.

E. Additional tests and inspections, at Contractor's expense, are performed to determine compliance of replaced or additional work with specified requirements.

F. Prepare test and inspection reports.

3.5 CLEANING AND PROTECTION

A. Remove temporary protective coverings and strippable films, if any, as metal panels are installed, unless otherwise indicated in manufacturer's written installation instructions. On completion of metal panel installation, clean finished surfaces as recommended by metal panel manufacturer. Maintain in a clean condition during construction.

B. After metal panel installation, clear weep holes and drainage channels of obstructions, dirt, and sealant.

C. Replace metal panels that have been damaged or have deteriorated beyond successful repair by finish touchup or similar minor repair procedures.

END OF SECTION 07 42 13.13

SECTION 07 42 93 - SOFFIT PANELS

PART 1 - GENERAL

1.1 SUMMARY

A. Section Includes:

1. Metal soffit panels.

B. Related Requirements:

1. Section 07 42 13.13 "Formed Metal Wall Panels"
2. Section 07 62 00 “Sheet Metal Flashing”

1.2 PREINSTALLATION MEETINGS

A. Preinstallation Conference: Conduct conference at Project site.

1.3 ACTION SUBMITTALS

A. Product Data:

1. Metal soffit panels.

B. Product Data Submittals:

1. Include construction details, material descriptions, dimensions of individual components and profiles, and finishes for each type of panel and accessory.

C. Shop Drawings:

1. Include fabrication and installation layouts of metal panels; details of edge conditions, joints, panel profiles, corners, anchorages, attachment system, trim, flashings, closures, and accessories; and special details.
2. Accessories: Include details of flashing, trim, and anchorage systems, at a scale of not less than 1-1/2 inches per 12 inches.

D. Samples for Initial Selection: For each type of metal panel indicated with factory-applied color finishes.

1. Include similar Samples of trim and accessories involving color selection.

E. Samples for Verification: For each type of exposed finish required, prepared on Samples of size indicated below:

1. Metal Panels: 12 inches long by actual panel width. Include fasteners, closures, and other metal panel accessories.

1.4 INFORMATIONAL SUBMITTALS

A. Qualification Data: For Installer.

B. Product Test Reports: For each product, tests performed by a qualified testing agency.

C. Sample Warranties: For special warranties.

1.5 CLOSEOUT SUBMITTALS

A. Maintenance Data: For metal panels to include in maintenance manuals.

1.6 QUALITY ASSURANCE

A. Installer Qualifications: An entity that employs installers and supervisors who are trained and approved by manufacturer.

B. UL-Certified, Portable Roll-Forming Equipment: UL-certified, portable roll-forming equipment capable of producing metal panels warranted by manufacturer to be the same as factory-formed products. Maintain UL certification of portable roll-forming equipment for duration of work.

1.7 DELIVERY, STORAGE, AND HANDLING

A. Deliver components, metal panels, and other manufactured items so as not to be damaged or deformed. Package metal panels for protection during transportation and handling.

B. Unload, store, and erect metal panels in a manner to prevent bending, warping, twisting, and surface damage.

C. Stack metal panels horizontally on platforms or pallets, covered with suitable weathertight and ventilated covering. Store metal panels to ensure dryness, with positive slope for drainage of water. Do not store metal panels in contact with other materials that might cause staining, denting, or other surface damage.

D. Retain strippable protective covering on metal panels during installation.

1.8 FIELD CONDITIONS

A. Weather Limitations: Proceed with installation only when existing and forecasted weather conditions permit assembly of metal panels to be performed according to manufacturers' written instructions and warranty requirements.

1.9 COORDINATION

A. Coordinate metal panel installation with rain drainage work, flashing, trim, construction of walls, and other adjoining work to provide a leakproof, secure, and noncorrosive installation.

1.10 WARRANTY

A. Special Warranty: Manufacturer's standard form in which manufacturer agrees to repair or replace components of metal panel systems that fail in materials or workmanship within specified warranty period.

1. Failures include, but are not limited to, the following:

a. Structural failures including rupturing, cracking, or puncturing.
b. Deterioration of metals and other materials beyond normal weathering.

2. Warranty Period: Two years from date of Substantial Completion.

B. Special Warranty on Panel Finishes: Manufacturer's standard form in which manufacturer agrees to repair finish or replace metal panels that show evidence of deterioration of factory-applied finishes within specified warranty period.

1. Exposed Panel Finish: Deterioration includes, but is not limited to, the following:

a. Color fading more than 5 Delta E units when tested according to ASTM D2244.
b. Chalking in excess of a No. 8 rating when tested according to ASTM D4214.
c. Cracking, checking, peeling, or failure of paint to adhere to bare metal.

2. Finish Warranty Period: 20 years from date of Substantial Completion.

PART 2 - PRODUCTS

2.1 PERFORMANCE REQUIREMENTS

A. Structural Performance: Provide metal panel systems capable of withstanding the effects of the following loads, based on testing according to ASTM E1592:

1. Wind Loads: As indicated on Drawings.
2. Deflection Limits: For wind loads, no greater than 1/180 of the span.

B. Air Infiltration: Air leakage of not more than 0.06 cfm/sq. ft. when tested according to ASTM E283.

C. Water Penetration under Static Pressure: No water penetration when tested according to ASTM E331.

D. Thermal Movements: Allow for thermal movements from ambient and surface

temperature changes by preventing buckling, opening of joints, overstressing of components, failure of joint sealants, failure of connections, and other detrimental effects. Base calculations on surface temperatures of materials due to both solar heat gain and nighttime-sky heat loss.

1. Temperature Change (Range): 120 deg F, ambient; 180 deg F, material surfaces

2.2 METAL SOFFIT PANELS

A. Provide metal soffit panels designed to be installed by lapping and interconnecting side edges of adjacent panels and mechanically attaching through panel to supports using concealed fasteners in side laps. Include accessories required for weathertight installation.

B. Metal Soffit Panels: V-Groove-Profile, Concealed-Fastener Metal Soffit Panels: Formed with vertical panel edges and intermediate stiffening ribs symmetrically spaced between panel edges.

1. Metallic-Coated Steel Sheet: Aluminum-zinc alloy-coated steel sheet complying with ASTM A 792/A 792M, Class AZ50 (Class AZM150) coating designation; structural quality. Prepainted by the coil-coating process to comply with ASTM A 755/A 755M.

   a. Nominal Thickness: 0.029 inch.
   b. Exterior Finish: Two-coat fluoropolymer
   c. Color: As selected by Contracting Officer from manufacturer’s full range, including premium. Basis of design: Sierra Tan

2. Panel Coverage: 12.75 inches.
3. Panel Height: 0.375 inches.

2.3 MISCELLANEOUS MATERIALS

A. Miscellaneous Metal Subframing and Furring: ASTM C645, cold-formed, metallic-coated steel sheet, ASTM A653/A653M, G90 hot-dip galvanized coating designation or ASTM A792/A792M, Class AZ50 aluminum-zinc-alloy coating designation unless otherwise indicated. Provide manufacturer's standard sections as required for support and alignment of metal panel system.

B. Panel Accessories: Provide components required for a complete, weathertight panel system including trim, clips, flashings, sealants, gaskets, fillers, closure strips, and similar items. Match material and finish of metal panels unless otherwise indicated.

1. Closure Strips: Closed-cell, expanded, cellular, rubber or crosslinked, polyolefin-foam or closed-cell laminated polyethylene; minimum 1-inch- thick, flexible closure strips; cut or premolded to match metal panel profile. Provide closure strips where indicated or necessary to ensure weathertight construction.

C. Flashing and Trim: Provide flashing and trim formed from same material as metal panels

as required to seal against weather and to provide finished appearance. Finish flashing and trim with same finish system as adjacent metal panels.

D. Panel Fasteners: Self-tapping screws designed to withstand design loads. Provide exposed fasteners with heads matching color of metal panels by means of plastic caps or factory-applied coating. Provide EPDM or PVC sealing washers for exposed fasteners.

E. Panel Sealants: Provide sealant types recommended by manufacturer that are compatible with panel materials, are nonstaining, and do not damage panel finish.

1. Sealant Tape: Pressure-sensitive, 100 percent solids, gray polyisobutylene compound sealant tape with release-paper backing. Provide permanently elastic, nonsag, nontoxic, nonstaining tape 1/2 inch wide and 1/8 inch thick.
2. Joint Sealant: ASTM C920; elastomeric polyurethane or silicone sealant; of type, grade, class, and use classifications required to seal joints in metal panels and remain weathertight; and as recommended in writing by metal panel manufacturer.
3. Butyl-Rubber-Based, Solvent-Release Sealant: ASTM C1311.

2.4 FABRICATION

A. Fabricate and finish metal panels and accessories at the factory, by manufacturer's standard procedures and processes, as necessary to fulfill indicated performance requirements demonstrated by laboratory testing. Comply with indicated profiles and with dimensional and structural requirements.

B. On-Site Fabrication: Subject to compliance with requirements of this Section, metal panels may be fabricated on-site using UL-certified, portable roll-forming equipment if panels are of same profile and warranted by manufacturer to be equal to factory-formed panels. Fabricate according to equipment manufacturer's written instructions and to comply with details shown.

C. Provide panel profile, including major ribs and intermediate stiffening ribs, if any, for full length of panel.

D. Fabricate metal panel joints with factory-installed captive gaskets or separator strips that provide a weathertight seal and prevent metal-to-metal contact, and that minimize noise from movements.

E. Sheet Metal Flashing and Trim: Fabricate flashing and trim to comply with manufacturer's recommendations and recommendations in SMACNA's "Architectural Sheet Metal Manual" that apply to design, dimensions, metal, and other characteristics of item indicated.

1. Form exposed sheet metal accessories that are without excessive oil canning, buckling, and tool marks and that are true to line and levels indicated, with exposed edges folded back to form hems.
2. Seams for Aluminum: Fabricate nonmoving seams with flat-lock seams. Form seams and seal with epoxy seam sealer. Rivet joints for additional strength.
3. Seams for Other Than Aluminum: Fabricate nonmoving seams in accessories with flat-lock seams. Tin edges to be seamed, form seams, and solder.

4. Sealed Joints: Form nonexpansion, but movable, joints in metal to accommodate sealant and to comply with SMACNA standards.
5. Conceal fasteners and expansion provisions where possible. Exposed fasteners are not allowed on faces of accessories exposed to view.
6. Fabricate cleats and attachment devices from same material as accessory being anchored or from compatible, noncorrosive metal recommended in writing by metal panel manufacturer.

    a. Size: As recommended by SMACNA's "Architectural Sheet Metal Manual" or metal soffit panel manufacturer for application but not less than thickness of metal being secured.

2.5 FINISHES

A. Protect mechanical and painted finishes on exposed surfaces from damage by applying a strippable, temporary protective covering before shipping.

B. Appearance of Finished Work: Variations in appearance of abutting or adjacent pieces are acceptable if they are within one-half of the range of approved Samples. Noticeable variations in same piece are not acceptable. Variations in appearance of other components are acceptable if they are within the range of approved Samples and are assembled or installed to minimize contrast.

C. Steel Panels and Accessories:

1. Three-Coat Fluoropolymer: AAMA 621. Fluoropolymer finish containing not less than 70 percent polyvinylidene fluoride (PVDF) resin by weight in both color coat and clear topcoat. Prepare, pretreat, and apply coating to exposed metal surfaces to comply with coating and resin manufacturers' written instructions.

PART 3 - EXECUTION

3.1 EXAMINATION

A. Examine substrates, areas, and conditions, with Installer present, for compliance with requirements for installation tolerances, metal panel supports, and other conditions affecting performance of the Work.

1. Examine framing to verify that girts, angles, channels, studs, and other structural panel support members and anchorage have been installed within alignment tolerances required by metal panel manufacturer.
2. Examine sheathing to verify that sheathing joints are supported by framing or blocking and that installation is within flatness tolerances required by metal panel manufacturer.

    a. Verify that air- or water-resistive barriers been installed over sheathing or backing substrate to prevent air infiltration or water penetration.

B. Examine roughing-in for components and systems penetrating metal panels to verify actual locations of penetrations relative to seam locations of metal panels before installation.

C. Proceed with installation only after unsatisfactory conditions have been corrected.

3.2 PREPARATION

A. Miscellaneous Supports: Install subframing, furring, and other miscellaneous panel support members and anchorages according to ASTM C754 and metal panel manufacturer's written recommendations.

1. Soffit Framing: Wire tie or clip furring channels to supports, as required to comply with requirements for assemblies indicated.

3.3 INSTALLATION OF METAL SOFFIT PANELS

A. Install metal panels according to manufacturer's written instructions in orientation, sizes, and locations indicated. Install panels perpendicular to supports unless otherwise indicated. Anchor metal panels and other components of the Work securely in place, with provisions for thermal and structural movement.

1. Shim or otherwise plumb substrates receiving metal panels.
2. Flash and seal metal panels at perimeter of all openings. Fasten with self-tapping screws. Do not begin installation until air- or water-resistive barriers and flashings that will be concealed by metal panels are installed.
3. Install screw fasteners in predrilled holes.
4. Locate and space fastenings in uniform vertical and horizontal alignment.
5. Install flashing and trim as metal panel work proceeds.
6. Locate panel splices over, but not attached to, structural supports. Stagger panel splices and end laps to avoid a four-panel lap splice condition.
7. Provide weathertight escutcheons for pipe- and conduit-penetrating panels.

B. Fasteners:

1. Steel Panels: Use stainless steel fasteners for surfaces exposed to the exterior; use galvanized-steel fasteners for surfaces exposed to the interior.
2. Aluminum Panels: Use aluminum or stainless steel fasteners for surfaces exposed to the exterior; use aluminum or galvanized-steel fasteners for surfaces exposed to the interior.
3. Copper Panels: Use copper, stainless steel, or hardware-bronze fasteners.
4. Stainless Steel Panels: Use stainless steel fasteners.

C. Metal Protection: Where dissimilar metals contact each other or corrosive substrates, protect against galvanic action as recommended in writing by metal panel manufacturer.

D. Lap-Seam Metal Panels: Fasten metal panels to supports with fasteners at each lapped joint at location and spacing recommended by manufacturer.

1. Apply panels and associated items true to line for neat and weathertight enclosure.
2. Provide metal-backed washers under heads of exposed fasteners bearing on weather side of metal panels.
3. Locate and space exposed fasteners in uniform vertical and horizontal alignment. Use proper tools to obtain controlled uniform compression for positive seal without rupture of washer.
4. Install screw fasteners with power tools having controlled torque adjusted to compress washer tightly without damage to washer, screw threads, or panels. Install screws in predrilled holes.

E. Watertight Installation:

1. Apply a continuous ribbon of sealant or tape to seal lapped joints of metal panels, using sealant or tape as recommend by manufacturer on side laps of nesting-type panels and elsewhere as needed to make panels watertight.
2. Provide sealant or tape between panels and protruding equipment, vents, and accessories.
3. At panel splices, nest panels with minimum 6-inch end lap, sealed with sealant and fastened together by interlocking clamping plates.

F. Accessory Installation: Install accessories with positive anchorage to building and weathertight mounting, and provide for thermal expansion. Coordinate installation with flashings and other components.

1. Install components required for a complete metal panel system including trim, corners, seam covers, flashings, sealants, gaskets, fillers, closure strips, and similar items. Provide types indicated by metal panel manufacturer; or, if not indicated, provide types recommended by metal panel manufacturer.

G. Flashing and Trim: Comply with performance requirements, manufacturer's written installation instructions, and SMACNA's "Architectural Sheet Metal Manual." Provide concealed fasteners where possible, and set units true to line and level as indicated. Install work with laps, joints, and seams that are permanently watertight.

1. Install exposed flashing and trim that is without buckling, and tool marks, and that is true to line and levels indicated, with exposed edges folded back to form hems. Install sheet metal flashing and trim to fit substrates and to achieve waterproof performance.
2. Expansion Provisions: Provide for thermal expansion of exposed flashing and trim. Space movement joints at a maximum of 10 feet with no joints allowed within 24 inches of corner or intersection. Where lapped expansion provisions cannot be used or would not be waterproof, form expansion joints of intermeshing hooked flanges, not less than 1 inch deep, filled with mastic sealant (concealed within joints).

3.4 CLEANING AND PROTECTION

A. Remove temporary protective coverings and strippable films, if any, as metal panels are installed unless otherwise indicated in manufacturer's written installation instructions. On completion of metal panel installation, clean finished surfaces as recommended by metal

panel manufacturer. Maintain in a clean condition during construction.

B. After metal panel installation, clear weep holes and drainage channels of obstructions, dirt, and sealant.

C. Replace metal panels that have been damaged or have deteriorated beyond successful repair by finish touchup or similar minor repair procedures.

END OF SECTION 07 42 93

SECTION 07 62 00 - SHEET METAL FLASHING AND TRIM

PART 1 - GENERAL

1.1 SUMMARY

A. Section Includes: Custom flashing and trim fabrications, made from the following:

1. Sheet metal materials including flashings, gutters, and downspouts to match existing adjacent in size, shape, and color.
2. Miscellaneous materials.

B. Related Requirements:

1. Section 06 10 00 "Rough Carpentry" for wood nailers, curbs, and blocking.
2. Section 07 41 13.16 "Standing-Seam Metal Roof Panels" for materials and installation of sheet metal flashing and trim integral with roofing.
3. Section 07 42 13.13 "Formed Metal Wall Panels" for sheet metal flashing and trim integral with metal wall panels.
4. Section 07 42 93 “Soffit Panels”
5. Section 07 92 00 “Joint Sealants” for sealing non-lap joints between sheet metal fabrications and adjacent construction.
6. Division 33 for storm drainage connections from downspouts.

C. Reference Standards

1. AAMA 2605 - Voluntary Specification, Performance Requirements and Test Procedures for Superior Performing Organic Coatings on Aluminum Extrusions and Panels (with Coil Coating Appendix); 2017a.
2. ASTM A653/A653M - Standard Specification for Steel Sheet, Zinc-Coated (Galvanized) or Zinc-Iron Alloy-Coated (Galvannealed) by the Hot-Dip Process; 2018.
3. ASTM B749 - Standard Specification for Lead and Lead Alloy Strip, Sheet, and Plate Products; 2014.
4. ASTM C920 - Standard Specification for Elastomeric Joint Sealants; 2018.
5. ASTM D4586/D4586M - Standard Specification for Asphalt Roof Cement, Asbestos-Free; current version.
6. SMACNA (ASMM) - Architectural Sheet Metal Manual; 2012.

1.2 PREINSTALLATION MEETINGS

A. Preinstallation Conference: Conduct conference at Project site.

1. Review construction schedule. Verify availability of materials, Installer's personnel, equipment, and facilities needed to make progress and avoid delays.
2. Review special roof details, roof drainage, roof-penetration flashing, equipment

curbs, and condition of other construction that affect sheet metal flashing and trim.
3. Review requirements for insurance and certificates if applicable.
4. Review sheet metal flashing observation and repair procedures after flashing installation.

1.3 ACTION SUBMITTALS

A. Product Data: For each type of product.

B. Shop Drawings: For sheet metal flashing and trim.

1. Plans, elevations, sections, and attachment details.
2. Fabrication and installation layouts, expansion-joint locations, and keyed details. Distinguish between shop- and field-assembled Work.
3. Identification of material, thickness, weight, and finish for each item and location in Project.
4. Details for forming, including profiles, shapes, seams, and dimensions.
5. Details for joining, supporting, and securing, including layout and spacing of fasteners, cleats, clips, and other attachments. Include pattern of seams.
6. Details of termination points and assemblies.
7. Details of roof-penetration flashing.
8. Details of edge conditions, including eaves, ridges, valleys, rakes, crickets, flashings, and counterflashings.
9. Details of special conditions.
10. Details of connections to adjoining work.
11. For applied gutters, provide profiles and details showing end dams, corner conditions and downspout connections.
12. Formed flashing and trim at scale of not less than 1-1/2 inches per 12 inches.

C. Samples: For each exposed product and for each color and texture specified, 6 inches long by actual width.

D. Samples for Initial Selection: Manufacturer's standard color sheets, showing full range of available colors for each type of exposed finish.

E. Samples for Verification: Actual sample of finished products for each type of exposed finish for sheet metal and other metal accessories.

1. Sheet Metal Flashing and Trim: Manufacturers' standard size. Include finished seam with required profile. Include fasteners, cleats, clips, closures, and other attachments.
2. Anodized Aluminum Samples: Samples to show full range to be expected for each color required.

1.4 INFORMATIONAL SUBMITTALS

A. Certificates: For each type of roof edge flashing that is ANSI/SPRI/FM 4435/ES-1 tested.

B. Product Test Reports: For each product, for tests performed by a qualified testing agency.

C. Research Reports: For roof edge flashing, from an agency acceptable to authority having jurisdiction showing compliance with ANSI/SPRI/FM 4435/ES-1.

D. Qualification Statements: For fabricator.

E. Sample warranties.

1.5 CLOSEOUT SUBMITTALS

A. Maintenance Data: For sheet metal flashing and trim, and its accessories.

1.6 QUALITY ASSURANCE

A. Fabricator Qualifications: Entity with similar projects/commercial installations for 15+ years that employs skilled workers who custom fabricate sheet metal flashing and trim similar to that required for this Project and whose products have a record of successful in-service performance.

B. Installer Qualifications: Entity that employs a supervisor who is an NRCA ProCertified Roofing Foreman and not less than 20 percent of installers who are NRCA ProCertified Architectural Metal Flashings and Accessories Installers.

C. For roof edge flashings that are ANSI/SPRI/FM 4435/ES-1 tested, shop is to be listed as able to fabricate required details as tested and approved.

1.7 MOCKUPS

A. Build mockups to verify selections made under Sample submittals, to demonstrate aesthetic effects, and to set quality standards for fabrication and installation.

1. Build mockup of typical roof eave, including fascia, approximately 8 ft. long, including supporting construction cleats, seams, attachments, underlayment, and accessories.
2. Approval of mockups does not constitute approval of deviations from the Contract Documents contained in mockups unless Contracting Officer specifically approves such deviations by Change Order.
3. Subject to compliance with requirements, approved mockups may become part of the completed Work if undisturbed at time of Substantial Completion.

1.8 DELIVERY, STORAGE, AND HANDLING

A. Do not store sheet metal flashing and trim materials in contact with other materials that might cause staining, denting, or other surface damage.

1. Store sheet metal flashing and trim materials away from uncured concrete.

2. Protect stored sheet metal flashing and trim from contact with water.

B. Protect strippable protective covering on sheet metal flashing and trim from exposure to sunlight and high humidity, except to extent necessary for period of sheet metal flashing and trim installation.

1.9 COORDINATION

A. Coordinate sheet metal flashing and trim layout and seams with sizes and locations of penetrations to be flashed, and joints and seams in adjacent materials.

B. Coordinate sheet metal flashing and trim installation with adjoining roofing and wall materials, joints, and seams to provide leakproof, secure, and noncorrosive installation.

1.10 WARRANTY

A. Special Warranty on Finishes: Manufacturer agrees to repair finish or replace sheet metal flashing and trim that shows evidence of deterioration of factory-applied finishes within specified warranty period.

1. Exposed Panel Finish: Deterioration includes, but is not limited to, the following:

a. Color fading more than 5 Delta E units when tested in accordance with ASTM D2244.
b. Chalking in excess of a No. 8 rating when tested in accordance with ASTM D4214.
c. Cracking, checking, peeling, or failure of paint to adhere to bare metal.

2. Finish Warranty Period: 10 years from date of Substantial Completion.

PART 2 - PRODUCTS

2.1 PERFORMANCE REQUIREMENTS

A. Sheet metal flashing and trim assemblies, including cleats, anchors, and fasteners, are to withstand wind loads, structural movement, thermally induced movement, and exposure to weather without failure due to defective manufacture, fabrication, installation, or other defects in construction. Completed sheet metal flashing and trim are not to rattle, leak, or loosen, and are to remain watertight.

B. Sheet Metal Standard for Flashing and Trim: Comply with SMACNA's "Architectural Sheet Metal Manual" requirements for dimensions and profiles shown unless more stringent requirements are indicated.

C. SPRI Wind Design Standard: Manufacture and install roof edge flashings tested in accordance with ANSI/SPRI/FM 4435/ES-1 and capable of resisting the following design pressure:

1. Design Pressure: As indicated on Drawings.

D. Thermal Movements: Allow for thermal movements from ambient and surface temperature changes.

1. Temperature Change: 120 deg F, ambient; 180 deg F, material surfaces.

2.2 SHEET METAL MATERIALS

A. Protect mechanical and other finishes on exposed surfaces from damage by applying strippable, temporary protective film before shipping.

B. Galvanized Steel: ASTM A653/A653M, with G90/Z275 zinc coating; minimum 24 gage, (0.0239 inch) (0.61 mm) thick base metal.

C. Pre-Finished Galvanized Steel: ASTM A653/A653M, with G90/Z275 zinc coating; minimum 24 gage, (0.0239) inch (0.61 mm) thick base metal, shop pre-coated with PVDF coating.

1. PVDF (Polyvinylidene Fluoride) Coating: Superior Performance Organic Finish, AAMA 2605; multiple coat, thermally cured fluoropolymer finish system.
2. Color: As selected by Contracting Officer from manufacturer's standard colors to match adjacent metal finish – roofing and/or wall panels.

D. Stainless Steel Sheet: ASTM A240/A240M, Type 304, dead soft, fully annealed; with smooth, flat surface.

1. Finish: ASTM A480/A480M, No. 4 (polished directional satin).

a. Surface Preparation: Remove tool and die marks and stretch lines, or blend into finish.
b. Polished Finishes: Grind and polish surfaces to produce uniform finish, free of cross scratches.

E. Stainless steel core flexible flashing with drainage fabric.

2.3 GUTTER AND DOWNSPOUT FABRICATION

A. Applied Metal Gutters: Basis of design: Prefinished galvanized steel 26 gage gutter, 6” half-round – match existing adjacent.

1. Color to match existing adjacent.

B. Downspouts: Basis of design: 6” round – match existing adjacent.

1. Seal metal joints.
2. Color to match existing adjacent.

2.4 MISCELLANEOUS MATERIALS

A. Provide materials and types of fasteners protective coatings, sealants, and other miscellaneous items as required for complete sheet metal flashing and trim installation and as recommended by manufacturer of primary sheet metal unless otherwise indicated.

B. Fasteners: Wood screws, annular threaded nails, self-tapping screws, self-locking rivets and bolts, and other suitable fasteners designed to withstand design loads and recommended by manufacturer of primary sheet metal.

1. General: Blind fasteners or self-drilling screws, gasketed with soft neoprene, with hex-washer head.

   a. Exposed Fasteners: Heads matching color of sheet metal using plastic caps or factory-applied coating. Provide metal-backed EPDM or PVC sealing washers under heads of exposed fasteners bearing on weather side of metal.
   b. Blind Fasteners: High-strength aluminum or stainless steel rivets suitable for metal being fastened.
   c. Spikes and Ferrules: Same material as gutter; with spike with ferrule matching internal gutter width.

2. Fasteners for Zinc-Coated (Galvanized) or Aluminum-Zinc Alloy-Coated Steel Sheet: Series 300 stainless steel or hot-dip galvanized steel in accordance with ASTM A153/A153M or ASTM F2329/F2329M.
3. Fasteners for Aluminum Sheet: Series 300 stainless steel.
4. Fasteners for Stainless Steel Sheet: Series 300 stainless steel.
5. Fasteners for Zinc Sheet: Series 300 stainless steel or hot-dip galvanized steel in accordance with ASTM A153/A153M or ASTM F2329/F2329M.

C. Primer: Zinc chromate type.

D. Sealant Tape: Pressure-sensitive, 100 percent solids, polyisobutylene compound sealant tape with release-paper backing. Provide permanently elastic, nonsag, nontoxic, nonstaining tape 1/2 inch wide and 1/8 inch thick.

E. Elastomeric Sealant: ASTM C920, elastomeric polymer sealant; of type, grade, class, and use classifications required to seal joints in sheet metal flashing and trim and remain watertight; color to match adjacent material.

F. Epoxy Seam Sealer: Two-part, noncorrosive, aluminum seam-cementing compound, recommended by aluminum manufacturer for exterior nonmoving joints, including riveted joints.

2.5 FABRICATION, GENERAL

A. Custom fabricate sheet metal flashing and trim to comply with details indicated and recommendations in cited sheet metal standard that apply to design, dimensions, geometry, metal thickness, and other characteristics of item required.

1. Fabricate sheet metal flashing and trim in shop to greatest extent possible.

2. Fabricate sheet metal flashing and trim in thickness or weight needed to comply with performance requirements, but not less than that specified for each application and metal.
3. Verify shapes and dimensions of surfaces to be covered and obtain field measurements for accurate fit before shop fabrication.
4. Form sheet metal flashing and trim to fit substrates without excessive oil-canning, buckling, and tool marks; true to line, levels, and slopes; and with exposed edges folded back to form hems.
5. Conceal fasteners and expansion provisions where possible. Do not use exposed fasteners on faces exposed to view.

B. Fabrication Tolerances:

1. Fabricate sheet metal flashing and trim that is capable of installation to a tolerance of 1/4 inch in 20 ft. on slope and within 1/8-inch offset of adjoining faces and of alignment of matching profiles.
2. Fabricate sheet metal flashing and trim that is capable of installation to tolerances specified.

C. Expansion Provisions: Form metal for thermal expansion of exposed flashing and trim.

1. Form expansion joints of intermeshing hooked flanges, not less than 1 inch deep, filled with butyl sealant concealed within joints.

D. Sealant Joints: Where movable, nonexpansion-type joints are required, form metal in accordance with cited sheet metal standard to provide for proper installation of elastomeric sealant.

E. Fabricate cleats and attachment devices from same material as accessory being anchored or from compatible, noncorrosive metal.

F. Fabricate cleats and attachment devices of sizes as recommended by cited sheet metal standard for application, but not less than thickness of metal being secured.

G. Seams:

1. Fabricate nonmoving seams with flat-lock seams. Tin edges to be seamed, form seams, and solder.
2. Fabricate nonmoving seams with flat-lock seams. Form seams and seal with elastomeric sealant unless otherwise recommended by sealant manufacturer for intended use.
3. Seams for Aluminum: Fabricate nonmoving seams with flat-lock seams. Form seams and seal with epoxy seam sealer.

H. Do not use graphite pencils to mark metal surfaces.

2.6 ROOF-DRAINAGE SHEET METAL FABRICATIONS

A. Hanging Gutters:

1. Fabricate to cross section required, complete with end pieces, outlet tubes, and other accessories as required.
2. Fabricate in minimum 96-inch- long sections.
3. Furnish flat-stock gutter brackets and gutter spacers and straps fabricated from same metal as gutters, of size recommended by cited sheet metal standard, but with thickness not less than twice the gutter thickness.
4. Fabricate expansion joints and gutter accessories from same metal as gutters. Shop fabricate interior and exterior corners.
5. Gutter Profile: Style U (half-round) in accordance with cited sheet metal standard.
6. Expansion Joints: Lap type.
7. Accessories: Wire-ball downspout strainer.
8. Gutters with Girth 16 to 20 Inches (410 to 510 mm): Fabricate from the following materials:

    a. Galvanized Steel: 0.028 inch thick.

B. Downspouts: Fabricate open-face downspouts to dimensions indicated on Drawings, complete with mitered elbows. Furnish with metal hangers from same material as downspouts and anchors. Shop fabricate elbows.

1. Hanger Style: Custom hangers as indicated on drawings to support downspouts at deep roof overhangs in accordance with SMACNA's "Architectural Sheet Metal Manual."
2. Fabricate from the following materials:

    a. Galvanized Steel: 0.022 inch thick.

PART 3 - EXECUTION

3.1 EXAMINATION

A. Examine substrates, areas, and conditions, with Installer present, for compliance with requirements for installation tolerances, substrates, and other conditions affecting performance of the Work.

1. Verify compliance with requirements for installation tolerances of substrates.
2. Verify that substrate is sound, dry, smooth, clean, sloped for drainage, and securely anchored.
3. Verify that air- or water-resistant barriers have been installed over substrate to prevent air infiltration or water penetration.

B. Proceed with installation only after unsatisfactory conditions have been corrected.

3.2 INSTALLATION OF SHEET METAL FLASHING AND TRIM, GENERAL

A. Install sheet metal flashing and trim to comply with details indicated and recommendations of cited sheet metal standard that apply to installation characteristics required unless otherwise indicated on Drawings.

1. Install fasteners, protective coatings, separators, sealants, and other miscellaneous items as required to complete sheet metal flashing and trim system.
2. Install sheet metal flashing and trim true to line, levels, and slopes. Provide uniform, neat seams with minimum exposure of sealant.
3. Anchor sheet metal flashing and trim and other components of the Work securely in place, with provisions for thermal and structural movement.
4. Install sheet metal flashing and trim to fit substrates and to result in watertight performance.
5. Install continuous cleats with fasteners spaced not more than 12 inches o.c.
6. Space individual cleats not more than 12 inches apart. Attach each cleat with at least two fasteners. Bend tabs over fasteners.
7. Install exposed sheet metal flashing and trim with limited oil-canning, and free of buckling and tool marks.
8. Do not field cut sheet metal flashing and trim by torch.
9. Do not use graphite pencils to mark metal surfaces.

B. Metal Protection: Where dissimilar metals contact each other, or where metal contacts pressure-treated wood or other corrosive substrates, protect against galvanic action or corrosion by painting contact surfaces with bituminous coating or by other permanent separation as recommended by sheet metal manufacturer or cited sheet metal standard.

1. Coat concealed side of sheet metal flashing and trim with bituminous coating where flashing and trim contact wood, ferrous metal, or cementitious construction.
2. Underlayment: Where installing sheet metal flashing and trim directly on cementitious or wood substrates, install underlayment and cover with slip sheet.

C. Expansion Provisions: Provide for thermal expansion of exposed flashing and trim.

1. Space movement joints at maximum of 10 feet with no joints within 24 inches of corner or intersection.
2. Form expansion joints of intermeshing hooked flanges, not less than 1 inch deep, filled with sealant concealed within joints.

D. Fasteners: Use fastener sizes that penetrate substrate not less than recommended by fastener manufacturer to achieve maximum pull-out resistance.

E. Conceal fasteners and expansion provisions where possible in exposed work and locate to minimize possibility of leakage. Cover and seal fasteners and anchors as required for a tight installation.

F. Seal joints as required for watertight construction.

1. Use sealant-filled joints unless otherwise indicated.

a. Embed hooked flanges of joint members not less than 1 inch into sealant.
b. Form joints to completely conceal sealant.
c. When ambient temperature at time of installation is between 40 and 70 deg F, set joint members for 50 percent movement each way.
d. Adjust setting proportionately for installation at higher ambient temperatures.

1) Do not install sealant-type joints at temperatures below 40 deg F.

2. Prepare joints and apply sealants to comply with requirements in Section 079200 "Joint Sealants."

3.3 INSTALLATION OF ROOF-DRAINAGE SHEET METAL FABRICATIONS

A. Install sheet metal roof-drainage items to produce complete roof-drainage system in accordance with cited sheet metal standard unless otherwise indicated. Coordinate installation of roof perimeter flashing with installation of roof-drainage system.

B. Hanging Gutters:

1. Join sections with joints sealed with sealant.
2. Provide for thermal expansion.
3. Attach gutters at eave or fascia to firmly anchor them in position.
4. Provide end closures and seal watertight with sealant.
5. Slope to downspouts.
6. Fasten gutter spacers to front and back of gutter.
7. Anchor and loosely lock back edge of gutter to continuous eave or apron flashing.
8. Anchor back of gutter that extends onto roof deck with cleats spaced not more than 24 inches apart.
9. Install gutter with expansion joints not exceeding 25 feet apart.

C. Downspouts:

1. Join sections with 1-1/2-inch telescoping joints.
2. Provide hangers with fasteners designed to hold downspouts securely to walls.
3. Locate hangers at top and bottom and at approximately 60 inches o.c.
4. Provide elbows at base of downspout to direct water away from building.
5. Connect downspouts to underground drainage system where indicated on drawings.

3.4 INSTALLATION OF SLOPED ROOF SHEET METAL FABRICATIONS

A. Install sheet metal flashing and trim to comply with performance requirements and cited sheet metal standard.

1. Provide concealed fasteners where possible, and set units true to line, levels, and slopes.
2. Install work with laps, joints, and seams that are permanently watertight and weather resistant.

B. Roof Edge Flashing:

1. Install roof edge flashings in accordance with ANSI/SPRI/FM 4435/ES-1.
2. Anchor to resist uplift and outward forces in accordance with recommendations in cited sheet metal standard unless otherwise indicated. Interlock bottom edge of roof edge flashing with continuous cleat anchored to substrate at staggered 3-inch

centers.

3. Anchor to resist uplift and outward forces in accordance with recommendations in FM Global Property Loss Prevention Data Sheet 1-49 for FM Approvals' listing for required windstorm classification.

C. Pipe or Post Counterflashing: Install counterflashing umbrella with close-fitting collar with top edge flared for elastomeric sealant, extending minimum of 4 inches over base flashing. Install stainless steel draw band and tighten.

D. Counterflashing: Coordinate installation of counterflashing with installation of base flashing.

1. Insert counterflashing in reglets or receivers and fit tightly to base flashing.
2. Extend counterflashing 4 inches over base flashing.
3. Lap counterflashing joints minimum of 4 inches.
4. Secure in waterproof manner by means of anchor and washer spaced at 12 inches o.c. along perimeter and 6 inches o.c. at corners areas unless otherwise indicated.

E. Roof-Penetration Flashing: Coordinate installation of roof-penetration flashing with installation of roofing and other items penetrating roof. Seal with elastomeric sealant and clamp flashing to pipes that penetrate roof.

3.5 INSTALLATION OF MISCELLANEOUS SHEET METAL FABRICATIONS

A. Equipment Support Flashing:

1. Coordinate installation of equipment support flashing with installation of roofing and equipment.
2. Weld or seal flashing with elastomeric sealant to equipment support member.

B. Overhead-Piping Safety Pans:

1. Suspend pans from structure above, independent of other overhead items such as equipment, piping, and conduit, unless otherwise indicated on Drawings.
2. Pipe and install drain line to plumbing waste or drainage system.

3.6 INSTALLATION TOLERANCES

A. Shim and align sheet metal flashing and trim within installed tolerance of 1/4 inch in 20 ft. on slope and within 1/8-inch offset of adjoining faces and of alignment of matching profiles.

3.7 CLEANING

A. Clean and neutralize flux materials. Clean off excess solder.

B. Clean off excess sealants.

3.8 PROTECTION

A. Remove temporary protective coverings and strippable films as sheet metal flashing and trim are installed unless otherwise indicated in manufacturer's written installation instructions.

B. On completion of sheet metal flashing and trim installation, remove unused materials and clean finished surfaces as recommended in writing by sheet metal flashing and trim manufacturer.

C. Maintain sheet metal flashing and trim in clean condition during construction.

D. Replace sheet metal flashing and trim that have been damaged or that have deteriorated beyond successful repair by finish touchup or similar minor repair procedures, as determined by Contracting Officer.

END OF SECTION 07 62 00

SECTION 07 92 00 - JOINT SEALANTS

PART 1 - GENERAL

1.1 SUMMARY

A. Section Includes:

1. Silicone joint sealants.
2. Nonstaining silicone joint sealants.
3. Urethane joint sealants.
4. Silane-modified polymer joint sealants.
5. Mildew-resistant joint sealants.
6. Latex joint sealants.

1.2 PREINSTALLATION MEETINGS

A. Preinstallation Conference: Conduct conference at Project site.

1.3 ACTION SUBMITTALS

A. Product Data:

1. Silicone joint sealants.
2. Nonstaining silicone joint sealants.
3. Urethane joint sealants.
4. Silane-modified polymer joint sealants.
5. Mildew-resistant joint sealants.
6. Latex joint sealants.

B. Samples for Initial Selection: Manufacturer's standard color charts consisting of strips of cured sealants showing the full range of colors available for each product exposed to view.

C. Samples for Verification: For each type and color of joint sealant required, provide Samples with joint sealants in 1/2-inch- wide joints formed between two 6-inch- long strips of material matching the appearance of exposed surfaces adjacent to joint sealants.

D. Joint-Sealant Schedule: Include the following information:

1. Joint-sealant application, joint location, and designation.
2. Joint-sealant manufacturer and product name.
3. Joint-sealant formulation.
4. Joint-sealant color.

1.4 INFORMATIONAL SUBMITTALS

A. Preconstruction Laboratory Test Schedule: Include the following information for each joint sealant and substrate material to be tested:

1. Joint-sealant location and designation.
2. Manufacturer and product name.
3. Type of substrate material.
4. Proposed test.
5. Number of samples required.

B. Preconstruction Laboratory Test Reports: For each joint sealant and substrate material to be tested from sealant manufacturer, indicating the following:

1. Materials forming joint substrates and joint-sealant backings have been tested for compatibility and adhesion with joint sealants.
2. Interpretation of test results and written recommendations for primers and substrate preparation are needed for adhesion.

C. Preconstruction Field-Adhesion-Test Reports: Indicate which sealants and joint preparation methods resulted in optimum adhesion to joint substrates based on testing specified in "Preconstruction Testing" Article.

D. Field Quality-Control Reports: For field-adhesion-test reports, for each sealant application tested.

E. Sample warranties.

1.5 CLOSEOUT SUBMITTALS

A. Manufacturers' special warranties.

B. Installer's special warranties.

1.6 QUALITY ASSURANCE

A. Installer Qualifications: Authorized representative who is trained and approved by manufacturer.

B. Testing Agency Qualifications: Qualified in accordance with ASTM C1021 to conduct the testing indicated.

1.7 MOCKUPS

A. Install sealant in mockups of assemblies specified in other Sections that are indicated to receive joint sealants specified in this Section. Use materials and installation methods specified in this Section.

1.8 PRECONSTRUCTION TESTING

A. Preconstruction Laboratory Testing: Submit to joint-sealant manufacturers, for testing indicated below, samples of materials that will contact or affect joint sealants.

1. Adhesion Testing: Use ASTM C794 to determine whether priming and other specific joint preparation techniques are required to obtain rapid, optimum adhesion of joint sealants to joint substrates.
2. Compatibility Testing: Use ASTM C1087 to determine sealant compatibility when in contact with glazing and gasket materials.
3. Stain Testing: Use ASTM C1248 to determine stain potential of sealant when in contact with concrete substrates.
4. Submit manufacturer's recommended number of pieces of each type of material, including joint substrates, joint-sealant backings, and miscellaneous materials.
5. Schedule sufficient time for testing and analyzing results to prevent delaying the Work.
6. For materials failing tests, obtain joint-sealant manufacturer's written instructions for corrective measures, including use of specially formulated primers.
7. Testing will not be required if joint-sealant manufacturers submit data that are based on previous testing, not older than 24 months, of sealant products for adhesion to, staining of, and compatibility with joint substrates and other materials matching those submitted.

B. Preconstruction Field-Adhesion Testing: Before installing sealants, field test their adhesion to Project joint substrates as follows:

1. Locate test joints where indicated on Project or, if not indicated, as directed by Contracting Officer.
2. Conduct field tests for each kind of sealant and joint substrate.
3. Notify Contracting Officer seven days in advance of dates and times when test joints will be erected.
4. Arrange for tests to take place with joint-sealant manufacturer's technical representative present.
5. Test Method: Test joint sealants in accordance with Method A, Tail Procedure, in ASTM C1521.

    a. For joints with dissimilar substrates, verify adhesion to each substrate separately; extend cut along one side, verifying adhesion to opposite side. Repeat procedure for opposite side.

6. Report whether sealant failed to adhere to joint substrates or tore cohesively. Include data on pull distance used to test each kind of product and joint substrate. For sealants that fail adhesively, retest until satisfactory adhesion is obtained.
7. Evaluation of Preconstruction Field-Adhesion-Test Results: Sealants not evidencing adhesive failure from testing, in absence of other indications of noncompliance with requirements, will be considered satisfactory. Do not use sealants that fail to adhere to joint substrates during testing.

1.9 FIELD CONDITIONS

A. Do not proceed with installation of joint sealants under the following conditions:

1. When ambient and substrate temperature conditions are outside limits permitted by joint-sealant manufacturer or are below 40 deg F.
2. When joint substrates are wet.
3. Where joint widths are less than those allowed by joint-sealant manufacturer for applications indicated.
4. Where contaminants capable of interfering with adhesion have not yet been removed from joint substrates.

1.10 WARRANTY

A. Special Installer's Warranty: Installer agrees to repair or replace joint sealants that do not comply with performance and other requirements specified in this Section within specified warranty period.

1. Warranty Period: One years from date of Substantial Completion.

B. Special Manufacturer's Warranty: Manufacturer agrees to furnish joint sealants to repair or replace those joint sealants that do not comply with performance and other requirements specified in this Section within specified warranty period.

1. Warranty Period: Five years from date of Substantial Completion.

C. Special warranties specified in this article exclude deterioration or failure of joint sealants from the following:

1. Movement of the structure caused by stresses on the sealant exceeding sealant manufacturer's written specifications for sealant elongation and compression.
2. Disintegration of joint substrates from causes exceeding design specifications.
3. Mechanical damage caused by individuals, tools, or other outside agents.
4. Changes in sealant appearance caused by accumulation of dirt or other atmospheric contaminants.

PART 2 - PRODUCTS

2.1 SOURCE LIMITATIONS

A. Obtain joint sealants from single manufacturer for each sealant type.

2.2 JOINT SEALANTS, GENERAL

A. Compatibility: Provide joint sealants, backings, and other related materials that are compatible with one another and with joint substrates under conditions of service and application, as demonstrated by joint-sealant manufacturer, based on testing and field experience.

B. Colors of Exposed Joint Sealants: As selected by Contracting Officer from manufacturer's full range to generally match the adjacent materials to be sealed.

C. Comply with South Cost Air Quality Management District (SCAQMD) Rule #1168 VOC limits.

2.3 NONSTAINING SILICONE JOINT SEALANTS

A. Nonstaining Joint Sealants: No staining of substrates when tested in accordance with ASTM C1248.

2.4 MILDEW-RESISTANT JOINT SEALANTS

A. Mildew-Resistant Joint Sealants: Formulated for prolonged exposure to humidity with fungicide to prevent mold and mildew growth.

2.5 JOINT-SEALANT BACKING

A. Cylindrical Sealant Backings: ASTM C1330, or any of the preceding types, as approved in writing by joint-sealant manufacturer for joint application indicated, and of size and density to control sealant depth and otherwise contribute to producing optimum sealant performance.

B. Bond-Breaker Tape: Polyethylene tape or other plastic tape recommended by sealant manufacturer for preventing sealant from adhering to rigid, inflexible joint-filler materials or joint surfaces at back of joint. Provide self-adhesive tape where applicable.

2.6 MISCELLANEOUS MATERIALS

A. Primer: Material recommended by joint-sealant manufacturer where required for adhesion of sealant to joint substrates indicated, as determined from preconstruction joint-sealant-substrate tests and field tests.

B. Cleaners for Nonporous Surfaces: Chemical cleaners acceptable to manufacturers of sealants and sealant backing materials, free of oily residues or other substances capable of staining or harming joint substrates and adjacent nonporous surfaces in any way, and formulated to promote optimum adhesion of sealants to joint substrates.

C. Masking Tape: Nonstaining, nonabsorbent material compatible with joint sealants and surfaces adjacent to joints.

PART 3 - EXECUTION

3.1 EXAMINATION

A. Examine joints indicated to receive joint sealants, with Installer present, for compliance

with requirements for joint configuration, installation tolerances, and other conditions affecting performance of the Work.

B. Proceed with installation only after unsatisfactory conditions have been corrected.

3.2 PREPARATION

A. Surface Cleaning of Joints: Clean out joints immediately before installing joint sealants to comply with joint-sealant manufacturer's written instructions and the following requirements:

1. Remove all foreign material from joint substrates that could interfere with adhesion of joint sealant, including dust, paints (except for permanent, protective coatings tested and approved for sealant adhesion and compatibility by sealant manufacturer), old joint sealants, oil, grease, waterproofing, water repellents, water, surface dirt, and frost.
2. Clean porous joint substrate surfaces by brushing, grinding, mechanical abrading, or a combination of these methods to produce a clean, sound substrate capable of developing optimum bond with joint sealants. Remove loose particles remaining after cleaning operations above by vacuuming or blowing out joints with oil-free compressed air. Porous joint substrates include the following:

    a. Concrete.
    b. Exterior insulation and finish systems.

3. Remove laitance and form-release agents from concrete.
4. Clean nonporous joint substrate surfaces with chemical cleaners or other means that do not stain, harm substrates, or leave residues capable of interfering with adhesion of joint sealants. Nonporous joint substrates include the following:

    a. Metal.
    b. Glass.

B. Joint Priming: Prime joint substrates where recommended by joint-sealant manufacturer or as indicated by preconstruction joint-sealant-substrate tests or prior experience. Apply primer to comply with joint-sealant manufacturer's written instructions. Confine primers to areas of joint-sealant bond; do not allow spillage or migration onto adjoining surfaces.

C. Masking Tape: Use masking tape where required to prevent contact of sealant or primer with adjoining surfaces that otherwise would be permanently stained or damaged by such contact or by cleaning methods required to remove sealant smears. Remove tape immediately after tooling without disturbing joint seal.

3.3 INSTALLATION OF JOINT SEALANTS

A. General: Comply with joint-sealant manufacturer's written installation instructions for products and applications indicated, unless more stringent requirements apply.

B. Sealant Installation Standard: Comply with recommendations in ASTM C1193 for use of

joint sealants as applicable to materials, applications, and conditions indicated.

C. Install sealant backings of type indicated to support sealants during application and at position required to produce cross-sectional shapes and depths of installed sealants relative to joint widths that allow optimum sealant movement capability.

1. Do not leave gaps between ends of sealant backings.
2. Do not stretch, twist, puncture, or tear sealant backings.
3. Remove absorbent sealant backings that have become wet before sealant application, and replace them with dry materials.

D. Install bond-breaker tape behind sealants where sealant backings are not used between sealants and backs of joints.

E. Install sealants using proven techniques that comply with the following and at the same time backings are installed:

1. Place sealants so they directly contact and fully wet joint substrates.
2. Completely fill recesses in each joint configuration.
3. Produce uniform, cross-sectional shapes and depths relative to joint widths that allow optimum sealant movement capability.

F. Tooling of Nonsag Sealants: Immediately after sealant application and before skinning or curing begins, tool sealants in accordance with requirements specified in subparagraphs below to form smooth, uniform beads of configuration indicated; to eliminate air pockets; and to ensure contact and adhesion of sealant with sides of joint.

1. Remove excess sealant from surfaces adjacent to joints.
2. Use tooling agents that are approved in writing by sealant manufacturer and that do not discolor sealants or adjacent surfaces.
3. Provide recessed joint configuration of recess depth and at locations indicated on Drawings in accordance with Figure 8C in ASTM C1193.

a. Use masking tape to protect surfaces adjacent to recessed tooled joints.

3.4 FIELD QUALITY CONTROL

A. Testing Agency: Engage a qualified testing agency to perform tests and inspections.

B. Tests and Inspections:

1. Field-Adhesion Testing: Field test joint-sealant adhesion to joint substrates as follows:

a. Extent of Testing: Test completed and cured sealant joints as follows:

1) Perform 3 tests for the first 100 ft. of joint length for each kind of sealant and joint substrate.
2) Perform one test for each 100 ft. of joint length thereafter or one test per each floor per elevation.

b. Test Method: Test joint sealants in accordance with Method A, Tail Procedure, in ASTM C1521.

1) For joints with dissimilar substrates, verify adhesion to each substrate separately; extend cut along one side, verifying adhesion to opposite side. Repeat procedure for opposite side.

c. Inspect tested joints and report on the following:

1) Whether sealants filled joint cavities and are free of voids.
2) Whether sealant dimensions and configurations comply with specified requirements.
3) Whether sealants in joints connected to pulled-out portion failed to adhere to joint substrates or tore cohesively. Include data on pull distance used to test each kind of product and joint substrate. Compare these results to determine if adhesion complies with sealant manufacturer's field-adhesion hand-pull test criteria.

d. Record test results in a field-adhesion-test log. Include dates when sealants were installed, names of persons who installed sealants, test dates, test locations, whether joints were primed, adhesion results and percent elongations, sealant material, sealant configuration, and sealant dimensions.

e. Repair sealants pulled from test area by applying new sealants following same procedures used originally to seal joints. Ensure that original sealant surfaces are clean and that new sealant contacts original sealant.

2. Evaluation of Field-Adhesion-Test Results: Sealants not evidencing adhesive failure from testing or noncompliance with other indicated requirements will be considered satisfactory. Remove sealants that fail to adhere to joint substrates during testing or to comply with other requirements. Retest failed applications until test results prove sealants comply with indicated requirements.

C. Prepare test and inspection reports.

3.5 CLEANING

A. Clean off excess sealant or sealant smears adjacent to joints as the Work progresses by methods and with cleaning materials approved in writing by manufacturers of joint sealants and of products in which joints occur.

3.6 PROTECTION

A. Protect joint sealants during and after curing period from contact with contaminating substances and from damage resulting from construction operations or other causes so sealants are without deterioration or damage at time of Substantial Completion. If, despite such protection, damage or deterioration occurs, cut out, remove, and repair damaged or deteriorated joint sealants immediately so installations with repaired areas are indistinguishable from original work.

END OF SECTION 07 92 00

SECTION 08 11 13 - HOLLOW METAL DOORS AND FRAMES

PART 1 - GENERAL

1.1 SUMMARY

A. Section Includes:

1. Exterior standard insulated steel doors and frames.

B. Related Requirements:

1. Section 08 71 11 "Door Hardware" for door hardware.
2. Section 09 91 13 “Exterior Painting” for door and frame finish.

1.2 DEFINITIONS

A. Minimum Thickness: Minimum thickness of base metal without coatings in accordance with NAAMM-HMMA 803 or ANSI/SDI A250.8.

1.3 COORDINATION

A. Coordinate anchorage installation for hollow-metal frames. Furnish setting drawings, templates, and directions for installing anchorages, including sleeves, concrete inserts, anchor bolts, and items with integral anchors. Deliver such items to Project site in time for installation.

B. Coordinate requirements for installation of door hardware, electrified door hardware, and access control and security systems.

1.4 PREINSTALLATION MEETINGS

A. Preinstallation Conference: Conduct conference at Project site.

1.5 ACTION SUBMITTALS

A. Product Data:

1. Exterior standard steel doors and frames.

B. Product Data Submittals: For each product.

C. Shop Drawings: Include the following:

1. Elevations of each door type.

2. Details of doors, including vertical- and horizontal-edge details and metal thicknesses.
3. Frame details for each frame type, including dimensioned profiles and metal thicknesses.
4. Locations of reinforcement and preparations for hardware.
5. Details of electrical raceway and preparation for electrified hardware, access control systems, and security systems.
6. Details of anchorages, joints, field splices, and connections.
7. Details of accessories.
8. Details of moldings, removable stops, and glazing.

D. Product Schedule: For hollow-metal doors and frames, prepared by or under the supervision of supplier, using same reference numbers for details and openings as those on Drawings. Coordinate with final door hardware schedule.

1.6 INFORMATIONAL SUBMITTALS

A. Product Test Reports: For each type of thermally rated door assemblies for tests performed by a qualified testing agency indicating compliance with performance requirements.

B. Oversize Construction Certification: For assemblies required to be fire-rated and exceeding limitations of labeled assemblies.

C. Field quality-control reports.

1.7 DELIVERY, STORAGE, AND HANDLING

A. Deliver hollow-metal doors and frames palletized, packaged, or crated to provide protection during transit and Project-site storage. Do not use nonvested plastic.

1. Provide additional protection to prevent damage to factory-finished units.

B. Deliver welded frames with two removable spreader bars across bottom of frames, tack welded to jambs and mullions.

C. Store hollow-metal doors and frames vertically under cover at Project site with head up. Place on minimum 4-inch- high wood blocking. Provide minimum 1/4-inch space between each stacked door to permit air circulation.

PART 2 - PRODUCTS

2.1 PERFORMANCE REQUIREMENTS

A. Fire-Rated Door Assemblies: Assemblies complying with NFPA 80 that are listed and labeled by a qualified testing agency acceptable to authorities having jurisdiction for fire-protection ratings indicated on Drawings, based on testing at positive pressure in accordance with NFPA 252 or UL 10C.

1. Temperature-Rise Limit: At vertical exit enclosures and exit passageways, provide doors that have a maximum transmitted temperature end point of not more than 450 deg F above ambient after 30 minutes of standard fire-test exposure.

B. Thermally Rated Door Assemblies: Provide door assemblies with U-factor of not more than 0.37 deg Btu/F x h x sq. ft. when tested in accordance with ASTM C1363 or ASTM E1423.

2.2 EXTERIOR STANDARD STEEL DOORS AND FRAMES

A. Construct hollow-metal doors and frames to comply with standards indicated for materials, fabrication, hardware locations, hardware reinforcement, thermal requirements, tolerances, and clearances, and as specified.

2.3 FRAME ANCHORS

A. Jamb Anchors:

1. Type: Anchors of minimum size and type required by applicable door and frame standard, and suitable for performance level indicated.
2. Quantity: Minimum of three anchors per jamb, with one additional anchor for frames with no floor anchor. Provide one additional anchor for each 24 inches of frame height above 7 feet.
3. Postinstalled Expansion Anchor: Minimum 3/8-inch- diameter bolts with expansion shields or inserts, with manufacturer's standard pipe spacer.

B. Material: ASTM A879/A879M, Commercial Steel (CS), 04Z coating designation; mill phosphatized.

1. For anchors built into exterior walls, steel sheet complying with ASTM A1008/A1008M or ASTM A1011/A1011M; hot-dip galvanized in accordance with ASTM A153/A153M, Class B.

2.4 MATERIALS

A. Recycled Content of Steel Products: Postconsumer recycled content plus one-half of preconsumer recycled content not less than 10 percent.

B. Cold-Rolled Steel Sheet: ASTM A1008/A1008M, Commercial Steel (CS), Type B; suitable for exposed applications.

C. Hot-Rolled Steel Sheet: ASTM A1011/A1011M, Commercial Steel (CS), Type B; free of scale, pitting, or surface defects; pickled and oiled.

D. Metallic-Coated Steel Sheet: ASTM A653/A653M, Commercial Steel (CS), Type B.

E. Inserts, Bolts, and Fasteners: Hot-dip galvanized in accordance with ASTM A153/A153M.

F. Power-Actuated Fasteners in Concrete: Fastener system of type suitable for application indicated, fabricated from corrosion-resistant materials, with clips or other accessory devices for attaching hollow-metal frames of type indicated.

G. Mineral-Fiber Insulation: ASTM C665, Type I (blankets without membrane facing); consisting of fibers manufactured from slag or rock wool; with maximum flame-spread and smoke-developed indexes of 25 and 50, respectively; passing ASTM E136 for combustion characteristics.

H. Glazing: Comply with requirements in Section 08 80 00 "Glazing."

2.5 FABRICATION

A. Hollow-Metal Frames: Fabricate in one piece except where handling and shipping limitations require multiple sections. Where frames are fabricated in sections, provide alignment plates or angles at each joint, fabricated of metal of same or greater thickness as frames.

1. Provide countersunk, flat- or oval-head exposed screws and bolts for exposed fasteners unless otherwise indicated.
2. Door Silencers: Except on weather-stripped frames, drill stops to receive door silencers as follows. Keep holes clear during construction.

   a. Single-Door Frames: Drill stop in strike jamb to receive three door silencers.
   b. Double-Door Frames: Drill stop in head jamb to receive two door silencers.

B. Hardware Preparation: Factory prepare hollow-metal doors and frames to receive templated mortised hardware, and electrical wiring; include cutouts, reinforcement, mortising, drilling, and tapping in accordance with ANSI/SDI A250.6, the Door Hardware Schedule on Drawings, and templates.

1. Reinforce doors and frames to receive nontemplated, mortised, and surface-mounted door hardware.
2. Comply with BHMA A156.115 for preparing hollow-metal doors and frames for hardware.

C. Glazed Lites: Provide stops and moldings around glazed lites where indicated. Form corners of stops and moldings with mitered hairline joints.

1. Provide stops and moldings flush with face of door, and with beveled stops unless otherwise indicated.
2. Provide fixed frame moldings on outside of exterior doors and frames. Provide loose stops and moldings on inside of hollow-metal doors and frames.
3. Coordinate rabbet width between fixed and removable stops with glazing and installation types indicated.
4. Provide stops for installation with countersunk flat- or oval-head machine screws spaced uniformly not more than 9 inches o.c. and not more than 2 inches o.c. from each corner.

2.6 STEEL FINISHES

A. Prime Finish: Clean, pretreat, and apply manufacturer's standard primer.

1. Shop Primer: Manufacturer's standard, fast-curing, lead- and chromate-free primer complying with ANSI/SDI A250.10; recommended by primer manufacturer for substrate; compatible with substrate and field-applied coatings despite prolonged exposure.

PART 3 - EXECUTION

3.1 PREPARATION

A. Remove welded-in shipping spreaders installed at factory. Restore exposed finish by grinding, filling, and dressing, as required to make repaired area smooth, flush, and invisible on exposed faces. Touch up factory-applied finishes where spreaders are removed.

B. Drill and tap doors and frames to receive nontemplated, mortised, and surface-mounted door hardware.

3.2 INSTALLATION

A. Install hollow-metal doors and frames plumb, rigid, properly aligned, and securely fastened in place. Comply with approved Shop Drawings and with manufacturer's written instructions.

B. Hollow-Metal Frames: Comply with ANSI/SDI A250.11.

1. Set frames accurately in position; plumbed, aligned, and braced securely until permanent anchors are set. After wall construction is complete, remove temporary braces without damage to completed Work.

   a. Where frames are fabricated in sections, field splice at approved locations by welding face joint continuously; grind, fill, dress, and make splice smooth, flush, and invisible on exposed faces. Touch-up finishes.
   b. Install frames with removable stops located on secure side of opening.

2. Floor Anchors: Secure with postinstalled expansion anchors.

   a. Floor anchors may be set with power-actuated fasteners instead of postinstalled expansion anchors if so indicated and approved on Shop Drawings.

3. Solidly pack mineral-fiber insulation inside frames.
4. Installation Tolerances: Adjust hollow-metal frames to the following tolerances:

   a. Squareness: Plus or minus 1/16 inch, measured at door rabbet on a line 90 degrees from jamb perpendicular to frame head.

b. Alignment: Plus or minus 1/16 inch, measured at jambs on a horizontal line parallel to plane of wall.
c. Twist: Plus or minus 1/16 inch, measured at opposite face corners of jambs on parallel lines, and perpendicular to plane of wall.
d. Plumbness: Plus or minus 1/16 inch, measured at jambs at floor.

C. Hollow-Metal Doors: Fit and adjust hollow-metal doors accurately in frames, within clearances specified below.

1. Non-Fire-Rated Steel Doors: Comply with ANSI/SDI A250.8.

D. Glazing: Comply with installation requirements in Section 08 80 00 "Glazing" and with hollow-metal manufacturer's written instructions.

3.3 FIELD QUALITY CONTROL

A. Inspection Agency: Engage a qualified inspector to perform inspections and to furnish reports to Contracting Officer.

B. Inspections:

1. Egress Door Inspections: Inspect each door equipped with panic hardware, each door equipped with fire exit hardware, each door located in an exit enclosure, each electrically controlled egress door, and each door equipped with special locking arrangements in accordance with NFPA 101, Section 7.2.1.15.
2. Contractor will commence inspection immediately after finishing work. Observations, measurements, and other notes will be recorded using DSC-CQC Accessibility Inspection Report as basis. Report can include digital images, product literature, drawings and sketches, etc. to communicate conditions, especially items not in compliance with ABAAS. Submit report to CO within 24 hours of commencing inspection.

C. Repair or remove and replace installations where inspections indicate that they do not comply with specified requirements.

D. Reinspect repaired or replaced installations to determine if replaced or repaired door assembly installations comply with specified requirements.

3.4 REPAIR

A. Prime-Coat Touchup: Immediately after erection, sand smooth rusted or damaged areas of prime coat and apply touchup of compatible air-drying, rust-inhibitive primer.

B. Metallic-Coated Surface Touchup: Clean abraded areas and repair with galvanizing repair paint in accordance with manufacturer's written instructions.

C. Factory-Finish Touchup: Clean abraded areas and repair with same material used for factory finish in accordance with manufacturer's written instructions.

D. Touchup Painting: Cleaning and touchup painting of abraded areas of paint are specified

in painting Sections.

END OF SECTION 08 11 13

SECTION 08 14 16 - FLUSH WOOD DOORS

PART 1 - GENERAL

1.1 SUMMARY

A. Section Includes:

1. Solid-core flush wood doors with full lites.

1.2 REFERENCE SECTIONS

A. Section 08 71 00 “Door Hardware”.

B. Section 08 80 00 “Glazing”.

1.3 PREINSTALLATION MEETINGS

A. Preinstallation Conference: Conduct conference at Project site.

1.4 ACTION SUBMITTALS

A. Product Data:

1. Solid-core five-ply flush wood veneer-faced doors for transparent finish.

B. Product Data Submittals: For each product, including the following:

1. Door core materials and construction.
2. Door edge construction
3. Door face type and characteristics.
4. Door louvers.
5. Door trim for openings.
6. Door frame construction.
7. Factory-machining criteria.
8. Factory- finishing specifications.

C. Sustainable Design Submittals:

1. Third-Party Certifications: For each product.
2. Third-Party Certified Life Cycle Assessment: For each product.
3. Chain-of-Custody Certificates: For certified wood products. Include statement of costs.

D. Shop Drawings: Indicate location, size, and hand of each door; elevation of each type of door; construction details not covered in Product Data; and the following:

1. Door schedule indicating door location, type, size, and swing.
2. Door elevations, dimension and locations of hardware, lite cutouts, and glazing thicknesses.
3. Dimensions and locations of blocking for hardware attachment.
4. Dimensions and locations of mortises and holes for hardware.
5. Clearances and undercuts.
6. Doors to be factory finished and application requirements.
7. Apply AWI Quality Certification Program label to Shop Drawings.

E. Samples for Initial Selection: For factory-finished doors.

F. Samples for Verification:

1. Factory finishes applied to actual door face materials, approximately 8 by 10 inches, for each material and finish. For each wood species and transparent finish, provide set of three Samples showing typical range of color and grain to be expected in finished Work.
2. Corner sections of doors, approximately 8 by 10 inches, with door faces and edges representing actual materials to be used.

1.5 INFORMATIONAL SUBMITTALS

A. Qualification Data: For door inspector.

1. Egress Door Inspector: Submit documentation of compliance with NFPA 101, Section 7.2.1.15.4.
2. Submit copy of DHI's Fire and Egress Door Assembly Inspector (FDAI) certificate.

B. Field quality-control reports.

C. Sample Warranty: For special warranty.

1.6 CLOSEOUT SUBMITTALS

A. Special warranties.

B. Quality Standard Compliance Certificates: AWI Quality Certification certificates.

1.7 QUALITY ASSURANCE

A. Manufacturer's Certification: Licensed participant in AWI's Quality Certification Program.

B. Egress Door Inspector Qualifications: Inspector for field quality-control inspections of egress door assemblies complies with qualifications set forth in NFPA 101, Section 7.2.1.15.4 and the following:

1. DHI's Fire and Egress Door Assembly Inspector (FDAI) certification.

1.8 DELIVERY, STORAGE, AND HANDLING

A. Comply with requirements of referenced standard and manufacturer's written instructions.

B. Package doors individually in plastic bags or cardboard cartons.

C. Mark each door on bottom rail with opening number used on Shop Drawings.

1.9 FIELD CONDITIONS

A. Environmental Limitations:

1. Do not deliver or install doors until spaces are enclosed and weathertight, wet-work in spaces is complete and dry, and HVAC system is operating and maintaining temperature and relative humidity at levels designed for building occupants for the remainder of construction period.
2. Do not deliver or install doors until building is enclosed and weathertight, wet work is complete, and HVAC system is operating and maintaining temperature between 60 and 90 deg F and relative humidity between 25 and 55 percent during remainder of construction period.

1.10 WARRANTY

A. Special Warranty: Manufacturer agrees to repair or replace doors that fail in materials or workmanship within specified warranty period.

1. Failures include, but are not limited to, the following:

a. Warping (bow, cup, or twist) more than 1/4 inch in a 42-by-84-inch section.

2. Warranty also includes installation and finishing that may be required due to repair or replacement of defective doors.
3. Warranty Period for Solid-Core Interior Doors: Life of installation.

PART 2 - PRODUCTS

2.1 SOURCE LIMITATIONS

A. Obtain flush wood doors from single manufacturer.

2.2 FLUSH WOOD DOORS, GENERAL

A. Quality Standard: In addition to requirements specified, comply with AWI/AWMAC/WI's "Architectural Woodwork Standards."

1. Provide labels, and from AWI certification program indicating that doors with

requirements of grades specified.

a. Contractor registers the Work under this Section with the AWI Quality Certification Program at www.awiqcp.org or by calling 855-345-0991.

2. The Contract Documents contain requirements that are more stringent than the referenced quality standard. Comply with the Contract Documents in addition to those of the referenced quality standard.

2.3 FABRICATION

A. Factory fit doors to suit frame-opening sizes indicated.

1. Comply with clearance requirements of referenced quality standard for fitting unless otherwise indicated.
2. Comply with NFPA 80 requirements for fire-rated doors.

B. Factory machine doors for hardware that is not surface applied.

1. Locate hardware to comply with DHI-WDHS-3.
2. Comply with final hardware schedules, door frame Shop Drawings, ANSI/BHMA-156.115-W, and hardware templates.
3. Coordinate with hardware mortises in metal frames, to verify dimensions and alignment before factory machining.

C. Openings: Factory cut and trim openings through doors.

1. Light Openings: Trim openings with moldings of material and profile indicated.
2. Glazing: Factory install glazing in doors indicated to be factory finished. Comply with applicable requirements in Section 08 80 00 "Glazing."

2.4 FACTORY FINISHING

A. Comply with referenced quality standard for factory finishing.

1. Complete fabrication, including fitting doors for openings and machining for hardware that is not surface applied, before finishing.
2. Finish faces, all four edges, edges of cutouts, and mortises.
3. Stains and fillers may be omitted on bottom edges, edges of cutouts, and mortises.

B. Factory finish doors to receive transparent finish.

C. Transparent Finish:

1. Architectural Woodwork Standards Grade: Premium.

a. System-5, Varnish, Conversion.
b. System-9, UV Curable, Acrylated Epoxy, Polyester or Urethane.
c. System-10, UV Curable, Water Based.
d. System-11, Polyurethane, Catalyzed.

2. ANSI/WDMA I.S. 1A Grade: Premium.

   a. TR-4 Conversion Varnish.
   b. TR-6 Catalyzed Polyurethane.
   c. TR-8 UV Cured Acrylated Polyester/Urethane.

3. Staining: None required.
4. Sheen: Satin.

PART 3 - EXECUTION

3.1 EXAMINATION

A. Examine doors, with Installer present, before hanging doors.

   1. Verify swing characteristics have been installed with level heads and plumb jambs.
   2. Reject doors with defects.

B. Proceed with installation only after unsatisfactory conditions have been corrected.

3.2 INSTALLATION

A. Hardware: For installation, see Section 08 71 00 "Door Hardware."

B. Install doors to comply with manufacturer's written instructions and referenced quality standard, and as indicated.

3.3 FIELD QUALITY CONTROL

A. Inspection Agency: Engage a qualified inspector to perform inspections and to furnish reports to Contracting Officer.

B. Inspections:

   1. Provide inspection of installed Work through AWI's Quality Certification Program, certifying that wood doors and frames, including installation, comply with requirements of AWI/AWMCA/WI's "Architectural Woodwork Standards" for the specified grade.
   2. Contractor will commence inspection immediately after finishing work. Observations, measurements, and other notes will be recorded using DSC-CQC Accessibility Inspection Report as basis. Report can include digital images, product literature, drawings and sketches, etc. to communicate conditions, especially items not in compliance with ABAAS. Submit report to CO within 24 hours of commencing inspection.

C. Repair or remove and replace installations where inspections indicate that they do not comply with specified requirements.

D. Reinspect repaired or replaced installations to determine if replaced or repaired door assembly installations comply with specified requirements.

3.4 ADJUSTING

A. Operation: Rehang or replace doors that do not swing or operate freely.

B. Finished Doors: Replace doors that are damaged or that do not comply with requirements. Doors may be repaired or refinished if Work complies with requirements and shows no evidence of repair or refinishing.

END OF SECTION 08 14 16

SECTION 08 31 13 - ACCESS DOORS AND FRAMES

PART 1 - GENERAL

1.1 SUMMARY

A. Section Includes:

1. Access door and frame at gypsum board ceiling.

B. Related Requirements:

1. Section 06 10 00 "Rough Carpentry"
2. Section 09 29 00 “Gypsum Board”
3. Section 09 91 24 "Interior Painting"

1.2 ACTION SUBMITTALS

A. Product Data: For each type of product.

1. Include construction details, material descriptions, dimensions of individual components and profiles, and finishes.

B. Samples: For each type of access door and frame and for each finish specified, complete assembly minimum 6 by 6 inches in size.

C. Product Schedule: For access doors and frames.

D. Shop drawing: For Equipment Platform access door showing full coordination with adjacent structural elements (including but not limited to roof trusses and platform floor joists).

PART 2 - PRODUCTS

2.1 PERFORMANCE REQUIREMENTS

A. Flush Access Doors with Concealed Flanges:

1. Description: Face of door flush with frame; with concealed flange for gypsum board installation and concealed hinge.
2. Latch and Lock: Cam latch, hex-head wrench operated with interior release
3. Frame Material: Same material and thickness as door
4. Metallic-Coated Steel Sheet for Door: Nominal 0.064 inch, 16 gage factory primed

a. Interior finish to match adjacent ceiling.

5. Door sizes: 12”x12” unless otherwise indicated on drawings.
6. Locations: Interior Gypsum Board Ceiling
7. Optional Features: Piano hinges

2.2 MATERIALS

A. Steel Plates, Shapes, and Bars: ASTM A36/A36M.

B. Steel Sheet: Uncoated or electrolytic zinc coated, ASTM A879/A879M, with cold-rolled steel sheet substrate complying with ASTM A1008/A1008M, Commercial Steel (CS), exposed.

C. Metallic-Coated Steel Sheet: ASTM A653/A653M, Commercial Steel (CS), Type B; with minimum G60 or A60 metallic coating.

D. Stainless Steel Plate, Sheet, and Strip: ASTM A240/A240M or ASTM A666, Type 304. Remove tool and die marks and stretch lines, or blend into finish.

E. Stainless Steel Flat Bars: ASTM A666, Type 304. Remove tool and die marks and stretch lines, or blend into finish.

F. Aluminum Extrusions: ASTM B221, Alloy 6063.

G. Aluminum Sheet: ASTM B209, alloy and temper recommended by aluminum producer and finisher for type of use and finish indicated.

H. Frame Anchors: Same material as door face.

I. Inserts, Bolts, and Anchor Fasteners: Hot-dip galvanized steel according to ASTM A153/A153M or ASTM F2329.

2.3 FABRICATION

A. General: Provide access door and frame assemblies manufactured as integral units ready for installation.

B. Metal Surfaces: For metal surfaces exposed to view in the completed Work, provide materials with smooth, flat surfaces without blemishes. Do not use materials with exposed pitting, seam marks, roller marks, rolled trade names, or roughness.

C. Doors and Frames: Grind exposed welds smooth and flush with adjacent surfaces. Furnish mounting holes, attachment devices and fasteners of type required to secure access doors to types of supports indicated.

1. For concealed flanges with drywall bead, provide edge trim for gypsum panels securely attached to perimeter of frames.

D. Recessed Access Doors: Form face of panel to provide recess for application of applied finish. Reinforce panel as required to prevent buckling. Provide access sleeves for each latch operator and install in holes cut through finish.

1. For recessed doors with plaster infill, provide self-furring expanded-metal lath attached to door panel.

E. Latch and Lock Hardware:

1. Quantity: Furnish number of latches and locks required to hold doors tightly closed.
2. Keys: Furnish two keys per lock and key all locks alike.

2.4 FINISHES

A. Comply with NAAMM's "Metal Finishes Manual for Architectural and Metal Products" for recommendations for applying and designating finishes.

B. Protect mechanical finishes on exposed surfaces from damage by applying a strippable, temporary protective covering before shipping.

C. Appearance of Finished Work: Noticeable variations in same piece are not acceptable. Variations in appearance of adjoining components are acceptable if they are within the range of approved Samples and are assembled or installed to minimize contrast.

D. Painted Finishes: Comply with coating manufacturer's written instructions for cleaning, conversion coating, and applying and baking finish.

1. Factory Primed: Apply manufacturer's standard, lead- and chromate-free, universal primer immediately after surface preparation and pretreatment.

PART 3 - EXECUTION

3.1 EXAMINATION

A. Examine substrates for compliance with requirements for installation tolerances and other conditions affecting performance of the Work.

B. Proceed with installation only after unsatisfactory conditions have been corrected.

3.2 INSTALLATION

A. Comply with manufacturer's written instructions for installing access doors and frames.

3.3 ADJUSTING

A. Adjust doors and hardware, after installation, for proper operation.

END OF SECTION 08 31 13

SECTION 08 54 13 - FIBERGLASS WINDOWS

PART 1 - GENERAL

1.1 SUMMARY

A. Section includes new fiberglass-framed casement and fixed windows including insect screens.

B. Section includes salvaging and reinstalling existing fiberglass windows and insect screens.

1.2 RELATED SECTIONS

A. Section 07 92 00 – Joint Sealants

1.3 COORDINATION

A. Arrange removal of existing windows so as not to interfere with Government operations of Maintenance Building.

1.4 PREINSTALLATION MEETINGS

A. Preinstallation Conference: Conduct conference at Project site.

1. Inspect and discuss existing windows to be salvaged for reinstallation.
2. Review and finalize protection requirements.
3. Review procedures for dust control.
4. Review procedures for protection of existing building.
5. Review storage and protection of existing windows.
6. Review and finalize construction schedule and verify availability of materials, Installer's personnel, equipment, and facilities needed to make progress and avoid delays.
7. Review, discuss, and coordinate the interrelationship of fiberglass windows with other exterior wall components. Include provisions for anchoring, flashing, weeping, sealing perimeters, and protecting finishes.
8. Review and discuss the sequence of work required to construct a watertight and weathertight exterior building envelope.
9. Inspect and discuss the condition of substrate and other preparatory work performed by other trades.

1.5 ACTION SUBMITTALS

A. Product Data: For each type of product.

1. Include construction details, material descriptions, glazing and fabrication methods, dimensions of individual components and profiles, hardware, and finishes for fiberglass windows.

B. Shop Drawings: For fiberglass windows.

1. Include plans, elevations, sections, hardware, accessories, insect screens, operational clearances, and details of installation, including anchor, flashing, and sealant installation. Indicate the type of anchors, hardware, operators and other components not included in manufacturer's standard data. Include
glazing details and standards for factory glazed units.

C. Samples: For each exposed product and for each color specified, 2 by 4 inches in size.

D. Samples for Initial Selection: For units with factory-applied finishes.

1. Include Samples of hardware and accessories involving color selection.

E. Samples for Verification: For fiberglass windows and components required, prepared on Samples of size indicated below:

1. Exposed Finishes: 2 by 4 inches.
2. Exposed Hardware: Full-size units.

F. Glass Samples: For each type of the following products; 12 inches square.

1. Insulating glass.

G. Product Schedule: For fiberglass windows. Use same designations indicated on Drawings.

1.6 INFORMATIONAL SUBMITTALS

A. Proposed Protection Measures: Submit report, including Drawings, that indicates the measures proposed for protecting individuals and property, for dust control, for noise control. Indicate proposed locations and construction of barriers.

B. Schedule of Building Demolition Activities: Indicate the following:

1. Detailed sequence of demolition work, with starting and ending dates for each activity.

C. Qualification Data: For manufacturer and Installer.

D. Product Test Reports: For each type of fiberglass window, for tests performed by a qualified testing agency.

E. Field quality-control reports.

F. Sample Warranties: For manufacturer's warranties.

1.7 QUALITY ASSURANCE

A. Overall Standards: Comply with ANSI/AAMA 101.I.S.2, except as otherwise noted herein.

B. Manufacturer Qualifications: A manufacturer capable of fabricating fiberglass windows that meet or exceed performance requirements indicated and of documenting this performance by test reports and calculations.

1. Member American Architectural Manufacturers Association (AAMA) and the National Fenestration Rating Council (NFRC).
2. IGCC Certified for fabrication of insulated glazing units with suspended film.
3. Minimum 5 years experience fabricating insulated glazing units using suspended film.

C. Installer Qualifications: An installer acceptable to fiberglass window manufacturer for installation of units required for this Project with 10 years experience on commercial installations.

D. Product Qualifications: Certifications for insulated glass windows:

1. AAMA: Windows shall be Gold Label certified with label attached to frame per AAMA requirements.
2. NFRC: Windows shall be NFRC certified with temporary U-factor label applied to glass and an NFRC tab added to permanent AAMA frame label.

1.8 DELIVERY, STORAGE, AND HANDLING

A. Delivery: Deliver materials to site undamaged in manufacturer's original, unopened containers and packaging, with labels clearly identifying manufacturer and product name. Include installation instructions.

B. Storage:

1. Protect the windows and accessories from the elements, construction activities, and other hazards until the project is complete.

a. Store materials in an upright position and in accordance with manufacturer's instructions.
b. Store materials off ground and under cover.
c. Protect materials from weather, direct sunlight, and construction activities.

C. Handling: Protect materials and finish during handling and installation to prevent damage.

1. Handle all fiberglass window units with glass cups instead of by the frames whenever possible and if unit is over 100 lbs.
2. Protect materials and finish during handling and installation to prevent damage.

1.9 WARRANTY

A. Manufacturer's Warranty: Manufacturer agrees to repair or replace fiberglass windows that fail in materials or workmanship within specified warranty period.

1. Failures include, but are not limited to, the following:

a. Failure to meet performance requirements.
b. Structural failures including excessive deflection, water leakage, and air infiltration.
c. Faulty operation of movable sash and hardware.
d. Deterioration of materials and finishes beyond normal weathering.
e. Failure of insulating glass.

2. Warranty Period:

a. Window: 10 years from date of Substantial Completion.

PART 2 - PRODUCTS

2.1 WINDOW PERFORMANCE REQUIREMENTS

A. Product Standard: Comply with AAMA/WDMA/CSA 101/I.S.2/A440 for definitions and minimum standards of performance, materials, components, accessories, and fabrication unless more stringent requirements are indicated.

1. Window Certification: WDMA certified with label attached to each window.

B. Solar Heat-Gain Coefficient (SHGC): As indicated on drawings.

C. Windborne-Debris Impact Resistance: Passes ASTM E1886 missile-impact and cyclic-pressure tests in accordance with ASTM E1996 for Wind Zone 1 for basic protection.

1. Large-Missile Test: For glazing located within 30 feet of grade.

2.2 MATERIALS

A. Frame and Sash: Pultruded Fiberglass Reinforced Polymer, with color coating.

B. Hardware: Hardware having component parts which are exposed shall be of brass, aluminum, stainless steel or other non corrosive material(s) compatible with fiberglass and of sufficient strength to perform the functions for which they are used. Cadmium or zinc-plated steel, where used, shall be in accordance with ASTM A 165 or B 633. Nickel chrome-plated steel, where used, shall be in accordance with ASTM B 456.

C. Weather-strip: Weather-strip conforming to AAMA 701or 702. Weather-strip shall meet the requirements of the specifications as detailed in the appropriate test report. All weather-strip shall be installed in specially-extruded ports and secured to prevent movement, shrinkage, or loss when removing sash either for cleaning or repair. Adhered

weather-stripping shall not be allowed.

D. Screens: Full screens supplied separately or delivered applied to windows as requested.

2.3 ASSEMBLY

A. Fabricate frames and sash with mitered and mechanically joined corners. Mitered seams shall be sealed thoroughly to prevent air or water penetration

B. Provide metal or composite reinforcement in sash or frame for attaching operating or locking mechanisms

C. Factory glazed, inside, with snap on PVC or Fiberglass glazing stops. Insulating glass units shall be reglazable without dismantling sash framing.

2.4 ACCESSORIES

A. Jamb Extensions: Paint-grade Pacific Hemlock

2.5 INSECT SCREENS

A. General: Fabricate insect screens to integrate with window frame. Provide screen for each operable exterior sash. Screen wickets are not permitted.

1. Type and Location: Full, inside for project-out sashes.

B. Aluminum Wire Fabric: 18-by-16 mesh of 0.011-inch- diameter, coated aluminum wire.

1. Wire-Fabric Finish: Black.

2.6 FABRICATION

A. Fabricate fiberglass windows in sizes indicated. Include a complete system for installing and anchoring windows.

B. Glaze fiberglass windows in the factory.

C. Weather strip each operable sash to provide weathertight installation.

D. Complete fabrication, assembly, finishing, hardware application, and other work in the factory to greatest extent possible. Disassemble components only as necessary for shipment and installation. Allow for scribing, trimming, and fitting at Project site.

2.7 FINISH (Exterior / Interior)

A. Frame and Sash colors:

1. One color for both interior and exterior:

    a. Factory applied coating – color to be selected by Contracting Officer from manufacturer's full line, including premium

        1) Design intent is Dark Bronze to match existing adjacent

B. Color match screen frame to window frame and sash color

2.8 WINDOW TYPES

A. Basis of Design: Alpen Zenith ZR-5, Balanced, Out swinging Casement and High-Profile Fixed

B. Casement Windows:

1. Factory assembled and glazed outward opening fiberglass casement
2. Frame:

    a. Chambered, foam insulated, pultruded fiberglass

3. Sash:

    a. Chambered, foam insulated, pultruded fiberglass
    b. Minimum 2-1/4 inch (57 mm) deep, chambered, pultruded fiberglass profile.

4. Sightlines: edge of frame to tip of glazing tower or glass line 2 13/16” (72mm)
5. Weather-strip:

    a. Triple weather-strip

        1) Continuous, flexible PVC type around sash perimeter
        2) Foam with fabric skin around frames interior perimeter
        3) Neoprene around perimeter of frame at sash opening

6. Hardware:

    a. Operator – steel worm-gear operator, zinc die cast base with painted finish
    b. Crank Handle – integrated folding handle with painted finish

        1) Design intent is Chestnut

    c. Locking System – Single handle multi-point with positive action (reaches out and pulls tight).
    d. All exposed fasteners- stainless steel

7. Performance Class Structural 1. Commercial CW-PG50

C. High Profile (HP) Fixed Window:

1. Factory assembled and glazed Fixed (non-operating)

2. Frame:

   a. Chambered, foam insulated, pultruded fiberglass
   b. Overall Frame Depth: 3-1/4 inch (83 mm)

3. Sash:

   a. Chambered, foam insulated, pultruded fiberglass
   b. Minimum 2-1/4 inch (57 mm) deep, chambered, pultruded fiberglass profile.

4. Sightlines: edge of frame to tip of glazing tower or glass line 2-13/16” (72 mm)
5. Performance Class Structural

   a. Commercial CW-PG45 for 60”x60” and smaller or CW-PG35 for >60”x60” to 72”x96”

PART 3 - EXECUTION

3.1 DEMOLITION, GENERAL

A. General: Demolish indicated windows as noted on the drawings. Use methods required to complete the Work within limitations of governing regulations and as follows:

   1. Do not use cutting torches until work area is cleared of flammable materials. Maintain portable fire-suppression devices during flame-cutting operations.
   2. Maintain fire watch during and for at least 12 hours after flame-cutting operations.
   3. Maintain adequate ventilation when using cutting torches.

B. Site Access and Temporary Controls: Conduct building demolition and debris-removal operations to ensure minimum interference with roads, streets, walks, walkways, and other adjacent occupied and used facilities.

   1. Do not close or obstruct streets, walks, walkways, or other adjacent occupied or used facilities without permission from Contracting Officer. Provide alternate routes around closed or obstructed trafficways if required.

3.2 EXAMINATION

A. Examine openings, substrates, structural support, anchorage, and conditions, with Installer present, for compliance with requirements for installation tolerances and other conditions affecting performance of the Work.

B. Verify rough opening dimensions, levelness of sill plate, and operational clearances.

C. Examine wall flashings, vapor retarders, water and weather barriers, and other built-in components to ensure weathertight window installation.

D. Proceed with installation only after unsatisfactory conditions have been corrected.

3.3 INSTALLATION

A. Comply with manufacturer's written instructions for installing windows, hardware, accessories, and other components. For installation procedures and requirements not addressed in manufacturer's written instructions, comply with installation requirements in ASTM E2112.

B. Install windows level, plumb, square, true to line, without distortion, anchored securely in place to structural support, and in proper relation to wall flashing and other adjacent construction to produce weathertight construction.

3.4 FIELD QUALITY CONTROL

A. Optional Field Testing: Field-test windows in accordance with AAMA 502, Test Method

B. Conduct air and water infiltration testing with the window manufacturer, contractor, and Contracting Officer present.

C. An AAMA accredited lab will be hired by the Contractor to perform the required testing.

D. Field tested units shall be of comparable size to gateway sizes listed in AAMA/WDMA/CSA 101/I.S.2/A440-05

3.5 ADJUSTING, CLEANING, AND PROTECTION

A. Adjust operating sashes and hardware for a tight fit at contact points and weather stripping for smooth operation and weathertight closure.

B. Clean exposed surfaces immediately after installing windows. Remove excess sealants, glazing materials, dirt, and other substances.

C. Remove and replace sashes if glass has been broken, chipped, cracked, abraded, or damaged during construction period.

D. Protect window surfaces from contact with contaminating substances resulting from construction operations. If contaminating substances do contact window surfaces, remove contaminants immediately according to manufacturer's written instructions.

END OF SECTION 08 54 13

SECTION 08 71 00 - DOOR HARDWARE

PART 1 - GENERAL

1.01 SUMMARY

A. Section includes:

1. Mechanical door hardware for swinging doors.

B. Section excludes:

1. Windows
2. Cabinets (casework), including locks in cabinets
3. Signage
4. Toilet accessories
5. Overhead doors

C. Related Sections:

1. Section 06 10 00 "Rough Carpentry"
2. Section 07 92 00 "Joint Sealants" for sealant requirements applicable to threshold installation specified in this section.
3. Section 08 11 13 "Hollow Metal Doors and Frames"
4. Section 08 14 16 "Flush Wood Doors"
5. Division 28 "Electronic Safety and Security" sections for coordination with other components of electronic access control system and fire alarm system.

1.02 REFERENCES

A. UL LLC

1. UL 10B - Fire Test of Door Assemblies
2. UL 10C - Positive Pressure Test of Fire Door Assemblies
3. UL 1784 - Air Leakage Tests of Door Assemblies

B. DHI - Door and Hardware Institute

1. Sequence and Format for the Hardware Schedule
2. Recommended Locations for Builders Hardware
3. Keying Systems and Nomenclature
4. Installation Guide for Doors and Hardware

C. NFPA – National Fire Protection Association

1. NFPA 70 – National Electric Code
2. NFPA 80 – 2016 Edition – Standard for Fire Doors and Other Opening Protectives
3. NFPA 101 – Life Safety Code
4. NFPA 105 – Smoke and Draft Control Door Assemblies

5. NFPA 252 – Fire Tests of Door Assemblies

D. ANSI - American National Standards Institute

1. ANSI A117.1 – 2017 Edition – Accessible and Usable Buildings and Facilities
2. ANSI/BHMA A156.1 - A156.29, and ANSI/BHMA A156.31 - Standards for Hardware and Specialties
3. ANSI/BHMA A156.28 - Recommended Practices for Keying Systems
4. ANSI/WDMA I.S. 1A - Interior Architectural Wood Flush Doors
5. ANSI/SDI A250.8 - Standard Steel Doors and Frames

1.03 SUBMITTALS

A. General:

1. Submit in accordance with Conditions of Contract and Division 01 Submittal Procedures.
2. Prior to forwarding submittal:
   a. Review drawings and Sections from related trades to verify compatibility with specified hardware.
   b. Highlight, encircle, or otherwise specifically identify on submittals: deviations from Contract Documents, issues of incompatibility or other issues which may detrimentally affect the Work.

B. Action Submittals:

1. Product Data: Submit technical product data for each item of door hardware, installation instructions, maintenance of operating parts and finish, and other information necessary to show compliance with requirements.
2. Riser and Wiring Diagrams: After final approval of hardware schedule, submit details of electrified door hardware, indicating:
   a. Wiring Diagrams: For power, signal, and control wiring and including:
      1) Details of interface of electrified door hardware and building safety and security systems.
      2) Schematic diagram of systems that interface with electrified door hardware.
      3) Point-to-point wiring.
      4) Risers.

3. Door Hardware Schedule:
   a. Submit concurrent with submissions of Product Data, Samples, and Shop Drawings. Coordinate submission of door hardware schedule with scheduling requirements of other work to facilitate fabrication of other work critical in Project construction schedule.
   b. Submit under direct supervision of a Door Hardware Institute (DHI) certified Architectural Hardware Consultant (AHC) or Door Hardware Consultant (DHC) with hardware sets in vertical format as illustrated by Sequence of Format for the Hardware Schedule published by DHI.
   c. Indicate complete designations of each item required for each opening, include:
      1) Door Index: door number, heading number, and hardware set number.
      2) Quantity, type, style, function, size, and finish of each hardware item.
      3) Name and manufacturer of each item.

4) Fastenings and other pertinent information.
5) Location of each hardware set cross-referenced to indications on Drawings.
6) Explanation of all abbreviations, symbols, and codes contained in schedule.
7) Mounting locations for hardware.
8) Door and frame sizes and materials.
9) Degree of door swing and handing.
10) Operational Description of openings with electrified hardware covering egress, ingress (access), and fire/smoke alarm connections.

4. Key Schedule:
   a. After Keying Conference, provide keying schedule that includes levels of keying, explanations of key system's function, key symbols used, and door numbers controlled.
   b. Use ANSI/BHMA A156.28 "Recommended Practices for Keying Systems" as guideline for nomenclature, definitions, and approach for selecting optimal keying system.
   c. Provide 3 copies of keying schedule for review prepared and detailed in accordance with referenced DHI publication. Include schematic keying diagram and index each key to unique door designations.
   d. Index keying schedule by door number, keyset, hardware heading number, cross keying instructions, and special key stamping instructions.
   e. Provide one complete bitting list of key cuts and one key system schematic illustrating system usage and expansion. Forward bitting list, key cuts and key system schematic directly to Contracting Officer, by means as directed by Contracting Officer.
   f. Prepare key schedule by or under supervision of supplier, detailing Contracting Officer’s final keying instructions for locks.

C. Informational Submittals:

1. Provide Qualification Data for Supplier, Installer and Architectural Hardware Consultant.
2. Provide Product Data:
   a. Include warranties for specified door hardware.

D. Closeout Submittals:

1. Operations and Maintenance Data: Provide in accordance with Division 01 and include:
   a. Complete information on care, maintenance, and adjustment; data on repair and replacement parts, and information on preservation of finishes.
   b. Catalog pages for each product.
   c. Final approved hardware schedule edited to reflect conditions as installed.
   d. Final keying schedule
   e. Copy of warranties including appropriate reference numbers for manufacturers to identify project.
   f. As-installed wiring diagrams for each opening connected to power, both low voltage and 110 volts.

1.04 QUALITY ASSURANCE

A. Qualifications and Responsibilities:

1. Supplier: Recognized architectural hardware supplier with a minimum of 5 years documented experience supplying both mechanical and electromechanical door hardware similar in quantity, type, and quality to that indicated for this Project. Supplier to be recognized as a factory direct distributor by the manufacturer of the primary materials with a warehousing facility in the Project's vicinity. Supplier to have on staff, a certified Architectural Hardware Consultant (AHC) or Door Hardware Consultant (DHC) available to Contracting Officer and Contractor, at reasonable times during the Work for consultation.
2. Installer: Qualified tradesperson skilled in the application of commercial grade hardware with experience installing door hardware similar in quantity, type, and quality as indicated for this Project.
3. Architectural Hardware Consultant: Person who is experienced in providing consulting services for door hardware installations that are comparable in material, design, and extent to that indicated for this Project and meets these requirements:
   a. For door hardware: DHI certified AHC or DHC.
   b. Can provide installation and technical data to Contracting Officer and other related subcontractors.
   c. Can inspect and verify components are in working order upon completion of installation.

4. Single Source Responsibility: Obtain each type of door hardware from single manufacturer.

B. Pre-Installation Meetings

1. Keying Conference
   a. Incorporate keying conference decisions into final keying schedule after reviewing door hardware keying system including:
      1) Function of building, flow of traffic, purpose of each area, degree of security required, and plans for future expansion.
      2) Preliminary key system schematic diagram.
      3) Requirements for key control system.
      4) Requirements for access control.
      5) Address for delivery of keys.

2. Pre-installation Conference
   a. Review and finalize construction schedule and verify availability of materials, Installer's personnel, equipment, and facilities needed to make progress and avoid delays.
   b. Inspect and discuss preparatory work performed by other trades.
   c. Inspect and discuss electrical roughing-in for electrified door hardware.
   d. Review sequence of operation for each type of electrified door hardware.
   e. Review required testing, inspecting, and certifying procedures.
   f. Review questions or concerns related to proper installation and adjustment of door hardware.

3. Electrified Hardware Coordination Conference:
   a. Prior to ordering electrified hardware, schedule and hold meeting to coordinate door hardware with security, electrical, doors and frames, and other related suppliers.

1.05 DELIVERY, STORAGE, AND HANDLING

A. Inventory door hardware on receipt and provide secure lock-up for hardware delivered to Project site. Promptly replace products damaged during shipping.

B. Tag each item or package separately with identification coordinated with final door hardware schedule, and include installation instructions, templates, and necessary fasteners with each item or package. Deliver each article of hardware in manufacturer's original packaging.

C. Maintain manufacturer-recommended environmental conditions throughout storage and installation periods.

D. Provide secure lock-up for door hardware delivered to Project. Control handling and installation of hardware items so that completion of Work will not be delayed by hardware losses both before and after installation.

E. Handle hardware in manner to avoid damage, marring, or scratching. Correct, replace or repair products damaged during Work. Protect products against malfunction due to paint, solvent, cleanser, or any chemical agent.

1.06 COORDINATION

A. Installation Templates: Distribute for doors, frames, and other work specified to be factory or shop prepared. Check Shop Drawings of other work to confirm that adequate provisions are made for locating and installing door hardware to comply with indicated requirements.

B. Security: Coordinate installation of door hardware, keying, and access control with Contracting Officer.

C. Electrical System Roughing-In: Coordinate layout and installation of electrified door hardware with connections to power supplies and building safety and security systems.

1.07 WARRANTY

A. Manufacturer's standard form in which manufacturer agrees to repair or replace components of door hardware that fail in materials or workmanship within published warranty period.

1. Warranty does not cover damage or faulty operation due to improper installation, improper use or abuse.
2. Warranty Period: Beginning from date of Substantial Completion, for durations indicated in manufacturer's published listings.
   a. Mechanical Warranty
      1) Locks: 10 years
      2) Closers: 30 years

1.08 MAINTENANCE

A. Turn over unused materials to Contracting Officer for maintenance purposes.

PART 2 - PRODUCTS

2.01 MATERIALS

A. Fabrication

1. Provide door hardware manufactured to comply with published templates generally prepared for machine, wood, and sheet metal screws. provide screws according to manufacturer's recognized installation standards for application intended.
2. Finish exposed screws to match hardware finish, or, if exposed in surfaces of other work, to match finish of this other work including prepared for paint surfaces to receive painted finish.
3. Provide concealed fasteners wherever possible for hardware units exposed when door is closed. Coordinate with "Metal Doors and Frames", "Flush Wood Doors", "Stile and Rail Wood Doors" to ensure proper reinforcements. Advise the Contracting Officer where visible fasteners, such as thru bolts, are required.

B. Provide screws, bolts, expansion shields, drop plates and other devices necessary for hardware installation.

1. Where fasteners are exposed to view: Finish to match adjacent door hardware material.

C. Cable and Connectors:

1. Where scheduled in the hardware sets, provide each item of electrified hardware and wire harnesses with number and gage of wires enough to accommodate electric function of specified hardware.
2. Provide Molex connectors that plug directly into connectors from harnesses, electric locking and power transfer devices.
3. Provide through-door wire harness for each electrified locking device installed in a door and wire harness for each electrified hinge, electrified continuous hinge, electrified pivot, and electric power transfer for connection to power supplies.

2.02 HINGES

A. Requirements:

1. Provide hinges conforming to ANSI/BHMA A156.1.
2. Provide five knuckle, ball bearing hinges.
3. 1-3/4 inch thick doors, up to and including 36 inches wide:
   a. Exterior: Standard weight, bronze or stainless steel, 4-1/2 inches high
   b. Interior: Standard weight, steel, 4-1/2 inches high

4. Adjust hinge width for door, frame, and wall conditions to allow proper degree of opening.
5. Provide three hinges per door leaf for doors 90 inches or less in height, and one additional hinge for each 30 inches of additional door height.
6. Hinge Pins: Except as otherwise indicated, provide hinge pins as follows:
   a. Steel Hinges: Steel pins
   b. Non-Ferrous Hinges: Stainless steel pins

c. Out-Swinging Exterior Doors: Non-removable pins
d. Out-Swinging Interior Lockable Doors: Non-removable pins

2.03 FLUSH BOLTS

A. Requirements:

1. Provide automatic, constant latching, and manual flush bolts with forged bronze or stainless-steel face plates, extruded brass levers, and with wrought brass guides and strikes. Provide 12 inch steel or brass rods at doors up to 90 inches in height. For doors over 90 inches in height increase top rods by 6 inches for each additional 6 inches of door height. Provide dust-proof strikes at each bottom flush bolt.

2.04 KEYSWITCHES

A. Requirements:

1. Provide key switches capable of being configured to momentary or maintained action.
2. Provide key switches that accept a mortise cylinder. Cylinders: Refer to "KEYING" article, herein.

2.05 CYLINDERS

A. Manufacturers:

1. Scheduled Manufacturer and Product:
   a. As directed by Contracting Officer.

B. Requirements:

1. Provide cylinders/cores to match Contracting Officer's existing BEST key system, compliant with ANSI/BHMA A156.5; latest revision; cylinder face finished to match lockset, manufacturer's series as indicated. Refer to "KEYING" article, herein.

2.06 KEYING

A. Provide a factory registered keying system, complying with guidelines in ANSI/BHMA A156.28, incorporating decisions made at keying conference.

B. Provide cylinders/cores keyed into Government's existing factory registered keying system. Comply with guidelines in ANSI/BHMA A156.28, incorporating decisions made at keying conference.

C. Requirements:

1. Construction Keying:
   a. Temporary Construction Cylinder Keying.

1) Provide construction cores that permit voiding construction keys without cylinder removal, furnished in accordance with the following requirements.
   a) Split Key or Lost Ball Construction Keying System.
   b) 3 construction control keys, and extractor tools or keys as required to void construction keying.
   c) 12 construction change (day) keys.
2) Contracting Officer will void operation of temporary construction keys.

b. Replaceable Construction Cores.
1) Provide temporary construction cores replaceable by permanent cores, furnished in accordance with the following requirements.
   a) 3 construction control keys
   b) 12 construction change (day) keys.
2) Contracting Officer will replace temporary construction cores with permanent cores.

2. Permanent Keying:
a. Provide permanent cylinders/cores keyed by the manufacturer according to the following key system.
   1) Master Keying system as directed by the Contracting Officer.
b. Forward bitting list and keys separately from cylinders, by means as directed by Contracting Officer. Failure to comply with forwarding requirements will be cause for replacement of cylinders/cores involved at no additional cost to Contracting Officer.
c. Provide keys with the following features:
   1) Material: Nickel silver; minimum thickness of .107-inch
   2) Patent Protection: Keys and blanks protected by one or more utility patent(s).
   3) Geographically Exclusive: Where High Security or Security cylinders/cores are indicated, provide nationwide, geographically exclusive key system complying with the following restrictions.
d. Identification:
   1) Mark permanent cylinders/cores and keys with applicable blind code for identification. Do not provide blind code marks with actual key cuts.
   2) Identification stamping provisions must be approved by the Contracting Officer.
   3) Stamp cylinders/cores and keys with Government's unique key system facility code as established by the manufacturer; key symbol and embossed or stamped with "DO NOT DUPLICATE" along with the "PATENTED" or patent number to enforce the patent protection.
   4) Failure to comply with stamping requirements will be cause for replacement of keys involved at no additional cost to Government.
   5) Forward permanent cylinders/cores to Contracting Officer, separately from keys, by means as directed by Contracting Officer.
e. Quantity: Furnish in the following quantities.
   1) Permanent Control Keys: As required.
   2) Master Keys: As required.
   3) Change (Day) Keys: As required per cylinder/core that is keyed differently
   4) Key Blanks: Quantity as determined in the keying meeting.

2.07 KEY CONTROL SYSTEM

A. Requirements:

1. Provide key control system, including envelopes, labels, tags with self-locking key clips, receipt forms, 3-way visible card index, temporary markers, permanent markers, and standard metal cabinet, all as recommended by system manufacturer, with capacity for 150% of number of locks required for Project.
    a. Provide complete cross index system set up by hardware supplier, and place keys on markers and hooks in cabinet as determined by final key schedule.
    b. Provide hinged-panel type cabinet for wall mounting.

2.08 DOOR CLOSERS

A. Requirements:

1. Provide door closers conforming to ANSI/BHMA A156.4 Grade 1 requirements by BHMA certified independent testing laboratory. ISO 9000 certify closers. Stamp units with date of manufacture code.
2. Provide door closers with fully hydraulic, full rack and pinion action with high strength cast iron cylinder, and full complement bearings at shaft.
3. Cylinder Body: 1-1/2-inch diameter piston with 5/8-inch diameter double heat-treated pinion journal. QR code with a direct link to maintenance instructions.
4. Hydraulic Fluid: Fireproof, passing requirements of UL10C, and requiring no seasonal closer adjustment for temperatures ranging from 120 degrees F to -30 degrees F.
5. Spring Power: Continuously adjustable over full range of closer sizes, and providing reduced opening force as required by accessibility codes and standards. Provide snap-on cover clip, with plastic covers, that secures cover to spring tube.
6. Hydraulic Regulation: By tamper-proof, non-critical valves, with separate adjustment for latch speed, general speed, and backcheck. Provide graphically labelled instructions on the closer body adjacent to each adjustment valve. Provide positive stop on reg valve that prevents reg screw from being backed out.
7. Provide closers with solid forged steel main arms and factory assembled heavy-duty forged forearms for parallel arm closers.
8. Pressure Relief Valve (PRV) Technology: Not permitted.
9. Finish for Closer Cylinders, Arms, Adapter Plates, and Metal Covers: Powder coating finish which has been certified to exceed 100 hours salt spray testing as described in ANSI Standard A156.4 and ASTM B117, or has special rust inhibitor (SRI).
10. Provide special templates, drop plates, mounting brackets, or adapters for arms as required for details, overhead stops, and other door hardware items interfering with closer mounting.

2.09 PROTECTION PLATES

A. Requirements:

1. Provide protection plates with a minimum of 0.050 inch thick, beveled four edges as scheduled. Furnish with sheet metal or wood screws, finished to match plates.
2. Sizes plates 2 inches less width of door on single doors, pairs of doors with a mullion, and doors with edge guards. Size plates 1 inch less width of door on pairs without a mullion or edge guards.

2.10 OVERHEAD STOPS AND OVERHEAD STOP/HOLDERS

A. Requirements:

1. Provide overhead stop at any door where conditions do not allow for a wall stop or floor stop presents tripping hazard.

2.11 DOOR STOPS AND HOLDERS

A. Provide door stops at each door leaf:

1. Provide wall stops wherever possible. Provide concave type where lockset has a push button of thumbturn.
2. Where a wall stop cannot be used, provide universal floor stops.
3. Where wall or floor stop cannot be used, provide overhead stop.
4. Provide roller bumper where doors open into each other and overhead stop cannot be used.

2.12 THRESHOLDS, SEALS, DOOR SWEEPS, AUTOMATIC DOOR BOTTOMS, AND GASKETING

A. Requirements:

1. Provide thresholds, weather-stripping, and gasketing systems as specified and per architectural details. Match finish of other items.
2. Smoke- and Draft-Control Door Assemblies: Where smoke- and draft-control door assemblies are required, provide door hardware that meets requirements of assemblies tested according to UL 1784 and installed in compliance with NFPA 105.
3. Provide door sweeps and seals only of type where resilient or flexible seal strip is easily replaceable and readily available.
4. Size thresholds 1/2 inch high by 5 inches wide by door width unless otherwise specified in the hardware sets or detailed in the drawings.

2.13 SILENCERS

A. Requirements:

1. Provide "push-in" type silencers for hollow metal or wood frames.
2. Provide one silencer per 30 inches of height on each single frame, and two for each pair frame.
3. Omit where gasketing is specified.

2.14 FINISHES

A. FINISH: BHMA 626/652 (US26D); EXCEPT:

1. Hinges at Exterior Doors: BHMA 630 (US32D)
2. Aluminum Geared Continuous Hinges: BHMA 628 (US28)

3. Push Plates, Pulls, and Push Bars: BHMA 630 (US32D)
4. Protection Plates: BHMA 630 (US32D)
5. Overhead Stops and Holders: BHMA 630 (US32D)
6. Door Closers: Powder Coat to Match
7. Wall Stops: BHMA 630 (US32D)
8. Latch Protectors: BHMA 630 (US32D)
9. Weatherstripping: Clear Anodized Aluminum
10. Thresholds: Mill Finish Aluminum

PART 3 - EXECUTION

3.01 EXAMINATION

A. Prior to installation of hardware, examine doors and frames, with Installer present, for compliance with requirements for installation tolerances, labeled fire-rated door assembly construction, wall and floor construction, and other conditions affecting performance. Verify doors, frames, and walls have been properly reinforced for hardware installation.

B. Examine roughing-in for electrical power systems to verify actual locations of wiring connections before electrified door hardware installation.

C. Submit a list of deficiencies in writing and proceed with installation only after unsatisfactory conditions have been corrected.

3.02 INSTALLATION

A. Mount door hardware units at heights to comply with the following, unless otherwise indicated or required to comply with governing regulations.

1. Standard Steel Doors and Frames: ANSI/SDI A250.8.
2. Custom Steel Doors and Frames: HMMA 831.
3. Interior Architectural Wood Flush Doors: ANSI/WDMA I.S. 1A
4. Installation Guide for Doors and Hardware: DHI TDH-007-20

B. Install door hardware in accordance with NFPA 80, NFPA 101 and provide post-install inspection, testing as specified in section 1.03.E unless otherwise required to comply with governing regulations.

C. Install each hardware item in compliance with manufacturer's instructions and recommendations, using only fasteners provided by manufacturer.

D. Do not install surface mounted items until finishes have been completed on substrate. Protect all installed hardware during painting.

E. Set units level, plumb and true to line and location. Adjust and reinforce attachment substrate as necessary for proper installation and operation.

F. Drill and countersink units that are not factory prepared for anchorage fasteners. Space fasteners and anchors according to industry standards.

G. Install operating parts so they move freely and smoothly without binding, sticking, or excessive clearance.

H. Hinges: Install types and in quantities indicated in door hardware schedule but not fewer than quantity recommended by manufacturer for application indicated.

I. Lock Cylinders:

1. Install construction cores to secure building and areas during construction period.
2. Replace construction cores with permanent cores as indicated in keying section.
3. Furnish permanent cores to Government for installation.

J. Wiring: Coordinate with Division 28 ELECTRONIC SAFETY AND SECURITY sections for:

1. Connections to fire/smoke alarm system and smoke evacuation system.
2. Connection of wire to door position switches and wire runs to central room or area, as directed by Contracting Officer.
3. Connections to panel interface modules, controllers, and gateways.
4. Testing and labeling wires with opening number indicated on drawings.

K. Key Control System: Tag keys and place them on markers and hooks in key control system cabinet, as determined by final keying schedule.

L. Continuous Hinges: Re-locate the door and frame fire rating labels where they will remain visible so that the hinge does not cover the label once installed.

M. Door Closers: Mount closers on room side of corridor doors, inside of exterior doors. Mount closers so they are not visible in corridors, unless approved by Contracting Officer.

N. Overhead Stops/Holders: Mount overhead stops/holders on room side of corridor doors, and inside of exterior doors.

O. Power Supplies: Locate power supplies as indicated or, if not indicated, above accessible ceilings or in equipment room, or alternate location as directed by Contracting Officer.

P. Thresholds: Set thresholds in full bed of sealant complying with requirements specified in Division 07 Section "Joint Sealants."

Q. Stops: Provide floor stops for doors unless wall or other type stops are indicated in door hardware schedule. Do not mount floor stops where they may impede traffic or present tripping hazard.

R. Perimeter Gasketing: Apply to head and jamb, forming seal between door and frame.

S. Meeting Stile Gasketing: Fasten to meeting stiles, forming seal when doors are closed.

T. Door Bottoms and Sweeps: Apply to bottom of door, forming seal with threshold when door is closed.

3.03 ADJUSTING

A. Initial Adjustment: Adjust and check each operating item of door hardware and each door to ensure proper operation or function of every unit. Replace units that cannot be adjusted to operate as intended. Adjust door control devices to compensate for final operation of heating and ventilating equipment and to comply with referenced accessibility requirements.

   1. Spring Hinges: Adjust to achieve positive latching when door can close freely from an open position of 30 degrees.
   2. Door Closers: Adjust sweep period to comply with accessibility requirements and requirements of authorities having jurisdiction.

B. Occupancy Adjustment: Approximately three to six months after date of Substantial Completion, examine and readjust each item of door hardware, including adjusting operating forces, as necessary to ensure function of doors and door hardware.

3.04 CLEANING AND PROTECTION

A. Clean adjacent surfaces soiled by door hardware installation.

B. Clean operating items per manufacturer's instructions to restore proper function and finish.

C. Provide final protection and maintain conditions that ensure door hardware is without damage or deterioration at time of Substantial Completion.

3.05 DOOR HARDWARE SCHEDULE

A. The intent of the hardware specification is to specify the hardware for interior and exterior doors, and to establish a type, continuity, and standard of quality. However, it is the door hardware supplier's responsibility to thoroughly review existing conditions, schedules, specifications, drawings, and other Contract Documents to verify the suitability of the hardware specified.

B. Discrepancies, conflicting hardware, and missing items are to be brought to the attention of the Contracting Officer with corrections made prior to the solicitation process. Omitted items not included in a hardware set should be scheduled with the appropriate additional hardware required for proper application.

C. Hardware items are referenced in the following hardware schedule. Refer to the above specifications for special features, options, cylinders/keying, and other requirements.

D. Hardware Sets:

Hardware Set No. 01

For use on Door #(s):
101

Provide each SGL door(s) with the following:

QTY		DESCRIPTION	CATALOG NUMBER		FINISH	MFR
3	EA	HINGE	5BB1HW 4.5 X 4.5 NRP		630	IVE
1	EA	STOREROOM LOCK	ND80 LAT		626	SCH
1	EA	CYLINDER	AS DIRECTED BY CO		626	SCH
1	EA	LOCK GUARD	LG12		630	IVE
1	EA	SURFACE CLOSER	4040XP SCUSH		689	LCN
1	EA	PA MOUNTING PLATE	4040XP-18PA		689	LCN
1	EA	KICK PLATE	8400 10" X 32" LDW B-CS		630	IVE
1	EA	RAIN DRIP	142AA MUST SPAN WIDTH OF FACE FRAME		AA	ZER
1	SET	GASKETING	429AA-S @ HEAD AND JAMBS		AA	ZER
1	EA	DOOR SWEEP	39A		A	ZER
1	EA	THRESHOLD	252x3-A-FG-XX SIZE AS REQUIRED		A	ZER
1	EA	DOOR CONTACT	7764/679-05 AS REQUIRED		BLK	SCE

Hardware Set No. 02

For use on Door #(s):
102-107

Provide each SGL door(s) with the following:

QTY		DESCRIPTION	CATALOG NUMBER		FINISH	MFR
3	EA	HINGE	5BB1 4.5 X 4.5		652	IVE
1	EA	PRIVACY LOCK	ND53 LAT LEVER		626	SCH
1	EA	SURFACE CLOSER	4040XP RW/PA		689	LCN
1	EA	MOUNTING PLATE	4040XP-18 (AS REQUIRED)		689	LCN
1	EA	KICK PLATE	8400 10" X 32" LDW B-CS		630	IVE
1	EA	GASKETING	488S @ HEAD & JAMBS		Gy	ZER

Door#	HwSet#
101	01
102	02
103	02
104	02
105	02
106	02

Door#	HwSet#
107	02

END OF SECTION 08 71 00

SECTION 08 80 00 - GLAZING

PART 1 - GENERAL

1.1 SUMMARY

A. Section Includes:

1. Glass products.
2. Laminated glass.
3. Insulating glass.
4. Glazing sealants.
5. Glazing tapes.
6. Miscellaneous glazing materials.

B. Related Requirements:

1. Section 08 11 13 "Hollow Metal Doors And Frames"
2. Section 08 14 16 "Flush Wood Doors"

1.2 DEFINITIONS

A. Glass Manufacturers: Firms that produce primary glass, fabricated glass, or both, as defined in referenced glazing publications.

B. Glass Thicknesses: Indicated by thickness designations in millimeters in accordance with ASTM C1036.

C. IBC: International Building Code.

D. Interspace: Space between lites of an insulating-glass unit.

1.3 COORDINATION

A. Coordinate glazing channel dimensions to provide necessary bite on glass, minimum edge and face clearances, and adequate sealant thicknesses, with reasonable tolerances to achieve proper safety margins for glazing retention under each design load case, load case combination, and service condition.

1.4 PREINSTALLATION MEETINGS

A. Preinstallation Conference: Conduct conference at Project site.

1. Review and finalize construction schedule and verify availability of materials, Installer's personnel, equipment, and facilities needed to make progress and avoid delays.

2. Review temporary protection requirements for glazing during and after installation.

1.5 ACTION SUBMITTALS

A. Product Data: For each type of product.

B. Glass Samples: For each type of the following products; 12 inches square.

1. Laminated glass.
2. Insulating glass.

C. Glazing Accessory Samples: For sealants, and, colored spacers, in 12-inch lengths.

D. Glazing Schedule: List glass types and thicknesses for each size opening and location. Use same designations indicated on Drawings.

E. Delegated Design Submittal: For glass indicated to comply with performance requirements and design criteria, including analysis data signed and sealed by qualified professional engineer responsible for their preparation.

1.6 INFORMATIONAL SUBMITTALS

A. Qualification Data: For Installer.

B. Product Certificates: For glass.

C. Product Test Reports: For fabricated glass, for tests performed by a qualified testing agency.

1. For glazing sealants, provide test reports based on testing current sealant formulations within previous 36-month period.

D. Preconstruction adhesion and compatibility test report.

E. Sample Warranties: For special warranties.

1.7 QUALITY ASSURANCE

A. Fabricated-Glass Manufacturer Qualifications: A qualified manufacturer of fabricated glass units who is approved by primary glass manufacturer.

B. Installer Qualifications: A qualified glazing contractor for this Project who is certified under the North American Contractor Certification Program (NACC) for Architectural Glass & Metal (AG&M) contractors with 10 years experience on commercial installations.

C. Glass Testing Agency Qualifications: A qualified independent testing agency accredited according to the NFRC CAP 1 Certification Agency Program.

D. Sealant Testing Agency Qualifications: An independent testing agency qualified according to ASTM C1021 to conduct the testing indicated.

1.8 PRECONSTRUCTION TESTING

A. Preconstruction Adhesion and Compatibility Testing: Test each glass product, tape sealant, gasket, glazing accessory, and glass-framing member for adhesion to and compatibility with elastomeric glazing sealants.

1. Testing is not required if data are submitted based on previous testing of current sealant products and glazing materials matching those submitted.
2. Use ASTM C1087 to determine whether priming and other specific joint-preparation techniques are required to obtain rapid, optimum adhesion of glazing sealants to glass, tape sealants, gaskets, and glazing channel substrates.
3. Test no fewer than eight Samples of each type of material, including joint substrates, shims, sealant backings, secondary seals, and miscellaneous materials.
4. Schedule enough time for testing and analyzing results to prevent delaying the Work.
5. For materials failing tests, submit sealant manufacturer's written instructions for corrective measures including use of specially formulated primers.

1.9 DELIVERY, STORAGE, AND HANDLING

A. Protect glazing materials in accordance with manufacturer's written instructions. Prevent damage to glass and glazing materials from condensation, temperature changes, direct exposure to sun, or other causes.

B. Comply with insulating-glass manufacturer's written instructions for venting and sealing units to avoid hermetic seal ruptures due to altitude change.

1.10 FIELD CONDITIONS

A. Environmental Limitations: Do not proceed with glazing when ambient and substrate temperature conditions are outside limits permitted by glazing material manufacturers and when glazing channel substrates are wet from rain, frost, condensation, or other causes.

1. Do not install glazing sealants when ambient and substrate temperature conditions are outside limits permitted by sealant manufacturer or are below 40 deg F.

1.11 WARRANTY

A. Manufacturer's Special Warranty for Coated-Glass Products: Manufacturer agrees to replace coated-glass units that deteriorate within specified warranty period. Deterioration of coated glass is defined as defects developed from normal use that are not attributed to glass breakage or to maintaining and cleaning coated glass contrary to manufacturer's written instructions. Defects include peeling, cracking, and other indications of

deterioration in coating.

1. Warranty Period: 10 years from date of Substantial Completion.

B. Manufacturer's Special Warranty for Laminated Glass: Manufacturer agrees to replace laminated-glass units that deteriorate within specified warranty period. Deterioration of laminated glass is defined as defects developed from normal use that are not attributed to glass breakage or to maintaining and cleaning laminated glass contrary to manufacturer's written instructions. Defects include edge separation, delamination materially obstructing vision through glass, and blemishes exceeding those allowed by referenced laminated-glass standard.

1. Warranty Period: Five years from date of Substantial Completion.

C. Manufacturer's Special Warranty for Insulating Glass: Manufacturer agrees to replace insulating-glass units that deteriorate within specified warranty period. Deterioration of insulating glass is defined as failure of hermetic seal under normal use that is not attributed to glass breakage or to maintaining and cleaning insulating glass contrary to manufacturer's written instructions. Evidence of failure is obstruction of vision by dust, moisture, or film on interior surfaces of glass.

1. Warranty Period: 10 years from date of Substantial Completion.

PART 2 - PRODUCTS

2.1 PERFORMANCE REQUIREMENTS

A. General: Installed glazing systems shall withstand normal thermal movement and wind and impact loads (where applicable) without failure, including loss or glass breakage attributable to defective manufacture, fabrication, or installation; failure of sealants or gaskets to remain watertight and airtight; deterioration of glazing materials; or other defects in construction.

B. Safety Glazing: Where safety glazing is indicated, provide glazing that complies with 16 CFR 1201, Category II.

C. Thermal and Optical Performance Properties: Provide glass with performance properties specified, as indicated in manufacturer's published test data, based on procedures indicated below:

1. For monolithic-glass lites, properties are based on units with lites of thickness indicated.
2. For laminated-glass lites, properties are based on products of construction indicated.
3. For insulating-glass units, properties are based on units of thickness indicated for overall unit and for each lite.
4. U-Factors: Center-of-glazing values, in accordance with NFRC 100 and based on most current non-beta version of LBL's WINDOW computer program, expressed as Btu/sq. ft. x h x deg F.

5. SHGC and Visible Transmittance: Center-of-glazing values, in accordance with NFRC 200 and based on most current non-beta version of LBL's WINDOW computer program.
6. Visible Reflectance: Center-of-glazing values, in accordance with NFRC 300.

2.2 GLASS PRODUCTS, GENERAL

A. Glazing Publications: Comply with published recommendations of glass product manufacturers and organizations below unless more stringent requirements are indicated. See these publications for glazing terms not otherwise defined in this Section or in referenced standards.

1. NGA Publications: "Laminated Glazing Reference Manual" and "Glazing Manual."
2. AAMA Publications: AAMA GDSG-1, "Glass Design for Sloped Glazing," and AAMA TIR A7, "Sloped Glazing Guidelines."
3. IGMA Publication for Sloped Glazing: IGMA TB-3001, "Guidelines for Sloped Glazing."
4. IGMA Publication for Insulating Glass: SIGMA TM-3000, "North American Glazing Guidelines for Sealed Insulating Glass Units for Commercial and Residential Use."

B. Safety Glazing Labeling: Where safety glazing is indicated, permanently mark glazing with certification label of manufacturer. Label shall indicate manufacturer's name, type of glass, thickness, and safety glazing standard with which glass complies.

C. Thickness: Where glass thickness is indicated, it is a minimum. Provide glass that complies with performance requirements and is not less than thickness indicated.

1. Minimum Glass Thickness for Exterior Lites: 6mm

D. Strength: Where annealed float glass is indicated, provide annealed float glass, heat-strengthened float glass, or fully tempered float glass. Where heat-strengthened float glass is indicated, provide heat-strengthened float glass or fully tempered float glass. Where fully tempered float glass is indicated, provide fully tempered float glass.

2.3 GLASS PRODUCTS

A. Clear Annealed Float Glass: ASTM C1036, Type I, Class 1 (clear), Quality-Q3.

B. Fully Tempered Float Glass: ASTM C1048, Kind FT (fully tempered), Condition A (uncoated) unless otherwise indicated, Type I, Class 1 (clear) or Class 2 (tinted) as indicated, Quality-Q3.

1. Fabrication Process: By horizontal (roller-hearth) process with roll-wave distortion parallel to bottom edge of glass as installed unless otherwise indicated.

2.4 INSULATING GLASS

A. Insulating-Glass Units: Factory-assembled units consisting of sealed lites of glass separated by a dehydrated interspace, qualified in accordance with ASTM E2190.

1. Sealing System: Dual seal, with manufacturer's standard primary and secondary sealants.
2. Perimeter Spacer: Aluminum with bronze, color anodic finish.
3. Desiccant: Molecular sieve or silica gel, or a blend of both.

2.5 GLAZING SEALANTS

A. General:

1. Compatibility: Compatible with one another and with other materials they contact, including glass products, seals of insulating-glass units, and glazing channel substrates, under conditions of service and application, as demonstrated by sealant manufacturer based on testing and field experience.
2. Suitability: Comply with sealant and glass manufacturers' written instructions for selecting glazing sealants suitable for applications indicated and for conditions existing at time of installation.
3. Colors of Exposed Glazing Sealants: As selected by Contracting Officer.

2.6 GLAZING TAPES

A. Back-Bedding Mastic Glazing Tapes: Preformed, butyl-based, 100 percent solids elastomeric tape; nonstaining and nonmigrating in contact with nonporous surfaces; with or without spacer rod as recommended in writing by tape and glass manufacturers for application indicated; and complying with ASTM C1281 and AAMA 800 for products indicated below:

1. AAMA 804.3 tape, where indicated.
2. AAMA 806.3 tape, for glazing applications in which tape is subject to continuous pressure.
3. AAMA 807.3 tape, for glazing applications in which tape is not subject to continuous pressure.

B. Expanded Cellular Glazing Tapes: Closed-cell, PVC foam tapes; factory coated with adhesive on both surfaces; and complying with AAMA 800 for the following types:

1. AAMA 810.1, Type 1, for glazing applications in which tape acts as primary sealant.
2. AAMA 810.1, Type 2, for glazing applications in which tape is used in combination with a full bead of liquid sealant.

2.7 MISCELLANEOUS GLAZING MATERIALS

A. General: Provide products of material, size, and shape complying with referenced

glazing standard, recommended in writing by manufacturers of glass and other glazing materials for application indicated, and with a proven record of compatibility with surfaces contacted in installation.

B. Cleaners, Primers, and Sealers: Types recommended by sealant or gasket manufacturer.

2.8 FABRICATION OF GLAZING UNITS

A. Fabricate glazing units in sizes required to fit openings indicated for Project, with edge and face clearances, edge and surface conditions, and bite complying with written instructions of product manufacturer and referenced glazing publications, to comply with system performance requirements.

1. Allow for thermal movements from ambient and surface temperature changes acting on glass framing members and glazing components.

a. Temperature Change: 120 deg F, ambient; 180 deg F, material surfaces.

B. Clean-cut or flat-grind vertical edges of butt-glazed monolithic lites to produce square edges with slight chamfers at junctions of edges and faces.

C. Grind smooth and polish exposed glass edges and corners.

PART 3 - EXECUTION

3.1 EXAMINATION

A. Examine framing, glazing channels, and stops, with Installer present, for compliance with the following:

1. Manufacturing and installation tolerances, including those for size, squareness, and offsets at corners.
2. Presence and functioning of weep systems.
3. Minimum required face and edge clearances.
4. Effective sealing between joints of glass-framing members.

B. Proceed with installation only after unsatisfactory conditions have been corrected.

3.2 PREPARATION

A. Clean glazing channels and other framing members receiving glass immediately before glazing. Remove coatings not firmly bonded to substrates.

B. Examine glazing units to locate exterior and interior surfaces. Label or mark units as needed so that exterior and interior surfaces are readily identifiable. Do not use materials that leave visible marks in the completed Work.

3.3 GLAZING, GENERAL

A. Comply with combined written instructions of manufacturers of glass, sealants, gaskets, and other glazing materials, unless more stringent requirements are indicated, including those in referenced glazing publications.

B. Protect glass edges from damage during handling and installation. Remove damaged glass from Project site and legally dispose of off Project site. Damaged glass includes glass with edge damage or other imperfections that, when installed, could weaken glass, impair performance, or impair appearance.

C. Apply primers to joint surfaces where required for adhesion of sealants, as determined by preconstruction testing.

D. Install setting blocks in sill rabbets, sized and located to comply with referenced glazing publications, unless otherwise required by glass manufacturer. Set blocks in thin course of compatible sealant suitable for heel bead.

E. Do not exceed edge pressures stipulated by glass manufacturers for installing glass lites.

F. Provide spacers for glass lites where length plus width is larger than 50 inches.

1. Locate spacers directly opposite each other on both inside and outside faces of glass. Install correct size and spacing to preserve required face clearances, unless gaskets and glazing tapes are used that have demonstrated ability to maintain required face clearances and to comply with system performance requirements.
2. Provide 1/8-inch- minimum bite of spacers on glass and use thickness equal to sealant width. With glazing tape, use thickness slightly less than final compressed thickness of tape.

G. Provide edge blocking where indicated or needed to prevent glass lites from moving sideways in glazing channel, as recommended in writing by glass manufacturer and in accordance with requirements in referenced glazing publications.

H. Set glass lites in each series with uniform pattern, draw, bow, and similar characteristics.

I. Set glass lites with proper orientation so that coatings face exterior or interior as specified.

J. Where wedge-shaped gaskets are driven into one side of channel to pressurize sealant or gasket on opposite side, provide adequate anchorage so gasket cannot walk out when installation is subjected to movement.

K. Square cut wedge-shaped gaskets at corners and install gaskets in a manner recommended by gasket manufacturer to prevent corners from pulling away; seal corner joints and butt joints with sealant recommended in writing by gasket manufacturer.

3.4 TAPE GLAZING

A. Position tapes on fixed stops so that, when compressed by glass, their exposed edges are

flush with or protrude slightly above sightline of stops.

B. Install tapes continuously, but not necessarily in one continuous length. Do not stretch tapes to make them fit opening.

C. Cover vertical framing joints by applying tapes to heads and sills first, then to jambs. Cover horizontal framing joints by applying tapes to jambs, then to heads and sills.

D. Place joints in tapes at corners of opening with adjoining lengths butted together, not lapped. Seal joints in tapes with compatible sealant approved by tape manufacturer.

E. Do not remove release paper from tape until right before each glazing unit is installed.

F. Apply heel bead of elastomeric sealant.

G. Center glass lites in openings on setting blocks, and press firmly against tape by inserting dense compression gaskets formed and installed to lock in place against faces of removable stops. Start gasket applications at corners and work toward centers of openings.

H. Apply cap bead of elastomeric sealant over exposed edge of tape.

3.5 GASKET GLAZING (DRY)

A. Cut compression gaskets to lengths recommended by gasket manufacturer to fit openings exactly, with allowance for stretch during installation.

B. Insert soft compression gasket between glass and frame or fixed stop so it is securely in place with joints miter cut and bonded together at corners.

C. Installation with Drive-in Wedge Gaskets: Center glass lites in openings on setting blocks, and press firmly against soft compression gasket by inserting dense compression gaskets formed and installed to lock in place against faces of removable stops. Start gasket applications at corners and work toward centers of openings. Compress gaskets to produce a weathertight seal without developing bending stresses in glass. Seal gasket joints with sealant recommended in writing by gasket manufacturer.

D. Installation with Pressure-Glazing Stops: Center glass lites in openings on setting blocks, and press firmly against soft compression gasket. Install dense compression gaskets and pressure-glazing stops, applying pressure uniformly to compression gaskets. Compress gaskets to produce a weathertight seal without developing bending stresses in glass. Seal gasket joints with sealant recommended in writing by gasket manufacturer.

E. Install gaskets so they protrude past face of glazing stops.

3.6 SEALANT GLAZING (WET)

A. Install continuous spacers, or spacers combined with cylindrical sealant backing, between glass lites and glazing stops to maintain glass face clearances and to prevent sealant from extruding into glass channel and blocking weep systems until sealants cure.

Secure spacers or spacers and backings in place and in position to control depth of installed sealant relative to edge clearance for optimum sealant performance.

B. Force sealants into glazing channels to eliminate voids and to ensure complete wetting or bond of sealant to glass and channel surfaces.

C. Tool exposed surfaces of sealants to provide a substantial wash away from glass.

3.7 CLEANING AND PROTECTION

A. Immediately after installation, remove nonpermanent labels and clean surfaces.

B. Protect glass from contact with contaminating substances resulting from construction operations. Examine glass surfaces adjacent to or below exterior concrete and other masonry surfaces at frequent intervals during construction, but not less than once a month, for buildup of dirt, scum, alkaline deposits, or stains.

1. If, despite such protection, contaminating substances do contact with glass, remove substances immediately as recommended in writing by glass manufacturer. Remove and replace glass that cannot be cleaned without damage to coatings.

C. Remove and replace glass that is damaged during construction period.

D. Wash glass on both exposed surfaces not more than four days before date scheduled for inspections that establish date of Substantial Completion. Wash glass as recommended in writing by glass manufacturer.

3.8 INSULATING GLASS SCHEDULE

A. Low-E-Coated, Clear Insulating Glass Type <GL1> at exterior door lites, as indicated in drawings:

1. Basis of Design product: Vitro Architectural Glass; Solarban R100
2. Overall Unit Thickness: 1 inch.
3. Minimum Thickness of Each Glass Lite: 6 mm.
4. Outdoor Lite: Fully tempered float glass.
5. Interspace Content: Argon.
6. Indoor Lite: Fully tempered float glass.
7. Low-E Coating: Pyrolytic on third surface.
8. U-Factor: As indicated in drawings.
9. Visible Light Transmittance: 42 percent minimum.
10. SHGC: 0.64 maximum.
11. Safety glazing required.

3.9 MONOLITHIC GLASS SCHEDULE

A. Clear Glass Type <GL2> at interior door lites, as indicated in drawings: Fully tempered float glass.

1. Minimum Thickness: 6 mm.
2. Safety glazing required.

END OF SECTION 08 80 00

SECTION 09 29 00 - GYPSUM BOARD

PART 1 - GENERAL

1.1 SUMMARY

A. Section Includes:

1. Interior gypsum wallboard.
2. Acoustical sealant.
3. Fire-retardant wood nailers.

B. Related Requirements:

1. Section 05 40 00 “Cold-Formed Metal Framing” for non-structural steel framing and suspension systems that support gypsum board panels.
2. Section 07 21 00 "Thermal Insulation" for acoustic insulation.

1.2 REFERENCE STANDARDS

A. ASTM C840 - Standard Specification for Application and Finishing of Gypsum Board; 2019b.

B. ASTM C1047 - Standard Specification for Accessories For Gypsum Wallboard and Gypsum Veneer Base; 2019.

C. ASTM C1396/C1396M - Standard Specification for Gypsum Board; 2017.

D. ASTM E90 - Standard Test Method for Laboratory Measurement of Airborne Sound Transmission Loss of Building Partitions and Elements; 2009 (Reapproved 2016).

E. ASTM E413 - Classification for Rating Sound Insulation; 2016.

F. GA-216 - Application and Finishing of Gypsum Panel Products; 2016.

1.3 ACTION SUBMITTALS

A. Product Data: For the following:

1. Gypsum wallboard.
2. Acoustical sealant.

B. Shop Drawings: Show locations and installation of control and expansion joints, including plans, elevations, sections, details of components, and attachments to other work.

C. Samples: For the following products:

1.4 DELIVERY, STORAGE AND HANDLING

A. Store materials inside under cover and keep them dry and protected against weather, condensation, direct sunlight, construction traffic, and other potential causes of damage. Stack panels flat and supported on risers on a flat platform to prevent sagging.

1.5 FIELD CONDITIONS

A. Environmental Limitations: Comply with ASTM C840 requirements or gypsum board manufacturer's written instructions, whichever are more stringent.

B. Do not install paper-faced gypsum panels until installation areas are enclosed and conditioned.

C. Do not install panels that are wet, moisture damaged, and mold damaged.

1. Indications that panels are wet or moisture damaged include, but are not limited to, discoloration, sagging, or irregular shape.
2. Indications that panels are mold damaged include, but are not limited to, fuzzy or splotchy surface contamination and discoloration.

PART 2 - PRODUCTS

2.1 GYPSUM BOARD, GENERAL

A. Recycled Content: Postconsumer recycled content plus one-half of preconsumer recycled content not less than 10 percent.

B. Size: Provide maximum lengths and widths available that will minimize joints in each area and that correspond with support system indicated.

2.2 INTERIOR GYPSUM BOARD

A. General gypsum Wallboard: Paper-faced, gypsum panels as defined in ASTM C1396/C1396M; sizes to minimize joints in place; ends square cut.

2.3 TRIM ACCESSORIES

A. Interior Trim: ASTM C1047.

1. Material: Galvanized or aluminum-coated steel sheet, rolled zinc, plastic, or paper-faced galvanized-steel sheet.
2. Shapes:

a. Cornerbead.
b. Bullnose bead.
c. LC-Bead: J-shaped; exposed long flange receives joint compound.

d. L-Bead: L-shaped; exposed long flange receives joint compound.
e. U-Bead: J-shaped; exposed short flange does not receive joint compound.
f. Expansion (control) joint.
g. Curved-Edge Cornerbead: With notched or flexible flanges.

B. Exterior Trim: ASTM C1047.

1. Material: Hot-dip galvanized-steel sheet, plastic, or rolled zinc.
2. Shapes:

a. Cornerbead.
b. LC-Bead: J-shaped; exposed long flange receives joint compound.
c. Expansion (Control) Joint: One-piece, rolled zinc with V-shaped slot and removable strip covering slot opening.

2.4 JOINT TREATMENT MATERIALS

A. General: Comply with ASTM C475/C475M.

B. Joint Tape:

1. Interior Gypsum Board: Paper.

C. Joint Compound for Interior Gypsum Board: For each coat, use formulation that is compatible with other compounds applied on previous or for successive coats.

1. Prefilling: At open joints, rounded or beveled panel edges, and damaged surface areas, use setting-type taping compound.
2. Embedding and First Coat: For embedding tape and first coat on joints, fasteners, and trim flanges, use drying-type, all-purpose compound.

a. Use setting-type compound for installing paper-faced metal trim accessories.

3. Fill Coat: For second coat, use setting-type, sandable topping compound.
4. Finish Coat: For third coat, use setting-type, sandable topping compound.

2.5 FIRE-RETARDANT-TREATED NAILERS

A. General: Where fire-retardant-treated materials are indicated, materials are to comply with requirements in this article, that are acceptable to authorities having jurisdiction, and with fire-test-response characteristics specified as determined by testing identical products per test method indicated by a qualified testing agency.

B. Fire-Retardant-Treated Lumber and Plywood by Pressure Process: Products with a flame-spread index of 25 or less when tested in accordance with ASTM E84, and with no evidence of significant progressive combustion when the test is extended an additional 20 minutes, and with the flame front not extending more than 10.5 feet beyond the centerline of the burners at any time during the test.

1. Treatment is not to promote corrosion of metal fasteners.

2. Exterior Type: Treated materials are to comply with requirements specified above for fire-retardant-treated lumber and plywood by pressure process after being subjected to accelerated weathering in accordance with ASTM D2898. Use for exterior locations and where indicated.
3. Design Value Adjustment Factors: Treated lumber is to be tested according to ASTM D5664 and design value adjustment factors are to be calculated according to ASTM D6841.

C. Identify fire-retardant-treated wood with appropriate classification marking of qualified testing agency and other information required by authorities having jurisdiction.

D. Application: Treat all rough carpentry unless otherwise indicated.

1. Concealed blocking.
2. Wood nailers, blocking, and similar members in connection with roofing.

2.6 AUXILIARY MATERIALS

A. Provide auxiliary materials that comply with referenced installation standards and manufacturer's written instructions.

B. Laminating Adhesive: Adhesive or joint compound recommended for directly adhering gypsum panels to continuous substrate.

C. Steel Drill Screws: ASTM C1002 unless otherwise indicated.

1. Use screws complying with ASTM C954 for fastening panels to steel members from 0.033 to 0.112 inch thick.

D. Thermal Insulation: As specified in Section 07 21 00 "Thermal Insulation."

E. Vapor Retarder: As specified in Section 07 26 00 "Vapor Retarders."

2.7 TEXTURE FINISHES

A. Primer: As recommended by textured finish manufacturer.

PART 3 - EXECUTION

3.1 EXAMINATION

A. Examine areas and substrates including welded hollow-metal frames and support framing, with Installer present, for compliance with requirements and other conditions affecting performance of the Work.

B. Examine panels before installation. Reject panels that are wet, moisture damaged, and mold damaged.

C. Proceed with installation only after unsatisfactory conditions have been corrected.

3.2 INSTALLATION OF INTERIOR GYPSUM BOARD

A. Install interior gypsum board in the following locations:

1. Wallboard Type: As indicated on Drawings.
2. Ceiling Type: As indicated on Drawings.

B. Single-Layer Application:

1. On ceilings, apply gypsum panels before wall/partition board application to greatest extent possible and at right angles to framing unless otherwise indicated.
2. On partitions/walls, apply gypsum panels horizontally (perpendicular to framing) unless otherwise indicated or required by fire-resistance-rated assembly, and minimize end joints.

    a. Stagger abutting end joints not less than one framing member in alternate courses of panels.
    b. At high walls, install panels horizontally unless otherwise indicated or required by fire-resistance-rated assembly.

3. Fastening Methods: Apply gypsum panels to supports with steel drill screws.

C. Laminating to Substrate: Where gypsum panels are indicated as directly adhered to a substrate (other than studs, joists, furring members, or base layer of gypsum board), comply with gypsum board manufacturer's written instructions and temporarily brace or fasten gypsum panels until fastening adhesive has set.

3.3 FINISHING OF GYPSUM BOARD

A. General: Treat gypsum board joints, interior angles, edge trim, control joints, penetrations, fastener heads, surface defects, and elsewhere as required to prepare gypsum board surfaces for decoration. Promptly remove residual joint compound from adjacent surfaces.

B. Prefill open joints and damaged surface areas.

C. Apply joint tape over gypsum board joints, except for trim products specifically indicated as not intended to receive tape.

D. Gypsum Board Finish Levels: Finish panels to levels indicated below and in accordance with ASTM C840:

1. Level 1: Ceiling plenum areas, concealed areas, and where indicated.
2. Level 2: Not used
3. Level 3: Not used.
4. Level 4: At panel surfaces that will be exposed to view unless otherwise indicated.

    a. Primer and its application to surfaces are specified in Section 09 91 23

"Interior Painting."

5. Level 5: Not used.

3.4 APPLICATION OF TEXTURE FINISHES

A. Surface Preparation and Primer: Prepare and apply primer to gypsum panels and other surfaces receiving texture finishes. Apply primer to surfaces that are clean, dry, and smooth.

B. Texture Finish Application: Mix and apply finish using powered spray equipment, to produce a uniform texture free of starved spots or other evidence of thin application or of application patterns.

C. Prevent texture finishes from coming into contact with surfaces not indicated to receive texture finish by covering them with masking agents, polyethylene film, or other means. If, despite these precautions, texture finishes contact these surfaces, immediately remove droppings and overspray to prevent damage according to texture-finish manufacturer's written instructions.

3.5 INSPECTION

A. Contractor will commence inspection immediately after finishing work. Observations, measurements, and other notes will be recorded using DSC-CQC Accessibility Inspection Report as basis. Report can include digital images, product literature, drawings and sketches, etc. to communicate conditions, especially items not in compliance with ABAAS. Submit report to CO within 24 hours of commencing inspection.

3.6 PROTECTION

A. Protect adjacent surfaces from drywall compound and promptly remove from floors and other non-drywall surfaces. Repair surfaces stained, marred, or otherwise damaged during drywall application.

B. Protect installed products from damage from weather, condensation, direct sunlight, construction, and other causes during remainder of the construction period.

C. Remove and replace panels that are wet, moisture damaged, and mold damaged.

1. Indications that panels are wet or moisture damaged include, but are not limited to, discoloration, sagging, or irregular shape.
2. Indications that panels are mold damaged include, but are not limited to, fuzzy or splotchy surface contamination and discoloration.

END OF SECTION 09 29 00

SECTION 09 65 13 - RESILIENT BASE AND ACCESSORIES

PART 1 - GENERAL

1.1 SUMMARY

A. Section Includes:

1. Resilient wall base and accessories.
2. Substrate Preparation.

1.2 ACTION SUBMITTALS

A. Product Data: For each type of product, submit manufacturer's technical data sheet, care & maintenance document, submittal and/or warranty.

B. Samples: For each exposed product and for each color and texture specified, not less than 12 inches long.

C. Samples for Verification: For each type of product indicated and for each color, texture, and pattern required in manufacturer's standard-size Samples, but not less than 12 inches long.

1.3 QUALITY ASSURANCE

A. Manufacturer Qualifications: Provide resilient flooring materials manufactured in the United States of America by a firm with a minimum of 10 years' experience with resilient flooring materials of type equivalent to those specified.

1. Manufacturer's quality management system must have ISO 9001:2000 approval.
2. Provide resilient flooring products, including wall base, accessories and subfloor preparation products from one manufacturer to ensure color matching and compatibility.
3. Manufacturer shall be capable of providing technical training and technical field service representation.

B. Installer Qualifications: Installer must be professional, licensed, insured and acceptable to manufacturer of resilient flooring materials. Project Managers or Field Supervisors must be INSTALL (International Standards & Training Alliance) certified, CFI (Certified Floorcovering Installers) Certified and/or an FCICA (The Flooring Contractors Association) CIM (Certified Installation Manager) for the requirements of the project.

1.4 MAINTENANCE MATERIAL SUBMITTALS

A. Furnish extra materials that match products installed and that are packaged with protective covering for storage and identified with labels describing contents.

1. Furnish not less than 10 linear feet for every 500 linear feet or fraction thereof, of each type, color, pattern, and size of resilient product installed.

1.5 DELIVERY, STORAGE, AND HANDLING

A. Deliver materials in labeled packages. Store and handle in strict compliance with manufacturer's recommendations. Protect from damage due to weather, excessive temperatures, and construction operations.

B. Deliver materials sufficiently in advance of installation to condition materials to the required temperature for 48-hours prior to installation.

1.6 FIELD CONDITIONS

A. Maintain ambient temperatures within range recommended by manufacturer, but not less than 70 deg F or more than 95 deg F, in spaces to receive resilient products during the following periods:

1. 48 hours before installation.
2. During installation.
3. 48 hours after installation.

B. After installation and until Substantial Completion, maintain ambient temperatures within range recommended by manufacturer, but not less than 55 deg F or more than 95 deg F.

C. Install resilient products after other finishing operations, including painting, have been completed.

1.7 WARRANTY

A. Provide manufacturer’s standard limited commercial warranty to cover manufacturing defects.

PART 2 - PRODUCTS

2.1 RESILIENT WALL BASE

A. Rubber Wall Base:

1. Material Specification: ASTM F1861, Type TS – rubber, vulcanized thermoset, Group 1 – solid, (homogenous), Style B – Cove
2. Material Height: 4 inches
3. Material Thickness: ASTM F386, 1/8 inch
4. Material Length: 120 feet sections
5. Color: as selected from manufacturer’s full range.

a. Basis of Design: Roppe Pinnacle Type TS, 114 Lunar Dust

6. Limited Warranty: 1 year, manufacturing only
7. Material & Composition: 100% vulcanized homogenous rubber compound comprised of a premium blend & SBR rubber materials
8. Surface Burning: ASTM E84/NFPA 25, Class B
9. Substrate Preparation: Per ASTM F710

2.2 INSTALLATION MATERIALS

A. Adhesives: Water-resistant type recommended by resilient-product manufacturer for resilient products and substrate conditions indicated.

PART 3 - EXECUTION

3.1 EXAMINATION

A. Examine substrates, with Installer present, for compliance with requirements for maximum moisture content and other conditions affecting performance of the Work.

1. Verify that finishes of substrates comply with tolerances and other requirements specified in other Sections and that substrates are free of cracks, ridges, depressions, scale, and foreign deposits that might interfere with adhesion of resilient products.

B. Proceed with installation only after unsatisfactory conditions have been corrected.

1. Installation of resilient products indicates acceptance of surfaces and conditions.

3.2 PREPARATION

A. Prepare substrates according to manufacturer's written instructions to ensure adhesion of resilient products.

B. Fill cracks, holes, and depressions in substrates with trowelable leveling and patching compound; remove bumps and ridges to produce a uniform and smooth substrate.

C. Do not install resilient products until materials are the same temperature as space where they are to be installed.

1. At least 48 hours in advance of installation, move resilient products and installation materials into spaces where they will be installed.

D. Immediately before installation, sweep and vacuum clean substrates to be covered by resilient products.

3.3 RESILIENT BASE INSTALLATION

A. Comply with manufacturer's written instructions for installing resilient base.

B. Apply resilient base to walls, casework and cabinets in toe spaces, and other permanent fixtures in rooms and areas where base is required.

C. Install resilient base in lengths as long as practical without gaps at seams and with tops of adjacent pieces aligned.

D. Do not install any pieces of resilient base that are less than 2 feet in length where a longer piece could be used.

E. Tightly adhere resilient base to substrate throughout length of each piece, with base in continuous contact with horizontal and vertical substrates.

F. Do not stretch resilient base during installation.

G. Job-Formed Corners:

1. Outside Corners: Use straight pieces of maximum lengths possible and form with returns not less than 3 inches in length.

   a. Form without producing discoloration (whitening) at bends.

2. Inside Corners: Use straight pieces of maximum lengths possible and form with returns not less than 3 inches in length.

   a. Miter or cope corners to minimize open joints.

3.4 RESILIENT ACCESSORY INSTALLATION

A. Comply with manufacturer's written instructions for installing resilient accessories.

B. Resilient Molding Accessories: Butt to adjacent materials and tightly adhere to substrates throughout length of each piece. Install reducer strips at edges of floor covering that would otherwise be exposed.

3.5 CLEANING AND PROTECTION

A. Comply with manufacturer's written instructions for cleaning and protecting resilient products.

B. Perform the following operations immediately after completing resilient-product installation:

1. Remove adhesive and other blemishes from surfaces.

C. Protect resilient products from mars, marks, indentations, and other damage from construction operations and placement of equipment and fixtures during remainder of

construction period.

D. Cover resilient products subject to wear and foot traffic until Substantial Completion.

END OF SECTION 09 65 13

SECTION 09 91 13 - EXTERIOR PAINTING

PART 1 - GENERAL

1.1 RELATED DOCUMENTS

A. Drawings and general provisions of the Contract, including General and Supplementary Conditions and Division 01 Specification Sections, apply to this Section.

1.2 SUMMARY

A. Section Includes:

1. Primers and finish coatings for hollow metal doors and frames.

B. Related Requirements:

1. Section 08 11 13 “Hollow Metal Doors and Frames”.

1.3 ACTION SUBMITTALS

A. Product Data: For each type of product.

1. Include preparation requirements and application instructions.
2. Indicate VOC content.

B. Samples: For each type of topcoat product.

C. Samples for Initial Selection: For each type of topcoat product.

D. Samples for Verification: For each type of paint system and each color and gloss of topcoat.

1. Submit Samples on rigid backing, 8 inches square.
2. Apply coats on Samples in steps to show each coat required for system.
3. Label each coat of each Sample.
4. Label each Sample for location and application area.

1.4 MAINTENANCE MATERIAL SUBMITTALS

A. Furnish extra materials that match products installed and that are packaged with protective covering for storage and identified with labels describing contents.

1. Paint Products: 5 percent, but not less than 1 gal. of each material and color applied.

1.5 QUALITY ASSURANCE

A. Warranty: period from date of Substantial Completion is 15 years.

1.6 DELIVERY, STORAGE, AND HANDLING

A. Store materials not in use in tightly covered containers in well-ventilated areas with ambient temperatures continuously maintained at not less than 45 deg F.

1. Maintain containers in clean condition, free of foreign materials and residue.
2. Remove rags and waste from storage areas daily.

1.7 FIELD CONDITIONS

A. Apply paints only when temperature of surfaces to be painted and ambient air temperatures are between 50 and 95 deg F.

B. Do not apply paints in snow, rain, fog, or mist; when relative humidity exceeds 85 percent; at temperatures less than 5 deg F above the dew point; or to damp or wet surfaces.

PART 2 - PRODUCTS

2.1 PAINT PRODUCTS, GENERAL

A. Material Compatibility:

1. Provide materials for use within each paint system that are compatible with one another and substrates indicated, under conditions of service and application as demonstrated by manufacturer based on testing and field experience.
2. For each coat in a paint system, provide products recommended in writing by topcoat manufacturer for use in paint system and on substrate indicated.

B. Colors: As selected by Contracting Officer from manufacturer's full line to match adjacent trim color.

2.2 PRIMERS

A. Exterior, Alkali-Resistant, Water-Based Primer: Pigmented, water-based primer formulated for use on alkaline surfaces, such as exterior plaster, vertical concrete, and masonry.

B. Water-Based Bonding Primer: Pigmented, water-based-emulsion primer formulated for exterior use and to promote adhesion of subsequent specified coatings.

2.3 FINISH COATINGS

A. Exterior Latex Paint, Semigloss: Water-based, pigmented emulsion coating formulated for alkali, mold, microbial, and water resistance and for use on exterior surfaces, such as masonry, portland cement plaster, and primed wood and metal.

1. Gloss Level: Manufacturer's standard semigloss finish.

PART 3 - EXECUTION

3.1 EXAMINATION

A. Examine substrates and conditions, with Applicator present, for compliance with requirements for maximum moisture content and other conditions affecting performance of the Work.

B. Verify suitability of substrates, including surface conditions and compatibility, with finishes and primers.

C. Proceed with coating application only after unsatisfactory conditions have been corrected.

1. Application of coating indicates acceptance of surfaces and conditions.

3.2 PREPARATION

A. Comply with manufacturer's written instructions applicable to substrates and paint systems indicated.

B. Remove hardware, covers, plates, and similar items already in place that are removable and are not to be painted. If removal is impractical or impossible because of size or weight of item, provide surface-applied protection before surface preparation and painting.

1. After completing painting operations, use workers skilled in the trades involved to reinstall items that were removed. Remove surface-applied protection.

C. Clean substrates of substances that could impair bond of paints, including dust, dirt, oil, grease, and incompatible paints and encapsulants.

1. Remove incompatible primers and reprime substrate with compatible primers or apply tie coat as required to produce paint systems specified in this Section.

3.3 INSTALLATION

A. Apply paints in accordance with manufacturer's written instructions.

1. Use applicators and techniques suited for paint and substrate indicated.
2. Paint surfaces behind movable items same as similar exposed surfaces. Before final installation, paint surfaces behind permanently fixed items with prime coat only.

3. Paint exterior side and edges of exterior doors and entire exposed surface of exterior door frames.
4. Do not paint over labels of independent testing agencies or equipment name, identification, performance rating, or nomenclature plates.
5. Primers specified in the Exterior Painting Schedule may be omitted on items that are factory primed or factory finished if compatible with intermediate and topcoat coatings and acceptable to intermediate and topcoat paint manufacturers.

B. Tint undercoats same color as topcoat, but tint each undercoat a lighter shade to facilitate identification of each coat if multiple coats of same material are to be applied. Provide sufficient difference in shade of undercoats to distinguish each separate coat.

C. If undercoats or other conditions show through topcoat, apply additional coats until cured film has a uniform paint finish, color, and appearance.

D. Apply paints to produce surface films without cloudiness, spotting, holidays, laps, brush marks, roller tracking, runs, sags, ropiness, or other surface imperfections. Cut in sharp lines and color breaks.

3.4 CLEANING AND PROTECTION

A. At end of each workday, remove rubbish, empty cans, rags, and other discarded materials from Project site.

1. Do not clean equipment with free-draining water and prevent solvents, thinners, cleaners, and other contaminants from entering into waterways, sanitary and storm drain systems, and ground.
2. Dispose of contaminants in accordance with requirements of authorities having jurisdiction.
3. Allow empty paint cans to dry before disposal.
4. Collect waste paint by type and deliver to recycling or collection facility.

B. After completing paint application, clean spattered surfaces. Remove spattered paints by washing, scraping, or other methods. Do not scratch or damage adjacent finished surfaces.

C. Protect work of other trades against damage from paint application. Correct damage to work of other trades by cleaning, repairing, replacing, and refinishing, as approved by Contracting Officer, and leave in an undamaged condition.

D. At completion of construction activities of other trades, touch up and restore damaged or defaced painted surfaces.

END OF SECTION 09 91 13

SECTION 09 91 24 - INTERIOR PAINTING (MPI STANDARDS)

PART 1 - GENERAL

1.1 SUMMARY

A. Section includes surface preparation and the application of paint systems on the following interior substrates:

1. Gypsum board.
2. Hollow metal doors.
3. Miscellaneous equipment.

B. Related Requirements:

1. Section 06 20 23 "Interior Finish Carpentry".
2. Section 08 11 13 “Hollow Metal Doors and Frames”.
3. Section 09 29 00 “Gypsum Board”.

1.2 DEFINITIONS

A. MPI Gloss Level 1: Not more than five units at 60 degrees and 10 units at 85 degrees, according to ASTM D523.

B. MPI Gloss Level 2: Not more than 10 units at 60 degrees and 10 to 35 units at 85 degrees, according to ASTM D523.

C. MPI Gloss Level 3: 10 to 25 units at 60 degrees and 10 to 35 units at 85 degrees, according to ASTM D523.

D. MPI Gloss Level 4: 20 to 35 units at 60 degrees and not less than 35 units at 85 degrees, according to ASTM D523.

E. MPI Gloss Level 5: 35 to 70 units at 60 degrees, according to ASTM D523.

F. MPI Gloss Level 6: 70 to 85 units at 60 degrees, according to ASTM D523.

G. MPI Gloss Level 7: More than 85 units at 60 degrees, according to ASTM D523.

1.3 ACTION SUBMITTALS

A. Product Data: For each type of product. Include preparation requirements and application instructions.

1. Include printout of current "MPI Approved Products List" for each product category specified, with the proposed product highlighted.
2. Indicate VOC content.

B. Samples for Verification: For each type of paint system and in each color and gloss of topcoat.

1. Submit Samples on rigid backing, 8 inches square.
2. Apply coats on Samples in steps to show each coat required for system.
3. Label each coat of each Sample.
4. Label each Sample for location and application area.

C. Product List: Use same designations indicated on Drawings and in the Interior Painting Schedule to cross-reference paint systems specified in this Section. Include color designations.

1.4 MAINTENANCE MATERIAL SUBMITTALS

A. Furnish extra materials that match products installed and that are packaged with protective covering for storage and identified with labels describing contents.

1. Paint: 5 percent, but not less than 1 gal. of each material and color applied.

1.5 QUALITY ASSURANCE

A. Mockups: Apply mockups of each paint system indicated and each color and finish selected to verify preliminary selections made under Sample submittals and to demonstrate aesthetic effects and set quality standards for materials and execution.

1. Contracting Officer will select one surface to represent surfaces and conditions for application of each paint system.

a. Vertical and Horizontal Surfaces: Provide samples of at least 100 sq. ft..
b. Other Items: Contracting Officer will designate items or areas required.

2. Final approval of color selections will be based on mockups.

a. If preliminary color selections are not approved, apply additional mockups of additional colors selected by Contracting Officer at no added cost to Government.

3. Approval of mockups does not constitute approval of deviations from the Contract Documents contained in mockups unless Contracting Officer specifically approves such deviations in writing.
4. Subject to compliance with requirements, approved mockups may become part of the completed Work if undisturbed at time of Substantial Completion.

1.6 DELIVERY, STORAGE, AND HANDLING

A. Store materials not in use in tightly covered containers in well-ventilated areas with ambient temperatures continuously maintained at not less than 45 deg F.

1. Maintain containers in clean condition, free of foreign materials and residue.

2. Remove rags and waste from storage areas daily.

1.7 FIELD CONDITIONS

A. Apply paints only when temperature of surfaces to be painted and ambient air temperatures are between 50 and 95 deg F.

B. Do not apply paints when relative humidity exceeds 85 percent; at temperatures of less than 5 deg F above the dew point; or to damp or wet surfaces.

PART 2 - PRODUCTS

2.1 PAINT PRODUCTS, GENERAL

A. Material Compatibility:

1. Materials for use within each paint system shall be compatible with one another and substrates indicated, under conditions of service and application as demonstrated by manufacturer, based on testing and field experience.
2. For each coat in a paint system, products shall be recommended in writing by topcoat manufacturers for use in paint system and on substrate indicated.

B. VOC Content: Comply with the following VOC limits established in South Coast Air Quality Management District (SCAQMD) Rule 1113, Architectural Coatings.

1. Flats: 50 g/L
2. Non-Flats: 150 g/L

C. Colors: As selected by Contracting Officer from manufacturer's full line. Basis of design noted in “Interior Painting Schedule”.

2.2 PRIMERS

A. Interior Latex Primer Sealer: Water-based latex sealer used on new interior plaster, concrete, and gypsum wallboard surfaces.

B. Interior, Institutional Low-Odor/VOC Primer Sealer: Water-based primer sealer with low-odor characteristics and a VOC of less than 10 grams per liter for use on new interior plaster, concrete, and gypsum wallboard surfaces that are subsequently to be painted with latex finish coats.

C. Interior Latex Primer for Wood: Waterborne-emulsion primer formulated for resistance to extractive bleeding, mold, and microbials; for hiding stains; and for use on interior wood subject to extractive bleeding.

2.3 WATER-BASED FINISH COATS

A. Interior, Latex, Low Sheen: Pigmented, water-based paint for use on primed/sealed interior gypsum board and on primed wood and metals.

1. Gloss and Sheen Level: Manufacturer's standard low-sheen finish.

B. Interior, Latex, Eggshell: Pigmented, water-based paint for use on primed/sealed interior gypsum board and on primed wood and metals.

1. Gloss and Sheen Level: Manufacturer's standard eggshell finish.

C. Interior, Latex, Satin: Pigmented, water-based paint for use on primed/sealed interior gypsum board and on primed wood and metals.

1. Gloss and Sheen Level: Manufacturer's standard low-sheen finish.

D. Interior, Latex, Semigloss: Pigmented, water-based paint for use on primed/sealed interior gypsum board and on primed wood.

1. Gloss Level: Manufacturer's standard semigloss finish.

PART 3 - EXECUTION

3.1 EXAMINATION

A. Examine substrates and conditions, with Applicator present, for compliance with requirements for maximum moisture content and other conditions affecting performance of the Work.

B. Maximum Moisture Content of Substrates: When measured with an electronic moisture meter as follows:

1. Gypsum Board: 12 percent.

C. Gypsum Board Substrates: Verify that finishing compound is sanded smooth.

D. Verify suitability of substrates, including surface conditions and compatibility, with existing finishes and primers.

E. Proceed with coating application only after unsatisfactory conditions have been corrected.

1. Application of coating indicates acceptance of surfaces and conditions.

3.2 PREPARATION

A. Comply with manufacturer's written instructions and recommendations in "MPI

Architectural Painting Specification Manual" applicable to substrates and paint systems indicated.

B. Remove hardware, covers, plates, and similar items already in place that are removable and are not to be painted. If removal is impractical or impossible because of size or weight of item, provide surface-applied protection before surface preparation and painting.

1. After completing painting operations, use workers skilled in the trades involved to reinstall items that were removed. Remove surface-applied protection if any.

C. Clean substrates of substances that could impair bond of paints, including dust, dirt, oil, grease, and incompatible paints and encapsulants.

1. Remove incompatible primers and reprime substrate with compatible primers or apply tie coat as required to produce paint systems indicated.

3.3 INSTALLATION

A. Apply paints according to manufacturer's written instructions and to recommendations in "MPI Manual."

1. Use applicators and techniques suited for paint and substrate indicated.
2. Paint surfaces behind movable equipment and furniture same as similar exposed surfaces. Before final installation, paint surfaces behind permanently fixed equipment or furniture with prime coat only.
3. Paint front and backsides of access panels, removable or hinged covers, and similar hinged items to match exposed surfaces.
4. Do not paint over labels of independent testing agencies or equipment name, identification, performance rating, or nomenclature plates.
5. Primers specified in painting schedules may be omitted on items that are factory primed or factory finished if acceptable to topcoat manufacturers.

B. Tint each undercoat a lighter shade to facilitate identification of each coat if multiple coats of same material are to be applied. Tint undercoats to match color of topcoat, but provide sufficient difference in shade of undercoats to distinguish each separate coat.

C. If undercoats or other conditions show through topcoat, apply additional coats until cured film has a uniform paint finish, color, and appearance.

D. Apply paints to produce surface films without cloudiness, spotting, holidays, laps, brush marks, roller tracking, runs, sags, ropiness, or other surface imperfections. Cut in sharp lines and color breaks.

E. Painting Plumbing, HVAC, Electrical, Communication, and Electronic Safety and Security Work:

1. Paint the following work where exposed in occupied spaces unless otherwise indicated on Drawings:

a. Equipment, including panelboards.
b. Uninsulated metal piping.
c. Uninsulated plastic piping.
d. Pipe hangers and supports.
e. Metal conduit.
f. Plastic conduit.

2. Paint portions of internal surfaces of metal ducts, without liner, behind air inlets and outlets that are visible from occupied spaces.
3. Color to be selected by CO from manufacturer's full line. Design intent is to match adjacent finish color.

3.4 CLEANING AND PROTECTION

A. At end of each workday, remove rubbish, empty cans, rags, and other discarded materials from Project site.

B. After completing paint application, clean spattered surfaces. Remove spattered paints by washing, scraping, or other methods. Do not scratch or damage adjacent finished surfaces.

C. Protect work of other trades against damage from paint application. Correct damage to work of other trades by cleaning, repairing, replacing, and refinishing, as approved by Contracting Officer, and leave in an undamaged condition.

D. At completion of construction activities of other trades, touch up and restore damaged or defaced painted surfaces.

3.5 INTERIOR PAINTING SCHEDULE

A. Gypsum Board Substrates:

1. Institutional Low-Odor/VOC Latex System:

a. Prime Coat: Primer sealer, interior, institutional low odor/VOC:

1) Basis of Design: ProMar 200 Zero V.O.C. Latex Primer

b. Intermediate Coat: Latex, interior, institutional low odor/VOC, matching topcoat.
c. Topcoat:

1) Latex, interior, institutional low odor/VOC, flat (MPI Gloss Level 1).

a) Basis of Design: Sherwin Williams Promar 200 Zero Voc

2) Latex, interior, institutional low odor/VOC (MPI Gloss Level 3).

a) Basis of Design: Sherwin Williams Promar 200 Zero Voc

2. Basis of design colors:

a. Gypsum walls basis of design: Sherwin Williams 7042 “Shoji White”

1) Gloss level: Matte.

b. Gypsum ceiling basis of design: Sherwin Williams 7005 “Pure White”

1) Gloss level: Flat

END OF SECTION 09 91 24

SECTION 10 14 23.16 - ROOM-IDENTIFICATION PANEL SIGNAGE

PART 1 - GENERAL

1.1 SUMMARY

A. Section includes room-identification signs that are directly attached to the building. Signage shall match existing within the building.

1.2 REFERENCE STANDARDS

A. ABAAS Standards – Architectural Barriers Accessibility Act Standards (Accessibility Standards for Federal Projects)

B. ASTM E84 - Standard Test Method for Surface Burning Characteristics of Building Materials; 2019b

C. ICC A117.1 - Accessible and Usable Buildings and Facilities; 2017

1.3 COORDINATION

A. Furnish templates for placement of sign-anchorage devices embedded in permanent construction by other installers.

1.4 ACTION SUBMITTALS

A. Product Data: For each type of product.

B. Shop Drawings: For room-identification signs.

1. Include fabrication and installation details and attachments to other work.
2. Show sign mounting heights, locations of supplementary supports to be provided by other installers, and accessories.
3. Show message list, typestyles, graphic elements, including raised characters and Braille, and layout for each sign at least half size.

C. Samples for Initial Selection: For each type of sign assembly, exposed component, and exposed finish.

1. Include representative Samples of available typestyles and graphic symbols.

D. Samples for Verification: For each type of sign assembly showing all components and with the required finish(es), in manufacturer's standard size unless otherwise indicated and as follows:

1. Room-Identification Signs: Full-size Sample.

2. Variable Component Materials: 8-inch Sample of each base material, character (letter, number, and graphic element) in each exposed color and finish not included in Samples above.
3. Exposed Accessories: Half-size Sample of each accessory type.
4. Full-size Samples, if approved, will be returned to Contractor for use in Project.

E. Product Schedule: For room-identification signs. Use same designations determined by Contracting Officer.

1.5 INFORMATIONAL SUBMITTALS

A. Qualification Data: For manufacturer.

B. Sample Warranty: For special warranty.

1.6 CLOSEOUT SUBMITTALS

A. Maintenance Data: For signs to include in maintenance manuals.

1.7 MAINTENANCE MATERIAL SUBMITTALS

A. Furnish extra materials that match products installed and that are packaged with protective covering for storage and identified with labels describing contents.

1.8 QUALITY ASSURANCE

A. Installer Qualifications: Manufacturer of products.

1.9 FIELD CONDITIONS

A. Field Measurements: Verify locations of anchorage devices embedded in permanent construction by other installers by field measurements before fabrication, and indicate measurements on Shop Drawings.

1.10 WARRANTY

A. Special Warranty: Manufacturer agrees to repair or replace components of signs that fail in materials or workmanship within specified warranty period.

1. Failures include, but are not limited to, the following:

a. Deterioration of finishes beyond normal weathering.
b. Deterioration of embedded graphic image.
c. Separation or delamination of sheet materials and components.

2. Warranty Period: Five years from date of Substantial Completion.

PART 2 - PRODUCTS

2.1 PERFORMANCE REQUIREMENTS

A. Accessibility Standard: Comply with applicable provisions in the ABA standards of the Federal agency having jurisdiction.

2.2 SIGN MATERIALS

A. Vinyl Film: UV-resistant vinyl film with pressure-sensitive, permanent adhesive; die cut to form characters or images as indicated on Drawings.

B. Paints and Coatings for Sheet Materials: Inks, dyes, and paints that are recommended by manufacturer for optimum adherence to surface and are UV and water resistant for colors and exposure indicated.

2.3 ACCESSORIES

A. Fasteners and Anchors: Manufacturer's standard as required for secure anchorage of signs, noncorrosive and compatible with each material joined, and complying with the following:

1. Use concealed fasteners and anchors unless indicated to be exposed.
2. Sign Mounting Fasteners:

a. Concealed Studs: Concealed (blind), threaded studs welded or brazed to back of sign material or screwed into back of sign assembly unless otherwise indicated.
b. Through Fasteners: Exposed metal fasteners matching sign finish, with type of head indicated, and installed in predrilled holes.

B. Adhesive: As recommended by sign manufacturer.

C. Two-Face Tape: Manufacturer's standard high-bond, foam-core tape, 0.045 inch thick, with adhesive on both sides.

D. Hook-and-Loop Tape: Manufacturer's standard two-part tape consisting of hooked part on sign back and looped side on mounting surface.

E. Magnetic Tape: Manufacturer's standard magnetic tape with adhesive on one side.

2.4 FABRICATION

A. General: Provide manufacturer's standard sign assemblies according to requirements indicated.

1. Preassemble signs and assemblies in the shop to greatest extent possible. Disassemble signs and assemblies only as necessary for shipping and handling

limitations. Clearly mark units for reassembly and installation; apply markings in locations concealed from view after final assembly.

2. Mill joints to a tight, hairline fit. Form assemblies and joints exposed to weather to resist water penetration and retention.
3. Conceal connections if possible; otherwise, locate connections where they are inconspicuous.
4. Provide rabbets, lugs, and tabs necessary to assemble components and to attach to existing work. Drill and tap for required fasteners. Use concealed fasteners where possible; use exposed fasteners that match sign finish.

B. Subsurface-Applied Graphics: Apply graphics to back face of clear face-sheet material to produce precisely formed image. Image shall be free of rough edges.

C. Subsurface-Etched Graphics: Reverse etch back face of clear face-sheet material. Fill resulting copy with manufacturer's standard enamel. Apply opaque manufacturer's standard background color coating over enamel-filled copy.

2.5 GENERAL FINISH REQUIREMENTS

A. Protect mechanical finishes on exposed surfaces from damage by applying a strippable, temporary protective covering before shipping.

B. Appearance of Finished Work: Noticeable variations in same piece are not acceptable. Variations in appearance of adjoining components are acceptable if they are within the range of approved Samples and are assembled or installed to minimize contrast.

2.6 ALUMINUM FINISHES

A. Clear Anodic Finish: AAMA 611, Class I, 0.018 mm or thicker.

B. Baked-Enamel or Powder-Coat Finish: AAMA 2603 except with a minimum dry film thickness of 1.5 mils. Comply with coating manufacturer's written instructions for cleaning, conversion coating, and applying and baking finish.

PART 3 - EXECUTION

3.1 INSTALLATION

A. General: Install signs using mounting methods indicated and according to manufacturer's written instructions.

1. Install signs level, plumb, true to line, and at locations and heights indicated, with sign surfaces free of distortion and other defects in appearance.
2. Install signs so they do not protrude or obstruct according to the accessibility standard.
3. Before installation, verify that sign surfaces are clean and free of materials or debris that would impair installation.

B. Accessibility: Install signs in locations on walls as indicated on Drawings and according to the accessibility standard.

C. Mounting Methods:

1. Concealed Studs: Using a template, drill holes in substrate aligning with studs on back of sign. Remove loose debris from hole and substrate surface.

   a. Thin or Hollow Surfaces: Place sign in position and flush to surface, install washers and nuts on studs projecting through opposite side of surface, and tighten.

2. Through Fasteners: Drill holes in substrate using predrilled holes in sign as template. Countersink holes in sign if required. Place sign in position and flush to surface. Install through fasteners and tighten.
3. Adhesive: Clean bond-breaking materials from substrate surface and remove loose debris. Apply linear beads or spots of adhesive symmetrically to back of sign and of suitable quantity to support weight of sign after cure without slippage. Keep adhesive away from edges to prevent adhesive extrusion as sign is applied and to prevent visibility of cured adhesive at sign edges. Place sign in position, and push to engage adhesive. Temporarily support sign in position until adhesive fully sets.
4. Two-Face Tape: Clean bond-breaking materials from substrate surface and remove loose debris. Apply tape strips symmetrically to back of sign and of suitable quantity to support weight of sign without slippage. Keep strips away from edges to prevent visibility at sign edges. Place sign in position, and push to engage tape adhesive.
5. Hook-and-Loop Tape: Clean bond-breaking materials from substrate surface and remove loose debris. Apply sign component of two-part tape strips symmetrically to back of sign and of suitable quantity to support weight of sign without slippage; push to engage tape adhesive. Keep tape strips 0.25 inch away from edges to prevent visibility at sign edges when sign is initially installed or reinstalled. Apply substrate component of tape to substrate in locations aligning with tape on back of sign; push and rub well to fully engage tape adhesive to substrate.
6. Magnetic Tape: Clean bond-breaking materials from substrate surface and remove loose debris. Apply tape strips symmetrically to back of sign and of suitable quantity to support weight of sign without slippage. Keep strips away from edges to prevent visibility at sign edges. Place sign in position.

3.2 INSPECTION

A. Contractor will commence inspection immediately after finishing work. Observations, measurements, and other notes will be recorded using DSC-CQC Accessibility Inspection Report as basis. Report can include digital images, product literature, drawings and sketches, etc. to communicate conditions, especially items not in compliance with ABAAS. Submit report to CO within 24 hours of commencing inspection.

3.3 ADJUSTING AND CLEANING

A. Remove and replace damaged or deformed signs and signs that do not comply with specified requirements. Replace signs with damaged or deteriorated finishes or components that cannot be successfully repaired by finish touchup or similar minor repair procedures.

B. Remove temporary protective coverings and strippable films as signs are installed.

C. On completion of installation, clean exposed surfaces of signs according to manufacturer's written instructions, and touch up minor nicks and abrasions in finish. Maintain signs in a clean condition during construction and protect from damage until acceptance by Contracting Officer.

END OF SECTION 10 14 23.16

SECTION 23 05 00 - COMMON WORK RESULTS FOR HVAC

PART 1 - GENERAL

1.1 RELATED DOCUMENTS

A. Drawings and general provisions of the Contract, including General and Supplementary Conditions and Division 1 Specification Sections, apply to this Section.

1.2 SUMMARY

A. This Section includes:
   1. Piping materials and installation instructions common to most piping systems.
   2. Concrete equipment base construction requirements.
   3. Equipment nameplate data requirements.
   4. Nonshrink grout for equipment installations.
   5. Field-fabricated metal and wood equipment supports.
   6. Installation requirements common to equipment specification sections.
   7. Mechanical demolition.
   8. Cutting and patching.
   9. Touch-up painting and finishing.

B. The plans and specifications are complimentary and shall be used together in order to fully describe the Work. In the case of a conflict between the plans and specifications, the plans take precedence.

C. The Design Team has based the drawings and design on non-certified information furnished by various equipment manufacturers. It is incumbent on the part of the CONTRACTOR to include in the bid all material and labor needed to install the actual equipment furnished.

D. Related Sections:
   1. The following is work of Division 26 sections of the Specifications:
      a. Power supply wiring from power source to power connection on equipment. Include starters, disconnects, and required electrical devices, except where specified as furnished, or factory-installed, by manufacturer.
      b. Interlock wiring between field-installed equipment, except where specified as factory installed. Interlock wiring, as used in this specification, is defined as that wiring between electrically-interlocked equipment for the purpose of controlling one piece or pieces of equipment by the operation (on, off, etc.) of another piece or pieces of associated equipment.

E. Testing and inspecting services are required to verify compliance with requirements specified or indicated. These services do not relieve Contractor of responsibility for compliance with the Contract Document requirements.
   1. Specific quality-assurance and -control requirements for individual construction activities are specified in the Sections that specify those activities. Requirements in those Sections may also cover production of standard products.
   2. Specified tests, inspections, and related actions do not limit Contractor's other quality-assurance and -control procedures that facilitate compliance with the Contract Document requirements.
   3. Requirements for Contractor to provide quality-assurance and -control services required by Contracting Officer, or authorities having jurisdiction are not limited by provisions of this Section.

4. Specific test and inspection requirements are not specified in this Section.

1.3 DEFINITIONS

A. Finished Spaces: Spaces other than mechanical and electrical equipment rooms, furred spaces, pipe chases, unheated spaces immediately below roof, and spaces above ceilings.

B. Exposed, Interior Installations: Exposed to view indoors. Examples include finished occupied spaces and mechanical equipment rooms.

C. Exposed, Exterior Installations: Exposed to view outdoors or subject to outdoor ambient temperatures and weather conditions. Examples include rooftop locations.

D. Concealed, Interior Installations: Concealed from view and protected from physical contact by building occupants. Examples include above ceilings and in chases.

E. Concealed, Exterior Installations: Concealed from view and protected from weather conditions and physical contact by building occupants but subject to outdoor ambient temperatures. Examples include installations within unheated shelters.

F. The following are industry abbreviations for plastic materials:
   1. ABS: Acrylonitrile-butadiene-styrene plastic.
   2. CPVC: Chlorinated polyvinyl chloride plastic.
   3. PE: Polyethylene plastic.
   4. PVC: Polyvinyl chloride plastic.

G. The following are industry abbreviations for rubber materials:
   1. EPDM: Ethylene-propylene-diene terpolymer rubber.
   2. NBR: Acrylonitrile-butadiene rubber.

1.4 REFERENCES

A. Applicable Standards:
   1. American Society for Testing and Materials (ASTM):
      a. A47 - Ferritic Malleable Iron Castings.
      b. A53 - Pipe, Steel, Black and Hot-Dipped, Zinc-Coated Welded and Seamless.
      c. A126 - Gray Iron castings for Valves, Flanges, and Pipe Fittings.
      d. A536 - Ductile Iron Castings.
      e. B32 - Solder Metal.
      f. C1107 - Packaged Dry, Hydraulic-Cement Grout (Nonshrink).
      g. D709 - Laminated Thermosetting Materials.
   2. American Society of Mechanical Engineers (ASME):
      a. Boiler and Pressure Vessel Code.
      b. A13.1 - Scheme for the Identification of Piping Systems.
      c. B1.20.1 - Pipe Threads, General Purpose (Inch).
      d. B16.20 - Ring-Joint Gaskets and Grooves for Steel Pipe Flanges.
      e. B16.21 - Nonmetallic Flat Gaskets for Pipe Flanges.
      f. B18.2.1 - Square and Hex Bolts and Screws-Inch Series.
      g. B31 Series - Code for Pressure Piping.
   3. American Welding Society (AWS):
      a. Soldering Manual, latest.
      b. Brazing Manual, latest.
      c. A5.8 - Filler Metals for Brazing.
      d. D1.1 - Structural Welding Code for Steel.
      e. D10.12 - Recommended Practices and Procedures for Welding Low Carbon Steel Pipe.

1.5 SUBMITTALS

A. Submit manufacturer's data sheets on all system components, including the following:
   1. Transition fittings
   2. Dielectric fittings
   3. Mechanical sleeve seals
   4. Escutcheons

B. General, all Division 23 sections of the Specifications: Follow the procedures specified in Division 1. Prepare maintenance manuals in accordance with Division 1 sections of the Specifications.

C. Welder certificates signed by Contractor certifying that welders comply with requirements specified under the "Quality Assurance" article of this section.

1.6 QUALITY ASSURANCE

A. Qualify welding processes and operators for structural steel according to AWS D1.1.

B. Pressure Vessels: Prior to installation and acceptance, any power boiler, low-pressure heating boiler, or unfire pressure vessel operated at pressures of 15 pounds per square inch or greater, furnished under this contract will be stamped with ASME Boiler and Pressure Vessel Code Symbol and a National Board of Boiler and Pressure Vessel Inspector's number, thus certifying that the vessel has been fabricated and tested per the provisions of the ASME Boiler and Pressure Vessel Code. Manufacturers' data reports (unless exempted by the ASME Code) will be filed with the National Board in Columbus, Ohio. Two copies of these data reports shall be submitted to the Contracting Officer. Testing, certification, and registration will be at the expense of the Contractor.

C. Electrical Characteristics for Mechanical Equipment: Equipment of higher electrical characteristics may be furnished provided such proposed equipment is approved in writing and connecting electrical services, circuit breakers, and conduit sizes are appropriately modified. If minimum energy ratings or efficiencies are specified, equipment shall comply with requirements.

D. Manufacturer's Technical Representative's Field Reports: Prepare written information documenting manufacturer's technical representative's tests and inspections specified in other Sections. Include the following:
   1. Name, address, and telephone number of technical representative making report.
   2. Statement on condition of substrates and their acceptability for installation of product.
   3. Statement that products at Project site comply with requirements.
   4. Summary of installation procedures being followed, whether they comply with requirements and, if not, what corrective action was taken.
   5. Results of operational and other tests and a statement of whether observed performance complies with requirements.
   6. Statement whether conditions, products, and installation will affect warranty.
   7. Other required items indicated in individual Specification Sections.

E. Factory-Authorized Service Representative's Reports: Prepare written information documenting manufacturer's factory-authorized service representative's tests and inspections specified in other Sections. Include the following:
   1. Name, address, and telephone number of factory-authorized service representative making report.
   2. Statement that equipment complies with requirements.

3. Results of operational and other tests and a statement of whether observed performance complies with requirements.
4. Statement whether conditions, products, and installation will affect warranty.
5. Other required items indicated in individual Specification Sections.

F. Manufacturer Qualifications: A firm experienced in manufacturing products or systems similar to those indicated for this Project and with a record of successful in-service performance, as well as sufficient production capacity to produce required units.

G. Fabricator Qualifications: A firm experienced in producing products similar to those indicated for this Project and with a record of successful in-service performance, as well as sufficient production capacity to produce required units.

H. Installer Qualifications: A firm or individual experienced in installing, erecting, or assembling work similar in material, design, and extent to that indicated for this Project, whose work has resulted in construction with a record of successful in-service performance.

I. Manufacturer's Technical Representative Qualifications: An authorized representative of manufacturer who is trained and approved by manufacturer to observe and inspect installation of manufacturer's products that are similar in material, design, and extent to those indicated for this Project.

J. Factory-Authorized Service Representative Qualifications: An authorized representative of manufacturer who is trained and approved by manufacturer to inspect installation of manufacturer's products that are similar in material, design, and extent to those indicated for this Project.

1.7 DELIVERY, STORAGE, AND PROTECTION

A. Deliver pipes and tubes with factory-applied end caps. Maintain end caps through shipping, storage, and handling to prevent pipe-end damage and prevent entrance of dirt, debris, and moisture.

B. Protect stored pipes ducts and tubes from moisture and dirt. Elevate above grade. When stored inside, do not exceed structural capacity of the floor.

C. Protect flanges, fittings, and ducting/piping specialties from moisture and dirt.

D. Store plastic pipes protected from direct sunlight. Support to prevent sagging and bending.

E. Materials and equipment furnished by others.
1. When equipment or materials are indicated to be furnished by others (F.B.O.) or by government furnished equipment (GFE) to the CONTRACTOR for installation and connection, the CONTRACTOR shall make a complete check of all materials and furnish a receipt to the Contracting Officer detailing the products received and the condition of the products delivered to him. After executing the receipt and acceptance by the CONTRACTOR, the CONTRACTOR shall assume full responsibility for the safe keeping, handling, and installation of the materials and equipment furnished by others or furnished by government, until completed installation and final approval by the Contracting Officer.
2. If the CONTRACTOR fails to issue said receipt it shall be assumed that all equipment and materials were then delivered to the CONTRACTOR in the proper quantities and in perfect condition.

1.8 PROJECT SITE CONDITIONS

A. Altitude Ratings: Unless otherwise noted, all specified equipment capacities, air quantities, etc., are for an altitude of 3,960 feet above sea level. Adjustments to manufacturers' ratings must be made accordingly.

1.9 SEQUENCING AND SCHEDULING

A. Coordinate mechanical piping, ducting, and equipment installation with other building components.

B. Arrange for chases, slots, and openings in building structure during progress of construction, to allow for mechanical installations.

C. Coordinate the installation of required supporting devices and set sleeves in poured-in-place concrete and other structural components, as they are constructed.

D. Sequence, coordinate, and integrate installations of mechanical materials and equipment for efficient flow of the work. Coordinate installation of large equipment requiring positioning prior to closing in the building.

E. Interruption of Mechanical Utilities:
   1. The Contractor shall not interrupt any main interior or exterior mechanical utility without written request for an outage and a subsequent approval of Contracting Officer nor shall he interrupt any branch line to an outlet or item of equipment without approval from the Contracting Officer.
   2. Written request for outages shall be submitted seven calendar days in advance of the outage date. This request will delineate the particular utility or service in question, the time the service will be interrupted and the approximate hours the utility shall be off.
   3. Unless otherwise noted on the drawings, or directed, any tie-ins or connections to existing utilities or equipment that necessitate interruptions of service shall be performed on a during non standard hours.
   4. The work to be performed during the interruption, will be preceded by all possible preparation, and will be carefully coordinated to minimize the duration of the interruption and work will proceed continuously until the system is restored to normal.

F. Coordinate installation of identifying devices after completion of covering and painting, where devices are applied to surfaces. Install identifying devices prior to installation of acoustical ceilings and similar concealment.

PART 2 - PRODUCTS

2.1 MATERIALS

A. Refer to specific Division 23 sections for further details on materials and equipment listed below.

B. Pipe and Pipe Fittings:
   1. Refer to individual piping system specification sections for pipe and fitting materials and joining methods.
   2. Pipe Threads: ASME B1.20.1 for factory-threaded pipe and pipe fittings.

C. Joining Materials:

1. Solder Filler Metal: ASTM B32.
    a. Alloy Sn95 or Alloy Sn94: Tin (approximately 95%) and silver (approximately 5%), having 0.10% lead content.
    b. Alloy E: Tin (approximately 95%) and copper (approximately 5%), having 0.10% maximum lead content.
    c. Alloy HA: Tin-antimony-silver-copper-zinc, having 0.10% maximum lead content.
    d. Alloy HB: Tin-antimony-silver-copper-nickel, having 0.10% maximum lead content.
    e. Alloy Sb5: Tin (95%) and antimony (5%), having 0.20% maximum lead content.
2. Brazing Filler Metals: AWS A5.8.
    a. BCuP Series: Copper-phosphorous alloys.
    b. BAgl: Silver alloy.
3. Welding Filler Metals: Comply with AWS D10.12 for welding materials appropriate for wall thickness and chemical analysis of steel pipe being welded.

D. Piping Specialties:
1. Dielectric Fittings: Assembly or fitting having insulating material isolating joined dissimilar metals, to prevent galvanic action and stop corrosion.
    a. Description: Combination of copper alloy and ferrous; threaded, solder, plain, and weld neck end types and matching piping system materials.
    b. Insulating Material: Suitable for system fluid, pressure, and temperature.
    c. Dielectric Unions: Factory-fabricated, union assembly, for 250 psig minimum working pressure at 180°F temperature.
    d. Dielectric Flanges: Factory-fabricated, companion-flange assembly, for 150 or 300 psig minimum pressure to suit system pressures.
    e. Dielectric-Flange Insulation Kits: Field-assembled, companion-flange assembly, full-face or ring type. Components include neoprene or phenolic gasket, phenolic or polyethylene bolt sleeves, phenolic washers, and steel backing washers.
        1) Provide separate companion flanges and steel bolts and nuts for 150- or 300-psig minimum working pressure to suit system pressures.
        2) Dielectric Couplings: Galvanized steel coupling, having inert and noncorrosive, thermoplastic lining, with threaded ends and 300-psig minimum working pressure at 225°F temperature.
        3) Dielectric Nipples: Electroplated steel nipple, having inert and noncorrosive, thermoplastic lining, with combination of plain, threaded, or grooved end types and 300-psig working pressure at 225°F temperature.
2. Mechanical Sleeve Seals: Modular, watertight, mechanical type. Components include interlocking synthetic rubber links shaped to continuously fill annular space between pipe and sleeve. Connecting bolts and pressure plates cause rubber sealing elements to expand when tightened.
3. Sleeves: The following materials are for wall, floor, slab, and roof penetrations:
    a. Steel Pipe: ASTM A53, Type E, Grade A, Schedule 40, galvanized, plain ends.
    b. Wall Penetration Systems: Wall sleeve assembly, consisting of housing, gaskets, and pipe sleeve, with one mechanical joint end conforming to AWWA C110 and one plain pipe sleeve end.
        1) Penetrating Pipe Deflection: 5% without leakage.
        2) Housing: Ductile-iron casting having water stop and anchor ring, with ductile-iron gland, steel studs and nuts, and rubber gasket conforming to AWWA C111, of housing and gasket size as required to fit penetrating pipe.
        3) Pipe Sleeve: AWWA C151, ductile-iron pipe.

4) Housing-to-Sleeve Gasket: Rubber or neoprene, push-on type, of manufacturer's design.

c. Cast-Iron Sleeve Fittings: Commercially made sleeve having integral clamping flange, with clamping ring, bolts, and nuts for membrane flashing.

E. Grout: Nonshrink, Nonmetallic Grout: ASTM C1107, Grade B.

1. Characteristics: Post-hardening, volume-adjusting, dry, hydraulic-cement grout, nonstaining, noncorrosive, nongaseous, and recommended for interior and exterior applications.
2. Design Mix: 5000 psi, 28-day compressive strength.

PART 3 - EXECUTION

3.1 ERECTION INSTALLATION APPLICATION

A. Mechanical Systems - Common Requirements:

1. General: Install piping and ducting as described below, except where system sections specify otherwise. Individual piping system specification sections in Division 23 specify piping installation requirements unique to the piping system.
2. General Locations and Arrangements: Drawings (plans, schematics, and diagrams) indicate general location and arrangement of mechanical systems. Indicated locations and arrangements were used to size pipe and calculate friction loss, expansion, pump sizing, and other design considerations. Install as indicated, except where deviations to layout are approved on coordination drawings.
3. Install piping at indicated slope.
4. Install components having pressure rating equal to or greater than system operating pressure.
5. Install piping in concealed interior and exterior locations, except in equipment rooms and service areas.
6. Install ducting and piping free of sags and bends.
7. Install exposed interior and exterior ducting and piping at right angles or parallel to building walls. Diagonal runs are prohibited, except where indicated.
8. Install ducting and piping tight to slabs, beams, joists, columns, walls, and other building elements. Allow sufficient space above removable ceiling panels to allow for ceiling panel removal.
9. Install ducting and piping to allow application of insulation plus 1-inch clearance around insulation for all exterior insulated ducts and pipes.
10. Locate groups of pipes parallel to each other, spaced to permit valve servicing.
11. Install fittings for changes in direction and branch connections.
12. Escutcheons: Where uncovered exposed pipes and ducts pass through floors, finished walls, or finished ceilings, they shall be fitted with chromium-plated cast-brass plates on chromium-plated pipe, or with cast-iron or steel plates on ferrous pipe. Plates shall be large enough to completely close the openings around the ducts and pipes and shall be square, octangular, or round, with the least dimension not less than 1-1/2 inches or more than 2-1/2 inches larger than the diameter of the duct/pipe. Plates shall be secured in an approved manner.
13. Install sleeves for pipes passing through concrete and masonry walls, concrete floor and roof slabs, and where indicated.
14. Above Grade, Exterior Wall, and Pipe Penetrations: Seal penetrations using sleeves and mechanical sleeve seals. Size sleeve for 1-inch annular clear space between pipe and sleeve for installation of mechanical seals.

a. Install steel pipe for sleeves smaller than 6 inches.
b. Install cast-iron wall pipes for sleeves 6 inches and larger.
c. Assemble and install mechanical seals according to manufacturer's printed instructions.

15. Verify final equipment locations for roughing in.
16. See equipment specifications in other sections of these specifications for roughing-in requirements.
17. Piping Joint Construction: Join pipe and fittings as follows and as specifically required in individual piping system specification sections.
    a. Ream ends of pipes and tubes and remove burrs. Bevel plain ends of steel pipe.
    b. Remove scale, slag, dirt, and debris from inside and outside of pipe and fittings before assembly.
    c. Soldered Joints: Construct joints according to AWS "Soldering Manual."
    d. Brazed Joints: Construct joints according to AWS "Brazing Manual."
    e. Threaded Joints: Thread pipe with tapered pipe threads according to ASME B1.20.1.
    f. Flanged Joints: Align flange surfaces parallel. Select appropriate gasket material, size, type, and thickness for service application. Install gasket concentrically positioned. Assemble joints by sequencing bolt tightening to make initial contact of flanges and gaskets as flat and parallel as possible. Use suitable lubricants on bolt threads. Tighten bolts gradually and uniformly using torque wrench.
18. Piping Connections: Except as otherwise indicated, make piping connections as specified below.
    a. Install unions, in piping 2 inches and smaller, adjacent to each valve and at final connection to each piece of equipment having 2-inches or smaller threaded pipe connection.
    b. Install flanges, in piping 2-1/2 inches and larger, adjacent to flanged valves and at final connection to each piece of equipment having flanged pipe connection.
    c. Dry Piping Systems (Gas, Compressed Air, and Vacuum): Install dielectric unions and flanges to connect piping materials of dissimilar metals.
    d. Wet Piping Systems (Water and Steam): Install dielectric coupling and nipple fittings to connect piping materials of dissimilar metals.

B. Equipment Installation - Common Requirements:
1. Install equipment to provide the maximum possible head room, where mounting heights are not indicated.
2. Install equipment according to approved submittal data. Portions of the Work are shown only in diagrammatic form. Refer conflicts to the Contracting Officer.
3. Install equipment level and plumb, parallel and perpendicular to other building systems and components in exposed interior spaces, except where otherwise indicated.
4. Install mechanical equipment to facilitate servicing, maintenance, and repair or replacement of equipment components. Connect equipment for ease of disconnecting, with minimum of interference with other installations. Extend grease fittings to an accessible location.
5. Install equipment giving right-of-way to piping systems installed at a required slope.
6. Shaft Alignment: All motors and pumps (or drives) connected by a shaft coupling, whether factory or field assembled, shall be aligned during installation using a dial indicator applied to both ends of both shafts for a full 360 degrees prior to operation. Alignment of the shafts shall be less than the maximum allowable tolerances as recommended by the coupling or equipment manufacturer. Alignment of shafts shall be

rechecked after several hours of operation and equipment has reached operating temperature.

C. Painting and Finishing:
   1. Field painting requirements are specified in Division 9 sections of the Specifications.
   2. Damage and Touch-Up: Repair marred and damaged factory-painted finishes with materials and procedures to match original factory finish.

D. Identification Tags and Labels:
   1. Materials:
      a. Pipe Labels: Pipe labels shall be self-adhesive labels, all temperature Perma-Code pipe markers No. B-500. The background color code for all markers shall conform to the American National Standard ANSI A-13.1 "Scheme for the Identification of Piping Systems." This standard establishes four basic backgrounds as follows: Yellow for dangerous materials, bright blue for protective materials, red for fire protection equipment, and green for safe materials.
      b. Tags: Tags shall be aluminum, brass or laminated plastic 2" x 1" minimum with edges ground smooth or rolled. Each tag shall be punched to receive tie wires or chain. Letters and Numbers shall be evenly spaced and stamped or engraved into the surface.
   2. Installation:
      a. Identification of Piping:
         1) Identify all piping according to the following procedures:
            a) Bare pipes to be marked shall first be wiped clean of dirt, dust, grease, and moisture. Markers to be installed on painted piping shall be applied only after completion of final coat of paint. Insulated pipes shall first be painted to a smooth, hard surface in the area the label is to be applied. Labels shall be applied, using pressure, so that it lies smooth and flat. After application on insulated pipes, the label shall be stapled securely to the insulation. The labels shall be applied to the pipe so that the lettering is in the most legible position. For overhead piping apply markers on the lower half of the pipe where view is unobstructed, so that markers can be read at a glance from floor level. The wording on the labels shall correspond directly to the wording in the mechanical symbol lists, regardless of whether or not it is standard wording for the designated manufacturer.
            b) Use an arrow marker with each pipe content marker. The arrow shall always point away from the pipe marker and in the direction of flow, with background color and height the same as content marker. If flow can be in both directions, use two arrow markers.
            c) Apply pipe marker and arrow marker at each valve, at every point of pipe entry or exit through wall or ceiling, on each riser and branch of tee, and every 20 feet on long continuous lines or at every bay or aisle to show proper identification of pipe content and direction of flow.
      b. Valves: All main service valves, including fire protection, located inside the building shall be tagged and identified as to the type of service. All valves controlling branch mains or risers to various portions of the building shall be tagged and identified as to the areas served.
      c. Controls: All automatic controls, control panels, zone valves, pressure electric, electric pressure switches, relays and starters shall be clearly tagged and identified. Wording shall be identical to that on the control diagram in the contract drawings.

E. Concrete Bases: Construct concrete equipment bases of dimensions indicated, but not less than 4 inches larger in both directions than supported unit. Follow supported equipment manufacturer's setting templates for anchor bolt and tie locations. Use 3000 psi, 28-day compressive strength concrete and reinforcement as specified in Division 3 sections of the Specifications. Housekeeping pads under pumps, etc. shall be 3-1/2 inches thick with #4 reinforcing bars 12 inches on center each way unless otherwise noted.

F. Erection of Metal Supports and Anchorage:
   1. Cut, fit, and place miscellaneous metal supports accurately in location, alignment, and elevation to support and anchor mechanical materials and equipment.
   2. Field Welding: Comply with AWS D1.1 "Structural Welding Code - Steel."

G. Cutting and Patching:
   1. Cut, channel, chase, and drill floors, walls, partitions, ceilings, and other surfaces necessary for mechanical installations. Perform cutting by skilled mechanics of the trades involved.
   2. Repair cut surfaces to match adjacent surfaces.

H. Grouting:
   1. Install nonmetallic, nonshrink grout for mechanical equipment base bearing surfaces, pump and other equipment base plates and anchors. Mix grout according to manufacturer's printed instructions.
   2. Clean surfaces that will come into contact with grout.
   3. Provide forms for placement of grout, as required.
   4. Avoid air entrapment when placing grout.
   5. Place grout, completely filling equipment bases.
   6. Place grout on concrete bases to provide a smooth bearing surface for equipment.
   7. Place grout around anchors.
   8. Cure placed grout according to manufacturer's printed instructions.

END OF SECTION 23 05 00

THIS PAGE INTENTIONALLY LEFT BLANK

SECTION 23 05 17 - SLEEVES AND SLEEVE SEALS FOR HVAC PIPING

PART 1 - GENERAL

1.1 RELATED DOCUMENTS

A. Drawings and general provisions of the Contract, including General and Supplementary Conditions and Division 01 Specification Sections, apply to this Section.

1.2 SUMMARY

A. Section Includes:
1. Sleeves.
2. Stack-sleeve fittings.
3. Sleeve-seal systems.
4. Sleeve-seal fittings.
5. Grout.

1.3 ACTION SUBMITTALS

A. Product Data: For each type of product indicated.

PART 2 - PRODUCTS

2.1 SLEEVES

A. Cast-Iron Wall Pipes: Cast or fabricated of cast or ductile iron and equivalent to ductile-iron pressure pipe, with plain ends and integral waterstop unless otherwise indicated.

B. Galvanized-Steel Wall Pipes: ASTM A 53/A 53M, Schedule 40, with plain ends and welded steel collar; zinc coated.

C. Galvanized-Steel-Pipe Sleeves: ASTM A 53/A 53M, Type E, Grade B, Schedule 40, zinc coated, with plain ends.

D. PVC-Pipe Sleeves: ASTM D 1785, Schedule 40.

E. Galvanized-Steel-Sheet Sleeves: 0.0239-inch minimum thickness; round tube closed with welded longitudinal joint.

2.2 STACK-SLEEVE FITTINGS

A. Description: Manufactured, cast-iron sleeve with integral clamping flange. Include clamping ring, bolts, and nuts for membrane flashing.
1. Underdeck Clamp: Clamping ring with setscrews.

2.3 SLEEVE-SEAL SYSTEMS

A. Manufacturers: Subject to compliance with requirements, provide products by one of the following available manufacturers offering products that may be incorporated into the Work include, but are not limited to, the following:

B. Description: Modular sealing-element unit, designed for field assembly, for filling annular space between piping and sleeve.
1. Sealing Elements: EPDM-rubber interlocking links shaped to fit surface of pipe. Include type and number required for pipe material and size of pipe.

2. Pressure Plates: Carbon steel or Stainless steel.
3. Connecting Bolts and Nuts: Carbon steel, with corrosion-resistant coating, or Stainless steel of length required to secure pressure plates to sealing elements.

2.4 SLEEVE-SEAL FITTINGS

A. Description: Manufactured plastic, sleeve-type, waterstop assembly made for imbedding in concrete slab or wall. Unit has plastic or rubber waterstop collar with center opening to match piping OD.

2.5 GROUT

A. Standard:ASTM C 1107/C 1107M, Grade B, post-hardening and volume-adjusting, dry, hydraulic-cement grout.

B. Characteristics: Nonshrink; recommended for interior and exterior applications.

C. Design Mix: 5000-psi, 28-day compressive strength.

D. Packaging: Premixed and factory packaged.

PART 3 - EXECUTION

3.1 SLEEVE INSTALLATION

A. Install sleeves for piping passing through penetrations in floors, partitions, roofs, and walls.

B. For sleeves that will have sleeve-seal system installed, select sleeves of size large enough to provide 1-inch annular clear space between piping and concrete slabs and walls.
   1. Sleeves are not required for core-drilled holes.

C. Install sleeves in concrete floors, concrete roof slabs, and concrete walls as new slabs and walls are constructed.
   1. Permanent sleeves are not required for holes in slabs formed by molded-PE or -PP sleeves.
   2. Cut sleeves to length for mounting flush with both surfaces.
      a. Exception: Extend sleeves installed in floors of mechanical equipment areas or other wet areas 2 inches above finished floor level.
   3. Using grout, seal the space outside of sleeves in slabs and walls without sleeve-seal system.

D. Install sleeves for pipes passing through interior partitions.
   1. Cut sleeves to length for mounting flush with both surfaces.
   2. Install sleeves that are large enough to provide 1/4-inch annular clear space between sleeve and pipe or pipe insulation.
   3. Seal annular space between sleeve and piping or piping insulation; use joint sealants appropriate for size, depth, and location of joint. Comply with requirements for sealants specified in Division 07 Specifications.

3.2 STACK-SLEEVE-FITTING INSTALLATION

A. Install stack-sleeve fittings in new slabs as slabs are constructed.
   1. Install fittings that are large enough to provide 1/4-inch annular clear space between sleeve and pipe or pipe insulation.

2. Secure flashing between clamping flanges for pipes penetrating floors with membrane waterproofing. Comply with requirements for flashing specified in Division 07 Specifications.
3. Install section of cast-iron soil pipe to extend sleeve to 2 inches above finished floor level.
4. Extend cast-iron sleeve fittings below floor slab as required to secure clamping ring if ring is specified.
5. Using grout, seal the space around outside of stack-sleeve fittings.

3.3 SLEEVE-SEAL-SYSTEM INSTALLATION

A. Install sleeve-seal systems in sleeves in exterior concrete walls and slabs-on-grade at service piping entries into building.

B. Select type, size, and number of sealing elements required for piping material and size and for sleeve ID or hole size. Position piping in center of sleeve. Center piping in penetration, assemble sleeve-seal system components, and install in annular space between piping and sleeve. Tighten bolts against pressure plates that cause sealing elements to expand and make a watertight seal.

3.4 SLEEVE-SEAL-FITTING INSTALLATION

A. Install sleeve-seal fittings in new walls and slabs as they are constructed.

B. Assemble fitting components of length to be flush with both surfaces of concrete slabs and walls. Position waterstop flange to be centered in concrete slab or wall.

C. Secure nailing flanges to concrete forms.

D. Using grout, seal the space around outside of sleeve-seal fittings.

3.5 SLEEVE AND SLEEVE-SEAL SCHEDULE

A. Use sleeves and sleeve seals for the following piping-penetration applications:
1. Exterior Concrete Walls above Grade:
   a. Piping Smaller Than NPS 6: Cast-iron wall sleeves with sleeve-seal system, Galvanized-steel wall sleeves with sleeve-seal system, Galvanized-steel-pipe sleeves with sleeve-seal system, Sleeve-seal fittings.
2. Interior Partitions:
   a. Piping Smaller Than NPS 6: Galvanized-steel-pipe sleeves, or PVC-pipe sleeves.

B. For new penetrations in existing walls, piping sleeves are not required, but separation between piping material and wall material must be provided.
1. Thermal hanger shield inserts may be installed where new piping penetrates existing walls.
2. Continuous insulation with a pipe sleeve may be provided where new piping penetrates existing wall. Pipe sleeves to be provided per sleeve and sleeve-seal schedule above.

END OF SECTION 23 05 17

SECTION 23 05 18 - ESCUTCHEONS FOR HVAC PIPING

PART 1 - GENERAL

1.1 SUMMARY

A. Section Includes:
   1. Escutcheons.

1.2 ACTION SUBMITTALS

A. Product Data: For each type of product.

PART 2 - PRODUCTS

2.1 ESCUTCHEONS

A. One-Piece, Deep-Pattern Type: Deep-drawn, box-shaped steel with polished, chrome-plated finish and spring-clip fasteners.

B. One-Piece, Stamped-Steel Type: With polished, chrome-plated finish and spring-clip fasteners.

C. Split-Plate, Stamped-Steel Type: With polished, chrome-plated finish; concealed hinge; and spring-clip fasteners.

PART 3 - EXECUTION

3.1 INSTALLATION

A. Install escutcheons for piping penetrations of walls, ceilings, and finished floors.

B. Install escutcheons with ID to closely fit around pipe, tube, and insulation of piping and with OD that completely covers opening.
   1. Escutcheons for New Piping:
      a. Insulated Piping: One-piece stamped steel or split-plate, stamped steel with concealed hinge with polished, chrome-plated finish.

3.2 FIELD QUALITY CONTROL

A. Using new materials, replace broken and damaged escutcheons and floor plates.

END OF SECTION 23 05 18

THIS PAGE INTENTIONALLY LEFT BLANK

SECTION 23 05 29 - HANGERS AND SUPPORTS FOR HVAC PIPING AND EQUIPMENT

PART 1 - GENERAL

1.1 SUMMARY

A. Section Includes:
1. Metal pipe hangers and supports.
2. Trapeze pipe hangers.
3. Thermal-hanger shield inserts.
4. Fastener systems.
5. Equipment supports.

1.2 PERFORMANCE REQUIREMENTS

A. Delegated Design: Design trapeze pipe hangers and equipment supports, including comprehensive engineering analysis by a qualified professional engineer, using performance requirements and design criteria indicated.

B. Structural Performance: Hangers and supports for HVAC piping and equipment shall withstand the effects of gravity loads and stresses within limits and under conditions indicated according to ASCE/SEI 7.
1. Design supports for multiple pipes capable of supporting combined weight of supported systems, system contents, and test water.
2. Design equipment supports capable of supporting combined operating weight of supported equipment and connected systems and components.
3. Design seismic-restraint hangers and supports for piping and equipment and obtain approval from authorities having jurisdiction.

1.3 ACTION SUBMITTALS

A. Product Data: For each type of product indicated.

B. Shop Drawings: Signed and sealed by a qualified professional engineer. Show fabrication and installation details and include calculations for the following; include Product Data for components:
1. Trapeze pipe hangers.
2. Equipment supports.

C. Delegated-Design Submittal: For trapeze hangers indicated to comply with performance requirements and design criteria, including analysis data signed and sealed by the qualified professional engineer responsible for their preparation.

1.4 INFORMATIONAL SUBMITTALS

A. Welding certificates.

1.5 QUALITY ASSURANCE

A. Structural Steel Welding Qualifications: Qualify procedures and personnel according to AWS D1.1/D1.1M, "Structural Welding Code - Steel."

B. Pipe Welding Qualifications: Qualify procedures and operators according to ASME Boiler and Pressure Vessel Code.

PART 2 - PRODUCTS

2.1 METAL PIPE HANGERS AND SUPPORTS

A. Carbon-Steel Pipe Hangers and Supports:
   1. Description: MSS SP-58, Types 1 through 58, factory-fabricated components.
   2. Galvanized Metallic Coatings: Pregalvanized or hot dipped.
   3. Nonmetallic Coatings: Plastic coating, jacket, or liner.
   4. Padded Hangers: Hanger with fiberglass or other pipe insulation pad or cushion to support bearing surface of piping.
   5. Hanger Rods: Continuous-thread rod, nuts, and washer made of carbon steel or stainless steel.

B. Copper Pipe Hangers:
   1. Description: MSS SP-58, Types 1 through 58, copper-coated-steel, factory-fabricated components.
   2. Hanger Rods: Continuous-thread rod, nuts, and washer made of stainless steel.

2.2 TRAPEZE PIPE HANGERS

A. Description: MSS SP-69, Type 59, shop- or field-fabricated pipe-support assembly made from structural carbon-steel shapes with MSS SP-58 carbon-steel hanger rods, nuts, saddles, and U-bolts.

2.3 THERMAL-HANGER SHIELD INSERTS

A. Insulation-Insert Material for Cold Piping: Water-repellent treated, ASTM C 533, Type I calcium silicate with 100-psig or ASTM C 552, Type II cellular glass with 100-psig minimum compressive strength and vapor barrier.

B. Insulation-Insert Material for Hot Piping: Water-repellent treated, ASTM C 533, Type I calcium silicate with 100-psig or ASTM C 552, Type II cellular glass with 100-psig minimum compressive strength.

C. For Trapeze or Clamped Systems: Insert and shield shall cover entire circumference of pipe.

D. For Clevis or Band Hangers: Insert and shield shall cover lower 180 degrees of pipe.

E. Insert Length: Extend 2 inches beyond sheet metal shield for piping operating below ambient air temperature.

2.4 FASTENER SYSTEMS

A. Mechanical-Expansion Anchors: Insert-wedge-type, zinc-coated or stainless- steel anchors, for use in hardened portland cement concrete; with pull-out, tension, and shear capacities appropriate for supported loads and building materials where used.

2.5 EQUIPMENT SUPPORTS

A. Description: Welded, shop- or field-fabricated equipment support made from structural carbon-steel shapes.

2.6 MISCELLANEOUS MATERIALS

A. Structural Steel: ASTM A 36/A 36M, carbon-steel plates, shapes, and bars; black and galvanized.

B. Grout: ASTM C 1107, factory-mixed and -packaged, dry, hydraulic-cement, nonshrink and nonmetallic grout; suitable for interior and exterior applications.

1. Properties: Nonstaining, noncorrosive, and nongaseous.
2. Design Mix: 5000-psi, 28-day compressive strength.

PART 3 - EXECUTION

3.1 HANGER AND SUPPORT INSTALLATION

A. Metal Pipe-Hanger Installation: Comply with MSS SP-69 and MSS SP-89. Install hangers, supports, clamps, and attachments as required to properly support piping from the building structure.

B. Metal Trapeze Pipe-Hanger Installation: Comply with MSS SP-69 and MSS SP-89. Arrange for grouping of parallel runs of horizontal piping, and support together on field-fabricated trapeze pipe hangers.
   1. Pipes of Various Sizes: Support together and space trapezes for smallest pipe size or install intermediate supports for smaller diameter pipes as specified for individual pipe hangers.
   2. Field fabricate from ASTM A 36/A 36M, carbon-steel shapes selected for loads being supported. Weld steel according to AWS D1.1/D1.1M.

C. Thermal-Hanger Shield Installation: Install in pipe hanger or shield for insulated piping.

D. Fastener System Installation:
   1. Install mechanical-expansion anchors in concrete after concrete is placed and completely cured. Install fasteners according to manufacturer's written instructions.

E. Install hangers and supports complete with necessary attachments, inserts, bolts, rods, nuts, washers, and other accessories.

F. Equipment Support Installation: Fabricate from welded-structural-steel shapes.

G. Install hangers and supports to allow controlled thermal and seismic movement of piping systems, to permit freedom of movement between pipe anchors, and to facilitate action of expansion joints, expansion loops, expansion bends, and similar units.

H. Install lateral bracing with pipe hangers and supports to prevent swaying.

I. Install building attachments within concrete slabs or attach to structural steel. Install additional attachments at concentrated loads, including valves, flanges, and strainers, and at changes in direction of piping. Install concrete inserts before concrete is placed; fasten inserts to forms and install reinforcing bars through openings at top of inserts.

J. Load Distribution: Install hangers and supports so that piping live and dead loads and stresses from movement will not be transmitted to connected equipment.

K. Pipe Slopes: Install hangers and supports to provide indicated pipe slopes and to not exceed maximum pipe deflections allowed by ASME B31.9 for building services piping.

L. Insulated Piping:
   1. Attach clamps and spacers to piping.
      a. Piping Operating above Ambient Air Temperature: Clamp may project through insulation.
      b. Piping Operating below Ambient Air Temperature: Use thermal-hanger shield insert with clamp sized to match OD of insert.
      c. Do not exceed pipe stress limits allowed by ASME B31.9 for building services piping.

2. Install MSS SP-58, Type 39, protection saddles if insulation without vapor barrier is indicated. Fill interior voids with insulation that matches adjoining insulation.
   a. Option: Thermal-hanger shield inserts may be used.
3. Install MSS SP-58, Type 40, protective shields on cold piping with vapor barrier. Shields shall span an arc of 180 degrees.
   a. Option: Thermal-hanger shield inserts may be used.
4. Shield Dimensions for Pipe: Not less than the following:
   a. NPS 1/4 to NPS 3-1/2: 12 inches long and 0.048 inch thick.
5. Thermal-Hanger Shields: Install with insulation same thickness as piping insulation.

3.2 EQUIPMENT SUPPORTS

A. Fabricate structural-steel stands to suspend equipment from structure overhead or to support equipment above floor.

B. Grouting: Place grout under supports for equipment and make bearing surface smooth.

C. Provide lateral bracing, to prevent swaying, for equipment supports.

3.3 METAL FABRICATIONS

A. Cut, drill, and fit miscellaneous metal fabrications for trapeze pipe hangers and equipment supports.

B. Fit exposed connections together to form hairline joints. Field weld connections that cannot be shop welded because of shipping size limitations.

C. Field Welding: Comply with AWS D1.1/D1.1M procedures for shielded, metal arc welding; appearance and quality of welds; and methods used in correcting welding work; and with the following:
   1. Use materials and methods that minimize distortion and develop strength and corrosion resistance of base metals.
   2. Obtain fusion without undercut or overlap.
   3. Remove welding flux immediately.
   4. Finish welds at exposed connections so no roughness shows after finishing and so contours of welded surfaces match adjacent contours.

3.4 ADJUSTING

A. Hanger Adjustments: Adjust hangers to distribute loads equally on attachments and to achieve indicated slope of pipe.

B. Trim excess length of continuous-thread hanger and support rods to 1-1/2 inches,

3.5 PAINTING

A. Touchup: Clean field welds and abraded areas of shop paint. Paint exposed areas immediately after erecting hangers and supports. Use same materials as used for shop painting. Comply with SSPC-PA 1 requirements for touching up field-painted surfaces.
   1. Apply paint by brush or spray to provide a minimum dry film thickness of 2.0 mils.

B. Touchup: Cleaning and touchup painting of field welds, bolted connections, and abraded areas of shop paint on miscellaneous metal are specified in Division 09 Specifications.

C. Galvanized Surfaces: Clean welds, bolted connections, and abraded areas and apply galvanizing-repair paint to comply with ASTM A 780.

3.6 HANGER AND SUPPORT SCHEDULE

A. Specific hanger and support requirements are in Sections specifying piping systems and equipment.

B. Comply with MSS SP-69 for pipe-hanger selections and applications that are not specified in piping system Sections.

C. Use hangers and supports with galvanized metallic coatings for piping and equipment that will not have field-applied finish.

D. Use nonmetallic coatings on attachments for electrolytic protection where attachments are in direct contact with copper tubing.

E. Use carbon-steel pipe hangers and supports or metal trapeze pipe hangers and attachments for general service applications.

F. Use copper-plated pipe hangers and copper attachments for copper piping and tubing.

G. Use padded hangers for piping that is subject to scratching.

H. Use thermal-hanger shield inserts for insulated piping and tubing.

I. Horizontal-Piping Hangers and Supports: Unless otherwise indicated and except as specified in piping system Sections, install the following types:
   1. Adjustable, Steel Clevis Hangers (MSS Type 1): For suspension of noninsulated or insulated, stationary pipes NPS 1/2 to NPS 30.
   2. Yoke-Type Pipe Clamps (MSS Type 2): For suspension of up to 1050 deg F.
   3. Carbon- or Alloy-Steel, Double-Bolt Pipe Clamps (MSS Type 3): For suspension of pipes NPS 3/4 to NPS 36, requiring clamp flexibility and up to 4 inches of insulation.
   4. Adjustable, Steel Band Hangers (MSS Type 7): For suspension of noninsulated, stationary pipes NPS 1/2 to NPS 8.
   5. U-Bolts (MSS Type 24): For support of heavy pipes NPS 1/2 to NPS 30.
   6. Single-Pipe Rolls (MSS Type 41): For suspension of pipes NPS 1 to NPS 30, from two rods if longitudinal movement caused by expansion and contraction might occur.
   7. Complete Pipe Rolls (MSS Type 44): For support of pipes NPS 2 to NPS 42 if longitudinal movement caused by expansion and contraction might occur but vertical adjustment is not necessary.

J. Vertical-Piping Clamps: Unless otherwise indicated and except as specified in piping system Sections, install the following types:
   1. Extension Pipe or Riser Clamps (MSS Type 8): For support of pipe risers NPS 3/4 to NPS 24.
   2. Carbon- or Alloy-Steel Riser Clamps (MSS Type 42): For support of pipe risers NPS 3/4 to NPS 24 if longer ends are required for riser clamps.

K. Hanger-Rod Attachments: Unless otherwise indicated and except as specified in piping system Sections, install the following types:
   1. Steel Turnbuckles (MSS Type 13): For adjustment up to 6 inches for heavy loads.
   2. Steel Clevises (MSS Type 14): For 120 to 450 deg F piping installations.

L. Building Attachments: Unless otherwise indicated and except as specified in piping system Sections, install the following types:
   1. Steel or Malleable Concrete Inserts (MSS Type 18): For upper attachment to suspend pipe hangers from concrete ceiling.
   2. Top-Beam C-Clamps (MSS Type 19): For use under roof installations with bar-joist construction, to attach to top flange of structural shape.

3. Side-Beam or Channel Clamps (MSS Type 20): For attaching to bottom flange of beams, channels, or angles.
4. Center-Beam Clamps (MSS Type 21): For attaching to center of bottom flange of beams.
5. Welded Beam Attachments (MSS Type 22): For attaching to bottom of beams if loads are considerable and rod sizes are large.
6. C-Clamps (MSS Type 23): For structural shapes.
7. Welded-Steel Brackets: For support of pipes from below, or for suspending from above by using clip and rod. Use one of the following for indicated loads:
   a. Light (MSS Type 31): 750 lb.
   b. Medium (MSS Type 32): 1500 lb.
   c. Heavy (MSS Type 33): 3000 lb.
8. Side-Beam Brackets (MSS Type 34): For sides of steel or wooden beams.
9. Plate Lugs (MSS Type 57): For attaching to steel beams if flexibility at beam is required.

M. Saddles and Shields: Unless otherwise indicated and except as specified in piping system Sections, install the following types:
   1. Steel-Pipe-Covering Protection Saddles (MSS Type 39): To fill interior voids with insulation that matches adjoining insulation.
   2. Protection Shields (MSS Type 40): Of length recommended in writing by manufacturer to prevent crushing insulation.
   3. Thermal-Hanger Shield Inserts: For supporting insulated pipe.

N. Spring Hangers and Supports: Unless otherwise indicated and except as specified in piping system Sections, install the following types:
   1. Spring Cushions (MSS Type 48): For light loads if vertical movement does not exceed 1-1/4 inches.
   2. Spring-Cushion Roll Hangers (MSS Type 49): For equipping Type 41, roll hanger with springs.
   3. Variable-Spring Base Supports (MSS Type 52): Preset to indicated load and limit variability factor to 25 percent to allow expansion and contraction of piping system from base support.

O. Comply with MSS SP-69 for trapeze pipe-hanger selections and applications that are not specified in piping system Sections.

P. Use mechanical-expansion anchors instead of building attachments where required in concrete construction.

END OF SECTION 23 05 29

SECTION 23 05 48 - VIBRATION CONTROLS FOR HVAC

PART 1 - GENERAL

1.1 SUMMARY

A. Section Includes:
1. Spring hangers.
2. Post-installed concrete anchors.
3. Concrete inserts.

1.2 ACTION SUBMITTALS

A. Product Data: For each type of product.

B. Shop Drawings:
1. Detail fabrication and assembly of equipment bases.
2. Vibration Isolation Base Details: Detail fabrication including anchorages and attachments to structure and to supported equipment. Include adjustable motor bases, rails, and frames for equipment mounting.

C. Delegated Design Submittals:
1. Design Calculations for Vibration Isolation Devices: Calculate static and dynamic loading due to equipment weight and operating forces required to select proper vibration isolators, and to design vibration isolation bases.

1.3 INFORMATIONAL SUBMITTALS

A. Coordination Drawings: Show coordination of vibration isolation device installation and seismic bracing for HVAC piping and equipment with other systems and equipment in the vicinity, including other supports and restraints, if any.

B. Welding certificates.

C. Field quality-control reports.

1.4 QUALITY ASSURANCE

A. Testing Agency Qualifications: An independent agency, with the experience and capability to conduct testing indicated, be an NRTL as defined by OSHA in 29 CFR 1910.7, and be acceptable to authorities having jurisdiction.

B. Welding Qualifications: Qualify procedures and personnel in accordance with AWS D1.1/D1.1M, "Structural Welding Code - Steel."

PART 2 - PRODUCTS

2.1 SPRING HANGERS

A. Combination Coil-Spring and Elastomeric-Insert Hanger with Spring and Insert in Compression:
1. Frame: Steel, fabricated for connection to threaded hanger rods and to allow for a maximum of 30 degrees of angular hanger-rod misalignment without binding or reducing isolation efficiency.

2. Outside Spring Diameter: Not less than 80 percent of the compressed height of the spring at rated load.
3. Minimum Additional Travel: 50 percent of the required deflection at rated load.
4. Lateral Stiffness: More than 80 percent of rated vertical stiffness.
5. Overload Capacity: Support 200 percent of rated load, fully compressed, without deformation or failure.
6. Elastomeric Element: Molded, oil-resistant rubber or neoprene. Steel-washer-reinforced cup to support spring and bushing projecting through bottom of frame.
7. Adjustable Vertical Stop: Steel washer with neoprene washer "up-stop" on lower threaded rod.
8. Self-centering hanger-rod cap to ensure concentricity between hanger rod and support spring coil.

2.2 POST-INSTALLED CONCRETE ANCHORS

A. Mechanical Anchor Bolts:
   1. Drilled-in and stud-wedge or female-wedge type in zinc-coated steel for interior applications and stainless steel for exterior applications. Select anchor bolts with strength for anchor and as tested according to ASTM E488/E488M.

B. Provide post-installed concrete anchors that have been prequalified for use in wind-load applications. Post-installed concrete anchors must comply with all requirements of ASCE/SEI 7-16, Ch. 13.
   1. Prequalify post-installed anchors in concrete in accordance with ACI 355.2 or other approved qualification testing procedures.
   2. Prequalify post-installed anchors in masonry in accordance with approved qualification procedures.

C. Expansion-type anchor bolts are not permitted for equipment in excess of 10 hp that is not vibration isolated.
   1. Undercut expansion anchors are permitted.

2.3 CONCRETE INSERTS

A. Provide preset concrete inserts that are seismically prequalified in accordance with ICC-ES AC466 testing.

B. Comply with ANSI/MSS SP-58.

PART 3 - EXECUTION

3.1 APPLICATIONS

A. Multiple Pipe Supports: Secure pipes to trapeze member with clamps approved for application by an agency acceptable to authorities having jurisdiction.

B. Hanger-Rod Stiffeners: Install where indicated or scheduled on Drawings to receive them and where required to prevent buckling of hanger rods due to seismic forces.

C. Strength of Support and Seismic-Restraint Assemblies: Where not indicated, select sizes of components so strength is adequate to carry present and future static, and wind loads within specified loading limits.

3.2 INSTALLATION OF VIBRATION-CONTROL DEVICES

A. Provide vibration-control devices for systems and equipment where indicated in Equipment Schedules, where indicated on Drawings, or where Specifications indicate they are to be installed on specific equipment and systems.

B. Coordinate location of embedded connection hardware with supported equipment attachment and mounting points and with requirements for concrete reinforcement and formwork specified in Division 03 Specifications.

C. Installation of vibration isolators must not cause any change of position of equipment, piping, or ductwork resulting in stresses or misalignment.

D. Attachment to Structure: If specific attachment is not indicated, anchor bracing to structure at flanges of beams, at upper truss chords of bar joists, or at concrete members.

E. Mechanical Anchor Bolts:
   1. Identify position of reinforcing steel and other embedded items prior to drilling holes for anchors. Do not damage existing reinforcing or embedded items during coring or drilling. Notify Contracting Officer if reinforcing steel or other embedded items are encountered during drilling. Locate and avoid prestressed tendons, electrical and telecommunications conduit, and gas lines.
   2. Do not drill holes in concrete or masonry until concrete, mortar, or grout has achieved full design strength.
   3. Wedge-Type Anchor Bolts: Protect threads from damage during anchor installation. Heavy-duty sleeve anchors to be installed with sleeve fully engaged in the structural element to which anchor is to be fastened.
   4. Set anchors to manufacturer's recommended torque, using a torque wrench.
   5. Install zinc-coated steel anchors for interior and stainless steel anchors for exterior applications.

3.3 ADJUSTING

A. Adjust isolators after system is at operating weight.

B. Adjust limit stops on restrained-spring isolators to mount equipment at normal operating height. After equipment installation is complete, adjust limit stops so they are out of contact during normal operation.

3.4 FIELD QUALITY CONTROL

A. Tests and Inspections:
   1. Perform tests and inspections with the assistance of a factory-authorized service representative.
   2. Provide evidence of recent calibration of test equipment by a testing agency acceptable to authorities having jurisdiction.
   3. Schedule test with Delegated-Design Contractor before connecting anchorage device to restrained component (unless postconnection testing has been approved), and with at least seven days' advance notice.
   4. Obtain Delegated-Design Contractor’s approval before transmitting test loads to structure. Provide temporary load-spreading members.
   5. Test no fewer than four of each type and size of installed anchors and fasteners.
   6. Test to 90 percent of rated proof load of device.
   7. Measure isolator restraint clearance.
   8. Measure isolator deflection.
   9. Verify snubber minimum clearances.

10. Test and adjust restrained-air-spring isolator controls and safeties.

B. Remove and replace malfunctioning units and retest as specified above.

C. Units will be considered defective if they do not pass tests and inspections.

D. Prepare test and inspection reports.

END OF SECTION 23 05 48

THIS PAGE INTENTIONALLY LEFT BLANK

SECTION 23 05 53 - IDENTIFICATION FOR HVAC PIPING AND EQUIPMENT

PART 1 - GENERAL

1.1 SUMMARY

A. Section Includes:
1. Equipment labels.
2. Warning signs and labels.
3. Pipe labels.
4. Duct labels.

1.2 ACTION SUBMITTALS

A. Product Data: For each type of product.

PART 2 - PRODUCTS

2.1 EQUIPMENT LABELS

A. Metal Labels for Equipment:
1. Material and Thickness: Stainless steel, 0.025-inch or aluminum, 0.032-inch or anodized aluminum, 0.032-inch minimum thickness, and having predrilled or stamped holes for attachment hardware.
2. Letter Color: White.
3. Background Color: Black or Blue or Red.
4. Minimum Label Size: Length and width vary for required label content, but not less than 2-1/2 by 3/4 inch.
5. Minimum Letter Size: 1/4 inch for name of units if viewing distance is less than 24 inches, 1/2 inch for viewing distances up to 72 inches, and proportionately larger lettering for greater viewing distances. Include secondary lettering two-thirds to three-quarters the size of principal lettering.
6. Fasteners: Stainless-steel rivets or self-tapping screws.
7. Adhesive: Contact-type permanent adhesive, compatible with label and with substrate.

B. Plastic Labels for Equipment:
1. Material and Thickness: Multilayer, multicolor, plastic labels for mechanical engraving, 1/8 inch thick, and having predrilled holes for attachment hardware.
2. Letter Color: White.
3. Background Color: Black or Blue or Red.
4. Maximum Temperature: Able to withstand temperatures up to 160 deg F.
5. Minimum Label Size: Length and width vary for required label content, but not less than 2-1/2 by 3/4 inch.
6. Minimum Letter Size: 1/4 inch for name of units if viewing distance is less than 24 inches, 1/2 inch for viewing distances up to 72 inches, and proportionately larger lettering for greater viewing distances. Include secondary lettering two-thirds to three-quarters the size of principal lettering.
7. Fasteners: Stainless-steel rivets or self-tapping screws.
8. Adhesive: Contact-type permanent adhesive, compatible with label and with substrate.

C. Label Content: Include equipment's Drawing designation or unique equipment number, Drawing numbers where equipment is indicated (plans, details, and schedules), and the Specification Section number and title where equipment is specified.

D. Equipment Label Schedule: For each item of equipment to be labeled, on 8-1/2-by-11-inch bond paper. Tabulate equipment identification number and identify Drawing numbers where equipment is indicated (plans, details, and schedules) and the Specification Section number and title where equipment is specified. Equipment schedule shall be included in operation and maintenance data.

2.2 WARNING SIGNS AND LABELS

A. Material and Thickness: Multilayer, multicolor, plastic labels for mechanical engraving, 1/8 inch thick, and having predrilled holes for attachment hardware.

B. Letter Color: Black.

C. Background Color: Yellow.

D. Maximum Temperature: Able to withstand temperatures up to 160 deg F.

E. Minimum Label Size: Length and width vary for required label content, but not less than 2-1/2 by 3/4 inch.

F. Minimum Letter Size: 1/4 inch for name of units if viewing distance is less than 24 inches, 1/2 inch for viewing distances up to 72 inches, and proportionately larger lettering for greater viewing distances. Include secondary lettering two-thirds to three-quarters the size of principal lettering.

G. Fasteners: Stainless-steel rivets or self-tapping screws.

H. Adhesive: Contact-type permanent adhesive, compatible with label and with substrate.

I. Label Content: Include caution and warning information plus emergency notification instructions.

2.3 PIPE LABELS

A. General Requirements for Manufactured Pipe Labels: Preprinted, color-coded, with lettering indicating service, and showing flow direction according to ASME A13.1.

B. Pretensioned Pipe Labels: Precoiled, semirigid plastic formed to cover full circumference of pipe and to attach to pipe without fasteners or adhesive.

C. Self-Adhesive Pipe Labels: Printed plastic with contact-type, permanent-adhesive backing.

D. Pipe Label Contents: Include identification of piping service using same designations or abbreviations as used on Drawings; also include pipe size and an arrow indicating flow direction.
   1. Flow-Direction Arrows: Integral with piping system service lettering to accommodate both directions or as separate unit on each pipe label to indicate flow direction.
   2. Lettering Size: Size letters according to ASME A13.1 for piping or At least 1/2 inch for viewing distances up to 72 inches and proportionately larger lettering for greater viewing distances.

2.4 DUCT LABELS

A. Material and Thickness: Multilayer, multicolor, plastic labels for mechanical engraving, 1/16 inch or 1/8 inch thick, and having predrilled holes for attachment hardware.

B. Letter Color: Black or Blue.

C. Background Color: White.

D. Maximum Temperature: Able to withstand temperatures up to 160 deg F.

E. Minimum Label Size: Length and width vary for required label content, but not less than 2-1/2 by 3/4 inch.

F. Minimum Letter Size: 1/4 inch for name of units if viewing distance is less than 24 inches, 1/2 inch for viewing distances up to 72 inches, and proportionately larger lettering for greater viewing distances. Include secondary lettering two-thirds to three-quarters the size of principal lettering.

G. Fasteners: Stainless-steel rivets or self-tapping screws.

H. Adhesive: Contact-type permanent adhesive, compatible with label and with substrate.

I. Duct Label Contents: Include identification of duct service using same designations or abbreviations as used on Drawings; also include duct size and an arrow indicating flow direction.
   1. Flow-Direction Arrows: Integral with duct system service lettering to accommodate both directions or as separate unit on each duct label to indicate flow direction.

PART 3 - EXECUTION

3.1 PREPARATION

A. Clean piping and equipment surfaces of substances that could impair bond of identification devices, including dirt, oil, grease, release agents, and incompatible primers, paints, and encapsulants.

3.2 EQUIPMENT LABEL INSTALLATION

A. Install or permanently fasten labels on each major item of mechanical equipment.

B. Locate equipment labels where accessible and visible.

3.3 PIPE LABEL INSTALLATION

A. Piping Color-Coding: Painting of piping is specified in Division 09 Specifications.

B. Pipe Label Locations: Locate pipe labels where piping is exposed or above accessible ceilings in finished spaces; machine rooms; accessible maintenance spaces such as shafts and plenums; and exterior exposed locations as follows:
   1. Near each valve and control device.
   2. Near each branch connection, excluding short takeoffs for fixtures and terminal units. Where flow pattern is not obvious, mark each pipe at branch.
   3. Near penetrations and on both sides of through walls, floors, ceilings, and inaccessible enclosures.
   4. At access doors, manholes, and similar access points that permit view of concealed piping.
   5. Near major equipment items and other points of origination and termination.
   6. Spaced at maximum intervals of 50 feet along each run. Reduce intervals to 25 feet in areas of congested piping and equipment.
   7. On piping above removable acoustical ceilings. Omit intermediately spaced labels.

C. Pipe Label Color Schedule:
   1. Refrigerant Piping: Black letters on a safety-orange background.

3.4 DUCT LABEL INSTALLATION

A. Install plastic-laminated or self-adhesive duct labels with permanent adhesive on air ducts in the following color codes:
   1. Blue: For supply ducts.
   2. Green: For exhaust-, outside-, relief-, return-, and mixed-air ducts.

B. Locate labels near points where ducts enter into and exit from concealed spaces and at maximum intervals of 50 feet in each space where ducts are exposed or concealed by removable ceiling system.

END OF SECTION 23 05 53

SECTION 23 05 93 - TESTING, ADJUSTING, AND BALANCING FOR HVAC

PART 1 - GENERAL

1.1 SUMMARY

A. Section Includes:
   1. Balancing Air Systems:
      a. Constant-volume air systems.

1.2 DEFINITIONS

A. AABC: Associated Air Balance Council.

B. NEBB: National Environmental Balancing Bureau.

C. TAB: Testing, adjusting, and balancing.

D. TABB: Testing, Adjusting, and Balancing Bureau.

E. TAB Specialist: An independent entity meeting qualifications to perform TAB work.

F. TDH: Total dynamic head.

1.3 ACTION SUBMITTALS

A. TAB Report: Documentation indicating that Work complies with ASHRAE/IES 90.1, Section 6.7.2.3 - "System Balancing."

1.4 INFORMATIONAL SUBMITTALS

A. Strategies and Procedures Plan: Within 30 days of Contractor's Notice to Proceed, submit TAB strategies and step-by-step procedures as specified in "Preparation" Article.

B. Certified TAB reports.

1.5 QUALITY ASSURANCE

A. TAB Specialists Qualifications: Certified by AABC.
   1. TAB Field Supervisor: Employee of the TAB specialist and certified by AABC.
   2. TAB Technician: Employee of the TAB specialist and certified by AABC as a TAB technician.

B. TAB Specialists Qualifications: Certified by NEBB or TABB.
   1. TAB Field Supervisor: Employee of the TAB specialist and certified by NEBB or TABB.
   2. TAB Technician: Employee of the TAB specialist and certified by NEBB or TABB as a TAB technician.

C. Instrumentation Type, Quantity, Accuracy, and Calibration: Comply with requirements in ASHRAE 111, Section 4, "Instrumentation."

D. ASHRAE/IES 90.1 Compliance: Applicable requirements in ASHRAE/IES 90.1, Section 6.7.2.3 - "System Balancing."

PART 2 - PRODUCTS (Not Applicable)

PART 3 - EXECUTION

3.1 EXAMINATION

A. Examine the Contract Documents to become familiar with Project requirements and to discover conditions in systems designs that may preclude proper TAB of systems and equipment.

B. Examine installed systems for balancing devices, such as test ports, gage cocks, thermometer wells, flow-control devices, balancing valves and fittings, and manual volume dampers. Verify that locations of these balancing devices are applicable for intended purpose and are accessible.

C. Examine the approved submittals for HVAC systems and equipment.

D. Examine design data including HVAC system descriptions, statements of design assumptions for environmental conditions and systems output, and statements of philosophies and assumptions about HVAC system and equipment controls.

E. Examine ceiling plenums and underfloor air plenums used for supply, return, or relief air to verify that they are properly separated from adjacent areas. Verify that penetrations in plenum walls are sealed and fire-stopped if required.

F. Examine equipment performance data including fan and pump curves.
   1. Relate performance data to Project conditions and requirements, including system effects that can create undesired or unpredicted conditions that cause reduced capacities in all or part of a system.
   2. Calculate system-effect factors to reduce performance ratings of HVAC equipment when installed under conditions different from the conditions used to rate equipment performance. To calculate system effects for air systems, use tables and charts found in AMCA 201, "Fans and Systems," or in SMACNA's "HVAC Systems - Duct Design." Compare results with the design data and installed conditions.

G. Examine system and equipment installations and verify that field quality-control testing, cleaning, and adjusting specified in individual Sections have been performed.

H. Examine test reports specified in individual system and equipment Sections.

I. Examine HVAC equipment and verify that bearings are greased, belts are aligned and tight, filters are clean, and equipment with functioning controls is ready for operation.

J. Examine strainers. Verify that startup screens have been replaced by permanent screens with indicated perforations.

K. Examine control valves for proper installation for their intended function of throttling, diverting, or mixing fluid flows.

L. Examine heat-transfer coils for correct piping connections and for clean and straight fins.

M. Examine operating safety interlocks and controls on HVAC equipment.

N. Report deficiencies discovered before and during performance of TAB procedures. Observe and record system reactions to changes in conditions. Record default set points if different from indicated values.

3.2 PREPARATION

A. Prepare a TAB plan that includes strategies and step-by-step procedures for balancing the systems.

B. Perform system-readiness checks of HVAC systems and equipment to verify system readiness for TAB work. Include, at a minimum, the following:
   1. Airside:
      a. Duct systems are complete with terminals installed.
      b. Volume dampers are open and functional.
      c. Clean filters are installed.
      d. Fans are operating, free of vibration, and rotating in correct direction.
      e. Variable-frequency controllers' startup is complete and safeties are verified.
      f. Automatic temperature-control systems are operational.
      g. Ceilings are installed.
      h. Windows and doors are installed.
      i. Suitable access to balancing devices and equipment is provided.

3.3 GENERAL PROCEDURES FOR TESTING AND BALANCING

A. Perform testing and balancing procedures on each system according to the procedures contained in AABC's "National Standards for Total System Balance" or NEBB's "Procedural Standards for Testing, Adjusting, and Balancing of Environmental Systems" or SMACNA's "HVAC Systems - Testing, Adjusting, and Balancing" and in this Section.

B. Cut insulation, ducts, pipes, and equipment cabinets for installation of test probes to the minimum extent necessary for TAB procedures.
   1. After testing and balancing, patch probe holes in ducts with same material and thickness as used to construct ducts.
   2. After testing and balancing, install test ports and duct access doors that comply with requirements in Section 233300 "Air Duct Accessories."
   3. Install and join new insulation that matches removed materials. Restore insulation, coverings, vapor barrier, and finish according to Section 230713 "Duct Insulation."

C. Mark equipment and balancing devices, including damper-control positions, valve position indicators, fan-speed-control levers, and similar controls and devices, with paint or other suitable, permanent identification material to show final settings.

D. Take and report testing and balancing measurements in inch-pound (IP) units.

3.4 GENERAL PROCEDURES FOR BALANCING AIR SYSTEMS

A. Prepare test reports for both fans and outlets. Obtain manufacturer's outlet factors and recommended testing procedures. Cross-check the summation of required outlet volumes with required fan volumes.

B. Prepare schematic diagrams of systems' "as-built" duct layouts.

C. Determine the best locations in main and branch ducts for accurate duct-airflow measurements.

D. Check airflow patterns from the outdoor-air louvers and dampers and the return- and exhaust-air dampers through the supply-fan discharge and mixing dampers.

E. Locate start-stop and disconnect switches, electrical interlocks, and motor starters.

F. Verify that motor starters are equipped with properly sized thermal protection.

G. Check dampers for proper position to achieve desired airflow path.

H. Check for airflow blockages.

I. Check condensate drains for proper connections and functioning.

J. Check for proper sealing of air-handling-unit components.

K. Verify that air duct system is sealed as specified in Section 233113 "Metal Ducts."

3.5 PROCEDURES FOR CONSTANT-VOLUME AIR SYSTEMS

A. Adjust fans to deliver total indicated airflows within the maximum allowable fan speed listed by fan manufacturer.
   1. Measure total airflow.
      a. Where duct conditions allow, measure airflow by Pitot-tube traverse. If necessary, perform multiple Pitot-tube traverses to obtain total airflow.
      b. Where duct conditions are not suitable for Pitot-tube traverse measurements, a coil traverse may be acceptable.
      c. If a reliable Pitot-tube traverse or coil traverse is not possible, measure airflow at terminals and calculate the total airflow.
   2. Measure fan static pressures as follows:
      a. Measure static pressure directly at the fan outlet or through the flexible connection.
      b. Measure static pressure directly at the fan inlet or through the flexible connection.
      c. Measure static pressure across each component that makes up the air-handling system.
      d. Report artificial loading of filters at the time static pressures are measured.
   3. Review Record Documents to determine variations in design static pressures versus actual static pressures. Calculate actual system-effect factors. Recommend adjustments to accommodate actual conditions.
   4. Obtain approval from Contracting Officer for adjustment of fan speed higher or lower than indicated speed. Comply with requirements in HVAC Sections for air-handling units for adjustment of fans, belts, and pulley sizes to achieve indicated air-handling-unit performance.
   5. Do not make fan-speed adjustments that result in motor overload. Consult equipment manufacturers about fan-speed safety factors. Modulate dampers and measure fan-motor amperage to ensure that no overload occurs. Measure amperage in full-cooling, full-heating, economizer, and any other operating mode to determine the maximum required brake horsepower.

B. Adjust volume dampers for main duct, submain ducts, and major branch ducts to indicated airflows.
   1. Measure airflow of submain and branch ducts.
   2. Adjust submain and branch duct volume dampers for specified airflow.
   3. Re-measure each submain and branch duct after all have been adjusted.

C. Adjust air inlets for each space to indicated airflows.
   1. Measure inlets airflow.
   2. Adjust each inlet for specified airflow.
   3. Re-measure each inlet after they have been adjusted.

3.6 TOLERANCES

A. Set HVAC system's airflow rates and water flow rates within the following tolerances:
   1. Supply, Return, and Exhaust Fans and Equipment with Fans: Plus or minus 10 percent.
   2. Air Outlets and Inlets: Plus or minus 10 percent.

B. Maintaining pressure relationships as designed shall have priority over the tolerances specified above.

3.7 FINAL REPORT

A. General: Prepare a certified written report; tabulate and divide the report into separate sections for tested systems and balanced systems.
   1. Include a certification sheet at the front of the report's binder, signed and sealed by the certified testing and balancing engineer.
   2. Include a list of instruments used for procedures, along with proof of calibration.
   3. Certify validity and accuracy of field data.

B. Final Report Contents: In addition to certified field-report data, include the following:
   1. Fan curves.
   2. Manufacturers' test data.
   3. Field test reports prepared by system and equipment installers.
   4. Other information relative to equipment performance; do not include Shop Drawings and Product Data.

C. General Report Data: In addition to form titles and entries, include the following data:
   1. Title page.
   2. Name and address of the TAB specialist.
   3. Project name.
   4. Project location.
   5. Contracting Officer's name and address.
   6. Contractor's name and address.
   7. Report date.
   8. Signature of TAB supervisor who certifies the report.
   9. Table of Contents with the total number of pages defined for each section of the report. Number each page in the report.
   10. Summary of contents including the following:
      a. Indicated versus final performance.
      b. Notable characteristics of systems.
      c. Description of system operation sequence if it varies from the Contract Documents.
   11. Nomenclature sheets for each item of equipment.
   12. Data for terminal units, including manufacturer's name, type, size, and fittings.
   13. Notes to explain why certain final data in the body of reports vary from indicated values.
   14. Test conditions for fans performance forms including the following:
      a. Settings for outdoor-, return-, and exhaust-air dampers.
      b. Conditions of filters.
      c. Cooling coil, wet- and dry-bulb conditions.
      d. Face and bypass damper settings at coils.
      e. Fan drive settings including settings and percentage of maximum pitch diameter.
      f. Settings for supply-air, static-pressure controller.
      g. Other system operating conditions that affect performance.

D. System Diagrams: Include schematic layouts of air distribution systems. Present each system with single-line diagram and include the following:
   1. Quantities of outdoor, supply, return, and exhaust airflows.
   2. Duct, outlet, and inlet sizes.
   3. Pipe and valve sizes and locations.
   4. Balancing stations.

5. Position of balancing devices.

E. Air-Handling-Unit Test Reports: For air-handling units with coils, include the following:
1. Unit Data:
   a. Unit identification.
   b. Location.
   c. Make and type.
   d. Model number and unit size.
   e. Manufacturer's serial number.
   f. Unit arrangement and class.
   g. Discharge arrangement.
   h. Sheave make, size in inches, and bore.
   i. Center-to-center dimensions of sheave and amount of adjustments in inches.
   j. Number, make, and size of belts.
   k. Number, type, and size of filters.
2. Motor Data:
   a. Motor make, and frame type and size.
   b. Horsepower and rpm.
   c. Volts, phase, and hertz.
   d. Full-load amperage and service factor.
   e. Sheave make, size in inches, and bore.
   f. Center-to-center dimensions of sheave and amount of adjustments in inches.
3. Test Data (Indicated and Actual Values):
   a. Total airflow rate in cfm.
   b. Total system static pressure in inches wg.
   c. Fan rpm.
   d. Discharge static pressure in inches wg.
   e. Filter static-pressure differential in inches wg.
   f. Cooling-coil static-pressure differential in inches wg.
   g. Heating-coil static-pressure differential in inches wg.
   h. Outdoor airflow in cfm.
   i. Return airflow in cfm.
   j. Outdoor-air damper position.
   k. Return-air damper position.

F. Round, Flat-Oval, and Rectangular Duct Traverse Reports: Include a diagram with a grid representing the duct cross-section and record the following:
1. Report Data:
   a. System and air-handling-unit number.
   b. Location and zone.
   c. Traverse air temperature in deg F.
   d. Duct static pressure in inches wg.
   e. Duct size in inches.
   f. Duct area in sq. ft..
   g. Indicated airflow rate in cfm.
   h. Indicated velocity in fpm.
   i. Actual airflow rate in cfm.
   j. Actual average velocity in fpm.
   k. Barometric pressure in psig.

3.8 VERIFICATION OF TAB REPORT

A. The TAB specialist's test and balance engineer shall conduct the inspection in the presence of Contracting Officer.

B. Contracting Officer shall randomly select measurements, documented in the final report, to be rechecked. Rechecking shall be limited to either 10 percent of the total measurements recorded or the extent of measurements that can be accomplished in a normal 8-hour business day.

C. If rechecks yield measurements that differ from the measurements documented in the final report by more than the tolerances allowed, the measurements shall be noted as "FAILED."

D. If the number of "FAILED" measurements is greater than 10 percent of the total measurements checked during the final inspection, the testing and balancing shall be considered incomplete and shall be rejected.

E. If TAB work fails, proceed as follows:
   1. TAB specialists shall recheck all measurements and make adjustments. Revise the final report and balancing device settings to include all changes; resubmit the final report and request a second final inspection.
   2. If the second final inspection also fails, Contracting Officer may contract the services of another TAB specialist to complete TAB work according to the Contract Documents and deduct the cost of the services from the original TAB specialist's final payment.
   3. If the second verification also fails, Contracting Officer may contact AABC Headquarters regarding the AABC National Performance Guaranty.

F. Prepare test and inspection reports.

3.9 ADDITIONAL TESTS

A. Within 90 days of completing TAB, perform additional TAB to verify that balanced conditions are being maintained throughout and to correct unusual conditions.

B. Seasonal Periods: If initial TAB procedures were not performed during near-peak summer and winter conditions, perform additional TAB during near-peak summer and winter conditions.

END OF SECTION 23 05 93

SECTION 23 07 13 - DUCT INSULATION

PART 1 - GENERAL

1.1 SUMMARY

A. Section includes insulating the following duct services:
   1. Indoor, concealed supply and outdoor air.
   2. Indoor, concealed return located in unconditioned space.

B. Related Sections:
   1. Section 233113 "Metal Ducts" for duct liners.

1.2 ACTION SUBMITTALS

A. Product Data: For each type of product indicated.

B. Shop Drawings: Include plans, elevations, sections, details, and attachments to other work.
   1. Detail application of protective shields, saddles, and inserts at hangers for each type of insulation and hanger.
   2. Detail insulation application at elbows, fittings, dampers, specialties and flanges for each type of insulation.
   3. Detail application of field-applied jackets.
   4. Detail application at linkages of control devices.

1.3 INFORMATIONAL SUBMITTALS

A. Field quality-control reports.

1.4 QUALITY ASSURANCE

A. Surface-Burning Characteristics: For insulation and related materials, as determined by testing identical products according to ASTM E 84, by a testing agency acceptable to authorities having jurisdiction. Factory label insulation and jacket materials and adhesive, mastic, tapes, and cement material containers, with appropriate markings of applicable testing agency.
   1. Insulation Installed Indoors: Flame-spread index of 25 or less, and smoke-developed index of 50 or less.
   2. Insulation Installed Outdoors: Flame-spread index of 75 or less, and smoke-developed index of 150 or less.

PART 2 - PRODUCTS

2.1 INSULATION MATERIALS

A. Comply with requirements in "Duct Insulation Schedule, General," "Indoor Duct and Plenum Insulation Schedule," and "Aboveground, Outdoor Duct and Plenum Insulation Schedule" articles for where insulating materials shall be applied.

B. Products shall not contain asbestos, lead, mercury, or mercury compounds.

C. Products that come in contact with stainless steel shall have a leachable chloride content of less than 50 ppm when tested according to ASTM C 871.

D. Insulation materials for use on austenitic stainless steel shall be qualified as acceptable according to ASTM C 795.

E. Foam insulation materials shall not use CFC or HCFC blowing agents in the manufacturing process.

F. Mineral-Fiber Blanket Insulation: Mineral or glass fibers bonded with a thermosetting resin. Comply with ASTM C 553, Type II and ASTM C 1290, Type III with factory-applied FSK jacket. Factory-applied jacket requirements are specified in "Factory-Applied Jackets" Article.

G. Mineral-Fiber Board Insulation: Mineral or glass fibers bonded with a thermosetting resin. Comply with ASTM C 612, Type IA or Type IB. For duct and plenum applications, provide insulation with factory-applied FSK jacket. Factory-applied jacket requirements are specified in "Factory-Applied Jackets" Article.

2.2 ADHESIVES

A. Materials shall be compatible with insulation materials, jackets, and substrates and for bonding insulation to itself and to surfaces to be insulated unless otherwise indicated.

B. Mineral-Fiber Adhesive: Comply with MIL-A-3316C, Class 2, Grade A.

C. ASJ Adhesive, and FSK Jacket Adhesive: Comply with MIL-A-3316C, Class 2, Grade A for bonding insulation jacket lap seams and joints.

2.3 MASTICS

A. Materials shall be compatible with insulation materials, jackets, and substrates; comply with MIL-PRF-19565C, Type II.

B. Vapor-Barrier Mastic: Water based; suitable for indoor use on below ambient services.
   1. Water-Vapor Permeance: ASTM E 96/E 96M, Procedure B, 0.013 perm at 43-mil dry film thickness.
   2. Service Temperature Range: Minus 20 to plus 180 deg F.
   3. Solids Content: ASTM D 1644, 58 percent by volume and 70 percent by weight.
   4. Color: White.

C. Breather Mastic: Water based; suitable for indoor and outdoor use on above ambient services.
   1. Water-Vapor Permeance: ASTM F 1249, 1.8 perms at 0.0625-inch dry film thickness.
   2. Service Temperature Range: Minus 20 to plus 180 deg F.
   3. Solids Content: 60 percent by volume and 66 percent by weight.
   4. Color: White.

2.4 SEALANTS

A. FSK and Metal Jacket Flashing Sealants:
   1. Materials shall be compatible with insulation materials, jackets, and substrates.
   2. Fire- and water-resistant, flexible, elastomeric sealant.
   3. Service Temperature Range: Minus 40 to plus 250 deg F.
   4. Color: Aluminum.

2.5 FACTORY-APPLIED JACKETS

A. Insulation system schedules indicate factory-applied jackets on various applications. When factory-applied jackets are indicated, comply with the following:
   1. FSK Jacket: Aluminum-foil, fiberglass-reinforced scrim with kraft-paper backing; complying with ASTM C 1136, Type II.

2.6 FIELD-APPLIED JACKETS

A. Field-applied jackets shall comply with ASTM C 921, Type I, unless otherwise indicated.

B. FSK Jacket: Aluminum-foil-face, fiberglass-reinforced scrim with kraft-paper backing.

2.7 TAPES

A. FSK Tape: Foil-face, vapor-retarder tape matching factory-applied jacket with acrylic adhesive; complying with ASTM C 1136.
   1. Width: 3 inches.
   2. Thickness: 6.5 mils.
   3. Adhesion: 90 ounces force/inch in width.
   4. Elongation: 2 percent.
   5. Tensile Strength: 40 lbf/inch in width.
   6. FSK Tape Disks and Squares: Precut disks or squares of FSK tape.

B. Aluminum-Foil Tape: Vapor-retarder tape with acrylic adhesive.
   1. Width: 2 inches.
   2. Thickness: 3.7 mils.
   3. Adhesion: 100 ounces force/inch in width.
   4. Elongation: 5 percent.
   5. Tensile Strength: 34 lbf/inch in width.

2.8 SECUREMENTS

A. Aluminum Bands: ASTM B 209, Alloy 3003, 3005, 3105, or 5005; Temper H-14, 0.020 inch thick, 3/4 inch wide with wing seal .

B. Insulation Pins and Hangers:
   1. Metal, Adhesively Attached, Perforated-Base Insulation Hangers: Baseplate welded to projecting spindle that is capable of holding insulation, of thickness indicated, securely in position indicated when self-locking washer is in place. Comply with the following requirements:
      a. Baseplate: Perforated, galvanized carbon-steel sheet, 0.030 inch thick by 2 inches square.
      b. Spindle: Copper- or zinc-coated, low-carbon steel or Aluminum or Stainless steel, fully annealed, 0.106-inch- diameter shank, length to suit depth of insulation indicated.
      c. Adhesive: Recommended by hanger manufacturer. Product with demonstrated capability to bond insulation hanger securely to substrates indicated without damaging insulation, hangers, and substrates.
   2. Nonmetal, Adhesively Attached, Perforated-Base Insulation Hangers: Baseplate fastened to projecting spindle that is capable of holding insulation, of thickness indicated, securely in position indicated when self-locking washer is in place. Comply with the following requirements:
      a. Baseplate: Perforated, nylon sheet, 0.030 inch thick by 1-1/2 inches in diameter.
      b. Spindle: Nylon, 0.106-inch- diameter shank, length to suit depth of insulation indicated, up to 2-1/2 inches.
      c. Adhesive: Recommended by hanger manufacturer. Product with demonstrated capability to bond insulation hanger securely to substrates indicated without damaging insulation, hangers, and substrates.
   3. Self-Sticking-Base Insulation Hangers: Baseplate welded to projecting spindle that is capable of holding insulation, of thickness indicated, securely in position indicated when self-locking washer is in place. Comply with the following requirements:
      a. Baseplate: Galvanized carbon-steel sheet, 0.030 inch thick by 2 inches square.
      b. Spindle: Copper- or zinc-coated, low-carbon steel or Aluminum or Stainless steel, fully annealed, 0.106-inch- diameter shank, length to suit depth of insulation indicated.

c. Adhesive-backed base with a peel-off protective cover.

4. Insulation-Retaining Washers: Self-locking washers formed from 0.016-inch- thick, galvanized-steel or aluminum or stainless-steel sheet, with beveled edge sized as required to hold insulation securely in place but not less than 1-1/2 inches in diameter.
   a. Protect ends with capped self-locking washers incorporating a spring steel insert to ensure permanent retention of cap in exposed locations.
5. Nonmetal Insulation-Retaining Washers: Self-locking washers formed from 0.016-inch-thick nylon sheet, with beveled edge sized as required to hold insulation securely in place but not less than 1-1/2 inches in diameter.

C. Staples: Outward-clinching insulation staples, nominal 3/4-inch- wide, stainless steel or Monel.

2.9 CORNER ANGLES

A. Aluminum Corner Angles: 0.040 inch thick, minimum 1 by 1 inch, aluminum according to ASTM B 209, Alloy 3003, 3005, 3105, or 5005; Temper H-14.

PART 3 - EXECUTION

3.1 PREPARATION

A. Surface Preparation: Clean and dry surfaces to receive insulation. Remove materials that will adversely affect insulation application.

3.2 GENERAL INSTALLATION REQUIREMENTS

A. Install insulation materials, accessories, and finishes with smooth, straight, and even surfaces; free of voids throughout the length of ducts and fittings.

B. Install insulation materials, vapor barriers or retarders, jackets, and thicknesses required for each item of duct system as specified in insulation system schedules.

C. Install accessories compatible with insulation materials and suitable for the service. Install accessories that do not corrode, soften, or otherwise attack insulation or jacket in either wet or dry state.

D. Install insulation with longitudinal seams at top and bottom of horizontal runs.

E. Install multiple layers of insulation with longitudinal and end seams staggered.

F. Keep insulation materials dry during application and finishing.

G. Install insulation with tight longitudinal seams and end joints. Bond seams and joints with adhesive recommended by insulation material manufacturer.

H. Install insulation with least number of joints practical.

I. Where vapor barrier is indicated, seal joints, seams, and penetrations in insulation at hangers, supports, anchors, and other projections with vapor-barrier mastic.
   1. Install insulation continuously through hangers and around anchor attachments.
   2. For insulation application where vapor barriers are indicated, extend insulation on anchor legs from point of attachment to supported item to point of attachment to structure. Taper and seal ends at attachment to structure with vapor-barrier mastic.
   3. Install insert materials and install insulation to tightly join the insert. Seal insulation to insulation inserts with adhesive or sealing compound recommended by insulation material manufacturer.

J. Apply adhesives, mastics, and sealants at manufacturer's recommended coverage rate and wet and dry film thicknesses.

K. Install insulation with factory-applied jackets as follows:
   1. Draw jacket tight and smooth.
   2. Cover circumferential joints with 3-inch- wide strips, of same material as insulation jacket. Secure strips with adhesive and outward clinching staples along both edges of strip, spaced 4 inches o.c.
   3. Overlap jacket longitudinal seams at least 1-1/2 inches. Clean and dry surface to receive self-sealing lap. Staple laps with outward clinching staples along edge at 2 inches o.c.
      a. For below ambient services, apply vapor-barrier mastic over staples.
   4. Cover joints and seams with tape, according to insulation material manufacturer's written instructions, to maintain vapor seal.
   5. Where vapor barriers are indicated, apply vapor-barrier mastic on seams and joints and at ends adjacent to duct flanges and fittings.

L. Cut insulation in a manner to avoid compressing insulation more than 75 percent of its nominal thickness.

M. Finish installation with systems at operating conditions. Repair joint separations and cracking due to thermal movement.

N. Repair damaged insulation facings by applying same facing material over damaged areas. Extend patches at least 4 inches beyond damaged areas. Adhere, staple, and seal patches similar to butt joints.

3.3 PENETRATIONS

A. Insulation Installation at Aboveground Exterior Wall Penetrations: Install insulation continuously through wall penetrations.
   1. Seal penetrations with flashing sealant.
   2. For applications requiring only indoor insulation, terminate insulation inside wall surface and seal with joint sealant. For applications requiring indoor and outdoor insulation, install insulation for outdoor applications tightly joined to indoor insulation ends. Seal joint with joint sealant.
   3. Extend jacket of outdoor insulation outside wall flashing and overlap wall flashing at least 2 inches.
   4. Seal jacket to wall flashing with flashing sealant.

B. Insulation Installation at Interior Wall and Partition Penetrations (That Are Not Fire Rated): Install insulation continuously through walls and partitions.

3.4 INSTALLATION OF MINERAL-FIBER INSULATION

A. Blanket Insulation Installation on Ducts and Plenums: Secure with adhesive and insulation pins.
   1. Apply adhesives according to manufacturer's recommended coverage rates per unit area, for 100 percent coverage of duct and plenum surfaces.
   2. Apply adhesive to entire circumference of ducts and to all surfaces of fittings and transitions.
   3. Install either capacitor-discharge-weld pins and speed washers or cupped-head, capacitor-discharge-weld pins on sides and bottom of horizontal ducts and sides of vertical ducts as follows:
      a. On duct sides with dimensions 18 inches and smaller, place pins along longitudinal centerline of duct. Space 3 inches maximum from insulation end joints, and 16 inches o.c.

b. On duct sides with dimensions larger than 18 inches, place pins 16 inches o.c. each way, and 3 inches maximum from insulation joints. Install additional pins to hold insulation tightly against surface at cross bracing.
c. Pins may be omitted from top surface of horizontal, rectangular ducts and plenums.
d. Do not overcompress insulation during installation.
e. Impale insulation over pins and attach speed washers.
f. Cut excess portion of pins extending beyond speed washers or bend parallel with insulation surface. Cover exposed pins and washers with tape matching insulation facing.

4. For ducts and plenums with surface temperatures below ambient, install a continuous unbroken vapor barrier. Create a facing lap for longitudinal seams and end joints with insulation by removing 2 inches from one edge and one end of insulation segment. Secure laps to adjacent insulation section with 1/2-inch outward-clinching staples, 1 inch o.c. Install vapor barrier consisting of factory- or field-applied jacket, adhesive, vapor-barrier mastic, and sealant at joints, seams, and protrusions.
   a. Repair punctures, tears, and penetrations with tape or mastic to maintain vapor-barrier seal.
   b. Install vapor stops for ductwork and plenums operating below 50 deg F at 18-foot intervals. Vapor stops shall consist of vapor-barrier mastic applied in a Z-shaped pattern over insulation face, along butt end of insulation, and over the surface. Cover insulation face and surface to be insulated a width equal to two times the insulation thickness, but not less than 3 inches.
5. Overlap unfaced blankets a minimum of 2 inches on longitudinal seams and end joints. At end joints, secure with steel bands spaced a maximum of 18 inches o.c.
6. Install insulation on rectangular duct elbows and transitions with a full insulation section for each surface. Install insulation on round and flat-oval duct elbows with individually mitered gores cut to fit the elbow.
7. Insulate duct stiffeners, hangers, and flanges that protrude beyond insulation surface with 6-inch- wide strips of same material used to insulate duct. Secure on alternating sides of stiffener, hanger, and flange with pins spaced 6 inches o.c.

B. Board Insulation Installation on Ducts and Plenums: Secure with adhesive and insulation pins.
1. Apply adhesives according to manufacturer's recommended coverage rates per unit area, for 75 percent coverage of duct and plenum surfaces.
2. Apply adhesive to entire circumference of ducts and to all surfaces of fittings and transitions.
3. Install either capacitor-discharge-weld pins and speed washers or cupped-head, capacitor-discharge-weld pins on sides and bottom of horizontal ducts and sides of vertical ducts as follows:
   a. On duct sides with dimensions 18 inches and smaller, place pins along longitudinal centerline of duct. Space 3 inches maximum from insulation end joints, and 16 inches o.c.
   b. On duct sides with dimensions larger than 18 inches, space pins 16 inches o.c. each way, and 3 inches maximum from insulation joints. Install additional pins to hold insulation tightly against surface at cross bracing.
   c. Pins may be omitted from top surface of horizontal, rectangular ducts and plenums.
   d. Do not overcompress insulation during installation.
   e. Cut excess portion of pins extending beyond speed washers or bend parallel with insulation surface. Cover exposed pins and washers with tape matching insulation facing.

4. For ducts and plenums with surface temperatures below ambient, install a continuous unbroken vapor barrier. Create a facing lap for longitudinal seams and end joints with insulation by removing 2 inches from one edge and one end of insulation segment. Secure laps to adjacent insulation section with 1/2-inch outward-clinching staples, 1 inch o.c. Install vapor barrier consisting of factory- or field-applied jacket, adhesive, vapor-barrier mastic, and sealant at joints, seams, and protrusions.
    a. Repair punctures, tears, and penetrations with tape or mastic to maintain vapor-barrier seal.
    b. Install vapor stops for ductwork and plenums operating below 50 deg F at 18-foot intervals. Vapor stops shall consist of vapor-barrier mastic applied in a Z-shaped pattern over insulation face, along butt end of insulation, and over the surface. Cover insulation face and surface to be insulated a width equal to two times the insulation thickness, but not less than 3 inches.
5. Install insulation on rectangular duct elbows and transitions with a full insulation section for each surface. Groove and score insulation to fit as closely as possible to outside and inside radius of elbows. Install insulation on round and flat-oval duct elbows with individually mitered gores cut to fit the elbow.
6. Insulate duct stiffeners, hangers, and flanges that protrude beyond insulation surface with 6-inch- wide strips of same material used to insulate duct. Secure on alternating sides of stiffener, hanger, and flange with pins spaced 6 inches o.c.

3.5 FIELD-APPLIED JACKET INSTALLATION

A. Where FSK jackets are indicated, install as follows:
    1. Draw jacket material smooth and tight.
    2. Install lap or joint strips with same material as jacket.
    3. Secure jacket to insulation with manufacturer's recommended adhesive.
    4. Install jacket with 1-1/2-inch laps at longitudinal seams and 3-inch- wide joint strips at end joints.
    5. Seal openings, punctures, and breaks in vapor-retarder jackets and exposed insulation with vapor-barrier mastic.

3.6 FINISHES

A. Do not field paint aluminum or stainless-steel jackets.

3.7 FIELD QUALITY CONTROL

A. Perform tests and inspections.

B. Tests and Inspections:
    1. Inspect ductwork, randomly selected by Contracting Officer, by removing field-applied jacket and insulation in layers in reverse order of their installation. Extent of inspection shall be limited to one location(s) for each duct system defined in the "Duct Insulation Schedule, General" Article.

C. All insulation applications will be considered defective Work if sample inspection reveals noncompliance with requirements.

3.8 DUCT INSULATION SCHEDULE, GENERAL

A. Plenums and Ducts Requiring Insulation:
    1. Indoor, concealed supply and outdoor air.
    2. Indoor, concealed return located in unconditioned space.

B. Items Not Insulated:
    1. Fibrous-glass ducts.

2. Metal ducts with duct liner of sufficient thickness to comply with energy code and ASHRAE/IESNA 90.1.
3. Factory-insulated flexible ducts.
4. Factory-insulated plenums and casings.
5. Flexible connectors.
6. Vibration-control devices.
7. Factory-insulated access panels and doors.

3.9 INDOOR DUCT AND PLENUM INSULATION SCHEDULE

A. Concealed, Supply-Air Duct and Plenum Insulation: Mineral-fiber blanket or board, 1-1/2 inches thick and 3-lb/cu. ft. nominal density.

B. Concealed, Return-Air Duct and Plenum Insulation: Mineral-fiber blanket or board, 1-1/2 inches thick and 1.5-lb/cu. ft. nominal density.

C. Concealed, Outdoor-Air Duct and Plenum Insulation: Mineral-fiber blanket or board, 1-1/2 inches thick and 3-lb/cu. ft. nominal density.

END OF SECTION 23 07 13

THIS PAGE INTENTIONALLY LEFT BLANK

SECTION 230719 - HVAC PIPING INSULATION

PART 1 - GENERAL

1.1 SUMMARY

A. Section includes insulation for HVAC piping systems.

B. Related Requirements:

1. Section 230713 "Duct Insulation" for duct insulation.

1.2 ACTION SUBMITTALS

A. Product Data: For each type of product.

1.3 INFORMATIONAL SUBMITTALS

A. Qualification Data: For qualified Installer.

B. Material test reports.

C. Field quality-control reports.

1.4 QUALITY ASSURANCE

A. Installer Qualifications: Skilled mechanics who have successfully completed an apprenticeship program or craft training program.

1.5 COORDINATION

A. Coordinate sizes and locations of supports, hangers, and insulation shields specified in Section 230529 "Hangers and Supports for HVAC Piping and Equipment."

B. Coordinate clearance requirements with piping Installer for piping insulation application. Before preparing piping Shop Drawings, establish and maintain clearance requirements for installation of insulation and field-applied jackets and finishes and for space required for maintenance.

1.6 SCHEDULING

A. Schedule insulation application after pressure testing systems and, where required, after installing and testing heat tracing. Insulation application may begin on segments that have satisfactory test results.

PART 2 - PRODUCTS

2.1 PERFORMANCE REQUIREMENTS

A. Surface-Burning Characteristics: For insulation and related materials, as determined by testing identical products in accordance with ASTM E84, by a testing agency acceptable to authorities having jurisdiction. Factory label insulation, jacket materials, adhesive, mastic, tapes, and cement material containers with appropriate markings of applicable testing agency.

   1. All Insulation Installed Indoors: Flame-spread index of 25 or less, and smoke-developed index of 50 or less.

2.2 INSULATION MATERIALS

A. Comply with requirements in "Piping Insulation Schedule, General," "Indoor Piping Insulation Schedule," and "Outdoor, Aboveground Piping Insulation Schedule" articles for where insulating materials shall be applied.

B. Products shall not contain asbestos, lead, mercury, or mercury compounds.

C. Products that come into contact with stainless steel shall have a leachable chloride content of less than 50 ppm when tested in accordance with ASTM C871.

D. Insulation materials for use on austenitic stainless steel shall be qualified as acceptable in accordance with ASTM C795.

E. Foam insulation materials shall not use CFC or HCFC blowing agents in the manufacturing process.

F. Cellular Glass: Inorganic, incombustible, foamed or cellulated glass with annealed, rigid, hermetically sealed cells. Comply with ASTM C552.
   1. Preformed Pipe Insulation without Jacket: Type II, Class 1, unfaced.
   2. Preformed Pipe Insulation with Jacket: Type II, Class 2, with factory-applied ASJ jacket.
   3. Fabricated shapes in accordance with ASTM C450, ASTM C585, and ASTM C1639.
   4. Factory-applied jacket requirements are specified in "Factory-Applied Jackets" Article.

G. Flexible Elastomeric: Closed-cell, or expanded-rubber materials; suitable for maximum use temperature between minus 70 deg F and 220 deg F. Comply with ASTM C534/C534M, Type I for tubular materials, Type II, for sheet materials.

H. Glass-Fiber, Preformed Pipe: Glass fibers bonded with a thermosetting resin; suitable for maximum use temperature up to 850 deg F in accordance with ASTM C411. Comply with ASTM C547.
   1. Preformed Pipe Insulation: Type I, Grade A with factory-applied ASJ.
   2. Fabricated shapes in accordance with ASTM C450 and ASTM C585.
   3. Factory-applied jacket requirements are specified in "Factory-Applied Jackets" Article.

I. Mineral Wool, Preformed Pipe: Mandrel-wound mineral wool fibers bonded with a thermosetting resin, unfaced; suitable for maximum use temperature up to 1200 deg F in accordance with ASTM C447. Comply with ASTM C547.
   1. Preformed Pipe Insulation: Type II, Grade A, with factory-applied ASJ.
   2. Fabricated shapes in accordance with ASTM C450 and ASTM C585.

2.3 ADHESIVES

A. Materials shall be compatible with insulation materials, jackets, and substrates and for bonding insulation to itself and to surfaces to be insulated unless otherwise indicated.

B. Cellular-Glass Adhesive: Two-component, thermosetting urethane adhesive containing no flammable solvents, with a service temperature range of minus 100 to plus 200 deg F.

C. Flexible Elastomeric Adhesive: Solvent-based adhesive.
   1. Flame-spread index shall be 25 or less and smoke-developed index shall be 50 or less as tested in accordance with ASTM E84.
   2. Wet Flash Point: Below 0 deg F.
   3. Service Temperature Range: 40 to 200 deg F.
   4. Color: Black.

D. Glass-Fiber and Mineral Wool Adhesive: Comply with MIL-A-3316C, Class 2, Grade A.

E. ASJ Adhesive Jacket Adhesive: Comply with MIL-A-3316C, Class 2, Grade A, for bonding insulation jacket lap seams and joints.

2.4 MASTICS AND COATINGS

A. Materials shall be compatible with insulation materials, jackets, and substrates.

B. Vapor-Retarder Mastic, Water Based: Suitable for indoor use on below-ambient services.
   1. Water-Vapor Permeance: Comply with ASTM E96/E96M or ASTM F1249.
   2. Service Temperature Range: 0 to plus 180 deg F.
   3. Comply with MIL-PRF-19565C, Type II, for permeance requirements, with supplier listing on DOD QPD - Qualified Products Database.
   4. Color: White.

C. Breather Mastic: Water based; suitable for indoor and outdoor use on above-ambient services.
   1. Water-Vapor Permeance: ASTM E96/E96M, greater than 1.0 perm at manufacturer's recommended dry film thickness.
   2. Service Temperature Range: 0 to plus 180 deg F.
   3. Color: White.

2.5 SEALANTS

A. Materials shall be as recommended by the insulation manufacturer and shall be compatible with insulation materials, jackets, and substrates.

B. Joint Sealants:

1. Permanently flexible, elastomeric sealant.

    a. Service Temperature Range: Minus 150 to plus 250 deg F.
    b. Color: White or gray.

C. Metal Jacket Flashing Sealants:
    1. Fire- and water-resistant, flexible, elastomeric sealant.
    2. Service Temperature Range: Minus 40 to plus 250 deg F.
    3. Color: Aluminum.

D. ASJ Flashing Sealants:
    1. Fire- and water-resistant, flexible, elastomeric sealant.
    2. Service Temperature Range: Minus 40 to plus 250 deg F.
    3. Color: White.

2.6 FACTORY-APPLIED JACKETS

A. Insulation system schedules indicate factory-applied jackets on various applications. When factory-applied jackets are indicated, comply with the following:

    1. ASJ: White, kraft-paper, fiberglass-reinforced scrim with aluminum-foil backing; complying with ASTM C1136, Type I.

2.7 FIELD-APPLIED JACKETS

A. Field-applied jackets shall comply with ASTM C1136, Type I, unless otherwise indicated.

B. Metal Jacket:
    1. Aluminum Jacket: Comply with ASTM B209, Alloy 3003, 3005, 3105, or 5005, Temper H-14.

        a. Sheet and roll stock ready for shop or field sizing.
        b. Finish and thickness are indicated in field-applied jacket schedules.
        c. Moisture Barrier for Outdoor Applications: 3-mil-thick, heat-bonded polyethylene and kraft paper or 3-mil-thick polysurlyn.
        d. Factory-Fabricated Fitting Covers:

            1) Same material, finish, and thickness as jacket.
            2) Preformed two-piece or gore, 45- and 90-degree, short- and long-radius elbows.
            3) Tee covers.
            4) Flange and union covers.
            5) End caps.
            6) Beveled collars.
            7) Valve covers.
            8) Field fabricate fitting covers only if factory-fabricated fitting covers are not available.

2.8 FIELD-APPLIED REINFORCING MESH

A. Woven Glass-Fiber Mesh: Approximately 2 oz./sq. yd. with a thread count of 10 strands by 10 strands/sq. in. for covering pipe and pipe fittings.

B. Woven Polyester Mesh: Approximately 1 oz./sq. yd. with a thread count of 10 strands by 10 strands/sq. in. in a Leno weave, for pipe.

2.9 TAPES

A. ASJ Tape: White vapor-retarder tape matching factory-applied jacket with acrylic adhesive, complying with ASTM C1136.
   1. Width: 3 inches.
   2. Thickness: 11.5 mils.
   3. Adhesion: 90 ounces force/inch in width.
   4. Elongation: 2 percent.
   5. Tensile Strength: 40 lbf/inch in width.
   6. ASJ Tape Disks and Squares: Precut disks or squares of ASJ tape.

2.10 SECUREMENTS

A. Bands:
   1. Aluminum: ASTM B209, Alloy 3003, 3005, 3105, or 5005; Temper H-14, 0.020 inch thick, 1/2 inch wide with wing seal.

B. Staples: Outward-clinching insulation staples, nominal 3/4 inch wide, stainless steel or Monel.

C. Wire: 0.062-inch soft-annealed, stainless steel

PART 3 - EXECUTION

3.1 PREPARATION

A. Clean and dry surfaces to receive insulation. Remove materials that will adversely affect insulation application.

B. Coordinate insulation installation with the tradesman installing heat tracing. Comply with requirements for heat tracing that apply to insulation.

C. Mix insulating cements with clean potable water; if insulating cements are to be in contact with stainless steel surfaces, use demineralized water.

3.2 GENERAL INSTALLATION REQUIREMENTS

A. Install insulation materials, accessories, and finishes with smooth, straight, and even surfaces; free of voids throughout the length of piping, including fittings, valves, and specialties.

B. Install insulation materials, forms, vapor barriers or retarders, jackets, and of thicknesses required for each item of pipe system, as specified in insulation system schedules.

C. Install accessories compatible with insulation materials and suitable for the service. Install accessories that do not corrode, compress, or otherwise damage insulation or jacket.

D. Install insulation with longitudinal seams at top and bottom (12 o'clock and 6 o'clock positions) of horizontal runs.

E. Install multiple layers of insulation with longitudinal and end seams staggered.

F. Do not weld brackets, clips, or other attachment devices to piping, fittings, and specialties.

G. Keep insulation materials dry during storage, application, and finishing. Replace insulation materials that get wet during storage or in the installation process before being properly covered and sealed in accordance with the Contract Documents.

H. Install insulation with tight longitudinal seams and end joints. Bond seams and joints with adhesive recommended by insulation material manufacturer.

I. Install insulation with least number of joints practical.

J. Where vapor barrier is indicated, seal joints, seams, and penetrations in insulation at hangers, supports, anchors, and other projections with vapor-barrier mastic.

1. Install insulation continuously through hangers and around anchor attachments.
2. For insulation application where vapor barriers are indicated, extend insulation on anchor legs from point of attachment to supported item to point of attachment to structure. Taper and seal ends attached to structure with vapor-barrier mastic.
3. Install insert materials and insulation to tightly join the insert. Seal insulation to insulation inserts with adhesive or sealing compound recommended by insulation material manufacturer.
4. Cover inserts with jacket material matching adjacent pipe insulation. Install shields over jacket, arranged to protect jacket from tear or puncture by hanger, support, and shield.

K. Apply adhesives, mastics, and sealants at manufacturer's recommended coverage rate and wet and dry film thicknesses.

L. Install insulation with factory-applied jackets as follows:

1. Draw jacket tight and smooth, but not to the extent of creating wrinkles or areas of compression in the insulation.
2. Cover circumferential joints with 3-inch-wide strips, of same material as insulation jacket. Secure strips with adhesive and outward-clinching staples along both edges of strip, spaced 4 inches o.c.
3. Overlap jacket longitudinal seams at least 1-1/2 inches. Install insulation with longitudinal seams at bottom of pipe. Clean and dry surface to receive self-sealing lap. Staple laps with outward-clinching staples along edge at 2 inches o.c.
4. For below-ambient services, apply vapor-barrier mastic over staples.
5. Cover joints and seams with tape, in accordance with insulation material manufacturer's written instructions, to maintain vapor seal.

6. Where vapor barriers are indicated, apply vapor-barrier mastic on seams and joints and at ends adjacent to pipe flanges and fittings.

M. Cut insulation in a manner to avoid compressing insulation.

N. Finish installation with systems at operating conditions. Repair joint separations and cracking due to thermal movement.

O. Repair damaged insulation facings by applying same facing material over damaged areas. Extend patches at least 4 inches beyond damaged areas. Adhere, staple, and seal patches in similar fashion to butt joints.

P. For above-ambient services, do not install insulation to the following:

1. Vibration-control devices.
2. Testing agency labels and stamps.
3. Nameplates and data plates.

3.3 PENETRATIONS

A. Insulation Installation at Aboveground Exterior Wall Penetrations: Install insulation continuously through wall penetrations.

1. Seal penetrations with flashing sealant.
2. For applications requiring only indoor insulation, terminate insulation inside wall surface and seal with joint sealant. For applications requiring indoor and outdoor insulation, install insulation for outdoor applications tightly joined to indoor insulation ends. Seal joint with joint sealant.
3. Extend jacket of outdoor insulation outside wall flashing and overlap wall flashing at least 2 inches.
4. Seal jacket to wall flashing with flashing sealant.

B. Insulation Installation at Interior Wall and Partition Penetrations (That Are Not Fire Rated): Install insulation continuously through walls and partitions.

3.4 GENERAL PIPE INSULATION INSTALLATION

A. Requirements in this article generally apply to all insulation materials, except where more specific requirements are specified in various pipe insulation material installation articles below.

B. Insulation Installation on Fittings, Valves, Strainers, and Unions:

1. Install insulation over fittings, valves, strainers, flanges, mechanical couplings, unions, and other specialties with continuous thermal and vapor-retarder integrity unless otherwise indicated.
2. Insulate pipe elbows using prefabricated fitting insulation or mitered or routed fittings made from same material and density as that of adjacent pipe insulation. Each piece shall be butted tightly against adjoining piece and bonded with adhesive. Fill joints, seams,

voids, and irregular surfaces with insulating cement finished to a smooth, hard, and uniform contour that is uniform with adjoining pipe insulation.

3. Insulate valves using prefabricated fitting insulation or sectional pipe insulation of same material, density, and thickness as that used for adjacent pipe. Overlap adjoining pipe insulation by not less than 2 times the thickness of pipe insulation, or one pipe diameter, whichever is thicker. For valves, insulate up to and including the bonnets, valve stuffing-box studs, bolts, and nuts. Fill joints, seams, and irregular surfaces with insulating cement.
4. Insulate strainers using prefabricated fitting insulation or sectional pipe insulation of same material, density, and thickness as that used for adjacent pipe. Overlap adjoining pipe insulation by not less than 2 times the thickness of pipe insulation, or one pipe diameter, whichever is thicker. Fill joints, seams, and irregular surfaces with insulating cement. Insulate strainers, so strainer basket flange or plug can be easily removed and replaced without damaging the insulation and jacket. Provide a removable reusable insulation cover. For below-ambient services, provide a design that maintains vapor barrier.
5. Cover segmented insulated surfaces with a layer of finishing cement and coat with a mastic. Install vapor-barrier mastic for below-ambient services and a breather mastic for above-ambient services. Reinforce the mastic with reinforcing mesh. Trowel the mastic to a smooth and well-shaped contour.
6. For services not specified to receive a field-applied jacket, except for flexible elastomeric and polyolefin, install fitted PVC cover over elbows, tees, strainers, valves, flanges, and unions. Terminate ends with PVC end caps. Tape PVC covers to adjoining insulation facing, using PVC tape.

C. Insulate instrument connections for thermometers, pressure gages, pressure temperature taps, test connections, flow meters, sensors, switches, and transmitters on insulated pipes. Shape insulation at these connections by tapering it to and around the connection with insulating cement and finish with finishing cement, mastic, and flashing sealant.

D. Install removable insulation covers. Installation shall conform to the following:

1. Make removable flange and union insulation from sectional pipe insulation of same thickness as that on adjoining pipe. Install same insulation jacket as that of adjoining pipe insulation.
2. When flange and union covers are made from sectional pipe insulation, extend insulation from flanges or union at least 2 times the insulation thickness over adjacent pipe insulation on each side of flange or union. Secure flange cover in place with stainless steel or aluminum bands. Select band material compatible with insulation and jacket.
3. Construct removable valve insulation covers in same manner as for flanges, except divide the two-part section on the vertical center line of valve body.
4. When covers are made from block insulation, make two halves, each consisting of mitered blocks wired to stainless steel fabric. Secure this wire frame, with its attached insulation, to flanges with tie wire. Extend insulation at least 2 inches over adjacent pipe insulation on each side of valve. Fill space between flange or union cover and pipe insulation with insulating cement. Finish cover assembly with insulating cement applied in two coats. After first coat is dry, apply and trowel second coat to a smooth finish.
5. Unless a PVC jacket is indicated in field-applied jacket schedules, finish exposed surfaces with a metal jacket.

3.5 INSTALLATION OF CELLULAR-GLASS INSULATION

A. Insulation Installation on Straight Pipes and Tubes:

1. Secure each layer of insulation to pipe with wire or bands, and tighten bands without deforming insulation materials.
2. Where vapor barriers are indicated, seal longitudinal seams, end joints, and protrusions with vapor-barrier mastic and joint sealant.
3. For insulation with jackets on above-ambient services, secure laps with outward-clinched staples at 6 inches o.c.
4. For insulation with jackets on below-ambient services, do not staple longitudinal tabs. Instead, secure tabs with additional adhesive, as recommended by insulation material manufacturer, and seal with vapor-barrier mastic and flashing sealant.

B. Insulation Installation on Pipe Flanges:

1. Install prefabricated pipe insulation to outer diameter of pipe flange.
2. Make width of insulation section same as overall width of flange and bolts, plus twice the thickness of pipe insulation.
3. Fill voids between inner circumference of flange insulation and outer circumference of adjacent straight pipe segments with cut sections of cellular-glass block insulation of same thickness as that of pipe insulation. Where voids are difficult to fill with block insulation, fill the voids with a fibrous insulation material suitable for the specific operating temperature.
4. Install jacket material with manufacturer's recommended adhesive, overlap seams at least 1 inch, and seal joints with flashing sealant.

C. Insulation Installation on Pipe Fittings and Elbows:

1. Install prefabricated sections of same material as that of straight segments of pipe insulation when available. Secure according to manufacturer's written instructions.
2. When preformed sections of insulation are not available, install mitered or routed sections of cellular-glass insulation. Secure insulation materials with wire or bands.

D. Insulation Installation on Valves and Pipe Specialties:

1. Install prefabricated sections of cellular-glass insulation to valve body.
2. Arrange insulation to permit access to packing and to allow valve operation without disturbing insulation.
3. Install insulation to flanges as specified for flange insulation application.

3.6 INSTALLATION OF FLEXIBLE ELASTOMERIC INSULATION

A. Seal longitudinal seams and end joints with manufacturer's recommended adhesive to eliminate openings in insulation that allow passage of air to surface being insulated.

B. Insulation Installation on Pipe Flanges:

1. Install pipe insulation to outer diameter of pipe flange.

2. Make width of insulation section same as overall width of flange and bolts, plus twice the thickness of pipe insulation.
3. Fill voids between inner circumference of flange insulation and outer circumference of adjacent straight pipe segments with cut sections of sheet insulation of same thickness as that of pipe insulation.
4. Secure insulation to flanges and seal seams with manufacturer's recommended adhesive to eliminate openings in insulation that allow passage of air to surface being insulated.

C. Insulation Installation on Pipe Fittings and Elbows:

1. Install sections of pipe insulation and miter if required in accordance with manufacturer's written instructions.
2. Secure insulation materials and seal seams with manufacturer's recommended adhesive to eliminate openings in insulation that allow passage of air to surface being insulated.

D. Insulation Installation on Valves and Pipe Specialties:

1. Install prefabricated valve covers manufactured of same material as that of pipe insulation when available.
2. When prefabricated valve covers are not available, install cut sections of pipe and sheet insulation to valve body. Arrange insulation to permit access to packing and to allow valve operation without disturbing insulation.
3. Install insulation to flanges as specified for flange insulation application.
4. Secure insulation to valves and specialties, and seal seams with manufacturer's recommended adhesive to eliminate openings in insulation that allow passage of air to surface being insulated.

3.7 INSTALLATION OF GLASS-FIBER AND MINERAL WOOL INSULATION

A. Insulation Installation on Straight Pipes and Tubes:

1. Secure each layer of preformed pipe insulation to pipe with wire or bands, and tighten bands without deforming insulation materials.
2. Where vapor barriers are indicated, seal longitudinal seams, end joints, and protrusions with vapor-barrier mastic and joint sealant.
3. For insulation with jackets on above-ambient surfaces, secure laps with outward-clinched staples at 6 inches o.c.
4. For insulation with jackets on below-ambient surfaces, do not staple longitudinal tabs. Instead, secure tabs with additional adhesive, as recommended by insulation material manufacturer, and seal with vapor-barrier mastic and flashing sealant.

B. Insulation Installation on Pipe Flanges:

1. Install prefabricated pipe insulation to outer diameter of pipe flange.
2. Make width of insulation section same as overall width of flange and bolts, plus twice the thickness of pipe insulation.
3. Fill voids between inner circumference of flange insulation and outer circumference of adjacent straight pipe segments with glass-fiber or mineral-wool blanket insulation.
4. Install jacket material with manufacturer's recommended adhesive, overlap seams at least 1 inch, and seal joints with flashing sealant.

C. Insulation Installation on Pipe Fittings and Elbows:

1. Install prefabricated sections of same material as that of straight segments of pipe insulation when available.
2. When preformed insulation elbows and fittings are not available, install mitered sections of pipe insulation, to a thickness equal to adjoining pipe insulation. Secure insulation materials with wire or bands.

D. Insulation Installation on Valves and Pipe Specialties:

1. Install prefabricated sections of same material as that of straight segments of pipe insulation when available.
2. When prefabricated sections are not available, install fabricated sections of pipe insulation to valve body.
3. Arrange insulation to permit access to packing and to allow valve operation without disturbing insulation.
4. Install insulation to flanges as specified for flange insulation application.

3.8 INSTALLATION OF FIELD-APPLIED JACKETS

A. Where metal jackets are indicated, install with 2-inch overlap at longitudinal seams and end joints. Overlap longitudinal seams arranged to shed water. Seal end joints with weatherproof sealant recommended by insulation manufacturer. Secure jacket with stainless steel bands 12 inches o.c. and at end joints.

3.9 FINISHES

A. Insulation with ASJ, Glass-Cloth, or Other Paintable Jacket Material: Paint jacket with paint system identified below and as specified in Division 09 specifications.

B. Flexible Elastomeric Thermal Insulation: After adhesive has fully cured, apply two coats of insulation manufacturer's recommended protective coating.

C. Color: Final color as selected by Contracting Officer. Vary first and second coats to allow visual inspection of the completed Work.

D. Do not field paint aluminum or stainless steel jackets.

3.10 FIELD QUALITY CONTROL

A. Perform tests and inspections.

B. Tests and Inspections: Inspect pipe, fittings, and valves, randomly selected by Contractor, by removing field-applied jacket and insulation in layers in reverse order of their installation. Extent of inspection shall be limited to three locations of straight pipe, three locations of threaded fittings, and three locations of welded fittings for each pipe service defined in the "Piping Insulation Schedule, General" Article.

C. All insulation applications will be considered defective if they do not pass tests and inspections.

D. Prepare test and inspection reports.

3.11 PIPING INSULATION SCHEDULE, GENERAL

A. Insulation conductivity and thickness per pipe size shall comply with schedules in this Section or with requirements of authorities having jurisdiction, whichever is more stringent.

B. Acceptable preformed pipe and tubular insulation materials and thicknesses are identified for each piping system and pipe size range. If more than one material is listed for a piping system, selection from materials listed is Contractor's option.

C. Items Not Insulated: Unless otherwise indicated, do not install insulation on the following:

3.12 INDOOR PIPING INSULATION SCHEDULE

A. Refrigerant Suction and Hot-Gas Piping:

1. All Pipe Sizes: Insulation shall be one of the following:

a. Cellular Glass: 1-1/2 inches thick.
b. Flexible Elastomeric: 1 inch thick.
c. Glass-Fiber, Preformed Pipe Insulation, Type I: 1 inch thick.
d. Mineral Wool, Preformed Pipe Insulation, Type II: 1 inch thick.

B. Refrigerant Suction and Hot-Gas Flexible Tubing:

1. All Pipe Sizes: Insulation shall be the following:

a. Flexible Elastomeric: 2 inches thick.

C. Refrigerant Liquid Piping:

1. All Pipe Sizes: Insulation shall be one of the following:

a. Cellular Glass: 1-1/2 inches thick.
b. Flexible Elastomeric: 1 inch thick.
c. Glass-Fiber, Preformed Pipe Insulation, Type I: 1 inch thick.
d. Mineral Wool, Preformed Pipe Insulation, Type II: 1 inch thick.

3.13 OUTDOOR, ABOVEGROUND PIPING INSULATION SCHEDULE

A. Refrigerant Suction and Hot-Gas Piping:

1. All Pipe Sizes: Insulation shall be one of the following:

a. Cellular Glass: 2 inches thick.
b. Flexible Elastomeric: 2 inches thick.
c. Glass-Fiber, Preformed Pipe Insulation, Type I: 2 inches thick.
d. Mineral Wool, Preformed Pipe Insulation, Type II: 2 inches thick.

B. Refrigerant Suction and Hot-Gas Flexible Tubing:

1. All Pipe Sizes: Insulation is the following:

a. Flexible Elastomeric: 2 inches thick.

C. Refrigerant Liquid Piping:

1. All Pipe Sizes: Insulation shall be one of the following:

a. Flexible Elastomeric: 1 inch thick.

3.14 OUTDOOR, FIELD-APPLIED JACKET SCHEDULE

A. Install jacket over insulation material. For insulation with factory-applied jacket, install the field-applied jacket over the factory-applied jacket.

B. If more than one material is listed, selection from materials listed is Contractor's option.

C. Piping, Exposed:
1. Aluminum, Smooth: 0.024 inch thick.

END OF SECTION 230719

SECTION 23 09 23.12 - CONTROL DAMPERS

PART 1 - GENERAL

1.1 SUMMARY

A. Section Includes:
   1. Rectangular control dampers with airfoil blades.
   2. Electric and electronic control-damper actuators.

1.2 ACTION SUBMITTALS

A. Product Data: For each type of damper and actuator:

B. Shop Drawings:
   1. Plans, elevations, sections, and mounting details.
   2. Details of product assemblies. Indicate dimensions, weights, loads, required clearances, method of field assembly, components, and location and size of each field connection.
   3. Diagrams for power, signal, and control wiring.

1.3 INFORMATIONAL SUBMITTALS

A. Coordination Drawings: Plan drawings and corresponding product installation details, drawn to scale, on which the following items are indicated and coordinated with each other, using input from installers of the items involved:
   1. Product installation location indicated in relationship to room, duct, and equipment.
   2. Size and location of wall access panels for control dampers and actuators installed behind walls.
   3. Size and location of ceiling access panels for control dampers and actuators installed above inaccessible ceilings.

1.4 CLOSEOUT SUBMITTALS

A. Operation and Maintenance Data: For control dampers.

PART 2 - PRODUCTS

2.1 PERFORMANCE REQUIREMENTS

A. Electrical Components, Devices, and Accessories: Listed and labeled as defined in NFPA 70, by a qualified testing agency, and marked for intended location and application.

B. ASHRAE 62.1 Compliance: Applicable outdoor ventilation requirements in ASHRAE 62.1, Section 5 - "Systems and Equipment" and Section 7 - "Construction and Startup."

C. ASHRAE/IES 90.1 Compliance: Applicable requirements in ASHRAE/IES 90.1, Section 6 - "Heating, Ventilating, and Air-Conditioning."

D. Code Compliance: Comply with governing energy code.

E. Ground Fault: Properly ground products to prevent failing due to ground fault conditions.

F. Backup Power Source: Serve control-damper actuators from a backup power source where associated with systems and equipment served by a backup power source.

G. Environmental Conditions: For actuators not available with integral enclosures complying with requirements indicated, house in protective secondary enclosures complying with requirements.

2.2 GENERAL CONTROL-DAMPER ACTUATORS REQUIREMENTS

A. Select actuators to operate related damper(s) with sufficient reserve power to provide smooth modulating action or two-position action and proper speed of response at velocity and pressure conditions to which the damper is subjected.

B. Select actuators with sufficient power and torque to close off against the maximum system pressures encountered. Actuators are to be sized to close off against the fan shutoff pressure as a minimum requirement.

C. The total damper area operated by an actuator is not to exceed 80 percent of manufacturer's maximum area rating.

D. Provide one actuator for each damper assembly where possible. Operate multiple actuators required to drive a single damper assembly in unison.

E. Avoid the use of excessively oversized actuators, which could overdrive and cause linkage failure when the damper blade has reached either its full open or closed position.

F. Use jackshafts and shaft couplings in lieu of blade-to-blade linkages when driving axially aligned damper sections.

G. Provide mounting hardware and linkages for connecting actuator to damper.

H. Select actuators to fail in desired position in the event of a power and signal failure.

I. Actuator Fail-Safe Positions:
   1. Outdoor Air: Close.

PART 3 - EXECUTION

3.1 CONTROL-DAMPER APPLICATIONS

A. Select from damper types indicated to achieve performance requirements and characteristics indicated while subjected to full range of system operation encountered.

3.2 INSTALLATION, GENERAL

A. Furnish and install products required to satisfy most stringent requirements indicated.

B. Properly support dampers and actuators, tubing, wiring, and conduit to comply with requirements indicated. Brace all products to prevent lateral movement and sway or a break in attachment when subjected to a seismic, wind, or others forces common to the application.

C. Provide ceiling, floor, roof, and wall openings, and sleeves required by installation. Before proceeding with drilling, punching, or cutting, check location first for concealed products that could potentially be damaged. Patch, flash, grout, seal, and refinish openings to match adjacent condition.

D. Seal penetrations made in fire-rated and acoustically rated assemblies.

E. Fastening Hardware:
   1. Wrenches, pliers, or other tools that will cause injury to or mar surfaces of rods, nuts, and other parts are prohibited for assembling and tightening nuts.
   2. Tighten bolts and nuts firmly and uniformly. Do not overstress threads by excessive force or by oversized wrenches.
   3. Lubricate threads of bolts, nuts, and screws with graphite and oil before assembly.

F. Install products in locations that are accessible and that will permit calibration and maintenance from floor, equipment platforms, or catwalks. Where ladders are required for access, confirm unrestricted ladder placement is possible under occupied condition.

3.3 CONTROL DAMPERS

A. Install smooth transitions, not exceeding 30 degrees, to dampers larger or smaller than adjacent duct. Install transitions as close to damper as possible but at distance to avoid interference and impact to performance. Consult manufacturer for recommended clearance.

B. Clearance:
   1. Locate dampers for easy access and provide separate support of dampers that cannot be handled by service personnel without hoisting mechanism.
   2. Install dampers with at least 24 inches of clear space on sides of dampers requiring service access unless more space is recommended by manufacturer. Provide code required clearances as applicable.

C. Service Access:
   1. Install dampers and actuators to be accessible for visual inspection and service.
   2. Install access door(s) in duct or equipment located upstream of damper to allow service personnel to hand clean any portion of damper, linkage, and actuator. Comply with requirements in Section 233300 "Air Duct Accessories."

D. Install dampers straight and true, level in all planes, and square in all dimensions.

E. Install supplementary structural reinforcement for large multiple-section dampers if factory-furnished support alone cannot handle loading.

F. Attach field-installed actuator(s) to damper drive shaft.

G. For duct-mounted and equipment-mounted dampers installed outside of equipment, install a visible and accessible indication of damper position from outside.

3.4 IDENTIFICATION

A. Identify system components, wiring, cabling, and terminals. Each piece of wire, cable, and tubing is to have the same designation at each end for operators to determine continuity at points of connection. Comply with requirements for identification specified in Division 26 Specifications.

B. Install engraved phenolic nameplate with damper identification on damper.

3.5 ELECTRICAL CONNECTIONS

A. Install electrical power to field-mounted control devices requiring electrical power.

B. Connect wiring in accordance with Division 26 Specifications.

C. Ground equipment in accordance with Division 26 Specifications.

D. Furnish and install raceways. Comply with requirements in Division 26 Specifications.

E. Furnish and install circuit breakers. Comply with requirements in Division 26 Specifications.

F. Install electrical devices furnished by manufacturer, but not factory mounted, in accordance with NFPA 70 and NECA 1.

G. Install nameplate for each electrical connection, indicating electrical equipment designation and circuit number feeding connection.
   1. Nameplate to be laminated acrylic or melamine plastic signs with a black background and engraved white letters at least 1/2 inch high.

3.6 CONTROL CONNECTIONS

A. Install control signal wiring to field-mounted control devices.

B. Connect control signal wiring in accordance with Division 26 Specifications.

C. Furnish and install raceways. Comply with requirements in Division 26 Specifications.

3.7 CLEANING

A. Remove grease, mastic, adhesives, dust, dirt, stains, fingerprints, labels, and other foreign materials from exposed surfaces.

3.8 STARTUP

A. Control-Damper Checkout:
   1. Check installed products before continuity tests, leak tests, and calibration.
   2. Check dampers for proper location and accessibility.
   3. Verify that control dampers are installed correctly for flow direction.
   4. Verify that proper blade alignment, either parallel or opposed, has been provided.
   5. Verify that damper frame attachment is properly secured and sealed.
   6. Verify that damper actuator and damper linkage attachment are secure.
   7. Verify that actuator wiring is complete, enclosed, and connected to correct power source.
   8. Verify that damper blade travel is smooth and unobstructed throughout operating range.

3.9 ADJUSTMENT, CALIBRATION, AND TESTING:

A. Stroke and adjust control dampers following manufacturer's recommended procedure, from 100 percent open to 100 percent closed back to 100 percent open.

B. Check and document open and close cycle times for applications with a cycle time of less than 30 seconds.

C. For control dampers equipped with positive position indication, check feedback signal at multiple positions to confirm proper position indication.

END OF SECTION 23 09 23.12

SECTION 23 23 00 - REFRIGERANT PIPING

PART 1 - GENERAL

1.1 SUMMARY

A. Section Includes:
1. Refrigerant pipes and fittings.
2. Refrigerant piping valves and specialties.
3. Refrigerants.

1.2 ACTION SUBMITTALS

A. Product Data: For each type of valve, refrigerant piping, and refrigerant piping specialty.

B. Shop Drawings:
1. Show piping size and piping layout, including oil traps, double risers, specialties, and pipe and tube sizes to accommodate, as a minimum, equipment provided, elevation difference between compressor and evaporator, and length of piping to ensure proper operation and compliance with warranties of connected equipment.
2. Show interface and spatial relationships between piping and equipment.
3. Shop Drawing Scale: 1/4 inch equals 1 foot.

1.3 INFORMATIONAL SUBMITTALS

A. Field quality-control reports.

1.4 CLOSEOUT SUBMITTALS

A. Operation and Maintenance Data: For refrigerant valves and piping specialties to include in maintenance manuals.

1.5 QUALITY ASSURANCE

A. Comply with ASHRAE 15, "Safety Code for Refrigeration Systems."

B. Comply with ASME B31.5, "Refrigeration Piping and Heat Transfer Components."

PART 2 - PRODUCTS

2.1 PERFORMANCE REQUIREMENTS

A. Line Test Pressure for Refrigerant R-454B:
1. Suction Lines for Heat-Pump Applications: 535 psig.
2. Hot-Gas and Liquid Lines: 535 psig.

2.2 COPPER TUBE AND FITTINGS

A. Copper Tube: ASTM B 88, Type L or ASTM B 280, Type ACR where permitted by direct expansion equipment manufacturer’s installation recommendations.

B. Wrought-Copper Fittings: ASME B16.22.

C. Wrought-Copper Unions: ASME B16.22.

D. Solder Filler Metals: ASTM B 32. Use 95-5 tin antimony or alloy HB solder to join copper socket fittings on copper pipe.

E. Brazing Filler Metals: AWS A5.8/A5.8M.

F. Flexible Connectors:
1. Body: Tin-bronze bellows with woven, flexible, tinned-bronze-wire-reinforced protective jacket.
2. End Connections: Socket ends.
3. Offset Performance: Capable of minimum 3/4-inch misalignment in minimum 7-inch-long assembly.
4. Working Pressure Rating: Factory test at minimum 500 psig.
5. Maximum Operating Temperature: 250 deg F.

2.3 VALVES AND SPECIALTIES

A. Diaphragm Packless Valves:
1. Body and Bonnet: Forged brass or cast bronze; globe design with straight-through or angle pattern.
2. Diaphragm: Phosphor bronze and stainless steel with stainless-steel spring.
3. Operator: Rising stem and hand wheel.
4. Seat: Nylon.
5. End Connections: Socket, union, or flanged.
6. Working Pressure Rating: 500 psig.
7. Maximum Operating Temperature: 275 deg F.

B. Packed-Angle Valves:
1. Body and Bonnet: Forged brass or cast bronze.
2. Packing: Molded stem, back seating, and replaceable under pressure.
3. Operator: Rising stem.
4. Seat: Nonrotating, self-aligning polytetrafluoroethylene.
5. Seal Cap: Forged-brass or valox hex cap.
6. End Connections: Socket, union, threaded, or flanged.
7. Working Pressure Rating: 500 psig.
8. Maximum Operating Temperature: 275 deg F.

C. Check Valves:
1. Body: Ductile iron, forged brass, or cast bronze; globe pattern.
2. Bonnet: Bolted ductile iron, forged brass, or cast bronze; or brass hex plug.
3. Piston: Removable polytetrafluoroethylene seat.
4. Closing Spring: Stainless steel.
5. Manual Opening Stem: Seal cap, plated-steel stem, and graphite seal.
6. End Connections: Socket, union, threaded, or flanged.
7. Maximum Opening Pressure: 0.50 psig.
8. Working Pressure Rating: 500 psig.
9. Maximum Operating Temperature: 275 deg F.

D. Service Valves:
1. Body: Forged brass with brass cap including key end to remove core.
2. Core: Removable ball-type check valve with stainless-steel spring.
3. Seat: Polytetrafluoroethylene.
4. End Connections: Copper spring.
5. Working Pressure Rating: 500 psig.

E. Solenoid Valves: Comply with AHRI 760 and UL 429; listed and labeled by a National Recognized Testing Laboratory (NRTL).
1. Body and Bonnet: Plated steel.

2. Solenoid Tube, Plunger, Closing Spring, and Seat Orifice: Stainless steel.
3. Seat: Polytetrafluoroethylene.
4. End Connections: Threaded.
5. Electrical: Molded, watertight coil in NEMA 250 enclosure of type required by location with 1/2-inch conduit adapter, and 208-V ac coil.
6. Working Pressure Rating: 400 psig.
7. Maximum Operating Temperature: 240 deg F.

F. Safety Relief Valves: Comply with 2010 ASME Boiler and Pressure Vessel Code; listed and labeled by an NRTL.
1. Body and Bonnet: Ductile iron and steel, with neoprene O-ring seal.
2. Piston, Closing Spring, and Seat Insert: Stainless steel.
3. Seat: Polytetrafluoroethylene.
4. End Connections: Threaded.
5. Working Pressure Rating: 400 psig.
6. Maximum Operating Temperature: 240 deg F.

G. Thermostatic Expansion Valves: Comply with AHRI 750.
1. Body, Bonnet, and Seal Cap: Forged brass or steel.
2. Diaphragm, Piston, Closing Spring, and Seat Insert: Stainless steel.
3. Packing and Gaskets: Non-asbestos.
4. Capillary and Bulb: Copper tubing filled with refrigerant charge.
5. Suction Temperature: 40 deg F, or as submitted by manufacturer.
6. Superheat: Adjustable.
7. Reverse-flow option (for heat-pump applications).
8. End Connections: Socket, flare, or threaded union.
9. Working Pressure Rating: 700 psig.

H. Straight-Type Strainers:
1. Body: Welded steel with corrosion-resistant coating.
2. Screen: 100-mesh stainless steel.
3. End Connections: Socket or flare.
4. Working Pressure Rating: 500 psig.
5. Maximum Operating Temperature: 275 deg F.

I. Angle-Type Strainers:
1. Body: Forged brass or cast bronze.
2. Drain Plug: Brass hex plug.
3. Screen: 100-mesh monel.
4. End Connections: Socket or flare.
5. Working Pressure Rating: 500 psig.
6. Maximum Operating Temperature: 275 deg F.

J. Moisture/Liquid Indicators:
1. Body: Forged brass.
2. Window: Replaceable, clear, fused glass window with indicating element protected by filter screen.
3. Indicator: Color coded to show moisture content in parts per million (ppm).
4. Minimum Moisture Indicator Sensitivity: Indicate moisture above 60 ppm.
5. End Connections: Socket or flare.
6. Working Pressure Rating: 500 psig.
7. Maximum Operating Temperature: 240 deg F.

K. Replaceable-Core Filter Dryers: Comply with AHRI 730.

1. Body and Cover: Painted-steel shell with ductile-iron cover, stainless-steel screws, and neoprene gaskets.
2. Filter Media: 10 micron, pleated with integral end rings; stainless-steel support.
3. Desiccant Media: Activated alumina or charcoal.
4. Designed for reverse flow (for heat-pump applications).
5. End Connections: Socket.
6. Access Ports: NPS 1/4 connections at entering and leaving sides for pressure differential measurement.
7. Maximum Pressure Loss: 2 psig.
8. Rated Flow: 2 tons.
9. Working Pressure Rating: 500 psig.
10. Maximum Operating Temperature: 240 deg F.

L. Permanent Filter Dryers: Comply with AHRI 730.
1. Body and Cover: Painted-steel shell.
2. Filter Media: 10 micron, pleated with integral end rings; stainless-steel support.
3. Desiccant Media: Activated alumina or charcoal.
4. Designed for reverse flow (for heat-pump applications).
5. End Connections: Socket.
6. Access Ports: NPS 1/4 connections at entering and leaving sides for pressure differential measurement.
7. Maximum Pressure Loss: 2 psig.
8. Rated Flow: 2 tons.
9. Working Pressure Rating: 500 psig.
10. Maximum Operating Temperature: 240 deg F.

2.4 REFRIGERANTS

A. ASHRAE 34, R-454B: Pentafluoroethane/Difluoromethane.

PART 3 - EXECUTION

3.1 PIPING APPLICATIONS FOR REFRIGERANT R-454B

A. Hot-Gas and Liquid Lines, and Suction Lines for Heat-Pump Applications: Copper, Type ACR or Type L, annealed- or drawn-temper tubing and wrought-copper fittings with brazed or soldered joints.

B. Safety-Relief-Valve Discharge Piping: Copper, Type ACR or Type L, annealed- or drawn-temper tubing and wrought-copper fittings with brazed or soldered joints.

3.2 VALVE AND SPECIALTY APPLICATIONS

A. Install diaphragm packless or packed-angle valves in suction and discharge lines of compressor.

B. Install service valves for gage taps at inlet and outlet of hot-gas bypass valves and strainers if they are not an integral part of valves and strainers.

C. Install a check valve at the compressor discharge and a liquid accumulator at the compressor suction connection.

D. Except as otherwise indicated, install diaphragm packless or packed-angle valves on inlet and outlet side of filter dryers.

E. Install a full-size, three-valve bypass around filter dryers.

F. Install solenoid valves upstream from each expansion valve and hot-gas bypass valve. Install solenoid valves in horizontal lines with coil at top.

G. Install thermostatic expansion valves as close as possible to distributors on evaporators.
   1. Install valve so diaphragm case is warmer than bulb.
   2. Secure bulb to clean, straight, horizontal section of suction line using two bulb straps. Do not mount bulb in a trap or at bottom of the line.
   3. If external equalizer lines are required, make connection where it will reflect suction-line pressure at bulb location.

H. Install safety relief valves where required by 2010 ASME Boiler and Pressure Vessel Code. Pipe safety-relief-valve discharge line to outside according to ASHRAE 15.

I. Install moisture/liquid indicators in liquid line at the inlet of the thermostatic expansion valve or at the inlet of the evaporator coil capillary tube.

J. Install strainers upstream from and adjacent to the following unless they are furnished as an integral assembly for the device being protected:
   1. Solenoid valves.
   2. Thermostatic expansion valves.
   3. Hot-gas bypass valves.
   4. Compressor.

K. Install filter dryers in liquid line between compressor and thermostatic expansion valve, and in the suction line at the compressor.

L. Install receivers sized to accommodate pump-down charge.

M. Install flexible connectors at compressors.

3.3 PIPING INSTALLATION

A. Drawing plans, schematics, and diagrams indicate general location and arrangement of piping systems; indicated locations and arrangements were used to size pipe and calculate friction loss, expansion, pump sizing, and other design considerations. Install piping as indicated unless deviations to layout are approved on Shop Drawings.

B. Install refrigerant piping according to ASHRAE 15.

C. Install piping in concealed locations unless otherwise indicated and except in equipment rooms and service areas.

D. Install piping indicated to be exposed and piping in equipment rooms and service areas at right angles or parallel to building walls. Diagonal runs are prohibited unless specifically indicated otherwise.

E. Install piping above accessible ceilings to allow sufficient space for ceiling panel removal.

F. Install piping adjacent to machines to allow service and maintenance.

G. Install piping free of sags and bends.

H. Install fittings for changes in direction and branch connections.

I. Select system components with pressure rating equal to or greater than system operating pressure.

J. Install piping as short and direct as possible, with a minimum number of joints, elbows, and fittings.

K. Arrange piping to allow inspection and service of refrigeration equipment. Install valves and specialties in accessible locations to allow for service and inspection. Install access doors or panels as specified in Division 08 Specifications if valves or equipment requiring maintenance is concealed behind finished surfaces.

L. Install refrigerant piping in protective conduit where installed belowground.

M. Install refrigerant piping in rigid or flexible conduit in locations where exposed to mechanical injury.

N. Slope refrigerant piping as follows:
   1. Install horizontal hot-gas discharge piping with a uniform slope downward away from compressor.
   2. Install horizontal suction lines with a uniform slope downward to compressor.
   3. Install traps and double risers to entrain oil in vertical runs.
   4. Liquid lines may be installed level.

O. When brazing or soldering, remove solenoid-valve coils and sight glasses; also remove valve stems, seats, and packing, and accessible internal parts of refrigerant specialties. Do not apply heat near expansion-valve bulb.

P. Install piping with adequate clearance between pipe and adjacent walls and hangers or between pipes for insulation installation.

Q. Identify refrigerant piping and valves according to Section 230553 "Identification for HVAC Piping and Equipment."

R. Install sleeves for piping penetrations of walls, ceilings, and floors. Comply with requirements for sleeves specified in Section 230517 "Sleeves and Sleeve Seals for HVAC Piping."

S. Install sleeve seals for piping penetrations of concrete walls and slabs. Comply with requirements for sleeve seals specified in Section 230517 "Sleeves and Sleeve Seals for HVAC Piping."

T. Install escutcheons for piping penetrations of walls, ceilings, and floors. Comply with requirements for escutcheons specified in Section 230518 "Escutcheons for HVAC Piping."

3.4 PIPE JOINT CONSTRUCTION

A. Ream ends of pipes and tubes and remove burrs.

B. Remove scale, slag, dirt, and debris from inside and outside of pipe and fittings before assembly.

C. Soldered Joints: Construct joints according to ASTM B 828 or CDA's "Copper Tube Handbook."

D. Brazed Joints: Construct joints according to AWS's "Brazing Handbook," Chapter "Pipe and Tube."
   1. Use Type BCuP (copper-phosphorus) alloy for joining copper socket fittings with copper pipe.
   2. Use Type BAg (cadmium-free silver) alloy for joining copper with bronze or steel.

3.5 HANGERS AND SUPPORTS

A. Comply with requirements for pipe hangers and supports specified in Section 230529 "Hangers and Supports for HVAC Piping and Equipment."

B. Install the following pipe attachments:
   1. Adjustable steel clevis hangers for individual horizontal runs less than 20 feet long.

2. Roller hangers and spring hangers for individual horizontal runs 20 feet or longer.
3. Pipe Roller: MSS SP-58, Type 44 for multiple horizontal piping 20 feet or longer, supported on a trapeze.
4. Spring hangers to support vertical runs.
5. Copper-clad hangers and supports for hangers and supports in direct contact with copper pipe.

C. Install hangers for copper tubing with the following maximum spacing and minimum rod diameters:
1. NPS 1/2: Maximum span, 60 inches; minimum rod, 1/4 inch.
2. NPS 5/8: Maximum span, 60 inches; minimum rod, 1/4 inch.
3. NPS 1: Maximum span, 72 inches; minimum rod, 1/4 inch.
4. NPS 1-1/4: Maximum span, 96 inches; minimum rod, 3/8 inch.
5. NPS 1-1/2: Maximum span, 96 inches; minimum rod, 3/8 inch.
6. NPS 2: Maximum span, 96 inches; minimum rod, 3/8 inch.

D. Support multifloor vertical runs at least at each floor.

3.6 FIELD QUALITY CONTROL

A. Perform the following tests and inspections:
1. Comply with ASME B31.5, Chapter VI.
2. Test refrigerant piping, specialties, and receivers. Isolate compressor, condenser, evaporator, and safety devices from test pressure if they are not rated above the test pressure.
3. Test high- and low-pressure side piping of each system separately at not less than the pressures indicated in "Performance Requirements" Article.
a. Fill system with nitrogen to the required test pressure.
b. System shall maintain test pressure at the manifold gage throughout duration of test.
c. Test joints and fittings with electronic leak detector or by brushing a small amount of soap and glycerin solution over joints.
d. Remake leaking joints using new materials, and retest until satisfactory results are achieved.

B. Prepare test and inspection reports.

3.7 SYSTEM CHARGING

A. Charge system using the following procedures:
1. Install core in filter dryers after leak test but before evacuation.
2. Evacuate entire refrigerant system with a vacuum pump to 500 micrometers. If vacuum holds for 12 hours, system is ready for charging.
3. Break vacuum with refrigerant gas, allowing pressure to build up to 2 psig.
4. Charge system with a new filter-dryer core in charging line.

3.8 ADJUSTING

A. Adjust thermostatic expansion valve to obtain proper evaporator superheat.

B. Adjust high- and low-pressure switch settings to avoid short cycling in response to fluctuating suction pressure.

C. Adjust set-point temperature of air-conditioning or chilled-water controllers to the system design temperature.

D. Perform the following adjustments before operating the refrigeration system, according to manufacturer's written instructions:
   1. Open shutoff valves in condenser water circuit.
   2. Verify that compressor oil level is correct.
   3. Open compressor suction and discharge valves.
   4. Open refrigerant valves except bypass valves that are used for other purposes.
   5. Check open compressor-motor alignment and verify lubrication for motors and bearings.

E. Replace core of replaceable filter dryer after system has been adjusted and after design flow rates and pressures are established.

END OF SECTION 23 23 00

SECTION 23 31 13 - METAL DUCTS

PART 1 - GENERAL

1.1 SUMMARY

A. Section Includes:
1. Rectangular ducts and fittings.
2. Round ducts and fittings.
3. Sheet metal materials.
4. Sealants and gaskets.
5. Hangers and supports.

B. Related Sections:
1. Section 230593 "Testing, Adjusting, and Balancing for HVAC" for testing, adjusting, and balancing requirements for metal ducts.
2. Section 233300 "Air Duct Accessories" for dampers, sound-control devices, duct-mounting access doors and panels, turning vanes, and flexible ducts.

1.2 PERFORMANCE REQUIREMENTS

A. Delegated Duct Design: Duct construction, including sheet metal thicknesses, seam and joint construction, reinforcements, and hangers and supports, shall comply with SMACNA's "HVAC Duct Construction Standards - Metal and Flexible" and performance requirements and design criteria indicated in "Duct Schedule" Article.

B. Structural Performance: Duct hangers and supports shall withstand the effects of gravity loads and stresses within limits and under conditions described in SMACNA's "HVAC Duct Construction Standards - Metal and Flexible" or ASCE/SEI 7.

C. Airstream Surfaces: Surfaces in contact with the airstream shall comply with requirements in ANSI/ASHRAE 62.1.

1.3 ACTION SUBMITTALS

A. Product Data: For each type of product indicated.

B. Shop Drawings:
1. Fabrication, assembly, and installation, including plans, elevations, sections, components, and attachments to other work.
2. Factory- and shop-fabricated ducts and fittings.
3. Duct layout indicating sizes, configuration, and static-pressure classes.
4. Elevation of top of ducts.
5. Dimensions of main duct runs from building grid lines.
6. Fittings.
7. Reinforcement and spacing.
8. Seam and joint construction.
9. Penetrations through fire-rated and other partitions.
10. Equipment installation based on equipment being used on Project.
11. Locations for duct accessories, including dampers, turning vanes, and access doors and panels.
12. Hangers and supports, including methods for duct and building attachment and vibration isolation.

C. Delegated-Design Submittal:

1. Sheet metal thicknesses.
2. Joint and seam construction and sealing.
3. Reinforcement details and spacing.
4. Materials, fabrication, assembly, and spacing of hangers and supports.
5. Design Calculations: Calculations for selecting hangers and supports.

1.4 INFORMATIONAL SUBMITTALS

A. Coordination Drawings: Plans, drawn to scale, on which the following items are shown and coordinated with each other, using input from installers of the items involved:
1. Duct installation in congested spaces, indicating coordination with general construction, building components, and other building services. Indicate proposed changes to duct layout.
2. Suspended ceiling components.
3. Structural members to which duct will be attached.
4. Size and location of initial access modules for acoustical tile.
5. Penetrations of fire-rated construction.
6. Items penetrating finished ceiling including the following:
a. Luminaires.
b. Air outlets and inlets.
c. Access panels.

B. Welding certificates.

1.5 QUALITY ASSURANCE

A. Welding Qualifications: Qualify procedures and personnel according to the following:
1. AWS D1.1/D1.1M, "Structural Welding Code - Steel," for hangers and supports.
2. AWS D1.2/D1.2M, "Structural Welding Code - Aluminum," for aluminum supports.
3. AWS D9.1M/D9.1, "Sheet Metal Welding Code," for duct joint and seam welding.

B. ASHRAE Compliance: Applicable requirements in ASHRAE 62.1, Section 5 - "Systems and Equipment" and Section 7 - "Construction and System Start-up."

C. ASHRAE/IES Compliance: Applicable requirements in ASHRAE/IES 90.1, Section 6.4.4 - "HVAC System Construction and Insulation."

PART 2 - PRODUCTS

2.1 RECTANGULAR DUCTS AND FITTINGS

A. General Fabrication Requirements: Comply with SMACNA's "HVAC Duct Construction Standards - Metal and Flexible" based on indicated static-pressure class unless otherwise indicated.

B. Transverse Joints: Select joint types and fabricate according to SMACNA's "HVAC Duct Construction Standards - Metal and Flexible," Figure 2-1, "Rectangular Duct/Transverse Joints," for static-pressure class, applicable sealing requirements, materials involved, duct-support intervals, and other provisions in SMACNA's "HVAC Duct Construction Standards - Metal and Flexible."

C. Longitudinal Seams: Select seam types and fabricate according to SMACNA's "HVAC Duct Construction Standards - Metal and Flexible," Figure 2-2, "Rectangular Duct/Longitudinal Seams," for static-pressure class, applicable sealing requirements, materials involved, duct-

support intervals, and other provisions in SMACNA's "HVAC Duct Construction Standards - Metal and Flexible."

D. Elbows, Transitions, Offsets, Branch Connections, and Other Duct Construction: Select types and fabricate according to SMACNA's "HVAC Duct Construction Standards - Metal and Flexible," Chapter 4, "Fittings and Other Construction," for static-pressure class, applicable sealing requirements, materials involved, duct-support intervals, and other provisions in SMACNA's "HVAC Duct Construction Standards - Metal and Flexible."

2.2 ROUND DUCTS AND FITTINGS

A. General Fabrication Requirements: Comply with SMACNA's "HVAC Duct Construction Standards - Metal and Flexible," Chapter 3, "Round, Oval, and Flexible Duct," based on indicated static-pressure class unless otherwise indicated.

B. Transverse Joints: Select joint types and fabricate according to SMACNA's "HVAC Duct Construction Standards - Metal and Flexible," Figure 3-1, "Round Duct Transverse Joints," for static-pressure class, applicable sealing requirements, materials involved, duct-support intervals, and other provisions in SMACNA's "HVAC Duct Construction Standards - Metal and Flexible."
   1. Transverse Joints in Ducts Larger Than 60 Inches in Diameter: Flanged.

C. Longitudinal Seams: Select seam types and fabricate according to SMACNA's "HVAC Duct Construction Standards - Metal and Flexible," Figure 3-2, "Round Duct Longitudinal Seams," for static-pressure class, applicable sealing requirements, materials involved, duct-support intervals, and other provisions in SMACNA's "HVAC Duct Construction Standards - Metal and Flexible."
   1. Fabricate round ducts larger Than 90 inches in diameter with butt-welded longitudinal seams.

D. Tees and Laterals: Select types and fabricate according to SMACNA's "HVAC Duct Construction Standards - Metal and Flexible," Figure 3-5, "90 Degree Tees and Laterals," and Figure 3-6, "Conical Tees," for static-pressure class, applicable sealing requirements, materials involved, duct-support intervals, and other provisions in SMACNA's "HVAC Duct Construction Standards - Metal and Flexible."

2.3 SHEET METAL MATERIALS

A. General Material Requirements: Comply with SMACNA's "HVAC Duct Construction Standards - Metal and Flexible" for acceptable materials, material thicknesses, and duct construction methods unless otherwise indicated. Sheet metal materials shall be free of pitting, seam marks, roller marks, stains, discolorations, and other imperfections.

B. Galvanized Sheet Steel: Comply with ASTM A 653/A 653M.
   1. Galvanized Coating Designation: G90.
   2. Finishes for Surfaces Exposed to View: Mill phosphatized.

C. Carbon-Steel Sheets: Comply with ASTM A 1008/A 1008M, with oiled, matte finish for exposed ducts.

D. Aluminum Sheets: Comply with ASTM B 209 Alloy 3003, H14 temper; with mill finish for concealed ducts, and standard, one-side bright finish for duct surfaces exposed to view.

E. Reinforcement Shapes and Plates: ASTM A 36/A 36M, steel plates, shapes, and bars; black and galvanized.
   1. Where black- and galvanized-steel shapes and plates are used to reinforce aluminum ducts, isolate the different metals with butyl rubber, neoprene, or EPDM gasket materials.

F. Tie Rods: Galvanized steel, 1/4-inch minimum diameter for lengths 36 inches or less; 3/8-inch minimum diameter for lengths longer than 36 inches.

2.4 SEALANT AND GASKETS

A. General Sealant and Gasket Requirements: Surface-burning characteristics for sealants and gaskets shall be a maximum flame-spread index of 25 and a maximum smoke-developed index of 50 when tested according to UL 723; certified by an NRTL.

B. Two-Part Tape Sealing System:
1. Tape: Woven cotton fiber impregnated with mineral gypsum and modified acrylic/silicone activator to react exothermically with tape to form hard, durable, airtight seal.
2. Tape Width: 4 inches.
3. Sealant: Modified styrene acrylic.
4. Water resistant.
5. Mold and mildew resistant.
6. Maximum Static-Pressure Class: 10-inch wg, positive and negative.
7. Service: Indoor and outdoor.
8. Service Temperature: Minus 40 to plus 200 deg F.
9. Substrate: Compatible with galvanized sheet steel (both PVC coated and bare), stainless steel, or aluminum.
10. For indoor applications, sealant shall have a VOC content of 250 g/L or less when calculated according to 40 CFR 59, Subpart D (EPA Method 24).
11. Sealant shall comply with the testing and product requirements of the California Department of Health Services' "Standard Practice for the Testing of Volatile Organic Emissions from Various Sources Using Small-Scale Environmental Chambers."

C. Water-Based Joint and Seam Sealant:
1. Application Method: Brush on.
2. Solids Content: Minimum 65 percent.
3. Shore A Hardness: Minimum 20.
4. Water resistant.
5. Mold and mildew resistant.
6. VOC: Maximum 75 g/L (less water).
7. Maximum Static-Pressure Class: 10-inch wg, positive and negative.
8. Service: Indoor or outdoor.
9. Substrate: Compatible with galvanized sheet steel (both PVC coated and bare), stainless steel, or aluminum sheets.

D. Flanged Joint Sealant: Comply with ASTM C 920.
1. General: Single-component, acid-curing, silicone, elastomeric.
2. Type: S.
3. Grade: NS.
4. Class: 25.
5. Use: O.
6. For indoor applications, sealant shall have a VOC content of 250 g/L or less when calculated according to 40 CFR 59, Subpart D (EPA Method 24).
7. Sealant shall comply with the testing and product requirements of the California Department of Health Services' "Standard Practice for the Testing of Volatile Organic Emissions from Various Sources Using Small-Scale Environmental Chambers."

E. Flange Gaskets: Butyl rubber, neoprene, or EPDM polymer with polyisobutylene plasticizer.

F. Round Duct Joint O-Ring Seals:
   1. Seal shall provide maximum leakage class of 3 cfm/100 sq. ft. at 1-inch wg and shall be rated for10-inch wg static-pressure class, positive or negative.
   2. EPDM O-ring to seal in concave bead in coupling or fitting spigot.
   3. Double-lipped, EPDM O-ring seal, mechanically fastened to factory-fabricated couplings and fitting spigots.

2.5 HANGERS AND SUPPORTS

A. Hanger Rods for Noncorrosive Environments: Cadmium-plated steel rods and nuts.

B. Hanger Rods for Corrosive Environments: Electrogalvanized, all-thread rods or galvanized rods with threads painted with zinc-chromate primer after installation.

C. Strap and Rod Sizes: Comply with SMACNA's "HVAC Duct Construction Standards - Metal and Flexible," Table 5-1, "Rectangular Duct Hangers Minimum Size," and Table 5-2, "Minimum Hanger Sizes for Round Duct."

D. Steel Cables for Galvanized-Steel Ducts: Galvanized steel complying with ASTM A 603.

E. Steel Cable End Connections: Cadmium-plated steel assemblies with brackets, swivel, and bolts designed for duct hanger service; with an automatic-locking and clamping device.

F. Duct Attachments: Sheet metal screws, blind rivets, or self-tapping metal screws; compatible with duct materials.

G. Trapeze and Riser Supports:
   1. Supports for Galvanized-Steel Ducts: Galvanized-steel shapes and plates.
   2. Supports for Aluminum Ducts: Aluminum or galvanized steel coated with zinc chromate.

PART 3 - EXECUTION

3.1 DUCT INSTALLATION

A. Drawing plans, schematics, and diagrams indicate general location and arrangement of duct system. Indicated duct locations, configurations, and arrangements were used to size ducts and calculate friction loss for air-handling equipment sizing and for other design considerations. Install duct systems as indicated unless deviations to layout are approved on Shop Drawings and Coordination Drawings.

B. Install ducts according to SMACNA's "HVAC Duct Construction Standards - Metal and Flexible" unless otherwise indicated.

C. Install ducts in maximum practical lengths.

D. Install ducts with fewest possible joints.

E. Install factory- or shop-fabricated fittings for changes in direction, size, and shape and for branch connections.

F. Unless otherwise indicated, install ducts vertically and horizontally, and parallel and perpendicular to building lines.

G. Install ducts close to walls, overhead construction, columns, and other structural and permanent enclosure elements of building.

H. Install ducts with a clearance of 1 inch, plus allowance for insulation thickness.

I. Route ducts to avoid passing through transformer vaults and electrical equipment rooms and enclosures.

J. Where ducts pass through non-fire-rated interior partitions and exterior walls and are exposed to view, cover the opening between the partition and duct or duct insulation with sheet metal flanges of same metal thickness as the duct. Overlap openings on four sides by at least 1-1/2 inches.

K. Protect duct interiors from moisture, construction debris and dust, and other foreign materials. Comply with SMACNA's "IAQ Guidelines for Occupied Buildings Under Construction," Appendix G, "Duct Cleanliness for New Construction Guidelines."

3.2 DUCT SEALING

A. Seal ducts for duct static-pressure, seal classes, and leakage classes specified in "Duct Schedule" Article according to SMACNA's "HVAC Duct Construction Standards - Metal and Flexible."

B. Seal ducts at a minimum to the following seal classes according to SMACNA's "HVAC Duct Construction Standards - Metal and Flexible":
   1. Comply with SMACNA's "HVAC Duct Construction Standards - Metal and Flexible."
   2. Unconditioned Space, Supply-Air Ducts in Pressure Classes 2-Inch wg and Lower: Seal Class B.
   3. Unconditioned Space, Return-Air Ducts: Seal Class B.

3.3 HANGER AND SUPPORT INSTALLATION

A. Comply with SMACNA's "HVAC Duct Construction Standards - Metal and Flexible," Chapter 5, "Hangers and Supports."

B. Building Attachments: Concrete inserts, powder-actuated fasteners, or structural-steel fasteners appropriate for construction materials to which hangers are being attached.
   1. Where practical, install concrete inserts before placing concrete.
   2. Install powder-actuated concrete fasteners after concrete is placed and completely cured.
   3. Use powder-actuated concrete fasteners for standard-weight aggregate concretes or for slabs more than 4 inches thick.
   4. Do not use powder-actuated concrete fasteners for lightweight-aggregate concretes or for slabs less than 4 inches thick.
   5. Do not use powder-actuated concrete fasteners for seismic restraints.

C. Hanger Spacing: Comply with SMACNA's "HVAC Duct Construction Standards - Metal and Flexible," Table 5-1, "Rectangular Duct Hangers Minimum Size," and Table 5-2, "Minimum Hanger Sizes for Round Duct," for maximum hanger spacing; install hangers and supports within 24 inches of each elbow and within 48 inches of each branch intersection.

D. Hangers Exposed to View: Threaded rod and angle or channel supports.

E. Support vertical ducts with steel angles or channel secured to the sides of the duct with welds, bolts, sheet metal screws, or blind rivets; support at each floor and at a maximum intervals of 16 feet.

F. Install upper attachments to structures. Select and size upper attachments with pull-out, tension, and shear capacities appropriate for supported loads and building materials where used.

3.4 CONNECTIONS

A. Make connections to equipment with flexible connectors complying with Section 233300 "Air Duct Accessories."

B. Comply with SMACNA's "HVAC Duct Construction Standards - Metal and Flexible" for branch, outlet and inlet, and terminal unit connections.

3.5 DUCT CLEANING

A. Clean new duct system(s) before testing, adjusting, and balancing.

B. Use service openings for entry and inspection.
   1. Create new openings and install access panels appropriate for duct static-pressure class if required for cleaning access. Provide insulated panels for insulated or lined duct. Patch insulation and liner as recommended by duct liner manufacturer. Comply with Section 233300 "Air Duct Accessories" for access panels and doors.
   2. Disconnect and reconnect flexible ducts as needed for cleaning and inspection.
   3. Remove and reinstall ceiling to gain access during the cleaning process.

C. Particulate Collection and Odor Control:
   1. When venting vacuuming system inside the building, use HEPA filtration with 99.97 percent collection efficiency for 0.3-micron-size (or larger) particles.
   2. When venting vacuuming system to outdoors, use filter to collect debris removed from HVAC system, and locate exhaust downwind and away from air intakes and other points of entry into building.

D. Clean the following components by removing surface contaminants and deposits:
   1. Air outlets and inlets (registers, grilles, and diffusers).
   2. Supply, return, and exhaust fans including fan housings, plenums (except ceiling supply and return plenums), scrolls, blades or vanes, shafts, baffles, dampers, and drive assemblies.
   3. Air-handling unit internal surfaces and components including mixing box, coil section, air wash systems, spray eliminators, condensate drain pans, humidifiers and dehumidifiers, filters and filter sections, and condensate collectors and drains.
   4. Coils and related components.
   5. Return-air ducts, dampers, actuators, and turning vanes except in ceiling plenums and mechanical equipment rooms.
   6. Supply-air ducts, dampers, actuators, and turning vanes.
   7. Dedicated exhaust and ventilation components and makeup air systems.

E. Mechanical Cleaning Methodology:
   1. Clean metal duct systems using mechanical cleaning methods that extract contaminants from within duct systems and remove contaminants from building.
   2. Use vacuum-collection devices that are operated continuously during cleaning. Connect vacuum device to downstream end of duct sections so areas being cleaned are under negative pressure.
   3. Use mechanical agitation to dislodge debris adhered to interior duct surfaces without damaging integrity of metal ducts, duct liner, or duct accessories.
   4. Clean fibrous-glass duct liner with HEPA vacuuming equipment; do not permit duct liner to get wet. Replace fibrous-glass duct liner that is damaged, deteriorated, or delaminated or that has friable material, mold, or fungus growth.
   5. Clean coils and coil drain pans according to NADCA 1992. Keep drain pan operational. Rinse coils with clean water to remove latent residues and cleaning materials; comb and straighten fins.
   6. Provide drainage and cleanup for wash-down procedures.
   7. Antimicrobial Agents and Coatings: Apply EPA-registered antimicrobial agents if fungus is present. Apply antimicrobial agents according to manufacturer's written instructions after removal of surface deposits and debris.

3.6 START UP

A. Air Balance: Comply with requirements in Section 230593 "Testing, Adjusting, and Balancing for HVAC."

3.7 DUCT SCHEDULE

A. Fabricate ducts with galvanized sheet steel except as otherwise indicated and as follows:

B. Supply Ducts:
   1. Ducts Connected to Furnaces:
      a. Pressure Class: Positive 2-inch wg.
      b. Minimum SMACNA Seal Class: A.
      c. SMACNA Leakage Class for Rectangular: 12.
      d. SMACNA Leakage Class for Round and Flat Oval: 12.

C. Return Ducts:
   1. Ducts Connected to Furnaces:
      a. Pressure Class: Positive or negative 2-inch wg.
      b. Minimum SMACNA Seal Class: A.
      c. SMACNA Leakage Class for Rectangular: 12.
      d. SMACNA Leakage Class for Round and Flat Oval: 12.

D. Outdoor-Air (Not Filtered, Heated, or Cooled) Ducts:
   1. Ducts Connected to Fan Coil Units, Furnaces, Heat Pumps, and Terminal Units:
      a. Pressure Class: Positive or negative 2-inch wg.
      b. Minimum SMACNA Seal Class: A.
      c. SMACNA Leakage Class for Rectangular: 12
      d. SMACNA Leakage Class for Round and Flat Oval: 12

E. Intermediate Reinforcement:
   1. Galvanized-Steel Ducts: Galvanized steel or carbon steel coated with zinc-chromate primer.
   2. Stainless-Steel Ducts:
      a. Exposed to Airstream: Match duct material.
      b. Not Exposed to Airstream: Galvanized or Match duct material.
   3. Aluminum Ducts: Aluminum or galvanized sheet steel coated with zinc chromate.

F. Elbow Configuration:
   1. Rectangular Duct: Comply with SMACNA's "HVAC Duct Construction Standards - Metal and Flexible," Figure 4-2, "Rectangular Elbows."
      a. Velocity 1000 fpm or Lower:
         1) Radius Type RE 1 with minimum 0.5 radius-to-diameter ratio.
         2) Mitered Type RE 4 without vanes.
      b. Velocity 1000 to 1500 fpm:
         1) Radius Type RE 1 with minimum 1.0 radius-to-diameter ratio.
         2) Radius Type RE 3 with minimum 0.5 radius-to-diameter ratio and two vanes.
         3) Mitered Type RE 2 with vanes complying with SMACNA's "HVAC Duct Construction Standards - Metal and Flexible," Figure 4-3, "Vanes and Vane Runners," and Figure 4-4, "Vane Support in Elbows."
      c. Velocity 1500 fpm or Higher:
         1) Radius Type RE 1 with minimum 1.5 radius-to-diameter ratio.
         2) Radius Type RE 3 with minimum 1.0 radius-to-diameter ratio and two vanes.

3) Mitered Type RE 2 with vanes complying with SMACNA's "HVAC Duct Construction Standards - Metal and Flexible," Figure 4-3, "Vanes and Vane Runners," and Figure 4-4, "Vane Support in Elbows."

2. Rectangular Duct: Comply with SMACNA's "HVAC Duct Construction Standards - Metal and Flexible," Figure 4-2, "Rectangular Elbows."
   a. Radius Type RE 1 with minimum 1.5 radius-to-diameter ratio.
   b. Radius Type RE 3 with minimum 1.0 radius-to-diameter ratio and two vanes.
   c. Mitered Type RE 2 with vanes complying with SMACNA's "HVAC Duct Construction Standards - Metal and Flexible," Figure 4-3, "Vanes and Vane Runners," and Figure 4-4, "Vane Support in Elbows."
3. Round Duct: Comply with SMACNA's "HVAC Duct Construction Standards - Metal and Flexible," Figure 3-4, "Round Duct Elbows."
   a. Minimum Radius-to-Diameter Ratio and Elbow Segments: Comply with SMACNA's "HVAC Duct Construction Standards - Metal and Flexible," Table 3-1, "Mitered Elbows." Elbows with less than 90-degree change of direction have proportionately fewer segments.
      1) Velocity 1000 fpm or Lower: 0.5 radius-to-diameter ratio and three segments for 90-degree elbow.
      2) Velocity 1000 to 1500 fpm: 1.0 radius-to-diameter ratio and four segments for 90-degree elbow.
      3) Velocity 1500 fpm or Higher: 1.5 radius-to-diameter ratio and five segments for 90-degree elbow.
      4) Radius-to Diameter Ratio: 1.5.
   b. Round Elbows, 12 Inches and Smaller in Diameter: Stamped or pleated.
   c. Round Elbows, 14 Inches and Larger in Diameter: Standing seam or Welded.

G. Branch Configuration:
1. Rectangular Duct: Comply with SMACNA's "HVAC Duct Construction Standards - Metal and Flexible," Figure 4-6, "Branch Connection."
   a. Rectangular Main to Rectangular Branch: 45-degree entry.
   b. Rectangular Main to Round Branch: Spin in.
2. Round: Comply with SMACNA's "HVAC Duct Construction Standards - Metal and Flexible," Figure 3-5, "90 Degree Tees and Laterals," and Figure 3-6, "Conical Tees." Saddle taps are permitted in existing duct.
   a. Velocity 1000 fpm or Lower: 90-degree tap.
   b. Velocity 1000 to 1500 fpm: Conical tap.
   c. Velocity 1500 fpm or Higher: 45-degree lateral.

END OF SECTION 23 31 13

SECTION 23 33 00 - AIR DUCT ACCESSORIES

PART 1 - GENERAL

1.1 SUMMARY

A. Section Includes:
1. Manual volume dampers.
2. Flange connectors.
3. Turning vanes.
4. Duct-mounted access doors.
5. Flexible connectors.
6. Duct accessory hardware.

1.2 ACTION SUBMITTALS

A. Product Data: For each type of product.

1.3 CLOSEOUT SUBMITTALS

A. Operation and maintenance data.

PART 2 - PRODUCTS

2.1 ASSEMBLY DESCRIPTION

A. Comply with NFPA 90A, "Installation of Air Conditioning and Ventilating Systems," and with NFPA 90B, "Installation of Warm Air Heating and Air Conditioning Systems."

B. Comply with SMACNA's "HVAC Duct Construction Standards - Metal and Flexible" for acceptable materials, material thicknesses, and duct construction methods unless otherwise indicated. Sheet metal materials shall be free of pitting, seam marks, roller marks, stains, discolorations, and other imperfections.

2.2 MATERIALS

A. Galvanized Sheet Steel: Comply with ASTM A 653/A 653M.
1. Galvanized Coating Designation: G90.
2. Exposed-Surface Finish: Mill phosphatized.

B. Aluminum Sheets: Comply with ASTM B 209, Alloy 3003, Temper H14; with mill finish for concealed ducts and standard, 1-side bright finish for exposed ducts.

C. Extruded Aluminum: Comply with ASTM B 221, Alloy 6063, Temper T6.

D. Reinforcement Shapes and Plates: Galvanized-steel reinforcement were installed on galvanized sheet metal ducts; compatible materials for aluminum and stainless-steel ducts.

E. Tie Rods: Galvanized steel, 1/4-inch minimum diameter for lengths 36 inches or less; 3/8-inch minimum diameter for lengths longer than 36 inches.

2.3 MANUAL VOLUME DAMPERS

A. Standard, Steel, Manual Volume Dampers:
1. Standard leakage rating, with linkage outside airstream.
2. Suitable for horizontal or vertical applications.

3. Frames:
    a. Frame: Hat-shaped, 0.094-inch- thick, galvanized sheet steel or 0.05-inch- thick stainless steel.
    b. Mitered and welded corners.
    c. Flanges for attaching to walls and flangeless frames for installing in ducts.
4. Blades:
    a. Multiple or single blade.
    b. Parallel- or opposed-blade design.
    c. Stiffen damper blades for stability.
    d. Galvanized or Stainless-steel, 0.064 inch thick.
5. Blade Axles: Galvanized steel or Stainless steel.
6. Bearings:
    a. Oil-impregnated bronze or Stainless-steel sleeve.
    b. Dampers in ducts with pressure classes of 3-inch wg or less shall have axles full length of damper blades and bearings at both ends of operating shaft.
7. Tie Bars and Brackets: Galvanized steel.

B. Standard, Aluminum, Manual Volume Dampers:
1. Standard leakage rating, with linkage outside airstream.
2. Suitable for horizontal or vertical applications.
3. Frames: Hat-shaped, 0.10-inch- thick, aluminum sheet channels; frames with flanges for attaching to walls and flangeless frames for installing in ducts.
4. Blades:
    a. Multiple or single blade.
    b. Parallel- or opposed-blade design.
    c. Stiffen damper blades for stability.
    d. Roll-Formed Aluminum Blades: 0.10-inch- thick aluminum sheet.
    e. Extruded-Aluminum Blades: 0.050-inch- thick extruded aluminum.
5. Blade Axles: Galvanized steel or Stainless steel.
6. Bearings:
    a. Oil-impregnated bronze or Stainless-steel sleeve.
    b. Dampers in ducts with pressure classes of 3-inch wg or less shall have axles full length of damper blades and bearings at both ends of operating shaft.
7. Tie Bars and Brackets: Aluminum.

C. Jackshaft:
1. Size: 0.5-inch or 1-inch diameter.
2. Material: Galvanized-steel pipe rotating within pipe-bearing assembly mounted on supports at each mullion and at each end of multiple-damper assemblies.
3. Length and Number of Mountings: As required to connect linkage of each damper in multiple-damper assembly.

D. Damper Hardware:
1. Zinc-plated, die-cast core with dial and handle made of 3/32-inch- thick zinc-plated steel, and a 3/4-inch hexagon locking nut.
2. Include center hole to suit damper operating-rod size.
3. Include elevated platform for insulated duct mounting.

2.4 FLANGE CONNECTORS

A. Description: Add-on or roll-formed, factory-fabricated, slide-on transverse flange connectors, gaskets, and components.

B. Material: Galvanized steel.

C. Gage and Shape: Match connecting ductwork.

2.5 TURNING VANES

A. Manufactured Turning Vanes for Metal Ducts: Curved blades of galvanized sheet steel; support with bars perpendicular to blades set; set into vane runners suitable for duct mounting.
   1. Acoustic Turning Vanes: Fabricate airfoil-shaped aluminum extrusions with perforated faces and fibrous-glass fill.

B. Manufactured Turning Vanes for Nonmetal Ducts: Fabricate curved blades of resin-bonded fiberglass with acrylic polymer coating; support with bars perpendicular to blades set; set into vane runners suitable for duct mounting.

C. General Requirements: Comply with SMACNA's "HVAC Duct Construction Standards - Metal and Flexible"; Figures 4-3, "Vanes and Vane Runners," and 4-4, "Vane Support in Elbows."

D. Vane Construction: Double wall.

2.6 DUCT-MOUNTED ACCESS DOORS

A. Duct-Mounted Access Doors: Fabricate access panels according to SMACNA's "HVAC Duct Construction Standards - Metal and Flexible"; Figures 7-2, "Duct Access Doors and Panels," and 7-3, "Access Doors - Round Duct."
   1. Door:
      a. Double wall, rectangular.
      b. Galvanized sheet metal with insulation fill and thickness as indicated for duct pressure class.
      c. Vision panel.
      d. Hinges and Latches: 1-by-1-inchbutt or piano hinge and cam latches.
      e. Fabricate doors airtight and suitable for duct pressure class.
   2. Frame: Galvanized sheet steel, with bend-over tabs and foam gaskets.
   3. Number of Hinges and Locks:
      a. Access Doors Less Than 12 Inches Square: No hinges and two sash locks.
      b. Access Doors up to 18 Inches Square: Continuous and two sash locks.
      c. Access Doors up to 24 by 48 Inches: Three hinges and two compression latches with outside and inside handles.
      d. Access Doors Larger Than 24 by 48 Inches: Four hinges and two compression latches with outside and inside handles.

B. Pressure Relief Access Door:
   1. Door and Frame Material: Galvanized sheet steel.
   2. Door: Single wall with metal thickness applicable for duct pressure class.
   3. Operation: Open outward for positive-pressure ducts and inward for negative-pressure ducts.
   4. Factory set at 3.0- to 8.0-inch wg.
   5. Doors close when pressures are within set-point range.
   6. Hinge: Continuous piano.
   7. Latches: Cam.
   8. Seal: Neoprene or foam rubber.
   9. Insulation Fill: 1-inch- thick, fibrous-glass or polystyrene-foam board.

2.7 DUCT ACCESS PANEL ASSEMBLIES

A. Labeled according to UL 1978 by an NRTL.

B. Panel and Frame: Minimum thickness 0.0528-inch carbon or 0.0428-inch stainless steel.

C. Fasteners: Carbon or Stainless steel. Panel fasteners shall not penetrate duct wall.

D. Gasket: Comply with NFPA 96; grease-tight, high-temperature ceramic fiber, rated for minimum 2000 deg F.

E. Minimum Pressure Rating: 10-inch wg, positive or negative.

2.8 FLEXIBLE CONNECTORS

A. Materials: Flame-retardant or noncombustible fabrics.

B. Coatings and Adhesives: Comply with UL 181, Class 1.

C. Metal-Edged Connectors: Factory fabricated with a fabric strip 3-1/2 inches wide attached to two strips of 2-3/4-inch- wide, 0.028-inch- thick, galvanized sheet steel or 0.032-inch- thick aluminum sheets. Provide metal compatible with connected ducts.

D. Indoor System, Flexible Connector Fabric: Glass fabric double coated with neoprene.
   1. Minimum Weight: 26 oz./sq. yd..
   2. Tensile Strength: 480 lbf/inch in the warp and 360 lbf/inch in the filling.
   3. Service Temperature: Minus 40 to plus 200 deg F.

E. Outdoor System, Flexible Connector Fabric: Glass fabric double coated with weatherproof, synthetic rubber resistant to UV rays and ozone.
   1. Minimum Weight: 24 oz./sq. yd..
   2. Tensile Strength: 530 lbf/inch in the warp and 440 lbf/inch in the filling.
   3. Service Temperature: Minus 50 to plus 250 deg F.

2.9 DUCT ACCESSORY HARDWARE

A. Instrument Test Holes: Cast iron or cast aluminum to suit duct material, including screw cap and gasket. Size to allow insertion of pitot tube and other testing instruments and of length to suit duct-insulation thickness.

B. Adhesives: High strength, quick setting, neoprene based, waterproof, and resistant to gasoline and grease.

PART 3 - EXECUTION

3.1 INSTALLATION

A. Install duct accessories according to applicable details in SMACNA's "HVAC Duct Construction Standards - Metal and Flexible" for metal ducts and in NAIMA AH116, "Fibrous Glass Duct Construction Standards," for fibrous-glass ducts.

B. Install duct accessories of materials suited to duct materials; use galvanized-steel accessories in galvanized-steel and fibrous-glass ducts, stainless-steel accessories in stainless-steel ducts, and aluminum accessories in aluminum ducts.

C. Install volume dampers at points on supply, return, and exhaust systems where branches extend from larger ducts. Where dampers are installed in ducts having duct liner, install dampers with hat channels of same depth as liner, and terminate liner with nosing at hat channel.
   1. Install steel volume dampers in steel ducts.
   2. Install aluminum volume dampers in aluminum ducts.

D. Set dampers to fully open position before testing, adjusting, and balancing.

E. Install test holes at fan inlets and outlets and elsewhere as indicated.

F. Install duct access doors on sides of ducts to allow for inspecting, adjusting, and maintaining accessories and equipment at the following locations:
   1. On both sides of duct coils.
   2. Upstream from duct filters.
   3. At outdoor-air intakes and mixed-air plenums.
   4. At drain pans and seals.
   5. Downstream from manual volume dampers, control dampers, backdraft dampers, and equipment.
   6. Upstream and downstream from turning vanes.
   7. Upstream or downstream from duct silencers.
   8. Control devices requiring inspection.
   9. Elsewhere as indicated.

G. Install access doors with swing against duct static pressure.

H. Access Door Sizes:
   1. One-Hand or Inspection Access: 8 by 5 inches.
   2. Two-Hand Access: 12 by 6 inches.
   3. Head and Hand Access: 18 by 10 inches.
   4. Head and Shoulders Access: 21 by 14 inches.
   5. Body Access: 25 by 14 inches.
   6. Body plus Ladder Access: 25 by 17 inches.

I. Label access doors according to Section 230553 "Identification for HVAC Piping and Equipment" to indicate the purpose of access door.

J. Install flexible connectors to connect ducts to equipment.

K. Connect terminal units to supply ducts directly or with maximum 12-inch lengths of flexible duct. Do not use flexible ducts to change directions.

L. Connect diffusers or light troffer boots to ducts directly or with maximum 60-inch lengths of flexible duct clamped or strapped in place.

M. Connect flexible ducts to metal ducts with draw bands or adhesive plus sheet metal screws.

N. Install duct test holes where required for testing and balancing purposes.

3.2 FIELD QUALITY CONTROL

A. Tests and Inspections:
   1. Operate dampers to verify full range of movement.
   2. Inspect locations of access doors and verify that purpose of access door can be performed.
   3. Inspect turning vanes for proper and secure installation.

END OF SECTION 23 33 00

THIS PAGE INTENTIONALLY LEFT BLANK

SECTION 23 37 13 - DIFFUSERS, REGISTERS, AND GRILLES

PART 1 - GENERAL

1.1 SUMMARY

A. Section Includes:
   1. Rectangular and square ceiling diffusers.
   2. Fixed face registers and grilles.

B. Related Sections:
   1. Section 233300 "Air Duct Accessories" for volume-control dampers not integral to diffusers, registers, and grilles.

1.2 ACTION SUBMITTALS

A. Product Data: For each type of product indicated, include the following:
   1. Data Sheet: Indicate materials of construction, finish, and mounting details; and performance data including throw and drop, static-pressure drop, and noise ratings.
   2. Diffuser, Register, and Grille Schedule: Indicate drawing designation, room location, quantity, model number, size, and accessories furnished.

B. Samples: For each exposed product and for each color and texture specified.

PART 2 - PRODUCTS

2.1 CEILING DIFFUSERS

A. Rectangular and Square Ceiling Diffusers:
   1. Devices shall be specifically designed for variable-air-volume flows.
   2. Material: Steel.
   3. Finish: Baked enamel, color as determined by Contracting Officer.
   4. Face Size: 24 by 24 inches or 12 by 12 inches.
   5. Face Style: Four cone.
   6. Mounting: Surface or T-bar or Mounting panel.
   7. Pattern: Fixed.
   8. Dampers: Radial opposed blade or Butterfly.
   9. Accessories:
      a. Operating rod extension.

2.2 REGISTERS AND GRILLES

A. Fixed Face Register:
   1. Material: Steel.
   2. Finish: Baked enamel, color as determined by Contracting Officer.
   3. Face Arrangement: 1/2-by-1/2-by-1/2-inch grid core.
   4. Core Construction: Integral.
   5. Frame: 1 inch wide.
   6. Mounting: Countersunk screw or Concealed.
   7. Damper Type: Adjustable opposed blade.

B. Fixed Face Grille:
   1. Material: Steel.

2. Finish: Baked enamel, color as determined by Contracting Officer.
3. Face Arrangement: Perforated core.
4. Core Construction: Removable.
5. Frame: 1 inch wide.
6. Mounting: Concealed or Lay in.

2.3 SOURCE QUALITY CONTROL

A. Verification of Performance: Rate diffusers, registers, and grilles according to ASHRAE 70, "Method of Testing for Rating the Performance of Air Outlets and Inlets."

PART 3 - EXECUTION

3.1 INSTALLATION

A. Install diffusers, registers, and grilles level and plumb.

B. Ceiling-Mounted Outlets and Inlets: Drawings indicate general arrangement of ducts, fittings, and accessories. Air outlet and inlet locations have been indicated to achieve design requirements for air volume, noise criteria, airflow pattern, throw, and pressure drop. Make final locations where indicated, as much as practical. For units installed in lay-in ceiling panels, locate units in the center of panel. Where architectural features or other items conflict with installation, notify Contracting Officer for a determination of final location.

C. Install diffusers, registers, and grilles with airtight connections to ducts and to allow service and maintenance of dampers, and air extractors.

3.2 ADJUSTING

A. After installation, adjust diffusers, registers, and grilles to air patterns indicated, or as directed, before starting air balancing.

END OF SECTION 23 37 13

SECTION 23 81 26 - SPLIT-SYSTEM AIR-CONDITIONERS

1.1 SUMMARY

A. Section includes split-system heat-pump units consisting of separate evaporator-fan and compressor-condenser components.

1.2 ACTION SUBMITTALS

A. Product Data: For each type of product indicated.

1.3 CLOSEOUT SUBMITTALS

A. Operation and maintenance data.

B. Warranty: Sample of special warranty.

1.4 QUALITY ASSURANCE

A. Electrical Components, Devices, and Accessories: Listed and labeled as defined in NFPA 70, by a qualified testing agency, and marked for intended location and application.

B. ASHRAE Compliance:
   1. Fabricate and label refrigeration system to comply with ASHRAE 15, "Safety Standard for Refrigeration Systems."
   2. ASHRAE Compliance: Applicable requirements in ASHRAE 62.1, Section 4 - "Outdoor Air Quality," Section 5 - "Systems and Equipment," Section 6 - " Procedures," and Section 7 - "Construction and System Start-up."

C. ASHRAE/IES Compliance: Applicable requirements in ASHRAE/IES 90.1.

1.5 WARRANTY

A. Special Warranty: Manufacturer's standard form in which manufacturer agrees to repair or replace components of split-system heat-pump units that fail in materials or workmanship within specified warranty period.
   1. Warranty Period:
      a. For Compressor: Seven year(s) from date of Substantial Completion.
      b. For Parts: Five year(s) from date of Substantial Completion.
      c. For Labor: One year(s) from date of Substantial Completion.

PART 2 - PRODUCTS

2.1 INDOOR UNITS (5 TONS OR LESS)

A. Vertical/Horizontal Ducted (Multi-Position Air Handler):
   1. General: 1. The multi-position indoor unit shall be factory assembled, wired and run tested. Contained within the unit shall be all factory wiring, piping, electronic modulating linear expansion device, control circuit board and fan motor. The unit shall have a self-diagnostic function, 3-minute time delay mechanism, and an auto restart function. Indoor unit and refrigerant pipes shall be charged with dehydrated air before shipment from the factory. The unit shall be suitable for use in air handling spaces in accordance with Section 18.2 of UL 1995 4th Edition, be tested in accordance with ANSI/ASHRAE 193 and have less than 2% air leakage at maximum airflow setting.

2. Unit Cabinet: 1. The cabinet shall include a fixed bottom return, a fixed vertical discharge supply and be pre-painted, pre-insulated, 22 gauge galvanized steel or utilize black ZAM steel.
3. Insulation: 1 inch R4.2 fiberglass free.
4. Refrigerant Coil: nonferrous construction with smooth plate fins on copper tubing. Tubing shall have inner grooves for high efficiency heat exchange. All tube joints shall be brazed with phos-copper or silver allow. Coils shall be pressure tested at the factory. Comply with ARI 206/110.
5. Electric Heat Kit: Unit shall have a manufacturer supplied electric heat kit accessory. The electric heat kit shall offer either one or two stages of back up heat for maximum efficiency. The heater shall be designed to work with the indoor unit without any modifications to the unit or to the control sequence. Heater shall be powered from a dedicated electrical feed, not from indoor unit.
6. Fan: Forward-curved, double-width wheel of galvanized steel; directly connected to motor.
7. Fan Motors:
   a. Comply with NEMA designation, temperature rating, service factor, enclosure type.
   b. Shall have 3-speeds with the capability to operate between 0.3-0.8 in. wg. Selectable.
   c. With internal thermal protection and permanent lubrication.
   d. Wiring Terminations: Connect motor to chassis wiring with plug connection.
8. Airstream Surfaces: Surfaces in contact with the airstream shall comply with requirements in ASHRAE 62.1.
9. Filters: 1 in. filter rack with reusable filter.
10. Condensate Drain Pans:
    a. Fabricated with one percent slope in at least two planes to collect condensate from cooling coils (including coil piping connections, coil headers, and return bends) and humidifiers, and to direct water toward drain connection.
       1) Depth: A minimum of 1 inch deep.
    b. Single-wall, galvanized-steel sheet.
    c. Drain Connection: Located at lowest point of pan and sized to prevent overflow. Terminate with threaded nipple on one end of pan.
       1) Minimum Connection Size: NPS 3/4.
    d. Pan-Top Surface Coating: Asphaltic waterproofing compound.
    e. Units with stacked coils shall have an intermediate drain pan to collect condensate from top coil.

2.2 OUTDOOR UNITS (5 TONS OR LESS)

A. Air-Cooled, Compressor-Condenser Components:
1. Casing: Steel, finished with baked enamel in color selected by Contracting Officer, with removable panels for access to controls, weep holes for water drainage, and mounting holes in base. Provide brass service valves, fittings, and gage ports on exterior of casing.
2. Compressor: Hermetically sealed with crankcase heater and mounted on vibration isolation device. Compressor motor shall have thermal- and current-sensitive overload devices, start capacitor, relay, and contactor.
   a. Compressor Type: Scroll.
   b. Inverter driven, variable speed compressor motor with manual-reset high-pressure switch and automatic-reset low-pressure switch.
   c. Refrigerant: R-454B.

d. Refrigerant Coil: Copper tube, with mechanically bonded aluminum fins and liquid subcooler. Comply with ARI 206/110.

3. Heat-Pump Components: Reversing valve and low-temperature-air cutoff thermostat.
4. Fan: Aluminum-propeller type, directly connected to motor.
5. Motor: Permanently lubricated, with integral thermal-overload protection.
6. Low Ambient Kit: Permits operation down to -13 deg F.
7. Mounting Base: Polyethylene.

2.3 ACCESSORIES

A. Thermostat: Low voltage with subbase to control compressor and evaporator fan.

B. Thermostat: Wireless infrared functioning to remotely control compressor and evaporator fan, with the following features:
1. Compressor time delay.
2. 24-hour time control of system stop and start.
3. Liquid-crystal display indicating temperature, set-point temperature, time setting, operating mode, and fan speed.
4. Fan-speed selection including auto setting.

C. Automatic-reset timer to prevent rapid cycling of compressor.

D. Refrigerant Line Kits: Soft-annealed copper suction and liquid lines factory cleaned, dried, pressurized, and sealed; factory-insulated suction line with flared fittings at both ends.

E. Drain Hose: For condensate.

PART 3 - EXECUTION

3.1 INSTALLATION

A. Install units level and plumb.

B. Install evaporator-fan components using manufacturer's standard mounting devices securely fastened to building structure.

C. Equipment Mounting:
1. Install ground-mounted, compressor-condenser components on cast-in-place concrete equipment base(s). Comply with requirements for equipment bases and foundations specified in Division 03 Specifications.
2. Install ground-mounted, compressor-condenser components on polyethylene mounting base.
3. Comply with requirements for vibration isolation devices specified in Section 230548.13 "Vibration Controls for HVAC."

D. Install and connect precharged refrigerant tubing to component's quick-connect fittings. Install tubing to allow access to unit.

3.2 CONNECTIONS

A. Piping installation requirements are specified in other Sections. Drawings indicate general arrangement of piping, fittings, and specialties.

B. Where piping is installed adjacent to unit, allow space for service and maintenance of unit.

C. Duct Connections: Duct installation requirements are specified in Section 233113 "Metal Ducts." Drawings indicate the general arrangement of ducts. Connect supply and return ducts to split-system air-conditioning units with flexible duct connectors.

3.3 FIELD QUALITY CONTROL

A. Perform tests and inspections.
   1. Manufacturer's Field Service: Engage a factory-authorized service representative to inspect components, assemblies, and equipment installations, including connections, and to assist in testing.

B. Tests and Inspections:
   1. Leak Test: After installation, charge system and test for leaks. Repair leaks and retest until no leaks exist.
   2. Operational Test: After electrical circuitry has been energized, start units to confirm proper motor rotation and unit operation.
   3. Test and adjust controls and safeties. Replace damaged and malfunctioning controls and equipment.

C. Remove and replace malfunctioning units and retest as specified above.

D. Prepare test and inspection reports.

END OF SECTION 23 81 26

THIS PAGE INTENTIONALLY LEFT BLANK

SECTION 26 05 00 - COMMON WORK RESULTS FOR ELECTRICAL

PART 1 - GENERAL

1.1 RELATED DOCUMENTS

A. Drawings and general provisions of the Contract, including General and Supplementary Conditions and Division 01 Specification Sections, apply to this Section.

B. Applicable codes include the following:
   1. International Building Code 2024
   2. International Fire Code 2024
   3. National Electric Code 2023
   4. International Energy Conservation Code 2024
   5. NPS Building Standards

1.2 SUMMARY

A. Section Includes:

   1. Electrical equipment coordination and installation.
   2. Common electrical installation requirements.

1.3 COORDINATION

A. Coordinate arrangement, mounting, and support of electrical equipment:

   1. To allow maximum possible headroom unless specific mounting heights that reduce headroom are indicated.
   2. To provide for ease of disconnecting the equipment with minimum interference to other installations.
   3. To allow right of way for piping and conduit installed at required slope.
   4. To connecting raceways, cables, wireways, cable trays, and busways will be clear of obstructions and of the working and access space of other equipment.

PART 2 - PRODUCTS - NOT USED

PART 3 - EXECUTION

3.1 COMMON REQUIREMENTS FOR ELECTRICAL INSTALLATION

A. Comply with NECA 1.

B. Measure indicated mounting heights to bottom of unit for suspended items and to center of unit for wall-mounting items, except as otherwise indicated in drawings.

C. Headroom Maintenance: If mounting heights or other location criteria are not indicated, arrange and install components and equipment to provide maximum possible headroom consistent with these requirements.

D. Equipment: Install to facilitate service, maintenance, and repair or replacement of components of both electrical equipment and other nearby installations. Connect in such a way as to facilitate future disconnecting with minimum interference with other items in the vicinity.

E. Right of Way: Give to piping systems installed at a required slope.

F. Exposed raceways/conduit: Where conduit or raceway is routed in an exposed location, the conduit and raceway shall be painted to match adjacent finishes. Coordinate required finishes with Contracting Officer.

END OF SECTION 26 05 00

SECTION 26 05 19 - LOW-VOLTAGE ELECTRICAL POWER CONDUCTORS AND CABLES

PART 1 - GENERAL

1.1 RELATED DOCUMENTS

A. Drawings and general provisions of the Contract, including General and Supplementary Conditions and Division 01 Specification Sections, apply to this Section.

1.2 SUMMARY

A. This Section includes the following:

1. Building wires and cables rated 600 V and less.
2. Connectors, splices, and terminations rated 600 V and less.

1.3 SUBMITTALS

A. Product Data: For each type of product indicated.

1.4 QUALITY ASSURANCE

A. Electrical Components, Devices, and Accessories: Listed and labeled as defined in NFPA 70, Article 100, by a testing agency acceptable to authorities having jurisdiction, and marked for intended use.

B. Comply with NFPA 70.

PART 2 - PRODUCTS

2.1 CONDUCTORS AND CABLES

A. Copper Conductors: Comply with NEMA WC 70.

B. Conductor Insulation: Comply with NEMA WC 70 for Types THWN or XHHW.

2.2 CONNECTORS AND SPLICES

A. Description: Factory-fabricated connectors and splices of size, ampacity rating, material, type, and class for application and service indicated.

PART 3 - EXECUTION

3.1 CONDUCTOR MATERIAL APPLICATIONS

A. Branch Circuits: Copper. Solid for No. 10 AWG and smaller; stranded for No. 8 AWG and larger.

3.2 CONDUCTOR INSULATION AND MULTICONDUCTOR CABLE APPLICATIONS AND WIRING METHODS

A. Exposed Branch Circuits: Type THWN, single conductors in raceway.

B. Branch Circuits Concealed in Ceilings, Walls, and Partitions: Type THHN-THWN, single conductors in raceway. Metal-clad cable, Type MC is not allowed.

C. Branch Circuits Concealed in Concrete, below Slabs-on-Grade, and Underground: Type XHHW, single conductors in raceway.

D. Cord Drops and Portable Appliance Connections: Type SO, hard service cord with stainless-steel, wire-mesh, strain relief device at terminations to suit application.

E. Class 1 Control Circuits: Type THHN-THWN, in raceway.

F. Class 2 Control Circuits: Type THHN-THWN, in raceway.

3.3 INSTALLATION OF CONDUCTORS AND CABLES

A. Conceal cables in finished walls, ceilings, and floors, unless otherwise indicated.

B. Use manufacturer-approved pulling compound or lubricant where necessary; compound used must not deteriorate conductor or insulation. Do not exceed manufacturer's recommended maximum pulling tensions and sidewall pressure values.

C. Use pulling means, including fish tape, cable, rope, and basket-weave wire/cable grips, that will not damage cables or raceway.

D. Support cables according to Division 26 Section "Hangers and Supports for Electrical Systems."

E. Identify and color-code conductors and cables according to Division 26 Section "Identification for Electrical Systems."

3.4 CONNECTIONS

A. Tighten electrical connectors and terminals according to manufacturer's published torque-tightening values. If manufacturer's torque values are not indicated, use those specified in UL 486A and UL 486B.

B. Make splices and taps that are compatible with conductor material and that possess equivalent or better mechanical strength and insulation ratings than unspliced conductors.

C. Wiring at Outlets: Install conductor at each outlet, with at least 12 inches of slack.

D. Provide crimped ferrules for stranded wires at any screw terminal locations.

3.5 FIELD QUALITY CONTROL

A. Perform tests and inspections and prepare test reports.

B. Tests and Inspections:

1. Perform each visual and mechanical inspection and electrical test stated in NETA Acceptance Testing Specification. Certify compliance with test parameters.

C. Test Reports: Prepare a written report to record the following:

1. Test procedures used.
2. Test results that comply with requirements.
3. Test results that do not comply with requirements and corrective action taken to achieve compliance with requirements.

D. Remove and replace malfunctioning units and retest as specified above.

END OF SECTION 26 05 19

SECTION 26 05 29 - HANGERS AND SUPPORTS FOR ELECTRICAL SYSTEMS

PART 1 - GENERAL

1.1 RELATED DOCUMENTS

A. Drawings and general provisions of the Contract, including General and Supplementary Conditions and Division 01 Specification Sections, apply to this Section.

1.2 SUMMARY

A. This Section includes the following:

1. Hangers and supports for electrical equipment and systems.

1.3 DEFINITIONS

A. EMT: Electrical metallic tubing.

B. IMC: Intermediate metal conduit.

C. RMC: Rigid metal conduit.

1.4 PERFORMANCE REQUIREMENTS

A. Design supports for multiple raceways, including comprehensive engineering analysis by a qualified professional engineer, using performance requirements and design criteria indicated.

B. Design supports for multiple raceways capable of supporting combined weight of supported systems and its contents.

C. Design equipment supports capable of supporting combined operating weight of supported equipment and connected systems and components.

D. Rated Strength: Adequate in tension, shear, and pullout force to resist maximum loads calculated or imposed for this Project, with a minimum structural safety factor of five times the applied force.

1.5 SUBMITTALS

A. Product Data: For the following:

1. Steel slotted support systems.
2. Nonmetallic slotted support systems.

B. Shop Drawings: Show fabrication and installation details and include calculations for the following:

1. Trapeze hangers. Include Product Data for components.
2. Steel slotted channel systems. Include Product Data for components.
3. Nonmetallic slotted channel systems. Include Product Data for components.
4. Equipment supports.

1.6 QUALITY ASSURANCE

A. Comply with NFPA 70.

PART 2 - PRODUCTS

2.1 SUPPORT, ANCHORAGE, AND ATTACHMENT COMPONENTS

A. Steel Slotted Support Systems: Comply with MFMA-4, factory-fabricated components for field assembly.

1. Metallic Coatings: Hot-dip galvanized after fabrication and applied according to MFMA-4.
2. Nonmetallic Coatings: Manufacturer's standard PVC, polyurethane, or polyester coating applied according to MFMA-4.
3. Painted Coatings: Manufacturer's standard painted coating applied according to MFMA-4.
4. Channel Dimensions: Selected for applicable load criteria.

B. Nonmetallic Slotted Support Systems: Structural-grade, factory-formed, glass-fiber-resin channels and angles with 9/16-inch-diameter holes at a maximum of 8 inches o.c., in at least 1 surface.

1. Fittings and Accessories: Products of channel and angle manufacturer and designed for use with those items.
2. Fitting and Accessory Materials: Same as channels and angles.
3. Rated Strength: Selected to suit applicable load criteria.

C. Raceway and Cable Supports: As described in NECA 1 and NECA 101.

D. Conduit and Cable Support Devices: Steel hangers, clamps, and associated fittings, designed for types and sizes of raceway or cable to be supported.

E. Mounting, Anchoring, and Attachment Components: Items for fastening electrical items or their supports to building surfaces include the following:

1. Powder-Actuated Fasteners: Threaded-steel stud, for use in hardened portland cement concrete, steel, or wood, with tension, shear, and pullout capacities appropriate for supported loads and building materials where used.

2. Mechanical-Expansion Anchors: Insert-wedge-type, zinc-coated steel, for use in hardened portland cement concrete with tension, shear, and pullout capacities appropriate for supported loads and building materials in which used.

3. Concrete Inserts: Steel or malleable-iron, slotted support system units similar to MSS Type 18; complying with MFMA-4 or MSS SP-58.

4. Clamps for Attachment to Steel Structural Elements: MSS SP-58, type suitable for attached structural element.

5. Through Bolts: Structural type, hex head, and high strength. Comply with ASTM A 325.

6. Toggle Bolts: All-steel springhead type.

7. Hanger Rods: Threaded steel.

2.2 FABRICATED METAL EQUIPMENT SUPPORT ASSEMBLIES

A. Description: Welded or bolted, structural-steel shapes, shop or field fabricated to fit dimensions of supported equipment.

PART 3 - EXECUTION

3.1 APPLICATION

A. Comply with NECA 1 and NECA 101 for application of hangers and supports for electrical equipment and systems except if requirements in this Section are stricter.

B. Maximum Support Spacing and Minimum Hanger Rod Size for Raceway: Space supports for EMT, IMC, and RMC as required by NFPA 70. Minimum rod size shall be 1/4 inch in diameter.

C. Spring-steel clamps designed for supporting single conduits without bolts may be used for 1-1/2-inch and smaller raceways serving branch circuits and communication systems above suspended ceilings and for fastening raceways to trapeze supports.

3.2 SUPPORT INSTALLATION

A. Comply with NECA 1 and NECA 101 for installation requirements except as specified in this Article.

B. Raceway Support Methods: In addition to methods described in NECA 1, EMT may be supported by openings through structure members, as permitted in NFPA 70.

C. Strength of Support Assemblies: Where not indicated, select sizes of components so strength will be adequate to carry present and future static loads within specified loading limits. Minimum static design load used for strength determination shall be weight of supported components plus 200 lb.

D. Mounting and Anchorage of Surface-Mounted Equipment and Components: Anchor and fasten electrical items and their supports to building structural elements by the following methods unless otherwise indicated by code:

1. To Wood: Fasten with lag screws or through bolts.
2. To New Concrete: Bolt to concrete inserts.
3. To Masonry: Approved toggle-type bolts on hollow masonry units and expansion anchor fasteners on solid masonry units.
4. To Existing Concrete: Expansion anchor fasteners.
5. Instead of expansion anchors, powder-actuated driven threaded studs provided with lock washers and nuts may be used in existing standard-weight concrete 4 inches thick or greater. Do not use for anchorage to lightweight-aggregate concrete or for slabs less than 4 inches thick.
6. To Steel: Welded threaded studs complying with AWS D1.1/D1.1M, with lock washers and nuts.
7. To Light Steel: Sheet metal screws.
8. Items Mounted on Hollow Walls and Nonstructural Building Surfaces: Mount cabinets, panelboards, disconnect switches, control enclosures, pull and junction boxes, transformers, and other devices on slotted-channel racks attached to substrate.

E. Drill holes for expansion anchors in concrete at locations and to depths that avoid reinforcing bars.

3.3 INSTALLATION OF FABRICATED METAL SUPPORTS

A. Cut, fit, and place miscellaneous metal supports accurately in location, alignment, and elevation to support and anchor electrical materials and equipment.

3.4 PAINTING

A. Touchup: Clean field welds and abraded areas of shop paint. Paint exposed areas immediately after erecting hangers and supports. Use same materials as used for shop painting. Comply with SSPC-PA 1 requirements for touching up field-painted surfaces.

1. Apply paint by brush or spray to provide minimum dry film thickness of 2.0 mils.

B. Touchup: Comply with requirements in Division 09 painting Sections for cleaning and touchup painting of field welds, bolted connections, and abraded areas of shop paint on miscellaneous metal.

C. Galvanized Surfaces: Clean welds, bolted connections, and abraded areas and apply galvanizing-repair paint to comply with ASTM A 780.

END OF SECTION 26 05 29

SECTION 26 05 33 - RACEWAY AND BOXES FOR ELECTRICAL SYSTEMS

PART 1 - GENERAL

1.1 RELATED DOCUMENTS

A. Drawings and general provisions of the Contract, including General and Supplementary Conditions and Division 01 Specification Sections, apply to this Section.

1.2 SUMMARY

A. This Section includes raceways, fittings, boxes, enclosures, and cabinets for electrical wiring.

1.3 DEFINITIONS

A. EMT: Electrical metallic tubing.

B. FMC: Flexible metal conduit.

C. IMC: Intermediate metal conduit.

D. LFMC: Liquidtight flexible metal conduit.

E. RNC: Rigid nonmetallic conduit.

F. RSC: Rigid steel conduit

1.4 SUBMITTALS

A. Product Data: For surface raceways, wireways and fittings, floor boxes, hinged-cover enclosures, and cabinets.

1.5 QUALITY ASSURANCE

A. Electrical Components, Devices, and Accessories: Listed and labeled as defined in NFPA 70, Article 100, by a testing agency acceptable to authorities having jurisdiction, and marked for intended use.

B. Comply with NFPA 70.

PART 2 - PRODUCTS

2.1 METAL CONDUIT AND TUBING

A. Rigid Steel Conduit: ANSI C80.1.

B. Aluminum Rigid Conduit: ANSI C80.5.

C. IMC: ANSI C80.6.

D. PVC-Coated Steel Conduit: PVC-coated Rigid Steel Conduit.

1. Comply with NEMA RN 1.
2. Coating Thickness: 0.040 inch, minimum.

E. EMT: ANSI C80.3.

F. LFMC: Flexible steel conduit with PVC jacket.

G. Fittings for Conduit (Including all Types and Flexible and Liquidtight), EMT, and Cable: NEMA FB 1; listed for type and size raceway with which used, and for application and environment in which installed.

1. Conduit Fittings for Hazardous (Classified) Locations: Comply with UL 886.
2. Fittings for EMT: Set-screw for conduits less than 2-inches. Compression type for conduits 2-inches or larger.
3. Coating for Fittings for PVC-Coated Conduit: Minimum thickness, 0.040 inch, with overlapping sleeves protecting threaded joints.

H. Joint Compound for Rigid Steel Conduit or IMC: Listed for use in cable connector assemblies, and compounded for use to lubricate and protect threaded raceway joints from corrosion and enhance their conductivity.

2.2 NONMETALLIC CONDUIT AND TUBING

A. RNC: NEMA TC 2, Type EPC-40-PVC, unless otherwise indicated. Type EPC-80-PVC for areas that will be subjected to vehicular travel.

B. Fittings for RNC: NEMA TC 3; match to conduit or tubing type and material.

2.3 SURFACE RACEWAYS

A. Surface Metal Raceways: Galvanized steel with snap-on covers. Manufacturer's standard enamel finish in color selected by the Contracting Officer.

2.4 BOXES, ENCLOSURES, AND CABINETS

A. Sheet Metal Outlet and Device Boxes: NEMA OS 1.

B. Cast-Metal Outlet and Device Boxes: NEMA FB 1, ferrous alloy, Type FD, with gasketed cover.

C. Small Sheet Metal Pull and Junction Boxes: NEMA OS 1.

D. Cast-Metal Access, Pull, and Junction Boxes: NEMA FB 1, cast aluminum with gasketed cover.

E. Hinged-Cover Enclosures: NEMA 250, Type 1, with continuous-hinge cover with flush latch, unless otherwise indicated.

1. Metal Enclosures: Steel, finished inside and out with manufacturer's standard enamel.
2. Nonmetallic Enclosures: Plastic.

F. Cabinets:

1. NEMA 250, Type 1, galvanized-steel box with removable interior panel and removable front, finished inside and out with manufacturer's standard enamel.
2. Hinged door in front cover with flush latch and concealed hinge.
3. Key latch to match panelboards.
4. Metal barriers to separate wiring of different systems and voltage.
5. Accessory feet where required for freestanding equipment.

PART 3 - EXECUTION

3.1 RACEWAY APPLICATION

A. Outdoors: Apply raceway products as specified below, unless otherwise indicated:

1. Exposed Conduit: Rigid steel conduit.
2. Concealed Conduit, Aboveground: EMT.
3. Underground Conduit: For horizontal underground conduit, utilize RNC, Type EPC-80-PVC, direct buried. Underground bends are to utilize PVC Coated Rigid Steel prefabricated sections. Vertical underground conduit (risers) shall be PVC Coated Rigid Steel.
4. Connection to Vibrating Equipment (Including Transformers and Hydraulic, Pneumatic, Electric Solenoid, or Motor-Driven Equipment): LFMC.
5. Boxes and Enclosures, Aboveground: NEMA 250, Type 3R.

B. Comply with the following indoor applications, unless otherwise indicated:

1. Exposed, Not Subject to Physical Damage: EMT.
2. Exposed, Not Subject to Severe Physical Damage: EMT.
3. Exposed, Subject to Severe Physical Damage: RSC.
4. Concealed in Ceilings and Interior Walls and Partitions: EMT.
5. Connection to Vibrating Equipment (Including Transformers and Hydraulic, Pneumatic, Electric Solenoid, or Motor-Driven Equipment): FMC, except use LFMC in damp or wet locations.
6. Damp or Wet Locations: IMC.
7. Raceways for Optical Fiber or Communications Cable in Spaces Used for Environmental Air: EMT.

8. Boxes and Enclosures: NEMA 250, Type 1, except use NEMA 250, Type 3R, stainless steel in damp or wet locations.

C. Minimum Raceway Size: 3/4-inch trade size.

D. Raceway Fittings: Compatible with raceways and suitable for use and location.

1. Rigid and Intermediate Steel Conduit: Use threaded rigid steel conduit fittings, unless otherwise indicated.
2. PVC Externally Coated, Rigid Steel Conduits: Use only fittings listed for use with that material. Patch and seal all joints, nicks, and scrapes in PVC coating after installing conduits and fittings. Use sealant recommended by fitting manufacturer.

E. Install nonferrous conduit or tubing for circuits operating above 60 Hz. Where aluminum raceways are installed for such circuits and pass through concrete, install in nonmetallic sleeve.

F. Do not install aluminum conduits in contact with concrete.

3.2 INSTALLATION

A. Comply with NECA 1 for installation requirements applicable to products specified in Part 2 except where requirements on Drawings or in this Article are stricter.

B. Keep raceways at least 6 inches away from parallel runs of flues and steam or hot-water pipes. Install horizontal raceway runs above water and steam piping.

C. Complete raceway installation before starting conductor installation.

D. Support raceways as specified in Division 26 Section "Hangers and Supports for Electrical Systems."

E. Install no more than the equivalent of three 90-degree bends in any conduit run except for communications conduits, for which fewer bends are allowed.

F. Conceal conduit and EMT within finished walls, ceilings, and floors, unless otherwise indicated.

G. Raceways Embedded in Slabs:

1. Run conduit larger than 1-inch trade size, parallel or at right angles to main reinforcement. Where at right angles to reinforcement, place conduit close to slab support.
2. RNC, Type EPC-40-PVC, rigid steel conduit, or IMC before rising above the floor.

H. Threaded Conduit Joints, Exposed to Wet, Damp, Corrosive, or Outdoor Conditions: Apply listed compound to threads of raceway and fittings before making up joints. Follow compound manufacturer's written instructions.

I. Raceway Terminations at Locations Subject to Moisture or Vibration: Use insulating bushings to protect conductors, including conductors smaller than No. 4 AWG.

J. Install pull wires in empty raceways. Use polypropylene or monofilament plastic line with not less than 200-lb tensile strength. Leave at least 12 inches of slack at each end of pull wire.

K. Install raceway sealing fittings at suitable, approved, and accessible locations and fill them with listed sealing compound. For concealed raceways, install each fitting in a flush steel box with a blank cover plate having a finish similar to that of adjacent plates or surfaces. Install raceway sealing fittings at the following points:

1. Where conduits pass from warm to cold locations, such as boundaries of refrigerated spaces.
2. Where otherwise required by NFPA 70.

L. Expansion-Joint Fittings for RNC: Install in each run of aboveground conduit that is located where environmental temperature change may exceed 30 deg F, and that has straight-run length that exceeds 25 feet.

1. Install expansion-joint fittings for each of the following locations, and provide type and quantity of fittings that accommodate temperature change listed for location:

a. Outdoor Locations Not Exposed to Direct Sunlight: 125 deg F temperature change.
b. Outdoor Locations Exposed to Direct Sunlight: 155 deg F temperature change.
c. Indoor Spaces: Connected with the Outdoors without Physical Separation: 125 deg F temperature change.
d. Attics: 135 deg F temperature change.

2. Install fitting(s) that provide expansion and contraction for at least 0.00041 inch per foot of length of straight run per deg F of temperature change.
3. Install each expansion-joint fitting with position, mounting, and piston setting selected according to manufacturer's written instructions for conditions at specific location at the time of installation.

M. Flexible Conduit Connections: Use maximum of 72 inches of flexible conduit for recessed and semirecessed lighting fixtures, equipment subject to vibration, noise transmission, or movement; and for transformers and motors.

1. Use LFMC in damp or wet locations subject to severe physical damage.
2. Use LFMC in damp or wet locations not subject to severe physical damage.

N. Install plastic bushings at conduit terminations prior to pulling wire.

3.3 INSTALLATION OF UNDERGROUND CONDUIT

A. Direct-Buried Conduit:

1. Excavate trench bottom to provide firm and uniform support for conduit. Prepare trench bottom as indicated in drawings for pipe less than 6 inches in nominal diameter.
2. Install backfill as indicated in drawings.
3. After installing conduit, backfill and compact. Start at tie-in point, and work toward end of conduit run, leaving conduit at end of run free to move with expansion and contraction

as temperature changes during this process. Firmly hand tamp backfill around conduit to provide maximum supporting strength. After placing controlled backfill to within 12 inches of finished grade, make final conduit connection at end of run and complete backfilling with normal compaction as indicated in drawings.

4. Install manufactured duct elbows for stub-ups at poles and equipment and at building entrances through floor unless otherwise indicated. Encase elbows for stub-up ducts throughout length of elbow.
5. Install manufactured PVC coated rigid steel conduit elbows for stub-ups at poles and equipment and at building entrances through floor.

    a. Couple steel conduits to ducts with adapters designed for this purpose, and encase coupling with 3 inches of concrete for a minimum of 12 inches on each side of the coupling.
    b. For stub-ups at equipment mounted on outdoor concrete bases and where conduits penetrate building foundations, extend steel conduit horizontally a minimum of 60 inches from edge of foundation or equipment base. Install insulated grounding bushings on terminations at equipment.
6. Underground Warning Tape: Comply with requirements in Section 260553 "Identification for Electrical Systems."

3.4 PROTECTION

A. Provide final protection and maintain conditions that ensure coatings, finishes, and cabinets are without damage or deterioration at time of Substantial Completion.

1. Repair damage to galvanized finishes with zinc-rich paint recommended by manufacturer.
2. Repair damage to PVC or paint finishes with matching touchup coating recommended by manufacturer.

END OF SECTION 26 05 33

SECTION 26 05 33.1 - HEAT TRACE FOR ICE AND SNOW MELT SYSTEM

PART 1 – GENERAL

1.1 SUMMARY

A. This Section includes furnishing and installing a ice/snow melt system to tie into existing snow melt system to keep water paths clear and to avoid ice dams in gutters and downspouts and shall include UL listed heat race cables, connection kits, and all other equipment and materials as required for a complete installation.

1.2 SUBMITTALS

A. As specified in Division 1 Section, "Submittal Procedures."

1. Product Data: Include rated capacities, operating characteristics, furnished specialties, and accessories for each type of product indicated.

2. Schedule heating capacity, length of cable, spacing, and electrical power requirement for each electric heating cable required.

3. Shop Drawings: For electric heating cable ice/snow melt system. Include plans with system layout, details, and attachments to other work.

4. Wiring Diagrams: Power, signal, and control wiring.

B. Closeout Submittals: As specified in Division 1 Section, "Closeout Procedures."

1. Manufactures Operation and Maintenance information.

2. Manufacturer's Installation and Operation Guide.

3. Warranty: Submit manufacturer's warranty.

1.3 QUALITY ASSURANCE

A. Manufacturer's Qualifications: Company specializing in roof ice melt systems with not less than Five years of experience.

B. Installer Qualifications: System installer shall have a complete understanding of product and product literature from manufacturer prior to installation. Electrical connections and testing shall be conducted by a licensed electrician.

C. Regulatory Requirements and Approvals: Systems heating cable and connection kits UL Listed and Classified for roof and gutter deicing.

PART 2 – PRODUCTS

2.1 ROOF SNOW AND ICE MELT SYSTEM

A. General: Provide all manufacturer's accessories as required including, power connection kits, splice kits, commercial grade adhesive, protective gutter and downspout straps.

B. Heater Cable: Self-regulating heating cable for gutters, downspouts, and chases.

1. UL/CUL 1588 listed de-icing and snow melting heating cable.

2. Output: 12 watt per foot.

3. Supply Voltage: 208V.

4. Two Bus Wires: 16 AWG, tinned copper bus wires.

5. Heating Core: Self-regulating conductive core.

6. Inner Jacket: Thermoplastic.

7. Metallic Braid: 14 AWG (equivalent size) tinned copper.

8. Outer Jacket: Flame retardant thermoplastic elastomer insulation.

2.2 EXAMINATION

A. Coordinate heat tape installation with gutters and downspouts in Division 07, “Sheet Metal flashing and Trim”.

B. Examine gutters, downspouts, and chases for proper installation, cleanliness, or condition that may hinder proper installation of ice melt system.

1. Notify Contracting Officer in writing of items needing correction.

2. Do not install ice melt system until faulty conditions are corrected.

2.3 INSTALLATION

A. Performed work in accordance with the National Electrical Code (NEC).

B. Install equipment in accordance with Manufacturer’s installation and operation requirements.

C. Install ice melt system, including self-regulating heat cables per the drawings and Manufacturer's Installation and Operation Guide.

D. Ensure all circuits are protected with 30mA GFCI breakers as required by NEC.

E. Heater cable handling:

1. Do not pull cable over sharp edges.

2. Do not use excessive pulling force.

3. Do not kink or crush the heating cable.

4. Do not walk on heater cable or heating panels.

5. Protect heater cable from sharp edges, such as sheet metal covers, with electrical tape.

2.4 FIELD QUALITY CONTROL

A. Notify Contracting Officer at least 48 hours before tests. Perform tests in the presence of the Contracting Officer.

B. Perform heater cable testing as directed by System Manufacturer in Installation Guide.

C. Perform heater cable insulation resistance testing in accordance with Manufacturer's requirements and as follows:

1. Prior to installation.

2. After splice kits, terminations, or end seals are installed.

3. Prior to final acceptance.

D. Provide dates and testing results to the Contracting Officer.

END OF SECTION 26 05 33

SECTION 26 05 53 - IDENTIFICATION FOR ELECTRICAL SYSTEMS

PART 1 - GENERAL

1.1 RELATED DOCUMENTS

A. Drawings and general provisions of the Contract, including General and Supplementary Conditions and Division 01 Specification Sections, apply to this Section.

1.2 SUMMARY

A. This Section includes the following:

1. Identification for raceway.
2. Identification for conductors and communication and control cable.
3. Underground-line warning tape.
4. Warning labels and signs.
5. Instruction signs.
6. Equipment identification labels.
7. Miscellaneous identification products.

1.3 SUBMITTALS

A. Product Data: For each electrical identification product indicated.

B. Identification Schedule: An index of nomenclature of electrical equipment and system components used in identification signs and labels.

1.4 QUALITY ASSURANCE

A. Comply with ANSI A13.1 and ANSI C2.

B. Comply with NFPA 70.

C. Comply with 29 CFR 1910.145.

1.5 COORDINATION

A. Coordinate identification names, abbreviations, colors, and other features with requirements in the Contract Documents, Shop Drawings, manufacturer's wiring diagrams, and the Operation and Maintenance Manual, and with those required by codes, standards, and 29 CFR 1910.145. Use consistent designations throughout Project.

B. Coordinate installation of identifying devices with completion of covering and painting of surfaces where devices are to be applied.

C. Coordinate installation of identifying devices with location of access panels and doors.

D. Install identifying devices before installing acoustical ceilings and similar concealment.

PART 2 - PRODUCTS

2.1 RACEWAY IDENTIFICATION MATERIALS

A. Comply with ANSI A13.1 for minimum size of letters for legend and for minimum length of color field for each raceway and cable size.

B. Color for Printed Legend:

1. Power Circuits: Black letters on an orange field.
2. Legend: Indicate system or service and voltage, if applicable.

C. Self-Adhesive Vinyl Labels: Preprinted, flexible label laminated with a clear, weather- and chemical-resistant coating and matching wraparound adhesive tape for securing ends of legend label.

D. Snap-Around Labels: Slit, pretensioned, flexible, preprinted, color-coded acrylic sleeves, with diameter sized to suit diameter of raceway or cable it identifies and to stay in place by gripping action.

E. Snap-Around, Color-Coding Bands: Slit, pretensioned, flexible, solid-colored acrylic sleeves, 2 inches long, with diameter sized to suit diameter of raceway or cable it identifies and to stay in place by gripping action.

F. Self-Adhesive Vinyl Tape: Colored, heavy duty, waterproof, fade resistant; 2 inches wide; compounded for outdoor use.

2.2 CONDUCTOR AND COMMUNICATION- AND CONTROL-CABLE IDENTIFICATION MATERIALS

A. Color-Coding Conductor Tape: Colored, self-adhesive vinyl tape not less than 3 mils thick by 1 to 2 inches wide.

B. Marker Tapes: Vinyl or vinyl-cloth, self-adhesive wraparound type, with circuit identification legend machine printed by thermal transfer or equivalent process.

C. Aluminum Wraparound Marker Labels: Cut from 0.014-inch-thick aluminum sheet, with stamped, embossed, or scribed legend, and fitted with tabs and matching slots for permanently securing around wire or cable jacket or around groups of conductors.

D. Metal Tags: Brass or aluminum, 2 by 2 by 0.05 inch, with stamped legend, punched for use with self-locking nylon tie fastener.

E. Write-On Tags: Polyester tag, 0.010 inch thick, with corrosion-resistant grommet and polyester or nylon tie for attachment to conductor or cable.

1. Marker for Tags: Permanent, waterproof, black ink marker recommended by tag manufacturer.

2.3 UNDERGROUND-LINE WARNING TAPE

A. Tape:

1. Recommended by manufacturer for the method of installation and suitable to identify and locate underground electrical utility lines.
2. Printing on tape shall be permanent and shall not be damaged by burial operations.
3. Tape material and ink shall be chemically inert, and not subject to degrading when exposed to acids, alkalis, and other destructive substances commonly found in soils.

B. Color and Printing:

1. Comply with ANSI Z535.1 through ANSI Z535.5.
2. Inscriptions for Red-Colored Tapes: ELECTRIC LINE, HIGH VOLTAGE.
3. Inscriptions for Orange-Colored Tapes: TELEPHONE CABLE, CATV CABLE, COMMUNICATIONS CABLE, OPTICAL FIBER CABLE.
4. Inscriptions for Blue-Colored Tapes: CONTROL CIRCUIT CABLE.

C. Tape Characteristics:

1. Detectable three-layer laminate, consisting of a printed pigmented polyolefin film, a solid aluminum-foil core, and a clear protective film that allows inspection of the continuity of the conductive core, bright-colored, compounded for direct-burial service.
2. Overall Thickness: 5 mils.
3. Foil Core Thickness: 0.35 mil.
4. Weight: 28 lb/1000 sq. ft.
5. 3-Inch Tensile According to ASTM D 882: 70 lbf, and 4600 psi.

2.4 WARNING LABELS AND SIGNS

A. Comply with NFPA 70 and 29 CFR 1910.145.

B. Self-Adhesive Warning Labels: Factory printed, multicolor, pressure-sensitive adhesive labels, configured for display on front cover, door, or other access to equipment, unless otherwise indicated.

C. Baked-Enamel Warning Signs: Preprinted aluminum signs, punched or drilled for fasteners, with colors, legend, and size required for application. 1/4-inch grommets in corners for mounting. Nominal size, 7 by 10 inches.

D. Metal-Backed, Butyrate Warning Signs: Weather-resistant, nonfading, preprinted, cellulose-acetate butyrate signs with 0.0396-inch galvanized-steel backing; and with colors, legend, and size required for application. 1/4-inch grommets in corners for mounting. Nominal size, 10 by 14 inches.

2.5 INSTRUCTION SIGNS

A. Engraved, laminated acrylic or melamine plastic, minimum 1/16 inch thick for signs up to 20 sq. in. and 1/8 inch thick for larger sizes.

1. Engraved legend with black letters on white face.
2. Punched or drilled for mechanical fasteners.
3. Framed with mitered acrylic molding and arranged for attachment at applicable equipment.

2.6 EQUIPMENT IDENTIFICATION LABELS

A. Adhesive Film Label: Machine printed, in black, by thermal transfer or equivalent process. Minimum letter height shall be 3/8 inch.

B. Self-Adhesive, Engraved, Laminated Acrylic or Melamine Label: Adhesive backed, with white letters on a dark-gray background. Minimum letter height shall be 3/8 inch.

C. Engraved, Laminated Acrylic or Melamine Label: Punched or drilled for screw mounting. White letters on a dark-gray background. Minimum letter height shall be 3/8 inch.

D. Stenciled Legend: In nonfading, waterproof, black ink or paint. Minimum letter height shall be 1 inch.

2.7 MISCELLANEOUS IDENTIFICATION PRODUCTS

A. Cable Ties: Fungus-inert, self-extinguishing, 1-piece, self-locking, Type 6/6 nylon cable ties.

1. Minimum Width: 3/16 inch.
2. Tensile Strength: 50 lb, minimum.
3. Temperature Range: Minus 40 to plus 185 deg F.
4. Color: Black, except where used for color-coding.

B. Paint: Paint materials and application requirements are specified in Division 09 painting Sections.

1. Interior Gypsum Board:

   a. Semigloss Acrylic-Enamel Finish: One finish coat over a primer.

      1) Primer: Interior gypsum board primer.
      2) Finish Coats: Interior semigloss acrylic enamel.

2. Interior Ferrous Metal:

   a. Semigloss Acrylic-Enamel Finish: One finish coat over a primer.

      1) Primer: Interior ferrous-metal primer.
      2) Finish Coats: Interior semigloss acrylic enamel.

3. Interior Zinc-Coated Metal (except Raceways):

a. Semigloss Acrylic-Enamel Finish: One finish coat over a primer.

1) Primer: Interior zinc-coated metal primer.
2) Finish Coats: Interior semigloss acrylic enamel.

C. Fasteners for Labels and Signs: Self-tapping, stainless-steel screws or stainless-steel machine screws with nuts and flat and lock washers.

PART 3 - EXECUTION

3.1 APPLICATION

A. Accessible Raceways and Cables of Auxiliary Systems: Identify the following systems with color-coded, self-adhesive vinyl tape applied in bands:

1. Fire Alarm System: Red.
2. Combined Fire Alarm and Security System: Red and blue.
3. Security System: Blue and yellow.
4. Telecommunication System: Green and yellow.
5. Control Wiring: Green and red.

B. Power-Circuit Conductor Identification: For secondary conductors No. 1/0 AWG and larger in vaults, pull and junction boxes, manholes, and handholes use color-coding conductor tape. Identify source and circuit number of each set of conductors. For single conductor cables, identify phase in addition to the above.

C. Branch-Circuit Conductor Identification: Where there are conductors for more than three branch circuits in same junction or pull box, use color-coding conductor tape. Identify each ungrounded conductor according to source and circuit number.

D. Auxiliary Electrical Systems Conductor Identification: Identify field-installed alarm, control, signal, sound, intercommunications, voice, and data connections.

1. Identify conductors, cables, and terminals in enclosures and at junctions, terminals, and pull points. Identify by system and circuit designation.
2. Use system of marker tape designations that is uniform and consistent with system used by manufacturer for factory-installed connections.
3. Coordinate identification with Project Drawings, manufacturer's wiring diagrams, and Operation and Maintenance Manual.

E. Warning Labels for Indoor Cabinets, Boxes, and Enclosures for Power and Lighting: Comply with 29 CFR 1910.145 and apply self-adhesive warning labels. Identify system voltage with black letters on an orange background. Apply to exterior of door, cover, or other access.

1. Equipment Requiring Workspace Clearance According to NFPA 70: Unless otherwise indicated, apply to door or cover of equipment but not on flush panelboards and similar equipment in finished spaces.

F. Equipment Identification Labels: On each unit of equipment, install unique designation label that is consistent with wiring diagrams, schedules, and Operation and Maintenance Manual. Apply labels to disconnect switches and protection equipment, central or master units, control panels, control stations, terminal cabinets, and racks of each system. Systems include power, lighting, control, communication, signal, monitoring, and alarm systems unless equipment is provided with its own identification.

1. Labeling Instructions:

   a. Indoor Equipment: Adhesive film label. Unless otherwise indicated, provide a single line of text with 1/2-inch- high letters on 1-1/2-inch- high label; where 2 lines of text are required, use labels 2 inches high.
   b. Outdoor Equipment: Engraved, laminated acrylic or melamine label.
   c. Elevated Components: Increase sizes of labels and letters to those appropriate for viewing from the floor.

2. Equipment to Be Labeled:
   a. Disconnect switches.

3.2 INSTALLATION

A. Verify identity of each item before installing identification products.

B. Location: Install identification materials and devices at locations for most convenient viewing without interference with operation and maintenance of equipment.

C. Apply identification devices to surfaces that require finish after completing finish work.

D. Self-Adhesive Identification Products: Clean surfaces before application, using materials and methods recommended by manufacturer of identification device.

E. Attach nonadhesive signs and plastic labels with screws and auxiliary hardware appropriate to the location and substrate.

F. System Identification Color Banding for Raceways and Cables: Each color band shall completely encircle cable or conduit. Place adjacent bands of two-color markings in contact, side by side. Locate bands at changes in direction, at penetrations of walls and floors, at 50-foot maximum intervals in straight runs, and at 25-foot maximum intervals in congested areas.

G. Color-Coding for Phase Identification, 600 V and Less: Use the colors listed below for ungrounded branch-circuit conductors.

1. Color shall be factory applied.
2. Colors for 208/120-V Circuits:

   a. Phase A: Black.
   b. Phase B: Red.
   c. Phase C: Blue

3. Field-Applied, Color-Coding Conductor Tape: Apply in half-lapped turns for a minimum distance of 6 inches from terminal points and in boxes where splices or taps are made. Apply last two turns of tape with no tension to prevent possible unwinding. Locate bands to avoid obscuring factory cable markings.

H. Aluminum Wraparound Marker Labels and Metal Tags: Secure tight to surface of conductor or cable at a location with high visibility and accessibility.

I. Painted Identification: Prepare surface and apply paint according to Division 09 painting Sections.

END OF SECTION 26 05 53

SECTION 26 09 23 - LIGHTING CONTROL DEVICES

PART 1 - GENERAL

1.1 RELATED DOCUMENTS

A. Drawings and general provisions of the Contract, including General and Supplementary Conditions and Division 01 Specification Sections, apply to this Section.

1.2 SUMMARY

A. This Section includes the following lighting control devices:
   1. Indoor occupancy sensors.

B. Related Sections include the following:
   1. Division 26 Section "Wiring Devices" for manual light switches.

1.3 DEFINITIONS

A. LED: Light-emitting diode.

B. PIR: Passive infrared.

1.4 SUBMITTALS

A. Product Data: For each type of product indicated.

B. Shop Drawings: Show installation details for occupancy and light-level sensors.

   1. Interconnection diagrams showing field-installed wiring.

C. Operation and Maintenance Data: For each type of product to include in emergency, operation, and maintenance manuals.

1.5 QUALITY ASSURANCE

A. Electrical Components, Devices, and Accessories: Listed and labeled as defined in NFPA 70, Article 100, by a testing agency acceptable to authorities having jurisdiction, and marked for intended use.

1.6 COORDINATION

A. Coordinate layout and installation of ceiling-mounted devices with other construction that penetrates ceilings or is supported by them, including light fixtures, HVAC equipment, smoke detectors, fire-suppression system, and partition assemblies.

PART 2 - PRODUCTS

2.1 INDOOR OCCUPANCY SENSORS

A. General Description: Wall mounted, 120v units which do not require a separate low voltage power pack.

1. Operation: Unless otherwise indicated, turn lights on when covered area is occupied and off when unoccupied; with a time delay for turning lights off, adjustable over a minimum range of 1 to 60 minutes.
2. Sensor Output: Contacts rated to operate the connected relay, complying with UL 773A. Sensor shall be powered from the relay unit.
3. Mounting:

    a. Sensor: Suitable for mounting in any position on a standard outlet box.
    b. Time-Delay and Sensitivity Adjustments: Recessed and concealed behind hinged door.

4. Indicator: LED, to show when motion is being detected during testing and normal operation of the sensor.
5. Bypass Switch: Override the on function in case of sensor failure.
6. Automatic Light-Level Sensor: Adjustable from 2 to 200 fc; keep lighting off when selected lighting level is present.
7. Auxiliary Contacts: Where mechanical equipment is indicated for occupancy sensor control, auxiliary contact shall have a minimum horsepower rating suitable for the connected equipment, to be verified with final mechanical shop drawings.

B. Dual-Technology Type: Wall/ceiling mounted; detect occupancy by using a combination of PIR and ultrasonic methods in area of coverage. Particular technology or combination of technologies that controls on-off functions shall be selectable in the field by operating controls on unit.

1. Sensitivity Adjustment: Separate for each sensing technology.
2. Detector Sensitivity: Detect occurrences of 6-inch- minimum movement of any portion of a human body that presents a target of not less than 36 sq. in. and detect a person of average size and weight moving not less than 12 inches in either a horizontal or a vertical manner at an approximate speed of 12 inches/s.
3. Detection Coverage (Standard Room): Detect occupancy anywhere within a circular area of 1000 sq. ft. when mounted on a 96-inch- high ceiling.

PART 3 - EXECUTION

3.1 SENSOR INSTALLATION

A. Install and aim sensors in locations to achieve not less than 90 percent coverage of areas indicated. Do not exceed coverage limits specified in manufacturer's written instructions.

3.2 WIRING INSTALLATION

A. Wiring within Enclosures: Comply with NECA 1. Separate power-limited and nonpower-limited conductors according to conductor manufacturer's written instructions.

B. Size conductors according to lighting control device manufacturer's written instructions, unless otherwise indicated.

C. Splices, Taps, and Terminations: Make connections only on numbered terminal strips in junction, pull, and outlet boxes; terminal cabinets; and equipment enclosures.

3.3 IDENTIFICATION

A. Identify components and power and control wiring according to Division 26 Section "Identification for Electrical Systems."

3.4 ADJUSTING

A. Occupancy Adjustments: When requested within 12 months of date of Substantial Completion, provide on-site assistance in adjusting sensors to suit occupied conditions. Provide up to one visit to Project during other-than-normal occupancy hours for this purpose.

END OF SECTION 260923

SECTION 26 27 26 - WIRING DEVICES

PART 1 - GENERAL

1.1 RELATED DOCUMENTS

A. Drawings and general provisions of the Contract, including General and Supplementary Conditions and Division 01 Specification Sections, apply to this Section.

1.2 SUMMARY

A. This Section includes the following:

1. Receptacles, receptacles with integral GFCI, and associated device plates.
2. Toggle switches.

B. Related Sections include the following:
1. Division 26 Section "Lighting Control Devices" for wall-switch occupancy sensors.

1.3 DEFINITIONS

A. GFCI: Ground-fault circuit interrupter.

B. Pigtail: Short lead used to connect a device to a branch-circuit conductor.

1.4 SUBMITTALS

A. Product Data: For each type of product indicated.

B. Operation and Maintenance Data: For wiring devices to include in all manufacturers' packing label warnings and instruction manuals that include labeling conditions.

1.5 QUALITY ASSURANCE

A. Source Limitations: Obtain each type of wiring device and associated wall plate through one source from a single manufacturer. Insofar as they are available, obtain all wiring devices and associated wall plates from a single manufacturer and one source.

B. Electrical Components, Devices, and Accessories: Listed and labeled as defined in NFPA 70, Article 100, by a testing agency acceptable to authorities having jurisdiction, and marked for intended use.

C. Comply with NFPA 70.

1.6 COORDINATION

A. Receptacles for Government-Furnished Equipment: Match plug configurations.

1. Cord and Plug Sets: Match equipment requirements.

PART 2 - PRODUCTS

2.1 GENERAL WIRING-DEVICE REQUIREMENTS

A. Wiring Devices, Components, and Accessories: Listed and labeled as defined in NFPA 70, by a qualified testing agency, and marked for intended location and application.

B. Comply with NFPA 70.

C. Devices that are manufactured for use with modular plug-in connectors may be substituted under the following conditions:

1. Connectors shall comply with UL 2459 and shall be made with stranding building wire.
2. Devices shall comply with the requirements in this Section.

2.2 STRAIGHT BLADE RECEPTACLES

A. Convenience Receptacles, 125 V, 20 A: Comply with NEMA WD 1, NEMA WD 6 configuration 5-20R, and UL 498.

2.3 GFCI RECEPTACLES

A. General Description: Straight blade, non-feed-through type. Comply with NEMA WD 1, NEMA WD 6, UL 498, and UL 943, Class A, and include indicator light that is lighted when device is tripped.

B. Exterior Locations: Provide with in-use cover. Device shall be corrosion resistant, suitable for salt air conditions.

C. Duplex GFCI Convenience Receptacles, 125 V, 20 A:

2.4 SPECIAL EQUIPMENT RECEPTACLES

A. General Description: Voltage and NEMA configuration as indicated on drawings: Comply with NEMA WD 1, NEMA WD 6, and UL 498.

2.5 TOGGLE SWITCHES

A. Comply with NEMA WD 1, UL 20, and FS W-S-896.

B. Switches, 120/277 V, 20 A

2.6 WALL PLATES

A. Single and combination types to match corresponding wiring devices.

1. Plate-Securing Screws: Metal with head color to match plate finish.
2. Material for Finished Spaces: Thermoplastic.
3. Material for Unfinished Spaces: Galvanized steel.
4. Material for Damp Locations: Thermoplastic with spring-loaded lift cover, and listed and labeled for use in "wet locations."

B. Wet-Location, Weatherproof Cover Plates: NEMA 250, complying with type 3R weather-resistant, die-cast aluminum with lockable cover.

2.7 FINISHES

A. Color: Wiring Device outlet colors are to be white for locations with steel or thermoplastic cover plates. Confirm with Contracting Officer prior to providing submittals.

PART 3 - EXECUTION

3.1 INSTALLATION

A. Comply with NECA 1, including the mounting heights listed in that standard, unless otherwise noted.

B. Coordination with Other Trades:

1. Take steps to ensure that devices and their boxes are protected. Do not place wall finish materials over device boxes and do not cut holes for boxes with routers that are guided by riding against outside of the boxes.
2. Keep outlet boxes free of plaster, drywall joint compound, mortar, cement, concrete, dust, paint, and other material that may contaminate the raceway system, conductors, and cables.
3. Install wiring devices after all wall preparation, including painting, is complete.

C. Conductors:

1. Do not strip insulation from conductors until just before they are spliced or terminated on devices.
2. Strip insulation evenly around the conductor using tools designed for the purpose. Avoid scoring or nicking of solid wire or cutting strands from stranded wire.
3. The length of free conductors at outlets for devices shall meet provisions of NFPA 70, Article 300, without pigtails.

D. Device Installation:

1. Replace all devices that have been in temporary use during construction or that show signs that they were installed before building finishing operations were complete.
2. Keep each wiring device in its package or otherwise protected until it is time to connect conductors.
3. Do not remove surface protection, such as plastic film and smudge covers, until the last possible moment.
4. Connect devices to branch circuits using pigtails that are not less than 6 inches in length.
5. When there is a choice, use side wiring with binding-head screw terminals. Wrap solid conductor tightly clockwise, 2/3 to 3/4 of the way around terminal screw. Pressure plate connections are also acceptable. Stab in connections are not allowed.
6. Use a torque screwdriver when a torque is recommended or required by the manufacturer.
7. When conductors larger than No. 12 AWG are installed on 15- or 20-A circuits, splice No. 12 AWG pigtails for device connections.
8. Tighten unused terminal screws on the device.
9. When mounting into metal boxes, remove the fiber or plastic washers used to hold device mounting screws in yokes, allowing metal-to-metal contact.

E. Receptacle Orientation: Install ground pin of vertically mounted receptacles down, and on horizontally mounted receptacles to the right.

F. Device Plates: Do not use oversized or extra-deep plates. Repair wall finishes and remount outlet boxes when standard device plates do not fit flush or do not cover rough wall opening.

G. Arrangement of Devices: Unless otherwise indicated, mount flush, with long dimension vertical and with grounding terminal of receptacles on top. Group adjacent switches under single, multigang wall plates.

3.2 INSPECTION

A. Contractor will perform inspection of sub-contractor work immediately after work in this section is completed.

B. Contractor will record observations for conformance with ABAAS and SDC Accessibility Standards using the DSC, CQC Accessibility Inspection Report.
   1. Report may be supplemented by sketches, notation, digital images, product literature, red-line contract documents, etc. to illustrate and explain conditions.

C. Coordinate inspections according to updated construction schedules.

D. Submit report to Contracting Officer within 24 hours of commencing inspection.

END OF SECTION 26 27 26

SECTION 26 41 13 – LIGHTNING PROTECTION FOR STRUCTURES

PART 1 - GENERAL

1.1 RELATED DOCUMENTS

A. Drawings and general provisions of the Contract, including General and Supplementary Conditions and Division 01 Specification Sections, apply to this Section.

1.2 SUMMARY

A. This Section includes lightning protection for buildings.

1.3 DEFINITIONS

A. LPI: Lightning Protection Institute.

B. NRTL: National recognized testing laboratory.

1.4 SUBMITTALS

A. Product Data: For air terminals and mounting accessories.

B. Shop Drawings: Detail lightning protection system, including air-terminal locations, conductor routing and connections, and bonding and grounding provisions. Include indications for use of raceway, data on how concealment requirements will be met, and calculations required by NFPA 780 for bonding of grounded and isolated metal bodies.

C. Qualification data for firms and persons specified in "Quality Assurance" Article to demonstrate their capabilities and experience. Include data on listing or certification by an NRTL or LPI.

D. Certification, signed by Contractor, that roof adhesive for air terminals is approved by manufacturers of both the terminal assembly and the single-ply membrane roofing material.

E. Field inspection reports indicating compliance with specified requirements.

1.5 QUALITY ASSURANCE

A. Installer Qualifications: Engage an experienced installer who is an NRTL or who is certified by LPI as a Master Installer/Designer.

B. Listing and Labeling: As defined in NFPA 780, "Definitions" Article.

1.6 COORDINATION

A. Coordinate installation of lightning protection with installation of other building systems and components, including electrical wiring, supporting structures and building materials, metal bodies requiring bonding to lightning protection components, and building finishes.

B. Coordinate installation of air terminals attached to roof systems with roofing manufacturer and Installer.

PART 2 - PRODUCTS

2.1 LIGHTNING PROTECTION SYSTEM COMPONENTS

A. Comply with UL 96.

B. Roof-Mounting Air Terminals: NFPA Class I, copper, unless otherwise indicated.

   1. Single-Membrane, Roof-Mounting Air Terminals: Designed for single-membrane roof materials.

C. Stack-Mounting Air Terminals: Solid copper.

D. Ground Rods and Ground Loop Conductors: Comply with Division 26 Section "Grounding and Bonding for Electrical Systems" and with standards referenced in this Section.

PART 3 - EXECUTION

3.1 INSTALLATION

A. Install lightning protection components and systems according to UL 96A and NFPA 780.

B. Install conductors with direct paths from air terminals to ground connections. Avoid sharp bends and narrow loops.

C. Conceal the following conductors, except as otherwise noted.

   1. System conductors.
   2. Down conductors.
   3. Interior conductors.
   4. Conductors within normal view from exterior locations at grade within 200 feet of building.
   5. Notify Contracting Officer at least 48 hours in advance of inspection before concealing lightning protection components.

D. Cable Connections: Use approved exothermic-welded connections for all conductor splices and connections between conductors and other components, except those above single-ply membrane roofing.

E. Air Terminals on Single-Ply Membrane Roofing: Comply with adhesive manufacturer's written instructions.

F. Bond extremities of vertical metal bodies exceeding 60 feet in length to lightning protection components.

G. A counterpoise installation based on requirements in Division 26 Section "Grounding and Bonding for Electrical Systems" may be used as a ground loop required by NFPA 780, provided counterpoise conductor meets or exceeds minimum requirements in NFPA 780.

1. Bond ground terminals to counterpoise conductor.
2. Bond grounded metal bodies on building within 12 feet of ground to counterpoise conductor.
3. Bond grounded metal bodies on building within 12 feet of roof to counterpoise conductor.

H. Bond lightning protection components with intermediate-level interconnection loop conductors to grounded metal bodies of building at 60-foot intervals.

3.2 CORROSION PROTECTION

A. Do not combine materials that can form an electrolytic couple that will accelerate corrosion in the presence of moisture unless moisture is permanently excluded from junction of such materials.

B. Use conductors with protective coatings where conditions would cause deterioration or corrosion of conductors.

3.3 FIELD QUALITY CONTROL

A. UL Inspection: Provide inspections as required to obtain a UL Master Label for system.

B. Provide an inspection by an inspector certified by LPI to obtain an LPI certification.

END OF SECTION 26 41 13

SECTION 26 51 00 - LIGHTING FIXTURES

PART 1 - GENERAL

1.1 RELATED DOCUMENTS

A. Drawings and general provisions of the Contract, including General and Supplementary Conditions and Division 01 Specification Sections, apply to this Section.

1.2 SUMMARY

A. This Section includes the following:

1. Lighting fixtures.
2. Emergency lighting units.
3. Exit signs.

B. Related Sections include the following:

1. Division 26 Section "Lighting Control Devices" for automatic control of lighting, including time switches, photoelectric relays, occupancy sensors, and multipole lighting relays and contactors.

1.3 DEFINITIONS

A. CRI: Color-rendering index.

B. LER: Luminaire efficacy rating.

C. Luminaire: Complete lighting fixture, including ballast housing if provided.

1.4 SUBMITTALS

A. Product Data: For each type of lighting fixture, arranged in order of fixture designation. Include data on features, accessories, finishes, and the following:
1. Physical description of lighting fixture including dimensions.
2. Emergency lighting units including battery and charger.
3. Driver.
4. Energy-efficiency data.
5. Life, output, and energy-efficiency data for lamps.
6. Photometric data, in IESNA format, based on laboratory tests of each lighting fixture type, outfitted with lamps, ballasts, and accessories identical to those indicated for the lighting fixture as applied in this Project.
   a. For indicated fixtures, photometric data shall be certified by a qualified independent testing agency. Photometric data for remaining fixtures shall be certified by the manufacturer.

b. Photometric data shall be certified by a manufacturer's laboratory with a current accreditation under the National Voluntary Laboratory Accreditation Program (NVLAP) for Energy Efficient Lighting Products.

B. Qualification Data: For agencies providing photometric data for lighting fixtures.

C. Operation and Maintenance Data: For lighting equipment and fixtures to include in emergency, operation, and maintenance manuals.

D. Warranties: Special warranties specified in this Section.

1.5 QUALITY ASSURANCE

A. Luminaire Photometric Data Testing Laboratory Qualifications: Provided by an independent agency, with the experience and capability to conduct the testing indicated, that is an NRTL as defined by OSHA in 29 CFR 1910.7.

B. Electrical Components, Devices, and Accessories: Listed and labeled as defined in NFPA 70, Article 100, by a testing agency acceptable to authorities having jurisdiction, and marked for intended use.

C. Comply with NFPA 70.

1.6 COORDINATION

A. Coordinate layout and installation of lighting fixtures and suspension system with other construction that penetrates ceilings or is supported by them, including HVAC equipment, fire-suppression system, and partition assemblies.

PART 2 - PRODUCTS

2.1 MANUFACTURERS

A. In Lighting Fixture Schedule where titles below are column or row headings that introduce lists, the following requirements apply to product selection:
   1. Basis-of-Design Product: The design for each lighting fixture is based on the product named. Subject to compliance with requirements, provide either the named product or a comparable product, not limited to manufacturers specified.

2.2 LIGHTING FIXTURES AND COMPONENTS, GENERAL REQUIREMENTS

A. Metal Parts: Free of burrs and sharp corners and edges.

B. Sheet Metal Components: Steel, unless otherwise indicated. Form and support to prevent warping and sagging.

C. Doors, Frames, and Other Internal Access: Smooth operating, free of light leakage under operating conditions, and designed to permit relamping without use of tools. Designed to prevent doors, frames, lenses, diffusers, and other components from falling accidentally during relamping and when secured in operating position.

D. Reflecting surfaces shall have minimum reflectance as follows, unless otherwise indicated:

1. White Surfaces: 85 percent.
2. Specular Surfaces: 83 percent.
3. Diffusing Specular Surfaces: 75 percent.
4. Laminated Silver Metallized Film: 90 percent.

E. Plastic Diffusers and Covers:

1. Acrylic Lighting Diffusers: 100 percent virgin acrylic plastic. High resistance to yellowing and other changes due to aging, exposure to heat, and UV radiation.

   a. Lens Thickness: At least 0.125 inch minimum unless different thickness is indicated.
   b. UV stabilized.

2. Glass: Annealed crystal glass, unless otherwise indicated.

2.3 EXIT SIGNS

A. Description: Comply with UL 924; for sign colors, visibility, luminance, and lettering size, comply with authorities having jurisdiction.

B. Internally Lighted Signs:
1. Lamps for AC Operation: LEDs, 70,000 hours minimum rated lamp life.
2. Self-Powered Exit Signs (Battery Type): Integral automatic charger in a self-contained power pack.

   a. Battery: Sealed, maintenance-free, nickel-cadmium type.
   b. Charger: Fully automatic, solid-state type with sealed transfer relay.
   c. Operation: Relay automatically energizes lamp from battery when circuit voltage drops to 80 percent of nominal voltage or below. When normal voltage is restored, relay disconnects lamps from battery, and battery is automatically recharged and floated on charger.
   d. Test Push Button: Push-to-test type, in unit housing, simulates loss of normal power and demonstrates unit operability.
   e. LED Indicator Light: Indicates normal power on. Normal glow indicates trickle charge; bright glow indicates charging at end of discharge cycle.
   f. Integral Self-Test: Factory-installed electronic device automatically initiates code-required test of unit emergency operation at required intervals. Test failure is annunciated by an integral audible alarm and flashing red LED.

2.4 EMERGENCY LIGHTING UNITS

A. Description: Self-contained units complying with UL 924.

1. Battery: Sealed, maintenance-free, lead-acid type.
2. Charger: Fully automatic, solid-state type with sealed transfer relay.
3. Operation: Relay automatically turns lamp on when power supply circuit voltage drops to 80 percent of nominal voltage or below. Lamp automatically disconnects from battery when voltage approaches deep-discharge level. When normal voltage is restored, relay disconnects lamps from battery, and battery is automatically recharged and floated on charger.
4. Test Push Button: Push-to-test type, in unit housing, simulates loss of normal power and demonstrates unit operability.
5. LED Indicator Light: Indicates normal power on. Normal glow indicates trickle charge; bright glow indicates charging at end of discharge cycle.
6. Integral Time-Delay Relay: Holds unit on for fixed interval of 15 minutes when power is restored after an outage.
7. Integral Self-Test: Factory-installed electronic device automatically initiates code-required test of unit emergency operation at required intervals. Test failure is annunciated by an integral audible alarm and flashing red LED.

2.5 SOLID STATE LIGHTING FIXTURES

A. Housing, where applicable:

1. Steel bonderized or equal rust projected, or aluminum, rigid construction. Minimum gauge thickness shall be as follows:

    a. Interior locations: No. 20 gauge steel, no. 16 gauge aluminum.

B. Finish:

1. Baked enamel finish (except when otherwise specified).
2. Concealed interior surfaces (this applies to interior hardware, circuit boards, etc.) matte black.
3. Concealed exterior surfaces: matte black.
4. Visible surfaces: color and texture as specified below for each fixture type or as selected.
5. Exterior fixture finish: refer to Lighting Fixture Schedule.

C. Light Emitting Diode (LED) requirements:

1. Correlated color temperature (CCT) for phosphor - coated white LEDs must have one of the following designated CCT's and fall within the following binning standards:
    a. Outdoor:
        i. 2700K defined as 2725 +/- 145K
        ii. Amber
    b. Indoor:
        iii. 3500K defined as 3465 +/- 245K
        iv. 4000K defined as 3985 +/- 275K

2. Color spatial uniformity shall be limited to variations in chromaticity for different directions within 0.004 from the weighted average point on the CIE 1976 (u',v') diagram.
3. Color maintenance shall be limited to a maximum change in chromaticity of 0.007 on the CIE 1976 (u',v') diagram over the lifetime of the product.
4. Color rendering index.
    a. Color rendering index to be determined using ANSI C78.377-2008 and applicable IESNA standards.
    b. Laboratory tests must be produced using specific module(s)/array(s) and power supply combination that will be used in production.
    c. Manufacturers must provide a test report from a laboratory accredited by NVLAP or one of its MRA signatories.
5. Lumen depreciation.
    a. Lumen depreciation to be measured using IESNA LM-80-08 standard for IES approved method of measuring lumen maintenance of LED light sources.
    b. Phosphor coated white LED module(s)/array(s) shall deliver at least 70% of initial lumens for a minimum of 35,000 hours when installed in-situ and operated at 100% output and the maximum specified operating temperature.
    c. Colored LED module(s)/array(s) shall deliver at least 50% of initial lumens for a minimum of 35,000 hours when installed in-situ and operated at 100% output and the maximum specified operating temperature.

D. Luminaire Efficacy:

1. Luminaire efficiency shall be measured using IESNA LM-79-08 standard for electrical and photometric measurements of solid state lighting products.
2. Manufacturer shall provide published luminaire efficacy, which is defined as luminaire light output divided by luminaire input power measured in a 25 degree Celsius environment. Efficacy shall include power supply, thermal, optical, and fixture losses. Minimum efficacy of 80 lumens per watt.

E. Thermal Management:

1. Solid state light fixture shall not exceed LED manufacturer's maximum junction temperature requirements when operated in-situ at fixture manufacturer's maximum ambient operating temperature and 100% light output.
2. Solid state light fixtures shall be thermally protected using one of more of the following thermal management techniques:
    a. Metal core board
    b. Gap pad
    c. Internal monitoring firmware
3. Solid state lighting fixture housing shall be designed to transfer heat from the LED board to the outside environment.

F. Power Supplies/Drivers:

1. Power supply shall have a power factor of 0.90 or greater for primary application.
2. Power supply input current shall have Total Harmonic Distortion (THD) of less than 20%.
3. Power supply shall have a minimum operating temperature of minus 20 degrees Celsius of below when used in luminaires intended for outdoor applications.
4. Power supply output operating frequency to be equal to or greater than 120Hz.

5. Power supply shall operate with sustained input variations of +/- 10% (voltage and frequency) with no damage to the driver.
6. Power supply shall tolerate sustained open circuit and short circuit output conditions without damage and without need for external fuses or trip devices.
7. Power supply output shall be regulated to +/- 5% across published load range.
8. Power supply shall have a Class A sound rating.
9. Power supply outputs shall have current limiting protection.
10. Power supply shall operate LEDs at constant and regulated current levels. LEDs shall not be overdriven beyond the diode manufacturer's specified nominal voltage and current.

G. Solid State Lighting Controls:

1. Control interface to dimmable power supplies shall consist of one of the following:

   a. Line Voltage Dimming. Controls to be rated for magnetic or electronic low voltage transformer operation.
   b. Low voltage (0-10V) control. Controls to be compatible with either current sink or current source operation.

2. Dimmable LED power supplies shall use pulse width modulation (PWM) to regulate power to LEDs

   a. Dimmable power supplies shall have 12-bit or greater resolution to obtain flicker-free operation throughout the dimming range.

H. System Installation:

1. All hardwired connections to solid state lighting fixtures shall be reverse polarity protected and provide high voltage protection in the event connections are reversed or shorted during the installation process.
2. All solid state lighting fixtures (100% of each lot) shall undergo a minimum eight-hour burn-in test during manufacturing.
3. Solid state lighting installations shall be UL listed as a low-voltage lighting system including, but not limited to, luminaire, power supply, controller, keypad, and wiring.

I. Warranty: Luminaires, drivers, and controllers for solid state lighting systems shall be covered by a two-year warranty against defects in workmanship or material. Warranty shall include in-warranty service program providing for payment of authorized labor charges incurred in replacement of inoperative in-warranty equipment.

PART 3 - EXECUTION

3.1 INSTALLATION

A. Lighting fixtures: Set level, plumb, and square with ceilings and walls. Install lamps in each fixture.

B. Adjust aimable lighting fixtures to provide required light intensities.

END OF SECTION 26 51 00

SECTION 270010 - SUPPLEMENTAL REQUIREMENTS FOR COMMUNICATIONS

PART 1 - GENERAL

1.1 SUMMARY

A. Section Includes:

1. Supplemental requirements generally applicable to the Work specified in Division 27.
   a. Work specified in Division 27 may be applicable to, or in coordination with, trades other than division 27. It is the contractor's responsibility to coordinate with other trades to define and complete the scope of work.
   b. Information herein shall be considered supplementary, and in addition to, system specific specifications.

B. Related Requirements:

1. Refer to the division 26 specifications for further information regarding:
   a. Abbreviations, acronyms, definitions, and additional coordination drawing submittal requirements.
2. Section 280010 "Supplemental Requirements for Electronic Safety and Security" for additional abbreviations, definitions, submittals, qualifications, testing agencies, and other Project requirements applicable to Work specified in this Section.
3. Refer to the specifications below:
   a. 270528 – Pathways For Communication Systems
   b. 270529 – Hangers And Supports For Communication Systems
   c. 270544 - Sleeves And Sleeve Seals For Communication Pathways And Cabling
   d. 270553 - Identification For Communication Systems
   e. 271513 - Communications Copper Horizontal Cabling

1.2 REFERENCES

A. Abbreviations and Acronyms for Communications:

1. LAN: Local area network.
2. PoE: Power over Ethernet.
3. POTS: Plain old telephone service. See "public switched telephone network."
4. TCP/IP: Transmission control protocol/Internet protocol.
5. WAN: Wide area network.

B. Definitions for Communications:

1. Calling Party Control (CPC): A momentary break in phone line loop current, which is used to signal voicemail and other automated telephone company services that distant party has hung up.
2. Private Branch Exchange (PBX): Analog telephone switch that routes calls internal to a business or organization so a direct external line for each phone is unnecessary.

3. Public Switched Telephone Network (PSTN): Analog telephone technology that uses twisted-pair cables from a telephone-provider central office for the transmission medium. PSTN refers to the telephone network; POTS refers to the individual subscriber line.
4. Remote Office Phone System (ROPS): VoIP system that allows phones for a business or organization located anywhere in the world with internet connectivity to behave similar to phones connected to a PBX.
5. Ringer Equivalence Number (REN): The loading effect of a single traditional telephone ringing circuit. TIA-968 defines REN 1 as an impedance of 7000 Ω at 20 Hz (Type A ringer) or 8000 Ω from 15 Hz to 68 Hz (Type B ringer). The sum of the RENs for all devices on a subscriber line circuit may not exceed the maximum permitted REN for the subscriber line.
6. Voice over Internet Protocol (VoIP): Digital telephone packet technology that uses the internet for its transmission medium.

1.3 COORDINATION

A. The Technology drawings and specifications provide the scope and requirements of construction applicable to multiple trades and systems. These systems are inclusive of, but not limited to, structured cabling, low voltage, audio-visual, and other such systems. Each system requires the coordination of multiple contracting trades and disciplines. It is the responsibility of each contractor to review all technology scope and to coordinate with other disciplines.

B. Contractor shall coordinate with all other trades prior to construction, at minimum, contractor shall coordinate with the general, electrical, security, and other low voltage contractors. It is the contractor's responsibility to ensure all other contractor trades are aware and knowledgeable of the system requirements and associated responsibilities as defined in these construction documents.

C. Contractor shall always maintain a working set of the construction documents in field (These may be printed or virtual). These documents shall always represent the latest information as well as capture all changes to final constructed solution(s). Any cost associated with an unaccepted installation, and subsequent reinstallation, due to the wrong documentation reference is the sole responsibility of the contractor and shall not be a cost transferred to the contracting officer. At a minimum, the working set of construction documents shall include:
   1. The latest version of construction documents
   2. All changes associates with change orders, RFIs, Addenda, email, and/or other such documentation
   3. All field coordinated changes and/or changes to be captured in as-built drawings.

D. For any and all discrepancies, contractor shall provide written notification to contracting officer and general contractor prior to commencement of work and procurement of material.

E. Interruption of Existing Telephone, Internet, CATV, Cellular, or other such Service: Do not interrupt service to facilities occupied by end user or others unless permitted under the following conditions:

   1. Notify Contracting Officer no fewer than 20 business days in advance of proposed interruption of service.
   2. Do not proceed with interruption of service without Contracting Officer's written permission.

F. Multi-disciplinary coordination requirements: Ensure that all trades and integrators who are impacted or dependent on the Division 27 scope of work (either via scheduling, constructability, support, or other such means) are contacted and informed of coordination items relevant to their scope of work at least 10 days prior to commencement of work. Furthermore, ensure all trades and integrators whose work has a similar effect on the Division 27 scope of work are contacted for information regarding items relevant to the scope of work at least 10 days prior to work commencement.

1.4 PREINSTALLATION MEETINGS

A. Communications Preconstruction Conference: Schedule conference with General Contractor and the Contracting Officer not later than 10 business days after notice to proceed. Agenda topics include, but are not limited to, the following:

1. Installation schedule for communications systems.
2. Installation schedule for all systems effecting, or effected by, the communications systems scope of work.
3. Value analysis proposals and requests for substitution of communications equipment.
4. Utility service coordination, outages, inspections, and/or activation.
5. Sustainability activities.
6. Submission of action submittals specified in Division 27.
7. Submission of information submittals specified in Division 27.
8. Submission of closeout submittals specified in Division 27.
9. Orders placed for major equipment.
10. Arrival of major equipment on-site.
11. Preinstallation meetings specified in Division 27.
12. System startup, testing, and commissioning activities for communications equipment.
13. System startup, testing, and commissioning activities for Work specified in other divisions that depends on Work specified in Division 27.
14. Requests for special inspections.
15. Requests for inspections by authorities having jurisdiction.

1.5 ACTION SUBMITTALS

A. Submission of action submittals shall be in accordance with Division 01 specifications. Refer to each specification section for submittal requirements specific to each scope of work.

B. The items listed below outline the multiple categories of action submittals, and the associated items comprising each category, that may be included in a system's specification. Refer to each division 27 specification for the system specific submittal requirements.
   1. Product Data
      a. Manufacturer and Part number
         1) Shall be highlighted to indicate version of equipment to be utilized when multiple models/variations of product are present on documentation.
   2. Shop Drawings
      a. Contractor shall provide Site Plans, Overall plans, Floor plans, Ceiling plans, One-line Diagrams, Wiring Diagrams, and/or Elevations views as needed to indicate system specific fabrication, installation, layout, connectivity, and coordination.

b. Cabling Plan for backbone cabling indicating the origination point, termination point, and general path of cable including the pathways utilized along path.

3. Identification Schedule
   a. An electronic copy of the system specific labeling schedule including, at minimum, an itemized list of the component(s) to be labeled, the associated label per component, and component information such as manufacturer, part number, and installed location.
   b. Scaled details drawings indicating components to be labeled and location of label on components.

1.6 INFORMATIONAL SUBMITTALS

A. Submission of information submittals shall be in accordance with Division 01 specifications. Refer to each specification section for submittal requirements specific to each scope of work.

B. Information submittals shall be submitted to General Contractor at monthly intervals unless otherwise noted/directed by General Contractor.

C. At each issuance, a combined submittal shall be submitted that includes the information submittals from all the division 27 specifications referenced herein.
   1. Where multiple specification sections indicate the same or similar recorded item, it is acceptable for the contractor to submit a combined submittal to address multiple specification sections.
      a. For example, Field Quality Control Reports can be combined to encompass multiple specification sections. It must be noted on report which sections are included in report.

D. The items listed below outline the multiple categories of information submittals, and the associated items comprising each category, that may be included in a system's specification. Refer to each division 27 specification for the system specific submittal requirements.
   1. Coordination Drawings
      a. Drawings indicating specific coordination items between the division 27 scope of work components with elements from architectural, structural, and other trades.
   2. Installer Qualification Data
      a. Certification information of each title as specified.
   3. Field Quality Control Reports
      a. Reports that include the following:
         1) Adherence and/or adjustments to installation schedule
         2) Adherence and/or adjustments to procurement schedule
         3) System Start-up, Testing, Commissioning and Turn-Over schedules
         4) System outages and downtime
         5) Major Equipment order placing and arrival schedules
         6) Waste-management and work site cleanliness adherence
         7) Testing and Verification Results
   4. Factory Test Reports
      a. Manufacturer generated test reports validating the products viability prior to being shipped.
   5. System Testing Plans

a. A scheduled plan to execute the testing requirements of a specific product in accordance with manufacturer requirements, industry recommendations, and specification requirements.
b. Plan shall include testing procedures, testing equipment, pass/fail thresholds per test, testing parameters of equipment and test, and the proposed schedule for testing plan.

6. Certificates
   a. Seismic-Load Performance Certificates: Provide special certification as indicated in Paragraph 13.2.2 "Special Certification Requirements for Designated Seismic Systems" of ASCE/SEI 7-16 for designated seismic-load systems identified on Drawings or in the Specifications.
      1) Include the following information:
         a) Basis for Certification: Indicate whether withstand certification is based on actual test of assembled components or on calculation.
         b) Dimensioned Outline Drawings of Equipment Unit: Identify center of gravity and locate and describe mounting and anchorage provisions.
         c) Detailed description of equipment anchorage devices on which the certification is based and their installation requirements.
         d) Detailed description of conduit support devices and interconnections on which the certification is based and their installation requirements.
         e) Provide equipment manufacturer's written certification for each designated active electrical seismic device and system, stating that it will remain operable following the design earthquake. Certification must be based on requirements of ASCE/SEI 7, including shake table testing per ICC-ES AC156 or a similar nationally recognized testing standard procedure acceptable to authorities having jurisdiction.
         f) Submit evidence demonstrating compliance with these requirements for approval to authorities having jurisdiction after review and acceptance by qualified structural professional engineer.
   b. Wind-Load Performance Certificates: Provide special certification for designated wind-load systems and components identified on Drawings or in the Specifications.
      1) Include the following information:
         a) Provide equipment manufacturer's written certification for each designated system and component, stating that it will remain in place and operable following the design wind event and comply with requirements of authorities having jurisdiction.
         b) Certification must be based on ICC-ES or similar nationally recognized testing standard procedures acceptable to authorities having jurisdiction.

1.7 CLOSEOUT SUBMITTALS

A. Submission of closeout submittals shall be in accordance with Division 01 specifications. Refer to each specification section for submittal requirements specific to each scope of work.

B. A combined submittal shall be submitted to the Contracting Officer that includes the closeout submittals from all the division 27 specifications referenced herein.

1. Where multiple specification sections indicate the same or similar recorded item, it is acceptable for the contractor to submit a combined submittal to address multiple specification sections.
    a. For example, Record Documentation can be combined to encompass multiple specification sections. It must be noted on document which sections are included in document.

C. The items listed below outline the multiple categories of closeout submittals, and the associated items comprising each category, that may be included in a system's specification. Refer to each division 27 specification for the system specific submittal requirements.
1. Record Documentation:
    a. Including the installed location of equipment and components.
    b. Including the major routes of backbone, utility, and grounding cables.
2. Operation and Maintenance Data:
    a. Provide emergency operation, normal operation, and preventive maintenance manuals for each system, equipment, and device listed below:
    b. Manufacturer's operating specifications.
    c. User's guides.
    d. Schedule of maintenance material items recommended to be stored at Project site.
    e. Detailed instructions covering operation under both normal and abnormal conditions.
    f. Instructions for setting field-adjustable components.
    g. Manufacturer's instructions for testing, adjusting, and maintaining component/equipment.
3. Warranty Information
    a. Manufacturer's and Contractor's Warranty Documents
    b. Maintenance Contracts and Service Agreements
4. Software and Firmware Operational Documentation: Provide software and firmware operational documentation, including the following:
    a. Software operating and upgrade manuals.
    b. Names, versions, and website addresses for locations of installed software.
    c. Device address list.
    d. Printout of software application and graphic screens.
    e. Testing and adjusting of panic and emergency power features.
    f. Provide the program Software Backup username and password for approved online or cloud solution.
    g. Provide to Contracting Officer the upgrades and unrestricted licenses for installed and backup software, including operating systems and programming tools required for operation and maintenance.
5. Identification Schedule
    a. The finalized version of the identification schedule updated to include label changes from in-field/coordinated changes.
    b. A single identification schedule encompassing all associated specification sections shall be submitted.
6. Extra Materials
    a. Furnish to Contracting Officer extra materials that match products installed and that are packaged with protective covering for storage and identified with labels describing contents.
7. Field Test and Inspection Reports
    a. Preform testing per system specification and submit associated report.

b. All test reports shall be combined and submitted as a single file and combined report.

1.8 QUALIFICATIONS

A. Communications Design Professional: Design professional possessing active qualifications specified in Section 014000 "Quality Requirements" and the following:

1. Expertise in design of communications infrastructure and distribution equipment.
2. BICSI Registered Communications Distribution Designer (RCDD) certification.

B. Communications Cable Installer: Entity possessing active qualifications specified in Section 014000 "Quality Requirements" and the following:

1. Training and manufacturer certification to install, splice, and terminate communications cabling.
2. Installation Supervisor: BICSI Technician (TECH) certification.
3. Copper Installers: 30 percent of on-site employees possess BICSI Copper Installer 2 (INSTC) certification. Remaining employees possess BICSI Installer 1 (INST1) certification.
4. Fiber Installers: 30 percent of on-site employees possess BICSI Optical Fiber Installer 2 (INSTF) certification. Remaining employees possess BICSI Installer 1 (INST1) certification.

C. Communications Testing Agency: Entity possessing active credentials from a qualified electrical testing laboratory recognized by authorities having jurisdiction.

1. On-site communications testing supervisor must have BICSI Technician (TECH)] certification and documented training, and be experienced with testing communications equipment in accordance with BICSI and ANSI/TIA testing standards.

PART 2 - PRODUCTS

2.1 COMMUNICATIONS EQUIPMENT

A. Products shown within the associated division 27 specifications, and/or within associated drawings/schedules, shall be considered as basis of design, unless specifically noted.

PART 3 - EXECUTION

3.1 EXAMINATION

A. Verification of Conditions:

1. Immediately upon initial (1st day) arrival to site, contractor shall coordinate with General Contractor for all site and project specific information. Contractor shall adhere to all General Contractor requirements throughout duration of project.

2. Prior to commencement of work, contractor shall reference and/or inspect the following conditions:
   a. All safety and security protocols specific to site construction.
   b. The most current version of construction documents as specified in section 1.3.C herein.
   c. The most updated/recent version of project and installation schedule(s).
   d. All coordinated work previously completed and coordinated work that is uncompleted but scheduled for prior completion.
   e. Current construction conditions affecting scope of work.

3. For any and all questions, concerns, coordination, or other project specific information, especially those affecting schedule, quality of work, or system acceptance, contractor shall inform General Contractor in as timely a manner as possible.

B. Preinstallation Testing:

1. It is the contractor's responsibility to ensure that all material and equipment is tested for acceptance pursuant to the manufacturer's specifications and parameters prior to installation.

2. All material and equipment shall be tested for acceptance immediately upon being received by contractor.
   a. If material and/or equipment is received off-site, material and/or equipment shall be retested and confirmed to be acceptable upon arrival on-site.

3. Any material and/or equipment that fails testing procedure and is unacceptable for installation shall be noted and communicated to manufacturer. Dependent upon scope and breadth of failures, contractor shall coordinate required replacement material and maintain installation schedule. If failures affect the installation schedule and/or project schedule, contractor shall inform the General Contractor.

3.2 PREPARATION

A. Protection of In-Place Conditions:

1. Contractor shall always maintain a neat and orderly workspace while on site. The workspace shall not interfere with, or in any other form, disallow other trades to complete their scope of work or maintain proper schedule of work.

2. All tools, material, equipment, trash, etc., shall be maintained to be always neat and orderly while on site.

3. All material and equipment that has been installed shall be protected in place. It is the contractor's responsibility to ensure all installed equipment is protected in place through means of protective coverings, enclosed/restricted spaces, and coordination with other trades. The items of note include, but are not limited to:
   a. Capping/Taping the open ends of unused conduit and open backboxes while protecting pull string.

b. Covering of all active equipment and termination components to ensure any openings, ports, or other such component orifices are protected from elements such as water, dust, and construction debris and/or material.
c. Isolation of telecommunication rooms and equipment from general construction whenever possible to minimize water, dust, and construction debris and/or material.
d. Protection of active equipment from tampering, especially pre-configured or recently configured.
e. Proper bonding and grounding of all equipment immediately upon installation.

3.3 INSTALLATION OF COMMUNICATIONS WORK

A. Unless more stringent requirements are specified in the Contract Documents or manufacturers' instructions, contractors shall complete scope of work in a neat and workmanlike manner and comply with NFPA 70, NECA NEIS 1, and BICSI N1 for installation of work specified in Division 27. Consult Contracting Officer for resolution of conflicting requirements.

B. For all work specified in Division 27, contractor shall provide a complete and functional (turnkey) system. Coordination with General Contractor, Contracting Officer, and other trades may be required. Reference the Responsibility Matrix on Technology sheets for information per each system.

3.4 SYSTEM STARTUP

A. Commissioning Activities:

1. Contractor shall reference and adhere to manufacturer’s startup/activation requirements for commissioning.

2. Commissioning effort shall ensure that system is complete and operational prior to final testing, system turnover and substantial completion.

3.5 FIELD QUALITY CONTROL

A. Administrant for Communications Equipment, Systems, and Material Tests and Inspections:
1. Contractor shall administer and perform tests and inspections.

2. Contractor may utilize assistance of factory-authorized service representative, or a third-party certified testing authority, at no cost to Contracting Officer.

3.6 CLEANING

A. Waste Management:

1. Proper disposal and on-site management of all waste material, packaging, and other such extra items not scheduled for install is required. It is the contractor’s responsibility to

ensure all waste management procedures and protocols are observed and practiced with regards to any and all waste accumulated.

2. Prior to initial (1st day) arrival on site, contractor shall coordinate with General Contractor for current site conditions, rules, regulations, and requirements regarding the accumulation and disposal of waste.

3. The requirements below are in addition to General Contractor defined site requirements, not in lieu of, and shall not supersede any site requirements. Any discrepancy between the below and the site requirements shall be communicated to General Contractor for further clarification.
   a. All trash or waste accumulated shall be properly disposed of at the end of each day.
   b. Any material deemed hazardous must be disposed of immediately. Disposal of material shall be communicated to, and coordinated with, General Contractor.

3.7 CLOSEOUT ACTIVITIES

A. Demonstration:

1. Contractor shall coordinate with Contracting Officer and General Contractor to schedule time and attendance for a contractor provided demonstration of the operability of the following systems and equipment:
   a. Telecommunication Equipment Room
   b. Structured Cabling System (Horizontal and Backbone) and Infrastructure
   c. Paging System
   d. AV system

2. It is acceptable for contractor to engage sub-contractors, manufacturer representatives, and/or third parties, to conduct demonstration. Any engagement of such shall be at no cost to Contracting Officer.

3. At Contracting Officer's request, Contractor shall record demonstration(s) or allow Contracting Officer to record demonstration(s). Any contractor provided recording shall be at no extra cost to Contracting Officer.

B. Training:

1. Train end-user's maintenance personnel on any system and/or equipment defined herein. Training shall be administered by contractor(s) and shall include at least 1 hour of training per section on how to adjust, operate, update, and maintain the system(s) below:
   a. Section 271116 "Communications Rack, Frames, and Enclosures"
   b. Section 271513 "Communications Copper Horizontal Cabling"

   At Contracting Officer's request, Contractor shall record training session(s) or allow Contracting Officer to record session(s). Any contractor provided recording shall be at no extra cost to Contracting Officer.

END OF SECTION 270010

SECTION 270528 - PATHWAYS FOR COMMUNICATIONS SYSTEMS

PART 1 - GENERAL

1.1 RELATED DOCUMENTS

A. Drawings and general provisions of the Contract, including General and Supplementary Conditions and Division 01 Specification Sections, apply to this Section.

B. Section 270010 "Supplemental Requirements for Communications" for additional abbreviations, definitions, submittals, qualifications, testing agencies, and other Project requirements applicable to Work specified in this Section.

C. Section 260533 "Raceways and Boxes for Electrical Systems" for conduits, wireways, surface raceways, boxes, enclosures, cabinets, handholes, and faceplate adapters serving electrical systems.

1.2 SUMMARY

A. Section Includes:

1. Metal conduits and fittings.
2. Nonmetallic conduits and fittings.
3. Innerduct pathways
4. Boxes, enclosures, and cabinets.

1.3 DEFINITIONS

A. ARC: Aluminum rigid conduit.

B. GRC: Galvanized rigid conduit.

C. IMC: Intermediate metal conduit.

D. RTRC: Reinforced thermosetting resin conduit.

E. EMT: Electrical Metallic Tubing.

1.4 ACTION SUBMITTALS

A. Product data:
1. The following products shall be included:
a. Surface pathways
b. Boxes, enclosures, and cabinets.
c. Underground handholes and boxes.

B. Shop Drawings:

1. Pathway layout, showing route and components to scale, with relationship between the pathway and adjacent structural, electrical, and mechanical elements. Include the following:

    a. Coordination with structure, other architectural elements, and other trade elements such as lighting, plumbing, and HVAC elements.
    b. Structural connection points and connection components including clamps, brackets, hanger rods, splice-plate connectors, expansion-joint assemblies, straight lengths, and fittings.
    c. Vertical and horizontal offsets and transitions.
    d. Vertical elevation of pathway above the floor or bottom of ceiling structure.
    e. Coordination with access panels.
    f. Underground ducts, piping, and structures in location of underground enclosures and handholes.

1.5 INFORMATIONAL SUBMITTALS

A. Coordination Drawings

PART 2 - PRODUCTS

2.1 PERFORMANCE REQUIREMENTS

A. Seismic Performance: Pathways, fittings, and supports shall withstand the effects of earthquake motions determined according to ASCE/SEI 7.

1. The term "withstand" means "the equipment will remain in place without separation of any parts when subjected to the seismic forces specified."

2.2 METAL CONDUITS AND FITTINGS

A. Description: Metal raceway of circular cross section with manufacturer-fabricated fittings.

B. General Requirements for Metal Conduits and Fittings:

1. Listed and labeled as defined in NFPA 70, by a nationally recognized testing laboratory, and marked for intended location and application.
2. Comply with TIA-569-D.

C. GRC: Comply with ANSI C80.1 and UL 6.

D. ARC: Comply with ANSI C80.5 and UL 6A.

E. IMC: Comply with ANSI C80.6 and UL 1242.

F. PVC-Coated Steel Conduit: PVC-coated GRC.

1. Comply with NEMA RN 1.
2. Coating Thickness: 0.040 inch (1 mm), minimum.

G. EMT: Comply with ANSI C80.3 and UL 797.

H. Fittings for Metal Conduit: Comply with NEMA FB 1 and UL 514B.

1. Conduit Fittings for Hazardous (Classified) Locations: Comply with UL 1203 and NFPA 70.
2. Fittings for EMT:

a. Material: Steel
b. Type: compression

3. Expansion Fittings: PVC or steel to match conduit type, complying with UL-467, rated for environmental conditions where installed, and including flexible external bonding jumper.
4. Coating for Fittings for PVC-Coated Conduit: Minimum thickness of 0.040 inch (1 mm), with overlapping sleeves protecting threaded joints.

I. Joint Compound for IMC, GRC, or ARC: Approved, as defined in NFPA 70, by authorities having jurisdiction for use in conduit assemblies, and compounded for use to lubricate and protect threaded conduit joints from corrosion and to enhance their conductivity.

2.3 NONMETALLIC CONDUITS AND FITTINGS

A. Description: Nonmetallic raceway of circular section with manufacturer-fabricated fittings.

B. General Requirements for Nonmetallic Conduits and Fittings:

1. Listed and labeled as defined in NFPA 70, by an NRTL, and marked for intended location and application.
2. Comply with TIA-569-D.

C. RNC: Type EPC-40-PVC & Type EPC-80-PVC, complying with NEMA TC 2 and UL 651 unless otherwise indicated.

D. Rigid HDPE: Comply with UL 651A.

E. Continuous HDPE: Comply with UL 651A.

F. RTRC: Comply with UL 2515A and NEMA TC 14.

G. Fittings: Comply with NEMA TC 3; match to conduit or tubing type and material.

H. Solvents and Adhesives: As recommended by, and in respect to, each manufacturer listed above.

2.4 INNERDUCT PATHWAYS

A. Description: Comply with UL 2024; flexible-type pathway, able to be installed into existing conduit or routed independently in plenum environment, and approved for plenum and general-use (dependent on specific product) installation unless otherwise indicated.

B. Listed and labeled as defined in NFPA 70, by an NRTL, and marked for intended location and application.

C. Comply with TIA-569-D.

2.5 BOXES, ENCLOSURES, AND CABINETS

A. Description: Enclosures for communications.

B. General Requirements for Boxes, Enclosures, and Cabinets:

1. Comply with TIA-569-D.
2. Boxes, enclosures, and cabinets installed in wet locations shall be listed and labeled as defined in NFPA 70, by an NRTL, and marked for use in wet locations.
3. Box extensions used to accommodate new building finishes shall be of same material as recessed box.
4. Device Box Dimensions: 4 inches square by 2-1/8 inches deep (100 mm square by 60 mm deep) at minimum
   a. Refer to drawing notes, details, and other such information for the use of any other size/type of device box (commonly referred to as backbox also)
5. Gangable boxes are prohibited.

C. Sheet Metal Outlet and Device Boxes: Comply with NEMA OS 1 and UL 514A.

D. Cast-Metal Outlet and Device Boxes: Comply with NEMA FB 1, aluminum, Type FD, with gasketed cover.

E. Conduit Bodies: A pull box that is manufactured to facilitate a change in the direction of the pathway at 90-degree increments, while also adhering to ANSI/TIA 568 and BICSI standards for cabling and pathway bend radius requirements. It is acceptable to use this device to optimize pathway routing near or at a penetration only.
1. For all locations where a conduit body may be installed, contractor shall submit the location and specification of device to be used to the Contracting Officer prior to procurment for approval.
2. Device shall have lid and gasket to protect cabling from exposure to elements and other such debris.

F. Small Sheet Metal Pull and Junction Boxes: NEMA OS 1.

G. Nonmetallic Outlet and Device Boxes: Comply with NEMA OS 2 and UL 514C.

H. Hinged-Cover Enclosures: Comply with UL 50 and NEMA 250 (Type indicated below) with continuous-hinge cover with flush latch unless otherwise indicated. Shall be manufactured of steel, finished inside and out with manufacturer's standard enamel.

1. The following NEMA 250 enclosure types shall be utilized for each scenario at a minimum, it is the contractor's responsibility to increase the enclosure type rating as required for each installation.
    a. Interior to Telecommunication Room - Type 2 at minimum
    b. Interior to building, outside of Telecommunication Room - Type 12 at minimum
    c. Exterior Environment - Type 4 at minimum
    d. Any environment where corrosion, moisture, chemical, or other such hazardous or deteriorating substances may come in direct contact - Type 4x at minimum

I. Cabinets:

1. NEMA 250 (Type indicated below) galvanized-steel box with removable interior panel and removable front, finished inside and out with manufacturer's standard enamel.
    a. The following NEMA 250 cabinet types shall be utilized for each scenario at a minimum, it is the contractor's responsibility to increase the cabinet type rating as required for each installation.
        1) Interior to Telecommunication Room - Type 2 at minimum
        2) Interior to building, outside of Telecommunication Room - Type 12 at minimum
        3) Exterior Environment - Type 4 at minimum
        4) Any environment where corrosion, moisture, chemical, or other such hazardous or deteriorating substances may come in direct contact - Type 4x at minimum
2. Hinged door in front cover with flush latch and concealed hinge.
3. Key latch to match panelboards.
4. Metal barriers to separate wiring of different systems and voltage.
5. Accessory feet where required for freestanding equipment.
6. Nonmetallic cabinets shall be listed and labeled as defined in NFPA 70, by a qualified testing agency, and marked for intended location and application.

2.6 POLYMER-CONCRETE HANDHOLES

A. Description: Molded of sand and aggregate; bound together with polymer resin; and reinforced with steel, fiberglass, or a combination of the two.

B. General Requirements for Polymer Concrete Handholes:

1. Boxes and handholes for use in underground systems shall be listed and labeled as defined in NFPA 70, by an NRTL, and marked for intended location and application.
2. Boxes installed in wet areas shall be listed and labeled as defined in NFPA 70, by an NRTL, and marked for intended location and application.
3. Comply with TIA-569-D.

C. Configuration: Designed for flush burial with open bottom unless otherwise indicated.

D. Cover: Weatherproof, secured by tamper-resistant locking devices and having structural load rating consistent with enclosure and handhole location.

1. Cover Finish: Nonskid finish shall have a minimum coefficient of friction of 0.50.
2. Cover Legend: Molded lettering, ["COMMUNICATIONS"].

a. Coordinate with Contracting Officer prior to procurement of cover to ensure labeling/lettering is acceptable. Contractor shall provide alternate labeling/lettering per Contracting Officer's request.

3. Cover Rating: Tier 15 rating unless otherwise noted

E. Handholes a minimum of 24 Inches Wide, 36 Inches Long, and 24 inches Deep (600 mm Wide, 910 mm Long, and 600 mm Deep) and Larger: Have inserts for cable racks and pulling-in irons installed before concrete is poured.

1. Refer to drawings and schedules for more information.
2. Installed handhole size and installation parameters shall be in accordance with BICSI standards, existing and new conditions, and future growth.

PART 3 - EXECUTION

3.1 PATHWAY APPLICATION

A. Outdoors: Apply pathway products as specified below unless otherwise indicated:

1. Exposed Conduit: GRC
2. Concealed Conduit, Aboveground: GRC
3. Underground Conduit, direct buried in non-traffic area: Type EPC-40-PVC
4. Underground Conduit, direct buried in traffic area: Type EPC-80-PVC
5. Underground Conduit, concrete encased in traffic area: Type EPC-80-PVC
6. Boxes and Enclosures, Aboveground: NEMA 250, Type 4 and/or Type 4X as previously indicated.

B. Indoors: Apply pathway products as specified below unless otherwise indicated:

1. Exposed, Not Subject to Physical Damage: EMT
2. Exposed, Not Subject to Severe Physical Damage: EMT
3. Exposed and Subject to Severe Physical Damage: GRC. Pathway locations include the following:

   a. Loading dock
   b. Corridors used for traffic of mechanized carts, forklifts, and pallet-handling units

4. Concealed in Ceilings and Interior Walls and Partitions: EMT
5. Damp, Wet, and/or Caustic Locations (Natatorium, high humidity areas, chemical storage, etc.): GRC
   a. This does not include submerged areas and/or pathways.
6. Pathways for Optical-Fiber or Communications Cable in Spaces Used for Environmental Air: EMT
7. Pathways for Optical-Fiber or Communications-Cable Risers in Vertical Shafts: EMT
8. Pathways for Concealed General-Purpose Distribution of Optical-Fiber or Communications Cable: EMT
9. Boxes and Enclosures: NEMA 250, Type 2 and/or Type 12.
   a. Type 4X, stainless steel units in institutional and commercial kitchens and damp or wet locations.

C. Minimum Pathway Size: 1-inch (25-mm) trade size for copper and aluminum cables, and 1 inch (25 mm) for optical-fiber cables.

D. Pathway Fittings: Compatible with pathways and suitable for use and location.

1. Rigid and Intermediate Steel Conduit: Use threaded rigid steel conduit fittings unless otherwise indicated. Comply with NEMA FB 2.10.
2. PVC Externally Coated, Rigid Steel Conduits: Use only fittings listed for use with this type of conduit. Patch and seal all joints, nicks, and scrapes in PVC coating after installing conduits and fittings. Use sealant recommended by fitting manufacturer and apply in thickness and number of coats recommended by manufacturer.
3. EMT: Use compression, steel fittings. Comply with NEMA FB 2.10.
4. All conduit fittings that facilitate a change in pathway direction (such as a 90-degree bend) shall be:
   a. For conduits with an internal diameter of 2 inches or less, a sweeping bend with a bend radius greater than 6 times the pathway diameter, or
   b. For conduits with an internal diameter greater than 2 inches, a sweeping bend with a bend radius greater than 10 times the pathway diameter, or

E. Do not install aluminum conduits, boxes, or fittings in contact with concrete or earth.

F. Do not install nonmetallic conduit where ambient temperature exceeds 120 deg F (49 deg C).

G. Pathways indicated on the T-sheets shall be dedicated for use by the associated systems only. No other trade may route through, utilize, or otherwise be attached to these pathways. In addition, refer to specification 271313 and/or 271513 for the separation requirements of pathway when an EMI source is present.

3.2 INSTALLATION

A. Comply with the following standards for installation requirements except where requirements on Drawings or in this Section are stricter:

1. NECA 1.
2. NECA/BICSI 568.
3. TIA-569-D.
4. NECA 101
5. NECA 102.
6. NECA 105.
7. NECA 111.

B. Comply with NFPA 70 limitations for types of pathways allowed in specific occupancies and number of floors.

C. Comply with requirements in Section 270529 "Hangers and Supports for Communications Systems" for hangers and supports.

D. Comply with requirements in Section 270544 "Sleeves and Sleeve Seals for Communications Pathways and Cabling" for sleeves and sleeve seals for communications.

E. Keep pathways at least 6 inches (150 mm) away from parallel runs of flues and steam or hot-water pipes. Install horizontal pathway runs above water and steam piping.

F. Complete pathway installation before starting conductor installation.

G. Arrange stub-ups so curved portions of bends are not visible above finished slab.

H. Install no more than the equivalent of two 90-degree bends in any pathway run. Support within 12 inches (300 mm) of changes in direction. Utilize long radius ells for all optical-fiber cables.

I. Conceal rigid conduit within finished walls, ceilings, and floors unless otherwise indicated. Install conduits parallel or perpendicular to building lines.

J. Support conduit within 12 inches (300 mm) of enclosures to which attached.

K. Pathways Embedded in Slabs:

1. Run conduit larger than 1-inch (27-mm) trade size, parallel or at right angles to main reinforcement. Where at right angles to reinforcement, place conduit close to slab support. Secure pathways to reinforcement at maximum 10-foot (3-m) intervals.
2. Arrange pathways to cross building expansion joints at right angles with expansion fittings. Comply with requirements for expansion joints specified in this article.
3. Arrange pathways to keep a minimum of 1 inch (25 mm) of concrete cover in all directions.
4. Do not embed threadless fittings in concrete unless specifically approved by Contracting Officer for each specific location.

L. Stub-ups to Above Recessed Ceilings:

1. Use EMT for pathways, unless otherwise noted
2. Use a conduit bushing or insulated fitting to terminate stub-ups not terminated in hubs or in an enclosure.

M. Threaded Conduit Joints, Exposed to Wet, Damp, Corrosive, or Outdoor Conditions: Apply listed compound to threads of pathway and fittings before making up joints. Follow compound manufacturer's written instructions.

N. Coat field-cut threads on PVC-coated pathway with a corrosion-preventing conductive compound prior to assembly.

O. Terminate threaded conduits into threaded hubs or with locknuts on inside and outside of boxes or cabinets. Install insulated bushings on conduits terminated with locknuts.

P. Install pathways square to the enclosure and terminate at enclosures with locknuts. Install locknuts hand tight plus one additional quarter-turn.

Q. Do not rely on locknuts to penetrate nonconductive coatings on enclosures. Remove coatings in the locknut area prior to assembling conduit to enclosure, to assure a continuous ground path.

R. Cut conduit perpendicular to the length. For conduits of 2-inch (50-mm) trade size and larger, use roll cutter or a guide to ensure cut is straight and perpendicular to the length.

S. Install pull wires in empty pathways. Use polypropylene or monofilament plastic line with not less than 200-lb (90-kg) tensile strength. Leave at least 12 inches (300 mm) of slack at each end of pull wire. Secure pull wire, so it cannot fall into conduit. Cap pathways designated as spare alongside pathways in use.

T. Pathways for Optical-Fiber and Communications Cable: Install pathways, metal and nonmetallic, rigid and flexible, as follows:
   1. 1-Inch (25-mm) Trade Size and Larger: Install pathways in maximum lengths of 75 feet (23 m).
   2. Install with a maximum of two 90-degree bends or equivalent for each length of pathway unless Drawings show stricter requirements. Separate lengths with pull or junction boxes or terminations at distribution frames or cabinets where necessary to comply with these requirements.

U. Install pathway-sealing fittings at accessible locations according to NFPA 70 and fill them with listed sealing compound. For concealed pathways, install each fitting in a flush steel box with a blank cover plate having a finish similar to that of adjacent plates or surfaces. Install pathway-sealing fittings according to NFPA 70.

V. Install devices to seal pathway interiors at accessible locations. Locate seals, so no fittings or boxes are between the seal and the following changes of environments. Seal the interior of all pathways at the following points:

   1. Where conduits pass from warm to cold locations, such as boundaries of refrigerated spaces.
   2. Where an underground service pathway enters a building or structure.
   3. Where otherwise required by NFPA 70.

W. Comply with manufacturer's written instructions for solvent welding PVC conduit and fittings.

X. Expansion-Joint Fittings:

   1. Install in each run of aboveground RNC that is located where environmental temperature change may exceed 30 deg F (17 deg C), and that has straight-run length that exceeds 25 feet (7.6 m). Install in each run of aboveground RMC and EMT that is located where environmental temperature change may exceed 100 deg F (55 deg C), and that has straight-run length that exceeds 100 feet (30 m).
   2. Install type and quantity of fittings that accommodate temperature change listed for each of the following locations:

      a. Outdoor Locations: 125 deg F (70 deg C) temperature change.
      b. Indoor Spaces Connected with Outdoors without Physical Separation: 125 deg F (70 deg C) temperature change.
      c. Attics: 135 deg F (75 deg C) temperature change.

   3. Install fitting(s) that provide expansion and contraction for at least 0.00041 inch per foot of length of straight run per deg F (0.06 mm per meter of length of straight run per deg C) of temperature change for PVC conduits. Install fitting(s) that provide expansion and contraction for at least 0.000078 inch per foot of length of straight run per deg F (0.0115 mm per meter of length of straight run per deg C) of temperature change for metal conduits.

4. Install expansion fittings at all locations where conduits cross building or structure expansion joints.
5. Install each expansion-joint fitting with position, mounting, and piston setting selected according to manufacturer's written instructions for conditions at specific location at time of installation. Install conduit supports to allow for expansion movement.

Y. Mount boxes at heights indicated on Drawings. If mounting heights of boxes are not individually indicated, give priority to ADA requirements. Install boxes with height measured to center of box unless otherwise indicated.

Z. Recessed Boxes in Masonry Walls: Saw-cut opening for box in center of cell of masonry block and install box flush with surface of wall. Prepare block surface to provide a flat surface for a raintight connection between box and cover plate or supported equipment and box.

AA. Horizontally separate boxes mounted on opposite sides of walls, so they are not in the same vertical channel.

BB. Support boxes of three gangs or more from more than one side by spanning two framing members or mounting on brackets specifically designed for the purpose.

CC. Fasten junction and pull boxes to or support from building structure. Do not support boxes by conduits.

3.3 SLEEVE AND SLEEVE-SEAL INSTALLATION FOR COMMUNICATIONS PENETRATIONS

A. Install sleeves and sleeve seals at penetrations of exterior floor and wall assemblies. Comply with requirements in Section 270544 "Sleeves and Sleeve Seals for Communications Pathways and Cabling."

3.4 PROTECTION

A. Protect coatings, finishes, and cabinets from damage or deterioration.

1. Repair damage to galvanized finishes with zinc-rich paint recommended by manufacturer.
2. Repair damage to PVC coatings or paint finishes with matching touchup coating recommended by manufacturer.

END OF SECTION 270528

SECTION 270529 - HANGERS AND SUPPORTS FOR COMMUNICATIONS SYSTEMS

PART 1 - GENERAL

1.1 RELATED DOCUMENTS

A. Drawings and general provisions of the Contract, including General and Supplementary Conditions and Division 01 Specification Sections, apply to this Section.

B. Section 270010 "Supplemental Requirements for Communications" for additional abbreviations, definitions, submittals, qualifications, testing agencies, and other Project requirements applicable to Work specified in this Section.

1.2 SUMMARY

A. Section Includes:

1. Steel slotted support systems for communication raceways.
2. Aluminum slotted support systems for communication raceways.
3. Conduit and cable support devices.
4. Support for conductors in vertical conduit.
5. Structural steel for fabricated supports and restraints.
6. Mounting, anchoring, and attachment components, including powder-actuated fasteners, mechanical expansion anchors, concrete inserts, clamps, through bolts, toggle bolts, and hanger rods.
7. Fabricated metal equipment support assemblies.

1.3 ACTION SUBMITTALS

A. Product Data: For each type of product.
1. The following products shall be included:
a. Slotted support systems, hardware, and accessories.
b. Hangers.

PART 2 - PRODUCTS

2.1 PERFORMANCE REQUIREMENTS

A. Seismic Performance: Hangers and supports shall withstand the effects of earthquake motions determined according to ASCE/SEI 7.

1. The term "withstand" means "the supported equipment and systems will remain in place without separation of any parts when subjected to the seismic forces specified.

B. Surface-Burning Characteristics: Comply with ASTM E84; testing by a qualified testing agency. Identify products with appropriate markings of applicable testing agency.

1. Flame Rating: Class 1.
2. Self-extinguishing according to ASTM D635.

2.2 SUPPORT, ANCHORAGE, AND ATTACHMENT COMPONENTS

A. Steel Slotted Support Systems: Preformed steel channels and angles with minimum 13/32-inch- (10-mm-) diameter holes at a maximum of 8 inches (200 mm) o.c. in at least one surface.
1. Standard: Comply with MFMA-4 factory-fabricated components for field assembly.
2. Material for Channel, Fittings, and Accessories: Stainless Steel, Type 304
3. Channel Dimensions: Selected for applicable load criteria.

B. Aluminum Slotted Support Systems: Extruded aluminum channels and angles with minimum 13/32-inch- (10-mm-) diameter holes at a maximum of 8 inches (200 mm) o.c. in at least one surface.
1. Standard: Comply with MFMA-4 factory-fabricated components for field assembly.
2. Channel Material: 6063-T6 aluminum alloy.
3. Fittings and Accessories Material: 5052-H32 aluminum alloy.
4. Channel Dimensions: Selected for applicable load criteria.

C. Conduit and Cable Support Devices: Steel clamps, hangers, and associated fittings, designed for types and sizes of raceway or cable to be supported.

D. Support for Conductors in Vertical Conduit: Factory-fabricated assembly consisting of threaded body and insulating wedging plug or plugs for nonarmored communications conductors or cables in riser conduits. Plugs shall have number, size, and shape of conductor gripping pieces as required to suit individual conductors or cables supported. Body shall be made of malleable iron.

E. Structural Steel for Fabricated Supports and Restraints: ASTM A36/A36M steel plates, shapes, and bars; black and galvanized.

F. Mounting, Anchoring, and Attachment Components: Items for fastening electrical items or their supports to building surfaces include the following:

1. Powder-Actuated Fasteners: Threaded-steel stud for use in hardened portland cement concrete, steel, or wood, with tension, shear, and pullout capacities appropriate for supported loads and building materials where used.

2. Mechanical-Expansion Anchors: Insert-wedge-type stainless steel for use in hardened portland cement concrete, with tension, shear, and pullout capacities appropriate for supported loads and building materials where used.

3. Concrete Inserts: Steel or malleable-iron, slotted support system units are similar to MSS Type 18 units and comply with MFMA-4 or MSS SP-58.
4. Clamps for Attachment to Steel Structural Elements: MSS SP-58 units are suitable for attached structural element.

5. Through Bolts: Structural type, hex head, and high strength. Comply with ASTM F3125/F3125M,Grade A325 (Grade A325M).
6. Toggle Bolts: Stainless steel springhead type.
7. Hanger Rods: Threaded steel.

2.3 FABRICATED METAL EQUIPMENT SUPPORT ASSEMBLIES

A. Description: Welded or bolted structural-steel shapes, shop or field fabricated to fit dimensions of supported equipment.

PART 3 - EXECUTION

3.1 APPLICATION

A. Comply with the following standards for application and installation requirements of hangers and supports, except where requirements on Drawings or in this Section are stricter:

1. NECA 1.
2. NECA/BICSI 568.
3. TIA-569-D.
4. NECA 101.
5. NECA 102.
6. NECA 105.
7. NECA 111.

B. Comply with requirements for pathways specified in Section 270528 "Pathways for Communications Systems."

C. Maximum Support Spacing and Minimum Hanger Rod Size for Raceway: Space supports for EMTs, IMCs, and RMCs as required by NFPA 70. Minimum rod size shall be 1/4 inch (6 mm) in diameter.

D. Multiple Raceways or Cables: Install trapeze-type supports fabricated with steel slotted support system, sized so capacity can be increased by at least 25 percent in future without exceeding specified design load limits.

1. Secure raceways and cables to these supports with two-bolt conduit clamps.

3.2 SUPPORT INSTALLATION

A. Strength of Support Assemblies: Where not indicated, select sizes of components, so strength will be adequate to carry present and future static loads within specified loading limits. Minimum static design load used for strength determination shall be weight of supported components plus 200 lb (90 kg).

B. Mounting and Anchorage of Surface-Mounted Equipment and Components: Anchor and fasten communications items and their supports to building structural elements by the following methods unless otherwise indicated by code:

1. To Wood: Fasten with lag screws or through bolts.
2. To New Concrete: Bolt to concrete inserts.
3. To Masonry: Use approved toggle-type bolts on hollow masonry units and expansion anchor fasteners on solid masonry units.
4. To Existing Concrete: Use expansion anchor fasteners.
5. Instead of expansion anchors, powder-actuated-driven threaded studs, provided with lock washers and nuts, may be used in existing standard-weight concrete 4 inches (100 mm) thick or greater. Do not use for anchorage to lightweight-aggregate concrete or for slabs less than 4 inches (100 mm) thick.
6. To Steel: Welded threaded studs complying with AWS D1.1/D1.1M, with lock washers and nuts or Beam clamps (MSS SP-58, Type 19, 21, 23, 25, or 27), complying with MSS SP-69
7. To Light Steel: Sheet metal screws.
8. Items Mounted on Hollow Walls and Nonstructural Building Surfaces: Mount cabinets, enclosures, pull and junction boxes, and other devices on slotted-channel racks attached to substrate by means that comply with seismic-restraint strength and anchorage requirements.

C. Drill holes for expansion anchors in concrete at locations and to depths that avoid the need for reinforcing bars.

3.3 INSTALLATION OF FABRICATED METAL SUPPORTS

A. Cut, fit, and place miscellaneous metal supports accurately in location, alignment, and elevation to support and anchor communications materials and equipment.

3.4 PAINTING

A. Touchup: Clean field welds and abraded areas of shop paint. Paint exposed areas immediately after erecting hangers and supports. Use same materials as used for shop painting. Comply with SSPC-PA 1 requirements for touching up field-painted surfaces.

1. Apply paint by brush or spray to provide minimum dry film thickness of 2.0 mils (0.05 mm).

END OF SECTION 270529

SECTION 270544 - SLEEVES AND SLEEVE SEALS FOR COMMUNICATIONS PATHWAYS AND CABLING

PART 1 - GENERAL

1.1 RELATED DOCUMENTS

A. Drawings and general provisions of the Contract, including General and Supplementary Conditions and Division 01 Specification Sections, apply to this Section.

B. Section 270010 "Supplemental Requirements for Communications" for additional abbreviations, definitions, submittals, qualifications, testing agencies, and other Project requirements applicable to Work specified in this Section.

1.2 SUMMARY

A. Section Includes:

1. Manufactured Sleeve Seal Systems.
2. Conduit or Field Fabricated sleeves.
3. Sealants and Devices

1.3 ACTION SUBMITTALS

A. Product data:
1. The following products shall be included:
a. Manufactured Sleeve Seal Systems
b. Conduit or Field Fabricated sleeves
c. Sealant and Devices

1.4 INFORMATION SUBMITTALS

A. Coordination Drawings
1. Indicating all penetration locations and penetrating component.
2. Details indicating each penetration type, associated components, and associated structural coordination.

1.5 CLOSEOUT SUBMITTALS

A. Operation and Maintenance Data

PART 2 - PRODUCTS

2.1 MANUFACTURED SLEEVE SEAL SYSTEM

A. Description: Modular sealing device, designed for field assembly, to fill annular space between sleeve and cable. Shall be an engineered, re-enterable cable pathway that is specifically manufactured for facilitating a floor, ceiling, or wall penetration.

1. Sealing Elements: Self-sealing intumescent material

B. Pathway shall be able to be retrofitted to existing cable and penetration and shall be able to be removed from existing cabling, without cutting or splicing existing cables.

C. It is acceptable to utilize grommet type sleeves (typically allowing a single cable or small cable bundle through penetration), round type sleeves, and square type sleeves. Number of cables per rated penetration shall be in accordance with manufacturer.

2.2 CONDUIT OR FIELD FABRICATED SLEEVES

A. Pipe Sleeves, PVC:

1. Description: ASTM D1785, Schedule 40

B. Sheet Metal Sleeves, Galvanized Steel, Round:

1. Description: Galvanized-steel sheet; thickness not less than 0.0239-inch (0.6-mm); round tube closed with welded longitudinal joint, with tabs for screw-fastening the sleeve to the board.

2.3 SEALANTS AND DEVICES

A. Description: Products and material that have been tested for specific acoustical rated construction, conforming to penetrating item type, filling annular space between cable and pathway, and filling the space between pathway and penetration.

1. Sealants - Single component latex formulations that, upon cure, do not re-emulsify during exposure to moisture.
2. Putty - Intumescent, non-hardening, water-resistant putties containing no solvents, inorganic fibers or silicone compounds.
3. Pillows - Re-enterable, non-curing, mineral fiber core encapsulated on six sides with intumescent coating contained in a flame retardant poly bag.

PART 3 - EXECUTION

3.1 INSTALLATION OF SLEEVES, SEALANTS, AND DEVICES THROUGH NON-FIRE-RATED BARRIERS

A. Comply with NECA 1.

B. Sleeves for Conduits Penetrating Above-Grade, Non-Fire-Rated, Concrete and Masonry-Unit Floors and Walls:

1. Interior Penetrations of Non-Fire-Rated Walls and Floors:

a. Seal space outside of sleeves with mortar or grout. Pack sealing material solidly between sleeve and wall or floor so no voids remain. Tool exposed surfaces smooth; protect material while curing.
b. Seal annular space between sleeve and pathway or cable, using joint sealant appropriate for size, depth, and location of joint. Comply with requirements in Section 079200 "Joint Sealants."

2. Use pipe sleeves unless penetration arrangement requires rectangular sleeved opening.
3. Size pipe sleeves to provide 1/4-inch (6.4-mm) annular clear space between sleeve and pathway or cable, unless sleeve seal system is to be installed or seismic criteria require different clearance.
4. Install sleeves for wall penetrations. Install sleeves during erection of walls. Cut sleeves to length for mounting flush with both surfaces of walls. Deburr after cutting.
5. Install sleeves for floor penetrations. Extend sleeves installed in floors 6 inches (50 mm) above finished floor level. Install sleeves during erection of floors.

C. Sleeves for Conduits Penetrating Non-Fire-Rated Wall Assemblies:

1. Use circular metal sleeves unless penetration arrangement requires rectangular sleeved opening.
2. Seal space outside of sleeves with approved joint compound for wall assemblies.

D. Aboveground, Exterior-Wall Penetrations: Seal penetrations using steel pipe sleeves and mechanical sleeve seal systems. Size sleeves to allow for 1-inch (25-mm) annular clear space between pipe and sleeve for installing mechanical sleeve seals.

3.2 INSTALLATION OF SLEEVES, SEALANTS, AND DEVICES THROUGH RATED BARRIERS

A. Install sleeves in existing walls without compromising structural integrity of walls. Do not cut structural elements without reinforcing the wall to maintain the designed weight bearing and wall stiffness.

B. Install conduits and cable with no crossings within the sleeve.

C. Fill opening around conduits and cables with sealant without leaving voids.

D. Install type and number of sealing elements recommended by manufacturer for pathway or cable material and size. Position pathway or cable in center of sleeve. Assemble mechanical sleeve seals and install in annular space between pathway or cable and sleeve. Tighten bolts against pressure plates that cause sealing elements to expand and make watertight seal.

END OF SECTION 270544

SECTION 270553 - IDENTIFICATION FOR COMMUNICATIONS SYSTEMS

PART 1 - GENERAL

1.1 RELATED DOCUMENTS

A. Drawings and general provisions of the Contract, including General and Supplementary Conditions and Division 01 Specification Sections, apply to this Section.

B. Section 270010 "Supplemental Requirements for Communications" for additional abbreviations, definitions, submittals, qualifications, testing agencies, and other Project requirements applicable to Work specified in this Section.

1.2 SUMMARY

A. Section Includes:

1. Labels
2. Cable ties.
3. Miscellaneous identification products.

1.3 ACTION SUBMITTALS

A. Product data:
1. The following products shall be included:
   a. Labels

PART 2 - PRODUCTS

2.1 PERFORMANCE REQUIREMENTS

A. Comply with NFPA 70 and TIA 606-B.

B. Comply with ANSI Z535.4 for safety signs and labels.

C. Adhesive-attached labeling materials, including label stocks, laminating adhesives, and inks used by label printers, shall comply with UL 969.

D. Thermal Movements: Allow for thermal movements from ambient and surface temperature changes.

1. Temperature Change: 120 deg F (67 deg C), ambient.

2.2 COLOR AND LEGEND REQUIREMENTS

A. Equipment Identification Labels:

1. Black letters on a white field.

2.3 LABELS

A. Vinyl Wraparound Labels: Preprinted, flexible labels laminated with a clear, weather- and chemical-resistant coating and matching wraparound clear adhesive tape for securing label ends.

B. Self-Adhesive Labels: Vinyl, thermal, transfer-printed, 3-mil- (0.08-mm-) thick, multicolor, weather- and UV-resistant, pressure-sensitive adhesive labels, configured for intended use and location.

1. Minimum Nominal Size:

a. 1-1/2 by 6 inches (37 by 150 mm) for raceway and conductors.
b. 3-1/2 by 5 inches (76 by 127 mm) for equipment.
c. As required by authorities having jurisdiction.

2.4 CABLE TIES

A. Plenum-Rated Cable Ties: Self-extinguishing, UV stabilized, one piece, and self-locking.

1. Minimum Width: 3/16 inch (5 mm).
2. Tensile Strength at 73 deg F (23 deg C) according to ASTM D638: 7000 psi (48.2 MPa).
3. UL 94 Flame Rating: 94V-0.
4. Temperature Range: Minus 50 to plus 284 deg F (Minus 46 to plus 140 deg C).
5. Color: Black.

2.5 MISCELLANEOUS IDENTIFICATION PRODUCTS

A. Paint: Comply with requirements in painting Sections for paint materials and application requirements. Retain paint system applicable for surface material and location (exterior or interior).

B. Fasteners for Labels and Signs: Self-tapping, stainless-steel screws or stainless-steel machine screws with nuts and flat and lock washers.

PART 3 - EXECUTION

3.1 PREPARATION

A. Self-Adhesive Identification Products: Before applying communications identification products, clean substrates of substances that could impair bond, using materials and methods recommended by manufacturer of identification product.

3.2 INSTALLATION

A. Verify and coordinate identification names, abbreviations, colors, and other features with requirements in other Sections requiring identification applications, Drawings, Shop Drawings, manufacturer's wiring diagrams, and operation and maintenance manual. Use consistent designations throughout Project.

B. Install identifying devices before installing acoustical ceilings and similar concealment.

C. Verify identity of each item before installing identification products.

D. Coordinate identification with Project Drawings, manufacturer's wiring diagrams, and operation and maintenance manual.

E. Apply identification devices to surfaces that require finish after completing finish work.

F. Install signs with approved legend to facilitate proper identification, operation, and maintenance of communications systems and connected items.

G. Elevated Components: Increase sizes of labels, signs, and letters to those appropriate for viewing from the floor.

H. Vinyl Wraparound Labels:

1. Secure tight to surface of raceway or cable at a location with high visibility and accessibility.
2. Attach labels that are not self-adhesive type with clear vinyl tape, with adhesive appropriate to the location and substrate.
3. Provide label 6 inches (150 mm) from cable end.

I. Self-Adhesive Labels:

1. On each item, install unique designation label that is consistent with wiring diagrams, schedules, and operation and maintenance manual.
2. Unless otherwise indicated, provide a single line of text with 1/2-inch- (13-mm-) high letters on 1-1/2-inch- (38-mm-) high label; where two lines of text are required, use labels 2 inches (50 mm) high.

J. Cable Ties: General purpose, except as listed below:

1. Outdoors: UV-stabilized nylon.
2. In Spaces Handling Environmental Air: Plenum rated.

3.3 IDENTIFICATION SCHEDULE

A. Install identification materials and devices at locations for most convenient viewing without interference with operation and maintenance of equipment. Install access doors or panels to provide view of identifying devices.

B. Identify conductors, cables, and terminals in enclosures and at junctions, terminals, pull points, and locations with high visibility. Identify by system and circuit designation.

C. Accessible Fittings for Raceways and Cables within Buildings: Identify covers of each junction and pull box with self-adhesive labels containing wiring system legend.

1. System legends shall be as follows:

a. Network/Voice
b. Audiovisual
c. Security
1) Intrusion

D. Faceplates/Surface Mount Box:
1. Label individual faceplate with self-adhesive labels. Place label at top of faceplate. Each faceplate shall be labeled with its individual, sequential designation, numbered clockwise when entering room from primary egress, composed of the following, in the format shown:
a. [Cable Origination Room #] : [Outlet #]

2. Label individual ports with self-adhesive labels. Place label above each port. Each port label shall be composed of the following, in the format shown:
a. [Outlet Port #]

E. Equipment Room Labeling:

1. Racks, Frames, and Enclosures: Identify front and rear of each with self-adhesive labels. Each shall be labeled sequentially, beginning with the device closest to the wall.
a. [Rack #]

2. Patch Panels: Label each individual patch panel in room sequentially, starting at the top of rack and working down, with self-adhesive labels. Patch panel numbering shall restart at one at each rack. Each patch panel label shall be composed of the following, in the format shown:
a. [Patch Panel #]

3. Patch Panel Port: Label each port with a self-adhesive label, place label directly above port in designated area. Each port shall be composed of the following, in the format shown:
a. [Cable Termination Room #] : [Outlet #] : [Outlet Port #]

F. Backbone Cables:
1. Label each cable within 6 inches of strand/conductor breakout with a vinyl-wraparound label indicating the location of the far or other end of the backbone cable. Each label shall be composed of the following, in the format shown:
a. [Room Number of other end of cable] : [Patching Device] : [Patching Device #]
b. Patching Device Legend:
1) Fiber Patch Panel
2) Copper Patch Panel
3) 110-Block
4) 66-Block

5) OTHER

G. Horizontal Cables: Label each cable within 6 inches of termination with a vinyl-wraparound label. Label shall match the port label as referenced above.

1. For cables terminated at patch panel:
   a. Refer to label specified at Patch Panel Port
2. For cables terminated at faceplate/surface mount box:
   a. Refer to label specified at faceplate/surface mount box

H. Instructional Signs: Self-adhesive labels.

I. Warning Labels for Indoor Cabinets, Boxes, and Enclosures: Laminated-acrylic or melamine-plastic sign

1. Apply to exterior of door, cover, or other access.

END OF SECTION 270553

SECTION 271513 - COMMUNICATIONS COPPER HORIZONTAL CABLING

PART 1 - GENERAL

1.1 RELATED DOCUMENTS

A. Drawings and general provisions of the Contract, including General and Supplementary Conditions and Division 01 Specification Sections, apply to this Section.

B. Section 270010 "Supplemental Requirements for Communications" for additional abbreviations, definitions, submittals, qualifications, testing agencies, and other Project requirements applicable to Work specified in this Section.

1.2 SUMMARY

A. Section Includes:

1. Category 6a twisted pair cable.
2. Twisted pair cable hardware, including panels and jacks.

1.3 DEFINITIONS

A. Cross-Connect: A facility enabling the termination of cable elements and their interconnection or cross-connection.

B. EMI: Electromagnetic interference.

C. FTP: Shielded twisted pair.

D. F/FTP: Overall foil screened cable with foil screened twisted pair.

E. F/UTP: Overall foil screened cable with unscreened twisted pair.

F. IDC: Insulation displacement connector.

G. LAN: Local area network.

H. Jack: Also commonly called an "outlet," it is the fixed, female connector.

I. Plug: Also commonly called a "connector," it is the removable, male telecommunications connector.

J. RCDD: Registered Communications Distribution Designer.

K. Screen: A metallic layer, either a foil or braid, placed around a pair or group of conductors.

L. Shield: A metallic layer, either a foil or braid, placed around a pair or group of conductors.

M. S/FTP: Overall braid screened cable with foil screened twisted pair.

N. S/UTP: Overall braid screened cable with unscreened twisted pairs.

O. UTP: Unscreened (unshielded) twisted pair.

1.4 ACTION SUBMITTALS

A. Product data:

1. The following products shall be included:
   a. Each type of Category Cabling
   b. Twisted pair cabling hardware

B. Shop Drawings:
1. Reviewed and stamped by RCDD.
2. Wiring diagrams and installation details of telecommunications equipment, to show location and layout of telecommunications equipment, including the following:
   a. Telecommunications cable termination locations.
   b. Typical telecommunications details.
   c. Patch Panel Configuration with racks and cable labels.
   d. Telecommunication room locations and cable origination locations.

C. Identification Schedule

1.5 INFORMATIONAL SUBMITTALS

A. Installer Qualification Data:
1. Qualifications per specification 270010 “Supplemental Requirements for Communications”.
2. RCDD certification for Installer, installation supervisor, and field inspector.
3. Manufacturer certification indicating completion of manufacturer specific training and/or accreditation for the installation of products submitted.

B. Field Quality Control Reports

C. Factory Test Reports.

D. Twisted Pair Cable Testing Plan.

1.6 CLOSEOUT SUBMITTALS

A. Operation and Maintenance Data

B. Warranty Documentation

C. Identification Schedule

D. Extra Material

1. Connecting Blocks: One of each type.
2. Cover Plates: Five of each type.
3. Jacks: Ten of each type.
4. Patch-Panel Units: One of each type.

E. Field test and inspection reports.

1.7 DELIVERY, STORAGE, AND HANDLING

A. Environmental Limitations: Do not deliver or install cables and connecting materials until wet-work in spaces is complete and dry, and temporary HVAC system is operating and maintaining ambient temperature and humidity conditions at occupancy levels during remainder of construction period.

B. Test cables upon receipt at Project site.

1. Test each pair of twisted pair cable for open and short circuits.

1.8 QUALITY ASSURANCE

A. Installer Qualifications: Cabling Installer must have personnel certified by BICSI on staff.

1. Layout Responsibility: Preparation of Shop Drawings, cabling administration Drawings, and field-testing program development by an RCDD.
2. Installation Supervision: Installation shall be under the direct supervision of Technician, who shall be present at all times when Work of this Section is performed at Project site.
3. Testing Supervisor: Currently certified by BICSI as an RCDD to supervise on-site testing.

B. Testing Agency Qualifications: An NRTL.

1. Testing Agency's Field Supervisor: Currently certified by BICSI as an RCDD to supervise on-site testing.

C. Electrical Components, Devices, and Accessories: Listed and labeled as defined in NFPA 70, by a qualified testing agency, and marked for intended location and application.

D. Telecommunications Pathways and Spaces: Comply with TIA-569-D.

E. Grounding: Comply with TIA-607-B.

PART 2 - PRODUCTS

2.1 PERFORMANCE REQUIREMENTS

A. General Performance: Horizontal cabling system shall comply with transmission standards in TIA-568-C.1, when tested according to test procedures of this standard.

2.2 GENERAL CABLE CHARACTERISTICS

A. Listed and labeled by an NRTL acceptable to authorities having jurisdiction as complying with the applicable standard and NFPA 70 for the following types:

1. Communications, Plenum Rated:

   a. Type CMP complying with UL 1685.

2. Communications, Non-Plenum Rated:

   a. Type CMR complying with UL 1666.

B. RoHS compliant.

C. It is a requirement that all equipment and components within a channel (patch cable to patch cable), inclusive of, but not limited to, cabling, jacks, plugs, faceplates, patch panels, patch cables, etc., shall be of a single manufacturer. All installation, testing, and warranty requirements shall be in-line with the chosen manufacturer's requirements.

2.3 CATEGORY 6a TWISTED PAIR CABLE

A. Description: Four-pair, balanced-twisted pair cable, with internal spline, certified to meet transmission characteristics of Category 6a cable at frequencies up to 500 MHz.

B. Standard: Comply with TIA-568-C.2 for Category 6a cables.

C. Conductors: 100-ohm, 23 AWG solid copper.

D. Shielding/Screening: Unshielded twisted pairs (UTP).

E. Cable Rating: Plenum.

F. Jacket: Refer to schedules.

2.4 TWISTED PAIR CABLE HARDWARE

A. Description: Hardware designed to connect, splice, and terminate twisted pair copper communications cable.

B. General Requirements for Twisted Pair Cable Hardware:

1. Comply with the performance requirements of Category 6a, dependent upon cabling used in conjunction with hardware.
2. Comply with TIA-568-C.2, IDC type, with modules designed for punch-down caps or tools.
3. Cables shall be terminated with connecting hardware of same category or higher.

C. Manufacturer Limitations: Obtain twisted pair cable hardware from single manufacturer that is from same manufacturer of structured cabling. The structured cabling solution shall be an end-

to-end solution from a single manufacturer, pursuant to, and in line with, the specific manufacturers product solution warranty.

D. Connecting Blocks:
   1. 110-style IDC for Category 6a.
   2. Provide blocks for the number of cables terminated on the block, plus 25 percent spare, integral with connector bodies, including plugs and jacks where indicated.
   3. All hardware required for a wall mounted solution shall be included.

E. Patch Panel: Modular panels housing numbered jack units with IDC-type connectors at each jack location for permanent termination of pair groups of installed cables.

   1. Features:

      a. Universal T568A and T568B wiring labels.
      b. Labeling areas adjacent to conductors.
      c. Replaceable connectors.
      d. 24 or 48 ports.

   2. Construction: 16-gauge steel and mountable on 19-inch (483 mm) equipment racks.
   3. Number of Jacks per Field: One for each four-pair cable indicated at minimum. Refer to rack elevation and schedules.
   4. A minimum of one patch panel shall be dedicated for analog voice communication applications. It shall be connected to the wall mounted 110-block via a 25-pair CAT5E cable. Horizontal cabling scheduled for analog voice use shall be patched from horizontal patch panel to the voice dedicated patch panel.

F. Patch Cords: Factory-made, four-pair cables in lengths as specified in drawing schedules; terminated with an eight-position modular plug at each end.

   1. Patch cords shall have bend-relief-compliant boots and color-coded icons to ensure performance. Patch cords shall have latch guards to protect against snagging.

G. Jacks and Jack Assemblies:

   1. Female; eight position; modular; fixed telecommunications connector designed for termination of a single four-pair, 100-ohm, unshielded or shielded twisted pair cable.
   2. Designed to snap-in to a patch panel or cover plate.
   3. Standard: Comply with TIA-568-C.2.
   4. Marked to indicate transmission performance.

H. Cover Plate:

   1. Four port, vertical single gang cover plates designed to mount to single gang wall boxes.
   2. For use with snap-in jacks accommodating any combination of twisted pair, optical fiber, and coaxial work area cords.

      a. Flush mounting jacks, positioning the cord at a 45-degree angle.

I. Legend:

1. Machine printed, in the field, using adhesive-tape label.
2. Snap-in, clear-label covers and machine-printed paper inserts.

2.5 IDENTIFICATION PRODUCTS

A. Comply with TIA-606-B and UL 969 for a system of labeling materials, including label stocks, laminating adhesives, and inks used by label printers.

PART 3 - EXECUTION

3.1 COPPER HORIZONTAL CABLING DESCRIPTION

A. Horizontal cable and its connecting hardware provide the means of transporting signals between the telecommunications outlet/connector and the horizontal cross-connect located in the communications equipment room. This cabling and its connecting hardware are called "permanent link," a term that is used in the testing protocols.

1. Horizontal cabling shall contain no more that one transition point or consolidation point between the horizontal cross-connect and the telecommunications outlet/connector.
2. Bridged taps and splices shall not be installed in the horizontal cabling.
3. Splitters shall not be installed as part of the optical fiber cabling.

B. The maximum allowable horizontal cable length is 295 feet. This maximum allowable length does not include an allowance for the length of 16 feet to the workstation equipment. The maximum allowable length does not include an allowance for the length of 16 feet in the horizontal cross-connect, when cabling leaves the communications equipment room.

3.2 SELECTION OF COMMUNICATIONS COPPER HORIZONTAL CABLING

A. All cable selection shall be as specified in section 2 and on the construction drawings. Final cable selection shall be approved through submittal process.

B. CMP (Plenum rated) Cabling: Plenum cabling shall be provided and installed in all Inside Plant (ISP) applications.
1. It is acceptable to utilize CMR (Riser rated) cabling interior to the telecommunications space when specified and/or with Contracting Officer's approval.
2. It is at the contractor's risk to utilize any non-CMP cabling for ISP applications.
3. It is acceptable to use ISP/OSP plenum rated cable within the building.

3.3 WIRING METHODS

A. Routing:
1. Unless otherwise and specifically indicated, cables shall be installed into, and route through raceways and/or cable trays as indicated below. Cables shall route via:
   a. Conduit(s) in all cases from telecom room to outlet/device or to nearest cable tray. Cable shall not be routed freely or exposed in any way outside of the telecom room or cable tray.

B. Wiring within Enclosures, cabinets, consoles and other such non-architectural equipment.

1. Cable shall route freely without raceway unless equipment provides raceway. Bundle, lace, and train cables within enclosures. Connect to terminal points with no excess and without exceeding manufacturer's limitations on bending radii. Provide and use lacing bars and distribution spools.

3.4 INSTALLATION OF PATHWAYS

A. Comply with Section 270528 "Pathways for Communications Systems."

B. Comply with Section 270529 "Hangers and Supports for Communications Systems."

C. Comply with Section 270536 "Cable Trays for Communications Systems."

D. Drawings indicate general arrangement of pathways and fittings.

3.5 INSTALLATION OF TWISTED-PAIR HORIZONTAL CABLES

A. Comply with NECA 1 and NECA/BICSI 568.

B. General Requirements for Cabling:

1. Comply with TIA-568-C.0, TIA-568-C.1, and TIA-568-C.2.
2. Comply with BICSI's "Information Transport Systems Installation Methods Manual (ITSIMM), Ch. 5, "Copper Structured Cabling Systems," "Cable Termination Practices" Section.
3. Install 110-style IDC termination hardware unless otherwise indicated.
4. Do not untwist twisted pair cables more than 1/2 inch (12 mm) from the point of termination to maintain cable geometry.
5. Terminate all conductors; no cable shall contain unterminated elements. Make terminations only at indicated outlets, terminals, cross-connects, and patch panels.
6. MUTOA shall not be used as a cross-connect point.
7. Consolidation points may be used only for making a direct connection to equipment outlets:

    a. Do not use consolidation point as a cross-connect point, as a patch connection, or for direct connection to workstation equipment.
    b. Locate consolidation points for twisted-pair cables at least 49 feet (15 m) from communications equipment room.

8. Cables may not be spliced. Secure and support cables at intervals not exceeding 30 inches (760 mm) and not more than 6 inches (150 mm) from cabinets, boxes, fittings, outlets, racks, frames, and terminals.
9. Install lacing bars to restrain cables, prevent straining connections, and prevent bending cables to smaller radii than minimums recommended by manufacturer.
10. Bundle, lace, and train conductors to terminal points without exceeding manufacturer's limitations on bending radii, but not less than radii specified in BICSI Information Transport Systems Installation Methods Manual, Ch. 5, "Copper Structured Cabling Systems," "Cable Termination Practices" Section. Use lacing bars and distribution spools.

11. Do not install bruised, kinked, scored, deformed, or abraded cable. Do not splice cable between termination, tap, or junction points. Remove and discard cable if damaged during installation, and replace it with new cable.
12. Cold-Weather Installation: Bring cable to room temperature before dereeling. Heat lamps shall not be used for heating.
13. Install a 10-foot- (3-m-) long service loop on each end of cable. One loop shall be located in communication room and one shall be located in accessible ceiling near cable termination. Refer to drawing details for more information.
14. Pulling Cable: Comply with BICSI Information Transport Systems Installation Methods Manual, Ch. 5, "Copper Structured Cabling Systems," "Pulling and Installing Cable" Section. Monitor cable pull tensions.

C. Open-Cable Installation:

1. Install cabling with horizontal and vertical cable guides in telecommunications spaces with terminating hardware and interconnection equipment.
2. Suspend twisted pair cabling, not in a wireway or pathway, a minimum of 8 inches (200 mm) above ceilings by cable supports not more than 60 inches (1524 mm) apart and not less than 48 inches (1220 mm) apart. Spacing of cable supports shall be at alternating distances (between the maximum and minimum separation requirements) to reduce effects of EMI generation on cable run(s). Refer to specification 270529 for cable hanger and support information.
3. Cable shall not be run through structural members or in contact with pipes, ducts, or other potentially damaging items.

D. Group connecting hardware for cables into separate logical fields.

E. Separation from EMI Sources:

1. Comply with recommendations from BICSI's "Telecommunications Distribution Methods Manual" and TIA-569-D for separating unshielded copper communication cable from potential EMI sources, including electrical power lines and equipment.
2. Separation between open communications cables or cables in nonmetallic raceways and unshielded power conductors and electrical equipment shall be as follows:

    a. Electrical Equipment Rating Less Than 2 kVA: A minimum of 5 inches (127 mm).
    b. Electrical Equipment Rating between 2 and 5 kVA: A minimum of 12 inches (300 mm).
    c. Electrical Equipment Rating More Than 5 kVA: A minimum of 24 inches (600 mm).

3. Separation between communications cables in grounded metallic raceways and unshielded power lines or electrical equipment shall be as follows:

    a. Electrical Equipment Rating Less Than 2 kVA: A minimum of 2-1/2 inches (64 mm).
    b. Electrical Equipment Rating between 2 and 5 kVA: A minimum of 6 inches (150 mm).
    c. Electrical Equipment Rating More Than 5 kVA: A minimum of 12 inches (300 mm).

4. Separation between communications cables in grounded metallic raceways, power lines, and electrical equipment located in grounded metallic conduits or enclosures shall be as follows:

   a. Electrical Equipment Rating Less Than 2 kVA: No requirement.
   b. Electrical Equipment Rating between 2 and 5 kVA: A minimum of 3 inches (76 mm).
   c. Electrical Equipment Rating More Than 5 kVA: A minimum of 6 inches (150 mm).

5. Separation between Communications Cables and Electrical Motors and Transformers, 5 kVA or HP and Larger: A minimum of 48 inches (1200 mm).
6. Separation between Communications Cables and Fluorescent Fixtures: A minimum of 5 inches (127 mm).

3.6 GROUNDING

A. Comply with requirements in Section 270526 "Grounding and Bonding for Communications Systems" for grounding conductors and connectors.

B. Install grounding according to the "Grounding, Bonding, and Electrical Protection" chapter in BICSI's "Telecommunications Distribution Methods Manual."

C. Comply with TIA-607-B and NECA/BICSI-607.

D. Bond metallic equipment to the grounding bus bar, using not smaller than a No. 6 AWG equipment grounding conductor.

3.7 IDENTIFICATION

A. Identify system components, wiring, and cabling complying with TIA-606-B. Comply with requirements for identification specified in Section 270553 "Identification for Communications Systems."

   1. Color-code cross-connect fields and apply colors to voice and data service backboards, connections, covers, and labels per indication on drawing schedules and rack elevations.

B. Cable Schedule: Install in a prominent location in each equipment room and wiring closet. List incoming and outgoing cables and their designations, origins, and destinations. Protect with rigid frame and clear plastic cover. Furnish an electronic copy of final comprehensive schedules for Project.

C. Cabling Administration Drawings: Show building floor plans with cabling administration-point labeling. Identify labeling convention and show labels for telecommunications closets, terminal hardware and positions, horizontal cables, work areas and workstation terminal positions, grounding buses and pathways, and equipment grounding conductors.

3.8 FIELD QUALITY CONTROL

A. Field tests and inspections must be witnessed by the Contracting Officer, coordinate with the Contracting Officer for scheduling and attendees requirements.

B. Tests and Inspections:

1. Perform manufacturer's recommended test and inspections.
2. Factory test cables on reels according to TIA-568-C.1.
3. Factory test twisted pair cables according to TIA-568-C.2.
4. Visually inspect jacket materials for NRTL certification markings. Inspect cabling terminations in communications equipment rooms for compliance with color-coding for pin assignments, and inspect cabling connections for compliance with TIA-568-C.1.
5. Visually inspect cable placement, cable termination, grounding and bonding, equipment and patch cords, and labeling of all components.
6. Test twisted pair cabling for DC loop resistance, shorts, opens, intermittent faults, and polarity between conductors. Test operation of shorting bars in connection blocks. Test cables after termination but not cross-connection.

    a. Test instruments shall meet or exceed applicable requirements in TIA-568-C.2. Perform tests with a tester that complies with performance requirements in "Test Instruments (Normative)" Annex, complying with measurement accuracy specified in "Measurement Accuracy (Informative)" Annex. Use only test cords and adapters that are qualified by test equipment manufacturer for channel or link test configuration.
    b. The following testing procedures shall be applied:
        1) Continuity
        2) Insertion Loss
        3) NEXT
        4) Return Loss
    c. All test reports shall be combined into a single document and provided to the Contracting Officer at completion of testing.

C. Data for each measurement shall be documented. Data for submittals shall be printed in a summary report that is formatted similarly to Table 10.1 in BICSI's "Telecommunications Distribution Methods Manual," or shall be transferred from the instrument to the computer, saved as text files, printed, and submitted.

D. Nonconforming Work:

1. End-to-end cabling will be considered defective if it does not pass tests and inspections.
2. Remove and replace cabling where test results indicate that they do not comply with specified requirements.

E. Collect, assemble, and submit test and inspection reports.

END OF SECTION 271513

SECTION 283111 - DIGITAL, ADDRESSABLE FIRE-ALARM SYSTEM

PART 1 - GENERAL

1.1 RELATED DOCUMENTS

A. Drawings and general provisions of the Contract, including General and Supplementary Conditions and Division 01 Specification Sections, apply to this Section.

1.2 SUMMARY

A. Section Includes:
   1. System smoke detectors.
   2. Notification appliances.

1.3 DEFINITIONS

A. LED: Light-emitting diode.

B. NICET: National Institute for Certification in Engineering Technologies.

1.4 SYSTEM DESCRIPTION

A. Noncoded, UL-certified addressable system, with multiplexed signal transmission, dedicated to fire-alarm service only.

1.5 SUBMITTALS

A. General Submittal Requirements:

   1. Submittals shall be approved by authorities having jurisdiction prior to submitting them to Contracting Officer.
   2. Shop Drawings shall be prepared by persons with the following qualifications:

      a. Trained and certified by manufacturer in fire-alarm system design.
      b. NICET-certified fire-alarm technician, Level IV minimum.
      c. Licensed or certified by authorities having jurisdiction.

B. Product Data: For each type of product indicated.

C. Shop Drawings: For fire-alarm system. Include plans, elevations, sections, details, and attachments to other work.

   1. Comply with recommendations in the "Documentation" Section of the "Fundamentals of Fire Alarm Systems" Chapter in NFPA 72.

2. Include voltage drop calculations for notification appliance circuits.
3. Include battery-size calculations.
4. Include performance parameters and installation details for each detector, verifying that each detector is listed for complete range of air velocity, temperature, and humidity possible when air-handling system is operating.
5. Include plans, sections, and elevations of heating, ventilating, and air-conditioning ducts, drawn to scale and coordinating installation of duct smoke detectors and access to them. Show critical dimensions that relate to placement and support of sampling tubes, detector housing, and remote status and alarm indicators. Locate detectors according to manufacturer's written recommendations.
6. Include voice/alarm signaling-service equipment rack or console layout, grounding schematic, amplifier power calculation, and single-line connection diagram.
7. Include floor plans to indicate final outlet locations showing address of each addressable device. Show size and route of cable and conduits.

D. Delegated-Design Submittal: For smoke and heat detectors indicated to comply with performance requirements and design criteria, including analysis data signed and sealed by the qualified professional engineer responsible for their preparation.

1. Drawings showing the location of each smoke and heat detector, ratings of each, and installation details as needed to comply with listing conditions of the detector.
2. Design Calculations: Calculate requirements for selecting the spacing and sensitivity of detection, complying with NFPA 72.

E. Qualification Data: For qualified Installer.

F. Field quality-control reports.

1.6 QUALITY ASSURANCE

A. Installer Qualifications: Personnel shall be trained and certified by manufacturer for installation of units required for this Project.

B. Installer Qualifications: Installation shall be by personnel certified by NICET as fire-alarm Level IV technician.

C. Source Limitations for Fire-Alarm System and Components: Obtain fire-alarm system from single source from single manufacturer. Components shall be compatible with, and operate as, an extension of existing system.

D. Electrical Components, Devices, and Accessories: Listed and labeled as defined in NFPA 70, by a qualified testing agency, and marked for intended location and application.

E. NFPA Certification: Obtain certification according to NFPA 72 by an NRTL.

F. NFPA Certification: Obtain certification according to NFPA 72 by a UL-listed alarm company.

1.7 EXTRA MATERIALS

A. Furnish extra materials that match products installed and that are packaged with protective covering for storage and identified with labels describing contents.

1. Lamps for Remote Indicating Lamp Units: Quantity equal to 10 percent of amount installed, but no fewer than 1 unit.
2. Lamps for Strobe Units: Quantity equal to 10 percent of amount installed, but no fewer than 1 unit.
3. Smoke Detectors, Fire Detectors: Quantity equal to 10 percent of amount of each type installed, but no fewer than 1 unit of each type.
4. Detector Bases: Quantity equal to 2 percent of amount of each type installed, but no fewer than 1 unit of each type.
5. Audible and Visual Notification Appliances: One of each type installed.

PART 2 - PRODUCTS

2.1 SYSTEM SMOKE DETECTORS

A. General Requirements for System Smoke Detectors:

1. Comply with UL 268; operating at 24-V dc, nominal.
2. Detectors shall be [four] [two]-wire type.
3. Integral Addressable Module: Arranged to communicate detector status (normal, alarm, or trouble) to fire-alarm control unit.
4. Base Mounting: Detector and associated electronic components shall be mounted in a twist-lock module that connects to a fixed base. Provide terminals in the fixed base for connection to building wiring.
5. Self-Restoring: Detectors do not require resetting or readjustment after actuation to restore them to normal operation.
6. Integral Visual-Indicating Light: LED type indicating detector has operated[and power-on status].
7. Remote Control: Unless otherwise indicated, detectors shall be analog-addressable type, individually monitored at fire-alarm control unit for calibration, sensitivity, and alarm condition and individually adjustable for sensitivity by fire-alarm control unit.

    a. Rate-of-rise temperature characteristic shall be selectable at fire-alarm control unit for 15 or 20 deg F (8 or 11 deg C) per minute.
    b. Fixed-temperature sensing shall be independent of rate-of-rise sensing and shall be settable at fire-alarm control unit to operate at 135 or 155 deg F (57 or 68 deg C).
    c. Provide multiple levels of detection sensitivity for each sensor.

B. Photoelectric Smoke Detectors:

1. Detector address shall be accessible from fire-alarm control unit and shall be able to identify the detector's location within the system and its sensitivity setting.
2. An operator at fire-alarm control unit, having the designated access level, shall be able to manually access the following for each detector:

a. Primary status.
b. Device type.
c. Present average value.
d. Present sensitivity selected.
e. Sensor range (normal, dirty, etc.).

2.2 NOTIFICATION APPLIANCES

A. General Requirements for Notification Appliances: Individually addressed, connected to a signaling line circuit, equipped for mounting as indicated and with screw terminals for system connections.

B. General Requirements for Notification Appliances: Connected to notification appliance signal circuits, zoned as indicated, equipped for mounting as indicated and with screw terminals for system connections.

1. Combination Devices: Factory-integrated audible and visible devices in a single-mounting assembly, equipped for mounting as indicated and with screw terminals for system connections.

C. Chimes, Low-Level Output: Vibrating type, 75-dBA minimum rated output.

D. Chimes, High-Level Output: Vibrating type, 81-dBA minimum rated output.

E. Horns: Electric-vibrating-polarized type, 24-V dc; with provision for housing the operating mechanism behind a grille. Comply with UL 464. Horns shall produce a sound-pressure level of 90 dBA, measured 10 feet (3 m) from the horn, using the coded signal prescribed in UL 464 test protocol.

F. Visible Notification Appliances: Xenon strobe lights comply with UL 1971, with clear or nominal white polycarbonate lens mounted on an aluminum faceplate. The word "FIRE" is engraved in minimum 1-inch-(25-mm-) high letters on the lens.

1. Rated Light Output:
   a. 15/30/75/110 cd, selectable in the field.

2. Mounting: Wall mounted unless otherwise indicated.
3. Flashing shall be in a temporal pattern, synchronized with other units.
4. Strobe Leads: Factory connected to screw terminals.
5. Mounting Faceplate: Factory finished, match existing.

G. Tone Notification Appliances:

1. Appliances shall comply with UL 1480 and shall be listed and labeled by an NRTL.
2. High-Range Units: Rated 2 to 15 W.
3. Low-Range Units: Rated 1 to 2 W.
4. Mounting: Surface mounted and bidirectional.
5. Matching Transformers: Tap range matched to acoustical environment of speaker location.

PART 3 - EXECUTION

3.1 EQUIPMENT INSTALLATION

A. Comply with NFPA 72 for installation of fire-alarm equipment.

B. Connecting to Existing Equipment: Verify that existing fire-alarm system is operational before making changes or connections.

1. Connect new equipment to existing control panel in existing part of the building.
2. Connect new equipment to existing monitoring equipment at the supervising station.
3. Expand, modify, and supplement existing control equipment as necessary to extend existing control functions to the new points. New components shall be capable of merging with existing configuration without degrading the performance of either system.

C. Smoke- or Heat-Detector Spacing:

1. Comply with NFPA 72, "Smoke-Sensing Fire Detectors" Section in the "Initiating Devices" Chapter, for smoke-detector spacing.
2. Comply with NFPA 72, "Heat-Sensing Fire Detectors" Section in the "Initiating Devices" Chapter, for heat-detector spacing.
3. Smooth ceiling spacing shall not exceed 30 feet (9 m).
4. Spacing of detectors for irregular areas, for irregular ceiling construction, and for high ceiling areas shall be determined according to Appendix A [or Appendix B]in NFPA 72.
5. HVAC: Locate detectors not closer than 3 feet (1 m) from air-supply diffuser or return-air opening.
6. Lighting Fixtures: Locate detectors not closer than 12 inches (300 mm) from any part of a lighting fixture.

D. Audible Alarm-Indicating Devices: Install not less than 6 inches (150 mm) below the ceiling. Install bells and horns on flush-mounted back boxes with the device-operating mechanism concealed behind a grille.

E. Visible Alarm-Indicating Devices: Install adjacent to each alarm bell or alarm horn and at least 6 inches (150 mm) below the ceiling.

F. Device Location-Indicating Lights: Locate in public space near the device they monitor.

3.2 IDENTIFICATION

A. Identify system components, wiring, cabling, and terminals. Comply with requirements for identification specified in Division 26 Section "Identification for Electrical Systems."

3.3 FIELD QUALITY CONTROL

A. Field tests shall be witnessed by Contracting Officer.

B. Perform tests and inspections.

C. Tests and Inspections:

1. Visual Inspection: Conduct visual inspection prior to testing.

   a. Inspection shall be based on completed Record Drawings and system documentation that is required by NFPA 72 in its "Completion Documents, Preparation" Table in the "Documentation" Section of the "Fundamentals of Fire Alarm Systems" Chapter.
   b. Comply with "Visual Inspection Frequencies" Table in the "Inspection" Section of the "Inspection, Testing and Maintenance" Chapter in NFPA 72; retain the "Initial/Reacceptance" column and list only the installed components.

2. System Testing: Comply with "Test Methods" Table in the "Testing" Section of the "Inspection, Testing and Maintenance" Chapter in NFPA 72.
3. Test audible appliances for the public operating mode according to manufacturer's written instructions. Perform the test using a portable sound-level meter complying with Type 2 requirements in ANSI S1.4.
4. Test audible appliances for the private operating mode according to manufacturer's written instructions.
5. Test visible appliances for the public operating mode according to manufacturer's written instructions.

D. Reacceptance Testing: Perform reacceptance testing to verify the proper operation of added or replaced devices and appliances.

E. Fire-alarm system will be considered defective if it does not pass tests and inspections.

F. Prepare test and inspection reports.

G. Maintenance Test and Inspection: Perform tests and inspections listed for weekly, monthly, quarterly, and semiannual periods. Use forms developed for initial tests and inspections.

END OF SECTION 28 31 11

SECTION 31 10 00 – SITE CLEARING

PART 1 - GENERAL

1.1 RELATED DOCUMENTS

A. Drawings and general provisions of the Contract, including General and Supplementary Conditions and Division 01 Specification Sections, apply to this Section.

1.2 SUMMARY

A. Section Includes:

1. Clearing and grubbing.
2. Surface material, weedy scrape, and organic material.
3. Disposal of material from clearing, grubbing, thinning and demolition in approved off-site disposal areas.
4. Filling of voids and excavations resulting from the work.

B. Related Sections:

1. Section 01 57 13 – Under-An-Acre Pollution Prevention
2. Section 02 41 13 – Selective Demolition
3. Section 31 20 00 – Earth Moving

1.3 MATERIAL OWNERSHIP

A. Except for materials indicated to be stockpiled or to remain on the Government's property, cleared materials shall become Contractor's property and shall be removed and disposed of legally. When possible, the Contractor should re-use or sell materials generated by Site Clearing such as timber, firewood, or wood chips.

1.4 SITE CONDTIONS

A. Site conditions existing during the bidding period will be maintained by the government insofar as practical.

B. Actual site condition variations that differ from those of the bidding period and which affect site clearing operations shall be brought to the attention of the Contracting Officer (CO) prior to the commencement of any site work.

1.5 SUBMITTALS

A. The Contractor shall submit the following information to the CO for review before commencing work:

1. Permits for transport and disposal of debris.
2. Demolition procedures and operational sequence.

PART 2 - PRODUCTS – Not Used.

PART 3 - EXECUTION

3.1 PROTECTION

A. The Contractor shall flag the limits of clearing shown on the drawings by accurate field survey with marked stakes or other means acceptable to the CO. Trees to remain shall be clearly identified during this staking process. The CO shall be notified a minimum of five (5) working days prior to scheduled commencement of clearing operations to review the flagged limits. Adjust the clearing limits as directed by the CO.

B. Install erosion-control measures prior to start of any other construction to prevent soil erosion and discharge of soil-bearing water runoff or airborne dust to adjacent properties and roadways in accordance with Section 01 57 13 – Under-An-Acre Pollution Prevention.

C. Before clearing begins, protect designated trees to remain with tree protection fencing to the approximate diameter of foliage (dripline of the tree) to prevent damage to the trunk, foliage and root system by construction equipment and procedures.

D. Place tree protection fencing as required to protect other plants, adjacent property areas to remain uncleared, monuments, and existing improvements from damage.

E. The Contractor shall repair or replace immediately any damage to existing trees or root systems that are to remain. The Contractor shall employ an arborist licensed in the State of Washington to determine the repair and replacement needs and methods for approval by the CO.

F. Replace damaged shrubs and other vegetation designated to remain with the same size and species.

G. The tree protection fencing shall be maintained for the duration of construction operations. The work shall include immediate replacement of any damaged fence. Fencing shall be removed from the site at the completion of construction operations. The fencing disposal shall be in accordance with local, state, and federal laws and regulations for the disposal of the material.

3.2 UTILITIES

A. Notify all corporations, companies, individuals, or local authorities owning or having jurisdiction over utilities running to, through, or across areas to be affected by site clearing operations.

B. Locate and identify existing utilities that are to remain and protect them from damage.

C. For utilities to be disconnected, have utility services disconnected in accordance with the requirements of the utility owner.

3.3 CLEARING AND GRUBBING

A. Clearing shall include cutting, removal, and off-site disposal of trees, bushes, shrubs, stumps, fallen timber, brush, refuse, trash, fencing and other incidental materials not required for reuse on the site.

B. The Contractor shall grub the area within the clearing limits to completely remove stumps and root systems, except for those to remain.

C. Depressions, excavations and voids resulting from the removal of stumps or roots shall be filled with suitable material and compacted as specified under Section 31 20 00 – Earth Moving.

3.4 DISPOSAL

A. Remove all material resulting from site clearing and demolition operations from site.

B. No burning of any material will be allowed.

END OF SECTION 31 10 00

SECTION 31 20 00 – EARTH MOVING

PART 1 - GENERAL

1.1 RELATED DOCUMENTS

A. Drawings and general provisions of the Contract, including General and Supplementary Conditions and Division 01 Specification Sections, apply to this Section.

1.2 SUMMARY

A. This Section includes the following:

1. Preparing subgrades buildings.
2. Preparing subgrades for roadways and parking areas.
3. Preparing subgrades for walkways.
4. Permeable material for rock trench.
5. Geotextile for drainage.

B. Related Sections include the following:

1. Section 01 57 13 – Under-An-Acre Pollution Prevention
2. Section 31 10 00 – Site Clearing
3. Section 31 25 00 – Erosion and Sediment Control
4. Section 32 13 20 – Site Concrete
5. Section 32 15 00 – Aggregate Surfacing

1.3 DEFINITIONS

A. Backfill: Soil material or controlled low-strength material used to fill an excavation.

1. Initial Backfill: Backfill placed beside and over pipe in a trench, including haunches to support sides of pipe.
2. Final Backfill: Backfill placed over initial backfill to fill a trench.

B. Base Course: The layer or layers of specified material placed on a subbase or subgrade to support a surface course.

C. Bedding Material: Granular material placed over the excavated subgrade in a trench above and below a pipe.

D. Borrow Soil: Satisfactory soil imported from off-site for use as fill or backfill.

E. Earth Grade: The elevation of the completely graded roadway before placing the pavement structure.

F. Engineered Fill: Clean, crushed, granular material that will support structures. Structural fill material will be material that is considered an all-weather fill material.

G. Excavation: Removal of material encountered above subgrade elevations and to lines and dimensions indicated.

1. Unauthorized Excavation: Excavation below subgrade elevations or beyond indicated lines and dimensions without direction by CO. Unauthorized excavation, as well as remedial work directed by CO, shall be without additional compensation.

H. Fill: Soil materials used to raise existing grades.

I. Pavement Structure: All combinations of subbase, base course, and surface course, including shoulders, placed on a subgrade.

J. Rock: Rock material in beds, ledges, unstratified masses, conglomerate deposits, and boulders of rock material 3/4 cu. yd. (0.57 cu. m) or more in volume that exceed a standard penetration resistance of 100 blows/2 inches (97 blows/50 mm) when tested by an independent geotechnical testing agency, according to ASTM D 1586.

K. Structures: Buildings, footings, foundations, retaining walls, curbs, or other man-made stationary features constructed above or below the ground surface.

L. Subbase Course: The layer of specified material placed on the subgrade as a part of the pavement structure.

M. Subgrade: The portion of the earth grade upon which the pavement structure is placed.

N. Utilities: On-site underground pipes, conduits, ducts, and cables.

O. Earthwork Terminology: Terms used in this Section and not defined herein shall be interpreted in accordance with the definitions given in ASTM D653.

P. Embankment: Soil or soil-rock material placed to raise the subgrade or natural grade of the site for embankment construction.

Q. Native Soil: Sand or silt naturally occurring on site that was never imported to the site, is weed free, and supports local native habitats.

R. Unsuitable Material: Excavated material or material below the natural ground surface in embankment areas or below subgrade elevation in excavated areas, which is unsuitable for its planned use as determined by the Contracting Officer. Unsuitable material is further defined as material determined to be:

1. Of such unstable nature as to be incapable of being compacted to specified density using ordinary methods at optimum moisture content.
2. Too wet to be properly compacted and circumstances prevent suitable in-place drying prior to incorporation into the Work.
3. Not meeting requirements specified in Part 2 of this Section.
4. Otherwise unsuitable for the planned use.

The presence of excessive moisture in a material is not, by itself, sufficient cause for determining that the material is unsuitable.

Q. Relative Compaction: The ratio, expressed as a percentage, of the in-place dry density of fill materials as compacted in the field to the maximum dry density of the same material.

R. Optimum Moisture Content: The water content at which a soil can be compacted to a maximum dry unit weight by a given compactive effort.

1.4 LAWS AND REGULATIONS

A. Work shall be accomplished in accordance with regulations of local, township, county, state and federal agencies or utility company standards as they apply.

1.5 SUBMITTALS

A. Delivery Tickets: Submit a delivery ticket with each load of imported material delivered to the site, stating the type of fill material, source, and the quantity.

B. Product Data: For the following:

1. All aggregates proposed for use.
2. Import fill.
3. Geotextile fabric.

C. Material Test Reports: The Contractor shall conduct testing at their own expense for material testing of material that does not come from a pre-approved quarry. The test information shall be provided to the CO for approval prior to material import. Material test reports shall be from a qualified testing agency indicating and interpreting test results for compliance of the following with requirements indicated:

1. Classification according to ASTM D 2487 of each on-site and import soil material proposed for fill and backfill.
2. Laboratory compaction curve according to ASTM D 1557 for each on-site and import soil material proposed for fill and backfill.

D. Compaction test results.

E. Pre-excavation Photographs or Videotape: Show existing conditions of adjoining construction and site improvements, including finish surfaces, that might be misconstrued as damage caused by earthwork operations. Submit before earthwork begins.

F. Weed Free Certificate: Certify the soil and aggregate materials are weed free.

1.6 QUALITY ASSURANCE

A. Pre-excavation Conference: Conduct conference at Project site to comply with requirements in Division 01 Section “Project Management and Coordination.”

B. Tolerances:

1. Construct finished subgrades to plus 0 or minus 1/2-inch of the elevations indicated.
2. Construct finished grade of slopes not steeper than 2:1 plus or minus 1/2 inch and on slopes steeper than 3:1 plus or minus two inches (2").
3. Maintain the moisture content of fill material as it is being placed within plus or minus 2% of the optimum moisture content of the material as determined by the laboratory tests herein specified.

1.7 PROJECT CONDITIONS

A. Existing Utilities: Do not interrupt utilities serving facilities occupied by Government or others unless permitted in writing by Contracting Officer and then only after arranging to provide temporary utility services according to requirements indicated.

1. Notify Contracting Officer not less than two days in advance of proposed utility interruptions.
2. Do not proceed with utility interruptions without Contracting Officer's written permission.
3. Contact utility-locator service for area where Project is located before excavating.

B. Demolish and completely remove from site existing underground utilities indicated to be removed. Coordinate with utility companies to shut off services if lines are active.

C. Unfavorable Weather Conditions:

1. Excavating, filling, backfilling, and grading work shall not be performed during weather conditions that might damage or be detrimental to the condition of existing ground, in-progress work, or completed work. When the Work is interrupted by rain, freezing weather, or other conditions deemed unsuitable by the Project Representative, excavating, filling, backfilling, and grading work shall not resume until the site and soil condition (moisture content) are suitable for compaction.
2. Subgrade shall be free from mud, snow, ice, and deleterious material when work is resumed.
3. Soil material that is too wet for compaction shall be left to drain, to be aerated and dried by disking and harrowing or other approved method until the moisture content of the area is uniform and within the specified limits.

D. Erosion Prevention: Protect stockpiles, ditches, embankments, filled, backfilled, and graded areas to prevent erosion until such time as permanent drainage and erosion control measures have been installed per the requirements of Section 01 57 23 – Under-An-Acre Pollution Prevention.

E. Control of Dust: Employ construction methods and means that keep flying dust to the minimum throughout the entire Contract period. It may include watering and sprinkling, or other approved methods at the construction site of such frequency that will satisfactorily control the dust caused by construction operations.

F. Control of Dirt: Promptly remove from existing roadways all dirt and other materials that have been spilled, washed, tracked, or otherwise deposited thereon by construction operations whenever the accumulation is sufficient to cause the formation of mud, interfere with drainage, damage pavements, or create a traffic hazard.

G. Indicated locations of existing facilities and systems are approximate. Investigate and determine exact location and nature of utilities, facilities, and systems, and be solely responsible for damages caused by construction activities.

H. Excavation in areas that have or may have underground facilities:

1. Delineate with white paint, flags, or other methods the area to be excavated and contact Underground Location Service to request that Government mark the location of underground utilities.
2. Identify temporary survey markings using PINK colored markings in accordance with Underground Service alert requirements.
3. Government will field mark approximate location and number of subsurface installations affected by excavation using the following colors:

    a. Safety RED – Electric power, distribution, and transmission installations, or municipal electric installations.
    b. High Visibility Safety YELLOW – Gas distribution and transmission installations, oil distribution and transmission installations containing or transporting dangerous materials, products, or steam.
    c. Safety Alert ORANGE – Telephone and telegraph installations, police and fire communication installations, and cable television installations.
    d. Safety Precaution BLUE – Water installations and slurry pipelines.
    e. Safety GREEN – Sewer installations.
    f. Do not use above listed colors for Contractor's temporary markings suck as survey points; use U.S.A. designated PINK color.

PART 2 - PRODUCTS

2.1 STRUCTURAL FILL MATERIALS

A. Any imported materials shall be clean and weed free and the materials source determined in consultation with the park. Any site certifications must include a list of species present at the material source location.

B. Structure backfill must be free of organic or other unsatisfactory material.

C. Structural fill, including fill supporting structures and pavements should be free of all debris and organic matter. Structural fill shall be near the optimum moisture content and otherwise capable of being compacted to the required specifications for the particular use. Material used for structural fill shall include clean sand and gravel; well-graded mixtures of sand and gravel (commonly called "granular borrow" or "pit run"); mixtures of silt, sand, and gravel; crushed rock; quarry spalls; and controlled density fill (CDF). If on-site soils do not meet the criteria for structural fill, or cannot be reworked to a suitable condition, imported granular fill consisting of clean, well-graded sand and gravel complying with the requirements below shall be used.

1. If the imported material has a sand equivalent less than 30, it must have less than 5% passing the No. 200 sieve, in accordance with AASHTO T 27 / T 11.

Other materials may be used with the approval of the CO. Structural fill imported during wet weather shall be free-draining.

D. Rocks exceeding four inches (4″) in largest dimension and deleterious material shall be removed from the site and disposed of as specified herein under Disposal of Surplus Material.

E. Excavated material not suitable for use as structure backfill may be used to replace imported borrow or other excavated material.

2.2 SOIL MATERIALS

A. General

1. Any imported materials shall be clean and weed free and the materials source determined in consultation with the park plant ecologist. Any site certifications must include a list of species present at the material source location.

B. Aggregate for Base Course: Aggregate Base as defined in Section 32 15 00 – Aggregate Surfacing.

C. Embankment: All embankment material shall consist of clean well-graded soil with little or no potential for expansion.

D. Geotextile for drainage: Geotextile shall be nonwoven and shall comply with the requirements in the following table:

Quality Characteristic	**Test Method**	**Minimum Average Roll Values (in weaker principal direction)**
Grab Tensile Strength, lb	ASTM D4632	180
Puncture Strength, lb	ASTM D6241	450
Apparent Opening Size, Standard Sieve	ASTM D4751	#70 or Finer
Permittivity, sec^{-1}	ASTM D4491	0.7

E. Pipe Bedding Material: Bedding material shall consist of natural sand obtained from acceptable pits. The sand shall be free of clay or organic material and shall comply with the following gradation requirements:

Sieve Size	**Percentage Passing**
No. 4	90-100
No. 200	0-5

F. Permeable material: Permeable material shall be Aggregate for Open Graded Base Class II and shall comply with the following gradation requirements:

Sieve Size	**Percentage Passing**
2”	100
1 ½”	90-100
¾”	40-75
½”	20-40
No. 4	0-10

No. 8	0-5.0

G. Sand: ASTM C 33; fine aggregate, natural, or manufactured.

PART 3 - EXECUTION

3.1 PREPARATION

A. Protect structures, utilities, pavements, and other facilities from damage caused by settlement, lateral movement, undermining, washout, and other hazards created by earthwork operations.

B. Preparation for earthwork operations including removal of vegetation, topsoil, debris, and obstructions, from ground surface is specified in Section 31 10 00 – Site Clearing.

C. Provide erosion-control measures to prevent erosion or displacement of soils and discharge of soil-bearing water runoff or airborne dust.

3.2 STAKING AND GRADES

A. Layout the work, establish all necessary markers, benchmarks, grading stakes, and other stakes as required, in accordance with the lines and grades of the Plans.

3.3 UTILITIES

A. Verify on site the location and depth (elevation) of all existing utilities and services before performing any excavation work. Use the 811-call utility service and other means required to verify locations.

B. Active utility lines encountered, which are not indicated in the Contract Documents, shall be reported immediately to the Contracting Officer and utility owners involved. The Contracting Officer and utility authorities shall be permitted free access to determine the measures deemed necessary to repair, relocate, or remove the utility.

3.4 EARTHWORK GENERAL REQUIREMENTS

A. Erosion Protection: Prevent erosion of the site and turbidity in adjacent waterbodies of the site at all times. Conform to all the requirements as per Section 01 57 13 – Under-An-Acre Pollution Prevention and Section 31 25 00 – Erosion and Sediment Controls.

B. Construction Traffic: Protect exposed soil layers with high moisture content from excessive wheel loads.

C. On-Site Excavation:

1. Do not excavate or remove any material from the project site which is not within the designated excavation.

2. The Contractor is responsible for retaining enough excavated material for reuse for any actions and for disposing excess material off-site.

D. Disposal of Surplus Material:

1. Excess earth materials, unsuitable materials, and debris shall be removed from the site and disposed of in a legal manner. The Contractor is to provide the CO with copies of the documentation for the legal disposal of materials.

E. Maintenance of Excavations, Slopes, and Embankments:

1. Reroute surface water runoff away from excavated areas. Do not allow water to accumulate in excavations. Do not use excavated trenches as temporary drainage ditches.
2. Maintain slopes and embankments until final completion and acceptance of the Work. Promptly repair slides, slipouts, washouts, settlements, and subsidence that occur for any reason, and refinish the slope or embankment to the indicated lines and grades.

F. Dust and Dirt Control: Provide satisfactory control or remove dust and/or dirt at the project site and adjacent roadways whenever traffic or buildings that are occupied or in use, are affected.

3.5 ROUGH GRADING AND FILLING

A. Fill or backfill holes, swales, and low points that will not otherwise be removed in the course of the Work, to the indicated grades.

3.6 DEWATERING

A. Prevent surface water and ground water from entering excavations, from ponding on prepared subgrades, and from flooding Project site and surrounding area. Discharge locations shall be identified in a preconstruction submittal and approved by the CO. All discharge shall avoid turbidity or erosion into adjacent water bodies.

B. Protect subgrades from softening, undermining, washout, and damage by rain or water accumulation.

1. Reroute surface water runoff away from excavated areas. Do not allow water to accumulate in excavations. Do not use excavated trenches as temporary drainage ditches.
2. Install a dewatering system to keep subgrades dry and convey ground water away from excavations. Maintain until dewatering is no longer required.

3.7 EXPLOSIVES

A. Explosives: Do not use explosives.

3.8 EXCAVATION

A. The bottoms of excavations shall be level, firm, undisturbed earth, clean and free from loose material, debris, and foreign matter.

B. Protect existing structures during excavation.

C. Excavate to the lines and grades indicated on the Contract Drawings.

D. Support and maintain excavation so that sides are stable and will not move. Excavations may be maintained by sloping cut faces where space permits, or by providing structural support of earth walls.

E. Limits of excavations shall allow for adequate working space for installing forms, and as required for safety of personnel.

F. Excavation and its restoration, when conducted for convenience of the Contractor, shall be at no additional expense to the Government.

G. Place excavated material at sufficient distance from edge of excavation so as not to cause cave-ins or bank slides, but in no case closer than three feet (3′) from the edge of excavations.

H. Condition excavated earth material that is suitable for backfill or embankment for re-use. Test, screen, and mix as necessary to meet specified requirements.

I. Footing excavations shall be free of any loose, soft, or disturbed material, and water prior to placement of reinforcing bars and concrete.

3.9 EMBANKMENT CONSTRUCTION

A. Fill shall be placed in level lifts not exceeding 8 inches in loose thickness. Each lift shall be brought to within 3 percent of optimum moisture content and compacted to at least 90 percent compaction.

B. Finished fill slopes shall be constructed at an inclination no steeper than 2:1. Fill slopes shall be overbuilt and trimmed back as necessary to expose a well-compacted surface.

C. Structural fill supporting footings shall extend laterally outside of the footing base at a 1H:1V or flatter inclination projected down and away from the bottom edges of the footing.

D. Routine maintenance of slope sloughing and erosion should be anticipated. Fill slopes and areas disturbed during construction shall be planted with vegetation to reduce erosion.

E. Remove material that cannot be compacted to the required density within specified tolerances and replace with suitable material at no additional expense to the Government.

3.10 STRUCTURAL FILL SUBGRADE PREPARTION

A. The subgrade surface shall be free of any water, debris, organic, loose, soft, disturbed, or other deleterious material prior to placement of fill, reinforcing bars, and concrete.

B. If grading or excavation to the subgrade during construction reveal highly variable conditions within the foundation footprint, subgrade shall be over excavated and replaced with compacted engineered fill to achieve a uniform subgrade surface.

C. Native subgrade that is wet, unsuitable, or that has become loosened by the contractor's operation shall be properly moisture conditioned and compacted or over-excavated and replaced with a suitable engineered fill. Caution should be exercised if compacting by means of proof rolling so as not to damage the subgrade.

D. Structural fill shall be placed in level lifts not exceeding 8 inches in loose thickness and compacted to at least 95 percent of maximum ASTM D 1557 dry density below all footings and within 3 feet of final grade in pavement areas.

E. Structural fill placed around footings should be compacted to at least 95 percent of maximum ASTM D 1557 dry density.

F. After the densification process, a firm, unyielding, stable surface shall be produced.

G. Proof-rolling shall be performed prior to constructing any structures founded on engineered fill with a fully loaded 10-yard dump truck. Remove yielding areas to expose suitable subgrade.

H. Notify CO when excavations have reached required subgrade and before placing any fill material. If CO determines that unsatisfactory soil is present, continue excavation and replace with compacted backfill or fill material as directed.

I. For pavement, slab, structural fill, or foundation subgrade, any suitable material loosened during excavation or other activities prior to placement of structural fill, pavement or slab materials, or foundations shall be compacted.

J. If wet fine-grained soils are encountered at the subgrade, geotextile meeting the requirements of Section 2.2.C shall be installed prior to backfilling.

K. Where fill will be placed adjacent to an existing slope, steps shall be excavated into the existing slope to help "key" the new fill into the slope.

L. Structural fill shall be placed on firm, un-yielding subgrade prepared in accordance with these specifications.

M. Perform all cutting, blading, and shaping as required to cut and shape the subgrade to the grades and elevations indicated.

N. Subgrade preparation includes fine grading, reworking as necessary, and preparation of cut, fill, or embankment upon which structure and equipment foundations, pipe, base, and pavement will be placed.

O. The upper 6 inches of subgrade under pavements shall be moisture conditioned and compacted to at least 95 percent relative compaction and should be smooth and unyielding.

P. After the material has been thoroughly mixed and moisture-conditioned, accurately construct and fine grade the subgrade to indicated line, grade, and contour with high and low spots eliminated. Compact for full width to the specified density. Remove soft spots developed during working, fill with approved material, and re-compact.

Q. If soil moisture conditions allow, after exposing the subgrade for pavement, slab, or structural fill, proof-rolling the subgrade with a loaded dump truck or other heavy wheeled vehicle to identify soft pockets and areas of excess yielding. Do not proof-roll wet or saturated subgrades.

1. Completely proof-roll subgrade in one direction, repeating proof-rolling in direction perpendicular to first direction. Limit vehicle speed to 3 mph (5km/h).
2. Proof-roll with loaded 10-wheel, tandem-axle dump truck weighing not less than 15 tons (13.6 tonnes).
3. Excavate soft spots, unsatisfactory soils, and areas of excessive pumping or rutting, as determined by CO and replace with compacted backfill or fill as directed.

R. Authorized additional excavation and replacement material will be paid for according to Contract provisions for unit prices.

S. Reconstruct subgrades damaged by freezing temperatures, frost, rain, accumulated water, or construction activities, as directed by CO, without additional compensation.

3.11 STORAGE OF SOIL MATERIALS

A. Stockpile borrow soil materials and excavated satisfactory soil materials without intermixing. Place, grade, and shape stockpiles to drain surface water. Cover to prevent windblown dust.

1. Stockpile soil materials away from edge of excavations. Do not store within drip line of remaining trees.
2. Temporary stockpiles shall be no higher than 5 feet.

3.12 BACKFILL

A. Place backfill on subgrades free of mud, frost, snow, or ice.

B. Place backfill in horizontal layers not to exceed 8 inches of loose material and compact each layer to at least 90 percent of maximum ASTM D1557 dry density before the next layer is placed.

C. Place backfill material in such a manner that unbalanced horizontal loads will not be applied to a newly placed structure or portion of a structure, utilities, or pipelines.

D. Do not backfill on or against structural concrete until the specified 28-day concrete strength has been attained.

E. Do not use compaction equipment and methods that produce excessive horizontal or vertical earth pressures.

3.13 SOIL MOISTURE CONTROL

A. Uniformly moisten or aerate subgrade and each subsequent fill or backfill soil layer for the parking lot/picnic area or trail before compaction to within 3 percent of optimum moisture content.

1. Do not place backfill or fill soil material on surfaces that are muddy, frozen, or contain frost or ice.
2. Remove and replace, or scarify and air dry otherwise satisfactory soil material that exceeds optimum moisture content by 3 percent and is too wet to compact to specified dry unit weight.

3.14 COMPACTION OF SOIL BACKFILLS AND FILLS

A. Place backfill and fill soil materials in layers not more than 8 inches in loose depth for material compacted by heavy compaction equipment, and not more than 4 inches in loose depth for material compacted by hand-operated tampers.

B. Place backfill and fill soil materials evenly on all sides of structures to required elevations, and uniformly along the full length of each structure.

C. Fill compaction shall be verified by means of in-place density tests performed per ASTM D6938 (or appropriate alternative when ASTM D6938 is not suitable for the fill material) during fill placement so that compaction may be evaluated as earthwork progresses.

D. Compact soil materials to not less than the following percentages of maximum dry unit weight according to ASTM D 1557:

Fill Application	**Minimum Compaction %**
Building Pad	95
Footing subgrade or bearing pad	95
Slab-on-grade floor subgrade and subbase	95
Retaining wall footing subgrade	95
Concrete slab subgrades	95
Asphalt pavement base and subbase	95
Asphalt pavement subgrade, within 3 feet of finished grade	95
Asphalt pavement subgrade, more than 3 feet below finished grade	90
Retaining wall backfill	90
Footing and stem wall backfill	90

3.15 GRADING

A. General: Uniformly grade areas to a smooth surface, free of irregular surface changes. Comply with compaction requirements and grade to cross sections, lines, and elevations indicated.

1. Provide a smooth transition between adjacent existing grades and new grades.
2. Cut out soft spots, fill low spots, and trim high spots to comply with required surface tolerances.

B. Site Grading: Slope grades to direct water away from buildings and to prevent ponding. Finish subgrades to required elevations within the following tolerances:

1. Unpaved Areas: Plus or minus 1 inch.

2. Walks: Plus or minus 1 inch.
3. Pavements: Plus or minus 1/2 inch.

3.16 SUBBASE AND BASE COURSES

A. Place subbase and base course on subgrades free of mud, frost, snow, or ice.

B. On prepared subgrade, place subbase and base course under pavements and walks as follows:

1. Place base course material over subbase course under hot-mix asphalt pavement.
2. Shape subbase and base course to required crown elevations and cross-slope grades.
3. Place subbase and base course 6 inches or less in compacted thickness in a single layer.
4. Place subbase and base course that exceeds 6 inches in compacted thickness in layers of equal thickness, with no compacted layer more than 6 inches thick or less than 3 inches thick.
5. Compact subbase and base course at optimum moisture content to required grades, lines, cross sections, and thickness to not less than 95 percent of maximum dry unit weight according to ASTM D 1557.

3.17 SHORING AND SHEETING

A. Construct and maintain all shoring, sheeting, and slope lay-back necessary to protect the excavation, as need for safety of the employees and as required by applicable State and Federal laws.

B. For trenches over five (5) feet deep, provide suitable barricades for worker protection. When work area is left open and unattended by Contractor, provide suitable barricades for public safety, regardless of trench depth.

C. For trenches over four (4) feet deep, provide suitable exit means in accordance with applicable provisions in OSHA.

D. Do not remove timber or sheeting if it is in a compacted zone. Trim timber or sheeting off at a safe level above that zone.

E. As directed, remove all other sheeting and shoring when no longer needed.

3.18 FIELD QUALITY CONTROL

A. Testing Agency: Contractor shall engage a qualified independent geotechnical engineering testing agency to perform field quality-control testing.

B. Allow testing agency to inspect and test subgrades and each fill or backfill layer. Proceed with subsequent earthwork only after test results for previously completed work comply with requirements.

C. Testing agency will test compaction of soils in place according to ASTM D 1556, ASTM D 2167, ASTM D 2922, and ASTM D 2937, as applicable. Tests will be performed at the following locations and frequencies:

1. Paved Areas: At subgrade and at each compacted fill and backfill layer, at least 1 test for every 2000 sq. ft. or less of paved area or building slab, but in no case fewer than 3 tests.
2. Trench Backfill: At each compacted initial and final backfill layer, at least 1 test for each 150 feet or less of trench length, but no fewer than 2 tests.

D. When testing agency reports that subgrades, fills, or backfills have not achieved degree of compaction specified, scarify and moisten or aerate, or remove and replace soil to depth required; recompact and retest until specified compaction is obtained.

3.19 PROTECTION

A. The subgrade must be protected from other construction activities, traffic, and weather conditions. The subgrade will degrade and become unsuitable if the soil gets too wet or too dry. Construction activity and equipment of all types have the potential to disturb and negatively impact the prepared subgrade. The contractor shall implement suitable procedures to protect the subgrade, such as excavating without tracking on the native soils, use of a crushed rock or gravel-working mat, dewatering, soil admixing, geotextiles, or other suitable procedures during construction.

B. Pavement and foundation subgrade shall be maintained in a well-compacted state and protected from degradation prior to paving or placing concrete. Protection measures may include restricted traffic, perimeter drain ditches, or placement of a protective gravel layer on the subgrade. Disturbed or wet areas in the subgrade shall be removed and replaced with suitably compacted structural fill.

C. Protecting Graded Areas: Protect newly graded areas from traffic, freezing, and erosion. Keep free of trash and debris.

D. Repair and reestablish grades to specified tolerances where completed or partially completed surfaces become eroded, rutted, settled, or where they lose compaction due to subsequent construction operations or weather conditions.

1. Scarify or remove and replace soil material to depth as directed by CO; reshape and recompact.

E. Where settling occurs before Project correction period elapses, remove finished surfacing, backfill with additional soil material, compact, and reconstruct surfacing.

1. Restore appearance, quality, and condition of finished surfacing to match adjacent work, and eliminate evidence of restoration to greatest extent possible.

3.20 DISPOSAL OF SURPLUS AND WASTE MATERIALS

A. Disposal: Remove surplus satisfactory soil and waste material, including unsatisfactory soil, trash, and debris, and legally dispose of it.

B. Disposal: Remove and legally dispose of all miscellaneous debris, trash, construction materials off Park property.

END OF SECTION 31 20 00

SECTION 32 13 20 – SITE CONCRETE

PART 1 - GENERAL

1.1 RELATED DOCUMENTS

A. Drawings and general provisions of the Contract, including General and Supplementary Conditions and Division 01 Specification Sections, apply to this Section.

1.2 SUMMARY

A. Section includes cast-in-place concrete, including formwork, reinforcement, concrete materials, mixture design, placement procedures, and special concrete flatwork finish, for the following:

1. Concrete pavement.

B. Related Sections:

1. Section 03 20 00 – Concrete Reinforcing.
2. Section 03 30 00 – Cast-in-Place Concrete.

1.3 DEFINITIONS

A. Cementitious Materials: Portland cement alone or in combination with one or more of the following: blended hydraulic cement, fly ash and other pozzolans, ground granulated blast-furnace slag, and silica fume; subject to compliance with requirements.

B. Broom Finish Concrete Paving: Where shown on the drawings, using a medium bristle concrete finishing brush perpendicular to the direction of travel.

1.4 SUBMITTALS

A. Product Data: For each type of product.

B. Design Mixtures: For each concrete mixture. Submit design mixtures when characteristics of materials, Project conditions, weather, test results, or other circumstances warrant adjustments.

C. Steel Reinforcement Shop Drawings: Placing drawings that detail fabrication, bending, and placement. Include bar sizes, lengths, material, grade, bar schedules, stirrup spacing, bent bar diagrams, bar arrangement, splices and laps, tie spacing, hoop spacing, and supports for concrete reinforcement.

D. Qualification Data: For manufacturer testing agency.

E. Material Certificates: For each of the following, signed by manufacturers:

1. Cementitious materials.
2. Admixtures.
3. Form materials and form-release agents.
4. Curing compounds.
5. Adhesives.
6. Vapor retarders.
7. Semirigid joint filler.
8. Joint-filler strips.
9. Repair materials.

F. Material Test Reports: For the following, from a qualified testing agency, indicating compliance with requirements:

1. Aggregates.

G. Field quality-control reports.

1.5 QUALITY ASSURANCE

A. Testing will be performed by an independent testing laboratory selected by the Contractor. All tests will be paid for by the Contractor.

B. Installer Qualifications: A qualified installer who employs on Project personnel qualified as ACI-certified Flatwork Technician and Finisher and a supervisor who is an ACI-certified Concrete Flatwork Technician.

C. Manufacturer Qualifications: A firm experienced in manufacturing ready-mixed concrete products and that complies with ASTM C 94/C 94M requirements for production facilities and equipment.

1. Manufacturer certified according to NRMCA's "Certification of Ready Mixed Concrete Production Facilities."

D. Testing Agency Qualifications: An independent agency, acceptable to authorities having jurisdiction, qualified according to ASTM C 1077 and ASTM E 329 for testing indicated.

1. Personnel conducting field tests shall be qualified as ACI Concrete Field Testing Technician, Grade 1, according to ACI CP-1 or an equivalent certification program.
2. Personnel performing laboratory tests shall be ACI-certified Concrete Strength Testing Technician and Concrete Laboratory Testing Technician - Grade I. Testing Agency laboratory supervisor shall be an ACI-certified Concrete Laboratory Testing Technician - Grade II.

E. Source Limitations: Obtain each type or class of cementitious material of the same brand from the same manufacturer's plant, obtain aggregate from single source, and obtain admixtures from single source from single manufacturer.

F. ACI Publications: Comply with the following unless modified by requirements in the Contract Documents:

1. ACI 301, “Specifications for Structural Concrete,” Sections 1 through 5.
2. ACI 117, “Specifications for Tolerances for Concrete Construction and Materials.”

G. Concrete Testing Service: Engage a qualified independent testing agency to perform material evaluation tests and to design concrete mixtures.

PART 2 - PRODUCTS

2.1 FORM-FACING MATERIALS

A. Rough-Formed Finished Concrete: Plywood, lumber, metal, or another approved material. Provide lumber dressed on at least two edges and one side for tight fit.

B. Chamfer Strips: Wood, metal, PVC, or rubber strips, 3/4 by 3/4 inch, minimum.

C. Form-Release Agent: Commercially formulated form-release agent that will not bond with, stain, or adversely affect concrete surfaces and will not impair subsequent treatments of concrete surfaces. The form-release agent shall be natural, organic, VOC compliant, and biodegradable.

1. Formulate form-release agent with rust inhibitor for steel form-facing materials.

D. Form Ties: Factory-fabricated, removable or snap-off metal or glass-fiber-reinforced plastic form ties designed to resist lateral pressure of fresh concrete on forms and to prevent spalling of concrete on removal.

1. Furnish units that will leave no corrodible metal closer than 1 inch to the plane of exposed concrete surface.
2. Furnish ties that, when removed, will leave holes no larger than 1 inch in diameter in concrete surface.

2.2 CONCRETE MATERIALS

A. Cementitious Material

1. Use one of the following cementitious materials, of the same type, brand, and source, throughout Project:

a. Combination of Type II or Type V Portland Cement and SCM.
b. Blended Concrete.

B. Silica Fume

1. ASTM C 1240, amorphous silica.

C. Aggregates

1. Use a fine and coarse concrete aggregate that meets the following requirements:

Characteristic	Test Method	Requirements
Idaho Degradation	Idaho IT 15	5.0% maximum loss
Ethylene Glycol	Idaho IT 116	90% minimum retained
Sodium Sulfate Soundness	AASHTO T 104	Maximum 10% loss for fine aggregate and 12% loss for coarse aggregate after 5 cycles

2. Do not use limestone for fine or coarse aggregate in concrete wearing surfaces.
3. Fine aggregate shall meet the following requirements:

Fine Aggregate Gradation

Sieve Size	% Passing
3/8”	100
No. 4	95-100
No. 16	45-80
No. 50	10-30
No. 100	2-10
No. 200	0-4.0

Fine Aggregate Criteria

Characteristic	Test Method	Requirements
Sand Equivalent	AASHTO T 176 Modified Alternate Method No. 2 Pre-wet	70 minimum
Organic Impurities	AASHTO T 21	Reject a color darker than the standard
Deleterious Substances (percent by mass)	AASHTO M 6	Clay Lumps….1.0 max Coal & Lignite….1.0 max Others (shale, alkali, mica, coated grains, soft and flaky particles)….5.0 max

4. Coarse aggregate shall meet the following requirements:

Coarse Aggregate Size No. & Gradation

	% Passing					
Sieve Size	**1**	**2a**	**2b**	**3**	**4**	**5**
2 ½”	--	--	--	--	--	100
2”	--	--	--	--	100	95-100
1 ½”	--	--	--	100	95-100	--
1”	--	100	100	95-100	--	35-70
¾”	100	90-100	80-100	--	35-70	--
½”	90-100	--	--	25-60	--	10-30
3/8”	40-70	20-55	10-40	--	10-30	--
No. 4	0-15	0-10	0-4	0-10	0-5	0-5
No. 8	0-5	0-5	--	0-5	--	--

Coarse Aggregate Criteria

Characteristic	Test Method	Requirements
Los Angeles Abrasion	AASHTO T 96	35% maximum
Deleterious Substances	AASHTO M 80	--
	Coal & Lignite	1.0% max by mass
	Clay Lumps	0.5% max by mass

	Clay Lumps & Friable Particles	2.0% max by mass
	Material Passing No. 200 Sieve	1.0% max by mass
	Flat and Elongated Aggregate Particles (length to thickness ratio greater than 5)	15.0% maximum

5. As an option to using coarse and fine graded aggregates for concrete, aggregate gradation may consist of a combined gradation meeting the following requirements:

	Individual Percent Retained				
Sieve Size	**1C**	**2C**	**3C**	**4C**	**5C**
2 ½”	--	--	--	--	0
2”	--	--	--	0	0-10
1 ½”	--	--	0	0-10	4-18
1”	--	0	0-10	4/18	6-20
¾”	0	0-10	4-18	6/20	6-20
½”	0-10	4-18	6-20	6-20	6-20
3/8”	5-18	6-20	6-20	6-20	6-20
No. 4	4-20	6-20	6-20	6-20	6-20
No. 8	4-20	0-16	0-16	0-16	0-16
No. 16	4-20	0-16	0-16	0-16	0-16
No. 30	4-20	6-20	6-20	6-20	6-20
No. 50	4-20	6-20	6-20	6-20	6-20
No. 100	4-20	4-18	4-18	4-18	4-18
No. 200	0-6.0	0-6.0	0-6.0	0-6.0	0-6.0
pan	0-3.0	0-2.0	0-2.0	0-2.0	0-2.0

D. Water

1. ASTM C 94/C 94M and potable.

2.3 ADMIXTURES

A. Air-Entraining Admixtures must comply with ASTM C260.

B. Chemical Admixtures must comply with ASTM C494.

2.4 CURING MATERIALS

A. Absorptive Cover: AASHTO M 182, Class 2, burlap cloth made from jute or kenaf, weighing approximately 9 oz./sq. yd. when dry.

B. Moisture-Retaining Cover: ASTM C 171, polyethylene film or white burlap-polyethylene sheet.

C. Water: Potable.

D. Clear, Waterborne, Membrane-Forming Curing Compound: ASTM C309, Type 1 or 2, Class A or B.

2.5 RELATED MATERIALS

A. Semirigid Joint Filler: Two-component, semirigid, 100 percent solids, epoxy resin with a Type A shore durometer hardness of 80 per ASTM D 2240.

B. Bonding Agent: ASTM C 1059/C 1059M, Type II, non-redispersible, acrylic emulsion or styrene butadiene.

C. Epoxy Bonding Adhesive: ASTM C 881, two-component epoxy resin, capable of humid curing and bonding to damp surfaces, of class suitable for application temperature and of grade to suit requirements, and as follows:

1. Types I and II, non-load bearing, for bonding hardened or freshly mixed concrete to hardened concrete.

2.6 CONCRETE MIXTURES, GENERAL

A. Prepare design mixtures for each type and strength of concrete, proportioned based on laboratory trial mixture or field test data, or both, according to ACI 301.

1. Use a qualified independent testing agency for preparing and reporting proposed mixture designs based on laboratory trial mixtures.
2. Provide concrete with an ultimate strength of 4000 psi.
3. Air entrainment shall be between 4.5% min. and 7.0% max.
4. Use a locally-obtained sand to match the geology of the park location.

B. Limit water-soluble, chloride-ion content in hardened concrete to 0.15 percent by weight of cement.

C. Admixtures: Use admixtures according to manufacturer's written instructions.

1. Use admixture in concrete, as required, for placement and workability.
2. Use water-reducing and retarding admixture when required by high temperatures, low humidity, or other adverse placement conditions.
3. Use water-reducing admixture in pumped concrete, concrete for heavy-use industrial slabs and parking structure slabs, concrete required to be watertight, and concrete with a water-cementitious materials ratio below 0.50.

4. Use corrosion-inhibiting admixture in concrete mixtures where indicated.

2.7 REINFORCING STEEL

A. Refer to Section 03 20 00 – Concrete Reinforcing.

2.8 CONCRETE MIXING

A. Ready-Mixed Concrete: Measure, batch, mix, and deliver concrete according to ASTM C 94/C 94M and ASTM C 1116/C 1116M, and furnish batch ticket information.

B. Project-Site Mixing: Measure, batch, and mix concrete materials and concrete according to ASTM C 94/C 94M. Mix concrete materials in appropriate drum-type batch machine mixer.

1. For mixer capacity of 1 cu. yd. or smaller, continue mixing at least 1-1/2 minutes, but not more than 5 minutes after ingredients are in mixer, before any part of batch is released.
2. For mixer capacity larger than 1 cu. yd., increase mixing time by 15 seconds for each additional 1 cu. yd.
3. Provide batch ticket for each batch discharged and used in the Work, indicating Project identification name and number, date, mixture type, mixture time, quantity, and amount of water added. Record approximate location of final deposit in structure.

PART 3 - EXECUTION

3.1 FORMWORK

A. Use either fixed forms or slip forms.

B. Provide straight, full depth, un-warped forms that will resist springing during concrete placement.

C. Firmly stake fixed forms.

D. Construct forms tight enough to prevent loss of concrete mortar.

E. Clean forms and adjacent surfaces to receive concrete. Remove chips, wood, sawdust, dirt, and other debris just before placing concrete.

F. Retighten forms and bracing before placing concrete, as required, to prevent mortar leaks and maintain proper alignment.

G. Coat contact surfaces of forms with form-release agent, according to manufacturer's written instructions, before placing reinforcement.

H. Form liners shall not be used for the final finish.

3.2 REMOVING AND REUSING FORMS

A. General: Formwork that does not support weight of concrete may be removed after cumulatively curing at not less than 50 deg F for 24 hours after placing concrete. Concrete shall be hard enough to not be damaged by form-removal operations and curing and protection operations need to be maintained.

1. Remove forms only if shores have been arranged to permit removal of forms without loosening or disturbing shores.

B. Clean and repair surfaces of forms to be reused in the Work. Split, frayed, delaminated, or otherwise damaged form-facing material will not be acceptable for exposed surfaces. Apply new form-release agent.

C. When forms are reused, clean surfaces, remove fins and laitance, and tighten to close joints. Align and secure joints to avoid offsets. Do not use patched forms for exposed concrete surfaces unless approved by Contracting Officer (CO).

3.3 SHORES AND RESHORES

A. Comply with ACI 318 and ACI 301 for design, installation, and removal of shoring and reshoring.

B. Plan sequence of removal of shores and reshore to avoid damage to concrete. Locate and provide adequate reshoring to support construction without excessive stress or deflection.

3.4 VAPOR RETARDERS

A. Sheet Vapor Retarders: Place, protect, and repair sheet vapor retarder according to ASTM E 1643 and manufacturer's written instructions.

1. Lap joints 6 inches and seal with manufacturer's recommended tape.

3.5 REINFORCEMENT

A. Reinforcement: Place according to Section 03 20 00 – Concrete Reinforcing.

3.6 JOINTS

A. General: Construct joints true to line with faces perpendicular to surface plane of concrete.

3.7 CONCRETE PLACEMENT

A. Before placing concrete, verify that installation of formwork, reinforcement, and embedded items is complete and that required inspections have been performed.

B. Before test sampling and placing concrete, water may be added at Project site, subject to limitations of ACI 301.

1. Do not add water to concrete after adding high-range water-reducing admixtures to mixture.

C. Deposit concrete continuously in one layer or in horizontal layers of such thickness that no new concrete will be placed on concrete that has hardened enough to cause seams or planes of weakness. If a section cannot be placed continuously, provide construction joints as indicated. Deposit concrete to avoid segregation.

1. Deposit concrete in horizontal layers of depth to not exceed formwork design pressures and in a manner to avoid inclined construction joints.
2. Consolidate placed concrete with mechanical vibrating equipment according to ACI 301.
3. Do not use vibrators to transport concrete inside forms. Insert and withdraw vibrators vertically at uniformly spaced locations to rapidly penetrate placed layer and at least 6

inches into preceding layer. Do not insert vibrators into lower layers of concrete that have begun to lose plasticity. At each insertion, limit duration of vibration to time necessary to consolidate concrete and complete embedment of reinforcement and other embedded items without causing mixture constituents to segregate.

D. Cold-Weather Placement: Comply with ACI 306.1 and as follows. Protect concrete work from physical damage or reduced strength that could be caused by frost, freezing actions, or low temperatures.

1. When average high and low temperature is expected to fall below 40 deg F for three successive days, maintain delivered concrete mixture temperature within the temperature range required by ACI 301.
2. Do not use frozen materials or materials containing ice or snow. Do not place concrete on frozen subgrade or on subgrade containing frozen materials.
3. Do not use calcium chloride, salt, or other materials containing antifreeze agents or chemical accelerators unless otherwise specified and approved in mixture designs.

E. Hot-Weather Placement: Comply with ACI 301 and as follows:

1. Maintain concrete temperature below 90 deg F at time of placement. Chilled mixing water or chopped ice may be used to control temperature, provided water equivalent of ice is calculated to total amount of mixing water. Using liquid nitrogen to cool concrete is Contractor's option.
2. Fog-spray forms, steel reinforcement, and subgrade just before placing concrete. Keep subgrade uniformly moist without standing water, soft spots, or dry areas.

3.8 FINISHING CONCRETE

A. Float the surface, but do not over-float, to produce a smooth surface, free from irregularities. Round the edges and joints with finishing tools.

B. Texture the surface of walkways and sidewalk ramps with a coarse broom transverse to the direction of travel.

3.9 CONCRETE PAVING SAW-CUT JOINTS

A. All control joints and construction joints shall be saw-cut. Only isolation joints and expansion joints may have tooled joints. Saw-cutting shall employ a light walk-behind machine cutting to the width and depth shown on the plans. Joints shall be saw-cut as soon as the concrete is cured sufficiently to support a light walk-behind machine without marking the surface or within 4 hours unless approved by the CO. In no case shall concrete paving be left overnight without being saw-cut.

3.10 CONCRETE PROTECTING AND CURING

A. General: Protect freshly placed concrete from premature drying and excessive cold or hot temperatures. Comply with ACI 306.1 for cold-weather protection and ACI 301 for hot-weather protection during curing.

B. Evaporation Retarder: Apply evaporation retarder to unformed concrete surfaces to deter moisture loss due to hot, dry, or windy conditions before and during finishing operations. Apply according to manufacturer's written instructions after placing, screeding, and bull floating or darbying concrete, but before float finishing.

C. Formed Surfaces: Cure formed concrete surfaces, including underside of beams, supported slabs, and other similar surfaces. If forms remain during curing period, moist cure after loosening forms. If removing forms before end of curing period, continue curing for the remainder of the curing period.

D. Unformed Surfaces: Begin curing immediately after finishing concrete. Cure unformed surfaces, including floors and slabs, concrete floor toppings, and other surfaces.

E. Cure concrete according to ACI 308.1, by the following method:

1. Moisture-Retaining-Cover Curing: Cover concrete surfaces with moisture-retaining cover for curing concrete, placed in widest practicable width, with sides and ends lapped at least 12 inches, and sealed by waterproof tape or adhesive. Cure for not less than seven days. Immediately repair any holes or tears during curing period using cover material and waterproof tape.

3.11 JOINT FILLING

A. Prepare, clean, and install joint filler according to manufacturer's written instructions.

B. Remove dirt, debris, saw cuttings, curing compounds, and sealers from joints; leave contact faces of joint clean and dry.

C. Install semirigid joint filler full depth in saw-cut joints and at least 2 inches deep in formed joints. Overfill joint and trim joint filler flush with top of joint after hardening.

3.12 FIELD QUALITY CONTROL

A. Testing and Inspecting: Contractor shall engage a qualified testing and inspecting agency to perform field tests and inspections and prepare test reports.

B. Concrete Tests: Testing of composite samples of fresh concrete obtained according to ASTM C 172 shall be performed according to the following requirements:

1. Testing Frequency: Obtain one composite sample for each day's pour of each concrete mixture exceeding 5 cu. yd., but less than 25 cu. yd., plus one set for each additional 50 cu. yd. or fraction thereof.
2. Testing Frequency: Obtain at least one composite sample for each 100 cu. yd. or fraction thereof of each concrete mixture placed each day.

a. When frequency of testing will provide fewer than five compressive-strength tests for each concrete mixture, testing shall be conducted from at least five randomly selected batches or from each batch if fewer than five are used.

3. Slump: ASTM C 143/C 143M; one test at point of placement for each composite sample, but not less than one test for each day's pour of each concrete mixture. Perform additional tests when concrete consistency appears to change.
4. Air Content: ASTM C 231, pressure method, for normal-weight concrete; ASTM C 173 volumetric method, for structural lightweight concrete; one test for each composite sample, but not less than one test for each day's pour of each concrete mixture.
5. Concrete Temperature: ASTM C 1064/C 1064M; one test hourly when air temperature is 40 deg F and below and when 80 deg F and above, and one test for each composite sample.
6. Compression Test Specimens: ASTM C 31/C 31M.

    a. Cast and laboratory cure two sets of two standard cylinder specimens for each composite sample.

7. Compressive-Strength Tests: ASTM C 39/C 39M; test one set of two laboratory-cured specimens at 7 days and one set of two specimens at 28 days.

    a. Test one set of two field-cured specimens at 7 days and one set of two specimens at 28 days.
    b. A compressive-strength test shall be the average compressive strength from a set of two specimens obtained from same composite sample and tested at age indicated.

8. Test results shall be reported in writing to CO, concrete manufacturer, and Contractor within 48 hours of testing. Reports of compressive-strength tests shall contain Project identification name and number, date of concrete placement, name of concrete testing and inspecting agency, location of concrete batch in Work, design compressive strength at 28 days, concrete mixture proportions and materials, compressive breaking strength, and type of break for both 7- and 28-day tests.
9. Nondestructive Testing: Impact hammer, sonoscope, or other nondestructive device may be permitted by CO but will not be used as sole basis for approval or rejection of concrete.
10. Additional Tests: Testing and inspecting agency shall make additional tests of concrete when test results indicate that slump, air entrainment, compressive strengths, or other requirements have not been met, as directed by CO. Testing and inspecting agency may conduct tests to determine adequacy of concrete by cored cylinders complying with ASTM C 42/C 42M or by other methods as directed by CO.
11. Additional testing and inspecting, at Contractor's expense, will be performed to determine compliance of replaced or additional work with specified requirements.
12. Correct deficiencies in the Work that test reports and inspections indicate do not comply with the Contract Documents.

3.13 INSPECTIONS

A. Accessibility Inspection: Accessibility inspection shall be performed by the Contractor in a two-part process to ensure compliance of final installation. The two-part process inspections shall occur pre-installation and post-installation.

1. Pre-installation inspection shall examine slopes, dimensions, base materials and preparation work prior to concrete placement. Check formwork, embedded items, reinforcing, etc. Pre-installation work shall conform to National Park Service Accessible Route Design Standards.

2. Post-installation inspection shall examine completed concrete placement. Report non-compliance with ABAAS for running and cross slopes, landings, vertical changes in elevation, transitions, imperfections or flaws, improper drainage, slippery surfaces, and dimensional accuracy.

B. Contractor shall utilize the National Park Service CQC Accessibility Inspection Report as basis for recording findings. Any non-compliant conditions shall be documented. Supplement Report with digital images, notation, red-line drawings, sketches and dimensions, product literature, submittal, etc. to explain installed work. Submit completed Report to CO within 24 hours of commencing inspection.

END OF SECTION 32 13 20

SECTION 32 15 00 – AGGREGATE SURFACING

PART 1 - GENERAL

1.1 RELATED DOCUMENTS

A. Drawings and general provisions of the Contract, including General and Supplementary Conditions and Division 01 Specification Sections, apply to this Section.

B. Idaho Transportation Department (ITD), Standard Specifications for Highway Construction latest Edition, Section 703, and other sections as specified or applicable.

1.2 SUMMARY

A. This section includes the following:

1. Aggregate base course for gravel roadways.
2. Aggregate base course for concrete.
3. Geotextile for separation.

B. Related Sections include the following:

1. Section 31 20 00 – Earth Moving

1.3 DEFINITIONS

A. Aggregate Base shall refer to Aggregate for Untreated Base, unless otherwise noted.

1.4 SUBMITTALS

A. Product Data for the following:

1. Aggregate base course for gravel roadways.
2. Geotextile.

B. Material Test Reports: The Contractor shall conduct testing at their own expense for material testing of material that does not come from a pre-approved quarry. The test information shall be provided to the CO for approval prior to material import. Material test reports shall be from a qualified testing agency indicating and interpreting test results for compliance of the following with requirements indicated:

1. Classification according to ASTM D 2487 of each on-site and import soil material proposed for fill and backfill.
2. Laboratory compaction curve according to ASTM D 1557 for each on-site and import soil material proposed for fill and backfill.

C. Compaction test results

PART 2 - PRODUCTS

2.1 MATERIALS

A. Aggregate for Untreated Base.

1. Aggregate base shall meet the following gradation:

Sieve Size	Percentage Passing
2″	100
1″	90-100
1/2″	65-100
No. 4	40-80
No. 8	30-60
No. 30	15-35
No. 200	6.0-18.0

2. Aggregate Base Course, ¾″ Maximum shall meet the following gradation:

Sieve Size	Percentage Passing
1″	100
3/4″	90-100
No. 4	40-65
No. 8	30-50
No. 200	3.0-9.0

3. Free from clay lumps, vegetable matter, or any other deleterious material.

B. Soil stabilizer shall be a non-toxic, non-carcinogenic, non-flammable, non-combustible, organic stabilizer that is a colorless and odorless concentrated powder that binds aggregate base together, creating a natural-appearing, firm surface.

C. Geotextile for separation: Geotextiles shall be nonwoven and shall comply with the requirements in the following table:

Quality Characteristic	Test Method	Minimum Average Roll Values (in weaker principal direction)		
		Type I	Type II	Type III
Permittivity, sec^{-1}	ASTM D4491	0.5	0.05	0.7
Apparent opening size, US standard sieve size	ASTM D4751	#30 or finer	#40 or finer	#70 or finer
Grab elongation, %	ASTM D4632	< 50% / ≥ 50%		
Puncture strength, lb	ASTM D6241	500 / 300	600 / 450	600 / 450
Trapezoidal tearing strength, lb	ASTM D4533	70 / 40	100 / 75	100 / 75
Grab Tensile Strength, lb	ASTM D4632	180 / 110	270 / 180	270 / 180

The dual values for strengths for each geotextile type are related to the grab elongation. For geotextiles with elongation less than 50%, the first strength values are applied. For geotextiles with elongation equal to or greater than 50%, the second strength values are applied. Higher strength is required for geotextiles with lower elongation.

PART 3 - EXECUTION

3.1 GENERAL

A. After each layer has been spread, compact the layer for its full width. Continue compaction until at least 95 percent of the maximum dry density is attained.

B. Maintain the surface of each layer during the compaction operations so a uniform texture is produced and the aggregate firmly keyed. Apply enough water uniformly over the base materials during compaction to ensure proper compaction is achieved.

3.2 PREPARATION

A. Subgrade shall comply with the compaction and elevation tolerance requirements as specified in Section 31 20 00 – Earth Moving and shall be free from loose or extraneous material.

B. Contractor shall be responsible for protection of the subgrade.

3.3 GEOTEXTILE

A. Before placing geotextile materials, remove sharp objects that may come in contact with the material.

B. Place the material:

1. Per the manufacturer's instructions.
2. Longitudinally along the roadway alignment.
3. Without wrinkles.

C. Overlap adjacent edges of geosynthetic material at least 2 feet. Overlap the ends of the rolls at least 2 feet in the direction the aggregate base is spread.

D. Geotextile may be folded or cut to conform to curves. If material is cut, overlap it at least 2 feet.

E. Do not place stockpiles on geosynthetic material or place more material than can be covered in 72 hours. Material may be held in place with mechanical ties, staples, pins, or smalls piles of aggregate base.

F. Do not operate equipment or vehicles directly on filter fabric.

G. Repair or replace any damaged geosynthetic material by placing a new piece of material over the damaged area with at least 3 feet of overlap.

3.4 SUBBASE AND BASE COURSES

A. Place subbase and base course on subgrades free of mud, frost, snow, or ice.

B. On prepared subgrade, place subbase and base course under pavements and walks as follows:

1. Place base course material over subbase course under hot-mix asphalt pavement or cement concrete.
2. Shape subbase and base course to required crown elevations and cross-slope grades.
3. Place subbase and base course 6 inches or less in compacted thickness in a single layer.
4. Place subbase and base course that exceeds 6 inches in compacted thickness in layers of equal thickness, with no compacted layer more than 6 inches thick or less than 3 inches thick.
5. Compact subbase and base course at optimum moisture content to required grades, lines, cross sections, and thickness to not less than 95 percent of maximum dry unit weight according to ASTM D 1557.

3.5 COMPACTION OF SUBBASE AND BASE COURSES

A. Place subbase and base materials in accordance with 3.4 above.

B. Place backfill and fill soil materials evenly on all sides of structures to required elevations, and uniformly along the full length of each structure.

C. Fill compaction shall be verified by means of in-place density tests performed per ASTM D6938 (or appropriate alternative when ASTM D6938 is not suitable for the fill material) during fill placement so that compaction may be evaluated as earthwork progresses.

D. Compact soil materials to not less than the following percentages of maximum dry unit weight according to ASTM D 1557:

Fill Application	**Minimum Compaction %**
Asphalt pavement base and subbase	95
Concrete base and subbase	95

3.6 FIELD QUALITY CONTROL

A. Testing Agency: Contractor shall engage a qualified independent geotechnical engineering testing agency to perform field quality-control testing.

B. Allow testing agency to inspect and test each subbase or base layer. Proceed with subsequent work only after test results for previously completed work comply with requirements.

C. Testing agency will test compaction of soils in place according to ASTM D 1556 and ASTM D 2167 as applicable. Tests will be performed at the following locations and frequencies:

1. Paved and Gravel Drive Areas: At each compacted subbase and base layer, at least 1 test for every 500 sq. ft. or less of paved area, but in no case fewer than 3 tests.

D. When testing agency reports that subbases or bases have not achieved degree of compaction specified, remove and replace subbases or bases to depth required; recompact and retest until specified compaction is obtained.

END OF SECTION 32 15 00

Geotechnical Evaluation

MIIN Robinson Maintenance Building
Minidoka National Historic Site

Twin Falls, Idaho

Anderson Hallas Architects, PC

715 Fourteenth Street | Golden, Colorado 80401

March 23, 2022 | Project No. 501559002

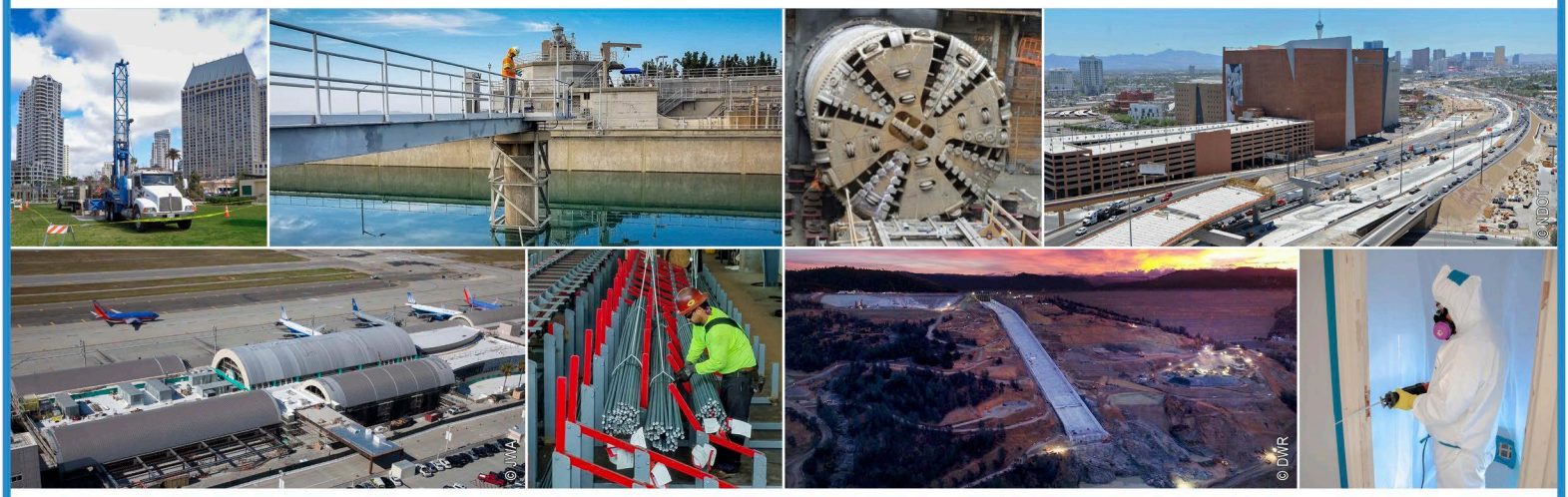

Geotechnical | Environmental | Construction Inspection & Testing | Forensic Engineering & Expert Witness

Geophysics | Engineering Geology | Laboratory Testing | Industrial Hygiene | Occupational Safety | Air Quality | GIS

Ninyo & Moore

Geotechnical & Environmental Sciences Consultants

Ninyo & Moore
Geotechnical & Environmental Sciences Consultants

Geotechnical Evaluation
MIIN Robinson Maintenance Building
Minidoka National Historic Site
Twin Falls, Idaho

Ms. Elizabeth Hallas, AIA, LEED AP BD+C
Anderson Hallas Architects, PC
715 Fourteenth Street | Golden, Colorado 80401

March 23, 2022 | Project No. 501559002

PROFESSIONAL ENGINEER
LICENSED
Exp 03/31/2024
17008
STATE OF IDAHO
AVRAM NINYO

Forrest K. Wright
Senior Engineer

Avram Ninyo, PE
Principal Engineer

FKW/AN/lm

Distribution: (1) Addressee (via e-mail)

CONTENTS

1 INTRODUCTION 3
2 SCOPE OF SERVICES 3
3 SITE DESCRIPTION AND BACKGROUND REVIEW 4
4 PROPOSED CONSTRUCTION 4
5 FIELD EXPLORATION AND LABORATORY TESTING 5
6 PERCOLATION TESTING 5
7 GEOLOGY AND SUBSURFACE CONDITIONS 6
7.1 Geologic Setting 6
7.2 Subsurface Conditions 6
7.2.1 Fill 6
7.2.2 Alluvium 6
7.3 Groundwater 7
7.4 Soil Treatment Area 7
8 GEOLOGIC HAZARDS 7
8.1 Seismic Hazards 7
8.1.1 Seismic Design Considerations 7
8.2 Compressible/Collapsible Soils 8
9 CONCLUSIONS 9
10 RECOMMENDATIONS 10
10.1 Earthwork 10
10.1.1 Site Grading 10
10.1.2 Excavations 11
10.1.3 Temporary Excavations 11
10.1.4 Suitability of On-site Soils 12
10.1.5 Imported Soil 12
10.1.6 Fill Placement and Compaction 12
10.1.7 Utility Installation 13
10.2 Foundation Systems 13
10.2.1 Spread-Footing Foundations 14
10.3 Slab-On-Grade Floors 14
10.4 On-Site Wastewater Treatment System (OWTS) 15
10.5 Exterior Flatwork 16

10.6 Corrosion and Sulfate Considerations 16
10.6.1 Concrete 16
10.6.2 Buried Metal Pipes 17
10.7 Site Drainage 17
10.8 Construction Observation and Testing 18
10.9 Plan Review 18
10.10 Pre-Construction Meeting 19
11 LIMITATIONS 19
12 REFERENCES 21

TABLES

1 – 2021 International Building Code Seismic Design Criteria 8

FIGURES

1 – Site Location
2 – Test Pit Locations

APPENDICES

A – Test Pit Logs
B – Laboratory Testing – Ninyo & Moore
C – Laboratory Testing – Performed By Others
D – Percolation Test Results

1 INTRODUCTION

In accordance with your request and authorization, we have conducted a geotechnical evaluation for the proposed new maintenance building at the Minidoka National Historic Site near Twin Falls, Idaho. The approximate location of the site is depicted on Figure 1.

The purpose of our study was to evaluate the subsurface conditions and to provide design and construction recommendations regarding geotechnical aspects of the proposed project. This report presents the findings of our subsurface exploration, results of our laboratory testing, conclusions regarding the subsurface conditions at the site, and geotechnical recommendations for design and construction of this proposed improvements.

2 SCOPE OF SERVICES

The scope of our services for the project generally included:

- Perform geologic research (reviewing readily available published and in-house geotechnical literature of the site and the general site area including geologic maps and aerial photographs).
- Coordinate the location of the septic field with the project civil engineer.
- Prepare an aerial site plan depicting the profile and percolation testing locations and submit that to NPS two or more weeks prior to field services.
- Coordinate with the project design team so that the archeological monitor is scheduled to be on-site during the course of our field drilling services.
- Coordinate site access with park personnel.
- Coordinate with 811 (Digline, Inc.) to locate the publicly owned underground utilities in the vicinity of the proposed test locations.
- Coordinate with NPS personnel to locate and mark the privately-owned utilities.
- Visit the project site to mark the test pit locations, meet with the NPS personnel and utility locators.
- Advance a total of five test pits consisting of one (1) foundation test pit, one (1) profile test pit and three (3) percolation test pits. The test pits were advanced with a mini-excavator. The approximate location of the test pits is provided in Figure 2. The test pit logs are provided in Appendix A.
    - The foundation and profile test pits were advanced to depths of approximately 8 feet below the ground surface (bgs). The purpose of the test pits was to evaluate the subsurface geologic conditions and to obtain samples for laboratory testing. Disturbed and relatively undisturbed (hand-drive) samples of the subsurface materials will be obtained and returned to our laboratory for testing. Test pit logs were prepared that present the approximate thickness, consistency, and character of each layer encountered.

Groundwater level, if encountered, will be documented. These test pit logs are provided in Appendix A.

  - The percolation test locations were spaced over the proposed septic field location. The percolation test locations were excavated to a depth of approximately 24 inches bgs and an approximately 8-inch diameter hole were hand-excavated within the test pits using a post-hole digger. The percolation holes were prepared by carefully scraping the bottom and sides of the holes to remove smeared soil surfaces, removing loose soils from the hole, and adding six inches of fine gravel to protect the bottom of the hole, prior to presoaking.

- Perform laboratory testing to evaluate the relevant engineering characteristics, including but not limited to, in-place moisture and density, sieve analysis (includes 200 wash), Atterberg limits, sulfates, and corrosivity. The results of the laboratory testing performed by Ninyo & Moore are presented on the test pit logs and in Appendix B. Laboratory testing for sulfates and corrosivity performed by others are presented in Appendix C.

- Performance of the percolation tests in general accordance with the applicable local health department guidelines and after a 24-hour pre-soaking period. Percolation holes were backfilled with the excavation spoils after the completion of percolation testing. Percolation test results are presented in Appendix D.

- Compilation and analysis of the data obtained.

- Preparation of this report presenting our findings, conclusions, and geotechnical recommendations regarding design and construction of the project.

3 SITE DESCRIPTION AND BACKGROUND REVIEW

The project site is located at the Minidoka National Historic Site located near Twin Falls, Idaho. The project site is north of Hunt Road where it crosses Clover Creek. The area is generally flat with a gradual slope to the south towards Clover Creek. Based on aerial imagery the site appears to be in arid area covered with native grasses and shrubs, sporadic trees, and occasional basaltic cobbles and boulders outcrops. The neighboring property to the east, west, and north are used for irrigated agricultural purposes. The approximate location of the site is depicted on Figure 1.

Based on available aerial imagery, the site has generally remained in its current state since 1992. The site currently consists of three single-story maintenance and residential building with gravel paved access drive and turn-around area, and areas for equipment maintenance and storage.

4 PROPOSED CONSTRUCTION

Based on our review of the background information associated with MIN 314972, the sewage disposal system (septic field) for the facility is beyond its lifecycle and not compliant with the current standards. Ninyo & Moore understands that the proposed construction will consist of the construction of a new septic system and single-story office/garage building for less than 6 people.

The septic system, designed by others, is assumed to be residential scale and will be designed by others.

5 FIELD EXPLORATION AND LABORATORY TESTING

On September 7, 2022, Ninyo & Moore conducted a subsurface exploration at the site to evaluate the existing subsurface conditions and to collect samples for laboratory testing. The evaluation consisted of the advancing test pits using a Bobcat E35 Mini-Excavator. Test Pit TP-1 was advanced to a depth of approximately 4.7 feet bgs within the potential building location. Test Pit TP-2 was advanced to a depth of 7 feet bgs as a profile test pit within the proposed septic treatment area. Both Test Pits TP-1 and TP-2 encountered refusal conditions at their termination depth due to basalt boulders. Percolation test pits (Test Pits P-1 through P-3) were advanced to depths of approximately 2 feet bgs, which were then hand-augered to depths of approximately 4 to 5 feet bgs. The approximate locations of the test pits are presented on Figure 2.

Sowers Dynamic Cone Penetrometer (DCP) testing was performed in general accordance with ASTM STP44629S. DCP readings were taken at approximate 1-foot intervals at the test pit locations. Modified California samples rings were collected using the excavator bucket. The sampling methods used during the subsurface evaluation and DCP blow counts are presented in Appendix A.

Soil samples collected during the subsurface exploration were transported to the Ninyo & Moore laboratory for geotechnical laboratory analyses. Selected samples were analyzed to evaluate engineering properties including in-situ moisture content, Atterberg limits, particle size analysis, and soil corrosivity characteristics (including resistivity, pH, water soluble sulfates and chlorides). The results of the in-situ moisture content tests are presented on the test pit logs in Appendix A. Descriptions of the laboratory test methods and the remainder of the test results performed by Ninyo & Moore are presented in Appendix B. Laboratory testing results performed by others are presented in Appendix C.

6 PERCOLATION TESTING

Percolation tests were performed by test pitting and auger drilling three, approximately 8-inch diameter, percolation holes to depths of approximately 45, 52, and 57 inches bgs within the limits of the proposed absorption field. The approximate locations of the percolation test holes are presented on Figure 2. The results of the percolation testing are presented in Appendix D.

7 GEOLOGY AND SUBSURFACE CONDITIONS

The geology and subsurface conditions at the site are described in the following sections.

7.1 Geologic Setting

The site is located in the Snake River Plain, a U-shaped plain in southern Idaho generally bisected by the Snake River which cuts across the Basin and Range Mountain structures. The Snake River Plain is divided into three sections based on the underlying geologic features: western, central, and eastern. The site is located in the central section of the Snake River Plain which was where the Yellowstone hotspot was located approximately 10 million years ago. The central section of the Snake River plain generally consists of thick sections of alluvial deposits underlain by basalt erupted from large shield volcanos.

Geologic mapping by Scott (1982) indicates the surficial deposits on subject site are alluvium deposits consisting of silt and sands with basalt gravel and bedrock outcrops (Scott, 1982). The surficial deposits are underlain by Pleistocene-age basalt flows and cinder cones of the Snake River Plain (Lewis, 2012).

7.2 Subsurface Conditions

Our understanding of the subsurface conditions at the project site is based on our field exploration and laboratory testing, review of published geologic maps, and historic aerial imagery. The following sections provide a generalized description of the subsurface materials encountered. More detailed descriptions are presented on the test pit logs in Appendix A.

7.2.1 Fill

Fill material was encountered at the ground surface in the test pits, except Test Pit P-1, and extended to depths between approximately 1 to 2 feet bgs. Fill material within the test pits generally consisted of brown, gray, dry, sandy lean clay, silty sand, and clayey sand with gravel. No documentation is available for the fill material placement and compaction.

7.2.2 Alluvium

Alluvium was encountered at the ground surface at Test Pit P-1 and below the fill material in the remaining test pits. The alluvial material extended to test pit termination depths of approximately 4.7 to 7 feet bgs. Test Pits TP-1 and TP-2 were terminated at refusal depths of 4.7 to 7 feet bgs on basalt boulders. The alluvium generally consisted of brown, dry, stiff to hard sandy lean clay and dense clayey sand.

Based on the results of the laboratory testing, a select sample of the alluvium had an in-place moisture content between approximately 6.6 to 12.1 percent and a dry densities between approximately 114.6 to 121.4 pounds per cubic foot (pcf).

7.3 Groundwater

Groundwater was not encountered in the test pits at the time of subsurface exploration. Visual evidence of the groundwater table, to include staining and oxidation, was not observed within Test Pit TP-2 at the time of our exploration. Groundwater levels can fluctuate due to seasonal variations, precipitation, flash flooding, groundwater withdrawal or injection, and other factors. Depending on the time of year construction occurs, groundwater could be encountered.

7.4 Soil Treatment Area

During the test pitting and hand auguring within the soil treatment area (STA) of the septic field the soils were visually classified. Based on our observations, the soil within the STA is a sandy clay loam and silty clayey loam. Ninyo & Moore performed percolation testing in Test Pits P-1 through P-3. Based on the results of our percolation testing, which ranged from 45 to 57 minutes per inches (min/in), we recommend a percolation rate of 40 minutes per inch (min/in).

8 GEOLOGIC HAZARDS

The following sections describe potential geologic hazards at the site including seismicity, liquefaction potential, landslides, and compressible/collapsible soils.

8.1 Seismic Hazards

The seismic hazards considered in this study include the potential for ground rupture due to faulting, seismic ground shaking, liquefaction, dynamic settlement, compressible/collapsible soils, and landslides. These potential hazards are discussed in the following subsections.

8.1.1 Seismic Design Considerations

Historically, several minor earthquakes have been recorded within Idaho, particularly to the north of the site in central Idaho. Based on our field observations and our review of readily available published geological maps and literature, there are no known active faults underlying or adjacent to the subject site.

The most recent significant earthquake event was the Stanley earthquake (Magnitude M6.5) which occurred on March 31, 2020. This earthquake epicenter was approximately 19 miles northwest of Stanley, Idaho, or approximately 130 miles northwest of the site. This event

triggered a significant liquefaction event at Stanley Lake. Over 3,200 aftershocks were recorded in the following year after the initial earthquake. According to the Modified Mercalli Intensity (MMI) Scale, the site experienced light to weak shaking which corresponds to no damage. Idaho has experienced two large earthquakes in historical times. These two earthquakes were the 1983 Borah Peak earthquake (M6.9) and the 1959 Hebgen Lake earthquake (M7.3) in Montana. The epicenters of these earthquakes were over approximately 100 and 200 miles away from the site, respectively. The Tertiary Age Hollister and Supah Springs faults are mapped approximately 26.5 and 28 miles, respectively, southwest of the site. These faults are mapped as high-angle normal faults (Malde, 1963).

Design of the proposed improvements should be performed in accordance with the requirements of the governing jurisdictions and applicable building codes. Table 1 presents the seismic design parameters for the site in accordance with the 2021 International Building Code (IBC) guidelines and adjusted maximum considered earthquake spectral response acceleration parameters evaluated using the OSHPD (OSHPD, 2022) ground motion calculator (web-based).

Table 1 – 2021 International Building Code Seismic Design Criteria

Seismic Design Factors	Value
Site Class	D
Site Coefficient, F_a	1.6
Site Coefficient, F_v	2.4
Mapped Spectral Acceleration at 0.2-second Period, S_s	0.166 g
Mapped Spectral Acceleration at 1.0-second Period, S_1	0.079 g
Spectral Acceleration at 0.2-second Period Adjusted for Site Class, S_{MS}	0.266 g
Spectral Acceleration at 1.0-second Period Adjusted for Site Class, S_{M1}	0.191 g
Design Spectral Response Acceleration at 0.2-second Period, S_{DS}	0.177 g
Design Spectral Response Acceleration at 1.0-second Period, S_{D1}	0.127 g

8.2 Compressible/Collapsible Soils

Compressible soils are generally comprised of soils that undergo consolidation when exposed to new loadings, such as fill or foundation loads. Soil collapse (or hydrocollapse) is a phenomenon where soils undergo a significant decrease in volume upon an increase in moisture content, with or without an increase in external loads. Buildings, structures, and other improvements may be subject to excessive settlement-related distress when compressible soils or collapsible soils are

present. Based on the test pit logs and laboratory testing the soils are have low compressibility characteristics.

9 CONCLUSIONS

Based on the results of the subsurface evaluation, laboratory testing, and data analyses, it is our the proposed project is feasible from a geotechnical standpoint, provided the recommendations presented herein are implemented and appropriate construction practices are followed. Geotechnical design and construction considerations for the proposed project include the following:

- Fill material was encountered at the ground surface in the test pits, except Test Pit P-1, and extended to depths between approximately 1 to 2 feet bgs. Fill material within the test pits generally consisted of brown, gray, dry, sandy lean clay, silty sand, and clayey sand with gravel. Fill materials encountered in our test pits are considered undocumented.

- Alluvium was encountered at the ground surface at Test Pit P-1 and below the alluvial material in the remaining test pits. The alluvial material extended to test pit termination depths of approximately 4.3 to 7 feet bgs. Test Pits TP-1 and TP-2 were terminated at refusal depths of 4.7 to 7 feet bgs on basalt boulders. The alluvium generally consisted of brown, dry, stiff to hard sandy lean clay and dense clayey sand.

- The on-site fill materials and alluvium, with the exception of basalt boulders encountered in test pits, may generally be excavated with moderate- to heavy-duty earthmoving or excavation equipment in good operating condition. It should be noted that the fill material and alluvium deposits at this site may contain cobbles and/or boulders, which could complicate excavations and increase wear and tear.

- Excavations into basalt boulders will require more aggressive excavation techniques to include, but not limited to, heavy-duty earthmoving equipment equipped with rock teeth, hoe-rams, and rock claws which may cause additional wear on the equipment.

- Groundwater was not encountered in the test pits at the time of subsurface exploration. Visual evidence of the groundwater table, to include staining and oxidation, was not observed within Test Pit TP-2 at the time of our exploration. Groundwater levels can fluctuate due to seasonal variations, precipitation, flash flooding, groundwater withdrawal or injection, and other factors. Depending on the time of year construction occurs, groundwater could be encountered.

- Based on our observations, the soil within the STA is a sandy clay loam and silty clayey loam. Ninyo & Moore performed percolation testing in Test Pits P-1 through P-3. Based on the results of our percolation testing, a percolation rate of 40 minutes per inch (min/in) is recommended.

- The proposed residential building is suitable to be supported on spread footing foundations and slab-on-grade floors.

- Based on our laboratory data, the sulfate content of the tested fill materials and alluvium presents a negligible risk of sulfate attack to concrete. Although the sulfate exposure results were low we recommend the use of Type V cement for construction of concrete structures at this site.

- Based on our laboratory data, the subgrade soils at the site are extremely corrosive to ferrous metals. Therefore, special consideration should be given to the use of heavy gauge, corrosion-protected, underground steel pipe or culverts, if any are planned. A corrosion specialist should be consulted for further recommendations.

10 RECOMMENDATIONS

Based on our understanding of the project, the following sections present our geotechnical recommendations for design and construction of the proposed building and other site improvements.

10.1 Earthwork

The following sections provide our earthwork recommendations for this project. We anticipate the site grading may consist of material cuts and fills of approximately 3 feet or less. Deeper cuts and fills may be needed to install buried utilities.

10.1.1 Site Grading

Prior to grading, the ground surface in proposed improvement areas should be cleared of any surface obstructions, existing pavements, debris, topsoil, organics (including vegetation), and other deleterious material. Based on our site observations, stripping depths of 6 inches or less should be anticipated. Material generated from site stripping should not be incorporated into engineered fill, but may be stockpiled for re-use as landscaping material or other non-structural material. Topsoil-contaminated fill materials should not be used during site grading.

Materials generated from clearing operations should be removed from the project sites for disposal (e.g., at a legal landfill site). Obstructions that extend below finish grade, if present, should be removed and resulting voids filled with compacted, engineered fill or CLSM.

Undocumented fill was encountered at the test pit locations at the sites to depths of approximately 1 to 2 feet bgs. We recommend that the undocumented fill materials be removed, moisture-conditioned, and recompacted as engineered fill.

Subgrades should be evaluated by a geotechnical representative during the excavation work. Additional recommendations specific to the site conditions encountered may be provided at the time of construction

The proposed new building may be supported on a shallow foundation system consisting of spread footings bearing on 12 or more inches of engineered fill extending to firm alluvium.

Deepening of the footing excavation may be needed to penetrate through isolated areas. If overexcavation is needed below foundations to penetrate these zones, the engineered fill limits should extend laterally 1-foot for every 1-foot of overexcavation depth beyond the footing limits.

10.1.2 Excavations

Our evaluation of the excavation characteristics of the on-site materials is based on the results of the subsurface exploration, our site observations, and our experience with similar materials. The on-site surface and near-surface soils (fill and alluvium), excluding the basalt boulders encountered in the test pits, may generally be excavated with moderate to heavy-duty earthmoving or excavation equipment in good operating condition. The fill material and alluvium deposits contain cobbles and/or boulders, which could complicate excavations and increase wear and tear. Excavations into basalt boulders will require more aggressive excavation techniques to including heavy-duty earthmoving equipment equipped with rock teeth, hoe-rams, and rock claws.

The fill and alluvial materials are susceptible to variations in moisture content. As a result, and depending on the time of year construction occurs, wet or saturated soils may be encountered after periods of heavy or prolonged precipitation. These materials may soften under the action of light equipment and foot traffic. Where encountered, drying or overexcavation of these materials is recommended. If the subgrade becomes disturbed, it should be compacted or removed and replaced before placing additional backfill material.

Groundwater was not encountered during the subsurface exploration. Groundwater is not anticipated to be encountered during excavation activities. Groundwater levels can fluctuate due to seasonal variations in precipitation, flash flooding, snowmelt, irrigation, groundwater withdrawal or injection, and other factors.

10.1.3 Temporary Excavations

Temporary excavations will be needed for this project to construct utilities. Based on the subsurface information obtained from our exploratory test pits and our experience with similar projects, we anticipate that the soil conditions and stability of the excavation sidewalls may vary with depth. Soils with higher fines content may stand vertically for a short time (less than 12 hours) with little sloughing. However, as the soil dries after excavation or as the excavations are exposed to rainfall, sloughing may occur. Soils with low cohesion (e.g., predominately sandy or gravelly material), may slough or cave during excavation, especially if wet or saturated.

The contractor should provide safely sloped excavations or an adequately constructed and braced shoring system, in compliance with OSHA regulations as mentioned in Section 9.2.2.

The fill and alluvium materials on site are generally considered Type C soil when applying the OSHA regulations. For Type C soil conditions, OSHA recommends a temporary slope inclination of 1.5:1 (horizontal to vertical) or flatter for excavations 20 feet or less in depth. Appropriate slope inclinations should be evaluated in the field by an OSHA-qualified "Competent Person" based on the conditions encountered.

10.1.4 Suitability of On-site Soils

The on-site soils encountered during the subsurface exploration in the fill and alluvium were generally clayey with varying amounts of sand. These soils are suitable for reuse. Excavations deeper than 4 feet may encounter cobbles and boulders which will require removal. This could be performed by use of screens or rock buckets to separate the cobbles and boulders from the excavated materials. Once this is done, the fill and alluvium are anticipated to be suitable to be re-used as engineered fill, provided they are free of deleterious materials and organic matter such as coal, ash, and plant debris, and do not contain particles larger than 3 inches in diameter. However, additional testing should be performed at the time of fill placement to check the suitability of the material.

10.1.5 Imported Soil

Imported soil for use as engineered fill should generally be granular in nature. Imported soil should not contain organic matter, clay lumps, bedrock (granitic/diorite, etc.) fragments, debris, other deleterious matter, or particles larger than approximately 3 inches nominal diameter. Imported soil for use as engineered fill should exhibit low corrosion potential.

10.1.6 Fill Placement and Compaction

Onsite and import soils used as engineered fill should be moisture-conditioned to moisture contents within 2 percent of optimum moisture content. Engineered fill should be compacted to a relative compaction of 95 percent, or more, as evaluated by American Society for Testing and Materials (ASTM) D698.

Lift thickness for fill will be dependent upon the type of compaction equipment utilized, but should generally be placed in lifts not exceeding 8 inches in loose thickness. Fill materials should not be placed, worked, rolled while they are frozen, thawing, or during poor/inclement weather conditions.

10.1.7 Utility Installation

The contractor should provide adequate mechanical compaction in utility trench backfills. The contractor should take particular care to achieve and maintain adequate compaction of the backfill soils around manholes, valve risers and other vertical pipeline elements where settlements are commonly observed.

Pipe bedding materials, placement and compaction should meet the specifications of the pipe manufacturer and applicable local and state standards. Materials proposed for use as pipe bedding should be tested for suitability prior to use.

Special care should be exercised to avoid damaging the pipe or other structures during the compaction of the backfill. This may be accomplished with placement by hand or small-scale compaction equipment.

Positive surface drainage should be maintained over utility trench alignments. Where topography, site constraints or other factors limit or preclude adequate surface drainage, the granular bedding materials should be surrounded by a non-woven geotextile fabric having a maximum average Apparent Opening Size less than 0.43 mm (US Sieve #40) by ASTM D4751 and a minimum grab tensile strength of 120 pounds by ASTM D4632 to reduce the potential for migration of fines into the bedding and subsequent, associated settlement.

Sandy pipe bedding materials can function as conduits for re-distribution of natural and applied waters in the subsurface. Development of site grading plans should consider the subsurface transfer of water in utility trenches and the pipe bedding in areas where the utility trenches penetrate the building footprint. Cut-off walls in utility trenches or other water-stopping measures should be implemented to reduce the rates and volumes of water transmitted along utility alignments and transmitted toward the proposed building, or other structures, where wetting of the underlying soils increases the potential for soil movements, material degradation, or structural distresses. Incorporation of water cut-offs and/or outlet mechanisms for saturated bedding materials into development plans should be considered for the project. Cutoffs and outlet mechanisms will help reduce the potential for migration of fines into the bedding and subsequent, associated settlement.

10.2 Foundation Systems

The following foundation design parameters may be used for the design of foundation systems for the proposed building.

10.2.1 Spread-Footing Foundations

We anticipate that spread footings will be utilized for the proposed building. Perimeter and interior spread footings should extend to 24 or more inches below finished grade. Continuous footings and isolated pad footings should have widths of 18 and 24 inches or more, respectively. Footings should be reinforced in accordance with the recommendations of the structural engineer.

Footings bearing on 12 or more inches of compacted engineered fill may be designed using a net allowable soil bearing pressure of 2,000 pounds per square foot (psf). Total and differential settlements for footings designed and constructed in accordance with the above recommendations are estimated to be less than approximately 1-inch and ½-inch over a horizontal span of 20 feet, respectively.

The allowable lateral resistance can be taken as the sum of the frictional resistance and passive resistance provided the passive resistance does not exceed one-half of the total allowable resistance. The passive resistance (including the maximum value) may be increased by one-third when considering loads of short duration such as wind or seismic forces.

The bottom surface of foundation excavations should be compacted with hand-held dynamic compaction equipment (i.e., jumping jack, flat-plate vibrator) prior to placement of forms and reinforcing steel. The base of foundation excavations should be free of ice, snow, water, frost, and loose soil prior to placing concrete. Concrete should be placed soon after subgrade compaction to reduce bearing soil disturbance. Should the soils at bearing level become excessively dry, disturbed, or saturated, the affected soil should be moisture-conditioned and recompacted. It is recommended that Ninyo & Moore be retained to observe, test, and evaluate the foundation bearing materials.

10.3 Slab-On-Grade Floors

For slab design, a design modulus of subgrade reaction (K) of 150 pci (pounds per square inch per inch of deflection) may be used for the subgrade soils in evaluating such deflections.

The design of the floor slabs (including jointing and reinforcement) is the responsibility of the Structural Engineer. Joints should be constructed at intervals designed by the Structural Engineer to help reduce random cracking of the slab. Floor slabs should have a minimum thickness of 4 inches and be reinforced with No. 3 rebar at 24 inches on-center at the mid-height of the slab. Other recommendations based on structural considerations for slab thickness, slump, jointing,

and steel reinforcement should be developed by the structural engineer in accordance with American Concrete Institute recommendations. Proper placement of reinforcement in the slab is vital for satisfactory performance.

Floor slabs should be separated from bearing walls and columns with expansion joints, which allow unrestrained vertical movement. Joints should be observed periodically, particularly during the first several years after construction. Slab movement can cause previously free-slipping joints to bind. Measures should be taken so that slab isolation is maintained in order to reduce the likelihood of damage to walls and other interior improvements.

Where floor slabs are tied to perimeter walls or turn-down slabs to meet structural or other construction objectives, our experience indicates that any differential movement between the walls and slabs will probably be observed in adjacent slab expansion joints or floor slab cracks that occur beyond the length of the structural dowels. The Structural Engineer should account for this potential differential settlement through use of sufficient control joints, appropriate reinforcing or other means.

10.4 On-Site Wastewater Treatment System (OWTS)

The project site is located in Jerome County, Idaho. OWTS regulations established by Idaho Department of Environmental Quality (IDEQ, 2022a and b) are to be followed when designing, constructing, and operating the OWTS system for the proposed facility.

We understand that, for the purposes of sizing the OWTS, the proposed facility will be categorized as a residential building with 3 or 4 bedrooms. We also understand that the total number of occupants for the facility will be limited to 6 people.

From our test pit profile, soils were generally classified as a sandy clay loam and silty clayey loam. According to IDEQ soil group designation these soils are in soil design subgroup C-1 (IDEQ, 2022). Table 2.4 of the IDEQ Techincal Guidance Manual shows these soils have a design application rate of 0.3 gallons per day per square-foot (GPD/ft^2). Percolation tests were performed in accordance with applicable county and state requirements in the materials found in the proposed soil treatment area (STA). The recommended percolation rate in these materials was found to be 40 min/in. Percolation tests were conducted in general accordance with ASTM STP322. The percolation test data is presented in Appendix D.

The percolation tests were performed at the current site grades and the percolation holes were extended into the alluvial soils. We understand that the site grades at the location of the STA will be within approximately 2 feet above the current grades

10.5 Exterior Flatwork

Ground-supported exterior flatwork, such as walkways, will be subject to soil-related movements. We recommend minimum thickness of 4 inches and be reinforced with No. 3 rebar at 24 inches on-center at the mid-height of the slab. We recommend that flexible joints be provided where such elements abut the main structure to allow for differential movement at these locations. In no case should exterior flatwork extend to under any portion of the building where there is less than 2 inches of clearance between the flatwork and any element of the building. Exterior flatwork in contact with brick, rock facades, or any other element of the building can cause damage to the structure if the flatwork experiences movements.

Concrete walkways should be in accordance with local requirements, 4 inches or more thick, and be supported on improved subgrade as described in Section 9.2.1 of this report. Positive drainage should be established and maintained adjacent to flatwork. Water should not be allowed to pond on flatwork.

Exterior concrete flatwork, including curbs and gutters, should be constructed in accordance with the recommendations of the project's civil or structural engineer. Recommendations regarding concrete utilized in construction of proposed improvements are provided in Section 9.7.1.

10.6 Corrosion and Sulfate Considerations

The corrosion and sulfate potential of on-site soils to concrete and buried metal was evaluated in the laboratory using representative samples obtained from the exploratory test pits. Laboratory testing was conducted to assess the effects of sulfate on concrete and the effects of soil resistivity on buried metal. Results of these tests are presented in Appendix B. Recommendations regarding concrete to be utilized in construction of proposed improvements and for buried metal pipes are provided in the following sections.

10.6.1 Concrete

The test for water-soluble sulfate content of the soils was conducted and laboratory test results are presented in Appendix C. The percentage of water-soluble sulfates in water measured was negligible. Based on the laboratory results, the on-site soils represent a Class 0 severity of sulfate exposure to concrete on a scale that ranges between Class 0 and Class 3. Therefore, we recommend that the concrete used for this project should have a maximum water to cementitious material ratio of 0.45 and the cementitious materials should meet one of the below outlined requirements.

- ASTM C 150 Type V

- ASTM C 595 Type IP, IP(MS) or IP(HS)
- ASTM C 1157 Type GU, MS or HS
- ASTM C 150 Type III cement if it is allowed, as in Class E concrete

The structural engineer should ultimately select the concrete design strength based on the project specific loading conditions. Higher strength concrete may be selected for increased durability, resistance to slab curling and shrinkage cracking. We recommend the use of concrete with a design 28-day compressive strength of 4,000 psi or more, for concrete slabs at this site. Concrete exposed to the elements should be air-entrained, as designed by the structural engineer.

10.6.2 Buried Metal Pipes

The corrosion potential of on-site materials was analyzed to evaluate potential effects on foundations and structures. Corrosion potential was evaluated using the results of laboratory testing of samples obtained during the subsurface evaluation that were considered representative of soils at the subject site.

Based on IBC recommendations, The results of the laboratory testing indicate the on-site materials could be extremely corrosive to ferrous metals. Therefore, special consideration should be given to the use of heavy gauge, corrosion-protected, underground steel pipe or culverts, if any are planned. A corrosion specialist should be consulted appropriate design recommendations.

10.7 Site Drainage

Infiltration of water into subsurface soils can lead to soil movement and associated distress, and chemically and physically related deterioration of concrete structures. To reduce the potential for infiltration of moisture into subsurface soils at the site, we recommend the following:

- Positive drainage should be established and maintained away from the proposed buildings and STA. Positive drainage may be established by providing a surface gradient for paved areas of 2 to 5 percent or more for a distance of 10 feet or more away from structures. Where concrete flatwork is placed adjacent to structures and other considerations are required by law, such as ADA requirements, slopes of 1 percent or more are considered acceptable. For unpaved areas, positive drainage may be established by a slope of approximately 5 percent away from structures, where possible.
- Adequate surface drainage should be provided to channel surface water away from on-site structures, STA, and off paved surfaces to a suitable outlet such as a storm drain. Adequate surface drainage may be enhanced by utilization of graded swales, area drains, and other drainage devices. Surface run-off should not be allowed to pond near structures or structure footings.

- Building roof drains should have downspouts tightlined to an appropriate outlet, such as a storm drain or the street, away from structures, pavements, and flatwork. If tightlining of the downspouts is not practicable, they should discharge 5 feet or more away from structures and onto surfaces that slope away from the structure. Downspouts should not be allowed to discharge onto the ground surface adjacent to building foundations.

- The possibility of moisture infiltration beneath a structure, in the event of plumbing leaks, should be considered in the design and construction of underground water and sewer conduits. Permitting increases in moisture to the building supporting soils may result in a decrease in bearing capacity and an increase in settlement, heave, and/or differential movement. Incorporating a perimeter drainage system around the building foundations that will aid in reduction of the moisture infiltration of subsurface soils may be considered.

- Utility trenches should be backfilled with compacted, low permeability fill (i.e. permeability of 10-5 cm/s or less) within 5 feet of the building. Planters, if any, should be maintained 5 feet or more from the building and constructed with closed bottoms or with drainage systems to drain excess irrigation away from the building.

10.8 Construction Observation and Testing

A qualified geotechnical consultant should perform appropriate observation and testing services during grading and construction operations. These services should include observation of any soft, loose, or otherwise unsuitable soils, evaluation of subgrade conditions where soil removals are performed, evaluation of the suitability of proposed borrow materials for use as fill, evaluation of the stability of open temporary excavations, evaluation of the results of any subgrade stabilization or dewatering activities, and performance of observation and testing services during placement and compaction of engineered fill and structural fill soils.

The geotechnical consultant should also perform observation and testing services during placement of concrete, mortar, grout, asphalt concrete, and steel reinforcement. If another geotechnical consultant is selected to perform foundation inspection, and construction observation and materials testing services for the project, we request that the selected consultant provide a letter to the owner, with a copy to Ninyo & Moore, indicating that they fully understand our geotechnical recommendations and that they are in full agreement with the recommendations contained in this report. Qualified subcontractors utilizing appropriate techniques and construction materials should perform construction of the proposed improvements.

10.9 Plan Review

The recommendations presented in this report are based on preliminary and conceptual design information for the proposed project and on the findings of our geotechnical evaluation. When finished, project plans and specifications should be reviewed by the geotechnical consultant prior to submitting the plans and specifications for bid. Additional field exploration, laboratory testing and geotechnical recommendations may be needed upon review of the project design plans.

10.10 Pre-Construction Meeting

We recommend a pre-construction meeting be held. The owner or the owner's representative, the architect, the contractor, and the geotechnical consultant should be in attendance to discuss the plans and the project.

11 LIMITATIONS

The field evaluation, laboratory testing, and geotechnical analyses presented in this geotechnical report have been conducted in general accordance with current practice and the standard of care exercised by geotechnical consultants performing similar tasks in the project area. No warranty, expressed or implied, is made regarding the conclusions, recommendations, and opinions presented in this report. There is no evaluation detailed enough to reveal every subsurface condition. Variations may exist and conditions not observed or described in this report may be encountered during construction. Uncertainties relative to subsurface conditions can be reduced through additional subsurface exploration. Additional subsurface evaluation will be performed upon request. Please also note that our evaluation was limited to assessment of the geotechnical aspects of the project, and did not include evaluation of structural issues, environmental concerns, or the presence of hazardous materials.

This document is intended to be used only in its entirety. No portion of the document, by itself, is designed to completely represent any aspect of the project described herein. Ninyo & Moore should be contacted if the reader requires additional information or has questions regarding the content, interpretations presented, or completeness of this document.

This report is intended for design purposes only. It does not provide sufficient data to prepare an accurate bid by contractors. It is suggested that the bidders and their geotechnical consultant perform an independent evaluation of the subsurface conditions in the project areas. The independent evaluations may include, but not be limited to, review of other geotechnical reports prepared for the adjacent areas, site reconnaissance, and additional exploration and laboratory testing.

Our conclusions, recommendations, and opinions are based on an analysis of the observed site conditions. If geotechnical conditions different from those described in this report are encountered, our office should be notified and additional recommendations, if warranted, will be provided upon request. It should be understood that the conditions of a site could change with time as a result of natural processes or the activities of man at the subject site or nearby sites. In addition, changes to the applicable laws, regulations, codes, and standards of practice may occur due to government action or the broadening of knowledge. The findings of this report may,

therefore, be invalidated over time, in part or in whole, by changes over which Ninyo & Moore has no control.

This report is intended exclusively for use by the client. Any use or reuse of the findings, conclusions, and/or recommendations of this report by parties other than the client is undertaken at said parties' sole risk.

12 REFERENCES

American Concrete Institute (ACI), 2010, Guide to Design of Slabs-On-Ground (ACI 360R-10).

American Concrete Institute (ACI), 2015, Guidelines for Concrete Floor and Slab Construction (ACI 302.1R-15).

American Concrete Institute (ACI), 2019, Building Code Requirements for Structural Concrete (ACI 318-19) and Commentary.

American Society of Civil Engineers (ASCE), 2010, Minimum Design Loads and Associated Criteria for Buildings and Other Structures.

American Society of Civil Engineers (ASCE), 2016, Minimum Design Loads and Associated Criteria for Buildings and Other Structures.

American Society for Testing and Materials (ASTM), 2020 Annual Book of ASTM Standards.

Idaho Geological Survey, 2022, https://www.idahogeology.org/.

Idaho Department of Environmental Quality (IDEQ), 2022a, Individual/Subsurface Sewage Disposal Rules, dated March 31.

Idaho Department of Environmental Quality (IDEQ), 2022b, Technical Guidance Manual, Individual and Subsurface Sewage Disposal Systems, dated September.

International Code Council, 2018, International Building Code.

Lewis, R.S, Link, P.K., Stanford, L.R., and Long, S.P., 2012, Geologic Map of Idaho, 1:750,000.

Malde, H.E., H.A. Powers, C.H. Marshall. 1963. Reconnaissance geologic map of west-central Snake River Plain, Idaho. U.S. Geological Survey Miscellaneous Geological Investigations Map I-373.

Ninyo & Moore, In-house proprietary information.

Occupational Safety and Health Administration (OSHA), 2005, OSHA Standards for the Construction Industry, 29 CFR Part 1926: dated June.

OSHPD, 2022, Seismic Design Maps, http://seismicmaps.org/.

Othberg, K.L., Kaufmann, J.D., Gillerman, V.S., and Garwood, D.L., 2012, Geologic Map of the Twin Falls 30 x 60 Minute Quadrangle, Idaho, 1:100,000.

Scott, W.E., 1982, Surficial Geologic Map of the Eastern Snake River Plain and Adjacent Areas, 111 degree x 115 degree W., Idaho and Wyoming, 1:250,000.

FIGURES

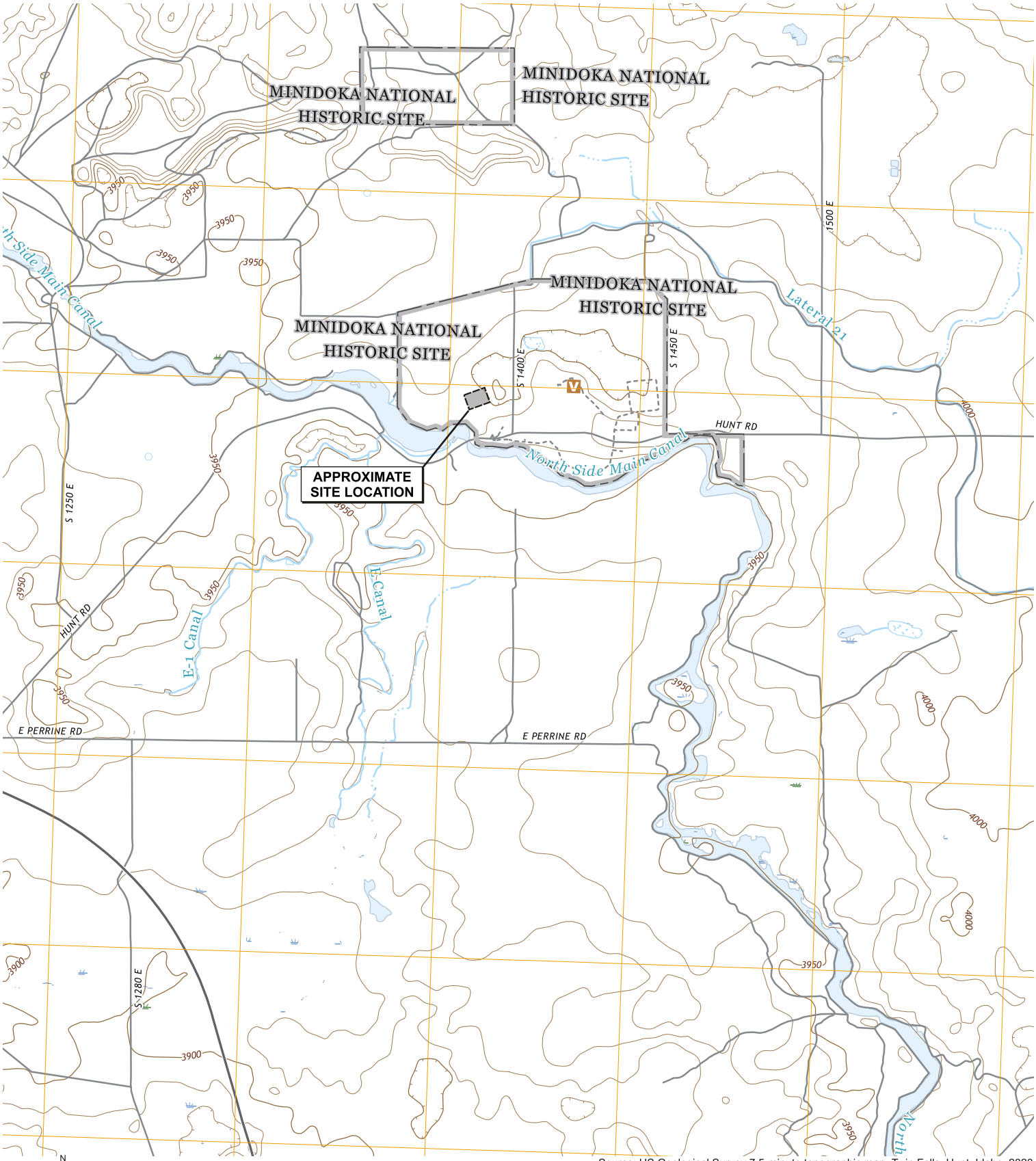

Source: US Geological Survey 7.5-minute topographic map, Twin Falls, Hunt, Idaho, 2020.

N

FEET

0 2000

NOTE: DIMENSIONS, DIRECTIONS AND LOCATIONS ARE APPROXIMATE.

FIGURE 1

SITE LOCATION

MINI ROBINSON MAINTENANCE BUILDING
MINIDOKA NATIONAL HISTORIC SITE
TWIN FALLS, IDAHO

Ninyo & Moore
Geotechnical & Environmental Sciences Consultants

501559002 | 3/23

bsm file no: 1559vmap1022

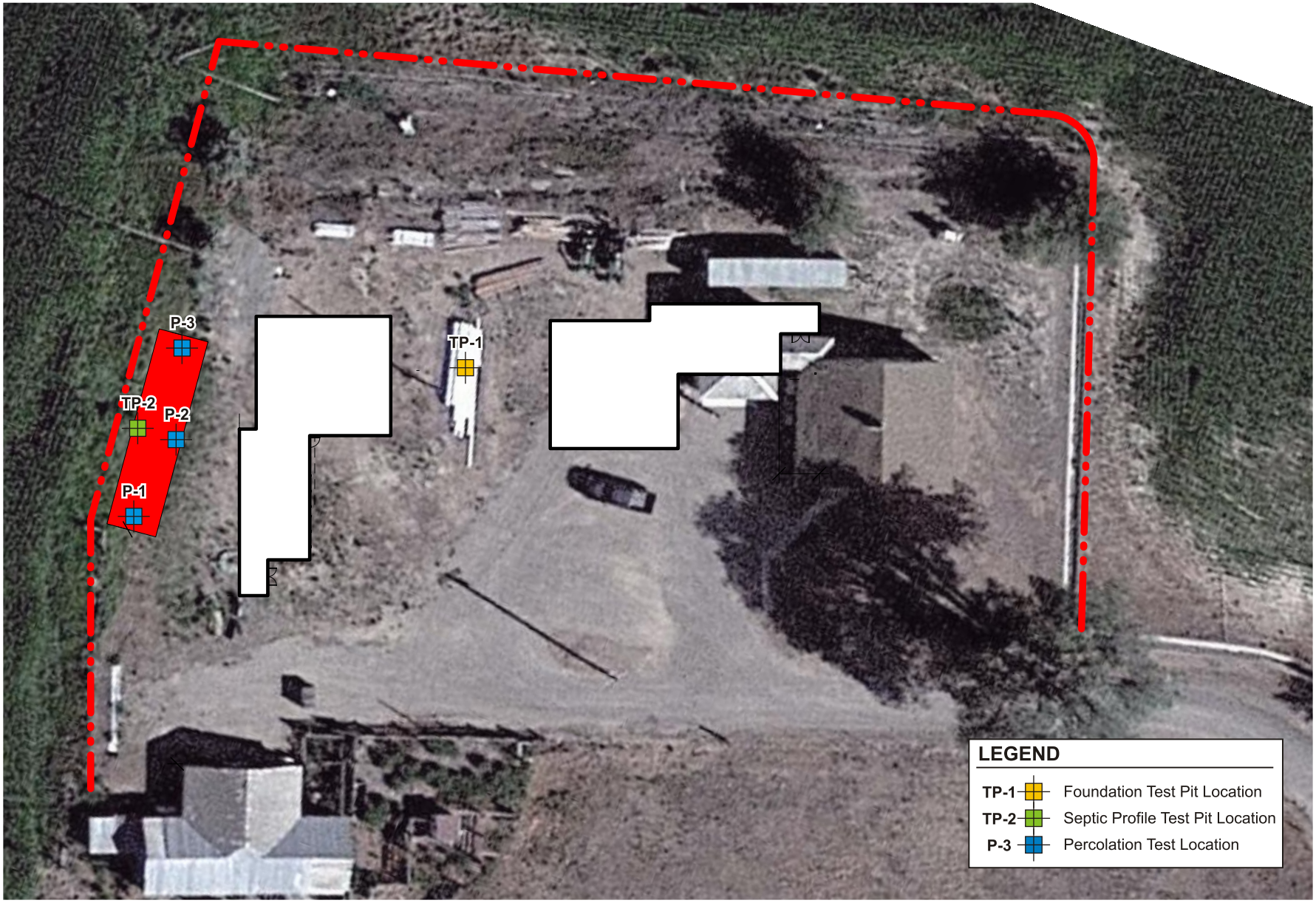

N

FEET

0 50

NOTE: DIMENSIONS, DIRECTIONS AND LOCATIONS ARE APPROXIMATE.

bsm file no: 1559blm1022b

FIGURE 2

Ninyo & Moore
Geotechnical & Environmental Sciences Consultants

TEST PIT LOCATIONS

MINI REPAIR AND RENOVATION OF THE ROBINSON MAINTENANCE BUILDING
MINIDOKA NATIONAL HISTORIC SITE
TWIN FALLS, IDAHO

501559002 | 10/22

APPENDIX A

Test Pit Logs

APPENDIX A

TEST PIT LOGS

Field Procedure for the Collection of Disturbed Samples
Disturbed soil samples were obtained in the field using the following methods.

Bulk Samples
Bulk samples of representative earth materials were obtained from the exploratory test pits. The samples were bagged and transported to the laboratory for testing.

Field Procedure for the Collection of Ring-lined Samples
Ring-lined soil samples were obtained in the field using the following methods.

The Modified California Drive Ring Samples
The brass rings with a length of 4 inches and an inside diameter of 1.9 inches, were pushed into the ground with the bucket of the excavator. The brass ring samples were removed, sealed, and transported to the laboratory for testing.

Ninyo & Moore

TEST PIT LOG

MINI ROBINSON MAINTENANCE BUILDING
MINIDOKA NATIONAL HISTORIC SITE, TWIN FALLS, IDAHO

PROJECT NO.	DATE
501559002	9/7/2022

DATE EXCAVATED	9/7/2022	TEST PIT NO.	TP-1
GROUND ELEVATION	3,960'±	LOGGED BY	JFS
METHOD OF EXCAVATION	Bobcat E35 Mini Excavator		
LOCATION	Hunt, Idaho		

DEPTH (FEET)	SAMPLES: Bulk	SAMPLES: Driven	SAMPLES: DCP Blows	MOISTURE (%)	DRY DENSITY (PCF)	CLASSIFICATION U.S.C.S.	DESCRIPTION
0			26			CL	FILL: Light brown and gray, dry, sandy lean CLAY.
	■	■	32	6.6	112.4	CL	ALLUVIUM: Light brown, dry, very stiff, sandy lean CLAY.
2			15				
	■	■		7.9	114.6	SM	Light brown, dry, dense, silty fine to medium SAND.
4			65				
							Refusal on basalt boulders.
6							Total Depth: 4.7 feet. Groundwater was not encountered during drilling. Backfilled with on-site soil after drilling on 9/7/2022.
8							Notes: Groundwater, though not encountered at the time of drilling, may rise to a higher level due to seasonal variations in precipitation and several other factors as discussed in the report.
10							The ground elevation shown above is an estimation only. It is based on our interpretations of published maps and other documents reviewed for the purposes of this evaluation. It is not sufficiently accurate for preparing construction bids and design documents.
12							

SCALE = 1 in./2 ft.

FIGURE A-1

Ninyo & Moore

TEST PIT LOG

MINI ROBINSON MAINTENANCE BUILDING
MINIDOKA NATIONAL HISTORIC SITE, TWIN FALLS, IDAHO

PROJECT NO.	DATE
501559002	9/7/2022

DATE EXCAVATED: 9/7/2022 | TEST PIT NO.: TP-2
GROUND ELEVATION: 3,960'± | LOGGED BY: JFS
METHOD OF EXCAVATION: Bobcat E35 Mini Excavator
LOCATION:

DEPTH (FEET)	SAMPLES: Bulk	SAMPLES: Driven	SAMPLES: DCP Blows	MOISTURE (%)	DRY DENSITY (PCF)	CLASSIFICATION U.S.C.S.	DESCRIPTION
0	■		57			SM	FILL: Dark brown, dry, silty SAND; few gravel.
	■		51				Brown.
2	■	■	55	11.0	121.4	CL	ALLUVIUM: Light brown, moist, hard, sandy lean CLAY.
			60				
4	■		50/1.5"				Brown.
			51				
6	■		77				Trace gravel.
							Refusal; possibly basalt.
8							Total Depth: 7 feet. Groundwater was not encountered during drilling. Backfilled with on-site soil on 9/8/2022.
10							Notes: Groundwater, though not encountered at the time of drilling, may rise to a higher level due to seasonal variations in precipitation and several other factors as discussed in the report.
12							The ground elevation shown above is an estimation only. It is based on our interpretations of published maps and other documents reviewed for the purposes of this evaluation. It is not sufficiently accurate for preparing construction bids and design documents.

SCALE = 1 in./2 ft.

FIGURE A-2

Ninyo & Moore

TEST PIT LOG

MINI ROBINSON MAINTENANCE BUILDING
MINIDOKA NATIONAL HISTORIC SITE, TWIN FALLS, IDAHO

PROJECT NO.	DATE
501559002	9/7/2022

DATE EXCAVATED 9/7/2022 TEST PIT NO. P-1

GROUND ELEVATION 3,960'± LOGGED BY JFS

METHOD OF EXCAVATION Bobcat E35 Mini Excavator and GX 35

LOCATION Hunt, Idaho

DEPTH (FEET)	SAMPLES: Bulk	SAMPLES: Driven	SAMPLES: DCP Blows	MOISTURE (%)	DRY DENSITY (PCF)	CLASSIFICATION U.S.C.S.	DESCRIPTION
0			55			SC	ALLUVIUM: Dark brown, dry, dense, clayey SAND; trace gravel.
						CL	Light brown, dry, hard, sandy lean CLAY.
2			31	11.0			Very stiff.
4							Total Depth: 4.3 feet. Groundwater was not encountered during drilling. Backfilled with on-site soil on 9/8/2022.
6							Notes: Groundwater, though not encountered at the time of drilling, may rise to a higher level due to seasonal variations in precipitation and several other factors as discussed in the report.
8							The ground elevation shown above is an estimation only. It is based on our interpretations of published maps and other documents reviewed for the purposes of this evaluation. It is not sufficiently accurate for preparing construction bids and design documents.
10							
12							

SCALE = 1 in./2 ft.

FIGURE A-3

Ninyo & Moore

TEST PIT LOG

MINI ROBINSON MAINTENANCE BUILDING
MINIDOKA NATIONAL HISTORIC SITE, TWIN FALLS, IDAHO

PROJECT NO.	DATE
501559002	9/7/2022

DATE EXCAVATED 9/7/2022 TEST PIT NO. P-2

GROUND ELEVATION 3,960'± LOGGED BY JFS

METHOD OF EXCAVATION Bobcat E35 Mini Excavator and GX 35

LOCATION Hunt, Idaho

DEPTH (FEET)	SAMPLES: Bulk	SAMPLES: Driven	SAMPLES: DCP Blows	MOISTURE (%)	DRY DENSITY (PCF)	CLASSIFICATION U.S.C.S.	DESCRIPTION
0	■		82			SC	FILL: Brown to dark brown, dry, clayey SAND with gravel. Dark gray.
2						CL	ALLUVIUM: Light brown, dry, hard, sandy lean CLAY.
			51				
4							
6							Total Depth: 5.1 feet. Groundwater was not encountered during drilling. Backfilled with on-site soil on 9/8/2022. Notes: Groundwater, though not encountered at the time of drilling, may rise to a higher level due to seasonal variations in precipitation and several other factors as discussed in the report. The ground elevation shown above is an estimation only. It is based on our interpretations of published maps and other documents reviewed for the purposes of this evaluation. It is not sufficiently accurate for preparing construction bids and design documents.
8							
10							
12							

SCALE = 1 in./2 ft.

FIGURE A-4

Ninyo & Moore

TEST PIT LOG

MINI ROBINSON MAINTENANCE BUILDING
MINIDOKA NATIONAL HISTORIC SITE, TWIN FALLS, IDAHO

PROJECT NO.	DATE
501559002	9/7/2022

DATE EXCAVATED 9/7/2022 TEST PIT NO. P-3

GROUND ELEVATION 3,960'± LOGGED BY JFS

METHOD OF EXCAVATION Bobcat E35 Mini Excavator and GX 35

LOCATION Hunt, Idaho

DEPTH (FEET)	SAMPLES Bulk	SAMPLES Driven	SAMPLES DCP Blows	MOISTURE (%)	DRY DENSITY (PCF)	CLASSIFICATION U.S.C.S.	DESCRIPTION
0			39			CL	FILL: Brown, dry, stiff, sandy lean CLAY.
						CL	ALLUVIUM: Light brown, moist, stiff, sandy lean CLAY.
2							
			50/ 1.5"				Hard.
4							
							Total Depth: 5 feet. Groundwater was not encountered during drilling. Backfilled with on-site soil on 9/8/2022.
6							
							Notes: Groundwater, though not encountered at the time of drilling, may rise to a higher level due to seasonal variations in precipitation and several other factors as discussed in the report.
8							The ground elevation shown above is an estimation only. It is based on our interpretations of published maps and other documents reviewed for the purposes of this evaluation. It is not sufficiently accurate for preparing construction bids and design documents.
10							
12							

SCALE = 1 in./2 ft.

FIGURE A-5

APPENDIX B

Laboratory Testing by Ninyo & Moore

APPENDIX B

LABORATORY TESTING

Classification

Soils were visually and texturally classified in accordance with the Unified Soil Classifications System (USCS) in general accordance with ASTM D 2488. Soil classifications are indicated on the logs of the exploratory excavations in Appendix A.

In-Place Moisture and Density Tests

The moisture content and dry density of ring-lined samples obtained from the exploratory test pits were evaluated in general accordance with ASTM D 2837. These test results are presented on the logs of the exploratory test pits in Appendix A.

Atterberg Limits

Tests were performed on selected representative fine-grained soil samples to evaluate the liquid limit, plastic limit, and plasticity index in general accordance with ASTM D 4318. These test results were utilized to evaluate the soil classification in accordance with the Unified Soil Classification System (USCS). The test results and classifications are shown on Figures 2 and 3.

Gradation Analysis

Gradation analysis tests were performed on selected representative soil samples in general accordance with ASTM D6913. The grain size distribution curves are shown on Figures B-1 through B-4. These test results were utilized in evaluating the soil classifications in accordance with the USCS.

SYMBOL	LOCATION	DEPTH (ft)	LIQUID LIMIT	PLASTIC LIMIT	PLASTICITY INDEX	USCS CLASSIFICATION (Fraction Finer Than No. 40 Sieve)	EQUIVALENT USCS
●	TP-2	2.0-2.5	28	18	10	CL	CL
■							
◆							
○							
□							
Δ							
X							
+							

NP - INDICATES NON-PLASTIC

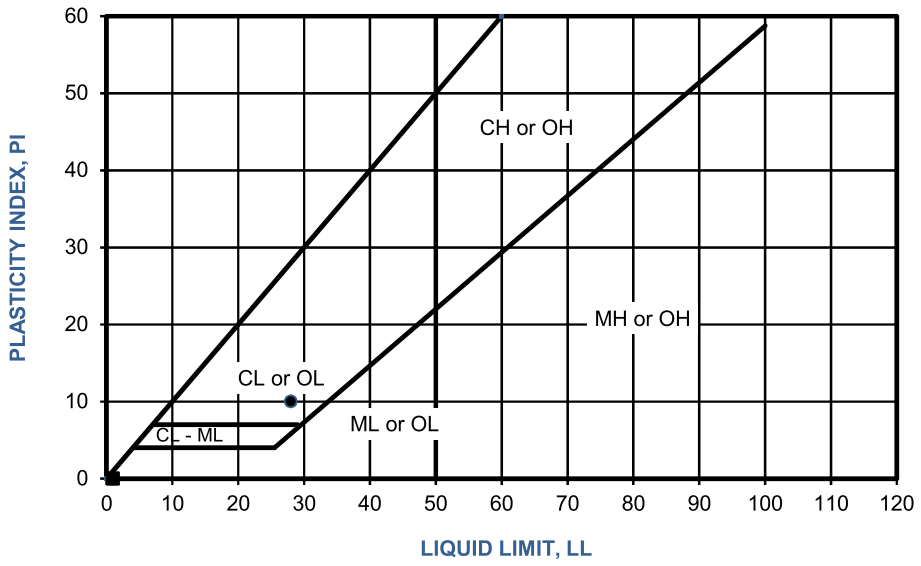

PERFORMED IN GENERAL ACCORDANCE WITH ASTM D 4318

FIGURE B-1

Ninyo & Moore
Geotechnical & Environmental Sciences Consultants

ATTERBERG LIMITS TEST RESULTS

MINI ROBINSON MAINTENANCE BUILDING
MINIDOKA NATIONAL SITE, TWIN FALLS, IDAHO

501559002 | 3/23

SAMPLE LOCATION	SAMPLE DEPTH (ft)	DESCRIPTION	PERCENT PASSING NO. 4	PERCENT PASSING NO. 200	EQUIVALENT USCS
TP-1	1.0-1.7	Fill: Light brown and gray Sandy Lean CLAY		90	CL
TP-1	3.0-3.4	Light brown Silty Fine to Medium SAND		22	SM
TP-2	2.0-2.5	Light brown Sandy Lean CLAY		81	CL
P-1	2.0-4.0	Light brown Sandy Lean CLAY		68	CL

PERFORMED IN GENERAL ACCORDANCE WITH ASTM D 1140

FIGURE B-2

Ninyo & Moore
Geotechnical & Environmental Sciences Consultants

NO. 200 SIEVE ANALYSIS TEST RESULTS

MINI ROBINSON MAINTENANCE BUILDING
MINIDOKA NATIONAL HISTORIC SITE, TWIN FALLS, IDAHO
501559002 | 3/23

APPENDIX C

Laboratory Testing by Others

Chemtech-Ford Laboratories
Serving the Intermountain West Since 1953

9632 South 500 West
Sandy, UT 84070
O:(801) 262-7299 F: (866) 792-0093
www.ChemtechFord.com

Certificate of Analysis

Ninyo and Moore
Joseph Spendlove
871 Robinson Drive
North Salt Lake, UT 84054

PO#:
Receipt: **9/20/22 13:26 @ 32.0** °C
Date Reported: 9/30/2022
Project Name: **501509002**

Sample ID: **TP-1 @ 3.0-4.0**

Matrix: **Solid**
Lab ID: **22I1615-01**
Date Sampled: **9/7/22 13:17**
Sampled By: **Client**

	Result	Units	Minimum Reporting Limit	Method	Preparation Date/Time	Analysis Date/Time	Flag(s)
Inorganic							
Chloride, Soluble (IC)	16	mg/kg dry	11	EPA 300.0	9/23/22	9/23/22	
pH	8.6	pH Units	0.1	EPA 9045D	9/20/22	9/20/22	
Sulfate, Soluble (IC)	62	mg/kg dry	11	EPA 300.0	9/23/22	9/23/22	
Total Dissolved Solids, Soluble	1310	mg/kg dry	545	SM 2540 C	9/26/22	9/28/22	
Total Solids	91.8	%	0.1	EPA 8000C	9/21/22	9/22/22	
eH	460	mV	0.1	SM 2580 B	9/21/22 9:04	9/21/22 10:33	
Resistivity	8.8	ohm m	1.0	SSSA 10-3.3	9/26/22	9/26/22	
Metals							
Sodium, Total	517	mg/kg dry	391	EPA 6010B/C/D	9/27/22	9/28/22	

Chemtech-Ford Laboratories
Serving the Intermountain West Since 1953

9632 South 500 West
Sandy, UT 84070
O:(801) 262-7299 F: (866) 792-0093
www.ChemtechFord.com

Certificate of Analysis

Ninyo and Moore
Joseph Spendlove
871 Robinson Drive
North Salt Lake, UT 84054

PO#:
Receipt: **9/20/22 13:26 @ 32.0** °C
Date Reported: 9/30/2022
Project Name: **501509002**

Report Footnotes

Abbreviations

ND = Not detected at the corresponding Minimum Reporting Limit (MRL).
1 mg/L = one milligram per liter or 1 mg/kg = one milligram per kilogram = 1 part per million.
1 ug/L = one microgram per liter or 1 ug/kg = one microgram per kilogram = 1 part per billion.
1 ng/L = one nanogram per liter or 1 ng/kg = one nanogram per kilogram = 1 part per trillion.

APPENDIX D

Percolation Testing Results

Ninyo & Moore

PERCOLATION TEST RESULTS

Project Number: 501559002
Project: MIIN Robinson Maintenance Building
Location: Twin Falls, ID

Test Date: 9/8/2022
Tested By: JFS
Elevation: 3,958' +/- (MSL)

Hole Number	Hole Depth	Time Interval	Initial Water Level Height at Start	Final Water Level Height at End	Drop in Water Level	Average Percolation Rate	Time Start	Time Stop
	(inches)	(minutes)	(inches)	(inches)	(inches)	(min/in)	(hh:mm)	(hh:mm)
P-1	45	30	0.00	3.00	3.00	10.00	9:35	
Height of Sand/Gravel		30	3.00	5.50	2.50	12.00		
added at bottom (in):	6.0	30	5.50	8.00	2.50	12.00		
		30	8.00	9.00	1.00	30.00		
		30	9.00	10.00	1.00	30.00		
		30	10.00	11.00	1.00	30.00		
		30	11.00	12.00	1.00	30.00		
		30	13.0	14.0	1.0	30.0		13:35
P-2	52	30	0.00	7.50	7.50	4.00	9:40	
Height of Sand/Gravel		30	7.50	9.00	1.50	20.00		
added at bottom (in):	6.0	30	9.00	10.50	1.50	20.00		
		30	10.50	11.50	1.00	30.00		
		30	11.50	13.00	1.50	20.00		
		30	13.00	14.00	1.00	30.00		
		30	14.00	15.00	1.00	30.00		
		30	15.0	16.0	1.0	30.0		13:40
P-3	57	30	0.00	4.50	4.50	6.67	9:45	
Height of Sand/Gravel		30	4.50	6.50	2.00	15.00		
added at bottom (in):	6.0	30	6.50	8.00	1.50	20.00		
		30	8.00	9.50	1.50	20.00		
		30	9.50	10.50	1.00	30.00		
		30	10.50	11.50	1.00	30.00		
		30	11.50	12.50	1.00	30.00		
		30	12.5	13.0	0.5	60.0		13:45

Average Percolation Rate = 40.0 min/in

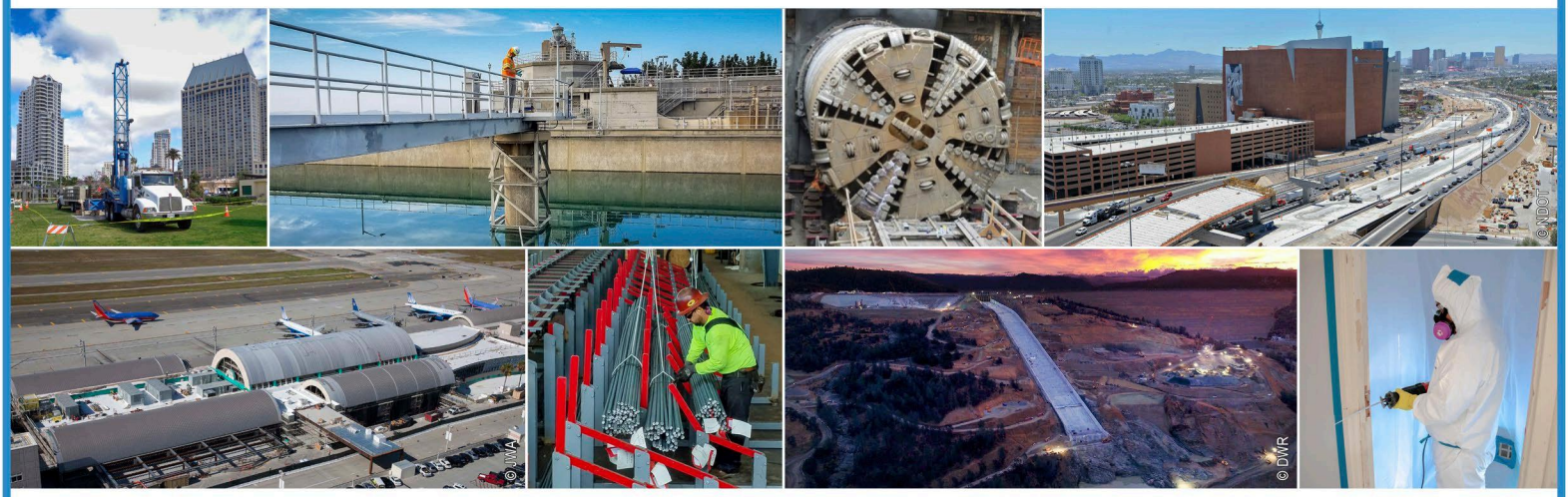

9707 E. Easter Lane | Centennial, Colorado 80112 | p. 303.629.6000

SAN DIEGO | IRVINE | LOS ANGELES | FONTANA | OAKLAND | SAN FRANCISCO | SACRAMENTO

SAN JOSE | PHOENIX | TUCSON | PRESCOTT | LAS VEGAS | DENVER | FT. COLLINS | HOUSTON

ninyoandmoore.com

Ninyo & Moore

Geotechnical & Environmental Sciences Consultants

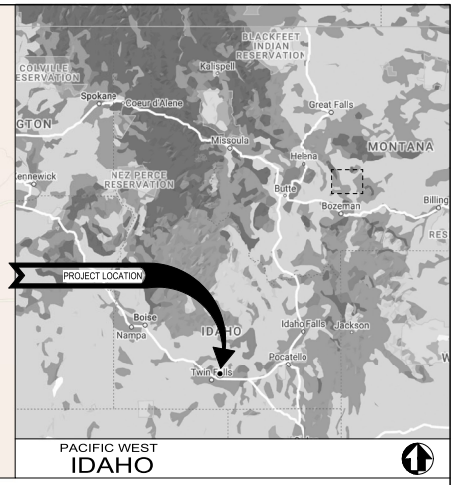

MINIDOKA NATIONAL HISTORIC SITE

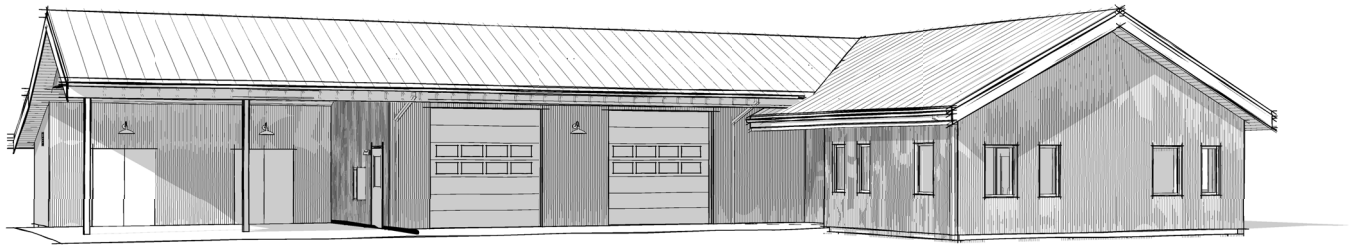

PROPOSED MAINTENANCE BUILDING

NOTE: PROPOSED MAINTENANCE BUILDING AXONOMETRIC SKETCH SHOWN FOR DIAGRAMMATIC PURPOSES ONLY. REFER TO DRAWINGS WITHIN FOR CONSTRUCTION DOCUMENTATION.

PMIS 314972

ANDERSON HALLAS ARCHITECTS, PC - 140P2019D0016

PRIME / ARCH:
ANDERSON HALLAS, PC
GOLDEN, CO
80401

CIVIL:
OTAK INC.
PORTLAND, OR
97204

MECHANICAL:
360 ENGINEERING
GOLDEN, CO
80403

STRUCTURAL:
JVA, INC.
BOULDER, CO
80302

ELECTRICAL:
AE DESIGN
DENVER, CO
80202

Mark	Sheet	REVISION	Date	Initial

QUALITY DESIGN CERTIFICATION

- ☐ Prepared in Accordance with design Development (Title I) _____ Drawing No.
- OR
- ☐ Variance from Design Development (Title I) Approved by Superintendent on _____ Date
- OR
- ☐ Construction Drawing Not Preceded by Design Development (Title I)

Project Manager _____ Date

FINAL 100% CDS

UNITED STATES
DEPARTMENT OF THE INTERIOR

NATIONAL PARK SERVICE
DENVER SERVICE CENTER

TITLE OF DRAWING
MIIN MAINTENANCE BUILDING

LOCATION WITHIN PARK
MINIDOKA
NAME OF PARK
MINIDOKA NATIONAL HISTORIC SITE

REGION	COUNTY	STATE
PACIFIC WEST	JEROME	IDAHO

DRAWING NO.
194
187126

PMIS/PKG NO.
314972

SHEET
1 OF 82

5/22/2024 11:18:35 AM Autodesk Docs://2023-360 NPS MIIN Rehab DD-CD/2023360 NPS MIIN - v24.rvt

GENERAL ABBREVIATIONS

#	POUND(S) or NUMBER	HDW	HARDWARE
&	AND	HM	HOLLOW METAL
(S)	SEALANT	HORIZ	HORIZONTAL
(T)	TEMPERED	HT	HEIGHT
<	ANGLE	HVAC	HEATING, VENTILATION and AIR CONDITIONING
<E>	EXISTING	IBC	INTERNATIONAL BUILDING CODE
<N>	NEW	ID	INSIDE DIAMETER
@	AT	INCL.	INCLUDING
A/V	AUDIO VISUAL	INFO	INFORMATION
ABA	ARCHITECTURAL BARRIERS ACT	INS	INSULATION or INSULATED
ABV	ABOVE	INT	INTERIOR
ACM	ASBESTOS CONTAINING MATERIAL	JT	JOINT
ACT	ACOUSTICAL CEILING TILE	LAV	LAVATORY
ADD	ADDENDUM	LIN	LINOLEUM
ADJ	ADJACENT or ADJUSTABLE	LS	LANDSCAPE
AFF	ABOVE FINISHED FLOOR	MATL	MATERIAL
AHU	AIR HANDLING UNIT	MAX	MAXIMUM
AL	ALUMINUM	MECH	MECHANICAL
ALT	ALTERNATE	MEP	MECHANICAL, ELECTRICAL and PLUMBING
APPROX	APPROXIMATE(LY)	MFG	MANUFACTURING
ARCH	ARCHITECTURAL	MFR	MANUFACTURER
ASPH	ASPHALT	MIN	MINIMUM
B.O.	BOTTOM OF	MISC	MISCELLANEOUS
BLDG	BUILDING	MO	MASONRY OPENING
BLKG	BLOCKING	MTD	MOUNTED
BR	BACKER ROD	MTL	METAL
BTWN	BETWEEN	N	NORTH
CAB	CABINET	NA	NOT APPLICABLE
CJ	CONTROL JOINT	NH	NON-HALOGENATED
CL	CENTERLINE	NIC	NOT IN CONTRACT
CLG	CEILING	NO.	NUMBER
CLR	CLEAR	NOM	NOMINAL
CMU	CONCRETE MASONRY UNIT	NS	NORTH SOUTH
CO	CONTRACTING OFFICER	NTS	NOT TO SCALE
COL	COLUMN	OC	ON CENTER
CONC	CONCRETE	OD	OUTSIDE DIAMETER
CONST	CONSTRUCTION	OH	OPPOSITE HAND
CONT	CONTINUOUS	OPNG	OPENING
CORR	CORRIDOR	OPP	OPPOSITE
CPT	CARPET	OSB	ORIENTED STRAND BOARD
CT	CERAMIC TILE	OTE	OPEN TO EXISTING
CTBB	CEMENTITIOUS TILE BACKER BOARD	OTS	OPEN TO STRUCTURE
CTR	CENTER	OVH	OVERHANG
DBL	DOUBLE	PLAM	PLASTIC LAMINATE
DEMO	DEMOLITION	PLAS	PLASTER
DET	DETAIL	PLUMB	PLUMBING
DF	DRINKING FOUNTAIN	PT	PAINT
DIAM	DIAMETER	PTD	PAINTED
DIM	DIMENSION	PWD	PLYWOOD
DN	DOWN	RAD	RADIUS
DS	DOWNSPOUT	RB	RUBBER BASE
E	EAST	RCP	REFLECTED CEILING PLAN
EA	EACH	RD	ROOF DRAIN
EG	FOR EXAMPLE	RE:	REFER TO or REFERENCE
ELEC	ELECTRICAL	REINF	REINFORCED
ELEV	ELEVATION	RELOC	RELOCATED
EMER	EMERGENCY	REQ	REQUIRED
ENGR	ENGINEER	REV	REVISE, REVISED or REVISION
EQ	EQUAL	RM	ROOM
EQP	EQUIPMENT	RO	ROUGH OPENING
ETR	EXISTING TO REMAIN	RR	RESTROOM(S)
EW	EAST WEST	RS	ROUGH SAWN
EXT	EXTERIOR	S	SOUTH
F.O.	FACE OF	SCHED	SCHEDULE
FACP	FIRE ALARM CONTROL PANEL	SF	SQUARE FEET
FD	FLOOR DRAIN	SHTG	SHEATHING
FDN	FOUNDATION	SIM	SIMILAR
FE	FIRE EXTINGUISHER	SOG	SLAB ON GRADE
FEC	FIRE EXTINGUISHER CABINET	SPEC	SPECIFICATION(S)
FIN	FINISH(ED)	SQ	SQUARE
FIXT	FIXTURE	SS	STAINLESS STEEL
FLR	FLOOR(ING)	STD	STANDARD
FP	FIRE PROTECTION	STL	STEEL
FRP	FIBERGLASS REINFORCED PANEL(ING)	STN	STAIN
FT	FEET	STRUC	STRUCTURE or STRUCTURAL
FTG	FOOTING	T&G	TONGUE AND GROOVE
FURR	FURRING	T.O.	TOP OF
GA	GAUGE OR GYPSUM ASSOCIATION	TD	THRESHOLD
GALV	GALVANIZED	TYP	TYPICAL
GC	GENERAL CONTRACTOR	U.O.N.	UNLESS OTHERWISE NOTED
GD	GRADE	VCT	VINYL COMPOSITION TILE
GL	GLASS or GLAZING	VERT	VERTICAL
GND	GROUND	VIF	VERIFY IN FIELD
GRT	GROUT	VIN	VINYL
GWB	GYPSUM WALLBOARD	VR	VAPOR RETARDER
HAZMAT	HAZARDOUS MATERIAL	W	WEST
HDR	HEADER	W/	WITH
		W/O	WITHOUT
		WC	WATER CLOSET
		WD	WOOD

GENERAL NOTES

1. DO NOT SCALE DRAWINGS
2. ALL DIMENSIONS ARE TO FACE OF STRUCTURE UNLESS OTHERWISE NOTED. ALL DIMENSIONS INDICATING REQUIRED CLEARANCES ARE TO FACE OF FINISH UNLESS OTHERWISE NOTED.
3. THE CONTRACTOR SHALL BE RESPONSIBLE FOR FAMILIARIZING THEMSELVES WITH THE CONTRACT DOCUMENTS, VERIFYING FIELD CONDITIONS AND DIMENSIONS, AND CONFIRMING THAT THE WORK MAY BE ACCOMPLISHED AS SHOWN PRIOR TO PROCEEDING WITH CONSTRUCTION. CONTRACTOR SHALL NOTIFY C.O. IN WRITING OF ANY DISCREPANCY WITHIN THE CONTRACT DOCUMENTS AND REQUEST CLARIFICATION PRIOR TO PROCEEDING WITH CONSTRUCTION.
4. SHOULD THERE BE ANY QUESTIONS CONCERNING THE CONTRACT DOCUMENTS, EXISTING CONDITIONS, AND/OR DESIGN INTENT, THE CONTRACTOR SHALL BE RESPONSIBLE FOR OBTAINING A CLARIFICATION FROM THE C.O. PRIOR TO PROCEEDING WITH THE WORK, OR RELATED WORK IN QUESTION.
5. THE CONTRACTOR SHALL BE RESPONSIBLE FOR FAMILIARIZING THEMSELVES WITH THE PROJECT SCOPE OF WORK, SCHEDULE, AND DEADLINES. THE CONTRACTOR SHALL BE RESPONSIBLE FOR ADVISING THE C.O. OF ALL ITEMS REQUIRING A LONG LEAD TIME UPON NOTICE TO PROCEED THAT WILL AFFECT THE SCHEDULE, AND SHALL SUBMIT ORDER CONFIRMATIONS AND DELIVERY DATES FOR THE ITEMS IN QUESTION TO THE C.O.
6. INSTALL ALL MANUFACTURED ITEMS, MATERIALS, AND EQUIPMENT IN STRICT ACCORDANCE WITH THE MANUFACTURER'S RECOMMENDED SPECIFICATIONS, EXCEPT WHERE THE CONTRACT DOCUMENTS ARE MORE STRINGENT. ANY MISCELLANEOUS ITEMS OR MATERIALS NOT SPECIFICALLY NOTED, BUT REQUIRED FOR PROPER INSTALLATION SHALL BE FURNISHED AND INSTALLED BY THE CONTRACTOR. THE CONTRACTOR SHALL FURNISH TO THE C.O. ALL WARRANTIES AND GUARANTEES REQUIRED AT THE CONCLUSION OF THE PROJECT.

BID OPTIONS

1. BID OPTION 01: OUTDOOR WORKSPACE/STORAGE
   THIS ITEM CONSISTS OF ALL WORK ASSOCIATED WITH CONSTRUCTION OF THE ATTACHED CARPORT, MATERIAL AND TOOL STORAGE ROOMS AT THE NORTHWEST END OF THE NEW MAINTENANCE BUILDING. REFER TO ARCHITECTURAL PLANS AND ALL OTHER DISCIPLINES DRAWINGS FOR EXTENTS OF BASE VERSUS BID WORK.
   - CARPORT STRUCTURE AND VEHICULAR PAVING
   - TWO STORAGE ROOMS WITH MECHANICAL, ELECTRICAL, & STRUCTURAL SYSTEMS (MATERIAL STORAGE – 111, TOOL STORAGE – 110)
   - PEDESTRIAN PAVING
2. BID OPTION 02: ROBISON HOUSE DEMOLITION
   THIS ITEM CONSISTS OF ALL WORK ASSOCIATED WITH DEMOLITION OF THE EXISTING ROBISON HOUSE. REFER TO ARCHITECTURAL AND CIVIL DEMOLITION PLANS FOR EXTENTS OF DEMOLITION. HOUSE WILL REMAIN OCCUPIED DURING CONSTRUCTION OF NEW MAINTENANCE BUILDING. COORDINATE UTILITY CUTOFF AND DISRUPTION WITH THE CONTRACTING OFFICER, PER SPECIFICATIONS.
3. BID OPTION 03: REMOVE POWER POLE
   THIS ITEM CONSISTS OF ALL WORK ASSOCIATED WITH REMOVING THE EXISTING POWER POLE AND OVERHEAD LINE. REFER TO ELECTRICAL AND CIVIL DRAWINGS FOR INFORMATION ON RELOCATION OF POWER LINE. COORDINATION WITH POWER COMPANY REQUIRED PER SPECIFICATIONS.
4. BID OPTION 04: LINOLEUM FLOOR FINISH
   THIS ITEM CONSISTS OF ALL WORK ASSOCIATED WITH PROVIDING LINOLEUM FLOOR FINISH. REFER TO ARCHITECTURAL FINISH PLANS FOR EXTENTS OF BASE VERSUS BID WORK OF LINOLEUM FLOOR FINISH INSTALLATION.
5. BID OPTION 05: ARCHEOLOGY MONITORING
   THIS ITEM CONSISTS OF ALL WORK ASSOCIATED ENGAGING AN ARCHEOLOGICAL MONITOR TO REVIEW ALL SITE RELATED ACTIVITIES PER SPECIFICATIONS.

SYMBOLS

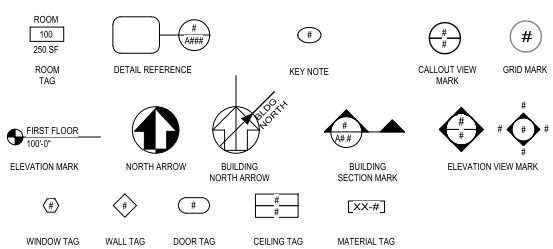

SHEET #	SUB SHEET	TITLE OF SHEET
GENERAL		
1	G000	COVER SHEET
2	G001	GENERAL NOTES AND INDEX
3	G100	CODE ANALYSIS
4	G110	CODE PLAN
5	G120	ACCESSIBILITY
6	G200	ENERGY ANALYSIS
7	G210	ASSEMBLIES
CIVIL		
8	C010	EXISTING CONDITIONS
9	C100	STAGING PLAN
10	C200	TESC & DEMO PLAN
11	C300	SITE PLAN
12	C400	UTILITY PLAN
13	C500	GRADING PLAN
14	C600	CIVIL DETAILS
ARCHITECTURAL		
15	AD01	ROBISON HOUSE DEMO PLANS - BID OPTION 02
16	AD02	ROBISON HOUSE DEMO ELEVATIONS - BID OPTION 02
17	A101	FLOOR PLAN
18	A102	ROOF PLAN
19	A111	REFLECTED CEILING PLAN
20	A121	FINISH PLAN & SCHEDULES
21	A200	EXTERIOR ELEVATIONS
22	A300	BUILDING SECTIONS
23	A310	WALL SECTIONS
24	A311	WALL SECTIONS
25	A400	ENLARGED PLANS & ELEVATIONS
26	A401	ENLARGED PLANS & ELEVATIONS
27	A500	DOOR SCHEDULE, TYPES
28	A501	DOOR DETAILS
29	A510	WINDOW SCHEDULE & DETAILS
30	A600	EXTERIOR DETAILS
31	A601	EXTERIOR DETAILS
32	A602	DETAILS
33	A603	INTERIOR DETAILS
STRUCTURAL		
34	S001	GENERAL NOTES
35	S002	GENERAL NOTES
36	S003	ABBREVIATIONS & SYMBOLS
37	S100	FOUNDATION, EQUIP PLATFORM & ROOF FRAMING PLANS
38	S501	SCHEDULES AND TYPICAL DETAILS
39	S502	FOUNDATION DETAILS
40	S503	FRAMING DETAILS
41	S504	FRAMING DETAILS
42	S505	FRAMING DETAILS
43	S510	TYPICAL COLD-FORMED STEEL DETAILS
44	S511	TYPICAL COLD-FORMED STEEL DETAILS

SHEET #	SUB SHEET	TITLE OF SHEET
MECHANICAL		
45	M001	MECHANICAL COVER SHEET
46	M002	MECHANICAL COMCHECK
47	M003	MECHANICAL COMCHECK
48	M004	MECHANICAL COMCHECK
49	M101	MECHANICAL PLANS
50	M501	MECHANICAL SCHEDULES
51	M502	MECHANICAL SCHEDULES
52	M601	MECHANICAL DETAILS
PLUMBING		
53	P001	PLUMBING COVER SHEET
54	P101	WATER PLAN
55	P102	PLUMBING WASTE & VENT PLAN
56	P501	PLUMBING SCHEDULES
57	P601	PLUMBING DETAILS
ELECTRICAL		
58	E000	ELECTRICAL COVER SHEET
59	E001	ELECTRICAL COVER SHEET
60	E100	ELECTRICAL SITE PLAN
61	E111	ELECTRICAL POWER PLAN
62	E211	ELECTRICAL LIGHTING PLAN
63	E600	ELECTRICAL ONE-LINE DIAGRAM
64	E610	ELECTRICAL DETAILS
65	E700	ELECTRICAL SCHEDULES
66	E710	ELECTRICAL PANEL SCHEDULES
67	E720	ELECTRICAL PANEL SCHEDULES
68	E800	ELECTRICAL LIGHTING SCHEDULES
69	E810	ELECTRICAL LIGHTING CONTROLS & SCHEDULES
70	E900	ELECTRICAL LIGHTING COMPLIANCE
71	E901	ELECTRICAL LIGHTING COMPLIANCE
FIRE ALARM		
72	FA111	FIRE ALARM PLAN
TECHNOLOGY		
73	T000	TECHNOLOGY COVER SHEET
74	T001	TECHNOLOGY RESPONSIBILITY MATRIX
75	T100	TECHNOLOGY SITE PLAN
76	T101	TECHNOLOGY FLOOR PLAN
77	T110	TECHNOLOGY INFASTRUCTURE PLAN
78	T111	TECHNOLOGY CEILING PLAN
79	T400	ENLARGED TECHNOLOGY PLAN IT 103
80	T500	TECHNOLOGY SCHEDULES
81	T600	TECHNOLOGY DETAILS
82	T601	TECHNOLOGY DETAILS

LICENSED ARCHITECT
5/23/2024
ELIZABETH HALLAS
AR-985880
STATE OF IDAHO

DESIGNED: BC	SUB SHEET NO.	TITLE OF SHEET	DRAWING NO. 194
CADD NM / CM	G001	GENERAL NOTES AND INDEX	187126
TECH REVIEW: EH / CR		MIIN MAINTENANCE BUILDING	PMIS/PKG NO. 314972
DATE: 05/23/2024		MINIDOKA NATIONAL HISTORIC SITE	SHEET 2 OF 82

5/22/2024 11:18:35 AM Autodesk Docs://2023-360 NPS MIIN Rehab DD-CD/2023360 NPS MIIN - v24.rvt

CODE SUMMARY

REFER TO INDIVIDUAL DISCIPLINE SHEETS FOR ADDITIONAL CODE INFORMATION.

ADDRESS: 428 HUNT ROAD, JEROME, ID 83338
AHJ: NATIONAL PARK SERVICE, PACIFIC WEST REGION
CLIMATE ZONE: 5B PER 2018 IECC
SEISMIC DESIGN CATEGORY: C
RISK CATEGORY: II

PROJECT DESCRIPTION
THE SCOPE OF THE PROJECT INCLUDES A <N> MAINTENANCE BUILDING AND SITE IMPROVEMENTS, INCLUDING NEW TRANSFORMER, WELL AND SEPTIC SYSTEM, AT MINIDOKA NATIONAL HISTORIC SITE. THE <N> BUILDING TO INCLUDE OFFICE, BREAK ROOM, RESTROOM WITH SHOWER, STORAGE AND WORKSHOP, WITH ASSOCIATED MEPT SYSTEMS. EXTERIOR STORAGE SPACES AND CARPORT ARE INCLUDED AS BID OPTION 01. THE <E> ROBISON HOUSE ON THE SITE WILL BE DEMOLISHED AND BACK FILLED AS PART OF BID OPTION 02.

APPLICABLE CODES AND STANDARDS
2021 INTERNATIONAL BUILDING CODE (IBC)
2018 INTERNATIONAL ENERGY CONSERVATION CODE (IECC)
2021 INTERNATIONAL FIRE CODE (IFC)
2020 NFPA 70 - NATIONAL ELECTRICAL CODE (NEC)
NATIONAL FIRE PROTECTION ASSOCIATION (NFPA) STANDARDS
ARCHITECTURAL BARRIERS ACT ACCESSIBILITY STANDARDS (ABAAS)
DIRECTOR'S ORDER 28: CULTURAL RESOURCE MANAGEMENT
DIRECTOR'S ORDER 58: STRUCTURAL FIRE MANAGEMENT
DENVER SERVICE CENTER WORKFLOWS

USE & OCCUPANCY CLASSIFICATION - IBC CHAPTER 3

OCCUPANCY CLASSIFICATION:
B BUSINESS (OFFICE) PER IBC §304.1
F-1 MODERATE-HAZARD FACTORY INDUSTRIAL (WOODWORKING) PER IBC §306.2
S-1 MODERATE-HAZARD STORAGE PER IBC §311.3

* SMALLER STORAGE AREAS ARE CONSIDERED ACCESSORY TO B OCCUPANCY PER IBC §311.1.1

GENERAL BUILDING HEIGHTS & AREAS - IBC CHAPTER 5
BUILDING HEIGHT §504

ALLOWABLE BUILDING HEIGHT (TABLE 504.3), AND NUMBER OF STORIES (TABLE 504.4)

B, F, S OCCUPANCY		
VB CONSTRUCTION TYPE (NON SPRINKLERED)	ALLOWABLE	ACTUAL
BUILDING HEIGHT NUMBER OF STORIES	40' 1 STORIES *	18' 1 STORIES

* MAX ALLOWABLE HEIGHT IS 1 STORIES FOR F-1 AND S-1 OCCUPANCY, WHICH IS MOST RESTRICTIVE

EQUIPMENT PLATFORMS PER §505.3
SHALL NOT BE CONSIDERED AS PORTION OF THE FLOOR BELOW AND SHALL NOT CONTRIBUTE TO EITHER THE BUILDING AREA OR NUMBER OF STORIES AS REGULATED BY §503.1

AREA LIMITATION PER §505.3.1, AGGREGATE AREA OF ALL EQUIPMENT PLATFORMS WITHIN A ROOM SHALL NOT BE GREATER THAN 2/3 OF THE AREA OF THE ROOM IN WHICH THEY ARE LOCATED

SHOP AREA 501* .66 = 330 SF
EQUIPMENT PLATFORM 292 SF < 330 SF

ALLOWABLE BUILDING AREA (TABLE 506.2)

OCCUPANCY GROUP(S) & CONSTRUCTION TYPE	ALLOWABLE BUILDING AREA	ACTUAL BUILDING AREA (PER FLOOR)
B, F-1, S-1; TYPE VB	8,500 SF	+/- 2,261 SF (MAIN FLOOR) BASE BID +/- 241 SF (MAIN FLOOR) BID OPTION 01
		+/- 2,502 SF (TOTAL PROPOSED AREA)

MIXED OCCUPANCIES IBC §508
EACH PORTION OF THE BUILDING SHALL BE INDIVIDUALLY CLASSIFIED AND WHERE A BUILDING CONTAINS MORE THAN ONE OCCUPANCY GROUP, THE BUILDING OR PORTION SHALL FOLLOW IBC §508.

ACCESSORY OCCUPANCIES ARE OCCUPANCIES THAT ARE ANCILLARY TO THE MAIN OCCUPANCY OF THE MAIN BUILDING (B) AND SHALL NOT OCCUPY MORE THAN 10% OF THE BUILDING AREA OF THE STORY IN WHICH THEY ARE LOCATED, PER IBC §508.2.3

NON-SEPARATED OCCUPANCIES PER IBC §508.3.2
PROJECT SHALL UTILIZE MOST RESTRICTIVE OCCUPANCY FOR MAXIMUM ON ALLOWABLE BUILDING AREA, HEIGHT AND NUMBER OF STORIES.

REQUIRED SEPARATION OF OCCUPANCIES PER TABLE 508.4
NO SEPARATION REQUIRED BETWEEN B, F-1 AND S-1 OCCUPANCIES

1 HR FIRE SEPARATION PROVIDED BETWEEN OCCUPANCIES AS VOLUNTARY CONTROL AREAS.

TYPES OF CONSTRUCTION - IBC CHAPTER 6
CONSTRUCTION CLASSIFICATION: VB PER IBC §602.5

FIRE-RESISTANCE RATING REQUIREMENTS FOR BUILDING ELEMENTS (HOURS) PER TABLE 601

	TYPE VB	
BUILDING ELEMENT	REQUIRED	PROVIDED
Primary structural frame [f] (see Section 202)	0	0
Bearing walls EXT [e, f] Interior	 0 0	 0 0
Nonbearing walls and partitions EXT	Re: Table 705.5	NA
Nonbearing walls and partitions INT[g]	0	0
Floor construction and secondary members (see Section 202)	0	0
Roof construction and secondary members (see Section 202)	0	0

FIRE AND SMOKE PROTECTION FEATURES - IBC CHAPTER 7

FIRE-RESISTANCE RATING REQUIREMENTS FOR EXT WALLS BASED ON FIRE SEPARATION DISTANCE PER TABLE 705.5

FIRE SEPARATION DISTANCE = X (feet)	TYPE OF CONSTRUCTION	F-1, S-1 OCCUPANCY GROUP	
		REQUIRED	PROVIDED
X < 5 [b]	ALL	2	NA
5 ≤ X < 10	IA OTHERS	2 1	NA
10 ≤ X < 30	IA, IB IIB, VB OTHERS	1 0 1	NA
X ≥ 30	ALL	0	0

THE PROPOSED WORK COMPLIES WITH TABLE 705.8 OPENINGS. THERE ARE NO OTHER STRUCTURES WITHIN 30' OF THE <N> BUILDING AND THEREFORE NO LIMIT TO THE NUMBER OF UNPROTECTED OPENINGS AND NO RATING REQUIREMENTS FOR EXT WALLS.

PROPOSED INTERIOR RATED WALLS NOT CODE REQUIRED.

INTERIOR FINISHES - IBC CHAPTER 8
THE INTERIOR WALL AND CEILING FINISHES IN ROOMS AND CORRIDORS SHALL BE FINISHES TESTED BY AN APPROVED TESTING AGENCY AND SHALL COMPLY WITH IBC §803 AND TABLE 803.13 (CLASS C OR BETTER FINISH MATERIALS)

FIRE PROTECTIVE SYSTEMS - IBC CHAPTER 9
AUTOMATIC SPRINKLER SYSTEM NOT REQUIRED PER IBC §903.2.4 (GROUP F-1), §903.2.9 (GROUP S-1) OR PER TABLE 903.2.11.6.

- GROUP F-1 FIRE AREA LESS THAN 12,000 SF AND ONLY 1 STORY, AND WOODWORKING OPERATIONS ARE LESS THAN 2,500 SF PER §903.2.4.1.
- GROUP S-1 FIRE AREA LESS THAN 12,000 SF AND STORAGE OF COMMERCIAL MOTOR VEHICLES IS LESS THAN 5,000 SF.

PORTABLE FIRE EXTINGUISHERS TO BE PROVIDED PER IBC §906
- PROVIDE CLASS A FIRE HAZARD (ORDINARY HAZARD OCCUPANCY) PORTABLE FIRE EXTINGUISHERS
- PORTABLE FIRE EXTINGUISHERS SHALL BE INSTALLED IN CONSPICUOUS LOCATIONS ALONG NORMAL PATHS OF TRAVEL
- MAXIMUM TRAVEL DISTANCE TO ANY FIRE EXTINGUISHER SHALL BE 75 FEET MAX AND 11,250 SF MAX FLOOR AREA PER TABLE 906.3(1)

FIRE ALARM AND DETECTION SYSTEMS TO BE PROVIDED PER §907
- RE FIRE ALARM DRAWINGS

MEANS OF EGRESS - IBC CHAPTER 10
RE: SHEET G110 CODE PLAN

HEADROOM PER IBC §1003.3.1
80" MINIMUM OVER ANY WALKING SURFACE

DESIGN OCCUPANT LOAD - TABLE 1004.5

FUNCTION OF SPACE:	BUSINESS*	INDUSTRIAL	STORAGE / MECH
FLOOR AREA PER OCCUPANT:	150 SF GROSS	100 SF GROSS	300 SF GROSS

*SMALLER STORAGE AREAS ARE CONSIDERED ACCESSORY TO B OCCUPANCY PER IBC §311.1.1

GROUND LEVEL
BUSINESS 8 OCC
INDUSTRIAL 5 OCC
STORAGE /MECH 4 OCC
TOTAL 17 OCC

EQUIPMENT PLATFORM
STORAGE/MECH 1 OCC

BUILDING TOTAL 18 OCCUPANTS

MEANS OF EGRESS SIZING PER IBC §1005
WHERE MULTIPLE MEANS OF EGRESS ARE REQUIRED, THEY SHALL BE SIZED SUCH THAT IN THE EVENT ONE OF THE MEANS OF EGRESS IS LOST, THEN THE REMAINING MEANS OF EGRESS SHALL NOT REDUCE THE AVAILABLE CAPACITY TO LESS THAN 50 PERCENT OF THE REQUIRED CAPACITY.

OTHER EGRESS COMPONENT SIZING (.2" PER OCCUPANT)
TOTAL OCCUPANTS 18 X .2" = 3.6" WIDTH REQUIRED (DEFAULTS TO 32")
36" EGRESS WIDTH PROVIDED

DOOR ENCROACHMENT: WHEN FULLY OPEN, DOORS SHALL NOT REDUCE THE REQUIRED MEANS OF EGRESS WIDTH BY MORE THAN 7". DOORS IN ANY POSITION SHALL NOT REDUCE THE REQUIRED WIDTH BY MORE THAN ONE-HALF.

NUMBER OF EXITS AND EXIT ACCESS DOORWAYS PER IBC §1006
TWO EXITS REQUIRED FROM ANY SPACE WHERE OCCUPANT LOAD EXCEEDS VALUES IN TABLE 1006.2.1 PER 1006.2.1

SPACES WITH ONE EXIT OR EXIT ACCESS DOORWAY PER TABLE 1006.2.1

OCCUPANCY	MAX OCC LOAD	MAXIMUM COMMON PATH OF TRAVEL (WITHOUT SPRINKLER SYSTEM, OL < 30)
B OCC	49	100 FT
F OCC	49	75 FT
S OCC	29	100 FT

MINIMUM NUMBER OF EXITS PER IBC §1006.3.3
TOTAL OCCUPANT LOAD = 18
REQUIRED NUMBER OF EXITS = 2
PROVIDED NUMBER OF EXITS = 3

EXIT AND EXIT ACCESS DOORWAY CONFIGURATION PER IBC §1007
WHERE TWO EXITS ARE REQUIRED, THEY SHALL BE PLACED A DISTANCE APART EQUAL TO NOT LESS THAN ONE-HALF OF THE LENGTH OF THE MAXIMUM OVERALL DIAGONAL DIMENSION OF THE BUILDING OR AREA TO BE SERVED MEASURED IN A STRAIGHT LINE BETWEEN THEM.

REQUIRED MIN EXIT SEPARATION DISTANCE: 83'-2" / 2 = 41'-7"
EXIT SEPARATION PROVIDED: 67'-6"

ACCESSIBLE MEANS OF EGRESS PER IBC §1009
ACCESSIBLE SPACES SHALL BE PROVIDED WITH NOT LESS THAN ONE ACCESSIBLE MEANS OF EGRESS. WHERE MORE THAN ONE MEANS OF EGRESS ARE REQUIRED FROM ANY ACCESSIBLE SPACE, EACH ACCESSIBLE PORTION OF THE SPACE SHALL BE SERVED BY NOT LESS THAN TWO ACCESSIBLE MEANS OF EGRESS PER SECTION 1009.1.

ACCESSIBLE MEANS OF EGRESS PROVIDED = 3

CONTINUITY PER IBC §1009.2
EACH REQUIRED ACCESSIBLE MEANS OF EGRESS SHALL BE CONTINUOUS TO A PUBLIC WAY

SIZE OF DOORS PER §1010.1
MINIMUM CLEAR WIDTH: 32"
BUILDING DOORS COMPLY WITH MINIMUM CLEAR DOOR WIDTH OF 32"

EXIT ACCESS TRAVEL DISTANCE - TABLE 1017.2
B / S OCCUPANCY, WITHOUT SPRINKLER SYSTEM: 200'-0"
ACTUAL MAXIMUM TRAVEL DISTANCE 56'-6"

ACCESSIBILITY - IBC CHAPTER 11
ACCESSIBLE ROUTE PER IBC §1104

ACCESSIBLE ENTRANCES PER IBC §1105.1
PUBLIC ENTRANCES: AT LEAST 60 PERCENT OF ALL PUBLIC ENTRANCES SHALL BE ACCESSIBLE. TWO ACCESSIBLE BUILDING ENTRIES PROVIDED, RE: CODE PLANS.

SIGNAGE PER IBC §1112
SIGNS: REQUIRED ACCESSIBLE ELEMENTS SHALL BE IDENTIFIED BY THE INTERNATIONAL SYMBOL OF ACCESSIBILITY AT THE LOCATIONS LISTED IN SECTION 1112.1

SIGNS IDENTIFYING TOILET OR BATHING ROOMS: SIGNAGE AND PICTOGRAMS IDENTIFYING TOILET ROOMS AND BATHING ROOMS SHALL BE VISUAL CHARACTERS, RAISED CHARACTERS AND BRAILLE COMPLYING WITH ICC A117.1 AND IN ACCORDANCE WITH SECTION 1112.2.

DIRECTIONAL SIGNAGE: DIRECTIONAL SIGNAGE INDICATING THE ROUTE TO THE NEAREST LIKE ACCESSIBLE ELEMENT SHALL INCLUDE THE INTERNATIONAL SYMBOL OF ACCESSIBILITY AND BE PROVIDED AT THE LOCATIONS LISTED IN SECTION 1112.3

OTHER SIGNS: SIGNAGE INDICATING SPECIAL ACCESSIBILITY PROVISIONS SHALL BE PROVIDED IN EACH DOOR TO AN EXIT DISCHARGE IN ACCORDANCE WITH SECTION PER SECTION 1112.4.

GENERAL ACCESSIBILITY NOTES
THE DETAILS AND NOTES PROVIDED WITHIN THESE DOCUMENTS REPRESENT ONLY A PORTION OF THE REQUIREMENTS SET FORTH BY FEDERAL LAW, STATE LAW, CITY AND COUNTY LAW AND THE BUILDING CODE FOR ACCESSIBILITY REQUIREMENTS.

CONTRACTORS MUST REVIEW ALL ACCESSIBILITY REQUIREMENTS AS PRESENTED IN THESE CONSTRUCTION DOCUMENTS AND THE REFERENCES HEREIN PRIOR TO STARTING ANY CONSTRUCTION.

FOR SITE ACCESSIBILITY REQUIREMENTS AND ALL SITE ACCESSIBILITY DETAILING, RE CIVIL.

STRUCTURAL DESIGN - CHAPTER 16
§1613 EARTHQUAKE LOADS

SITE SEISMIC CLASSIFICATION
OCCUPANCY & RISK CATEGORY II
SITE CLASS D
SEISMIC DESIGN CATEGORY C (JEROME COUNTY MINIMUM REQUIREMENT)

PLUMBING FIXTURES - CHAPTER 29
§2902.1 - MINIMUM NUMBER OF FIXTURES SHALL BE PROVIDED FOR THE TYPE OF OCCUPANCY AND IN THE MINIMUM NUMBERS PER TABLE 2902.1

WATER CLOSETS:
BUSINESS OCCUPANCY: (8 TOTAL BUSINESS OCCUPANTS)
1 PER 25 FOR FIRST 50 AND 1 PER 50 FOR THE REMAINDER EXCEEDING 50 = 0.32 REQUIRED

SHOP/ INDUSTRIAL OCCUPANCY: (5 TOTAL STORAGE OCCUPANTS)
1 PER 100 = 0.01 REQUIRED

STORAGE OCCUPANCY: (4 TOTAL STORAGE OCCUPANTS)
1 PER 100 = 0.04 REQUIRED

TOTAL REQUIRED = 0.32 + 0.01 + 0.04 = 0.37 (1)
1 WATER CLOSET PROVIDED (IN 1 SINGLE USER RESTROOM)

LAVATORIES:
BUSINESS OCCUPANCY: (8 TOTAL BUSINESS OCCUPANTS)
1 PER 40 FOR THE FIRST 80 AND 1 PER 80 FOR THE REMAINDER EXCEEDING 80 = 0.20 REQUIRED

SHOP/ INDUSTRIAL OCCUPANCY: (5 TOTAL STORAGE OCCUPANTS)
1 PER 100 = 0.01 REQUIRED

STORAGE OCCUPANCY: (4 TOTAL STORAGE OCCUPANTS)
1 PER 100 = 0.04 REQUIRED

TOTAL REQUIRED = 0.20 + 0.01 + 0.04 = 0.25 (1)
1 LAVATORY IS PROVIDED (IN 1 SINGLE USER RESTROOM)

DRINKING FOUNTAINS:
BUSINESS OCCUPANCY: (8 TOTAL BUSINESS OCCUPANTS)
1 PER 100 = 0.08 REQUIRED

SHOP/ INDUSTRIAL OCCUPANCY: (5 TOTAL STORAGE OCCUPANTS)
1 PER 100 = 0.05 REQUIRED

STORAGE OCCUPANCY: (4 TOTAL STORAGE OCCUPANTS)
1 PER 1000 = 0.004 REQUIRED

TOTAL REQUIRED: 0.08 + 0.05 + 0.004 = 0.134 (1)
2 DRINKING FOUNTAINS PROVIDED

SERVICE SINKS:
SERVICE SINKS REQUIRED = 1
SERVICE SINKS PROVIDED = 1

* PER IBC 2021 2902.2 EXCEPTIONS 4,5, SEPARATE FACILITIES PER GENDER NOT REQUIRED.

LICENSED ARCHITECT
ELIZABETH HALLAS
AR-985880
STATE OF IDAHO
5/23/2024

DESIGNED: BC	SUB SHEET NO.	TITLE OF SHEET	DRAWING NO. 194
CADD NM / CM	G100	CODE ANALYSIS	187126
TECH REVIEW: EH / CR			PMIS/PKG NO. 314972
DATE: 05/23/2024		MIIN MAINTENANCE BUILDING MINIDOKA NATIONAL HISTORIC SITE	SHEET 3 OF 82

5/22/2024 11:18:35 AM Autodesk Docs://2023-360 NPS MIIN Rehab DD-CD/2023360 NPS MIIN - v24.rvt

5/22/2024 11:18:37 AM Autodesk Docs://2023-360 NPS MIIN Rehab DD-CD/2023360 NPS MIIN - v24.rvt

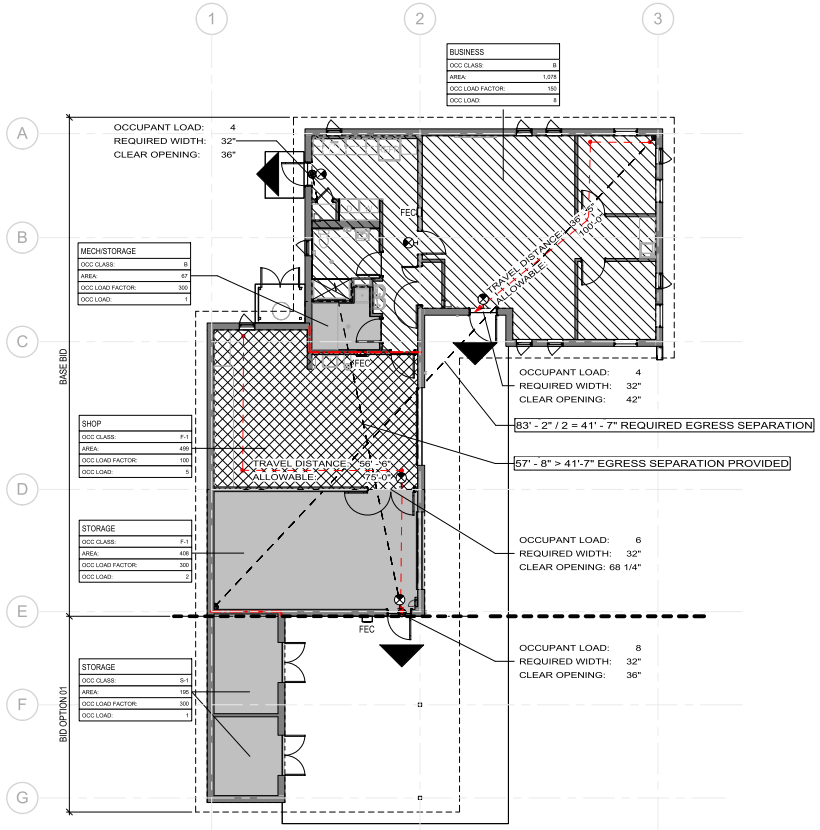

1 G110 CODE PLAN - FIRST FLOOR
SCALE (A)

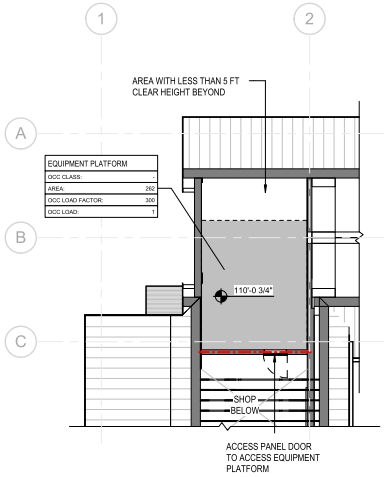

2 G110 CODE PLAN - EQUIP PLATFORM (ABOVE)
SCALE (A)

LEGEND

- BUSINESS OCC (1:150)
- INDUSTRIAL OCC (1:100)
- STORAGE/MECH OCC (1:300)
- EXIT
- PATH OF TRAVEL
- REQUIRED EXIT SEPARATION
- 1-HR FIRE RATED WALL
- FEC — FIRE EXTINGUISHER CABINET
- DELINEATION OF BASE BID AND BID OPTION 01 SCOPE OF WORK
- WALL MOUNTED EXIT SIGNAGE

SCALE: (A) 8 0 8 16
SCALE OF FEET

BLDG NORTH

LICENSED ARCHITECT
ELIZABETH HALLAS
AR-985880
STATE OF IDAHO

DESIGNED: BC	SUB SHEET NO.	TITLE OF SHEET	DRAWING NO.
DADD NM / CM	G110	CODE PLAN	194
TECH REVIEW: EH / CR			187126
DATE: 05/23/2024		MIIN MAINTENANCE BUILDING MINIDOKA NATIONAL HISTORIC SITE	PMIS/PKG NO. 314972
			SHEET 4 OF 82

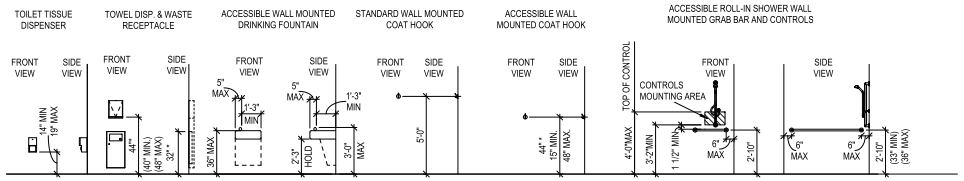

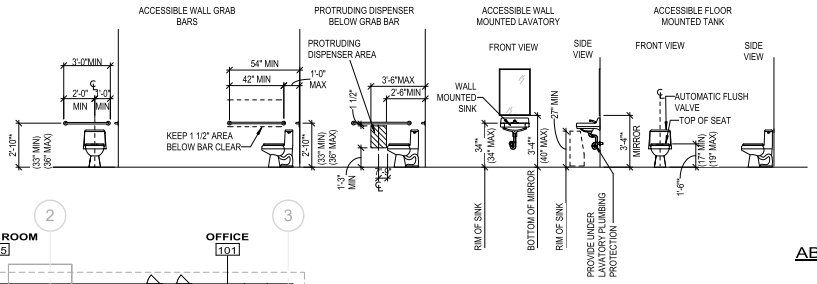

GENERAL NOTES

1. ALL ACCESSIBLE FIXTURES AND ACCESSORIES SHALL BE MOUNTED IN ACCORDANCE WITH ABAAS.
2. ALL LAVATORIES SHALL HAVE UNDERLAVATORY PROTECTION.
3. ALL FAUCETS SHALL BE ICC/ANSI A117.1 CERTIFIED
4. ALL DOOR AND WINDOW HARDWARE TO BE INSTALLED WITHIN ABAAS REACH RANGE.
5. ALL THRESHOLDS (CHANGE IN MATERIAL, DOORS, ETC) TO MEET ABAAS MAX ALLOWABLE HEIGHT AND SLOPE. RE: ABAAS SECTION 303.

* = PREFERRED MOUNTING HEIGHT

ABAAS SIGNAGE

REFER TO SPECIFICATION FOR OTHER SIGNAGE REQUIREMENTS. ALL SIGNS SHALL MEET REQUIREMENTS OF ABAAS

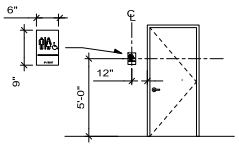

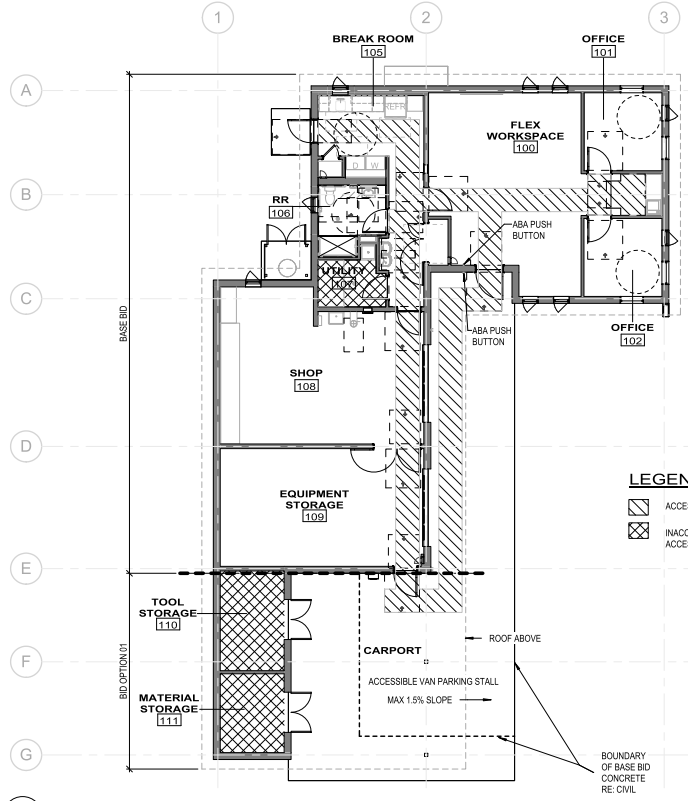

LEGEND

- ACCESSIBLE ROUTE 32" WIDE
- INACCESSIBLE AREA / AREA EXCLUDED FROM ACCESSIBILITY REQUIREMENTS

1 G120 ACCESSIBILITY PLAN
SCALE A

ACCESSIBILITY LEGEND

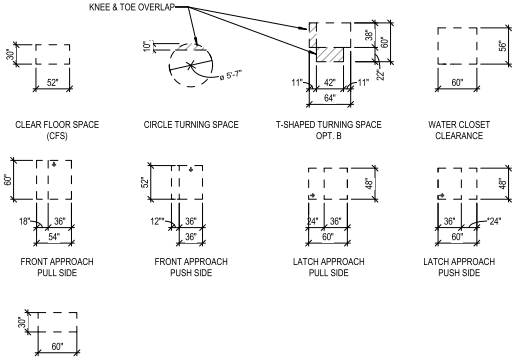

* = SIDE CLEARANCE ONLY REQUIRED IF BOTH CLOSER AND LATCH ARE PROVIDED

SCALE: A 8 0 8 16 SCALE OF FEET

BLDG NORTH

LICENSED ARCHITECT ELIZABETH HALLAS AR-985880 STATE OF IDAHO

DESIGNED: BC	SUB SHEET NO.	TITLE OF SHEET	DRAWING NO.
CADD NM / CM	G120	ACCESSIBILITY	194 187126
TECH REVIEW: EH / CR		MIIN MAINTENANCE BUILDING	PMIS/PKG NO. 314972
DATE: 05/23/2024		MINIDOKA NATIONAL HISTORIC SITE	SHEET 5 OF 82

5/22/2024 11:18:38 AM Autodesk Docs://2023-360 NPS MIIN Rehab DD-CD/2023360 NPS MIIN - v24.rvt

5 G200 EW AT CARPORT - THERMAL ENVELOPE
SCALE B

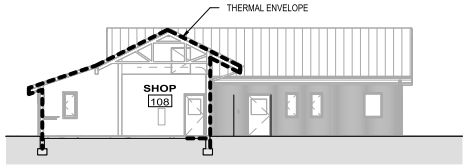

4 G200 EW AT SHOP - THERMAL ENVELOPE
SCALE B

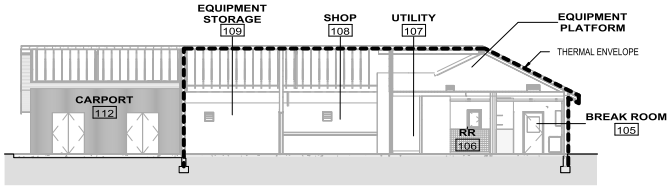

3 G200 NS AT EQUIPMENT PLATFORM - THERMAL ENVELOPE
SCALE B

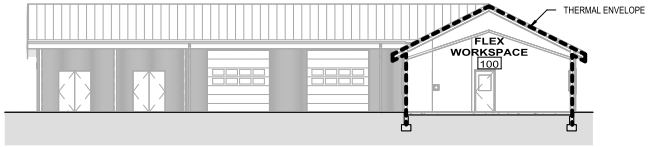

2 G200 NS AT OPEN OFFICE - THERMAL ENVELOPE
SCALE B

ENERGY CODE ANALYSIS

APPLICABLE CODE: 2018 IECC	
COMPLIANCE PATH: PRESCRIPTIVE PATH, R-VALUE METHOD	
CODE SECTION	
C301	CLIMATE ZONE 5B - THE PROJECT IS LOCATED IN JEROME COUNTY, IDAHO
TABLE C402.1.3	OPAQUE THERMAL ENVELOPE MINIMUM R-VALUE ASSEMBLY / REQUIRED / PROVIDED ROOF - INSULATION ABOVE DECK / R-30 / R-30 WALL - METAL FRAME / R-13 + R-7.5 CI / R-24 + R-8.4 CI UNHEATED SLAB ON GRADE / R-10 FOR 24" BELOW* / R-10 FOR 24" BELOW NON-SWINGING OPAQUE DOORS (GARAGE DOORS) / R-4.75 / R-17 *AT BUILDING PERIMETER/FOUNDATION. REFER TO SECTION C402.2.4 FOR ALLOWABLE INSTALLATION CONFIGURATIONS. REFER TO ASSEMBLIES FOR ACTUAL THERMAL VALUES.
TABLE C402.4	BUILDING ENVELOPE FENESTRATION MAXIMUM U-FACTOR FIXED FENESTRATION 0.38 OPERABLE FENESTRATION 0.45 DOOR ENTRANCES 0.77
TABLE C402.4	FENESTRATION MAX SHGC REQUIREMENT FENESTRATION U-FACTOR / MAXIMUM SHGC ORIENTATION / SEW / N PF<0.2 / 0.38 / 0.51 0.2<PF<0.5 / 0.46 / 0.56 0.5<0.5 / 0.61 / 0.61 PF (PROJECTION FACTOR)=A/B A = DISTANCE MEASURED HORIZ FROM GLAZING TO EDGE OF OVERHANG B = DISTANCE MEASURED VERTICALLY FROM BOTTOM OF GLAZING TO UNDERSIDE OF OVERHANG
C402.5.1	AIR BARRIERS: CONTINUOUS AIR BARRIER TO BE PROVIDED, REFER TO ASSEMBLIES AND DETAILS FOR MORE INFORMATION
C406	ADDITIONAL EFFICIENCY PACKAGE: REDUCED LIGHTING POWER IN ACCORDANCE WITH SECTION C406.3

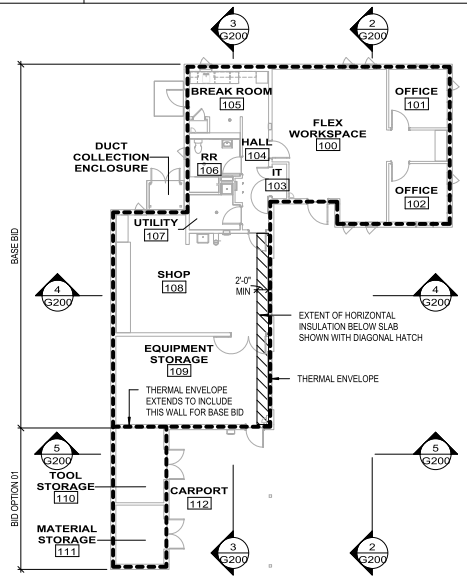

1 G200 THERMAL ENVELOPE KEY PLAN
SCALE A

SCALE: B 10 0 10 20 SCALE OF FEET
SCALE: A 10 0 4 8 20 SCALE OF FEET
BLDG. NORTH

LICENSED ARCHITECT ELIZABETH HALLAS AR-985880 STATE OF IDAHO

DESIGNED: BC	SUB SHEET NO.	TITLE OF SHEET	DRAWING NO.
CADD NM / CM	G200	ENERGY ANALYSIS	194 / 187126
TECH REVIEW: EH / CR		MIIN MAINTENANCE BUILDING MINIDOKA NATIONAL HISTORIC SITE	PMIS/PKG NO. 314972
DATE: 05/23/2024			SHEET 6 OF 82

5/22/2024 11:18:39 AM Autodesk Docs://2023-360 NPS MIIN Rehab DD-CD/2023360 NPS MIIN - v24.rvt

INTERIOR PARTITIONS

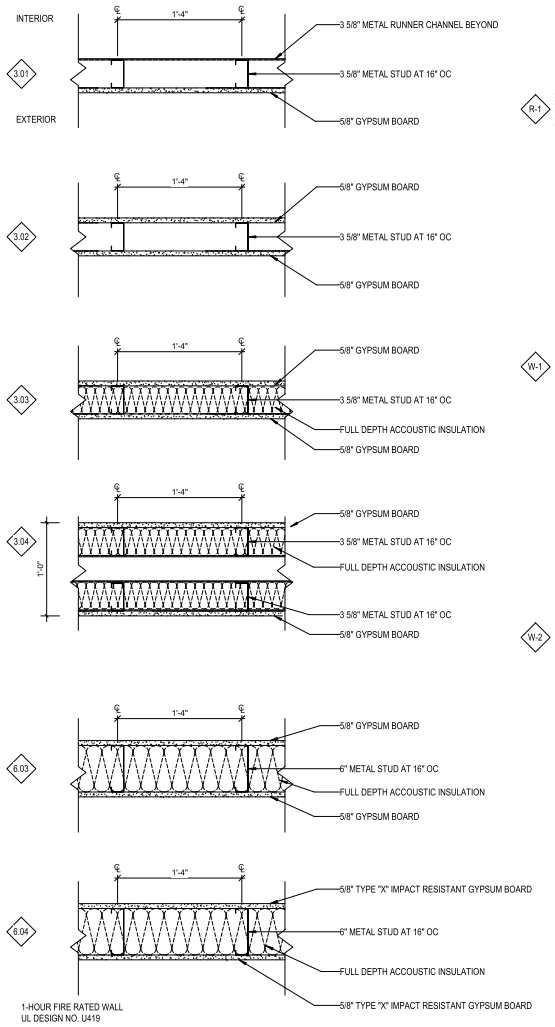

EXTERIOR ASSEMBLIES

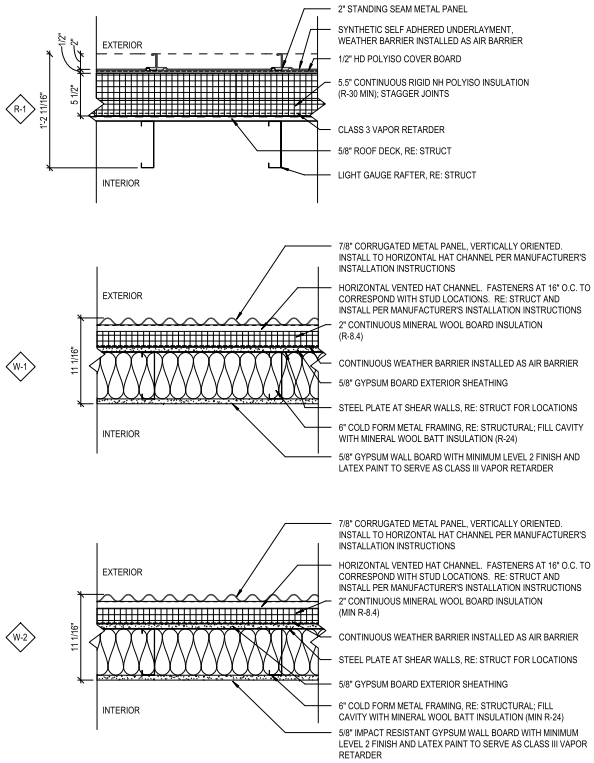

NOTE: PROVIDE 5/8" MOISTURE RESISTANCE GYP IN ALL WET LOCATIONS AND 5/8" CTBB AT ALL LOCATIONS OF TILE INSTALLATION.

SCALE: A — 12 6 0 12 SCALE OF INCHES

LICENSED ARCHITECT ELIZABETH HALLAS AR-985880 STATE OF IDAHO

DESIGNED: BC	SUB SHEET NO.	TITLE OF SHEET	DRAWING NO.
CADD NM / CM	G210	ASSEMBLIES	194 187126
TECH REVIEW: EH / CR			PMIS/PKG NO. 314972
DATE: 05/23/2024		MIIN MAINTENANCE BUILDING MINIDOKA NATIONAL HISTORIC SITE	SHEET 7 OF 82

5/22/2024 11:18:39 AM Autodesk Docs://2023-360 NPS MIIN Rehab DD-CD/2023360 NPS MIIN - v24.rvt

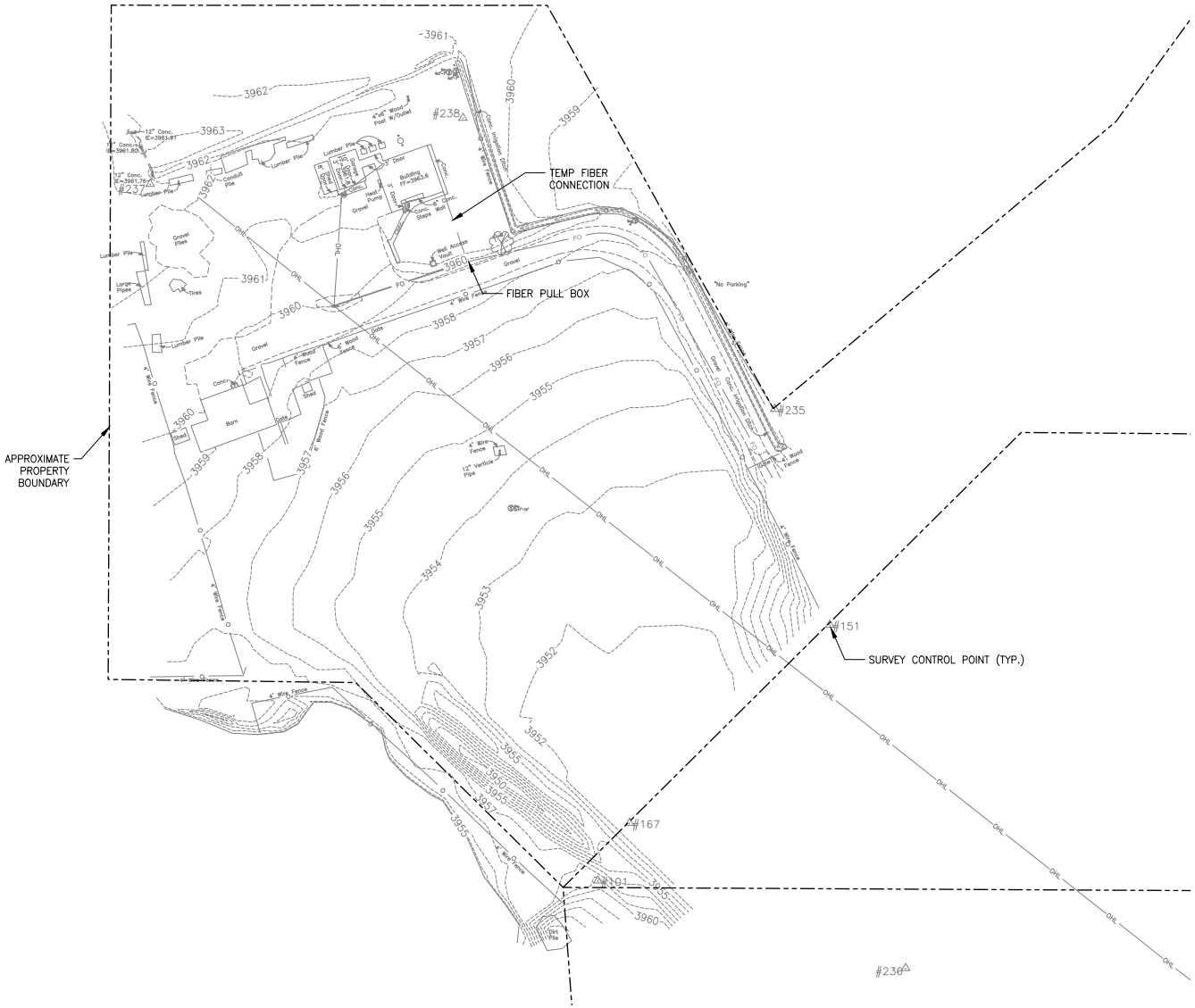

SURVEY CONTROL POINTS

#101
Found Dept. of Interior Brass Disk.
N=368,833.196
E=1,572,984.828
EL=3,959.66

#151
Found Dept. of Interior Brass Disk.
N=369,017.616
E=1,573,152.008
EL=3,965.26

#167
Found Dept. of Interior Brass Disk.
N=368,874.749
E=1,573,007.602
EL=3,952.10

#235
Found Dept. of Interior Brass Disk.
N=369,173.268
E=1,573,112.334
EL=3,954.94

#236
Set 5/8"x30" Iron Rod W/Red Plastic Cap Marked "Otak Control".
N=368,770.000
E=1,573,206.731
EL=3,964.11

#237
Set 5/8"x30" Iron Rod W/Red Plastic Cap Marked "Otak Control".
N=369,335.613
E=1,572,662.087
EL=3,963.46

#238
Set 5/8"x30" Iron Rod W/Red Plastic Cap Marked "Otak Control".
N=369,383.208
E=1,572,887.505
EL=3,961.48

LEGEND

△	SURVEY CONTROL POINT
HB	HOSE BIB
	SEPTIC TANK ACCESS
M	ELECTRIC METER
	UTILITY POLE
	GUY ANCHOR
	LINE CONTINUES
	DECIDUOUS TREE
X 4800.00	SPOT ELEVATION
	FENCE LINE
OHL	OVERHEAD UTILITY LINE
50	MAJOR (5') CONTOUR LINE WITH ELEVATION
51	MINOR (1') CONTOUR LINE WITH ELEVATION
	APPROXIMATE PROPERTY BOUNDARY

40' 0' 40' 80'
SCALE IN FEET

PROFESSIONAL LAND SURVEYOR LICENSED 19137 05-20-24 STATE OF IDAHO JOHN M. YAMASHITA

DESIGNED:	SUB SHEET NO.	TITLE OF SHEET	DRAWING NO.
EM	C010	EXISTING CONDITIONS MIIN MAINTENANCE BUILDING MINIDOKA NATIONAL HISTORIC SITE	194 / 187126
PADD: EM			PMIS/PKG NO. 314972
TECH REVIEW: EM/KK			SHEET 8 OF 82
DATE: 05/23/2024			

Plotted: May 20, 2024 - 8:12am kevin.kreisberger O:\PROJECT\32900\32919\04 CID\ACAD\MIIN\314972\DRAWINGS\CIVIL\EXISTING CONDITIONS_MIIN.dwg Layout Name: EXISTING CONDITIONS

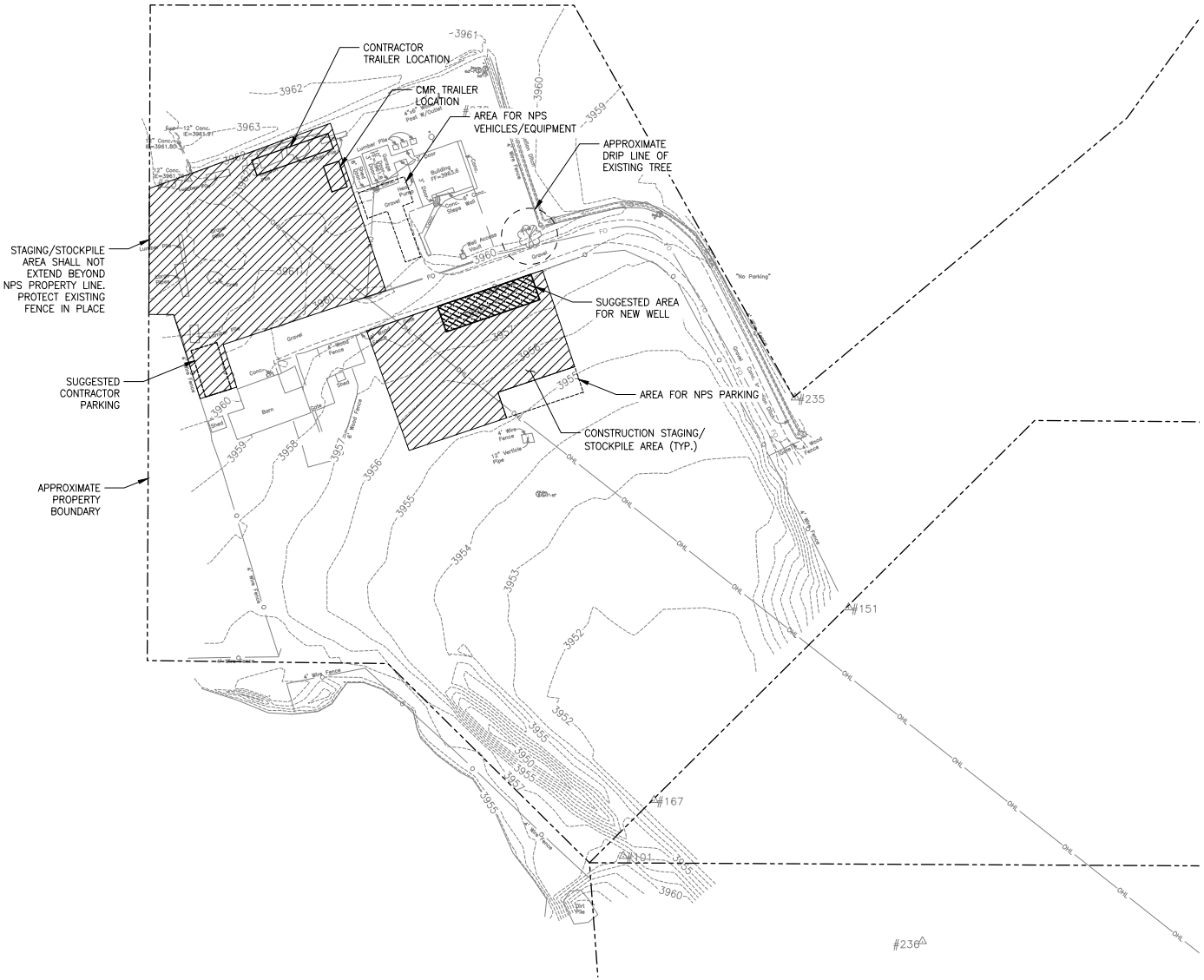

NOTES:

1. STAGING AREA SHALL BE RESTORED TO PRE-CONSTRUCTION UPON COMPLETION OF WORK.
2. CONTRACTOR TO REMAIN WITHIN AREAS SUBJECT TO THE WORK AT HAND UNLESS APPROVED BY THE CONTRACTING OFFICER.
3. SITE AREAS AND ELEMENTS OUTSIDE THE LIMITS OF WORK, INCLUDING ALL EXISTING FENCING AND GATES, SHALL BE PROTECTED DURING CONSTRUCTION. SEE SHEET C200 FOR REMOVALS.
4. ACCESS TO BARN AND REFUSE SHALL BE MAINTAINED THROUGHOUT CONSTRUCTION.

LEGEND

- STAGING / STOCKPILE AREA
- TRAILER LOCATIONS
- PARKING AREA
- APPROXIMATE PROPERTY BOUNDARY

40' 0' 40' 80'
SCALE IN FEET

PROFESSIONAL ENGINEER REGISTERED 10751 STATE OF IDAHO MARK D. COLE 05/21/24

DESIGNED: EM	SUB SHEET NO.	TITLE OF SHEET	DRAWING NO.
PADD EM	C100	STAGING PLAN	194 / 187126
TECH REVIEW: EM/KK		MIIN MAINTENANCE BUILDING	PMIS/PKG NO. 314972
DATE: 05/23/2024		MINIDOKA NATIONAL HISTORIC SITE	SHEET 9 OF 82

Plotted: May 21, 2024 - 5:10pm kevin.kreisberger O:\PROJECT\32900\32918\04 CAD\ACAD\MIIN\314972\DRAWINGS\CIVIL\STAGING PLAN_MIIN.dwg Layout Name: STAGING PLANS

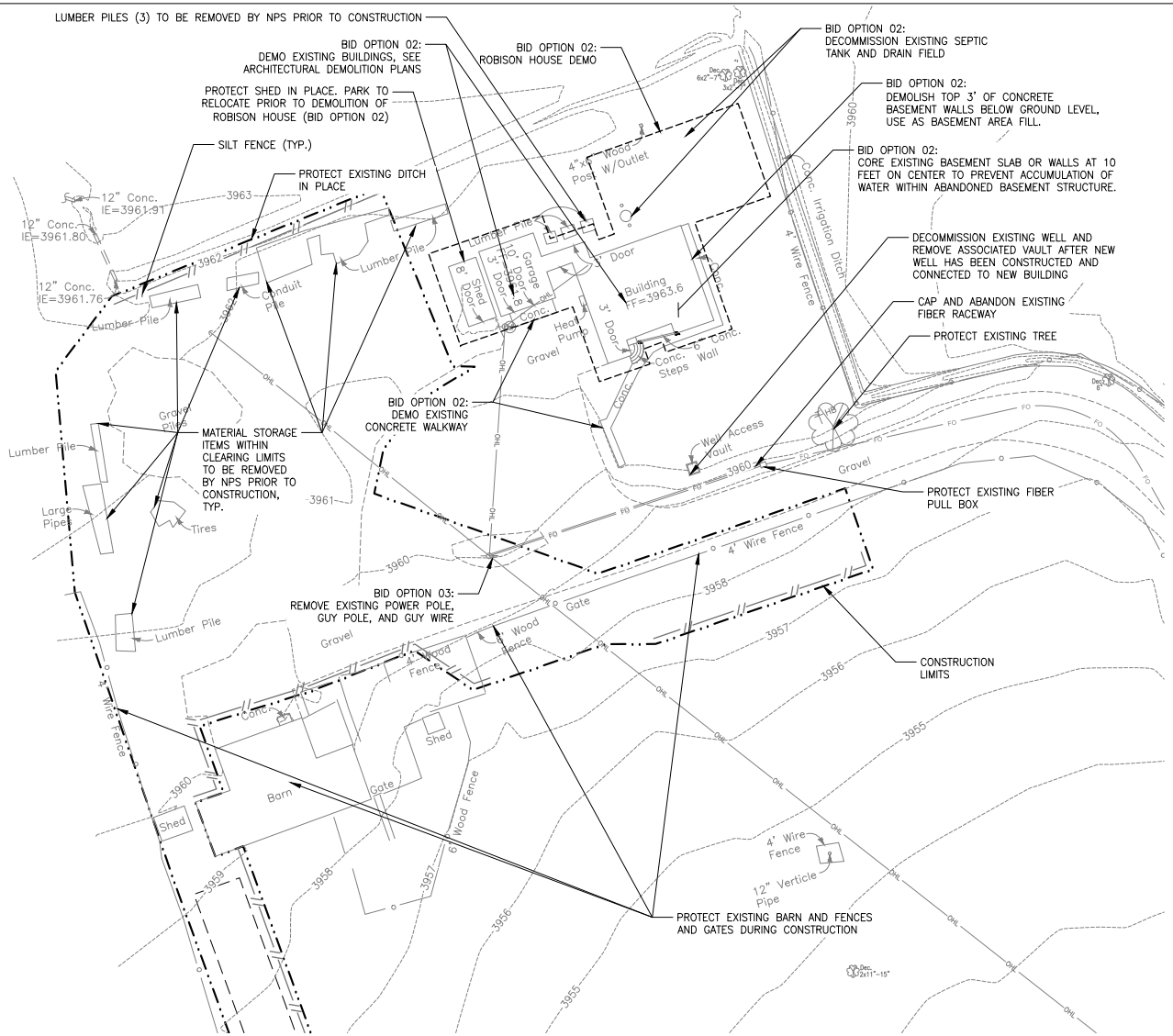

LEGEND

—//—	SILT FENCE
—··—	CONSTRUCTION LIMITS/ CLEARING & GRUBBING
– – – – –	BID OPTION LIMITS

TESC/DEMOLITION NOTES

1. CONTRACTOR SHALL BE RESPONSIBLE FOR EXISTING DRAINAGE THROUGH THE SITE DURING CONSTRUCTION.
2. PROTECT EXISTING UTILITIES, SIGNAGE, AND FEATURES IN PLACE NOT CALLED OUT FOR REMOVAL OR RELOCATION.
3. CONTRACTOR SHALL PROVIDE EROSION CONTROL MAINTENANCE DURING CONSTRUCTION AND SHALL REMOVE EROSION CONTROL MEASURES AFTER CONSTRUCTION.
4. CONTRACTOR IS RESPONSIBLE FOR VERIFYING LOCATION OF UNDERGROUND UTILITIES.

GENERAL NOTES

1. DEMO ENTIRE EXISTING WOOD FRAME HOUSE ON EXISTING CONCRETE FOUNDATION, INCLUDING CENTER BRICK CHIMNEY AND FOUNDATION. SALVAGE AND DONATE CABINETRY AND FIXTURES. BACKFILL AND RE-COMPACT GRADE.
2. COVER DISTURBED AREA WITH MINIMUM 6" TOPSOIL FROM NEW BUILDING LOCATION.
3. PARK WILL REVEGETATE AREA.
4. IMPORT FILL SHALL BE CLEAN AND WEED FREE. MATERIAL SOURCE SHALL BE DETERMINED IN CONSULTATION WITH THE PARK. PARK SHALL BE NOTIFIED OF MATERIAL SOURCE AND ALLOWED TIME TO INSPECT. ANY SITE CERTIFICATIONS MUST INCLUDE LIST OF SPECIES PRESENT AND HOW OFTEN MATERIAL IS TREATED FOR WEEDS.
5. ANY IMPORTED TOPSOIL MATERIALS SHALL BE CLEAN AND WEED FREE AND THE MATERIALS SOURCE DETERMINED IN CONSULTATION WITH THE PARK. ANY SITE CERTIFICATIONS MUST INCLUDE A LIST OF SPECIES PRESENT AT THE MATERIAL SOURCE LOCATION. PARK SHALL BE NOTIFIED OF MATERIAL SOURCE AND ALLOWED TIME TO INSPECT. NEW TOPSOIL BROUGHT ONTO THE SITE AND NOT IMMEDIATELY USED SHALL BE COVERED WITH A TARP TO PROMOTE EXTERMINATION OF WEEDS.

TOPSOIL NOTE

1. STORE TOPSOIL REMOVED FROM AREA OF NEW BUILDING CONSTRUCTION FOR USE AT AREA OF EXISTING BUILDING DEMOLITION.

20' 0' 20' 40'
SCALE IN FEET

PROFESSIONAL ENGINEER REGISTERED MARK D. COLE STATE OF IDAHO 09/21/24

DESIGNED:	SUB SHEET NO.	TITLE OF SHEET	DRAWING NO.
EM	C200	TESC & DEMO PLAN	194 / 187126
PADD EM			PMIS/PKG NO. 314972
TECH REVIEW: EM/KK		MIIN MAINTENANCE BUILDING	SHEET
DATE: 05/23/2024		MINIDOKA NATIONAL HISTORIC SITE	10 OF 82

Plotted: May 21, 2024 – 5:10pm kevin.kreisberger O:\PROJECT\32900\32918\04 CAD\ACAD\MIIN\314972\DRAWINGS\CIVIL\TESC&DEMO_MIIN.dwg Layout Name: TESC&DEMO

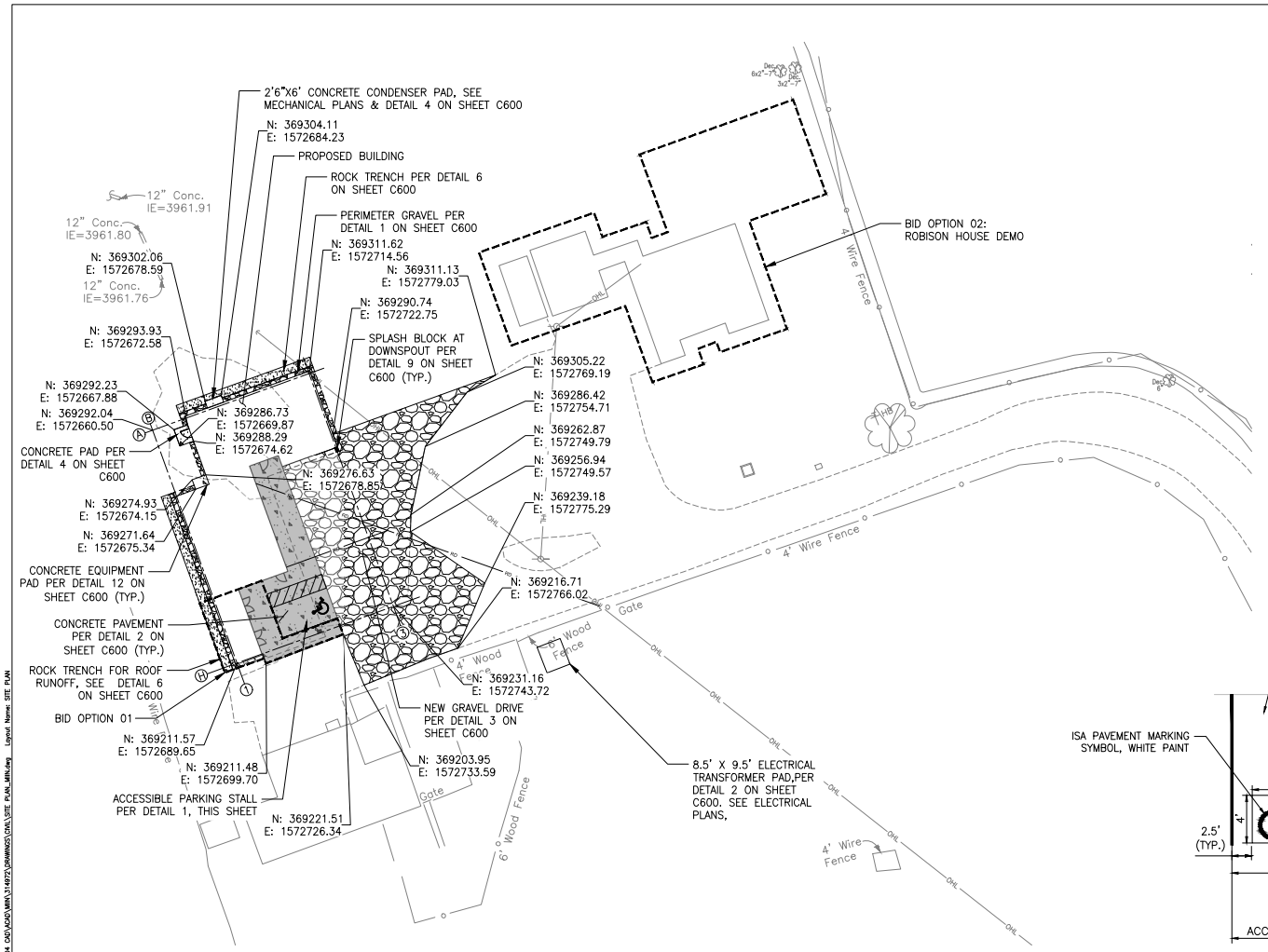

LEGEND

- CONCRETE PAD
- CONCRETE PAVEMENT
- PERIMETER GRAVEL
- ROCK TRENCH
- GRAVEL DRIVE
- BID OPTION LIMITS

GENERAL NOTES

1. COVER DISTURBED AREA WITH MINIMUM 6" TOPSOIL FROM NEW BUILDING LOCATION.
2. PARK WILL REVEGETATE AREA.
3. IMPORT FILL SHALL BE CLEAN AND WEED FREE. MATERIAL SOURCE SHALL BE DETERMINED IN CONSULTATION WITH THE PARK. PARK SHALL BE NOTIFIED OF MATERIAL SOURCE AND ALLOWED TIME TO INSPECT. ANY SITE CERTIFICATIONS MUST INCLUDE LIST OF SPECIES PRESENT AND HOW OFTEN MATERIAL IS TREATED FOR WEEDS.
4. ANY IMPORTED TOPSOIL MATERIALS SHALL BE CLEAN AND WEED FREE AND THE MATERIALS SOURCE DETERMINED IN CONSULTATION WITH THE PARK. ANY SITE CERTIFICATIONS MUST INCLUDE A LIST OF SPECIES PRESENT AT THE MATERIAL SOURCE LOCATION. PARK SHALL BE NOTIFIED OF MATERIAL SOURCE AND ALLOWED TIME TO INSPECT.

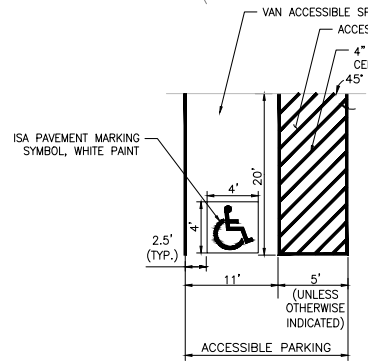

NOTES:

1. SYMBOLS & PARKING STALLS SHALL CONFORM TO THE REQUIREMENTS OF THE UNITED STATES ACCESS BOARD GUIDELINES AND STANDARDS.
2. ALL DIMENSIONS CENTER TO CENTER OF 4" PAVEMENT STRIPING.
3. ALL STRIPING SHALL BE 4" WIDE SOLID WHITE PAVEMENT MARKINGS UNLESS OTHERWISE NOTED.
4. 1.5% MAXIMUM ALLOWABLE SLOPE IN ANY DIRECTION WITHIN ACCESSIBLE PARKING SPACES AND AISLES. CONTRACTOR SHALL CHECK SLOPES WITH A 2' SMART LEVEL ON A 2'x2' GRID TAKEN IN BOTH DIRECTIONS. CONTRACTOR SHALL PROVIDE A RECORD OF THE MEASURED SLOPES TO CO.

1 / C300 ACCESSIBLE PARKING STALL LAYOUT
NTS

20' 0' 20' 40'
SCALE IN FEET

PROFESSIONAL ENGINEER REGISTERED 10751 STATE OF IDAHO MARK D. COLE 05/21/24

DESIGNED: EM	SUB SHEET NO.	TITLE OF SHEET	DRAWING NO.
PADD EM	C300	SITE PLAN	194 / 187126
TECH REVIEW: EM/KK			PMIS/PKG NO. 314972
DATE: 05/23/2024		MIIN MAINTENANCE BUILDING MINIDOKA NATIONAL HISTORIC SITE	SHEET 11 OF 82

Plotted: May 21, 2024 – 5:10pm kevin.kreisberger O:\PROJECT\32900\32918\04 CAD\ACAD\MIIN\314972\DRAWINGS\CIVIL\SITE PLAN_MIIN.dwg Layout Name: SITE PLAN

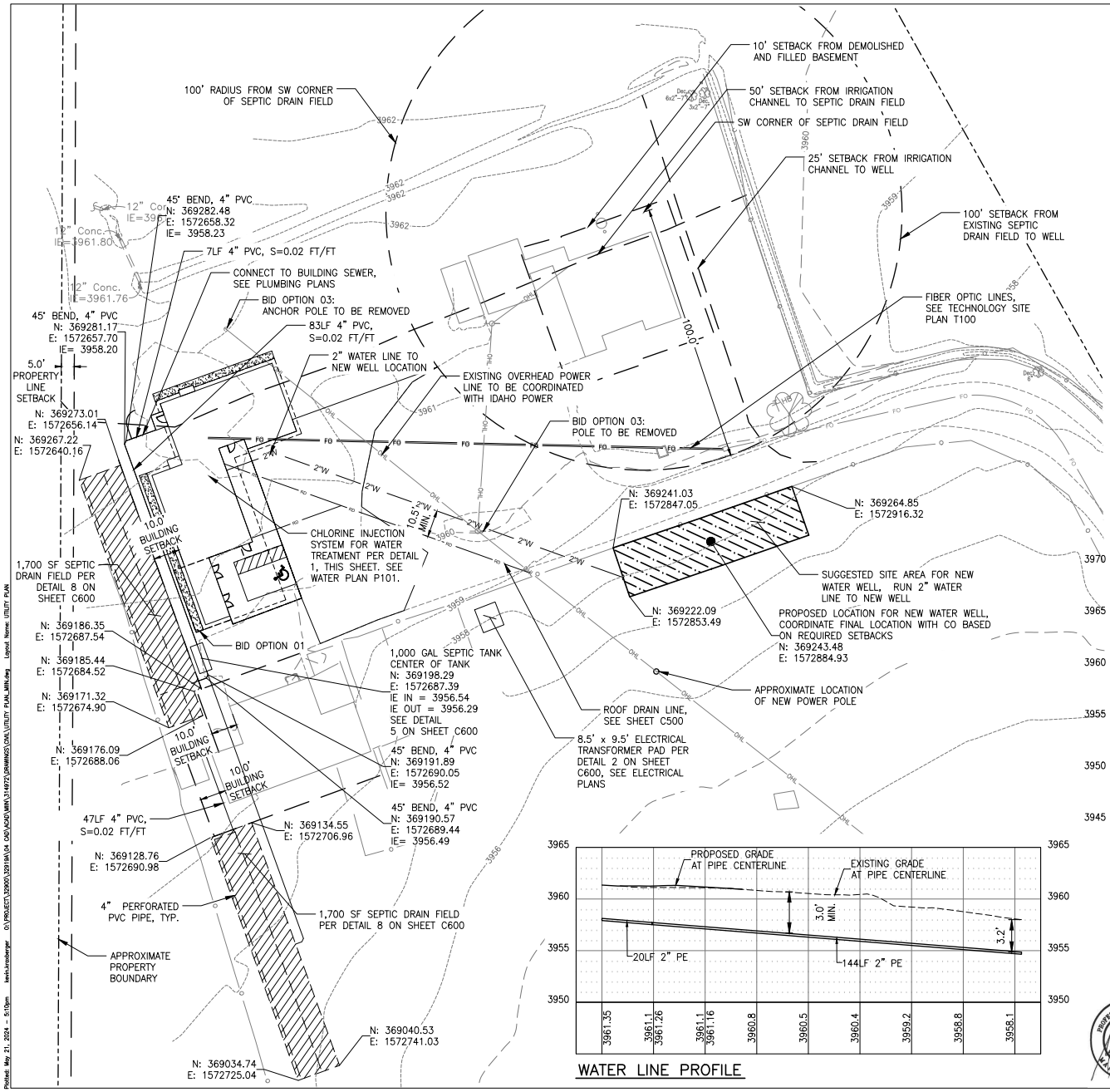

LEGEND

- SEPTIC DRAIN FIELD
- SETBACKS
- APPROXIMATE PROPERTY BOUNDARY

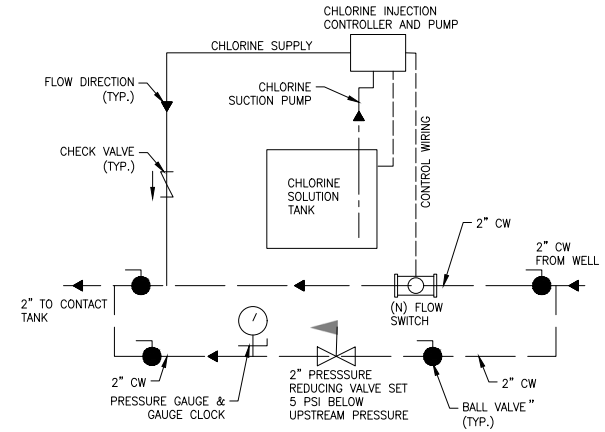

1 C400 PIPE DETAIL AT CHLORINE INJECTION
NTS

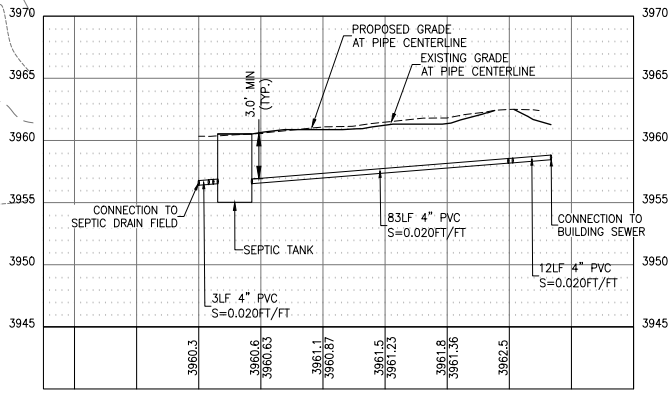

BUILDING SEWER LINE PROFILE

WATER LINE PROFILE

HORIZ 20' 0' 20' 40'
VERT 5' 0' 5' 10'

DESIGNED: EM	SUB SHEET NO.	TITLE OF SHEET	DRAWING NO.
PADD EM	C400	UTILITY PLAN	194 / 187126
TECH REVIEW: EM/KK			PMIS/PKG NO. 314972
DATE: 05/23/2024		MIIN MAINTENANCE BUILDING MINIDOKA NATIONAL HISTORIC SITE	SHEET 12 OF 82

PROFESSIONAL ENGINEER MARK D. COLE 05/21/24

Plotted: May 21, 2024 – 5:10pm kevin.kreseberger O:\PROJECT\32600\32918\04 CAD\ACAD\MIIN\314972\DRAWINGS\CIVIL\UTILITY PLAN_MIIN.dwg Layout Name: UTILITY PLAN

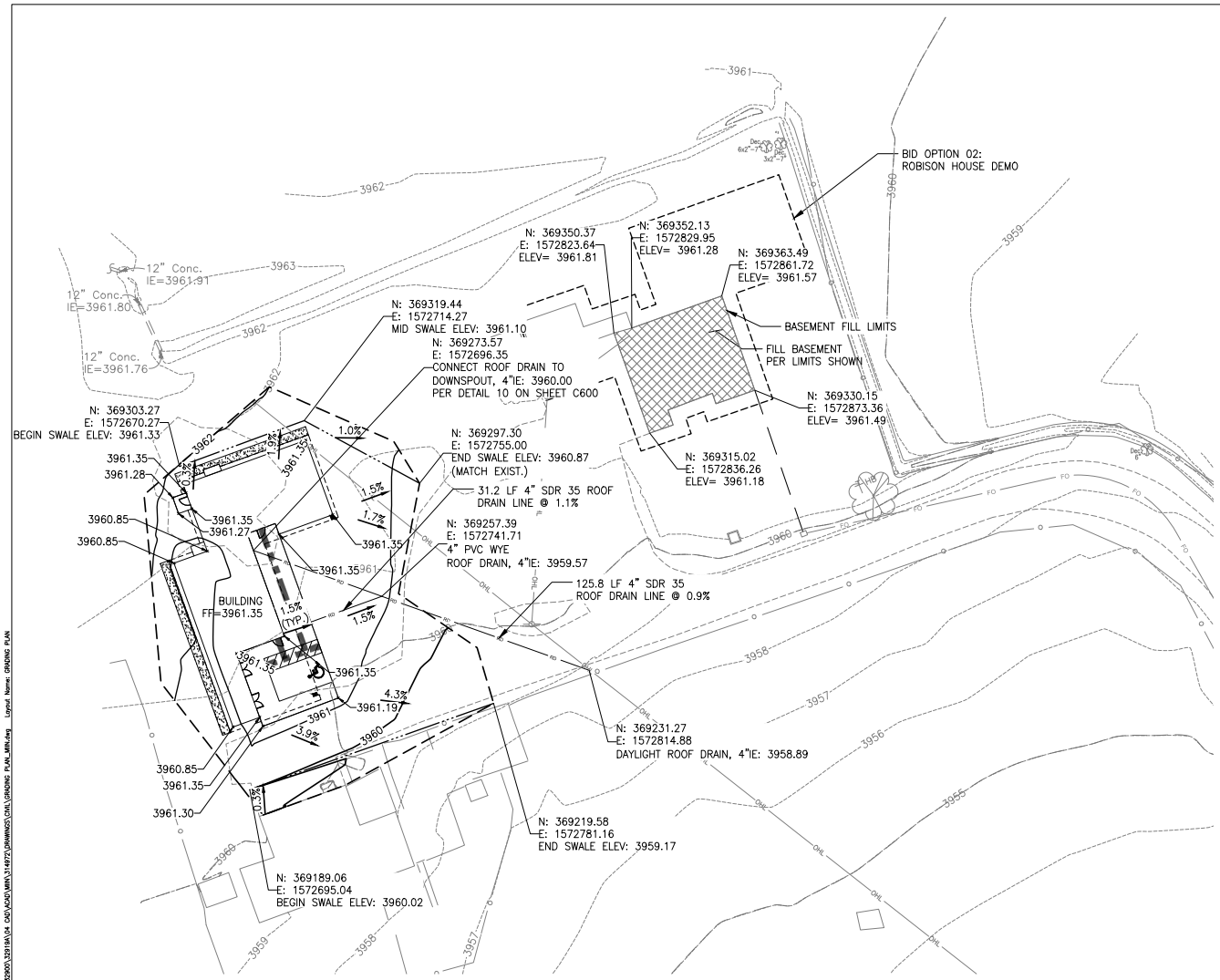

GRADING LEGEND

- GRADING LIMITS
- GRADE BREAK
- 3960 PROPOSED 5' CONTOUR
- 3957 PROPOSED 1' CONTOUR
- × 3961.19 SPOT ELEVATION
- BASEMENT FILL LIMITS
- BASEMENT FILL
- ACCESSIBLE ROUTE

20' 0' 20' 40'
SCALE IN FEET

DESIGNED:	SUB SHEET NO.	TITLE OF SHEET	DRAWING NO.
EM	C500	GRADING PLAN	194 / 187126
CADD: EM			PMIS/PKG NO. 314972
TECH REVIEW: EM/KK		MIIN MAINTENANCE BUILDING	SHEET
DATE: 05/23/2024		MINIDOKA NATIONAL HISTORIC SITE	13 OF 82

PROFESSIONAL ENGINEER REGISTERED 10751 STATE OF IDAHO MARK D. COLE 05/21/24

Plotted: May 21, 2024 – 5:10pm kevin.kreisberger O:\PROJECT\32900\32919\04 CAD\ACAD\MIIN\314972\DRAWINGS\CIVIL\GRADING PLAN\MIIN.dwg Layout Name: GRADING PLAN

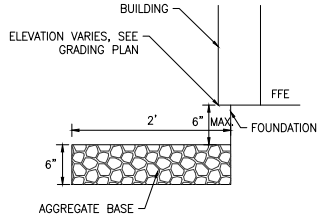

1 C600 PERIMETER GRAVEL
NTS

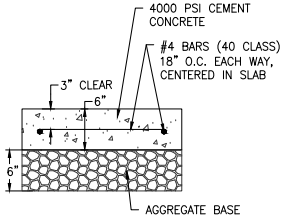

2 C600 CONCRETE PAVEMENT
NTS

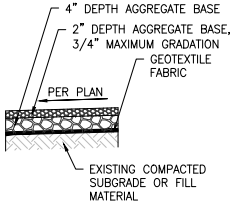

3 C600 GRAVEL DRIVE
NTS

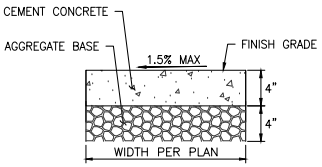

4 C600 CONCRETE PAD
NTS

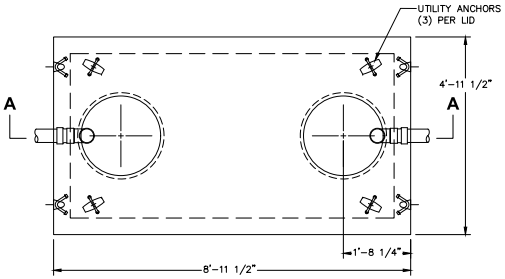

PLAN VIEW

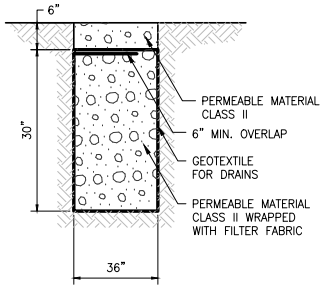

6 C600 ROCK TRENCH
NTS

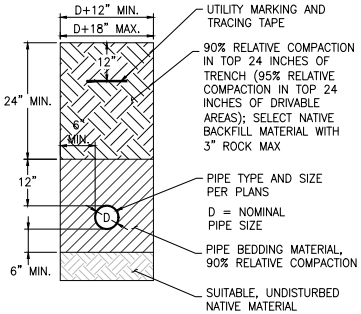

7 C600 WATER & SEWER TRENCH
NTS

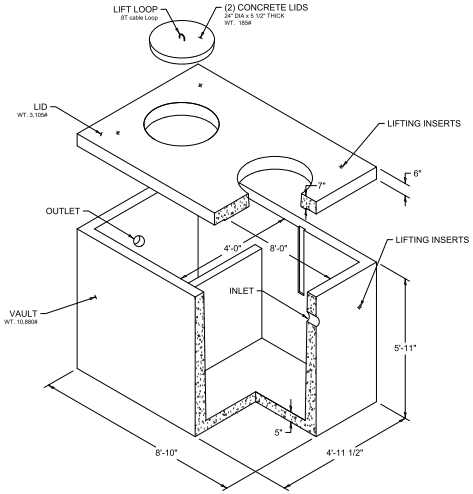

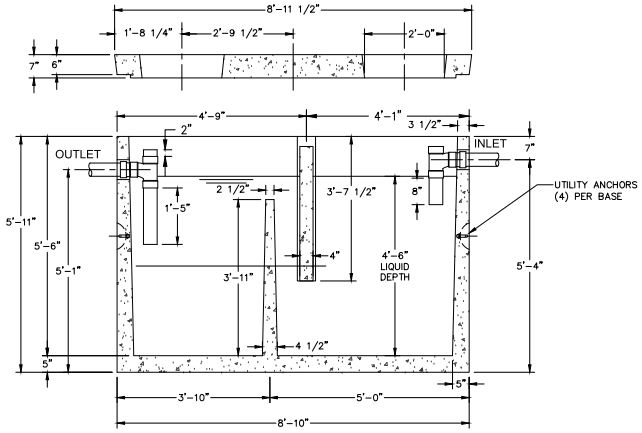

SECTION VIEW

5 C600 1,000 GALLON SEPTIC TANK
NTS

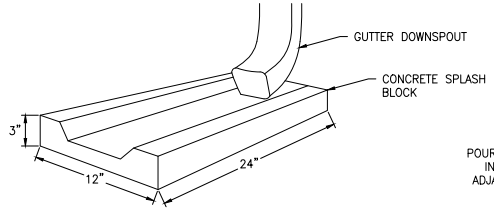

9 C600 CONCRETE SPLASH BLOCK
NTS

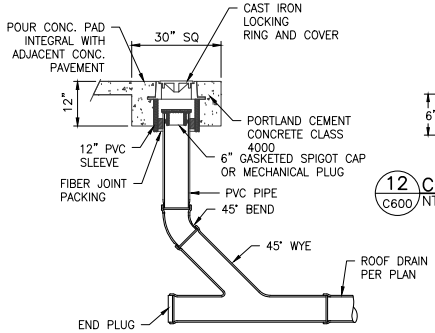

11 C600 CLEANOUT AND WYE
NTS

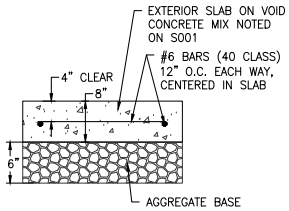

12 C600 CONCRETE EQUIPMENT PAVEMENT
NTS

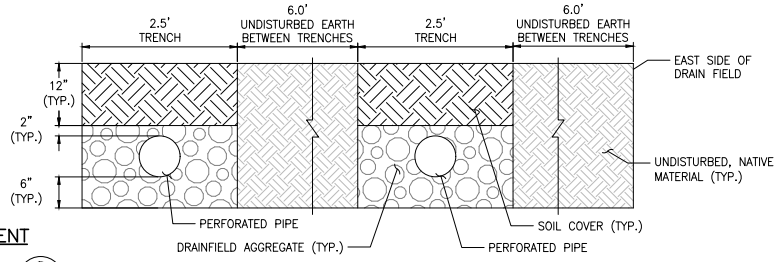

8 C600 SEPTIC DRAINFIELD
NTS

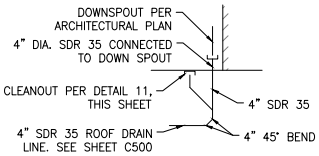

10 C600 DOWNSPOUT & ROOF DRAINAGE CONNECTION
NTS

DESIGNED:	SUB SHEET NO.	TITLE OF SHEET	DRAWING NO.
EM	C600	CIVIL DETAILS	194 / 187126
PADD: EM		MIIN MAINTENANCE BUILDING	PMIS/PKG NO. 314972
TECH REVIEW: EM/KK		MINIDOKA NATIONAL HISTORIC SITE	SHEET 14 OF 82
DATE: 05/23/2024			

Plotted: May 21, 2024 - 5:10pm kevin.kreisberger O:\PROJECT\32900\32919\04 CAD\ACAD\MIIN\314972\DRAWINGS\CIVIL\CIVIL DETAILS_MIIN.dwg Layout Name: Details

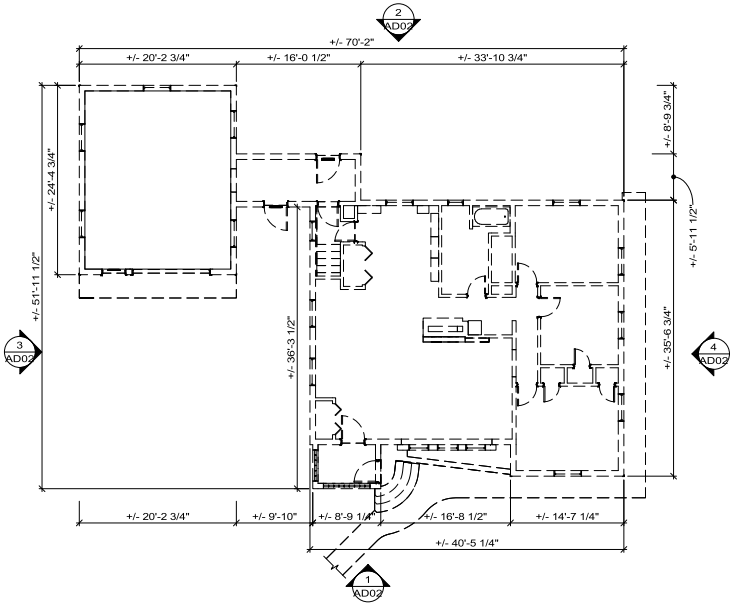

2 AD01 FIRST FLOOR OVERALL
SCALE A

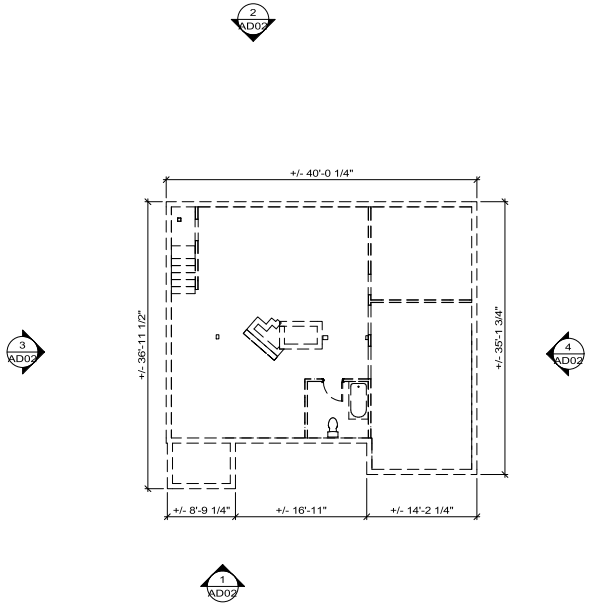

1 AD01 BASEMENT
SCALE A

GENERAL NOTES

1. REMOVE <E> UTILITIES, MECHANICAL/ELECTRICAL EQUIPMENT. REFER TO INDIVIDUAL DISCIPLINES FOR FULL SCOPE OF WORK.
2. VERIFY ALL DIMENSIONS IN FIELD.
3. DEMO ENTIRE EXISTING WOOD FRAME STRUCTURE, INCLUDING CENTER BRICK CHIMNEY, ASPHALT SHINGLE ROOFING, INTERIOR FINISHES, WOOD SIDING, FIBERGLASS, WINDOWS, DOORS, AND MEP EQUIPMENT. RE: CIVIL FOR EXTENTS OF CONCRETE FOUNDATION AND BASEMENT FLOOR DEMOLITION. BACKFILL AND RE-COMPACT GRADE.
4. REFER TO CIVIL FOR SCOPE OF DEMOLITION OF THE FOUNDATION, SEPTIC SYSTEM AND OTHER SITE ELEMENTS.
5. REVEGETATION BY PARK.
6. ANCILLARY SHED WEST OF ROBISON HOUSE GARAGE, MATERIAL STOCKPILES, SHOP EQUIPMENT AND FURNITURE TO BE RETAINED AND MOVED BY NPS PRIOR TO START OF CONSTRUCTION.
7. RE: 2010 ACM REPORT PROVIDED BY NPS. HAZARDOUS MATERIAL EVALUATION TO BE CONDUCTED BY CONTRACTOR PRIOR TO DEMOLITION.

LEGEND

<E> DOOR AND FRAME TO BE REMOVED

<E> WALL TO BE REMOVED

<E> ELEMENT TO BE REMOVED

<E> WALKWAY TO BE REMOVED

FROM SOUTH

FROM SOUTHEAST

FROM NORTH

FROM NORTHWEST

FROM WEST

(ANDERSON HALLAS, JUNE 2022)
NOTE: CONDITIONS SHOWN IN THE PHOTOS ABOVE ARE NOT CURRENT. CONDITIONS ON SITE MAY HAVE HAVE CHANGED.

BLDG NORTH

SCALE: A 8 0 8 16
SCALE OF FEET

LICENSED ARCHITECT
ELIZABETH HALLAS
AR-985880
STATE OF IDAHO

DESIGNED: BC	SUB SHEET NO.	TITLE OF SHEET	DRAWING NO.
CADD NM / CM	AD01	ROBISON HOUSE DEMO PLANS - BID OPTION 02	194
TECH REVIEW: EH / CR		MIIN MAINTENANCE BUILDING	187126
DATE: 05/23/2024		MINIDOKA NATIONAL HISTORIC SITE	PMIS/PKG NO. 314972
			SHEET 15 OF 82

5/22/2024 11:18:40 AM Autodesk Docs://2023-360 NPS MIIN Rehab DD-CD/2023360 NPS MIIN - v24.rvt

GENERAL NOTES

1. REMOVE <E> UTILITIES, MECHANICAL/ELECTRICAL EQUIPMENT. REFER TO INDIVIDUAL DISCIPLINES FOR FULL SCOPE OF WORK.
2. VERIFY ALL DIMENSIONS IN FIELD.
3. DEMO ENTIRE EXISTING WOOD FRAME STRUCTURE, INCLUDING CENTER BRICK CHIMNEY, ASPHALT SHINGLE ROOFING, INTERIOR FINISHES, WOOD SIDING, FIBERGLASS, WINDOWS, DOORS, AND MEP EQUIPMENT. RE: CIVIL FOR EXTENTS OF CONCRETE FOUNDATION AND BASEMENT FLOOR DEMOLITION. BACKFILL AND RE-COMPACT GRADE.
4. REFER TO CIVIL FOR SCOPE OF DEMOLITION OF THE FOUNDATION, SEPTIC SYSTEM AND OTHER SITE ELEMENTS.
5. REVEGETATION BY PARK.
6. ANCILLARY SHED WEST OF ROBISON HOUSE GARAGE, MATERIAL STOCKPILES, SHOP EQUIPMENT AND FURNITURE TO BE RETAINED AND MOVED BY NPS PRIOR TO START OF CONSTRUCTION.
7. RE: 2010 ACM REPORT PROVIDED BY NPS. HAZARDOUS MATERIAL EVALUATION TO BE CONDUCTED BY CONTRACTOR PRIOR TO DEMOLITION.

4 AD02 ELEVATION - EAST
SCALE A

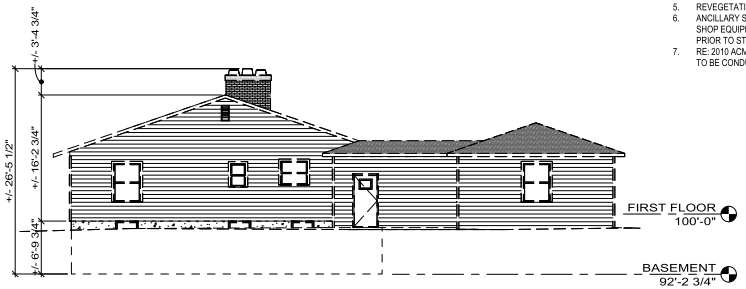

2 AD02 ELEVATION - NORTH
SCALE A

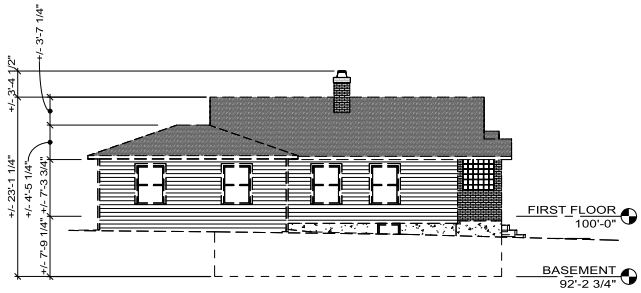

3 AD02 ELEVATION - WEST
SCALE A

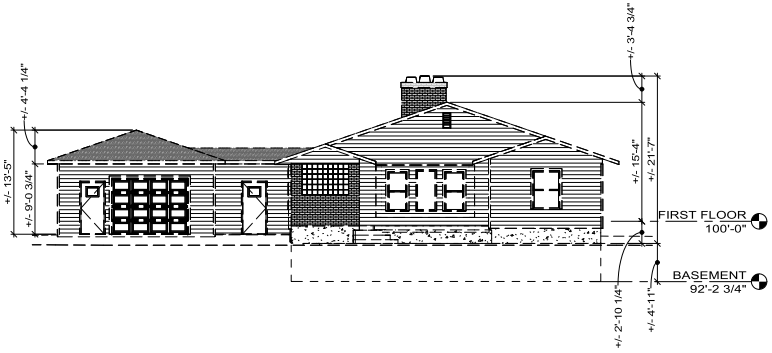

1 AD02 ELEVATION - SOUTH
SCALE A

SCALE: A
8 0 8 16
SCALE OF FEET

LICENSED ARCHITECT
ELIZABETH HALLAS
AR-985880
STATE OF IDAHO

DESIGNED: BC	SUB SHEET NO.	TITLE OF SHEET	DRAWING NO.
CADD NM / CM	AD02	ROBISON HOUSE DEMO ELEVATIONS - BID OPTION 02	194 / 187126
TECH REVIEW: EH / CR		MIIN MAINTENANCE BUILDING	PMIS/PKG NO. 314972
DATE: 05/23/2024		MINIDOKA NATIONAL HISTORIC SITE	SHEET 16 OF 82

5/22/2024 11:18:41 AM Autodesk Docs://2023-360 NPS MIIN Rehab DD-CD/2023360 NPS MIIN - v24.rvt

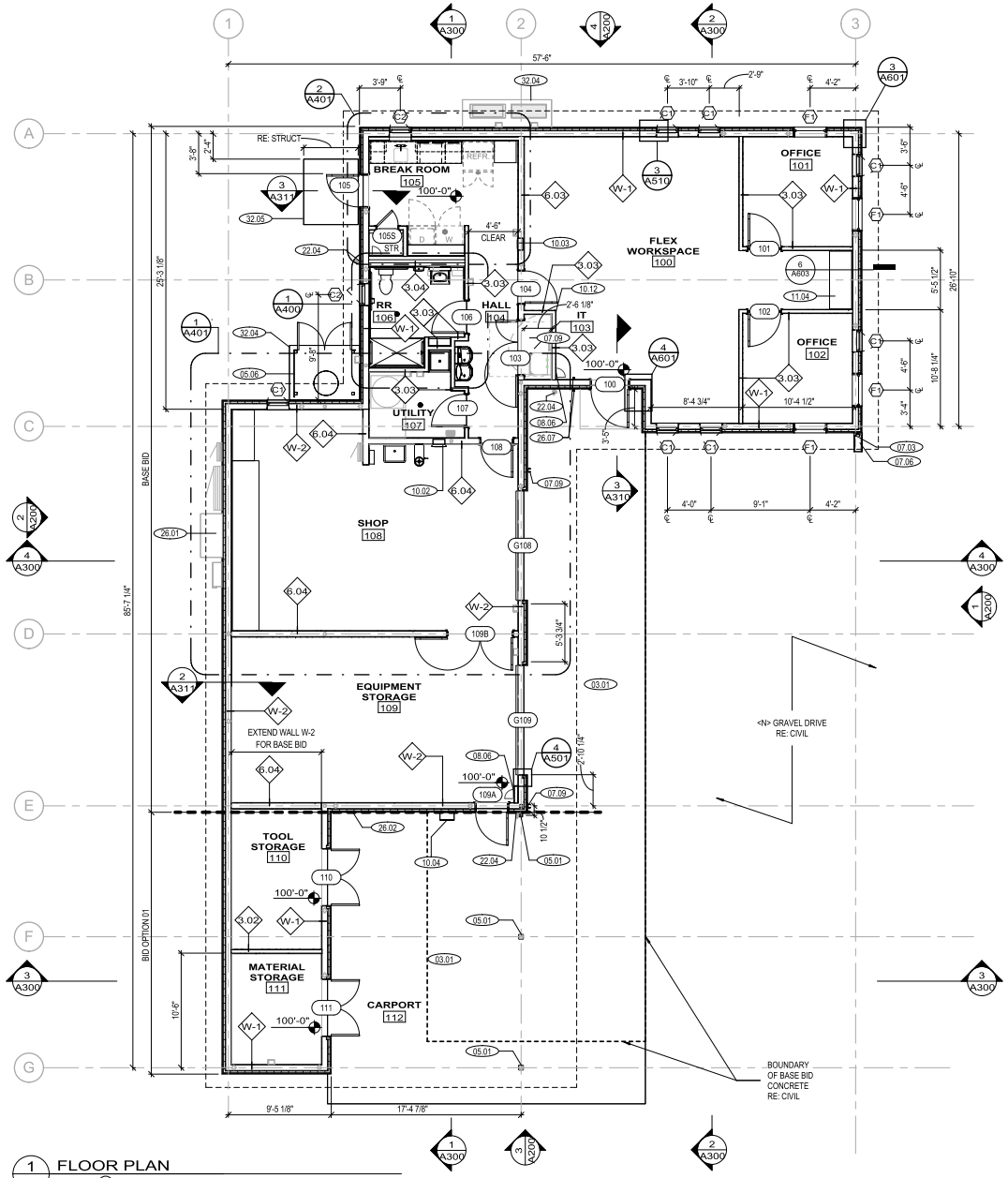

1 A101 FLOOR PLAN
SCALE A

GENERAL NOTES

1. REFER TO ENLARGED PLANS FOR ADDITIONAL INFORMATION.
2. REFER TO STRUC, MECH, ELEC, PLUMB, AND CIVIL DRAWINGS FOR FULL SCOPE OF THE WORK.
3. FF: 100'-0" = USGS 3961.35, REFER TO C500.
4. REFER TO SHEET G210 FOR ASSEMBLY INFORMATION.

LEGEND

PROVIDE 1/2" PLYWOOD SURFACE OVER METAL DECK, RE: STRUCT

KEYNOTES	
03.01	CONCRETE APRON AND SIDEWALK RE: CIVIL & STRUCT
05.01	BID OPTION 01: HSS STEEL COLUMN, PAINT FINISH, RE: STRUCT
05.06	CORRUGATED METAL ENCLOSURE FOR DUST COLLECTION SYSTEM, FINISH TO MATCH SIDING
07.03	PREFINISHED DOWNSPOUT, FINISH TO MATCH STANDING SEAM ROOF
07.06	SPLASH BLOCK RE: CIVIL
07.09	PREFINISHED DOWNSPOUT, FINISH TO MATCH STANDING SEAM ROOF. RE: CIVIL FOR CONNECTION
08.01	48" X 34" ACCESS PANEL TO EQUIPMENT PLATFORM 1 HR RATED
08.06	6" X 6" ACCESS PANEL AT HOSE BIB FOR MAINTENANCE
10.02	FIRE EXTINGUISHER IN SEMI-RECESSED CABINET
10.03	FIRE EXTINGUISHER IN FULLY-RECESSED CABINET
10.04	FIRE EXTINGUISHER IN EXTERIOR RATED SURFACE MOUNT CABINET
10.12	CORNER GUARD
11.04	CASEWORK & SOLID SURFACE COUNTER TOP & BACKSPLASH. PROVIDE ACCESS HOLES IN COUNTERTOP FOR CONCEALING WIRING WITHIN CABINETRY, COORDINATE WITH CO. RE: ELEC/TECH.
22.04	WALL HYDRANT, RE: PLUMB. MOUNT AT 20" ABOVE FINISH GRADE
23.03	MECHANICAL EQUIPMENT, RE: MECH
26.01	ELECTRICAL EQUIPMENT, RE: ELEC
26.02	VEHICULAR CHARGING, RE: ELEC
26.07	ABAAS PUSH BUTTON MOUNTED WITH CENTERLINE AT 40" AFF, RE: ELEC
32.04	CONCRETE EQUIPMENT PADS RE: CIVIL
32.05	CONCRETE PAD RE: STRUCT

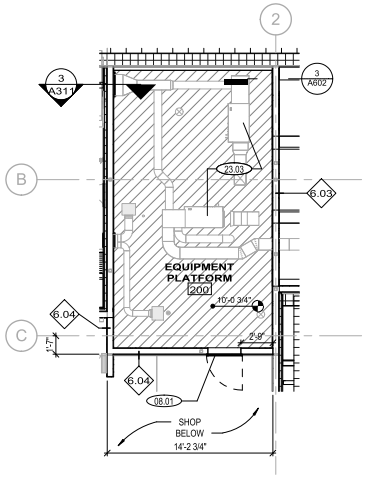

2 A101 EQUIPMENT PLATFORM - ENLARGED PLAN
SCALE A

SCALE: A 4 0 4 8 12
SCALE OF FEET

BLDG NORTH

LICENSED ARCHITECT ELIZABETH HALLAS AR-985880 STATE OF IDAHO

DESIGNED: BC	SUB SHEET NO.	TITLE OF SHEET	DRAWING NO.
CADD NM / CM	A101	FLOOR PLAN	194 / 187126
TECH REVIEW: EH / CR		MIIN MAINTENANCE BUILDING	PMIS/PKG NO. 314972
DATE: 05/23/2024		MINIDOKA NATIONAL HISTORIC SITE	SHEET 17 OF 82

5/22/2024 11:18:43 AM Autodesk Docs://2023-360 NPS MIIN Rehab DD-CD/2023360 NPS MIIN - v24.rvt

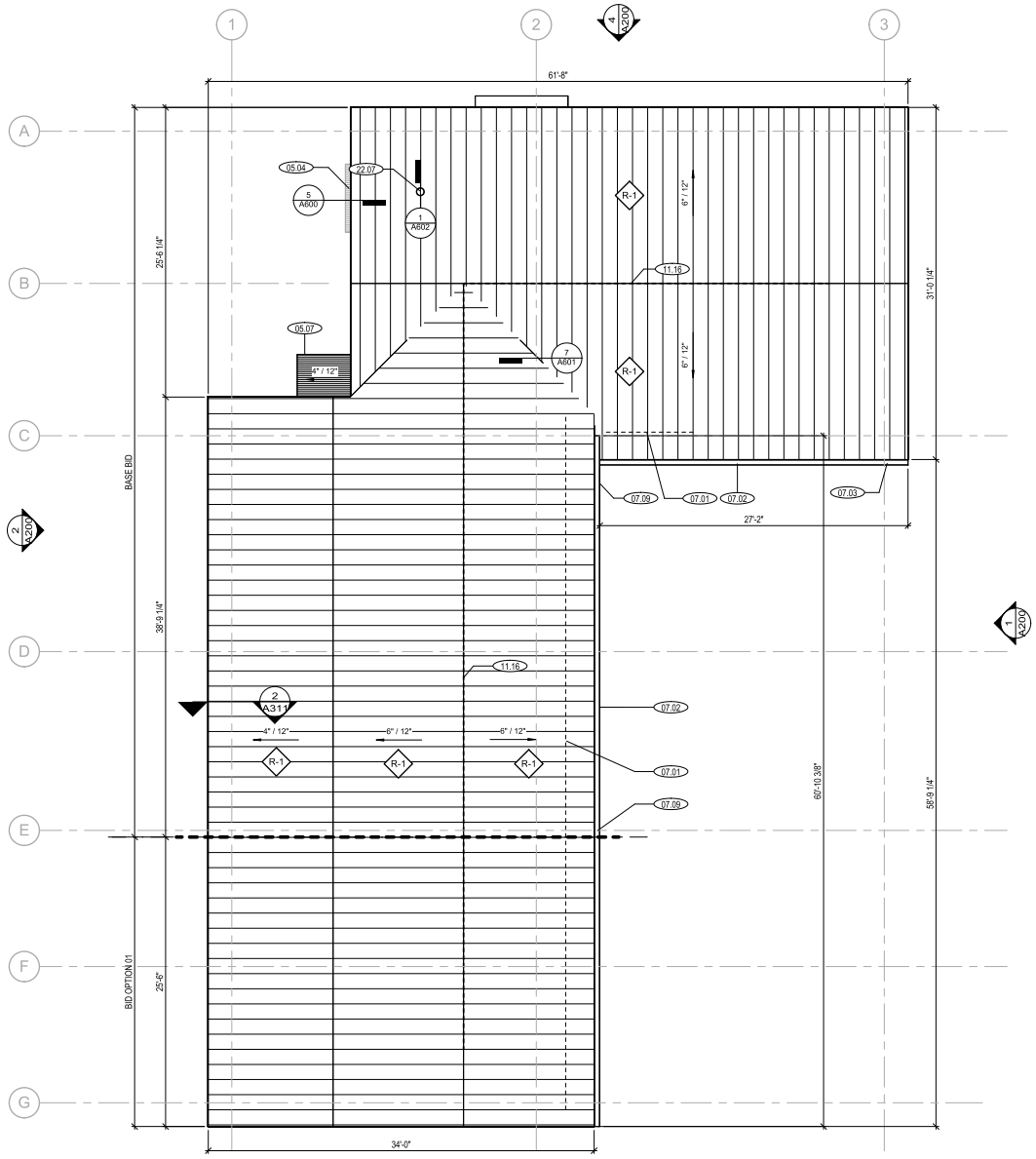

1 A102 ROOF PLAN
SCALE A

GENERAL NOTES

1. REFER TO STRUC, MECH, ELEC, PLUMB, AND CIVIL DRAWINGS FOR FULL SCOPE OF THE WORK.
2. REFER TO SHEET G210 FOR ASSEMBLY INFORMATION.

KEYNOTES	
05.04	CORRUGATED METAL PANEL ENTRY CANOPY. FINISH TO MATCH SIDING
05.07	CORRUGATED METAL ROOF OVER DUST COLLECTION ENCLOSURE.
07.01	SNOW GUARDS. LENGTH AND ATTACHMENT TO ROOF PER ENGINEERED SHOP DRAWINGS, RE: SPECIFICATIONS
07.02	PREFINISHED HALF-ROUND GUTTER AND DOWNSPOUT, FINISH TO MATCH STANDING SEAM ROOF
07.03	PREFINISHED DOWNSPOUT, FINISH TO MATCH STANDING SEAM ROOF
07.09	PREFINISHED DOWNSPOUT, FINISH TO MATCH STANDING SEAM ROOF. RE: CIVIL FOR CONNECTION
11.16	ROOFTOP HORIZONTAL FALL ARREST SYSTEM WITH PERMANENT ANCHORS EA SIDE OF RIDGE. ANCHORS TO BE NO LESS THAN 6-FT FROM EDGE OF ROOF AND FASTENED TO RAFTERS, COORDINATE WITH ROOFING INSTALL, SEAL AND DETAIL PENETRATIONS PER ROOFING MFR STANDARD DETAILS, RE: STRUCT.
22.07	ROOF VENT, RE: PLUMB AND DETAILS FOR PENETRATION THROUGH ROOF

SCALE: A 4 0 4 8 12 SCALE OF FEET

BLDG NORTH

LICENSED ARCHITECT ELIZABETH HALLAS AR-985880 STATE OF IDAHO 5/23/2024

DESIGNED: BC	SUB SHEET NO.	TITLE OF SHEET	DRAWING NO.
DRAWN: NM / CM	A102	ROOF PLAN	194 / 187126
TECH REVIEW: EH / CR		MIIN MAINTENANCE BUILDING	PMIS/PKG NO. 314972
DATE: 05/23/2024		MINIDOKA NATIONAL HISTORIC SITE	SHEET 18 OF 82

5/22/2024 11:18:43 AM Autodesk Docs://2023-360 NPS MIIN Rehab DD-CD/2023360 NPS MIIN - v24.rvt

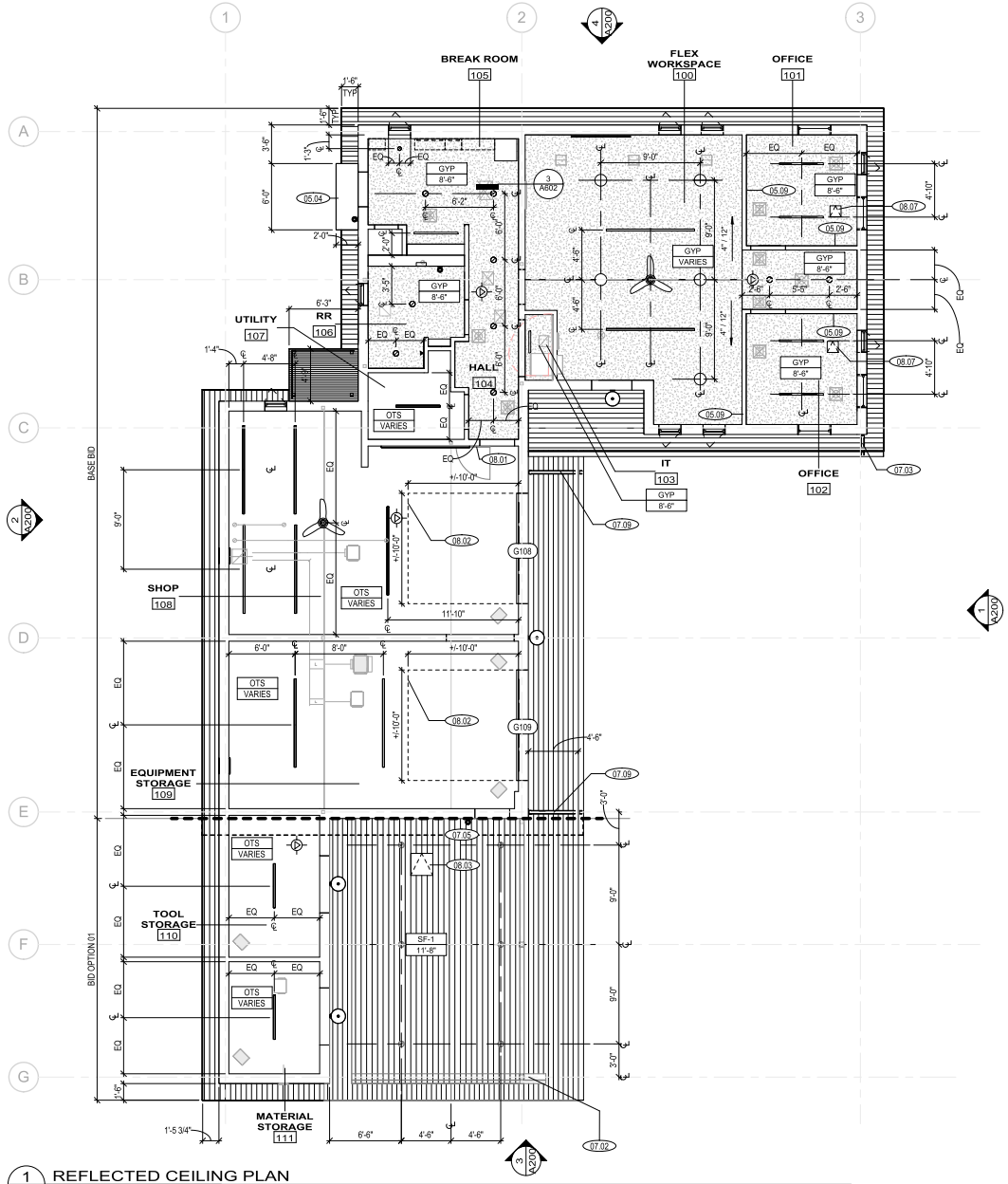

1 A111 REFLECTED CEILING PLAN
SCALE A

RCP GENERAL NOTES

1. ALL EXPOSED MECHANICAL DUCTWORK SHALL BE GALVANIZED FINISH, TYP.
2. ALL EXPOSED ELECTRICAL CONDUIT SHALL BE GALVANIZED FINISH, TYP.
3. COORDINATE WITH STRUCTURAL, MECHANICAL, PLUMBING, ELECTRICAL, AND TECHNOLOGY DRAWINGS FOR LOCATIONS OF CEILING FIXTURES.
4. OTHER DISCIPLINES SHOWN FOR REFERENCE ONLY. REFER TO EACH DISCIPLINE FOR FULL CONSTRUCTION DOCUMENTATION.

KEYNOTES	
05.04	CORRUGATED METAL PANEL ENTRY CANOPY, FINISH TO MATCH SIDING
05.09	TERMINATE METAL STUD PARTITION FRAMING ABOVE CEILING
07.02	PREFINISHED HALF-ROUND GUTTER AND DOWNSPOUT, FINISH TO MATCH STANDING SEAM ROOF
07.03	PREFINISHED DOWNSPOUT, FINISH TO MATCH STANDING SEAM ROOF.
07.05	PROVIDE TYPICAL ROOF OVERHANG IF BID OPTION 01 IS NOT CHOSEN. RE: DETAIL 2/A601
07.09	PREFINISHED DOWNSPOUT, FINISH TO MATCH STANDING SEAM ROOF. RE: CIVIL FOR CONNECTION
08.01	48" X 34" ACCESS PANEL TO EQUIPMENT PLATFORM 1 HR RATED
08.02	OVERHEAD DOOR CLEARANCE
08.03	24" X 24" SOFFIT ACCESS PANEL. MATCH ADJACENT SOFFIT COLOR. COORDINATE LOCATION WITH TRUSSES. RE: STRUCT FOR BLOCKING REQUIREMENTS
08.07	12" X 12" CEILING ACCESS PANEL. COORDINATE WITH CEILING FRAMING

LEGEND

- PT 2 & 3 GWB CEILING, RE: FINISH SCHEDULE
- SF-1 METAL PANEL SOFFIT ORIENTATION OF PANELS VARIES, RE: DRAWING
- CORRUGATED METAL ROOF
- RETURN DUCT REF MECH
- SUPPLY DUCT RE: MECH
- ELECTRICAL HEATERS RE: ELECTRICAL
- WAP RE: TECH
- LINEAR FIXTURE, RE: ELEC
- UNDERCABINET LINEAR FIXTURE, RE: ELEC
- SUSPENDED PENDANT, RE: ELEC
- RECESSED DOWNLIGHT, RE: ELEC
- WALL SCONCE, FIXTURE TYPE VARIES, RE: ELEC
- WALL SCONCE, FIXTURE TYPE VARIES, RE: ELEC
- CEILING ACCESS PANEL

SCALE: A 4 0 4 8 12 SCALE OF FEET

BLDG NORTH

LICENSED ARCHITECT ELIZABETH HALLAS AR-985880 STATE OF IDAHO 5/23/2024

DESIGNED: BC	SUB SHEET NO.	TITLE OF SHEET	DRAWING NO. 194 / 187126
CADD NM / CM	A111	REFLECTED CEILING PLAN	PMIS/PKG NO. 314972
TECH REVIEW: EH / CR		MIIN MAINTENANCE BUILDING	SHEET 19 OF 82
DATE: 05/23/2024		MINIDOKA NATIONAL HISTORIC SITE	

5/22/2024 11:18:44 AM Autodesk Docs://2023-360 NPS MIIN Rehab DD-CD/2023360 NPS MIIN - v24.rvt

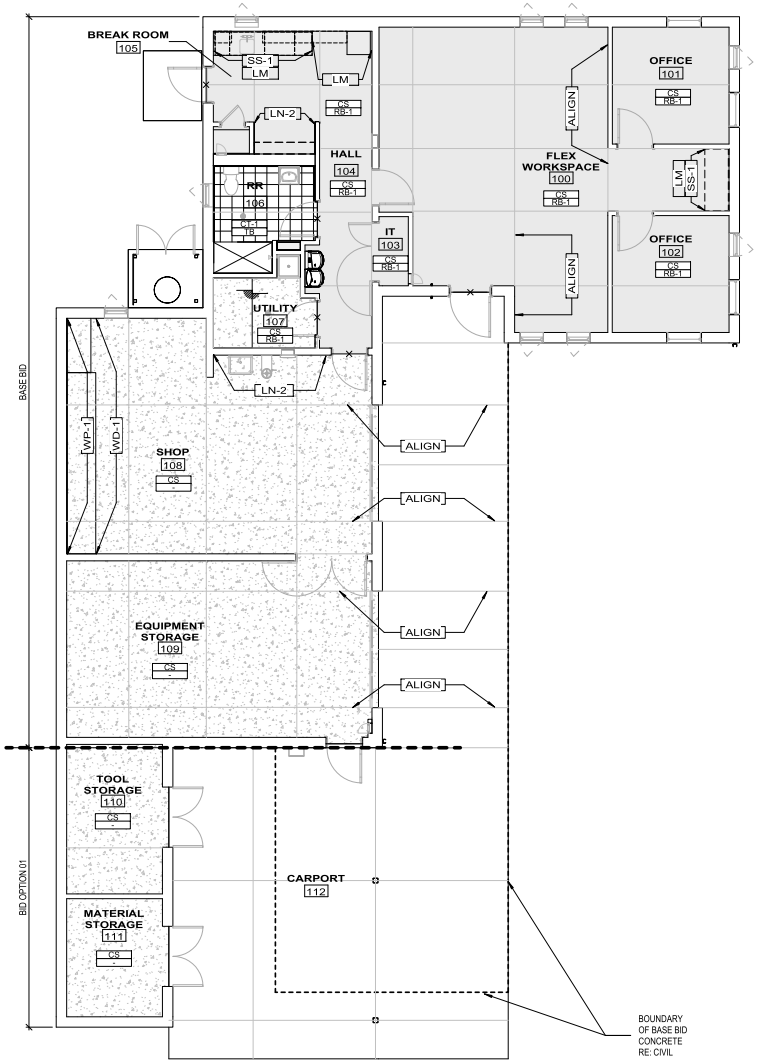

1 A121 FINISH PLAN
SCALE A

LEGEND

- CT-1
- LN-1 / CS
  NOTE: PROVIDE CS AS BASE BID, LN-1 AS BID OPTION 04
- CS
- THRESHOLD TRANSITION STRIP
- FURNITURE/EQUIPMENT TO BE PROVIDED BY PARK.
- CONTROL JOINTS SHOWN WITH GRAY LINES. PROVIDE AT A MAXIMUM SPACING OF 12' RE: STRUCT
- ELEVATION CHANGE

GENERAL NOTES

1. ALL FLOOR FINISHES TO EXTEND UNDER CASEWORK AND EQUIPMENT
2. FOR ALL FLOOR FINISHES, PREPARE SUBSTRATE PER MANUFACTURER'S RECOMMENDATIONS.
3. ALL DOOR AND WINDOW TRIM TO BE PRIMED AND PAINTED, RE: FINISH SCHEDULE.
4. BASIS OF DESIGN (BOD) PROVIDED FOR REFERENCE. REFER TO SPECIFICATIONS FOR FULL PERFORMANCE REQUIREMENTS.

ROOM SCHEDULE

ROOM	ROOM NAME	FLOOR MATERIAL	WALL BASE	WALL PRIMARY	WALL SECONDARY	CEILING
100	FLEX WORKSPACE	CS	RB-1	PT-1		PT-2
101	OFFICE	CS	RB-1	PT-1		PT-2
102	OFFICE	CS	RB-1	PT-1		PT-2
103	IT	CS	RB-1	PT-1		PT-2
104	HALL	CS	RB-1	PT-1		PT-2
105	BREAK ROOM	CS	RB-1	PT-1		PT-2
106	RR	CT-1	TB	CT-2	PT-3	PT-3
107	UTILITY	CS	RB-1	LN-2	PT-3	OTS
108	SHOP	CS	-	PT-3	LN-2	OTS
109	EQUIPMENT STORAGE	CS	-	PT-3		OTS
110	TOOL STORAGE	CS	-	PT-3		OTS
111	MATERIAL STORAGE	CS	-	PT-3		OTS
200	EQUIPMENT PLATFORM	WD-2	-	-		OTS

INTERIOR FINISH SCHEDULE

DESCRIPTION		NOTE
CT-1	CERAMIC TILE, FLOOR	12X12
CT-2	CERAMIC TILE, WALL	4X4, WAINSCOT INSTALL TO 4FT AFF
TB	TILE BASE	4X4 COVE BASE
PT-1	WALL PAINT, TYP	
PT-2	CEILING PAINT, TYP	
PT-3	PAINT, DAMP AREAS	
PT-4	DOOR AND WINDOW TRIM PAINT	
LN-1	LINOLEUM FLOORING	BID OPTION 04 ONLY. ASSUME CS AS BASE BID
LN-2	LINOLEUM WALL PANEL	WAINSCOT INSTALL TO 4FT AFF
WP-1	PEGBOARD WALL PANEL	4' X 8' INSTALL ABOVE BUILT-IN WORK BENCH AT 36" AFF. INSTALL BLOCKING. PROVIDE AN ASSORTMENT OF HEAVY DUTY WELDED GALVANIZED STEEL ROD PEG HOOKS IN A VARIETY OF SIZES AS SELECTED BY THE CONTRACTING OFFICER FROM MANUFACTURER'S STANDARD SIZES. ASSUME 50 STANDARD ACCESSORIES.
CS	SEALED CONCRETE	
RB-1	RUBBER BASE	4 IN
WD-1	BUTCHERBLOCK SURFACE	SHOP WORK BENCH WITH (X2) LOWER SHELVES
WD-2	WOOD PLYWOOD DECK	
LM	WOOD VENEER	
SS-1	SOLID SURFACE	COUNTERTOP AND BACKSPLASH
SS-2	SOLID SURFACE	SHOWER SURROUND
OTS	OPEN TO STRUCTURE	

SCALE: A
4 0 4 8 12
SCALE OF FEET

BLDG NORTH

LICENSED ARCHITECT
ELIZABETH HALLAS
AR-985880
STATE OF IDAHO
5/23/2024

DESIGNED: BC	SUB SHEET NO.	TITLE OF SHEET	DRAWING NO. 194
BADD NM / CM	A121	FINISH PLAN & SCHEDULES	187126
TECH REVIEW: EH / CR			PMIS/PKG NO. 314972
DATE: 05/23/2024		MIIN MAINTENANCE BUILDING MINIDOKA NATIONAL HISTORIC SITE	SHEET 20 OF 82

5/22/2024 11:18:45 AM Autodesk Docs://2023-360 NPS MIIN Rehab DD-CD/2023360 NPS MIIN - v24.rvt

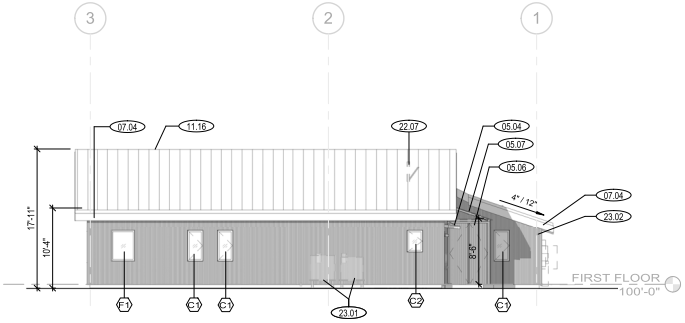

4 A200 ELEVATION - NORTH
SCALE A

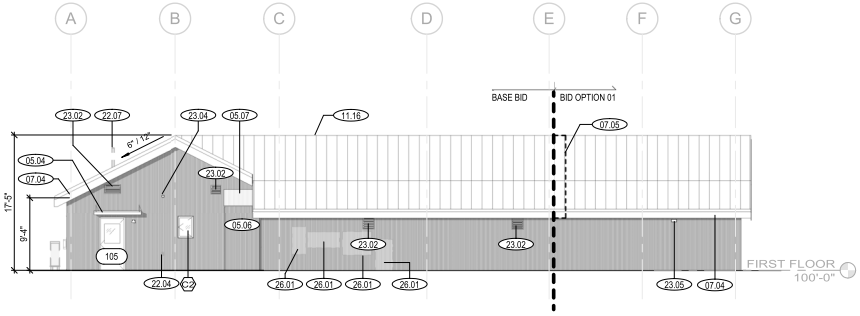

2 A200 ELEVATION - WEST
SCALE A

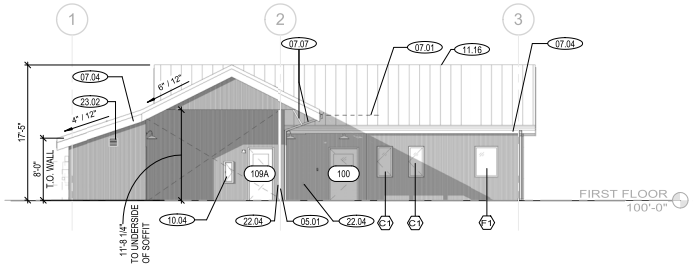

3 A200 ELEVATION - SOUTH
SCALE A

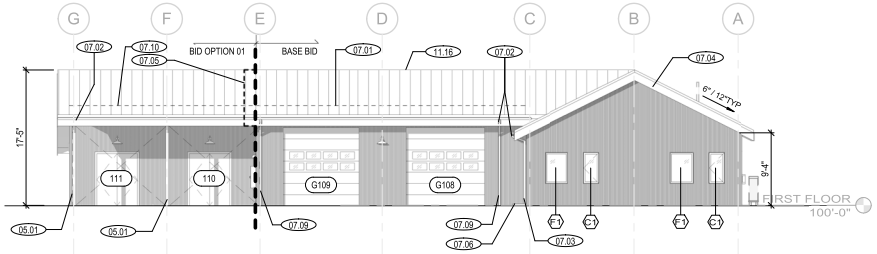

1 A200 ELEVATION - EAST
SCALE A

GENERAL NOTES

1. REFER TO INDIVIDUAL DISCIPLINES FOR FULL SCOPE OF WORK.
2. REFER TO WINDOW AND DOOR SCHEDULE FOR DIMS AND MORE INFORMATION.
3. REFER TO G001 GENERAL NOTES AND INDEX FOR SYMBOL INFORMATION.
4. REFER TO SHEET G210 FOR ASSEMBLY INFORMATION.

LEGEND

CORRUGATED METAL SIDING - VERTICALLY ORIENTED

STANDING SEAM METAL ROOF FLASHING FINISH TO MATCH

KEYNOTES	
05.01	BID OPTION 01: HSS STEEL COLUMN, PAINT FINISH, RE: STRUCT
05.04	CORRUGATED METAL PANEL ENTRY CANOPY, FINISH TO MATCH SIDING
05.06	CORRUGATED METAL ENCLOSURE FOR DUST COLLECTION SYSTEM, FINISH TO MATCH SIDING
05.07	CORRUGATED METAL ROOF OVER DUST COLLECTION ENCLOSURE.
07.01	SNOW GUARDS. LENGTH AND ATTACHMENT TO ROOF PER ENGINEERED SHOP DRAWINGS, RE: SPECIFICATIONS
07.02	PREFINISHED HALF-ROUND GUTTER AND DOWNSPOUT, FINISH TO MATCH STANDING SEAM ROOF
07.03	PREFINISHED DOWNSPOUT, FINISH TO MATCH STANDING SEAM ROOF
07.04	PREFINISHED METAL FLASHING, FINISH TO MATCH STANDING SEAM ROOF
07.05	PROVIDE TYPICAL ROOF OVERHANG IF BID OPTION 01 IS NOT CHOSEN. RE: DETAIL 2/A601
07.06	SPLASH BLOCK RE: CIVIL
07.07	PROVIDE PREFINISHED METAL DIAGONAL BRACING AS REQUIRED TO SUPPORT DIAGONAL SPAN OF DOWNSPOUT, TYPICAL AT 2 LOCATIONS
07.09	PREFINISHED DOWNSPOUT, FINISH TO MATCH STANDING SEAM ROOF. RE: CIVIL FOR CONNECTION
07.10	SNOW GUARD TO EXTEND WITH BID OPTION 01
10.04	FIRE EXTINGUISHER IN EXTERIOR RATED SURFACE MOUNT CABINET
11.16	ROOFTOP HORIZONTAL FALL ARREST SYSTEM WITH PERMANENT ANCHORS EA SIDE OF RIDGE. ANCHORS TO BE NO LESS THAN 6-FT FROM EDGE OF ROOF AND FASTENED TO RAFTERS, COORDINATE WITH ROOFING INSTALL, SEAL AND DETAIL PENETRATIONS PER ROOFING MFR STANDARD DETAILS, RE: STRUCT
22.04	WALL HYDRANT, RE: PLUMB. MOUNT AT 20" ABOVE FINISH GRADE
22.07	ROOF VENT, RE: PLUMB AND DETAILS FOR PENETRATION THROUGH ROOF
23.01	CONDENSING UNITS ON CONCRETE PADS, RE: MECH
23.02	PREFINISHED METAL LOUVER, RE: MECH
23.04	DRYER VENT CAP, RE: MECH
23.05	EXHAUST FAN HOOD, RE: MECH
26.01	ELECTRICAL EQUIPMENT, RE: ELEC

SCALE: A 8 0 8 16
SCALE OF FEET

LICENSED ARCHITECT
ELIZABETH HALLAS
AR-985880
STATE OF IDAHO
5/23/2024

DESIGNED: BC	SUB SHEET NO.	TITLE OF SHEET	DRAWING NO.
CADD NM / CM	A200	EXTERIOR ELEVATIONS	194 / 187126
TECH REVIEW: EH / CR		MIIN MAINTENANCE BUILDING	PMIS/PKG NO. 314972
DATE: 05/23/2024		MINIDOKA NATIONAL HISTORIC SITE	SHEET 21 OF 82

5/22/2024 11:18:51 AM Autodesk Docs://2023-360 NPS MIIN Rehab DD-CD/2023360 NPS MIIN - v24.rvt

GENERAL NOTES

1. REFER TO INDIVIDUAL DISCIPLINES FOR FULL SCOPE OF WORK.
2. REFER TO WINDOW AND DOOR SCHEDULE FOR DIMS AND MORE INFORMATION.
3. REFER TO G001 GENERAL NOTES AND INDEX FOR SYMBOL INFORMATION.
4. REFER TO SHEET G210 FOR ASSEMBLY INFORMATION.

LEGEND

CORRUGATED METAL SIDING - VERTICALLY ORIENTED

STANDING SEAM METAL ROOF FLASHING FINISH TO MATCH

KEYNOTES	
08.01	48" X 34" ACCESS PANEL TO EQUIPMENT PLATFORM 1 HR RATED
08.03	24" X 24" SOFFIT ACCESS PANEL. MATCH ADJACENT SOFFIT COLOR. COORDINATE LOCATION WITH TRUSSES. RE: STRUCT FOR BLOCKING REQUIREMENTS
10.02	FIRE EXTINGUISHER IN SEMI-RECESSED CABINET
10.04	FIRE EXTINGUISHER IN EXTERIOR RATED SURFACE MOUNT CABINET
22.02	EYEWASH SINK, RE: PLUMB
22.03	UTILITY SINK, RE: PLUMB

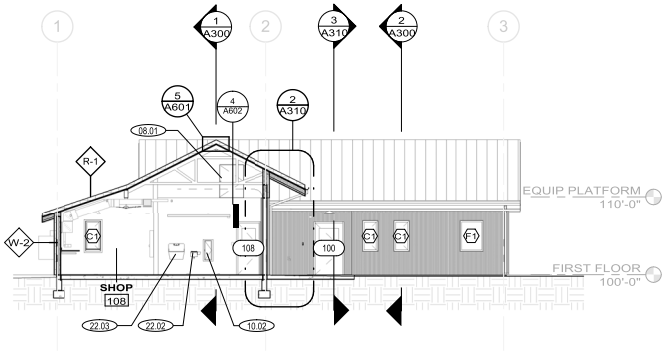

4 A300 BUILDING SECTION - EW AT SHOP
SCALE A

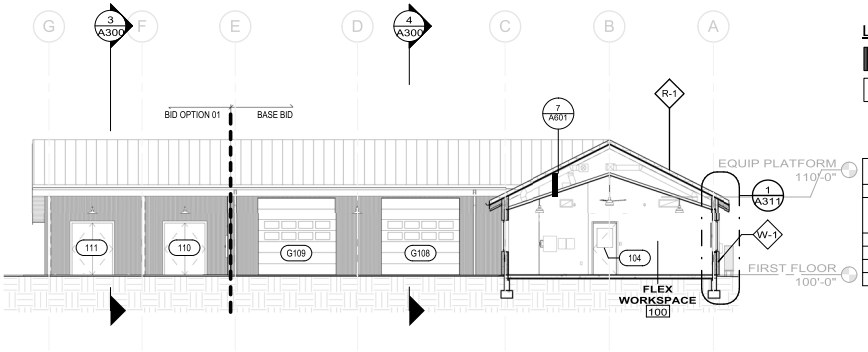

2 A300 BUILDING SECTION - NS AT OPEN OFFICE
SCALE A

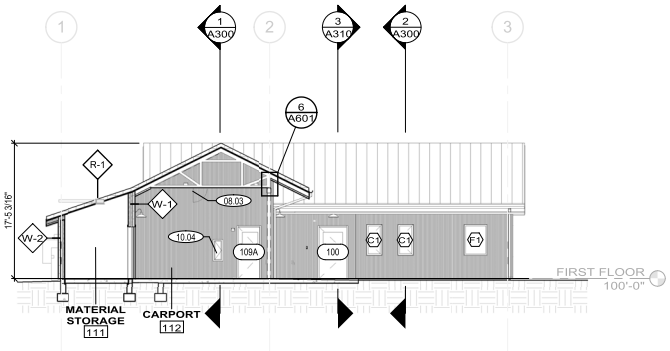

3 A300 BUILDING SECTION - EW AT CARPORT
SCALE A

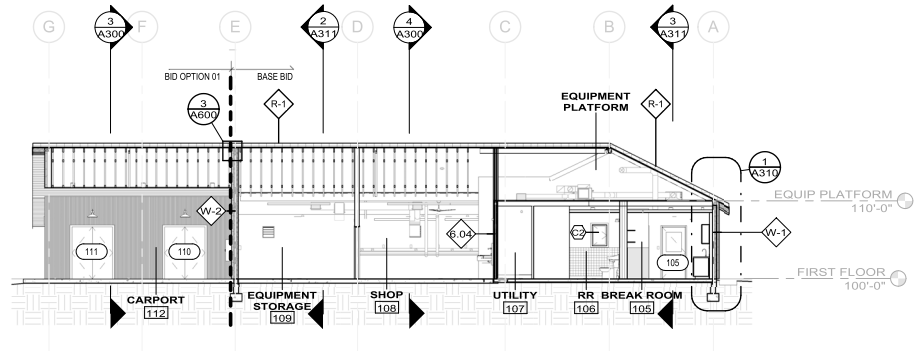

1 A300 BUILDING SECTION - NS AT EQUIPMENT PLATFORM
SCALE A

SCALE: A 8 0 8 16 SCALE OF FEET

LICENSED ARCHITECT ELIZABETH HALLAS AR-985880 STATE OF IDAHO

DESIGNED: BC	SUB SHEET NO.	TITLE OF SHEET	DRAWING NO.
DRAWN: NM / CM	A300	BUILDING SECTIONS	194 / 187126
TECH REVIEW: EH / CR		MIIN MAINTENANCE BUILDING	PMIS/PKG NO. 314972
DATE: 05/23/2024		MINIDOKA NATIONAL HISTORIC SITE	SHEET 22 OF 82

5/22/2024 11:18:55 AM Autodesk Docs://2023-360 NPS MIIN Rehab DD-CD/2023360 NPS MIIN - v24.rvt

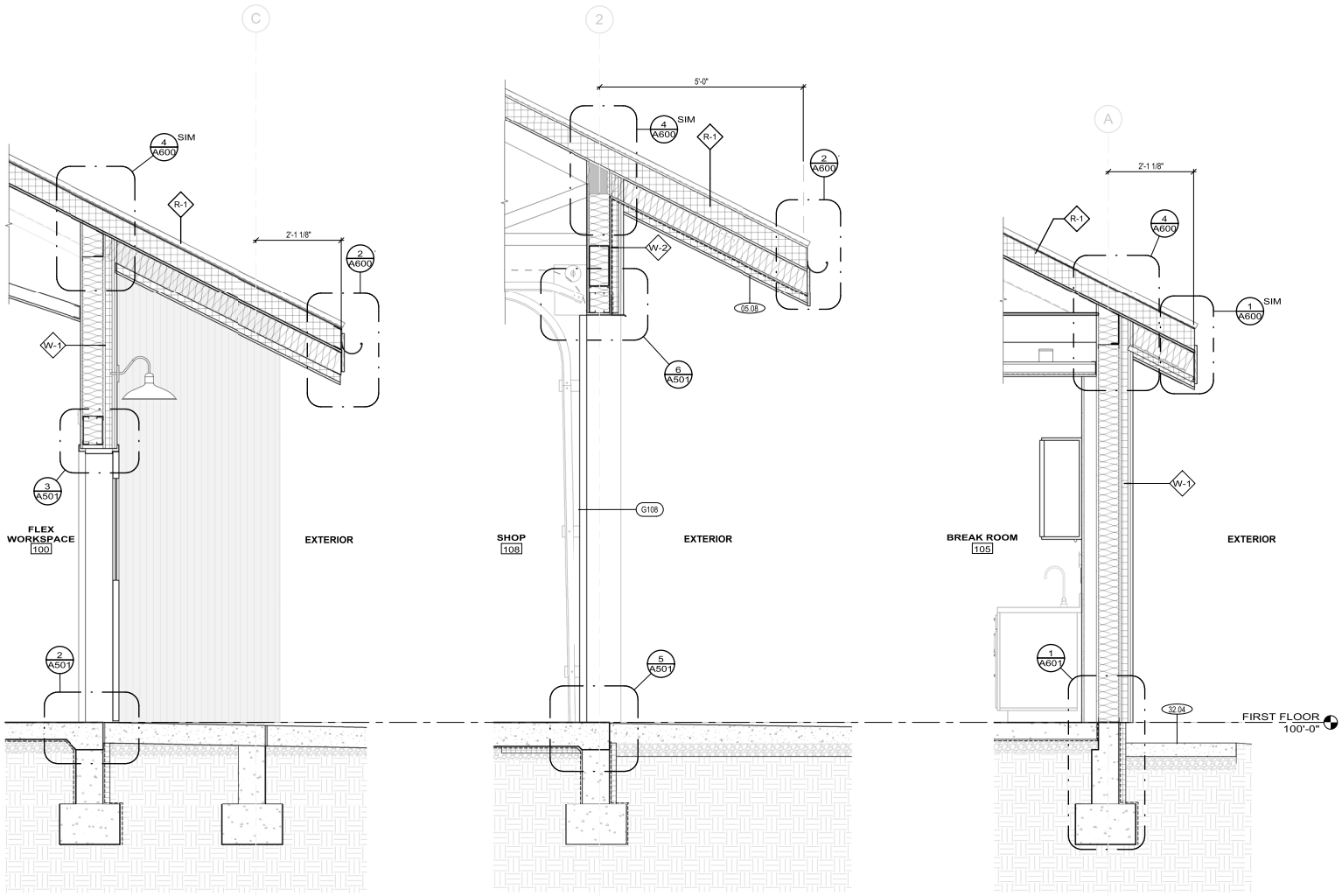

3 A310 WALL SECTION - OFFICE ENTRY
SCALE A

2 A310 WALL SECTION - EW AT SHOP
SCALE A

1 A310 WALL SECTION, TYPICAL
SCALE A

GENERAL NOTES

1. REFER TO INDIVIDUAL DISCIPLINES FOR FULL SCOPE OF WORK.
2. REFER TO WINDOW AND DOOR SCHEDULE FOR DIMS AND MORE INFORMATION.
3. REFER TO G001 GENERAL NOTES AND INDEX FOR SYMBOL INFORMATION.
4. REFER TO SHEET G210 FOR ASSEMBLY INFORMATION.

KEYNOTES	
05.08	METAL SOFFIT PANEL
32.04	CONCRETE EQUIPMENT PADS RE: CIVIL

SCALE: A 1 0 1 2 3
SCALE OF FEET

LICENSED ARCHITECT ELIZABETH HALLAS AR-985880 STATE OF IDAHO 5/23/2024

DESIGNED: BC	SUB SHEET NO.	TITLE OF SHEET WALL SECTIONS	DRAWING NO. 194 / 187126
CADD NM / CM	A310		PMIS/PKG NO. 314972
TECH REVIEW: EH / CR		MIIN MAINTENANCE BUILDING MINIDOKA NATIONAL HISTORIC SITE	SHEET 23 OF 82
DATE: 05/23/2024			

5/22/2024 11:18:57 AM Autodesk Docs://2023-360 NPS MIIN Rehab DD-CD/2023360 NPS MIIN - v24.rvt

GENERAL NOTES

1. REFER TO INDIVIDUAL DISCIPLINES FOR FULL SCOPE OF WORK.
2. REFER TO WINDOW AND DOOR SCHEDULE FOR DIMS AND MORE INFORMATION.
3. REFER TO G001 GENERAL NOTES AND INDEX FOR SYMBOL INFORMATION.
4. REFER TO SHEET G210 FOR ASSEMBLY INFORMATION.

KEYNOTES	
05.08	METAL SOFFIT PANEL
07.04	PREFINISHED METAL FLASHING, FINISH TO MATCH STANDING SEAM ROOF
23.03	MECHANICAL EQUIPMENT, RE: MECH
32.04	CONCRETE EQUIPMENT PADS RE: CIVIL

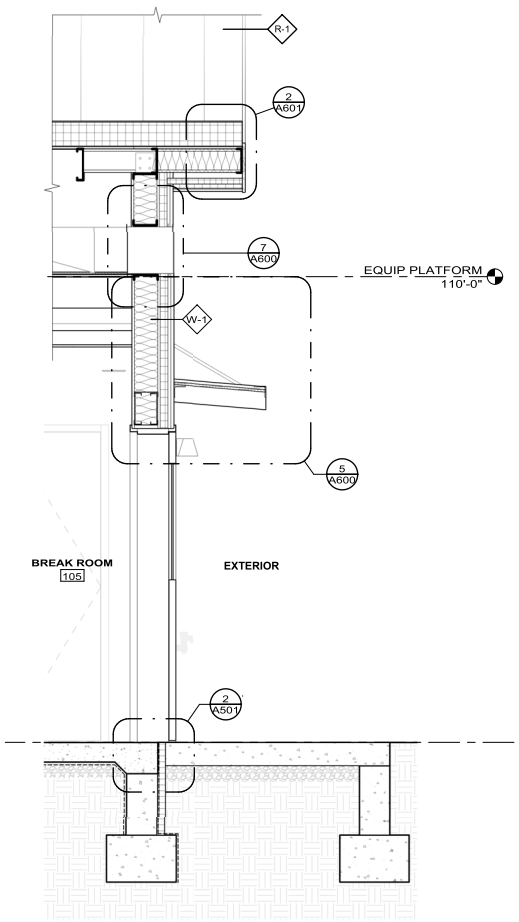

3 A311 WALL SECTION - DOOR CANOPY
SCALE A

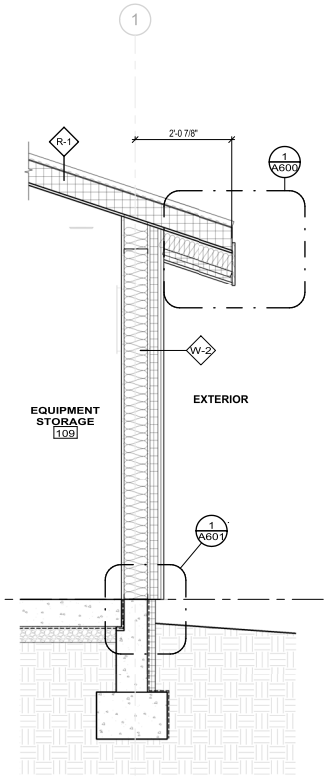

2 A311 WALL SECTION - WEST WALL
SCALE A

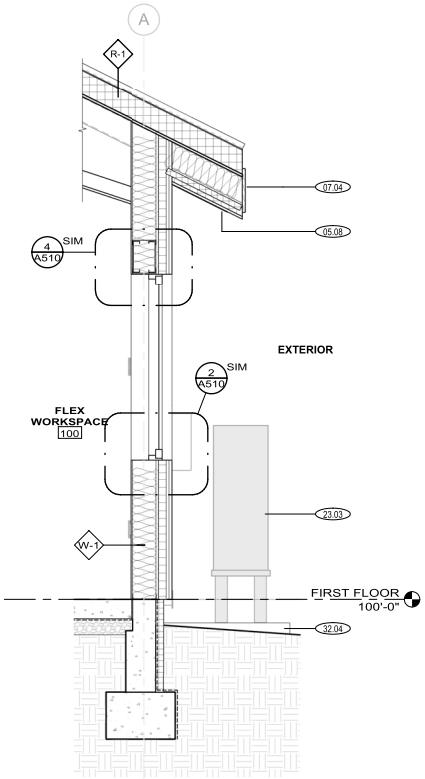

1 A311 WALL SECTION - NS AT OPEN OFFICE
SCALE A

SCALE: A 1 0 1 2 3
SCALE OF FEET

LICENSED ARCHITECT
ELIZABETH HALLAS
AR-985880
STATE OF IDAHO

DESIGNED:	SUB SHEET NO.	TITLE OF SHEET	DRAWING NO.
BC	A311	WALL SECTIONS	194 / 187126
DRAWN: NM / CM			PMIS/PKG NO. 314972
TECH REVIEW: EH / CR		MIIN MAINTENANCE BUILDING MINIDOKA NATIONAL HISTORIC SITE	SHEET 24 OF 82
DATE: 05/23/2024			

5/22/2024 11:19:00 AM Autodesk Docs://2023-360 NPS MIIN Rehab DD-CD/2023360 NPS MIIN - v24.rvt

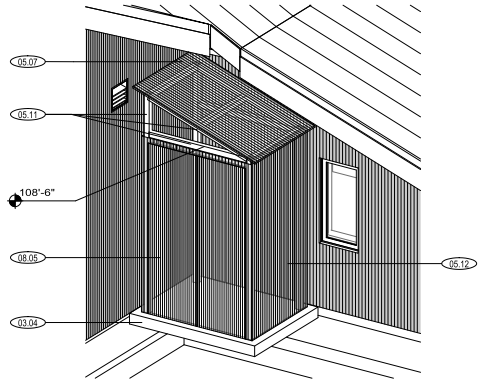

NOTE: AXONOMETRIC SKETCH SHOWN FOR DIAGRAMMATIC PURPOSES ONLY.
REFER TO DRAWINGS FOR CONSTRUCTION DOCUMENTATION.

7 A400 DUST COLLECTOR ENCLOSURE
N.T.S.

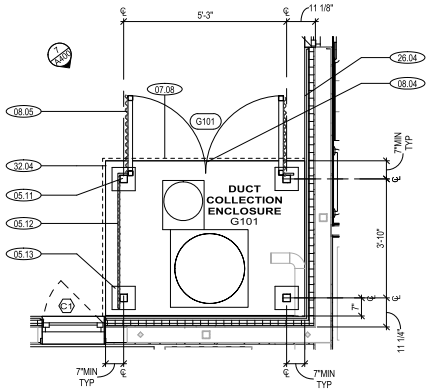

6 A400 DUST COLLECTOR ENCLOSURE ENLARGED PLAN
SCALE B

GENERAL NOTES

1. REFER TO ABAAS MOUNTING HEIGHTS FOR INFO ON MOUNTING LOCATIONS
2. PROVIDE CTBB BEHIND ALL WALL TILE. ALL GWB IN RESTROOM TO BE MOISTURE RESISTANT.
3. PROVIDE IN-WALL BLOCKING AS REQUIRED FOR MOUNTING OF ALL FIXTURES AND ACCESSORIES.
4. REFER TO OTHER DISCIPLINES FOR FULL SCOPE OF THE WORK.
5. REFER TO SHEET G210 FOR ASSEMBLY INFORMATION.

KEYNOTES	
03.04	CONCRETE PAD RE: STRUCT
05.07	CORRUGATED METAL ROOF OVER DUST COLLECTION ENCLOSURE.
05.11	HSS 3X3X1/4 TYPICAL, WELDED CONNECTIONS SHALL BE 3/16" EFFECTIVE THROAT ALL AROUND
05.12	VERTICAL CORRUGATED METAL SIDING, TYP.
05.13	1/2"X8"X9" EMBED PLATE W/ 5/8" DIA. X 5" HEADED ANCHOR STUDS @ 6" EACH WAY CENTERED ON EACH POST
06.03	MINIMUM 4 ADJUSTABLE WOOD SHELVING, FLOATING SHELF BRACKET, RE: FINISH SCHEDULE
07.08	EDGE OF CORRUGATED METAL ROOFING ABOVE. TYPICAL ROOF DECK PER S100, SLOPE TO MATCH MAIN BUILDING ROOF SLOPE
08.04	PROVIDE CANE BOLT AT SLAB
08.05	DOUBLE GATE WITH HSS 2X2X1/4 FRAME AND CORRUGATED SIDING FINISH
09.06	CERAMIC TILE WAINSCOT TO 4' AFF WITH BULL NOSE TOP BAND, TYP. ALL RESTROOM WALLS. RE:FINISH SCHEDULE
09.07	4" COVE BASE, RE:FINISH SCHEDULE
09.08	SOLID SURFACE, RE:FINISH SCHEDULE
10.05	WASTE RECEPTACLE, RECESSED
10.07	SHOWER ROD, MECHANICALLY INSTALLED
10.08	TOILET PAPER DISPENSER
10.10	WALL HOOKS
10.11	MIRROR WITH INTEGRAL SHELF
10.12	CORNER GUARD
10.14	ABAAS GRAB-BARS
10.16	PAPER TOWEL DISPENSER
22.05	DRINKING FOUNTAIN AND BOTTLE FILLER, RE: PLUMB
22.06	MOP SINK, RE: PLUMB
22.08	FLOOR DRAIN, RE: PLUMB
22.09	WATER CLOSET, RE: PLUMB
22.10	LAVATORY, RE: PLUMB
22.11	SHOWER BASE, RE: PLUMB. CONTRACTOR TO COORDINATE REQUIREMENTS FOR SHOWER BASE INSTALLATION WITH FINISH FLOOR INSTALLATION TO ENSURE A THRESHOLD HEIGHT OF 1/2" MAXIMUM FOR ACCESSIBILITY
26.04	DISCONNECT SWITCH, RE: ELEC
26.05	OCCUPANCY SENSOR OR SWITCH; RE: ELEC
26.06	OUTLET; RE: ELEC
32.04	CONCRETE EQUIPMENT PADS RE: CIVIL

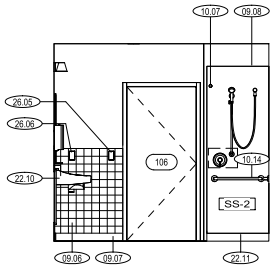

5 A400 RR ELEVATION - EAST
SCALE A

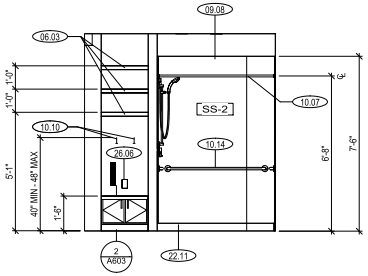

4 A400 RR ELEVATION - SOUTH
SCALE A

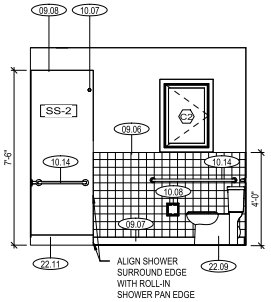

3 A400 RR ELEVATION - WEST
SCALE A

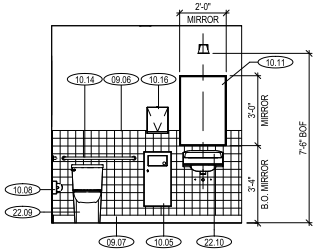

2 A400 RR ELEVATION - NORTH
SCALE A

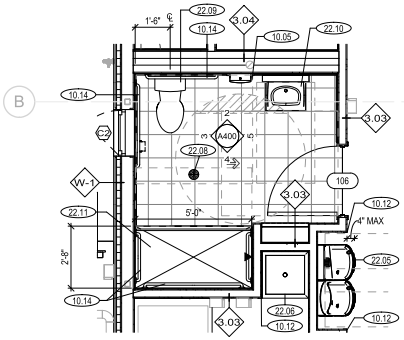

1 A400 RR - ENLARGED PLAN
SCALE A

SCALE: B 2 0 2 4 SCALE OF FEET
SCALE: A 2 0 3 6 SCALE OF FEET
BLDG. NORTH

LICENSED ARCHITECT
5/23/2024
ELIZABETH HALLAS
AR-985880
STATE OF IDAHO

DESIGNED: BC	SUB SHEET NO.	TITLE OF SHEET	DRAWING NO.
CADD NM / CM	A400	ENLARGED PLANS & ELEVATIONS	194 / 187126
TECH REVIEW: EH / CR		MIIN MAINTENANCE BUILDING	PMIS/PKG NO. 314972
DATE: 05/23/2024		MINIDOKA NATIONAL HISTORIC SITE	SHEET 25 OF 82

5/22/2024 11:19:02 AM Autodesk Docs://2023-360 NPS MIIN Rehab DD-CD/2023360 NPS MIIN - v24.rvt

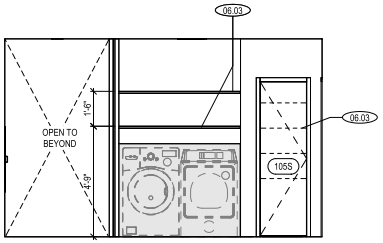

4 A401 INTERIOR ELEV- BREAK ROOM - SOUTH
SCALE A

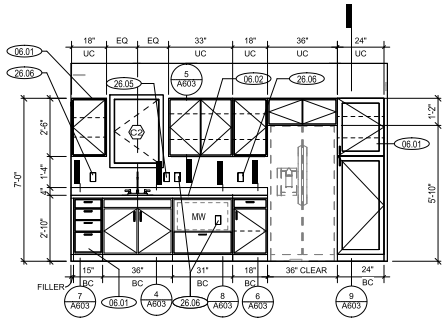

3 A401 INTERIOR ELEV - BREAK ROOM - NORTH
SCALE A

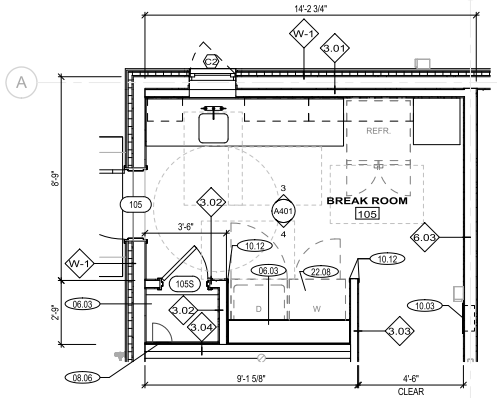

2 A401 ENLARGED PLAN - BREAK ROOM
SCALE A

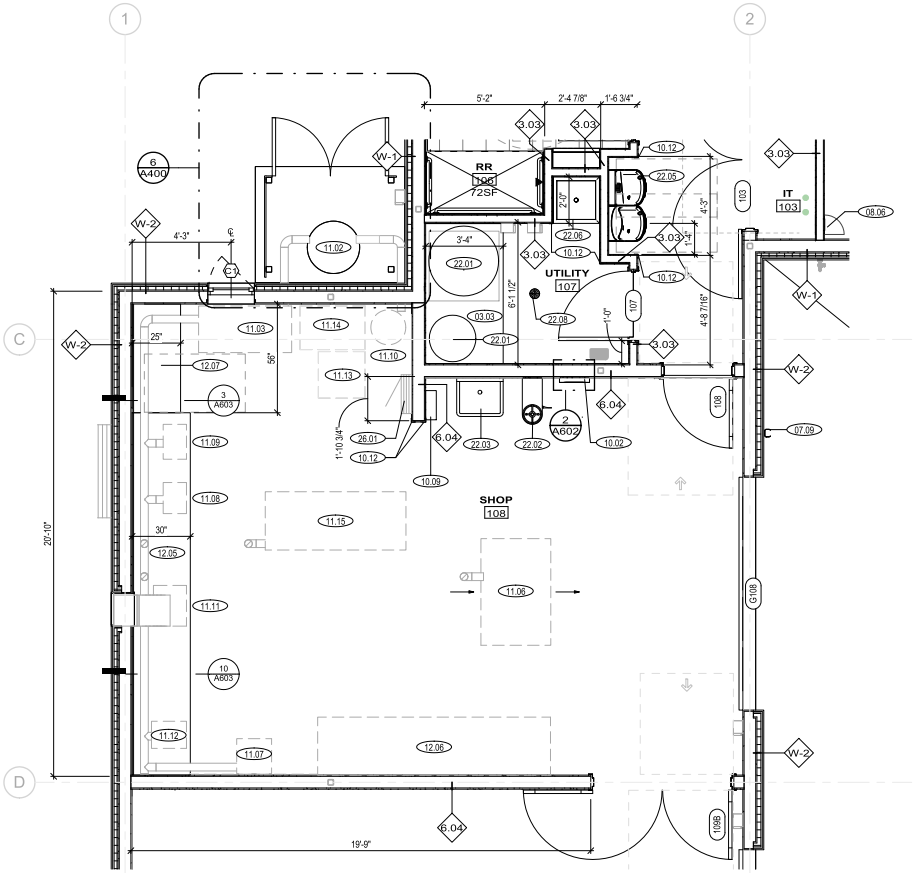

1 A401 SHOP - ENLARGED PLAN
SCALE A

GENERAL NOTES

1. REFER TO OTHER DISCIPLINES FOR FULL SCOPE OF THE WORK.
2. REFER TO SHEET G210 FOR ASSEMBLY INFORMATION.

LEGEND

FURNITURE OR EQUIPMENT TO BE PROVIDED BY NPS. RE: OTHER DISCIPLINES FOR INFRASTRUCTURE TO BE PROVIDED

KEYNOTES	
03.03	4" HIGH CONCRETE HOUSEKEEPING PAD RE: STRUCT
06.01	WOOD LAMINATE CASEWORK, RE: FINISH SCHEDULE
06.02	SOLID SURFACE, RE: FINISH SCHEDULE
06.03	MINIMUM 4 ADJUSTABLE WOOD SHELVING, FLOATING SHELF BRACKET, RE: FINISH SCHEDULE
07.09	PREFINISHED DOWNSPOUT, FINISH TO MATCH STANDING SEAM ROOF. RE: CIVIL FOR CONNECTION
08.06	6" X 6" ACCESS PANEL AT HOSE BIB FOR MAINTENANCE
10.02	FIRE EXTINGUISHER IN SEMI-RECESSED CABINET
10.03	FIRE EXTINGUISHER IN FULLY-RECESSED CABINET
10.09	WALL MOUNTED METAL FIRST AID CABINET
10.12	CORNER GUARD
11.02	DUST COLLECTION SYSTEM, RE: MECH
11.03	MOBILE TOOL STORAGE. PARK PROVIDED & PARK INSTALLED
11.06	TABLE SAW. PARK PROVIDED & PARK INSTALLED
11.07	BANDSAW. PARK PROVIDED & PARK INSTALLED
11.08	BENCHTOP GRINDER. PARK PROVIDED & PARK INSTALLED
11.09	BENCHTOP SANDER. PARK PROVIDED & PARK INSTALLED
11.10	AIR COMPRESSOR. PARK PROVIDED & PARK INSTALLED
11.11	MITER SAW. PARK PROVIDED & PARK INSTALLED
11.12	DRILL PRESS. PARK PROVIDED & PARK INSTALLED
11.13	WELDER ON MOBILE CART. PARK PROVIDED & PARK INSTALLED
11.14	POWER GENERATOR. PARK PROVIDED & PARK INSTALLED
11.15	MOBILE WORKBENCH AND TOOL STORAGE. PARK PROVIDED & INSTALLED
12.05	BUILT-IN WORKBENCH
12.06	BUILT-IN LUMBER STORAGE RACK. PARK PROVIDED
12.07	BUILT-IN WORK SURFACE COMPLYING WITH ABAAS 902
22.01	WATER HEATER AND TREATMENT, RE: PLUMB
22.02	EYEWASH SINK, RE: PLUMB
22.03	UTILITY SINK, RE: PLUMB
22.05	DRINKING FOUNTAIN AND BOTTLE FILLER, RE: PLUMB
22.06	MOP SINK, RE: PLUMB
22.08	FLOOR DRAIN, RE: PLUMB
26.01	ELECTRICAL EQUIPMENT, RE: ELEC
26.05	OCCUPANCY SENSOR OR SWITCH; RE: ELEC
26.06	OUTLET; RE: ELEC

SCALE: A
2 0 3 6
SCALE OF FEET
BLDG NORTH

LICENSED ARCHITECT
ELIZABETH HALLAS
AR-985880
STATE OF IDAHO

DESIGNED: BC	SUB SHEET NO.	TITLE OF SHEET	DRAWING NO.
DRAWN: NM / CM	A401	ENLARGED PLANS & ELEVATIONS	194
TECH REVIEW: EH / CR			187126
DATE: 05/23/2024		MIIN MAINTENANCE BUILDING MINIDOKA NATIONAL HISTORIC SITE	PMIS/PKG NO. 314972
			SHEET 26 OF 82

5/22/2024 11:19:04 AM Autodesk Docs://2023-360 NPS MIIN Rehab DD-CD/2023360 NPS MIIN - v24.rvt

DOOR SCHEDULE

NUMBER	ROOM LOCATION	INTERIOR/EXTERIOR	FRAME TYPE	DOOR TYPE	DOOR MATERIAL	GLAZING	SIZE			DETAILS			HARDWARE SET	COMMENTS
							THICKNESS	WIDTH	HEIGHT	HEAD DETAIL	JAMB DETAIL	THRESHOLD DETAIL		
100	100	EXT	HM	B	HM	GL-1	1 3/4"	3'-6"	6'-8"	3/A501	1/A501	2/A501	01	IN
101	101	INT	HM	C	WD	GL-2	1 3/4"	3'-0"	6'-8"	10/A501	7/A501	8/A501	02	
102	102	INT	HM	C	WD	GL-2	1 3/4"	3'-0"	6'-8"	10/A501	7/A501	8/A501	02	
103	103	INT	HM	F	WD	-	1 3/4"	5'-0"	6'-8"	10/A501	7/A501	8/A501	03	UN
104	104	INT	HM	B	WD	GL-2	1 3/4"	3'-0"	6'-8"	10/A501	7/A501	8/A501	04	
105	105	EXT	HM	B	HM	GL-1	1 3/4"	3'-0"	6'-8"	3/A501	1/A501	2/A501	05	IN
105S	105	INT	HM	A	WD	-	1 3/4"	2'-0"	6'-8"	10/A501	7/A501	8/A501	11	
106	106	INT	HM	A	WD	-	1 3/4"	3'-0"	6'-8"	10/A501	7/A501	9/A501	06	SN
107	107	INT	HM	A	WD	-	1 3/4"	3'-0"	6'-8"	10/A501	7/A501	8/A501	07	
108	108	INT	HM	B	HM	GL-2	1 3/4"	3'-0"	6'-8"	10/A501	7/A501	8/A501	10	45 MINUTE FIRE RATING, IN
109A	109	EXT	HM	A	HM	-	1 3/4"	3'-0"	6'-8"	3/A501	1/A501	2/A501	05	IN
109B	109	INT	HM	E	HM	GL-2	1 3/4"	6'-0"	6'-8"	10/A501	7/A501	8/A501	08	180
110	110	EXT	HM	D	HM	-	1 3/4"	5'-2"	6'-8"	3/A501	1/A501	2/A501	09	IN, BID OPTION 01
111	111	EXT	HM	D	HM	-	1 3/4"	5'-2"	6'-8"	3/A501	1/A501	2/A501	09	IN, BID OPTION 01
G101	G101	EXT	STL	H	CRR	-	1 3/4"	5'-0"	8'-0"	-	-	-	-	GHW
G108	108	EXT	-	G	MFR	MFR	2"	10'-0"	10'-0"	6/A501	4/A501	5/A501	-	IN
G109	109	EXT	-	G	MFR	MFR	2"	10'-0"	10'-0"	6/A501	4/A501	5/A501	-	IN

MATERIAL AND COMMENT KEY

IN PROVIDE INSULATED DOOR
HM HOLLOW METAL, PRIMED AND PAINTED
WD WOOD FINISH, STAINED
MFR MANUFACTURER FINISH
CRR CORRUGATED METAL SIDING OVER STEEL FRAME
SN PROVIDE ROOM SIGNAGE AT EXTERIOR SIDE OF DOOR
UN PROVIDE 1.5" UNDERCUT FOR VENTILATION
180 PROVIDE 180 DEGREE SWING HINGES
GHW PROVIDE HEAVY DUTY HINGES, CANE BOLT, AND PADLOCK HASP LATCH FOR GATE

GENERAL NOTES

1. VERIFY IN FIELD ALL DIMENSIONS FOR ROUGH OPENINGS.
2. PROVIDE NEW DOOR SWEEPS AND WEATHER STRIPPING AT ALL EXTERIOR DOORS.
3. PAINT ALL DOOR AND INTERIOR WINDOW TRIM, RE: FINISH SCHEDULE.
4. PROVIDE CLEAR STAIN AT ALL INTERIOR WOOD DOORS.
5. DOOR ELEVATIONS DISPLAY EXTERIOR ELEVATION U.O.N.
6. ALL GLAZING IN OPERABLE DOORS TO BE TEMPERED, RE: SPECIFICATIONS

DOOR PANEL TYPES

N.T.S

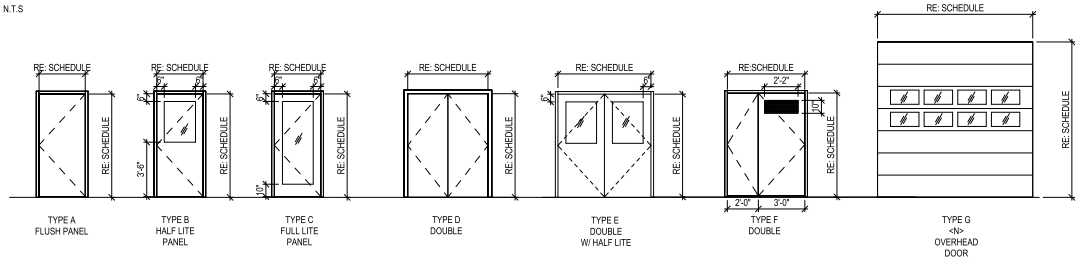

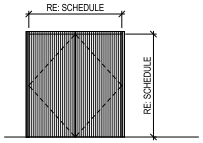

FRAME TYPES

N.T.S

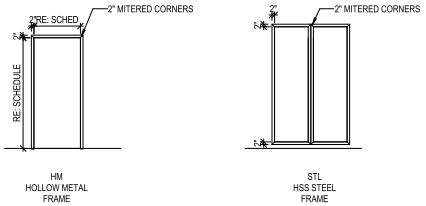

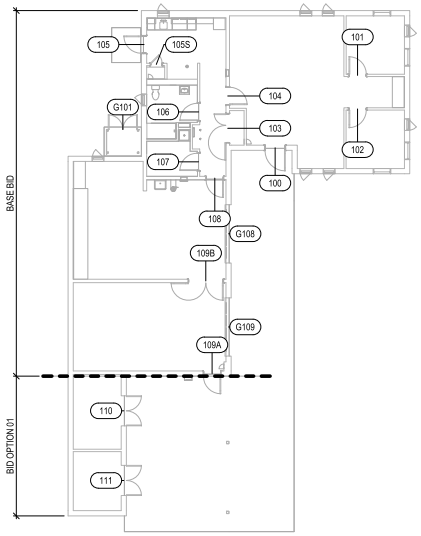

1 A500 DOOR KEYPLAN
SCALE A

SCALE: A
10 0 4 8 20
SCALE OF FEET

BLDG NORTH

LICENSED ARCHITECT
ELIZABETH HALLAS
AR-985880
STATE OF IDAHO

DESIGNED: BC	SUB SHEET NO.	TITLE OF SHEET	DRAWING NO.
CADD NM / CM	A500	DOOR SCHEDULE, TYPES	194 / 187126
TECH REVIEW: EH / CR		MIIN MAINTENANCE BUILDING	PMIS/PKG NO. 314972
DATE: 05/23/2024		MINIDOKA NATIONAL HISTORIC SITE	SHEET 27 OF 82

5/22/2024 11:19:04 AM Autodesk Docs://2023-360 NPS MIIN Rehab DD-CD/2023360 NPS MIIN - v24.rvt

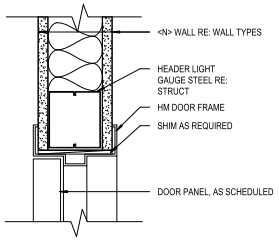

10 A501 DOOR HEAD - INTERIOR STUD WALL
SCALE A

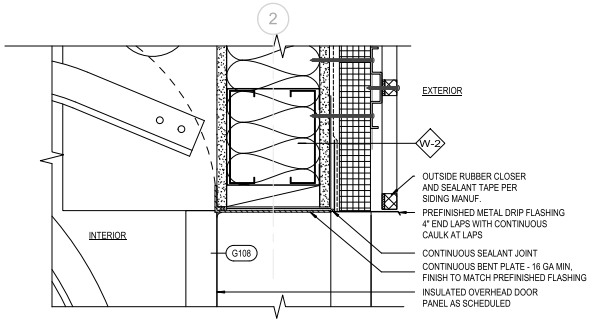

6 A501 DOOR HEAD - OVERHEAD DOOR
SCALE A

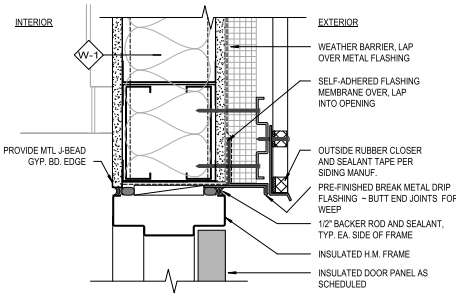

3 A501 DOOR HEAD - EXTERIOR HM, TYP
SCALE A

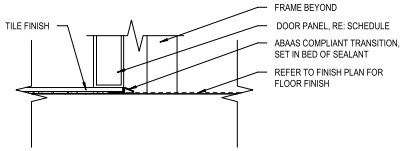

*REFER TO DOOR HARDWARE SPECIFICATIONS FOR DOOR HARDWARE REQUIREMENTS

9 A501 THRESHOLD AT TILE
SCALE A

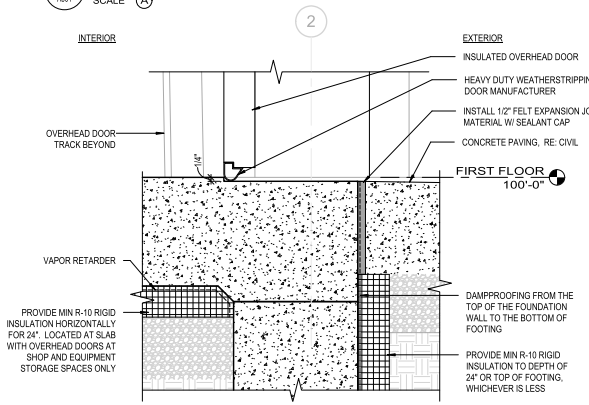

5 A501 DOOR SILL - OVERHEAD DOOR
SCALE A

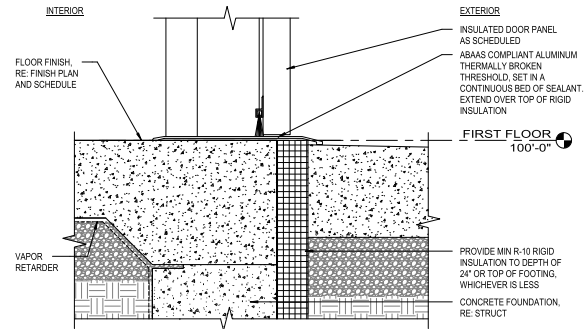

2 A501 DOOR SILL - EXTERIOR HM, TYP
SCALE A

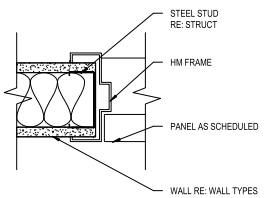

7 A501 DOOR JAMB - INTERIOR STUD WALL
SCALE A

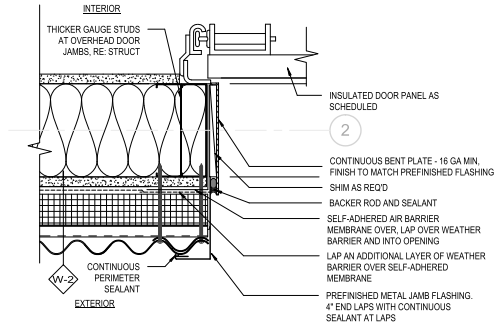

4 A501 DOOR JAMB - OVERHEAD DOOR
SCALE A

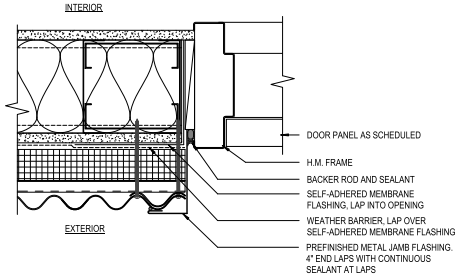

1 A501 DOOR JAMB - EXTERIOR HM, TYP
SCALE A

SCALE: A 6 3 0 6
SCALE OF INCHES

LICENSED ARCHITECT ELIZABETH HALLAS AR-985880 STATE OF IDAHO 5/23/2024

DESIGNED: BC	SUB SHEET NO.	TITLE OF SHEET	DRAWING NO.
CADD NM / CM	A501	DOOR DETAILS	194 / 187126
TECH REVIEW: EH / CR			PMIS/PKG NO. 314972
DATE: 05/23/2024		MIIN MAINTENANCE BUILDING MINIDOKA NATIONAL HISTORIC SITE	SHEET 28 OF 82

5/22/2024 11:19:05 AM Autodesk Docs://2023-360 NPS MIIN Rehab DD-CD/2023360 NPS MIIN - v24.rvt

WINDOW SCHEDULE

ROOM NUMBER	WINDOW TYPE	WIDTH	HEIGHT	HEAD HEIGHT	DETAILS			COMMENTS
					HEAD	JAMB	SILL	
100	C1	2'-0"	4'-0"	7'-0"	4/A510 SIM	3/A510 SIM	2/A510 SIM	
100	C1	2'-0"	4'-0"	7'-0"	4/A510 SIM	3/A510 SIM	2/A510 SIM	
100	C1	2'-0"	4'-0"	7'-0"	4/A510 SIM	3/A510 SIM	2/A510 SIM	
100	C1	2'-0"	4'-0"	7'-0"	4/A510 SIM	3/A510 SIM	2/A510 SIM	
101	F1	3'-0"	4'-0"	6'-10"	4/A510	3/A510	2/A510	
101	C1	2'-0"	4'-0"	6'-10"	4/A510 SIM	3/A510 SIM	2/A510 SIM	
101	F1	3'-0"	4'-0"	7'-0"	4/A510	3/A510	2/A510	
102	F1	3'-0"	4'-0"	7'-0"	4/A510	3/A510	2/A510	
102	F1	3'-0"	4'-0"	6'-10"	4/A510	3/A510	2/A510	
102	C1	2'-0"	4'-0"	6'-10"	4/A510 SIM	3/A510 SIM	2/A510 SIM	
105	C2	2'-0"	2'-10"	7'-0"	4/A510 SIM	3/A510 SIM	2/A510 SIM	
106	C2	2'-0"	2'-10"	7'-0"	4/A510 SIM	3/A510 SIM	2/A510 SIM	ADD PRIVACY FILM
108	C1	2'-0"	4'-0"	7'-0"	4/A510 SIM	3/A510 SIM	2/A510 SIM	

WINDOW TYPES

N.T.S

CASEMENT WINDOW

FIXED WINDOW

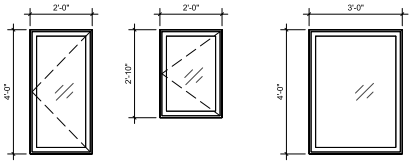

TYPE C1 TYPE C2 TYPE F1

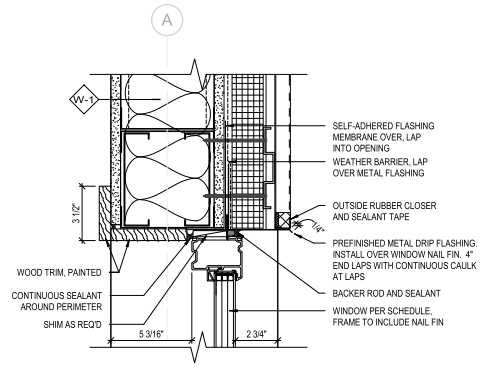

4 A510 CASEMENT WINDOW HEAD, TYP

SCALE B

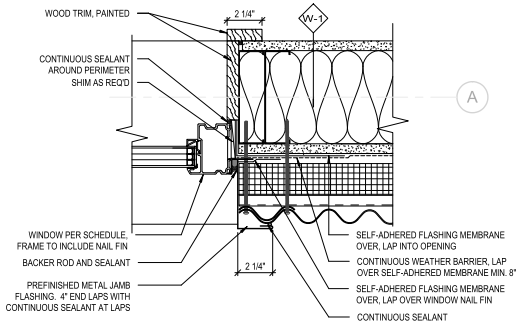

3 A510 FIXED WINDOW, JAMB TYP

SCALE B

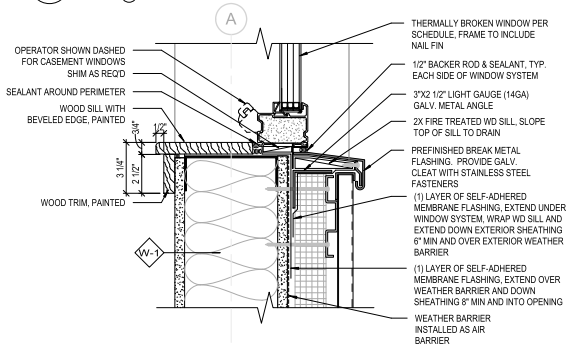

2 A510 FIXED WINDOW SILL, TYP

SCALE B

GENERAL NOTES

1. VERIFY IN FIELD ALL DIMENSIONS FOR ROUGH OPENINGS.
2. PAINT ALL INTERIOR WINDOW TRIM SURROUND, RE: FINISH SCHEDULE.
3. EXTERIOR WINDOW TRIM TO BE SELECTED FROM MANUFACTURER STANDARD OPTIONS.
4. PROVIDE INSECT SCREENS AT ALL OPERABLE WINDOWS.
5. SEPARATE ALL DISSIMILAR MATERIALS.
6. WINDOW ELEVATIONS DISPLAY EXTERIOR ELEVATION U.O.N.

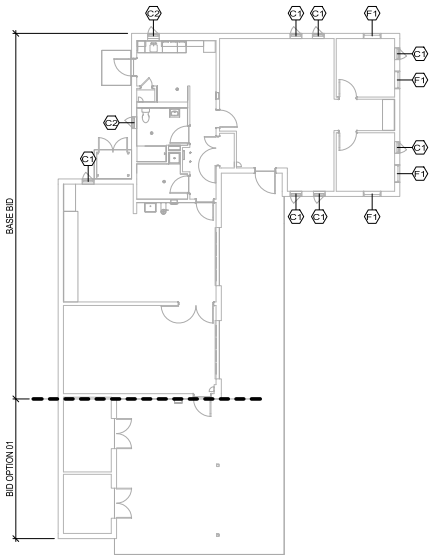

1 A510 WINDOW KEYPLAN

SCALE A

SCALE: B 6 3 0 6 SCALE OF INCHES

SCALE: A 10 0 4 8 20 SCALE OF FEET

BLDG. NORTH

LICENSED ARCHITECT ELIZABETH HALLAS AR-985880 STATE OF IDAHO

DESIGNED: BC	SUB SHEET NO.	TITLE OF SHEET	DRAWING NO.
CADD NM / CM	A510	WINDOW SCHEDULE & DETAILS	194 / 187126
TECH REVIEW: EH / CR			PMIS/PKG NO. 314972
DATE: 05/23/2024		MIIN MAINTENANCE BUILDING MINIDOKA NATIONAL HISTORIC SITE	SHEET 29 OF 82

5/22/2024 11:19:06 AM Autodesk Docs://2023-360 NPS MIIN Rehab DD-CD/2023360 NPS MIIN - v24.rvt

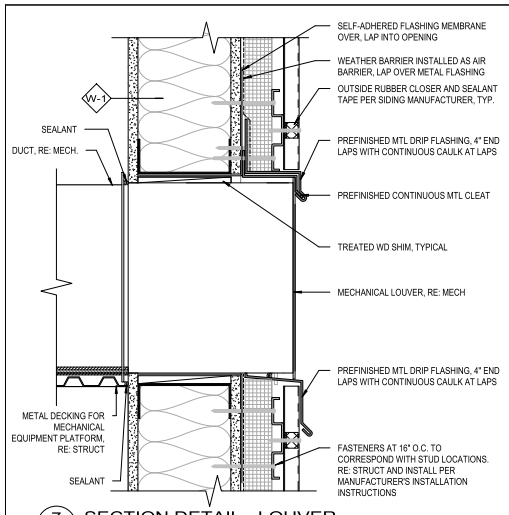

7 A600 SECTION DETAIL - LOUVER
SCALE A

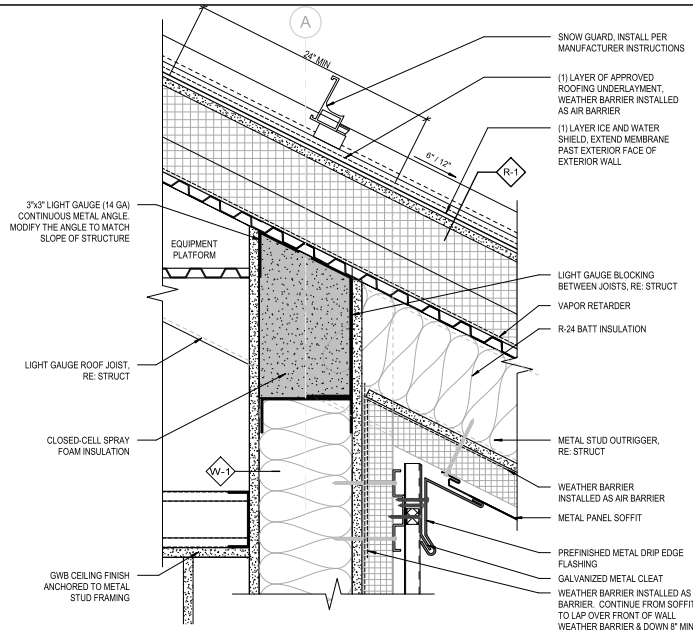

4 A600 SECTION DETAIL - EXTERIOR WALL TO ROOF
SCALE A

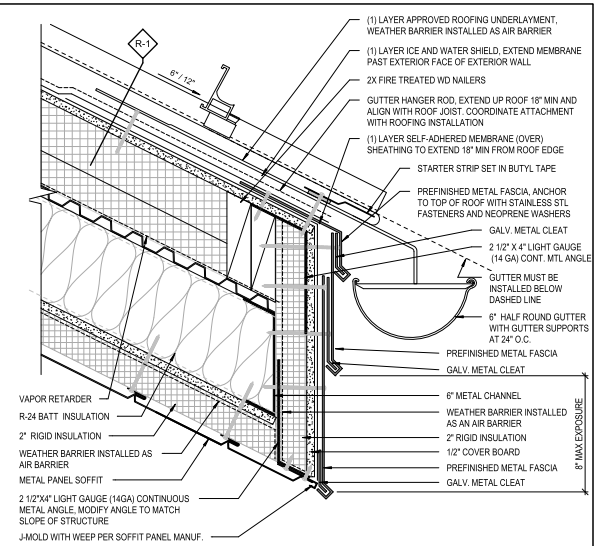

2 A600 SECTION DETAIL, EAVE W/ GUTTER TYP
SCALE A

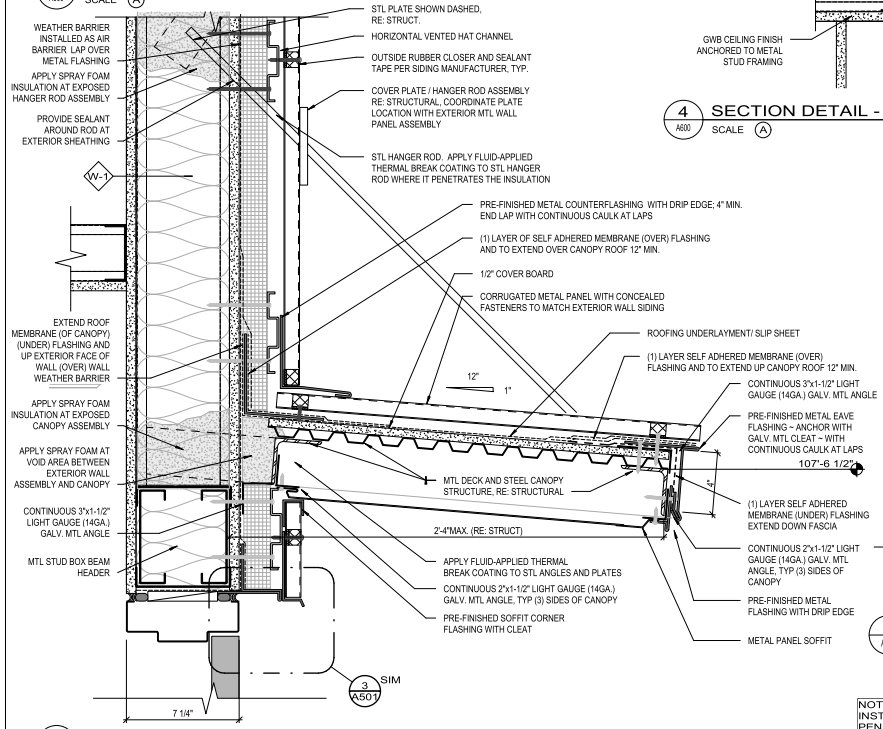

5 A600 SECTION DETAIL - CANOPY
SCALE A

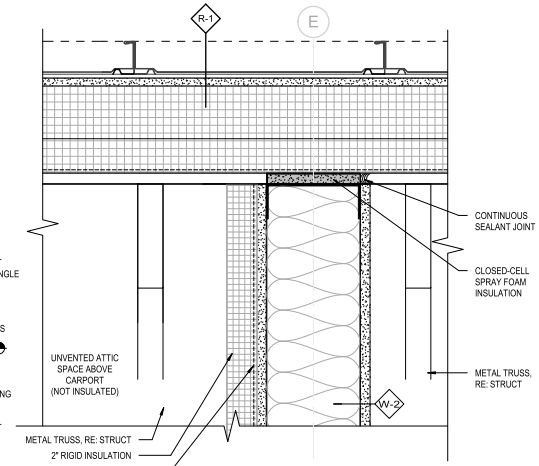

3 A600 SOFFIT TERMINATION AT CARPORT
SCALE A

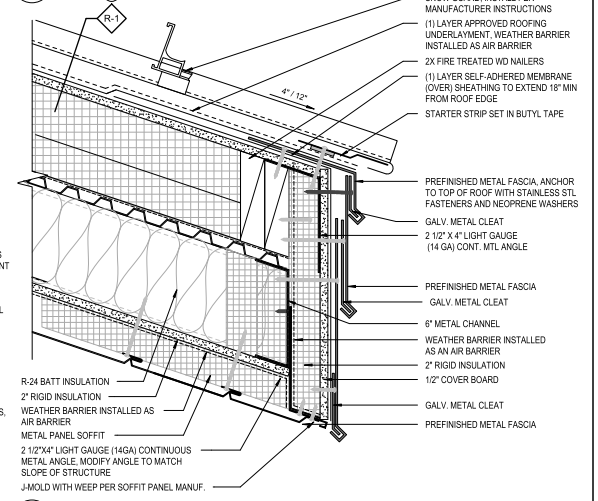

1 A600 SECTION DETAIL - EAVE
SCALE A

SCALE: A 6 3 0 6
SCALE OF INCHES

NOTE: WHEN THE WEATHER BARRIER IS INSTALLED AS AN AIR BARRIER, ALL SEAMS AND PENETRATIONS SHALL BE TAPED AND SEALED.

LICENSED ARCHITECT ELIZABETH HALLAS AR-985880 STATE OF IDAHO

DESIGNED: BC	SUB SHEET NO.	TITLE OF SHEET	DRAWING NO.
CADD NM / CM	A600	EXTERIOR DETAILS	194 / 187126
TECH REVIEW: EH / CR		MIIN MAINTENANCE BUILDING MINIDOKA NATIONAL HISTORIC SITE	PMIS/PKG NO. 314972
DATE: 05/23/2024			SHEET 30 OF 82

Autodesk Docs://2023-360 NPS MIIN Rehab DD-CD/2023360 NPS MIIN - v24.rvt
5/22/2024 11:19:08 AM

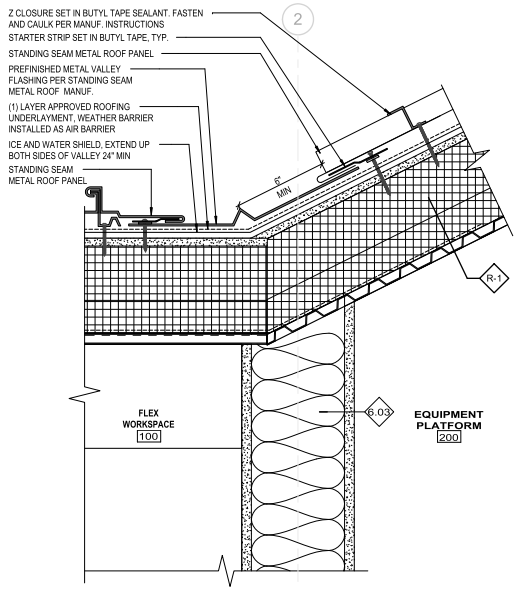

7 A601 ROOF VALLEY
SCALE A

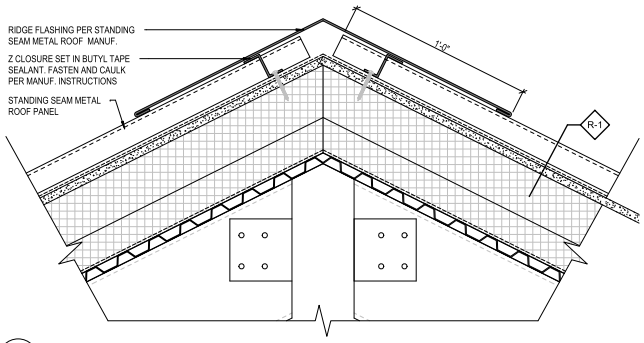

5 A601 STANDING SEAM METAL ROOF RIDGE
SCALE A

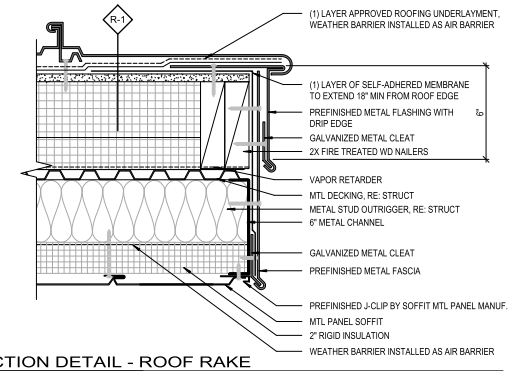

2 A601 SECTION DETAIL - ROOF RAKE
SCALE A

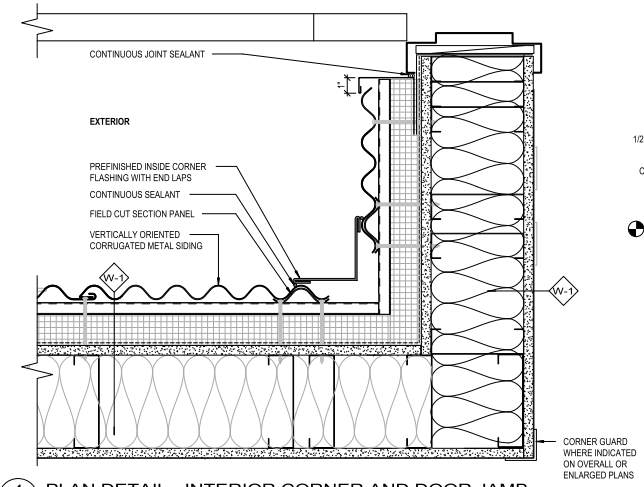

4 A601 PLAN DETAIL - INTERIOR CORNER AND DOOR JAMB
SCALE A

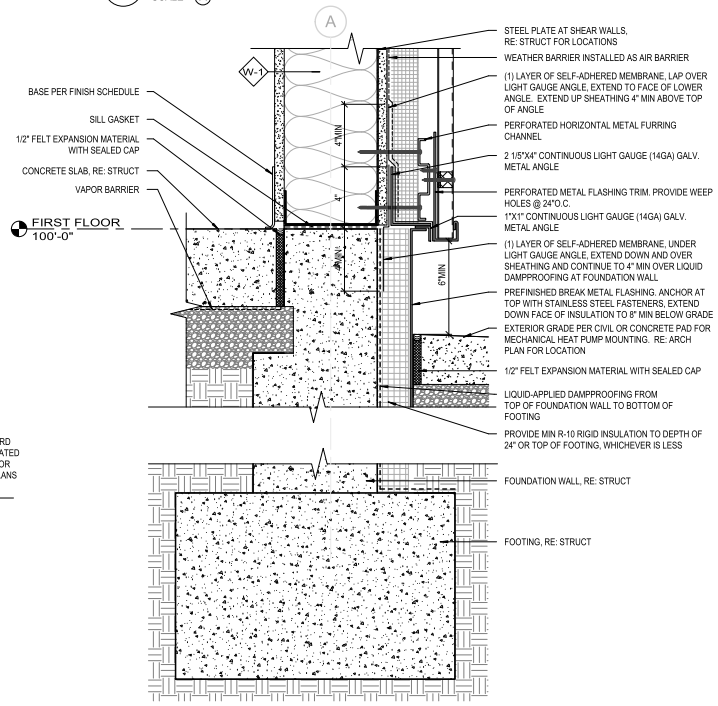

1 A601 SECTION DETAIL - BASE OF WALL AT GRADE
SCALE A

SCALE: A 6 3 0 6
SCALE OF INCHES

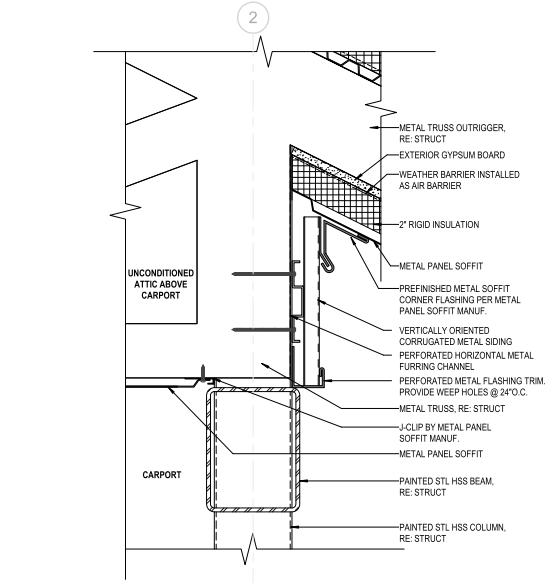

6 A601 EAVE ABOVE CARPORT
SCALE A

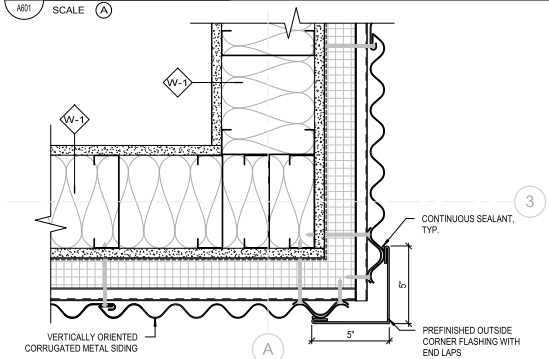

3 A601 PLAN DETAIL - EXTERIOR CORNER W/ DOWNSPOUT
SCALE A

LICENSED ARCHITECT
ELIZABETH HALLAS
AR-985880
STATE OF IDAHO

DESIGNED: BC	SUB SHEET NO.	TITLE OF SHEET	DRAWING NO.
CADD NM / CM	A601	EXTERIOR DETAILS	194 / 187126
TECH REVIEW: EH / CR			PMIS/PKG NO. 314972
DATE: 05/23/2024		MIIN MAINTENANCE BUILDING MINIDOKA NATIONAL HISTORIC SITE	SHEET 31 OF 82

5/22/2024 11:19:09 AM Autodesk Docs://2023-360 NPS MIIN Rehab DD-CD/2023360 NPS MIIN - v24.rvt

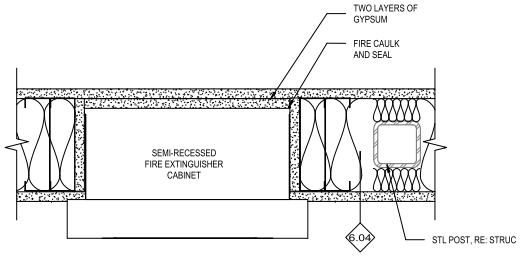

2 A602 PLAN DETAIL - FIRE EXT. CABINET 1-HR WALL
SCALE B

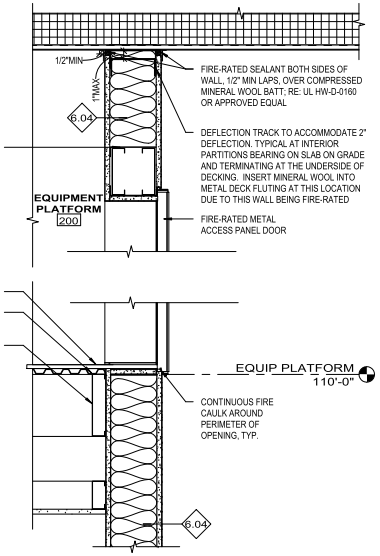

4 A602 SECTION DETAIL - ACCESS TO EQUIP. PLATFORM
SCALE A

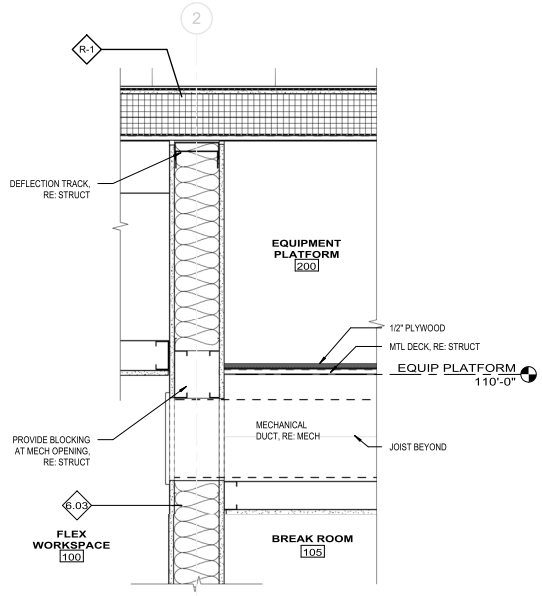

3 A602 SECTION DETAIL - DUCT AT EQUIP. PLATFORM
SCALE A

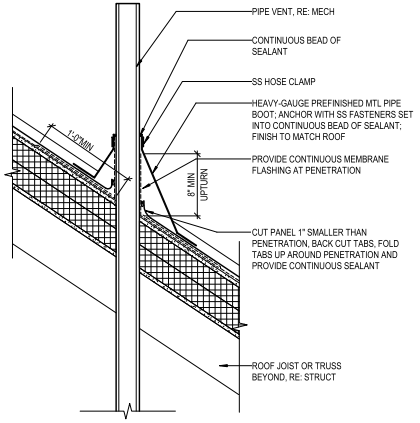

NOTE: COORDINATE LOCATION OF PENETRATION BETWEEN STANDING SEAMS OF ROOF AND ROOF STRUCTURE.

1 A602 SECTION DETAIL - PIPE PENETRATION
SCALE A

SCALE: B 6 3 0 6 SCALE OF INCHES

SCALE: A 12 6 0 12 SCALE OF INCHES

LICENSED ARCHITECT
5/23/2024
ELIZABETH HALLAS
AR-985880
STATE OF IDAHO

DESIGNED: BC	SUB SHEET NO.	TITLE OF SHEET	DRAWING NO.
CADD NM / CM	A602	DETAILS	194
TECH REVIEW: EH / CR			187126
DATE: 05/23/2024		MIIN MAINTENANCE BUILDING MINIDOKA NATIONAL HISTORIC SITE	PMIS/PKG NO. 314972
			SHEET 32 OF 82

5/22/2024 11:19:11 AM Autodesk Docs://2023-360 NPS MIIN Rehab DD-CD/2023360 NPS MIIN - v24.rvt

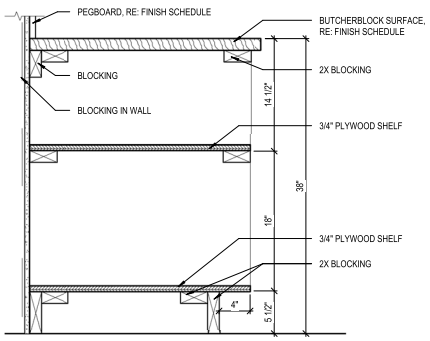

10 A603 BASE CABINET - WORKBENCH, TYP
SCALE A

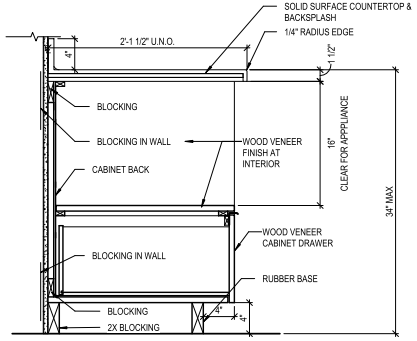

8 A603 BASE CABINET - OPEN W/ 1 DRAWER
SCALE A

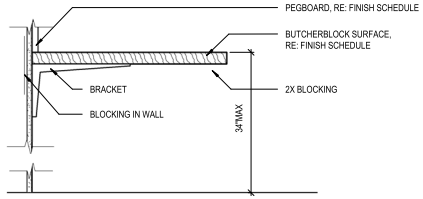

3 A603 ABAAS WORK SURFACE AT WORKBENCH
SCALE A

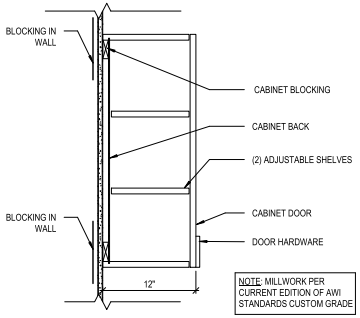

5 A603 UPPER CABINET
SCALE A

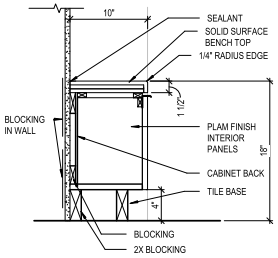

2 A603 RR STORAGE CABINET
SCALE A

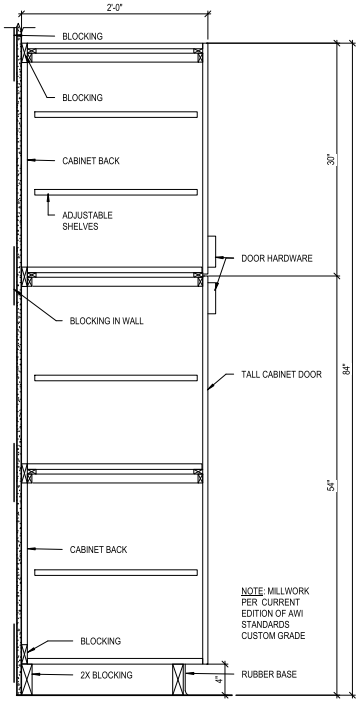

9 A603 FULL HEIGHT CABINET
SCALE A

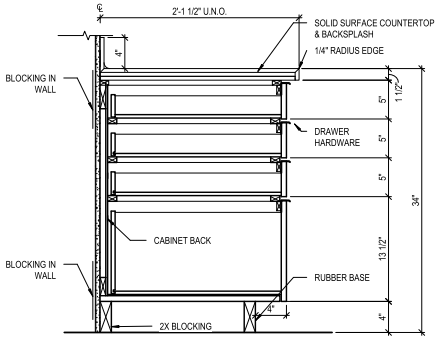

7 A603 BASE CABINET - 4 DRAWERS
SCALE A

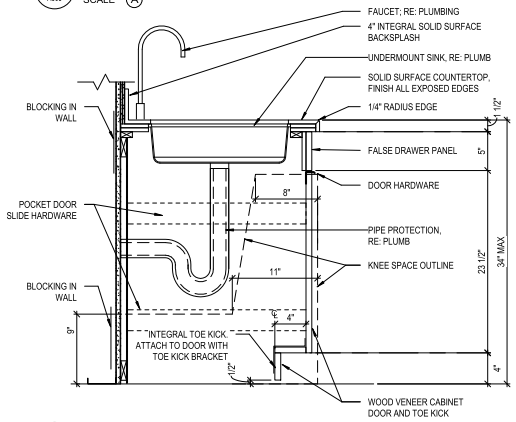

4 A603 ABAAS SINK @ BASE CABINET
SCALE A

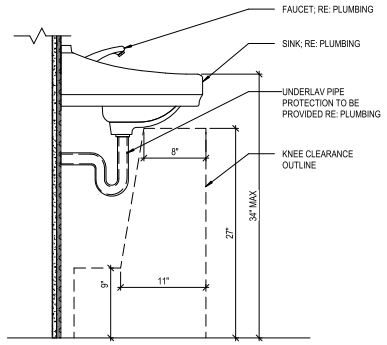

1 A603 ABAAS SINK @ RESTROOM
SCALE A

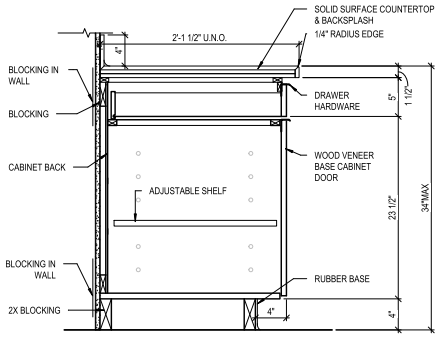

6 A603 BASE CABINET WITH DRAWER
SCALE A

SCALE: A 12 6 0 12
SCALE OF INCHES

LICENSED ARCHITECT ELIZABETH HALLAS AR-985880 STATE OF IDAHO 5/23/2024

DESIGNED: BC	SUB SHEET NO.	TITLE OF SHEET	DRAWING NO.
CADD NM / CM	A603	INTERIOR DETAILS	194 / 187126
TECH REVIEW: EH / CR		MIIN MAINTENANCE BUILDING MINIDOKA NATIONAL HISTORIC SITE	PMIS/PKG NO. 314972
DATE: 05/23/2024			SHEET 33 OF 82

5/22/2024 11:19:13 AM Autodesk Docs://2023-360 NPS MIIN Rehab DD-CD/2023360 NPS MIIN - v24.rvt

STRUCTURAL GENERAL NOTES

DESIGN LOADS:

1. AUTHORITY HAVING JURISDICTION: UNITED STATES GOVERNMENT
2. DESIGN LOADS BASED ON: 2021 INTERNATIONAL BUILDING CODE (IBC), ASCE 7-16, AND REFERENCED DOCUMENTS
3. RISK CATEGORY: II STANDARD
4. SITE LOCATION:
   - A. ELEVATION 3,960 FT
   - B. COORDINATES 42.6797 N, 114.2527 W
5. ROOF LOADS
   - A. ROOF DEAD LOAD (INCLUDES 5 PSF ALLOWANCE FOR FUTURE PV) 22 PSF (16 PSF TOP CHORD, 6 PSF BOTTOM CHORD)
   - B. ROOF LIVE LOAD 20 PSF, 300 LBS
   - C. GROUND SNOW LOAD, Pg 30 PSF (JEROME COUNTY MINIMUM REQUIREMENT)
   - D. FLAT-ROOF SNOW LOAD, Pf 25 PSF
   - E. SNOW EXPOSURE FACTOR, Ce 1.0
   - F. SNOW IMPORTANCE FACTOR, Is 1.0
   - G. THERMAL FACTOR, Ct 1.2
6. FLOOR LIVE LOADS:

OCCUPANCY OR USE	UNIFORMLY DISTRIBUTED (PSF)	CONCENTRATED LOAD (LBS)	LIVE LOAD REDUCTION
LIGHT STORAGE	125	N/A	NO

7. WIND:
   - A. BASIC DESIGN WIND SPEED, V, (3-SECOND GUST) 115 MPH (JEROME COUNTY MINIMUM REQUIREMENT)
   - B. ALLOWABLE STRESS DESIGN WIND SPEED, V_{ASD}, (3-SECOND GUST) 90 MPH (JEROME COUNTY MINIMUM REQUIREMENT)
   - C. INTERNAL PRESSURE COEFFICIENT ±0.55 (PARTIALLY ENCLOSED)
   - D. WIND EXPOSURE C
   - E. AIR DENSITY COEFFICIENT 0.87
   - F. COMPONENTS AND CLADDING ULTIMATE DESIGN WIND PRESSURES
     1. WALLS:
        - a. WITHIN 3 FEET OF CORNERS +32.8 PSF -41.3 PSF
        - b. AWAY FROM CORNERS +32.8 PSF -34.9 PSF
     2. ROOFS (SEE ASCE 7 FIGURE 30.3-2B, a = 3 FEET)
        - a. ZONE 1 & 2e +23.0 PSF -54.0 PSF
        - b. ZONE 2n, 2r & 3e +23.0 PSF -75.1 PSF
        - c. ZONE 3r +23.0 PSF -87.8 PSF
     3. OVERHANGS (SEE ASCE 7 FIGURE 30.3-2B, a = 3 FEET):
        - a. ZONE 1 & 2e +23.0 PSF -52.9 PSF
        - b. ZONE 2n & 2r +23.0 PSF -74.1 PSF
        - c. ZONE 3e +23.0 PSF -86.8 PSF
        - d. ZONE 3r +23.0 PSF -99.5 PSF
     4. PRESSURES MAY BE REDUCED FOR EFFECTIVE WIND AREAS LARGER THAN 10 SQUARE FEET, BUT NOT BELOW 16 PSF.
     5. ALLOWABLE WIND PRESSURE (ASD) MAY BE DETERMINED BY MULTIPLYING THE ULTIMATE PRESSURE BY 0.6.
8. SEISMIC:
   - A. SPECTRAL RESPONSE ACCELERATION PARAMETERS
     1. SHORT PERIOD
        - a. S_S 0.166g
        - b. S_{DS} 0.177g
     2. ONE SECOND
        - a. S_1 0.079g
        - b. S_{D1} 0.126g
   - B. SOILS SITE CLASS D
   - C. SEISMIC IMPORTANCE FACTOR 1.0
   - D. SEISMIC DESIGN CATEGORY C (JEROME COUNTY MINIMUM REQUIREMENT)
   - E. BASIC SEISMIC-FORCE-RESISTING SYSTEM STEEL SYSTEMS NOT SPECIFICALLY DETAILED FOR SEISMIC RESISTANCE
   - F. DESIGN BASE SHEAR 0.059W KIPS
   - G. SEISMIC RESPONSE COEFFICIENT, C_S 0.059
   - H. RESPONSE MODIFICATION COEFFICIENT, R 3
   - I. ANALYSIS PROCEDURE EQUIVALENT LATERAL FORCE

FOUNDATION DESIGN:

1. REFER TO SOILS REPORT #501559002 BY NINYO & MOORE, DATED MARCH 23, 2022
2. GEOTECHNICAL ENGINEER SPECIAL INSPECTOR (EMPLOYED BY THE CONTRACTOR) SHALL VERIFY SOIL CONDITIONS AND TYPES DURING EXCAVATION AND PRIOR TO PLACEMENT OF FORMWORK OR CONCRETE.
3. MINIMUM FROST DEPTH SHALL BE 2'-0" BELOW EXTERIOR GRADE.

FOOTINGS:

1. DESIGN OF FOOTINGS IS BASED ON A MAXIMUM ALLOWABLE BEARING PRESSURE OF 2,000 PSF
2. BEAR ON 12" OR MORE OF COMPACTED STRUCTURAL FILL. EXTERIOR FOOTINGS SHALL BEAR BELOW FROST DEPTH.

REINFORCED CONCRETE:

1. DESIGN IS BASED ON ACI 318 "BUILDING CODE REQUIREMENTS FOR STRUCTURAL CONCRETE" BY THE AMERICAN CONCRETE INSTITUTE (ACI).
2. CONCRETE WORK SHALL CONFORM TO ACI 301 "STANDARD SPECIFICATIONS FOR STRUCTURAL CONCRETE."
3. STRUCTURAL CONCRETE SHALL HAVE THE FOLLOWING PROPERTIES:

INTENDED USE	EXPOSURE CLASS	f'c, PSI 28 DAYS	MAX W/CM RATIO	MAXIMUM AGGREGATE	SLUMP, INCHES (+/- 1")	AIR CONTENT PERCENT (+/- 1.5%)	CEMENT TYPE	ADMIXTURES / COMMENTS
FOOTINGS	F0-S0-W0-C1	3000	0.52	3/4" STONE	5	N/A	I/II	15% MIN, 25% MAX FLY ASH
STEM WALLS	F2-S0-W0-C1	4500	0.45	3/4" STONE	4	6%	I/II	15% MIN, 25% MAX FLY ASH
INTERIOR SLAB ON GRADE	F0-S0-W0-C0	4000	0.45	3/4" STONE	4	N/P	I/II	15% MIN, 25% MAX FLY ASH
EXTERIOR SLAB ON VOID	F3-S0-W1-C2	5000	0.40	3/4" STONE	4	6%	I/II	15% MIN, 25% MAX FLY ASH

4. CONCRETE MIX TABLE NOTES:
   - A. SLUMP VALUES INDICATED ARE SUGGESTED BASED ON USE AND TYPICAL PLACEMENT METHODS. CONTRACTOR MAY ADJUST SLUMP AS NECESSARY FOR FIELD CONDITONS AND INSTALLATION METHOD USED PROVIDED REMAINING REQUIREMENTS ARE MET.
   - B. AIR CONTENT:
     - a. N/P: AIR ENTRAINING ADMIXTURES NOT PERMITTED, ENTRAPPED AIR ONLY
     - b. N/A: NOT APPLICABLE, NO STRUCTURAL AIR CONTENT REQUIREMENTS
   - C. GENERAL CONTRACTOR TO COORDINATE CONCRETE MOISTURE LEVEL AND ANTICIPATED MOISTURE MITIGATION PROCEDURES WITH CONCRETE SUPPLIER/MIX DESIGNER AND OTHER AFFECTED SUBCONTRACTORS (INCLUDING BUT NOT LIMITED TO FLOORING) TO ADDRESS ALL POTENTIAL SCHEDULE AND INSTALLATION CONFLICTS.
5. DETAILING, FABRICATION, AND PLACEMENT OF REINFORCING STEEL SHALL BE IN ACCORDANCE WITH ACI 315 "DETAILS AND DETAILING OF CONCRETE REINFORCEMENT."
6. WELDED WIRE FABRIC SHALL CONFORM TO ASTM A1064.
7. REINFORCING BARS SHALL CONFORM TO ASTM A615, GRADE 60, EXCEPT BARS SHOWN TO BE FIELD-BENT SHALL BE ASTM A706, GRADE 60.
8. BARS TO BE WELDED SHALL CONFORM TO ASTM A706.
9. UNLESS NOTED OTHERWISE ON THE STRUCTURAL DRAWINGS, LAP BARS PER THE CONCRETE LAP SPLICE SCHEDULE.
10. AT CORNERS AND INTERSECTIONS, MAKE HORIZONTAL BARS CONTINUOUS OR PROVIDE MATCHING CORNER BARS FOR EACH LAYER OF REINFORCEMENT.
11. TRIM OPENINGS IN WALLS AND SLABS WITH (2) #5 FOR EACH LAYER OF REINFORCEMENT, FULLY DEVELOPED BY EXTENSION OR HOOK.
12. IN CONTINUOUS MEMBERS, SPLICE TOP BARS AT MID-SPAN AND SPLICE BOTTOM BARS OVER SUPPORTS.
13. FORM INTERMITTENT SHEAR KEYS AT ALL CONSTRUCTION JOINTS AND AS SHOWN ON THE STRUCTURAL DRAWINGS.
14. EXCEPT AS NOTED ON THE DRAWINGS, CONCRETE PROTECTION FOR REINFORCEMENT IN CAST-IN-PLACE CONCRETE SHALL BE AS FOLLOWS:
    - A. CAST AGAINST AND PERMANENTLY EXPOSED TO EARTH: 3"
      1. EXPOSED TO EARTH OR WEATHER:
         - a. #6 THROUGH #18 BARS 2"
         - b. #5 BAR, W31 OR D31 WIRE, AND SMALLER 1-1/2"
    - B. NOT EXPOSED TO WEATHER OR IN CONTACT WITH GROUND:
      1. SLABS: 3/4"
15. ANCHOR RODS FOR COLUMN BASE PLATES SHALL BE PLACED WITH SETTING TEMPLATES.

POST-INSTALLED ANCHORS

1. ALL CAST IN PLACE ANCHORS DESIGNED IN ACCORDANCE WITH ACI 318.
2. POST-INSTALLED ANCHORS SHALL ONLY BE USED WHERE SPECIFIED ON THE CONSTRUCTION DOCUMENTS. THE CONTRACTOR SHALL OBTAIN APPROVAL FROM THE CONTRACTING OFFICER PRIOR TO INSTALLING POST-INSTALLED ANCHORS IN PLACE OF MISSING OR MISPLACED CAST-IN-PLACE ANCHORS.
3. CARE SHALL BE TAKEN IN PLACING POST-INSTALLED ANCHORS TO AVOID CONFLICTS WITH EXISTING REBAR. EXISTING REINFORCING BARS SHALL NOT BE CUT UNLESS APPROVED BY THE CONTRACTING OFFICER.
4. ALL ANCHORS MUST BE INSTALLED IN STRICT ACCORDANCE WITH THE MANUFACTURER'S PRINTED INSTALLATION INFORMATION (MPII) IN CONJUNCTION WITH EDGE DISTANCE, SPACING, AND EMBEDMENT DEPTH AS INDICATED ON THE DRAWINGS. HOLES SHALL BE DRILLED AND CLEANED IN ACCORDANCE WITH THE MPII.
5. SUBSTITUTION REQUESTS, FOR PRODUCTS OTHER THAN THOSE SPECIFIED, SHALL BE SUBMITTED BY THE CONTRACTOR TO THE CONTRACTING OFFICER.
6. THE CONTRACTOR SHALL ARRANGE FOR A MANUFACTURER'S FIELD REPRESENTATIVE TO PROVIDE INSTALLATION TRAINING FOR ALL PRODUCTS TO BE USED, PRIOR TO THE ANCHOR INSTALLATION. A RECORD OF TRAINING SHALL BE KEPT ON SITE AND MADE AVAILABLE TO THE CONTRACTING OFFICER/ SPECIAL INSPECTOR AS REQUESTED.
7. ADHESIVE ANCHORS INSTALLED IN HORIZONTAL TO VERTICALLY OVERHEAD ORIENTATION THAT SUPPORT SUSTAINED TENSION LOADS SHALL BE DONE BY A CERTIFIED ANCHOR INSTALLER (AAI) AS CERTIFIED THROUGH ACI/CRSI (ACI 318 17.8.2.2). PROOF OF CURRENT CERTIFICATION SHALL BE SUBMITTED TO THE CONTRACTING OFFICER FOR APPROVAL PRIOR TO COMMENCEMENT OF INSTALLATION.
8. ADHESIVE ANCHORS MUST BE INSTALLED IN CONCRETE AGED A MINIMUM OF 21 DAYS (ACI 318 17.1.2)
9. ALL POST INSTALLED ANCHORS SHALL BE INSTALLED IN DRY HOLES THAT HAVE BEEN DRILLED, CLEANED, AND PREPARED IN STRICT ACCORDANCE WITH THE MANUFACTURER'S PRINTED INSTALLATION INFORMATION AND THE RESPECTIVE ICC-ES EVALUATION REPORTS.
10. PROVIDE SPECIAL INSPECTION (EMPLOYED BY THE CONTRACTOR) FOR ALL MECHANICAL AND ADHESIVE ANCHORS PER THE APPLICABLE BUILDING CODE AND PER THE CURRENT ICC-ES REPORT (IBC TABLE 1705.3 NOTE B).

CONCRETE POST INSTALLED ANCHORS			
ANCHOR TYPE	DEWALT	HILTI	SIMPSON
EXPANSION	POWER-STUD+ SD2 (ICC ESR-2502)	KWIK BOLT TZ2 (ICC ESR-4266)	STRONG-BOLT 2 (ICC ESR-3037)
CONCRETE SCREW	SCREW-BOLT+ (ICC ESR 3889)	KWIK HUS-EZ (ICC ESR-3027)	TITEN HD (ICC ESR 2713)
ADHESIVE	AC200+ (ICC ESR-4027)	HIT-HY 200 (ICC ESR-3187)	AT-XP (UES ER-263)

STRUCTURAL STEEL:

1. STRUCTURAL STEEL SHALL BE DETAILED, FABRICATED, AND ERECTED IN ACCORDANCE WITH THE "SPECIFICATION FOR STRUCTURAL STEEL BUILDINGS" (AISC 360) AND THE "CODE OF STANDARD PRACTICE FOR STEEL BUILDINGS AND BRIDGES" (AISC 303) BY THE AMERICAN INSTITUTE OF STEEL CONSTRUCTION (AISC).
2. ROLLED SHAPES, INCLUDING PLATES, AND ANGLES SHALL CONFORM TO ASTM A36, 36 KSI YIELD.
3. HOLLOW STRUCTURAL SECTION (HSS) RECTANGULAR SHAPES SHALL CONFORM TO ASTM A500, GRADE C, 50 KSI YIELD.
4. ANCHOR RODS SHALL CONFORM TO ASTM F1554, GRADE (36, 55 WITH WELDABILITY SUPPLEMENT S1) AS NOTED ON THE STRUCTURAL DRAWINGS.
5. WELDING SHALL BE DONE BY A CERTIFIED WELDER IN ACCORDANCE WITH THE AISC DOCUMENTS LISTED ABOVE, THE AMERICAN WELDING SOCIETY (AWS) D1.1: STRUCTURAL WELDING CODE, AND THE RECOMMENDATIONS FOR USE OF WELD 70 KSI ELECTRODES. WHERE NOT SPECIFICALLY NOTED, MINIMUM WELD SHALL BE 3/16" FILLET BY LENGTH OF CONTACT EDGE.
6. GROUT BENEATH COLUMN BASE AND BEAM BEARING PLATES SHALL HAVE A MINIMUM 28-DAY, COMPRESSIVE STRENGTH OF 7,500 PSI AND SHALL BE NON-SHRINK, NON-METALLIC, AND TESTED IN ACCORDANCE WITH ASTM C1107.

STEEL DECKING:

1. STEEL ROOF AND NON-COMPOSITE FLOOR DECK SHALL BE MANUFACTURED AND ERECTED IN ACCORDANCE WITH THE STANDARD DECK SPECIFICATIONS AND THE "MANUAL OF CONSTRUCTION WITH STEEL DECK" AS PREPARED BY THE STEEL DECK INSTITUTE (SDI).
2. ROOF AND NON-COMPOSITE FLOOR DECK SHALL BE CONNECTED TO SUPPORTING MEMBERS AND INTERCONNECTED AS NOTED ON THE STRUCTURAL DRAWINGS.
3. DIAPHRAGM CAPACITY OR WELDING PATTERNS, SCREW PATTERNS, AND DETAILS SHALL BE AS INDICATED ON THE STRUCTURAL DRAWINGS.

CORROSION CONTROL:

1. ALL STEEL MEMBERS EXPOSED TO WEATHER SHALL BE HOT DIPPED GALVANIZED PER ASTM A123.
2. FASTENERS AND HARDWARE EXPOSED TO WEATHER SHALL BE HOT DIPPED GALVANIZED PER ASTM A153 OR ASTM B695 CLASS 50. STAINLESS STEEL FASTENERS AND HARDWARE MAY ALSO BE USED IN LIEU OF HOT DIPPED GALVANIZED.
3. ALL FIELD CUT OR DAMAGED SURFACES AND FIELD WELDED AREAS AT GALVANIZED CONSTRUCTION SHALL BE REPAIRED WITH (2) COATS OF A 95% ZINC RICH PAINT PER ASTM A780 (ZRC PREFERRED).

STRUCTURAL DRAWING LIST	
S001	GENERAL NOTES
S002	GENERAL NOTES
S003	ABBREVIATIONS & SYMBOLS
S100	FOUNDATION, EQUIP PLATFORM & ROOF FRAMING PLANS
S501	SCHEDULES AND TYPICAL DETAILS
S502	FOUNDATION DETAILS
S503	FRAMING DETAILS
S504	FRAMING DETAILS
S505	FRAMING DETAILS
S510	TYPICAL COLD-FORMED STEEL DETAILS
S511	TYPICAL COLD-FORMED STEEL DETAILS

PROFESSIONAL ENGINEER LICENSED 17126 STATE OF IDAHO PAUL J. HAUSER
May 17, 2024

DESIGNED: CDT
CHKD: DJM/CDT
TECH REVIEW: PJH
DATE: 05/23/2024

SUB SHEET NO. S001

TITLE OF SHEET: GENERAL NOTES

MIIN MAINTENANCE BUILDING
MINIDOKA NATIONAL HISTORIC SITE

DRAWING NO. 194
187126
PMIS/PKG NO. 314972
SHEET 34 OF 82

5/16/2024 11:20:12 AMAutodesk Docs://2023-360 NPS MIIN Rehab DD-CD/22037 NPS MIIN JVA Structural S24.rvt

COLD-FORMED STEEL FRAMING:

1. COLD-FORMED STEEL FRAMING SHALL CONFORM TO THE "NORTH AMERICAN SPECIFICATION FOR THE DESIGN OF COLD-FORMED STEEL STRUCTURAL MEMBERS" (AISI S100), THE "CODE OF STANDARD PRACTICE FOR COLD-FORMED STEEL FRAMING" (AISI S202) AND THE " NORTH AMERICAN STANDARD FOR COLD-FORMED STEEL STRUCTURAL FRAMING (AISI S240) BY THE AMERICAN IRON AND STEEL INSTITUTE (AISI).
2. ALL COLD-FORMED STEEL FRAMING (STUDS, JOISTS, TRACK, RAFTERS, BRACING, AND BRIDGING) SHALL BE GALVANIZED G-60 SHEET STEEL CONFORMING TO ASTM A1003.
3. STUDS AND JOISTS 54 MILS (16 GAUGE) AND HEAVIER SHALL BE 50 KSI YIELD. 43 MILS (18 GAUGE) AND LIGHTER SHALL BE 33 KSI YIELD UNLESS NOTED.
4. THE COLD-FORMED STEEL FRAMING SHOWN ON THESE DRAWINGS HAS BEEN DESIGNED. PROVIDE COLD-FORMED STEEL FRAMING AS DETAILED. ALTERNATE DESIGNS MAY BE CONSIDERED PROVIDED THEY ARE SUBMITTED ALONG WITH CALCULATIONS. ALTERNATE DRAWINGS AND CALCULATIONS WHICH ARE SUBMITTED MUST BE PREPARED BY A STRUCTURAL ENGINEER WITH CURRENT REGISTRATION IN THE STATE OF IDAHO.
5. ALL COLD-FORMED STEEL CONNECTIONS SHALL BE WELDED, SCREWED OR POWER FASTENED AS INDICATED ON THESE DRAWINGS.
   A. ALL WELDED CONNECTIONS SHALL BE PERFORMED IN ACCORDANCE WITH THE LATEST EDITION OF THE AWS D1.3 SPECIFICATION FOR WELDING SHEET STEEL IN STRUCTURES. ALL WELDING SHALL BE PERFORMED BY AWS CERTIFIED WELDERS. ALL WELDS SHALL BE CLEANED AND COATED WITH RUST INHIBITIVE ZINC PAINT. THE MINIMUM WELD LENGTH SHALL BE 1" FOR COLD-FORMED STEEL TO COLD-FORMED STEEL CONNECTIONS. INDICATED WELDING IS BASED ON 60 KSI ELECTRODES.
   B. SCREWS INDICATED IN THE DRAWINGS SHALL BE ASTM C1513 SELF-DRILLING SELF-TAPPING SCREWS UNLESS NOTED OTHERWISE. SCREWS SHALL BE SPACED A MINIMUM OF 3/4" BETWEEN ADJACENT SCREWS AND 1/2" FROM METAL EDGES.
   C. ALL POWER ACTUATED FASTENERS (PAF'S) INDICATED IN THE DRAWINGS SHALL BE 0.157" DIAMETER AND SHALL BE INSTALLED IN ACCORDANCE WITH THE MANUFACTURER'S INSTRUCTIONS.
      a. PROVIDE PAF'S FOR COLD-FORMED STEEL CONNECTIONS TO CONCRETE SUPPORTS WHERE INDICATED. UNLESS NOTED OTHERWISE, PAF'S IN CONCRETE SHALL BE SPACED 3" MINIMUM BETWEEN ADJACENT PAF'S AND 3" MINIMUM FROM CONCRETE EDGES. MINIMUM PAF EMBEDMENT IN CONCRETE SHALL BE 1 1/4".
      b. PROVIDE PAF'S FOR COLD-FORMED STEEL CONNECTIONS TO STRUCTURAL STEEL SUPPORTS WHERE INDICATED. UNLESS NOTED OTHERWISE, PAF'S IN STEEL SHALL BE SPACED 1 1/2" MINIMUM BETWEEN ADJACENT PAF'S AND 1/2" MINIMUM FROM STEEL EDGES. THE PAF POINT SHALL BE DRIVEN THROUGH THE BACK OF THE STRUCTURAL STEEL MEMBER.
6. COLD-FORMED STEEL CONNECTORS CALLED OUT IN THE DRAWINGS ARE SIMPSON STRONG-TIE CODE-APPROVED PRODUCTS AS USED FOR BASIS OF DESIGN. ALTERNATE PRODUCTS MAY BE USED THAT HAVE EQUAL OR GREATER SALIENT CHARACTERISTICS, INCLUDING SAME OR GREATER ALLOWABLE STRESS DESIGN CAPACITIES AND SAME INTENDED USE AS WELL AS SIMILAR BASIC GEOMETRIC PROPERTIES. NOTE THAT EXACT SIZE, GAGE, AND FASTENER SIZE/COUNT NEED NOT MATCH UNLESS SUCH CHARACTERISTICS ARE SPECIFICALLY NOTED. CONTRACTORS SHALL COMPARE SPECIFIED BASIS OF DESIGN PRODUCTS USING THE LATEST EDITION OF SIMPSON STRONG-TIES'S CATALOG TO PROPOSED PRODUCTS TO BE SUBMITTED TO CONTRACTING OFFICER FOR APPROVAL.
7. FASTEN COLD-FORMED STEEL TRACKS TO STUDS WITH (1) #10 SCREW EACH FLANGE AT EACH STUD. SQUARELY SEAT WALL STUDS AGAINST TOP AND BOTTOM TRACKS WITH GAP NOT EXCEEDING 1/16" BETWEEN THE END OF STUD AND THE WEB OF THE TRACK.
8. FASTEN COLD-FORMED STEEL TRACKS TO CONCRETE OR STEEL SUPPORTS WITH PAF'S AT 1'-4" MAXIMUM SPACING (8" MAXIMUM SPACING AT SHEARWALLS) UNLESS NOTED OTHERWISE. PROVIDE (2) PAF'S AT ALL JAMB STUDS.
9. PROVIDE TAUT COLD-FORMED STEEL FLAT STRAP BRIDGING AT 4'-0" MAXIMUM SPACING FOR WALLS STUDS AND AT MIDSPAN FOR RAFTERS AND JOISTS.
10. WHERE PUNCHOUTS ARE WITHIN 8" OF COLD-FORMED STEEL MEMBER ENDS, INSTALL UNPUNCHED TRACK STIFFENERS WITH (8) #10 SDST SCREWS TO THE MEMBER AS INDICATED.
11. PARALLEL COLD-FORMED STEEL MEMBERS IN CONTACT SHALL HAVE (2) #10 SCREWS @ 1'-4" MAX ALONG EACH CONTACT EDGE IN THE FIELD OF THE MEMBER.
12. ALL COLD-FORMED STEEL FRAMING MEMBERS SHALL BE CUT SQUARELY FOR ATTACHMENT TO PERPENDICULAR MEMBERS OR SLOPE CUT AS REQUIRED FOR AN ANGULAR FIT AGAINST ABUTTING MEMBERS. FIELD CUTTING OF COLD-FORMED STEEL FRAMING MEMBERS SHALL BE DONE BY SAWING OR SHEARING. TORCH CUTTING OF COLD-FORMED STEEL MEMBERS IS NOT PERMITTED.
13. INSTALL COLD-FORMED STEEL FRAMING MEMBERS IN ONE PIECE LENGTHS UNLESS SPLICE CONNECTIONS ARE INDICATED FOR TRACK OR TENSION MEMBERS.
14. REFER TO THE ARCHITECTURAL DRAWINGS FOR ALL DIMENSIONS PERTAINING TO THE COLD-FORMED STEEL FRAMING THAT ARE NOT INDICATED ON THESE DRAWINGS.
15. THESE DRAWINGS DO NOT INCLUDE DESIGN AND DETAILING FOR THE INTERIOR NON-STRUCTURAL COLD-FORMED STEEL FRAMING.
16. THE SSMA PRODUCT IDENTIFICATION CODES ARE USED TO LABEL MEMBERS ON THE DRAWINGS: [MEMBER DEPTH IN 1/100 INCHES] [STYLE] [FLANGE WIDTH IN 1/100 INCHES] [MATERIAL THICKNESS IN MILS] [YIELD STRENGTH KSI]

STYLE	SECTION	THICKNESS (MILS)	REFERENCE ONLY GAUGE NO.
S	STUD OR JOIST	33	20 - STRUCTURAL
T	TRACK	43	18
U	CHANNEL	54	16
F	FURRING CHANNEL	68	14
		97	12

PRE-ENGINEERED COLD-FORMED STEEL TRUSSES:

1. COLD-FORMED STEEL TRUSS DESIGN FOR THIS PROJECT IS A PERFORMANCE BASED, DELEGATED DESIGN. THE CONTRACTOR SHALL SUBMIT SHOP DRAWINGS AND CALCULATIONS FOR REVIEW PRIOR TO FABRICATION. CALCULATIONS SHALL BE PERFORMED BY A STRUCTURAL ENGINEER WITH CURRENT REGISTRATION IN THE STATE OF IDAHO.
2. TRUSSES SHALL BE DESIGNED TO SUPPORT THE FULL DEAD LOADS AND THE SUPERIMPOSED DESIGN LOADS NOTED ABOVE AND ON THE DRAWINGS.
3. TRUSSES SHALL BE DESIGNED, FABRICATED AND ERECTED IN ACCORDANCE WITH IBC SECTION 2211.
4. ALL PRE-ENGINEERED GABLE END TRUSSES SHALL BE DESIGNED FOR WIND FORCES PERPENDICULAR TO THE TRUSS.
5. ALL PRE-ENGINEERED TRUSSES SHALL BE FABRICATED SUCH THAT THEY INCORPORATE ALL ROOF PLANES. AT CONTRACTOR'S OPTION, STANDARD SHAPE TRUSSES MAY BE USED IN CONJUNCTION WITH OVERFRAMING UNLESS NOTED OTHERWISE.
6. FULL HEIGHT BLOCKING SHALL BE PLACED BETWEEN TRUSSES AT ALL SUPPORTS.
7. CROSS BRIDGING DESIGN SHALL BE PROVIDED BY TRUSS MANUFACTURER AS REQUIRED FOR LATERAL EFFECTS.
8. TRUSS MEMBERS AND COMPONENTS SHALL NOT BE CUT, NOTCHED, DRILLED, SPLICED OR OTHERWISE ALTERED IN ANY WAY WITHOUT WRITTEN APPROVAL OF A REGISTERED DESIGN PROFESSIONAL.
9. SCISSOR TYPE TRUSSES SHALL BE DESIGNED FOR A MAXIMUM OF 1/2" TOTAL HORIZONTAL DEFLECTION UNDER DEAD PLUS LIVE LOADS.
10. THE FABRICATOR SHALL DETERMINE TRUSS WEB ARRANGEMENTS AND MEMBER FORCES UNLESS NOTED OTHERWISE.
11. TRUSS TO TRUSS CONNECTIONS SPECIFIED SHALL BE BY TRUSS SUPPLIER, UNLESS SPECIFICALLY NOTED ON THE DRAWINGS.
12. TRUSS FABRICATOR SHALL SPECIFY ALL ROOF TRUSS BRACING AND BRIDGING.
13. DEFLECTION LIMITS FOR TRUSSES SHALL NOT EXCEED THE FOLLOWING DEFLECTION CRITERIA:
    A. ROOF LIVE LOAD = L/360
    B. ROOF TOTAL LOAD = L/240 (1" MAXIMUM)

SHOP DRAWINGS:

1. THE STRUCTURAL DRAWINGS ARE COPYRIGHTED AND SHALL NOT BE COPIED FOR USE AS ERECTION PLANS OR SHOP DETAILS. USE OF JVA'S ELECTRONIC FILES AS THE BASIS FOR SHOP DRAWINGS REQUIRES PRIOR APPROVAL BY JVA, A SIGNED RELEASE OF LIABILITY BY THE GENERAL CONTRACTOR AND/OR HIS SUBCONTRACTORS, AND DELETION OF JVA'S NAME AND LOGO FROM ALL SHEETS SO USED.
2. THE GENERAL CONTRACTOR SHALL SUBMIT IN WRITING ANY REQUESTS TO MODIFY THE STRUCTURAL DRAWINGS OR PROJECT SPECIFICATIONS.
3. ALL SHOP AND ERECTION DRAWINGS SHALL BE CHECKED AND STAMPED (AFTER HAVING BEEN CHECKED) BY THE GENERAL CONTRACTOR PRIOR TO SUBMISSION FOR CONTRACTING OFFICER'S REVIEW; SHOP DRAWING SUBMITTALS NOT CHECKED BY THE GENERAL CONTRACTOR PRIOR TO SUBMISSION TO THE CONTRACTING OFFICER WILL BE RETURNED WITHOUT REVIEW.
4. FURNISH ELECTRONIC VERSION (PDF) OF SHOP AND ERECTION DRAWINGS TO THE CONTRACTING OFFICER FOR REVIEW PRIOR TO FABRICATION FOR:
   A. CONCRETE MIX DESIGNS
   B. CONCRETE REINFORCING STEEL
   C. CONCRETE SLAB ON GRADE CONTROL JOINT LAYOUT
   D. STEEL ROOF DECK
   E. COLD-FORMED STEEL FRAMING
   F. PRE-ENGINEERED COLD-FORMED STEEL TRUSSES
5. SUBMIT IN A TIMELY MANNER TO PERMIT 10 WORKING DAYS FOR REVIEW BY THE CONTRACTING OFFICER.
6. SHOP DRAWINGS SUBMITTED FOR REVIEW DO NOT CONSTITUTE "REQUEST FOR CHANGE IN WRITING" UNLESS SPECIFIC SUGGESTED CHANGES ARE CLEARLY MARKED. IN ANY EVENT, CHANGES MADE BY MEANS OF THE SHOP DRAWING SUBMITTAL PROCESS BECOME THE RESPONSIBILITY OF THE ONE INITIATING THE CHANGE.

SPECIAL INSPECTIONS:

1. FOR THE DETAILED LIST OF REQUIRED INSPECTIONS, REFER TO THE "STATEMENT OF STRUCTURAL TESTS AND SPECIAL INSPECTIONS" CONTAINED IN SECTION 01 40 00 QUALITY REQUIREMENTS OF THE SPECIFICATIONS. THE FOLLOWING SPECIAL INSPECTIONS AND TESTING LIST IS SHOWN HERE FOR REFERENCE ONLY AND SHALL BE PERFORMED BY A QUALIFIED SPECIAL INSPECTOR, EMPLOYED BY THE CONTRACTOR, IN ACCORDANCE WITH CHAPTER 17 OF THE IBC:
   A. SECTION 1704 SPECIAL INSPECTIONS, CONTRACTOR RESPONSIBILITY, AND STRUCTURAL OBSERVATIONS AND THE FOLLOWING SUB-SECTIONS:
      1. 1704.2 SPECIAL INSPECTIONS AND TESTS
      2. 1704.3 STATEMENT OF SPECIAL INSPECTIONS
   B. SECTION 1705 REQUIRED VERIFICATION AND INSPECTION AND THE FOLLOWING SUB-SECTIONS:
      1. 1705.1.1 SPECIAL CASES (POST-INSTALLED ANCHORS)
      2. 1705.2 STEEL CONSTRUCTION
      3. 1705.3 CONCRETE CONSTRUCTION
      4. 1705.6 SOILS
2. THE SPECIAL INSPECTOR SHALL BE A QUALIFIED PERSON WHO SHALL DEMONSTRATE COMPETENCE, TO THE SATISFACTION OF THE CONTRACTING OFFICER, FOR INSPECTION OF THE PARTICULAR TYPE OF CONSTRUCTION OR OPERATION REQUIRING SPECIAL INSPECTION. THE APPROVED INSPECTOR MUST BE INDEPENDENT FROM THE CONTRACTOR RESPONSIBLE FOR THE WORK BEING INSPECTED.
3. DUTIES AND RESPONSIBILITIES OF THE SPECIAL INSPECTOR SHALL BE TO INSPECT AND/OR TEST THE WORK OUTLINED ABOVE AND WITHIN THE STATEMENT OF SPECIAL INSPECTIONS IN ACCORDANCE WITH CHAPTER 17 OF THE IBC FOR CONFORMANCE WITH THE APPROVED CONSTRUCTION DOCUMENTS.
4. ALL DISCREPANCIES SHALL BE BROUGHT TO THE IMMEDIATE ATTENTION OF THE CONTRACTING OFFICER FOR CORRECTION.
5. PER SECTION 1704.2.4 THE SPECIAL INSPECTOR SHALL FURNISH REGULAR REPORTS TO THE CONTRACTING OFFICER. PROGRESS REPORTS FOR CONTINUOUS INSPECTION SHALL BE FURNISHED WEEKLY. INDIVIDUAL REPORTS OF PERIODIC INSPECTIONS SHALL BE FURNISHED WITHIN ONE WEEK OF INSPECTION DATES. THE REPORTS SHALL NOTE UNCORRECTED DEFICIENCIES, CORRECTION OF PREVIOUSLY REPORTED DEFICIENCIES, AND CHANGES TO THE APPROVED CONSTRUCTION DOCUMENTS AUTHORIZED BY THE CONTRACTING OFFICER.
6. THE SPECIAL INSPECTOR SHALL SUBMIT A FINAL SIGNED REPORT WITHIN 10 DAYS OF THE FINAL SPECIAL INSPECTION STATING WHETHER THE WORK REQUIRING SPECIAL INSPECTION WAS, TO THE BEST OF THE INSPECTOR'S KNOWLEDGE, IN CONFORMANCE WITH THE APPROVED CONSTRUCTION DOCUMENTS AND THE APPLICABLE WORKMANSHIP PROVISIONS OF THE IBC. WORK NOT IN COMPLIANCE SHALL BE NOTED IN THE REPORT.
7. EXCEPT AS NOTED, THE SPECIAL INSPECTIONS OUTLINED ABOVE ARE IN ADDITION TO, AND BEYOND THE SCOPE OF, PERIODIC STRUCTURAL OBSERVATIONS AS DEFINED IN SECTION 1704.5.

STRUCTURAL ERECTION AND BRACING REQUIREMENTS:

1. THE CONSTRUCTION DRAWINGS ILLUSTRATE AND DESCRIBE THE COMPLETED STRUCTURE WITH ELEMENTS IN THEIR FINAL POSITIONS, PROPERLY SUPPORTED, CONNECTED, AND/OR BRACED.
2. THE CONSTRUCTION DRAWINGS ILLUSTRATE TYPICAL AND REPRESENTATIVE DETAILS TO ASSIST THE GENERAL CONTRACTOR. DETAILS SHOWN APPLY AT ALL SIMILAR CONDITIONS UNLESS OTHERWISE INDICATED. ALTHOUGH DUE DILIGENCE HAS BEEN APPLIED TO MAKE THE DRAWINGS AS COMPLETE AS POSSIBLE, NOT EVERY DETAIL IS ILLUSTRATED AND NOT EVERY EXCEPTIONAL CONDITION IS ADDRESSED.
3. ALL PROPRIETARY CONNECTIONS AND ELEMENTS SHALL BE INSTALLED IN ACCORDANCE WITH THE MANUFACTURERS' RECOMMENDATIONS.
4. ALL WORK SHALL BE ACCOMPLISHED IN A WORKMANLIKE MANNER AND IN ACCORDANCE WITH THE APPLICABLE CODES AND LOCAL ORDINANCES.
5. THE GENERAL CONTRACTOR IS RESPONSIBLE FOR COORDINATION OF ALL WORK, INCLUDING LAYOUT AND DIMENSION VERIFICATION, MATERIALS COORDINATION, SHOP DRAWING REVIEW, AND THE WORK OF SUBCONTRACTORS. ANY DISCREPANCIES OR OMISSIONS DISCOVERED IN THE COURSE OF THE WORK SHALL BE IMMEDIATELY REPORTED TO THE CONTRACTING OFFICER FOR RESOLUTION.
6. CONTINUATION OF WORK WITHOUT NOTIFICATION OF DISCREPANCIES RELIEVES THE CONTRACTING OFFICER FROM ALL CONSEQUENCES.
7. UNLESS OTHERWISE SPECIFICALLY INDICATED, THE CONSTRUCTION DRAWINGS DO NOT DESCRIBE METHODS OF CONSTRUCTION.
8. THE GENERAL CONTRACTOR, IN THE PROPER SEQUENCE, SHALL PERFORM OR SUPERVISE ALL WORK NECESSARY TO ACHIEVE THE FINAL COMPLETED STRUCTURE, AND TO PROTECT THE STRUCTURE, WORKMEN, AND OTHERS DURING CONSTRUCTION. SUCH WORK SHALL INCLUDE, BUT NOT BE LIMITED TO TEMPORARY BRACING, SHORING FOR CONSTRUCTION EQUIPMENT, SHORING FOR EXCAVATION, FORMWORK, SCAFFOLDING, SAFETY DEVICES AND PROGRAMS OF ALL KINDS, SUPPORT AND BRACING FOR CRANES AND OTHER ERECTION EQUIPMENT.
9. TEMPORARY BRACING SHALL REMAIN IN PLACE UNTIL ALL FLOORS, WALLS, ROOFS AND ANY OTHER SUPPORTING ELEMENTS ARE IN PLACE.
10. THE CONTRACTING OFFICER BEARS NO RESPONSIBILITY FOR THE ABOVE ITEMS, AND OBSERVATION VISITS TO THE SITE DO NOT IN ANY WAY INCLUDE INSPECTIONS OF THESE ITEMS.

PRECAUTIONARY NOTES ON STRUCTURAL BEHAVIOR:

1. INTERIOR ARCHITECTURAL FINISH DETAILING MUST ACCOMMODATE THE RELATIVE DIFFERENTIAL MOVEMENTS OF SUPPORTING STRUCTURAL ELEMENTS.
2. WHERE THE ROOF FRAMING ELEMENT SPANS ARE LONG, APPLIED LOADING WILL NATURALLY CAUSE SUBSTANTIAL DEFLECTION. INTERIOR ELEMENTS HUNG FROM THE ROOF STRUCTURE WILL DEFLECT WITH THE ROOF.
3. EXTERIOR/PERIMETER AND INTERIOR ARCHITECTURAL FINISH DETAILS SHOULD ALLOW FOR RELATIVE MOVEMENTS BETWEEN ELEMENTS WITH DIFFERENT SUPPORT CONDITIONS.

DEFERRED SUBMITTALS:

1. PORTIONS OF THE STRUCTURE HAVE ELEMENTS OF PROPRIETARY DESIGN AND FABRICATION, WHICH SHALL BE SUBMITTED BY THE SUPPLIER FOR APPROVAL AFTER AWARD OF CONTRACT.
2. THESE ITEMS SHALL CONFORM TO THE LOAD, CAPACITY, SIZE, GEOMETRY, CONNECTION, AND SUPPORT CRITERIA NOTED ON THE STRUCTURAL DRAWINGS.
3. SHOP DRAWINGS AND CALCULATIONS SHALL BE PREPARED BY AN ENGINEER REGISTERED IN THE STATE OF IDAHO. FINAL SHOP DRAWING SUBMITTALS SHALL BE STAMPED AND SIGNED.
4. FURNISH DEFERRED SUBMITTALS FOR:
   A. PRE-ENGINEERED COLD-FORMED STEEL TRUSSES
   B. FALL PROTECTION SYSTEM LAYOUT AND DESIGN
5. SUBMITTALS WILL BE REVIEWED BY THE CONTRACTING OFFICER FOR COMPLIANCE WITH THE SPECIFIED DESIGN REQUIREMENTS.
6. DEFERRED SUBMITTAL ITEMS SHALL NOT BE INSTALLED UNTIL THEIR DESIGN CALCULATIONS AND DRAWINGS HAVE BEEN REVIEWED BY THE CONTRACTING OFFICER.

PROFESSIONAL ENGINEER LICENSED 17126 STATE OF IDAHO PAUL J. HAUSER
May 17, 2024

DESIGNED:	SUB SHEET NO.	TITLE OF SHEET	DRAWING NO.
CDT	S002	GENERAL NOTES	194
DRAWN: DJM/CDT			187126
TECH REVIEW: PJH		MIIN MAINTENANCE BUILDING MINIDOKA NATIONAL HISTORIC SITE	PMIS/PKG NO. 314972
DATE: 05/23/2024			SHEET 35 OF 82

5/16/2024 11:20:13 AMAutodesk Docs://2023-360 NPS MIIN Rehab DD-CD/22037 NPS MIIN JVA Structural S24.rvt

ABBREVIATIONS KEY

(E)	EXISTING
(N)	NEW
(R)	REMOVE
@	ON CENTER SPACING
AB	ANCHOR ROD (BOLT)
ADDL	ADDITIONAL
ADJ	ADJUSTABLE
AESS	ARCH EXPOSED STRUCTURAL STEEL
AFF	ABOVE FINISHED FLOOR
ALT	ALTERNATE
AMT	AMOUNT
ANCH	ANCHOR, ANCHORAGE
APPROX	APPROXIMATE
ARCH	ARCHITECT, -URAL
ATR	ALL THREAD ROD
AVG	AVERAGE
BC	BOTTOM OF CONCRETE
BL	BRICK LEDGE
BLDG	BUILDING
BLK	BLOCK
BLKG	BLOCKING
BM	BEAM
BOT	BOTTOM
BRG	BEARING
BW	BOTTOM OF WALL
CB	COUNTERBORE
CF	CUBIC FOOT
CFS	COLD FORMED STEEL
CG	CENTER OF GRAVITY
CIP	CAST-IN-PLACE
CJ	CONSTRUCTION JOINT, CONTROL JOINT
CJP	COMPLETE JOINT PENETRATION
CL	CENTER LINE
CLG	CEILING
CLR	CLEAR
CLSM	CONTROLLED LOW STRENGTH MATERIAL
CM	CONSTRUCTION MANAGER, -MENT
CMU	CONCRETE MASONRY UNIT
COL	COLUMN
COM	COMMON
COMB	COMBINATION
CONC	CONCRETE
CONN	CONNECTION
CONT	CONTINUOUS, CONTINUE

COORD	COORDINATE, COORDINATION
CS	COUNTERSINK
CTR	CENTER
CY	CUBIC YARD
DAB	DEFORMED ANCHOR BAR
DET	DETAIL
DEV	DEVELOP
DIAG	DIAGONAL
DIM	DIMENSION
DL	DEAD LOAD
DN	DOWN
DP	DRILLED PIER
DT	DOUBLE TEE
DWG	DRAWING
DWL	DOWEL
E-E	END TO END
E-W	EAST TO WEST
EA	EACH
ECC	ECCENTRIC
EF	EACH FACE
EJ	EXPANSION JOINT
EL	ELEVATION
ELEC	ELECTRIC, ELECTRICAL
EMBED	EMBEDMENT
ENGR	ENGINEER
EQ	EQUAL
EQUIP	EQUIPMENT
EQUIV	EQUIVALENT
ES	EACH SIDE
EST	ESTIMATE
EXC	EXCAVATE
EXP	EXPANSION
EXT	EXTERIOR
F-F	FACE TO FACE
FD	FLOOR DRAIN
FDN	FOUNDATION
FF	FINISHED FLOOR, FAR FACE
FIG	FIGURE
FL	FLUSH
FLG	FLANGE
FLR	FLOOR
FO	FACE OF
FP	FULL PENETRATION
FS	FOOTING STEP, FAR SIDE
FTG	FOOTING

GA	GAGE, GAUGE
GALV	GALVANIZED
GC	GENERAL CONTRACTOR
GEN	GENERAL
GL	GLUED LAMINATED, GLULAM
GND	GROUND
GR	GRADE
GT	GIRDER TRUSS
GYP BD	GYPSUM BOARD
HAS	HEADED ANCHOR STUD
HDG	HOT-DIP GALVANIZED
HDR	HEADER
HORIZ	HORIZONTAL
HP	HIGH POINT
HT	HEIGHT
IBC	INTERNATIONAL BUILDING CODE
ID	INSIDE DIAMETER
IEBC	INTERNATIONAL EXISTING BUILDING CODE
IF	INSIDE FACE
INT	INTERIOR, INTERMEDIATE
IT	INVERTED TEE
JB	JOIST BEARING
JST	JOIST
JT	JOINT
K	KIPP (1,000 LBS)
LGS	LIGHT GAGE STEEL
LL	LIVE LOAD
LLH	LONG LEG HORIZONTAL
LLV	LONG LEG VERTICAL
LOC	LOCATION
LP	LOW POINT
LSL	LAMINATED STRAND LUMBER
LT	LIGHT
LVL	LAMINATED VENEER LUMBER
MACH	MACHINE
MASY	MASONRY
MATL	MATERIAL
MAX	MAXIMUM
MB	MACHINE BOLT
MECH	MECHANICAL
MEZZ	MEZZANINE
MFR	MANUFACTURE, -ER, -ED
MIN	MINIMUM
ML	MICROLLAM (TRUS-JOIST BRAND LVL)

MO	MASONRY OPENING
MTL	METAL
N-S	NORTH TO SOUTH
NF	NEAR FACE
NIC	NOT IN CONTRACT
NS	NEAR SIDE
NTS	NOT TO SCALE
OCJ	OSHA COLUMN JOIST
OD	OUTSIDE DIAMETER
OF	OUTSIDE FACE
OH	OPPOSITE HAND
OPNG	OPENING
OPP	OPPOSITE
OSB	ORIENTED STRAND BOARD
PAF	POWDER ACTUATED FASTENER
PC	PRECAST
PCF	POUNDS PER CUBIC FOOT
PE	PRE-ENGINEERED
PEN	PENETRATION
PERP	PERPENDICULAR
PJP	PARTIAL JOINT PENETRATION
PL	PLATE
PLF	POUND PER LINEAR FOOT
PNL	PANEL
PP	PANEL POINT
PS	PRESTRESSED
PSF	POUNDS PER SQUARE FOOT
PSI	POUNDS PER SQUARE INCH
PSL	PARALLEL STRAND LUMBER
PT	POST TENSIONED, PRESSURE TREATED
PTN	PARTITION
PWD	PLYWOOD
QTY	QUANTITY
R	RADIUS
RE	REFERENCE, REFER TO
RECT	RECTANGLE
REINF	REINFORCE, -ED, -ING
REQ	REQUIRED
REQMT	REQUIREMENT
RET	RETAINING
RM	ROOM
RMO	ROUGH MASONRY OPENING
RO	ROUGH OPENING
SC	SLIP-CRITICAL
SCH	SCHEDULE

SDST	SELF-DRILLING/SELF-TAPPING
SECT	SECTION
SF	SQUARE FEET, SUB-FLOOR
SHT	SHEET
SHTG	SHEATHING
SIM	SIMILAR
SLH	SHORT LEG HORIZONTAL
SLRS	SEISMIC LOAD-RESISTING SYSTEM
SLV	SHORT LEG VERTICAL
SOG	SLAB ON GRADE
SP	SPACES, SPACED
SPEC	SPECIFICATIONS
SQ	SQUARE
SSR	SHEAR STUD RAIL
ST	SNUG-TIGHT
STD	STANDARD
STIFF	STIFFENER
STL	STEEL
STRUCT	STRUCTURE, -AL
SUPT	SUPPORT
SY	SQUARE YARD
SYM	SYMMETRICAL
T&B	TOP AND BOTTOM
T&G	TOUNGE AND GROOVE
TB	TOP OF BEAM
TC	TOP OF CONCRETE
TCA	TORQUE-CONTROLLED ANCHOR
TD	TOP OF DECK
THD	THREAD
THK	THICK, -NESS
TJ	TOP OF JOIST
TL	TOTAL LOAD
TPG	TOPPING
TRANS	TRANSVERSE
TW	TOP OF WALL
TYP	TYPICAL
ULT	ULTIMATE
UNO	UNLESS OTHERWISE NOTED
VERT	VERTICAL
VIF	VERIFY IN FIELD
WP	WORK POINT
WT	WEIGHT
WTS	WELDED THREADED STUD
WWF	WELDED WIRE FABRIC
XS	EXTRA STRONG
XSECT	CROSS SECTION
XXS	DOUBLE EXTRA STRONG

	DIRECTION OF DECK SPAN
GRID	GRID DESIGNATION
2	REVISION
	CIP CONCRETE
	EARTH
FX.X	ISOLATED SPREAD FOOTING MARK
FXX	SPREAD FOOTING MARK
XX:12	ROOF SLOPE

XXX'-X	TOP OF CONCRETE ELEVATION
[XXX'-X]	TOP OF BEAM ELEVATION
(XXX'-X)	TOP OF FOOTING ELEVATION
XXX'-X	TOP OF FLOOR ELEVATION
CXX	COLUMN STARTING AT THIS LEVEL
B	COLUMN STOPPING BELOW THIS LEVEL, SEE FRAMING PLAN AT NEXT LOWER LEVEL

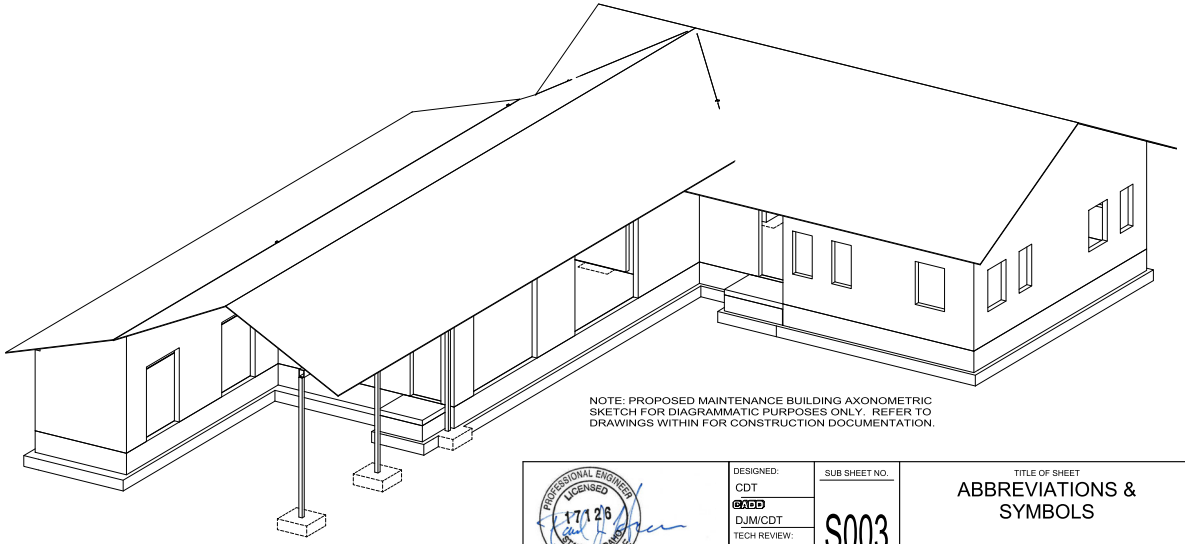

NOTE: PROPOSED MAINTENANCE BUILDING AXONOMETRIC SKETCH FOR DIAGRAMMATIC PURPOSES ONLY. REFER TO DRAWINGS WITHIN FOR CONSTRUCTION DOCUMENTATION.

PROFESSIONAL ENGINEER LICENSED 17126 STATE OF IDAHO PAUL J HAUSER

May 17, 2024

DESIGNED: CDT
CADD: DJM/CDT
TECH REVIEW: PJH
DATE: 05/23/2024

SUB SHEET NO. S003

TITLE OF SHEET
ABBREVIATIONS & SYMBOLS

MIIN MAINTENANCE BUILDING
MINIDOKA NATIONAL HISTORIC SITE

DRAWING NO. 194
187126
PMIS/PKG NO. 314972
SHEET 36 OF 82

5/16/2024 11:20:13 AMAutodesk Docs://2023-360 NPS MIIN Rehab DD-CD/22037 NPS MIIN JVA Structural S24.rvt

5/16/2024 11:20:16 AMAutodesk Docs://2023-360 NPS MIIN Rehab DD-CD/22037 NPS MIIN JVA Structural S24.rvt

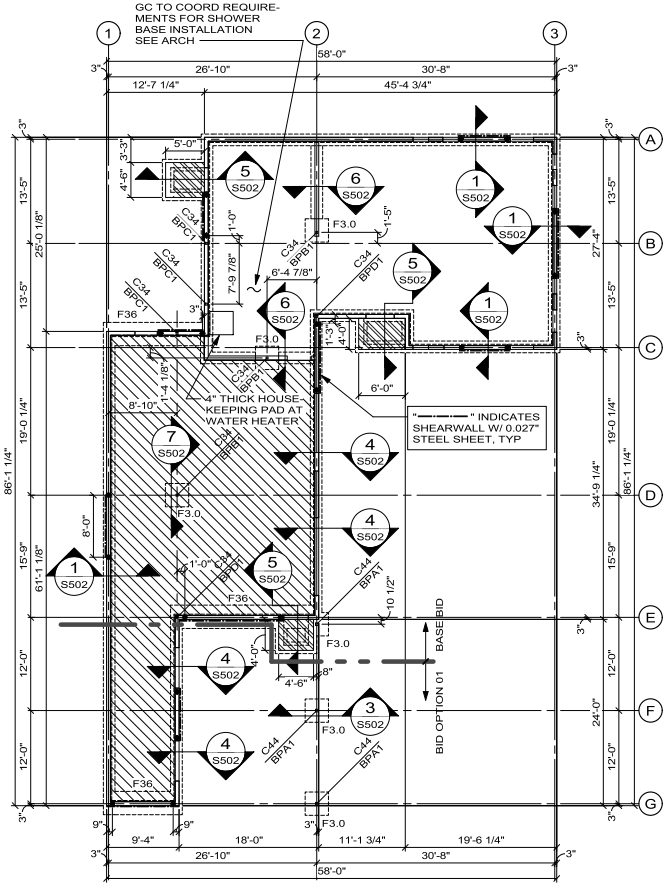

FOUNDATION PLAN

- ELEVATION 100'-0" = TOP OF MAIN INTERIOR FLOOR SLAB, SEE CIVIL FOR USGS ELEVATION
- TOP OF PERIMETER/EXTERIOR FOOTING = 98'-0"
- TOP OF CONCRETE STEM WALL ELEVATION = 100'-0" AT EXTERIOR STUD WALLS. STEP DOWN TO 99'-4" AT DOOR OPENINGS. ALIGN STEP W/ DOOR JAMB, SEE ARCH.
- WALL FOOTINGS ARE TYP F18, TYPICAL UNLESS NOTED OTHERWISE
- ◆ INDICATES HOLDOWN AT END OF SHEARWALL, SEE 8/S502 AND 1/S510

TYPICAL INTERIOR SLAB ON GRADE:
5" THICK CONCRETE SLAB ON UNDISTURBED NATURAL SOILS OR COMPACTED STRUCTURAL FILL PER SOILS REPORT; REINFORCE SLAB W/ #4 @ 16", EA WAY, AT MID-DEPTH; ADD (2) #4 x 4'-0" DIAGONAL BARS AT MID-DEPTH OF SLAB AT ALL RE-ENTRANT CORNERS PER 8/S501. PROVIDE SAWCUT OR FORMED CONTROL JOINTS, PER 6/S501, @ 12'-0±. IN EACH DIRECTION. JOINTS SHALL BE CONTINUOUS, NOT STAGGERED OR OFFSET. ASPECT RATIO SHALL BE A MAXIMUM OF 1.5 TO 1.

GARAGE INTERIOR SLAB ON GRADE:
7" THICK CONCRETE SLAB ON UNDISTURBED NATURAL SOILS OR COMPACTED STRUCTURAL FILL PER SOILS REPORT. SEE "TYPICAL INTERIOR SLAB ON GRADE" NOTE ABOVE FOR ADDITIONAL INFORMATION.

INDICATES 6" MINIMUM SLAB ON 4" VOID AT EXTERIOR STOOPS REINFORCED W/ #5 @ 12" EA WAY AT MID-DEPTH, SEE CIVIL FOR SLOPE

INTERIOR NON-STRUCTURAL PARTITION NOTE:
INTERIOR NON-STRUCTURAL PARTITION WALLS BEARING ON SLAB ON GRADE SHALL HAVE A MINIMUM 2" VERTICAL SLIP JOINT LOCATED AT THE TOP OR BOTTOM OF WALL. VERTICAL JOINTS SHALL ALSO BE PROVIDED WHERE PARTITIONS INTERSECT ELEMENTS FOUNDED ON FOUNDATION SUPPORTED ELEMENTS (STEM WALLS, GRADE BEAM, ETC)

STEEL COLUMN SCHEDULE

MARK	SIZE
C34	HSS3x3x1/4
C44	HSS4x4x1/4

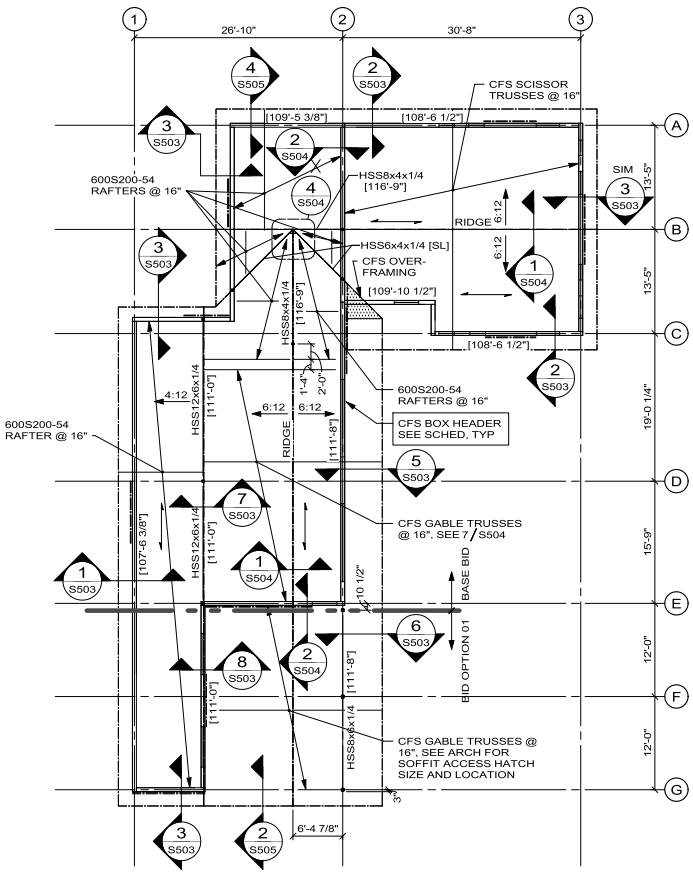

ROOF FRAMING PLAN

- ELEVATION 100'-0" = TOP OF MAIN LEVEL INTERIOR FLOOR SLAB
- TOP OF STEEL ELEVATION NOTED THUS: [XXX'-X"]
- [SL] INDICATES SLOPING BEAM

TYPICAL ROOF DECK:
0.6" DEEP x 24 GAGE GRADE 80 GALVANIZED STEEL DECK (TYPE 0.6C-36) W/ #12 SDST SCREWS @ 6" (36/7) AT INTERMEDIATE SUPPORTS & EDGES AND #12 SDST SCREWS @ 12" AT SIDELAP CONNECTIONS. STEEL DECK SHALL BE CONTINUOUS OVER THREE OR MORE SUPPORTS WITH ENDS LAPPED

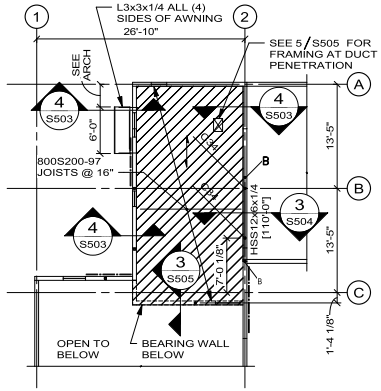

EQUIP PLATFORM FRAMING PLAN

- ELEVATION 100'-0" = TOP OF MAIN LEVEL INTERIOR FLOOR SLAB
- TOP OF STEEL ELEVATION NOTED THUS: [XXX'-X"]
- BOTTOM OF STEEL DECK ELEVATION = 110'-0"

TYPICAL FLOOR DECK:
0.6" DEEP x 24 GAGE GRADE 80 GALVANIZED STEEL DECK (TYPE 0.6C-36) W/ #12 SDST SCREWS @ 6" (36/7) AT INTERMEDIATE SUPPORTS & EDGES AND #12 SDST SCREWS @ 12" AT SIDELAP CONNECTIONS. STEEL DECK SHALL BE CONTINUOUS OVER THREE OR MORE SUPPORTS WITH ENDS LAPPED

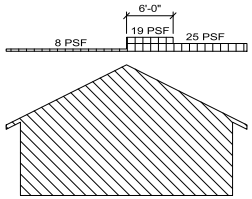

TYPICAL GABLE ROOF UNBALANCED SNOW LOADS

SCALE: (A) 8 0 8 16 SCALE OF FEET

BLDG NORTH

PROFESSIONAL ENGINEER LICENSED 17126 STATE OF IDAHO PAUL J. HAUSER
May 17, 2024

DESIGNED:	SUB SHEET NO.	TITLE OF SHEET	DRAWING NO.
CDT	S100	FOUNDATION, EQUIP PLATFORM & ROOF FRAMING PLANS	194 / 187126
CHKD: DJM/CDT		MIIN MAINTENANCE BUILDING	PMIS/PKG NO. 314972
TECH REVIEW: PJH		MINIDOKA NATIONAL HISTORIC SITE	SHEET 37 OF 82
DATE: 05/23/2024			

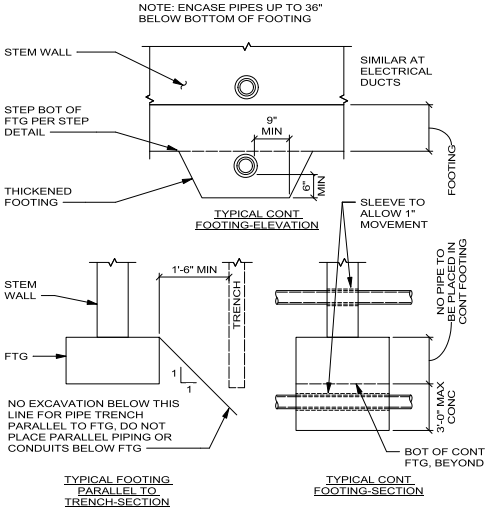

5 S501 TYP PIPE AT FOOTING DETAIL

SCALE Ⓐ

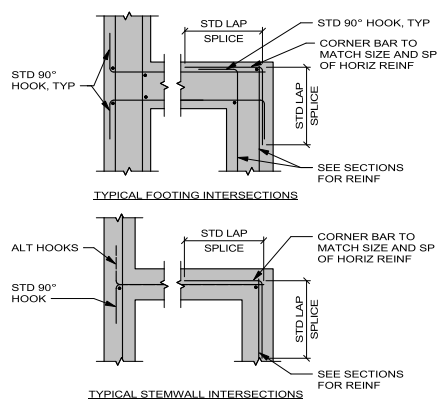

1 S501 TYP CONC WALL CORNER & INT REINF

SCALE Ⓐ

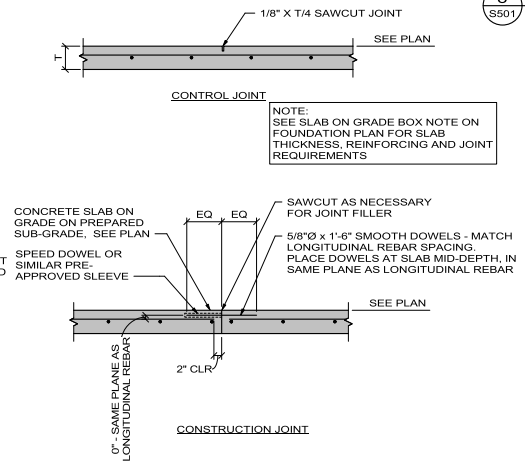

6 S501 TYP INTERIOR SLAB ON GRADE JOINTS

SCALE Ⓐ

FOOTING SCHEDULE				
MARK	WIDTH	LENGTH	THICKNESS	REINFORCING
F3.0	3'-0"	3'-0"	1'-0"	(4) #5 EA WAY BOT
F18	1'-6"		1'-0"	(2) #5 CONT BOT
F36	3'-0"		1'-0"	(3) #5 CONT BOT, #5 @ 18" TRANSV BOT

FOOTING NOTES:
- FOOTINGS SHALL BE PLACED ON 1'-0" DEPTH MINIMUM COMPACTED ENGINEERED FILL PER SOILS REPORT
- CENTER FOOTINGS UNDER STEMWALLS & PILASTERS, TYPICAL UNLESS NOTED OTHERWISE
- LAPPED BOARD FORMING NOT ALLOWED
- TRENCH FORMING NOT ALLOWED

2 S501 FOOTING SCHEDULE

NO SCALE

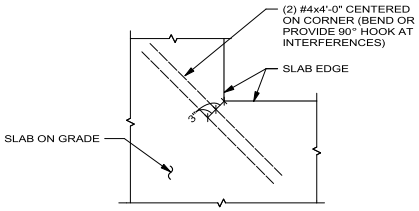

8 S501 TYP RE-ENTRANT CORNER REINF

NO SCALE

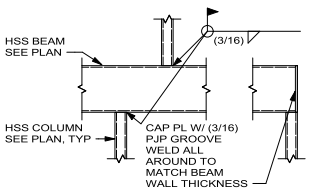

9 S501 TYP HSS BEAM TO COL CONNECTIONS

SCALE Ⓐ

BASE PLATE SCHEDULE

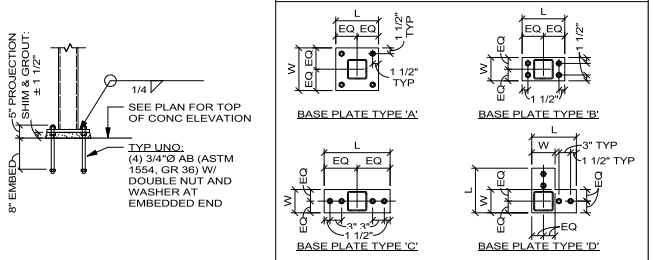

BASE PLATE SCHEDULE					
MARK	TYPE	LENGTH	WIDTH	THICKNESS	COMMENTS
BPA1	A	10"	10"	3/4"	
BPB1	B	10"	6"	3/4"	
BPC1	C	1'-4"	6"	3/4"	
BPD1	D	11"	6"	3/4"	

7 S501 STEEL COLUMN BASE PLATE SCHEDULE

NO SCALE

TYPICAL CONCRETE REINFORCING LAP LENGTHS (UNO)							
BAR SIZE	TYPE	Fc = 3000 PSI (TOP)	Fc = 3000 PSI (OTHER)	Fc = 4000 PSI (TOP)	Fc = 4000 PSI (OTHER)	Fc = 5000 PSI (TOP)	Fc = 5000 PSI (OTHER)
#3	EMBED	22	17	19	15	17	13
#3	LAP	28	22	24	19	22	17
#4	EMBED	29	22	25	19	22	17
#4	LAP	37	29	32	25	29	22
#5	EMBED	36	28	31	24	28	22
#5	LAP	47	36	40	31	36	28
#6	EMBED	43	33	37	29	33	26
#6	LAP	56	43	48	37	43	33
#7	EMBED	63	48	54	42	49	37
#7	LAP	81	63	70	54	63	49
#8	EMBED	72	55	62	48	55	43
#8	LAP	93	72	80	62	72	55

NOTES:
1. TOP BARS ARE HORIZONTAL BARS WITH MORE THAN 12 INCHES OF FRESH CONCRETE CAST BELOW BAR
2. TABULATED VALUES ARE BASED ON GRADE 60 NON-EPOXY-COATED REINFORCING BARS AND NORMAL WEIGHT CONCRETE
3. VALUES ARE IN INCHES

3 S501 CONC REINF LAP SPLICE SCHEDULE

NO SCALE

STANDARD HOOKS

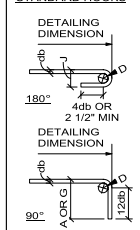

MIN D = 6 db FOR #3 THROUGH #8

STANDARD HOOKS				STIRRUPS & TIE HOOKS	
BAR SIZE	D	180° (J)	90° (A OR G)	180° (J)	90° (A OR G)
#3	2 1/4"	3"	6"	2 1/4"	4 1/8"
#4	3"	4"	8"	3"	4 1/2"
#5	3 3/4"	5"	10"	3 3/4"	5 5/8"
#6	4 1/2"	6"	1'-0"	6"	1'-0"
#7	5 1/4"	7"	1'-2"	7"	1'-2"
#8	6"	8"	1'-4"	8"	1'-4"

ALL GRADES OF STEEL
D = FINISHED INSIDE BEND Ø
db = NOMINAL BAR DIAMETER

STIRRUP & TIE HOOKS

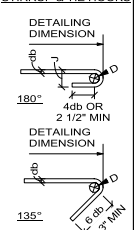

MIN D = 4 db FOR #3 THROUGH #5

4 S501 CONC REINF HOOK SCHEDULE

NO SCALE

SCALE: Ⓐ 1 0 1 2 3 SCALE OF FEET

PROFESSIONAL ENGINEER LICENSED 17126 STATE OF IDAHO PAUL J. HAUSER
May 17, 2024

DESIGNED: CDT	SUB SHEET NO.	TITLE OF SHEET	DRAWING NO. 194
DRAWN: DJM/CDT	S501	SCHEDULES AND TYPICAL DETAILS	187126
TECH REVIEW: PJH			PMIS/PKG NO. 314972
DATE: 05/23/2024		MIIN MAINTENANCE BUILDING MINIDOKA NATIONAL HISTORIC SITE	SHEET 38 OF 82

5/16/2024 11:20:17 AMAutodesk Docs://2023-360 NPS MIIN Rehab DD-CD/22037 NPS MIIN JVA Structural S24.rvt

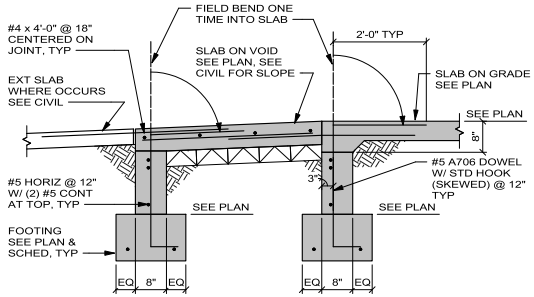

5 S502 SECTION
SCALE Ⓐ

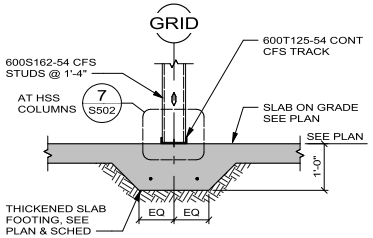

6 S502 SECTION
SCALE Ⓐ

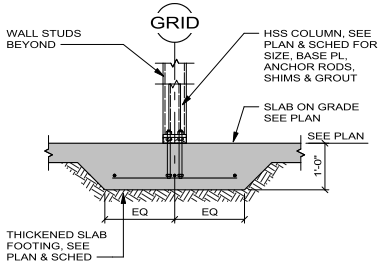

7 S502 SECTION
SCALE Ⓐ

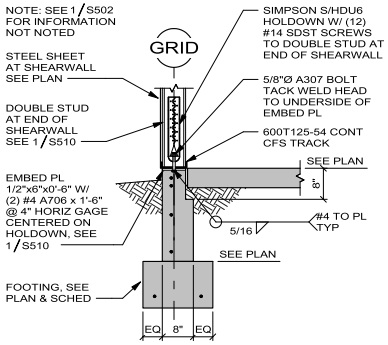

8 S502 SECTION
SCALE Ⓐ

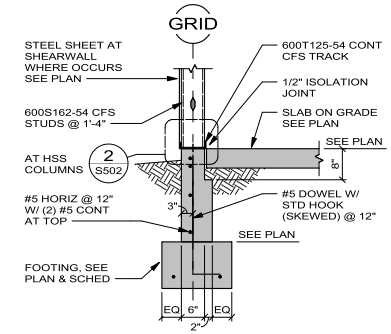

1 S502 SECTION
SCALE Ⓐ

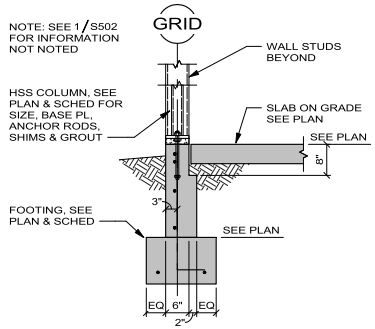

2 S502 SECTION
SCALE Ⓐ

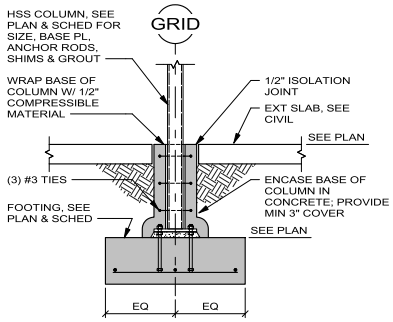

3 S502 SECTION
SCALE Ⓐ

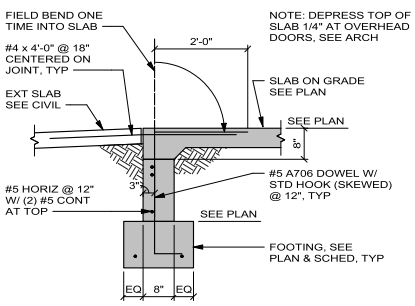

4 S502 SECTION
SCALE Ⓐ

SCALE: Ⓐ 8 0 8 16
SCALE OF FEET

PROFESSIONAL ENGINEER LICENSED 17126 STATE OF IDAHO PAUL J HAUSER
May 17, 2024

DESIGNED: CDT	SUB SHEET NO.	TITLE OF SHEET	DRAWING NO. 194
CADD DJM/CDT	S502	FOUNDATION DETAILS	187126
TECH REVIEW: PJH			PMIS/PKG NO. 314972
DATE: 05/23/2024		MIIN MAINTENANCE BUILDING MINIDOKA NATIONAL HISTORIC SITE	SHEET 39 OF 82

5/16/2024 11:20:17 AMAutodesk Docs://2023-360 NPS MIIN Rehab DD-CD/22037 NPS MIIN JVA Structural S24.rvt

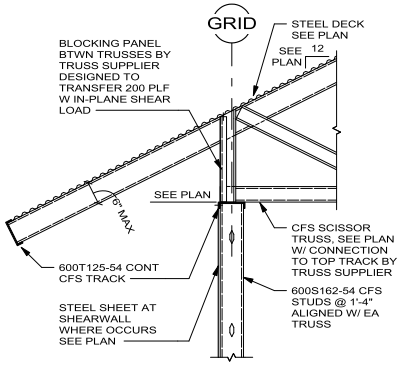

5 S503 SECTION
SCALE Ⓐ

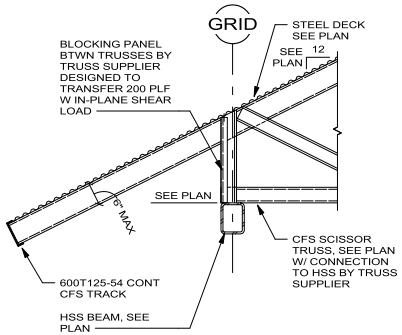

6 S503 SECTION
SCALE Ⓐ

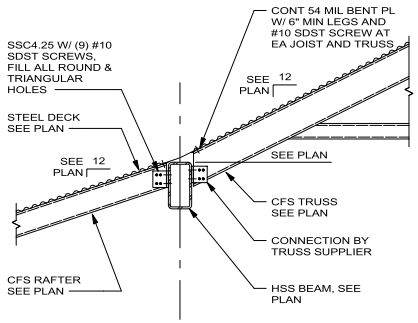

7 S503 SECTION
SCALE Ⓐ

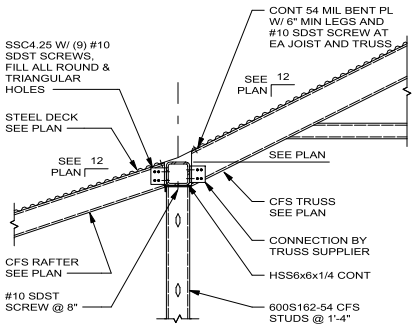

8 S503 SECTION
SCALE Ⓐ

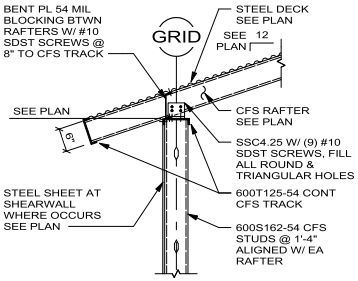

1 S503 SECTION
SCALE Ⓐ

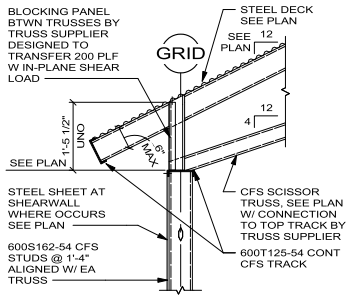

2 S503 SECTION
SCALE Ⓐ

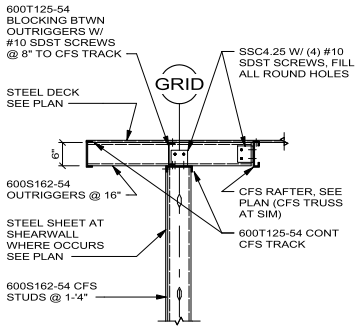

3 S503 SECTION
SCALE Ⓐ

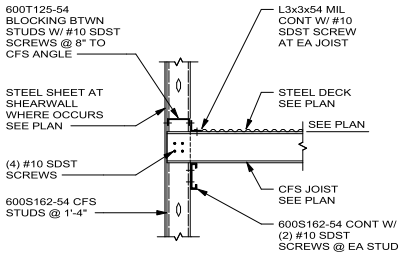

4 S503 SECTION
SCALE Ⓐ

SCALE: Ⓐ 8 0 8 16
SCALE OF FEET

PROFESSIONAL ENGINEER LICENSED 17126 STATE OF IDAHO PAUL J. HAUSER
May 17, 2024

DESIGNED: CDT	SUB SHEET NO.	TITLE OF SHEET	DRAWING NO.
CADD DJM/CDT	S503	FRAMING DETAILS	194 / 187126
TECH REVIEW: PJH			PMIS/PKG NO. 314972
DATE: 05/23/2024		MIIN MAINTENANCE BUILDING MINIDOKA NATIONAL HISTORIC SITE	SHEET 40 OF 82

5/16/2024 11:20:18 AMAutodesk Docs://2023-360 NPS MIIN Rehab DD-CD/22037 NPS MIIN JVA Structural S24.rvt

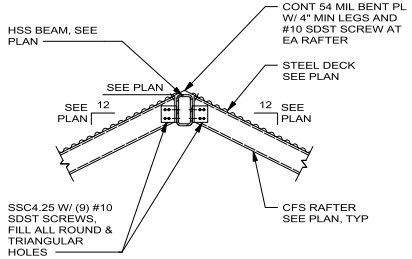

5 S504 SECTION
SCALE Ⓐ

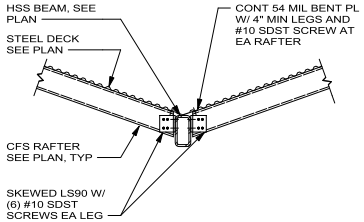

6 S504 SECTION
SCALE Ⓐ

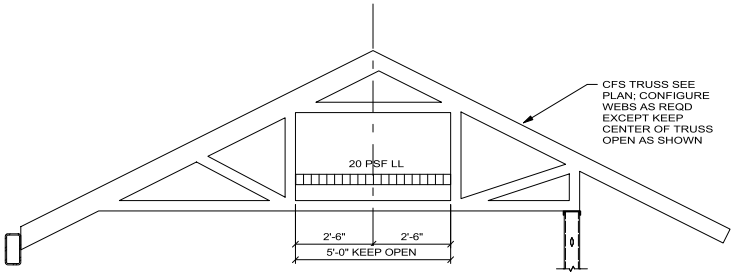

7 S504 TYPICAL SHOP TRUSS ELEVATION
SCALE Ⓑ

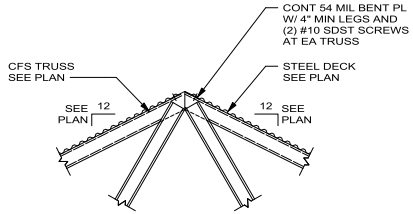

1 S504 SECTION
SCALE Ⓐ

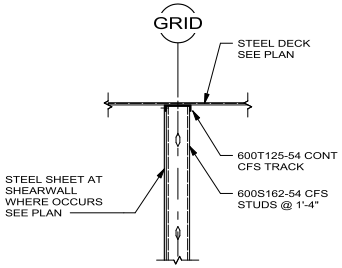

2 S504 SECTION
SCALE Ⓐ

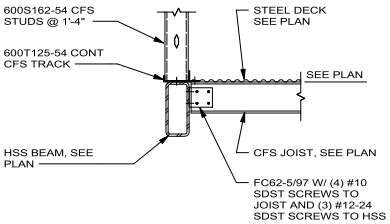

3 S504 SECTION
SCALE Ⓐ

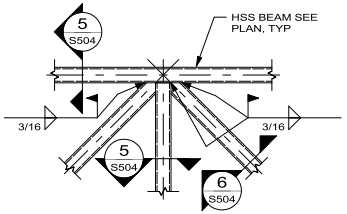

4 S504 PLAN DETAIL
SCALE Ⓐ

SCALE: Ⓑ 2 0 2 4 SCALE OF FEET

SCALE: Ⓐ 1 0 1 2 3 SCALE OF FEET

PROFESSIONAL ENGINEER LICENSED 17126 STATE OF IDAHO PAUL J HAUSER
May 17, 2024

DESIGNED: CDT	SUB SHEET NO.	TITLE OF SHEET	DRAWING NO. 194 / 187126
DRAWN: DJM/CDT	S504	FRAMING DETAILS	PMIS/PKG NO. 314972
TECH REVIEW: PJH		MIIN MAINTENANCE BUILDING MINIDOKA NATIONAL HISTORIC SITE	SHEET 41 OF 82
DATE: 05/23/2024			

5/16/2024 11:20:18 AMAutodesk Docs://2023-360 NPS MIIN Rehab DD-CD/22037 NPS MIIN JVA Structural S24.rvt

5/16/2024 11:20:18 AMAutodesk Docs://2023-360 NPS MIIN Rehab DD-CD/22037 NPS MIIN JVA Structural S24.rvt

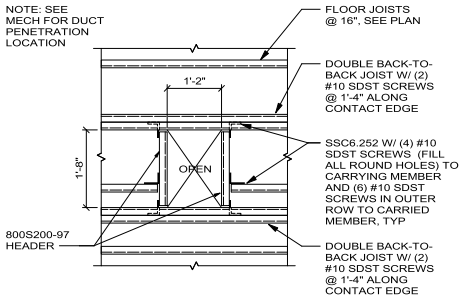

5 S505 PLAN DETAIL
SCALE Ⓐ

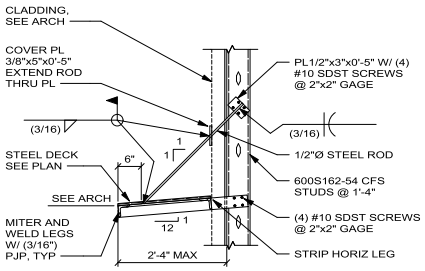

1 S505 SECTION
SCALE Ⓐ

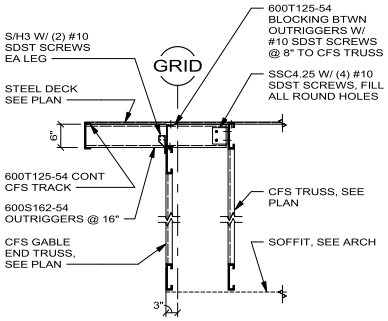

2 S505 SECTION
SCALE Ⓐ

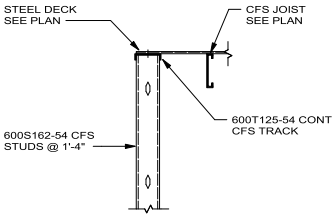

3 S505 SECTION
SCALE Ⓐ

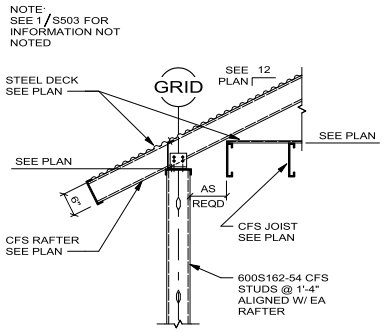

4 S505 SECTION
SCALE Ⓐ

SCALE: Ⓐ 1 0 1 2 3 SCALE OF FEET

PROFESSIONAL ENGINEER LICENSED 17126 STATE OF IDAHO PAUL J. HAUSER
May 17, 2024

DESIGNED: CDT	SUB SHEET NO.	TITLE OF SHEET	DRAWING NO.
CADD DJM/CDT	S505	FRAMING DETAILS	194 / 187126
TECH REVIEW: PJH			PMIS/PKG NO. 314972
DATE: 05/23/2024		MIIN MAINTENANCE BUILDING MINIDOKA NATIONAL HISTORIC SITE	SHEET 42 OF 82

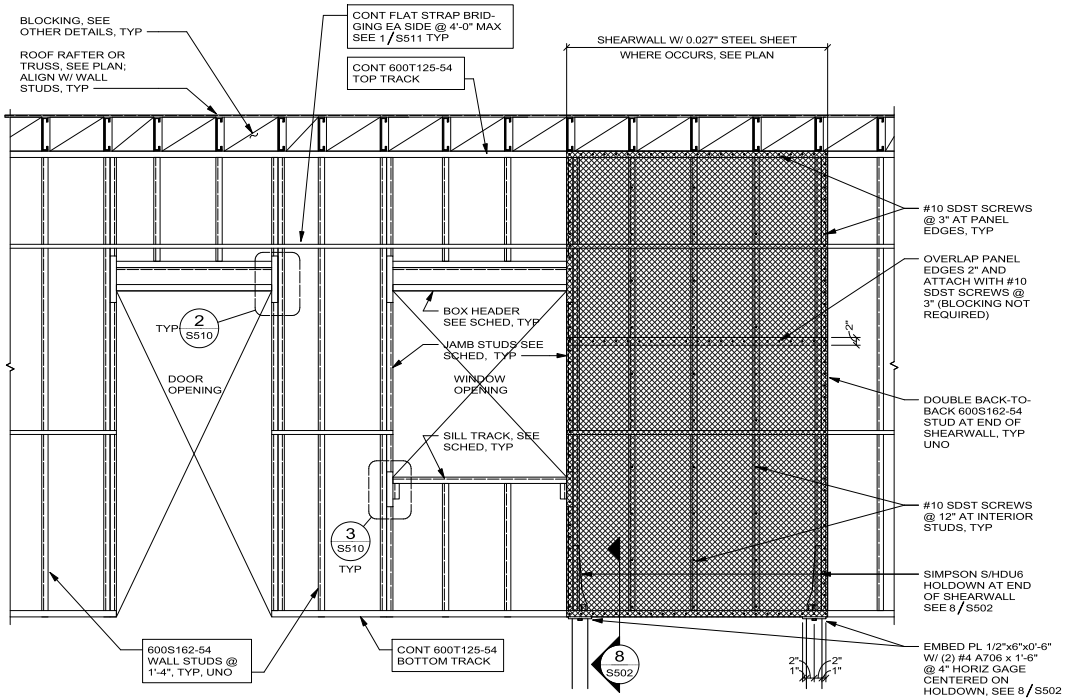

COLD-FORMED STEEL FRAMED WALL OPENING ASSEMBLIES				
OPENING WIDTH	JAMB STUDS	BOX HEADER	SILL	COMMENTS
<5'-4"	(2) 600S162-54	BOX BEAM: (2) 600T125-54 + (2) 600S162-54 (VERT)	(1) 600T125-54	
5'-5" TO 10'-0"	(2) 600S162-97	BOX BEAM: (2) 600T125-54 + (2) 800S162-97 (VERT)	N/A	

TYPICAL BOX BEAM HEADER

ASSEMBLY AS NOTED IN SCHEDULE. FASTEN W/ #10 SDST SCREWS @ 12" EACH FLANGE, AS SHOWN

NOTES:
- THIS DETAIL IS APPLICABLE UNLESS OTHERWISE NOTED IN SECTIONS
- SEE GENERAL NOTES FOR CONNECTION OF TRACKS TO STUDS AND FOR CONNECTION OF TRACKS TO CONCRETE OR STEEL SUPPORTS

1 S510 TYP COLD-FORMED STEEL WALL FRAMING
NO SCALE

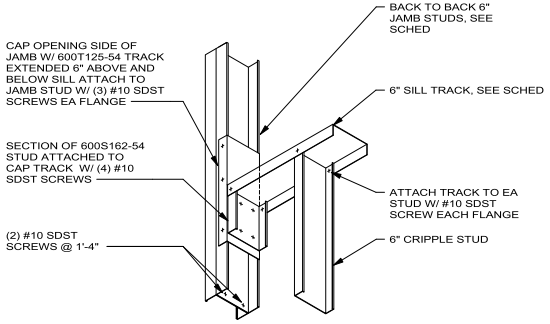

3 S510 TYP SILL TO JAMB CONNECTION
NO SCALE

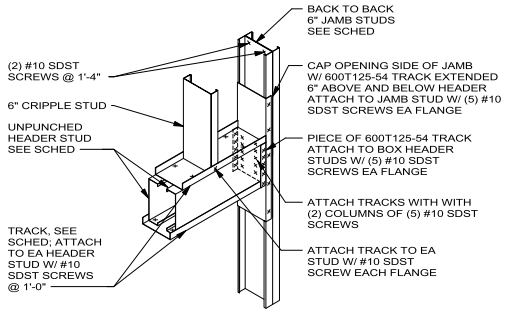

2 S510 TYP BOX HEADER CONSTRUCTION
NO SCALE

PROFESSIONAL ENGINEER LICENSED 17126 STATE OF IDAHO PAUL J HAUSER
May 17, 2024

DESIGNED:	SUB SHEET NO.	TITLE OF SHEET	DRAWING NO.
CDT	S510	TYPICAL COLD-FORMED STEEL DETAILS	194 / 187126
DRAWN: DJM/CDT			PMIS/PKG NO. 314972
TECH REVIEW: PJH		MIIN MAINTENANCE BUILDING MINIDOKA NATIONAL HISTORIC SITE	SHEET 43 OF 82
DATE: 05/23/2024			

5/16/2024 11:20:19 AMAutodesk Docs://2023-360 NPS MIIN Rehab DD-CD/22037 NPS MIIN JVA Structural S24.rvt

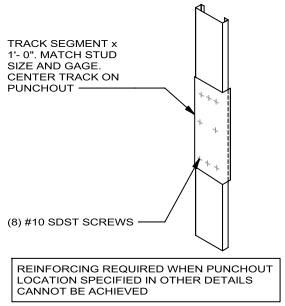

4 S511 TYP STUD PUNCHOUT REINFORCING
NO SCALE

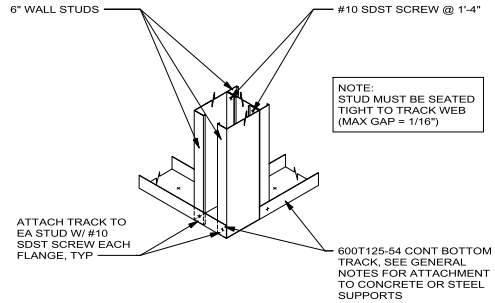

5 S511 TYP WALL CORNER
NO SCALE

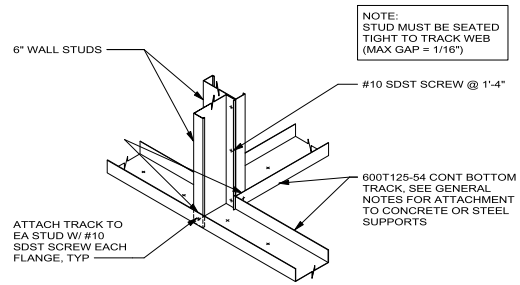

6 S511 TYP WALL INTERSECTION
NO SCALE

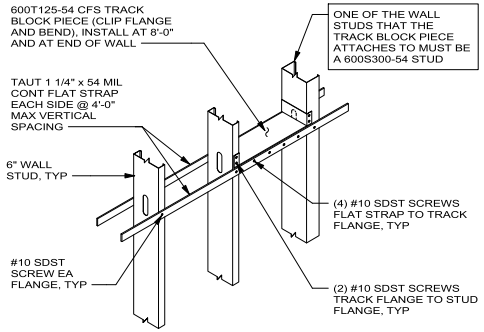

1 S511 TYP WALL BRIDGING
NO SCALE

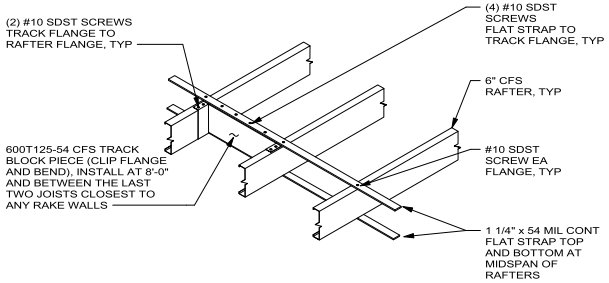

2 S511 TYP ROOF RAFTER AND FLOOR JOIST BRIDGING
NO SCALE

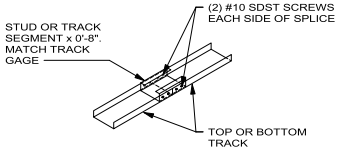

3 S511 TYP HORIZ TRACK SPLICE
NO SCALE

PROFESSIONAL ENGINEER LICENSED 17126 STATE OF IDAHO PAUL J HAUSER
May 17, 2024

DESIGNED: CDT	SUB SHEET NO. S511	TITLE OF SHEET: TYPICAL COLD-FORMED STEEL DETAILS	DRAWING NO. 194 / 187126
DRAWN: DJM/CDT			PMIS/PKG NO. 314972
TECH REVIEW: PJH		MIIN MAINTENANCE BUILDING MINIDOKA NATIONAL HISTORIC SITE	SHEET 44 OF 82
DATE: 05/23/2024			

5/16/2024 11:20:19 AMAutodesk Docs://2023-360 NPS MIIN Rehab DD-CD/22037 NPS MIIN JVA Structural S24.rvt

MECHANICAL NOTES

I. GENERAL

- ALL WORK SHALL BE IN ACCORDANCE WITH SMACNA STANDARDS AND SPECIFICATIONS, AND AUTHORITY HAVING JURISDICTION.
- THESE DRAWINGS ARE DIAGRAMMATIC IN NATURE AND NOT INTENDED TO SHOW ALL TRANSITIONS, OFFSETS, ETC. CONTRACTOR SHALL FIELD VERIFY EXISTING CONDITIONS AND PROVIDE ALL NECESSARY FITTINGS TO COMPLETE THE INTENT OF THE DRAWINGS. ANY DISCREPANCIES BETWEEN DRAWINGS AND FIELD CONDITIONS SHALL BE REPORTED TO THE CONTRACTING OFFICER FOR RESOLUTION. PENDING WRITTEN APPROVAL BY CONTRACTING OFFICER, CONTRACTOR MAY LOCATE MECHANICAL EQUIPMENT DIFFERENTLY THAN SHOWN ON DRAWINGS DUE TO CONFLICTS, AS LONG AS FUNCTION AND/OR APPEARANCE ARE NOT AFFECTED.
- COORDINATE SPACE REQUIREMENTS, SUPPORTS, AND INSTALLATION OF MECHANICAL WORK, WHICH ARE INDICATED DIAGRAMMATICALLY ON THE DRAWINGS. FOLLOW ROUTING SHOWN FOR PIPES AND DUCTS AS CLOSELY AS PRACTICABLE; PLACE RUNS PARALLEL WITH LINES OF BUILDING. UTILIZE SPACES EFFICIENTLY TO MAXIMIZE ACCESSIBILITY FOR OTHER INSTALLATIONS, FOR MAINTENANCE, AND FOR REPAIRS.
- COMPLY WITH MANUFACTURER'S INSTRUCTIONS INCLUDING EACH STEP IN SEQUENCE. SHOULD MANUFACTURERS' INSTRUCTIONS CONFLICT WITH THE DRAWINGS REQUEST CLARIFICATION FROM THE CONTRACTING OFFICER BEFORE PROCEEDING.
- DUCT SIZES ARE INSIDE DIMENSION.
- CONTRACTOR SHALL REVIEW THESE DOCUMENTS CAREFULLY. CONTRACTOR SHALL CONTACT THE CONTRACTING OFFICER, FOR RESOLUTION OF ANY DISCREPANCIES, OMISSIONS, OR CLARIFICATIONS, BEFORE BID DATE. IN THE EVENT THAT AN INTERPRETATION OF BID DOCUMENTS IS NECESSARY AFTER THE BID DATE, THE DECISION OF THE CONTRACTING OFFICER SHALL BE FINAL AND BINDING.
- PRODUCT DELIVERY, STORAGE, AND HANDLING: PROVIDE EQUIPMENT AND PERSONNEL TO HANDLE PRODUCTS BY METHODS TO PREVENT DAMAGE. PROMPTLY INSPECT SHIPMENTS TO ENSURE THAT PRODUCTS ARE UNDAMAGED. STORE AND PROTECT PRODUCTS IN ACCORDANCE WITH MANUFACTURERS' INSTRUCTIONS.
- THE CONTRACTOR IS RESPONSIBLE FOR THE COSTS OF ALL CHANGE ORDERS, WHICH THE CONTRACTING OFFICER HAS NOT APPROVED IN WRITING PRIOR TO THE EXECUTION OF THE ASSOCIATED WORK.
- IN THE CASE OF A CONFLICT, UNLESS OTHERWISE NOTED, KEYNOTES ON MECHANICAL PLANS SHALL SUPERCEDE ANY GENERAL NOTES ON THE PLANS.
- CONTRACTOR SHALL COORDINATE WORK WITH OTHER TRADES AND NOTIFY THE CONTRACTING OFFICER IF ANY CONFLICTS OCCUR.
- THERMOSTAT LOCATIONS TO BE COORDINATED WITH CONTRACTING OFFICER. THERMOSTAT HEIGHTS SHALL BE 48" AFF TO MATCH LIGHTSWITCH HEIGHTS AND INSTALLED TO MEET ICC A117.1. CONTRACTOR TO CALIBRATE ALL THERMOSTATS SHOWN ON THIS PLAN.
- PROVIDE VOLUME DAMPERS AT ALL DIFFUSER TAKEOFFS.
- ALL TAKEOFFS, RUNOUTS, AND FLEX DUCTWORK TO DIFFUSERS SHALL BE THE SAME SIZE AS DIFFUSER INLET UNLESS OTHERWISE NOTED.
- THERMOSTAT CONTROL LINES SHALL BE SUPPORTED AT INTERVALS NOT TO EXCEED 4'-0".
- PROVIDE EXTERNAL INSULATION ON ALL NEW RIGID ROUND DUCTWORK.
- PROVIDE ACCESS DOORS IN DUCTWORK AS REQUIRED FOR ACCESS TO FIRE DAMPERS, FIRE/SMOKE DAMPERS, OR ANY OTHER MECHANICAL EQUIPMENT REQUIRING MAINTENANCE OF SERVICE.
- ALL PIPE AND DUCT PENETRATIONS THROUGH RATED WALLS SHALL BE SEALED PER 2021 IBC.

ABBREVIATIONS

AD	ACCESS DOOR
AFF	ABOVE FINISHED FLOOR
AP	ACCESS PANEL
AUX.	AUXILIARY
AVG	AVERAGE
BDD	BACKDRAFT DAMPER
BTUH	BRITISH THERMAL UNIT PER HOUR
CFM	CUBIC FEET PER MINUTE
CW	COLD WATER
DB	DRY BULB
DN	DOWN
D	DRAIN
(E)	EXISTING
EA	EXHAUST AIR
EAT	ENTERING AIR TEMPERATURE
E.C.	ELECTRICAL CONTRACTOR
EWT	ENTERING WATER TEMP
F	FAHRENHEIT
FCO	FLOOR CLEANOUT
FD	FLOOR DRAIN, FIRE DAMPER
FLA	FULL LOAD AMPS
FPM	FEET PER MINUTE
FS	FLOW SWITCH
F/S	FIRE SMOKE DAMPER
FT	FEET
G.C.	GENERAL CONTRACTOR
GCO	GRADE CLEANOUT
GPM	GALLONS PER MINUTE
HB	HOSE BIBB
ID	INSIDE DIAMETER
IN	INCHES
KW	KILOWATT
LAT	LEAVING AIR TEMPERATURE
M	MOTORIZED DAMPER
M.C.	MECHANICAL CONTRACTOR
NA	NOT APPLICABLE
NC	NORMALLY CLOSED
NIC	NOT IN CONTRACT
NO	NORMALLY OPEN
OA	OUTSIDE AIR
OAT	OUTSIDE AIR TEMPERATURE
RPM	REVOLUTIONS PER MINUTE
SA	SUPPLY AIR
SP	STATIC PRESSURE
S	SINK
SS	SINK
T&P	TYPICAL
TYP.	TEMPERATURE AND PRESSURE
U	URINAL
UC	UNDER CUT DOOR
V	VENT, VOLTS
VD	VOLUME DAMPER
WB	WET BULB
W	WATT, WASTE
W/	WITH
W/O	WITHOUT
ESP	EXTERNAL STATIC PRESSURE
RL	REFRIGERANT LIQUID
RS	REFRIGERANT SUCTION
EFF	EFFICIENCY
EER	ENERGY EFFICIENCY RATIO
SEER	SEASONAL ENERGY EFFICIENCY RATIO
HSPF	HEATING SEASONAL PERFORMANCE FACTOR

VENTILATION AND AIR CONDITIONING SYMBOLS

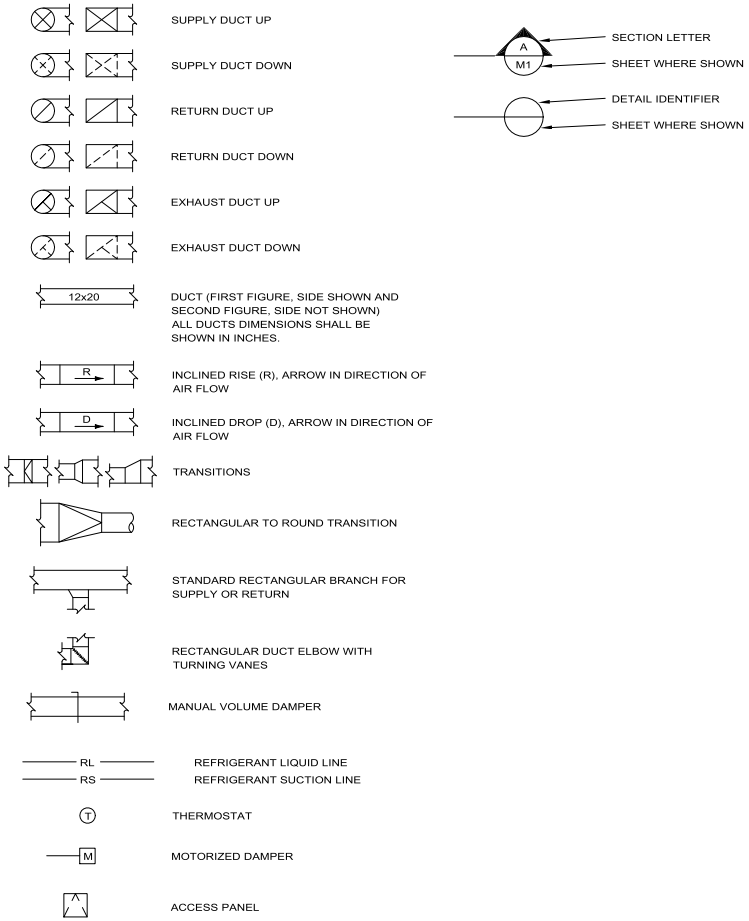

EQUIPMENT STORAGE VENTILATION CALCULATION

ROOM NAME	ROOM NUMBER	AREA [SF FT]	REQUIRED CFM/SF	REQUIRED TOTAL CFM	PROVIDED CFM
EQUIPMENT STORAGE (CONTINUOUS)	109	398	0.05	20	25
EQUIPMENT STORAGE (DEMAND RATE)	109	398	0.75	299	300

*FOR WHEN CO OR NO2 SETPOINTS ARE EXCEEDED.

OUTSIDE AIR CALCULATION (CALCULATIONS BASED ON IMC TABLE 403.3)

ROOM NAME	ROOM #	ROOM TYPE	SQUARE FEET	OCCUPANT LOAD #/1000 SF	OA CFM/ PERSON	OA CFM/SF	AIR DIST. EFFECTIVENESS	OA PERCENTAGE	OA PROVIDED CFM	OA REQUIRED CFM
		PER TABLE 6-1								
Flex Workspace (FC-1)	100	Office spaces	314	5	5	0.06	0.8	25%	50	33.4
Flex Workspace (FC-2)	100	Office spaces	193	5	5	0.06	0.8	25%	25	20.5
Office	101	Office spaces	101	5	5	0.06	0.8	25%	15	10.7
Office	102	Office spaces	101	5	5	0.06	0.8	25%	15	10.7
Hall	104	Main entry lobbies	98	10	5	0.06	0.8	25%	15	13.5
Break Room	105	Breakroom	126	3 PEOPLE	5	0.12	0.8	25%	50	36.8
									170	131.3

PROFESSIONAL ENGINEER LICENSED 15298 5/23/24 STATE OF IDAHO DENISE M. OHLE

DESIGNED: AT / MK	SUB SHEET NO.	TITLE OF SHEET	DRAWING NO.
CADD: AT / MK	M001	MECHANICAL COVER SHEET	194
TECH REVIEW: AZ			187126
DATE: 05/23/2024		MIIN MAINTENANCE BUILDING	PMIS/PKG NO. 314972
		MINIDOKA NATIONAL HISTORIC SITE	SHEET 45 OF 82

5/21/2024 7:06:38 AM Autodesk Docs://2023-360 NPS MIIN Rehab DD-CD/2023-360 NPS MIIN Rehab DD-CD - v24 - BIM360 - MP.rvt

COM*check* Software Version COMcheckWeb

Mechanical Compliance Certificate

Project Information

Energy Code:	2018 IECC
Project Title:	MIIN
Location:	Jerome, Idaho
Climate Zone:	5b
Project Type:	New Construction

Construction Site: Owner/Agent: Designer/Contractor:

Additional Efficiency Package(s)

Credits: 1.0 Required 0.0 Proposed

Mechanical Systems List

Quantity	System Type & Description
1	CU-1 (Unknown): VRF Condensing Unit, Air Cooled Heat Pump Heating Mode: Capacity = 32 kBtu/h, No minimum efficiency requirement applies Cooling Mode: Capacity = 27 kBtu/h, No minimum efficiency requirement applies Fan System: None
1	CU-2 (Unknown): VRF Condensing Unit, Air Cooled Heat Pump Heating Mode: Capacity = 28 kBtu/h, No minimum efficiency requirement applies Cooling Mode: Capacity = 18 kBtu/h, No minimum efficiency requirement applies Fan System: None
1	FCU-1 (Single Zone): Heating: 1 each - Other, Electric, Capacity = 27 kBtu/h No minimum efficiency requirement applies Cooling: 1 each - VRF Zone Fan Unit, Capacity = 27 kBtu/h, Unknown Economizer No minimum efficiency requirement applies Fan System: FAN SYSTEM 1 -- Compliance (Motor nameplate HP and fan efficiency method) : Passes Fans: FAN 1 Supply, Constant Volume, 875 CFM, 0.3 motor nameplate hp, 0.0 fan efficiency grade, 0.0 total fan efficiency, 0.0 design fan efficiency , fan exception: Single fan <= 5HP
1	FCU-2 (Single Zone): Heating: 1 each - Other, Electric, Capacity = 17 kBtu/h No minimum efficiency requirement applies Cooling: 1 each - VRF Zone Fan Unit, Capacity = 18 kBtu/h, Unknown Economizer No minimum efficiency requirement applies Fan System: FAN SYSTEM 2 -- Compliance (Motor nameplate HP and fan efficiency method) : Passes Fans: FAN 2 Supply, Constant Volume, 675 CFM, 0.3 motor nameplate hp, 0.0 fan efficiency grade, 0.0 total fan efficiency, 0.0 design fan efficiency , fan exception: Single fan <= 5HP
1	EWH-1: Electric Storage Water Heater, Capacity: 80 gallons w/ Circulation Pump No minimum efficiency requirement applies

Mechanical Compliance Statement

Compliance Statement: The proposed mechanical design represented in this document is consistent with the building plans, specifications, and other calculations submitted with this permit application. The proposed mechanical systems have been designed to meet the 2018 IECC requirements in COM*check* Version COMcheckWeb and to comply with any applicable mandatory requirements listed in the Inspection Checklist.

Matt Krueger - Project Engineer	Matt Krueger Digitally signed by Matt Krueger DN: cn=C=US, E=mkrueger@kcbrand.com, O=KCB, CN=Matt Krueger Date: 2024.05.20 15:35:02-06'00'	05/20/2024
Name - Title	Signature	Date

COM*check* Software Version COMcheckWeb

Inspection Checklist

Energy Code: 2018 IECC

Requirements: 100.0% were addressed directly in the COM*check* software

Text in the "Comments/Assumptions" column is provided by the user in the COMcheck Requirements screen. For each requirement, the user certifies that a code requirement will be met and how that is documented, or that an exception is being claimed. Where compliance is itemized in a separate table, a reference to that table is provided.

Section # & Req.ID	Plan Review	Complies?	Comments/Assumptions
C103.2 [PR2][1]	Plans, specifications, and/or calculations provide all information with which compliance can be determined for the mechanical systems and equipment and document where exceptions to the standard are claimed. Load calculations per acceptable engineering standards and handbooks.	☐Complies ☐Does Not ☐Not Observable ☐Not Applicable	Requirement will be met. **Location on plans/spec:** M Sheets, Div 23 Specifications
C103.2 [PR3][1]	Plans, specifications, and/or calculations provide all information with which compliance can be determined for the service water heating systems and equipment and document where exceptions to the standard are claimed. Hot water system sized per manufacturer's sizing guide.	☐Complies ☐Does Not ☐Not Observable ☐Not Applicable	Requirement will be met. **Location on plans/spec:** P Sheets, Division 22 Specifications
C406 [PR9][1]	Plans, specifications, and/or calculations provide all information with which compliance can be determined for the additional energy efficiency package options.	☐Complies ☐Does Not ☐Not Observable ☐Not Applicable	Requirement will be met.

Additional Comments/Assumptions:

1	High Impact (Tier 1)	2	Medium Impact (Tier 2)	3	Low Impact (Tier 3)

PROFESSIONAL ENGINEER LICENSED 15298 5/23/24 STATE OF IDAHO DENISE M. OHLE

DESIGNED: AT / MK	SUB SHEET NO.	TITLE OF SHEET	DRAWING NO.
CADD: AT / MK	M002	MECHANICAL COMCHECK	194 / 187126
TECH REVIEW: AZ		MIIN MAINTENANCE BUILDING	PMIS/PKG NO. 314972
DATE: 05/23/2024		MINIDOKA NATIONAL HISTORIC SITE	SHEET 46 OF 82

5/21/2024 7:06:41 AM Autodesk Docs://2023-360 NPS MIIN Rehab DD-CD/2023-360 NPS MIIN Rehab DD-CD - v24 - BIM360 - MP.rvt

Section # & Req.ID	Footing / Foundation Inspection	Complies?	Comments/Assumptions
C403.12.2 , C403.12.3 [FO9][3]	Snow/ice melting system and freeze protection systems have sensors and controls configured to limit service for pavement temperature and outdoor temperature. future connection to controls.	☐Complies ☐Does Not ☐Not Observable ☐Not Applicable	**Exception:** Requirement does not apply. **Location on plans/spec:** No such systems are present

Additional Comments/Assumptions:

1	High Impact (Tier 1)	2	Medium Impact (Tier 2)	3	Low Impact (Tier 3)

Section # & Req.ID	Plumbing Rough-In Inspection	Complies?	Comments/Assumptions
C404.5, C404.5.1, C404.5.2 [PL6][3]	Heated water supply piping conforms to pipe length and volume requirements. Refer to section details.	☐Complies ☐Does Not ☐Not Observable ☐Not Applicable	Requirement will be met.
C404.6.1, C404.6.2 [PL3][3]	Automatic time switches installed to automatically switch off the recirculating hot-water system or heat trace.	☐Complies ☐Does Not ☐Not Observable ☐Not Applicable	Requirement will be met.
C404.6.3 [PL7][3]	Pumps that circulate water between a heater and storage tank have controls that limit operation from startup to <= 5 minutes after end of heating cycle.	☐Complies ☐Does Not ☐Not Observable ☐Not Applicable	**Exception:** Requirement does not apply. **Location on plans/spec:** No such systems are present
C404.7 [PL8][3]	Demand recirculation water systems have controls that start the pump upon receiving a signal from the action of a user of a fixture or appliance and limits the temperature of the water entering the cold-water piping to 104°F.	☐Complies ☐Does Not ☐Not Observable ☐Not Applicable	**Exception:** Requirement does not apply. **Location on plans/spec:** No such systems are present

Additional Comments/Assumptions:

1	High Impact (Tier 1)	2	Medium Impact (Tier 2)	3	Low Impact (Tier 3)

Section # & Req.ID	Mechanical Rough-In Inspection	Complies?	Comments/Assumptions
C402.2.6 [ME41][3]	Thermally ineffective panel surfaces of sensible heating panels have insulation >= R-3.5.	☐Complies ☐Does Not ☐Not Observable ☐Not Applicable	**Exception:** Requirement does not apply. **Location on plans/spec:** No such systems are present
C403.11.3 [ME61][3]	HVAC piping insulation insulated in accordance with Table C403.11.3. Insulation exposed to weather is protected from damage and is provided with shielding from solar radiation.	☐Complies ☐Does Not ☐Not Observable ☐Not Applicable	Requirement will be met. **Location on plans/spec:** HVAC Pipe Insulation spec
C403.8.1 [ME65][3]	HVAC fan systems at design conditions do not exceed allowable fan system motor nameplate hp or fan system bhp.	☐Complies ☐Does Not ☐Not Observable ☐Not Applicable	Requirement will be met. *See the Mechanical Systems list for values.*
C403.8.3 [ME117][2]	Fans have efficiency grade (FEG) >= 67. The total efficiency of the fan at the design point of operation <= 15% of maximum total efficiency of the fan.	☐Complies ☐Does Not ☐Not Observable ☐Not Applicable	**Exception:** Single fans with motor nameplate horsepower of = 5 hp.
C403.8.4 [ME142][2]	Motors for fans that are not less than 1/12 hp and less than 1 hp are electronically commutated motors or have a minimum motor efficiency of 70 percent. These motors have the means to adjust motor speed.	☐Complies ☐Does Not ☐Not Observable ☐Not Applicable	Requirement will be met. **Location on plans/spec:** VRF Spec
C403.8.5 [ME143][2]	Each DX cooling system > 65 kBtu and chiller water/evaporative cooling system with fans > 1/4 hp are designed to vary the indoor fan airflow as a function of load and comply with detailed requirements of this section.	☐Complies ☐Does Not ☐Not Observable ☐Not Applicable	**Exception:** Requirement does not apply. **Location on plans/spec:** No such systems are present
C403.12.1 [ME71][2]	Systems that heat outside the building envelope are radiant heat systems controlled by an occupancy sensing device or timer switch.	☐Complies ☐Does Not ☐Not Observable ☐Not Applicable	**Exception:** Requirement does not apply. **Location on plans/spec:** No such systems are present
C403.2.2 [ME59][1]	Natural or mechanical ventilation is provided in accordance with International Mechanical Code Chapter 4. Mechanical ventilation has capability to reduce outdoor air supply to minimum per IMC Chapter 4.	☐Complies ☐Does Not ☐Not Observable ☐Not Applicable	Requirement will be met.
C403.7.1 [ME59][1]	Demand control ventilation provided for spaces >500 ft2 and >25 people/1000 ft2 occupant density and served by systems with air side economizer, auto modulating outside air damper control, or design airflow >3,000 cfm.	☐Complies ☐Does Not ☐Not Observable ☐Not Applicable	**Exception:** Requirement does not apply.
C403.7.2 [ME115][3]	Enclosed parking garage ventilation has automatic contaminant detection and capacity to stage or modulate fans to 50% or less of design capacity.	☐Complies ☐Does Not ☐Not Observable ☐Not Applicable	**Exception:** Requirement does not apply.
C403.7.6 [ME141][3]	HVAC systems serving guestrooms in Group R-1 buildings with > 50 guestrooms: Each guestroom is provided with controls that automatically manage temperature setpoint and ventilation (see sections C403.7.6.1 and C403.7.6.2).	☐Complies ☐Does Not ☐Not Observable ☐Not Applicable	**Exception:** Requirement does not apply. **Location on plans/spec:** Building has less than 50 guestrooms.

1	High Impact (Tier 1)	2	Medium Impact (Tier 2)	3	Low Impact (Tier 3)

PROFESSIONAL ENGINEER LICENSED 15298 5/23/24 STATE OF IDAHO DENISE M. OHLE

DESIGNED: AT / MK CADD: AT / MK TECH REVIEW: AZ DATE: 05/23/2024	SUB SHEET NO. M003	TITLE OF SHEET MECHANICAL COMCHECK MIIN MAINTENANCE BUILDING MINIDOKA NATIONAL HISTORIC SITE	DRAWING NO. 194 187126 PMIS/PKG NO. 314972 SHEET 47 OF 82

5/21/2024 7:06:44 AM Autodesk Docs://2023-360 NPS MIIN Rehab DD-CD/2023-360 NPS MIIN Rehab DD-CD - v24 - BIM360 - MP.rvt

Section # & Req.ID	Mechanical Rough-In Inspection	Complies?	Comments/Assumptions
C403.7.4 [ME57][1]	Exhaust air energy recovery on systems meeting Table C403.7.4(1) and C403.7.4(2).	☐Complies ☐Does Not ☐Not Observable ☐Not Applicable	**Exception:** Requirement does not apply.
C403.7.5 [ME116][1]	Kitchen exhaust systems comply with replacement air and conditioned supply air limitations, and satisfy hood rating requirements and maximum exhaust rate criteria.	☐Complies ☐Does Not ☐Not Observable ☐Not Applicable	**Exception:** Requirement does not apply. **Location on plans/spec:** No such systems are present
C403.11.1, C403.11.2 [ME60][1]	HVAC ducts and plenums insulated in accordance with C403.11.1 and constructed in accordance with C403.11.2, verification may need to occur during Foundation Inspection.	☐Complies ☐Does Not ☐Not Observable ☐Not Applicable	Requirement will be met.
C403.4.3.3.2 [ME121][1]	Closed-circuit cooling tower within heat pump loop have either automatic bypass valve or lower leakage positive closure dampers. Open-circuit tower within heat pump loop have automatic valve to bypass all heat pump water flow around the tower. Open- or closed-circuit cooling towers used in conjunction with a separate heat exchanger have heat loss by shutting down the circulation pump on the cooling tower loop. Open- or closed circuit cooling towers have a separate heat exchanger to isolate the cooling tower from the heat pump loop, and heat loss is controlled by shutting down the circulation pump on the cooling tower loop.	☐Complies ☐Does Not ☐Not Observable ☐Not Applicable	**Exception:** Requirement does not apply. **Location on plans/spec:** No such systems are present
C403.4.1.4 [ME63][2]	Heating for vestibules and air curtains with integral heating include automatic controls that shut off the heating system when outdoor air temperatures > 45F. Vestibule heating and cooling systems controlled by a thermostat in the vestibule with heating setpoint <= 60F and cooling setpoint >= 80F.	☐Complies ☐Does Not ☐Not Observable ☐Not Applicable	**Exception:** Requirement does not apply. **Location on plans/spec:** No such systems are present
C408.2.2.1 [ME53][1]	Air outlets and zone terminal devices have means for air balancing.	☐Complies ☐Does Not ☐Not Observable ☐Not Applicable	Requirement will be met.
C403.5, C403.5.1, C403.5.2 [ME123][1]	Refrigerated display cases, walk-in coolers or walk-in freezers served by remote compressors and remote condensers not located in a condensing unit, have fan-powered condensers that comply with Sections C403.5.1 and refrigeration compressor systems that comply with C403.5.2..	☐Complies ☐Does Not ☐Not Observable ☐Not Applicable	**Exception:** Requirement does not apply. **Location on plans/spec:** No such systems are present

Additional Comments/Assumptions:

1 High Impact (Tier 1) | 2 Medium Impact (Tier 2) | 3 Low Impact (Tier 3)

Section # & Req.ID	Rough-In Electrical Inspection	Complies?	Comments/Assumptions
C405.6 [EL26][2]	Low-voltage dry-type distribution electric transformers meet the minimum efficiency requirements of Table C405.6.	☐Complies ☐Does Not ☐Not Observable ☐Not Applicable	Requirement will be met.
C405.7 [EL27][2]	Electric motors meet the minimum efficiency requirements of Tables C405.7(1) through C405.7(4). Efficiency verified through certification under an approved certification program or the equipment efficiency ratings shall be provided by motor manufacturer (where certification programs do not exist).	☐Complies ☐Does Not ☐Not Observable ☐Not Applicable	Requirement will be met.
C405.8.2, C405.8.2.1 [EL28][2]	Escalators and moving walks comply with ASME A17.1/CSA B44 and have automatic controls configured to reduce speed to the minimum permitted speed in accordance with ASME A17.1/CSA B44 or applicable local code when not conveying passengers.	☐Complies ☐Does Not ☐Not Observable ☐Not Applicable	**Exception:** Requirement does not apply.
C405.9 [EL29][2]	Total voltage drop across the combination of feeders and branch circuits <= 5%.	☐Complies ☐Does Not ☐Not Observable ☐Not Applicable	Requirement will be met.

Additional Comments/Assumptions:

1 High Impact (Tier 1) | 2 Medium Impact (Tier 2) | 3 Low Impact (Tier 3)

Section # & Req.ID	Final Inspection	Complies?	Comments/Assumptions
C303.3, C408.2.5.3 [FI8][1]	Furnished O&M manuals for HVAC systems within 90 days of system acceptance.	☐Complies ☐Does Not ☐Not Observable ☐Not Applicable	Requirement will be met.
C403.2.2 [FI27][1]	HVAC systems and equipment capacity does not exceed calculated loads.	☐Complies ☐Does Not ☐Not Observable ☐Not Applicable	Requirement will be met. **Location on plans/spec:** M501, M502, VRF Spec Section
C403.2.4.1 [FI47][1]	Heating and cooling to each zone is controlled by a thermostat control. Minimum one humidity control device per installed humidification/dehumidification system.	☐Complies ☐Does Not ☐Not Observable ☐Not Applicable	Requirement will be met. **Location on plans/spec:** M101
C403.2.4.1.1 [FI42][1]	Heat pump controls prevent supplemental electric resistance heat from coming on when not needed.	☐Complies ☐Does Not ☐Not Observable ☐Not Applicable	Requirement will be met. **Location on plans/spec:** VRF Controls/Sequence
C403.4.1.2 [FI38][1]	Thermostatic controls have a 5 °F deadband.	☐Complies ☐Does Not ☐Not Observable ☐Not Applicable	**Exception:** Manual changeover thermostats.
C403.2.4.1.3 [FI20][1]	Temperature controls have setpoint overlap restrictions.	☐Complies ☐Does Not ☐Not Observable ☐Not Applicable	Requirement will be met. **Location on plans/spec:** VRF Controls
C403.2.4.2 [FI39][1]	Each zone equipped with setback controls using automatic time clock or programmable control system.	☐Complies ☐Does Not ☐Not Observable ☐Not Applicable	Requirement will be met. **Location on plans/spec:** VRF Controls
C403.2.4.2.1, C403.2.4.2.2 [FI40][1]	Automatic Controls: Setback to 55°F (heat) and 85°F (cool); 7-day clock, 2-hour occupant override, 10-hour backup	☐Complies ☐Does Not ☐Not Observable ☐Not Applicable	Requirement will be met. **Location on plans/spec:** VRF Control
C403.2.4.2.3 [FI41][1]	Systems include optimum start controls.	☐Complies ☐Does Not ☐Not Observable ☐Not Applicable	**Exception:** Requirement does not apply.
C404.3 [FI11][1]	Heat traps installed on supply and discharge piping of non-circulating systems.	☐Complies ☐Does Not ☐Not Observable ☐Not Applicable	**Exception:** Requirement does not apply. **Location on plans/spec:** Relevant systems are circulating
C404.4 [FI25][2]	All piping insulated in accordance with section details and Table C403.11.3.	☐Complies ☐Does Not ☐Not Observable ☐Not Applicable	Requirement will be met.
C404.6.1 [FI12][1]	Controls are installed that limit the operation of a recirculation pump installed to maintain temperature of a storage tank. System return pipe is a dedicated return pipe or a cold water supply pipe.	☐Complies ☐Does Not ☐Not Observable ☐Not Applicable	Requirement will be met. **Location on plans/spec:** P101

1 High Impact (Tier 1) | 2 Medium Impact (Tier 2) | 3 Low Impact (Tier 3)

Section # & Req.ID	Final Inspection	Complies?	Comments/Assumptions
C408.1.1 [FI57][1]	Building operations and maintenance documents will be provided to the owner. Documents will cover manufacturers' information, specifications, programming procedures and means of illustrating to owner how building, equipment and systems are intended to be installed, maintained, and operated.	☐Complies ☐Does Not ☐Not Observable ☐Not Applicable	Requirement will be met.
C408.2.1 [FI28][1]	Commissioning plan developed by registered design professional or approved agency.	☐Complies ☐Does Not ☐Not Observable ☐Not Applicable	Requirement will be met. **Location on plans/spec:** Commissioning not required
C408.2.3.1 [FI31][1]	HVAC equipment has been tested to ensure proper operation.	☐Complies ☐Does Not ☐Not Observable ☐Not Applicable	Requirement will be met.
C408.2.3.2 [FI10][1]	HVAC control systems have been tested to ensure proper operation, calibration and adjustment of controls.	☐Complies ☐Does Not ☐Not Observable ☐Not Applicable	Requirement will be met.
C408.2.4 [FI29][1]	Preliminary commissioning report completed and certified by registered design professional or approved agency.	☐Complies ☐Does Not ☐Not Observable ☐Not Applicable	Requirement will be met. **Location on plans/spec:** Commissioning not required
C408.2.5.1 [FI7][1]	Furnished HVAC as-built drawings submitted within 90 days of system acceptance.	☐Complies ☐Does Not ☐Not Observable ☐Not Applicable	Requirement will be met.
C408.2.5.3 [FI43][1]	An air and/or hydronic system balancing report is provided for HVAC systems.	☐Complies ☐Does Not ☐Not Observable ☐Not Applicable	Requirement will be met. **Location on plans/spec:** HVAC TAB Spec Section
C408.2.5.4 [FI30][1]	Final commissioning report due to building owner within 90 days of receipt of certificate of occupancy.	☐Complies ☐Does Not ☐Not Observable ☐Not Applicable	Requirement will be met. **Location on plans/spec:** Commissioning not required

Additional Comments/Assumptions:

1 High Impact (Tier 1) | 2 Medium Impact (Tier 2) | 3 Low Impact (Tier 3)

PROFESSIONAL ENGINEER LICENSED 15298 5/23/24 STATE OF IDAHO DENISE M. OHLE

DESIGNED: AT / MK CADD: AT / MK TECH REVIEW: AZ DATE: 05/23/2024	SUB SHEET NO. M004	TITLE OF SHEET MECHANICAL COMCHECK MIIN MAINTENANCE BUILDING MINIDOKA NATIONAL HISTORIC SITE	DRAWING NO. 194 187126 PMIS/PKG NO. 314972 SHEET 48 OF 82

5/21/2024 7:06:48 AM Autodesk Docs://2023-360 NPS MIIN Rehab DD-CD/2023-360 NPS MIIN Rehab DD-CD - v24 - BIM360 - MP.rvt

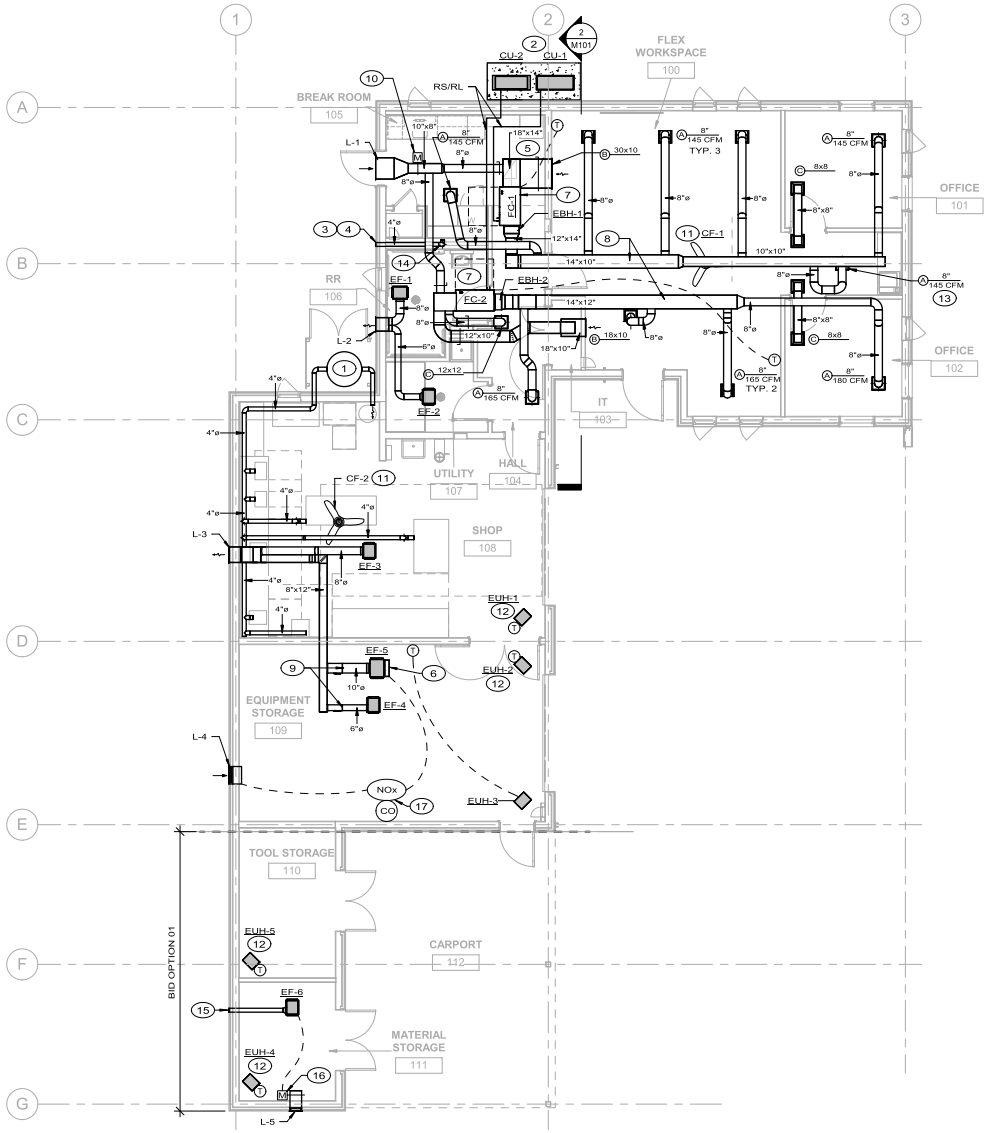

1 M101 MECHANICAL PLANS
SCALE: C

GENERAL NOTES:

1. ROOMS BELOW GRIDLINE "E" (TOOL STORAGE 110 AND MATERIAL STORAGE 111) TO BE INCLUDED WITH BID OPTION 1. INCLUDE ALL ASSOCIATED MECHANICAL EQUIPMENT WITH BID OPTION 01.

KEYNOTES: #

1. DUST COLLECTION SYSTEM WITH EXTERNAL FILTER TO ALLOW FOR RETURN AIR TO BE DUCTED BACK INTO SHOP. DUST COLLECTION SYSTEM SHALL NOT REQUIRE MAKE-UP AIR. DUCTING SYSTEM SHOWN IS FOR REFERENCE ONLY. FINAL DUCTING SYSTEM SHALL BE SIZED BY DUST COLLECTION SYSTEM MANUFACTURER AND SHALL BE COORDINATED WITH FIELD CONDITIONS. REFER TO M-502 FOR MORE INFORMATION.

2. PROVIDE CONCRETE PAD, SEE CIVIL DRAWINGS AND SPECIFICATIONS. PROVIDE MANUFACTURER'S 18" EQUIPMENT STANDS FOR OUTDOOR UNITS.

3. PROVIDE AND INSTALL NEW DRYER VENT THROUGH WALL WITH DRYER VENT CAP. BASIS OF DESIGN MODEL: IMPERIAL VT0548. PROVIDE DRYER VENT DUCT AND CONNECT DRYER TO VENT THROUGH WALL.

4. LOCATE DRYER VENT TERMINATION HIGH IN SIDEWALL TO MAINTAIN MINIMUM 3'0" CLEARANCE TO ANY BUILDING OPENING.

5. RETURN GRILLE CONNECTED TO 30x10 RETURN PLENUM BOX. CONNECT PLENUM BOX TO MAIN RETURN DUCT ABOVE WITH 20"x14" DUCT. REFER TO M101, SECTION 2 FOR MORE INFORMATION.

6. PROVIDE WITH 1/2" x 1/2" STAINLESS STEEL BIRD SCREEN ON INLET OF EXHAUST FAN.

7. UNIT LOCATED ON MECHANICAL PLATFORM ABOVE ACCESSIBLE FROM 108-SHOP.

8. ROUTE DUCT MAIN THROUGH SCISSOR TRUSSES ABOVE FINISHED CEILING.

9. ROUTE DUCTS BELOW STRUCTURAL BEAM.

10. MOTORIZED DAMPER TO REMAIN CLOSED DURING UNOCCUPIED HOURS.

11. SUPPORT CEILING FAN FROM BOTTOM OF TRUSSES BELOW MAIN DUCT.

12. PROVIDE ELECTRIC UNIT HEATER WITH INTEGRAL THERMOSTAT.

13. INSTALL CEILING DIFFUSER BELOW DUCT MAIN.

14. ROUTE 4" DRYER VENT UP THROUGH WALL BETWEEN STUDS. RISE ABOVE MECHANICAL PLATFORM IN ATTIC BEFORE TRANSITIONING TO HORIZONTAL.

15. TERMINATE EXHAUST FAN WITH MANUFACTURER APPROVED EXHAUST HOOD.

16. PROVIDE NORMALLY CLOSED MOTORIZED DAMPER. DAMPER TO OPEN WHEN INTERLOCKED EXHAUST FAN OPERATES.

17. EF-5 TO OPERATE BASED ON INPUT FROM NITROGEN DIOXIDE (NOx) AND CARBON MONOXIDE (CO) SENSORS. INCLUDE SWITCH TO ALLOW MANUAL FAN OPERATION.

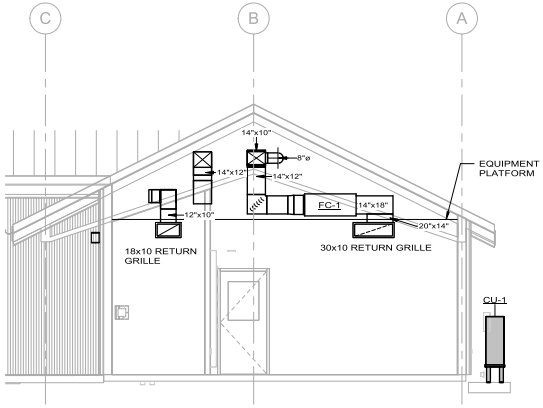

2 M101 FC-1 RETURN SECTION
SCALE: A

SCALE: A 2 0 2 4
SCALE OF FEET

SCALE: C 4 0 4 8 12
SCALE OF FEET

DESIGNED: AT / MK	SUB SHEET NO.	TITLE OF SHEET	DRAWING NO.
CADD AT / MK	M101	MECHANICAL PLANS	194 / 187126
TECH REVIEW: AZ		MIIN MAINTENANCE BUILDING	PMIS/PKG NO. 314972
DATE: 05/23/2024		MINIDOKA NATIONAL HISTORIC SITE	SHEET 49 OF 82

PROFESSIONAL ENGINEER LICENSED 15298 STATE OF IDAHO DENISE M. OHLE 5/23/24

5/21/2024 7:06:50 AM Autodesk Docs://2023-360 NPS MIIN Rehab DD-CD/2023-360 NPS MIIN Rehab DD-CD - v24 - BIM360 - MP.rvt

FAN SCHEDULE / SALIENT CHARACTERISTICS

GENERAL						PERFORMANCE (@ 4,000 FT)						ELECTRICAL			PHYSICAL				NOTES
TAG	BASIS OF DESIGN MANUFACTURER	BASIS OF DESIGN MODEL	LOCATION	SERVICE	TYPE	AIRFLOW [CFM]	ESP [IN. W.C.]	SPEED [RPM]	POWER [W]	SIZE [HP]	SOUND [SONES]	VOLTAGE [V]	Ø	FLA [A]	LENGTH [IN]	WIDTH [IN]	HEIGHT [IN]	WEIGHT [LBS]	
EF-1	GREENHECK	SP-A390-VG	RR	GENERAL EXHAUST	CEILING	125	0.875	1,703	50	1/12	3.0	115	1	1.5	12	14	11	24	1,2,3,4,9
EF-2	GREENHECK	SP-B110	UTILITY	GENERAL EXHAUST	CEILING	75	0.50	950	80	1/20	3.5	115	1	1.2	12	14	7	10	1,2,3,4,9
EF-3	GREENHECK	SP-A390-VG	SHOP	GENERAL EXHAUST	CEILING	100	0.875	1,685	46	1/12	3.0	115	1	1.5	12	14	11	24	1,2,3,4,9
EF-4	GREENHECK	SP-B90	EQUIPMENT STORAGE	GENERAL EXHAUST	CEILING	25	0.50	700	17	-	3.0	115	1	0.2	12	14	7	10	3,4,5,9
EF-5	GREENHECK	CSP-A710-VG	EQUIPMENT STORAGE	VEHICLE EXHAUST	INLINE	300	0.875	1,543	113	1/6	2.0	115	1	4	14	18	15	36	3,4,6,9
CF-1	BIG ASS FANS	HAIKU L	FLEX WORKSPACE	GENERAL CEILING FAN	CEILING	-	-	35 / 201	20.3	-		115	1	0.2	52" DIA.		16.4	12	7,8,9
CF-2	BIG ASS FANS	HAIKU L	SHOP	GENERAL CEILING FAN	CEILING	-	-	35 / 201	20.3	-		115	1	0.2	52" DIA.		16.4	12	7,8,9
PROVIDE THE FOLLOWING WITH BID OPTION 01:																			
EF-6	GREENHECK	SP-B150	MATERIAL STORAGE	GENERAL EXHAUST	CEILING	100	0.50	1,050	128	-	4.5	115	1	1.8	12	14	7	10	3,4,5,9

NOTES:
1. PROVIDE WITH INDIVIDUAL TIMECLOCK BY MANUFACTURER. INSTALL TIMECLOCK ADJACENT TO ASSOCIATED FAN SUCH THAT TIMECLOCK IS ACCESSIBLE BY MAINTENANCE PERSONNEL WHEN ACCESSING FAN. EACH TIMECLOCK SHALL BE POWERED BY ASSOCIATED FAN. COORDINATE FAN OPERATING SCHEDULE WITH CONTRACTING OFFICER.
2. PROVIDE WITH BACKDRAFT DAMPER.
3. UNIT WEIGHT DOES NOT INCLUDE ACCESSORIES.
4. PROVIDE WITH SPRING ISOLATORS.
5. FAN TO OPERATE CONTINUOUSLY.
6. UNIT TO AUTOMATICALLY ENGAGE BY MEANS OF CARBON MONOXIDE DETECTOR AND NITROGEN DIOXIDE DETECTOR, BOTH OF WHICH SHALL BE LISTED IN ACCORDANCE WITH UL 2075.
7. EQUIPMENT HEIGHT INCLUDES 10 IN. DOWN ROD. COORDINATE FINAL HEIGHT IN FIELD.
8. PROVIDE WITH MANUFACTURER SUPPLIED WIRED WALL CONTROL. BASIS OF DESIGN MODEL: TM2825
9. MANUFACTURER LISTED AS BASIS OF DESIGN OR APPROVED EQUAL.

CONDENSING UNIT SCHEDULE / SALIENT CHARACTERISTICS

GENERAL							ELECTRICAL						PHYSICAL DATA		NOTES
TAG	BASIS OF DESIGN MANUFACTURER	BASIS OF DESIGN MODEL	COOLING CAPACITY [MBH]	HEATING CAPACITY [MBH]	COP	EER	VOLTAGE [V]	PHASE	FREQ. [HZ]	MCA [A]	MOCP [A]	SCCR [kA]	D x W x H [IN]	WEIGHT [LBS]	
CU-1	MITSUBISHI	SUZ-KA30NAHZ	30	32.0	3.9	12.5	208	1	60	17	31	5	13 x 33-1/6 x 34-5/8	129	1,2,3,4,5,6,7
CU-2	MITSUBISHI	SUZ-KA18NAHZ	18	21.6	3.3	12.5	208	1	60	14	24	5	13 x 33-1/6 x 34-5/8	127	1,2,3,4,5,6,7

NOTES:
1. PROVIDE WITH FIELD-MOUNTED DISCONNECT BY E.C.
2. PROVIDE ALUMINUM JACKETING FOR ALL EXTERIOR REFRIGERANT PIPING.
3. ALL REFRIGERANT PIPING, INCLUDING VALVES, FITTINGS, AND CONNECTIONS, TO BE PROVIDED AND ROUTED PER MANUFACTURER'S RECOMENDATIONS.
4. PROVIDE WITH LOW AMBIENT KIT FOR PERFORMANCE DOWN TO -10°F.
5. ASSOCIATED INDOOR UNIT IS POWERED BY THE OUTDOOR UNIT.
6. PROVIDE WITH 18" STAND, SNOW/HAIL GUARD, AND 20W PANEL HEATER.
7. MANUFACTURER LISTED AS BASIS OF DESIGN OR APPROVED EQUAL.

FAN COIL UNIT SCHEDULE / SALIENT CHARACTERISTICS

GENERAL				SUPPLY FAN DATA		ELECTRICAL				COIL DATA				NOTES
TAG	BASIS OF DESIGN MANUFACTURER	BASIS OF DESIGN MODEL	LOCATION	TOTAL AIRFLOW [CFM]	ESP [IN. W.C.]	VOLTAGE [V]	PHASE	FREQUENCY [HZ]	MCA [A]	SERVICE	EAT DB [DEG. F]	LAT DB [DEG. F]	CAPACITY [MBH]	
FC-1	MITSUBISHI	SVZ-KP30NA	EQUIPMENT PLATFORM	870	0.6	208	1	60	2.7	HEATING	58.9	86.9	23.1	1,2,3,4,5
										COOLING	78.9	54.2	20.6	
FC-2	MITSUBISHI	SVZ-KP18NA	EQUIPMENT PLATFORM	675	0.6	208	1	60	1.7	HEATING	63.3	81.3	12.5	1,2,3,4,5
										COOLING	77.3	57.6	12.7	

NOTES:
1. PROVIDE WITH 208V MAXIBLUE DIAMOND CONDENSATE PUMP WITH SENSOR AND RESERVOIR. SENSOR SHALL BE CAPABLE OF PROVIDING AUDIBLE ALARM AND SHALL SHUT UNIT DOWN IF RESERVOIR IS FILLED.
2. PROVIDE WITH FITLER BOX FOR MERV 8 FILTERS.
3. MOUNT EQUIPMENT ON SPRING ISOLATORS.
4. PROVIDE WITH AUXILIARY HEAT RELAY KIT TO ENERGIZE BACKUP ELECTRIC HEAT COILS. BASIS OF DESIGN MODEL: MITSUBISHI CN24.
5. MANUFACTURER LISTED AS BASIS OF DESIGN OR APPROVED EQUAL.

PROFESSIONAL ENGINEER LICENSED 15298 5/23/24 STATE OF IDAHO DENISE M. OHLE

DESIGNED: AT / MK	SUB SHEET NO.	TITLE OF SHEET	DRAWING NO.
CADD: AT / MK	M501	MECHANICAL SCHEDULES	194
TECH REVIEW: AZ		MIIN MAINTENANCE BUILDING	187126
DATE: 05/23/2024		MINIDOKA NATIONAL HISTORIC SITE	PMIS/PKG NO. 314972
			SHEET 50 OF 82

5/21/2024 7:06:50 AM Autodesk Docs://2023-360 NPS MIIN Rehab DD-CD/2023-360 NPS MIIN Rehab DD-CD - v24 - BIM360 - MP.rvt

ELECTRIC HEAT SCHEDULE / SALIENT CHARACTERISTICS

GENERAL						ELECTRICAL			PHYSICAL				
TAG	BASIS OF DESIGN MANUFACTURER	BASIS OF DESIGN MODEL	LOCATION	CONFIGURATION	AIR FLOW [CFM]	VOLTAGE [V]	PHASE	POWER [KW]	DEPTH [IN]	WIDTH [IN]	HEIGHT [IN]	WEIGHT [LBS]	REMARKS
EUH-1	QMARK	MWUH5004	SHOP	CEILING SUSPENDED	270	208	1	2.50	17-3/4	14	12-1/2	24.0	1,3,9
EUH-2	QMARK	MWUH5004	EQUIPMENT STORAGE	CEILING SUSPENDED	270	208	1	2.50	17-3/4	14	12-1/2	24.0	1,3,9
EUH-3	QMARK	IUH520	EQUIPMENT STORAGE	CEILING SUSPENDED	270	208	1	5.00	12-3/8	14	12-1/2	25.0	2,3,9
EBH-1	MITSUBISHI	EH08-SVZ-S	MECHANICAL MEZZANINE	FCU-MOUNTED	875	208	1	3.80	21-1/4	17	6	15.0	5,6,7,9
EBH-2	MITSUBISHI	EH05-SVZ-S	MECHANICAL MEZZANINE	FCU-MOUNTED	675	208	1	6.00	21-1/4	17	6	14.0	5,6,7,9
PROVIDE THE FOLLOWING WITH BID OPTION 01:													
EUH-4	QMARK	MWUH5004	MATERIAL STORAGE	CEILING SUSPENDED	270	208	1	3.00	17-3/4	14	12-1/2	24.0	1,3,9
EUH-5	QMARK	MWUH5004	TOOL STORAGE	CEILING SUSPENDED	270	208	1	1.80	17-3/4	14	12-1/2	24.0	1,3,9

NOTES:
1. PROVIDE WITH MANUFACTURER'S INTEGRAL THERMOSTAT.
2. PROVIDE WITH HEATING ONLY 120v THERMOSTAT.
3. PROVIDE WITH MANUFACTURER'S MOUNTING BRACKET AND HARDWARE.
4. REFER TO ARCHITECTURAL PLANS FOR UNIT MOUNTING HEIGHT.
5. PROVIDE SEPARATE CIRCUIT; DO NOT POWER FROM OUTDOOR UNIT.
6. MOUNT DIRECTLY TO OUTLET OF FAN COIL UNIT.
7. ENABLE BACKUP HEAT TO RUN WHEN OUTDOOR TEMPERATURES FALL BELOW -13°F, OR IF HEAT PUMP FAILS.
8. CONNECT TO AUXILIARY HEAT RELAY KIT IN ASSOCIATED FAN COIL UNIT. BASIS OF DESIGN MODEL: MITSUBISHI CN24.
9. MANUFACTURER LISTED AS BASIS OF DESIGN OR APPROVED EQUAL.

LOUVER SCHEDULE / SALIENT CHARACTERISTICS

GENERAL						PERFORMANCE				PHYSICAL				NOTES
TAG	BASIS OF DESIGN MANUFACTURER	BASIS OF DESIGN MODEL	FINISH	LOCATION	SERVICE	AIRFLOW [CFM]	FREE AREA [SF]	FACE VELOCITY [FT/MIN]	PRESSURE DROP [IN. W.C.]	HEIGHT [IN]	WIDTH [IN]	DEPTH [IN]	WEIGHT [LBS]	
L-1	GREENHECK	ESD-403	PAINTED	NORTH BREAKROOM WALL	OA INTAKE	300	0.6	476	0.04	12	22	4	6	1,2,3,4,6,7
L-2	GREENHECK	ESD-403	PAINTED	WEST RR WALL	RR/UTILITY EXHAUST	200	0.4	543	0.05	12	14	4	4	1,2,3,4,7
L-3	GREENHECK	ESD-403	PAINTED	WEST SHOP WALL	SHOP EXHAUST	400	0.7	607	0.05	16	16	4	6	1,2,3,4,7
L-4	GREENHECK	ESD-403	PAINTED	WEST EQUIP. STOR. WALL	INTAKE	325	0.7	493	0.05	16	16	4	6	1,2,4,5,7
PROVIDE THE FOLLOWING WITH BID OPTION 01:														
L-5	GREENHECK	ESD-403	PAINTED	MATERIAL STORAGE	INTAKE	100	0.2	501	0.04	12	12	4	3	1,2,4,5,7

NOTES:
1. PROVIDE WITH STAINLESS STEEL BIRDSCREEN
2. PROVIDE WITH 2 COATS OF KYNAR PAINT. REFER TO ARCHITECTURAL PLANS AND SPECIFICATIONS FOR COLOR SELECTION.
3. PROVIDE WITH BACKDRAFT DAMPER UPSTREAM OF LOUVER MOUNTED IN DUCT, GREENHECK MODEL EM-30, MATCH LOUVER SIZE
4. PROVIDE WITH EXTENDED SILL, FLANGED FRAME, AND WELDED CONSTRUCTION
5. PROVIDE WITH MOTORIZED DAMPER TO BE INTERLOCKED WITH EF-5.
6. PROVIDE MOTORIZED DAMPER CONTROLLED BY TIME CLOCK SUCH THAT DAMPER IS ONLY OPEN DURING OCCUPIED HOURS.
7. MANUFACTURER LISTED AS BASIS OF DESIGN OR APPROVED EQUAL.

DUST COLLECTION SYSTEM / SALIENT CHARACTERISTICS

OPERATION			MOTOR AND ELECTRICAL											IMPELLER	CARTRIDGE FILTER		
FAN RATING [FREE FAN]	FAN RATING [WITH CYCLONE & FILTER]	MAX. SUCTION RATING	MOTOR TYPE	MOTOR INSULATION	MOTOR SERVICE FACTOR	HP	PHASE	VOLTAGE [V]	CYCLE	LISTED FLA [A]	RECOMMENDED CIRCUIT SIZE	RECOMMENDED CIRCUIT SIZE	SOUND EMISSION	SIZE	FILTER MEDIA TYPE	FILTER EFFICIENCY	FILTER SURFACE AREA
2,940 CFM	1,030 CFM @ 2 IN. W.C.	21 IN. W.C.	U.S. MADE TEFC MOTOR	CLASS F	1.15	3	SINGLE-PHASE (1 ph)	208-230 V	60 HZ	15 - 17.5 A	30 A	HACR	77 dBA @ 10 FT.	15 IN.	HEPA GRADE EPTFE MEDIA	E12 MINIMUM EFFICIENCY RATING	95 SQ. FT.

NOTES:
1. ON/OFF SWITCH SHALL BE REMOTE STARTER WITH PUSH BUTTON ON/OFF SWITCH AND RF KEYFOB.
2. UNIT SHALL BE PROVIDED WITH POWER CORD A MINIMUM OF 7 FT.
3. IMPELLER MATERIAL SHALL BE SINGLE-PIECE, BACKWARD INCLINED, NON-SPARKING/NON-FERROUS.
4. CYCLONIC SEPARATION EFFICIENCY SHALL BE CAPABLE OF REMOVING OVER 99% OF FINE WOOD DUSTS.
5. PRIMARY BUILD MATERIAL OF BARREL AND CYCLONE BODY SHALL BE HEAVY-GAUGE COLD-ROLLED STEEL.
6. SYSTEM SHALL INCLUDE BLOWER MOTOR ASSEMBLY, MAGNETIC STARTER, SMART BOOST CONTROLLER, FAN HOUSING, CYCLONE SEPARATOR, FILTER PLENUM, FLAMEGUARD CARTRIDGE FILTER, INTERNAL SILENCER, FREESTANDING LEG KIT, STEEL DUST BIN, BIN LEVEL INDICATOR, REMOTE CONTROL, AND HARDWARE.
7. DUCTING SYSTEM SHOWN ON PLANS IS FOR REFERENCE ONLY. FINAL DUCTING SYSTEM SHALL BE SIZED BY DUST COLLECTION SYSTEM MANUFACTURER AND COORDINATED WITH CONDITIONS IN FIELD. DUCT WORK SHALL BE RATED FOR LISTED MAXIMUM SUCTION.

DUST COLLECTION SYSTEM (CONT'D)

PHYSICAL				NOTES
INLET	OUTLET	DISCHARGE	OVERALL HEIGHT	
6 IN. DIAMETER	SQUARE ID: 7-3/8 IN (W) x 6-3/8 IN (H)	9 IN. DIAMETER	96 IN. (w/ 55 GAL. DRUM)	1,2,3,4,5,6,7

GRILLES, REGISTERS, AND DIFFUSERS SCHEDULE / SALIENT CHARACTERISTICS

TAG	BASIS OF DESIGN MANUFACTURER	BASIS OF DESIGN MODEL	SERVICE	MATERIAL	FACE SIZE	FINISH	REMARKS
A	PRICE	SPD	SUPPLY	STEEL	12" x 12"	POWDER COATED	1,3,4
B	PRICE	530	RETURN	STEEL	SEE PLANS	POWDER COATED	2,4
C	PRICE	PDDR	RETURN	STEEL	12" x 12"	POWDER COATED	1,4

NOTES:
1. PROVIDE WITH PLASTER MOUNTING FRAME, INCLUDE MOUNTING CLIPS.
2. PROVIDE WITH GYPSUM BOARD MOUNTING FRAME.
3. PROVIDE WITH CABLE-OPERATED BALANCING DAMPER IN SUPPLY BRANCH DUCT. LOCATE DAMPER NO LESS THAN 5'-0" FROM DIFFUSER. MOUNT DAMPER ADJUSTER IN DIFFUSER FACE.
4. MANUFACTURER LISTED AS BASIS OF DESIGN OR APPROVED EQUAL.

PROFESSIONAL ENGINEER LICENSED 15298 5/23/24 STATE OF IDAHO DENISE M. OWLE

DESIGNED: AT / MK	SUB SHEET NO.	TITLE OF SHEET	DRAWING NO. 194
CADD: AT / MK	M502	MECHANICAL SCHEDULES	187126
TECH REVIEW: AZ		MIIN MAINTENANCE BUILDING	PMIS/PKG NO. 314972
DATE: 05/23/2024		MINIDOKA NATIONAL HISTORIC SITE	SHEET 51 OF 82

5/21/2024 7:06:50 AM Autodesk Docs://2023-360 NPS MIIN Rehab DD-CD/2023-360 NPS MIIN Rehab DD-CD - v24 - BIM360 - MP.rvt

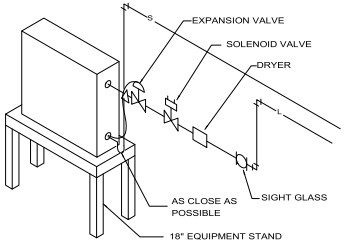

5 M601 DX COIL PIPING
SCALE: NTS

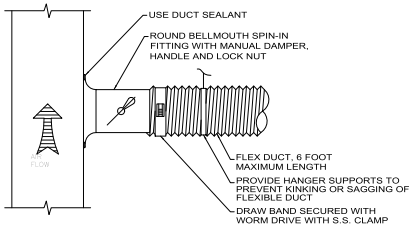

2 M601 ROUND DUCT TAKE-OFF DETAIL
SCALE: NTS

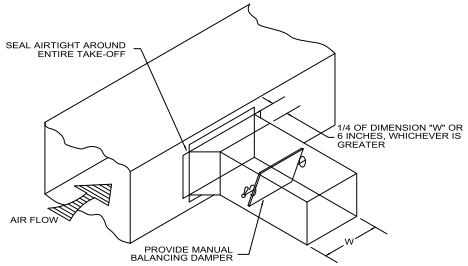

3 M601 45° DUCT TAKE-OFF DETAIL
SCALE: NTS

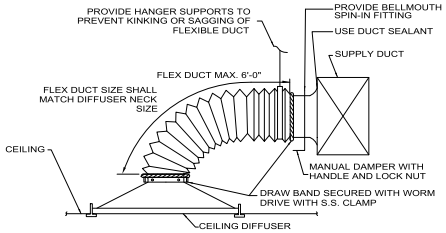

4 M601 DIFFUSER CONNECTION DETAIL
SCALE: NTS

CONTROL SEQUENCE OF OPERATIONS

7-DAY PROGRAMMABLE THERMOSTATS SHALL CONTROL ALL FAN COIL UNITS.

SPACE SETPOINTS
OCCUPIED:
HEATING: 70°F (ADJ.)
COOLING: 75°F (ADJ.)

UNOCCUPIED:
HEATING: 60°F (ADJ.)
COOLING: 80°F (ADJ.)

INDOOR FAN COIL UNITS (FC-X) AND OUTDOOR CONDENSING UNITS (CU-X):
UNITS SHALL BE ENABLED WITH THEIR ASSOCIATED OUTDOOR CONDENSING UNITS (CU-X) VIA THERMOSTAT TO PROVIDE HEATING OR COOLING TO THE SPACES DURING ALL OCCUPIED HOURS.

WITH A CALL FOR HEATING OR COOLING, THE OUTDOOR FAN AND COMPRESSOR SHALL ENERGIZE TO RUN AT LOWEST DEMAND. IF THIS DOES NOT SATISFY DEMAND, THE SYSTEM SHALL RAMP UP UNTIL IT SATISFIES THE DEMAND. AFTER MEETING THE HIGHER DEMAND, THE UNIT SHALL RETURN TO LOWER CAPACITY UNTIL THE DEMAND IS SATISFIED OR UNTIL THE DEMAND INCREASES.

WITH A CALL FOR HEATING OR COOLING, THE INDOOR UNIT SHALL BE ENABLED WITH THE ASSOCIATED OUTDOOR UNIT VIA INTERNAL CONTROLS TO PROVIDE HEATING OR COOLING.

THE INDOOR UNIT SHALL BE SUPPLIED WITH A MANUFACTURER COMPATIBLE EXTERNAL HEATER ADAPTER, EQUAL TO RELAY KIT CN24 TO ENABLE THE ELECTRIC AUXILIARY HEATER (EBH-X) DURING TIMES OF EXTREME COLD WHEN THE OUTDOOR UNIT CANNOT OPERATE IN HEATING MODE. SUPPLEMENTAL HEAT SHALL BE LOCKED OUT FROM OPERATION WHEN THE OUTSIDE AIR TEMPERATURE IS HIGH ENOUGH FOR THE HEAT PUMP ALONE TO ACHIEVE SPACE SET POINT. UTILIZE CONTROL EQUAL TO ETC-211000-MIT.

WHEN THERE IS NOT A CALL FOR HEATING OR COOLING, THE FAN SHALL OPERATE CONTINUOUSLY DURING OCCUPIED HOURS FOR PROPER VENTILATION.

GENERAL EXHAUST FANS (EF-1 - EF-3):
EACH UNIT SHALL BE CONTROLLED BY AN INDIVIDUAL TIMECLOCK TO PROVIDE CONTINUOUS, GENERAL EXHAUST DURING OCCUPIED HOURS.

GENERAL EXHAUST FANS (EF-4, EF-6):
EACH UNIT SHALL BE ENERGIZED TO OPERATE CONTINUOUSLY TO PROVIDE GENERAL EXHAUST.

EQUIPMENT STORAGE DEMAND EXHAUST FAN (EF-5):
UNIT SHALL BE CONTROLLED BY NITROGEN DIOXIDE (NOx) AND CARBON MONOXIDE (CO) SENSORS TO PROVIDE DEMAND VENTILATION TO EQUIPMENT STORAGE WHEN NOx SENSOR DETECTS LEVELS EXCEEDING 5 PPM OR CO SENSOR DETECTS LEVELS EXCEEDING 50 PPM. FAN SHALL STOP OPERATING NOT LESS THAN 5 MINUTES AFTER NOx AND CO LEVELS DROP BELOW THE ACCEPTABLE THRESHOLDS.

ROOM CEILING FANS (CF-X):
UNITS SHALL BE CONTROLLED BY MANUAL WALL SWITCH TO MIX AIR AS NEEDED IN THE SPACES SERVED.

INTAKE LOUVER MOTORIZED DAMPERS (L-1, L-4):
THE MOTORIZED DAMPER SERVING L-1, RESPONSIBLE FOR SPACE VENTILATION INTAKE, SHALL BE CONTROLLED BY TIMECLOCK TO REMAIN FULLY OPEN DURING OCCUPIED HOURS. THE DAMPER SHALL REMAIN CLOSED DURING UNOCCUPIED HOURS.

THE MOTORIZED DAMPER SERVING L-4, RESPONSIBLE FOR SPACE MAKEUP AIR, SHALL BE INTERLOCKED WITH EF-5. THE DAMPER SHALL OPEN FULLY WHEN EF-5 OPERATES, AND REMAIN CLOSED WHEN FAN IS NOT OPERATING.

GENERAL ELECTRIC UNIT HEATERS (EUH-1 - EUH-5):
UNITS SHALL BE CONTROLLED BY INTEGRAL THERMOSTATS AND INTERNAL SAFETY CONTROLS TO MAINTAIN MINIMUM SPACE TEMPERATURE OF 55°F DURING ALL HOURS OF THE DAY.

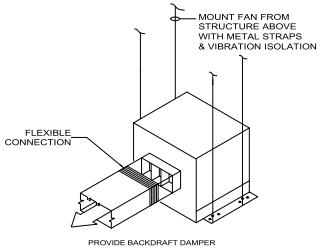

1 M601 CEILING FAN DETAIL
SCALE: NTS

PROFESSIONAL ENGINEER LICENSED 15298 5/23/24 STATE OF IDAHO DENISE M. OHLE

DESIGNED: AT / MK	SUB SHEET NO.	TITLE OF SHEET	DRAWING NO.
CADD: AT / MK	M601	MECHANICAL DETAILS	194 / 187126
TECH REVIEW: AZ		MIIN MAINTENANCE BUILDING	PMIS/PKG NO. 314972
DATE: 05/23/2024		MINIDOKA NATIONAL HISTORIC SITE	SHEET 52 OF 82

5/21/2024 7:06:50 AM Autodesk Docs://2023-360 NPS MIIN Rehab DD-CD/2023-360 NPS MIIN Rehab DD-CD - v24 - BIM360 - MP.rvt

ABBREVIATIONS

AD	ACCESS DOOR
AP	ACCESS PANEL
AUX.	AUXILIARY
AVG	AVERAGE
BTUH	BRITISH THERMAL UNIT PER HOUR
C.I.	CAST IRON
CO	CLEANOUT
CW	COLD WATER
DAS	DIRT AND AIR SEPARATOR
DCBP	DOUBLE CHECK BACKFLOW PREVENTER
DN	DOWN
D	DRAIN
(E)	EXISTING
E.C.	ELECTRICAL CONTRACTOR
EWT	ENTERING WATER TEMP
(F)	FUTURE
F	FAHRENHEIT
FCO	FLOOR CLEANOUT
FD	FLOOR DRAIN, FIRE DAMPER
FLA	FULL LOAD AMPS
FPM	FEET PER MINUTE
FS	FLOW SWITCH
FT	FEET
G.C.	GENERAL CONTRACTOR
GCO	GRADE CLEANOUT
GPM	GALLONS PER MINUTE
HB	HOSE BIBB
ID	INSIDE DIAMETER
IN	INCHES
KW	KILOWATT
L	LAVATORY
M.C.	MECHANICAL CONTRACTOR
MSB	MOP SERVICE BASIN
NA	NOT APPLICABLE
OAT	OUTSIDE AIR TEMPERATURE
PRV	PRESSURE REDUCING VALVE
RPBP	REDUCED PRESSURE BACKFLOW PREVENTER
S	SINK
SS	SINK
T&P	TEMPERATURE AND PRESSURE
TYP.	TYPICAL
V	VENT
VTR	VENT THROUGH ROOF
W	WATT, WASTE
W/	WITH
W/O	WITHOUT
WC	WATER CLOSET, WATER COLUMN
WCO	WALL CLEANOUT
WHA	WATER HAMMER ARRESTOR

PLUMBING PIPING SYMBOLS

- COLD WATER
- DOMESTIC HOT WATER
- DOMESTIC HOT WATER RECIRCULATING
- WASTE (ABOVE GRADE)
- WASTE (BELOW GRADE)
- VENT
- SLOPE DOWN IN DIRECTION OF ARROW

PIPING SYMBOLS

- CAP
- FCO — FLOOR CLEANOUT
- FLOOR DRAIN
- FLOOR SINK
- GCO — GRADE CLEANOUT
- CLEANOUT PLUG, IN LINE
- WCO — WALL CLEANOUT
- WCO — TEE, OUTLET UP
- TEE, OUTLET DOWN
- ELBOW, TURNED DOWN
- ELBOW, TURNED UP
- EXPANSION JOINT
- FLEXIBLE CONNECTOR
- REDUCER - CONCENTRIC
- REDUCER - ECCENTRIC
- UNION

- PRESSURE GAUGE
- TS — TEMPERATURE SENSOR
- PS — PRESSURE SENSOR
- FS — FLOW SWITCH
- WATER HAMMER ARRESTOR
- BALL VALVE
- CHECK VALVE
- RELIEF VALVE
- 3-WAY AUTOMATIC VALVE
- 2-WAY AUTOMATIC VALVE
- BALANCING VALVE
- HB — HOSE BIB (PLAN)
- WH — WALL HYDRANT
- PUMP
- REDUCED PRESSURE BACKFLOW
- THERMOMETER
- STRAINER
- T&P PORT
- PRESSURE REDUCING VALVE

PLUMBING NOTES

I. GENERAL

- THESE DRAWINGS ARE DIAGRAMMATIC IN NATURE AND NOT INTENDED TO SHOW ALL TRANSITIONS, OFFSETS, ETC. CONTRACTOR SHALL FIELD VERIFY EXISTING CONDITIONS AND PROVIDE ALL NECESSARY FITTINGS TO COMPLETE THE INTENT OF THE DRAWINGS. ANY DISCREPANCIES BETWEEN DRAWINGS AND FIELD CONDITIONS SHALL BE REPORTED TO THE CONTRACTING OFFICER FOR RESOLUTION.
- CONTRACTOR SHALL COORDINATE WORK WITH OTHER TRADES AND NOTIFY CONTRACTING OFFICER IF ANY CONFLICTS OCCUR.
- CONTRACTOR SHALL REVIEW THESE DOCUMENTS CAREFULLY. CONTRACTOR SHALL CONTACT THE CONTRACTING OFFICER, FOR RESOLUTION OF ANY DISCREPANCIES, OMISSIONS, OR CLARIFICATIONS, BEFORE BID DATE. IN THE EVENT THAT AN INTERPRETATION OF BID DOCUMENTS IS NECESSARY AFTER THE BID DATE, THE DECISION OF THE CONTRACTING OFFICER SHALL BE FINAL AND BINDING.
- THE CONTRACTOR SHALL BE RESPONSIBLE FOR THE COSTS OF ALL CHANGE ORDERS, WHICH THE CONTRACTING OFFICER HAS NOT APPROVED IN WRITING PRIOR TO THE EXECUTION OF THE ASSOCIATED WORK.
- IN THE CASE OF A CONFLICT, UNLESS OTHERWISE NOTED, KEYNOTES ON PLUMBING PLANS SHALL SUPERCEDE ANY GENERAL NOTES ON THE PLANS.

II. EXECUTION

- ALL PLUMBING WORK SHALL COMPLY WITH CODES AND ORDINANCES BY AUTHORITY HAVING JURISDICTION.
- PITCH WASTE LINES NOT LESS THAN 1/4" PER FOOT. (UNLESS NOTED OTHERWISE).
- RUN ALL PIPING ON WARM SIDE OF BUILDING INSULATION. PIPE INSULATION IS NOT CONSIDERED FREEZE PROTECTION.
- PROVIDE DIELECTRIC UNIONS AT CONNECTIONS BETWEEN DISSIMILAR METALS, I.E., IRON VALVES AND COPPER TUBING.
- PROVIDE PIPE HANGERS OF THE SAME MATERIAL AS THE PIPING SYSTEM OR USE COATED HANGERS.
- SET FLOOR DRAINS SO THAT TOP WILL BE SLIGHTLY LOWER THAN SURROUNDING FINISHED FLOOR.
- PROVIDE BALL VALVES AND UNIONS ON ALL LINES TO EQUIPMENT FOR ISOLATION AND REMOVAL.
- ALL PIPE PENETRATIONS THROUGH RATED WALLS SHALL BE SEALED PER 2021 IBC.
- PROVIDE ADHESIVE, MULTICOLOR PIPE LABELS FOR ALL SYSTEMS. PROVIDE EVERY 50 FEET, AND EVERY 25 FEET IN CONGESTED AREAS.

SANITARY DRAINAGE FIXTURE UNIT CALCULATION
(CALCULATIONS BASED ON IPC TABLE 709.1)

FIXTURE	NUMBER OF INSTANCES	DFU UNITS	TOTAL LOAD
WATER CLOSET (TANK)	1	3	3
LAVATORY	1	1	1
SHOWER	1	2	2
KITCHEN SINK	1	2	2
WASHER BOX	1	2	2
SERVICE SINK	1	2	2
MOP SERVICE BASIN	1	2	2
FLOOR DRAIN	4	2	8
TOTAL			22

4" WASTE MAIN CAN ACCEPT A 180 DFU CAPACITY AT 1/8" PER FOOT SLOPE

WATER SUPPLY FIXTURE UNIT CALCULATION (CALCULATIONS BASED ON IPC TABLE E103.3(2))

FIXTURE	NUMBER OF INSTANCES	COLD (WSFU)	HOT (WSFU)	TOTAL LOAD (WSFU)	TOTAL LOAD (WSFU)
WATER CLOSET (TANK)	1	5	--	5	5
LAVATORY	1	1.5	1.5	2	2
SHOWER	1	3	3	4	4
KITCHEN SINK	1	1	1	1.4	1.4
WASHER BOX	1	2.25	2.25	3	3
SERVICE SINK	1	2.25	2.25	3	3
MOP SINK BASIN	1	3	3	4	4
TOTAL					22

22 WSFU TOTAL -> 21 GPM. THE NEW SERVICE AND METER IS 2" AND CAN HANDLE A MAXIMUM FLOW RATE OF 50 GPM TO ALLOW FOR FUTURE EXPANSION.

PROFESSIONAL ENGINEER LICENSED 15298 STATE OF IDAHO DENISE M. OHLE 5/23/24

DESIGNED: AT / MK	SUB SHEET NO.	TITLE OF SHEET	DRAWING NO. 194
CADD: AT / MK	P001	PLUMBING COVER SHEET	187126
TECH REVIEW: AZ		MIIN MAINTENANCE BUILDING	PMIS/PKG NO. 314972
DATE: 05/23/2024		MINIDOKA NATIONAL HISTORIC SITE	SHEET 53 OF 82

5/21/2024 7:06:51 AM Autodesk Docs://2023-360 NPS MIIN Rehab DD-CD/2023-360 NPS MIIN Rehab DD-CD - v24 - BIM360 - MP.rvt

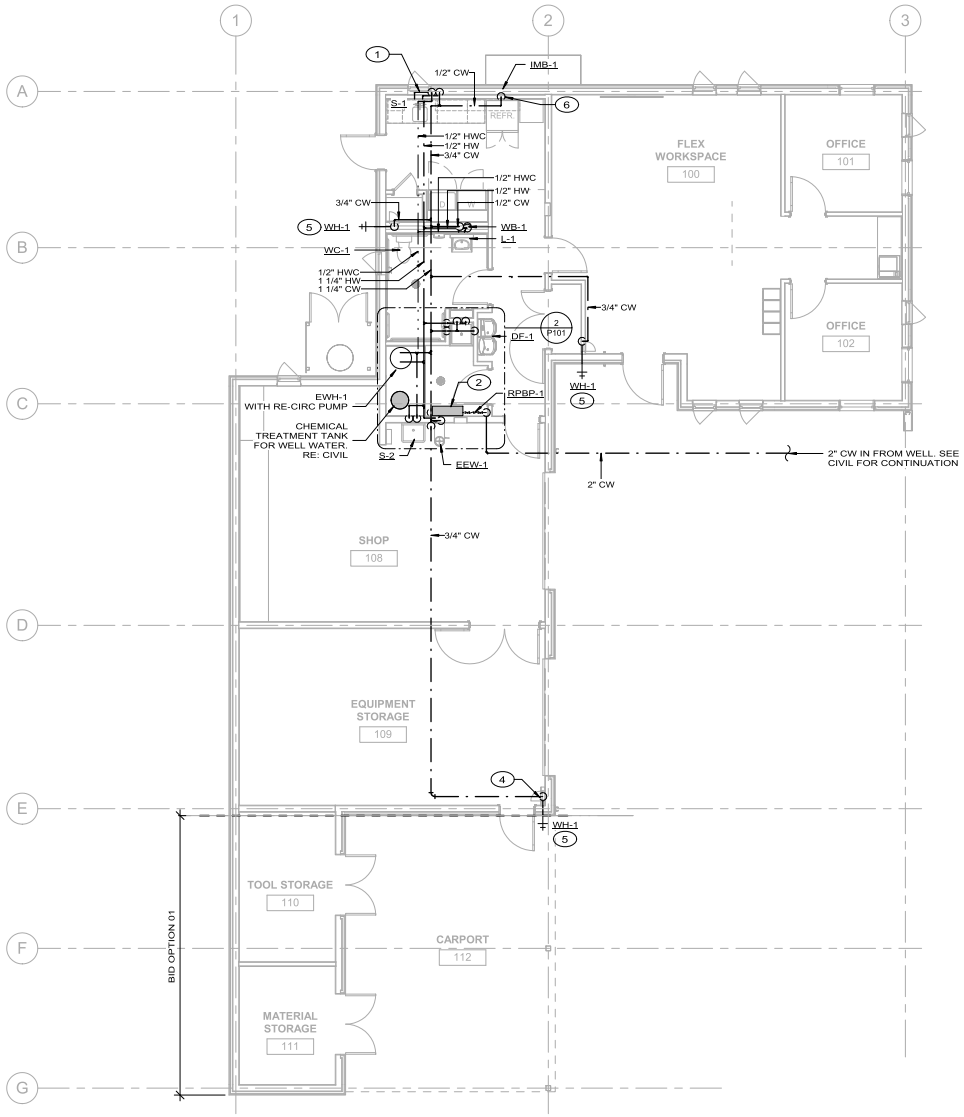

1 P101 PLUMBING PLANS
SCALE: C

GENERAL NOTES:

1. ROOMS BELOW GRIDLINE "E" (TOOL STORAGE 110 AND MATERIAL STORAGE 111) TO BE INCLUDED WITH BID OPTION 01.

KEYNOTES: #

1. HOT AND COLD WATER ROUTES DOWN WALL NEXT TO WINDOW IN FURRED PORTION OF WALL, THEN ROUTES TO SINK BENEATH WINDOW.

2. RESERVE SPACE FOR CHEMICAL TREATMENT SYSTEM DOWNSTREAM OF RPBP-1. REFER TO C400, DETAIL 1 FOR TREATMENT SYSTEM ARRANGEMENT. INSTALL PER MANUFACTURERS RECOMMENDATIONS.

3. WH-1 LOCATION IS INCLUDED WITH BASE BID. REFER TO KEYNOTE 5 FOR ALTERNATIVE LOCATION AND PIPING IN BID OPTION 01.

4. VERTICAL PORTION OF PIPING RUNS CONCEALED WITHIN ARCHITECTURAL ENCLOSURE. REFER TO ARCHITECTURAL DRAWINGS AND SPECIFICATIONS.

5. MOUNT WALL HYDRANT 20" ABOVE FINISHED GRADE.

6. COLD WATER ROUTED DOWN IN FURRED PORTION OF WALL.

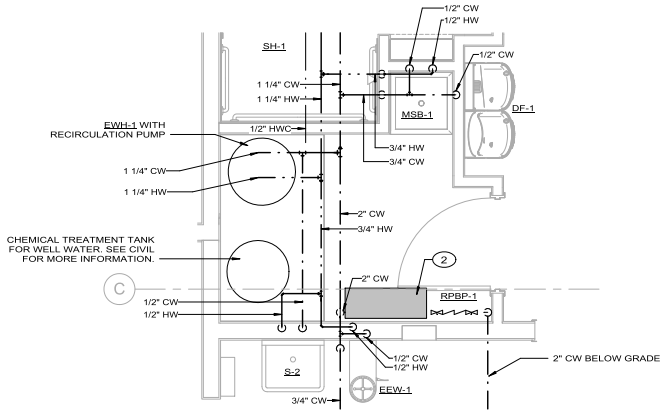

2 P101 ENLARGED UTILITY PLUMBING PLAN
SCALE: A

SCALE: A 2 0 2 4
SCALE OF FEET

SCALE: C 4 0 4 8 12
SCALE OF FEET

DESIGNED: AT / MK CADD: AT / MK TECH REVIEW: AZ DATE: 05/23/2024	SUB SHEET NO. P101	TITLE OF SHEET WATER PLAN MIIN MAINTENANCE BUILDING MINIDOKA NATIONAL HISTORIC SITE	DRAWING NO. 194 187126 PMIS/PKG NO. 314972 SHEET 54 OF 82

5/21/2024 7:06:51 AM Autodesk Docs://2023-360 NPS MIIN Rehab DD-CD/2023-360 NPS MIIN Rehab DD-CD - v24 - BIM360 - MP.rvt

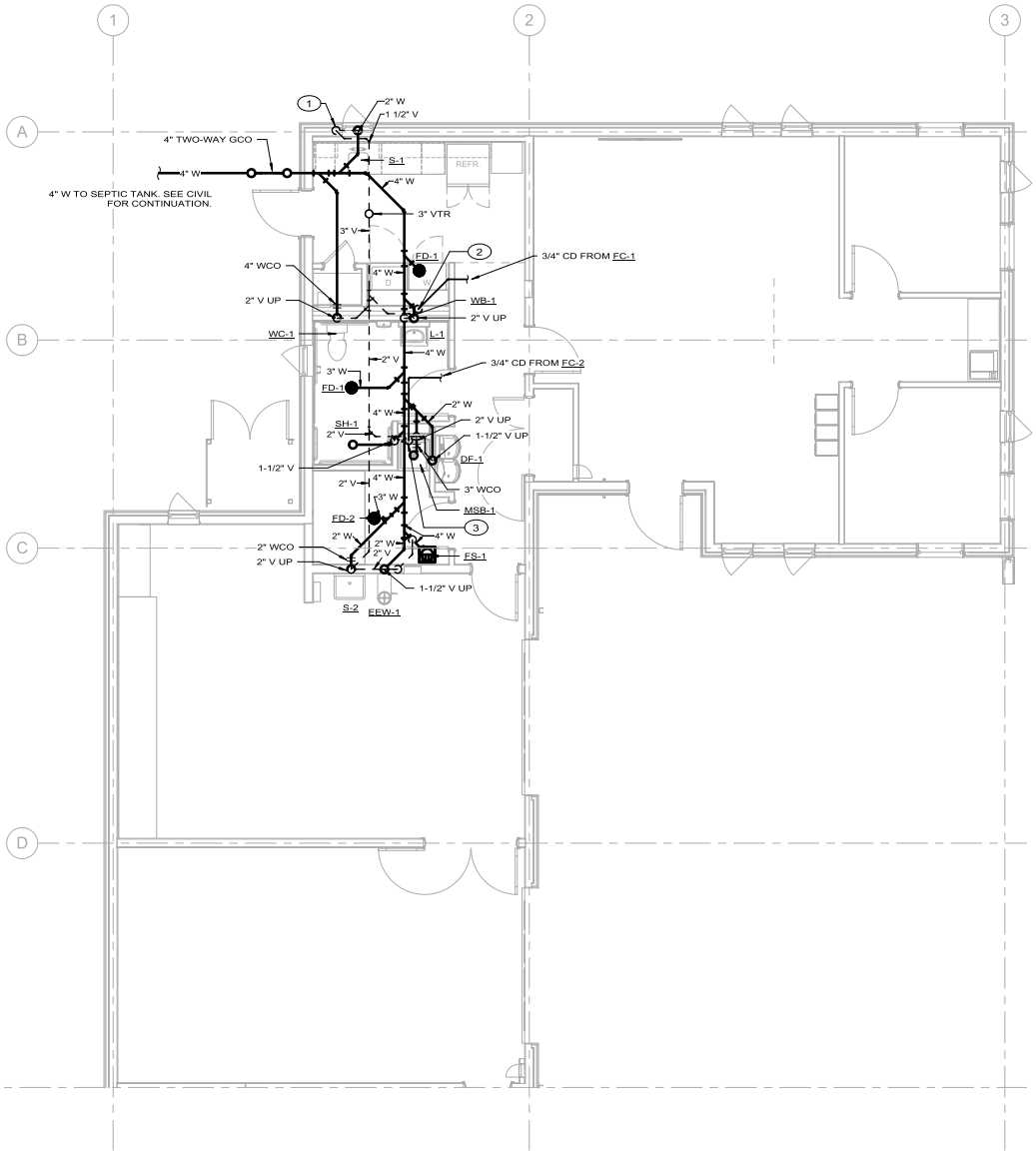

1 P102 PLUMBING WASTE & VENT PLAN
SCALE: B

KEYNOTES: #

1. BREAK ROOM VENT ROUTES HORIZONTALLY BENEATH WINDOW BEFORE RISING UP ADJACENT WALL.

2. ROUTE 3/4" CONDENSATE DRAIN FROM FC-1 DOWN INTERIOR WALL. DISCHARGE INTO WB-1 VIA AIRGAP.

3. ROUTE 3/4" CONDENSATE DRAIN FROM FC-2 EXPOSED, TIGHT TO WALL. DISCHARGE INTO MSB-1 VIA AIRGAP.

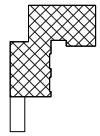

2 P102 P102 KEY PLAN

SCALE: B 4 0 4 8 SCALE OF FEET

PROFESSIONAL ENGINEER LICENSED 15298 5/23/24 STATE OF IDAHO DENISE M. OHLE

DESIGNED: AT / MK CADD: AT / MK TECH REVIEW: AZ DATE: 05/23/2024	SUB SHEET NO. P102	TITLE OF SHEET PLUMBING WASTE & VENT PLAN MIIN MAINTENANCE BUILDING MINIDOKA NATIONAL HISTORIC SITE	DRAWING NO. 194 187126 PMIS/PKG NO. 314972 SHEET 55 OF 82

5/21/2024 7:06:51 AM Autodesk Docs://2023-360 NPS MIIN Rehab DD-CD/2023-360 NPS MIIN Rehab DD-CD - v24 - BIM360 - MP.rvt

PLUMBING FIXTURE SCHEDULE / SALIENT CHARACTERISTICS

TAG	DESCRIPTION	BASIS OF DESIGN MANUFACTURER	BASIS OF DESIGN MODEL NUMBER	FINISH	BASIS OF DESIGN MANUFACTURER	BASIS OF DESIGN MODEL NUMBER	FINISH	GPM/GPF	ELECTRICAL	REMARKS
WC-1	WATER CLOSET- FLOOR MOUNTED (ABAAS)	AMERICAN STANDARD	215BA104.020	WHITE	BEMIS	1955CT	WHITE	1.28	-	1,13,28
L-1	LAVATORY- WALL HUNG (ABAAS)	AMERICAN STANDARD	0355.012	WHITE	DELTA	23C323	CHROME	0.5	-	2,3,6,10,12,28
MSB-1	MOP SERVICE BASIN	FIAT	MSB2424	WHITE	CHICAGO	445-897SRXKCCP	CHROME	2.2	-	4,14,28
S-1	SINK- SINGLE COMPARTMENT (ABAAS)	JUST	USADA1616A55-J	STAINLESS STEEL (18 GA)	DELTA	23C323	CHROME	1.5	-	3,6,10,11,28
S-2	SINK- SINGLE COMPARTMENT UTILITY	KOHLER	K-6719	WHITE	DELTA	28C2384-AC	CHROME	1.0	-	3,10,28
DF-1	DRINKING FOUNTAIN HIGH/LOW WITH BOTTLE FILLER	ELKAY	LZSTLDDWSLK	STAINLESS STEEL	-	-	-	-	115V	2,3,28
FD-1	FLOOR DRAIN	ZURN	Z415-SZ1	STAINLESS STEEL	-	-	-	-	-	7,8,28
FD-2	FLOOR DRAIN	JAY R SMITH	2120-Y	CAST IRON	-	-	-	-	-	7,8,28
FS-1	FLOOR SINK 8" SQUARE, 6" DEEP	JAY R SMITH	3413-Y	WHITE ACID RESISTANT	-	-	-	-	-	7,8,28
SH-1	SHOWER (ABAAS)	INPRO	ENSR6030ROLL	SOLID SURFACE BRIGHT WHITE	NIAGRA DELTA	LUXURY SPA R11000	CHROME	1.5	-	18,19,21,22,28
WB-1	WASHER BOX	SIOUX CHIEF	696-G2313MF	WHITE	-	-	-	-	-	5,28
WH-1	WALL HYDRANT	WOODFORD	HB67-12 3/4"	-	-	-	-	-	-	15,16,20,23,25,28
EEW-1	EMERGENCY EYE AND FACE WASH (ABAAS)	BRADLEY	S19224SS	SS	-	-	-	5.1	-	9,17,24,26,28
RPBP-1	REDUCED PRESSURE BACKFLOW PREVENTER DOMESTIC	APOLLO	RPLF4A 2"	-	-	-	-	-	-	27,28

REMARKS:

1. QUARTER-TURN ANGLE STOP, STAINLESS STEEL BRAIDED SUPPLIES
2. PROVIDE WITH CONCEALED FLOOR MOUNTED CARRIER
3. 17 GA. P-TRAP, QUARTER-TURN ANGLE STOPS, STAINLESS STEEL BRAIDED SUPPLIES
4. PAIL HOOK, WALL BRACKET, THREAD END, VACUUM BREAKER, INTEGRAL CHECKS & SHUTOFF STOPS
5. WITH "AA" WATER HAMMER ARRESTERS
6. PROVIDE MIXING VALVE UNDER FIXTURE. BASIS OF DESIGN MODEL LEONARD #270-LF (ASSE 1070 RATED).
7. PROVIDE WITH TRAP GUARD
8. MOUNT FLUSH WITH FLOOR
9. PROVIDE WITH EMERGENCY THERMOSTATIC MIXING VALVE. BASIS OF DESIGN MODEL: BRADLEY S19-2100 EFX25. 15 PSI DROP AT 5 GPM. 180 F MAXIMUM INLET TEMPERATURE.
10. PROVIDE WITH SUPPLIES AND P-TRAP INSULATION KIT. BASIS OF DESIGN MODEL: TRUEBRO #103 E-Z
11. 5-3/8" DEEP BOWL, REAR DRAIN LOCATION
12. SEE ARCHITECTURAL PLANS FOR MOUNTING HEIGHT
13. FLUSH TANK WATER CLOSET
14. PROVIDE WITH HOSE AND HOSE BRACKET, MOP HANGER, SS WALL GUARD
15. COORDINATE LENGTH WITH WALL
16. VACUUM BREAKER
17. PROVIDE WITH STAINLESS STEEL BOWL.
18. PROVIDE HEAVY DUTY BAR. BASIS OF DESIGN MODEL DELTA #51600-24"
19. PAUSE FLOW BY PRESSING BUTTON ON HANDLE. NOT A POSITIVE SHUT-OFF
20. ASSE 1052 RATED
21. PROVIDE WITH SHOWER STEM, AND TRIM FOR VALVE AND SHOWER HEAD.
22. PROVIDE WITH HANDHELD SHOWER (BASIS OF DESIGN MODEL: DELTA 59424-18-PK 1.75 GPM) AND (3) PORT,(2) SETTING DIVERTER WITH DIVERTER TRIM
23. WITH ENCLOSED WALL MOUNTED BOX
24. PROVIDE WITH BARRIER FREE OPTION.
25. MOUNT 20" ABOVE FINISHED GRADE.
26. PROVIDE WITH STAINLESS STEEL P-TRAP SHIELD.
27. PROVIDE WITH INLET STRAINER.
28. MANUFACTURER LISTED AS BASIS OF DESIGN OR APPROVED EQUAL.

PLUMBING FIXTURE CONNECTION SCHEDULE / SALIENT CHARACTERISTICS

TAG	CW [IN.]	HW [IN.]	HWC [IN.]	WASTE [IN.]	VENT [IN.]	REMARKS
WC-1	1/2"	--	--	4"	2"	--
L-1	1/2"	1/2"	1/2"	2"	1-1/2"	1
MSB-1	1/2"	1/2"	--	3"	2"	--
S-1	1/2"	1/2"	--	2"	1-1/2"	--
S-2	1/2"	1/2"	--	2"	1-1/2"	--
BF-1	1/2"	--	--	2"	1-1/2"	--
FD-1	--	--	--	3"	2"	--
FD-2	--	--	--	3"	2"	--
FS-1	--	--	--	4"	2"	--
SH-1	1/2"	1/2"	1/2"	2"	1-1/2"	--
WB-1	1/2"	1/2"	--	2" 3" HORIZONTAL	2"	--
WH-1	3/4"	3/4"	--	--	--	--
EEW-1	1/2"	1/2"	--	2"	1-1/2"	2
RPBP-1	2"	--	--	DRAIN TO FLOOR SINK	--	--

REMARKS:

1. CONNECT HOT WATER RECIRCULATION TO HOT WATER LINE PER 2021 IECC TABLE C404.5.1
2. HW, CW INLET PIPING TO TMV. OUTLET PIPE SHALL BE 3/4" TEPID WATER AT 80°F

ELECTRIC WATER HEATER SCHEDULE / SALIENT CHARACTERISTICS

TAG	BASIS OF DESIGN MANUFACTURER	BASIS OF DESIGN MODEL	RECOVERY AT °F RISE	GALLON CAPACITY	HEIGHT	DIAMETER/ DEPTH	OPER. LBS.	ELECTRICAL VOLTAGE	PHASE	KW	REMARKS
EWH-1	RHEEM	PROE55-T2-RH-CG	25 GPH 90°F	55	57	22-1/4"	589	208	1	11	1,2,3

REMARKS:

1. PROVIDE WITH MAGNESIUM ANODE ROD
2. PROVIDE WITH EXPANSION TANK (PET-1)
3. MANUFACTURER LISTED AS BASIS OF DESIGN OR APPROVED EQUAL.

PLUMBING MISCELLANEOUS SCHEDULE / SALIENT CHARACTERISTICS

TAG	DESCRIPITION	BASIS OF DESIGN MANUFACTURER	BASIS OF DESIGN MODEL NUMBER	REMARKS
PET-1	PLUMBING EXPANSION TANK	ARMSTRONG	AST-5 ASME RATED	1,4
TMV-1	THERMOSTATIC MIXING VALVE (BUILDING)	LEONARD	LV-981A-LF ASSE 1017	2,3,4

REMARKS:

1. 2.3 GALLONS ACCEPTANCE VOLUME
2. 2.5 GPM MINIMUM FLOW
3. 10 PSI PRESSURE DROP AT 24 GPM
4. MANUFACTURER LISTED AS BASIS OF DESIGN OR APPROVED EQUAL.

RECIRCULATION PUMP SCHEDULE / SALIENT CHARACTERISTICS

GENERAL TAG	BASIS OF DESIGN MANUFACTURER	BASIS OF DESIGN MODEL	SYSTEM	PERFORMANCE FLOW [GPM]	HEAD [FT.]	ELECTRICAL POWER [HP]	VOLTAGE [V]	PHASE	FREQUENCY [HZ]	SPEED [RPM]	NOTES
RCP-1	BELL & GOSSETT	PL-30B	EWH-1	1	18	1/12	115	1	60	2650	1,2,3

NOTES:

1. LEAD FREE BRONZE
2. PROVIDE WITH AQUASTAT AND TIMECLOCK TO RUN DURING OCCUPIED HOURS
3. MANUFACTURER LISTED AS BASIS OF DESIGN OR APPROVED EQUAL.

PROFESSIONAL ENGINEER LICENSED 15298 5/23/24 STATE OF IDAHO DENISE M. OHLE

DESIGNED: AT / MK	SUB SHEET NO. P501	TITLE OF SHEET PLUMBING SCHEDULES	DRAWING NO. 194
CADD: AT / MK		MIIN MAINTENANCE BUILDING	187126
TECH REVIEW: AZ		MINIDOKA NATIONAL HISTORIC SITE	PMIS/PKG NO. 314972
DATE: 05/23/2024			SHEET 56 OF 82

5/21/2024 7:06:52 AM Autodesk Docs://2023-360 NPS MIIN Rehab DD-CD/2023-360 NPS MIIN Rehab DD-CD - v24 - BIM360 - MP.rvt

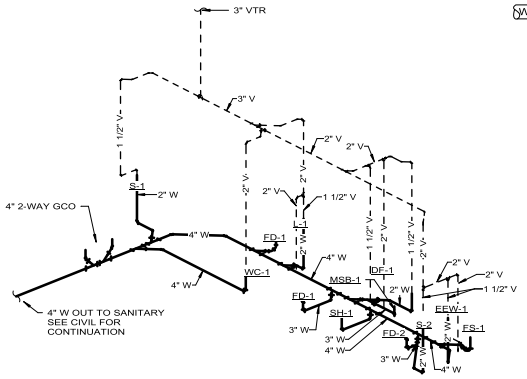

6 P601 WASTE & VENT ISOMETRIC

SCALE: NTS

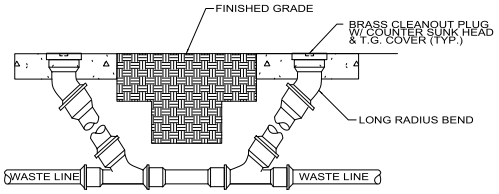

3 P601 2-WAY GRADE CLEANOUT DETAIL

SCALE: NTS

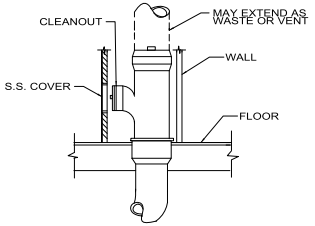

4 P601 WALL CLEANOUT DETAIL

SCALE: NTS

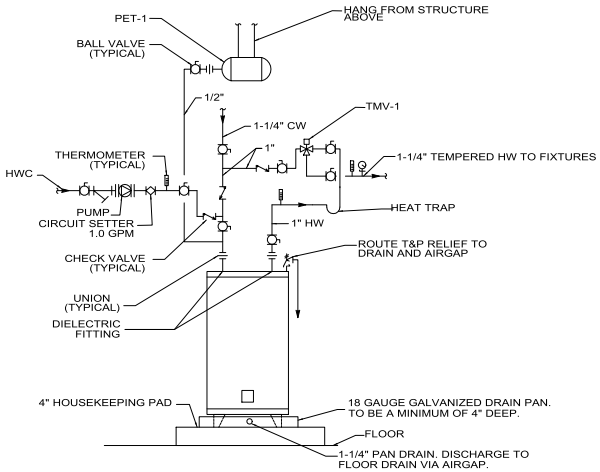

1 P601 WATER HEATER INSTALLATION DETAIL

SCALE: NTS

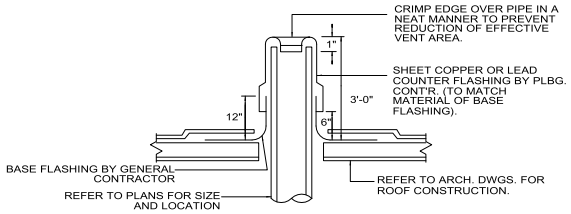

6 P601 PLUMBING VENT THROUGH ROOF DETAIL

SCALE: NTS

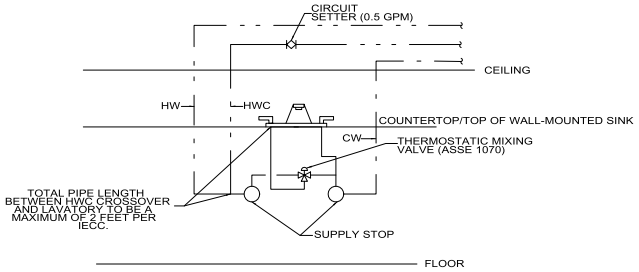

2 P601 PUBLIC LAVATORY PIPING DETAIL

SCALE: NTS

DESIGNED: AT / MK CADD AT / MK TECH REVIEW: AZ DATE: 05/23/2024	SUB SHEET NO. P601	TITLE OF SHEET PLUMBING DETAILS MIIN MAINTENANCE BUILDING MINIDOKA NATIONAL HISTORIC SITE	DRAWING NO. 194 187126 PMIS/PKG NO. 314972 SHEET 57 OF 82

5/21/2024 7:06:52 AM Autodesk Docs://2023-360 NPS MIIN Rehab DD-CD/2023-360 NPS MIIN Rehab DD-CD - v24 - BIM360 - MP.rvt

COVERSHEET NOTES

1. THE CONTRACTOR SHALL PROVIDE ALL LABOR AND MATERIAL NECESSARY FOR A COMPLETE AND FUNCTIONING ELECTRICAL SYSTEM.
2. MATERIALS AND INSTALLATION SHALL COMPLY WITH CODES, LAWS AND ORDINANCES OF FEDERAL GOVERNING BODIES HAVING JURISDICTION. CODES FOR THIS SCOPE OF WORK INCLUDE THE 2018 IBC, IFC AND IEBC, 2023 NEC, NFPA 914, AND 2016 ASHRAE 90.1.
3. MATERIALS AND EQUIPMENT SHALL BE LISTED AND/OR LABELED BY U.L., ETL, CSA OR ANOTHER RECOGNIZED TESTING LAB.
4. ALL WORK REQUIRED FOR THE INSTALLATION AS SHOWN ON DRAWINGS INCLUDING LABOR, EQUIPMENT AND MATERIALS SHALL BE IN STRICT COMPLIANCE WITH THE BUILDING STANDARDS, EXCEPT AS NOTED OTHERWISE.
5. THE CONTRACTOR SHALL SECURE AND PAY FOR ALL PERMITS, GOVERNMENTAL FEES, TAXES AND LICENSES NECESSARY FOR THE PROPER EXECUTION AND COMPLETION OF THE ELECTRICAL WORK.
6. THE CONTRACTOR SHALL PREPARE AND SUBMIT TO GOVERNMENTAL AGENCIES AND UTILITY COMPANIES SHOP DRAWINGS, WHICH ARE REQUIRED BY THESE AGENCIES, FOR THEIR APPROVAL.
7. ALL MATERIALS, AND EQUIPMENT SHALL BE ERECTED, INSTALLED, CONNECTED, CLEANED, ADJUSTED, TESTED, CONDITIONED, AND PLACED IN SERVICE IN ACCORDANCE WITH THE MANUFACTURER'S DIRECTIONS AND RECOMMENDATIONS.
8. ALL MATERIAL, EQUIPMENT, WIRING DEVICES, ETC. SHALL BE NEW, UNLESS SPECIFICALLY INDICATED AS EXISTING TO BE REUSED.
9. THE CONTRACTOR SHALL PROVIDE NEW TYPE WRITTEN PANEL DIRECTORIES FOR ALL EXISTING PANELS WITH NEW CIRCUITS. PANELBOARD SHALL BE MARKED WHERE THE SOURCE OF POWER SUPPLY ORIGINATES.
10. DO NOT SHARE NEUTRAL CONDUCTORS FOR MULTIWIRE BRANCH CIRCUITS. WHERE THE E.C. PROPOSES THE USE OF SHARED NEUTRAL CONDUCTORS OR SHARED NEUTRAL CONDUCTORS ARE REQUIRED (SUCH AS POWERED FURNITURE SYSTEMS), HANDLE TIES SHALL BE PROVIDED ON THE CIRCUIT BREAKERS, WITH SHARED NEUTRALS, SUCH THAT IT WILL SIMULTANEOUSLY DISCONNECT ALL UNGROUNDED CONDUCTORS. ALL HANDLE TIES ARE REQUIRED TO BE INDICATED ON THE PANELBOARD SHOP DRAWINGS.
11. SHOULD ACTUAL FIELD CONDITIONS REQUIRE INDICATED CIRCUIT DESIGNATIONS TO VARY, INDICATE THE CIRCUIT NUMBER USED ON THE "AS-BUILT" DRAWINGS.
12. ALL SERVICE EQUIPMENT SHALL BE LEGIBLY MARKED IN THE FIELD BY THE ELECTRICAL CONTRACTOR WITH THE MAXIMUM AVAILABLE FAULT CURRENT AS INDICATED WITHIN THESE DOCUMENTS. THE FIELD MARKING(S) SHALL COMPLY WITH ELECTRICAL SPECIFICATIONS FOR READABILITY AND DURABILITY.
13. TYPE AC CABLING IS NOT PERMITTED UNDER ANY CIRCUMSTANCES. ALL NEW CIRCUITS SHALL HAVE A GROUND WIRE INSTALLED.
14. PER NPS REQUIREMENTS, ALL WIRING MUST BE INSTALLED IN CONDUIT (MINIMUM SIZE 3/4").
15. ELECTRICAL CONTRACTOR SHALL PROVIDE ALL SPECIAL OUTLET BOXES THAT MAY BE REQUIRED TO ENCLOSE RECEPTACLES.
16. EACH SWITCH, LIGHT, RECEPTACLE AND OTHER MISCELLANEOUS DEVICE SHALL BE PROVIDED WITH A GALVANIZED OR PRESSED STEEL OUTLET BOX OF THE KNOCKOUT TYPE, OF NOT LESS THAN NO. 14 U.S. GAUGE STEEL. CONDUITS SHALL BE FASTENED WITH LOCKNUTS AND BUSHINGS AND ALL UNUSED KNOCKOUTS MUST BE LEFT SEALED. THERE MUST BE SUFFICIENT ROOM FOR WIRES AND BUSHINGS AND DEEP BOXES SHALL BE INSTALLED WHERE REQUIRED. BOXES SHALL BE SECURELY AND ADEQUATELY SUPPORTED.
17. IN EXPOSED AND SUSPENDED CEILING APPLICATIONS, ROUTE CONDUIT AS CLOSE TO STRUCTURAL SLAB OR DECK AS POSSIBLE, AND SUPPORT CONDUIT AND JUNCTION BOXES DIRECTLY FROM THE STRUCTURAL SLAB, DECK, OR FRAMING PROVIDED FOR THAT PURPOSE. BRANCH CIRCUIT CONDUITS SHALL NOT BE CLIPPED TO THE CEILING SYSTEM, UNLESS IT HAS BEEN SPECIFICALLY DESIGNED FOR THAT PURPOSE.
18. ALL EXPOSED CONDUIT SHALL BE CONCEALED TO THE GREATEST EXTENT POSSIBLE, AND SHALL BE INSTALLED PARALLEL AND CLOSE TO STRUCTURAL MEMBERS. GENERAL CONTRACTOR SHALL PAINT CONDUIT TO MATCH ADJACENT FINISHES.
19. WHERE FLOOR FITTINGS REQUIRE PENETRATION OF THE FLOOR SLAB, THEY SHALL BE STANDARD DEVICE LISTED BY UL FOR THE PURPOSE AND HAVE A UL FIRE RATING EQUAL TO THE FLOOR RATING. FLOOR SERVICE BOXES SHALL BE MODULAR, ADJUSTABLE FLUSH TYPE, DUAL SERVICE UNITS SUITABLE FOR WIRING METHOD USED. COMPARTMENT BARRIERS SHALL SEPARATE POWER FROM LOW VOLTAGE CABLING. PROVIDE RECTANGULAR SERVICE PLATE WITH SATIN FINISH.
20. ALL RECEPTACLES SHALL BE SPECIFICATION GRADE NEMA 5-20R, UNLESS OTHERWISE NOTED.
21. ALL LIGHT SWITCHES SHALL BE SPECIFICATION GRADE, QUIET OPERATION RATED 120/277 VOLT, 20 AMPS, UNLESS OTHERWISE NOTED.
22. ALL FACE PLATE AND DEVICE COLORS SHALL BE APPROVED BY CONTRACTING OFFICER.
23. PROVIDE LUMINAIRES SHOWN AS SHADED WITH EMERGENCY BATTERY BACKUP. EMERGENCY LUMINAIRES SHALL SENSE UNSWITCHED POWER TO THE SPACE AND OPERATED AUTOMATICALLY UPON LOSS OF NORMAL POWER. CONNECT THE EMERGENCY BATTERY BACKUP TO THE UN-SWITCHED LEG OF THE LIGHTING CIRCUIT INDICATED.
24. ALL DIMMED LIGHTING CIRCUITS ARE TO RECEIVE DEDICATED NEUTRALS. DO NOT SHARE NEUTRALS ON DIMMED LIGHTING CIRCUITS.
25. PROVIDE CONTRACTING OFFICER WITH A COMPLETE LISTING OF ALL LAMPS UTILIZED ON THE PROJECT INCLUDING MANUFACTURER AND CATALOG INFORMATION. PROVIDE A SUGGESTED SOURCE, INCLUDING CONTACT NAME AND PHONE NUMBER, FOR REORDERING.
26. THE CONTRACTOR SHALL VERIFY THE CEILING TYPE BEFORE ORDERING LIGHTING FIXTURES.
27. ROUGH-IN FOR MECHANICAL EQUIPMENT SHALL ONLY OCCUR AFTER MECHANICAL EQUIPMENT SUBMITTALS ARE THOROUGHLY REVIEWED FOR CHANGES. NOTIFY CONTRACTING OFFICER OF ANY DISCREPANCIES.
28. EC SHALL COORDINATE ELECTRIC WATER COOLER RECEPTACLE PLACEMENT SUCH THAT THE RECEPTACLE IS ACCESSIBLE WITHIN THE WATER COOLER SHROUD, YET CONCEALED BY THE SHROUD PER NEC 422.33(A). PROVIDE 5mA GFCI CIRCUIT BREAKER IN ELECTRICAL PANEL PER NEC SECTION 422.
29. THE POWER AND CONTROL REQUIREMENTS FOR ALL EQUIPMENT CONNECTIONS SHALL BE CONFIRMED WITH APPROVED SHOP DRAWINGS PRIOR TO ELECTRICAL ROUGH-IN. FINAL POWER REQUIREMENTS, DIMENSIONED ROUGH-IN LOCATIONS, LOW VOLTAGE SYSTEM CONNECTIONS, ETC. SHALL BE CONFIRMED AND MODIFIED AS REQUIRED.
30. ALL DEVICES IN OR ABOVE COUNTERS SHALL HAVE LOCATIONS AND MOUNTING HEIGHTS CONFIRMED WITH ARCHITECTURAL ELEVATIONS & CONTRACTING OFFICER PRIOR TO ROUGH-IN. ANY ADJUSTMENTS TO MOUNTING HEIGHTS REQUIRED BY LACK OF COORDINATION WILL BE AT THE CONTRACTOR'S EXPENSE.
31. ALL EXISTING ELECTRICAL SERVICES NOT SPECIFICALLY INDICATED TO BE REMOVED OR ALTERED SHALL REMAIN AS THEY PRESENTLY EXIST.
32. G.C. SHALL INCLUDE IN HIS COST THE REMOVAL OF ALL EXISTING ELECTRICAL DEVICES, CONDUITS, FIXTURES AND EQUIPMENT. TURN EQUIPMENT OVER TO CONTRACTING OFFICER AS INDICATED OR RECYCLE/DISCARD ALL EQUIPMENT AS REQUIRED. E.C. SHALL BE RESPONSIBLE FOR DISCONNECTING PRIMARY SERVICE AND TEMPORARY POWER.
33. ALL CIRCUIT BREAKERS IN NEW ELECTRICAL PANELS TO BE BOLT ON TYPE WITH TRIP INDICATOR.
34. IDENTIFY EACH RECEPTACLE WITH PANELBOARD IDENTIFICATION AND CIRCUIT NUMBER. USE HOT, STAMPED, OR ENGRAVED MACHINE PRINTING WITH BLACK-FILLED LETTERING ON FACE OF PLATE, AND DURABLE WIRE MARKERS OR TAGS INSIDE OUTLET BOXES.
35. UNLESS OTHERWISE NOTED, ALL GFCI RECEPTACLES SHALL HAVE TEST/RESET SWITCHES INTEGRAL TO RECEPTACLE DEVICE.
36. THE CONTRACTOR SHALL BE RESPONSIBLE FOR ALL COORDINATION WITH, APPROVAL FROM, AND ASSOCIATED FEES REQUIRED BY THE POWER UTILITY COMPANY (IDAHO POWER, KC RAMSEY, 208-736-3412, KRAMSEY@IDAHOPOWER.COM). CONTRACTOR SHALL CARRY AN ALLOWANCE IN THE BID TO COVER THE COSTS OF THE CONNECTION TO THE UTILITY PROVIDER.

PROFESSIONAL ENGINEER LICENSED 17050 05/23/2024 STATE OF IDAHO JON E BROOKS

DESIGNED: MD/AW CADD: MD/AW TECH REVIEW: JM DATE: 05/23/2024	SUB SHEET NO. E000	TITLE OF SHEET ELECTRICAL COVER SHEET MIIN MAINTENANCE BUILDING MINIDOKA NATIONAL HISTORIC SITE	DRAWING NO. 194 187126 PMIS/PKG NO. 314972 SHEET 58 OF 82

5/21/2024 5:19:11 PM Autodesk Docs://2023-360 NPS MIIN Rehab DD-CD/5854.00 - NPS MIIN - Electrical Central.rvt

DISTRIBUTION AND RACEWAY

- MDC — MAIN DISTRIBUTION CENTER (MDC)
- SURFACE MTD PANELBOARD
- RECESSED PANELBOARD
- T — TRANSFORMER
- BRANCH CIRCUIT HOMERUN
- CONDUIT CONCEALED IN FLOOR OR UNDERGROUND
- CONDUIT EXPOSED OR CONCEALED IN WALL OR CEILING
- RACEWAY UP
- RACEWAY DOWN
- CAPPED CONDUIT
- CURRENT TRANSFORMER
- CIRCUIT BREAKER SWITCH
- FUSED SWITCH
- GROUNDING ELECTRODE CONDUCTOR
- M — METER
- GFP — GROUND FAULT PROTECTION

SYSTEMS

- TTB, MDF OR IDF SYSTEM BACKBOARD
- TELECOMMUNICATION OUTLET
- FLOOR MOUNTED TELECOMMUNICATION OUTLET
- TELEVISION OUTLET
- WAP — WIRELESS ACCESS POINT
- SPEAKER - PAGING AND OR SOUND SYSTEM - INDICATES SPEAKER ZONE
- M — MICROPHONE OUTLET
- V — VOLUME CONTROL
- PUSH BUTTON
- CLOSED CIRCUIT TELEVISION CAMERA
- CABLE TRAY (LENGTH AS INDICATED ON DRAWINGS)

LIGHTING FIXTURES

- A_{1^a} — LUMINAIRE TYPE, REFERENCING LUMINAIRE SCHEDULE TYPICAL ALL FIXTURES. SUBSCRIPT, IF SHOWN, REFERENCES WALL SWITCH OR RELAY/ZONE CONTROL
- WALL MOUNTED LUMINAIRE
- SURFACE OR PENDANT MOUNTED LUMINAIRE
- RECESSED LUMINAIRE
- RECESSED DOWNLIGHT LUMINAIRE
- SURFACE CEILING LUMINAIRE
- PENDANT LUMINAIRE
- ARROW INDICATES DIRECTIONAL LUMINAIRE
- MONOPOINT LUMINAIRE
- SURFACE OR PENDANT TRACK LUMINAIRE
- LED TAPE LUMINAIRE
- EXIT LUMINAIRE - SHADED INDICATES FACE / DIRECTIONAL ARROWS AS SHOWN
- BATTERY PACK EMERGENCY LUMINAIRE
- HATCH INDICATES EMERGENCY LUMINAIRE
- STEP LIGHT TYPE LUMINAIRE
- IN-GRADE UPLIGHT
- BOLLARD OR POST TOP LUMINAIRE
- EXTERIOR AREA LIGHT

WIRING DEVICES

- DUPLEX RECEPTACLE
- FOUR PLEX RECEPTACLE
- SINGLE RECEPTACLE
- COMBO RECEPTACLE/SWITCH
- SWITCHED DUPLEX RECEPTACLE
- EMERGENCY POWERED DUPLEX RECEPTACLE
- SPECIAL PURPOSE RECEPTACLE
- FLOOR MOUNTED SPECIAL PURPOSE RECEPTACLE
- FLOOR MOUNTED RECEPTACLE DUPLEX/QUAD
- CLG CLG — CEILING MOUNTED RECEPTACLE DUPLEX/QUAD
- SR — SURFACE RACEWAY
- JUNCTION BOX
- WALL MOUNTED J-BOX
- FLOOR MOUNTED JUNCTION BOX
- MOLDED CASE CIRCUIT BREAKER IN ENCLOSURE
- NON-FUSED DISCONNECT SWITCH
- FUSED DISCONNECT SWITCH
- MAGNETIC CONTROLLER (STARTER)
- HP — MOTOR
- TC — TIME CLOCK
- PC — PHOTOCELL
- $_{TO}$ — THERMAL OVERLOAD SWITCH
- $ — SINGLE POLE SWITCH, LINE VOLTAGE
- $_3$ — 3-WAY SWITCH, LINE VOLTAGE
- $_4$ — 4-WAY SWITCH, LINE VOLTAGE
- $_K$ — KEY OPERATED SWITCH
- $_D$ — DIMMER SWITCH, LINE VOLTAGE
- X — LIGHTING CONTROL DEVICE, REFER TO DETAILS FOR CONTROL INTENT

ABBREVIATIONS AND SYMBOLS

A	AMPERE(S)
AC	ABOVE COUNTER
AFF	ABOVE FINISHED FLOOR
AFG	ABOVE FINISHED GRADE
AHJ	AUTHORITY HAVING JURISDICTION
AIC	AMPERES INTERRUPTING CAPACITY
ATS	AUTOMATIC TRANSFER SWITCH
BFF	BELOW FINISHED FLOOR
C	CONDUIT
CATV	CABLE TELEVISION
CB	CIRCUIT BREAKER
CT	CURRENT TRANSFORMER
DISC	DISCONNECT
DW	DISHWASHER
DWG(S)	DRAWING(S)
(E)	EXISTING TO REMAIN
EC	ELECTRICAL CONTRACTOR
EF	EXHAUST FAN
(ER)	EXISTING TO BE RELOCATED
EM	EMERGENCY
EPO	EMERGENCY POWER OFF
EWC	ELECTRIC WATER COOLER
F	FUSE
FLA	FULL LOAD AMPS
FS	SPRINKLER FLOW SWITCH
G	GROUND
GC	GENERAL CONTRACTOR
GD	GARBAGE DISPOSAL
GFI	GROUND FAULT CIRCUIT INTERRUPTER
GFP	GROUND FAULT PROTECTION
HP	HORSEPOWER
IDF	INTERMEDIATE DISTRIBUTION FACILITY
IG	ISOLATED GROUND
ISC	SHORT CIRCUIT CURRENT
KVA	KILOVOLT AMPERE(S)
KW	KILOWATT(S)
LTG	LIGHTING
MCA	MINIMUM CIRCUIT AMPERE(S)
MCB	MAIN CIRCUIT BREAKER
MDP	MAIN DISTRIBUTION CENTER
MDF	MAIN DISTRIBUTION FACILITY
MLO	MAIN LUGS ONLY
MTS	MANUAL TRANSFER SWITCH
MW	MICROWAVE
NC	NORMALLY CLOSED
NL	NIGHT LIGHT - SEE GENERAL NOTES
NO	NORMALLY OPEN
OAE	OR APPROVED EQUAL
OH	OVERHEAD
P	POLE
PART	PARTIAL CIRCUIT
PH	PHASE
PNL	PANEL
RCPT	RECEPTACLE
REF	REFRIGERATOR
(R)	EXISTING TO BE REMOVED
(RL)	RELOCATED LOCATION
SPD	SURGE PROTECTION DEVICE
TC	TIMECLOCK
TS	SPRINKLER TAMPER SWITCH
UC	UNDER COUNTER/CABINET
UG	UNDERGROUND
UON	UNLESS OTHERWISE NOTED
V	VOLT(S)
W	WATT(S) OR WIRE
WG	WIRE GUARD
WP	WEATHERPROOF
XFMR	TRANSFORMER

- X/X — MECHANICAL EQUIPMENT SCHEDULE NOTATION
- X — DETAIL NOTE
- X — DELTA REVISION NOTE
- X — ELECTRICAL WIRE SIZE
- X — LIGHTING SEQUENCE OF OPERATIONS TAG, REFER TO DETAILS FOR CONTROL INTENT

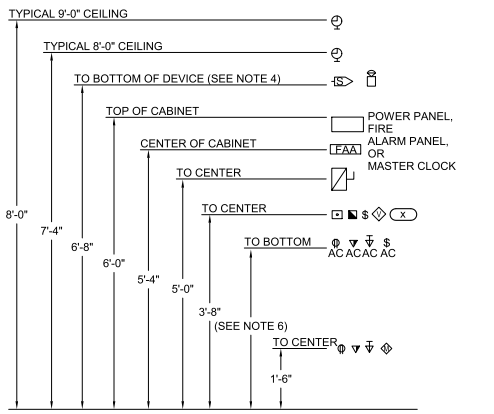

NOTES:

1. WHERE MULTIPLE LINE VOLTAGE DEVICES ARE SHOWN ADJACENT TO EACH OTHER, THEY ARE ALL TO SHARE THE SAME JUNCTION BOX, UP TO FOUR GANGS.
2. WHERE MORE THAN FOUR DEVICES ARE SHOWN ADJACENT TO EACH OTHER, DEVICES ARE TO STACK VERTICALLY ABOVE ONE ANOTHER IN TWO ROWS IN AS SMALL OF GANG BOXES AS POSSIBLE. I.E. SIX DEVICES WILL USE TWO THREE GANG BOXES, FIVE DEVICES WILL USE ONE THREE GANG AND ONE TWO GANG BOX.
3. SEPARATELY GANGED DEVICES ARE NOT ALLOWED TO BE INSTALLED ADJACENT TO ONE ANOTHER HORIZONTALLY WITHIN THE SAME STUD BAY.
4. AUDIBLE/VISUAL FIRE ALARM DEVICES SHOWN ARE TO BE MOUNTED AT 90" OR 6" BELOW CEILING, WHICHEVER IS LOWER. ABAAS STROBES TO BE MOUNTED AT 80" AFF OR 6" BELOW CEILING, WHICHEVER IS LOWER.
5. MAXIMUM ELEVATION FOR ALL LOAD CENTER CIRCUIT BREAKERS SHALL NOT EXCEED 48" AFF, WITHIN DWELLING UNITS.
6. THE E.C. SHALL REFER TO ARCHITECTURAL ELEVATIONS TO COORDINATE ALL COUNTER HEIGHTS. ALL "AC" DEVICES SHALL HAVE BOTTOM OF BACK-BOX MOUNTED 4" ABOVE THE BACK/SIDE SPLASH.

LIGHTNING PROTECTION SYSTEM NOTES

ELECTRICAL CONTRACTOR SHALL PROVIDE PRICING TO PROVIDE AND INSTALL A LIGHTNING PROTECTION SYSTEM FOR THE MAINTENANCE BUILDING WITH AN UNDERWRITER'S LABORATORIES LISTED MASTER C LABEL. REFER TO PERFORMACE SPECIFICATION SECTION 26 4113 FOR SYSTEM REQUIREMENTS. COORDINATE ALL GROUND ROD LOCATIONS ON ROOF WITH CONTRAACTING OFFICER WHILE DEVELOPING SUBMITTALS. COORDINATE ALL DOWN CONDUCTOR LOCATIONS WITH CONTRACTING OFFICER AND MANUFACTURER DURING SUBMITTALS. SUBMITTALS REQUIRE FULL ROOF PLANS WITH ALL AIR TERMINALS (AND ALL OTHER EQUIPMENT) TO BE INDICATED FOR REVIEW PRIOR TO SUBMITTAL APPROVAL.

PROFESSIONAL ENGINEER LICENSED 17050 05/23/2024 STATE OF IDAHO JON E BROOKS

DESIGNED: MD/AW	SUB SHEET NO.	TITLE OF SHEET	DRAWING NO. 194
DRAWN: MD/AW	E001	ELECTRICAL COVER SHEET	187126
TECH REVIEW: JM		MIIN MAINTENANCE BUILDING	PMIS/PKG NO. 314972
DATE: 05/23/2024		MINIDOKA NATIONAL HISTORIC SITE	SHEET 59 OF 82

5/21/2024 5:19:12 PM Autodesk Docs://2023-360 NPS MIIN Rehab DD-CD/5854.00 - NPS MIIN - Electrical Central.rvt

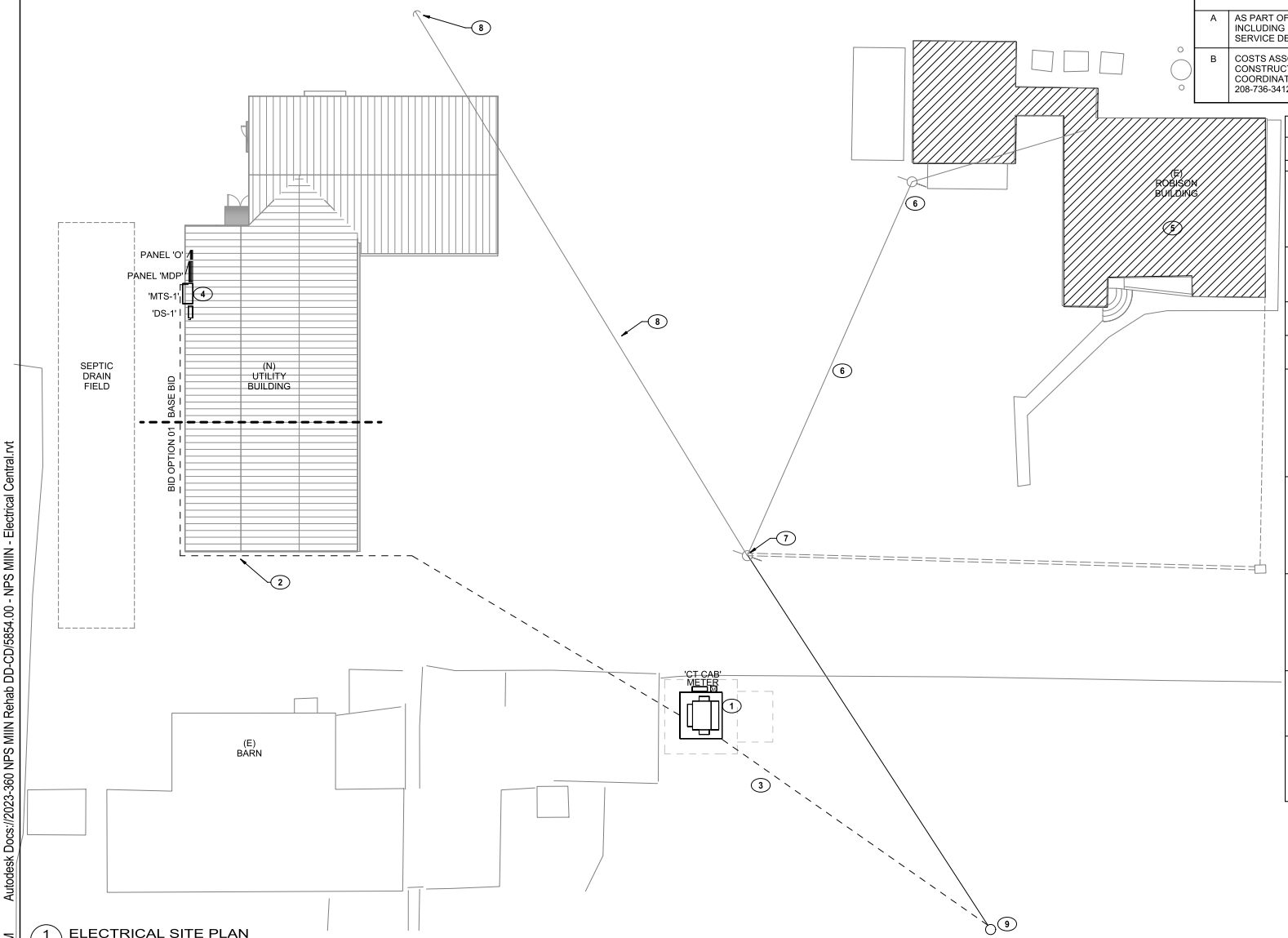

1 ELECTRICAL SITE PLAN
E100 SCALE A

SITE PLAN GENERAL NOTES

A	AS PART OF BID OPTION 02, BUILDING IN HATCHED AREA TO BE DEMOLISHED, INCLUDING ELECTRICAL SERVICE. SEE ONE-LINE, SHEET E600 FOR ELECTRICAL SERVICE DEMOLITION INFORMATION.
B	COSTS ASSOCIATED WITH IDAHO POWER SCOPE SHALL BE CARRIED AS PART OF CONSTRUCTION BUDGET AND PAID FOR BY THE NPS. CONTRACTOR SHALL COORDINATE SEQUENCING OF WORK WITH IDAHO POWER COMPANY (KC RAMSEY 208-736-3412 KRAMSEY@IDAHOPWER.COM).

KEYNOTE LEGEND

KEY VALUE	KEYNOTE TEXT
1	PROPOSED LOCATION OF NEW TRANSFORMER. IDAHO POWER COMPANY SHALL PROVIDE DESIGN OF UPGRADED ELECTRICAL SERVICE INCLUDING PRIMARY UTILITY FEEDERS, TRANSFORMER AND SECONDARY FEEDERS TO CT CABINET AND METER. ELECTRICAL CONTRACTOR IS RESPONSIBLE FOR TRANSFORMER PAD AND ALL SECONDARY WIRING, EQUIPMENT AND DEVICES.
2	APPROXIMATE ROUTING OF SERVICE SECONDARY CONDUCTORS BETWEEN THE UTILITY PAD MOUNTED TRANSFORMER, CT CABINET AND METER, AND THE BUILDING ELECTRICAL SERVICE POINT. REFER TO ELECTRICAL ONELINE DIAGRAM #1/1-E600 FOR MORE INFORMATION.
3	NEW UNDERGROUND UTILITY PRIMARY FROM OVERHEAD POLE TO NEW PAD MOUNTED TRANSFORMER SHALL BE PROVIDED BY IDAHO POWER COMPANY.
4	EC SHALL PROVIDE 208V 3 PHASE 4 WIRE 800A 3-POLE NEMA 3R MANUAL TRANSFER SWITCH FOR PORTABLE GENERATOR CONNECTION.
5	THE ROBISON BUILDING SHALL REMAIN FULLY OPERATIONAL DURING CONSTRUCTION OF THE NEW MAINTENANCE BUILDING. MAINTAIN EXISTING POWER TO ROBISON BUILDING DURING CONSTRUCTION. DEMOLITION OF THE ROBISON BUILDING AND THE EXISTING INCOMING ELECTRICAL SERVICE SHALL BE UNDER BID OPTION 02. ONCE CONSTRUCTION OF THE NEW MAINTENANCE BUILDING IS COMPLETE AND FULLY FUNCTIONAL, AND BID OPTION 02 HAS BEEN APPROVED, DEMOLITION OF THE EXISTING ROBISON BUILDING AND INCOMING ELECTRICAL UTILITY CAN PROCEED.
6	AS PART OF BID OPTION 02, EXISTING ELECTRICAL SERVICE TO EXISTING ROBISON BUILDING SHALL BE DEMOLISHED. CONTRACTOR SHALL REMOVE FEEDERS FROM OVERHEAD UTILITY POLE BACK TO EXISTING METER PEDESTAL AT THE ROBISON BUILDING. EC SHALL REMOVE EXISTING METER PEDESTAL AND DISCONNECT. CONDUIT SHALL BE CUT BELOW GRADE AND CAPPED. EC SHALL COORDINATE SHUTDOWN OF EXISTING SERVICE WITH IDAHO POWER COMPANY.
7	AS PART OF BID OPTION 03, IDAHO POWER COMPANY SHALL REMOVE OVERHEAD ELECTRICAL LINE AND UTILITY POLE. CONTRACTOR SHALL BACKFILL DISTURBED AREA. CONTRACTOR SHALL COORDINATE SEQUENCING OF WORK WITH IDAHO POWER COMPANY (KC RAMSEY). ONCE CONSTRUCTION OF THE NEW MAINTENANCE BUILDING IS COMPLETE AND FULLY FUNCTIONAL AND BID OPTION 03 HAS BEEN APPROVED, DEMOLITION OF THE EXISTING ELECTRICAL UTILITY POLE CAN PROCEED.
8	TO ALLOW FOR CONSTRUCTION OF NEW BUILDING, EXISTING POWER POLE ANCHOR LINE AND ANCHOR POLE SHALL BE REMOVED (BY IDAHO POWER) AS PART OF BASE BID. IDAHO POWER WILL INTERCEPT EXISTING OVERHEAD TENSION LINE, INSTALL POWER POLE AND ANCHOR LINE AND REMOVE EXISTING ANCHOR AND EXISTING POLE.
9	APPROXIMATE LOCATION OF NEW IDAHO POWER POLE WITH ANCHOR LINE. POLE WILL BE USED TO PROVIDE NEW OVERHEAD PRIMARY LINE TO BACKFEED EXISTING OVERHEAD SINGLE PHASE TRANSFORMER. NEW THREE PHASE POWER WILL BE ROUTED UNDERGROUND FROM NEW UTILITY POLE TO NEW PAD MOUNT TRANSFORMER.

SCALE: A 10 0 10 20 SCALE OF FEET

RLDG-NORTH

PROFESSIONAL ENGINEER LICENSED 17050 05/23/2024 STATE OF IDAHO JON E BROOKS

DESIGNED:	MD/AW
CADD	MD/AW
TECH REVIEW:	JM
DATE:	05/23/2024
SUB SHEET NO.	E100
TITLE OF SHEET	ELECTRICAL SITE PLAN
	MIIN MAINTENANCE BUILDING
	MINIDOKA NATIONAL HISTORIC SITE
DRAWING NO.	194
	187126
PMIS/PKG NO.	314972
SHEET	60 OF 82

5/21/2024 5:19:12 PM Autodesk Docs://2023-360 NPS MIIN Rehab DD-CD/5854.00 - NPS MIIN - Electrical Central.rvt

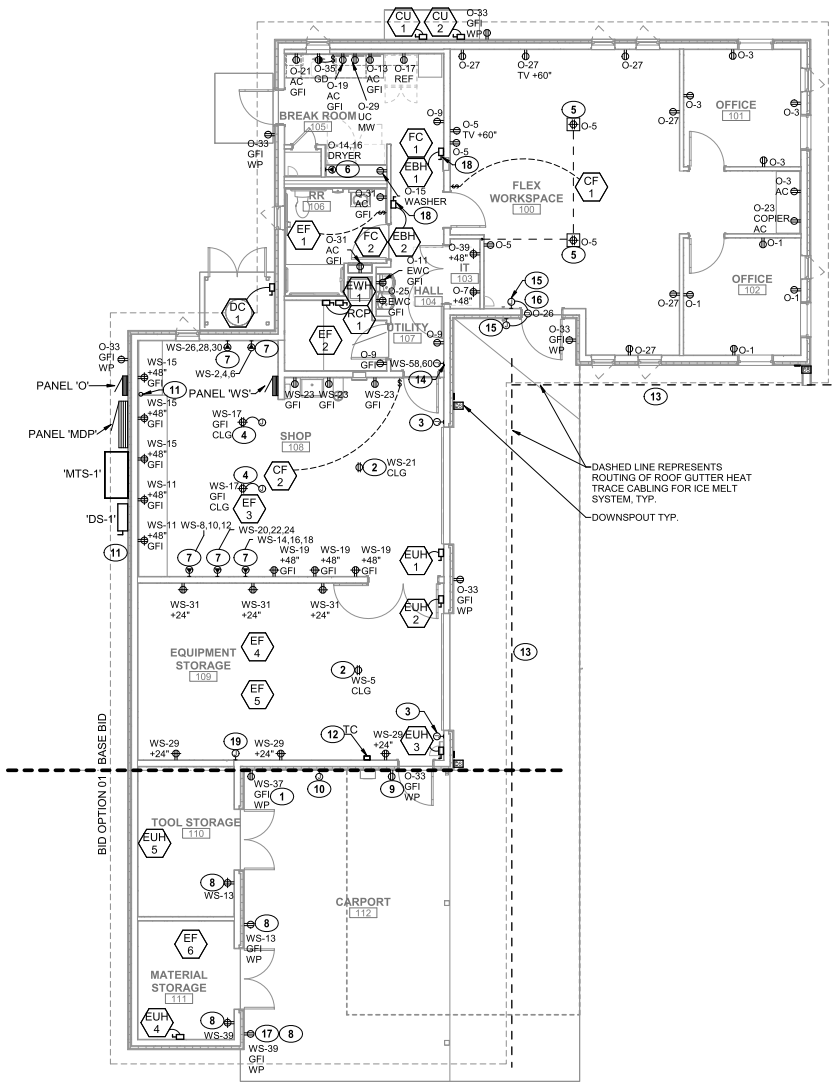

1 ELECTRICAL POWER PLAN
E111 SCALE A

KEYNOTE LEGEND

KEY VALUE	KEYNOTE TEXT
1	AS A PART OF THE BASE BID, PROVIDE EXTERIOR, WEATHERPROOF IN-USE TYPE RECEPTACLE FOR 120V, 20A DEDICATED CORD & PLUG CONNECTION TO VEHICLE BLOCK HEATER.
2	CEILING MOUNTED RECEPTACLE FOR 120V, 20A DEDICATED CORD & PLUG CONNECTION TO OVERHEAD DOOR MOTOR OPERATOR. EC SHALL MAKE FINAL LOW VOLTAGE CONNECTIONS BETWEEN OPERATOR AND CONTROLS LOCATION AS COORDINATED WITH SHOP DRAWINGS.
3	EC SHALL PROVIDE 120V, 20A, SINGLE PHASE CONNECTION TO OVERHEAD DOOR CONTROLLER. RUN 2#12, 1#12G, IN 3/4"C TO CONNECTION AND RUN CONTROL WIRING FROM THE CONTROL TO THE OVERHEAD DOOR MOTOR. CONFIRM CONNECTION REQUIREMENTS AND MOUNTING LOCATION WITH SHOP DRAWINGS PRIOR TO ROUGH-IN.
4	ELECTRICAL CONTRACTOR SHALL PROVIDE NEMA 5-20R DROP CORD QUAD RECEPTACLE WITH SO CORD AS INDICATED. REFER TO CEILING MOUNT DROP-CORD RECEPTACLE DIAGRAM, 0-E610, FOR ADDITIONAL INFORMATION. COORDINATE EXACT LOCATION AND LENGTH OF CORD IN FIELD WITH CONTRACTING OFFICER PRIOR TO ROUGH IN.
5	CONTRACTOR SHALL PROVIDE RECESSED FLUSH MOUNTED FLOOR BOX AND MULTIPLE SERVICE FLOOR BOX COVER KIT FOR TELE/DATA AND POWER APPLICATION. PROVIDE 1-1/2" INCH DATA CONDUIT AND 3/4" POWER CONDUIT FROM FLOOR TO NEAREST FULL HEIGHT PARTITION AND RUN ABOVE CEILING. PROVIDE BUSHING ON END OF CONDUIT. PROVIDE PULL LINE IN ENTIRE LENGTH OF CONDUIT. ALL WIRING AND CABLE SHALL BE ROUTED BACK TO THE SOURCE IN CONDUIT.
6	PROVIDE 30A, 208V 1PHASE, NEMA 6-30P RECEPTACLE (3-#10 CU, 1#10 GND). COORDINATE EXACT CONNECTION REQUIREMENTS WITH APPLIANCE PROVIDED.
7	PROVIDE 208V 3PH 30A NEMA 6-30R CONNECTION TO SHOP EQUIPMENT. RUN 3#10, 1#10G, 3/4"C. COORDINATE FINAL CONNECTION REQUIREMENT WITH EQUIPMENT SUPPLIED.
8	ALL DEVICES AND FIXTURES SHOWN IN THIS AREA ARE PART OF BID OPTION 01 UNLESS OTHERWISE NOTED. WORK SHALL NOT BE PERFORMED AS A PART OF THE BASE BID SCOPE.
9	DEVICE SHALL BE PROVIDED AS A PART OF THE BASE BID SCOPE.
10	AS PART OF BASE BID, EC SHALL PROVIDE INFRASTRUCTURE FOR FUTURE LEVEL 2 SINGLE PORT EV CHARGER. RUN 1" EMPTY CONDUIT AND PULL STRING IN WALL FROM PANEL 'WS' TO FUTURE EV CHARGER LOCATION. CONDUIT SHALL TERMINATE IN SURFACE MOUNTED J-BOX. PROVIDE BLANK COVER PLATE.
11	PROPOSED LOCATION OF FUTURE PV SYSTEM DISCONNECT AND INVERTERS. PROVIDE 2" EMPTY CONDUIT AND PULLSTRING. ROUTE CONDUIT FROM PANEL 'MDP' INTO SHOP AREA. CONDUIT SHALL PENETRATE ROOF IN SHOP AREA AT SOLAR READY ZONE ON ROOF. CAP CONDUIT FOR FUTURE PV SYSTEM. REFER TO ONE-LINE DIAGRAM #1/E600 FOR MORE INFORMATION.
12	AS BASIS OF DESIGN, PROVIDE ASTRONOMIC 7-DAY/365 DAY 2-CIRCUIT TIMECLOCK. MODEL ET2825CP FROM INTERMATIC OR APPROVED EQUAL FOR CONTROL OF EXTERIOR LIGHTING FIXTURES. REFER TO LIGHTING PLAN ON SHEET E-111 AND LIGHTING ZONE SCHEDULE ON SHEET E-801 FOR MORE INFORMATION.
13	PROVIDE A COMPLETE ICE MELT HEAT TRACE SYSTEM FOR THE BUILDING NORTH EXTERIOR GUTTERS AND DOWNSPOUTS BY RAYCHEM OR APPROVED EQUAL. REFER TO SPECIFICATION SECTION 260533.1 FOR ADDITIONAL REQUIREMENTS. SEE HEAT TRACE SYSTEM NOTES, THIS SHEET, FOR SYSTEM GENERAL SUMMARY.
14	PROPOSED LOCATION OF HEAT TRACE CONTROL PANEL.
15	EC SHALL PROVIDE RECESSED, WALL-MOUNTED JUNCTION BOX AT +42" AFF AND 3/4" CONDUIT TO STUB OUT ABOVE INACCESSIBLE CEILING FOR INSTALLATION OF MOTORIZED ASSIST PUSH PAD DEVICE. ACTUATOR PUSH PAD TO BE PLACED ADJACENT TO DOOR, IN THE DIRECTION OF TRAVEL. COORDINATE EXACT LOCATION AND CONNECTION REQUIREMENTS WITH APPROVED SHOP DRAWINGS AND CONTRACTING OFFICER PRIOR TO ROUGH-IN.
16	JUNCTION BOX FOR 120V POWER CONNECTION TO MOTORIZED AUTOMATED ACCESS DOOR OPERATOR. EC SHALL MAKE ALL NECESSARY INTERCONNECTIONS BETWEEN JUNCTION BOX, OPERATOR MOTOR, AND PUSH PAD LOCATIONS PER MANUFACTURER'S REQUIREMENTS. COORDINATE EXACT LOCATION WITH APPROVED EQUIPMENT SHOP DRAWINGS.
17	AS PART OF BID OPTION 01, PROVIDE EXTERIOR, WEATHERPROOF IN-USE TYPE RECEPTACLE FOR 120V, 20A DEDICATED CORD & PLUG CONNECTION TO VEHICLE BLOCK HEATER.
18	EQUIPMENT DISCONNECT SHALL BE MOUNTED ON EQUIPMENT PLATFORM. COORDINATE LOCATION WITH CONTRACTING OFFICER PRIOR TO INSTALLATION.
19	PROVIDE 120V, 20A CONNECTION TO NOX/CO SENSOR IN SNOW BUILDING. COORDINATE FINAL CONNECTION REQUIREMENTS AND MOUNTING LOCATION PRIOR TO ROUGH-IN.

POWER GENERAL NOTES

A	UNLESS OTHERWISE NOTED, ALL CIRCUIT NUMBERS INDICATED ON THIS SHEET SHALL REFER TO CIRCUIT ORIGINATING IN PANELBOARDS BASED UPON THE FOLLOWING CONVENTION, (THIS SHEET ONLY): O-# = CIRCUIT TO PANEL 'O' WS-# = CIRCUIT TO PANEL 'WS'
B	120V, 20A FEEDS 1. EC SHALL UTILIZE #12 CU FOR DISTANCES LESS THAN 150 FEET. 2. EC SHALL UTILIZE #10 CU FOR DISTANCES BETWEEN 150 AND 200 FEET. 3. EC SHALL UTILIZE #8 CU FOR DISTANCES BETWEEN 250 AND 400 FEET. 4. EC SHALL UTILIZE #6 CU FOR DISTANCES GREATER THAN 400 FEET.
C	REFER TO MECHANICAL SCHEDULE AND NOTES ON SHEET E700 FOR EQUIPMENT CONNECTION AND ADDITIONAL INFORMATION ON MECHANICAL EQUIPMENT.

HEAT TRACE SYSTEM

GENERAL SUMMARY OF SYSTEM COMPONENTS ARE AS FOLLOWS:

- SELF-REGULATING HEATING CABLE WITH 12 W/FT OUTPUT.
- ESTIMATED 40A 208V 1PH, MULTI-CIRCUIT POWER DISTRIBUTION CENTER AND CONTROL PANEL WITH (1)30A CIRCUIT AND (1)20A CIRCUIT AND 30mA GFCI BREAKERS.
- TEMPERATURE MOISTURE SENSORS, CABLE STRAPS, POWER CONNECTION KITS, SPLICE KITS, HANGER KITS, TEE KITS, END SEAL KITS, AND ALL ASSOCIATED COMPONENTS AS REQUIRED FOR A COMPLETE SYSTEM.
- APPROXIMATE CABLE LENGTHS:
  1. GUTTERS - APPROXIMATELY 63FT X 2 FOR PARALLEL RUN, 126 FT TOTAL.
  2. DOWNSPOUTS - QTY 3 - APPROXIMATELY 14 FT OF CABLING EACH, 42 FT TOTAL.
  3. BID OPTION 01 - APPROXIMATELY 26 FT X 2 FOR PARALLEL RUN, 52 FT TOTAL
- COORDINATE FINAL RECOMMENDED CABLE LENGTHS WITH SELECTED MANUFACTURER AND ARCHITECTURAL ROOF PLANS. PROVIDE ADDITIONAL CABLING FOR CONNECTION KITS.

SCALE: A 4 0 4 8 12 SCALE OF FEET

RLDG-NORTH

PROFESSIONAL ENGINEER LICENSED 17050 05/23/2024 STATE OF IDAHO JON E BROOKS

DESIGNED: MD/AW	SUB SHEET NO.	TITLE OF SHEET	DRAWING NO. 194
CADD MD/AW	E111	ELECTRICAL POWER PLAN	187126
TECH REVIEW: JM			PMIS/PKG NO. 314972
DATE: 05/23/2024		MIIN MAINTENANCE BUILDING MINIDOKA NATIONAL HISTORIC SITE	SHEET 61 OF 82

5/21/2024 5:19:15 PM Autodesk Docs://2023-360 NPS MIIN Rehab DD-CD/5854.00 - NPS MIIN - Electrical Central.rvt

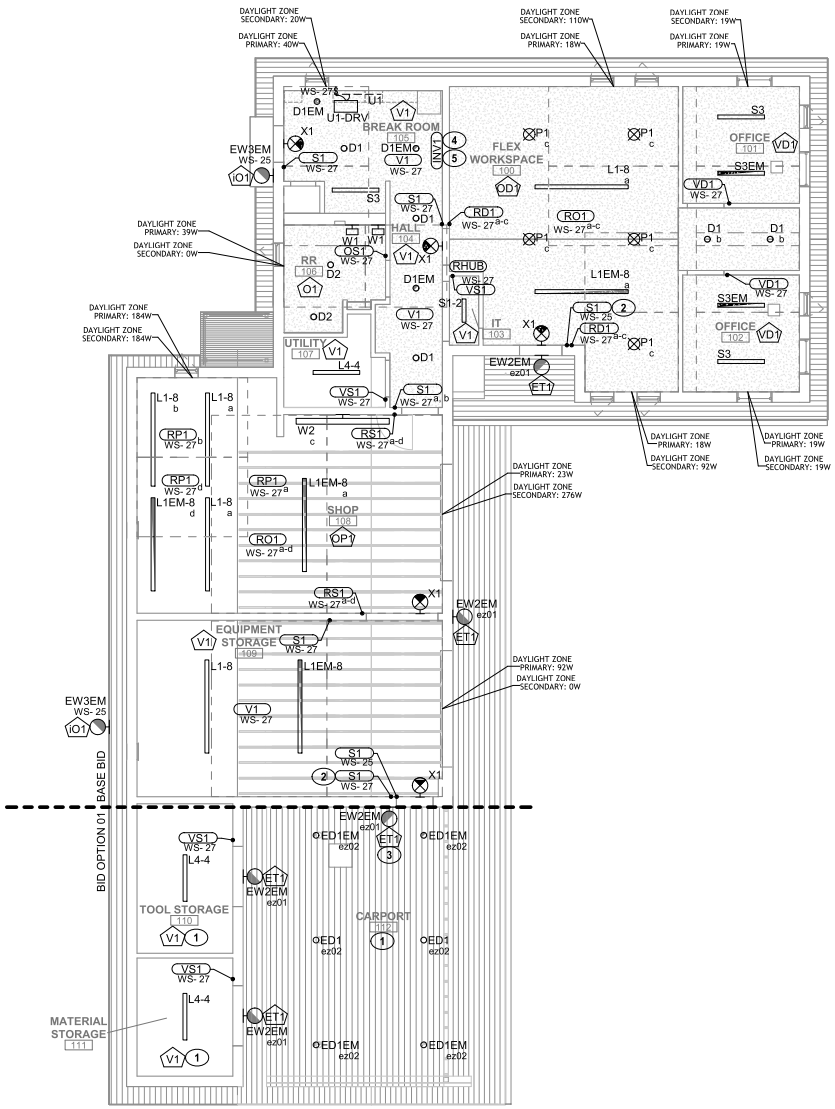

1 E211 ELECTRICAL LIGHTING PLAN
SCALE A

LIGHTING GENERAL NOTES

A	ALL FIXTURES WITH HATCHING AND/OR DESIGNATED AS 'EM' SHALL BE PROVIDED WITH INTEGRAL BATTERY BACKUP, UNLESS OTHERWISE INDICATED. BATTERY SHALL ENGAGE ONLY AFTER COMPLETE LOSS OF POWER TO THE CIRCUIT.
B	CIRCUIT ALL EMERGENCY LIGHTING AND EXIT SIGNS TO NEAREST LINE VOLTAGE CIRCUIT, AHEAD OF ALL SWITCH LEGS.
C	UNLESS OTHERWISE NOTED, ALL CIRCUIT NUMBER INDICATED ON THIS SHEET SHALL REFER TO CIRCUIT ORIGINATING IN PANELBOARDS OR RELAY PANELS BASED ON THE FOLLOWING CONVENTION, (THIS SHEET ONLY): O-# = CIRCUIT TO PANEL 'O' WS-# = CIRCUIT TO PANEL 'WS'

KEYNOTE LEGEND

KEY VALUE	KEYNOTE TEXT
1	ALL DEVICES AND FIXTURES SHOWN IN THIS AREA ARE PART OF BID OPTION 01 UNLESS OTHERWISE NOTED. WORK SHALL NOT BE PERFORMED AS A PART OF THE BASE BID SCOPE.
2	MANUAL OVERRIDE SWITCH FOR EXTERIOR LIGHT FIXTURES. EC SHALL COORDINATE FINAL MOUNTING LOCATION WITH CONTRACTING OFFICER PRIOR TO ROUGH-IN. REFER TO POWER PLAN ON SHEET E101 FOR TIMECLOCK LOCATION.
3	DEVICE SHALL BE PROVIDED AS A PART OF THE BASE BID SCOPE.
4	LIGHTING INVERTER FOR EMERGENCY LIGHTING SHALL BE LOCATED ON THE EQUIPMENT PLATFORM. FINAL MOUNTING LOCATION SHALL BE CONFIRMED WITH CONTRACTING OFFICER PRIOR TO INSTALLATION.
5	EC SHALL INSTALL EACH UL924 EMERGENCY LIGHTING SHUNT RELAY ADJACENT TO ASSOCIATED INVERTER. WIRE ACCORDING TO DETAIL 2/E810. WORK TO INTERACT WITH INDICATED ROOM CONTROLLER OR TIME CLOCK TO DETECT LOSS OF POWER AND AUTOMATICALLY TURN ON EMERGENCY LIGHTS VIA INVERTER.

LIGHTING CONTROLS NAMING CONVENTION

SYSTEM TYPE:
- **N** = NETWORKED
- **R** = ROOM CONTROLLER
- **W** = WIRELESS

- THE ABSENCE OF LETTERS UNDER 'SYSTEM TYPE' INDICATES A WIRED STANDALONE SYSTEM
- THE ABSENCE OF 'W' MEANS THE SYSTEM IS WIRED

SENSOR TYPE:
- **O** = OCCUPANCY
- **V** = VACANCY
- **P** = PHOTOCELL

DEVICES:
- **D** = DIMMER
- **S** = SWITCH
- **H** = HUB
- **U** = UNIQUE DEVICE TYPE

NUMBERING:
1,2,3... = QUANTITY AS REQUIRED FOR DIFFERENT HARDWARE, DEVICE CHARACTERISTICS, OR MOUNTING CONDITIONS.

SCALE: A 4 0 4 8 12 SCALE OF FEET

ROTG-NORTH

PROFESSIONAL ENGINEER LICENSED 17050 05/23/2024 STATE OF IDAHO JON E BROOKS

DESIGNED: MD/AW	SUB SHEET NO.	TITLE OF SHEET	DRAWING NO. 194 187126
CADD MD/AW	E211	ELECTRICAL LIGHTING PLAN	PMIS/PKG NO. 314972
TECH REVIEW: JM		MIIN MAINTENANCE BUILDING MINIDOKA NATIONAL HISTORIC SITE	SHEET 62 OF 82
DATE: 05/23/2024			

5/21/2024 5:19:17 PM Autodesk Docs://2023-360 NPS MIIN Rehab DD-CD/5854.00 - NPS MIIN - Electrical Central.rvt

FAULT CURRENT CALCULATION SCHEDULE

POINT	LOCATION DESCRIPTION	LENGTH (L) (ft)	VOLTAGE (EL-L)	VOLTAGE (EL-N)	PHASE	WIRE SIZE	CONDUCTOR MATERIAL	CONDUCTOR TYPE	CONDUIT MATERIAL	VOLTAGE CLASS	C VALUE	# OF PARALLEL RUNS	Isc AVAILABLE UPSTREAM	Isc AT EQUIP (3ph) OR (IL-L)	POINT
F0	UTILITY XFMR												--	42,000	F0
F1	800A DISCONNECT	60	208	120	3	500	COPPER	THREE SINGLE CONDUCTORS	NONMAGNETIC	600V	26706	2	42,000	30,154	F1
F2	PANEL 'MDP'	1	208	120	3	500	COPPER	THREE SINGLE CONDUCTORS	STEEL	600V	22185	2	30,154	29,984	F2
F3	PANEL 'O'	1	208	120	3	3X	COPPER	THREE SINGLE CONDUCTORS	STEEL	600V	12843	1	29,984	29,412	F3
F4	PANEL 'WS'	35	208	120	3	3X	COPPER	THREE SINGLE CONDUCTORS	STEEL	600V	12843	2	29,412	22,053	F4

NOTES:

1. ALL CALCULATIONS WERE DONE USING BUSSMAN "POINT-TO-POINT" METHOD.
2. REFER TO PLANS FOR ASSUMED UTILITY TRANSFORMER SIZE UTILIZED FOR CALCULATIONS.
3. TRANSFORMER IMPEDANCES USED IN THE CALCULATIONS WERE TAKEN FROM EATON'S PUBLISHED IMPEDANCES FOR DOE 2016 DRY-TYPE TRANSFORMERS.
4. CONDUCTOR LENGTHS INDICATED IN THIS SCHEDULE ARE FOR THE PURPOSES OF FAULT CURRENT CALCULATIONS ONLY. THESE LENGTHS ASSUME WORST CASE SHORTEST DISTANCE CONDITIONS AND SHOULD NOT BE UTILIZED BY THE ELECTRICAL CONTRACTOR FOR BIDDING PURPOSES. THE ELECTRICAL CONTRACTOR SHALL BE RESPONSIBLE FOR ESTIMATING AND MEASURING ACTUAL FIELD CONDITION LENGTHS AS PART OF THE BID PROCESS.

FEEDER SCHEDULE

KEY/ AMPS	FEEDER CONDUIT AND CONDUCTORS	KEY/ AMPS	FEEDER CONDUIT AND CONDUCTORS
SERVICE ENTRANCE FEEDERS		SDS XFMR FEEDERS (NOTE 1)	
400N	2[4#3/0, 2"C]	30S	4#10, 1#8G, 3/4"C
600N	2[4#350, 3"C]	50S	4#6, 1#8G, 1-1/4"C
800N	2[4#500, 3-1/2"C]	100S	4#1, 1#6G, 1-1/2"C
1000N	3[4#400, 3-1/2"C]	150S	4#1/0, 1#6G, 2"C
1200N	4[4#350, 3"C]	250S	4#250, 1#2G, 3"C
1600N	5[4#400, 3-1/2"C]	400S	2[4#3/0, 1#2G, 2"C]
2000N	6[4#400, 3-1/2"C]	500S	2[4#250, 1#1/0G, 3"C]
2500N	7[4#500, 3-1/2"C]	800S	2[4#500, 1#2/0G, 3-1/2"C]
3000N	8[4#500, 3-1/2"C]	1000S	3[4#400, 1#4/0G, 3-1/2"C]
3500N	10[4#500, 3-1/2"C]	1600S	5[4#400, 1#350G, 3-1/2"C]
4000N	11[4#500, 3-1/2"C]	2500S	7[4#500, 1#500G, 3-1/2"C]
EQUIPMENT FEEDERS			
20NG	4#12, #12G, 3/4"C	20G	3#12, #12G, 3/4"C
30NG	4#10, 1#10G, 3/4"C	30G	3#10, 1#10G, 3/4"C
40NG	4#8, 1#10G, 1"C	40G	3#8, 1#10G, 1"C
50NG	4#6, 1#10G, 1-1/4"C	50G	3#6, 1#10G, 1"C
60NG	4#4, 1#10G, 1-1/4"C	60G	3#4, 1#10G, 1"C
70NG	4#4, 1#8G, 1-1/4"C	70G	3#4, 1#8G, 1-1/4"C
80NG	4#3, 1#8G, 1-1/4"C	80G	3#3, 1#8G, 1-1/4"C
90NG	4#2, 1#8G, 1-1/2"C	90G	3#2, 1#8G, 1-1/4"C
100NG	4#1, 1#8G, 1-1/2"C	100G	3#1, 1#8G, 1-1/2"C
110NG	4#1, 1#6G, 2"C	110G	3#1, 1#6G, 1-1/2"C
125NG	4#1/0, 1#6G, 2"C	125G	3#1/0, 1#6G, 1-1/2"C
150NG	4#1/0, 1#6G, 2"C	150G	3#1/0, 1#6G, 1-1/2"C
175NG	4#2/0, 1#6G, 2"C	175G	3#2/0, 1#6G, 2"C
200NG	4#3/0, 1#6G, 2-1/2"C	200G	3#3/0, 1#6G, 2"C
225NG	4#4/0, 1#4G, 2-1/2"C	225G	3#4/0, 1#4G, 2"C
250NG	4#250, 1#4G, 3"C	250G	3#250, 1#4G, 2-1/2"C
300NG	4#350, 1#4G, 3"C	300G	3#350, 1#4G, 2-1/2"C
350NG	4#500, 1#3G, 3-1/2"C	350G	3#500, 1#3G, 3"C
400NG	2[4#3/0, 1#3G, 2-1/2"C]	400G	2[3#3/0, 1#3G, 2"C]
450NG	2[4#4/0, 1#2G, 2-1/2"C]	450G	2[3#4/0, 1#2G, 2"C]
500NG	2[4#250, 1#2G, 3"C]	500G	2[3#250, 1#2G, 2-1/2"C]
600NG	2[4#350, 1#1G, 3"C]	600G	2[3#350, 1#1G, 2-1/2"C]
700NG	2[4#500, 1#1/0G, 3-1/2"C]	700G	2[3#500, 1#1/0G, 3"C]
800NG	2[4#500, 1#1/0G, 3-1/2"C]	800G	2[3#500, 1#1/0G, 3"C]
1000NG	3[4#400, 1#2/0G, 3-1/2"C]	1000G	3[3#400, 1#2/0G, 3"C]
1200NG	4[4#350, 1#3/0G, 3"C]	1200G	4[3#350, 1#3/0G, 3"C]
1600NG	5[4#400, 1#4/0G, 3-1/2"C]	1600G	5[3#400, 1#4/0G, 3"C]
2000NG	6[4#400, 1#250G, 3-1/2"C]	2000G	6[3#400, 1#250G, 3"C]
GROUNDING CONDUCTORS		ABBREVIATIONS	
G8	1#8, 3/4" C	MECH	SEE MECH SCHEDULE
G6	1#6, 3/4" C	XFMR	SEE XFMR SCHEDULE
G4	1#4, 3/4" C		
G2	1#2, 3/4" C		
G10	1-1/0, 3/4" C		
G20	1-2/0, 3/4" C		
G30	1-3/0, 3/4" C		

NOTES:

1. FEEDER FOR SECONDARY OF SEPARATELY DERIVED SYSTEM (SDS). GROUND SIZE PER NEC 250.66.
2. ALL CONDUCTORS ARE SINGLE CONDUCTOR COPPER THWN UNLESS NOTED OTHERWISE. AMPACITY BASED ON NEC TABLE 310.16.
3. ALL CONDUITS ARE EMT UNLESS NOTED OTHERWISE, FILL RATIOS BASED ON NEC ANNEX C TABLE C1.

KEYNOTE LEGEND

KEY VALUE	
1.	PROVIDE INTEGRAL 65kA/MODE SURGE PROTECTION DEVICE (SPD) PER NEC 700.8.
2.	BREAKER SPACE FOR FUTURE PV SYSTEM SHALL BE LOCATED AT THE OPPOSITE END OF THE BUS BARS FROM THE PANEL'S MAIN LUGS PER NEC 705.12.
3.	DISCONNECT AND METER FOR PV SYSTEM ARE FUTURE AND SHOWN FOR REFERENCE ONLY. EMPTY CONDUIT WITH PULL STRING SHALL BE INSTALLED UNDER THIS CONTRACT FOR FUTURE USE.
4.	PROVIDE ELECTRONIC TYPE ADJUSTABLE TRIP UNIT LSI-G CIRCUIT BREAKER.
5.	PROVIDE DIGITAL ELECTRONIC DEMAND METERING SYSTEM WITH CTS, EMON DEMON OR APPROVED EQUAL, FOR FOR DATA PROCESSING OF METER. EACH METER SHALL MONITOR VOLTAGE, AMPS, VA/KVA, VAR/KVAR, AND POWER FACTOR. METER SHALL BE CAPABLE OF LOGGING AND RECORDING ELECTRICAL ENERGY USAGE WITH BOTH PEAK DEMAND KVA AND AMPS, AND MONTHLY KWH.

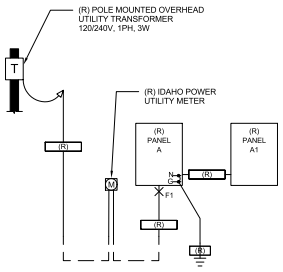

2 E600 DEMOLITION ONE-LINE DIAGRAM

N.T.S.

(BID OPTION 02 AND 03)

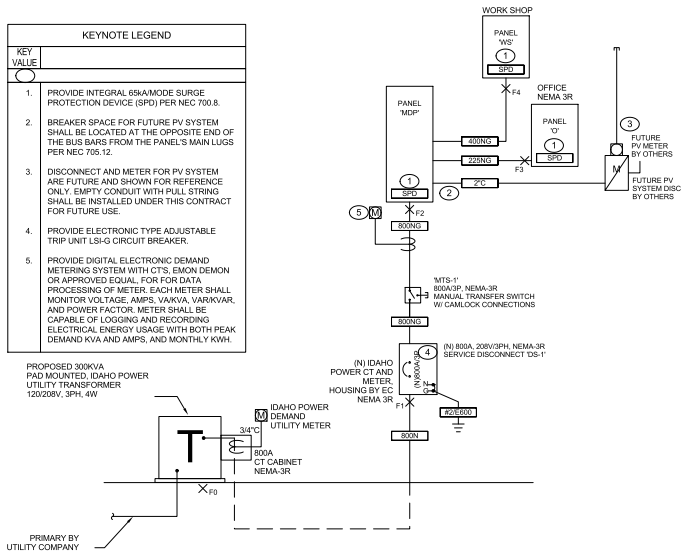

1 E600 ONE-LINE DIAGRAM

N.T.S.

PROFESSIONAL ENGINEER LICENSED 17050 05/23/2024 STATE OF IDAHO JON E BROOKS

DESIGNED: MD/AW	SUB SHEET NO.	TITLE OF SHEET
CADD: MD/AW	E600	ELECTRICAL ONE-LINE DIAGRAM
TECH REVIEW: JM		MIIN MAINTENANCE BUILDING
DATE: 05/23/2024		MINIDOKA NATIONAL HISTORIC SITE

DRAWING NO. 194 187126

PMIS/PKG NO. 314972

SHEET 63 OF 82

5/21/2024 5:19:17 PM Autodesk Docs://2023-360 NPS MIIN Rehab DD-CD/5854.00 - NPS MIIN - Electrical Central.rvt

EC SHALL VERIFY ALL DEVICE SPECIFICATIONS AND COLOR FINISHES WITH CONTRACTING OFFICER PRIOR TO PURCHASE.
ASSEMBLY TO CONSIST OF THE FOLLOWING COMPONENTS (BASIS OF DESIGN):

1. KH INDUSTRIES (#RTAN3LW-WW-J12H) 35-FT NEMA 2 CORD REEL WITH WHITE MOUNTING BASE AND BLACK SJOW 12/3 WIRE LEADS
2. KH INDUSTRIES #PT1GD-520-A BLACK-PORTABLE OUTLET BOX WITH GFCI DUPLEX AND STANDARD DUPLEX OUTLETS (OPPOSING)
3. HUBBELL #074011335--STAINLESS STEEL CORD GRIP FLOOR LEVEL

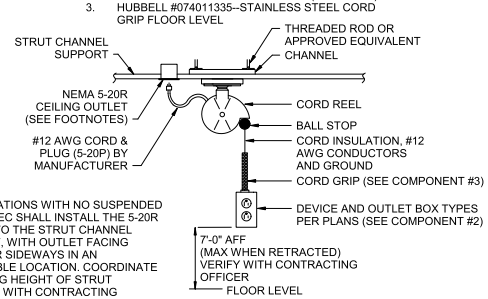

FOOTNOTE(S):

1. FOR LOCATIONS WITH NO SUSPENDED CEILING, EC SHALL INSTALL THE 5-20R OUTLET TO THE STRUT CHANNEL SUPPORT, WITH OUTLET FACING DOWN OR SIDEWAYS IN AN ACCESSIBLE LOCATION. COORDINATE MOUNTING HEIGHT OF STRUT CHANNEL WITH CONTRACTING OFFICER.

2 POWER CORD REEL
E610 N.T.S.

GROUNDING ELECTRODE SYSTEMS NOTES	
1	METAL UNDERGROUND WATER PIPE - MAKE CONNECTION TO METAL UNDERGROUND WATER PIPE INDIRECT CONTRACT WITH THE EARTH FOR 10' OR AND ELECTRICALLY CONTINUOUS TO THE POINTS OF CONNECTION TO THE GROUNDING ELECTRODE CONDUCTOR AND BONDING CONDUCTORS. CONNECTION POINT TO BE AT A MAXIMUM OF 5' OF THE POINT OF ENTRANCE ON THE INTERIOR OF THE BUILDING.
2	BUILDING STEEL - THE METAL FRAME OF THE BUILDING OR STRUCTURE, WHERE ANY OF THE FOLLOWING METHODS ARE USED TO MAKE AN EARTH CONNECTION: A.AT LEAST ONE STRUCTURAL METAL MEMBER THAT IS IN DIRECT CONTACT WITH THE EARTH FOR 10' OR MORE, WITH OR WITHOUT CONCRETE ENCASEMENT. B.HOLD-DOWN BOLTS SECURING THE STRUCTURAL STEEL COLUMN THAT ARE CONNECTED TO A CONCRETE ENCASED ELECTRODE THAT COMPLIES WITH 250.52(A)(3) AND IS LOCATED IN THE SUPPORT FOOTING OR FOUNDATION. THE HOLD-DOWN BOLTS SHALL BE CONNECTED TO THE CONCRETE-ENCASED ELECTRODE BY WELDING, EXOTHERMIC WELDING, THE USUAL STEEL TIE WIRES, OR OTHER APPROVED MEANS.
3	UFER GROUND (CONCRETE-ENCASED ELECTRODE) - AN ELECTRODE ENCASED BY AT LEAST 2" OF CONCRETE, LOCATED WITHIN AND NEAR THE BOTTOM OF A CONCRETE FOUNDATION OR FOOTING THAT IS IN DIRECT CONTACT WITH EARTH, CONSISTING OF AT LEAST 20' OF ONE OR MORE BARE OR ZINC GALVANIZED OR OTHER ELECTRICALLY CONDUCTIVE COATED STEEL REINFORCING BARS OR RODS OF NOT LESS THAN 1/2" IN DIAMETER, OR CONSISTING OF AT LEAST 20' OF BARE COPPER CONDUCTOR NOT SMALLER THAN NO. 4 AWG. REINFORCING BARS SHALL BE PERMITTED TO BE BONDED TOGETHER BY THE USUAL STEEL TIE WIRES OR OTHER EFFECTIVE MEANS.
4	GROUND ROD - ROD IS TO BE 8FT IN LENGTH AND SHALL BE MADE OF IRON OR STEEL AT LEAST 5/8" DIAMETER. INSTALLATION METHODS FOR GROUND ROD SHALL BE IN COMPLIANCE WITH THE NEC SUCH THAT AT LEAST 8' OF LENGTH IS IN CONTACT WITH THE EARTH.

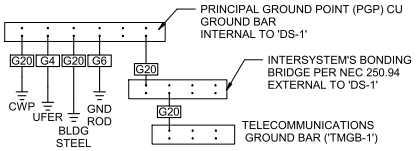

GENERAL GROUNDING NOTES	
1	ALL CABLES TO BE TERMINATED ONTO BUS BAR WITH TWO HOLE COMPRESSION LUGS AND ATTACHED TO BUS BAR WITH TAB COMPRESSION BELLEVILLE WASHERS AND TORK BOLT ASSEMBLY.
2	ALL GROUND CONNECTORS SHALL BE STRANDED.
3	ALL BUS BARS SHALL BE ATTACHED TO SURFACE WITH NON-CONDUCTIVE STAND-OFFS.
4	GROUND BUS BAR AND GROUNDING SYSTEM SHALL BE UL LISTED AND COMPLY WITH MANUFACTURERS INSTALLATION INSTRUCTIONS.

1 ELEC DISTRIBUTION GROUNDING ONE-LINE DIAGRAM & NOTES
E610 N.T.S.

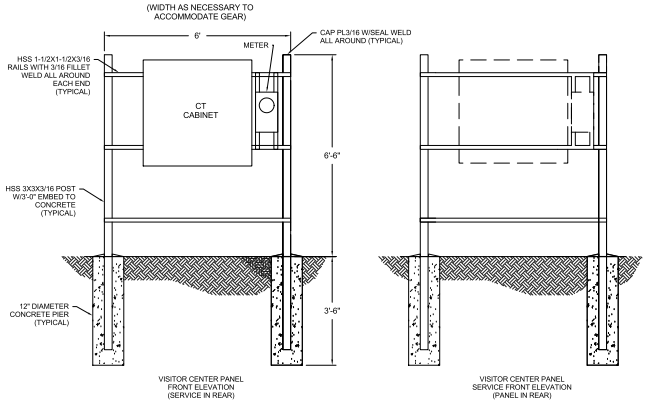

NOTE:

1. CONTRACTOR SHALL PROVIDE ALL NECESSARY HARDWARE, ACCESSORIES AND APPURTENANCES FOR A COMPLETE INSTALLATION. ELECTRICAL CONTRACTOR IS RESPONSIBLE FOR FOR MEANS AND METHODS NECESSARY FOR A COMPLETE INSTALLATION.
2. RECEPTACLE SHALL BE MOUNTED AT AN ABA ACCESSIBLE HEIGHT. MINIMUM HEIGHT TO BE 24" TO KEEP DEVICE ABOVE FLOOD PLAIN.

4 H-FRAME DETAIL
E610 SCALE A

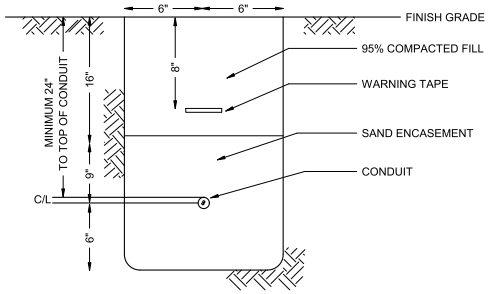

3 ELECTRICAL TRENCH DETAIL
E610 N.T.S.

SCALE: A 8 0 8 16 SCALE OF FEET

PROFESSIONAL ENGINEER LICENSED 17050 05/23/2024 STATE OF IDAHO JON E BROOKS

DESIGNED: MD/AW	SUB SHEET NO.	TITLE OF SHEET	DRAWING NO.
CADD: MD/AW	E610	ELECTRICAL DETAILS	194 187126
TECH REVIEW: JM			PMIS/PKG NO. 314972
DATE: 05/23/2024		MIIN MAINTENANCE BUILDING MINIDOKA NATIONAL HISTORIC SITE	SHEET 64 OF 82

5/21/2024 5:19:18 PM Autodesk Docs://2023-360 NPS MIIN Rehab DD-CD/5854.00 - NPS MIIN - Electrical Central.rvt

MECHANICAL EQUIPMENT GENERAL NOTES

A	REFER TO MECHANICAL PLANS FOR SPECIFIC EQUIPMENT LOCATIONS AND REQUIREMENTS.
B	PRIOR TO ROUGH-IN, COORDINATE ALL MECHANICAL EQUIPMENT POWER AND CONNECTION REQUIREMENTS WITH MECHANICAL CONTRACTOR'S FINAL SHOP DRAWINGS.
C	PROVIDE ALL 120V CONTROL WIRING, REFER TO SPECIFICATIONS FOR FURTHER CONTROL WIRING CLARIFICATION.
D	EXTERIOR DISCONNECT SWITCHES ARE TO BE PROVIDED AS NEMA 3R EQUIPMENT UNLESS OTHERWISE NOTED.
E	PROVIDE WEATHERPROOF 120 VOLT GFCI RECEPTACLES WITHIN 25' OF ALL ROOFTOP HEATING, VENTILATING, AND AIR CONDITIONING EQUIPMENT. CIRCUIT TO SPARE CIRCUIT ON NEAREST 120V PANELBOARD OR AS INDICATED ON PLANS.
F	PROVIDE DUCT DETECTION ON ALL RETURN AIR SYSTEMS OF 2,000 CFM OR GREATER, AND FOR ALL SUPPLY AIR SYSTEMS 15,000 CFM OR GREATER, INCLUDING THOSE SYSTEMS SERVING MULTIPLE FLOORS. PROVIDE ADDITIONAL DUCT DETECTORS AND INSTALL REMOTE INDICATOR LIGHTS AS REQUIRED BY LOCAL AUTHORITY HAVING JURISDICTION.
G	EC TO PROVIDE HAND/OFF/AUTO STARTERS FOR ALL MOTORS WHEN NOT INDICATED AS TO BE PROVIDED BY THE MECHANICAL CONTRACTOR ON THE MECHANICAL PLANS. SIZE OF STARTER TO BE BASED UPON SIZE OF MOTOR HORSEPOWER INDICATED.

MECHANICAL EQUIPMENT SPECIFIC NOTES

1	INDOOR FCU UNIT POWERED FROM CORRESPONDING EXTERIOR CU UNIT. PROVIDE 3/4" CONDUIT FROM EXTERIOR UNIT TO INTERIOR UNIT.
2	ELECTRIC UNIT HEATER IS TO BE INCLUDED AS PART OF BID OPTION 01.
3	FAN SHALL OPERATE CONTINUOUSLY.
4	FAN SHALL OPERATE VIA MANUFACTURER PROVIDED TIMECLOCK.TIMECLOCK SHALL BE POWERED BY THE FAN UNIT.
5	FAN SHALL BE CONTROLLED BY CARBON MONOXIDE DETECTOR AND NITROGEN DETECTOR.
6	PROVIDE 120V CONNECTION TO HEATING ONLY THERMOSTAT.
7	SEPARATE CIRCUITS SHALL BE PROVIDED.
8	INTERLOCK UNIT WITH MOTORIZED DAMPER FOR THE LOUVER. REFER TO MECHANICAL DRAWINGS FOR THE LOCATION OF L-4.
9	PUMP SHALL BE CONTROLLED VIA TIMECLOCK.

MECHANICAL EQUIPMENT SCHEDULE

		EQUIPMENT DESCRIPTION	LOAD	ELECTRICAL	MOCP/ MFS	FEEDER	DISCONNECT	PANEL	CIRCUIT	NOTES
CF	1	CEILING FAN	0.2 FLA	208 V/1-208 VA	15A	2#12, 1#12G, 3/4"C	WITH UNIT	O	22,24	--
CF	2	CEILING FAN	0.2 FLA	208 V/1-208 VA	15A	2#12, 1#12G, 3/4"C	WITH UNIT	WS	48,50	--
CU	1	CONDENSING UNIT	17 MCA	208 V/1-3536 VA	35A	2#8, 1#10G, 1"C	60A/2P	O	40,42	1
CU	2	CONDENSING UNIT	14 MCA	208 V/1-2912 VA	25A	2#10, 1#10G, 3/4"C	30A/2P	O	41,43	1
DC	1	DUST COLLECTOR	15 FLA	208 V/1-3120 VA	30A	2#10, 1#10G, 3/4"C	30A/2P	O	18,20	--
EBH	1	BACK-UP HEATER	3.8 KW	208 V/1-3800 VA	25A	2#10, 1#10G, 3/4"C	30A/2P	O	6,8	7
EBH	2	BACK-UP HEATER	6.0 KW	208 V/1-6000 VA	40A	2#8, 1#10G, 1"C	60A/2P	O	10,12	7
EF	1	EXHAUST FAN	1.5 FLA	120 V/1-180 VA	15A	2#12, 1#12G, 3/4"C	WITH UNIT	O	34	4
EF	2	EXHAUST FAN	1.2 FLA	120 V/1-144 VA	15A	2#12, 1#12G, 3/4"C	WITH UNIT	O	38	4
EF	3	EXHAUST FAN	1.5 FLA	120 V/1-180 VA	15A	2#12, 1#12G, 3/4"C	WITH UNIT	WS	3	4
EF	4	EXHAUST FAN	0.2 FLA	120 V/1-180 VA	15A	2#12, 1#12G, 3/4"C	WITH UNIT	WS	9	3
EF	5	EXHAUST FAN	4 FLA	120 V/1-480 VA	15A	2#12, 1#12G, 3/4"C	WITH UNIT	WS	1	5, 8
EF	6	EXHAUST FAN	1.8 FLA	120 V/1-216 VA	15A	2#12, 1#12G, 3/4"C	WITH UNIT	WS	35	3
EUH	1	ELECTRIC UNIT HEATER	2.5 KW	208 V/1-2500 VA	20A	2#12, 1#12G, 3/4"C	30A/2P	WS	40,42	--
EUH	2	ELECTRIC UNIT HEATER	2.5 KW	208 V/1-2500 VA	20A	2#12, 1#12G, 3/4"C	30A/2P	WS	44,46	--
EUH	3	ELECTRIC UNIT HEATER	5.0 KW	208 V/1-5000 VA	30A	2#10, 1#10G, 3/4"C	30A/2P	WS	32,34	6
EUH	4	ELECTRIC UNIT HEATER	3.0 KW	208 V/1-3000 VA	20A	2#12, 1#12G, 3/4"C	30A/2P	WS	36,38	--
EUH	5	ELECTRIC UNIT HEATER	1.8 KW	208 V/1-1800 VA	20A	2#12, 1#12G, 3/4"C	WITH UNIT	WS	41,43	2
EWH	1	ELECTRIC WATER HEATER	12.1 KW	208 V/1-12100 VA	80A	2#3, 1#8G, 1-1/4"C	100A/2P	O	2,4	--
FC	1	FAN COIL UNIT	2.7 MCA	208 V/1-562 VA	15A	2#12, 1#12G, 3/4"C	30A/2P	O	40,42	1
FC	2	FAN COIL UNIT	1.7 MCA	208 V/1-354 VA	15A	2#12, 1#12G, 3/4"C	30A/2P	O	41,43	1
RCP	1	RECIRCULATION PUMP	1/12 HP	120 V/1-200 VA	15A	2#12, 1#12G, 3/4"C	30A/1P	O	36	9

PROFESSIONAL ENGINEER LICENSED 17050 05/23/2024 STATE OF IDAHO JON E BROOKS

DESIGNED: MD/AW	SUB SHEET NO.	TITLE OF SHEET	DRAWING NO. 194
CADD: MD/AW	E700	ELECTRICAL SCHEDULES	187126
TECH REVIEW: JM			PMIS/PKG NO. 314972
DATE: 05/23/2024		MIIN MAINTENANCE BUILDING MINIDOKA NATIONAL HISTORIC SITE	SHEET 65 OF 82

5/21/2024 5:19:18 PM Autodesk Docs://2023-360 NPS MIIN Rehab DD-CD/5854.00 - NPS MIIN - Electrical Central.rvt

PANEL: MDP

LOCATION: EXTERIOR WEST
SUPPLY FROM: DS-1
MOUNTING: Surface
ENCLOSURE: NEMA 3R

VOLTS: 120/208 Wye
PHASES: 3
WIRES: 4

A.I.C. RATING: 42K AIC
MAINS TYPE: MCB
MAINS RATING: 800 A
MCB RATING: 800 A

Notes:

CKT	CCT TYPE	LOAD DESCRIPTION	TRIP	POLES	A		B		C		POLES	TRIP	LOAD DESCRIPTION	CCT TYPE	CKT
1	E; Spar...	PANEL O	250	3	15547	12995					3	400	PANEL WS	L; E;...	2
3	--	--	--	--			17503	13939			--	--	--	--	4
5	--	--	--	--					16542	12760	--	--	--	--	6
7	--	BUSSED SPACE	--	1	--	3600					2	40	EXTERIOR EV CHARGER (FUTURE)	C	8
9	--	BUSSED SPACE	--	1			--	3600			--	--	--	--	10
11	--	BUSSED SPACE	--	1					--	--	1	--	BUSSED SPACE	--	12
13	--	BUSSED SPACE	--	1	--	--					1	--	BUSSED SPACE	--	14
15	--	BUSSED SPACE	--	1			--	--			1	--	BUSSED SPACE	--	16
17	--	BUSSED SPACE	--	1					--	--	1	--	BUSSED SPACE	--	18
19	--	BUSSED SPACE	--	1	--	--					1	--	BUSSED SPACE	--	20
21	--	BUSSED SPACE	--	1			--	--			1	--	BUSSED SPACE	--	22
23	--	BUSSED SPACE	--	1					--	--	1	--	BUSSED SPACE	--	24
				Total Load:	32142 VA		35042 VA		29302 VA						
				Total Amps:	271 A		296 A		244 A						

LEGEND

CCT TYPE:	LOAD	DEMAND LOAD	PANEL TOTALS	
LIGHTING:	1486 VA	1857 VA		
RECEPTACLE:	18300 VA	14150 VA	**TOTAL CONN. LOAD:**	96486 VA
MOTOR:	4908 VA	5202 VA	**TOTAL EST. LOAD:**	95475 VA
EQUIPMENT:	61900 VA	61900 VA	**TOTAL CONN.:**	268 A
KITCH EQUIP:			**TOTAL EST. DEMAND:**	265 A

NOTES:

PANEL: WS

LOCATION: SHOP
SUPPLY FROM: MDP
MOUNTING: Surface
ENCLOSURE: Type 1

VOLTS: 120/208 Wye
PHASES: 3
WIRES: 4

A.I.C. RATING: 42K AIC
MAINS TYPE: MLO
MAINS RATING: 400 A
MCB RATING: N/A

Notes:

CKT	CCT...	LOAD DESCRIPTION	TRIP	POLES	CB...	A		B		C		CB...	POLES	TRIP	LOAD DESCRIPTION	CCT...	CKT
1	E; M	EF-5 - STORAGE 109	15	1		980	533						3	30	RCPT - EQUIP - SHOP 108	E	2
3	M	EF-3 - SHOP 108	15	1				180	533				--	--	--	--	4
5	M	OVERHEAD DOOR - STOR 109	20	1						1176	533		--	--	--	--	6
7	--	SPARE	20	1		0	533						3	30	RCPT - EQUIP - SHOP 108	E	8
9	M	EF-4 - STORAGE 109	15	1				180	533				--	--	--	--	10
11	R	RCPT - SHOP 108	20	1						720	533		--	--	--	--	12
13	R	RCPT - STORAGE 110 (N1)	20	1		540	533						3	30	RCPT - EQUIP - SHOP 108	E	14
15	R	RCPT - SHOP 108	20	1				1080	533				--	--	--	--	16
17	R	RCPT - CORD REEL - SHOP...	20	1						720	533		--	--	--	--	18
19	R	RCPT - SHOP 108	20	1		1080	533						3	30	RCPT - EQUIP - SHOP 108	E	20
21	M	OVERHEAD DOOR - SHOP 108	20	1				1176	533				--	--	--	--	22
23	R	RCPT - SHOP 108	20	1						1080	533		--	--	--	--	24
25	L	LTG - EXTERIOR	20	1		214	533						3	30	RCPT - EQUIP - SHOP 108	E	26
27	L	LTG - INTERIOR	20	1				1272	533				--	--	--	--	28
29	R	RCPT - STORAGE 109	20	1						1080	533		--	--	--	--	30
31	R	RCPT - STORAGE 109	20	1		1080	2500						2	30	EUH-3 - STORAGE 109	E	32
33	E	TIMECLOCK - STORAGE 109	20	1				500	2500				--	--	--	--	34
35	M	EXHAUST FAN EF-6 (N1)	20	1						216	1500		2	20	EUH-4 - STORAGE 111 (N1)	E	36
37	R	RCPT - EXT CARPORT (N1)	20	1		180	1500						--	--	--	--	38
39	R	RCPT - STORAGE 111 (N1)	20	1				540	1250				2	20	EUH-1 - SHOP 108	E	40
41	E	ELECTRIC UNIT HEATER (N1)	20	2						900	1250		--	--	--	--	42
43	--	--	--	--		900	1250						2	20	EUH-2 - STORAGE 109	E	44
45	--	SPARE	20	1				0	1250				--	--	--	--	46
47	--	SPARE	20	1						0	104		2	15	CF-2 - SHOP 108	E	48
49	--	SPARE	20	1		0	104						--	--	--	--	50
51	--	SPARE	20	1				0	0				1	20	SPARE	--	52
53	--	SPARE	20	1						0	0		1	20	SPARE	--	54
55	--	BUSSED SPACE	--	1		--	0						1	20	SPARE	--	56
57	--	BUSSED SPACE	--	1				--	1348				2	40	HEAT TRACE CONTROLLER	C	58
59	--	BUSSED SPACE	--	1						--	1348		--	--	--	--	60
				Total Load:		12995 VA		13939 VA		12760 VA							
				Total Amps:		109 A		116 A		106 A							

CB TYPE LEGEND

GFCI: 5mA GROUND FAULT CIRCUIT INTERRUPTER
GFEP: 30mA GROUND FAULT PROTECTION FOR EQUIPMENT
AFCI: ARC FAULT CIRCUIT INTERRUPTER
CAFCI: COMBINATION ARC FAULT & 5mA GROUND FAULT CIRCUIT INTERRUPTER
HC(-ON/OFF): HANDLE CLAMP FOR LOCKING IN ON/OFF POSITION
HT#: HANDLE TIE WITH GROUPING #
ST: SHUNT TRIP
LOCK: PERMANENTLY LOCKABLE BREAKER

CIRCUIT PHASE CODE LEGEND

N1. CIRCUIT IS A PART OF BID OPTION 01 AND IS SHOWN FOR REFERENCE ONLY.

CCT TYPE:	LOAD	DEMAND LOAD	PANEL TOTALS	
LIGHTING:	1486 VA	1857 VA		
RECEPTACLE:	8100 VA	8100 VA	**TOTAL CONN. LOAD:**	39694 VA
MOTOR:	3408 VA	3702 VA	**TOTAL EST. LOAD:**	41033 VA
EQUIPMENT:	24008 VA	24008 VA	**TOTAL CONN.:**	110 A
KITCH EQUIP:			**TOTAL EST. DEMAND:**	114 A

NOTES:

PROFESSIONAL ENGINEER LICENSED 17050 05/23/2024 STATE OF IDAHO JON E BROOKS

DESIGNED: MD/AW	SUB SHEET NO.	TITLE OF SHEET	DRAWING NO. 194
CHKD: MD/AW	E710	ELECTRICAL PANEL SCHEDULES	187126
TECH REVIEW: JM			PMIS/PKG NO. 314972
DATE: 05/23/2024		MIIN MAINTENANCE BUILDING MINIDOKA NATIONAL HISTORIC SITE	SHEET 66 OF 82

5/21/2024 5:19:19 PM Autodesk Docs://2023-360 NPS MIIN Rehab DD-CD/5854.00 - NPS MIIN - Electrical Central.rvt

PANEL: O

LOCATION: EXTERIOR WEST
SUPPLY FROM: MDP
MOUNTING: Surface
ENCLOSURE: NEMA 3R

VOLTS: 120/208 Wye
PHASES: 3
WIRES: 4

A.I.C. RATING: 42K AIC
MAINS TYPE: MLO
MAINS RATING: 225 A
MCB RATING: N/A

Notes:

CKT	CCT...	LOAD DESCRIPTION	TRIP	POLES	CB...	A		B		C		CB...	POLES	TRIP	LOAD DESCRIPTION	CCT...	CKT
1	R	RCPT - OFFICE 102	20	1		720	6050						2	80	EWH-1 - UTILITY 107	E	2
3	R	RCPT - OFFICE 101	20	1				900	6050				--	--	--	--	4
5	R	RCPT - FLEX 100	20	1						1260	1900		2	25	EBH-1 - HALL 104	E	6
7	R	RCPT - IT 103	20	1		360	1900						--	--	--	--	8
9	R	RCPT - HALL 104, UTILITY	20	1				720	3000				2	40	EBH-2 - UTILITY 107	E	10
11	R	RCPT - EWC - HALL 104	20	1						360	3000		--	--	--	--	12
13	R	RCPT - AC - BREAK RM	20	1		180	900					GFCI	2	30	RCPT - DRYER - BREAK RM	E	14
15	R	RCPT - WASHER - BREAK RM	20	1	GFCI			900	900				--	--	--	--	16
17	E	RCPT - REF - BREAK RM	20	1						900	1560		2	30	DC-1 - EXTERIOR	E	18
19	R	RCPT - AC - BREAK RM	20	1		180	1560						--	--	--	--	20
21	R	RCPT - AC - BREAK RM	20	1				180	104				2	15	CF-1 - FLEX 100	E	22
23	R	RCPT - COPIER	20	1						1200	104		--	--	--	--	24
25	R	RCPT - EWC - HALL 104	20	1		360	200						1	20	ADA DOOR OPERATOR	E	26
27	R	RCPT - FLEX 100	20	1				1080	0				1	20	SPARE	--	28
29	E	RCPT - MW - BREAK RM	20	1						1200	0		1	20	SPARE	--	30
31	R	RCPT - RR 106	20	1		360	0						1	20	SPARE	--	32
33	R	RCPT - EXTERIOR	20	1				1080	180				1	15	EF-1 - RR 106	M	34
35	M	RCPT - DISPOSAL - BREAK RM	20	1						1176	200		1	15	RCP-1 - UTILITY 107	E	36
37	E	FACP - FLEX 100	20	1		500	144						1	15	EF-2 - UTILITY 107	M	38
39	R	RCPT - IT 103	20	1				360	2049				2	35	CU-1	E	40
41	E	CU-2	25	2						1633	2049		--	--	--	--	42
43	--	--	--	--		1633	500						1	20	DAMPER - BREAK ROOM	E	44
45	--	SPARE	20	1				0	0				1	20	SPARE	--	46
47	--	SPARE	20	1						0	0		1	20	SPARE	--	48
49	--	SPARE	20	1		0	0						1	20	SPARE	--	50
51	--	SPARE	20	1				0	--				1	--	BUSSED SPACE	--	52
53	--	SPARE	20	1						0	--		1	--	BUSSED SPACE	--	54
55	--	SPARE	20	1		0	--						1	--	BUSSED SPACE	--	56
57	--	SPARE	20	1				0	--				1	--	BUSSED SPACE	--	58
59	--	SPARE	20	1						0	--		1	--	BUSSED SPACE	--	60
				Total Load:		15547 VA		17503 VA		16542 VA							
				Total Amps:		130 A		147 A		139 A							

CB TYPE LEGEND

GFCI: 5mA GROUND FAULT CIRCUIT INTERRUPTER
GFEP: 30mA GROUND FAULT PROTECTION FOR EQUIPMENT
AFCI: ARC FAULT CIRCUIT INTERRUPTER
CAFCI: COMBINATION ARC FAULT & 5mA GROUND FAULT CIRCUIT INTERRUPTER
HC(-ON/OFF): HANDLE CLAMP FOR LOCKING IN ON/OFF POSITION
HT#: HANDLE TIE WITH GROUPING #
ST: SHUNT TRIP
LOCK: PERMANENTLY LOCKABLE BREAKER

CIRCUIT PHASE CODE LEGEND

N1.
N2.
N3.

CCT TYPE:	LOAD	DEMAND LOAD	PANEL TOTALS
LIGHTING:			
RECEPTACLE:	10200 VA	10100 VA	**TOTAL CONN. LOAD:** 49592 VA
MOTOR:	1500 VA	1794 VA	**TOTAL EST. LOAD:** 49786 VA
EQUIPMENT:	37892 VA	37892 VA	**TOTAL CONN.:** 138 A
KITCH EQUIP:			**TOTAL EST. DEMAND:** 138 A

NOTES:

PROFESSIONAL ENGINEER LICENSED 17050 05/23/2024 STATE OF IDAHO JON E BROOKS

DESIGNED: MD/AW	SUB SHEET NO.	TITLE OF SHEET	DRAWING NO. 194
CADD: MD/AW	E720	ELECTRICAL PANEL SCHEDULES	187126
TECH REVIEW: JM			PMIS/PKG NO. 314972
DATE: 05/23/2024		MIIN MAINTENANCE BUILDING MINIDOKA NATIONAL HISTORIC SITE	SHEET 67 OF 82

5/21/2024 5:19:19 PM Autodesk Docs://2023-360 NPS MIIN Rehab DD-CD/5854.00 - NPS MIIN - Electrical Central.rvt

LIGHTING FIXTURE SCHEDULE

TYPE	DESCRIPTION	BASIS OF DESIGN MANUFACTURER	BASIS OF DESIGN CATALOG NUMBER	VOLTAGE	LAMP QUAN.	LAMP WATTAGE	LAMP / CCT / CRI	MAX WATTAGE	LUMEN OUTPUT	DIMMING	FIXTURE FINISH	LOCATION	BOF/RFD/OFH	NOTES
D1	6" APERATURE LED RECESSED DOWNLIGHT	COOPER LIGHTING, OR APPROVED EQUAL	BAA-LD6C-20-90-35-D010-W-0-H, OR APPROVED EQUAL	120V	1	20 W	LED / 3500K / 80 CRI	20 VA	2300 LM	0-10V - 1%	WHITE	RECESSED CEILING	0-6.5" RFD	--
D1EM	6" APERATURE LED RECESSED DOWNLIGHT WITH 90 MINUTE EMERGENCY BATTERY	COOPER LIGHTING, OR APPROVED EQUAL	BAA-LD6C-20-90-35-D010-W-0-H-IEM7, OR APPROVED EQUAL	120V	1	20 W	LED / 3500K / 80 CRI	20 VA	2300 LM	0-10V - 1%	WHITE	RECESSED CEILING	0-6.5" RFD	--
D2	6" APERATURE LED RECESSED DOWNLIGHT, WET RATED	COOPER LIGHTING, OR APPROVED EQUAL	BAA-LD6C-20-90-35-D010-W-0-H-IEM7, OR APPROVED EQUAL	120V	1	23 W	LED / 3500K / 80 CRI	23 VA	2000 LM	SWITCHING	WHITE	RECESSED CEILING	0-6.5" RFD	--
L1-8	8' LONG DIRECT/INDIRECT LED LINEAR SUSPENDED FIXTURE	COOPER LIGHTING, OR APPROVED EQUAL	BAA-S124DIP-C-795D-365-U-835-C4-JB-8F0-1-U-DD-F-4-W, OR APPROVED EQUAL	120V	1	92 W	LED / 3500K / 80 CRI	92 VA	4640 LM	0-10V - 1%	WHITE	PENDANT CEILING	9'-0" BOF	1
L1EM-8	8' LONG DIRECT/INDIRECT LED LINEAR SUSPENDED FIXTURE WITH 90 MINUTE BATTERY BACKUP	COOPER LIGHTING, OR APPROVED EQUAL	BAA-S124DIP-C-795D-365-U-835-C4-JB-8F0-1-B2-U-DD-F-4-W, OR APPROVED EQUAL	120V	1	92 W	LED / 3500K / 80 CRI	92 VA	4640 LM	0-10V - 1%	WHITE	PENDANT CEILING	9'-0" BOF	1
L4-4	4' LINEAR SUSPENDED STRIP LIGHT	COOPER LIGHTING, OR APPROVED EQUAL	BAA-4SNX-31SL-LW-UNV-L835-CD-1-SCA, OR APPROVED EQUAL	120V	1	20 W	LED / 3500K / 80 CRI	20 VA	2932 LM	0-10V - 10%	WHITE	PENDANT CEILING	9'-0" BOF	1
P1	14" DIAMETER LED PENDANT	TROY RLM, OR APPROVED EQUAL	RHS14-LED1835-SGW-FG-B, OR APPROVED EQUAL	120V	1	18 W	LED / 3500K / 80 CRI	18 VA	1311 LM	TRIAC DIMMING	WHITE	PENDANT CEILING	9'-0" BOF	1
S1-2	2' LINEAR SURFACE MOUNTED STRIP LIGHT	COOPER LIGHTING, OR APPROVED EQUAL	BAA-2SNX-23SL-LW-UNV-L835-CD-1, OR APPROVED EQUAL	120V	1	15 W	LED / 3500K / 80 CRI	15 VA	2146 LM	0-10V - 10%	WHITE	SURFACE CEILING	0'-3 1/2" OFH	--
S3	4' LONG SURFACE MOUNTED LINEAR	COOPER LIGHTING, OR APPROVED EQUAL	BAA-S124RDS-C-575-80-35-JB-4F0-1-U-DD-F-W, OR APPROVED EQUAL	120V	1	19 W	LED / 3500K / 80 CRI	19 VA	2300 LM	0-10V - 10%	WHITE	SURFACE CEILING	0'-5.1" OFH	--
S3EM	4' LONG SURFACE MOUNTED LINEAR	COOPER LIGHTING, OR APPROVED EQUAL	BAA-S124RDS-C-575-80-35-JB-4F0-1-B2-U-DD-F-W, OR APPROVED EQUAL	120V	1	19 W	LED / 3500K / 80 CRI	19 VA	2300 LM	0-10V - 10%	WHITE	SURFACE CEILING	0'-5.1" OFH	--
U1	SURFACE MOUNTED LOW VOLTAGE CONTINUOUS LINEAR UNDERCABINET LIGHT, FROSTED LENS, END CAPS	JUNO, OR APPROVED EQUAL	JFX-24V-200LM-4FT-30K-90CRI-DL-SLCH-24IN, OR APPROVED EQUAL	--	1	9 W	LED / 3000K / 90 CRI	9 VA	800 LM	0-10V - 10%	WHITE	UNDERCABINET	0'-0.35" OFH	--
U1-DRV	LED UNDERCABINET FIXTURE DRIVER	JUNO, OR APPROVED EQUAL	JFX-120VAC-MLV-20W, OR APPROVED EQUAL	120V	--	20 W	--	20 VA	--	--	--	SEE NOTES	--	--
W1	5" DIAMETER ROUND WALL SCONCE	SCHOOLHOUSE, OR APPROVED EQUAL	ALABAX SMALL-WT, OR APPROVED EQUAL; LMAP - SATCO S12427, OR APPROVED EQUAL	120V	1	11 W	LED / 3000K / 90 CRI	11 VA	1100 LM	SWITCHING	WHITE	SURFACE WALL	0'-4.75" OFH	1
W2	8' LONG DIRECT ONLY WALL MOUNTED LINEAR FIXTURE	COOPER LIGHTING, OR APPROVED EQUAL	BAA-S124DW-C-350D-80-35-8F0/8-1-U-DD-F-W, OR APPROVED EQUAL	120V	1	23 W	LED / 3500K / 80 CRI	23 VA	2800 LM	0-10V - 1%	WHITE	SURFACE WALL	0'-4" OFH	1
X1	EMERGENCY EXIT SIGN, LED WITH INTEGRAL BATTERY	COOPER LIGHTING, OR APPROVED EQUAL	BAA-APX7-G, OR APPROVED EQUAL	120V	1	1 W	LED	1 VA	--	--	WHITE / GREEN	SURFACE WALL	0'-7.1875" OFH	--
ED1	6" APERATURE LED RECESSED ADJUSTABLE DOWNLIGHT, WET RATED	COOPER LIGHTING, OR APPROVED EQUAL	BAA-LDA6A-10-80-27-D010TR-LARL20NF-6LA0-WH, OR APPROVED EQUAL	120V	1	14 W	LED / 2700K / 80 CRI	14 VA	1000 LM	SWITCHING	WHEAT	RECESSED CEILING	0'-7 7/8" RFD	--
ED1EM	6" APERATURE LED RECESSEDADJUSTABLE DOWNLIGHT, WET RATED WITH 90 MINUTE BATTERY BACKUP	COOPER LIGHTING, OR APPROVED EQUAL	BAA-LDA6A-10-80-27-D010TR-IEM7-LARL20NF-6LA0-WH, OR APPROVED EQUAL	120V	1	14 W	LED / 2700K / 80 CRI	14 VA	1000 LM	SWITCHING	WHEAT	RECESSED CEILING	0'-7 7/8" RFD	--
EW2EM	14" DIAMETER HEAVY DUTY EXTERIOR LED WALL MOUNTED FIXTURE WITH GOOSENECK STYLE ARM, CONNECTED TO EMERGENCY INVERTER	TROY RLM, OR APPROVED EQUAL	RH14-LED1827-BK-FG-2-SL23-TBZ, OR APPROVED EQUAL	120V	1	18 W	LED / 2700K / 80 CRI	18 VA	1265 LM	SWITCHING	BRONZE	SURFACE WALL	8'-6" BOF	--
EW3EM	LED EXTERIOR WALL CYLINDER, FULL CUTOFF WITH INTEGRAL OCCUPANCY SENSOR AND CONNECTED TO EMERGECNY INVERTER	LUMIERE, OR APPROVED EQUAL	BAA-9003-W1-RW-LED2790-M-BZ-L2-UNIV-RSM-SVPD2, OR APPROVED EQAUL	120V	1	20 W	LED / 2700K / 90 CRI	20 VA	1088 LM	0-10V - 1%	BRONZE	SURFACE WALL	8'-6" BOF	--

LIGHTING FIXTURE GENERAL NOTES

A	ALL LED LAMPS TO BE 3500K COLOR TEMPERATURE AND A MINIMUM OF 82CRI, UNLESS NOTED OTHERWISE. ALL REFLECTOR LAMPS TO BE PROVIDED AS WIDE FLOOD DISTRIBUTION, UNLESS NOTED OTHERWISE.
B	ALL FIXTURES INDICATED IN THE SCHEDULE ARE BASIS OF DESIGN AND APPROVED EQUALS WILL BE ALLOWED.

LIGHTING FIXTURE SPECIFIC NOTES

1	CONFIRM MOUNTING HEIGHT WITH CONTRACTING OFFICER PRIOR TO INSTALLATION.

PROFESSIONAL ENGINEER LICENSED 17050 05/23/2024 STATE OF IDAHO JON E BROOKS

DESIGNED: MD/AW	SUB SHEET NO.	TITLE OF SHEET	DRAWING NO. 194
CADD: MD/AW	E800	ELECTRICAL LIGHTING SCHEDULES	187126
TECH REVIEW: JM			PMIS/PKG NO. 314972
DATE: 05/23/2024		MIIN MAINTENANCE BUILDING MINIDOKA NATIONAL HISTORIC SITE	SHEET 68 OF 82

5/21/2024 5:19:20 PM Autodesk Docs://2023-360 NPS MIIN Rehab DD-CD/5854.00 - NPS MIIN - Electrical Central.rvt

LIGHTING CONTROLS NAMING CONVENTION

SYSTEM TYPE:
- **N** = NETWORKED
- **R** = ROOM CONTROLLER
- **W** = WIRELESS

- THE ABSENCE OF LETTERS UNDER 'SYSTEM TYPE' INDICATES A WIRED STANDALONE SYSTEM
- THE ABSENCE OF 'W' MEANS THE SYSTEM IS WIRED

SENSOR TYPE:
- **O** = OCCUPANCY
- **V** = VACANCY
- **P** = PHOTOCELL

DEVICES:
- **D** = DIMMER
- **S** = SWITCH
- **H** = HUB
- **U** = UNIQUE DEVICE TYPE

NUMBERING:
- **1,2,3**... = QUANTITY AS REQUIRED FOR DIFFERENT HARDWARE, DEVICE CHARACTERISTICS, OR MOUNTING CONDITIONS.

LIGHTING SEQUENCE OF OPERATION

CONTROL SEQUENCE	ON	OFF	SENSOR TYPE	TIME OUT	DIMMING	CONTROLLED RECEPTACLE	DAYLIGHT HARVESTING	TARGET ILLUMINANCE (FC)	NOTES
ET1	TIMECLOCK AUTOMATIC ON 30 MINUTES PRIOR TO SUNSET	TIMECLOCK AUTOMATIC OFF 30 MINUTES AFTER SUNRISE	NONE	N/A	SWITCHING	NO	NO	--	FIXTURES SHALL TURN OFF 1 HOUR AFTER THE CLOSE OF BUSINESS AND TURN OF 1 HOUR PRIOR TO BUSINESS OPEN.
iO1	AUTOMATIC ON UPON OCCUPANCY VIA INTEGRAL SENSOR	AUTOMATIC OFF	INTEGRAL OCCUPANCY	15 MINUTES	SWITCHING	NO	NO	--	
O1	AUTOMATIC ON	AUTOMATIC OFF	OCCUPANCY	15 MINUTES	SWITCHING	NO	NO	--	
OD1	AUTOMATIC ON TO 50% OUTPUT	AUTOMATIC OFF	OCCUPANCY	15 MINUTES	0-10V DIMMING	NO	NO	--	
OP1	AUTOMATIC ON TO 50% OUTPUT, OVERRIDE WITH PHOTOCELL BELOW TARGET ILLUMINANCE	AUTOMATIC OFF, OVERRIDE WITH PHOTOCELL ABOVE TARGET ILLUMINANCE	OCCUPANCY / PHOTOCELL	15 MINUTES	0-10V DIMMING	NO	YES	50 FC	PHOTOCELL OVERRIDE FUNCTIONALITY DURING DETECTION OF OCCUPANCY ONLY
V1	MANUAL ON	AUTOMATIC OFF	VACANCY	15 MINUTES	SWITCHING	NO	NO	--	
VD1	MANUAL ON	AUTOMATIC OFF	VACANCY	15 MINUTES	0-10V DIMMING	NO	NO	--	

LIGHTING ZONE SCHEDULE

ZONE ID	ZONE DESCRIPTION	DIMMING / SWITCHING	VOLTAGE	PANEL	CIRCUIT NUMBER	ZONE LOAD	CONTROL SEQUENCE
ez01	EXTERIOR SCONCES	SWITCHING	120V	WS	25	90 VA	ET1
ez02	EXTERIOR DOWNLIGHTS	SWITCHING	120V	WS	25	84 VA	ET1

LIGHTING CONTROL DEVICES

TYPE	DESCRIPTION
ROOM CONTROLLED COMPONENTS	
RD1	ROOM CONTROLLER MANUAL DIMMER, EC SHALL COORDINATE MINIMUM LEVEL FOR DIMMING WITH THAT NOTED ON LUMINAIRE FIXTURE SCHEDULE
RHUB	ROOM CONTROLLER
RO1	ROOM CONTROLLER, CEILING MOUNT OCCUPANCY SENSOR
RP1	ROOM CONTROLLER CLOSED LOOP PHOTOCELL/DAYLIGHT SENSOR
RS1	ROOM CONTROLLER ON/OFF SWITCH, PROGRAM ZONES AS INDICATED ON PLANS
STANDALONE CONTROL SYSTEMS	
OS1	WALLSWITCH MOUNT, OCCUPANCY SENSOR ON/OFF SWITCH
S1	LOW VOLTAGE ON/OFF SWITCH
V1	CEILING MOUNTED, OCCUPANCY SENSOR SET TO VACANCY MODE, LOW VOLTAGE
VD1	WALLSWITCH MOUNT, VACANCY SENSOR WITH MANUAL DIMMER
VS1	WALLSWITCH MOUNT, OCCUPANCY SENSOR SET TO VACANCY MODE, ON/OFF SWITCH

LIGHTING CONTROL NOTES

	GENERAL CONTROL NOTES
G1	THE LIGHTING CONTROL SYSTEM CONSISTS OF THE FOLLOWING: a. STAND-ALONE CONTROLS b. ROOM CONTROLLER CONTROLS
G2	ALTERNATE MANUFACTURER'S WILL BE REVIEWED ACCORDING TO THE NOTES PROVIDED IN THE LIGHTING FIXTURE SCHEDULE.
G3	ALL WIRING DIAGRAMS WITHIN THESE DRAWINGS ARE PROVIDED TO COMMUNICATE THE DESIGN INTENT. SYSTEM SHALL BE WIRED ACCORDING TO THE APPROVED SHOP DRAWINGS.
G4	ALL STRUCTURED CABLE WIRING SHOWN ON RISER DIAGRAMS IS INTENDED TO BE BY CONTROL MANUFACTURER APPROVED STANDARD STRUCTURED CABLING, UNLESS OTHERWISE NOTED. EC SHALL PROVIDE ALL CABLING WITHIN THE LIGHTING CONTROL SYSTEM, CABLING BETWEEN THE NETWORKED HEAD-END AND THE BUILDINGS COMMUNICATION NETWORK SHALL BE PROVIDED BY THE LOW VOLTAGE CONTRACTOR/CONTRACTING OFFICER.
G5	ALL MANUALLY DIMMED LIGHT LOADS SHALL BE CAPABLE OF DIMMING LIGHTS TO OFF SETTING. DIMMING COMPATIBILITY BETWEEN THE CONTROLS AND LIGHT FIXTURES SHALL BE COORDINATED BY THE EC TO ENSURE THAT LIGHTING IS ABLE TO DIM TO LEVEL NOTED ON LIGHTING FIXTURE SCHEDULE.
G6	LIGHTING CONTROL SYSTEM SHALL INCLUDE A MINIMUM OF (4) HOURS OF MANUFACTURER'S REPRESENTATIVE TIME ON SITE FOR SYSTEM CHECK-OUT AND CONTRACTING OFFICER TRAINING. ELECTRICAL CONTRACTOR SHALL VIDEO RECORD TRAINING SESSION AND PROVIDE COPY OF VIDEO TO CONTRACTING OFFICER AS PART OF PROJECT COMPLETION SUBMITTALS.
G7	ALL DIGITAL SWITCHES FOR OVERRIDE CONTROL OF LIGHTING CONTROL SYSTEM(S) SHALL HAVE A MAXIMUM SETTING OF 2 HOURS PER ASHRAE REQUIREMENTS.
G8	FINAL OCCUPANCY AND DAYLIGHT SENSOR LOCATION SHALL BE PROVIDED BY MANUFACTURER AND LOCATED PER APPROVED SHOP DRAWINGS AND DEVICE REQUIREMENTS. LOCATIONS INDICATED IN THESE DRAWINGS SHALL BE REVIEWED AND ALTERED AS NECESSARY FOR CORRECT OPERATION BY MANUFACTURER. IF OPERATIONS OF SENSORS DOES NOT MEET THE INTENT OUTLINED IN THESE DOCUMENTS THE MANUFACTURER REPRESENTATIVE SHALL PROVIDE FIELD RECTIFICATION SERVICES AS NECESSARY IN ORDER TO RECONFIGURE SYSTEM TO MEET OUTINED INTENT.
	STANDALONE LIGHTING CONTROL GENERAL NOTES
S1	APPROVED STANDALONE LIGHTING CONTROLS TO BE PROVIDED BY ONE OF THE FOLLOWING PRE-APPROVED MANUFACTURERS AS A BASIS OF DESIGN: a. LEVITON b. nLIGHT/SENSORSWITCH c. LUTRON e. WATTSTOPPER
	ROOM CONTROLLER GENERAL NOTES
R1	APPROVED ROOM CONTROLLER LIGHTING CONTROLS TO BE PROVIDED BY ONE OF THE FOLLOWING PRE-APPROVED MANUFACTURERS AS A BASIS OF DESIGN: a. CRESTRON b. nLIGHT c. LUTRON e. WATTSTOPPER
R2	REFER TO ELECTRICAL LIGHTING LAYOUTS FOR LAYOUT OF DEVICES CONNECTED TO ROOM CONTROLLERS. ROOM CONTROLLER COMPONENTS ARE INDICATED IN THE "LIGHTING CONTROL DEVICE" SCHEDULE, THESE COMPONENTS START WITH THE DESIGNATION 'R'.
R3	ROOM CONTROLLER HEAD END EQUIPMENT LOCATIONS ARE INDICATED IN SPACES, HOWEVER DRAWINGS ARE DIAGRAMMATIC AND EXACT QUANTITY OF ROOM CONTROLLER HEAD END EQUIPMENT PIECES VARIES FROM MANUFACTURER TO MANUFACTURER BASED ON DIMMING UTILIZATION, QUANTITY OF RELAYS, NUMBER OF INPUT DEVICES, QUANTITY OUTPUT ZONES AND RECEPTACLE CONTROL.

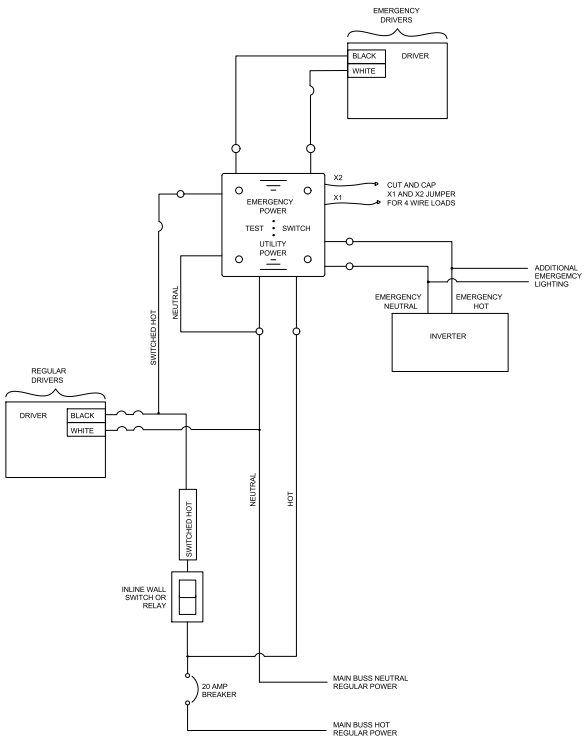

EMERGENCY LIGHTING CONTROL DEVICE GENERAL NOTES
1. USE WITH MANUFACTURER CONTROL TO DETERMINE THE SUITABILITY OF THE SPECIFIED DIMMER FOR SHUNT TRIP OPERATION.
2. EM SWITCHING DEVICE SHALL BE INSTALLED DOWNSTREAM OF THE EM LIGHTING INVERTER AND POWERED WITH THE SAME CIRCUIT AS THE ZONE IT IS CONTROLLING.

2 E810 EMERGENCY CONTROL DEVICE DIAGRAM
N.T.S.

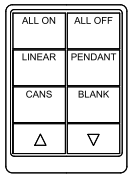

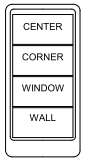

WALLSTATION 'RD1'	
LOCATION: FLEX WORKSPACE 100	
ALL ON	ZONES 'a', 'b', 'c' ON
ALL OFF	ZONES 'a', 'b', 'c' OFF
LINEAR	ZONE 'a'
PENDANT	ZONE 'c'
CANS	ZONE 'b'
BLANK	
RAISE	DIM UP
LOWER	DIM DOWN

WALLSTATION 'RS1'	
LOCATION: SHOP 108	
CENTER	ZONE 'a' ON/OFF
CORNER	ZONE 'b' ON/OFF
WINDOW	ZONE 'd' ON/OFF
WALL	ZONE 'c' ON/OFF

TYPICAL KEYPAD DETAILS GENERAL NOTES	
A.	ALL BUTTON ENGRAVINGS ARE NOTED FOR DESIGN INTENT ONLY AND SHALL BE FINALIZED WITH THE CONTRACTING OFFICER PRIOR TO PROCUREMENT. EC SHALL CONFIRM THAT ENGRAVINGS FIT WITHIN MANUFACTURER CHARACTER LIMITS PRIOR TO PROCUREMENT.
B.	ALL FACEPLATES AND BUTTON FINISHES SHALL BE PROVIDED WHITE UNLESS OTHERWISE APPROVED BY THE CONTRACTING OFFICER. FINAL APPROVAL REQUIRED PRIOR TO PROCUREMENT.

1 E810 WALLSTATION ENGRAVING DETAIL
N.T.S.

PROFESSIONAL ENGINEER LICENSED 17050 05/23/2024 STATE OF IDAHO JON E BROOKS

DESIGNED: MD/AW	SUB SHEET NO.	TITLE OF SHEET	DRAWING NO. 194 187126
CADD MD/AW	E810	ELECTRICAL LIGHTING CONTROLS SCHEDULES	PMIS/PKG NO. 314972
TECH REVIEW: JM		MIIN MAINTENANCE BUILDING	SHEET
DATE: 05/23/2024		MINIDOKA NATIONAL HISTORIC SITE	69 OF 82

5/21/2024 5:19:21 PM Autodesk Docs://2023-360 NPS MIIN Rehab DD-CD/5854.00 - NPS MIIN - Electrical Central.rvt

COM*check* Software Version COMcheckWeb
Interior Lighting Compliance Certificate

Project Information

Energy Code: 90.1 (2016) Standard
Project Title: 5854.00 NPS Idaho Parks - MIIN
Project Type: New Construction

Construction Site:
1428 Hunt Rd
Jerome, Idaho 83338

Owner/Agent:

Designer/Contractor:
Allie Wilson
AE Design
1900 Wazee St Suite #205
Denver, Colorado 80202
7206176288
awilson@aedesign-inc.com

Allowed Interior Lighting Power

A Area Category	B Floor Area (ft2)	C Allowed Watts / ft2	D Allowed Watts
1-Workshop	2502	0.90	2252
		Total Allowed Watts =	2252

Proposed Interior Lighting Power

A Fixture ID : Description / Lamp / Wattage Per Lamp / Ballast	B Lamps/ Fixture	C # of Fixture	D Fixture Watt.	E (C X D)
1-Workshop				
LED: D1/D1EM: RECESSED DOWNLIGHT: Other:	1	8	20	160
LED: D2: RECESSED DOWNLIGHT: Other:	1	2	23	46
LED: L1-8/L1EM-8: SUSPENDED LINEAR: Other:	1	9	92	828
LED: L4-4: SUSPENDED STRIP: Other:	1	3	20	60
LED: P1: PENDANT: Other:	1	5	18	90
LED: R4/R4EM: RECESSED FLAT PANEL: Other:	1	4	19	76
LED: S1-2: SURFACE STRIP: Other:	1	1	15	15
LED: S3: SURFACE LINEAR: Other:	1	1	19	19
LED: U1-DRV: UNDERCABINET: Other:	1	1	20	20
LED: W1: WALL SCONCE: Other:	1	2	11	22
LED: W2: WALL LINEAR: Other:	1	1	23	23
			Total Proposed Watts =	1359

Interior Lighting PASSES: Design 40% better than code

Interior Lighting Compliance Statement

Compliance Statement: The proposed interior lighting design represented in this document is consistent with the building plans, specifications, and other calculations submitted with this permit application. The proposed interior lighting systems have been designed to meet the 90.1 (2016) Standard requirements in COM*check* Version COMcheckWeb and to comply with any applicable mandatory requirements listed in the Inspection Checklist.

Allie Wilson - Project Designer — Name - Title
Allie Wilson — Signature
03/13/2024 — Date

COM*check* Software Version COMcheckWeb
Exterior Lighting Compliance Certificate

Project Information

Energy Code: 90.1 (2016) Standard
Project Title: 5854.00 NPS Idaho Parks - MIIN
Project Type: New Construction
Exterior Lighting Zone 1 (Developed area in national or state park (LZ1))

Construction Site:
1428 Hunt Rd
Jerome, Idaho 83338

Owner/Agent:

Designer/Contractor:
Allie Wilson
AE Design
1900 Wazee St Suite #205
Denver, Colorado 80202
7206176288
awilson@aedesign-inc.com

Allowed Exterior Lighting Power

A Area/Surface Category	B Quantity	C Allowed Watts /	D Tradable Wattage	E Allowed Watts (B X C)
Entry canopy	1118 ft2	0.2	Yes	224
			Total Tradable Watts (a) =	224
			Total Allowed Watts =	224
			Total Allowed Supplemental Watts (b) =	350

(a) Wattage tradeoffs are only allowed between tradable areas/surfaces.
(b) A supplemental allowance equal to 350 watts may be applied toward compliance of both non-tradable and tradable areas/surfaces.

Proposed Exterior Lighting Power

A Fixture ID : Description / Lamp / Wattage Per Lamp / Ballast	B Lamps/ Fixture	C # of Fixture	D Fixture Watt.	E (C X D)
Entry canopy (1118 ft2): Tradable Wattage				
LED: EW2EM: WALL SCONCE: Other:	1	5	18	90
LED: EW3EM: WALL CYLINDER: Other:	1	2	20	40
LED: ED1/ED1EM: RECESSED DOWNLIGHT: Other:	1	6	14	84
			Total Tradable Proposed Watts =	214

Exterior Lighting PASSES: Design 63% better than code

Exterior Lighting Compliance Statement

Compliance Statement: The proposed exterior lighting design represented in this document is consistent with the building plans, specifications, and other calculations submitted with this permit application. The proposed exterior lighting systems have been designed to meet the 90.1 (2016) Standard requirements in COM*check* Version COMcheckWeb and to comply with any applicable mandatory requirements listed in the Inspection Checklist.

Allie Wilson - Project Designer — Name - Title
Allie Wilson — Signature
03/13/2024 — Date

PROFESSIONAL ENGINEER LICENSED 17050 05/23/2024 STATE OF IDAHO JON E BROOKS

DESIGNED: MD/AW	SUB SHEET NO.	TITLE OF SHEET	DRAWING NO.
CHKD MD/AW	E900	ELECTRICAL LIGHTING COMPLIANCE	194 / 187126
TECH REVIEW: JM			PMIS/PKG NO. 314972
DATE: 05/23/2024		MIIN MAINTENANCE BUILDING MINIDOKA NATIONAL HISTORIC SITE	SHEET 70 OF 82

5/21/2024 5:19:21 PM Autodesk Docs://2023-360 NPS MIIN Rehab DD-CD/5854.00 - NPS MIIN - Electrical Central.rvt

COM*check* Software Version COMcheckWeb

Inspection Checklist

Energy Code: 90.1 (2016) Standard

Requirements: 100.0% were addressed directly in the COM*check* software

Text in the "Comments/Assumptions" column is provided by the user in the COMcheck Requirements screen. For ea requirement, the user certifies that a code requirement will be met and how that is documented, or that an excepti is being claimed. Where compliance is itemized in a separate table, a reference to that table is provided.

Section # & Req.ID	Plan Review	Complies?	Comments/Assumptions
4.2.2, 8.4.1.1, 8.4.1.2, 8.7 [PR6][2]	Plans, specifications, and/or calculations provide all information with which compliance can be determined for the electrical systems and equipment and document where exceptions are claimed. Feeder connectors sized in accordance with approved plans and branch circuits sized for maximum drop of 3%.	☐Complies ☐Does Not ☐Not Observable ☐Not Applicable	Requirement will be met.
4.2.2, 9.4.3, 9.7 [PR4][1]	Plans, specifications, and/or calculations provide all information with which compliance can be determined for the interior lighting and electrical systems and equipment and document where exceptions to the standard are claimed. Information provided should include interior lighting power calculations, wattage of bulbs and ballasts, transformers and control devices.	☐Complies ☐Does Not ☐Not Observable ☐Not Applicable	Requirement will be met.
9.7 [PR8][1]	Plans, specifications, and/or calculations provide all information with which compliance can be determined for the exterior lighting and electrical systems and equipment and document where exceptions to the standard are claimed. Information provided should include exterior lighting power calculations, wattage of bulbs and ballasts, transformers and control devices.	☐Complies ☐Does Not ☐Not Observable ☐Not Applicable	Requirement will be met.

Additional Comments/Assumptions:

1 High Impact (Tier 1) | 2 Medium Impact (Tier 2) | 3 Low Impact (Tier 3)

Section # & Req.ID	Rough-In Electrical Inspection	Complies?	Comments/Assumptions
8.4.2 [EL10][2]	At least 50% of all 125 volt 15- and 20-Amp receptacles are controlled by an automatic control device.	☐Complies ☐Does Not ☐Not Observable ☐Not Applicable	**Exception:** Requirement does not apply.
8.4.3 [EL11][2]	New buildings have electrical energy use measurement devices installed. Where tenant spaces exist, each tenant is monitored separately. In buildings with a digital control system the energy use is transmitted to to control system and displayed graphically.	☐Complies ☐Does Not ☐Not Observable ☐Not Applicable	**Exception:** Buildings 25,000 ft2.
9.4.1.1 [EL1][2]	Automatic control requirements prescribed in Table 9.6.1, for the appropriate space type, are installed. Mandatory lighting controls (labeled as 'REQ') and optional choice controls (labeled as 'ADD1' and 'ADD2') are implemented.	☐Complies ☐Does Not ☐Not Observable ☐Not Applicable	Requirement will be met.
9.4.1.1 [EL2][2]	Independent lighting controls installed per approved lighting plans and all manual controls readily accessible and visible to occupants.	☐Complies ☐Does Not ☐Not Observable ☐Not Applicable	Requirement will be met.
9.4.1.1f [EL13][1]	Daylight areas under skylights and roof monitors that have more than 150 W combined input power for general lighting are controlled by photocontrols.	☐Complies ☐Does Not ☐Not Observable ☐Not Applicable	Requirement will be met.
9.4.1.4 [EL3][2]	Automatic lighting controls for exterior lighting installed.	☐Complies ☐Does Not ☐Not Observable ☐Not Applicable	**Exception:** Covered vehicle entrance/exit areas requiring lighting for safety, security and eye adaptation.
9.4.1.3 [EL4][1]	Separate lighting control devices for specific uses installed per approved lighting plans.	☐Complies ☐Does Not ☐Not Observable ☐Not Applicable	Requirement will be met.
9.6.2 [EL8][1]	Additional interior lighting power allowed for special functions per the approved lighting plans and is automatically controlled and separated from general lighting.	☐Complies ☐Does Not ☐Not Observable ☐Not Applicable	Requirement will be met.

Additional Comments/Assumptions:

1 High Impact (Tier 1) | 2 Medium Impact (Tier 2) | 3 Low Impact (Tier 3)

Section # & Req.ID	Final Inspection	Complies?	Comments/Assumptions
8.7.1 [FI16][3]	Furnished as-built drawings for electric power systems within 30 days of system acceptance.	☐Complies ☐Does Not ☐Not Observable ☐Not Applicable	Requirement will be met.
8.7.2 [FI17][3]	Furnished O&M instructions for systems and equipment to the building owner or designated representative.	☐Complies ☐Does Not ☐Not Observable ☐Not Applicable	Requirement will be met.
9.2.2.3 [FI18][1]	Interior installed lamp and fixture lighting power is consistent with what is shown on the approved lighting plans, demonstrating proposed watts are less than or equal to allowed watts.	☐Complies ☐Does Not ☐Not Observable ☐Not Applicable	*See the Interior Lighting fixture schedule for values.*
9.4.2 [FI19][1]	Exterior lighting power is consistent with what is shown on the approved lighting plans, demonstrating proposed watts are less than or equal to allowed watts.	☐Complies ☐Does Not ☐Not Observable ☐Not Applicable	*See the Exterior Lighting fixture schedule for values.*
9.4.4 [FI20][1]	At least 75% of all permanently installed lighting fixtures in dwelling units have >= 55 lm/W efficacy or a >= 45 lm/W total luminaire efficacy.	☐Complies ☐Does Not ☐Not Observable ☐Not Applicable	Requirement will be met.

Additional Comments/Assumptions:

1 High Impact (Tier 1) | 2 Medium Impact (Tier 2) | 3 Low Impact (Tier 3)

PROFESSIONAL ENGINEER LICENSED 17050 05/23/2024 STATE OF IDAHO JON E BROOKS

DESIGNED: MD/AW	SUB SHEET NO.	TITLE OF SHEET	DRAWING NO.
CHKD: MD/AW	E901	ELECTRICAL LIGHTING COMPLIANCE	194 / 187126
TECH REVIEW: JM			PMIS/PKG NO. 314972
DATE: 05/23/2024		MIIN MAINTENANCE BUILDING MINIDOKA NATIONAL HISTORIC SITE	SHEET 71 OF 82

5/21/2024 5:19:22 PM Autodesk Docs://2023-360 NPS MIIN Rehab DD-CD/5854.00 - NPS MIIN - Electrical Central.rvt

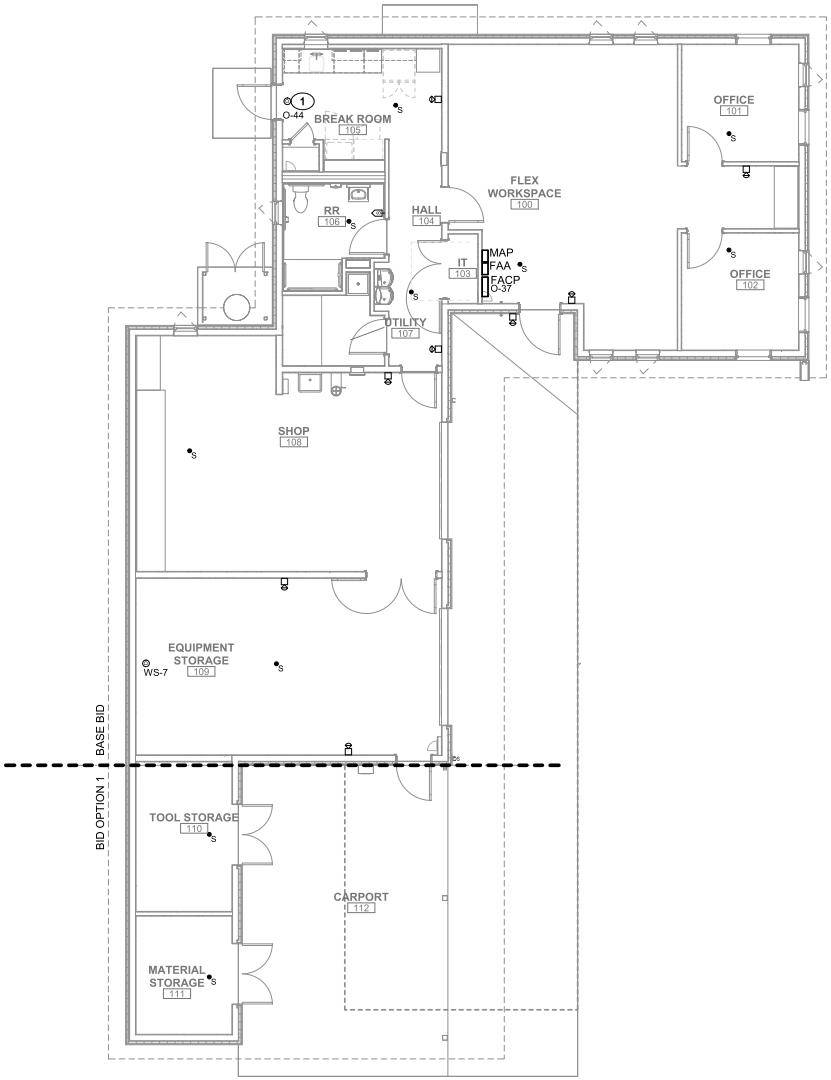

1 FA111 FIRE ALARM PLAN
SCALE A

FIRE ALARM

FACP	FIRE ALARM CONTROL PANEL
FAA	FIRE ALARM ANNUNCIATOR
FA-RPS	FIRE ALARM REMOTE POWER SUPPLY
C	CONTROL MODULE
M	MONITOR MODULE
	MANUAL PULLDOWN STATION
S	WALL MOUNTED ABAAS STROBE
	ABAAS HORN OR SPEAKER WITH STROBE
	MINI HORN / STROBE
MH	ELECTROMAGNETIC DOOR HOLD OPEN
FS	SPRINKLER FLOW SWITCH
TS	SPRINKLER TAMPER SWITCH
T	THERMAL DETECTOR
S	PHOTOELECTRIC SMOKE DETECTOR
	DUCT SMOKE DETECTOR, SUPPLY OR RETURN
TS	REMOTE INDICATING LIGHT (TEST SWITCH)
D	120V. MOTORIZED SMOKE DAMPER
RA	RESCUE ASSISTANCE PHONE
F	FIRE FIGHTERS PHONE JACK
MAP	FIRE ALARM GRAPHIC MAP

FIRE ALARM GENERAL NOTES

A	FINAL LAYOUT AND QUANTITY OF ALL FIRE ALARM DEVICES SUBJECT TO APPROVAL OF AUTHORITY HAVING JURISDICTION.

KEYNOTE LEGEND

KEY VALUE	KEYNOTE TEXT
1	MOTORIZED DAMPER SHALL BE CONTROLLED VIA TIMECLOCK.

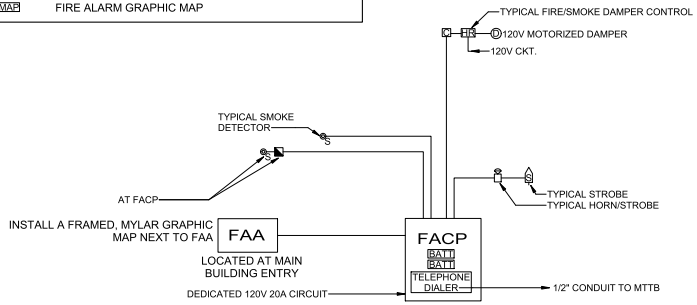

FIRE ALARM GENERAL NOTES:

1. THIS IS A FULLY ADDRESSABLE SYSTEM WITH EACH DEVICE HAVING A DISTINCT 'ADDRESS'.
2. PROVIDE NON-POWER LIMITING, PLENUM RATED WIRING. INSTALL IN EMT WHERE WIRING IS ROUTED THROUGH HAZARDOUS LOCATIONS, EXPOSED STRUCTURAL CEILINGS, AND INACCESSIBLE CEILINGS. ALL RACEWAY COMPONENTS SHALL BE PAINTED RED.
3. PROVIDE DUCT DETECTION FOR ALL AIR-HANDLING EQUIPMENT OPERATING WITH A RETURN CAPACITY EXCEEDING 2000CFM. SUPPLY CAPACITY EXCEEDING 15,000CFM WITH COMMON DUCT SERVING MULTIPLE FLOORS, AND ADDITIONALLY AS REQUIRED BY LOCAL CODES.
4. PROVIDE 120V CIRCUIT AND LOW-VOLTAGE FIRE ALARM CONTROL CIRCUIT TO ALL SMOKE DAMPERS. COORDINATE LOCATIONS WITH MECHANICAL CONTRACTOR PRIOR TO BID.
6. COORDINATE ALL SEQUENCING OF OPERATIONS WITH DENVER SERVICE CENTER.
7. ALL DEVICES INSTALLED IN DAMP, WET OR EXTERIOR LOCATIONS SHALL BE FURNISHED WITH WP HOUSINGS.
8. SYSTEM SHALL TRANSMIT REQUIRED FIRE ALARM SIGNALS TO CENTRAL MONITORING AGENCY VIA DIALER PROVIDED IN FIRE ALARM CONTROL PANEL.
9. THE ELECTRICAL CONTRACTOR SHALL INCLUDE IN HIS BID AN ADDITIONAL 10% SPARE STROBES AND HORN/STROBES, INCLUDING INSTALLATION, AS MAY BE REQUIRED BY AHJ.

2 FA111 FIRE ALARM RISER DIAGRAM
1/8" = 1'-0"

SCALE: A 4 0 4 8 12 SCALE OF FEET

BLDG. NORTH

PROFESSIONAL ENGINEER LICENSED 17050 05/23/2024 STATE OF IDAHO JON E BROOKS

DESIGNED: MD/AW	SUB SHEET NO.	TITLE OF SHEET FIRE ALARM PLAN	DRAWING NO. 194 187126
CADD MD/AW	FA111		PMIS/PKG NO. 314972
TECH REVIEW: JM		MIIN MAINTENANCE BUILDING	SHEET 72 OF 82
DATE: 05/23/2024		MINIDOKA NATIONAL HISTORIC SITE	

5/21/2024 5:19:23 PM Autodesk Docs://2023-360 NPS MIIN Rehab DD-CD/5854.00 - NPS MIIN - Electrical Central.rvt

DISTRIBUTION & RACEWAY

- CONDUIT CONCEALED IN FLOOR OR UNDERGROUND
- CONDUIT EXPOSED OR CONCEALED IN WALL OR CEILING
- RACEWAY UP
- RACEWAY DOWN
- CONDUIT WITH CAPPING
- CONDUIT WITH BUSHING
- CONDUIT WITH CONTINUATION
- LADDER RACK — LENGTH AS INDICATED ON DRAWINGS
- CABLE TRAY — LENGTH AS INDICATED ON DRAWINGS
- MDF OR IDF BOUNDARY
- XX — PATHWAY/JUNCTION/OUTLET BOX
  - HH HANDHOLE
  - PB PULL BOX
- XX# — (HAND HOLE WILL BE SPECIFIED IN SCHEDULE) (PULL BOX WILL BE SPECIFIED IN SCHEDULE)

  PATHWAY/JUNCTION/OUTLET BOX (XX = TYPE, # = IDENTIFIER)

TELECOMMUNICATIONS LEGEND

- #/# — TYPICAL TELECOMMUNICATION SYMBOLS WHERE FIRST (OR SINGLE) '#' DENOTES THE NUMBER OF NETWORK CABLES TO BE PROVIDED AT THE DEVICE, AND THE SECOND '#' DENOTES THE NUMBER OF VOICE CABLES TO BE PROVIDED AT THE DEVICE.
- XXX — 'XXX' REFERENCES A CABLE DEFINED IN THE EQUIPMENT SCHEDULES. REFER TO SCHEDULE KEY VALUES FOR CABLE REFERENCE AND ASSOCIATED REQUIREMENTS.
- TELECOMMUNICATION OUTLET
- CABLE TELEVISION (CATV) OUTLET
- FLOOR MOUNTED TELECOMMUNICATION/CATV OUTLET
- FLOOR MOUNTED INTEGRATED POWER / TELECOM OUTLET
- LC / CLG — CEILING MOUNTED TELECOMMUNICATION/CATV OUTLET
- WALL MOUNTED WIRELESS ACCESS POINT (WAP) OUTLET
- CEILING MOUNTED WIRELESS ACCESS POINT (WAP) OUTLET

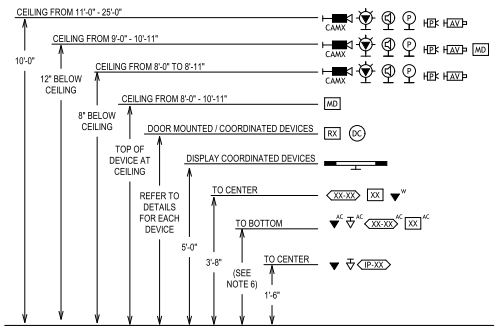

NOTES:

1. HEIGHTS INDICATED ON LEGEND REPRESENT THE CENTERLINE MOUNTING HEIGHT OF THE DEVICE'S BACKBOX/MOUNTING EQUIPMENT, UNLESS OTHERWISE NOTED.
2. NOT ALL CAMERA VERSIONS OUR SHOWN. THE SINGLE LENS CAMERA SHOWN SHALL REPRESENT THE MOUNTING HEIGHTS FOR ALL SECURITY CAMERAS, UNLESS OTHERWISE NOTED.
3. NOT ALL SYMBOL VARIATIONS ARE. FOR DEVICES WHERE THE 'SYSTEM CABLING' VERSION OF SYMBOL IS DEFINED, THE HIEGHT REQUIREMENTS SHALL BE APPLIED TO THE 'BUILDING NETWORK CABLING' VERSION AS WELL.
4. AUDIOVISUAL DEVICE SYMBOL SHOWN SHALL REPRESENT ALL AUDIOVISUAL DEVICE SUBSCRIPTS WITHIN THE SYMBOL UNLESS A DEVICE IS SPECIFICALLY CALLED OUT FOR A DIFFERENT HEIGHT ON THE LEGEND OR ON THE PLAN SHEETS.
5. WALL MOUNTED SECURITY DEVICE SYMBOL SHOWN SHALL REPRESENT ALL WALL MOUNTED SECURITY DEVICE SUBSCRIPTS WITHIN THE SYMBOL UNLESS A DEVICE IS SPECIFICALLY CALLED OUT FOR A DIFFERENT HEIGHT ON THE LEGEND OR ON THE PLAN SHEETS.
6. THE E.C. SHALL REFER TO ARCHITECTURAL ELEVATIONS TO COORDINATE ALL COUNTER HEIGHTS. ALL "AC" DEVICES SHALL HAVE BOTTOM OF BACK-BOX MOUNTED 4" ABOVE THE BACKSIDE SPLASH.

1 / T000 TECHNOLOGY DEVICE MOUNTING HEIGHTS

N.T.S.

ABBREVIATIONS AND SYMBOLS

AC	ABOVE COUNTER MOUNTED
ADA	AMERICANS WITH DISABILITIES ACT
AFF	ABOVE FINISHED FLOOR
AFG	ABOVE FINISHED GRADE
AHJ	AUTHORITY HAVING JURISDICTION
ALS	ASSISTIVE LISTENING SYSTEM
AV	AUDIO VIDEO
AVC	AUDIO VIDEO CONTRACTOR COORDINATED
BGM	BACKGROUND MUSIC
C	CONDUIT
CATV	COMMUNITY ACCESS TELEVISION
CCTV	CLOSED CIRCUIT TELEVISION
CH	CHANNEL ROUTED, MOUNTED, TERMINATED
CLG	CEILING MOUNTED
CPU	CENTRAL PROCESSING UNIT
DM	DESK MOUNTED
DSP	DIGITAL SIGNAL PROCESSOR
DVD	DIGITAL VIDEO DISC/VERSATILE DISC
(E)	EXISTING TO REMAIN
EC	ELECTRICAL CONTRACTOR COORDINATED
ELEV	ELEVATOR CONTRACTOR COORDINATED
(ER)	EXISTING TO BE RELOCATED
FFE	FIXTURES, FURNITURE, AND EQUIPMENT
FB	FLOOR BOX MOUNTED
FC	FIRE ALARM CONTRACTOR COORDINATED
FF	FURNITURE FEEDTHROUGH
FM	FREQUENCY MODULATION
FPD	FLAT PANEL DISPLAY
GAS	GAS SERVICE / METER COORDINATED
GC	GENERAL CONTRACTOR COORDINATED
GPC	GENERAL PURPOSE COMPUTER
IR	INFRARED
IT	INFORMATION TECHNOLOGY
J	JUNCTION BOX
LAN	LOCAL AREA NETWORK
LIGH	LIGHTING CONTROL COORDINATED
LCD	LIQUID CRYSTAL DISPLAY
LTG	LIGHTING
MATV	MASTER ANTENNA TELEVISION
M	MULLION MOUNTED
MC	MECHANICAL CONTRACTOR COORDINATED
(N)	NEW
OAE	OR APPROVED EQUAL
OH	OVERHEAD
PA	PUBLIC ADDRESS
PC	PERSONAL COMPUTER
PDP	PLASMA DISPLAY PANEL
PH	PHASE
PT	POKE THROUGH MOUNTED
RCPT	RECEPTACLE
(R)	EXISTING TO BE REMOVED
RF	RADIO FREQUENCY
(RL)	RELOCATED LOCATION
RU	RACK UNIT (TIA/EIA RACK)
SC	SECURITY CONTRACTOR COORDINATED
SPC	SPRINKLER CONTROL CONTRACTOR COORDINATED
TO	TELECOMMUNICATIONS OUTLET
TC	TELECOMMUNICATIONS CONTRACTOR COORDINATED
TV	TELEVISION
UC	UNDER COUNTER/CABINET MOUNTED
UG	UNDERGROUND
UHF	ULTRA HIGH FREQUENCY
UON	UNLESS OTHERWISE NOTED
UPS	UNINTERRUPTIBLE POWER SUPPLY.
USB	UNIVERSAL SERIAL BUS
VHF	VERY HIGH FREQUENCY
VP	VIDEO PROJECTOR
W	WALL PHONE
WAN	WIDE AREA NETWORK
WG	WIREGUARD
WP	WEATHERPROOF OR WATERPROOF
+XX"	MOUNTING HEIGHT OF 'XX' INCHES
x	DETAIL NOTE
x	REVISION (DELTA) TAG
REF: '#'/'T###'	REFERENCE TO VIEW '#' ON SHEET 'T###'

PROJECT GENERAL NOTES

1. THE WORK DESCRIBED HEREIN SHALL BE REVIEWED, COORDINATED, AND FACILITATED BY ALL CONTRACTORS; THIS INCLUDES, BUT IS NOT LIMITED TO THE COMMUNICATIONS, SECURITY, LOW VOLTAGE, AV, ELECTRICAL, AND GENERAL CONTRACTORS. FURTHERMORE, ALL WORK SHALL BE COORDINATED WITH THE CONTRACTING OFFICER TO SCHEDULE THE SEQUENCE OF ALL WORK.
2. THESE DRAWINGS ARE DIAGRAMMATIC IN NATURE; NOT ALL EQUIPMENT, PARTS, OR ANCILLARY PIECES ARE SHOWN FOR A COMPLETE SYSTEM. CONTRACTORS ARE RESPONSIBLE FOR FURNISHING, INSTALLING, AND SUCCESSFULLY TESTING FULLY FUNCTIONING AND COMPLETE SYSTEMS, UNLESS OTHERWISE NOTED.
3. DEVICES SHOWN ON PLAN ARE DIAGRAMMATIC. THE PRECISE LOCATION OF DEVICES SHALL BE COORDINATED WITH THE FINAL ARCHITECTURAL DRAWINGS AND APPROVED VENDOR SHOP DRAWINGS PRIOR TO ROUGH-IN. EXACT DEVICE LOCATIONS SHALL ALLOW FOR COORDINATED, PRE-DRYWALL RELOCATION, WITHIN A 10-FOOT RADIUS AT NO CHARGE TO THE CONTRACTING OFFICER.
4. ALL WORK SHOWN HEREIN SHALL BE ASSUMED TO BE RESPONSIBILITY OF THE CONTRACTOR, UNLESS OTHERWISE NOTED. REFER TO RESPONSIBILITY MATRIX FOR FURTHER CLARIFICATION AND DELINEATION OF CONSTRUCTION RESPONSIBILITIES.
5. EACH CONTRACTOR SHALL BE RESPONSIBLE FOR COORDINATING WITH ALL OTHER TRADES AND THEIR ASSOCAITED DRAWINGS/SPECIFICATIONS.
6. CONTRACTORS SHALL MAINTAIN AN UPDATED DOCUMENT SET CONTAINING THE MOST RECENT CONSTRUCTION DOCUMENTS, ALL FIELD AND/OR DOCUMENT CHANGES, AND UPDATED 'AS BUILT' DRAWINGS THROUGHOUT CONSTRUCTION.
7. ALL MATERIAL AND EQUIPMENT SHALL BE ERECTED, INSTALLED, CONNECTED, CLEANED, ADJUSTED, TESTED, CONDITIONED, AND PLACED IN SERVICE IN ACCORDANCE WITH THE MANUFACTURER'S DIRECTIONS AND RECOMMENDATIONS.
8. ALL CUTTING, DRILLING, AND PATCHING OF MASONRY, STEEL, OR IRON WORK BELONGING TO THE BUILDING MUST BE COORDINATED WITH ELECTRICAL, GENERAL, AND STRUCTURAL CONTRACTOR, AS WELL AS THE CONTRACTING OFFICER. UNDER NO CIRCUMSTANCES MAY STRUCTURAL WORK BE CUT UNLESS WRITTEN INSTRUCTION IS PROVIDED BY CONTRACTING OFFICER.
9. ALL MATERIAL, EQUIPMENT, WIRING DEVICES, CABLING, ETC. SHALL BE NEW, UNLESS SPECIFICALLY INDICATED OTHERWISE.
10. PULL BOXES AND HANDHOLES SHALL NOT BE INSTALLED IN PLACE OF CONDUIT BENDS. CONTRACTOR SHALL INSTALL PULL BOXES AND HANDHOLES IN STRAIGHT SECTIONS OF CONDUIT.
11. ALL CONDUITS AND SLEEVES DESIGNATED FOR COMMUNICATIONS USE SHALL BE FIRE RATED TO MATCH OR EXCEED THE PENETRATED MATERIAL. ALL PENETRATIONS OF FIRE-RATED ASSEMBLIES SHALL BE FIRE-STOPPED WITH AN APPROVED SYSTEM AND SHALL COMPLY WITH UL 1479 OR UL 2079. THE F&T RATING OF THE FIRE-STOP SYSTEM SHALL NOT BE LESS THAN THE FIRE-RESISTIVE RATING OF THE ASSEMBLY PENETRATED. THIS SHALL INCLUDE PENETRATIONS INTO AND THROUGH WALLS, FLOORS, CEILINGS, AND ROOFS PER CODE AND AHJ.
12. THE ENTIRE CABLE PLANT SHALL BE TESTED AND CERTIFIED BY CONTRACTOR AS DETERMINED BY BICSI, NEC, AND TIA/EIA STANDARDS AT A MINIMUM, UNLESS OTHERWISE SPECIFIED.
13. ALL TELECOMMUNIATIONS SYSTEMS CONDUITS WHICH ARE INTERIOR, EXPOSED IN THE EXTERIOR, OR WITHIN A TUNNEL SYSTEM SHALL BE METALLIC CONDUIT AS INDICATED IN SPECIFICATIONS. UNDER NO CIRCUMSTANCES SHALL FLEXIBLE CONDUIT BE UTILIZED FOR PATHWAYS. ALL CONDUITS SHALL BE, AT MINIMUM, 1 INCH IN TRADE SIZE, UNLESS SPECIFICALLY AND OTHERWISE NOTED. WHEN CONDUIT IS EXPOSED, COORDINATE WITH CONTRACTING OFFICER FOR CONDUIT COLOR AND/OR PAINTING REQUIREMENTS.
14. ALL TELECOMMUNICATIONS SYSTEMS CONDUITS WHICH ARE UNDERGROUND SHALL BE RIGID POLYVINYL CHLORIDE CONDUIT (PVC), UNLESS OTHERWISE NOTED. REFER TO SPECIFICATIONS FOR MORE INFORMATION.
15. NO MORE THAN TWO (2) 90-DEGREE BENDS (OR A TOTAL OF 180-DEGREES) MAY BE INSTALLED BETWEEN PULLBOXES, HANDHOLES, OR PULL POINTS. A 4 INCH SQUARE, 2-1/8 INCH DEEP BACKBOX SHALL BE PROVIDED AND INSTALLED AS A PULL BOX FOR 1 INCH CONDUIT PATHWAYS, UNLESS OTHERWISE NOTED. FOR ALL OTHER PATHWAYS, REFER TO DRAWINGS AND SPECIFICATIONS FOR PULL BOX SIZE REQUIREMENTS.
16. FOR INTERIOR SPACES, NO MORE THAN 100 FEET OF PATHWAY MAY BE INSTALLED BETWEEN PULLBOXES OR PULL POINTS.
17. FOR EXTERIOR PATHWAY, NO MORE THAN 500 FEET OF PATHWAY MAY BE INSTALLED BETWEEN HANDHOLES OR PULL POINTS.
18. ALL MANUFACTURER CABLE BEND RADIUS REQUIREMENTS SHALL BE OBSERVED AND PROTECTED DURING THE INSTALLATION OF CABLING. FOR 2 INCH (TRADE SIZE) CONDUITS OR LESS, CONDUITS BEND RADIUS SHALL BE A MINIMUM OF 6 TIMES THE CONDUIT DIAMETER. FOR CONDUITS GREATER THAN 2 INCHES (TRADE SIZE), CONDUIT BEND RADIUS SHALL BE A MINIMUM OF 10 TIMES THE CONDUIT DIAMETER. ALL CONDUIT BENDS SHALL BE "SWEEPING" TYPE, NO BEND FITTINGS ARE PERMITTED.
19. FOR LOCATIONS WHERE BOTH POWER AND NETWORK OUTLETS ARE TO BE INSTALLED, NETWORK OUTLETS SHALL BE IMMEDIATELY ADJACENT AND ORTHOGONAL TO THE POWER OUTLET, UNLESS OTHERWISE NOTED. THE CONTRACTOR SHALL ENSURE THAT ALL NETWORK OUTLET LOCATIONS AND POWER OUTLET LOCATIONS ARE COORDINATED TO BE ADJACENT TO EACH OTHER WITH PROPER SPACING PER ARCHITECTURAL ELEVATIONS AND/OR NOTES.
20. BACK-TO-BACK MOUNTED OUTLETS IN WALLS ARE NOT PERMITTED, BOXES SHALL MAINTAIN A MINIMUM OF 12-INCHES OF SEPARATION. IN CASES WHERE OUTLET BOXES IN ADJACENT ROOMS ARE IN THE SAME STUD CAVITY, PROVIDE A LAYER OF EXPANDABLE SPRAY FOAM INSULATION AROUND EACH BOX CAVITY. FOR ALL OUTLETS/BACKBOXES INSTALLED INTO ACOUSTICALLY-RATED PARTITIONS (TYPICALLY OFFICES, CONFERENCE ROOM, CLASSROOMS, PRESENTATION SPACES, ETC.), PROVIDE ACOUSTICAL OUTLET BACKER PUTTY AND/OR PUTTY PADS. ACOUSTICAL RATING SHALL BE MAINTAINED PER ASTM C919 AND ASTM E497, AND BE TESTED TO UL 263 (ASTM E119) AND UL 1479 (ASTM E814) STANDARDS. WHEN INSTALLED INTO FIRE-RATED WALLS, PROVIDE FIRE-RATED PUTTY TO COVER THE BACK OF EACH OUTLET.
21. ALL CABLING SHALL BE SUPPORTED BY DEDICATED INFRASTRUCTURE AND EQUIPMENT. THIS INCLUDES CABLE TRAY, CONDUIT, AND MAUNFACTURED SLEEVES. CABLE SHALL NOT BE SUPPORTED BY OTHER TRADE'S EQUIPMENT OR ARCHITECTURAL ELEMENTS. THIS INCLUDES, BUT IS NOT LIMITED TO, HVAC DUCTS, PIPING, ELECTRICALLY DEDICATED CONDUIT, CEILING TILE/GRID, ETC.
22. CABLE TRAY, CONDUIT, SLEEVES, PENETRATIONS, AND ANY OTHER PATHWAYS USED FOR ROUTING TELECOMMUNICATIONS (NETWORK/VOICE/CATV) CABLING SHALL BE DEDICATED TO TELECOMMUNICATION CABLING. NO OTHER TRADE, SERVICE, OR SYSTEM SHALL UTILIZE SAME PATHWAY.
23. CABLE TRAY SHALL ONLY BE INSTALLED WHERE INDICATED AND ABOVE ACCESSIBLE CEILINGS. EXPOSED OR NON-ACCESSIBLE CABLING IS NOT ACCEPTABLE; CONDUIT PATHWAY SHALL BE PROVIDED AND INSTALLED FOR ROUTING OF CABLING FROM EACH OUTLET BACK TO THE NEAREST CABLE TRAY OR TELECOMMUNICATION SPACE. CONDUIT SHALL BE UTILIZED FOR CABLE ROUTING THROUGH NON-ACCESSIBLE CEILINGS, OPEN CEILING ENVIRONMENTS, AND/OR HIGH CEILING ENVIRONMENTS WHERE THE CABLE IS BELOW THE CEILING, UNLESS OTHERWISE NOTED.
24. ALL INTERIOR CABLING SHALL BE PLENUM RATED UNLESS SPECIFICALLY AND OTHERWISE NOTED.
25. ALL BACKBOX INSTALLATIONS SHALL BE COORDINATED TO ENSURE THAT MUD RING/EXTENSION RING IS MOUNTED FLUSH WITH WALL SURFACE TO ALLOW PROPER MOUNTING OF FACEPLATE(S).
26. FOR ALL OPEN ENDED CONDUIT NOT TERMINATED INTO A BOX OR ENLCOSURE, CONTRACTOR SHALL PROVIDE AND INSTALL A NYLON BUSHING AND CONDUIT END.
27. A PULL STRING SHALL BE PROVIDED FOR ALL CONDUIT PATHWAYS. FOR EXTERIOR PATHWAYS, PULL STRING SHALL BE MULE TAPE WITH A MINIMUM TENSION STRENGTH OF 2200 LBS. FOR INTERIOR PATHWAYS, A STRING OR MULE TAPE WITH A MINIMUM TENSION STRENGTH OF 200 LBS. SHALL BE INSTALLED. ALL PULL STRINGS SHALL BE TIED OFF WITH 3 FEET OF SLACK ON EACH END.

PROFESSIONAL ENGINEER LICENSED 17050 05/23/2024 STATE OF IDAHO JON E BROOKS

DESIGNED: MD/AW	SUB SHEET NO.	TITLE OF SHEET	DRAWING NO. 194
CADD: MD/AW	T000	TECHNOLOGY COVER SHEET	187126
TECH REVIEW: JM			PMIS/PKG NO. 314972
DATE: 05/23/2024		MIIN MAINTENANCE BUILDING MINIDOKA NATIONAL HISTORIC SITE	SHEET 73 OF 82

5/21/2024 4:41:03 PM Autodesk Docs://2023-360 NPS MIIN Rehab DD-CD/5854.00 - NPS MIIN - Electrical Central.rvt

SECURITY LEGEND

'CAMX' DEFINES THE CAMERA TYPE. REFER TO SCHEDULES FOR MORE INFORMATION. EACH CAMERA SHALL RECEIVE ONE (1) BUILDING NETWORK CONNECTION.

CEILING-MOUNTED WALL-MOUNTED

SINGLE LENSE CAMERA

DUAL LENSE CAMERA

TRIPLE LENSE CAMERA

QUAD LENSE CAMERA

MOTION DETECTOR - DIRECTIONAL

MOTION DETECTOR - OMNI-DIRECTIONAL

WALL-MOUNTED
POLE-MOUNTED
CORNER-MOUNTED

SECURITY DEVICE - REFER TO SPECIAL SYMBOLS LEGEND. 'XX' DENOTES THE DEVICE DESCRIPTION FROM REFERENCE BELOW.

WALL MOUNTED SECURITY DEVICES

CR	CARD READER DEVICE
KP	KEYPAD ACCESS DEVICE
CK	CARD READER / KEYPAD COMBINATION DEVICE
BM	BIOMETRIC COMBINATION DEVICE
IC	INTERCOM (REMOTE)
IM	INTERCOM (MASTER)
DU	DURESS BUTTON
RX	REQUEST-TO-EXIT DEVICE
KI	KEYPAD INTERFACE - INTRUSION SYSTEM
DB	DOOR BELL

CEILING MOUNTED SECURITY DEVICES

DC	DOOR CONTACT
MD	MOTION DETECTOR

MATRIX OF CONSTRUCTION RESPONSIBILITIES

THE RESPONSIBILITIES LISTED HEREIN ARE PROVIDED AS A RECOMMENDATION AND DO NOT SUPERSEDE OR REPLACE ANY CONTRACTS, OR OTHERWISE DEFINED RESPONSIBILITIES, BETWEEN THE DESIGNATED PARTIES. IN ADDITION, THE INFORMATION IS MEANT TO INDICATE GENERAL RESPONSIBILITY FOR A SCOPE OF WORK AND IN NO WAY DISALLOWS THE RESPONSIBLE PARTY TO SUBCONTRACT THE SCOPE.

RESPONSIBLE PARTY	GENERAL CONTRACTOR		ELECTRICAL CONTRACTOR		TELECOM CONTRACTOR		LOW VOLTAGE CONTRACTOR		AUDIO-VISUAL CONTRACTOR		SECURITY CONTRACTOR		CONTRACTING OFFICER		NOTES
SCOPE OF WORK	FURNISH	INSTALL	FURNISH	INSTALL	FURNISH	INSTALL	FURNISH	INSTALL	FURNISH	INSTALL	FURNISH	INSTALL	FURNISH	INSTALL	
BUDGET OF WORK	GC		GC		GC		GC		GC		GC		FFE		
DEMOLITION															
GENERAL															8
SITE															
INCOMING SERVICE PROVIDER CABLING & COORDINATION													X	X	1
CAMPUS / LAN CABLING & COORDINATION					X	X									
EXTERIOR CONDUIT PATHWAY / DUCTBANK			X	X											
TRENCHING			X	X											
INTERIOR INFRASTRUCTURE															
GROUNDING & BONDING			X	X	X	X									3, 4
INTERIOR CONDUIT PATHWAY			X	X											
BACKBOX / JUNCTION BOX			X	X											
FLOOR BOX / POKE THROUGH			X	X		X									5
CABLE TRAY			X	X											
J-HOOK / SLING					X	X									
SLEEVE / CONDUIT PENETRATIONS			X	X	X	X									6, 7
TELECOMMUNICATIONS															
PLYWOOD BACKBOARD	X	X													
LADDER RACK / LADDER RUNWAY / ACCESSORIES					X	X									
RACK / FRAME / CABINET (TELECOM)					X	X									
WIREMANAGER					X	X									
FIBER PATCH PANEL					X	X									
COPPER PATCH PANEL					X	X									
POWER DISTRIBUTION UNIT (PDU)					X	X									
UNINTERRUPTIBLE POWER SUPLY (UPS)													X	X	
MISCELLANEOUS RACK COMPONENTS (DRAWER, SHELF, ETC.)					X	X									
BACKBONE CABLING SYSTEM (NETWORK, VOICE, CATV)					X	X									
HORIZONTAL CABLING SYSTEM (NETWORK, VOICE, CATV)					X	X									
FACEPLATE / JACK / SURFACE MOUNT BOX					X	X									
PATCH CABLE (INTERIOR TO TELECOMMUNICATIONS ROOM)					X									X	
PATCH CABLE (END DEVICE / OUTLET)					X	X		X		X		X		X	2
LABELING					X	X									
WIRELESS ACCESS POINT (WAP)													X	X	
NETWORK EQUIPMENT (SWITCH, HEADEND, FIREWALL, ETC.)													X	X	
PERIPHERAL EQUIPMENT (PHONE, PRINTER, PC, ETC.)													X	X	
LOW VOLTAGE															
CELLULAR DISTRIBUTED ANTENNA SYSTEM (DAS)													X	X	
SECURITY - INTRUSION DETECTION (ID)															
ID HEADEND / CONTROLLER / PANEL											X	X			
ID SOFTWARE, PROGRAMMING, & INTEGRATION											X	X			
MOTION SENSOR											X	X			

NOTES:

1. CONTRACTOR SHALL COORDINATE WITH CONTRACTING OFFICER REGARDING TIMELINE OF INSTALLATION AND REQUIREMENTS FOR INSTALLATION TO ENSURE A TIMLEY INSTALLATION.

2. THE PARTY RESPONSIBLE FOR INSTALLING THE END DEVICE (PC, CAMERA, WAP, ETC.) SHALL BE RESPONSIBLE FOR INSTALLING THE END-OF-RUN PATCH CABLE. AFTER INSTALLATION, VERIFICATION OF OPERABILITY IS REQUIRED.

3. THE ELECTRICAL CONTRACTOR SHALL i) EXTEND THE BUILDING GROUND TO EACH TELECOMMUNICATION SPACE ii) PROVIDE AND INSTALL THE BUSBAR(S), GROUNDING CABLES, AND ASSOCIATED EQUIPMENT, iii) AND ENSURE EACH TELECOMMUNICATION SPACE HAS PROPER ACCESS TO BUILDING GROUND THROUGH THE LOCAL BUSBAR AS SHOWN IN THE DRAWINGS.

4. FOR ALL DEVICES, EQUIPMENT, PATHWAY, AND OTHER SUCH MATERIAL REQUIRED TO BE GROUNDED, THE CONTRACTOR/PARTY, WITH WHICH THE DEVICE, EQUIPMENT, PATHWAY OR OTHER SUCH MATERIAL WAS INSTALLED BY, SHALL BE RESPONSIBLE FOR ITS PROPER BONDING AND GROUNDING.

5. THE ELECTRICAL CONTRACTOR SHALL BE RESPONSIBLE FOR THE PROVISION AND INSTALLATION OF ALL FLOOR BOXES AND POKE THROUGHS, AS WELL AS ALL CONDUIT/PATHWAY REQUIREMENTS PERTAINING TO IT, REGARDLESS IF THERE IS POWER CABLING INCLUDED AT DEVICE. THE TELECOM CONTRACTOR SHALL COORDINATE WITH DRAWINGS AND ELECTRICAL CONTRACTOR TO ENSURE LOW VOLTAGE INFRASTRUCTURE AND CABLING REQUIREMENTS ARE MET AND SHALL PROVIDE AND INSTALL ALL CABLING AND FACEPLATE/TERMINATION EQUIPMENT PERTAINING TO DEVICE.

6. FOR ALL PENETRATIONS SHOWN IN DRAWINGS, THE ELECTRICAL CONTRACTOR SHALL PROVIDE AND INSTALL. THE ELECTRICAL CONTRACTOR SHALL ENSURE THE EXTERIOR OF EACH PENETRATION IS FIRE-RATED TO MATCH OR EXCEED THE PENETRATED SURFACE.

7. ALL PENETRATIONS NOT SHOWN ON DRAWINGS, BUT REQUIRED FOR CABLING INSTALLATION, SHALL BE PROVIDED AND INSTALLED BY THE CABLING INSTALLATION CONTRACTOR/TEAM. FOR FIRE-RATED PENETRATIONS, THE CABLE INSTALLATION CONTRACTOR/TEAM SHALL ENSURE THE EXTERIOR OF EACH PENETRATION IS FIRE-RATED TO MATCH OR EXCEED THE PENETRATED SURFACE. AFTER ALL CABLING IS INSTALLED, TESTED, AND ACCEPTED, THE INTERIOR OF EACH PENETRATION SHALL BE FIRE-RATED TO MATCH OR EXCEED THE PENETRATED MATERIAL AS WELL.

8. IT IS ACCEPTABLE FOR THE CONTRACTOR TO REUSE AN EXISTING DEVICE WITH CONTRACTING OFFICER APPROVAL. COORDINATE WITH THE CONTRACTING OFFICER PRIOR TO ANY NEW DEVICE PROCUREMENT TO RECORD ALL DEVICES THAT MAY BE REUSED. FOR ALL DEVICES SCHEDULED FOR REUSE THAT REPLACE AN ITEM SCHEDULED FOR NEW, A CREDIT SHALL BE GIVEN TO THE CONTRACTING OFFICER FOR ITEM REPLACEMENT.

9. THIS SCOPE IS DETERMINED TO BE EXISTING TO REMAIN AND SHALL BE UTILIZED THROUGH COORDINATION WITH CONTRACTING OFFICER AND OTHER TRADES.

PROFESSIONAL ENGINEER LICENSED 17050 05/23/2024 STATE OF IDAHO JON E BROOKS

DESIGNED: MD/AW	SUB SHEET NO.	TITLE OF SHEET	DRAWING NO. 194
CADD: MD/AW	T001	TECHNOLOGY RESPONSIBILITY MATRIX	187126
TECH REVIEW: JM		MIIN MAINTENANCE BUILDING	PMIS/PKG NO. 314972
DATE: 05/23/2024		MINIDOKA NATIONAL HISTORIC SITE	SHEET 74 OF 82

5/21/2024 4:41:03 PM Autodesk Docs://2023-360 NPS MIIN Rehab DD-CD/5854.00 - NPS MIIN - Electrical Central.rvt

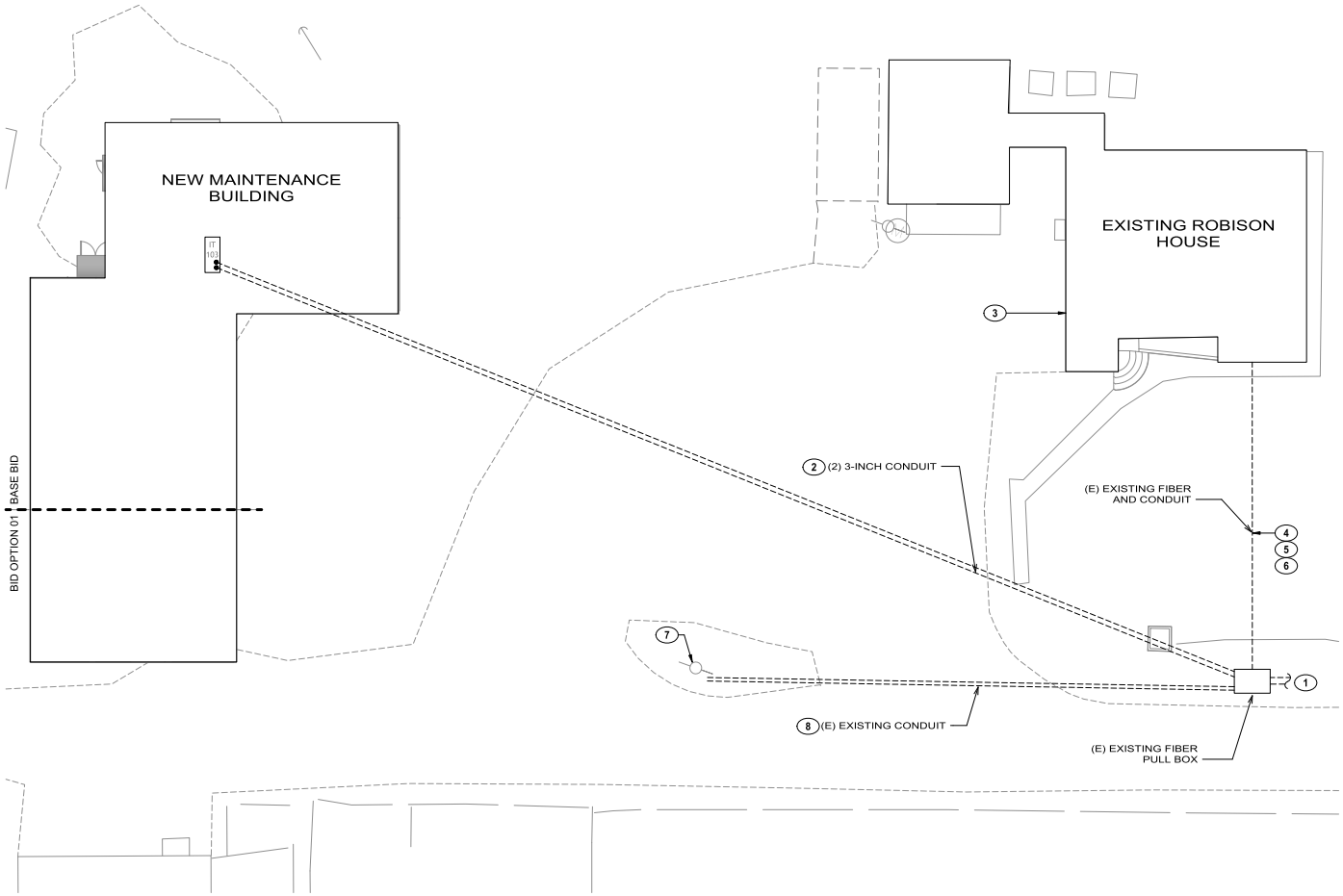

1 T100 TECHNOLOGY SITE PLAN
SCALE A

TECHNOLOGY GENERAL NOTES

1.	CONTRACTOR SHALL REFER TO LEGEND, NOTES, SCHEDULES, DETAILS, AND SPECIFICATIONS FOR MORE INFORMATION.
2.	SITE CONDITIONS INDICATED ARE BASED ON LIMITED SITE INVESTIGATION AND DRAWING REFERENCES. CONTRACTOR SHALL VERIFY AND RECORD EXISTING CONDITIONS PRIOR TO COMMENCEMENT OF WORK.
3.	DEVICES AND PATHWAY SHOWN ARE DIAGRAMMATIC IN NATURE AND DO NOT REPRESENT PRECISE LOCATIONS. CONTRACTOR SHALL FIELD COORDINATE DEVICES AND PATHWAYS WITH OTHER UTILITIES AND SERVICES, CIVIL, STRUCTURAL, AND CONTRACTING OFFICER.
4.	ANY BURIED CONDUIT SHALL BE FIELD COORDINATED SPECIFICALLY TO AVOID BUILDING FOOTINGS AND OTHER STRUCTURAL ELEMENTS.
5.	NO MORE THAN 500 FEET OF PATHWAY MAY BE INSTALLED BETWEEN PULL POINTS.
6.	NO MORE THAN TWO (2) 90-DEGREE BENDS (OR 180 DEGREE OF BENDS IN TOTAL) MAY BE INSTALLED BETWEEN PULL POINTS. THE ONLY EXCEPTION IS TO ALLOW THE STUB INTO THE DEMARCATION SPACE TO BE THE THIRD 90-DEGREE BEND BETWEEN PULL POINTS.
7.	ALL CONDUIT BENDS SHALL BE THE "SWEEPING" TYPE AND IN ACCORDANCE WITH THE BEND RADIUS REQUIREMENTS SPECIFIED IN PROJECT GENERAL NOTES. NO "BEND" OR "ELBOW" FITTINGS ARE PERMITTED UNLESS SPECIFICALLY NOTED.

KEYNOTE LEGEND

KEY VALUE	KEYNOTE TEXT
1	EXISTING CONDUIT ROUTE TO HERRMANN HOUSE.
2	ALL CONDUITS SHALL ROUTE IN UNISON TO NEW BUILDING IT ROOM.
3	BID OPTION 02: THE ROBISON HOUSE IS SCHEDULED FOR DEMOLITION.
4	BID OPTION 02: AFTER ALL INCOMING CABLING HAS BEEN REROUTED TO THE NEW MAINTENANCE BUILDING, THE MAINTENANCE BUILDING CONSTRUCTION IS COMPLETE, AND THE MAINTENANCE BUILDING NETWORK CONNECTION IS OPERATIONAL, EXISTING CONDUIT FROM HANDHOLE TO ROBISON BUILDING SHALL BE DEMOLISHED.
5	AFTER CONSTRUCTION OF THE NEW MAINTENANCE BUILDING, NETWORK CONNECTION CABLE INTO ROBISON HOUSE SHALL BE PULLED BACK AND RE-ROUTED INTO THE NEW MAINTENANCE BUILDING.
6	BID OPTION 03: ONLY IF BID OPTION 02 IS NOT ACCEPTED, CONTRACTOR SHALL ABANDON IN PLACE THE EXISTING CONDUIT AND SHALL CAP EACH END. EACH CAP SHALL BE LABELLED TO INDICATE LOCATION OF OTHER END OF CONDUIT.
7	AS PART OF BID OPTION 03 OVERHEAD ELECTRICAL LINE AND UTILITY POLE SHALL BE REMOVED. REFER TO ELECTRICAL FOR MORE INFORMATION.
8	CONDUIT SHALL BE CAPPED AND ABANDONED IN PLACE.

SCALE: A 10 0 10 20 SCALE OF FEET

RLDG-NORTH

PROFESSIONAL ENGINEER LICENSED 17050 05/23/2024 STATE OF IDAHO JON E BROOKS

DESIGNED: MD/AW	SUB SHEET NO.	TITLE OF SHEET	DRAWING NO.
CADD: MD/AW	T100	TECHNOLOGY SITE PLAN	194
TECH REVIEW: JM			187126
DATE: 05/23/2024		MIIN MAINTENANCE BUILDING MINIDOKA NATIONAL HISTORIC SITE	PMIS/PKG NO. 314972
			SHEET 75 OF 82

5/21/2024 4:41:04 PM Autodesk Docs://2023-360 NPS MIIN Rehab DD-CD/5854.00 - NPS MIIN - Electrical Central.rvt

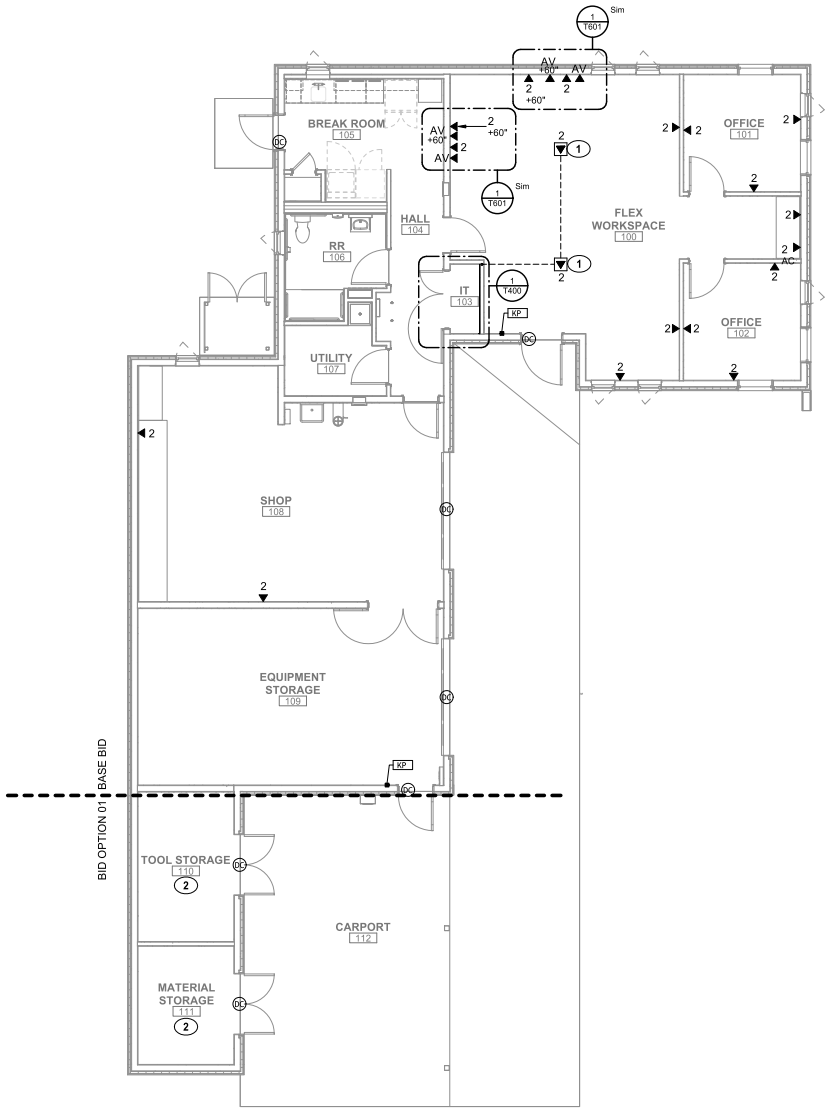

1 T101 TECHNOLOGY FLOOR PLAN
SCALE A

TECHNOLOGY GENERAL NOTES

1.	CONTRACTOR SHALL REFER TO LEGEND, NOTES, SCHEDULES, DETAILS, AND SPECIFICATIONS FOR MORE INFORMATION.
2.	TELECOM BOUNDARIES REPRESENT THE AREA SERVED BY THE CORRESPONDING TELECOM ROOM AND/OR CONSOLIDATION POINT. ALL NETWORK CABLING SHALL HOMERUN TO, AND ORIGINATE FROM, THE ASSOCIATED ROOM/POINT.
3.	DEVICE LOCATIONS SHOWN SHALL BE COORDINATED WITH ARCHITECTURAL ELEMENTS, FURNITURE, AND OTHER TRADES FOR FINAL INSTALLATION LOCATION.
4.	CABLING SHALL BE ENCLOSED IN CONDUIT FROM TELECOMMUNICATION ROOM TO EACH DEVICE/OUTLET. NO CABLING SHALL BE VISIBLE OR EXPOSED OUTSIDE OF A TELECOMMUNICATION ROOM/RACK.
5.	NO MORE THAN 100 FEET OF PATHWAY MAY BE INSTALLED BETWEEN PULL POINTS.
6.	ALL CONDUIT BENDS SHALL THE "SWEEPING" TYPE AND IN ACCORDANCE WITH THE BEND RADIUS REQUIREMENTS SPECIFIED IN PROJECT GENERAL NOTES. NO "BEND" OR "ELBOW" FITTINGS ARE PERMITTED UNLESS SPECIFICALLY NOTED.

KEYNOTE LEGEND

KEY VALUE	KEYNOTE TEXT
1	TELECOM PROVISION LOCATION. REFER TO ELECTRICAL PLANS FOR RECESSED FLOOR BOX AND CONDUIT RACEWAY INFORMATION.
2	ALL DEVICES AND FIXTURES SHOWN IN THIS AREA ARE PART OF BID OPTION 01 UNLESS OTHERWISE NOTED. WORK SHALL NOT BE PERFORMED AS A PART OF THE BASE BID SCOPE.

SCALE: A 4 0 4 8 12 SCALE OF FEET

BLDG. NORTH

PROFESSIONAL ENGINEER LICENSED 17050 05/23/2024 STATE OF IDAHO JON E BROOKS

DESIGNED: MD/AW	SUB SHEET NO.	TITLE OF SHEET	DRAWING NO. 194 187126
CADD: MD/AW	T101	TECHNOLOGY FLOOR PLAN	PMIS/PKG NO. 314972
TECH REVIEW: JM		MIIN MAINTENANCE BUILDING	SHEET 76 OF 82
DATE: 05/23/2024		MINIDOKA NATIONAL HISTORIC SITE	

5/21/2024 4:41:04 PM Autodesk Docs://2023-360 NPS MIIN Rehab DD-CD/5854.00 - NPS MIIN - Electrical Central.rvt

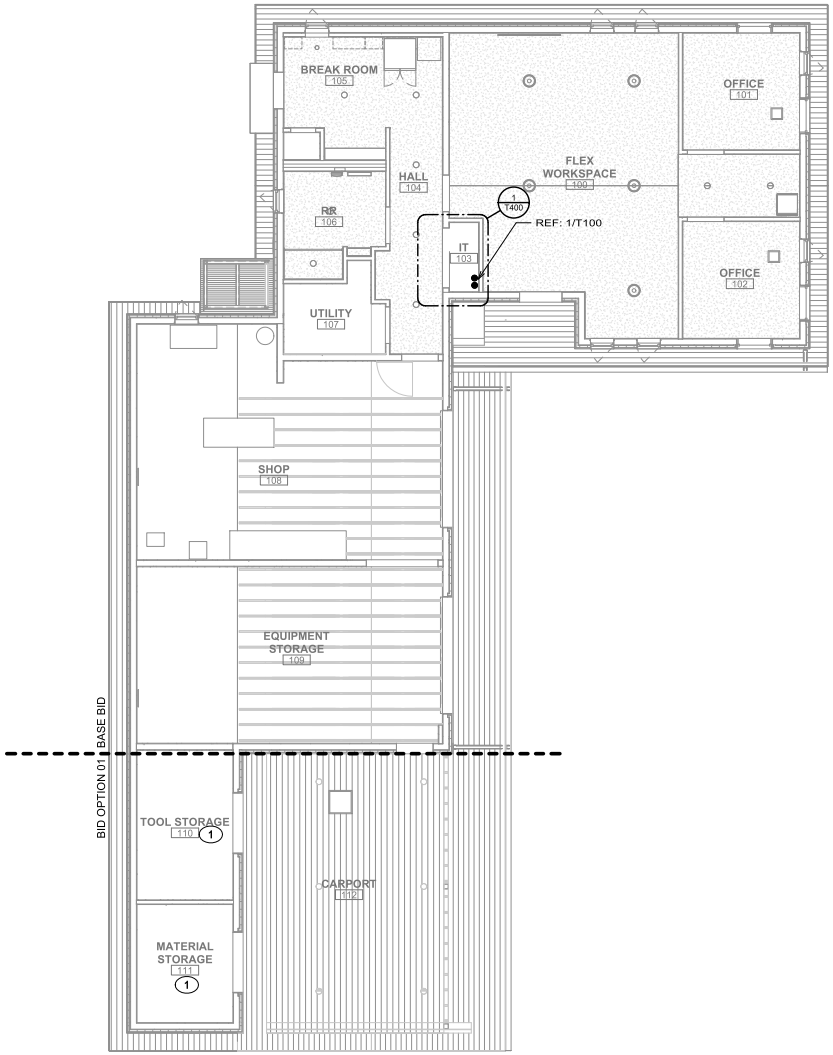

1 T110 TECHNOLOGY INFRASTRUCTURE PLAN
SCALE A

TECHNOLOGY GENERAL NOTES	
1.	CONTRACTOR SHALL REFER TO LEGEND, NOTES, SCHEDULES, DETAILS, AND SPECIFICATIONS FOR MORE INFORMATION.
2.	TELECOM BOUNDARIES REPRESENT THE AREA SERVED BY THE CORRESPONDING TELECOM ROOM AND/OR CONSOLIDATION POINT. ALL NETWORK CABLING SHALL HOMERUN TO, AND ORIGINATE FROM, THE ASSOCIATED ROOM/POINT.
3.	ALL CONDUIT BENDS SHALL THE "SWEEPING" TYPE AND IN ACCORDANCE WITH THE BEND RADIUS REQUIREMENTS SPECIFIED IN PROJECT GENERAL NOTES. NOT "BEND" OR "ELBOW" FITTINGS ARE PERMITTED UNLESS SPECIFICALLY NOTED.

KEYNOTE LEGEND	
KEY VALUE	KEYNOTE TEXT
1	ALL DEVICES AND FIXTURES SHOWN IN THIS AREA ARE PART OF BID OPTION 01 UNLESS OTHERWISE NOTED. WORK SHALL NOT BE PERFORMED AS A PART OF THE BASE BID SCOPE.

SCALE: A 4 0 4 8 12
SCALE OF FEET

RLDG-NORTH

PROFESSIONAL ENGINEER LICENSED 17050 05/23/2024 STATE OF IDAHO JON E BROOKS

DESIGNED: MD/AW	SUB SHEET NO.	TITLE OF SHEET	DRAWING NO. 194
CADD: MD/AW	T110	TECHNOLOGY INFRASTRUCTURE PLAN	187126
TECH REVIEW: JM		MIIN MAINTENANCE BUILDING	PMIS/PKG NO. 314972
DATE: 05/23/2024		MINIDOKA NATIONAL HISTORIC SITE	SHEET 77 OF 82

5/21/2024 4:41:04 PM Autodesk Docs://2023-360 NPS MIIN Rehab DD-CD/5854.00 - NPS MIIN - Electrical Central.rvt

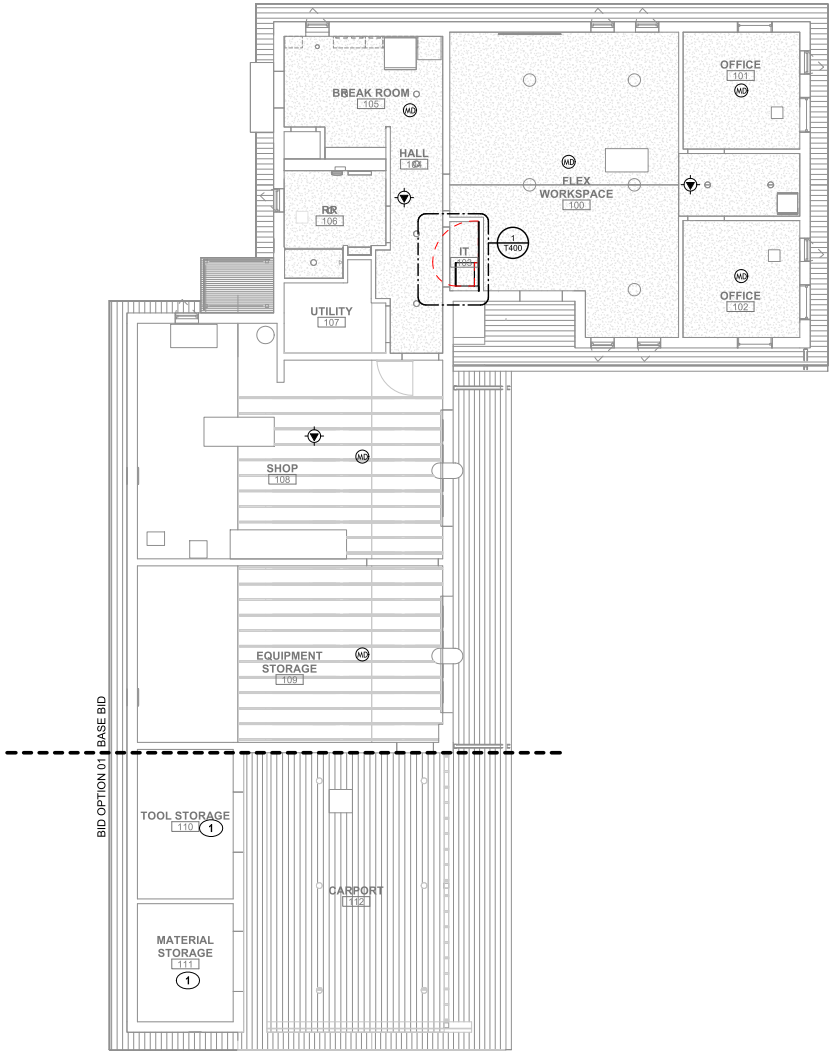

1 / T111 TECHNOLOGY CEILING PLAN
SCALE A

TECHNOLOGY GENERAL NOTES

1.	CONTRACTOR SHALL REFER TO LEGEND, NOTES, SCHEDULES, DETAILS, AND SPECIFICATIONS FOR MORE INFORMATION.
2.	TELECOM BOUNDARIES REPRESENT THE AREA SERVED BY THE CORRESPONDING TELECOM ROOM AND/OR CONSOLIDATION POINT. ALL NETWORK CABLING SHALL HOMERUN TO, AND ORIGINATE FROM, THE ASSOCIATED ROOM/POINT.
3.	DEVICE LOCATIONS SHOWN SHALL BE COORDINATED WITH ARCHITECTURAL ELEMENTS, FURNITURE, AND OTHER TRADES FOR FINALL INSTALLATION LOCATION.
4.	CABLING SHALL BE ENCLOSED IN CONDUIT IN FROM TELECOMMUNICATION ROOM TO EACH DEVICE/OUTLET. NO CABLING SHALL BE VISIBLE OR EXPOSED OUTSIDE OF A TELECOMMUNICATION ROOM/RACK.
5.	ALL CONDUIT PATHWAY ROUTED FROM A BACKBOX, FLOOR BOX, JUNCTION BOX, OR POKE THROUGH SHALL BE ROUTED TO NEAREST ACCESSIBLE CEILING.
6.	NO MORE THAN 100 FEET OF PATHWAY MAY BE INSTALLED BETWEEN PULL POINTS.
7.	ALL CONDUIT BENDS SHALL THE "SWEEPING" TYPE AND IN ACCORDANCE WITH THE BEND RADIUS REQUIREMENTS SPECIFIED IN PROJECT GENERAL NOTES. NOT "BEND" OR "ELBOW" FITTINGS ARE PERMITTED UNLESS SPECIFICALLY NOTED.

KEYNOTE LEGEND

KEY VALUE	KEYNOTE TEXT
1	ALL DEVICES AND FIXTURES SHOWN IN THIS AREA ARE PART OF BID OPTION 01 UNLESS OTHERWISE NOTED. WORK SHALL NOT BE PERFORMED AS A PART OF THE BASE BID SCOPE.

SCALE: A
4 0 4 8 12
SCALE OF FEET

BLDG. NORTH

PROFESSIONAL ENGINEER LICENSED 17050 05/23/2024 STATE OF IDAHO JON E BROOKS

DESIGNED: MD/AW	SUB SHEET NO.	TITLE OF SHEET	DRAWING NO.
CADD: MD/AW	T111	TECHNOLOGY CEILING PLAN	194
TECH REVIEW: JM		MIIN MAINTENANCE BUILDING	187126
DATE: 05/23/2024		MINIDOKA NATIONAL HISTORIC SITE	PMIS/PKG NO. 314972
			SHEET 78 OF 82

5/21/2024 4:41:05 PM Autodesk Docs://2023-360 NPS MIIN Rehab DD-CD/5854.00 - NPS MIIN - Electrical Central.rvt

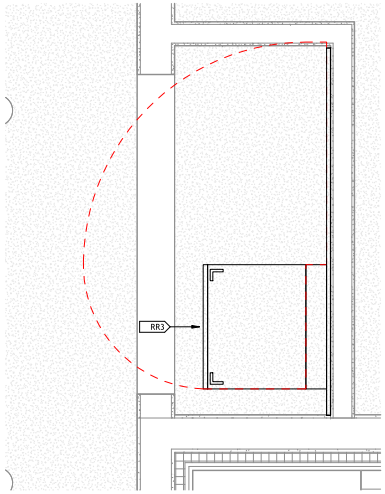

1 T400 ENLARGED TECHNOLOGY PLAN - IT 103
SCALE A

TECHNOLOGY GENERAL NOTES

1.	CONTRACTOR SHALL REFER TO LEGEND, NOTES, SCHEDULES, DETAILS, AND SPECIFICATIONS FOR MORE INFORMATION.
2.	NO EQUIPMENT MAY ENTER OR PASS THROUGH THE TELECOMMUNICATION SPACE UNLESS SPECIFICALLY SUPPORTING THE SPACE. THIS INCLUDES, BUT IS NOT LIMITED TO, HVAC DUCTS, CONDUIT, PLUMBING, ETC.
3.	ALL CABLING ROUTED VERTICALLY ON WALLS SHALL BE SUPPORTED WITH CABLE TIES MOUNTED TO WALL MOUNTED VERTICAL LADDER RACK AND/OR D-RINGS.
4.	A MINIMUM OF 3 FEET OF CLEARANCE SHALL BE MAINTAINED IN THE FRONT AND BACK OF EACH RACK, AFTER EQUIPMENT IS INSTALLED. CONTRACTOR SHALL ASSUME A MINIMUM OF 24 INCHES OF DEPTH FOR RACK MOUNTED ACTIVE EQUIPMENT IN 2-POST RACKS.
5.	ALL WALLS SHALL BE COVERED WITH PLYWOOD, REFER TO SPECIFICATIONS FOR MORE INFORMATION.
6.	THE DEDICATED IN-ROOM HVAC THERMOSTAT SHALL BE MOUNTED ADJACENT THE LIGHT SWITCH NEAR ENTRY DOOR.
7.	CONTRACTOR SHALL COORDINATE WITH ALL OTHER CONTRACTORS/TRADES TO ENSURE WALL AND RACK SPACE ALLOCATION NEEDS.

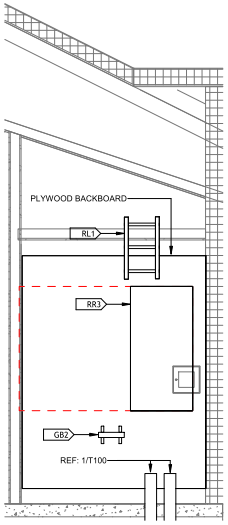

2 T400 ENLARGED TECHNOLOGY PLAN - IT 103 EAST
SCALE A

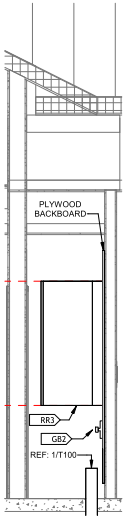

3 T400 ENLARGED TECHNOLOGY PLAN - IT 103 NORTH
SCALE A

SCALE: A
2 0 2 4
SCALE OF FEET

BLDG NORTH

PROFESSIONAL ENGINEER LICENSED 17050 05/23/2024 STATE OF IDAHO JON E BROOKS

DESIGNED: MD/AW CADD MD/AW TECH REVIEW: JM DATE: 05/23/2024	SUB SHEET NO. T400	TITLE OF SHEET ENLARGED TECHNOLOGY PLAN IT 103 MIIN MAINTENANCE BUILDING MINIDOKA NATIONAL HISTORIC SITE	DRAWING NO. 194 187126 PMIS/PKG NO. 314972 SHEET 79 OF 82

5/21/2024 4:41:05 PM Autodesk Docs://2023-360 NPS MIIN Rehab DD-CD/5854.00 - NPS MIIN - Electrical Central.rvt

EQUIPMENT SCHEDULES INFORMATION
ALL COMPONENTS SHOWN HEREIN SHALL BE CONSIDERED AS 'BASIS OF DESIGN'. THEY ARE SHOWN TO INDICATE GENERAL FUNCTION AND APPLICATION. IT IS ACCEPTABLE TO PROVIDE/SUBMIT COMPONENTS DETERMINED TO BE 'APPROVED EQUAL'.

COPPER CONNECTIVITY

KEY	DESCRIPTION	MANUFACTURER	PART NUMBER	COMMENTS
CC2	CAT 6A CABLE, PLENUM, UTP	COMMSCOPE	CS44P	
CJ2	CAT 6A JACK	COMMSCOPE	UKJ10G	
CW4	4-PORT FACEPLATE, LABELED	COMMSCOPE	2111039-x	FINISH SHALL MATCH COLOR OF POWER RECEPTACLE DEVICE FACEPLATES
CW5	1-PORT WALL PHONE FACEPLATE	SEE COMMENTS	M10LWSP	
CW7	SURFACE MOUNT BOX, (BISCUIT), PLENUM, 2 PORT	COMMSCOPE	SMB-2P-xxx PLENUM	WIRELESS ACCESSS POINT LOCATIONS
CP2	CAT 6A PATCH PANEL, 48 PORTS, 2RU, BLACK, FLAT	COMMSCOPE	UNP-6A-DM-2U-48	

COPPER PATCH CORDS

SYSTEM	AREA	CATEGORY	QUANTITY	LENGTH (FT)	COLOR	MANUFACTURER	PART NUMBER	COMMENTS
NETWORK	IT ROOM	CAT6A	1 PER PATCH PORT	1	BLUE	COMMSCOPE	UC1AAA2	
	PREMISE		1 PER OUTLET PORT	7	BLUE	COMMSCOPE	UC1AAA2	PLENUM RATED WHEN ABOVE CEILING
WIRELESS ACCESS POINT (WAP)	IT ROOM	CAT6A	1 PER PATCH PORT	1	GREEN	COMMSCOPE	UC1AAA2	
	PREMISE		1 PER OUTLET PORT	10	GREEN	COMMSCOPE	UC1AA22	PLENUM RATED

GROUNDING

KEY	DESCRIPTION	MANUFACTURER	PART NUMBER	COMMENTS
GB2	SECONDARY BONDING BUSBAR (SBB) COMPLIANT WITH ANSI/TIA-607	CPI	13622-012	
GS2	SURGE PROTECTION - CAT6 / CAT6A	CIRCA MAX	604-75RJ	

HORIZONTAL CABLE MATRIX

SYSTEM	CABLE KEY	CABLE COLOR	JACK KEY	JACK COLOR	COMMENTS
NETWORK	CC2	BLUE	CJ2	BLUE	
WIRELESS ACCESS POINT (WAP)	CC2	GREEN	CJ2	GREEN	

SECURITY - INTRUSION DETECTION SYSTEM (IDS)

KEY	DESCRIPTION	MANUFACTURER	PART NUMBER	COMMENTS
MD	MOTION DETECTOR - CEILING MOUNT, 360 DEGREE	BOSCH	DS9370	
DU	DOOR CONTACT (POSITION SWITCH), CONCEALED MOUNT	GE INTERLOGIX	2767-L	
KP	SECURITY KEYPAD	HONEYWELL	SEE SPECIFICATIONS	

RACKS AND ACCESSORIES

KEY	DESCRIPTION	MANUFACTURER	PART NUMBER	COMMENTS
RR3	WALL MOUNT SWING GATE RACK, EIA. 19-INCH IN WIDTH, BLACK, 26RU	CPI	11807-725	
RL1	LADDER RUNWAY, 12-INCH WIDE	CPI	10250-712	
RA1	BUTT-SPLICE KIT	CPI	11301-701	
RA2	JUNCTION-SPLICE KIT	CPI	11302-701	
RA3	LADDER RUNWAY ELEVATION KIT	CPI	10506-706	
RA4	LADDER RUNWAY RADIUS DROP	CPI	12100-712	
RA5	LADDER RUNWAY CORNER BRACKET	CPI	11959-715	
RA6	UPPER TROUGH	CPI	13183-719	

POWER DISTRIBUTION DEVICES

KEY	DESCRIPTION	MANUFACTURER	PART NUMBER	COMMENTS
SP1	PDU, HORIZTONAL, 120V INPUT, (16) 5-20 OUTLETS	TRIPPLITE	PDUMH20ATS	

PROFESSIONAL ENGINEER LICENSED 17050 05/23/2024 STATE OF IDAHO JON E BROOKS

DESIGNED: MD/AW	SUB SHEET NO.	TITLE OF SHEET	DRAWING NO.
CADD: MD/AW	T500	TECHNOLOGY SCHEDULES	194
TECH REVIEW: JM			187126
DATE: 05/23/2024		MIIN MAINTENANCE BUILDING MINIDOKA NATIONAL HISTORIC SITE	PMIS/PKG NO. 314972
			SHEET 80 OF 82

5/21/2024 4:41:05 PM Autodesk Docs://2023-360 NPS MIIN Rehab DD-CD/5854.00 - NPS MIIN - Electrical Central.rvt

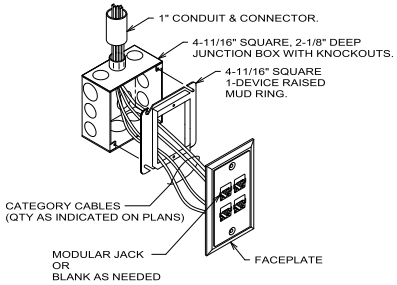

SYMBOL: ▼ ▽ CR IM KP

1 T600 TECHNOLOGY SYSTEMS OUTLETS AND CONDUIT

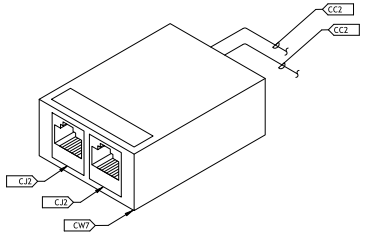

SYMBOL:

2 T600 2 PORT SURFACE MOUNT BOX

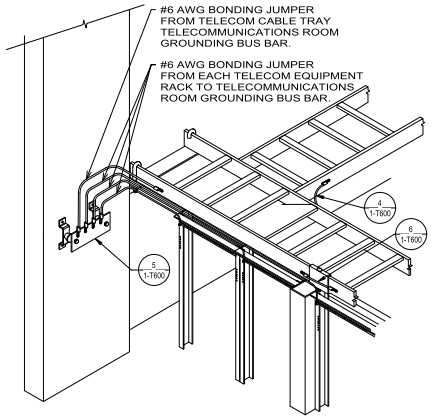

3 T600 TELECOMMUNICATIONS GROUNDING SYSTEM OVERVIEW ER/TR ONLY

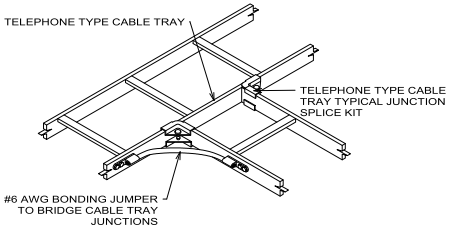

4 T600 TYPICAL CABLE TRAY JUNCTION GROUNDING DETAILS ER/TR ONLY

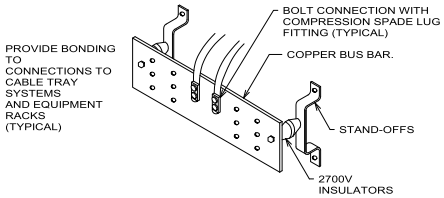

5 T600 TELECOMMUNICATIONS GROUNDING BUS BAR (TYPICAL)

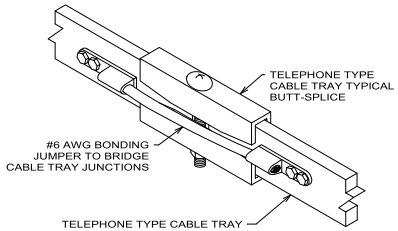

6 T600 TYPICAL CABLE TRAY GROUNDING DETAILS ER/TR ONLY

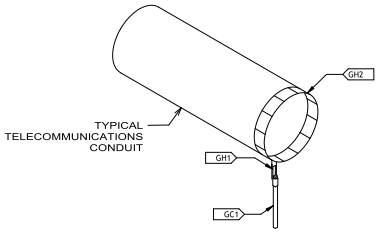

NOTE: CONTRACTOR SHALL BOND EVERY CONDUIT CARRYING COMMUNICATIONS CABLES

7 T600 BONDING CONDUIT

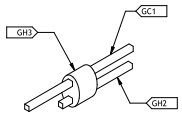

CONTRACTOR SHALL SIZE H-TAP ACCORDING TO BOTH BONDING CONDUCTOR GAUGES

8 T600 BONDING H-TAP DETAIL

PROFESSIONAL ENGINEER LICENSED 17050 05/23/2024 STATE OF IDAHO JON E BROOKS

DESIGNED: MD/AW	SUB SHEET NO.	TITLE OF SHEET	DRAWING NO.
CADD MD/AW	T600	TECHNOLOGY DETAILS	194
TECH REVIEW: JM			187126
DATE: 05/23/2024		MIIN MAINTENANCE BUILDING MINIDOKA NATIONAL HISTORIC SITE	PMIS/PKG NO. 314972
			SHEET 81 OF 82

5/21/2024 4:41:06 PM Autodesk Docs://2023-360 NPS MIIN Rehab DD-CD/5854.00 - NPS MIIN - Electrical Central.rvt

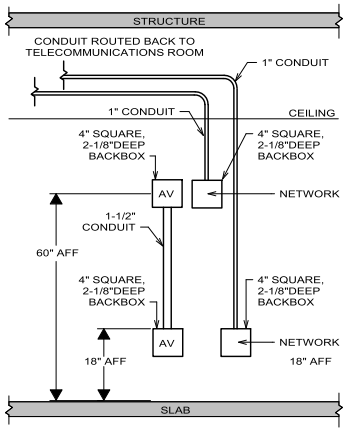

1 T601 AV ELEVATION - DISPLAY INFRASTRUCTURE

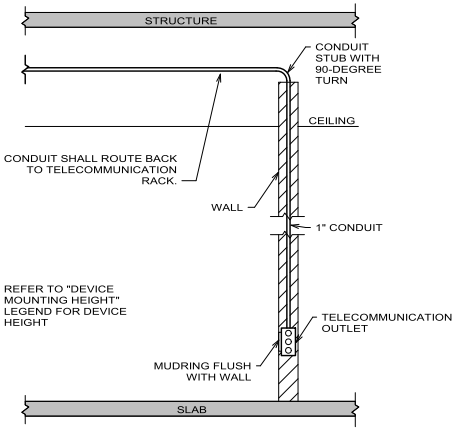

2 T601 TELECOMMUNICATIONS OUTLET ROUTING - ABOVE CEILING

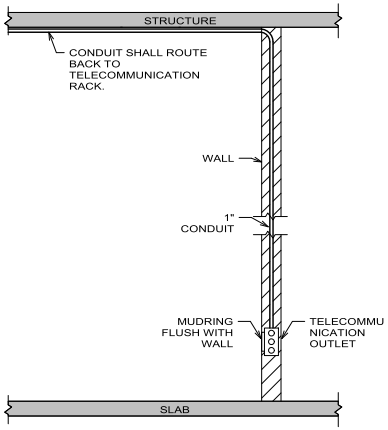

3 T601 TELECOMMUNICATIONS OUTLET ROUTING - OPEN CEILING

PROFESSIONAL ENGINEER LICENSED 17050 05/23/2024 STATE OF IDAHO JON E BROOKS

DESIGNED: MD/AW CADD: MD/AW TECH REVIEW: JM DATE: 05/23/2024	SUB SHEET NO. T601	TITLE OF SHEET TECHNOLOGY DETAILS MIIN MAINTENANCE BUILDING MINIDOKA NATIONAL HISTORIC SITE	DRAWING NO. 194 187126 PMIS/PKG NO. 314972 SHEET 82 OF 82

5/21/2024 4:41:06 PM Autodesk Docs://2023-360 NPS MIIN Rehab DD-CD/5854.00 - NPS MIIN - Electrical Central.rvt