FORT STORY BLDG 808/810/845/1083
REPLACE HVAC UNIT

JOINT EXPEDITIONARY BASE LITTLE CREEK - FORT STORY
VIRGINIA BEACH, VIRGINIA

NAVFAC MID-ATLANTIC, FORT STORY SITE
FEAD LITTLE CREEK

LOCATION MAP

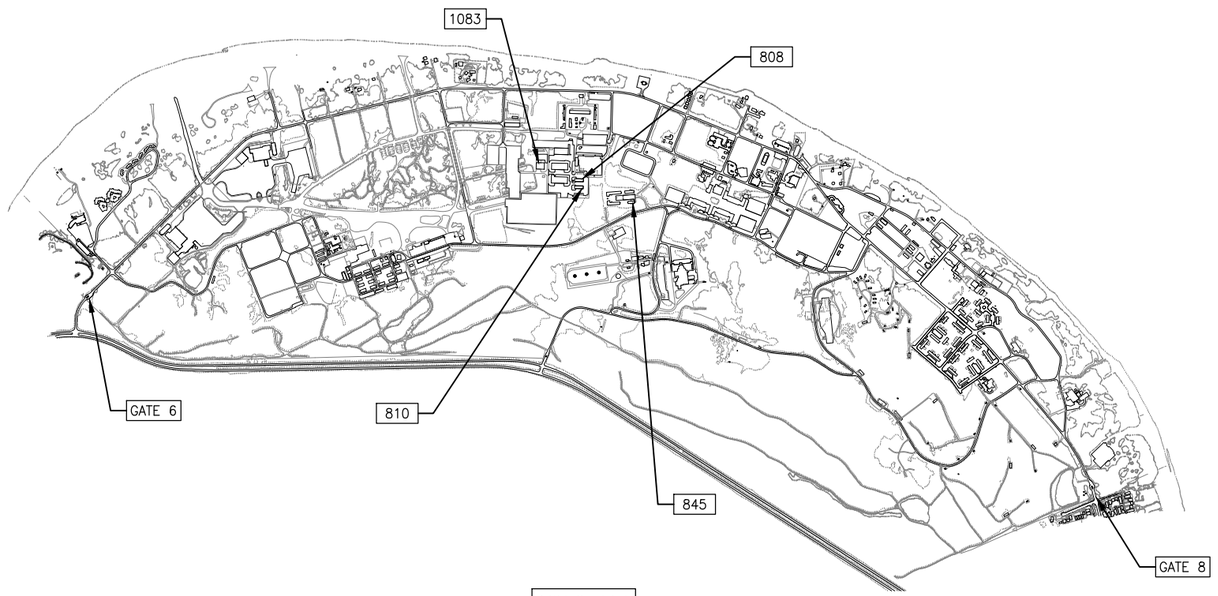

LIST OF SHEETS

SHEET NO.		NAVFAC DWG. NO.	SHEET TITLE
1	G-000	12943370	OVERALL COVER SHEET
			BUILDING 808 REPLACE HVAC PACKAGE UNIT
2	G-001	12943371	COVER SHEET
3	M-001	12943372	MECHANICAL GENERAL DATA SHEET
4	MD-101	12943373	OFFICE RTU – DEMOLITION
5	M-101	12943374	OFFICE RTU – NEW WORK
6	M-501	12943375	MECHANICAL DETAILS AND CONTROLS
7	M-601	12943376	MECHANICAL SCHEDULES
8	E-001	12943377	LEGEND, NOTES AND DETAILS
9	E-101	12943378	DEMOLITION AND NEW WORK PARTIAL PLANS
10	E-501	12943378	DETAILS, DIAGRAMS AND SCHEDULE
			BUILDING 810 REPLACE HVAC PACKAGE UNIT
11	G-001	12925046	COVER SHEET
12	M-001	12925047	MECHANICAL GENERAL DATA SHEET
13	MD101	12925048	OFFICE RTU – DEMOLITION
14	M-101	12925049	OFFICE RTU – NEW WORK
15	M-501	12925050	MECHANICAL DETAILS AND CONTROLS
16	M-601	12925051	MECHANICAL SCHEDULES
17	E-001	12925052	LEGEND, NOTES AND DETAILS
18	E-101	12925053	DEMOLITION AND NEW WORK PARTIAL PLANS
19	E-501	12925054	DETAILS, DIAGRAMS AND SCHEDULE
			BUILDING 845 REPLACE HVAC UNIT
20	G-001	12944637	COVER SHEET
21	M-001	12944638	LEGEND, ABBREVIATIONS, AND GENERAL NOTES
22	M-101	12944639	DEMOLITION AND NEW WORK PARTIAL PLANS
23	M-501	12944640	MECHANICAL DETAILS AND SCHEDULES
			BUILDING 1083 REPLACE HVAC UNIT FOR MALE HEAD
24	G-001	12943360	COVER SHEET
25	M-001	12943361	LEGEND, ABBREVIATIONS, AND GENERAL NOTES
26	M-101	12943362	DEMOLITION AND NEW WORK PARTIAL PLANS
27	M-501	12943363	MECHANICAL DETAILS
28	M-601	12943364	MECHANICAL SCHEDULES AND CONTROL

MARK	DESCRIPTION	DATE

NAVFAC

SEAL

A/E INFO

APPROVED

FOR COMMANDER NAVFAC

ACTIVITY

SATISFACTORY TO DATE

DES	SL	DRW	SL	CHK	CML

PM/DM J HOFFLER/SHUN LI

BRANCH MANAGER F.C. FRANKLIN

CHIEF ENG/ARCH B.P. ROWE

FIRE PROTECTION

DEPARTMENT OF THE NAVY
NAVAL FACILITIES ENGINEERING SYSTEMS COMMAND
FEAD LITTLE CREEK

NAVAL FACILITIES ENGINEERING SYSTEMS COMMAND
VIRGINIA BEACH, VA.

JBLCFS LITTLE CREEK – FORT STORY
VIRGINIA BEACH, VA.

BLDG 808/810/845/1083 REPLACE HVAC UNIT

OVERALL COVER SHEET

SCALE:	AS NOTED
EPROJECT NO.:	1570672
CONSTR. CONTR. NO.	N/A
NAVFAC DRAWING NO.	12943370
SHEET	1 OF 28

G-000

DRAWFORM REVISION: 14 SEP 2023

FILE NAME: K:\VA\FortStory\Buildings\808\2026_1781844_DBB_Replace HVAC Package Unit Bldg 808\8_Design\Drawings\Bldg 808-1781844-G-000.dwg LAYOUT NAME: G-001 COVER SHEET PLOTTED: Tuesday, March 24, 2026 - 1:32pm USER: shunli

FORT STORY BLDG 808 REPLACE HVAC PACKAGE UNIT

JOINT EXPEDITIONARY BASE LITTLE CREEK - FORT STORY
VIRGINIA BEACH, VIRGINIA

NAVFAC MID-ATLANTIC, FORT STORY SITE

FEAD LITTLE CREEK

ENLARGED LOCATION MAP

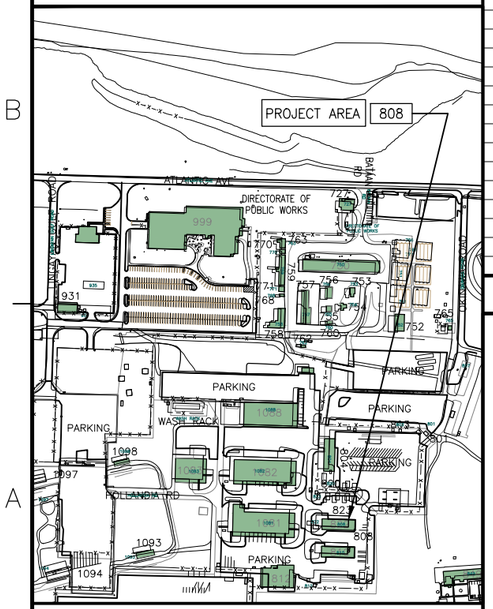

LIST OF SHEETS

SHEET NO.		NAVFAC DWG. NO.	SHEET TITLE
1	G-001	12943370	COVER SHEET
2	M-001	12943371	MECHANICAL GENERAL DATA SHEET
3	MD-101	12943372	OFFICE RTU – DEMOLITION
4	M-101	12943373	OFFICE RTU – NEW WORK
5	M-501	12943374	MECHANICAL DETAILS AND CONTROLS
6	M-601	12943375	MECHANICAL SCHEDULES
7	E-001	12943376	LEGEND, NOTES AND DETAILS
8	E-101	12943377	DEMOLITION AND NEW WORK PARTIAL PLANS
9	E-501	12943378	DETAILS, DIAGRAMS AND SCHEDULE

LOCATION MAP

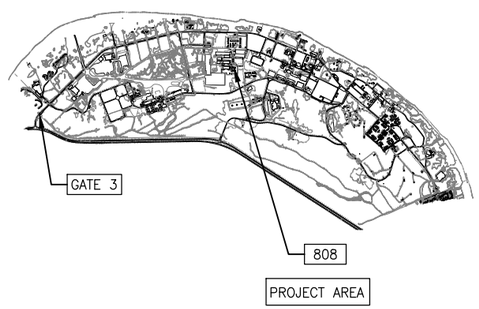

SYMBOLS LEGEND

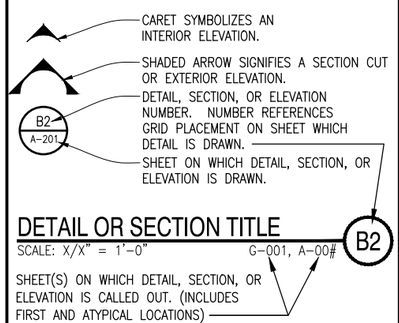

GENERAL NOTES

1. CONTRACTOR SHALL BE RESPONSIBLE FOR SECURING WORK AREAS AND THE BUILDING TO WEATHER TIGHT CONDITION DURING CONSTRUCTION.
2. CONTRACTOR SHALL SECURE AND CORDON OFF ALL WORK AREAS. CONTRACTOR SHALL PROVIDE ALL NECESSARY MATERIALS AND LABOR TO INSURE THE PROTECTION OF PEDESTRIANS AND PERSONNEL.
3. CONSTRUCTION WORK AREAS AND PATHWAYS SHALL BE CLEANED. CONTRACTOR SHALL COVER AND PROTECT EXISTING FURNITURE AND EQUIPMENT IN, AROUND AND BELOW THE WORK AREAS FROM DAMAGE.
4. WHERE EXISTING CONSTRUCTION TO REMAIN IS DAMAGED DURING CONSTRUCTION, CONTRACTOR SHALL MAKE REPAIRS USING LIKE MATERIALS TO MATCH EXISTING IN ALL WAYS.
5. ALL INDICATED DIMENSIONS AND EXISTING CONDITIONS ARE CONSIDERED APPROXIMATE AND SHALL BE FIELD VERIFIED PRIOR TO ORDERING MATERIALS, FABRICATIONS OR BEGINNING CONSTRUCTION.
6. UNLESS NOTED OR INDICATED OTHERWISE ALL WALL DIMENSIONS ARE FROM FACE OF GYPSUM BOARD OR BACKER BOARD NOT FROM APPLIED FINISH MATERIAL. CEILING HEIGHTS INDICATED ARE TO FACE OF FINISH MATERIAL.
7. CONTRACTOR SHALL INVESTIGATE ALL EXISTING ARCHITECTURAL, STRUCTURAL, MECHANICAL AND ELECTRICAL FIELD CONDITIONS PRIOR TO COMMENCING ANY DEMOLITION AND/OR NEW CONSTRUCTION. CONTRACTOR SHALL NOTIFY CONTRACTING OFFICER PRIOR TO INTERRUPTING UTILITIES.
8. CONTRACTOR, ALL OF HIS STAFF, WORKERS, SUBCONTRACTORS, SUPPLIERS, ETC. ARE SUBJECT TO THE SAME CONDITIONS AS THOSE GOVERNING THE CONTRACTOR.
9. CONTRACTORS STORAGE AND PARKING AREA SHALL BE COORDINATED WITH THE CONTRACTING OFFICER PRIOR TO THE PRE-CONSTRUCTION MEETING. THE ALLOWABLE AREA SIZE SHALL BE ESTABLISHED BY THE CONTRACTING OFFICER.
10. ALL ITEMS AND WORK NOT INDICATED TO BE EXISTING SHALL BE FURNISHED AND INSTALLED AS PART OF THE REQUIREMENTS OF THIS CONTRACT.
11. CONTRACTOR SHALL FIELD VERIFY AND RECORD THE LOCATION(S) OF ALL EXISTING CEILING MOUNTED ITEMS: LIGHT FIXTURES, SPEAKERS, DIFFUSERS, RETURNS, EXHAUST FANS, ALARM DEVICES, ETC. NOTE: THESE ITEMS ARE NOT NECESSARILY INDICATED ON THE DRAWINGS.
12. IT IS THE CONTRACTORS RESPONSIBILITY TO RECORD EXISTING CONDITIONS PRIOR TO STARTING WORK.
13. DOMINION ENERGY (DE) OWNS AND OPERATES THE MEDIUM VOLTAGE ELECTRICAL DISTRIBUTION SYSTEM AND ASSOCIATED SECONDARY SERVICE CONDUCTORS TO A DEMARK POINT FOR BUILDINGS AT FORT STORY. FOR THIS PROJECT, COST ASSOCIATED WITH DOMINION ENERGY TO DE- OR RE-ENERGIZE THE ELECTRICAL SERVICE SHALL BE PAID DIRECTLY TO DE BY THE CONTRACTOR.

DATE | MARK | DESCRIPTION

NAVFAC

SEAL

A/E INFO

APPROVED

FOR COMMANDER NAVFAC

ACTIVITY

SATISFACTORY TO DATE

DES SL | DRW SL | CHK CML

PM/DM J HOFFLER/SHUN LI

BRANCH MANAGER F.C. FRANKLIN

CHIEF ENG/ARCH B.P. ROWE

FIRE PROTECTION

DEPARTMENT OF THE NAVY
NAVAL FACILITIES ENGINEERING SYSTEMS COMMAND
FEAD LITTLE CREEK | JBLCFS LITTLE CREEK – FORT STORY | VIRGINIA BEACH, VA.

NAVAL FACILITIES ENGINEERING SYSTEMS COMMAND
VIRGINIA BEACH, VA.

BLDG 808 REPLACE HVAC PACKAGE UNIT

COVER SHEET

SCALE: AS NOTED

EPROJECT NO.: 1781844

CONSTR. CONTR. NO. N/A

NAVFAC DRAWING NO. 12943371

SHEET 2 OF 28

G-001

DRAWFORM REVISION: 14 SEP 2023

FILE NAME: C:\Users\shun.li\AppData\Local\Temp\AcPublish_24172\Bldg 808--1781844--G-001.dwg LAYOUT NAME: G-001 COVER SHEET PLOTTED: Tuesday, March 24, 2026 - 1:32pm USER: shun.li

MECHANICAL LEGEND

T	TEMPERATURE SENSOR
H	HUMIDITY SENSOR
OT	OVERRIDE TIMER
EM	EMERGENCY SHUTDOWN SWITCH
A 70	AIR TERMINAL TAG WITH AIR FLOW (CFM)
12x10 OR 12/10	RECTANGULAR DUCT DIMENSIONS (INCHES)
12"ø	ROUND DUCT DIMENSION
	FLEXIBLE ROUND DUCT
	DOWNWARD DIRECTION OF SLOPED PIPING
	SUPPLY DUCT, SUPPLY DUCT DOWN/UP
	RETURN DUCT, RETURN DUCT DOWN/UP
	GATE VALVE
	GLOBE VALVE
	BUTTERFLY VALVE
	MANUAL FLOW CONTROL BALANCING VALVE
	CHECK VALVE
	AUTOMATIC FLOW BALANCING VALVE
	PRESSURE REDUCING VALVE
	SQUARE HEAD BALANCING COCK
	DRAIN VALVE WITH HOSE CONNECTION
	2-WAY CONTROL VALVE
	3-WAY CONTROL VALVE
	RELIEF VALVE
	BACKFLOW PREVENTER
	MANUAL AIR VENT
	VACUUM BREAKER
T	STEAM TRAP
	WYE STRAINER
	VALVE IN VERT. PIPING
	SPRINKLER HEAD
	STRAINER W/ BLOWDOWN VALVE
C.O.	CLEAN OUT
	ECCENTRIC REDUCER
	PIPE REDUCER
	UNION
	THERMOMETER IN PIPE WELL
	PRESSURE GAUGE W/ SHUTOFF COCK
	PIPE CAP
	FLANGE
	FLEXIBLE PIPE CONNECTOR
	THIN LINE WEIGHT INDICATES EXISTING ITEM TO REMAIN
	HEAVY LINE WEIGHT INDICATES NEW WORK TO BE PROVIDED
	HEAVY DASHED LINE WEIGHT INDICATES EXISTING ITEM TO REMOVE, REFER TO DEMOLITION NOTES.
1	DEMOLITION WORK NOTE
1	NEW WORK NOTE

AD — ACCESS DOOR

VOLUME DAMPER

MECHANICAL PIPING LEGEND

--- NAME ---	PIPING TO BE REMOVED
—CHR—	CHILLED WATER RETURN PIPING
—CHS—	CHILLED WATER SUPPLY PIPING
—D—	CONDENSATE DRAIN PIPING
—DCW—	DOMESTIC COLD WATER PIPING
—HG—	HOT GAS BYPASS PIPING
—HWR—	HOT WATER RETURN PIPING
—HWS—	HOT WATER SUPPLY PIPING
— RL —	REFRIGERANT LIQUID PIPING
— RS —	REFRIGERANT SUCTION PIPING
—LPS—	LOW PRESSURE STEAM
—LPC—	LOW PRESSURE CONDENSATE

MECHANICAL ABBREVIATIONS

AD	ACCESS DOOR
AFF	ABOVE FINISHED FLOOR
AP	ACCESS PANEL
APD	AIR PRESSURE DROP
AHU	AIR HANDLING UNIT
BD	BALANCING DAMPER
BR	BASEBOARD RADIATOR
BTUH	BRITISH THERMAL UNIT PER HOUR
C	COMMON
Cv	LOSS COEFFICIENT
CU	CONDENSING UNIT
CW	CHILLED WATER
CFM	CUBIC FEET PER MINUTE
CLG	CEILING
CND	CONDENSER
COP	COEFFICENT OF PERFORMANCE
CRAHU	COMPUTER ROOM AIR HANDLING UNIT
DB	DRY BULB
DDC	DIRECT DIGITAL CONTROL
DEG	DEGREE
DX	DIRECT EXPANSION
EAT	ENTERING AIR TEMPRATURE
ECM	ELECTRONIC CONTROL MODULE
EER	ENERGY EFFICIENCY RATIO
EF	EXHAUST FAN
EFF	EFFICIENCY
ESP	EXTERNAL STATIC PRESSURE
EWT	ENTERING WATER TEMPERATURE
EXST	EXISTING
F	FAHRENHEIT
FCU	FAN COIL UNIT
FD	FIRE DAMPER
FT	FEET
FTWG	FEET OF WATER GAUGE
GPM	GALLONS PER MINUTE
HGT	HEIGHT
HP	HEAT PUMP, HORSEPOWER
HR	HOUR
HW	HOT WATER
HX	HEAT EXCHANGER
IAW	INCHES OF WATER GAUGE
IWG	IN ACCORDANCE WITH
kW	KILOWATT
LAT	LEAVING AIR TEMPERATURE
LBS	POUNDS
LV	LOUVER
LWT	LEAVING WATER TEMPERATURE
MAU	MAKEUP AIR UNIT
MAX	MAXIMUM
MIN	MINIMUM
NC	NOISE CRITERIA, NORMALLY CLOSED
NO	NUMBER, NORMALLY OPEN
OA	OUTSIDE AIR
OAU	OUTSIDE AIR UNIT
OU	OUTDOOR UNIT
PH	PHASE
PRS	PRESSURE REDUCING STATION
PSI	POUNDS PER SQUARE INCH
RA	RETURN AIR
RH	RELATIVE HUMIDITY
RL	REFRIGERANT LIQUID
RS	REFRIGERANT SUCTION
RTU	ROOFTOP UNIT
SA	SUPPLY AIR
SEER	SEASONAL ENERGY EFFICIENCY RATIO
SIM	SIMILAR
SP	STATIC PRESSURE
SQ	SQUARE
TYP	TYPICAL
UH	UNIT HEATER
UOI	UNLESS OTHERWISE INDICATED
V	VOLTS
VFD	VARIABLE FREQUENCY DRIVE
W	WIDTH
WB	WET BULB
WPD	WATER PRESSURE DROP
°	DEGREES
ø	DIAMETER

MECHANICAL SYMBOLS

	POINT OF DISCONNECTION
	POINT OF CONNECTION

GENERAL MECHANICAL NOTES

1. THESE GENERAL MECHANICAL NOTES APPLY TO ALL MECHANICAL DRAWINGS IN THIS SET. SHEET SPECIFIC NOTES ARE INDICATED ON EACH SHEET UNDER GENERAL SHEET NOTES.
2. PATCH ALL HOLES FROM REMOVAL OF PIPING, DUCTWORK, OR EQUIPMENT TO MATCH ADJACENT CONSTRUCTION.
3. PROVIDE ALL MATERIALS AND EQUIPMENT AND PERFORM ALL LABOR REQUIRED TO INSTALL COMPLETE AND OPERABLE MECHANICAL SYSTEMS AS INDICATED ON THE DRAWINGS, AS SPECIFIED AND AS REQUIRED BY CODE.
4. INSTALL ALL MECHANICAL EQUIPMENT AND APPURTENANCES IN ACCORDANCE WITH MANUFACTURER'S RECOMMENDATIONS, THIS CONTRACT'S DOCUMENTS, AND APPLICABLE CODES AND REGULATIONS.
5. PROVIDE VIBRATION ISOLATORS FOR ALL MECHANICAL EQUIPMENT TO PREVENT TRANSMISSION OF VIBRATION TO BUILDING STRUCTURE.
6. ALL OPENINGS IN FIRE WALLS DUE TO DUCTWORK, PIPING, CONDUIT, ETC., SHALL BE FIRE STOPPED.
7. EXISTING DUCT AND PIPING SIZES INDICATED ARE APPROXIMATE. FIELD VERIFY ALL DIMENSIONS.
8. PROVIDE PIPE SLEEVES FOR ALL PIPING PENETRATIONS THRU WALLS AND FLOORS. EACH PIPE SHALL BE SEPARATELY SLEEVED. PROVIDE CONTINUOUS SEALANT JOINT AROUND PIPE SLEEVE, BOTH SIDES OF WALL, WATERTIGHT.
9. PROVIDE P-TRAPS IN CONDENSATE DRAIN PIPING AT EACH AHU UNLESS THE AHU IS EQUIPPED WITH AN INTERNAL TRAP.
10. AFTER THE PIPING IS INSULATED, PROVIDE SETON BRAND OR EQUAL FACTORY-FABRICATED PIPE LABELS WITH DIRECTION OF FLOW. PROVIDE AT 10 FOOT INTERVALS ON PIPING MAINS AND 5 FOOT INTERVALS ON THE BRANCH RUNOUTS FROM MAINS. PROVIDE ON THE FOLLOWING PIPING SYSTEM:

    HEATING HOT WATER
    CHILLED WATER
    CONDENSATE DRAIN

MARK	DESCRIPTION	DATE

NAVFAC

SEAL

A/E INFO

APPROVED

FOR COMMANDER NAVFAC

ACTIVITY

SATISFACTORY TO DATE

DES	SL	DRW	SL	CHK	CML
PM/DM	J HOFFLER/SHUN LI				
BRANCH MANAGER	F.C. FRANKLIN				
CHIEF ENG/ARCH	B.P. ROWE				
FIRE PROTECTION					

DEPARTMENT OF THE NAVY
NAVAL FACILITIES ENGINEERING SYSTEMS COMMAND
FEAD LITTLE CREEK

NAVAL FACILITIES ENGINEERING SYSTEMS COMMAND
VIRGINIA BEACH, VA.

JBLCFS LITTLE CREEK – FORT STORY
VIRGINIA BEACH, VA.

BLDG 808 REPLACE HVAC PACKAGE UNIT

MECHANICAL GENERAL DATA SHEET

SCALE:	AS NOTED
EPROJECT NO.:	1781844
CONSTR. CONTR. NO.	N/A
NAVFAC DRAWING NO.	12943372
SHEET	3 OF 28

M-001

DRAWFORM REVISION: 14 SEP 2023

FILE NAME: K:\NAVFortStory\Buildings\808\2026_1781844_DBB_Replace HVAC Package Unit Bldg 808\8_Design\Drawings\Bldg 808-1781844-M-001.dwg LAYOUT NAME: M-001 PLOTTED: Tuesday, March 24, 2026 - 1:32pm USER: shunli

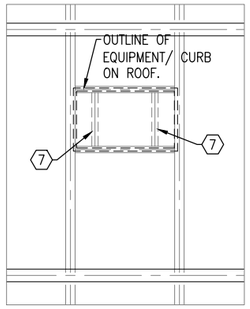

FRAMING - DEMOLITION
SCALE: 1/4"=1'-0"
C4

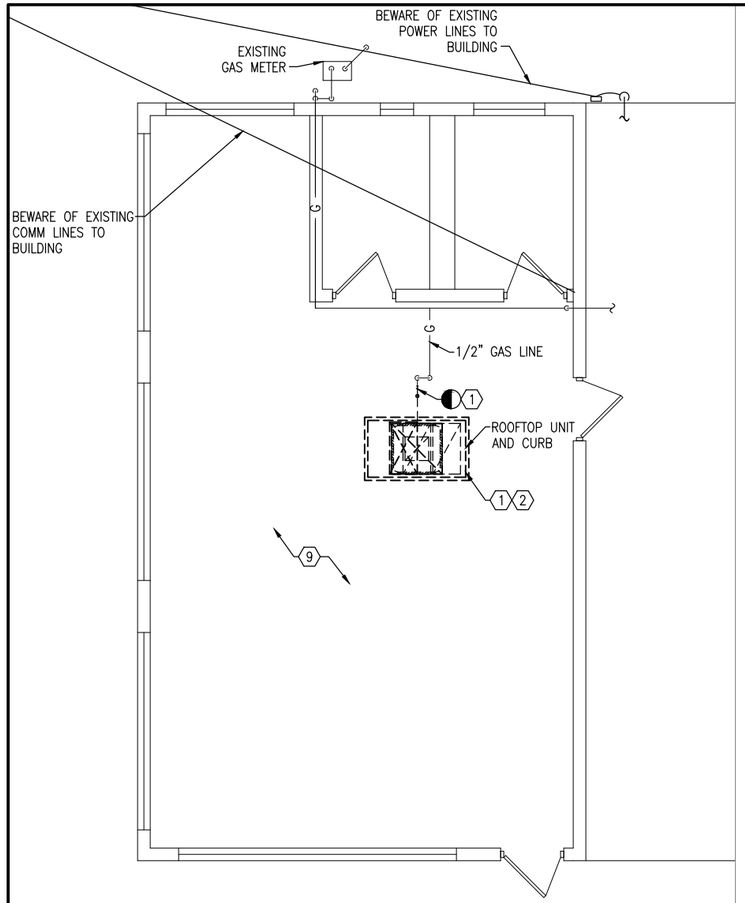

OFFICE RTU - ROOF - DEMOLITION
SCALE: 1/4"=1'-0"
PLAN NORTH
MD-101 A1

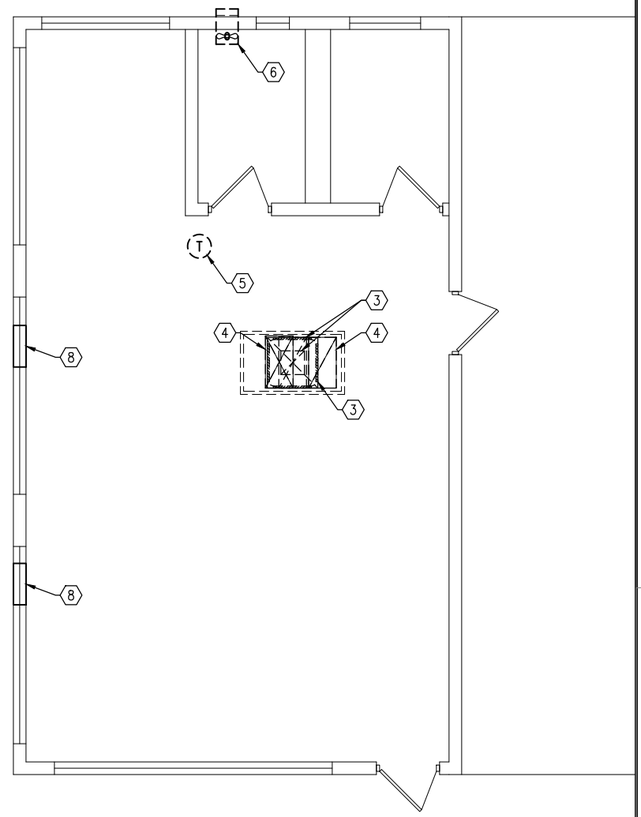

OFFICE RTU - DEMOLITION
SCALE: 1/4"=1'-0"
PLAN NORTH
MD-101 A3

DEMOLITION KEYNOTES

1. DEMOLISH GAS PACK ON ROOF COMPLETE. SHUT OFF GAS AND CAP. SEE NEW WORK FOR DIRECTION TO MOVE THE LOCATION OF THE GAS SHUT OFF VALVE.
2. REUSE CURB IF IT FITS THE NEW UNIT OR ELSE DEMOLISH THE CURB COMPLETELY.
3. DEMOLISH THE COMBINATION DIFFUSER AND RETURN GRILLE.
4. DEMOLISH THE DUCTWORK TO THE ROOF.
5. DEMOLISH THE THERMOSTAT.
6. DEMOLISH THE EXHAUST FAN.
7. DEMOLISH THE STEEL FRAMING AROUND THE DUCT PENETRATION AND GRILLES. SEE NEW WORK SHEET M-101 FOR NEW CHANNEL.
8. EXISTING WINDOW AC UNIT TO REMAIN.
9. EXISTING TWO-PLY MODIFIED BITUMEN MEMBRANE INCLUDING INSULATION.

KEYPLAN
NO SCALE
PLAN NORTH

GRAPHIC SCALE
1/4"=1'-0" 0' 2' 4' 8'

MARK	DESCRIPTION	DATE

NAVFAC

SEAL

A/E INFO

APPROVED
FOR COMMANDER NAVFAC

ACTIVITY

SATISFACTORY TO DATE

DES	SL	DRW SL	CHK CML
PM/DM	J HOFFLER/SHUN LI		
BRANCH MANAGER	F.C. FRANKLIN		
CHIEF ENG/ARCH	B.P. ROWE		
FIRE PROTECTION			

DEPARTMENT OF THE NAVY
NAVAL FACILITIES ENGINEERING SYSTEMS COMMAND
VIRGINIA BEACH, VA.
FSO LITTLE CREEK

NAVAL FACILITIES ENGINEERING SYSTEMS COMMAND
VIRGINIA BEACH, VA.
JBLCFS LITTLE CREEK - FORT STORY

BLDG 808 REPLACE HVAC PACKAGE UNIT

OFFICE RTU - DEMOLITION

SCALE:	AS NOTED
EPROJECT NO.:	1781844
CONSTR. CONTR. NO.	N/A
NAVFAC DRAWING NO.	12943373
SHEET	4 OF 28

MD-101

DRAWFORM REVISION: 14 SEP 2023

FILE NAME: K:\VA\FortStory\Buildings\808\2026_1781844_DBB_Replace HVAC Package Unit Bldg 808\B_Design\Drawings\Bldg 808-1781844-MD-101.dwg LAYOUT NAME: MD-101 PLOTTED: Tuesday, March 24, 2026 - 1:32pm USER: shun.li

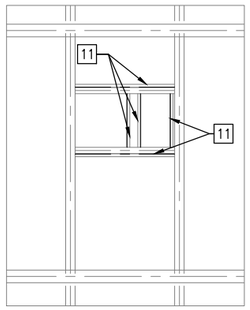

FRAMING - NEW WORK
SCALE: 1/4"=1'-0"
C4

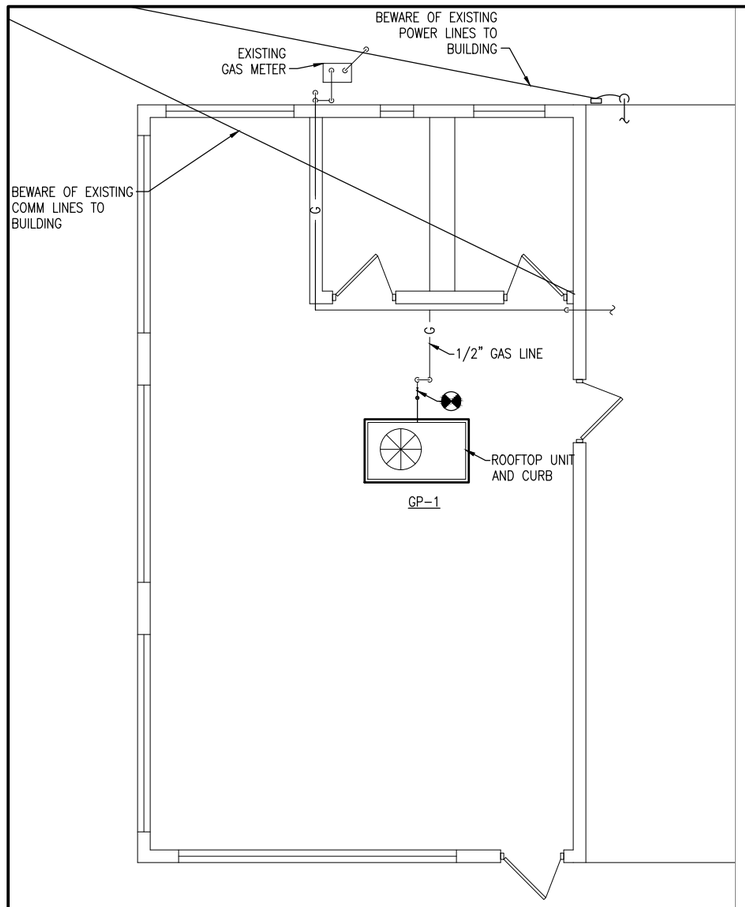

OFFICE RTU - ROOF - NEW WORK
SCALE: 1/4"=1'-0"
PLAN NORTH
MD-101 A1

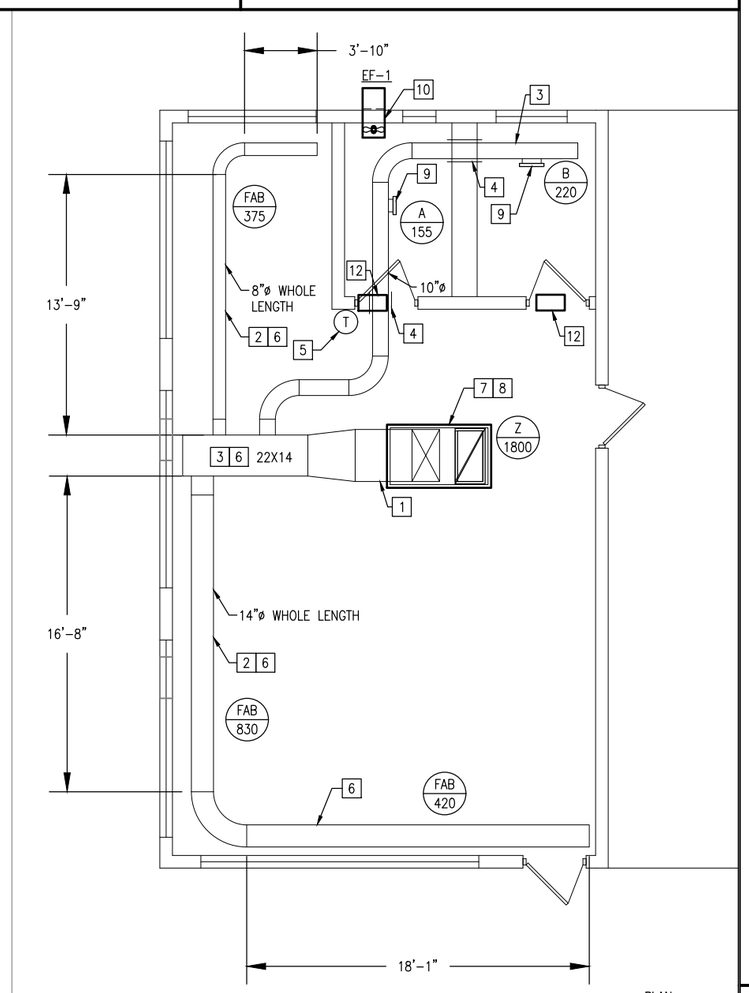

OFFICE RTU - NEW WORK
SCALE: 1/4"=1'-0"
PLAN NORTH
MD-101 A3

NEW WORK KEYNOTES

1. MATCH THE MANUFACTURER'S DISCHARGE DIMENSIONS IN A SWEEP ELBOW FROM THE ROOF. SEE ROOF EQUIPMENT DETAIL ON SHEET M-501.
2. PROVIDE FABRIC DUCT. LAYOUT DIMENSIONS AND PERCENT OF DIFFUSERS ARE A GUIDE. THESE ARE FROM A PARTICULAR VENDOR. 16% OF AIRFLOW IS DIFFUSERS BUILT INTO THE FABRIC AND THE REMAINDER IS HOLES IN THE DUCT. PROVIDE CFM STATED FOR EACH LEG. PROVIDE INNER FRAME OR RETAINING RINGS SO THAT IT ALWAYS LOOKS FULL. PROVIDE GREEN COLOR TO MATCH THE CEILING. DO NOT USE THE COLOR RED.
3. PROVIDE GALVANIZED STEEL DUCTWORK.
4. PROVIDE SLEEVE IN WALL.
5. PROVIDE THERMOSTAT AT IDENTICAL HEIGHT OF EXISTING THERMOSTAT.
6. COORDINATE WITH ELECTRICIAN TO LOWER LIGHTS OR MOVE LIGHTS OVER. SEE ELECTRICAL SHEETS.
7. PROVIDE A GAS PACK ON THE ROOF COMPLETE. REFER TO PACKAGED GAS PACK SCHEDULE ON SHEET M-601. SEE ROOF EQUIPMENT DETAIL SHEET M-501. SHUT OFF GAS TO THE BUILDING AND PROVIDE A NEW GAS SHUT OFF VALVE BEFORE THE DRIP LEG. SEE GAS PIPING DETAIL ON SHEET M-501. PROVIDE A DRAIN WITH A TRAP. SEE AHU-CONDENSATE DRAIN DETAIL ON SHEET M-501.
8. ATTACH GAS PACK TO CURB. SEE ROOF EQUIPMENT SUPPORT DETAIL SHEET M-501. PROVIDE A PRE-MANUFACTURED ROOF CURB. PROVIDE PARTIAL ROOF PATCH CONSISTING OF TWO-PLY MODIFIED BITUMEN MEMBRANE INCLUDING INSULATION, FLASHING AND COVER BOARD AROUND THE NEW CURB AND METAL DECK IN-FILL AREA TO MATCH EXISTING ROOF THICKNESS. DO NOT VOID WARRANTY.
9. PROVIDE DIFFUSERS AND GRILLES. REFER TO DETAILS ON SHEET M-501, REGISTER DUCT CONNECTION FOR SUPPLY REGISTER AND RETURN GRILLE CONNECTION FOR RETURN GRILLE.
10. PROVIDE EXHAUST FAN. PROVIDE MOTOR SIDE WIRE GUARD OR BOX ON THE INLET SIDE AND ON THE DISCHARGE SIDE, PROVIDE A WEATHER HOOD. SEE PROPELLER FAN DETAIL ON SHEET M-501.
11. PROVIDE 6" C CHANNELS. FRAME OUT THE SUPPLY AND RETURN OPENINGS AND THE EDGE OF THE CURB. PROVIDE THE CHANNELS AGAINST THE VALLEYS OF THE ROOF DECK. SPECIFICALLY, THERE SHOULD NOT BE A GAP BETWEEN THE SUPPORT CHANNEL AND THE ROOF DECK.
12. PROVIDE 18"X6" AIR TRANSFER GRILLE ABOVE THE DOOR.

KEYPLAN
NO SCALE

PLAN NORTH

GRAPHIC SCALE
1/4"=1'-0" 0' 2' 4' 8'

MARK	DESCRIPTION	DATE

NAVFAC

A/E INFO

APPROVED
FOR COMMANDER NAVFAC

ACTIVITY

SATISFACTORY TO DATE

DES	SL	DRW	SL	CHK	CML
PM/DM	J HOFFLER/SHUN L				
BRANCH MANAGER	F.C. FRANKLIN				
CHIEF ENG/ARCH	B.P. ROWE				
FIRE PROTECTION					

DEPARTMENT OF THE NAVY
NAVAL FACILITIES ENGINEERING SYSTEMS COMMAND
VIRGINIA BEACH, VA.
FSIO LITTLE CREEK
JBLCFS LITTLE CREEK – FORT STORY
VIRGINIA BEACH, VA.

BLDG 808 REPLACE HVAC PACKAGE UNIT

OFFICE RTU – NEW WORK

SCALE:	AS NOTED
EPROJECT NO.:	1781844
CONSTR. CONTR. NO.	N/A
NAVFAC DRAWING NO.	12943374
SHEET	5 OF 28

M-101

DRAWFORM REVISION: 14 SEP 2023

FILE NAME: K:\VA\FortStory\Buildings\808\2026_1781844_DBB_Replace HVAC Package Unit Bldg 808\B_Design\Drawings\Bldg 808-1781844-M-101.dwg LAYOUT NAME: M-101 PLOTTED: Tuesday, March 24, 2026 - 1:32pm USER: shunt.fl

CONTROL SEQUENCE GP-1

THE UNIT SHALL BE CONTROLLED BY A STAND ALONE, PROGRAMMABLE 7-DAY THERMOSTAT AND AN ATFP SWITCH. THE THERMOSTAT SHALL BE PROGRAMMED OR SCHEDULED FOR OPERATION ON A 5 DAY WORK WEEK, TIME OF DAY BASIS AND PLACED INTO OCCUPIED AND UNOCCUPIED MODES. OCCUPIED TIMES ARE MON – FRI (ADJUSTABLE), 0730 TILL 1600 (ADJUSTABLE). UNOCCUPIED TIMES ARE ALL OTHER TIMES (ADJUSTABLE).
ATFP: WHEN ATFP SWITCH IS PRESSED, THE UNIT SHALL SHUT DOWN AND DAMPERS CLOSE. ATFP SHALL BE RESET MANUALLY BY SWITCH.

UNOCCUPIED MODE:

THE SUPPLY FAN SHALL CYCLE WITH THE AIR CONDITIONER OR THE GAS HEATER TO MAINTAIN UNOCCUPIED SETPOINT OF 80°F +/– 1.5 COOLING (ADJUSTABLE) AND 55°F +/– 1.5 HEATING (ADJUSTABLE). THE UNIT SHALL RUN A MINIMUM OF 5 MINUTES (ADJUSTABLE) AND SHUT OFF WHEN THE TEMPERATURE IS REACHED. OUTSIDE AIR DAMPERS AND EXHAUST DAMPERS SHALL BE CLOSED.

OCCUPIED MODE:

THE SUPPLY FAN SHALL CYCLE WITH THE AIR CONDITIONER OR THE GAS HEATER. THE THERMOSTAT SHALL HAVE A FAN ON/AUTOMATIC SWITCH TO RUN THE FAN AUTOMATICALLY OR CONTINUOUSLY. UPON A RISE IN SPACE TEMPERATURE ABOVE THE COOLING SETPOINT 75 +/– 1.5 DEG F (ADJUSTABLE), THE UNIT CONTROLLER SHALL ENERGIZE AND MODULATE THE REFRIGERATION CONTROLS TO MAINTAIN THE COOLING SETPOINT. UPON A DROP IN THE SPACE TEMPERATURE THE REVERSE SHALL OCCUR. UPON A CONTINUED DROP IN SPACE TEMPERATURE BELOW THE HEATING SETPOINT 70 +/– 2.0 DEG F (ADJUSTABLE), THE GAS FURNACE CONTROLS SHALL FIRE, MODULATE AND MAINTAIN SETPOINT. UPON A RISE IN TEMPERATURE, THE REVERSE SHALL OCCUR.

THE OA DAMPER SHALL BE OPEN TO THE MINIMUM POSITION REQUIRED FOR OUTSIDE AIR VENTILATION. THIS POSITION SHALL BE SET IN CONJUNCTION WITH THE BALANCE CONTRACTOR.

THE OUTSIDE AND EXHAUST AIR DAMPERS SHALL CLOSE AND THE RETURN AIR DAMPER SHALL OPEN WHEN THE UNIT IS DE-ENERGIZED.

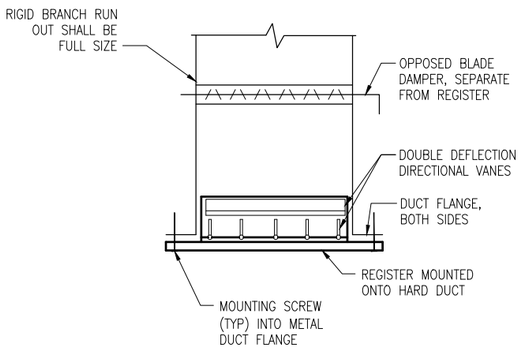

REGISTER DUCT CONNECTION DETAIL
NOT TO SCALE — M-101 C3

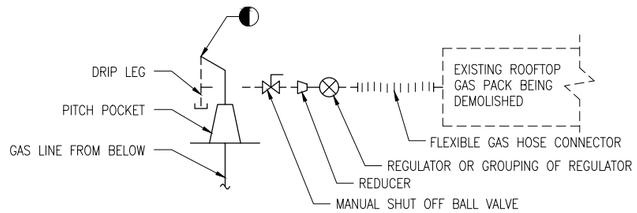

DEMOLITION PLAN

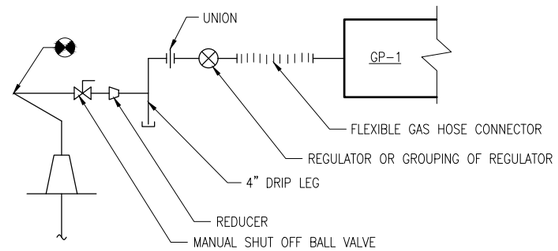

NEW WORK PLAN

GAS PIPING DETAIL
NOT TO SCALE — M-101 B5

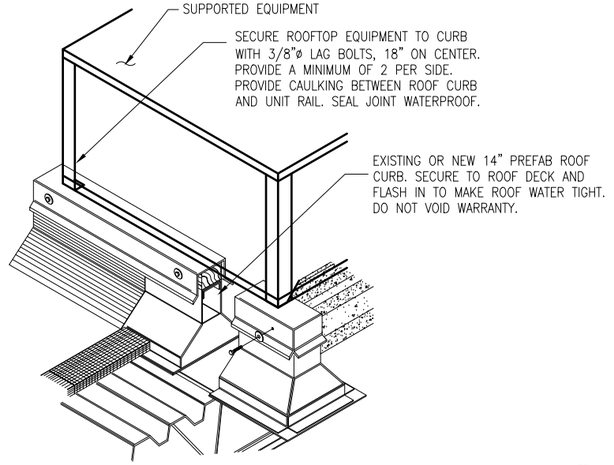

ROOF EQUIPMENT SUPPORT DETAIL
NOT TO SCALE — M-101 B2

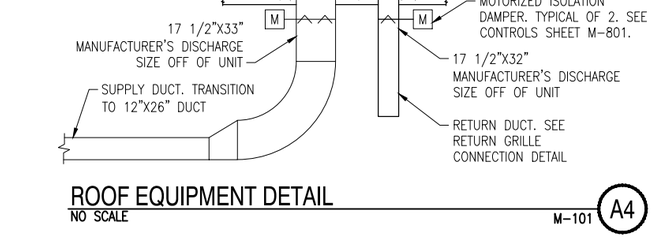

RETURN GRILLE CONNECTION DETAIL
NOT TO SCALE — M-101 B4

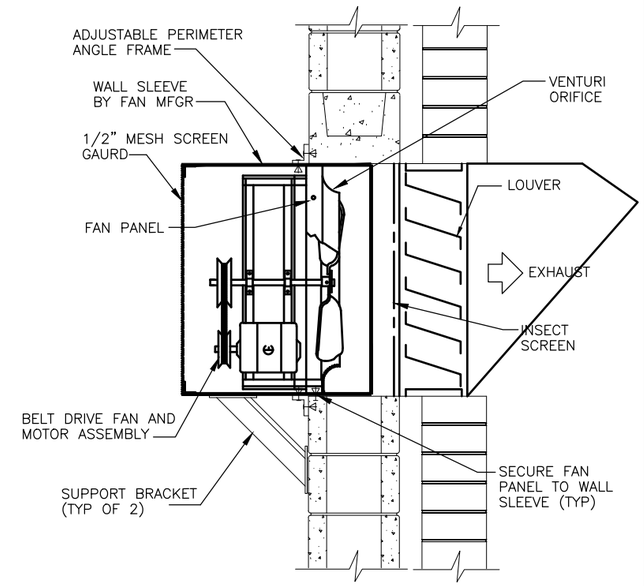

WALL MOUNTED PROPELLER FAN DETAIL
NOT TO SCALE — M-101 A5

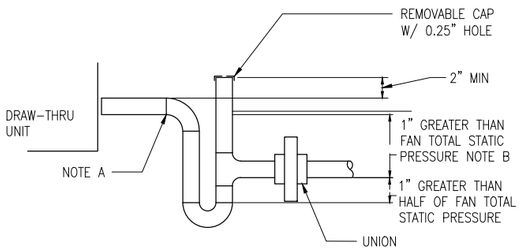

NOTES:
A. DRAIN SHALL BE FULL SIZE OF COIL CONNECTION

B. ADJUST DIMENSIONS WHERE REQUIRED TO CONFORM TO MANUFACTURER'S RECOMMENDATIONS.

AHU-CONDENSATE DRAIN
NOT TO SCALE — M-101 A2

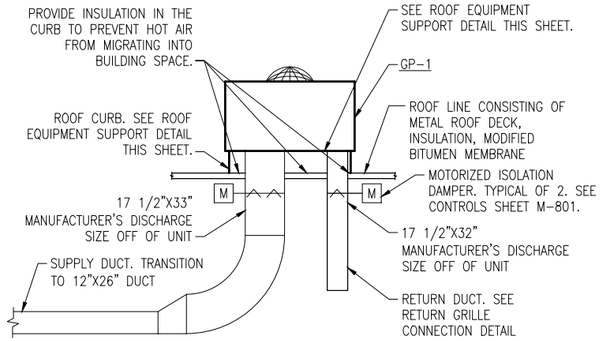

ROOF EQUIPMENT DETAIL
NO SCALE — M-101 A4

MARK	DESCRIPTION	DATE

NAVFAC

SEAL

A/E INFO

APPROVED

FOR COMMANDER NAVFAC

ACTIVITY

SATISFACTORY TO DATE

DES	SL	DRW	SL	CHK	CML
PM/DM	J HOFFLER/SHUN LI				
BRANCH MANAGER	F.C. FRANKLIN				
CHIEF ENG/ARCH	B.P. ROWE				
FIRE PROTECTION					

DEPARTMENT OF THE NAVY
NAVAL FACILITIES ENGINEERING SYSTEMS COMMAND
VIRGINIA BEACH, VA.
NAVAL FACILITIES ENGINEERING SYSTEMS COMMAND
FE90 LITTLE CREEK
JBLCFS LITTLE CREEK – FORT STORY
VIRGINIA BEACH, VA.

BLDG 808 REPLACE HVAC PACKAGE UNIT

MECHANICAL DETAILS AND CONTROLS

SCALE:	AS NOTED
EPROJECT NO.:	1781844
CONSTR. CONTR. NO.	N/A
NAVFAC DRAWING NO.	12943375
SHEET	6 OF 28

M-501

DRAWFORM REVISION: 14 SEP 2023

FILE NAME: K:\VA\FortStory\Buildings\808\2026_1781844_08B_Replace HVAC Package Unit Bldg 808\E_Design\Drawings\Bldg 808-1781844-M-501.dwg LAYOUT NAME: M-501 PLOTTED: Tuesday, March 24, 2026 - 1:32pm USER: shunli

PACKAGED GAS PACK SCHEDULE

TAG NO.	TYPE	S.A. CFM	O.A. CFM	ESP (W.G.)	COOLING						HEATING					ELECTRICAL DATA			REMARKS
					EAT DB °F	EAT WB °F	LAT DB °F	LAT WB °F	TOTAL CAPACITY MBH	SENSIBLE CAPACITY MBH	INPUT CAPACITY MBH	OUTPUT CAPACITY MBH	MIN EFF	EAT °F	INLET GAS PRESS (W.C.)	HP	VOLTS	PHASE	
GP–1	DX COOLING W/ GAS HEATER	2000	200	0.71"	83.7	68.6	58.6	57.7	69.7	54.7	80.0	64.8	80%	66.8	7 – 14"	1.0	208	3	SEE NOTES

NOTES:
1. PROVIDE WITH ECM MOTOR.
2. FILTRATION WILL BE MERV 11 AT RETURN GRILLE.
3. PROVIDE LOW HEAT OPTION WITH A STAINLESS STEEL HEAT EXCHANGER.
4. COOLING MBH AND HEATING MBH SCHEDULED ARE MINIMUMS.
5. PROVIDE WITH 24 HOUR, 7 DAY PROGRAMMABLE THERMOSTAT.
6. PROVIDE A DISCONNECT.
7. PROVIDE WITH COASTAL CORROSION RESISTANT MATERIAL PROTECTION.
8. PROVIDE VARIABLE FREQUENCY DRIVE FOR SOFT START FOR FABRIC DUCT.
9. PROVIDE WITH ROOF CURB, LIMIT THE UNIT TO 1250 LBS.
10. DESIGN IS BASED ON TRANE MODEL YSC072.

DIFFUSER/REGISTER/GRILL SCHEDULE

MARK NO.	TYPE	CFM	ESP P.D. (IN. WG.)	MAX P.D. (IN. WG.)	NOMINAL DUCT SIZE INCHES	N.C.	SERVICE	FINISH	REMARKS
A	DUCT MOUNTED	155		0.056	10"x8"	19	SUPPLY	WHITE	DOUBLE DEFLECTION, DESIGN IS BASED ON TITUS 250–AA
B	DUCT MOUNTED	220		0.056	12"x8"	20	SUPPLY	WHITE	DOUBLE DEFLECTION, DESIGN IS BASED ON TITUS 250–AA
FAB	FABRIC / SUSPENDED	375	0.42	0.49	8"ø	–	SUPPLY	LIGHT GREEN	16% DIFFUSERS, REMAINDER IS HOLES IN DUCT, COLOR LIGHT GREEN TO MATCH CEILING
FAB	FABRIC / SUSPENDED	420	0.48	0.57	14"ø	–	SUPPLY	LIGHT GREEN	16% DIFFUSERS, REMAINDER IS HOLES IN DUCT, COLOR LIGHT GREEN TO MATCH CEILING
FAB	FABRIC / SUSPENDED	830	0.48	0.57	14"ø	–	SUPPLY	LIGHT GREEN	16% DIFFUSERS, REMAINDER IS HOLES IN DUCT, COLOR LIGHT GREEN TO MATCH CEILING
Z	DUCT MOUNTED	1800		1.01	36"x18"	–	RETURN	WHITE	EGGCRATE FILTERBACK GRILLE, 1/2"x1/2"x1/2" CORES, DESIGN IS BASED ON TITUS 50–FF

NOTES:
1. FOR FILTERBACK RETURNS, PRESSURE DROP INCLUDES CLEAN FILTER. PROVIDE MERV 11 FILTER.
2. FABRIC DUCT – PERCENTAGE OF DIFFUSERS TO AIR ESCAPING BY HOLES IS PARTICULAR MANUFACTURER'S DESIGN. CFM PER LEG MUST REMAIN AS ON DRAWINGS.

FAN SCHEDULE

MARK	SERVICE	LOCATION	QTY	TYPE	CFM	ESP (IN WG)	FAN DATA			ELECTRICAL DATA			DRIVE	MOTOR RPM	NOTES
							RPM	RLA	MAX. SONES	HP	VOLTS	PHASE			
EF–1	EXHAUST	RESTROOM	1	PROPELLER, SIDEWALL	70	0.1	702	1.9	1.1	1/8	115	1	DIRECT	1725	SEE NOTES

NOTES:
1. PROVIDE STANDARD DISCONNECT SWITCH.
2. PROVIDE WIREGUARD OR HOUSING ON THE INLET SIDE OF THE FAN.
3. PROVIDE INTERNAL SPEED CONTROL, ELECTRONICALLY COMMUTATED MOTOR.
4. PROVIDE 45 DEGREE WEATHER HOOD WITH BIRDSCREEN.
5. DESIGN IS BASED ON COOK MODEL XWD VF.

DUCT CONSTRUCTION AND LEAKAGE TEST

SYSTEM	DUCT PRESSURE CLASS (IN WG)				DUCT SEAL CLASS	DUCT LEAKAGE CLASS	
	SUPPLY	RETURN	EXHAUST	OUTSIDE AIR		RECTANGULAR	ROUND
EXHAUST DUCT	–	–	–	–	A	24	12
SUPPLY DUCT	1"	–	–	–	A	24	12
RETURN DUCT	–	1"	–	–	A	24	12
OUTSIDE AIR	–	–	–	1"	A	24	12

ALL DUCT SHALL BE SEALED TO DUCT SEAL CLASS A.
ALL DUCT WILL BE TESTED FOR LEAKAGE

DESIGN CONDITIONS

LOCATION	HEATING		COOLING			REMARKS
	DB	WB	DB	WB	RH	
OUTSIDE AIR	27°	24°	91°	76°	–	
INTERIOR SPACES	68° ± 2	–	76° ± 2	–	50%	

DATE | DESCRIPTION | MARK

SEAL

A/E INFO

APPROVED

FOR COMMANDER NAVFAC

ACTIVITY

SATISFACTORY TO DATE

DES SL | DRW SL | CHK CML

PM/DM J HOFFLER/SHUN LI

BRANCH MANAGER F.C. FRANKLIN

CHIEF ENG/ARCH B.P. ROWE

FIRE PROTECTION

DEPARTMENT OF THE NAVY
NAVAL FACILITIES ENGINEERING SYSTEMS COMMAND
VIRGINIA BEACH, VA.
FEAD LITTLE CREEK

NAVAL FACILITIES ENGINEERING SYSTEMS COMMAND
VIRGINIA BEACH, VA.
JBLCFS LITTLE CREEK – FORT STORY

BLDG 808 REPLACE HVAC PACKAGE UNIT

MECHANICAL SCHEDULES

SCALE: AS NOTED
EPROJECT NO.: 1781844
CONSTR. CONTR. NO. N/A
NAVFAC DRAWING NO. 12943376
SHEET 7 OF 28

M-601

DRAWFORM REVISION: 14 SEP 2023

FILE NAME: K:\VA\FortStory\Buildings\808\2026_1781844_088_Replace HVAC Package Unit Bldg 808\B_Design\Drawings\Bldg 808–1781844–M–601.dwg LAYOUT NAME: M–601 PLOTTED: Tuesday, March 24, 2026 – 1:32pm USER: shunli

ELECTRICAL LEGEND

- (#) DEMOLITION NOTE – REFER TO "DEMOLITION KEYNOTES" FOR EACH SHEET
- [#] NEW WORK NOTE – REFER TO "NEW WORK KEYNOTES" FOR EACH SHEET
- #. GENERAL NOTE – REFER TO "GENERAL NOTES" FOR EACH SHEET
- ——— OBJECTS ON DRAWINGS AT THIS LINEWEIGHT ARE CATEGORIZED AS NEW OR PROPOSED FOR CONSTRUCTION, UON.
- – – – – OBJECTS ON DRAWINGS AT THIS LINEWEIGHT ARE CATEGORIZED AS EXISTING TO BE REMOVED–DEMOLISHED, UON.
- ——— OBJECTS ON DRAWINGS AT THIS LINEWEIGHT ARE CATEGORIZED AS EXISTING TO REMAIN, UON.
- LUMINAIRE TYPE. SEE LUMINAIRE SCHEDULE, SHEET E–101
- LUMINAIRE. (⊣ INDICATES BRACKET, WALL MOUNTED FIXTURES)
- EMERGENCY LUMINAIRE. (⊣ INDICATES BRACKET, WALL MOUNTED FIXTURES)
- EXIT LUMINAIRE, TYPE E. ARROW, WHEN USED, INDICATES DIRECTION. (⊣ INDICATES BRACKET, WALL MOUNTED FIXTURES) FILLED IN QUADRANT(s) OF SYMBOL INDICATES NUMBER AND ORIENTATION OF ILLUMINATED FACES.
- S^{a} LOW–VOLTAGE SWITCH, MOUNT 48" AFF UON. SUBSCRIPT INDICATES CONTROL GROUP
- S_{D} 0–10V DIMMER SWITCH, MOUNT 48" AFF UON.
- (OS) OCCUPANCY SENSOR, CEILING MOUNTED UON.
- $\$^{b}_{2}$ LINE–VOLTAGE TOGGLE SWITCH, 20 A, 120/277 V. MOUNT 48" AFF UON. SUBSCRIPT "2" = 2 WAY, "3" = 3 WAY, "4" = 4 WAY.
- S_{T} TIMER SWITCH, MAX 15 MIN, WALL MOUNTED 48" AFF UON.
- S_{OS} OCCUPANCY SENSOR CONTROLLER WALL MOUNTED 48" AFF UON.
- [117] ROOM NUMBER

- (J) JUNCTION BOX. MINIMUM 4" SQUARE X 2 1/8" / SIZE PER NEC.
- (E) EQUIPMENT CONNECTION
- 3P 30/20 3R DISCONNECT SWITCH. 3P = NO. OF POLES, 30 = SWITCH RATING, 20 = FUSE RATING (NF INDICATES NON–FUSED), 3R INDICATES NEMA RATING.
- BRANCH CIRCUIT OR FEEDER WIRING IN CONDUIT. NO TICK MARKS INDICATE 2#12 CONDUCTORS & 1#12 GND. IN 3/4" CONDUIT UON. CONDUIT LARGER THAN 3/4" & WIRE LARGER THAN #12 SHALL BE INDICATED.
- LA–1 HOMERUN TO PANEL. PANEL & CIRCUIT DESIGNATIONS AS INDICATED.
- 208Y/120V PANELBOARD
- GROUND ROD
- METER BASE

3" INTERIOR
6" EXTERIOR

WARNING

Shock, Arc Flash, and Arc Blast Hazard
Appropriate PPE Required
Failure to Comply Can Result in Injury or Death
Refer to UFC 3-560-01

2" INTERIOR
4" EXTERIOR

ARC FLASH WARNING LABEL DETAIL

NO SCALE

ABBREVIATIONS

ø	PHASE
A	AMPERAGE OR AMPS
AFF	ABOVE FINISHED FLOOR
C	CONDUIT
CKT	CIRCUIT
DE	DOMINION ENERGY
EC	EMPTY CONDUIT
EXST	EXISTING
GFCI	GOVERNMENT FURNISHED CONTRACTOR INSTALLED
GFE	GOVERNMENT FURNISHED EQUIPMENT
GFGI	GOVERNMENT FURNISHED GOVERNMENT INSTALLED
GFI	GROUND FAULT INTERRUPTER
GND	GROUND
MCB	MAIN CIRCUIT BREAKER
MLO	MAIN LUGS ONLY
NF	NON FUSIBLE
NIC	NOT IN CONTRACT
NTS	NOT TO SCALE
RCPT	RECEPTACLE
RM	ROOM
TYP	TYPICAL
UON	UNLESS OTHERWISE NOTED
V	VOLTAGE OR VOLTS
W	WIRE
WP	WEATHERPROOF
XFMR	TRANSFORMER

GENERAL NOTES

1. ALL ELECTRICAL WORK AND MATERIAL IS NEW AND SHALL BE PROVIDED BY THE CONTRACTOR UON.
2. ELECTRICAL WORK AND MATERIALS SHALL BE AS PER NATIONAL ELECTRICAL CODE (NEC). ELECTRICAL EQUIPMENT AND MATERIALS SHALL BE LISTED AND LABELED FOR THEIR INTENDED USE.
3. SUBMIT SHOP DRAWINGS OF THE ELECTRICAL EQUIPMENT AND MATERIALS INTENDED TO BE USED ON THIS PROJECT FOR REVIEW AND APPROVAL.
4. DRAWINGS ARE BASED ON EXISTING BUILDING PLANS AND FIELD INVESTIGATIONS. CONTRACTOR SHALL VISIT THE EXISTING BUILDING AND BECOME FAMILIAR WITH THE EXISTING CONDITIONS. CONTRACTOR SHALL EXAMINE DRAWINGS TO AVOID CONFLICT.
5. UNLESS OTHERWISE INDICATED CONDUIT SHALL BE RUN CONCEALED IN FINISHED AREAS. INTERIOR WALL MOUNTED DEVICE AND JUNCTION BOXES SHALL BE FLUSH TYPE. WHERE POSSIBLE, RUN CONDUIT ABOVE CEILINGS AND IN NEW OR FURRED WALLS. CONDUIT MAY BE SURFACE MOUNTED TO EXISTING CMU WALLS AND PAINTED TO MATCH THE SURROUNDING SURFACE MATERIAL AND COLOR. REUSE OF EXISTING CONDUIT IN EXISTING WALLS IS ACCEPTABLE.
6. AN EQUIPMENT GROUND WIRE SHALL BE RUN WITH FEEDERS AND BRANCH CIRCUITS.
7. FEEDERS/CIRCUITS SHALL BE IDENTIFIED AT EACH END OF THE WIRE AND AT EVERY SPLICE OR JUNCTION/PULL BOX.
8. ELECTRICAL EQUIPMENT SHALL BE IDENTIFIED AND LABELED.
9. PROVIDE ARC–FLASH LABELS ON ALL PANELS/DISCONNECT SWITCHES AS PER UFC 3–560–01. REFER TO DETAIL THIS SHEET.
10. PROVIDE NAMEPLATES ON THE EXTERIOR OF ELECTRICAL PANELS, DISCONNECT SWITCHES, MOTOR STARTERS AND ENCLOSURES AS FOLLOWS:

PANEL LP1A	DEVICE ID
100A, 208Y/120V–3ø, 4W	DEVICE RATING
FEEDS FROM PANEL MDP	POWER SOURCE
INSTALLED 2016	INSTALLATION DATE
DRAWING NO. 15,350,896	NAVFAC DRAWING NUMBER

11. PROVIDE NEW TYPED DIRECTORIES ON CARD STOCK FOR PANELS (NEW OR EXISTING TO REMAIN) INCLUDED IN THIS PROJECT – REGULAR SHEET PAPER IS UNACCEPTABLE. WHEN REPLACING AN EXISTING DIRECTORY, MARK 'OLD' AND PLACE BEHIND NEW DIRECTORY.
12. COORDINATE ELECTRICAL WORK PRIOR TO FABRICATION AND INSTALLATION TO PREVENT CONFLICTS. NOTIFY CONTRACTING OFFICER WHERE CONFLICTS ARE DISCOVERED PRIOR TO CONSTRUCTION AND BEFORE BEGINNING WORK IN THOSE AREAS. ALL CONFLICTS THAT ARISE DUE TO LACK OF COORDINATION SHALL BE RECTIFIED BY THE CONTRACTOR AT NO COST TO THE GOVERNMENT.

GENERAL DEMOLITION NOTES

1. EQUIPMENT SHOWN WITH DASHED LINE SHALL BE DEMOLISHED, UON.
2. WIRING TO EQUIPMENT SHALL BE DEMOLISHED BACK TO SOURCE, UON.
3. CONDUIT SHALL BE DEMOLISHED, UON.
4. CONDUIT CONCEALED IN WALLS AND SLABS SHALL BE BLANKED OFF AND ABANDONED IN PLACE. PATCH WALLS AND SLABS AFTER DEMOLITION IS COMPLETE.
5. BOXES DISCONTINUED SHALL BE BLANKED OFF OR DEMOLISHED AND DEVICES DEMOLISHED.
6. EXISTING ELECTRICAL EQUIPMENT NOT INDICATED ON DEMOLITION PLAN SHALL REMAIN CONNECTED FOR CONTINUED USE.
7. CONTRACTOR SHALL RECONNECT EXISTING CIRCUIT(S) (INTERRUPTED BY REMOVAL OF EXISTING DEVICE) TO THE REMAINING ELECTRICAL EQUIPMENT LOCATED DOWNSTREAM FROM THE POINT OF INTERRUPTION.

DATE | DESCRIPTION | MARK

NAVFAC

SEAL

A/E INFO

APPROVED

FOR COMMANDER NAVFAC

ACTIVITY

SATISFACTORY TO DATE

DES SLC | DRW SLC | CHK JH

PM/DM J HOFFLER/SHUN LI

BRANCH MANAGER F.C. FRANKLIN

CHIEF ENG/ARCH B.P. ROWE

FIRE PROTECTION

DEPARTMENT OF THE NAVY
NAVAL FACILITIES ENGINEERING SYSTEMS COMMAND
VIRGINIA BEACH, VA.
FISO LITTLE CREEK
JBLCFS LITTLE CREEK – FORT STORY
VIRGINIA BEACH, VA.

BLDG 808 REPLACE HVAC PACKAGE UNIT

LEGEND, NOTES AND DETAILS

SCALE: AS NOTED
EPROJECT NO.: 1781844
CONSTR. CONTR. NO. N/A
NAVFAC DRAWING NO. 12943377
SHEET 8 OF 28

E-001

DRAWFORM REVISION: 14 SEP 2023

PLOTTED: Tuesday, March 24, 2026 - 1:32pm USER: dhunt
FILE NAME: K:\VA\FortStory\Buildings\808\2026_1781844_DBB_Replace HVAC Package Unit Bldg 808\B_Design\Drawings\Bldg 808-1781844-E-001.dwg LAYOUT NAME: E-001 LEGEND NOTES AND DETAILS

FILE NAME: K:\VA\FortStory\Buildings\808\2026_1781844_088_Replace HVAC Package Unit Bldg 808\8_Design\Drawings\Bldg 808-1781844-E-101.dwg LAYOUT NAME: E-101 DEMOLITION AND NEW WORK PARTIAL PLANS PLOTTED: Tuesday, March 24, 2026 - 1:32pm USER: shunfi

LUMINAIRE SCHEDULE

TAG	PLATE	STYLE	SOURCE	LUMENS	CCT	LPW	WATTS	FEATURES/OPTIONS	MOUNTING	NOTES
A	NL-3	1'x4' LOW-PROFILE CURVED-BASKET WRAP	LED	3200	3500K	125	-	ACRYLIC DIFFUSER, LINEAR PRISMATIC LENS, 1% DIMMING, SELF-DIAGNOSTIC EMERGENCY BATTERY WHERE SHOWN ON PLAN	PENDANT 8' AFF	
E	NL-28	EXIT LIGHT - SINGLE FACE	LED	-	-	-	<5	WHITE THERMOPLASTIC HOUSING AND PANEL, RED LETTERS, SELF-DIAGNOSTIC EMERGENCY BATTERY	SURFACE WALL, ABOVE DOOR, UON	

LIGHTING CONTROL TABLE

ROOM #	ROOM TYPE	LOCAL CONTROL	MANUAL ON	AUTOMATIC ON 100% OR <50%	BI-LEVEL CONTROL	DAYLIGHT HARVESTING	AUTOMATIC FULL OFF	NOTES
100	OFFICE/CLASSROOM	YES	YES	<50%	DIMMING	N/A	YES	1
102	TOILET	YES	NO	100%	-	N/A	YES	
103	STORAGE	YES	YES	NO	-	N/A	TIMER	

NOTES:
1. SPACE SERVES AS EGRESS FOR OTHER SPACES

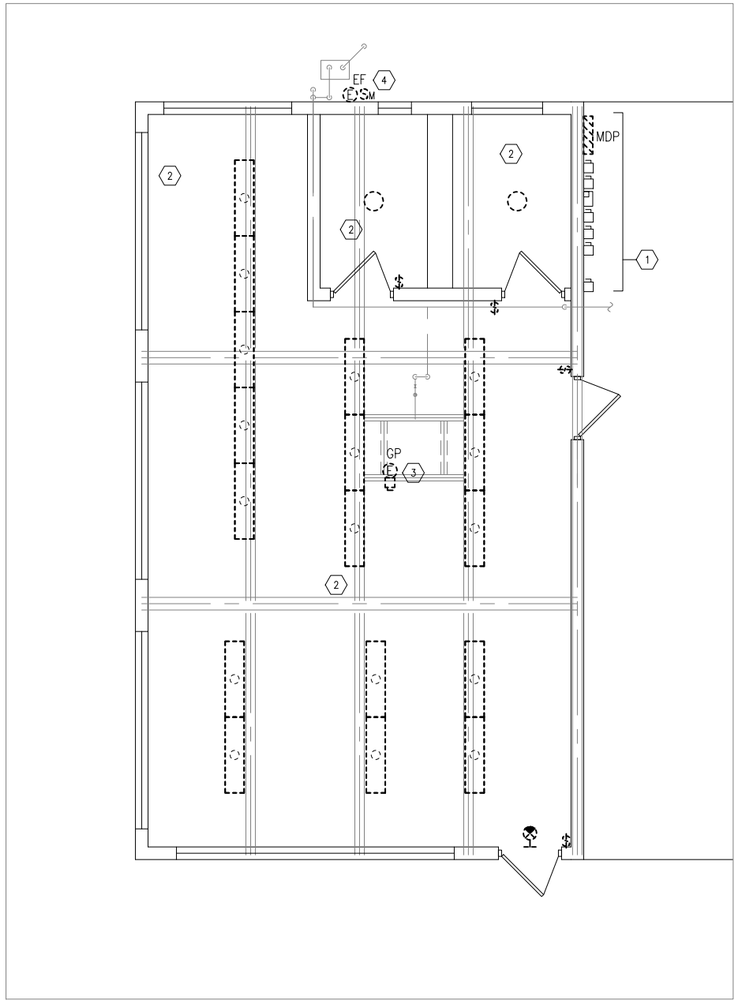

FLOORPLAN - DEMOLITION
SCALE: 1/4"=1'-0"

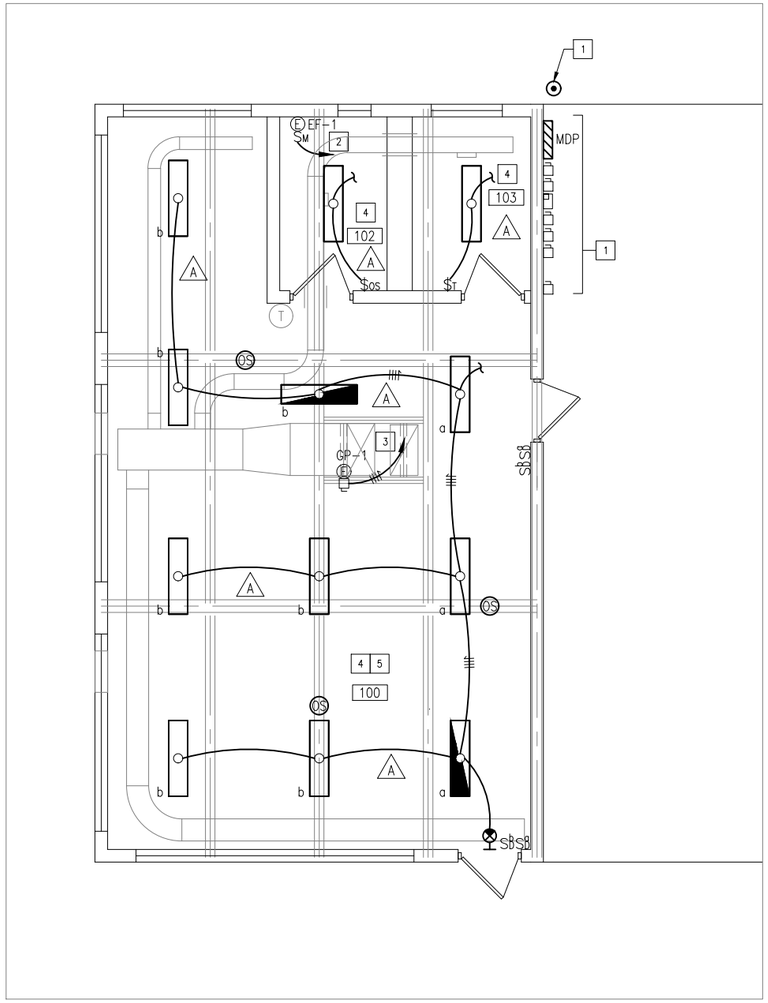

FLOORPLAN - NEW WORK
SCALE: 1/4"=1'-0"

GENERAL SHEET NOTES

1. THIS BUILDING IS TO REMAIN IN USE DURING CONSTRUCTION. COORDINATE CONSTRUCTION ACTIVITY WITH BUILDING OCCUPANT'S ONGOING OPERATIONS.
2. EQUIPMENT AND DEVICE LOCATIONS ARE APPROXIMATE. FIELD VERIFY EXACT LOCATIONS.
3. EXISTING ELECTRICAL EQUIPMENT AND DEVICES NOT INDICATED ON PLANS SHALL REMAIN CONNECTED FOR CONTINUED USE.
4. PATCH AND SEAL PENETRATIONS AND PAINT TO MATCH SURROUNDING SURFACE.

DEMOLITION KEYNOTES

1. DEMOLISH PANEL MDP, REFER TO RISER DIAGRAM ON E-501
2. DEMOLISH LUMINAIRES AND ASSOCIATED CONTROL DEVICES, SENSORS, CONDUIT AND WIRING COMPLETE. RETAIN EXISTING BRANCH CIRCUIT FOR REUSE.
3. DISCONNECT EXISTING GAS PACK RTU AND DEMOLISH ASSOCIATED DISCONNECT, WIRING AND CONDUIT BACK TO SOURCE
4. DISCONNECT EXISTING EXHAUST FAN AND DEMOLISH ASSOCIATED DISCONNECT, WIRING AND CONDUIT BACK TO SOURCE

NEW WORK KEYNOTES

1. PROVIDE PANELBOARD MDP, GROUND ROD AND RECONNECTIONS FOR EXISTING TO REMAIN ITEMS, REFER TO POWER RISER DIAGRAM ON SHEET E-501
2. EF-1, 1/8 HP, 120V, MDP-20 2#12, 1#12GND, 1/2"C
3. GP-1(ON ROOF), 39 MCA, 208V, 3ø; 3P-60/NF-4X DISCONNECT, MDP-14 3#8, 1#10GND, 3/4"C
4. INTERCEPT EXISTING LIGHTING CIRCUIT IN EACH ROOM AND EXTEND TO NEW LUMINAIRES, EXIT LIGHTS AND CONTROL DEVICES, REFER TO SCHEDULES ON THIS SHEET AND DIAGRAMS ON E-501.
5. PROVIDE LOCALIZED LIGHTING CONTROL SYSTEM, REFER TO SCHEDULES ON THIS SHEET AND DIAGRAMS ON E-501. WIRELESS AND NETWORKED CONTROL SYSTEMS ARE NOT ALLOWED. DIGITAL ADDRESSABLE CONTROL SYSTEMS WITH INTEGRATED CONTROL AND SENSORS IN THE LUMINAIRES ARE ACCEPTABLE.

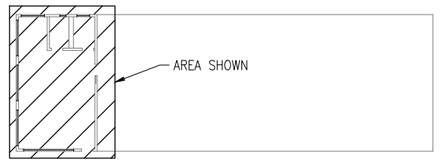

KEYPLAN
NO SCALE

PLAN NORTH

GRAPHIC SCALE
1/4"=1'-0" 0' 2' 4' 8'

MARK	DESCRIPTION	DATE

NAVFAC

SEAL

A/E INFO

APPROVED
FOR COMMANDER NAVFAC
ACTIVITY
SATISFACTORY TO DATE
DES SLC DRW SLC CHK JH
PM/DM J HOFFLER/SHUN LI
BRANCH MANAGER F.C. FRANKLIN
CHIEF ENG/ARCH B.P. ROWE
FIRE PROTECTION

DEPARTMENT OF THE NAVY
NAVAL FACILITIES ENGINEERING SYSTEMS COMMAND
VIRGINIA BEACH, VA.
FEAD LITTLE CREEK
JBLCFS LITTLE CREEK - FORT STORY
VIRGINIA BEACH, VA.

BLDG 808 REPLACE HVAC PACKAGE UNIT

DEMOLITION AND NEW WORK PARTIAL PLANS

SCALE: AS NOTED
EPROJECT NO.: 1781844
CONSTR. CONTR. NO. N/A
NAVFAC DRAWING NO. 12943378
SHEET 9 OF 28

E-101

DRAWFORM REVISION: 14 SEP 2023

PANEL MDP SCHEDULE

100 AMP BUS | 100 AMP MCB | 208Y/120 VOLTS | 3PH, 4W, SN | MIN. 22 KAIC | SURFACE MOUNTED

CKT. NO.	LOAD DESCRIPTION	GND SIZE	PHASE SIZE	BKR TRIP	AMPS	KVA	PH	KVA	AMPS	BKR TRIP	PHASE SIZE	GND SIZE	LOAD DESCRIPTION	CKT. NO.
1	NEW A/C 208V	12	12	20	10.0	1.0	A						SPACE ONLY	2
3	NOTE 1				10.0	1.0	B						SPACE ONLY	4
5	NOTE 1-RCPT SHOP NORTH WALL	12	12	20	10.0	1.2	C						SPACE ONLY	6
7	NOTE 1-LTS SHOP	12	12	20	10.0	1.2	A	0.0	0.1	60	4	4	SPD	8
9	NOTE 1-LTS SHOP	12	12	20	10.0	1.2	B	0.0	0.1					10
11	NOTE 1-LTS SHOP	12	12	20	10.0	1.2	C	0.0	0.1					12
13	NOTE 1-SPECIAL RCPT ON COLUMN	12	12	20	10.0	1.2	A	4.8	40.0	50	8	10	GP-1	14
15	NOTE 1-LIGHTS SHOP	12	12	20	10.0	1.2	B	4.8	40.0					16
17	NOTE 1-OFFICE LIGHTS	12	12	20	10.0	1.2	C	4.8	40.0					18
19	NOTE 1-BATTERY RM FAN	12	12	20	10.0	1.2	A	0.5	4.4	20	12	12	EF-1	20
21	NOTE 1-LIGHTS OFFICE & SHOP & RCPT WAT	12	12	20	10.0	1.2	B						SPACE ONLY	22
23	NOTE 1-BAD BREAKER	12	12	20	10.0	1.2	C						SPACE ONLY	24
25	NOTE 1-CEILING GAS HEATER	12	12	20	10.0	1.2	A						SPACE ONLY	26
27	NOTE 1-UNIT HEATER OFFICE	12	12	20	10.0	1.2	B						SPACE ONLY	28
29	NOTE 1-WATER HEATER	12	12	20	10.0	1.2	C						SPACE ONLY	30
31	NOTE 1-RCPT TELISILE TESTER, REFRIG	12	12	20	10.0	1.2	A						SPACE ONLY	32
33	NOTE 1-UNIT GAS HEAT	12	12	20	10.0	1.2	B						SPACE ONLY	34
35	SPACE ONLY						C						SPACE ONLY	36
37	RTU A/C	10	10	30	10.0	1.0	A						SPACE ONLY	38
39	NOTE 1				10.0	1.0	B						SPACE ONLY	40
41	SPACE ONLY						C						SPACE ONLY	42
TOTAL AMPS (CONN. LOAD)				A:	111.8		B:	107.4		C:	90.1			
TOTAL AMPS (FEEDTHRU)				A:			B:			C:				
TOTAL AMPS (CONN. LOAD + FEED-THRU)				A:	111.8		B:	107.4		C:	90.1			

PANELBOARD OPTIONS:

PANELBOARD NOTES:

1. INTERCEPT AND EXTEND EXISTING BRANCH CIRCUIT, UPDATE DESCRIPTION IF MADE SPARE BY DEMOLITION

POWER RISER DIAGRAM NOTES

1. DEMOLISH EXISTING PANEL, RETAIN BRANCH CIRCUITS FOR RECONNECTION. PROVIDE WIREWAY TO EXTEND BRANCH CIRCUITS TO NEW PANEL AS REQUIRED.
2. EXISTING BRANCH CIRCUITS TO REMAIN, UON
3. DISCONNECT EXISTING GROUNDING SYSTEM AND RETAIN FOR REUSE
4. EXTEND BRANCH CIRCUITS TO NEW PANELBOARD MDP, REFER TO PANELBOARD SCHEDULE THIS SHEET
5. 4#1, 1#8GND 1 1/2"C
6. INTERCEPT AND EXTEND EXISTING SERVICE GROUND WITH 1#4GND
7. #4GND TO EXTERIOR GROUND ROD, CORE DRILL EXTERIOR WALL AND PAVEMENT
8. #4GND TO BUILDING STEEL
9. 4#4, 1#4GND 1 1/4"C

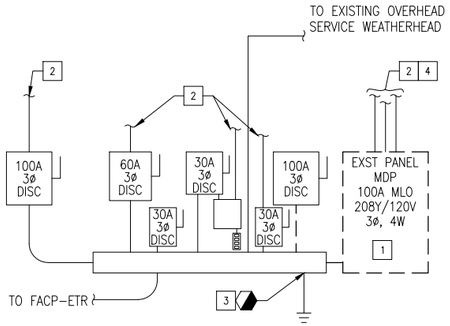

DEMOLITION

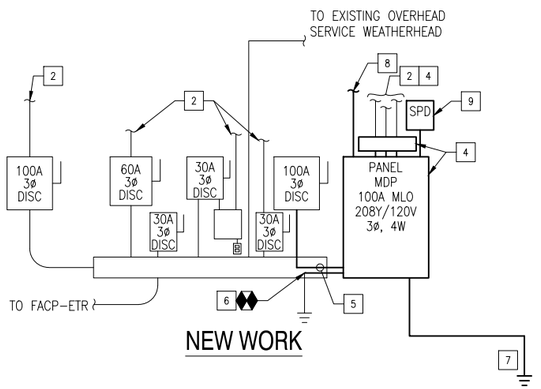

NEW WORK

POWER RISER DIAGRAM

SCALE: NONE

CONTROL DIAGRAM NOTES

1. INTERCEPT AND EXTEND EXISTING UNSWITCHED LIGHTING CIRCUIT IN ROOM TO NEW LUMINAIRES AND CONTROLS IN ROOM
2. ROOM/WALL CONTROLLER, COORDINATE REQUIREMENTS WITH LIGHTING CONTROL TABLE AND PLAN ON SHEET E-101
3. EXTEND UNSWITCHED CIRCUIT TO EMERGENCY BATTERY PACKS
4. SWITCH LEG FROM CONTROLLER TO LUMINAIRES
5. SENSOR AND SWITCH DEVICE CONTROL WIRING PER MANUFACTURER'S RECOMMENDATIONS
6. TO ADDITIONAL LUMINAIRES AND CONTROLS, REFER TO PLAN ON SHEET E-101 FOR EACH ROOM
7. 0-10V DIMMING CONTROL WIRING PER MANUFACTURER'S RECOMMENDATIONS
8. PROVIDE MULTIPLE ROOM CONTROLLERS OR RELAY CONTACTS FOR ROOMS WITH MULTIZONE CONTROL REQUIREMENTS, REFER TO PLAN ON SHEET E-101

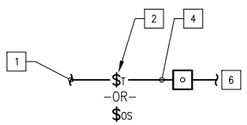

NON-DIMMING CONTROL DIAGRAM

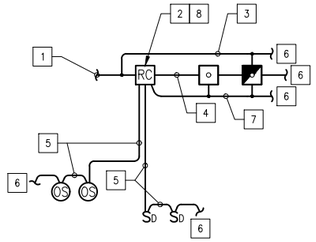

DIMMING CONTROL DIAGRAM

GENERAL NOTE:
THIS IS A SIMPLIFIED ONE-LINE DIAGRAM SHOWING THE BASIC INTERCONNECTION OF LUMINAIRES AND CONTROL DEVICES. COORDINATE ACTUAL WIRING AND CONNECTIONS WITH MANUFACTURER'S RECOMMENDATIONS

SIMPLIFIED LIGHTING CONTROL DIAGRAMS

SCALE: NONE

NOTE: THIS SKETCH IS A NON-PROPRIETARY GRAPHIC REPRESENTATION OF A LUMINAIRE THAT MAY MEET THE SPECIFICATION REQUIREMENTS. IT IS NOT INTENDED TO INDICATE A CERTAIN MANUFACTURER OR PREFERENCE.

LUMINAIRE REQUIREMENTS:

1. HOUSING – DIE-FORMED, COLD ROLLED STEEL, WITH REINFORCEMENT RIBS FOR RIGIDITY; ENDCAPS SAME MATERIAL AS HOUSING, SECURED TABS, SCREWS, OR RIVETS. SIZE AS INDICATED IN LUMINAIRE SCHEDULE.
2. OPTICS – ACRYLIC OR POLYCARBONATE LENS AS INDICATED IN LUMINAIRE SCHEDULE.
3. LIGHT SOURCE – SOLID STATE LEDS, 3500K CCT UON, MINIMUM 80 CRI UON, AND MINIMUM EFFICACY OF 110 LUMENS/WATT UON. INITIAL LUMEN OUTPUT AS INDICATED IN LUMINAIRE SCHEDULE.
4. DRIVER – REPLACEABLE, INTEGRAL, HIGH-EFFICIENCY DRIVER WITH MINIMUM 0.9 PF, OPERATING VOLTAGE OF 120-277V, THERMAL MANAGEMENT, AND < 20% THD. ON/OFF CONTROL AND FULLY DIMMABLE DOWN TO 10% MINIMUM OR AS INDICATED IN LUMINAIRE SCHEDULE.
5. CERTIFICATION – UL LISTED FOR DRY OR DAMP LOCATION, ROHS COMPLIANT, DLC QUALIFIED. COMPLIES WITH IES LM79, LM80 AND TM21 TESTING STANDARDS.
6. MOUNTING – SURFACE MOUNTED.
7. OPTIONS – EMERGENCY BATTERY BACK-UP, INTEGRAL OCCUPANCY/VACANCY SENSOR, VARIOUS SIZE AND OUTPUT OPTIONS.

SURFACE LED WRAPAROUND

REVISED: NOVEMBER 2020 | LIGHTING PLATE: NL-3

NOTE: THIS SKETCH IS A NON-PROPRIETARY GRAPHIC REPRESENTATION OF A LUMINAIRE THAT MAY MEET THE SPECIFICATION REQUIREMENTS. IT IS NOT INTENDED TO INDICATE A CERTAIN MANUFACTURER OR PREFERENCE.

LUMINAIRE REQUIREMENTS:

1. HOUSING – DIE-CAST ALUMINUM OR HIGH-IMPACT, UV-STABILIZED, INJECTION-MOLDED THERMOPLASTIC.
2. LIGHT SOURCE – SOLID STATE LEDS.
3. DRIVER – INTEGRAL, HIGH-EFFICIENCY DRIVER WITH MINIMUM 0.9 PF, OPERATING VOLTAGE OF 120/277V, THERMAL MANAGEMENT, AND < 20% THD.
4. CERTIFICATION – NFPA 101, UL LISTED FOR DAMP OR WET LOCATION, AND ROHS COMPLIANT.
5. MOUNTING – SURFACE MOUNTED ON CEILING AND/OR WALL.
6. OPTIONS – RED OR GREEN LETTERING, ONE- OR TWO-SIDED. ELU REMOTE HEAD CAPABILITIES. BATTERY BACKUP.

EXIT SIGN

REVISED: NOVEMBER 2020 | LIGHTING PLATE: NL-28

DATE | DESCRIPTION | MARK

SEAL

A/E INFO

APPROVED

FOR COMMANDER NAVFAC

ACTIVITY

SATISFACTORY TO DATE

DES SLC DRW SLC CHK JH

PM/DM J HOFFLER/SHUN LI

BRANCH MANAGER F.C. FRANKLIN

CHIEF ENG/ARCH B.P. ROWE

FIRE PROTECTION

DEPARTMENT OF THE NAVY
NAVAL FACILITIES ENGINEERING SYSTEMS COMMAND
VIRGINIA BEACH, VA.
FEAD LITTLE CREEK
JBLCFS LITTLE CREEK – FORT STORY
VIRGINIA BEACH, VA.

BLDG 808 REPLACE HVAC PACKAGE UNIT

DETAILS, DIAGRAMS AND SCHEDULE

SCALE: AS NOTED
EPROJECT NO.: 1781844
CONSTR. CONTR. NO. N/A
NAVFAC DRAWING NO. 12943379
SHEET 10 OF 28

E-501

DRAWFORM REVISION: 14 SEP 2023

FILE NAME: K:\VA\FortStory\Buildings\808\2026_1781844_DBB_Replace HVAC Package Unit Bldg 808\8_Design\Drawings\Bldg 808-1781844-E-501.dwg LAYOUT NAME: E-501 DETAILS DIAGRAMS AND SCHEDULE PLOTTED: Tuesday, March 24, 2026 - 1:32pm USER: shunli

FORT STORY BLDG 810 REPLACE HVAC PACKAGE UNIT

JOINT EXPEDITIONARY BASE LITTLE CREEK - FORT STORY
VIRGINIA BEACH, VIRGINIA

NAVFAC MID-ATLANTIC, FORT STORY SITE

FEAD LITTLE CREEK

ENLARGED LOCATION MAP

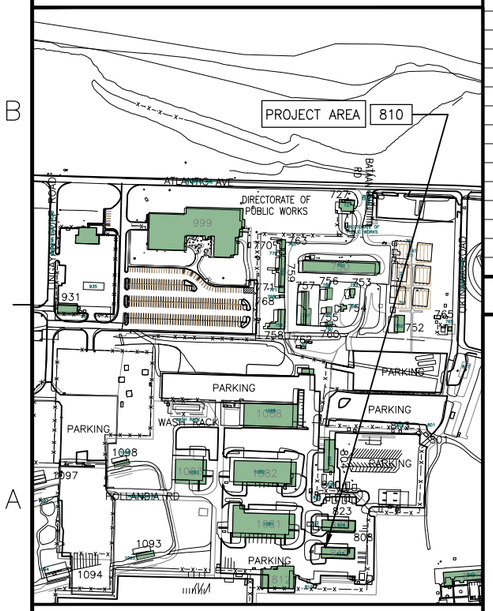

LIST OF SHEETS

SHEET NO.		NAVFAC DWG. NO.	SHEET TITLE
11	G-001	12925046	COVER SHEET
12	M-001	12925047	MECHANICAL GENERAL DATA SHEET
13	MD101	12925048	OFFICE RTU – DEMOLITION
14	M-101	12925049	OFFICE RTU – NEW WORK
15	M-501	12925050	MECHANICAL DETAILS AND CONTROLS
16	M-601	12925051	MECHANICAL SCHEDULES
17	E-001	12925052	LEGEND, NOTES AND DETAILS
18	E-101	12925053	DEMOLITION AND NEW WORK PARTIAL PLANS
19	E-501	12925054	DETAILS, DIAGRAMS AND SCHEDULE

LOCATION MAP

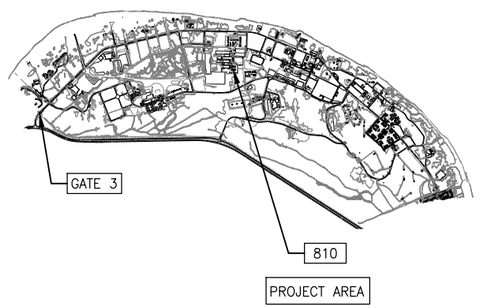

SYMBOLS LEGEND

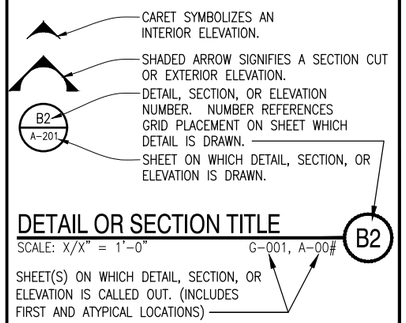

GENERAL NOTES

1. CONTRACTOR SHALL BE RESPONSIBLE FOR SECURING WORK AREAS AND THE BUILDING TO WEATHER TIGHT CONDITION DURING CONSTRUCTION.
2. CONTRACTOR SHALL SECURE AND CORDON OFF ALL WORK AREAS. CONTRACTOR SHALL PROVIDE ALL NECESSARY MATERIALS AND LABOR TO INSURE THE PROTECTION OF PEDESTRIANS AND PERSONNEL.
3. CONSTRUCTION WORK AREAS AND PATHWAYS SHALL BE CLEANED. CONTRACTOR SHALL COVER AND PROTECT EXISTING FURNITURE AND EQUIPMENT IN, AROUND AND BELOW THE WORK AREAS FROM DAMAGE.
4. WHERE EXISTING CONSTRUCTION TO REMAIN IS DAMAGED DURING CONSTRUCTION, CONTRACTOR SHALL MAKE REPAIRS USING LIKE MATERIALS TO MATCH EXISTING IN ALL WAYS.
5. ALL INDICATED DIMENSIONS AND EXISTING CONDITIONS ARE CONSIDERED APPROXIMATE AND SHALL BE FIELD VERIFIED PRIOR TO ORDERING MATERIALS, FABRICATIONS OR BEGINNING CONSTRUCTION.
6. UNLESS NOTED OR INDICATED OTHERWISE ALL WALL DIMENSIONS ARE FROM FACE OF GYPSUM BOARD OR BACKER BOARD NOT FROM APPLIED FINISH MATERIAL. CEILING HEIGHTS INDICATED ARE TO FACE OF FINISH MATERIAL.
7. CONTRACTOR SHALL INVESTIGATE ALL EXISTING ARCHITECTURAL, STRUCTURAL, MECHANICAL AND ELECTRICAL FIELD CONDITIONS PRIOR TO COMMENCING ANY DEMOLITION AND/OR NEW CONSTRUCTION. CONTRACTOR SHALL NOTIFY CONTRACTING OFFICER PRIOR TO INTERRUPTING UTILITIES.
8. CONTRACTOR, ALL OF HIS STAFF, WORKERS, SUBCONTRACTORS, SUPPLIERS, ETC. ARE SUBJECT TO THE SAME CONDITIONS AS THOSE GOVERNING THE CONTRACTOR.
9. CONTRACTORS STORAGE AND PARKING AREA SHALL BE COORDINATED WITH THE CONTRACTING OFFICER PRIOR TO THE PRE-CONSTRUCTION MEETING. THE ALLOWABLE AREA SIZE SHALL BE ESTABLISHED BY THE CONTRACTING OFFICER.
10. ALL ITEMS AND WORK NOT INDICATED TO BE EXISTING SHALL BE FURNISHED AND INSTALLED AS PART OF THE REQUIREMENTS OF THIS CONTRACT.
11. CONTRACTOR SHALL FIELD VERIFY AND RECORD THE LOCATION(S) OF ALL EXISTING CEILING MOUNTED ITEMS: LIGHT FIXTURES, SPEAKERS, DIFFUSERS, RETURNS, EXHAUST FANS, ALARM DEVICES, ETC. NOTE: THESE ITEMS ARE NOT NECESSARILY INDICATED ON THE DRAWINGS.
12. IT IS THE CONTRACTORS RESPONSIBILITY TO RECORD EXISTING CONDITIONS PRIOR TO STARTING WORK.
13. DOMINION ENERGY (DE) OWNS AND OPERATES THE MEDIUM VOLTAGE ELECTRICAL DISTRIBUTION SYSTEM AND ASSOCIATED SECONDARY SERVICE CONDUCTORS TO A DEMARK POINT FOR BUILDINGS AT FORT STORY. FOR THIS PROJECT, COST ASSOCIATED WITH DOMINION ENERGY TO DE- OR RE-ENERGIZE THE ELECTRICAL SERVICE SHALL BE PAID DIRECTLY TO DE BY THE CONTRACTOR.

MARK | DESCRIPTION | DATE

A/E INFO

APPROVED

FOR COMMANDER NAVFAC

ACTIVITY

SATISFACTORY TO | DATE

DES	SL	DRW SL	CHK CML
PM/DM	J HOFFLER/SHUN LI		
BRANCH MANAGER	F.C. FRANKLIN		
CHIEF ENG/ARCH	B.P. ROWE		
FIRE PROTECTION			

DEPARTMENT OF THE NAVY
NAVAL FACILITIES ENGINEERING SYSTEMS COMMAND
VIRGINIA BEACH, VA.
FEAD LITTLE CREEK – FORT STORY
VIRGINIA BEACH, VA.
JBLCFS LITTLE CREEK

BLDG 810 REPLACE HVAC PACKAGE UNIT

COVER SHEET

SCALE:	AS NOTED
EPROJECT NO.:	1570672
CONSTR. CONTR. NO.	N/A
NAVFAC DRAWING NO.	12925046
SHEET	11 OF 28

G-001

DRAWFORM REVISION: 14 SEP 2023

FILE NAME: K:\NAVFacHQ\FortStory\Buildings\810\2017_1570672_DBB_Replace HVAC Package Unit Bldg 810\8_Design\Drawings\Bldg 810-1570672-G-001.dwg LAYOUT NAME: G-001 COVER SHEET PLOTTED: Tuesday, March 24, 2026 – 1:16pm USER: shunfli

MECHANICAL LEGEND

T	TEMPERATURE SENSOR
H	HUMIDITY SENSOR
OT	OVERRIDE TIMER
EM	EMERGENCY SHUTDOWN SWITCH
A 70	AIR TERMINAL TAG WITH AIR FLOW (CFM)
12x10 OR 12/10	RECTANGULAR DUCT DIMENSIONS (INCHES)
12"ø	ROUND DUCT DIMENSION
	FLEXIBLE ROUND DUCT
	DOWNWARD DIRECTION OF SLOPED PIPING
	SUPPLY DUCT, SUPPLY DUCT DOWN/UP
	RETURN DUCT, RETURN DUCT DOWN/UP
	GATE VALVE
	GLOBE VALVE
	BUTTERFLY VALVE
	MANUAL FLOW CONTROL BALANCING VALVE
	CHECK VALVE
	AUTOMATIC FLOW BALANCING VALVE
	PRESSURE REDUCING VALVE
	SQUARE HEAD BALANCING COCK
	DRAIN VALVE WITH HOSE CONNECTION
	2-WAY CONTROL VALVE
	3-WAY CONTROL VALVE
	RELIEF VALVE
	BACKFLOW PREVENTER
	MANUAL AIR VENT
	VACUUM BREAKER
T	STEAM TRAP
	WYE STRAINER
	VALVE IN VERT. PIPING
	SPRINKLER HEAD
	STRAINER W/ BLOWDOWN VALVE
C.O.	CLEAN OUT
	ECCENTRIC REDUCER
	PIPE REDUCER
	UNION
	THERMOMETER IN PIPE WELL
	PRESSURE GAUGE W/ SHUTOFF COCK
	PIPE CAP
	FLANGE
	FLEXIBLE PIPE CONNECTOR
	THIN LINE WEIGHT INDICATES EXISTING ITEM TO REMAIN
	HEAVY LINE WEIGHT INDICATES NEW WORK TO BE PROVIDED
	HEAVY DASHED LINE WEIGHT INDICATES EXISTING ITEM TO REMOVE, REFER TO DEMOLITION NOTES.
1	DEMOLITION WORK NOTE
1	NEW WORK NOTE

AD — ACCESS DOOR

VOLUME DAMPER

MECHANICAL PIPING LEGEND

--- NAME ---	PIPING TO BE REMOVED
—CHR—	CHILLED WATER RETURN PIPING
—CHS—	CHILLED WATER SUPPLY PIPING
—D—	CONDENSATE DRAIN PIPING
—DCW—	DOMESTIC COLD WATER PIPING
—HG—	HOT GAS BYPASS PIPING
—HWR—	HOT WATER RETURN PIPING
—HWS—	HOT WATER SUPPLY PIPING
— RL —	REFRIGERANT LIQUID PIPING
— RS —	REFRIGERANT SUCTION PIPING
—LPS—	LOW PRESSURE STEAM
—LPC—	LOW PRESSURE CONDENSATE

MECHANICAL ABBREVIATIONS

AD	ACCESS DOOR
AFF	ABOVE FINISHED FLOOR
AP	ACCESS PANEL
APD	AIR PRESSURE DROP
AHU	AIR HANDLING UNIT
BD	BALANCING DAMPER
BR	BASEBOARD RADIATOR
BTUH	BRITISH THERMAL UNIT PER HOUR
C	COMMON
Cv	LOSS COEFFICIENT
CU	CONDENSING UNIT
CW	CHILLED WATER
CFM	CUBIC FEET PER MINUTE
CLG	CEILING
CND	CONDENSER
COP	COEFFICENT OF PERFORMANCE
CRAHU	COMPUTER ROOM AIR HANDLING UNIT
DB	DRY BULB
DDC	DIRECT DIGITAL CONTROL
DEG	DEGREE
DX	DIRECT EXPANSION
EAT	ENTERING AIR TEMPRATURE
ECM	ELECTRONIC CONTROL MODULE
EER	ENERGY EFFICIENCY RATIO
EF	EXHAUST FAN
EFF	EFFICIENCY
ESP	EXTERNAL STATIC PRESSURE
EWT	ENTERING WATER TEMPERATURE
EXST	EXISTING
F	FAHRENHEIT
FCU	FAN COIL UNIT
FD	FIRE DAMPER
FT	FEET
FTWG	FEET OF WATER GAUGE
GPM	GALLONS PER MINUTE
HGT	HEIGHT
HP	HEAT PUMP, HORSEPOWER
HR	HOUR
HW	HOT WATER
HX	HEAT EXCHANGER
IAW	INCHES OF WATER GAUGE
IWG	IN ACCORDANCE WITH
kW	KILOWATT
LAT	LEAVING AIR TEMPERATURE
LBS	POUNDS
LV	LOUVER
LWT	LEAVING WATER TEMPERATURE
MAU	MAKEUP AIR UNIT
MAX	MAXIMUM
MIN	MINIMUM
NC	NOISE CRITERIA, NORMALLY CLOSED
NO	NUMBER, NORMALLY OPEN
OA	OUTSIDE AIR
OAU	OUTSIDE AIR UNIT
OU	OUTDOOR UNIT
PH	PHASE
PRS	PRESSURE REDUCING STATION
PSI	POUNDS PER SQUARE INCH
RA	RETURN AIR
RH	RELATIVE HUMIDITY
RL	REFRIGERANT LIQUID
RS	REFRIGERANT SUCTION
RTU	ROOFTOP UNIT
SA	SUPPLY AIR
SEER	SEASONAL ENERGY EFFICIENCY RATIO
SIM	SIMILAR
SP	STATIC PRESSURE
SQ	SQUARE
TYP	TYPICAL
UH	UNIT HEATER
UOI	UNLESS OTHERWISE INDICATED
V	VOLTS
VFD	VARIABLE FREQUENCY DRIVE
W	WIDTH
WB	WET BULB
WPD	WATER PRESSURE DROP
°	DEGREES
ø	DIAMETER

MECHANICAL SYMBOLS

	POINT OF DISCONNECTION
	POINT OF CONNECTION

GENERAL MECHANICAL NOTES

1. THESE GENERAL MECHANICAL NOTES APPLY TO ALL MECHANICAL DRAWINGS IN THIS SET. SHEET SPECIFIC NOTES ARE INDICATED ON EACH SHEET UNDER GENERAL SHEET NOTES.
2. PATCH ALL HOLES FROM REMOVAL OF PIPING, DUCTWORK, OR EQUIPMENT TO MATCH ADJACENT CONSTRUCTION.
3. PROVIDE ALL MATERIALS AND EQUIPMENT AND PERFORM ALL LABOR REQUIRED TO INSTALL COMPLETE AND OPERABLE MECHANICAL SYSTEMS AS INDICATED ON THE DRAWINGS, AS SPECIFIED AND AS REQUIRED BY CODE.
4. INSTALL ALL MECHANICAL EQUIPMENT AND APPURTENANCES IN ACCORDANCE WITH MANUFACTURER'S RECOMMENDATIONS, THIS CONTRACT'S DOCUMENTS, AND APPLICABLE CODES AND REGULATIONS.
5. PROVIDE VIBRATION ISOLATORS FOR ALL MECHANICAL EQUIPMENT TO PREVENT TRANSMISSION OF VIBRATION TO BUILDING STRUCTURE.
6. ALL OPENINGS IN FIRE WALLS DUE TO DUCTWORK, PIPING, CONDUIT, ETC., SHALL BE FIRE STOPPED.
7. EXISTING DUCT AND PIPING SIZES INDICATED ARE APPROXIMATE. FIELD VERIFY ALL DIMENSIONS.
8. PROVIDE PIPE SLEEVES FOR ALL PIPING PENETRATIONS THRU WALLS AND FLOORS. EACH PIPE SHALL BE SEPARATELY SLEEVED. PROVIDE CONTINUOUS SEALANT JOINT AROUND PIPE SLEEVE, BOTH SIDES OF WALL, WATERTIGHT.
9. PROVIDE P-TRAPS IN CONDENSATE DRAIN PIPING AT EACH AHU UNLESS THE AHU IS EQUIPPED WITH AN INTERNAL TRAP.
10. AFTER THE PIPING IS INSULATED, PROVIDE SETON BRAND OR EQUAL FACTORY-FABRICATED PIPE LABELS WITH DIRECTION OF FLOW. PROVIDE AT 10 FOOT INTERVALS ON PIPING MAINS AND 5 FOOT INTERVALS ON THE BRANCH RUNOUTS FROM MAINS. PROVIDE ON THE FOLLOWING PIPING SYSTEM:

    HEATING HOT WATER
    CHILLED WATER
    CONDENSATE DRAIN

DATE | DESCRIPTION | MARK

NAVFAC

SEAL

A/E INFO

APPROVED

FOR COMMANDER NAVFAC

ACTIVITY

SATISFACTORY TO DATE

DES	SL	DRW	SL	CHK	CML
PM/DM	J HOFFLER/SHUN LI				
BRANCH MANAGER	F.C. FRANKLIN				
CHIEF ENG/ARCH	B.P. ROWE				
FIRE PROTECTION					

DEPARTMENT OF THE NAVY
NAVAL FACILITIES ENGINEERING SYSTEMS COMMAND
FEAD LITTLE CREEK

NAVAL FACILITIES ENGINEERING SYSTEMS COMMAND
VIRGINIA BEACH, VA.

JBLCFS LITTLE CREEK – FORT STORY
VIRGINIA BEACH, VA.

BLDG 810 REPLACE HVAC PACKAGE UNIT

MECHANICAL GENERAL DATA SHEET

SCALE:	AS NOTED
EPROJECT NO.:	1570672
CONSTR. CONTR. NO.	N/A
NAVFAC DRAWING NO.	12925047
SHEET	12 OF 28

M-001

DRAWFORM REVISION: 14 SEP 2023

FILE NAME: K:\NAVFarr\Story\Buildings\810\2017_1570672_DBB_Replace HVAC Package Unit Bldg 810\8_Design\Drawings\Bldg 810-1570672-M-001.dwg LAYOUT NAME: M-001 PLOTTED: Tuesday, March 24, 2026 - 1:16pm USER: shunli

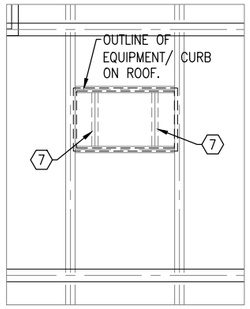

FRAMING - DEMOLITION
SCALE: 1/4"=1'-0"
C4

DEMOLITION KEYNOTES

1. DEMOLISH GAS PACK ON ROOF COMPLETE. SHUT OFF GAS AND CAP. SEE NEW WORK FOR DIRECTION TO MOVE THE LOCATION OF THE GAS SHUT OFF VALVE.
2. REUSE CURB IF IT FITS THE NEW UNIT OR ELSE DEMOLISH THE CURB COMPLETELY.
3. DEMOLISH THE COMBINATION DIFFUSER AND RETURN GRILLE.
4. DEMOLISH THE DUCTWORK TO THE ROOF.
5. DEMOLISH THE THERMOSTAT.
6. DEMOLISH THE EXHAUST FAN.
7. DEMOLISH THE STEEL FRAMING AROUND THE DUCT PENETRATION AND GRILLES. SEE NEW WORK SHEET M-101 FOR NEW CHANNEL.
8. EXISTING WINDOW AC UNIT TO REMAIN.
9. EXISTING TWO-PLY MODIFIED BITUMEN MEMBRANE INCLUDING INSULATION.

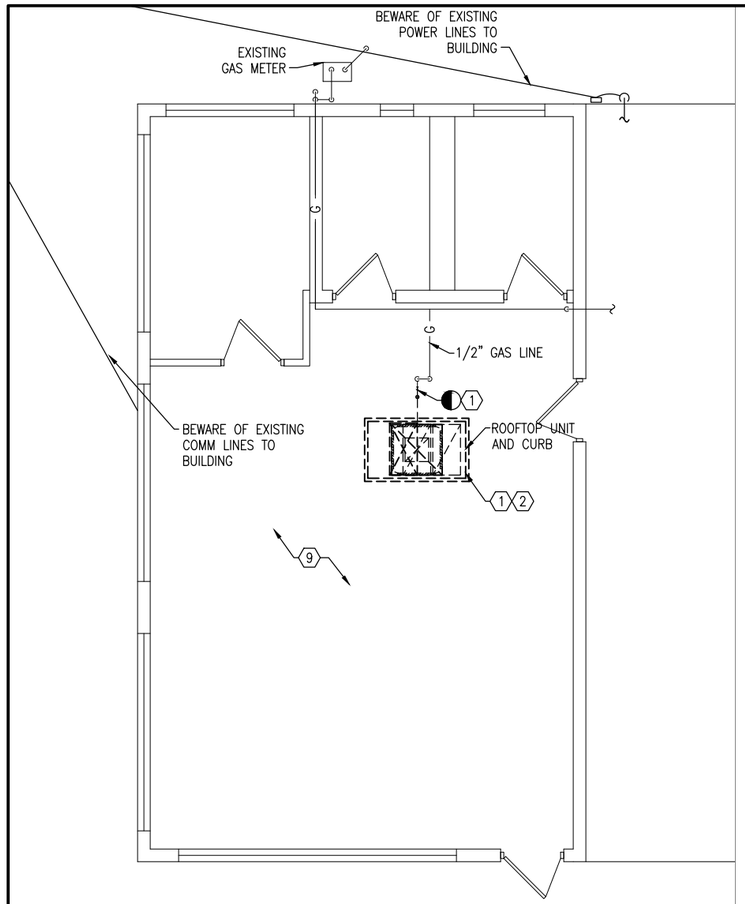

OFFICE RTU - ROOF - DEMOLITION
SCALE: 1/4"=1'-0"
MD-101
A1
PLAN NORTH

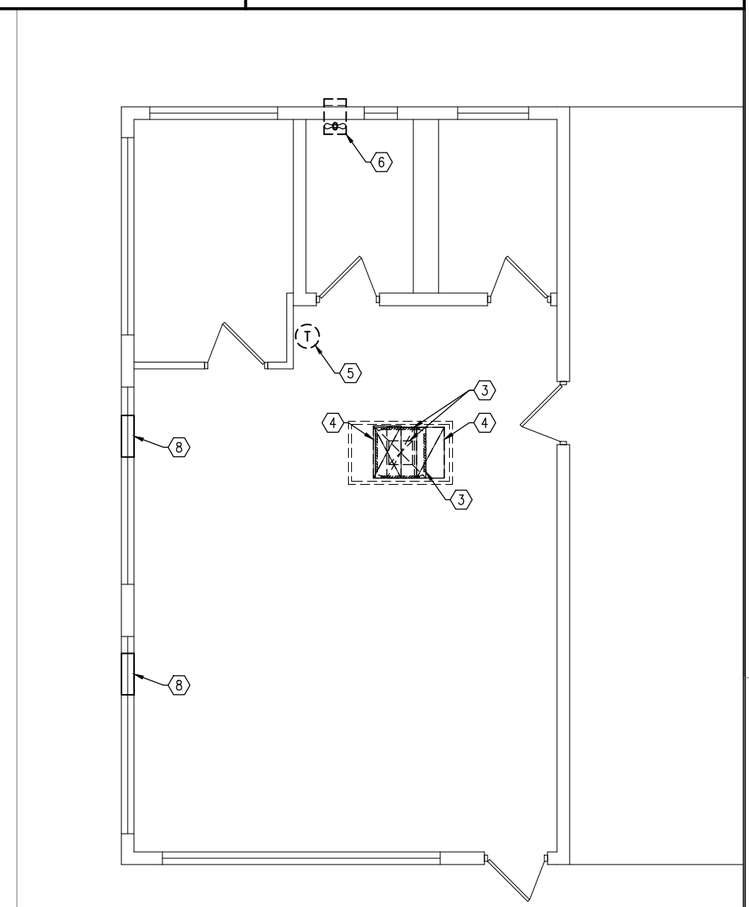

OFFICE RTU - DEMOLITION
SCALE: 1/4"=1'-0"
MD-101
A3
PLAN NORTH

KEYPLAN
NO SCALE
PLAN NORTH

GRAPHIC SCALE
1/4"=1'-0" 0' 2' 4' 8'

MARK	DESCRIPTION	DATE

NAVFAC

SEAL

A/E INFO

APPROVED
FOR COMMANDER NAVFAC

ACTIVITY

SATISFACTORY TO DATE

DES	SL	DRW	SL	CHK	CML
PM/DM	J HOFFLER/SHUN LI				
BRANCH MANAGER	F.C. FRANKLIN				
CHIEF ENG/ARCH	B.P. ROWE				
FIRE PROTECTION					

DEPARTMENT OF THE NAVY
NAVAL FACILITIES ENGINEERING SYSTEMS COMMAND
NAVAL FACILITIES ENGINEERING SYSTEMS COMMAND
VIRGINIA BEACH, VA.
FEAD LITTLE CREEK
JBLCFS LITTLE CREEK - FORT STORY
VIRGINIA BEACH, VA.
BLDG 810 REPLACE HVAC PACKAGE UNIT
OFFICE RTU - DEMOLITION

SCALE: AS NOTED
EPROJECT NO.: 1570672
CONSTR. CONTR. NO. N/A
NAVFAC DRAWING NO. 12925048
SHEET 13 OF 28
MD-101

DRAWFORM REVISION: 14 SEP 2023

FILE NAME: C:\Users\shun.li\AppData\Local\Temp\AcPublish_2472\Bldg 810-1570672-MD-101.dwg LAYOUT NAME: MD-101 PLOTTED: Tuesday, March 24, 2026 - 1:16pm USER: shun.li

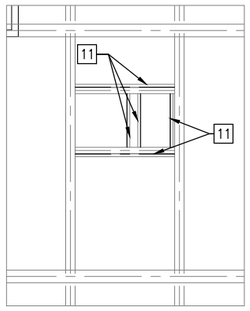

FRAMING - NEW WORK
SCALE: 1/4"=1'-0"
C4

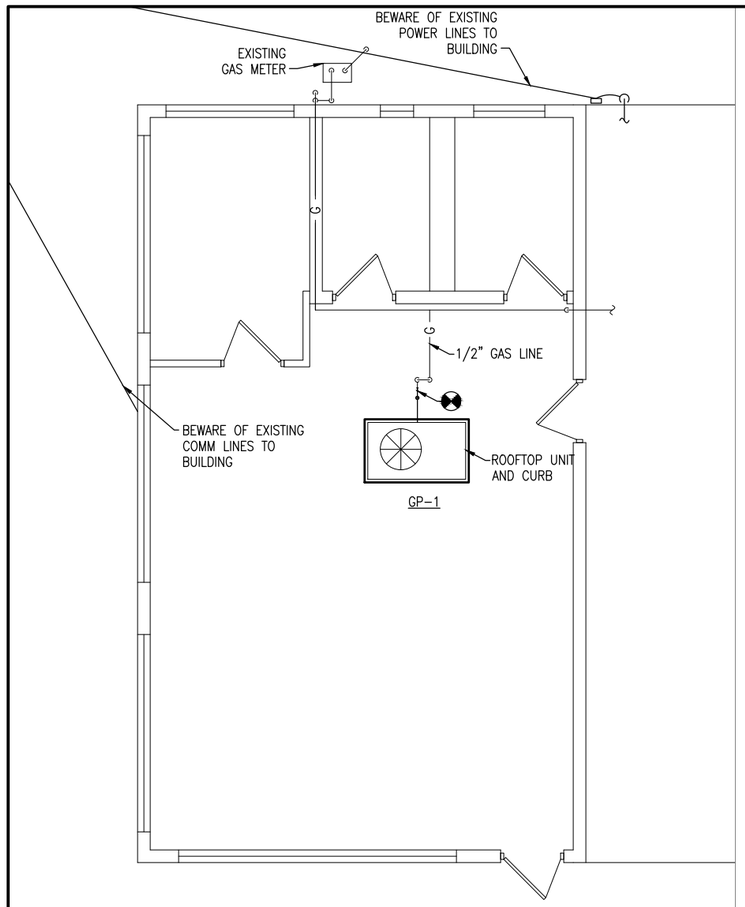

OFFICE RTU - ROOF - NEW WORK
SCALE: 1/4"=1'-0"
PLAN NORTH
MD-101 A1

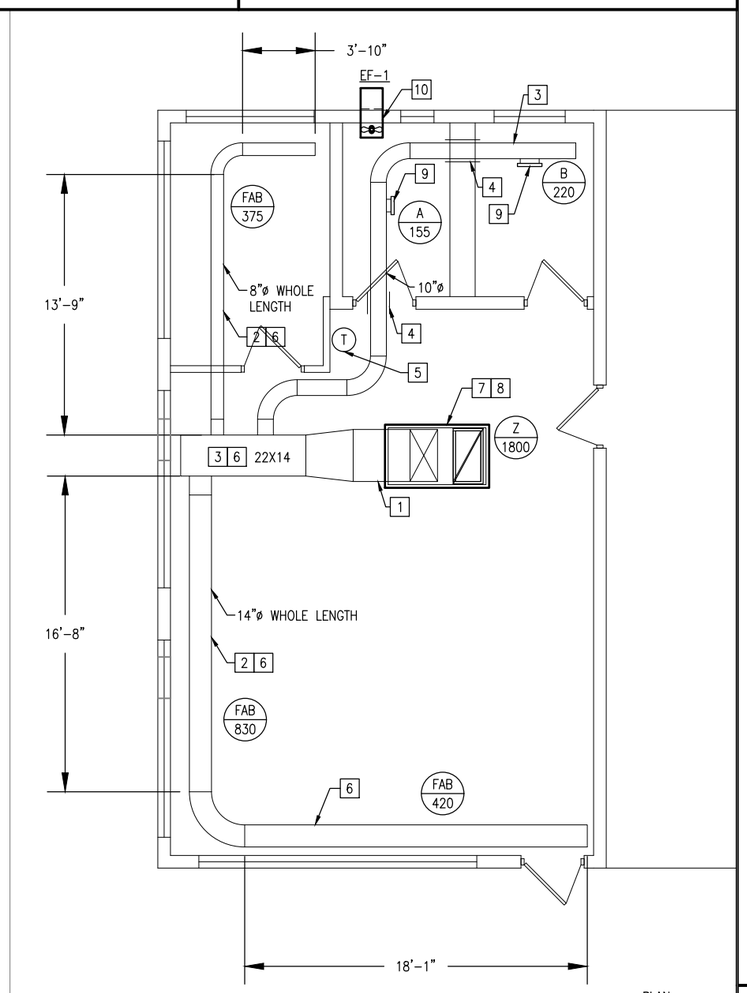

OFFICE RTU - NEW WORK
SCALE: 1/4"=1'-0"
PLAN NORTH
MD-101 A3

NEW WORK KEYNOTES

1. MATCH THE MANUFACTURER'S DISCHARGE DIMENSIONS IN A SWEEP ELBOW FROM THE ROOF. SEE ROOF EQUIPMENT DETAIL ON SHEET M-501.
2. PROVIDE FABRIC DUCT. LAYOUT DIMENSIONS AND PERCENT OF DIFFUSERS ARE A GUIDE. THESE ARE FROM A PARTICULAR VENDOR. 16% OF AIRFLOW IS DIFFUSERS BUILT INTO THE FABRIC AND THE REMAINDER IS HOLES IN THE DUCT. PROVIDE CFM STATED FOR EACH LEG. PROVIDE INNER FRAME OR RETAINING RINGS SO THAT IT ALWAYS LOOKS FULL. PROVIDE GREEN COLOR TO MATCH THE CEILING. DO NOT USE THE COLOR RED.
3. PROVIDE GALVANIZED STEEL DUCTWORK.
4. PROVIDE SLEEVE IN WALL.
5. PROVIDE THERMOSTAT AT IDENTICAL HEIGHT OF EXISTING THERMOSTAT.
6. COORDINATE WITH ELECTRICIAN TO LOWER LIGHTS OR MOVE LIGHTS OVER. SEE ELECTRICAL SHEETS.
7. PROVIDE A GAS PACK ON THE ROOF COMPLETE. REFER TO PACKAGED GAS PACK SCHEDULE ON SHEET M-601. SEE ROOF EQUIPMENT DETAIL SHEET M-501. SHUT OFF GAS TO THE BUILDING AND PROVIDE A NEW GAS SHUT OFF VALVE BEFORE THE DRIP LEG. SEE GAS PIPING DETAIL ON SHEET M-501. PROVIDE A DRAIN WITH A TRAP. SEE AHU-CONDENSATE DRAIN DETAIL ON SHEET M-501.
8. ATTACH GAS PACK TO CURB. SEE ROOF EQUIPMENT SUPPORT DETAIL SHEET M-501. PROVIDE A PRE-MANUFACTURED ROOF CURB. PROVIDE PARTIAL ROOF PATCH CONSISTING OF TWO-PLY MODIFIED BITUMEN MEMBRANE INCLUDING INSULATION, FLASHING AND COVER BOARD AROUND THE NEW CURB AND METAL DECK IN-FILL AREA TO MATCH EXISTING ROOF THICKNESS. DO NOT VOID WARRANTY.
9. PROVIDE DIFFUSERS AND GRILLES. REFER TO DETAILS ON SHEET M-501, REGISTER DUCT CONNECTION FOR SUPPLY REGISTER AND RETURN GRILLE CONNECTION FOR RETURN GRILLE.
10. PROVIDE EXHAUST FAN. PROVIDE MOTOR SIDE WIRE GUARD OR BOX ON THE INLET SIDE AND ON THE DISCHARGE SIDE, PROVIDE A WEATHER HOOD. SEE PROPELLER FAN DETAIL ON SHEET M-501.
11. PROVIDE 6" C CHANNELS. FRAME OUT THE SUPPLY AND RETURN OPENINGS AND THE EDGE OF THE CURB. PROVIDE THE CHANNELS AGAINST THE VALLEYS OF THE ROOF DECK. SPECIFICALLY, THERE SHOULD NOT BE A GAP BETWEEN THE SUPPORT CHANNEL AND THE ROOF DECK.

KEYPLAN
NO SCALE
PLAN NORTH

GRAPHIC SCALE
1/4"=1'-0" 0' 2' 4' 8'

MARK	DESCRIPTION	DATE

A/E INFO
APPROVED
FOR COMMANDER NAVFAC
ACTIVITY
SATISFACTORY TO DATE
DES SL DRW SL CHK CML
PM/DM J HOFFLER/SHUN LI
BRANCH MANAGER F.C. FRANKLIN
CHIEF ENG/ARCH B.P. ROWE
FIRE PROTECTION

DEPARTMENT OF THE NAVY
NAVAL FACILITIES ENGINEERING SYSTEMS COMMAND
VIRGINIA BEACH, VA.
FSO LITTLE CREEK
NAVAL FACILITIES ENGINEERING SYSTEMS COMMAND
VIRGINIA BEACH, VA.
JBLCFS LITTLE CREEK - FORT STORY
VIRGINIA BEACH, VA.

BLDG 810 REPLACE HVAC PACKAGE UNIT

OFFICE RTU - NEW WORK

SCALE: AS NOTED
EPROJECT NO.: 1570672
CONSTR. CONTR. NO. N/A
NAVFAC DRAWING NO. 12925049
SHEET 14 OF 28

M-101

DRAWFORM REVISION: 14 SEP 2023

FILE NAME: C:\Users\shunl\Vegdata\Local\Temp\AcPublish_24\72\Bldg 810-1570672-M-101.dwg LAYOUT NAME: M-101 PLOTTED: Tuesday, March 24, 2026 - 1:16pm USER: shunl

CONTROL SEQUENCE GP-1

THE UNIT SHALL BE CONTROLLED BY A STAND ALONE, PROGRAMMABLE 7-DAY THERMOSTAT AND AN ATFP SWITCH. THE THERMOSTAT SHALL BE PROGRAMMED OR SCHEDULED FOR OPERATION ON A 5 DAY WORK WEEK, TIME OF DAY BASIS AND PLACED INTO OCCUPIED AND UNOCCUPIED MODES. OCCUPIED TIMES ARE MON – FRI (ADJUSTABLE), 0730 TILL 1600 (ADJUSTABLE). UNOCCUPIED TIMES ARE ALL OTHER TIMES (ADJUSTABLE).
ATFP: WHEN ATFP SWITCH IS PRESSED, THE UNIT SHALL SHUT DOWN AND DAMPERS CLOSE. ATFP SHALL BE RESET MANUALLY BY SWITCH.

UNOCCUPIED MODE:

THE SUPPLY FAN SHALL CYCLE WITH THE AIR CONDITIONER OR THE GAS HEATER TO MAINTAIN UNOCCUPIED SETPOINT OF 80°F +/- 1.5 COOLING (ADJUSTABLE) AND 55°F +/- 1.5 HEATING (ADJUSTABLE). THE UNIT SHALL RUN A MINIMUM OF 5 MINUTES (ADJUSTABLE) AND SHUT OFF WHEN THE TEMPERATURE IS REACHED. OUTSIDE AIR DAMPERS AND EXHAUST DAMPERS SHALL BE CLOSED.

OCCUPIED MODE:

THE SUPPLY FAN SHALL CYCLE WITH THE AIR CONDITIONER OR THE GAS HEATER. THE THERMOSTAT SHALL HAVE A FAN ON/AUTOMATIC SWITCH TO RUN THE FAN AUTOMATICALLY OR CONTINUOUSLY. UPON A RISE IN SPACE TEMPERATURE ABOVE THE COOLING SETPOINT 75 +/- 1.5 DEG F (ADJUSTABLE), THE UNIT CONTROLLER SHALL ENERGIZE AND MODULATE THE REFRIGERATION CONTROLS TO MAINTAIN THE COOLING SETPOINT. UPON A DROP IN THE SPACE TEMPERATURE THE REVERSE SHALL OCCUR. UPON A CONTINUED DROP IN SPACE TEMPERATURE BELOW THE HEATING SETPOINT 70 +/- 2.0 DEG F (ADJUSTABLE), THE GAS FURNACE CONTROLS SHALL FIRE, MODULATE AND MAINTAIN SETPOINT. UPON A RISE IN TEMPERATURE, THE REVERSE SHALL OCCUR.

THE OA DAMPER SHALL BE OPEN TO THE MINIMUM POSITION REQUIRED FOR OUTSIDE AIR VENTILATION. THIS POSITION SHALL BE SET IN CONJUNCTION WITH THE BALANCE CONTRACTOR.

THE OUTSIDE AND EXHAUST AIR DAMPERS SHALL CLOSE AND THE RETURN AIR DAMPER SHALL OPEN WHEN THE UNIT IS DE-ENERGIZED.

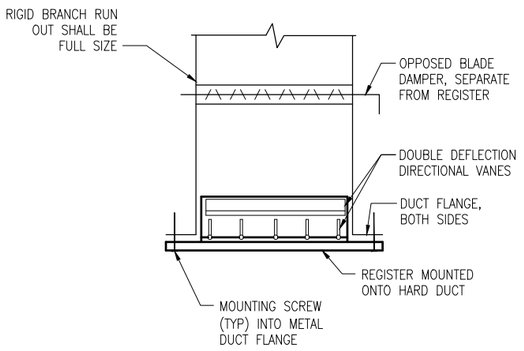

REGISTER DUCT CONNECTION DETAIL
NOT TO SCALE — M-101 C3

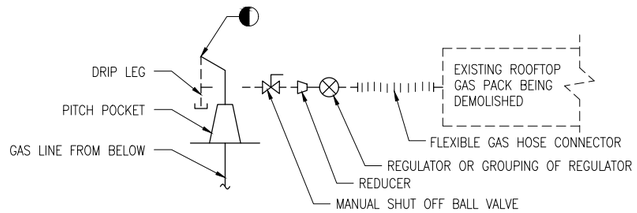

DEMOLITION PLAN

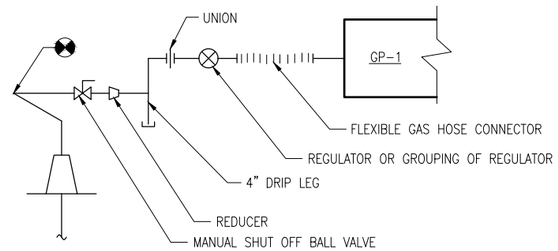

NEW WORK PLAN

GAS PIPING DETAIL
NOT TO SCALE — M-101 B5

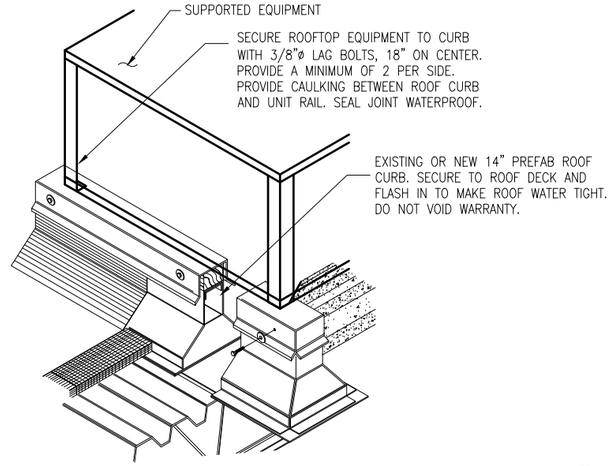

ROOF EQUIPMENT SUPPORT DETAIL
NOT TO SCALE — M-101 B2

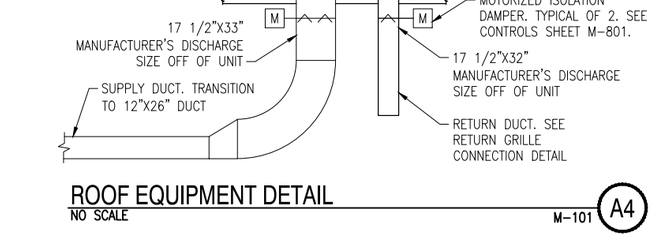

RETURN GRILLE CONNECTION DETAIL
NOT TO SCALE — M-101 B4

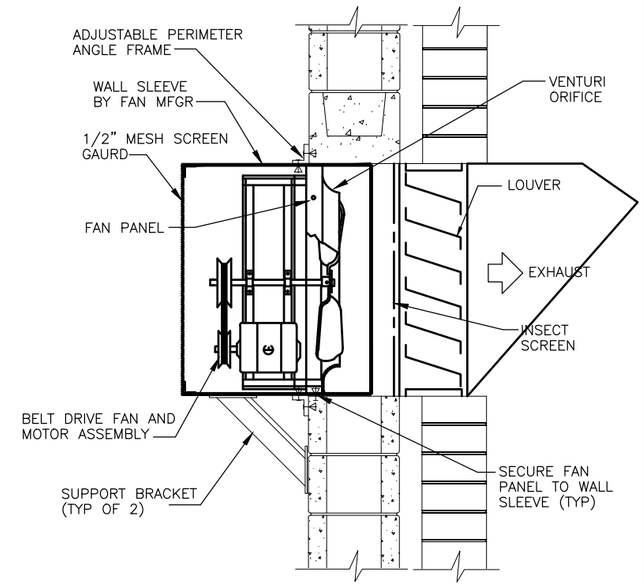

WALL MOUNTED PROPELLER FAN DETAIL
NOT TO SCALE — M-101 A5

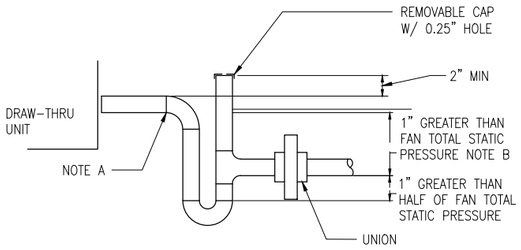

NOTES:
A. DRAIN SHALL BE FULL SIZE OF COIL CONNECTION

B. ADJUST DIMENSIONS WHERE REQUIRED TO CONFORM TO MANUFACTURER'S RECOMMENDATIONS.

AHU-CONDENSATE DRAIN
NOT TO SCALE — M-101 A2

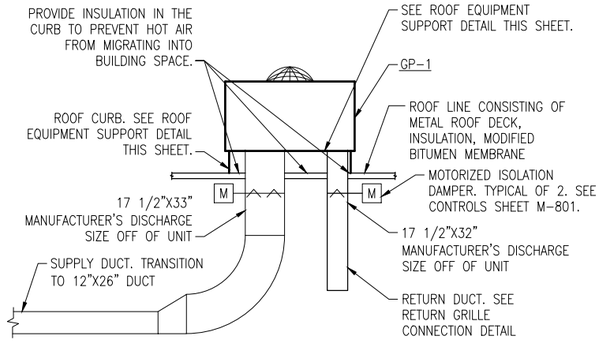

ROOF EQUIPMENT DETAIL
NO SCALE — M-101 A4

DEPARTMENT OF THE NAVY
NAVAL FACILITIES ENGINEERING SYSTEMS COMMAND
VIRGINIA BEACH, VA.
FEAD LITTLE CREEK
JBLCFS LITTLE CREEK – FORT STORY
VIRGINIA BEACH, VA.

BLDG 810 REPLACE HVAC PACKAGE UNIT

MECHANICAL DETAILS AND CONTROLS

A/E INFO
APPROVED
FOR COMMANDER NAVFAC
ACTIVITY
SATISFACTORY TO DATE
DES SL | DRW SL | CHK CML
PM/DM J HOFFLER/SHUN LI
BRANCH MANAGER F.C. FRANKLIN
CHIEF ENG/ARCH B.P. ROWE
FIRE PROTECTION

SCALE: AS NOTED
EPROJECT NO.: 1570672
CONSTR. CONTR. NO. N/A
NAVFAC DRAWING NO. 12925050
SHEET 15 OF 28
M-501

DRAWFORM REVISION: 14 SEP 2023

DATE | DESCRIPTION | MARK

SEAL

FILE NAME: K:\VA\FortStory\Buildings\810\2017_1570672_08B_Replace HVAC Package Unit Bldg 810\B_Design\Drawings\Bldg 810-1570672-M-501.dwg LAYOUT NAME: M-501 PLOTTED: Tuesday, March 24, 2026 - 1:16pm USER: shunli

PACKAGED GAS PACK SCHEDULE

TAG NO.	TYPE	S.A. CFM	O.A. CFM	ESP (W.G.)	COOLING						HEATING					ELECTRICAL DATA			REMARKS
					EAT DB °F	EAT WB °F	LAT DB °F	LAT WB °F	TOTAL CAPACITY MBH	SENSIBLE CAPACITY MBH	INPUT CAPACITY MBH	OUTPUT CAPACITY MBH	MIN EFF	EAT °F	INLET GAS PRESS (W.C.)	HP	VOLTS	PHASE	
GP–1	DX COOLING W/ GAS HEATER	2000	200	0.71"	83.7	68.6	58.6	57.7	69.7	54.7	80.0	64.8	80%	66.8	7 – 14"	1.0	208	3	SEE NOTES

NOTES:
1. PROVIDE WITH ECM MOTOR.
2. FILTRATION WILL BE MERV 11 AT RETURN GRILLE.
3. PROVIDE LOW HEAT OPTION WITH A STAINLESS STEEL HEAT EXCHANGER.
4. COOLING MBH AND HEATING MBH SCHEDULED ARE MINIMUMS.
5. PROVIDE WITH 24 HOUR, 7 DAY PROGRAMMABLE THERMOSTAT.
6. PROVIDE A DISCONNECT.
7. PROVIDE WITH COASTAL CORROSION RESISTANT MATERIAL PROTECTION.
8. PROVIDE VARIABLE FREQUENCY DRIVE FOR SOFT START FOR FABRIC DUCT.
9. PROVIDE WITH ROOF CURB, LIMIT THE UNIT TO 1250 LBS.
10. DESIGN IS BASED ON TRANE MODEL YSC072.

DIFFUSER/REGISTER/GRILL SCHEDULE

MARK NO.	TYPE	CFM	ESP P.D. (IN. WG.)	MAX P.D. (IN. WG.)	NOMINAL DUCT SIZE INCHES	N.C.	SERVICE	FINISH	REMARKS
A	DUCT MOUNTED	155		0.056	10"x8"	19	SUPPLY	WHITE	DOUBLE DEFLECTION, DESIGN IS BASED ON TITUS 250–AA
B	DUCT MOUNTED	220		0.056	12"x8"	20	SUPPLY	WHITE	DOUBLE DEFLECTION, DESIGN IS BASED ON TITUS 250–AA
FAB	FABRIC / SUSPENDED	375	0.42	0.49	8"ø	–	SUPPLY	LIGHT GREEN	16% DIFFUSERS, REMAINDER IS HOLES IN DUCT, COLOR LIGHT GREEN TO MATCH CEILING
FAB	FABRIC / SUSPENDED	420	0.48	0.57	14"ø	–	SUPPLY	LIGHT GREEN	16% DIFFUSERS, REMAINDER IS HOLES IN DUCT, COLOR LIGHT GREEN TO MATCH CEILING
FAB	FABRIC / SUSPENDED	830	0.48	0.57	14"ø	–	SUPPLY	LIGHT GREEN	16% DIFFUSERS, REMAINDER IS HOLES IN DUCT, COLOR LIGHT GREEN TO MATCH CEILING
Z	DUCT MOUNTED	1800		1.01	36"x18"	–	RETURN	WHITE	EGGCRATE FILTERBACK GRILLE, 1/2"x1/2"x1/2" CORES, DESIGN IS BASED ON TITUS 50–FF

NOTES:
1. FOR FILTERBACK RETURNS, PRESSURE DROP INCLUDES CLEAN FILTER. PROVIDE MERV 11 FILTER.
2. FABRIC DUCT – PERCENTAGE OF DIFFUSERS TO AIR ESCAPING BY HOLES IS PARTICULAR MANUFACTURER'S DESIGN. CFM PER LEG MUST REMAIN AS ON DRAWINGS.

FAN SCHEDULE

MARK	SERVICE	LOCATION	QTY	TYPE	CFM	ESP (IN WG)	FAN DATA			ELECTRICAL DATA			DRIVE	MOTOR RPM	NOTES
							RPM	RLA	MAX. SONES	HP	VOLTS	PHASE			
EF–1	EXHAUST	RESTROOM	1	PROPELLER, SIDEWALL	70	0.1	702	1.9	1.1	1/8	115	1	DIRECT	1725	SEE NOTES

NOTES:
1. PROVIDE STANDARD DISCONNECT SWITCH.
2. PROVIDE WIREGUARD OR HOUSING ON THE INLET SIDE OF THE FAN.
3. PROVIDE INTERNAL SPEED CONTROL, ELECTRONICALLY COMMUTATED MOTOR.
4. PROVIDE 45 DEGREE WEATHER HOOD WITH BIRDSCREEN.
5. DESIGN IS BASED ON COOK MODEL XWD VF.

DUCT CONSTRUCTION AND LEAKAGE TEST

SYSTEM	DUCT PRESSURE CLASS (IN WG)				DUCT SEAL CLASS	DUCT LEAKAGE CLASS	
	SUPPLY	RETURN	EXHAUST	OUTSIDE AIR		RECTANGULAR	ROUND
EXHAUST DUCT	–	–	–	–	A	24	12
SUPPLY DUCT	1"	–	–	–	A	24	12
RETURN DUCT	–	1"	–	–	A	24	12
OUTSIDE AIR	–	–	–	1"	A	24	12

ALL DUCT SHALL BE SEALED TO DUCT SEAL CLASS A.
ALL DUCT WILL BE TESTED FOR LEAKAGE

DESIGN CONDITIONS

LOCATION	HEATING		COOLING			REMARKS
	DB	WB	DB	WB	RH	
OUTSIDE AIR	27°	24°	91°	76°	–	
INTERIOR SPACES	68° ± 2	–	76° ± 2	–	50%	

DATE | MARK | DESCRIPTION

NAVFAC

SEAL

A/E INFO

APPROVED
FOR COMMANDER NAVFAC

ACTIVITY

SATISFACTORY TO DATE

DES SL | DRW SL | CHK CML

PM/DM J HOFFLER/SHUN LI

BRANCH MANAGER F.C. FRANKLIN

CHIEF ENG/ARCH B.P. ROWE

FIRE PROTECTION

DEPARTMENT OF THE NAVY
NAVAL FACILITIES ENGINEERING SYSTEMS COMMAND
VIRGINIA BEACH, VA.
FEAD LITTLE CREEK
JBLCFS LITTLE CREEK – FORT STORY
VIRGINIA BEACH, VA.

BLDG 810 REPLACE HVAC PACKAGE UNIT

MECHANICAL SCHEDULES

SCALE: AS NOTED
EPROJECT NO.: 1570672
CONSTR. CONTR. NO. N/A
NAVFAC DRAWING NO. 12925051
SHEET 16 OF 28

M-601

DRAWFORM REVISION: 14 SEP 2023

FILE NAME: C:\Users\shun.li\Vepdata\Local\Temp\AcPublish_2472\Bldg 810–1570672–M–601.dwg LAYOUT NAME: M–601 PLOTTED: Tuesday, March 24, 2026 – 1:16pm USER: shun.li

ELECTRICAL LEGEND

(#)	DEMOLITION NOTE – REFER TO "DEMOLITION KEYNOTES" FOR EACH SHEET
[#]	NEW WORK NOTE – REFER TO "NEW WORK KEYNOTES" FOR EACH SHEET
#.	GENERAL NOTE – REFER TO "GENERAL NOTES" FOR EACH SHEET
———	OBJECTS ON DRAWINGS AT THIS LINEWEIGHT ARE CATEGORIZED AS NEW OR PROPOSED FOR CONSTRUCTION, UON.
– – – – –	OBJECTS ON DRAWINGS AT THIS LINEWEIGHT ARE CATEGORIZED AS EXISTING TO BE REMOVED–DEMOLISHED, UON.
———	OBJECTS ON DRAWINGS AT THIS LINEWEIGHT ARE CATEGORIZED AS EXISTING TO REMAIN, UON.
	LUMINAIRE TYPE. SEE LUMINAIRE SCHEDULE, SHEET E–101
	LUMINAIRE. (⊣ INDICATES BRACKET, WALL MOUNTED FIXTURES)
	EMERGENCY LUMINAIRE. (⊣ INDICATES BRACKET, WALL MOUNTED FIXTURES)
	EXIT LUMINAIRE, TYPE E. ARROW, WHEN USED, INDICATES DIRECTION. (⊣ INDICATES BRACKET, WALL MOUNTED FIXTURES) FILLED IN QUADRANT(s) OF SYMBOL INDICATES NUMBER AND ORIENTATION OF ILLUMINATED FACES.
S^a	LOW–VOLTAGE SWITCH, MOUNT 48" AFF UON. SUBSCRIPT INDICATES CONTROL GROUP
S_D	0–10V DIMMER SWITCH, MOUNT 48" AFF UON.
(OS)	OCCUPANCY SENSOR, CEILING MOUNTED UON.
$\$^{b}_{2}$	LINE–VOLTAGE TOGGLE SWITCH, 20 A, 120/277 V. MOUNT 48" AFF UON. SUBSCRIPT "2" = 2 WAY, "3" = 3 WAY, "4" = 4 WAY.
$\$_T$	TIMER SWITCH, MAX 15 MIN, WALL MOUNTED 48" AFF UON.
$\$_{OS}$	OCCUPANCY SENSOR CONTROLLER WALL MOUNTED 48" AFF UON.
117	ROOM NUMBER

(J)	JUNCTION BOX. MINIMUM 4" SQUARE X 2 1/8" / SIZE PER NEC.
(E)	EQUIPMENT CONNECTION
3P $\frac{30}{20}$ 3R	DISCONNECT SWITCH. 3P = NO. OF POLES, 30 = SWITCH RATING, 20 = FUSE RATING (NF INDICATES NON–FUSED), 3R INDICATES NEMA RATING.
	BRANCH CIRCUIT OR FEEDER WIRING IN CONDUIT. NO TICK MARKS INDICATE 2#12 CONDUCTORS & 1#12 GND. IN 3/4" CONDUIT UON. CONDUIT LARGER THAN 3/4" & WIRE LARGER THAN #12 SHALL BE INDICATED.
LA–1	HOMERUN TO PANEL. PANEL & CIRCUIT DESIGNATIONS AS INDICATED.
	208Y/120V PANELBOARD
	GROUND ROD
	METER BASE

ABBREVIATIONS

ø	PHASE
A	AMPERAGE OR AMPS
AFF	ABOVE FINISHED FLOOR
C	CONDUIT
CKT	CIRCUIT
DE	DOMINION ENERGY
EC	EMPTY CONDUIT
EXST	EXISTING
GFCI	GOVERNMENT FURNISHED CONTRACTOR INSTALLED
GFE	GOVERNMENT FURNISHED EQUIPMENT
GFGI	GOVERNMENT FURNISHED GOVERNMENT INSTALLED
GFI	GROUND FAULT INTERRUPTER
GND	GROUND
MCB	MAIN CIRCUIT BREAKER
MLO	MAIN LUGS ONLY
NF	NON FUSIBLE
NIC	NOT IN CONTRACT
NTS	NOT TO SCALE
RCPT	RECEPTACLE
RM	ROOM
TYP	TYPICAL
UON	UNLESS OTHERWISE NOTED
V	VOLTAGE OR VOLTS
W	WIRE
WP	WEATHERPROOF
XFMR	TRANSFORMER

GENERAL NOTES

1. ALL ELECTRICAL WORK AND MATERIAL IS NEW AND SHALL BE PROVIDED BY THE CONTRACTOR UON.
2. ELECTRICAL WORK AND MATERIALS SHALL BE AS PER NATIONAL ELECTRICAL CODE (NEC). ELECTRICAL EQUIPMENT AND MATERIALS SHALL BE LISTED AND LABELED FOR THEIR INTENDED USE.
3. SUBMIT SHOP DRAWINGS OF THE ELECTRICAL EQUIPMENT AND MATERIALS INTENDED TO BE USED ON THIS PROJECT FOR REVIEW AND APPROVAL.
4. DRAWINGS ARE BASED ON EXISTING BUILDING PLANS AND FIELD INVESTIGATIONS. CONTRACTOR SHALL VISIT THE EXISTING BUILDING AND BECOME FAMILIAR WITH THE EXISTING CONDITIONS. CONTRACTOR SHALL EXAMINE DRAWINGS TO AVOID CONFLICT.
5. UNLESS OTHERWISE INDICATED CONDUIT SHALL BE RUN CONCEALED IN FINISHED AREAS. INTERIOR WALL MOUNTED DEVICE AND JUNCTION BOXES SHALL BE FLUSH TYPE. WHERE POSSIBLE, RUN CONDUIT ABOVE CEILINGS AND IN NEW OR FURRED WALLS. CONDUIT MAY BE SURFACE MOUNTED TO EXISTING CMU WALLS AND PAINTED TO MATCH THE SURROUNDING SURFACE MATERIAL AND COLOR. REUSE OF EXISTING CONDUIT IN EXISTING WALLS IS ACCEPTABLE.
6. AN EQUIPMENT GROUND WIRE SHALL BE RUN WITH FEEDERS AND BRANCH CIRCUITS.
7. FEEDERS/CIRCUITS SHALL BE IDENTIFIED AT EACH END OF THE WIRE AND AT EVERY SPLICE OR JUNCTION/PULL BOX.
8. ELECTRICAL EQUIPMENT SHALL BE IDENTIFIED AND LABELED.
9. PROVIDE ARC–FLASH LABELS ON ALL PANELS/DISCONNECT SWITCHES AS PER UFC 3–560–01. REFER TO DETAIL THIS SHEET.
10. PROVIDE NAMEPLATES ON THE EXTERIOR OF ELECTRICAL PANELS, DISCONNECT SWITCHES, MOTOR STARTERS AND ENCLOSURES AS FOLLOWS:

PANEL LP1A	DEVICE ID
100A, 208Y/120V–3ø, 4W	DEVICE RATING
FEEDS FROM PANEL MDP	POWER SOURCE
INSTALLED 2016	INSTALLATION DATE
DRAWING NO. 15,350,896	NAVFAC DRAWING NUMBER

11. PROVIDE NEW TYPED DIRECTORIES ON CARD STOCK FOR PANELS (NEW OR EXISTING TO REMAIN) INCLUDED IN THIS PROJECT – REGULAR SHEET PAPER IS UNACCEPTABLE. WHEN REPLACING AN EXISTING DIRECTORY, MARK 'OLD' AND PLACE BEHIND NEW DIRECTORY.
12. COORDINATE ELECTRICAL WORK PRIOR TO FABRICATION AND INSTALLATION TO PREVENT CONFLICTS. NOTIFY CONTRACTING OFFICER WHERE CONFLICTS ARE DISCOVERED PRIOR TO CONSTRUCTION AND BEFORE BEGINNING WORK IN THOSE AREAS. ALL CONFLICTS THAT ARISE DUE TO LACK OF COORDINATION SHALL BE RECTIFIED BY THE CONTRACTOR AT NO COST TO THE GOVERNMENT.

GENERAL DEMOLITION NOTES

1. EQUIPMENT SHOWN WITH DASHED LINE SHALL BE DEMOLISHED, UON.
2. WIRING TO EQUIPMENT SHALL BE DEMOLISHED BACK TO SOURCE, UON.
3. CONDUIT SHALL BE DEMOLISHED, UON.
4. CONDUIT CONCEALED IN WALLS AND SLABS SHALL BE BLANKED OFF AND ABANDONED IN PLACE. PATCH WALLS AND SLABS AFTER DEMOLITION IS COMPLETE.
5. BOXES DISCONTINUED SHALL BE BLANKED OFF OR DEMOLISHED AND DEVICES DEMOLISHED.
6. EXISTING ELECTRICAL EQUIPMENT NOT INDICATED ON DEMOLITION PLAN SHALL REMAIN CONNECTED FOR CONTINUED USE.
7. CONTRACTOR SHALL RECONNECT EXISTING CIRCUIT(S) (INTERRUPTED BY REMOVAL OF EXISTING DEVICE) TO THE REMAINING ELECTRICAL EQUIPMENT LOCATED DOWNSTREAM FROM THE POINT OF INTERRUPTION.

3" INTERIOR
6" EXTERIOR

WARNING

Shock, Arc Flash, and Arc Blast Hazard Appropriate PPE Required Failure to Comply Can Result in Injury or Death Refer to UFC 3-560-01

2" INTERIOR
4" EXTERIOR

ARC FLASH WARNING LABEL DETAIL

NO SCALE

MARK	DESCRIPTION	DATE

NAVFAC

SEAL

A/E INFO

APPROVED

FOR COMMANDER NAVFAC

ACTIVITY

SATISFACTORY TO DATE

DES	SLC	DRW	SLC	CHK	JH
PM/DM	J HOFFLER/SHUN LI				
BRANCH MANAGER	F.C. FRANKLIN				
CHIEF ENG/ARCH	B.P. ROWE				
FIRE PROTECTION					

DEPARTMENT OF THE NAVY
NAVAL FACILITIES ENGINEERING SYSTEMS COMMAND
VIRGINIA BEACH, VA.

FEAD LITTLE CREEK
UBLCFS LITTLE CREEK – FORT STORY
VIRGINIA BEACH, VA.

BLDG 810 REPLACE HVAC PACKAGE UNIT

LEGEND, NOTES AND DETAILS

SCALE:	AS NOTED
EPROJECT NO.:	1570672
CONSTR. CONTR. NO.	N/A
NAVFAC DRAWING NO.	12925052
SHEET	17 OF 28

E-001

DRAWFORM REVISION: 14 SEP 2023

FILE NAME: C:\Users\shun.li\OpsData\Local\Temp\AcPublish_2472\Bldg 810–1570672–E–001.dwg LAYOUT NAME: E–001 LEGEND NOTES AND DETAILS PLOTTED: Tuesday, March 24, 2026 – 1:16pm USER: shun.li

FILE NAME: K:\VA\FortStory\Buildings\810\2017_1570672_D8B_Replace HVAC Package Unit Bldg 810\8_Design\Drawings\Bldg 810-1570672-E-101.dwg LAYOUT NAME: E-101 DEMOLITION AND NEW WORK PARTIAL PLANS PLOTTED: Tuesday, March 24, 2026 - 1:16pm USER: shuntl

LUMINAIRE SCHEDULE

TAG	PLATE	STYLE	SOURCE	LUMENS	CCT	LPW	WATTS	FEATURES/OPTIONS	MOUNTING	NOTES
A	NL-3	1'x4' LOW-PROFILE CURVED-BASKET WRAP	LED	3200	3500K	125	-	ACRYLIC DIFFUSER, LINEAR PRISMATIC LENS, 1% DIMMING, SELF-DIAGNOSTIC EMERGENCY BATTERY WHERE SHOWN ON PLAN	PENDANT 8' AFF	
B	NL-3	1'x2' LOW-PROFILE CURVED-BASKET WRAP	LED	3200	3500K	125	-	ACRYLIC DIFFUSER, LINEAR PRISMATIC LENS, 1% DIMMING	PENDANT 8' AFF	
E	NL-28	EXIT LIGHT - SINGLE FACE	LED	-	-	-	<5	WHITE THERMOPLASTIC HOUSING AND PANEL, RED LETTERS, SELF-DIAGNOSTIC EMERGENCY BATTERY	SURFACE WALL, ABOVE DOOR, UON	

LIGHTING CONTROL TABLE

ROOM #	ROOM TYPE	LOCAL CONTROL	MANUAL ON	AUTOMATIC ON 100% OR <50%	BI-LEVEL CONTROL	DAYLIGHT HARVESTING	AUTOMATIC FULL OFF	NOTES
100	OPEN OFFICE	YES	YES	<50%	DIMMING	N/A	YES	1
101	STORAGE	YES	YES	NO	-	N/A	TIMER	
102	TOILET	YES	NO	100%	-	N/A	YES	
103	BREAK/LOCKER	YES	YES	NO	-	N/A	TIMER	

NOTES:
1. SPACE SERVES AS EGRESS FOR OTHER SPACES

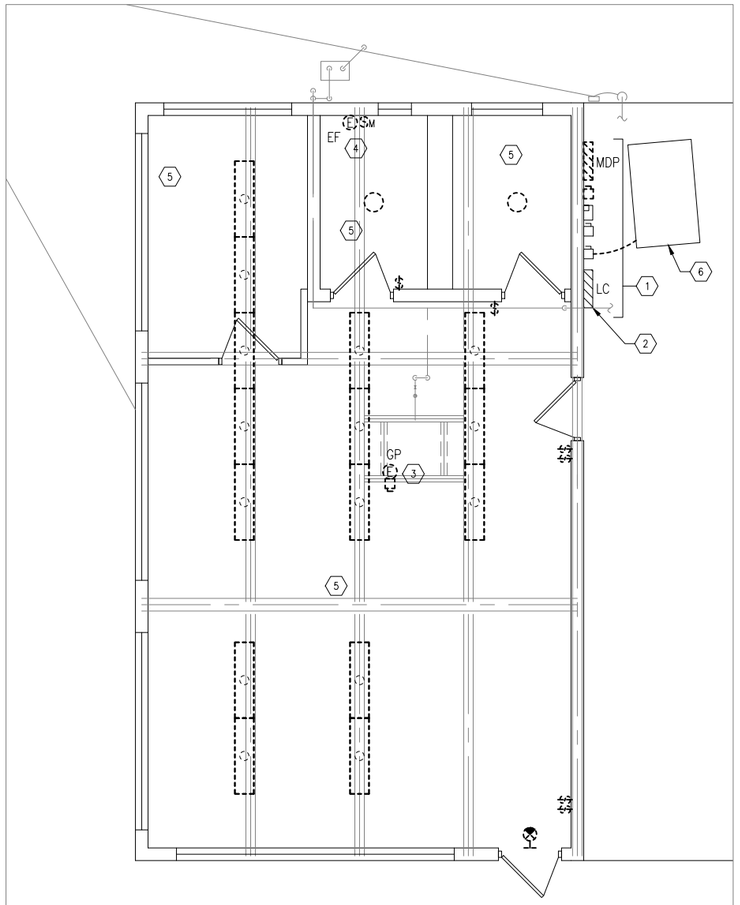

FLOORPLAN - DEMOLITION
SCALE: 1/4"=1'-0"

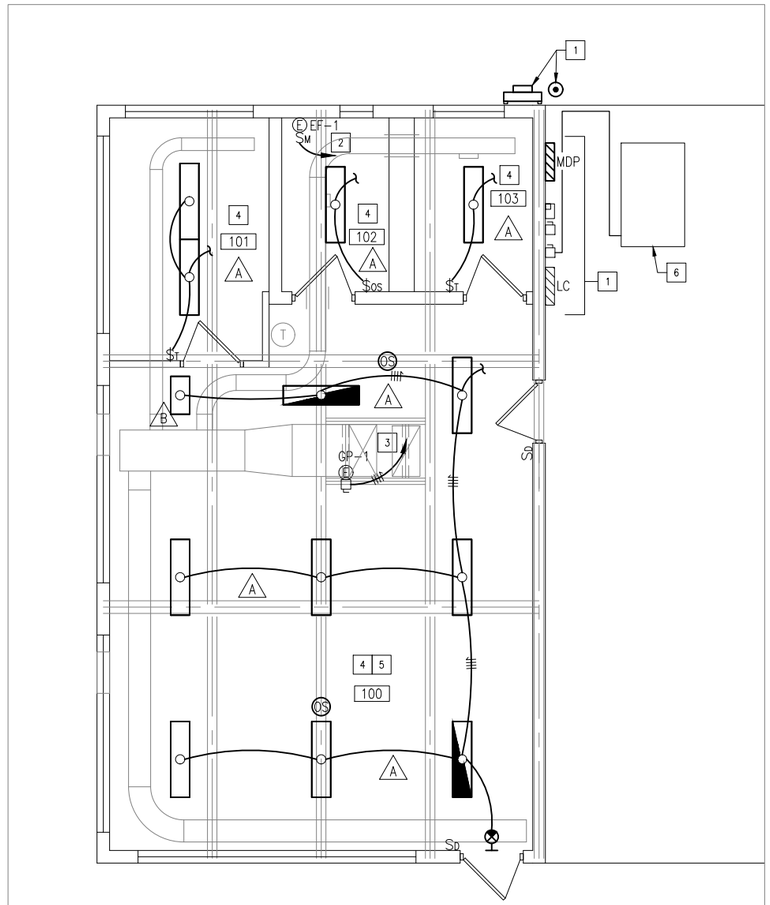

FLOORPLAN - NEW WORK
SCALE: 1/4"=1'-0"

GENERAL SHEET NOTES

1. THIS BUILDING IS TO REMAIN IN USE DURING CONSTRUCTION. COORDINATE CONSTRUCTION ACTIVITY WITH BUILDING OCCUPANT'S ONGOING OPERATIONS.
2. EQUIPMENT AND DEVICE LOCATIONS ARE APPROXIMATE. FIELD VERIFY EXACT LOCATIONS.
3. EXISTING ELECTRICAL EQUIPMENT AND DEVICES NOT INDICATED ON PLANS SHALL REMAIN CONNECTED FOR CONTINUED USE.
4. PATCH AND SEAL PENETRATIONS AND PAINT TO MATCH SURROUNDING SURFACE.

DEMOLITION KEYNOTES

1. DEMOLISH WIREWAY, SERVICE PANEL AND DISCONNECTS, REFER TO RISER DIAGRAM ON E-501
2. UNNAMED EXISTING LOAD CENTER, PROVIDE NAMEPLATE FOR PANEL WITH NAME INDICATED ON PLAN
3. DISCONNECT EXISTING GAS PACK RTU AND DEMOLISH ASSOCIATED DISCONNECT, WIRING AND CONDUIT BACK TO SOURCE
4. DISCONNECT EXISTING EXHAUST FAN AND DEMOLISH ASSOCIATED DISCONNECT, WIRING AND CONDUIT BACK TO SOURCE
5. DEMOLISH LUMINAIRES AND ASSOCIATED CONTROL DEVICES, SENSORS, CONDUIT AND WIRING COMPLETE. RETAIN EXISTING BRANCH CIRCUIT FOR REUSE.
6. DEMOLISH AIR COMPRESSOR POWER CONNECTION, DISCONNECT AIR CONNECTION

NEW WORK KEYNOTES

1. PROVIDE METER BASE, PANELBOARD MDP, GROUND ROD AND RECONNECTIONS FOR EXISTING TO REMAIN ITEMS, REFER TO POWER RISER DIAGRAM ON SHEET E-501
2. EF-1, 1/8 HP, 120V, MDP-32 2#12, 1#12GND, 1/2"C
3. GP-1(ON ROOF), 39 MCA, 208V, 3ø; 3P-60/NF-4X DISCONNECT, MDP-20 3#8, 1#10GND, 3/4"C
4. INTERCEPT EXISTING LIGHTING CIRCUIT IN EACH ROOM AND EXTEND TO NEW LUMINAIRES, EXIT LIGHTS AND CONTROL DEVICES, REFER TO SCHEDULES ON THIS SHEET AND DIAGRAMS ON E-501.
5. PROVIDE LOCALIZED LIGHTING CONTROL SYSTEM, REFER TO SCHEDULES ON THIS SHEET AND DIAGRAMS ON E-501. WIRELESS AND NETWORKED CONTROL SYSTEMS ARE NOT ALLOWED. DIGITAL ADDRESSABLE CONTROL SYSTEMS WITH INTEGRATED CONTROL AND SENSORS IN THE LUMINAIRES ARE ACCEPTABLE.
6. RELOCATE AIR COMPRESSOR TO BE 3' FROM ELECTRICAL EQUIPMENT OR MINIMUM 4' FROM WALL, WHICH EVER IS LARGER. RECONNECT POWER WITH 3#4, 1#10GND 1"C ALONG WALL TO AVOID TRIP HAZARD AT ELECTRICAL EQUIPMENT. RECONNECT AIR, AND BOLT AIR COMPRESSOR TO FLOOR IN TWO PLACES.

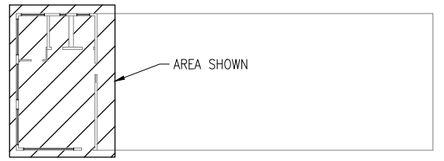

KEYPLAN
NO SCALE

PLAN NORTH

GRAPHIC SCALE
1/4"=1'-0" 0' 2' 4' 8'

MARK	DESCRIPTION	DATE

NAVFAC

SEAL

A/E INFO

APPROVED
FOR COMMANDER NAVFAC
ACTIVITY
SATISFACTORY TO DATE

DES	SLC	DRW SLC	CHK JH
PM/DM	J HOFFLER/SHUN LI		
BRANCH MANAGER	F.C. FRANKLIN		
CHIEF ENG/ARCH	B.P. ROWE		
FIRE PROTECTION			

DEPARTMENT OF THE NAVY
NAVAL FACILITIES ENGINEERING SYSTEMS COMMAND
NAVAL FACILITIES ENGINEERING SYSTEMS COMMAND
VIRGINIA BEACH, VA.
FEAD, LITTLE CREEK
JBLCFS LITTLE CREEK - FORT STORY
VIRGINIA BEACH, VA.

BLDG 810 REPLACE HVAC PACKAGE UNIT

DEMOLITION AND NEW WORK PARTIAL PLANS

SCALE:	AS NOTED
EPROJECT NO.:	1570672
CONSTR. CONTR. NO.	N/A
NAVFAC DRAWING NO.	12925053
SHEET	18 OF 28

E-101

DRAWFORM REVISION: 14 SEP 2023

PANEL MDP SCHEDULE

200 AMP BUS 200 AMP MCB 208Y/120 VOLTS 3PH, 4W, SN MIN. 22 KAIC SURFACE MOUNTED SE RATED

CKT. NO.	LOAD DESCRIPTION	GND SIZE	PHASE SIZE	BKR TRIP	AMPS	KVA	PH	KVA	AMPS	BKR TRIP	PHASE SIZE	GND SIZE	LOAD DESCRIPTION	CKT. NO.
1	NOTE 1-LIGHTS SHOP	12	12	20			A			100	1	8	PANEL LC	2
3	NOTE 1-CEILING HEAT	12	12	20			B							4
5	NOTE 1-RCPT SHOP NORTH WALL	12	12	20			C							6
7	NOTE 1-LTS SHOP	12	12	20			A			60	4	10	AIR COMPRESSOR DISCONNECT	8
9	NOTE 1-LTS SHOP	12	12	20			B							10
11	NOTE 1-LTS SHOP	12	12	20			C							12
13	NOTE 1-SPECIAL RCPT ON COLUMN	12	12	20			A			30	10	10	BAY EXHAUST FAN DISCONNECT	14
15	NOTE 1-LIGHTS SHOP OUTSIDE	12	12	20			B							16
17	NOTE 1-CEILING HEAT	12	12	20			C							18
19	NOTE 1-BATTERY RM FAN	12	12	20			A			50	8	10	GP-1	20
21	NOTE 1-LTS OFFICE & SHOP & RCPT WAT	12	12	20			B							22
23	NOTE 1-CONDENSATE PUMP	12	12	20			C							24
25	NOTE 1-UNIT HEATER WEST WALL	12	12	20			A			60	4	4	SPD	26
27	NOTE 1-WATER HEATER	12	12	20			B							28
29	NOTE 1-BATTERY CHARGER	12	12	20			C							30
31	NOTE 1-RCPT EAST WALL	12	12	20			A			20	12	12	EF-1	32
33	NOTE 1-RCPT WEST WALL	12	12	20			B							34
35	NOTE 1-RCPT NORTH WALL SHOP	12	12	20			C							36
37	~~RTU A/C~~			30			A							38
39	**SPARE**						B							40
41							C							42
TOTAL AMPS (CONN. LOAD)				A:			B:			C:				
TOTAL AMPS (FEEDTHRU)				A:			B:			C:				
TOTAL AMPS (CONN. LOAD + FEED-THRU)				A:			B:			C:				

PANELBOARD OPTIONS:

PANELBOARD NOTES:
1. INTERCEPT AND EXTEND EXISTING BRANCH CIRCUIT

POWER RISER DIAGRAM NOTES

1. DISCONNECT EXISTING OVERHEAD SERVICE FEEDER, COORDINATE WITH DOMINION ENERGY (DE). DEMOLISH SERVICE FEEDER, CONDUITS AND WIREWAY AS REQUIRED. REUSE OF EXISTING CONDUITS AND WIREWAY IS ACCEPTABLE IF DESIRED.
2. EXISTING BRANCH CIRCUITS TO REMAIN, UON
3. DEMOLISH EXISTING PANEL, RETAIN BRANCH CIRCUITS FOR RECONNECTION. PANEL ENCLOSER MAY BE RETAINED AS WIREWAY TO RECONNECT BRANCH CIRCUITS, OTHERWISE PROVIDE WIREWAY TO EXTEND BRANCH CIRCUITS TO NEW PANEL.
4. DISCONNECT EXISTING GROUNDING SYSTEM AND RETAIN FOR REUSE
5. INTERCEPT EXISTING OVERHEAD SERVICE CONDUIT AND EXTEND WITH 4#3/0 2"C
6. INTERCEPT AND EXTEND EXISTING SERVICE GROUND WITH 1#4GND
7. #4GND TO EXTERIOR GROUND ROD, CORE DRILL EXTERIOR WALL AND PAVEMENT
8. #4GND TO BUILDING STEEL
9. EXTEND BRANCH CIRCUITS TO NEW PANELBOARD MDP, REFER TO PANELBOARD SCHEDULE THIS SHEET
10. MDP-2, 4#1, 1#8GND 1 1/2"C
11. MDP-8, 3#4, 1#10GND 1"C
12. MDP-14, 3#10, 1#10GND 1/2"C
13. 4#4, 1#4GND 1 1/4"C
14. 4#3/0 2"C SERVICE MAST TO WEATHERHEAD, MOUNT WITH STAINLESS STEEL HARDWARE
15. METER BASE FURNISHED BY DE, INSTALLED BY CONTRACTOR, MOUNT TO EXTERIOR OF BUILDING WITH STAINLESS STEEL C-CHANNEL SUPPORTS

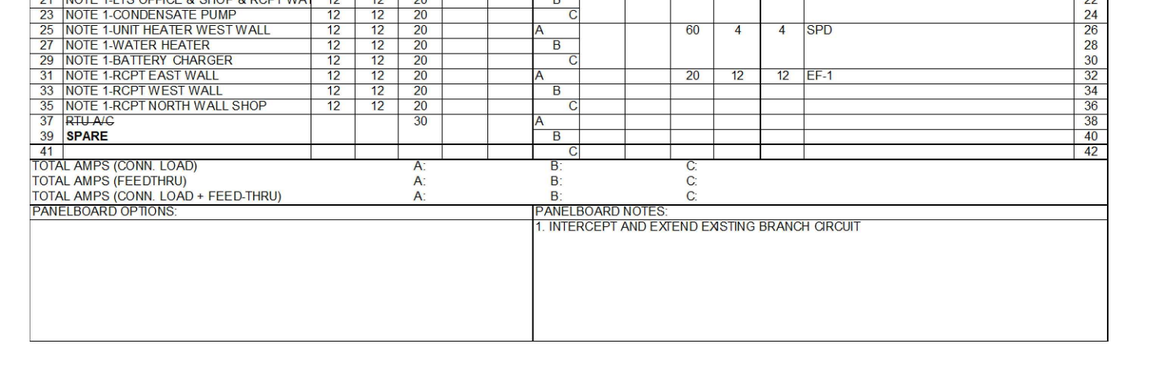

DEMOLITION NEW WORK

POWER RISER DIAGRAM

SCALE: NONE

CONTROL DIAGRAM NOTES

1. INTERCEPT AND EXTEND EXISTING UNSWITCHED LIGHTING CIRCUIT IN ROOM TO NEW LUMINAIRES AND CONTROLS IN ROOM
2. ROOM/WALL CONTROLLER, COORDINATE REQUIREMENTS WITH LIGHTING CONTROL TABLE AND PLAN ON SHEET E-101
3. EXTEND UNSWITCHED CIRCUIT TO EMERGENCY BATTERY PACKS
4. SWITCH LEG FROM CONTROLLER TO LUMINAIRES
5. SENSOR AND SWITCH DEVICE CONTROL WIRING PER MANUFACTURER'S RECOMMENDATIONS
6. TO ADDITIONAL LUMINAIRES AND CONTROLS, REFER TO PLAN ON SHEET E-101 FOR EACH ROOM
7. 0-10V DIMMING CONTROL WIRING PER MANUFACTURER'S RECOMMENDATIONS
8. PROVIDE MULTIPLE ROOM CONTROLLERS OR RELAY CONTACTS FOR ROOMS WITH MULTIZONE CONTROL REQUIREMENTS, REFER TO PLAN ON SHEET E-101

NON-DIMMING CONTROL DIAGRAM

DIMMING CONTROL DIAGRAM

GENERAL NOTE:
THIS IS A SIMPLIFIED ONE-LINE DIAGRAM SHOWING THE BASIC INTERCONNECTION OF LUMINAIRES AND CONTROL DEVICES. COORDINATE ACTUAL WIRING AND CONNECTIONS WITH MANUFACTURER'S RECOMMENDATIONS

SIMPLIFIED LIGHTING CONTROL DIAGRAMS

SCALE: NONE

NOTE: THIS SKETCH IS A NON-PROPRIETARY GRAPHIC REPRESENTATION OF A LUMINAIRE THAT MAY MEET THE SPECIFICATION REQUIREMENTS. IT IS NOT INTENDED TO INDICATE A CERTAIN MANUFACTURER OR PREFERENCE.

LUMINAIRE REQUIREMENTS:

1. HOUSING – DIE-FORMED, COLD ROLLED STEEL, WITH REINFORCEMENT RIBS FOR RIGIDITY; ENDCAPS SAME MATERIAL AS HOUSING, SECURED TABS, SCREWS, OR RIVETS. SIZE AS INDICATED IN LUMINAIRE SCHEDULE.
2. OPTICS – ACRYLIC OR POLYCARBONATE LENS AS INDICATED IN LUMINAIRE SCHEDULE.
3. LIGHT SOURCE – SOLID STATE LEDS, 3500K CCT UON, MINIMUM 80 CRI UON, AND MINIMUM EFFICACY OF 110 LUMENS/WATT UON. INITIAL LUMEN OUTPUT AS INDICATED IN LUMINAIRE SCHEDULE.
4. DRIVER – REPLACEABLE, INTEGRAL, HIGH-EFFICIENCY DRIVER WITH MINIMUM 0.9 PF, OPERATING VOLTAGE OF 120-277V, THERMAL MANAGEMENT, AND < 20% THD. ON/OFF CONTROL AND FULLY DIMMABLE DOWN TO 10% MINIMUM OR AS INDICATED IN LUMINAIRE SCHEDULE.
5. CERTIFICATION – UL LISTED FOR DRY OR DAMP LOCATION, ROHS COMPLIANT, DLC QUALIFIED. COMPLIES WITH IES LM79, LM80 AND TM21 TESTING STANDARDS.
6. MOUNTING – SURFACE MOUNTED.
7. OPTIONS – EMERGENCY BATTERY BACK-UP, INTEGRAL OCCUPANCY/VACANCY SENSOR, VARIOUS SIZE AND OUTPUT OPTIONS.

SURFACE LED WRAPAROUND

REVISED:	NOVEMBER 2020	LIGHTING PLATE:	NL-3

NOTE: THIS SKETCH IS A NON-PROPRIETARY GRAPHIC REPRESENTATION OF A LUMINAIRE THAT MAY MEET THE SPECIFICATION REQUIREMENTS. IT IS NOT INTENDED TO INDICATE A CERTAIN MANUFACTURER OR PREFERENCE.

LUMINAIRE REQUIREMENTS:

1. HOUSING – DIE-CAST ALUMINUM OR HIGH-IMPACT, UV-STABILIZED, INJECTION-MOLDED THERMOPLASTIC.
2. LIGHT SOURCE – SOLID STATE LEDS.
3. DRIVER – INTEGRAL, HIGH-EFFICIENCY DRIVER WITH MINIMUM 0.9 PF, OPERATING VOLTAGE OF 120/277V, THERMAL MANAGEMENT, AND < 20% THD.
4. CERTIFICATION – NFPA 101, UL LISTED FOR DAMP OR WET LOCATION, AND ROHS COMPLIANT.
5. MOUNTING – SURFACE MOUNTED ON CEILING AND/OR WALL.
6. OPTIONS – RED OR GREEN LETTERING, ONE- OR TWO-SIDED. ELU REMOTE HEAD CAPABILITIES. BATTERY BACKUP.

EXIT SIGN

REVISED:	NOVEMBER 2020	LIGHTING PLATE:	NL-28

DATE | DESCRIPTION | MARK

NAVFAC

SEAL

A/E INFO

APPROVED

FOR COMMANDER NAVFAC

ACTIVITY

SATISFACTORY TO DATE

DES	SLC	DRW SLC	CHK JH
PM/DM	J HOFFLER/SHUN L		
BRANCH MANAGER	F.C. FRANKLIN		
CHIEF ENG/ARCH	B.P. ROWE		
FIRE PROTECTION			

DEPARTMENT OF THE NAVY
NAVAL FACILITIES ENGINEERING SYSTEMS COMMAND
FSO LITTLE CREEK
NAVAL FACILITIES ENGINEERING SYSTEMS COMMAND
VIRGINIA BEACH, VA.
JBLCFS LITTLE CREEK – FORT STORY
VIRGINIA BEACH, VA.

BLDG 810 REPLACE HVAC PACKAGE UNIT

DETAILS, DIAGRAMS AND SCHEDULE

SCALE:	AS NOTED
EPROJECT NO.:	1570672
CONSTR. CONTR. NO.	N/A
NAVFAC DRAWING NO.	12925054
SHEET	19 OF 28

E-501

DRAWFORM REVISION: 14 SEP 2023

FILE NAME: K:\VA\Fort Story\Buildings\810\2017_1570672_DBB_Replace HVAC Package Unit Bldg 810\8_Design\Drawings\Bldg 810_1570672-E-501.dwg LAYOUT NAME: E-501 DETAILS, DIAGRAMS AND SCHEDULE PLOTTED: Tuesday, March 24, 2026 - 1:16pm USER: shunli

BUILDING 845
REPLACE HVAC PACKAGE UNIT

JOINT EXPEDITIONARY BASE LITTLE CREEK - FORT STORY

VIRGINIA BEACH, VIRGINIA

NAVFAC MID-ATLANTIC, LITTLE CREEK SITE

FEAD LITTLE CREEK

SYMBOLS LEGEND

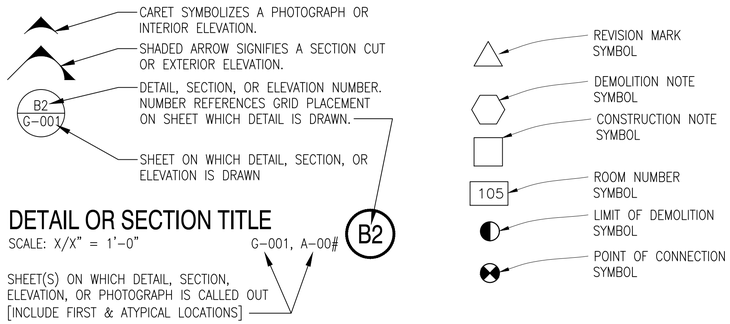

VICINITY MAP

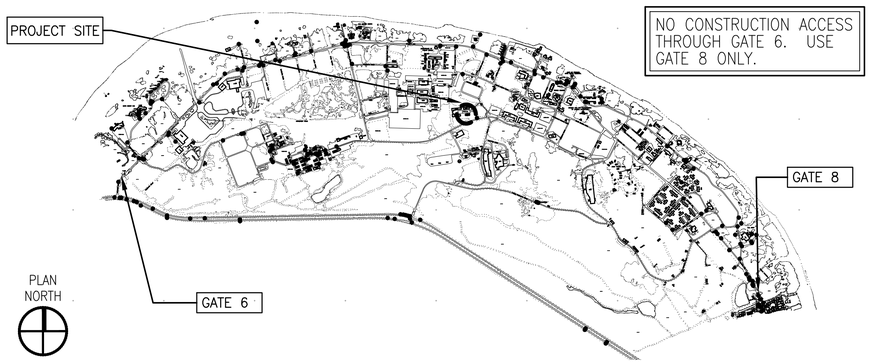

GENERAL NOTES

A. CONTRACTOR SHALL BE RESPONSIBLE FOR SECURING WORK AREAS AND THE BUILDING TO WEATHER TIGHT CONDITION DURING CONSTRUCTION.

B. CONTRACTOR SHALL SECURE AND CORDON OFF ALL OPEN EXCAVATIONS IMMEDIATELY. CONTRACTOR SHALL PROVIDE ALL NECESSARY MATERIALS AND LABOR TO ENSURE THE PROTECTION OF PEDESTRIANS AND PERSONNEL.

C. CONSTRUCTION WORK AREAS AND PATHWAYS SHALL BE CLEANED DAILY. CONTRACTOR SHALL COVER AND PROTECT EXISTING FURNITURE AND EQUIPMENT IN, AROUND AND BELOW THE WORK AREAS FROM DAMAGE.

D. WHERE EXISTING CONSTRUCTION TO REMAIN IS DAMAGED DURING CONSTRUCTION, CONTRACTOR SHALL MAKE REPAIRS USING LIKE MATERIALS TO MATCH EXISTING IN ALL WAYS.

E. ALL INDICATED DIMENSIONS AND EXISTING CONDITIONS ARE CONSIDERED APPROXIMATE AND SHALL BE FIELD VERIFIED PRIOR TO ORDERING MATERIALS, FABRICATIONS OR BEGINNING CONSTRUCTION.

F. CONTRACTOR SHALL INVESTIGATE ALL EXISTING ARCHITECTURAL, STRUCTURAL, MECHANICAL AND ELECTRICAL FIELD CONDITIONS PRIOR TO COMMENCING ANY DEMOLITION AND/OR NEW CONSTRUCTION. CONTRACTOR SHALL NOTIFY CONTRACTING OFFICER PRIOR TO INTERRUPTING UTILITIES.

G. CONTRACTOR, ALL OF THE STAFF, WORKERS, SUBCONTRACTORS, SUPPLIERS, ETC. ARE SUBJECT TO THE SAME CONDITIONS AS THOSE GOVERNING THE CONTRACTOR. REFER TO SPECIFICATIONS FOR SECURITY REQUIREMENTS AND OTHER WORK RESTRICTIONS.

H. CONTRACTORS STORAGE AND PARKING AREA SHALL BE COORDINATED WITH THE ACTIVITY BY THE CONTRACTING OFFICER PRIOR TO THE PRECONSTRUCTION MEETING. THE ALLOWABLE AREA SIZE SHALL BE ESTABLISHED BY THE CONTRACTING OFFICER.

I. ALL ITEMS AND WORK NOT INDICATED TO BE EXISTING SHALL BE FURNISHED AND INSTALLED AS PART OF THE REQUIREMENTS OF THIS CONTRACT.

J. IT IS THE CONTRACTORS RESPONSIBILITY TO RECORD EXISTING CONDITIONS PRIOR TO STARTING WORK.

LIST OF SHEETS

SHEET NO.	NAVFAC DWG NO.	SHEET TITLE
20 G-001	12944637	COVER SHEET
21 M-001	12944638	LEGEND, ABBREVIATIONS, AND GENERAL NOTES
22 M-101	12944639	DEMOLITION AND NEW WORK PARTIAL PLANS
23 M-501	12944640	MECHANICAL DETAILS AND SCHEDULES

ABBREVIATIONS

CL	CENTERLINE	OC	ON CENTER
CMU	CONC MASONRY UNIT	PSF	POUNDS PER SQ FT
CONC	CONCRETE	REQ'D	REQUIRED
ø or DIA	DIAMETER	SHT	SHEET
DIM	DIMENSION	SPEC	SPECIFICATION
DWGS	DRAWINGS	SQ	SQUARE
ELEV	ELEVATION	TYP	TYPICAL
EXIST	EXISTING	VERT	VERTICAL
GALV	GALVANIZED	UON	UNLESS OTHERWISE NOTED
MAX	MAXIMUM	VIF	VERIFY IN FIELD
MIN	MINIMUM	W/	WITH
MFR	MANUFACTURER	W/O	WITHOUT

MARK	DESCRIPTION	DATE

NAVFAC

SEAL

A/E INFO

APPROVED

FOR COMMANDER NAVFAC

ACTIVITY

SATISFACTORY TO DATE

DES	SL	DRW	SL	CHK	SLC

PM/DM J HOFFLER / SHUN LI

BRANCH MANAGER F.C. FRANKLIN

CHIEF ENG/ARCH B.P. ROWE

FIRE PROTECTION N/A

DEPARTMENT OF THE NAVY
NAVAL FACILITIES ENGINEERING SYSTEMS COMMAND
FEAD LITTLE CREEK

NAVAL FACILITIES ENGINEERING SYSTEMS COMMAND
VIRGINIA BEACH, VA.

JBLCFS LITTLE CREEK - FORT STORY
VIRGINIA BEACH, VA.

BUILDING 845
REPLACE HVAC PACKAGE UNIT

GOVER SHEET

SCALE: AS NOTED

EPROJECT NO. 1923072

CONSTR. CONTR. NO. -

NAVFAC DRAWING NO. 12944637

SHEET 20 OF 28

G-001

DRAWFORM REVISION: 14 SEP 2023

FILE NAME: K:\VA\FortStory\Buildings\845\2020_1923072_Replace\HVAC\Unit\E_Design\DWGS\Sheet\01_GEN\G-001 GOVER SHEET.dwg PLOTTED: Wednesday, April 22, 2026 8:43:34 AM USER: zhun.li

MECHANICAL LEGEND

T	TEMPERATURE SENSOR
H	HUMIDITY SENSOR
OT	OVERRIDE TIMER
EM	EMERGENCY SHUTDOWN SWITCH
A 70	AIR TERMINAL TAG WITH AIR FLOW (CFM)
12x10 OR 12/10	RECTANGULAR DUCT DIMENSIONS (INCHES)
12"ø	ROUND DUCT DIMENSION
	FLEXIBLE ROUND DUCT
	DOWNWARD DIRECTION OF SLOPED PIPING
	SUPPLY DUCT, SUPPLY DUCT DOWN/UP
	RETURN DUCT, RETURN DUCT DOWN/UP
	GATE VALVE
	GLOBE VALVE
	BUTTERFLY VALVE
	MANUAL FLOW CONTROL BALANCING VALVE
	CHECK VALVE
	AUTOMATIC FLOW BALANCING VALVE
	PRESSURE REDUCING VALVE
	SQUARE HEAD BALANCING COCK
	DRAIN VALVE WITH HOSE CONNECTION
	2-WAY CONTROL VALVE
	3-WAY CONTROL VALVE
	RELIEF VALVE
	BACKFLOW PREVENTER
	MANUAL AIR VENT
	VACUUM BREAKER
T	STEAM TRAP
	WYE STRAINER
	VALVE IN VERT. PIPING
	SPRINKLER HEAD
	STRAINER W/ BLOWDOWN VALVE
C.O.	CLEAN OUT
	ECCENTRIC REDUCER
	PIPE REDUCER
	UNION
	THERMOMETER IN PIPE WELL
	PRESSURE GAUGE W/ SHUTOFF COCK
	PIPE CAP
	FLANGE
	FLEXIBLE PIPE CONNECTOR
	THIN LINE WEIGHT INDICATES EXISTING ITEM TO REMAIN
	HEAVY LINE WEIGHT INDICATES NEW WORK TO BE PROVIDED
	HEAVY DASHED LINE WEIGHT INDICATES EXISTING ITEM TO REMOVE, REFER TO DEMOLITION NOTES.
1	DEMOLITION WORK NOTE
1	NEW WORK NOTE

AD — ACCESS DOOR

VOLUME DAMPER

MECHANICAL PIPING LEGEND

--- NAME ---	PIPING TO BE REMOVED
—CHR—	CHILLED WATER RETURN PIPING
—CHS—	CHILLED WATER SUPPLY PIPING
—D—	CONDENSATE DRAIN PIPING
—DCW—	DOMESTIC COLD WATER PIPING
—HG—	HOT GAS BYPASS PIPING
—HWR—	HOT WATER RETURN PIPING
—HWS—	HOT WATER SUPPLY PIPING
— RL —	REFRIGERANT LIQUID PIPING
— RS —	REFRIGERANT SUCTION PIPING
—LPS—	LOW PRESSURE STEAM
—LPC—	LOW PRESSURE CONDENSATE

ELECTRICAL LEGEND

E	EQUIPMENT CONNECTION
	DISCONNECT SWITCH, NEMA 1, AND AS INDICATED ON PLANS.
LA-1	HOMERUN TO PANEL. PANEL & CIRCUIT DESIGNATIONS AS INDICATED.
	EXISTING 208Y/120V PANELBOARD
J	JUNCTION BOX

ELECTRICAL ABBREVIATION

ø	PHASE
1/C	ONE CONDUCTOR
A	AMPERAGE OR AMPS
AFF	ABOVE FINISHED FLOOR
ARF	ABOVE RAISED FLOOR
C	CONDUIT
CKT	CIRCUIT
EC	EMPTY CONDUIT
EXST	EXISTING
GFCI	GOVERNMENT FURNISHED CONTRACTOR INSTALLED
GFE	GOVERNMENT FURNISHED EQUIPMENT
GFGI	GOVERNMENT FURNISHED GOVERNMENT INSTALLED
GFI	GROUND FAULT INTERRUPTER
GND	GROUND
MCB	MAIN CIRCUIT BREAKER
MLO	MAIN LUGS ONLY
NF	NON FUSIBLE
NIC	NOT IN CONTRACT
NL	NIGHT LIGHT
NTS	NOT TO SCALE
RCPT	RECEPTACLE
RM	ROOM
TYP	TYPICAL
UON	UNLESS OTHERWISE NOTED
V	VOLTAGE OR VOLTS
W	WIRE
WP	WEATHERPROOF
XFMR	TRANSFORMER

MECHANICAL ABBREVIATIONS

AD	ACCESS DOOR
AFF	ABOVE FINISHED FLOOR
AP	ACCESS PANEL
APD	AIR PRESSURE DROP
AHU	AIR HANDLING UNIT
BD	BALANCING DAMPER
BR	BASEBOARD RADIATOR
BTUH	BRITISH THERMAL UNIT PER HOUR
C	COMMON
Cv	LOSS COEFFICIENT
CU	CONDENSING UNIT
CW	CHILLED WATER
CFM	CUBIC FEET PER MINUTE
CLG	CEILING
CND	CONDENSER
COP	COEFFICENT OF PERFORMANCE
CRAHU	COMPUTER ROOM AIR HANDLING UNIT
DB	DRY BULB
DDC	DIRECT DIGITAL CONTROL
DEG	DEGREE
DX	DIRECT EXPANSION
EAT	ENTERING AIR TEMPRATURE
ECM	ELECTRONIC CONTROL MODULE
EER	ENERGY EFFICIENCY RATIO
EF	EXHAUST FAN
EFF	EFFICIENCY
ESP	EXTERNAL STATIC PRESSURE
EWT	ENTERING WATER TEMPERATURE
EXST	EXISTING
F	FAHRENHEIT
FCU	FAN COIL UNIT
FD	FIRE DAMPER
FT	FEET
FTWG	FEET OF WATER GAUGE
GPM	GALLONS PER MINUTE
HGT	HEIGHT
HP	HEAT PUMP, HORSEPOWER
HR	HOUR
HW	HOT WATER
HX	HEAT EXCHANGER
IAW	INCHES OF WATER GAUGE
IWG	IN ACCORDANCE WITH
kW	KILOWATT
LAT	LEAVING AIR TEMPERATURE
LBS	POUNDS
LV	LOUVER
LWT	LEAVING WATER TEMPERATURE
MAU	MAKEUP AIR UNIT
MAX	MAXIMUM
MIN	MINIMUM
NC	NOISE CRITERIA, NORMALLY CLOSED
NO	NUMBER, NORMALLY OPEN
OA	OUTSIDE AIR
OAU	OUTSIDE AIR UNIT
OU	OUTDOOR UNIT
PH	PHASE
PRS	PRESSURE REDUCING STATION
PSI	POUNDS PER SQUARE INCH
RA	RETURN AIR
RH	RELATIVE HUMIDITY
RL	REFRIGERANT LIQUID
RS	REFRIGERANT SUCTION
RTU	ROOFTOP UNIT
SA	SUPPLY AIR
SEER	SEASONAL ENERGY EFFICIENCY RATIO
SIM	SIMILAR
SP	STATIC PRESSURE
SQ	SQUARE
TYP	TYPICAL
UH	UNIT HEATER
UOI	UNLESS OTHERWISE INDICATED
V	VOLTS
VFD	VARIABLE FREQUENCY DRIVE
W	WIDTH
WB	WET BULB
WPD	WATER PRESSURE DROP
°	DEGREES
ø	DIAMETER

MECHANICAL SYMBOLS

	POINT OF DISCONNECTION
	POINT OF CONNECTION

GENERAL MECHANICAL NOTES

1. THESE GENERAL MECHANICAL NOTES APPLY TO ALL MECHANICAL DRAWINGS IN THIS SET. SHEET SPECIFIC NOTES ARE INDICATED ON EACH SHEET UNDER GENERAL SHEET NOTES.
2. PATCH ALL HOLES FROM REMOVAL OF PIPING, DUCTWORK, OR EQUIPMENT TO MATCH ADJACENT CONSTRUCTION.
3. PROVIDE ALL MATERIALS AND EQUIPMENT AND PERFORM ALL LABOR REQUIRED TO INSTALL COMPLETE AND OPERABLE MECHANICAL SYSTEMS AS INDICATED ON THE DRAWINGS, AS SPECIFIED AND AS REQUIRED BY CODE.
4. INSTALL ALL MECHANICAL EQUIPMENT AND APPURTENANCES IN ACCORDANCE WITH MANUFACTURER'S RECOMMENDATIONS, THIS CONTRACT'S DOCUMENTS, AND APPLICABLE CODES AND REGULATIONS.
5. PROVIDE VIBRATION ISOLATORS FOR ALL MECHANICAL EQUIPMENT TO PREVENT TRANSMISSION OF VIBRATION TO BUILDING STRUCTURE.
6. ALL OPENINGS IN FIRE WALLS DUE TO DUCTWORK, PIPING, CONDUIT, ETC., SHALL BE FIRE STOPPED.
7. EXISTING DUCT AND PIPING SIZES INDICATED ARE APPROXIMATE. FIELD VERIFY ALL DIMENSIONS.
8. PROVIDE PIPE SLEEVES FOR ALL PIPING PENETRATIONS THRU WALLS AND FLOORS. EACH PIPE SHALL BE SEPARATELY SLEEVED. PROVIDE CONTINUOUS SEALANT JOINT AROUND PIPE SLEEVE, BOTH SIDES OF WALL, WATERTIGHT.
9. PROVIDE P-TRAPS IN CONDENSATE DRAIN PIPING AT EACH AHU UNLESS THE AHU IS EQUIPPED WITH AN INTERNAL TRAP.
10. AFTER THE PIPING IS INSULATED, PROVIDE SETON BRAND OR EQUAL FACTORY-FABRICATED PIPE LABELS WITH DIRECTION OF FLOW. PROVIDE AT 10 FOOT INTERVALS ON PIPING MAINS AND 5 FOOT INTERVALS ON THE BRANCH RUNOUTS FROM MAINS. PROVIDE ON THE FOLLOWING PIPING SYSTEM:

    HEATING HOT WATER
    CHILLED WATER
    CONDENSATE DRAIN

GENERAL ELECTRICAL NOTES

1. ALL ELECTRICAL WORK AND MATERIAL IS NEW AND SHALL BE PROVIDED BY THE CONTRACTOR UON.
2. ELECTRICAL WORK AND MATERIALS SHALL BE AS PER NATIONAL ELECTRICAL CODE (NEC). ELECTRICAL EQUIPMENT AND MATERIALS SHALL BE LISTED AND LABELED FOR THEIR INTENDED USE.
3. DRAWINGS ARE BASED ON EXISTING BUILDING PLANS AND FIELD INVESTIGATIONS. CONTRACTOR SHALL VISIT THE EXISTING BUILDING AND BECOME FAMILIAR WITH THE EXISTING CONDITIONS. CONTRACTOR SHALL EXAMINE DRAWINGS TO AVOID CONFLICT.
4. UNLESS OTHERWISE INDICATED CONDUIT SHALL BE RUN CONCEALED IN FINISHED AREAS. INTERIOR WALL MOUNTED DEVICE AND JUNCTION BOXES SHALL BE FLUSH TYPE. WHERE POSSIBLE, RUN CONDUIT ABOVE CEILINGS AND IN NEW OR FURRED WALLS. WHERE IT IS NECESSARY TO RUN CONDUIT AND MOUNT DEVICE OR JUNCTION BOXES IN WALLS THAT WILL NOT RECEIVE A NEW FINISH, CUT THE WALL VERTICALLY OR HORIZONTALLY AS REQUIRED TO ACCOMPLISH THE INSTALLATION AND PATCH TO MATCH THE SURROUNDING SURFACE MATERIAL AND COLOR.
5. AN EQUIPMENT GROUND WIRE SHALL BE RUN WITH FEEDERS AND BRANCH CIRCUITS.
6. FEEDERS/CIRCUITS SHALL BE IDENTIFIED AT EACH END OF THE WIRE AND AT EVERY SPLICE OR JUNCTION/PULL BOX.
7. ELECTRICAL EQUIPMENT SHALL BE IDENTIFIED AND LABELED.
8. PROVIDE NEW TYPED DIRECTORIES ON CARD STOCK FOR PANELS (NEW OR EXISTING TO REMAIN) INCLUDED IN THIS PROJECT – REGULAR SHEET PAPER IS UNACCEPTABLE. WHEN REPLACING AN EXISTING DIRECTORY, MARK 'OLD' AND PLACE BEHIND NEW DIRECTORY.
9. REFER TO PLANS FOR CONDUCTOR SIZING. COMPLY WITH THE FOLLOWING GUIDELINES FOR CONDUCTOR RUN LENGTHS:

    20A, 120V CIRCUITS LONGER THAN 100' – USE #10 AWG TO LIMIT VOLTAGE DROP ON BRANCH CIRCUITS TO 3%

    20A, 120V CIRCUITS LONGER THAN 150' – USE #8 AWG TO LIMIT VOLTAGE DROP ON BRANCH CIRCUITS TO 3%

    20A, 277V CIRCUITS LONGER THAN 150' – USE #10 AWG TO LIMIT VOLTAGE DROP ON BRANCH CIRCUITS TO 3%

MARK	DESCRIPTION	DATE

NAVFAC

SEAL

A/E INFO

APPROVED

FOR COMMANDER NAVFAC

ACTIVITY

SATISFACTORY TO DATE

DES	SL	DRW	SL	CHK	SLC

PM/DM	J HOFFLER / SHUN LI
BRANCH MANAGER	F.C. FRANKLIN
CHIEF ENG/ARCH	B.P. ROWE
FIRE PROTECTION	N/A

DEPARTMENT OF THE NAVY
NAVAL FACILITIES ENGINEERING SYSTEMS COMMAND
FEAD LITTLE CREEK

NAVAL FACILITIES ENGINEERING SYSTEMS COMMAND
VIRGINIA BEACH, VA.

JBLCFS LITTLE CREEK - FORT STORY
VIRGINIA BEACH, VA.

BUILDING 845
REPLACE HVAC PACKAGE UNIT

LEGEND, ABBREVIATIONS, AND GENERAL NOTES

SCALE:	AS NOTED
EPROJECT NO.:	1923072
CONSTR. CONTR. NO.	-
NAVFAC DRAWING NO.	12944638
SHEET	21 OF 28

M-001

DRAWFORM REVISION: 14 SEP 2023

FILE NAME: K:\AirForStory\Building\845\2026_1923072_ReplaceAHCUnit\B_Design\DWGS\Sheet\12_MECHMA001 LEGEND, ABBREVIATIONS, AND GENERAL NOTES.dwg PLOTTED: Wednesday, April 22, 2026 8:43:40 AM USER: scott.lohnstopher

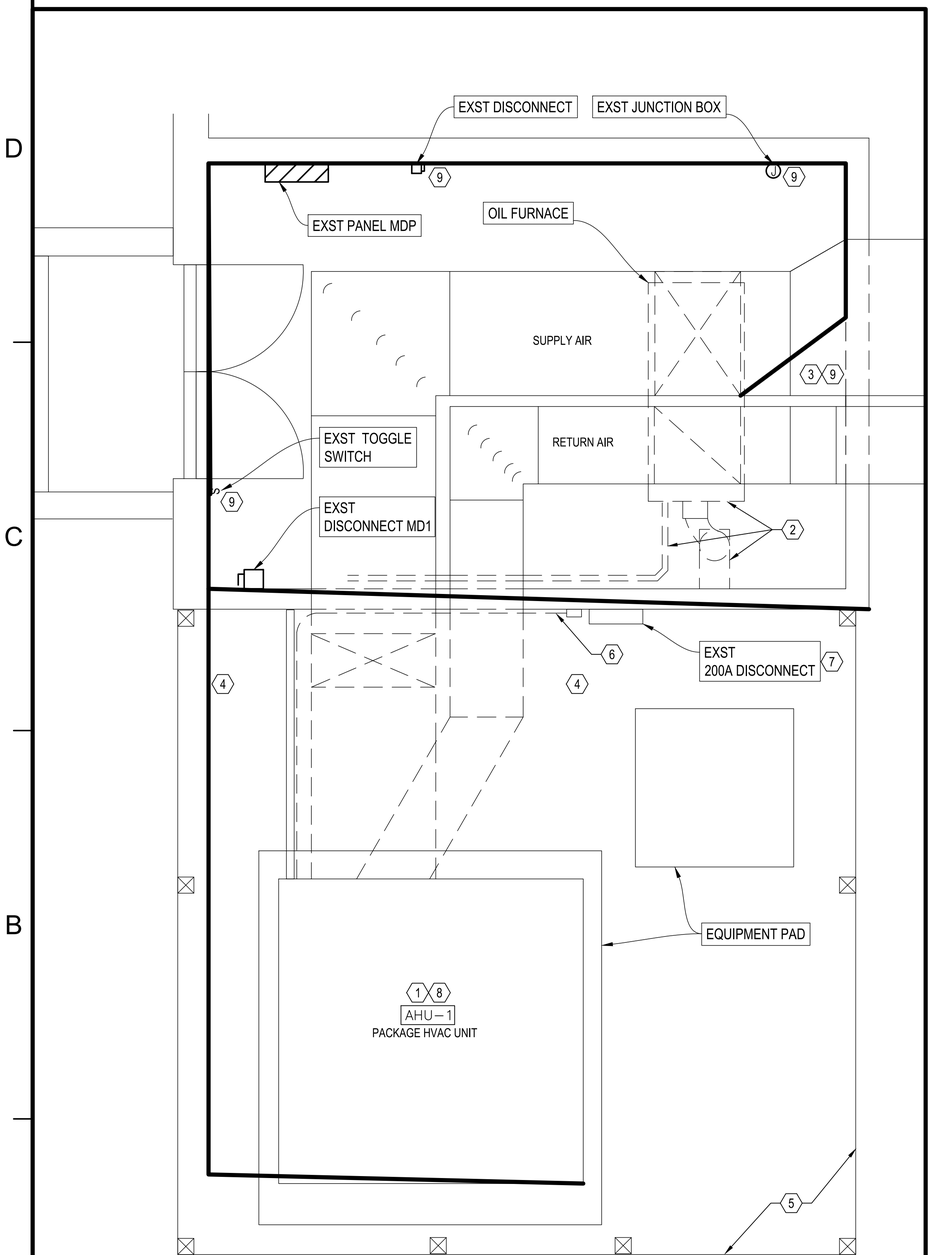

PARTIAL FLOOR PLAN - DEMOLITION

SCALE: 1/2" = 1'–0"

PLAN NORTH

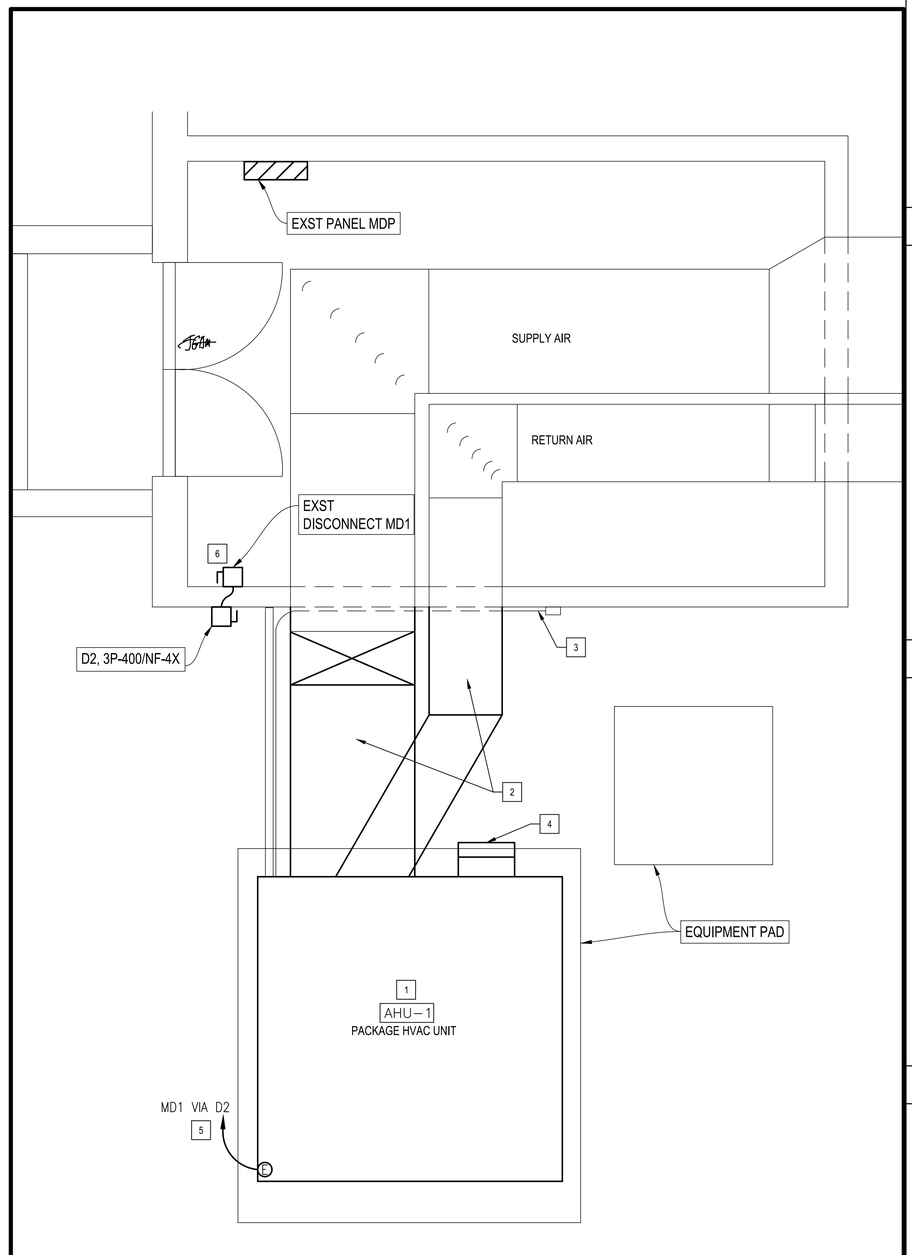

PARTIAL FLOOR PLAN - NEW WORK

SCALE: 1/2" = 1'–0"

PLAN NORTH

GENERAL SHEET NOTES

1. THIS BUILDING IS TO REMAIN IN USE DURING CONSTRUCTION. COORDINATE CONSTRUCTION ACTIVITY WITH BUILDING OCCUPANT'S ONGOING OPERATIONS.
2. EQUIPMENT AND DEVICE LOCATIONS ARE APPROXIMATE. FIELD VERIFY EXACT LOCATIONS.
3. SEE SHEET M–001 FOR LEGEND, ABBREVIATION AND GENERAL NOTES.

⬡ DEMOLITION KEYNOTES

1. DEMOLISH EXISTING PACKAGE HVAC UNIT AHU–1.
2. DEMOLISH EXISTING OIL FURNACE COMPLETE, DEMOLISH FUEL PIPING TO ABANDONED UNDERGROUND TANK AND FLUE PIPE TO WALL PERPETRATION.
3. DEMOLISH DUCTWORK CONNECTING SYSTEM TO OIL FURNACE.
4. DEMOLISH ALL EXTERIOR DUCTWORK AND INSULATION TO POINT INDICATE.
5. DEMOLISH WOODEN FENCE COMPLETE. INCLUDE BOTH GATES.
6. DEMOLISH CONTROL CONDUIT COMPLETE TO EXTERIOR JUNCTION BOX.
7. DEMOLISH 200A DISCONNECT AND ASSOCIATED CONDUIT AND WIRE BACK TO PANEL MDP.
8. DISCONNECT AHU–1 AND DEMOLISH ASSOCIATED CONDUIT AND WIRE BACK TO DISCONNECT MD1.
9. DISCONNECT BOILER AND DEMOLISH JUNCTION BOX, DISCONNECT, TOGGLE SWITCH AND ASSOCIATED CONDUIT AND WIRE BACK TO PANEL MDP

☐ NEW WORK KEYNOTES

1. PROVIDE PACKAGE HVAC UNIT AHU–1, SEE SCHEDULE SHEET M–501 FOE DETAILS. COMPLETE WITH NEW STAND. REMOVE ALL OVERGROWN VEGETATION AROUND UNIT, ON EXTERIOR DUCTWORK, FENCE AND BUILDING.
2. PROVIDE NEW EXTERIOR DUCTWORK, TRANSITIONS, INSULATION AND WEATHERPROOF. MATCH EXISTING DUCT SIZE, INSULATION TYPE AND THICKNESS. PROVIDE A FLEXIBLE DUCT FITTING ON EACH OF THE SUPPLY AND RETURN DUCTS. REFER TO DUCT TRANSITION DETAIL C5/M–501.
3. PROVIDE NEW RIGID CONDUIT TO EQUIPMENT. PROVIDE ALL NEW CONTROL WIRE FROM EQUIPMENT TO INTERIOR. INCLUDE NEW PROGRAMMABLE THERMOSTAT.
4. FABRICATE AND INSTALL FRESH AIR INTAKE AT LEAST 10 FEET AFG. SUPPORT AS NEEDED. REFER TO DETAIL C4/M–501.
5. CONNECT AHU–1 WITH 3#4/0, 1#4GND, 2"C
6. PROVIDE 225A FUSES IN DISCONNECT MD1

KEY PLAN

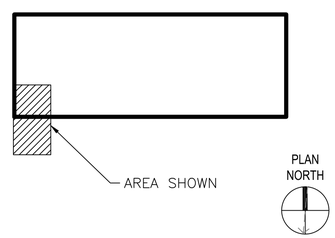

GRAPHIC SCALE(S)

1/2"=1'-0" 0' 1' 2' 4'

MARK	DESCRIPTION	DATE

NAVFAC

SEAL

A/E INFO

APPROVED

FOR COMMANDER NAVFAC

ACTIVITY

SATISFACTORY TO DATE

DES	SL	DRW	SL	CHK	SLC

PM/DM J HOFFLER / SHUN LI

BRANCH MANAGER F.C. FRANKLIN

CHIEF ENG/ARCH B.P. ROWE

FIRE PROTECTION N/A

DEPARTMENT OF THE NAVY
NAVAL FACILITIES ENGINEERING SYSTEMS COMMAND
FEAD LITTLE CREEK

NAVAL FACILITIES ENGINEERING SYSTEMS COMMAND
VIRGINIA BEACH, VA.

JBLCFS LITTLE CREEK - FORT STORY
VIRGINIA BEACH, VA.

BUILDING 845
REPLACE HVAC PACKAGE UNIT

DEMOLITION AND NEW WORK PARTIAL PLANS

SCALE: AS NOTED

EPROJECT NO.: 1923072

CONSTR. CONTR. NO. -

NAVFAC DRAWING NO. 12944639

SHEET 22 OF 28

M-101

DRAWFORM REVISION: 14 SEP 2023

FILE NAME: K:\VA\Fort Story\Buildings\845\2026_1923072_Replace HVAC Unit\B_Design\DWGS\Sheet\12_MECH\M-101 DEMOLITION AND NEW WORK PARTIAL PLANS.dwg PLOTTED: Wednesday, April 22, 2026 8:43:46 AM USER: scott.lohstroh

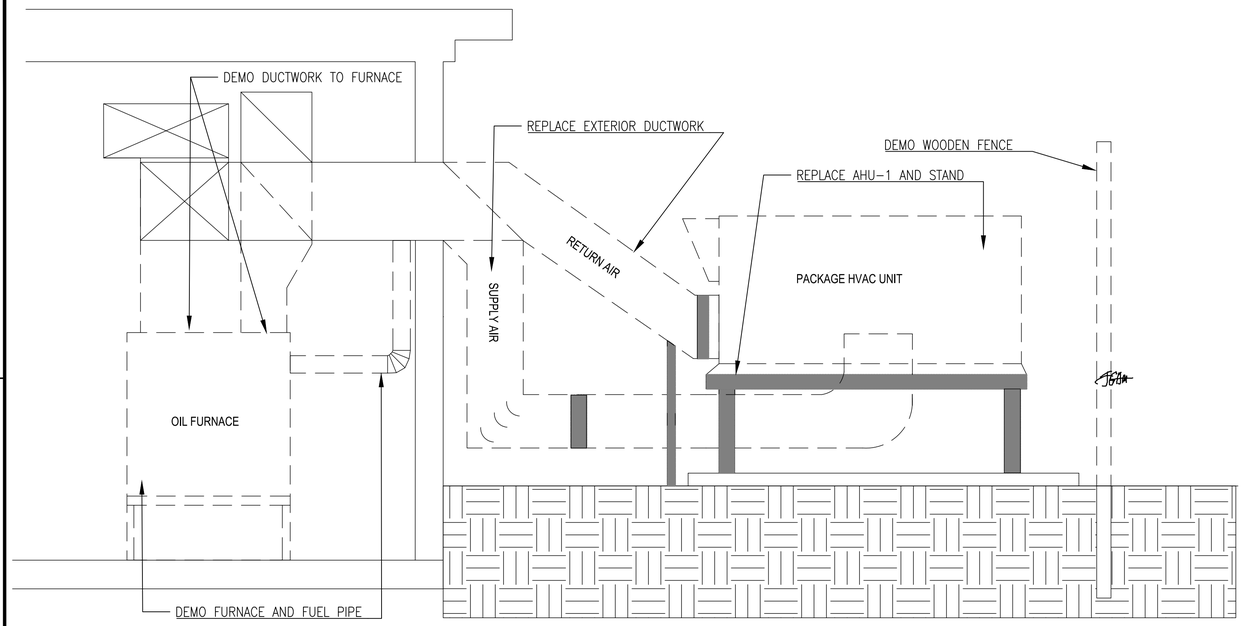

IDE VIEW - WEST

NOT TO SCALE

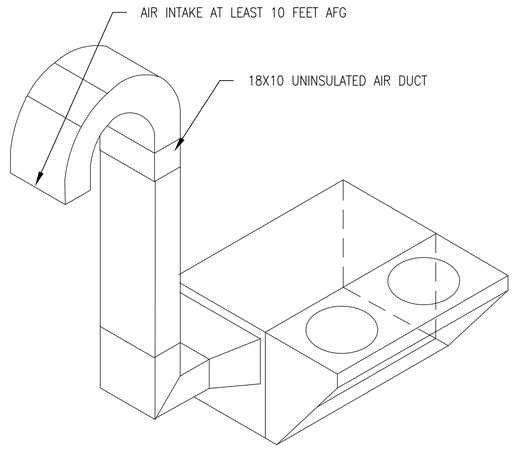

DETAIL - PACKAGE UNIT OUTSIDE AIR INTAKE C4

NOT TO SCALE — M-101

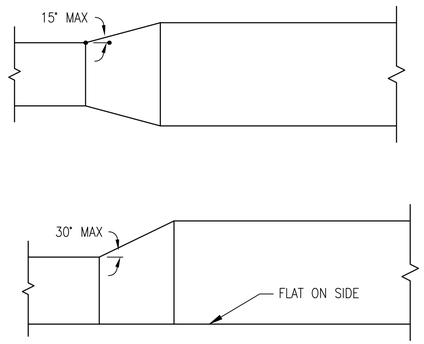

DETAIL - TYPICAL DUCT TRANSITIONS C5

NOT TO SCALE — M-101

PACKAGE AIR CONDITIONING UNIT SCHEDULE

UNIT MARK	FAN CAPACITY				DX COOLING								HEAT PUMP				ELECTRIC HEAT			ELECTRICAL DATA				APPROX. WEIGHT LBS	DIMENSION FT		
	AIRFLOW CFM	ESP IN WG	HP	MIN OA CFM	TOTAL COOLING CAPACITY MBH	SENSIBLE COOLING CAPACITY MBH	COOLING EER AT DESIGN	EAT		LAT		AMBIENT F	TOTAL HEATING CAPACITY MBH	HEATING COP AT 47 F	EAT F	LAT F	CAPACITY KW	EAT F	LAT F	VOLTS	ø	MCA	MOCP		HEIGHT	WIDTH	LENGTH
								FDB	FWB	FDB	FWB																
AHU-1	5500	1.0	1.0	650	182	131	11.7	80	67	56.97	56.11	95	161	3.6	70	97.1	54	70	100.53	208	3	224	225	2115	4.92	7.25	10.25

NOTES:
1. DESIGN BASED ON TRANE WHK180A3S0P.
2. PROVIDE WITH SINGLE POINT POWER CONNECTION. PROVIDE DISCONNECT BY ELECTRICAL.
3. PROVIDE COILS WITH 500 HOUR SALT SPRAY COATING ACCORDING TO ASTM B117.
4. PROVIDE UNIT WITH BACNET COMMUNICATION CAPABILITY AND INTEGRATE OPERATION INTO DDC SYSTEM.

DATE | MARK | DESCRIPTION

NAVFAC

SEAL

A/E INFO

APPROVED

FOR COMMANDER NAVFAC

ACTIVITY

SATISFACTORY TO DATE

DES SL | DRW SL | CHK SLC

PM/DM J HOFFLER / SHUN LI

BRANCH MANAGER F.C. FRANKLIN

CHIEF ENG/ARCH B.P. ROWE

FIRE PROTECTION N/A

DEPARTMENT OF THE NAVY
NAVAL FACILITIES ENGINEERING SYSTEMS COMMAND
FEAD LITTLE CREEK

NAVAL FACILITIES ENGINEERING SYSTEMS COMMAND
VIRGINIA BEACH, VA.

JBLCFS LITTLE CREEK - FORT STORY
VIRGINIA BEACH, VA.

BUILDING 845
REPLACE HVAC PACKAGE UNIT

MECHANICAL DETAILS AND SCHEDULES

SCALE: AS NOTED

EPROJECT NO.: 1923072

CONSTR. CONTR. NO. -

NAVFAC DRAWING NO. 12944640

SHEET 23 OF 28

M-501

DRAWFORM REVISION: 14 SEP 2023

FILE NAME: K:\NAFortStory\Building\845\2026_1923072_Redacon\HVAC\Uni\B_Design\DWGS\Sheet\12_MECHM-501 MECHANICAL DETAILS AND SCHEDULES.dwg PLOTTED: Wednesday, April 22, 2026 8:43:51 AM USER: dhunt

BUILDING 1083
REPLACE HVAC UNIT FOR MALE HEAD

JOINT EXPEDITIONARY BASE LITTLE CREEK - FORT STORY

VIRGINIA BEACH, VIRGINIA

NAVFAC MID-ATLANTIC, LITTLE CREEK SITE

FEAD LITTLE CREEK

SYMBOLS LEGEND

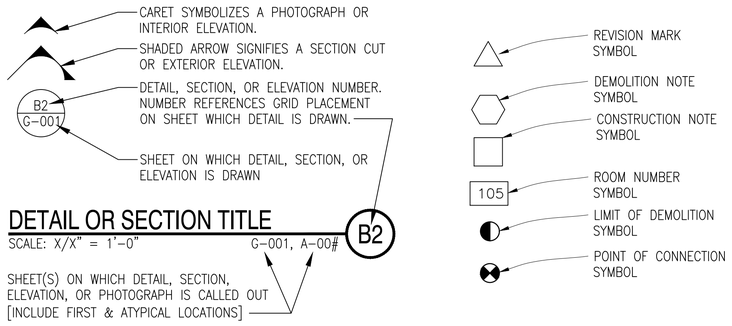

VICINITY MAP

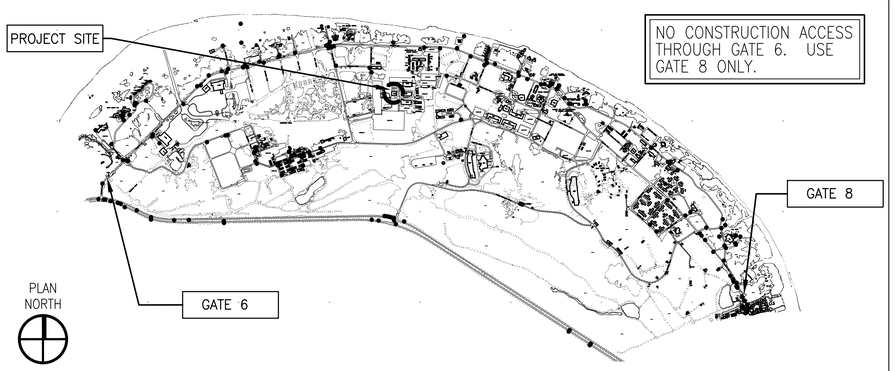

GENERAL NOTES

A. CONTRACTOR SHALL BE RESPONSIBLE FOR SECURING WORK AREAS AND THE BUILDING TO WEATHER TIGHT CONDITION DURING CONSTRUCTION.

B. CONTRACTOR SHALL SECURE AND CORDON OFF ALL OPEN EXCAVATIONS IMMEDIATELY. CONTRACTOR SHALL PROVIDE ALL NECESSARY MATERIALS AND LABOR TO ENSURE THE PROTECTION OF PEDESTRIANS AND PERSONNEL.

C. CONSTRUCTION WORK AREAS AND PATHWAYS SHALL BE CLEANED DAILY. CONTRACTOR SHALL COVER AND PROTECT EXISTING FURNITURE AND EQUIPMENT IN, AROUND AND BELOW THE WORK AREAS FROM DAMAGE.

D. WHERE EXISTING CONSTRUCTION TO REMAIN IS DAMAGED DURING CONSTRUCTION, CONTRACTOR SHALL MAKE REPAIRS USING LIKE MATERIALS TO MATCH EXISTING IN ALL WAYS.

E. ALL INDICATED DIMENSIONS AND EXISTING CONDITIONS ARE CONSIDERED APPROXIMATE AND SHALL BE FIELD VERIFIED PRIOR TO ORDERING MATERIALS, FABRICATIONS OR BEGINNING CONSTRUCTION.

F. CONTRACTOR SHALL INVESTIGATE ALL EXISTING ARCHITECTURAL, STRUCTURAL, MECHANICAL AND ELECTRICAL FIELD CONDITIONS PRIOR TO COMMENCING ANY DEMOLITION AND/OR NEW CONSTRUCTION. CONTRACTOR SHALL NOTIFY CONTRACTING OFFICER PRIOR TO INTERRUPTING UTILITIES.

G. CONTRACTOR, ALL OF THE STAFF, WORKERS, SUBCONTRACTORS, SUPPLIERS, ETC. ARE SUBJECT TO THE SAME CONDITIONS AS THOSE GOVERNING THE CONTRACTOR. REFER TO SPECIFICATIONS FOR SECURITY REQUIREMENTS AND OTHER WORK RESTRICTIONS.

H. CONTRACTORS STORAGE AND PARKING AREA SHALL BE COORDINATED WITH THE ACTIVITY BY THE CONTRACTING OFFICER PRIOR TO THE PRECONSTRUCTION MEETING. THE ALLOWABLE AREA SIZE SHALL BE ESTABLISHED BY THE CONTRACTING OFFICER.

I. ALL ITEMS AND WORK NOT INDICATED TO BE EXISTING SHALL BE FURNISHED AND INSTALLED AS PART OF THE REQUIREMENTS OF THIS CONTRACT.

J. IT IS THE CONTRACTORS RESPONSIBILITY TO RECORD EXISTING CONDITIONS PRIOR TO STARTING WORK.

LIST OF SHEETS

SHEET NO.	NAVFAC DWG NO.	SHEET TITLE
24 G-001	12943360	COVER SHEET
25 M-001	12943361	LEGEND, ABBREVIATIONS, AND GENERAL NOTES
26 M-101	12943362	DEMOLITION AND NEW WORK PARTIAL PLANS
27 M-501	12943363	MECHANICAL DETAILS
28 M-601	12943364	MECHANICAL SCHEDULES AND CONTROL

ABBREVIATIONS

CL	CENTERLINE	OC	ON CENTER
CMU	CONC MASONRY UNIT	PSF	POUNDS PER SQ FT
CONC	CONCRETE	REQ'D	REQUIRED
ø or DIA	DIAMETER	SHT	SHEET
DIM	DIMENSION	SPEC	SPECIFICATION
DWGS	DRAWINGS	SQ	SQUARE
ELEV	ELEVATION	TYP	TYPICAL
EXIST	EXISTING	VERT	VERTICAL
GALV	GALVANIZED	UON	UNLESS OTHERWISE NOTED
MAX	MAXIMUM	VIF	VERIFY IN FIELD
MIN	MINIMUM	W/	WITH
MFR	MANUFACTURER	W/O	WITHOUT

MARK	DESCRIPTION	DATE

NAVFAC

SEAL

A/E INFO

APPROVED

FOR COMMANDER NAVFAC

ACTIVITY

SATISFACTORY TO DATE

DES	SL	DRW	SL	CHK	CML

PM/DM J HOFFLER / SHUN LI

BRANCH MANAGER F.C. FRANKLIN

CHIEF ENG/ARCH B.P. ROWE

FIRE PROTECTION N/A

DEPARTMENT OF THE NAVY
NAVAL FACILITIES ENGINEERING SYSTEMS COMMAND
FEAD LITTLE CREEK
NAVAL FACILITIES ENGINEERING SYSTEMS COMMAND – < <AGENCY> >
VIRGINIA BEACH, VA.
JBLCFS LITTLE CREEK - FORT STORY
VIRGINIA BEACH, VA.
BUILDING 1083
REPLACE HVAC UNIT FOR MALE HEAD
GOVER SHEET

SCALE: AS NOTED

EPROJECT NO. 1839099

CONSTR. CONTR. NO. N/A

NAVFAC DRAWING NO. 12943360

SHEET 24 OF 28

G-001

DRAWFORM REVISION: 14 SEP 2023

FILE NAME: K:\VA\FortStory\Buildings\1083\2026_1839099_FS1083REP-HVAC_AC_MALEHEAD\B_Design\DWGS\Sheet\01_GENG-G01 GOVER SHEET.dwg PLOTTED: Wednesday, April 22, 2026 8:46:37 AM USER: shun.li

MECHANICAL LEGEND

T	TEMPERATURE SENSOR
H	HUMIDITY SENSOR
OT	OVERRIDE TIMER
EM	EMERGENCY SHUTDOWN SWITCH
A 70	AIR TERMINAL TAG WITH AIR FLOW (CFM)
12x10 OR 12/10	RECTANGULAR DUCT DIMENSIONS (INCHES)
12"ø	ROUND DUCT DIMENSION
	FLEXIBLE ROUND DUCT
	DOWNWARD DIRECTION OF SLOPED PIPING
	SUPPLY DUCT, SUPPLY DUCT DOWN/UP
	RETURN DUCT, RETURN DUCT DOWN/UP
	GATE VALVE
	GLOBE VALVE
	BUTTERFLY VALVE
	MANUAL FLOW CONTROL BALANCING VALVE
	CHECK VALVE
	AUTOMATIC FLOW BALANCING VALVE
	PRESSURE REDUCING VALVE
	SQUARE HEAD BALANCING COCK
	DRAIN VALVE WITH HOSE CONNECTION
	2-WAY CONTROL VALVE
	3-WAY CONTROL VALVE
	RELIEF VALVE
	BACKFLOW PREVENTER
	MANUAL AIR VENT
	VACUUM BREAKER
T	STEAM TRAP
	WYE STRAINER
	VALVE IN VERT. PIPING
	SPRINKLER HEAD
	STRAINER W/ BLOWDOWN VALVE
C.O.	CLEAN OUT
	ECCENTRIC REDUCER
	PIPE REDUCER
	UNION
	THERMOMETER IN PIPE WELL
	PRESSURE GAUGE W/ SHUTOFF COCK
	PIPE CAP
	FLANGE
	FLEXIBLE PIPE CONNECTOR
	THIN LINE WEIGHT INDICATES EXISTING ITEM TO REMAIN
	HEAVY LINE WEIGHT INDICATES NEW WORK TO BE PROVIDED
	HEAVY DASHED LINE WEIGHT INDICATES EXISTING ITEM TO REMOVE, REFER TO DEMOLITION NOTES.
1	DEMOLITION WORK NOTE
1	NEW WORK NOTE

AD — ACCESS DOOR

VOLUME DAMPER

MECHANICAL PIPING LEGEND

--- NAME ---	PIPING TO BE REMOVED
—CHR—	CHILLED WATER RETURN PIPING
—CHS—	CHILLED WATER SUPPLY PIPING
—D—	CONDENSATE DRAIN PIPING
—DCW—	DOMESTIC COLD WATER PIPING
—HG—	HOT GAS BYPASS PIPING
—HWR—	HOT WATER RETURN PIPING
—HWS—	HOT WATER SUPPLY PIPING
— RL —	REFRIGERANT LIQUID PIPING
— RS —	REFRIGERANT SUCTION PIPING
—LPS—	LOW PRESSURE STEAM
—LPC—	LOW PRESSURE CONDENSATE

ELECTRICAL LEGEND

DISCONNECT SWITCH.

H1-1 — EXISTING HOMERUN TO PANEL. PANEL & CIRCUIT DESIGNATIONS AS INDICATED.

EXISTING PANELBOARD

MECHANICAL ABBREVIATIONS

AD	ACCESS DOOR
AFF	ABOVE FINISHED FLOOR
AP	ACCESS PANEL
APD	AIR PRESSURE DROP
AHU	AIR HANDLING UNIT
BD	BALANCING DAMPER
BR	BASEBOARD RADIATOR
BTUH	BRITISH THERMAL UNIT PER HOUR
C	COMMON
Cv	LOSS COEFFICIENT
CU	CONDENSING UNIT
CW	CHILLED WATER
CFM	CUBIC FEET PER MINUTE
CLG	CEILING
CND	CONDENSER
COP	COEFFICENT OF PERFORMANCE
CRAHU	COMPUTER ROOM AIR HANDLING UNIT
DB	DRY BULB
DDC	DIRECT DIGITAL CONTROL
DEG	DEGREE
DX	DIRECT EXPANSION
EAT	ENTERING AIR TEMPRATURE
ECM	ELECTRONIC CONTROL MODULE
EER	ENERGY EFFICIENCY RATIO
EF	EXHAUST FAN
EFF	EFFICIENCY
ESP	EXTERNAL STATIC PRESSURE
EWT	ENTERING WATER TEMPERATURE
EXST	EXISTING
F	FAHRENHEIT
FCU	FAN COIL UNIT
FD	FIRE DAMPER
FT	FEET
FTWG	FEET OF WATER GAUGE
GPM	GALLONS PER MINUTE
HGT	HEIGHT
HP	HEAT PUMP, HORSEPOWER
HR	HOUR
HW	HOT WATER
HX	HEAT EXCHANGER
IAW	INCHES OF WATER GAUGE
IWG	IN ACCORDANCE WITH
kW	KILOWATT
LAT	LEAVING AIR TEMPERATURE
LBS	POUNDS
LV	LOUVER
LWT	LEAVING WATER TEMPERATURE
MAU	MAKEUP AIR UNIT
MAX	MAXIMUM
MIN	MINIMUM
NC	NOISE CRITERIA, NORMALLY CLOSED
NO	NUMBER, NORMALLY OPEN
OA	OUTSIDE AIR
OAU	OUTSIDE AIR UNIT
OU	OUTDOOR UNIT
PH	PHASE
PRS	PRESSURE REDUCING STATION
PSI	POUNDS PER SQUARE INCH
RA	RETURN AIR
RH	RELATIVE HUMIDITY
RL	REFRIGERANT LIQUID
RS	REFRIGERANT SUCTION
RTU	ROOFTOP UNIT
SA	SUPPLY AIR
SEER	SEASONAL ENERGY EFFICIENCY RATIO
SIM	SIMILAR
SP	STATIC PRESSURE
SQ	SQUARE
TYP	TYPICAL
UH	UNIT HEATER
UOI	UNLESS OTHERWISE INDICATED
V	VOLTS
VFD	VARIABLE FREQUENCY DRIVE
W	WIDTH
WB	WET BULB
WPD	WATER PRESSURE DROP
°	DEGREES
Ø	DIAMETER

MECHANICAL SYMBOLS

POINT OF DISCONNECTION

POINT OF CONNECTION

GENERAL MECHANICAL NOTES

1. THESE GENERAL MECHANICAL NOTES APPLY TO ALL MECHANICAL DRAWINGS IN THIS SET. SHEET SPECIFIC NOTES ARE INDICATED ON EACH SHEET UNDER GENERAL SHEET NOTES.
2. PATCH ALL HOLES FROM REMOVAL OF PIPING, DUCTWORK, OR EQUIPMENT TO MATCH ADJACENT CONSTRUCTION.
3. PROVIDE ALL MATERIALS AND EQUIPMENT AND PERFORM ALL LABOR REQUIRED TO INSTALL COMPLETE AND OPERABLE MECHANICAL SYSTEMS AS INDICATED ON THE DRAWINGS, AS SPECIFIED AND AS REQUIRED BY CODE.
4. INSTALL ALL MECHANICAL EQUIPMENT AND APPURTENANCES IN ACCORDANCE WITH MANUFACTURER'S RECOMMENDATIONS, THIS CONTRACT'S DOCUMENTS, AND APPLICABLE CODES AND REGULATIONS.
5. PROVIDE VIBRATION ISOLATORS FOR ALL MECHANICAL EQUIPMENT TO PREVENT TRANSMISSION OF VIBRATION TO BUILDING STRUCTURE.
6. ALL OPENINGS IN FIRE WALLS DUE TO DUCTWORK, PIPING, CONDUIT, ETC., SHALL BE FIRE STOPPED.
7. EXISTING DUCT AND PIPING SIZES INDICATED ARE APPROXIMATE. FIELD VERIFY ALL DIMENSIONS.
8. PROVIDE PIPE SLEEVES FOR ALL PIPING PENETRATIONS THRU WALLS AND FLOORS. EACH PIPE SHALL BE SEPARATELY SLEEVED. PROVIDE CONTINUOUS SEALANT JOINT AROUND PIPE SLEEVE, BOTH SIDES OF WALL, WATERTIGHT.
9. AFTER THE PIPING IS INSULATED, PROVIDE SETON BRAND OR EQUAL FACTORY-FABRICATED PIPE LABELS WITH DIRECTION OF FLOW. PROVIDE AT 10 FOOT INTERVALS ON PIPING MAINS AND 5 FOOT INTERVALS ON THE BRANCH RUNOUTS FROM MAINS. PROVIDE ON THE FOLLOWING PIPING SYSTEM:

   HEATING HOT WATER
   CHILLED WATER
   CONDENSATE DRAIN

MARK	DESCRIPTION	DATE

NAVFAC

SEAL

A/E INFO

APPROVED

FOR COMMANDER NAVFAC

ACTIVITY

SATISFACTORY TO DATE

DES	SL	DRW	SL	CHK	CML

PM/DM	J HOFFLER / SHUN LI
BRANCH MANAGER	F.C. FRANKLIN
CHIEF ENG/ARCH	B.P. ROWE
FIRE PROTECTION	N/A

DEPARTMENT OF THE NAVY
NAVAL FACILITIES ENGINEERING SYSTEMS COMMAND
FEAD LITTLE CREEK

NAVAL FACILITIES ENGINEERING SYSTEMS COMMAND ~ <<AGENCY>> ~
VIRGINIA BEACH, VA.

JBLCFS LITTLE CREEK - FORT STORY
VIRGINIA BEACH, VA.

BUILDING 1083
REPLACE HVAC UNIT FOR MALE HEAD

LEGEND, ABBREVIATIONS, AND GENERAL NOTES

SCALE:	AS NOTED
EPROJECT NO.:	1839099
CONSTR. CONTR. NO.	N/A
NAVFAC DRAWING NO.	12943361
SHEET	25 OF 28

M-001

DRAWFORM REVISION: 14 SEP 2023

FILE NAME: K:\NAFortStory\Building\1083\2026_1839099_FS1083REPLACE_AC_MALEHEAD\B_Design\DWGS\Sheet\12_MECHMA01 LEGEND, ABBREVIATIONS, AND GENERAL NOTES.dwg PLOTTED: Wednesday, April 22, 2026 8:46:39 AM USER: shunli

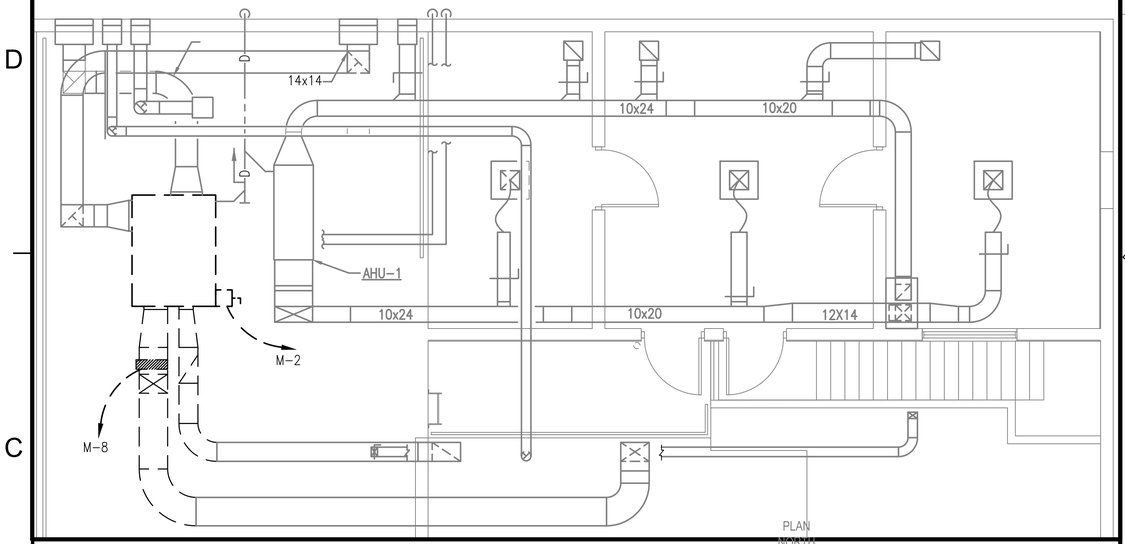

PARTIAL MEZZANINE FLOOR PLAN - DEMOLITION

SCALE: 1/4" = 1'-0"

PLAN NORTH

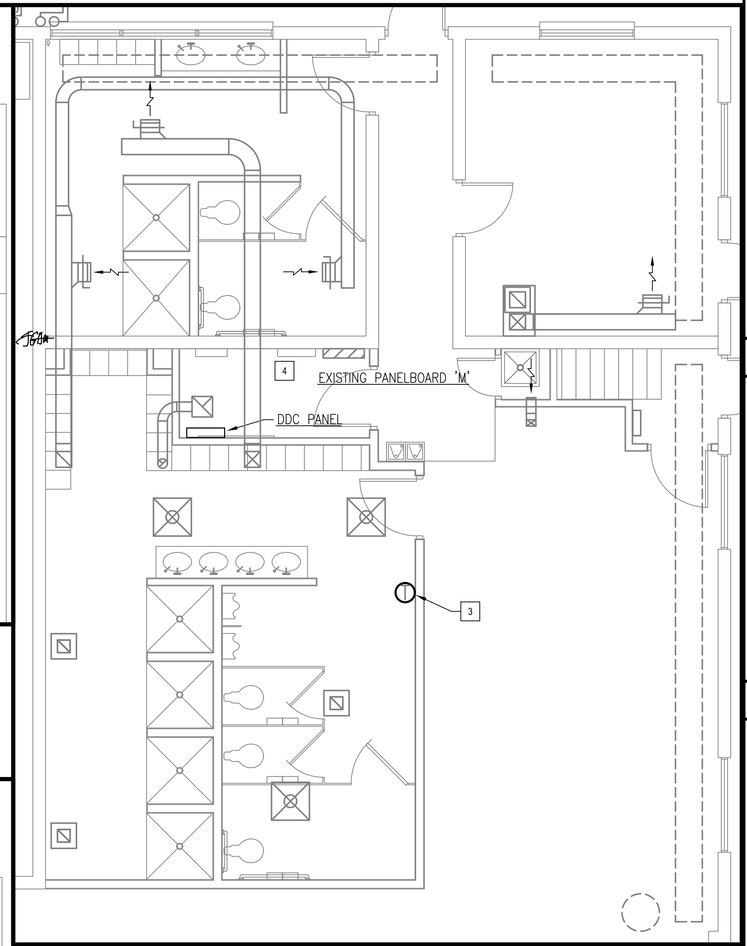

PARTIAL FIRST FLOOR PLAN - NEW WORK

SCALE: 1/4" = 1'-0"

PLAN NORTH

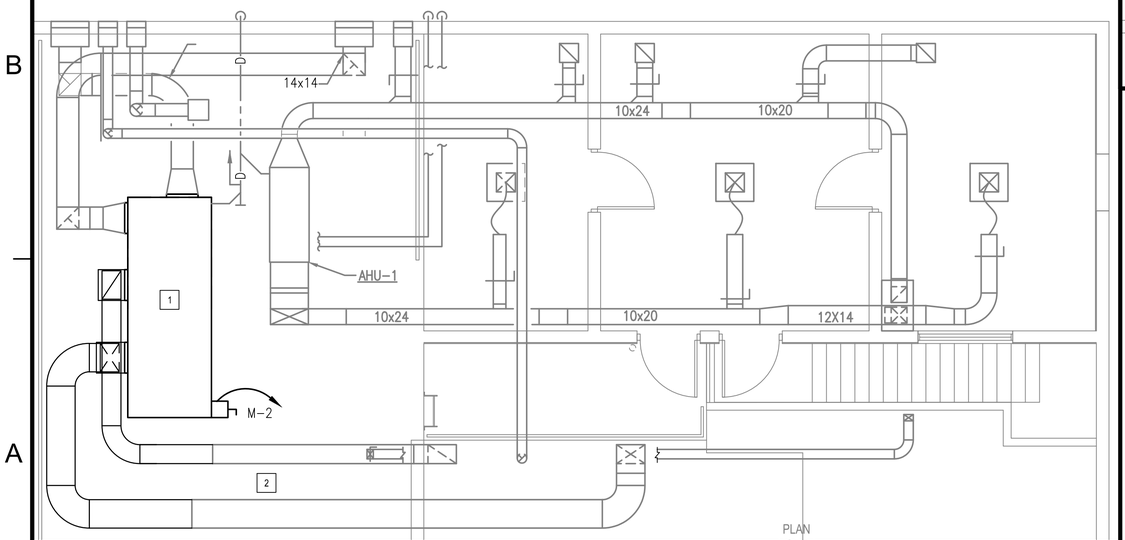

PARTIAL MEZZANINE FLOOR PLAN - NEW WORK

SCALE: 1/4" = 1'-0"

PLAN NORTH

GENERAL SHEET NOTES

1. THIS BUILDING IS TO REMAIN IN USE DURING CONSTRUCTION. COORDINATE CONSTRUCTION ACTIVITY WITH BUILDING OCCUPANT'S ONGOING OPERATIONS.
2. EQUIPMENT AND DEVICE LOCATIONS ARE APPROXIMATE. FIELD VERIFY EXACT LOCATIONS.
3. SEE SHEET M-001 FOR LEGEND, ABBREVIATION AND GENERAL NOTES.

DEMOLITION KEYNOTES

1. DEMOLISH EXISTING DOAS-1 UNIT. DEMOLISH EXISTING DISCONNECT AND CIRCUIT M-2 BACK TO SOURCE.
2. DEMOLISH EXISTING DUCT HEATER DH-1. DEMOLISH DISCONNECT EQUIPMENT AND EXISTING CIRCUIT M-8 BACK TO SOURCE.
3. DEMOLISH EXISTING DUCTWORK TO POINT INDICATED.
4. REMOVE EXISTING BREAKER #2.

NEW WORK KEYNOTES

1. PROVIDE NEW DOAS-1 UNIT, SEE SCHEDULE SHEET M-601 FOE DETAILS. PROVIDE 60A, NON-FUSED, 3-PHASE, NEMA 1, DISCONNECT SWITCH. PROVIDE 3#8, 1#8 GND IN 1" CONDUIT FROM BREAKER M-2.
2. PROVIDE DUCTWORK SIZED AS INDICATED. REFER TO DUCT SUPPORT, DUCT TRANSITION AND TAKE-OFF DETAILS C3 & A5 & C5/M-501.
3. PROVIDE NEW THERMOSTAT FOR DOAS-1 MOUNTED 60"AFF AT THE SAME LOCATION AS EXISTING THERMOSTAT REMOVED, WIRING MAY BE REUSED IF PRACTICAL.
4. PROVIDE NEW 50A, 3-PHASE BREAKER TO MATCH EXISTING BREAKER #2 IN PANELBOARD 'M'.

KEY PLAN

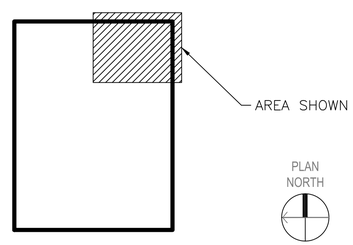

GRAPHIC SCALE(S)

1/8"=1'-0" 0' 4' 8' 16'

MARK	DESCRIPTION	DATE

NAVFAC

SEAL

A/E INFO

APPROVED

FOR COMMANDER NAVFAC

ACTIVITY

SATISFACTORY TO DATE

DES	SL	DRW	SL	CHK	CML

PM/DM J HOFFLER / SHUN LI

BRANCH MANAGER F.C. FRANKLIN

CHIEF ENG/ARCH B.P. ROWE

FIRE PROTECTION N/A

DEPARTMENT OF THE NAVY
NAVAL FACILITIES ENGINEERING SYSTEMS COMMAND
FEAD LITTLE CREEK

NAVAL FACILITIES ENGINEERING SYSTEMS COMMAND - < <AGENCY> >
VIRGINIA BEACH, VA.

JBLCFS LITTLE CREEK - FORT STORY
VIRGINIA BEACH, VA.

BUILDING 1083
REPLACE HVAC UNIT FOR MALE HEAD

DEMOLITION AND NEW WORK PARTIAL PLANS

SCALE: AS NOTED

EPROJECT NO. 1839099

CONSTR. CONTR. NO. N/A

NAVFAC DRAWING NO. 12943362

SHEET 26 OF 28

M-101

DRAWFORM REVISION: 14 SEP 2023

FILE NAME: K:\IA\Ford\Story\Buildings\1083\2026_1839099_FS1083REP-LACE_AC_MALE\HE4D\B_Design\DWGS\Sheet\12_MECH\M-101 DEMOLITION AND NEW WORK PARTIAL PLANS.dwg PLOTTED: Wednesday, April 22, 2026 8:46:42 AM USER: dhunli

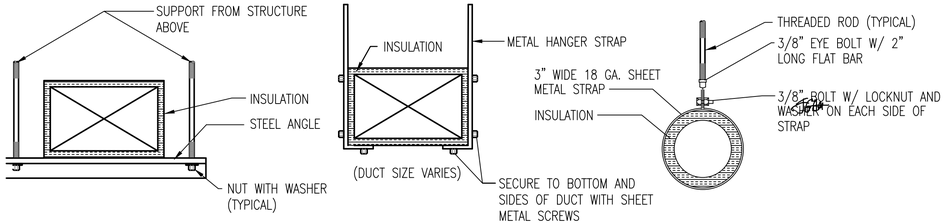

NOTE: FOR ANGLE SIZE AND HANGER STRAP GAUGE, SEE SMACNA LOW PRESSURE DUCT CONSTRUCTION STANDARDS.

TYPICAL DUCT SUPPORT DETAILS

NOT TO SCALE — M-101 — C3

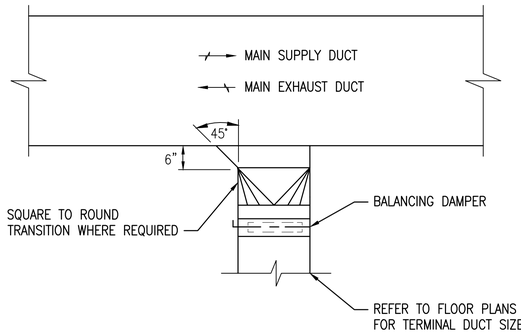

DETAIL - TYPICAL DUCT TAKE-OFF

NOT TO SCALE — M-101 — C5

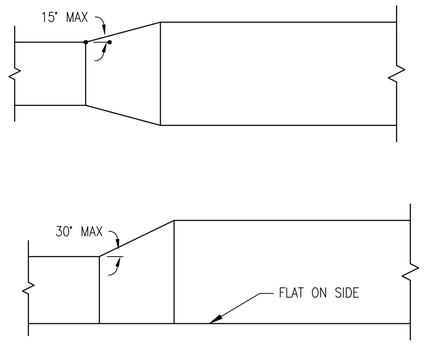

DETAIL - TYPICAL DUCT TRANSITIONS

NOT TO SCALE — M-101 — A5

DATE | MARK | DESCRIPTION

NAVFAC

SEAL

A/E INFO

APPROVED

FOR COMMANDER NAVFAC

ACTIVITY

SATISFACTORY TO DATE

DES	SL	DRW	SL	CHK	CML

PM/DM	J HOFFLER / SHUN LI
BRANCH MANAGER	F.C. FRANKLIN
CHIEF ENG/ARCH	B.P. ROWE
FIRE PROTECTION	N/A

DEPARTMENT OF THE NAVY
NAVAL FACILITIES ENGINEERING SYSTEMS COMMAND
FEAD LITTLE CREEK

NAVAL FACILITIES ENGINEERING SYSTEMS COMMAND~ <<AGENCY>> >
VIRGINIA BEACH, VA.

JBLCFS LITTLE CREEK - FORT STORY
VIRGINIA BEACH, VA.

BUILDING 1083
REPLACE HVAC UNIT FOR MALE HEAD

MECHANICAL DETAILS

SCALE:	AS NOTED
EPROJECT NO.:	1839099
CONSTR. CONTR. NO.	N/A
NAVFAC DRAWING NO.	12943363
SHEET	27 OF 28

M-501

DRAWFORM REVISION: 14 SEP 2023

FILE NAME: K:\NAFseStory\Buildings\1083\2026_1839099_FS1083REPLACE_AC_MALEHEAD\B_Design\DWGS\Sheet\12_MECHMA501 MECHANICAL DETAILS.dwg PLOTTED: Wednesday, April 22, 2026 8:46:45 AM USER: shurli

DEDICATED OUTDOOR AIR UNIT SCHEDULE

INDOOR UNIT MARK	SERVICE	LOCATION	SUPPLY FAN			EXHAUST FAN			ENERGY WHEEL			DX COOLING			HEAT PUMP		ELECTRIC HEAT		ELECTRICAL DATA					APPROX. WEIGHT LBS	SELECTION BASED ON		NOTES
			AIRFLOW CFM	ESP IN WG	HP	AIRFLOW CFM	ESP IN WG	HP	OUTDOOR AIRFLOW CFM	EXHAUST AIRFLOW CFM	MINIMUM TOTAL EFFICIENCY	TOTAL COOLING CAPACITY MBH	SENSIBLE COOLING CAPACITY MBH	COOLING EER AT DESIGN	TOTAL HEATING CAPACITY MBH	HEATING COP AT DESIGN	CAPACITY KW	AIR PD IN H2O	VOLTS	ø	FLA	MCA	MOCP		MANUFACTURER	MODEL NUMBER	
DOAS–1	BUILDING	MECH. MEZZ.	990	1.0	1.0	990	1.0	1.7	990	990	75%	38.6	26.5	21.7	36	3.3	5	0.01	208	3	37	43.6	50	1945	TRANE	ASHP B036	

NOTES:
1. CONTRACTOR SHALL INSTALL IN ACCORDANCE WITH MANUFACTURER'S RECOMMENDATIONS.
2. PROVIDE MODULATING DIRECT EXPANSION HEAT PUMP SYSTEM AND ARI CERTIFIED TOTAL ENTHALPY ENERGY RECOVERY WHEEL.
3. PROVIDE WITH SINGLE POINT POWER CONNECTION. PROVIDE DISCONNECT BY ELECTRICAL.
4. PROVIDE COILS WITH 500 HOUR SALT SPRAY COATING ACCORDING TO ASTM B117.
5. PROVIDE UNIT WITH BACNET COMMUNICATION CAPABILITY AND INTEGRATE OPERATION INTO DDC SYSTEM.
6. INTERLOCK OPERATION WITH ASSOCIATED MOTORIZED DAMPERS.

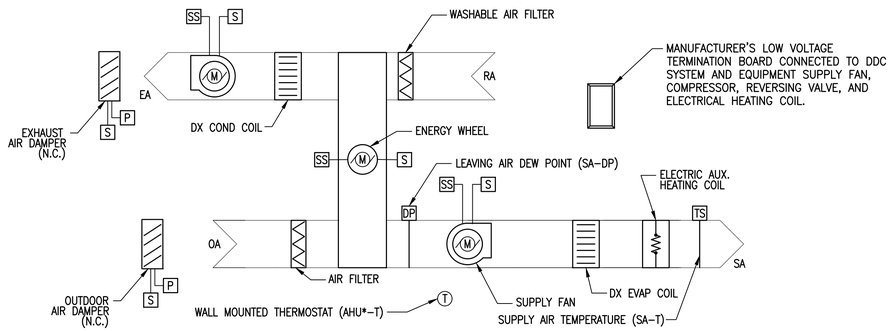

NOTE: ALL POINTS SHALL BE CONNECTED TO THE BACNET DDC PANEL.

DDC - INPUT/OUTPUT POINT SUMMARY BACNET DDC PANEL

SYSTEMS, APPARATUS, OR AREA POINT DESCRIPTION	INPUTS		OUTPUTS		ALARM	TREND	SCHEDULE	SHOW ON GRAPHICS
	ANALOG	DIGITAL	ANALOG	DIGITAL				
DEDICATED OUTDOOR AIR SYSTEM (DOAS–1)								
EQUIPMENT "LOW VOLTAGE TERMINATION BOARD"		X		X	X	X	X	X
SUPPLY AIR TEMPERATURE (SA–T)	X					X		X
WALL MOUNTED THERMOSTAT (DOAS*–T)	X					X		X
ELECTRIC HEATING CONTROL (EH–C)			X		X	X	X	X
ELECTRIC HEATING STATUS (EH–S)		X			X	X		X
OUTDOOR AIR DAMPER POSITION (MD–P)				X		X	X	X
EXHAUST AIR DAMPER POSITION (MD–P)				X		X	X	X

DEDICATED OUTDOOR AIR UNIT (DOAS-1) SEQUENCE OF OPERATION

SYSTEM DESCRIPTION:
THIS SYSTEM SHALL CONSIST OF A PACKAGED INDOOR HEAT PUMP (CAPABLE OF REVERSE CYCLE HEATING), OUTDOOR AND EXHAUST AIR MOTORIZED DAMPERS, TEMPERATURE/RELATIVE HUMIDITY SENSORS AND A WALL MOUNTED THERMOSTAT. PACKAGED INDOOR HEAT PUMP SHALL INCLUDE INTEGRAL ENERGY RECOVERY WHEEL, DIGITAL (MODULATING) COMPRESSOR, SUPPLY FAN, AND EXHAUST FAN.

DDC CONTROL:
THE UNIT SHALL COMMUNICATE WITH AND BE CONTROLLED THROUGH THE BACNET BUILDING DDC CONTROLLER. THE USER SHALL BE ABLE TO ADJUST THE SPACE TEMPERATURE HEATING AND COOLING SETPOINTS AT THE SPACE THERMOSTAT (DDC SETPOINTS SHALL OVERRIDE SPACE).

RUN CONDITIONS – SCHEDULED:
THE UNIT SHALL RUN ACCORDING TO A USER DEFINABLE TIME SCHEDULE IN THE FOLLOWING MODES (AS SENSED BY DUCT MOUNTED TEMPERATURE SENSOR):
- * OCCUPIED MODE: THE UNIT SHALL MAINTAIN:
  - 78°F COOLING SETPOINT
  - 78°F HEATING SETPOINT
- * UNOCCUPIED MODE (NIGHT SETBACK): THE UNIT SHALL MAINTAIN:
  - 90°F COOLING SETPOINT
  - 55°F HEATING SETPOINT

COOLING MODE:
UPON A RISE IN SUPPLY TEMPERATURE ABOVE COOLING SETPOINT (ADJ.), THE COMPRESSOR SHALL MODULATE THE COOLING TO MAINTAIN COOLING SETPOINT.

HEATING MODE:
UPON A DROP IN SPACE TEMPERATURE BELOW HEATING SETPOINT (ADJ.), THE COMPRESSOR SHALL MODULATE HEATING TO MAINTAIN HEATING SETPOINT.

DE–HUMIDIFICATION MODE:
UPON RISE IN LEAVING AIR DEW POINT ABOVE 58°F (ADJ.), THE COMPRESSOR SHALL MODULATE TO 100% AND THE ELECTRIC HEATING SHALL ENERGIZE TO MAINTAIN COOLING SETPOINT.

UPON DROP IN LEAVING AIR DEW POINT BELOW 58°F (ADJ.), THE ELECTRIC HEATING SHALL DE–ENERGIZE AND THE SYSTEM SHALL RETURN TO APPROPRIATE MODE OF OPERATION (COOLING OR HEATING).

FANS AND ENERGY WHEEL:
THE SUPPLY FAN, EXHAUST FAN AND ENERGY WHEEL SHALL RUN CONTINUOUSLY DURING OCCUPIED MODE OR ANYTIME THE UNIT IS COMMANDED "ON".

MOTORIZED DAMPER:
THE OUTDOOR AIR DAMPER AND EXHAUST DAMPER SHALL OPEN DURING OCCUPIED MODE OR ANYTIME THE UNIT IS COMMANDED "ON" MODE.

ALARMS:
AN ALARM SHALL BE SENT TO THE DDC SYSTEM UPON THE FOLLOWING:
- *FAN FAILURE IF FAN IS COMMANDED ON BUT DOES NOT ENERGIZE
- *DAMPER FAILURE IF THE MOTORIZED DAMPER IS COMMANDED TO OPEN AND REMAINS CLOSED.
- *HIGH TEMPERATURE IF SPACE TEMPERATURE RISES 5°F ABOVE COOLING SETPOINT
- *LOW TEMPERATURE IF SPACE TEMPERATURE DROPS 5°F BELOW HEATING SETPOINT

DATE | DESCRIPTION | MARK

NAVFAC

SEAL

A/E INFO

APPROVED

FOR COMMANDER NAVFAC

ACTIVITY

SATISFACTORY TO DATE

DES	SL	DRW	SL	CHK	CML

PM/DM J HOFFLER / SHUN LI
BRANCH MANAGER F.C. FRANKLIN
CHIEF ENG/ARCH B.P. ROWE
FIRE PROTECTION N/A

DEPARTMENT OF THE NAVY
NAVAL FACILITIES ENGINEERING SYSTEMS COMMAND
FEAD LITTLE CREEK

NAVAL FACILITIES ENGINEERING SYSTEMS COMMAND – << AGENCY >>
VIRGINIA BEACH, VA.

JBLCFS LITTLE CREEK - FORT STORY
VIRGINIA BEACH, VA.

BUILDING 1083
REPLACE HVAC UNIT FOR MALE HEAD

MECHANICAL SCHEDULES AND CONTROL

SCALE: AS NOTED
EPROJECT NO.: 1839099
CONSTR. CONTR. NO. N/A
NAVFAC DRAWING NO. 12943364
SHEET 28 OF 28

M-601

DRAWFORM REVISION: 14 SEP 2023

FILE NAME: K:\VA\FedSocy\Buildings\1083\2026_1839099_FS1083REPL-ACE_AC_MALEHEAD\8_Design\DIV0\SS\Sheet\12_MECHMA601 MECHANICAL SCHEDULES AND CONTROL.dwg PLOTTED: Wednesday, April 22, 2026 8:46:47 AM USER: shun.li