SEISMIC RETROFIT AND RENOVATE BUILDINGS 11,13 & 16

VA Roseburg Healthcare System

BUILDING 11
Project Number 653-107

PROJECT TEAM

PRINCIPAL IN CHARGE:	Blue Trident, LLC	Emmanuel (Manny) Bautista, PE*, F.SAME----------(206) 972-0645
PRJT MGR/ STRUCT. ENG.	Blue Trident, LLC	Brian Moll, PE, SE ----------(206) 351-2217
ARCHITECT	Blue Trident, LLC	Lauri Strauss, AIA, LEED AP BD&C----------(907) 317-5040
STRUCTURAL ENGINEER:	Reid Middleton	Brian Matsumoto----------(425) 741-3800
MECHANICAL ENGINEER:	Notkin P2S, inc	Peter Eberle, PE----------(206) 267-6940
ELECTRICAL ENGINEER:	SAZAN Group	Chris Larson, PE----------(503) 416-2078
FIRE PROTECTION ENGINEER:	SAZAN Group	Philip Roach, PE----------(503) 416-2400
HAZARDOUS MATERIALS	MedTox NW.	Jon Havelok----------(253) 351-0677
COST ESTIMATOR:	ProDims, PLLC	Dennis Teschlog ----------(714) 651-6696
GEOTECHNICAL ENGINEER	Terracon	Ryan Houser, PE ----------(503) 416-2078

VICINITY MAP

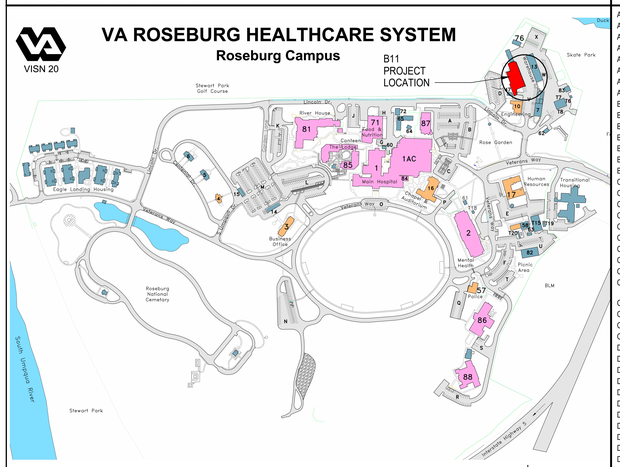

VA HEALTHCARE SYSTEM
ROSEBURG, OR

ABBREVIATIONS

A		EXG	EXISTING	M		S	
ACT	ACOUSTICAL CEILING TILE	EXP JT	EXPANSION JOINT	MATL	MATERIAL	SAN	SANITARY
ADJ	ADJACENT	EXT	EXTERIOR	MAX	MAXIMUM	SCHED	SCHEDULE
AFF	ABOVE FINISH FLOOR	F		MBL	MARBLE	SD	SOAP DISPENSER
ALT	ALTERNATE	FACP	FIRE ALARM CONTRL PANEL	MDF	MEDIUM DENSITY FIBERBOARD	SF	SQUARE FOOT
ALUM	ALUMINUM	FD	FLOOR DRAIN	MECH	MECHANICAL	SHT	SHEET
ANOD	ANNODIZED	FDN	FOUNDATION	MFG	MANUFACTURER	SHWR	SHOWER
APPROX	APPROXIMATE	FE	FIRE EXTINGUISHER	MIN	MINIMUM	SIM	SIMILAR
B		FEC	FIRE EXTINGUISHER CABINET	MIR	MIRROR	SND	SANITARY NAPKIN DISPOSAL
BD	BOARD	FF	FINISH FLOOR	MISC	MISCELLANEOUS	SS	SOLID SURFACE
BF	BRACE FRAME	FIN	FINISH	MS	METAL STUD	SST	STAINLESS STEEL
BLDG	BUILDING	FLR	FLOOR	MTD	MOUNTED	STD	STANDARD
BLKG	BLOCKING	FOC	FACE OF CABINET	MTL	METAL	STL	STEEL
BOD	BOTTOM OF DECK	FOF	FACE OF FINISH	N		STO	STORAGE
BOT	BOTTOM	FOS	FACE OF STUD	NA	NOT APPLICABLE	STS	SELF TAPPING SCREW
C		FOW	FACE OF WALL	NAP	NAPKIN	T	
CAB	CABINET(S)	G		NIC	NOT IN CONTRACT	TB	TOWEL BAR
CJ	CONROL JOINT	GA	GAUGE	NOM	NOMINAL	TEMP	TEMPORARY
CL	CENTER LINE	GALV	GALVANIZED	NTS	NOT TO SCALE	THK	THICK
CLG	CEILING	GB	GRAB BAR	O		THRU	THROUGH
CLO	CLOSET	GEN	GENERAL	OC	ON CENTER	TLT	TOILET
CLR	CLEAR	GLU-LAM	GLUE LAM BEAM	OD	OUTSIDE DIAMETER	TO	TOP OF
COL	COLUMN	GWB	GYPSUM WALL BOARD	OH	OVERHEAD	TPD	TOILET PAPER DISPENSER
CONC	CONCRETE	GYP	GUPSUM	OPNG	OPENING	TPTN	TOILET PARTITION
COR	CONTRACTING OFFICERS REPRESENTATIVE	H		OPP	OPPOSITE	TR	TRASH RECEPTACLE
		HDWR	HARDWARE	ORIG	ORIGINAL	TYP	TYPICAL
CORR	CORRIDOR	HM	HOLLOW METAL	P		TZO	TERRAZZO
CPT	CARPET	HORIZ	HORIZONTAL	PAF	POWER ACTIVATED FASTENERS	U	
CT	CERAMIC TILE	HVAC	HEATING VENTILATION AIR CONDITIONING			UC	UNDER COUNTER / UNDER CABINET
CTB	CERAMIC TILE COVE BASE			PLAM	PLASTIC LAMINATE		
D		I		PLWD	PLYWOOD	UNFIN	UNFINISHED
DBL	DOUBLE	IBC	INTERNATIONAL BUILDING CODE	PREFAB	PRE FABRICATED	UON	UNLESS OTHERWISE NOTED
DEG	DEGREE			PREFIN	PRE FINISHED	V	
DEMO	DEMOLITION	ID	INTERIOR DESIGN	PT	PAINT	VAR	VARIES
DF	DRINKING FOUNTAIN	INFO	INFORMATION	PTD	PAPER TOWEL DISPENSER	VCT	VINYL COMPOSITION TILE
DIA	DIAMETER	INSUL	INSULATION	PTN	PARTITION	VERT	VERTICAL
DIFF	DIFFERENCE	INT	INTERIOR	Q		VEST	VESTIBULE
DIM	DIMENSION	J		QT	QUARRY TILE	W	
DISP	DISPENSER / DISPOSAL	JAN	JANITOR	R		W/	WITH
DN	DOWN	JT	JOINT	RAD	RADIUS	W/O	WITHOUT
DWG	DRAWING(S)	K		RB	RUBBER	WC	WATER CLOSET
E		KIT	KITCHEN	RCP	REFLECETED CEILING PLAN	WD	WOOD
EA	EACH	L		REF	REFERENCE	WR	WATER RESISTANT
ELEC	ELECTRIC	LAM	LAMINATED	REINF	REINFORCING	WWF	WELDED WIRE FABRIC
EQ	EQUAL	LAV	LAVATORY	REQD	REQUIRED		
EQUIP	EQUIPMENT	LF	LINEAR FEEET	RESIL	RESILIENT		

SYMBOLS

A1 / A-101	SECTION CALLOUT MARK
1 Ref / A101	DETAIL CALLOUT MARK
A7.01 1	EXTERIOR OR INTERIOR ELEVATION CALLOUT MARK
1 A7.02 2 4 3	INTERIOR ELEVATION CALLOUT MARK
Room Name 101	ROOM NAME AND NUMBER
101	DOOR TAG
SN-X	SIGNAGE TAG SEE SCHEDULE SHEET AW600
PL1	MATERIAL FINISH TAG SEE SCHEDULE SHEET AI104
X	WALL TYPE TAG SEE SCHEDULE SHEET A-601
1i	EQUIPMENT TAG SEE SCHEDULE SHEET A-604
11	WINDOW / RELITE TAG SEE SCHEDULE SHEET A-604
NORTH/UTM	NORTH ARROW

DRAWING INDEX

GI001	B11 COVER
GI011	CODE PLAN
HM-003A	HAZARDOUS MATERIALS REMEDIATION - CRAWL SPACE
HM-003	HAZARDOUS MATERIALS REMEDIATION - 1ST FLOOR
S-001	GENERAL STRUCTURAL NOTES
S-100	FOUNDATION PLAN
S-101	FLOOR FRAMING PLAN
S-102	ROOF FRAMING PLAN
S-200	SHEAR WALL ELEVATIONS
S-201	SHEAR WALL ELEVATIONS
S-202	SHEAR WALL ELEVATIONS
S-203	SHEAR WALL ELEVATIONS
S-501	CONCRETE DETAILS
S-502	CONCRETE DETAILS
S-511	MASONRY DETAILS
S-512	MASONRY DETAILS
S-521	STEEL DETAILS
S-522	STEEL DETAILS
S-523	STEEL DETAILS
AD111	FIRST FLOOR DEMOLITION PLAN
A-111	B11 FIRST FLOOR PLAN
A-201	EXTERIOR ELEVATIONS
A-301	BUILDING SECTIONS
A-401	ENLARGED TOILET ROOMS
A-601	SCHEDULES AND DETAILS
AC111	REFLECTED CEILING PLAN AND SIGNAGE
FX000	B11 FIRE PROTECTION GENERAL NOTES AND LEGEND
FD111	B11 FIRE PROTECTION DEMOLITION - FIRST FLOOR PLAN
FX111	B11 FIRE PROTECTION - FIRST FLOOR PLAN
FX611	B11 FIRE PROTECTION DIAGRAMS
M-001	GENERAL NOTES LEGEND, ABBREVIATIONS, AND INDEX
MD-102	CRAWL SPACE PIPING DEMO PLAN
MD-111	FIRST FLOOR PIPING DEMO PLAN
MD-400	MECHANICAL ENLARGED DEMO PLANS
MD-401	MECHANICAL ENLARGED DEMO PLANS
M-102	CRAWL SPACE PIPING PLAN
M-111	FIRST FLOOR PLAN
M-112	FIRST FLOOR PIPING PLAN
M-211	ROOF PLAN
M-400	MECHANICAL ENLARGED PLANS
M-401	MECHANICAL ENLARGED PLANS
M-501	MECHANICAL DETAILS
M-601	MECHANICAL SCHEDULES
M-801	MECHANICAL CONTROLS
EG001	B11 GENERAL NOTES, ABBREV. AND SHEET INDEX
ED111	B11 ELECTRICAL DEMOLITION - FIRST FLOOR PLAN
EL111	B11 ELECTRICAL LIGHTING - FIRST FLOOR PLAN
EP111	B11 ELECTRICAL POWER - FIRST FLOOR PLAN
EL601	B11 ELECTRICAL LIGHTING SCHEDULE
EP621	B11 ELECTRICAL ONE-LINE DIAGRAM

PHASING

PHASE 1 – PREPARATIONS

THIS BUILDING IS THE MAIN LAUNDRY BUILDING FOR THE VA CAMPUS. THERE ARE TYPICALLY BETWEEN 9-11 EMPLOYEES WORKING IN THE BUILDING DURING NORMAL BUSINESS HOURS. ALL THE LAUNDRY EQUIPMENT WAS REPLACED WITH A MAJOR PROJECT IN 2016. SOME OF THE EQUIPMENT IS STILL UNDER WARRANTY AND THEREFORE MUST BE TREATED WITH EXTREME CARE SO THOSE WARRANTIES ARE NOT VOIDED. SOME OF THE EQUIPMENT HAS SENSITIVE ELECTRONICS THAT WILL NEED TO BE PROTECTED FROM DUST AND EXTREME TEMPERATURES DURING CONSTRUCTION OPERATIONS. THIS MAY REQUIRE PROVIDING TEMPORARY HEATING AND/OR COOLING WHILE THE HVAC UNIT IS BEING REPLACED. WHILE THE LAUNDRY OPERATIONS MUST BE KEPT FUNCTIONAL, SOME DOWN TIME AND OUTAGES CAN BE TOLERATED. THE VA HAS INDICATED THEY CAN SEND OUT EITHER THE WASH FUNCTION OR THE DRY FUNCTION TO A NEARBY FACILITY TO ACCOMPLISH THIS WORK, BUT THERE IS NO OTHER LOCATION THAT CAN HANDLE THE FULL OPERATION. THEREFORE, THE PHASING INTENT IS TO ONLY SHUT DOWN ONE SIDE (WASH OR DRY) OF THE LAUNDRY AT A TIME, AND TO ONLY SHUT DOWN THE AREAS NECESSARY FOR THE SEISMIC MITIGATION. I.E. SHUTTING DOWN ONE OR TWO WASHING MACHINES, ALLOWING OTHERS TO CONTINUE TO FUNCTION. SAME WITH DRYERS, SHUT DOWN ONE OR TWO BUT KEEP OTHERS UP AND RUNNING. THIS WILL ALL BE COORDINATED WITH THE COR AND LAUNDRY DIRECTOR.

CONTRACTOR SHALL FURNISH THE COR WITH A SCHEDULE OF PHASING DATES ON WHICH THE CONTRACTOR INTENDS TO ACCOMPLISH WORK IN EACH SPECIFIC AREA OF SITE, BUILDING OR PORTION THEREOF. ARRANGE SUCH DATES TO ENSURE ACCOMPLISHMENT OF THIS WORK IN SUCCESSIVE PHASES MUTUALLY AGREEABLE TO COR USING THE FOLLOWING PHASING OUTLINE.

1. BUILDING WILL REMAIN OCCUPIED WHILE THE VA PERFORMS NORMAL BUSINESS OPERATIONS THROUGHOUT THE DURATION OF THIS PROJECT. CONTRACTOR IS RESPONSIBLE TO PERFORM ALL WORK SO THE NORMAL BUSINESS OPERATIONS CAN OCCUR. THE VA WILL WORK WITH THE GC TO PROVIDE SOME SHORT-TERM, TEMPORARY DOWN TIMES TO GET HVAC AND ELECTRICAL REPLACEMENTS ACCOMPLISHED. THESE TIMES WILL NEED TO BE PRE-APPROVED AND WILL LIKELY OCCUR IN OVERNIGHT HOURS OR ON WEEKENDS.
2. NORMAL BUSINESS HOURS ARE 08:00AM – 04:30PM.
3. UPCOMING PHASED WORK SHALL BE AN AGENDA ITEM IN WEEKLY CONSTRUCTION PROGRESS MEETINGS.
4. CONTRACTOR SHALL COORDINATE SITE OFFICE AND MATERIAL LAYDOWN AREA WITH COR PRIOR TO MOBILIZATION.
5. CONTRACTOR SHALL COORDINATE MOVING OF EQUIPMENT WITH THE EQUIPMENT MANUFACTURER TO ACCOMPLISH THE SCOPE OF WORK. SOME EQUIPMENT MAY BE REQUIRED TO BE MOVED ONLY BY A CERTIFIED MANUFACTURER 'S REPRESENTATIVE, SO WARRANTIES ARE NOT VOIDED.
6. THE CONTRACT DOCUMENTS FOR THIS PROJECT SHOW ONLY THE 2D PLAN VIEW OF THE EQUIPMENT.
7. THE VA WILL PROVIDE A SET OF RECORD DRAWINGS SHOWING THE EXISTING EQUIPMENT LOCATIONS, CONNECTIONS, AND MANUFACTURES, FROM WHEN THE EQUIPMENT WAS REPLACED IN 2016.
8. SUBMIT MOVING WORK PLAN TO THE COR FOR APPROVAL.
9. COMPLETE AIR TESTING OF ALL SUPPLY, RETURN AND EXHAUST GRILLES TO DOCUMENT EXISTING CONDITIONS PRIOR TO WORK.
10. PROVIDE DRAWINGS OF BUILDING 11 CONSTRUCTION PHASES TO THE COR AND DESIGN TEAM FOR REVIEW.

PHASE 2 – SELECTIVE DEMOLITION (WASH = "DIRTY" SIDE) AND NEW CONSTRUCTION

1. CONTRACTOR SHALL COORDINATE IN ADVANCE WITH THE COR FOR THE REMOVAL AND RELOCATION OF EXISTING EQUIPMENT.
2. CONTRACTOR IS RESPONSIBLE TO PERFORM ALL WORK, SO THE FIRE AND LIFE SAFETY DEVICES REMAIN FUNCTIONAL.
   a. IF A SHUTOFF IS REQUIRED, SUBMIT PLAN OF INTERMITTENT LIFE SAFETY MEASURES (ILSM) TO COR FOR REVIEW AND APPROVAL.
3. CONTRACTOR IS RESPONSIBLE TO PERFORM ALL WORK TO ALLOW THE BUILDING NETWORK DEVICES TO REMAIN FUNCTIONAL.
4. PERMITS:
   a. SUBMIT HOT WORK PERMITS TO THE COR FOR VA SAFETY OFFICE APPROVAL.
   b. SUBMIT INFECTION CONTROL RISK ASSESSMENT TO VA FOR DETERMINATION OF SAFETY MEASURES REQUIRED TO BE IMPLEMENTED DURING CONSTRUCTION.
5. PROVIDE DETAILED SEQUENCE OF WORK FOR THE DEMOLITION OF EXISTING AND INSTALLATION OF NEW STEAM COILS (HC-3 AND HC-5) SERVING WASH "DIRTY" SIDE OF THE BUILDING, INCLUDING ISOLATION OF STEAM AND CONDENSATE PIPING TO COILS AS NECESSARY, VERIFY EXISTING ISOLATION/SHUTOFF VALVES WORK PRIOR TO START OF DEMOLITION.
6. PROVIDE DRAWINGS SHOWING THE SEISMIC BRACING LOCATIONS OF EXISTING PIPING AND DUCTWORK.
7. PROVIDE A SEQUENCE OF WORK FOR THE REMOVAL AND REPLACEMENT OF EXISTING ELECTRICAL PANELS. THIS WORK WILL NEED TO BE PERFORMED IN THE EVENINGS OR WEEKENDS AS DETERMINED AND APPROVED BY THE COR. ELECTRICAL PANEL REMOVALS WILL NEED TO HAPPEN SIMULTANEOUSLY.
8. INCLUDE COORDINATION FOR SHUT OFF, CAPPING AND/OR CONTINUATION OF UTILITY SERVICES AS REQUIRED.
   a. PROVIDE DETAILED SEQUENCE OF DEMOLITION AND REMOVAL WORK TO ENSURE UNINTERRUPTED PROGRESS OF VA ON-SITE OPERATIONS AND BUILDING OPERATIONS.
9. REFERENCE THE CONTRACT DRAWINGS AND SPECIFICATIONS FOR HAZARDOUS MATERIALS LOCATION AND MITIGATION PROCEDURES IN THE CRAWL SPACE AND MAIN FLOOR.
10. PRIOR TO BUILDING INTERIOR SEISMIC UPGRADES, CONCRETE OVERLAY OR LIGHT GAUGE STUD STRONGBACKS, CAREFULLY REMOVE ALL ITEMS FASTENED TO OR MOUNTED ON EXISTING WALLS RECEIVING THE STRUCTURAL UPGRADES.
    a. SOME OF THESE ITEMS MAY BE ALLOWED TO BE LEFT OR REINSTALLED IN THE STUD CAVITY OF THE STRONGBACK WALLS. COORDINATE WITH THE ENGINEERS WHERE ITEMS ARE NOT CLEARLY SHOWN ON THE CONTRACT DOCUMENTS. REINSTALL ALL FUNCTIONAL ITEMS SUCH AS CONDUITS, DUCTS, FIRE/LIFE SAFETY ITEMS, ETC. ON THE FACE OF NEW CONCRETE WALLS.
    b) SOME ITEMS MAY BE RELOCATED DUE TO NEW OR REPLACED MEP SYSTEMS.

PHASE 3 – SELECTIVE DEMOLITION (DRY = "CLEAN" SIDE) AND NEW CONSTRUCTION

1. CONTRACTOR SHALL COORDINATE IN ADVANCE WITH THE COR FOR THE REMOVAL AND RELOCATION OF EXISTING EQUIPMENT.
2. CONTRACTOR IS RESPONSIBLE TO PERFORM ALL WORK, SO THE FIRE AND LIFE SAFETY DEVICES REMAIN FUNCTIONAL.
3. IF A SHUTOFF IS REQUIRED, SUBMIT PLAN OF INTERMITTENT LIFE SAFETY MEASURES (ILSM) TO COR FOR REVIEW AND APPROVAL.
3. CONTRACTOR IS RESPONSIBLE TO PERFORM ALL WORK TO ALLOW THE BUILDING NETWORK DEVICES REMAIN FUNCTIONAL.
4. PERMITS:
a. SUBMIT HOT WORK PERMITS TO THE COR FOR VA SAFETY OFFICE APPROVAL.
b. SUBMIT INFECTION CONTROL RISK ASSESSMENT TO VA FOR DETERMINATION OF SAFETY MEASURES REQUIRED TO BE IMPLEMENTED DURING CONSTRUCTION.
5. PROVIDE DETAILED SEQUENCE OF WORK FOR THE DEMOLITION OF THE EXISTING AND INSTALLATION OF NEW STEAM COILS (HC-1, HC-2, AND HC-4) SERVING THE DRY "CLEAN" SIDE OF THE BUILDING, INCLUDING ISOLATION OF STEAM AND CONDENSATE PIPING TO COILS AS NECESSARY, VERIFY EXISTING ISOLATION/SHUTOFF VALVES WORK PRIOR TO START OF DEMOLITION.
6. PROVIDE DRAWINGS SHOWING THE SEISMIC BRACING LOCATIONS OF EXISTING PIPING, EQUIPMENT, AND DUCTWORK.
7. PROVIDE DETAILED SEQUENCE OF WORK FOR THE DEMOLITION OF THE EXISTING AIR HANDLER (ACU-1), INSTALLATION OF NEW AIR HANDLER (AHU-11), AND EXTERIOR DUCTWORK MODIFICATIONS TO ACCOMMODATE NEW AIR HANDLER.
8. PROVIDE A SEQUENCE OF WORK FOR THE REMOVAL AND REPLACEMENT OF EXISTING ELECTRICAL PANELS. THIS WORK WILL NEED TO BE PERFORMED IN THE EVENINGS OR WEEKENDS. THIS WORK WILL NEED TO HAPPEN SIMULTANEOUSLY.
9. INCLUDE COORDINATION FOR SHUT OFF, CAPPING AND/OR CONTINUATION OF UTILITY SERVICES AS REQUIRED.
a. PROVIDE DETAILED SEQUENCE OF DEMOLITION AND REMOVAL WORK TO ENSURE UNINTERRUPTED PROGRESS OF VA ON-SITE OPERATIONS AND BUILDING OPERATIONS.
10. REFERENCE THE CONTRACT DRAWINGS AND SPECIFICATIONS FOR HAZARDOUS MATERIALS LOCATION AND MITIGATION PROCEDURES IN THE CRAWL SPACE AND MAIN FLOOR.
11. PRIOR TO BUILDING INTERIOR SEISMIC UPGRADES, CONCRETE OVERLAY OR LIGHT GAUGE STUD STRONGBACKS, CAREFULLY REMOVE ALL ITEMS FASTENED TO OR MOUNTED ON EXISTING WALLS RECEIVING THE STRUCTURAL UPGRADES.
    a. SOME OF THESE ITEMS MAY BE ALLOWED TO BE LEFT OR REINSTALLED IN THE STUD CAVITY OF THE STRONGBACK WALLS. COORDINATE WITH THE ENGINEERS WHERE ITEMS ARE NOT CLEARLY SHOWN ON THE CONTRACT DOCUMENTS.
    b. REINSTALL ALL FUNCTIONAL ITEMS SUCH AS CONDUITS, DUCTS, FIRE/LIFE SAFETY ITEMS, ETC. ON THE FACE OF NEW CONCRETE WALLS.
    c. SOME ITEMS MAY BE RELOCATED DUE TO NEW OR REPLACED MEP SYSTEMS.

RENDERING

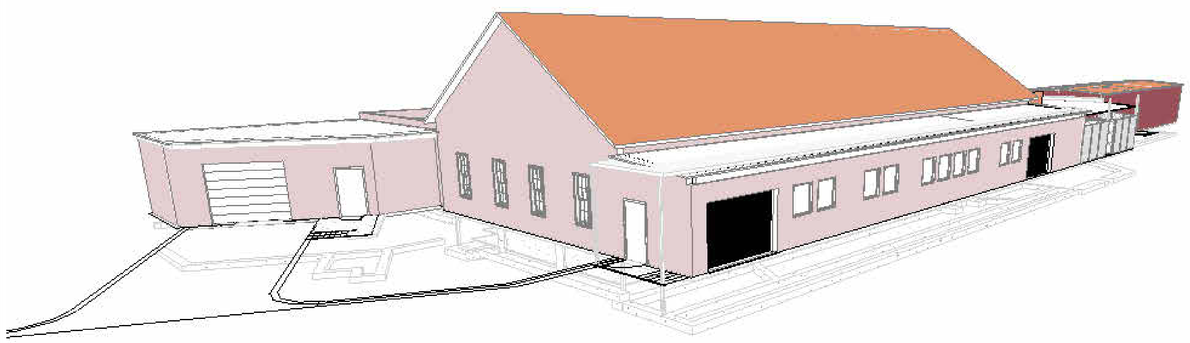

SCOPE OF WORK

1. SEISMICALLY BRACE EXISTING EXTERIOR CLAY TILE PARTITION WALLS.

2. ALL EXPOSED CONDUIT, PIPING, AND OTHER WALL MOUNTED EQUIPMENT WILL NEED TO BE REMOVED, SALVAGED, AND REINSTALLED ON THE SIESMICALLY IMPROVED WALLS.

3. REMOVE AND REPLACE EXISTING SUSPENDED ACOUSTICAL PANEL CEILING AND GRID IN TOILET ROOMS

4. REMOVE EXISTING DOORS AND FRAMES IN EXISTING DEMO'D WALLS AND REPLACE AS REQUIRED.

5. REMOVE, SALVAGE AND REINSTALL OVERHEAD GARAGE DOORS.

6. EXISTING TOILET AND LOCKER ROOMS TO BE COMPLETELY RECONFIGURED AND RECEIVE NEW FIXTURES, EQUIPMENT AND FINISHES.

7. PROVIDE NEW EXHAUST FANS IN EXISTING TOILET AND LOCKER ROOMS.

8. REPLACE ACU-1

9. ADD SECURITY CHAINLINK FENCING AROUND HVAC UNITS IN THE BACK OF THE BUILDING.

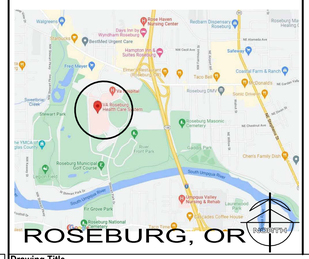

Revisions:	Date:

CONSULTANT
Consultant:

ARCHITECT/ENGINEER OF RECORD
A/E: Blue Trident, LLC Engineering and Construction Services
BLUE TRIDENT, LLC
900 Winslow Way E, Suite 130
BAINBRIDGE ISLAND, WA 98110
206-972-0645
EMMANUEL (MANNY) BAUTISTA, PE, F.SAME

STAMP
10241 REGISTERED ARCHITECT LAURA M. STRAUSS STATE OF WASHINGTON

Office of Construction and Facilities Management
VA U.S. Department of Veterans Affairs

Drawing Title: B11 COVER	Phase: ISSUED FOR CONSTRUCTION	Project Title: SEISMIC RETROFIT AND RENOVATE BUILDINGS 11,13 & 16	Project Number: 653-107
			Building Number: 11
Approved: director	FULLY SPRINKLERED	Location: VA Roseburg Healthcare System	Drawing Number: GI001
		Issue Date: 4/3/2026 · Checked: MR · Drawn: LMS	

VA FORM 08 - 6231

C:\Users\lauri\OneDrive - design2last.com\d2L-Projects\2024-011 - Roseburg Bldgs 11-13-16\04-DESIGN\BIM MODEL AND LINKS\ROSEBURG 11.ARCH 4/3/2026 5:52:29 PM

LIFE/SAFETY LEGEND

- FEC (NEW)
- BUILDING EXIT
- EXIT ROUTE
- SMOKE PARTITION REFERENCE NFPA 8.4
- 1-HR FIRE RESISTANT RATED BARRIER
- 2-HR FIRE RESISTANT RATED BARRIER
- HORIZONTAL SMOKE BARRIER CEILING ASSEMBLY
- HORIZONTAL 1-HR FIRE-RESISTANT RATED ASSEMBLY (ABOVE)

BUILDING TYPE = LAUNDRY
CODE: **NFPA 13, 70, 72, 90A, 101 (INCL CH 43.10)**
IEBC 2021

THE BUIILDING IS PROVIDED THROUGHOUT WITH AN APPROVED AUTOMATIC FIRE SPRINKLER SYSTEM.

USE AND OCCUPANCY (SAME AS EXISTING- NO CHANGE IN OCCUPANCY)
MODERATE HAZARD FACTORY INDUSTRIAL OCCUPANCY
SPECIAL-PURPOSE INDUSTRIAL OCCUPANCY: 40.1.2.1.2 (2)
(OCC TYPE F-1 FROM IBC)

OCCUPANT LOAD FACTOR 7.3.1.2
MP: THE OCCUPANT LOAD IS THE MAXIMUM PROBABLE NUMBER OF OCCUPANTS PRESENT AT ANY TIME.

SPACE	OCC AREA	S.F. / OCC	NO. OF OCC.
FIRST FLOOR	10,156	MP	11

TOTAL BUILDING OCCUPANT LOAD **11 OCCUPANTS**

INCIDENTAL USE AREAS WITHIN PROJECT SCOPE:
STORAGE ROOMS >100 S.F. - SMOKE SEPARATION PROVIDED

CONSTRUCTION TYPE
TYPE V-000 – NON-COMBUSTIBLE - FULLY SPRINKLERED

BUILDING AREA HEIGHT AND AREA IS NOT CHANGING - LIMITATIONS:
GENERAL BUILDING HEIGHTS AND AREAS
BASIC ALLOWABLE AREA (TABLE 503; F-1 SPRNKLD) 52,000 S.F.
BASIC ALLOWABLE HEIGHT 3 STORIES – 60'-0"

ACTUAL AREA AND HEIGHT
AREA ACTUAL 10,156 S.F.
HEIGHT ACTUAL 1 STORY - 32'-9 1/2" +/-

RATED ASSEMBLIES WITHIN THE PROJECT AREA REQUIRED:
NONE (NFPA 101, 7.1.3.1)
(NFPA 101, 7.1.3.1 - CORRIDORS ARE NOT REQUIRED TO BE RATED IN AN EXISTING BUILDING WHERE THE OCCUPANCY CLASS IS NOT CHANGING.)

NFPA CH. 40 - INDUSTRIAL OCCUPANCIES

MEANS OF EGRESS NFPA 101, 40.2.2
MINIMUM DOOR LEAF: NFPA 101, 7.2.1.2.3.
32" - MINIMUM DOOR LEAF
28" - MIN DOOR LEAF IN EXISTING BUILDINGS
WIDTH PROVIDED = 36"

CAPACITY OF MEANS OF EGRESS: NFPA 101, 40.2.3
OCC LOAD IS DETERMINED AS THE MAXIMUM PROBABLE POPULATION OF THE SPACE - SIZE OF EXITS COMPLY

MINIMUM NUMBER OF EXITS: NFPA 101, 40.2.4.1.1
NOT LESS THAN 2 EXITS FROM EVERY STORY:
NUMBER OF EXITS PROVIDED = FIRST FLOOR: 4

COMMON PATH OF TRAVEL DISTANCE NFPA 101, TABLE 40.2.5.1: 100' MAX
FIRST FLOOR: 99' MAX TRAVEL DIST TO ALL EXITS

MAXIMUM TRAVEL DISTANCE MEASURED: NFPA 101, 40.2.6
400' MAX ALLOWED IN INDUSTRIAL OCC W/ FIRE SPRINKLER
FIRST FLOOR: 99' MAX

PROTECTION OF VERTICAL OPENINGS NFPA 101, 40.3.1 - N/A

PORTABLE FIRE EXTINGUISHERS: NFPA 10, 6.2.1.2.2.
ARE PROVIDED IN EACH SPACE WITH LESS THAN 75' TRAVEL DISTANCE TO EACH.

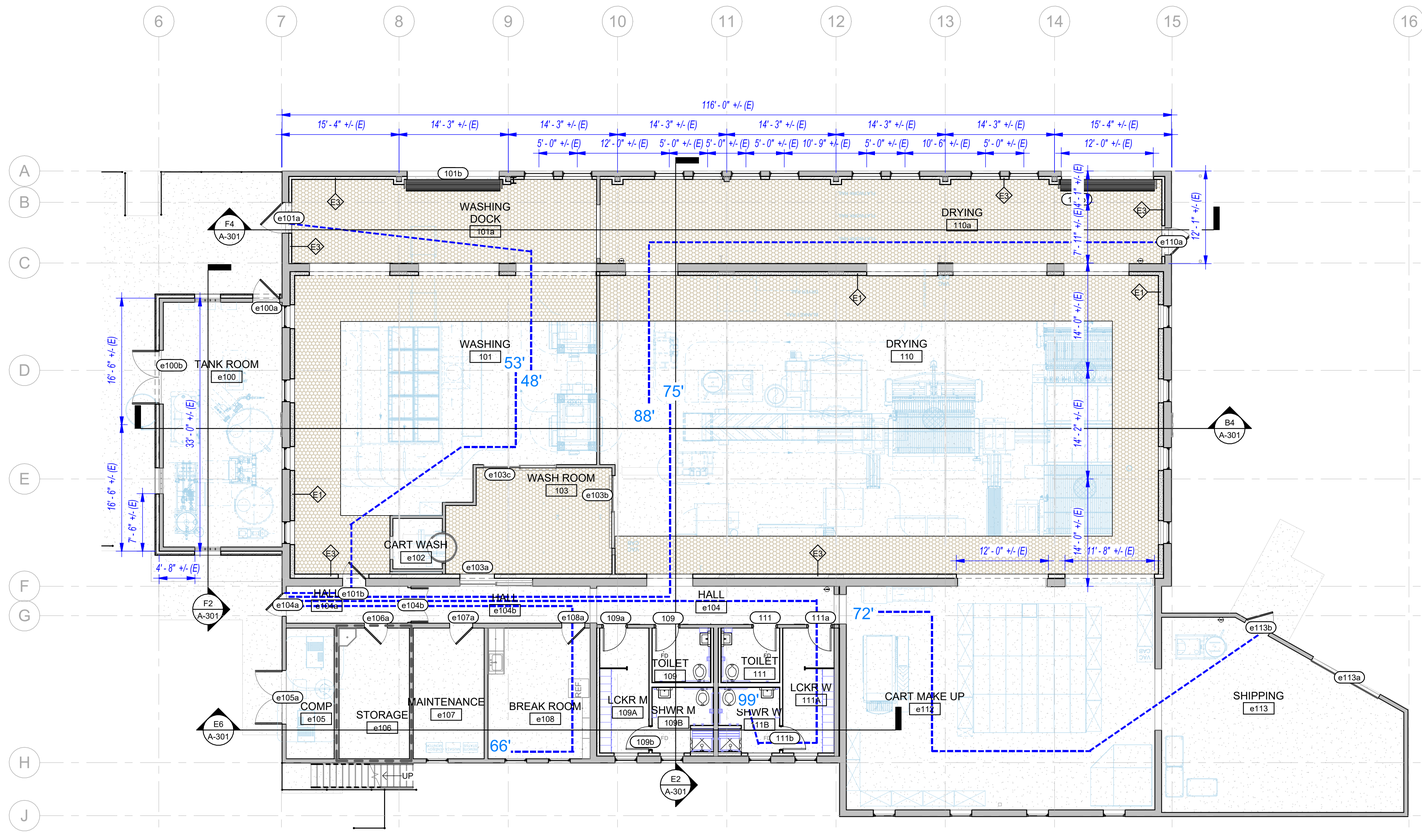

F4 B11 FLOOR PLAN CODE PLAN
1/8" = 1'-0"

Revisions:	Date:

CONSULTANT
Consultant:

ARCHITECT/ENGINEER OF RECORD
A/E:
Blue Trident, LLC
Engineering and Construction Services
BLUE TRIDENT, LLC
900 Winslow Way E, Suite 130
BAINBRIDGE ISLAND, WA 98110
206-972-0645
EMMANUEL (MANNY) BAUTISTA, PE, F.SAME

STAMP
10241 REGISTERED ARCHITECT LAURA M. STRAUSS STATE OF WASHINGTON

Office of Construction and Facilities Management
VA U.S. Department of Veterans Affairs

Drawing Title: CODE PLAN
Approved: director

Phase: ISSUED FOR CONSTRUCTION
FULLY SPRINKLERED

Project Title: SEISMIC RETROFIT AND RENOVATE BUILDINGS 11,13 & 16
Location: VA Roseburg Healthcare System
Issue Date: 4/3/2026
Checked: MR
Drawn: LMS

Project Number: 653-107
Building Number: 11
Drawing Number: GI011

VA FORM 08 - 6231

C:\Users\lauri\OneDrive - design2last.com\d2L-Projects\2024-011 - Roseburg Bldgs 11-13-16\04-DESIGN\BIM MODEL AND LINKS\ROSEBURG 11 ARCH
4/3/2026 5:52:32 PM

GENERAL NOTES

1. REFER TO ARCHITECTURAL, MECHANICAL, ELECTRICAL, AND STRUCTURAL DRAWINGS FOR REQUIRED PROJECT DETAILS AND COORDINATION.
2. ASBESTOS-CONTAINING MATERIALS HAVE BEEN IDENTIFIED IN THE PROJECT AREA. FRIABLE AND NON-FRIABLE ASBESTOS THAT WILL BE IMPACTED BY RENOVATION ACTIVITIES MUST BE REMOVED AND DISPOSED PROPERLY. ALL ASBESTOS WASTE WILL BE DISPOSED OF IN ACCORDANCE WITH SPECIFICATION SECTION 02 82 13 19 AND APPLICABLE REGULATIONS.
3. THE CERTIFIED ASBESTOS ABATEMENT CONTRACTOR SHALL VERIFY ALL EXISTING CONDITIONS AND OBSTRUCTIONS IMPACTING ABATEMENT WORK. REFER TO BUILDING AS-BUILTS FOR ADDITIONAL DETAILS.
4. ALL PAINTED SURFACES ARE ASSUMED TO CONTAIN AT LEAST TRACE LEVELS OF LEAD AND OTHER HAZARDOUS METALS; INCLUDING INTERIOR AND EXTERIOR PAINTS. CONTRACTOR PERSONNEL WORKING ON THIS PROJECT SHALL HAVE LEAD AWARENESS TRAINING IN ACCORDANCE WITH 29 CFR 1926.62; THIS INCLUDES ALL TRADES IMPACTING PAINTED SURFACES.
5. CONTRACTOR(S) MUST SUBMIT ASBESTOS, LEAD AND PCB ABATEMENT PLANS TO THE VETERANS ADMINISTRATION (VA) FOR REVIEW AND APPROVAL PRIOR TO START OF WORK ACTIVITIES.

ASBESTOS NOTES

1. ALL ASBESTOS WORK SHALL BE ACCOMPLISHED IN ACCORDANCE WITH SPECIFICATION SECTION 02 82 13 19.
2. NOT ALL OF THE ASBESTOS-CONTAINING MATERIALS IDENTIFIED ON THE DRAWING WILL BE REMOVED AS PART OF THIS PROJECT BUT ARE SHOWN FOR REFERENCE.
3. THE GENERAL CONTRACTOR AND CERTIFIED ASBESTOS ABATEMENT CONTRACTOR SHALL FIELD VERIFY ARCHITECTURAL, MECHANICAL, ELECTRICAL, AND STRUCTURAL DETAILS AND DIMENSIONS THAT MAY IMPACT THE WORK. THE ASBESTOS ABATEMENT CONTRACTOR SHALL VERIFY CONDITION, LOCATION, AND QUANTITIES OF HAZARDOUS MATERIALS IN THE WORK AREA PRIOR TO SUBMITTING A BID.
4. REFER TO 02 82 13 19 AND CONTRACTOR'S APPROVED WORK PLAN FOR ASBESTOS REMOVAL AND DISPOSAL PROCEDURES AND REQUIREMENTS.
5. THE CERTIFIED ASBESTOS CONTRACTOR IS REQUIRED TO READ THE INDIVIDUAL HAZARDOUS MATERIALS SURVEY REPORT(S) FOR BUILDINGS 11 SUBMITTED BY MED-TOX NORTHWEST AND DATED MAY 31, 2025. THE ASBESTOS ABATEMENT CONTRACTOR SHALL FIELD VERIFY THE LIMITATIONS SECTIONS IDENTIFIED IN THE REPORTS FOR THE DETERMINATION OF HIDDEN MATERIALS AS PART OF THEIR BID FOR THE WORK.

LEAD-BASED PAINT NOTES

1. REFER TO SPECIFICATION SECTION 02 83 33 13 FOR LEAD REQUIREMENTS INCLUDING DISPOSAL AND TESTING REQUIREMENTS.
2. THE CONTRACTOR SHALL ASSUME THAT LEAD IS PRESENT IN PAINTED OR PRIMERED SURFACES THROUGHOUT THE PROJECT. ALL WORK THAT MAY DISTURB PAINT OR PRIMER-CONTAINING LEAD OR OTHER LEAD BUILDING MATERIAL (SUCH AS CERAMIC TILE) SHALL BE IN ACCORDANCE WITH 29 CFR 1926.62 AND SPECIFICATION SECTION 02 83 33 13 INCLUDING DUST CONTROL, EMPLOYEE EXPOSURE ASSESSMENTS, AND WASTE CHARACTERIZATION.

PCB BALLASTS AND FLUORESCENT LIGHT TUBE NOTES

1. ALL FLUORESCENT LIGHTS TO BE DEMOLISHED SHALL BE INSPECTED. ALL BALLASTS NOT SPECIFICALLY LABELED AS "NO-PCBS" OR "PCB FREE" WILL BE ASSUMED TO BE PCB-CONTAINING AND BE REMOVED AND DISPOSED OF AS PCB WASTE IN ACCORDANCE WITH THE REGULATIONS. PARTIAL DISASSEMBLY OF FLUORESCENT FIXTURES AND SELECTIVE DEMOLITION FOR ACCESS ARE INCLUDED IN THE SCOPE OF WORK. REFER TO CONTRACT SPECIFICATIONS, ELECTRICAL DEMOLITION DRAWINGS, REGULATIONS, AND CONTRACTOR'S APPROVED WORK PLAN FOR PCB-BALLAST REMOVAL AND DISPOSAL PROCEDURES. HID LIGHTS ARE ASSUMED TO CONTAIN PCB-BALLASTS AND MERCURY-CONTAINING BULBS.
2. NON-PCB LIGHT BALLASTS ARE TO BE RECYCLED OR DISPOSED IN ACCORDANCE WITH 02 84 16.
3. ALL FLUORESCENT LIGHT TUBES AND HID LIGHT BULBS ARE ASSUMED MERCURY-CONTAINING.
4. MERCURY-CONTAINING LIGHT TUBES/BULBS SHALL BE RECYCLED IN ACCORDANCE WITH THE CONTRACT AND WITHOUT BREAKAGE ON SITE. REFER TO CONTRACT SPECIFICATIONS/DRAWINGS, REGULATIONS, AND CONTRACTORS APPROVED WORK PLAN FOR LIGHT TUBE RECYCLING PROCEDURES.
5. THE ELECTRICAL CONTRACTOR IS RESPONSIBLE FOR DE-ENERGIZING IMPACTED LIGHT FIXTURES.

TABLE 1. SUMMARY OF ASBESTOS-CONTAINING MATERIALS

MATERIAL	LOCATION	FRIABLE	QUANTITY
BLACK ASPHALTIC SEALANT	CRAWLSPACE CONCRETE CEILING	NO	4,560 SF

EA = EACH, SF = SQUARE FEET. NOTE: REFER TO HAZARDOUS BUILDING MATERIALS SURVEY REPORT INCLUDING APPENDICES FOR ADDITIONAL INFORMATION.

LEGEND

CRAWLSPACE ACM SEALANT ON CONCRETE CEILING

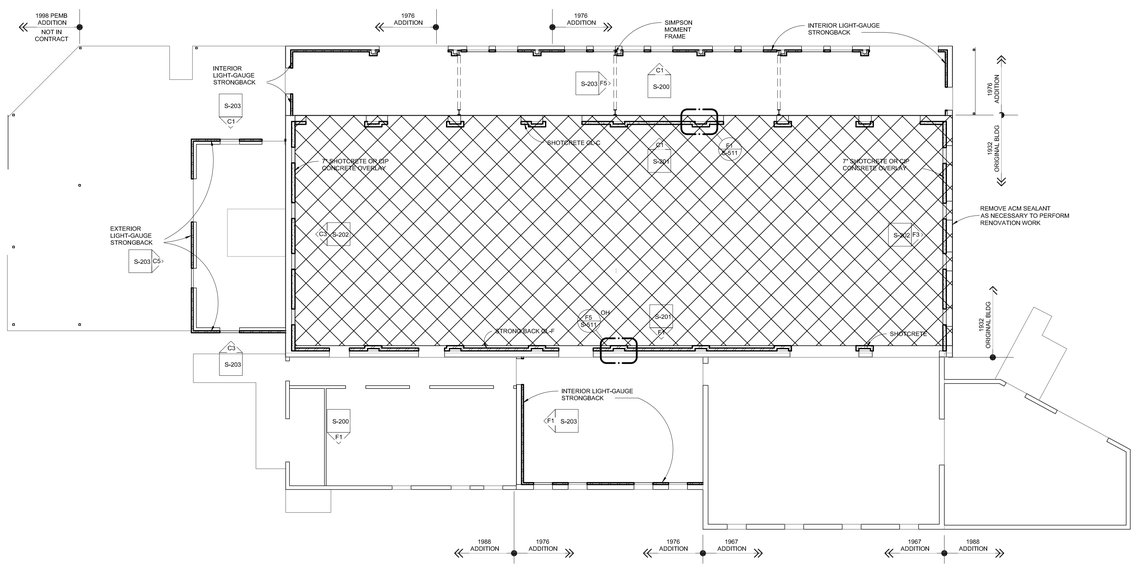

BUILDING 11 CRAWLSPACE

HAZARDOUS MATERIALS REMEDIATION

CONSULTANT	ARCHITECT/ENGINEER OF RECORD	STAMP	Office of Construction and Facilities Management	Drawing Title	Phase	Project Title	Project Number
Consultant: SAFE ENVIROMENT OF AMERICA, INC dba MED-TOX NORTHWEST	A/E: Blue Trident, LLC Engineering and Construction Services BLUE TRIDENT, LLC 7829 NE ESPERIONE LN BAINBRIDGE ISLAND, WA 98110 206-972-0645 EMMANUEL (MANNY) BAUTISTA, PE, F.SAME		VA U.S. Department of Veterans Affairs	HAZARDOUS MATERIALS REMEDIATION	ISSUED FOR CONSTRUCTION	SEISMICALLY MITIGATE BLDGS. 11,13,16	653-107
				Approved:	FULLY SPRINKLERED	Location: VA Roseburg Healthcare System	Building Number: 11
						Issue Date: 4/3/2026 / Checked: JAH / Drawn: SMB	Drawing Number: HM-003A

VA FORM 08 - 6231

GENERAL NOTES

1. REFER TO ARCHITECTURAL, MECHANICAL, ELECTRICAL, AND STRUCTURAL DRAWINGS FOR REQUIRED PROJECT DETAILS AND COORDINATION.
2. ASBESTOS-CONTAINING MATERIALS HAVE BEEN IDENTIFIED IN THE PROJECT AREA. FRIABLE AND NON-FRIABLE ASBESTOS THAT WILL BE IMPACTED BY RENOVATION ACTIVITIES MUST BE REMOVED AND DISPOSED PROPERLY. ALL ASBESTOS WASTE WILL BE DISPOSED OF IN ACCORDANCE WITH SPECIFICATION SECTION 02 82 13 19 AND APPLICABLE REGULATIONS.
3. THE CERTIFIED ASBESTOS ABATEMENT CONTRACTOR SHALL VERIFY ALL EXISTING CONDITIONS AND OBSTRUCTIONS IMPACTING ABATEMENT WORK. REFER TO BUILDING AS-BUILTS FOR ADDITIONAL DETAILS.
4. ALL PAINTED SURFACES ARE ASSUMED TO CONTAIN AT LEAST TRACE LEVELS OF LEAD AND OTHER HAZARDOUS METALS; INCLUDING INTERIOR AND EXTERIOR PAINTS. CONTRACTOR PERSONNEL WORKING ON THIS PROJECT SHALL HAVE LEAD AWARENESS TRAINING IN ACCORDANCE WITH 29 CFR 1926.62; THIS INCLUDES ALL TRADES IMPACTING PAINTED SURFACES.
5. CONTRACTOR(S) MUST SUBMIT ASBESTOS, LEAD AND PCB ABATEMENT PLANS TO THE VETERANS ADMINISTRATION (VA) FOR REVIEW AND APPROVAL PRIOR TO START OF WORK ACTIVITIES.

ASBESTOS NOTES

1. ALL ASBESTOS WORK SHALL BE ACCOMPLISHED IN ACCORDANCE WITH SPECIFICATION SECTION 02 82 13 19.
2. NOT ALL OF THE ASBESTOS-CONTAINING MATERIALS IDENTIFIED ON THE DRAWING WILL BE REMOVED AS PART OF THIS PROJECT BUT ARE SHOWN FOR REFERENCE.
3. THE GENERAL CONTRACTOR AND CERTIFIED ASBESTOS ABATEMENT CONTRACTOR SHALL FIELD VERIFY ARCHITECTURAL, MECHANICAL, ELECTRICAL, AND STRUCTURAL DETAILS AND DIMENSIONS THAT MAY IMPACT THE WORK. THE ASBESTOS ABATEMENT CONTRACTOR SHALL VERIFY CONDITION, LOCATION, AND QUANTITIES OF HAZARDOUS MATERIALS IN THE WORK AREA PRIOR TO SUBMITTING A BID.
4. REFER TO 02 82 13 19 AND CONTRACTOR'S APPROVED WORK PLAN FOR ASBESTOS REMOVAL AND DISPOSAL PROCEDURES AND REQUIREMENTS.
5. THE CERTIFIED ASBESTOS CONTRACTOR IS REQUIRED TO READ THE INDIVIDUAL HAZARDOUS MATERIALS SURVEY REPORT(S) FOR BUILDINGS 11 SUBMITTED BY MED-TOX NORTHWEST AND DATED MAY 31, 2025. THE ASBESTOS ABATEMENT CONTRACTOR SHALL FIELD VERIFY THE LIMITATIONS SECTIONS IDENTIFIED IN THE REPORTS FOR THE DETERMINATION OF HIDDEN MATERIALS AS PART OF THEIR BID FOR THE WORK.

LEAD-BASED PAINT NOTES

1. REFER TO SPECIFICATION SECTION 02 83 33 13 FOR LEAD REQUIREMENTS INCLUDING DISPOSAL AND TESTING REQUIREMENTS.
2. THE CONTRACTOR SHALL ASSUME THAT LEAD IS PRESENT IN PAINTED OR PRIMERED SURFACES THROUGHOUT THE PROJECT. ALL WORK THAT MAY DISTURB PAINT OR PRIMER-CONTAINING LEAD OR OTHER LEAD BUILDING MATERIAL (SUCH AS CERAMIC TILE) SHALL BE IN ACCORDANCE WITH 29 CFR 1926.62 AND SPECIFICATION SECTION 02 83 33 13 INCLUDING DUST CONTROL, EMPLOYEE EXPOSURE ASSESSMENTS, AND WASTE CHARACTERIZATION.

PCB BALLASTS AND FLUORESCENT LIGHT TUBE NOTES

1. ALL FLUORESCENT LIGHTS TO BE DEMOLISHED SHALL BE INSPECTED. ALL BALLASTS NOT SPECIFICALLY LABELED AS “NO-PCBS” OR “PCB FREE” WILL BE ASSUMED TO BE PCB-CONTAINING AND BE REMOVED AND DISPOSED OF AS PCB WASTE IN ACCORDANCE WITH THE REGULATIONS. PARTIAL DISASSEMBLY OF FLUORESCENT FIXTURES AND SELECTIVE DEMOLITION FOR ACCESS ARE INCLUDED IN THE SCOPE OF WORK. REFER TO CONTRACT SPECIFICATIONS, ELECTRICAL DEMOLITION DRAWINGS, REGULATIONS, AND CONTRACTOR'S APPROVED WORK PLAN FOR PCB-BALLAST REMOVAL AND DISPOSAL PROCEDURES. HID LIGHTS ARE ASSUMED TO CONTAIN PCB-BALLASTS AND MERCURY-CONTAINING BULBS.
2. NON-PCB LIGHT BALLASTS ARE TO BE RECYCLED OR DISPOSED IN ACCORDANCE WITH 02 84 16.
3. ALL FLUORESCENT LIGHT TUBES AND HID LIGHT BULBS ARE ASSUMED MERCURY-CONTAINING.
4. MERCURY-CONTAINING LIGHT TUBES/BULBS SHALL BE RECYCLED IN ACCORDANCE WITH THE CONTRACT AND WITHOUT BREAKAGE ON SITE. REFER TO CONTRACT SPECIFICATIONS/DRAWINGS, REGULATIONS, AND CONTRACTORS APPROVED WORK PLAN FOR LIGHT TUBE RECYCLING PROCEDURES.
5. THE ELECTRICAL CONTRACTOR IS RESPONSIBLE FOR DE-ENERGIZING IMPACTED LIGHT FIXTURES.

TABLE 1. SUMMARY OF ASBESTOS-CONTAINING MATERIALS

MATERIAL	LOCATION	FRIABLE	QUANTITY
ELECTRICAL PANEL INTERNALS (ASSUMED ACM)	THROUGHOUT INTERIOR	NO	5 EA
TROWELED INSULATING CEMENT (ASSUMED ACM)	BATHROOM WALLS AND CEILING PLENUM	YES	25 EA

EA = EACH, SF = SQUARE FEET. NOTE: REFER TO HAZARDOUS BUILDING MATERIALS SURVEY REPORT INCLUDING APPENDICES FOR ADDITIONAL INFORMATION.

LEGEND

AREA WITH MUDDED ACM PIPE FITTINGS

EP ELECTRICAL PANEL INTERIOR

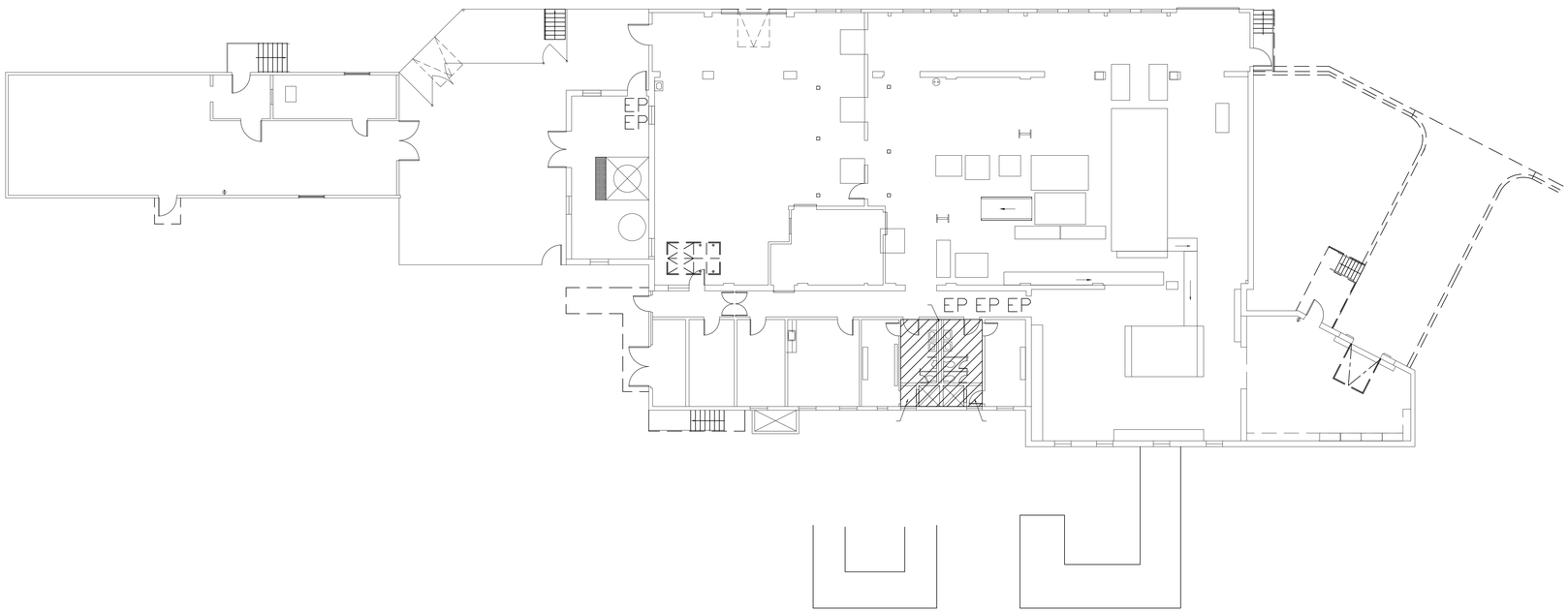

BUILDING 11 FIRST FLOOR PLAN

HAZARDOUS MATERIALS REMEDIATION

CONSULTANT

Consultant:

SAFE ENVIROMENT OF AMERICA, INC dba
MED-TOX NORTHWEST

ARCHITECT/ENGINEER OF RECORD

A/E:

Blue Trident, LLC
Engineering and Construction Services

BLUE TRIDENT, LLC
7829 NE ESPERIONE LN
BAINBRIDGE ISLAND, WA 98110
206-972-0645
EMMANUEL (MANNY) BAUTISTA, PE, F.SAME

STAMP

Office of Construction and Facilities Management

VA U.S. Department of Veterans Affairs

Drawing Title	HAZARDOUS MATERIALS REMEDIATION
Approved:	
Phase	ISSUED FOR CONSTRUCTION
	FULLY SPRINKLERED
Project Title	SEISMICALLY MITIGATE BLDGS. 11,13,16
Location	VA Roseburg Healthcare System
Issue Date	4/3/2026
Checked	JAH
Drawn	SMB
Project Number	653-107
Building Number	11
Drawing Number	HM-003

VA FORM 08 - 6231

SYMBOLS

+	ADDED TO
@	AT
L	ANGLE
&	AND
℄	CENTERLINE
Ø	DIAMETER
'	FOOT\FEET
"	INCH\INCHES
PL/ ℙ	PLATE
//	PARALLEL
⊥	PERPENDICULAR
	SOG REINF OR WWF
	OPENING
	DOWEL
	MTL DK (SECTION)
	METAL DECK (PLAN)
	METAL DECK W/CONC TOPPING (PLAN)
	W SECTION
	STEP IN SLAB\ROOF
	MOMENT CONNECTION
Ref 1 A101 1 Ref	WALL ELEVATION

ABBREVIATIONS

A	
AB	ANCHOR BOLT
ABV	ABOVE
AC	ASPHALT CONCRETE
ACI	AMERICAN CONCRETE INSTITUTE
ADDL	ADDITIONAL
AISC	AMERICAN IRON & STEEL INSTITUTE
ALT	ALTERNATE/ING
ANSI	AMERICAN NATIONAL STANDARDS INSTITUTE
ARCH	ARCHITECTURAL
ASCE	AMERICAN SOCIETY CIVIL ENGINEERS
ASTM	AMERICAN SOCIETY FOR TESTING MATERIALS
AWS	AMERICAN WELDING SOCIETY
B	
B/	BOTTOM OF
B/DK	BOTTOM OF DECK
B/FTG	BOTTOM OF FOOTING
BEL	BELOW
BLDG	BUILDING
BLKG	BLOCKING
BM	BEAM
BOT/B	BOTTOM
BRG	BEARING
BTWN/BET	BETWEEN
C	
C	CHANNEL
CB	CONCRETE BEAM
CJ	CONSTRUCTION JOINT
CL	CENTERLINE
CLG	CEILING
CLR	CLEAR/CLEARANCE
CMU	CONCRETE MASONRY UNIT
COL	COLUMN
CONC	CONCRETE
CONN	CONNECTION
CONSTR	CONSTRUCTION
CONT	CONTINUOUS/CONTINUATION
COORD	COORDINATE
CP	COMPLETE PENETRATION
CRSI	CONCRETE REINFORCING STEEL INSTITUTE
CTR	CENTER
D	
DBL	DOUBLE
DET/DTL	DETAIL
DIA	DIAMETER
DIM	DIMENSION
DK	DECK
DL	DEAD LOAD
DP	DEEP
DWG	DRAWING
DWL	DOWEL
E	
E	EARTHQUAKE
EA	EACH
EJ	EXPANSION JOINT
ELEC	ELECTRICAL
ELEV	ELEVATOR
ELEV/EL	ELEVATION
EQ	EQUAL
EQUIP	EQUIPMENT
EW	EACH WAY
EXIST	EXISTING
EXP	EXPANSION
EXT	EXTERIOR
F	
FDN	FOUNDATION
FF	FINISH FLOOR
FIN	FINISH(ED)
FJ	FLOOR JOISTS
FLR	FLOOR
FOC	FACE OF CONCRETE
FOS	FACE OF STUD
FT	FOOT/FEET
FTG	FOOTING
G	
GA	GAGE
GALV	GALVANIZED
GL	GRIDLINE
GSN	GENERAL STRUCTURAL NOTES
H	
HCT	HOLLOW CLAY TILE
HDR	HEADER
HK	HOOK
HM	HOLLOW METAL
HND/HD	HAND
HOR/H/HORIZ	HORIZONTAL
HSA	HEADED STUD ANCHOR
HSS	HOLLOW STRUCTURAL SECTION
HT	HEIGHT
HVAC	HEATING, VENTILATION & AIR CONDITIONING
I	
IBC	INTERNATIONAL BUILDING CODE
ICBO	INTERNATIONAL CONFERENCE OF BUILDING OFFICIALS
IJ	ISOLATION JOINT
IMF	INTERMEDIATE MOMENT FRAME
IN	INCH/INCHES
INCL	INCLUDE
INFO	INFORMATION
INT	INTERIOR
J	
JST	JOIST
JT	JOINT
L	
L	LENGTH
LL	LIVE LOAD
LLH	LONG LEG HORIZONTAL
LLV	LONG LEG VERTICAL
LOC	LOCATION
LONGIT	LONGITUDINAL
LSH	LONG SIDE HORIZONTAL
LSV	LONG SIDE VERTICAL
M	
MATL	MATERIAL
MAX	MAXIMUM
MECH	MECHANICAL
MEZZ	MEZZANINE
MFR/MANUF	MANUFACTURER
MID	MIDDLE
MIN	MINIMUM
MISC	MISCELLANEOUS
MP&E	MECHANICAL, PLUMBING AND ELECTRICAL
MPH	MILES PER HOUR
MTL	METAL
N	
N/A	NOT APPLICABLE
NIC	NOT IN CONTRACT
NOM	NOMINAL
NTS	NOT TO SCALE
O	
O/C / OC	ON CENTER
OD	OUTSIDE DIAMETER
OH	OVERHEAD
OPG/OPNG	OPENING
OPP	OPPOSITE
P	
PERP	PERPENDICULAR
PL/P	PLATE
PLF	POUNDS PER LINEAR FOOT
PLYWD	PLYWOOD
PR	PAIR
PROJ	PROJECT
PSF	POUNDS PER SQUARE FOOT
PSI	POUNDS PER SQUARE INCH
PT	PAINT
PVMT	PAVEMENT
Q	
QTY	QUANTITY
R	
RAD	RADIUS
REINF	REINFORCING
REQD	REQUIRED
REV	REVISION, REVERSE
RJ	ROOF JOIST
RO	ROUGH OPENING
S	
SCHED	SCHEDULE
SECT	SECTION
SF	SQUARE FEET (FOOT)
SHT	SHEET
SHTG	SHEATHING
SIM	SIMILAR
SJ	SHRINKAGE JOINT
SJI	STEEL JOIST INSTITUTE
SL	SLAB
SOG	SLAB ON GRADE
SPC	SPACE/SPACING
SPECS	SPECIFICATIONS
SQ	SQUARE
SSMA	STEEL STUD MANUFACTURER ASSOCIATION
STD	STANDARD
STIFF	STIFFENER
STL	STEEL
STRUCT	STRUCTURAL
SW	SHEAR WALL
SY	SQUARE YARD
T	
T	TOP
T&B	TOP AND BOTTOM
T/	TOP OF
T/FTG	TOP OF FOOTING
T/STL	TOP OF STEEL
THK/t	THICK/THICKNESS
THRU	THROUGH
TOS	TOP OF STEEL
TOT	TOTAL
TS	TUBE STEEL
TYP	TYPICAL
U	
UBC	UNIFORM BUILDING CODE
UNBAL	UNBALANCED
UNO	UNLESS NOTED OTHERWISE
URM	UNREINFORCED MASONRY
V	
VERT/V	VERTICAL
VIF	VERIFY IN FIELD
W	
W/	WITH
W/O	WITHOUT
WD	WOOD
WDB	WELDED DEFORMED BARS
WP	WORK POINT
WWF	WELDED WIRE FABRIC

GENERAL:

1. THE FOLLOWING STRUCTURAL NOTES APPLY UNLESS NOTED OTHERWISE ON THE STRUCTURAL DRAWINGS.

2. THE CONTRACT STRUCTURAL DRAWINGS AND SPECIFICATIONS REPRESENT THE FINISHED STRUCTURE, THEY DO NOT INDICATE THE METHOD OF CONSTRUCTION. THE CONTRACTOR WILL PROVIDE ALL MEASURES NECESSARY TO PROTECT THE STRUCTURE DURING CONSTRUCTION. SUCH MEASURES SHALL INCLUDE, BUT NOT BE LIMITED TO, BRACING, SHORING FOR LOADS DUE TO CONSTRUCTION EQUIPMENT, ETC.

3. OBSERVATION VISITS TO THE SITE BY THE STRUCTURAL ENGINEER SHALL NOT INCLUDE INSPECTION OF THE ABOVE ITEMS NOR WILL THE STRUCTURAL ENGINEER BE RESPONSIBLE FOR THE CONTRACTOR'S MEANS, METHODS, TECHNIQUES, PROCEDURES OR SEQUENCES OF CONSTRUCTION, OR THE SAFETY PRECAUTIONS AND THE PROGRAMS INCIDENT THERETO.

4. THE STRUCTURAL NOTES SHALL BE USED ALONG WITH THE PROJECT SPECIFICATIONS AND DRAWINGS. THE CONTRACTOR SHALL REQUEST CLARIFICATION IMMEDIATELY UPON DISCOVERY AND BEFORE PROCEEDING, WHERE A DIFFERENCE BETWEEN STRUCTURAL DRAWINGS, NOTES OR SPECIFICATIONS OCCUR.

5. THE CONTRACTOR SHALL BE RESPONSIBLE FOR VERIFICATION OF ALL DIMENSIONS AND CONDITIONS WITH ARCHITECTURAL DRAWINGS PRIOR TO START OF CONSTRUCTION. NOTIFY THE CONTRACTING OFFICER'S REPRESENTATIVE OF ANY DISCREPANCIES OR INCONSISTENCIES IMMEDIATELY UPON DISCOVERY.

6. THE CONTRACTOR SHALL VERIFY ALL EXISTING CONDITIONS SHOWN ON DRAWINGS.

7. THE CONTRACTOR SHALL ESTABLISH AND VERIFY ALL OPENINGS AND INSERTS FOR ARCHITECTURAL, MECHANICAL, ELECTRICAL, PLUMBING, SECURITY AND OTHER ITEMS WITH APPROPRIATE TRADES, DRAWINGS, AND SUBCONTRACTORS PRIOR TO CONSTRUCTION. NO PENETRATIONS THRU STRUCTURAL MEMBERS ALLOWED UNLESS SHOWN ON STRUCTURAL DRAWINGS OR APPROVED BY STRUCTURAL ENGINEER IN WRITING.

8. PLAN NOTES AND LOCATION SPECIFIC DETAILS ON DRAWINGS SHALL TAKE PRECEDENCE OVER GENERAL NOTES AND TYPICAL DETAILS.

9. TYPICAL DETAILS ARE NOT CUT ON PLANS, BUT APPLY UNLESS NOTED OTHERWISE. WHERE NO DETAILS ARE SHOWN, CONSTRUCTION SHALL CONFORM TO SIMILAR WORK ON PROJECT.

10. WHERE REFERENCE IS MADE TO VARIOUS TEST STANDARDS FOR MATERIALS, SUCH STANDARDS SHALL BE THE LATEST EDITION AND/OR ADDENDUM.

11. ANY ENGINEERING DESIGN PROVIDED BY OTHERS AND SUBMITTED FOR REVIEW SHALL BEAR THE SEAL AND SIGNATURE OF A REGISTERED STRUCTURAL ENGINEER.

DESIGN CRITERIA:

1. GOVERNING/REFERENCE CODES:
2022 ASCE 7-22
2024 INTERNATIONAL BUILDING CODE
2022 AISC 16TH EDITION
VA H-18-8 (JULY 2023, REV NOV 2024)
ASCE 41-23

2. EXISTING BUILDING SEISMIC FORCE RESISTING SYSTEM: UNREINFORCED MASONRY SHEAR WALLS AND FLEXIBLE DIAPHRAGMS (BUILDING 11 IS A 1-STORY, 14,051 GROSS SQUARE FEET STRUCTURE. IT WAS ORIGINALLY BUILT IN 1933.). THE ORIGINAL BUILDING DOES NOT CONFORM TO CURRENT BUILDING CODES. WITH ADDITIONS IN 1967,1976,1988 & 1998 AND HAS NOT UNDERGONE A SIGNIFICANT SEISMIC RETROFIT.

SEISMIC UPGRADES TO THE EXISTING STRUCTURE INCLUDE NEW STRONGBACKING OF EXISTING BRICK EXTERIOR WALLS, NEW INTERMEDIATE MOMENT FRAMES IN 1976 NORTH SIDE ADDITION TO REDUCE SPAN OF EXISTING STEEL DECK DIAPHRAGM, POSITIVE OUT OF PLANE AND IN-PLANE ANCHORAGE AT ROOF DIAPHRAGMS AND INDEPENDENT SECONDARY SUPPORT AT ORIGINAL ROOF TRUSS BEARING.

FACILITY CRITICALITY DESIGNATION: ESSENTIAL
SITE-SPECIFIC SEISMIC RESPONSE SPECTRUM PER THE GEOTECHNICAL GROUND-MOTION STUDY

RISK CATEGORY = III

SITE CLASS: C

Ss=1.02; S1 = 0.46 [ASCE 7]
BSE-2N: Sxs = 1.16 ; Sx1 = 0.65 [ASCE 41]
BSE-1N: Sxs = 0.78 ; Sx1 = 0.43[ASCE 41]

ANALYSIS PROCEDURE USED = LINEAR STATIC PROCEDURE

ASCE STRUCTURAL PERFORMANCE OBJECTIVES: IMMEDIATE OCCUPANCY AT THE BSE-1N; LIFE SAFETY AT THE BSE-2N

ASCE 41 NON-STRUCTURAL PERFORMANCE OBJECTIVE = OPERATIONAL @ BSE-1N; HAZARDS REDUCED @ BSE-2N

3. LIVE LOADS:
   A. ROOF = 25 PSF (SNOW)
   B. OFFICE = (1ST FLOOR) = 80 PSF
   C. MECH/ELEC = 150 PSF
   D. LIGHT STORAGE = 125 PSF
   E. CORRIDORS/LOBBIES/STAIRS = 100 PSF
   F. LAUNDRY = 200 PSF
   NOTE: STORAGE SPACES TO BE POSTED IN CONSPICUOUS LOCATION PER IBC REQUIREMENTS

4. MECHANICAL & NON-STRUCTURAL ANCHORAGE:
   A. DESIGN PER ASCE 7-22 CHAPTER 13, SEE SPECIFICATIONS SECTION 13 05 41.

5. GEOTECHNICAL:
SOIL BEARING SURFACES AND FILL SHALL BE PREPARED IN ACCORDANCE WITH THE GEOTECHNICAL REPORT AND INSPECTED BY THE GEOTECHNICAL ENGINEER [OR AN APPROVED TESTING AGENCY].

GEOTECHNICAL REPORT REFERENCE: TERRACON CONSULTANTS INC., REPORT #82245137, DATED FEBRUARY 25, 2025

FOOTINGS SHALL BE FOUNDED AT LEAST 18" BELOW LOWEST ADJACENT EXTERIOR FINISHED GRADE. OVEREXCAVATE FOOTINGS TO COMPETENT BEARING PER THE GEOTECHNICAL ENGINEER AND PROVIDE COMPACTED BACKFILL PER THE GEOTECHNICAL ENGINEER OR PROJECT SPECIFICATIONS. THE GEOTECHNICAL ENGINEER SHALL APPROVE FOOTING EXCAVATION / PREPARATION PRIOR TO PLACEMENT OF ALL FOOTINGS. FOOTING DEPTHS AND ELEVATIONS SHOWN ON DRAWINGS ARE MINIMUM AND FOR GUIDANCE ONLY; CONTRACTOR SHALL ESTABLISH ACTUAL ELEVATIONS IN FIELD. BACKFILL BEHIND ALL WALLS AND PROVIDE FOR SUBSURFACE DRAINAGE AS RECOMMENDED IN THE GEOTECHNICAL REPORT AND SPECIFICATIONS.

SOIL PROFILE TYPE SITE CLASS "C"
ALLOWABLE VERTICAL DESIGN PRESSURE: 6,000 PSF
LATERAL EARTH PRESSURE; LEVEL BACKFILL:
UNRESTRAINED (ACTIVE): 40 PCF
RESTRAINED (AT-REST) 55 PCF
ALLOWABLE PASSIVE PRESSURE 250 PCF, FS = 1.5
ALLOWABLE FRICTION COEFFICIENT: 0.27, FS = 1.5

CONCRETE:

1. CONCRETE FOR THE PROJECT SHALL ATTAIN A MINIMUM COMPRESSIVE STRENGTH fc' AT 28 DAYS WITH A MINIMUM CEMENT QUANTITY PER SPECIFICATION.

   A. SLAB-ON-GRADE/FOUNDATIONS fc' = 4000 PSI
   B. CONCRETE OVERLAY SHEAR WALLS fc' = 4,000 PSI
   C. GROUT UNDER COLUMN BASE PLATES SHALL HAVE fc' = 6000 PSI

2. ALL REINFORCING STEEL FOR THE PROJECT SHALL BE DEFORMED BARS AND SHALL CONFORM TO THE FOLLOWING ASTM STANDARD DESIGNATIONS.

   A. #4 BARS AND LARGER IN CONCRETE AND MASONRY - A-615, GRADE 60 KSI
   B. ANY REINFORCING TO BE WELDED - A-706, GRADE 60 KSI
   C. VERTICAL REINFORCEMENT IN SHEAR WALLS AND COLUMNS/PILASTERS - A706 GRADE 60 LOW ALLOY

3. REINFORCEMENT LAPS CONCRETE:

   A. VERTICAL BARS - CLASS B
   B. HORIZONTAL BARS - CLASS B (2'-0" MINIMUM)

4. THE FOLLOWING MINIMUM COVER SHALL BE PROVIDED FOR REINFORCEMENT PLACED IN CONCRETE (UNLESS NOTED OTHERWISE):

   A. CONCRETE WALLS EXPOSED TO EARTH OR WEATHER - 2"
   B. CONCRETE NOT EXPOSED TO EARTH OR WEATHER - 1 1/2" [BEAMS/COLS]
   C. CONCRETE NOT EXPOSED TO EARTH OR WEATHER - 1" [SLABS/WALLS]
   D. CONCRETE CAST AGAINST EARTH - 3"

STRUCTURAL STEEL AND MISCELLANEOUS METALS:

1. DESIGN, FABRICATION, AND ERECTION OF STRUCTURAL STEEL FOR BUILDINGS SHALL BE IN ACCORDANCE WITH THE LATEST EDITION AISC SPECIFICATIONS, SECTION 5 AND AWS D1 .1 SPECIFICATIONS AS MODIFIED BY THE CONTRACT SPECIFICATIONS.

2. ALL STRUCTURAL STEEL WIDE FLANGE BEAMS SHALL BE ASTM A-992. GRADE 50 KSI.

3. MISCELLANEOUS STEEL SHALL BE ASTM A-36 (FY = 36 KSI).

4. ALL STEEL TUBE COLUMNS/BRACES SHALL BE ASTM A-500 GRADE B (FY = 46 KSI).

5. ALL STEEL PIPE COLUMNS/BRACES SHALL BE ASTM A-501 GRADE B. TYPE E OR S (Fy = 35 KSI).

WELDED CONNECTIONS:

1. WHERE SIZE OF WELD IS NOT INDICATED, IT SHALL DEVELOP THE FULL STRENGTH OF MEMBER AND CONNECTION.

2. NO SPLICES IN STEEL BEAMS OR COLUMNS MAY BE MADE OTHER THAN THOSE DETAILED ON THE DRAWINGS UNLESS SHOWN ON SHOP DRAWINGS AND APPROVED BY CONTRACTING OFFICERS REPRESENTATIVE.

3. ALL BEVEL GROOVE WELDS SHALL BE COMPLETE PENETRATION WELDS UNLESS NOTED OTHERWISE.

4. ALL WELDING SHALL BE DONE BY CERTIFIED WELDERS - SEE SPECS.

BOLTED CONNECTIONS:

1. BOLTED CONNECTIONS SHALL CONFORM TO AISC STANDARD BOLTED CONNECTIONS WITH MAXIMUM NUMBER OF 3/4" DIAMETER A-325N BOLTS UNLESS DETAILED ON DRAWINGS (SEE FRAMED BEAM CONNECTIONS, TABLES 10-1, 10-2, 10-3, 10-4 OR 10-9 OF AISC MANUAL OF STEEL CONSTRUCTION). HIGH STRENGTH BOLTS INCLUDING NUTS AND WASHERS SHALL BE IN ACCORDANCE WITH ASTM SPECIFICATIONS AND SHALL MINIMALLY MEET "SNUG TIGHT" CRITERIA AS DEFINED IN AISC "SPECIFICATION FOR STRUCTURAL JOINTS …" UNO.

2. NO SLOTTED HOLES PERMITTED AT STEEL CONNECTIONS UNLESS APPROVED BY THE CONTRACTING OFFICER'S REPRESENTATIVE.

3. WHERE BOLT HOLES IN STEEL MEMBERS ARE ENLARGED TO MORE THAN 1 /16" DIAMETER OVERSIZE AT CONNECTION BOLTS (3/16" DIAMETER AT ANCHOR BOLTS), PROVIDE 5/16" x 2-1/2" x 2-1/2" PLATE WASHERS WITH PROPER DIAMETER HOLE. PLATE WASHERS SHALL BE WELDED TO STEEL MEMBER WITH 3/16" FILLET WELD ALL AROUND.

4. THREADED RODS SHALL BE ASTM F1554 GR 55 W/ WELD SUPPLEMENT S-1, HEADED STUDS & THREADED STUDS SHALL BE ASTM A29, WELDED DEFORMED BARS (WDB) SHALL BE ASTM A496.

POST INSTALLED CONCRETE ANCHORS:

1. DRILLED AND EPOXY GROUTED CONCRETE ANCHORS AND ADHESIVE BAR ANCHORS, SHALL BE EPOXY GROUTED WITH SIMPSON SET 3G, DEWALT ALT PURE 110+, OR HILTI HIT-RE 500 V3 EPOXY ADHESIVE OR APPROVED EQUIVALENT UNO. DRILL OVERSIZE HOLES, CLEAN, AND APPLY EPOXY PER MFR PRINTED INSTRUCTIONS. EPOXY SHALL BE MIXED, APPLIED AND CURED IN STRICT ACCORDANCE WITH MFR PRINTED INSTRUCTIONS. APPLY EPOXY ONLY TO CLEAN AND DRY CONCRETE AND PROVIDE PROTECTION SO DOWELS ARE NOT DISTURBED DURING THE CURING PERIOD.

2. EXPANSION ANCHORS SHALL BE HILTI "KWIK BOLT TZ2", SIMPSON STRONG BOLT 2, OR DEWALT "POWER SUD+ SD2" OR APPROVED EQUIVALENT. INSTALLATION SHALL BE IN STRICT ACCORDANCE WITH MANUFACTURERS PRINTED INSTRUCTIONS.

SHOP DRAWINGS AND SUBMITTALS:

1. SHOP DRAWINGS SHALL BE PREPARED AND SUBMITTED FOR REVIEW BY THE PARTY DENOTED IN THE SPECIFICATIONS. FOR EACH STRUCTURAL BUILDING MATERIAL SPECIFIED.

STATEMENT OF SPECIAL INSPECTION:

1. SEE SPEC SECTIONS 014535 - SPECIAL INSPECTIONS AND 014529 - TESTING LABORATORY SERVICES FOR MATERIALS, WORK, TYPE AND EXTENT OF EACH SPECIAL INSPECTION OR TEST.

MASONRY ANCHORAGE:

1. POST-INSTALLED MASONRY ANCHORS INTO EXISTING BRICK MASONRY WALLS SHALL BE THREADED ROD WITH HY-270 BY HILTI, AC100+ GOLD BY DEWALT, ET-3G BY SIMPSON STRONG-TIE, OR APPROVED EQUAL. PROVIDE SCREEN TUBES AT ALL EPOXY ANCHORS INTO BRICK MASONRY WALLS. EPOXY ANCHOR AND SCREEN TUBE ASSEMBLIES SHALL BE PULL TESTED PER MANUFACTURERS SPECIFICATIONS PRIOR TO INSTALLATION IN ORDER TO VERIFY CAPACITY AND SPACING.

2. SCREWS INTO CONCRETE OR BRICK FROM LIGHT GAUGE STRONGBACK WALLS SHALL BE AS NOTED IN THE DETAILS OR APPROVED EQUAL WITH MIN EMBED OF 1 1/2" (UNO).

EXISTING REBAR SCANNING:

THE GENERAL CONTRACTOR SHALL SELECT THE APPROPRIATE SCANNING METHODS BASED ON THE CONSTRUCTION MEANS AND METHODS REQUIRED TO INSTALL POST-INSTALLED ANCHORS IN ACCORDANCE WITH DETAILS. GROUND PENETRATING RADAR, X-RAY, AND MAGNETIC-BASED METHODS ARE ALL ACCEPTABLE METHODS OF SCANNING. HOWEVER, CERTAIN METHODS MAY HAVE LIMITATIONS AND THE APPROPRIATE METHODS AND EQUIPMENT MUST BE DETERMINED BY THE CONTRACTOR PRIOR TO CONSTRUCTION. DO NOT CUT, DAMAGE, OR REMOVE EXISTING REBAR TO INSTALL ANCHORS.

SHOTCRETE:

SHOTCRETE PROCEDURE SHALL BE IN ACCORDANCE WITH THE SPECIFICATIONS, IBC SECTION 1908 AND ACI 318. REINFORCING LAP SPLICES SHALL BE DETAILED ON SHOP DRAWINGS. NON-CONTACT LAP SPLICES, IF USED, SHALL HAVE A MAXIMUM CLEAR SPACE OF 4" BETWEEN BARS.

Revisions:	Date:

CONSULTANT

ARCHITECT/ENGINEER OF RECORD

A/E:
Blue Trident, LLC
Engineering and Construction Services

BLUE TRIDENT, LLC
900 WINSLOW WAY E, SUITE 130
BAINBRIDGE ISLAND, WA 98110
206-972-0645
EMMANUEL (MANNY) BAUTISTA, PE, F.SAME

STAMP

Office of Construction and Facilities Management

VA U.S. Department of Veterans Affairs

Drawing Title: GENERAL STRUCTURAL NOTES	Phase: ISSUED FOR CONSTRUCTION	Project Title: Seismic Retrofit and Renovate Building 11	Project Number: 653-107
			Building Number: B11
Approved:	FULLY SPRINKLERED	Location: VA Roseburg Healthcare System	Drawing Number: S-001
		Issue Date: 4/3/2026 · Checked: BEM · Drawn: AJW	

VA FORM 08 - 6231

3/31/2026 11:08:23 AM

C:\Users\PAurel\Desktop\Revit Local Files\Bldg 11 - Struct_djulian2EEYLW.rvt

PRIOR HISTORY KEY

- ORIGINAL 1932 BLDG
- 1967 ADDITION
- 1976 ADDITIONS
- 1988 ADDITIONS
- 1998 ADDITION
- UNKNOWN (BTWN 1967-1981)
- UNKNOWN (BTWN 1988-1998)

WALL LEGEND

- EXISTING WALL
- STRONGBACK WALL
- CONCRETE SHEAR WALL

FOUNDATION NOTES

1. SEE SHEET S001 FOR GENERAL STRUCTURAL NOTES.
2. ALL REFERENCE [REF] DIMENSIONS, ELEVATIONS, AND LOCATIONS OF EXISTING STRUCTURAL COMPONENTS ARE BASED ON INFORMATION GATHERED FROM ORIGINAL DRAWINGS OR CURSORY FIELD MEASUREMENTS AND ARE SHOWN FOR GENERAL INFORMATION ONLY. CONTRACTOR SHALL FIELD MEASURE AND VERIFY ALL CONDITIONS PRIOR TO COMMENCING ANY WORK. NOTIFY THE VA CONTRACTING OFFICER'S REPRESENTATIVE (COR) WHERE CONDITIONS VARY FROM THOSE SHOWN.
3. FOR ALL WALLS TO RECEIVE CONCRETE OVERLAY OR LIGHT GAUGE STRONGBACK, REMOVE ALL ITEMS ATTACHED TO THE EXISTING URM WALL (CONDUITS, EQUIPMENT, DUCTS, APPURTENANCES ETC) SO THAT THE WORK CAN OCCUR. THEN RE-ATTACH TO THE FACE OF THE UPGRADE WHEN IT IS COMPLETE.

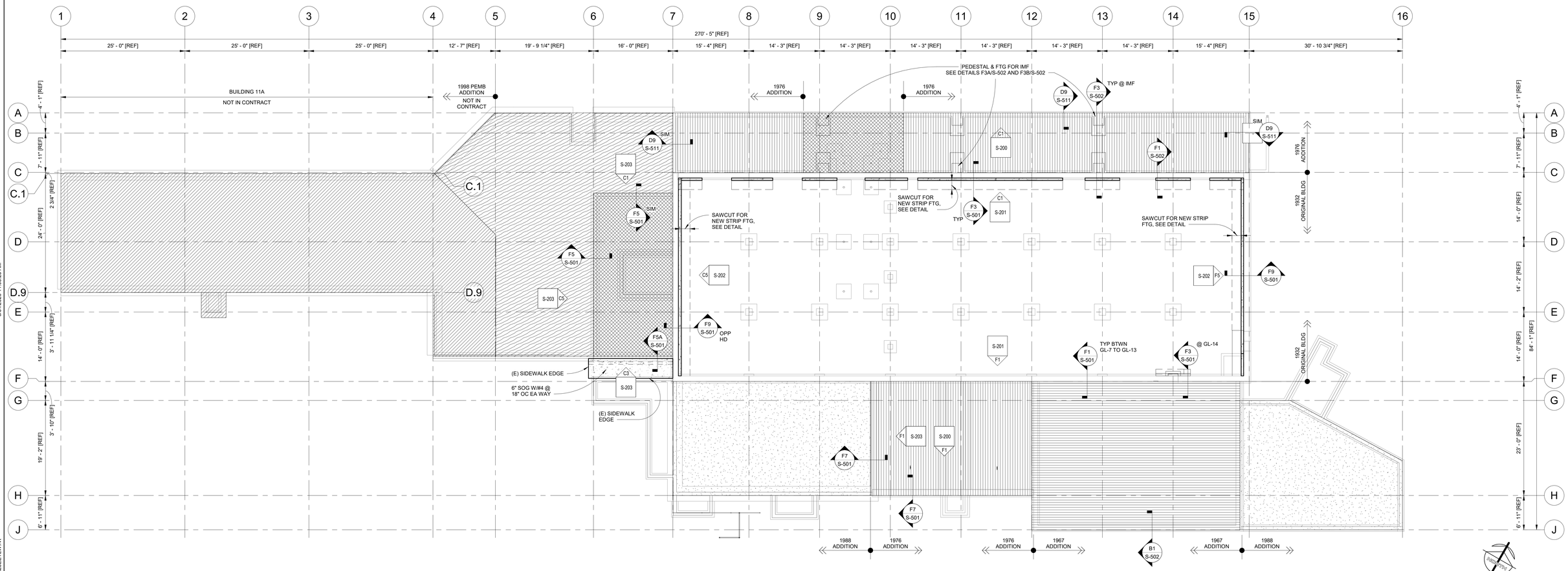

F1 FOUNDATION PLAN
1/8" = 1'-0"

Revisions:	Date:

CONSULTANT

ARCHITECT/ENGINEER OF RECORD

A/E:
Blue Trident, LLC
Engineering and Construction Services

BLUE TRIDENT, LLC
900 WINSLOW WAY E, SUITE 130
BAINBRIDGE ISLAND, WA 98110
206-972-0645
EMMANUEL (MANNY) BAUTISTA, PE, F.SAME

STAMP

Office of Construction and Facilities Management

VA U.S. Department of Veterans Affairs

Drawing Title: FOUNDATION PLAN	Phase: ISSUED FOR CONSTRUCTION	Project Title: Seismic Retrofit and Renovate Building 11	Project Number: 653-107
			Building Number: B11
Approved:	FULLY SPRINKLERED	Location: VA Roseburg Healthcare System	Drawing Number: S-100
		Issue Date: 4/3/2026 · Checked: BEM · Drawn: AJW	

VA FORM 08 - 6231

C:\Users\Paula\Desktop\Revit Local Files\Bldg 11 - Struct_djulian2SEE1LW.rvt

3/31/2026 11:08:25 AM

WALL LEGEND

- EXISTING WALL
- STRONGBACK WALL
- CONCRETE SHEAR WALL

FLOOR FRAMING NOTES

1. SEE SHEET S001 FOR GENERAL STRUCTURAL NOTES.
2. IMF-"I" = INTERMEDIATE MOMENT FRAME @ GRIDLINE "I", SEE F5/S-203.
3. ALL REFERENCE [REF] DIMENSIONS, ELEVATIONS, AND LOCATIONS OF EXISTING STRUCTURAL COMPONENTS ARE BASED ON INFORMATION GATHERED FROM ORIGINAL DRAWINGS OR CURSORY FIELD MEASUREMENTS AND ARE SHOWN FOR GENERAL INFORMATION ONLY. CONTRACTOR SHALL FIELD MEASURE AND VERIFY ALL CONDITIONS PRIOR TO COMMENCING ANY WORK. NOTIFY THE VA CONTRACTING OFFICER'S REPRESENTATIVE (COR) WHERE CONDITIONS VARY FROM THOSE SHOWN.
4. FOR ALL WALLS TO RECEIVE CONCRETE OVERLAY OR LIGHT GAUGE STRONGBACK, REMOVE ALL ITEMS ATTACHED TO THE EXISTING URM WALL (CONDUITS, EQUIPMENT, DUCTS, APPURTENANCES ETC) SO THAT THE WORK CAN OCCUR. THEN RE-ATTACH TO THE FACE OF THE UPGRADE WHEN IT IS COMPLETE.

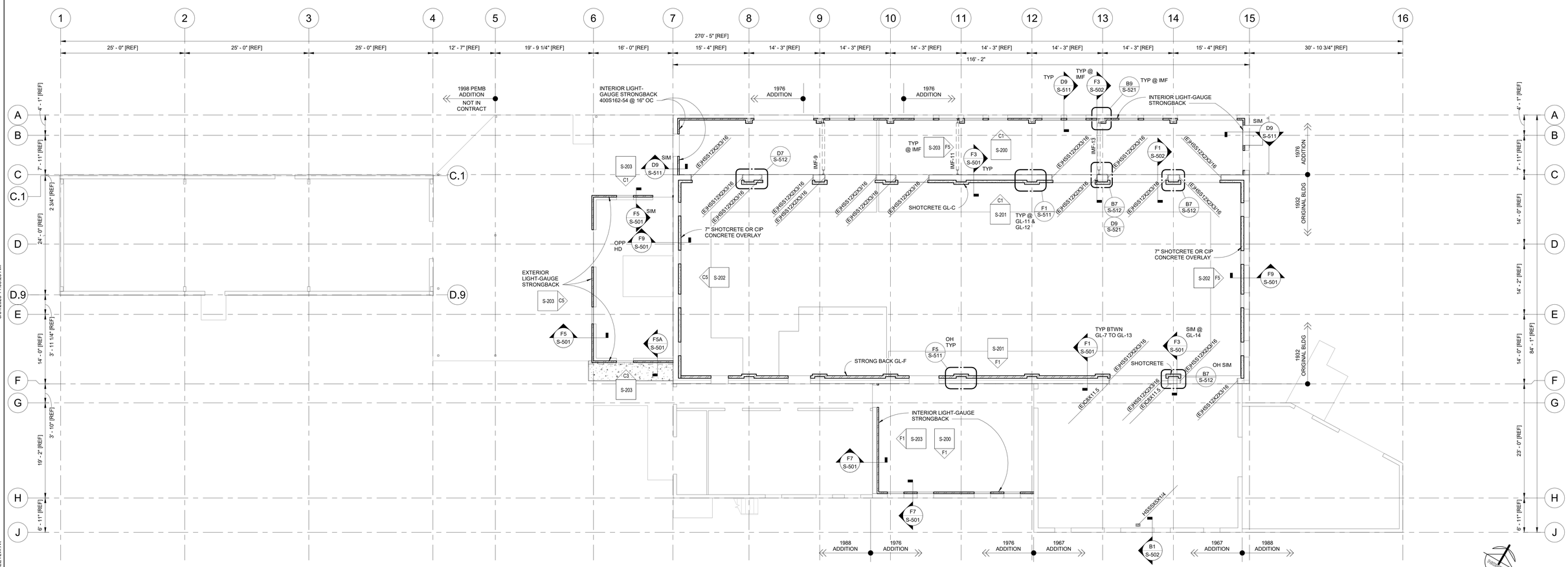

F1 FLOOR FRAMING PLAN

1/8" = 1'-0"

Revisions:	Date:

CONSULTANT

ARCHITECT/ENGINEER OF RECORD

A/E:
BLUE TRIDENT, LLC
900 WINSLOW WAY E, SUITE 130
BAINBRIDGE ISLAND, WA 98110
206-972-0645
EMMANUEL (MANNY) BAUTISTA, PE, F.SAME

STAMP

Office of Construction and Facilities Management

VA U.S. Department of Veterans Affairs

Drawing Title: FLOOR FRAMING PLAN	Phase: ISSUED FOR CONSTRUCTION	Project Title: Seismic Retrofit and Renovate Building 11	Project Number: 653-107
			Building Number: B11
Approved:	FULLY SPRINKLERED	Location: VA Roseburg Healthcare System	Drawing Number: S-101
		Issue Date: 4/3/2026 · Checked: BEM · Drawn: AJW	

VA FORM 08 - 6231

C:\Users\PAura\Desktop\Revit Local Files\Bldg 11 - Struct_djulian23EEYLW.rvt

3/31/2026 11:08:26 AM

ROOF FRAMING NOTES

1. SEE SHEET S001 FOR GENERAL STRUCTURAL NOTES.
2. ALL REFERENCE [REF] DIMENSIONS, ELEVATIONS, AND LOCATIONS OF EXISTING STRUCTURAL COMPONENTS ARE BASED ON INFORMATION GATHERED FROM ORIGINAL DRAWINGS OR CURSORY FIELD MEASUREMENTS AND ARE SHOWN FOR GENERAL INFORMATION ONLY. CONTRACTOR SHALL FIELD MEASURE AND VERIFY ALL CONDITIONS PRIOR TO COMMENCING ANY WORK. NOTIFY THE VA CONTRACTING OFFICER'S REPRESENTATIVE (COR) WHERE CONDITIONS VARY FROM THOSE SHOWN.
3. FOR ALL WALLS TO RECEIVE CONCRETE OVERLAY OR LIGHT GAUGE STRONGBACK, REMOVE ALL ITEMS ATTACHED TO THE EXISTING URM WALL (CONDUITS, EQUIPMENT, DUCTS, APPURTENANCES ETC) SO THAT THE WORK CAN OCCUR. THEN RE-ATTACH TO THE FACE OF THE UPGRADE WHEN IT IS COMPLETE.

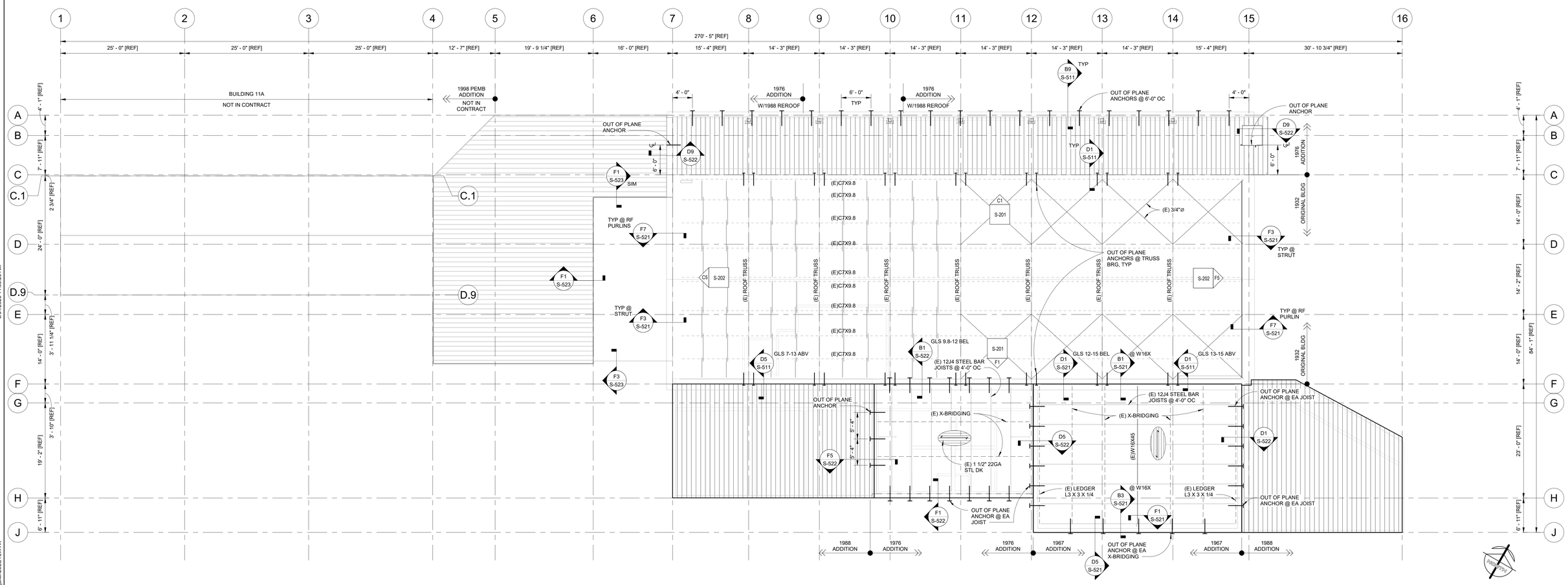

F1 ROOF FRAMING PLAN

1/8" = 1'-0"

Revisions:	Date:

CONSULTANT

ARCHITECT/ENGINEER OF RECORD

A/E:

Blue Trident, LLC
Engineering and Construction Services

BLUE TRIDENT, LLC
900 WINSLOW WAY E, SUITE 130
BAINBRIDGE ISLAND, WA 98110
206-972-0645
EMMANUEL (MANNY) BAUTISTA, PE, F.SAME

STAMP

Office of Construction and Facilities Management

VA U.S. Department of Veterans Affairs

Drawing Title: ROOF FRAMING PLAN	Phase: ISSUED FOR CONSTRUCTION	Project Title: Seismic Retrofit and Renovate Building 11	Project Number: 653-107
			Building Number: B11
Approved:	FULLY SPRINKLERED	Location: VA Roseburg Healthcare System	Drawing Number: S-102
		Issue Date: 4/3/2026 · Checked: BEM · Drawn: AJW	

VA FORM 08 - 6231

C:\Users\PAurel\Desktop\Revit Local Files\Bldg 11 - Struct_jjulian2SEE1LW.rvt

3/31/2026 11:08:26 AM

SHEAR WALL ELEVATION NOTES

1. SEE SHEET S-001 FOR GENERAL STRUCTURAL NOTES.
2. SEE DETAIL C1/S-523 FOR TYP LIGHT GAUGE FRAMING DETAILS.
3. FOR TYP STRONGBACK CONN INFO SEE D3/S-512.
4. FOR TYP REINF CONCRETE OVERLAY CONN INFO SEE D1/S-512 & F1/S-512. SEE C1/S-202 & F1/S-202 FOR TYP OVERLAY DWL PATTERNS.
5. @ CONC OVERLAY OPGS USE #5 DIAG X 4'-0" PLACED @ 45° ANGLE @ 3" CLR FROM CORNER, TYP. TRIM STEEL @ HEADS & SILLS SHALL BE (2) #6 @ 3" OC UNO.
6. FOR ALL WALLS TO RECEIVE CONCRETE OVERLAY OR LIGHT GAUGE STRONGBACK, REMOVE ALL ITEMS ATTACHED TO THE EXISTING URM WALL (CONDUITS, EQUIPMENT, DUCTS, APPURTENANCES ETC) SO THAT THE WORK CAN OCCUR. THEN RE-ATTACH TO THE FACE OF THE UPGRADE WHEN IT IS COMPLETE.

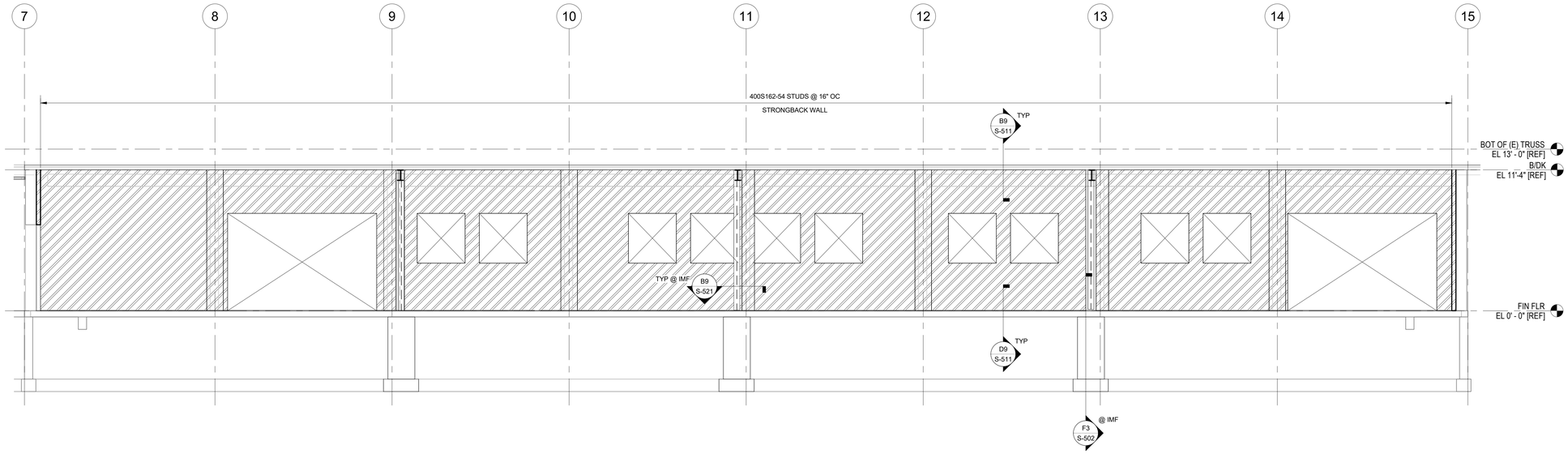

C1 SHEAR WALL ELEVATION - GRIDLINE A
1/4" = 1'-0"

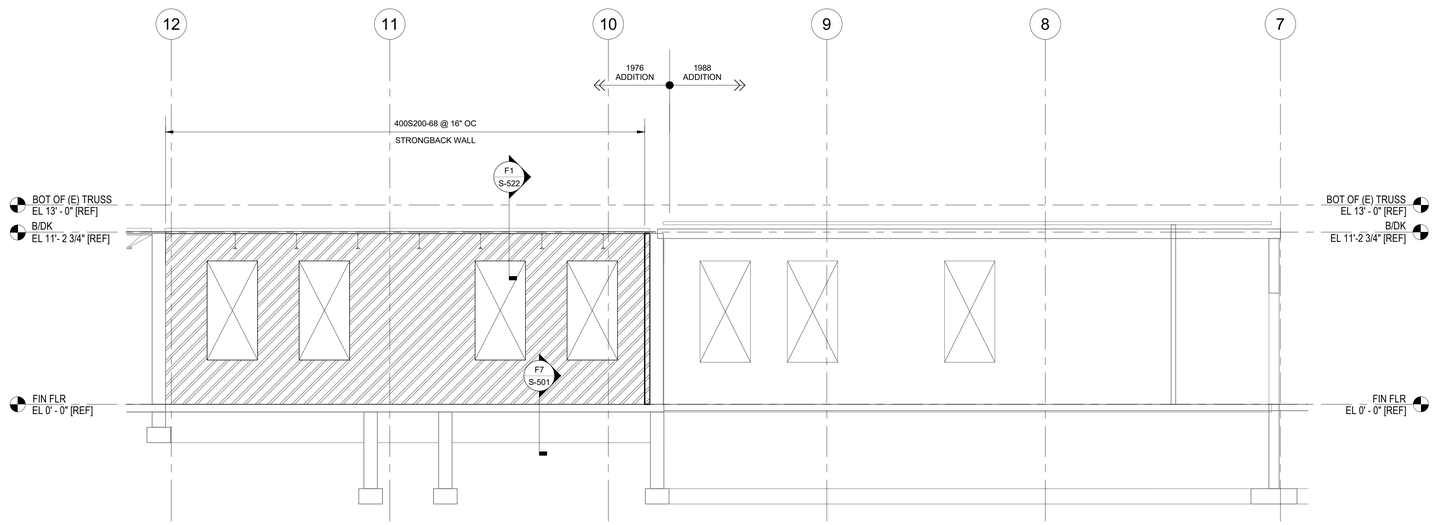

F1 SHEAR WALL ELEVATION - GRIDLINE H
1/4" = 1'-0"

Revisions:	Date:

CONSULTANT

ARCHITECT/ENGINEER OF RECORD

A/E:
Blue Trident, LLC
Engineering and Construction Services

BLUE TRIDENT, LLC
900 WINSLOW WAY E, SUITE 130
BAINBRIDGE ISLAND, WA 98110
206-972-0645
EMMANUEL (MANNY) BAUTISTA, PE, F.SAME

STAMP

Office of Construction and Facilities Management

VA U.S. Department of Veterans Affairs

Drawing Title: SHEAR WALL ELEVATIONS	Phase: ISSUED FOR CONSTRUCTION	Project Title: Seismic Retrofit and Renovate Building 11	Project Number: 653-107
			Building Number: B11
Approved:	FULLY SPRINKLERED	Location: VA Roseburg Healthcare System	Drawing Number: S-200
		Issue Date: 4/3/2026 · Checked: BEM · Drawn: AJW	

0 4 6 8 12

VA FORM 08 - 6231

3/31/2026 11:08:27 AM

C:\Users\PAurel\Desktop\Revit Local Files\Bldg 11 - Struct_ajulian23EEYLW.rvt

SHEAR WALL ELEVATION NOTES

1. SEE SHEET S-001 FOR GENERAL STRUCTURAL NOTES.
2. SEE DETAIL C1/S-523 FOR TYP LIGHT GAUGE FRAMING DETAILS.
3. FOR TYP STRONGBACK CONN INFO SEE D3/S-512.
4. FOR TYP REINF CONCRETE OVERLAY CONN INFO SEE D1/S-512 & F1/S-512. SEE C1/S-202 & F1/S-202 FOR TYP OVERLAY DWL PATTERNS.
5. @ CONC OVERLAY OPGS USE #5 DIAG X 4'-0" PLACED @ 45° ANGLE @ 3" CLR FROM CORNER, TYP. TRIM STEEL @ HEADS & SILLS SHALL BE (2) #6 @ 3" OC UNO.
6. FOR ALL WALLS TO RECEIVE CONCRETE OVERLAY OR LIGHT GAUGE STRONGBACK, REMOVE ALL ITEMS ATTACHED TO THE EXISTING URM WALL (CONDUITS, EQUIPMENT, DUCTS, APPURTENANCES ETC) SO THAT THE WORK CAN OCCUR. THEN RE-ATTACH TO THE FACE OF THE UPGRADE WHEN IT IS COMPLETE.

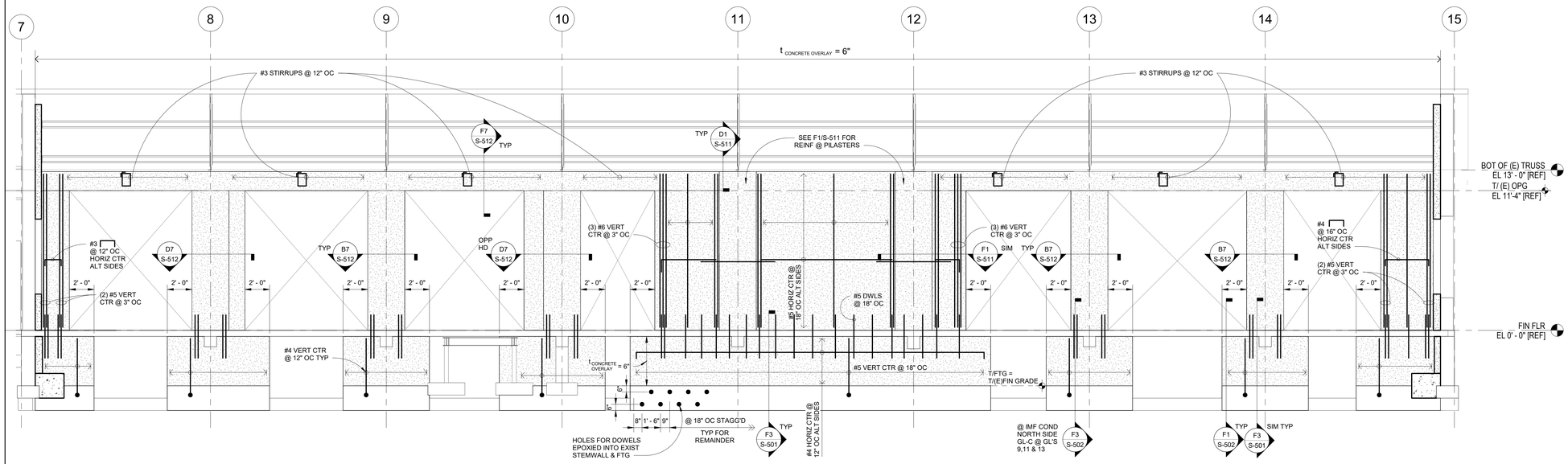

C1 SHEAR WALL ELEVATION - GRIDLINE C
1/4" = 1'-0"

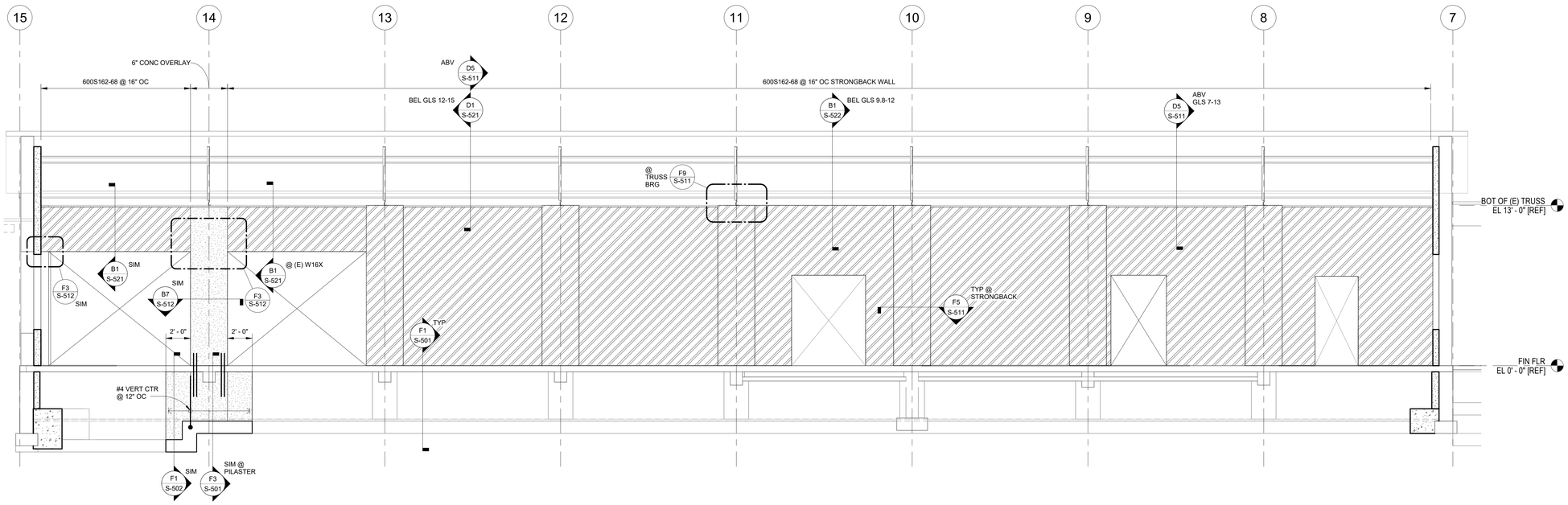

F1 SHEAR WALL ELEVATION - GRIDLINE F
1/4" = 1'-0"

Revisions:	Date:

CONSULTANT

ARCHITECT/ENGINEER OF RECORD

A/E:
BLUE TRIDENT, LLC
900 WINSLOW WAY E, SUITE 130
BAINBRIDGE ISLAND, WA 98110
206-972-0645
EMMANUEL (MANNY) BAUTISTA, PE, F.SAME

STAMP

Office of Construction and Facilities Management

VA U.S. Department of Veterans Affairs

Drawing Title	SHEAR WALL ELEVATIONS
Approved:	
Phase	ISSUED FOR CONSTRUCTION
	FULLY SPRINKLERED
Project Title	Seismic Retrofit and Renovate Building 11
Location	VA Roseburg Healthcare System
Issue Date	4/3/2026
Checked	BEM
Drawn	AJW
Project Number	653-107
Building Number	B11
Drawing Number	S-201

VA FORM 08 - 6231

3/31/2026 11:08:29 AM

C:\Users\PAurant\Desktop\Revit Local Files\Bldg 11 - Struct_ajulian-23EEYLW.rvt

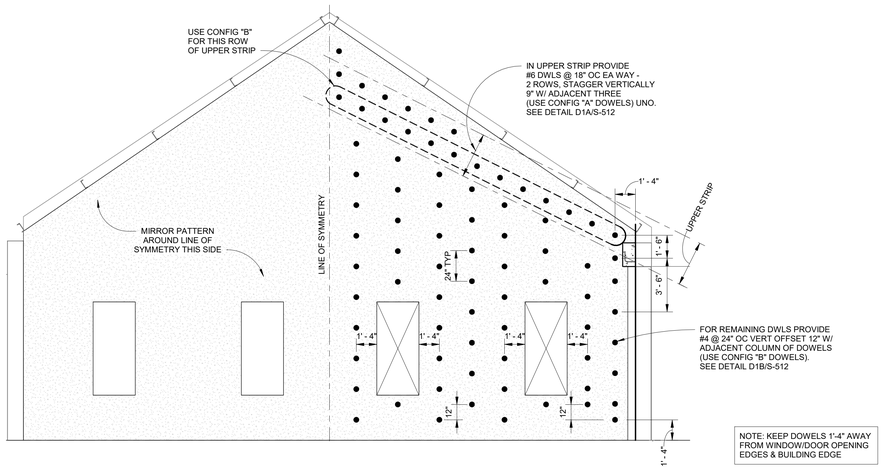

NOTE: KEEP DOWELS 1'-4" AWAY FROM WINDOW/DOOR OPENING EDGES & BUILDING EDGE

C1 TYPICAL DOWEL PATTERN @ GABLE END WALLS

1/4" = 1'-0"

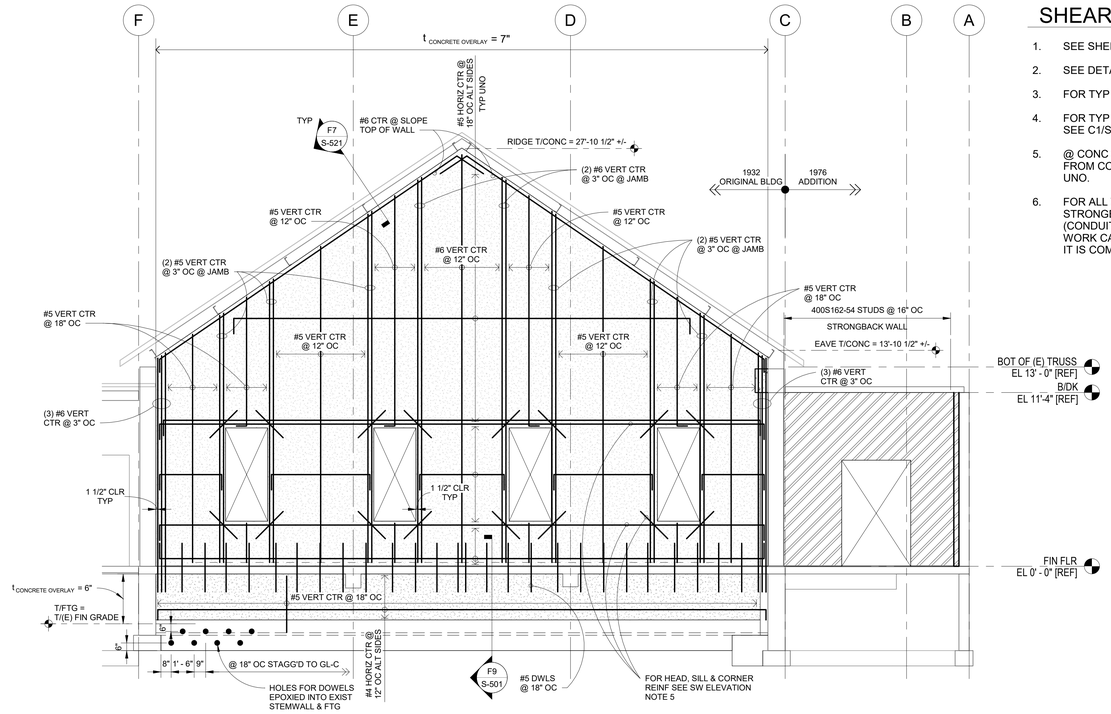

C5 SHEAR WALL ELEVATION - GRIDLINE 7

1/4" = 1'-0"

SHEAR WALL ELEVATION NOTES

1. SEE SHEET S-001 FOR GENERAL STRUCTURAL NOTES.
2. SEE DETAIL C1/S-523 FOR TYP LIGHT GAUGE FRAMING DETAILS.
3. FOR TYP STRONGBACK CONN INFO SEE D3/S-512.
4. FOR TYP REINF CONCRETE OVERLAY CONN INFO SEE D1/S-512 & F1/S-512. SEE C1/S-202 & F1/S-202 FOR TYP OVERLAY DWL PATTERNS.
5. @ CONC OVERLAY OPGS USE #5 DIAG X 4'-0" PLACED @ 45° ANGLE @ 3" CLR FROM CORNER, TYP. TRIM STEEL @ HEADS & SILLS SHALL BE (2) #6 @ 3" OC UNO.
6. FOR ALL WALLS TO RECEIVE CONCRETE OVERLAY OR LIGHT GAUGE STRONGBACK, REMOVE ALL ITEMS ATTACHED TO THE EXISTING URM WALL (CONDUITS, EQUIPMENT, DUCTS, APPURTENANCES ETC) SO THAT THE WORK CAN OCCUR. THEN RE-ATTACH TO THE FACE OF THE UPGRADE WHEN IT IS COMPLETE.

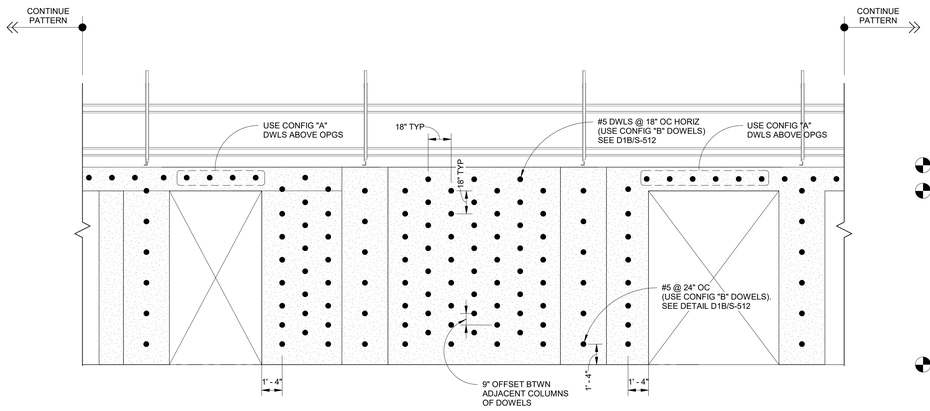

NOTE: KEEP DOWELS 1'-4" AWAY FROM WINDOW/DOOR OPENING EDGES & BUILDING EDGE

F1 TYPICAL DOWEL PATTERN @ SW-C CONCRETE OVERLAY

1/4" = 1'-0"

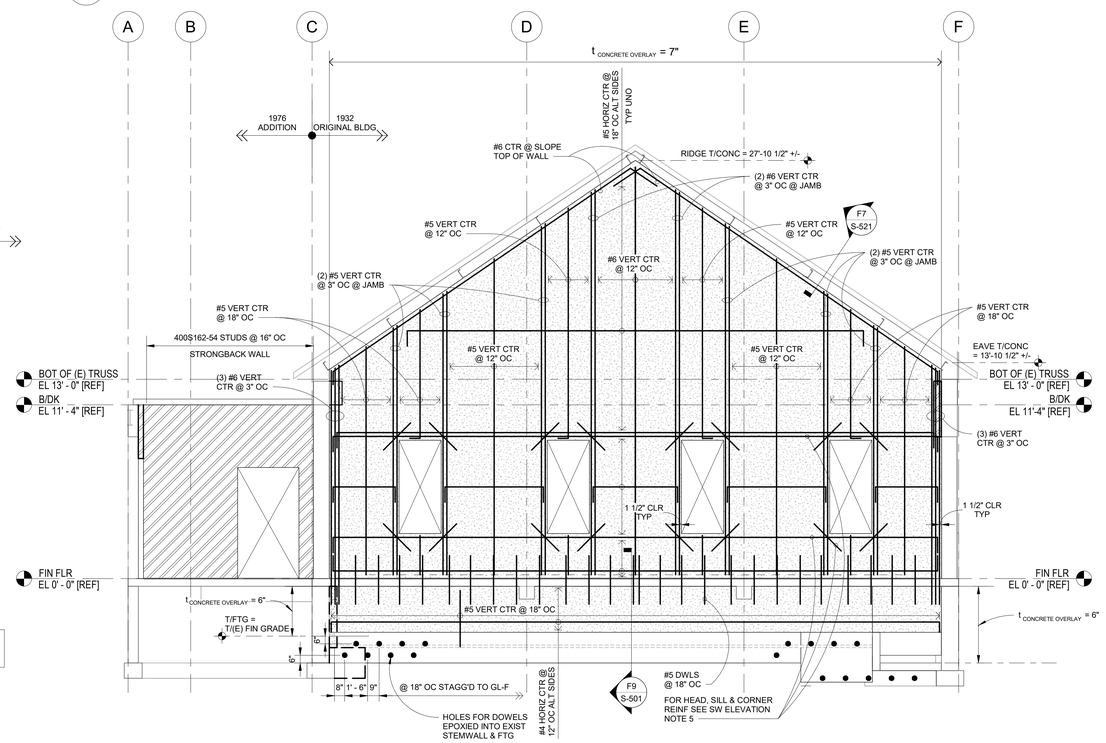

F5 SHEAR WALL ELEVATION - GRIDLINE 15

1/4" = 1'-0"

Revisions:	Date:

CONSULTANT

ARCHITECT/ENGINEER OF RECORD

A/E:

Blue Trident, LLC
Engineering and Construction Services

BLUE TRIDENT, LLC
900 WINSLOW WAY E, SUITE 130
BAINBRIDGE ISLAND, WA 98110
206-972-0645
EMMANUEL (MANNY) BAUTISTA, PE, F.SAME

STAMP

Office of Construction and Facilities Management

VA U.S. Department of Veterans Affairs

Drawing Title: SHEAR WALL ELEVATIONS	Phase: ISSUED FOR CONSTRUCTION	Project Title: Seismic Retrofit and Renovate Building 11	Project Number: 653-107
			Building Number: B11
Approved:	FULLY SPRINKLERED	Location: VA Roseburg Healthcare System	Drawing Number: S-202
		Issue Date: 4/3/2026 · Checked: BEM · Drawn: AJW	

VA FORM 08 - 6231

C:\Users\PAura\Desktop\Revit Local Files\Bldg 11 - Struct_sjulian23EEYLW.rvt

3/31/2026 11:08:33 AM

SHEAR WALL ELEVATION NOTES

1. SEE SHEET S-001 FOR GENERAL STRUCTURAL NOTES.
2. SEE DETAIL C1/S-523 FOR TYP LIGHT GAUGE FRAMING DETAILS.
3. FOR TYP STRONGBACK CONN INFO SEE D3/S-512.
4. FOR TYP REINF CONCRETE OVERLAY CONN INFO SEE D1/S-512 & F1/S-512. SEE C1/S-202 & F1/S-202 FOR TYP OVERLAY DWL PATTERNS.
5. @ CONC OVERLAY OPGS USE #5 DIAG X 4'-0" PLACED @ 45° ANGLE @ 3" CLR FROM CORNER, TYP. TRIM STEEL @ HEADS & SILLS SHALL BE (2) #6 @ 3" OC UNO.
6. FOR ALL WALLS TO RECEIVE CONCRETE OVERLAY OR LIGHT GAUGE STRONGBACK, REMOVE ALL ITEMS ATTACHED TO THE EXISTING URM WALL (CONDUITS, EQUIPMENT, DUCTS, APPURTENANCES ETC) SO THAT THE WORK CAN OCCUR. THEN RE-ATTACH TO THE FACE OF THE UPGRADE WHEN IT IS COMPLETE.

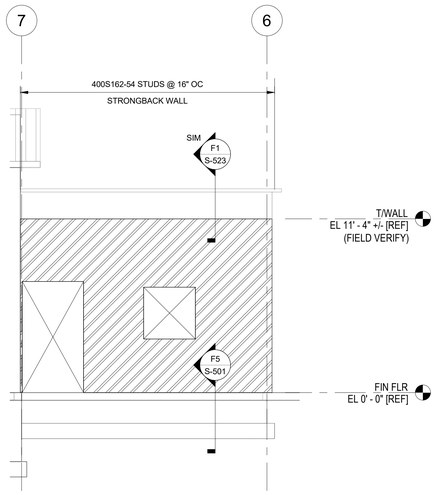

C1 SHEAR WALL ELEVATION - GL-C.2
1/4" = 1'-0" (EXTERIOR FACE)

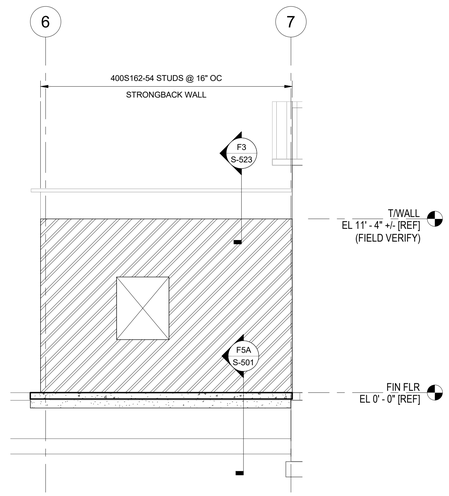

C3 SHEAR WALL ELEVATION - GL-E.8
1/4" = 1'-0" (EXTERIOR FACE)

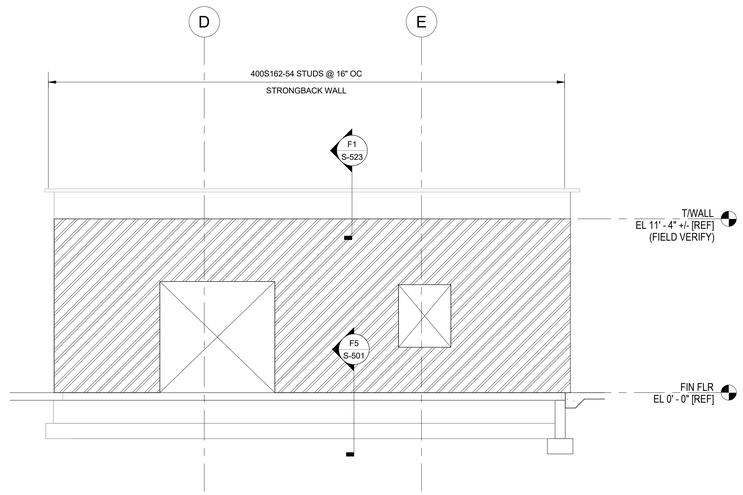

C5 SHEAR WALL ELEVATION - GL-6
1/4" = 1'-0" (EXTERIOR FACE)

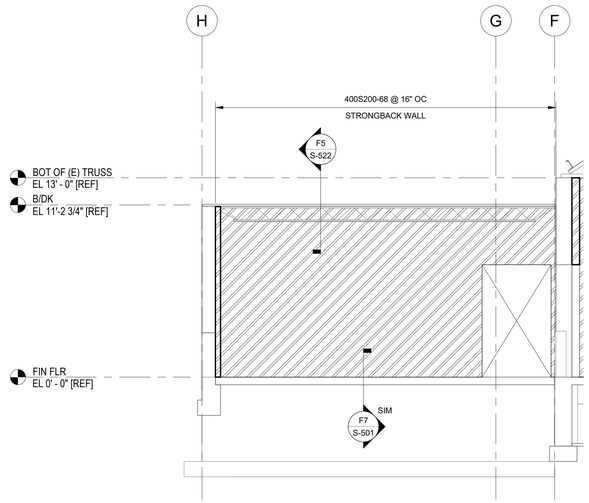

F1 SHEAR WALL ELEVATION - GL-9.8
1/4" = 1'-0"

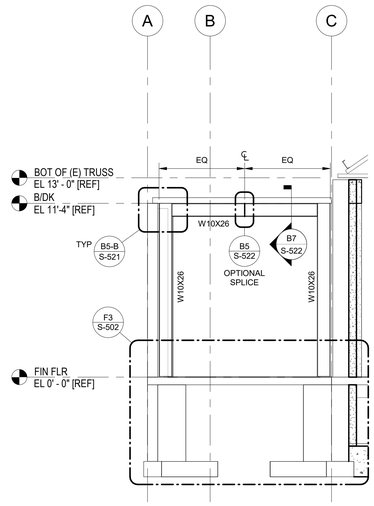

F5 MOMENT FRAME - GRIDLINES 9,11,13
1/4" = 1'-0"

Revisions:	Date:

CONSULTANT

ARCHITECT/ENGINEER OF RECORD

Blue Trident, LLC
Engineering and Construction Services

A/E:
BLUE TRIDENT, LLC
900 WINSLOW WAY E, SUITE 130
BAINBRIDGE ISLAND, WA 98110
206-972-0645
EMMANUEL (MANNY) BAUTISTA, PE, F.SAME

STAMP

Office of Construction and Facilities Management

VA U.S. Department of Veterans Affairs

Drawing Title: SHEAR WALL ELEVATIONS	Phase: ISSUED FOR CONSTRUCTION	Project Title: Seismic Retrofit and Renovate Building 11	Project Number: 653-107
			Building Number: B11
Approved:	FULLY SPRINKLERED	Location: VA Roseburg Healthcare System	Drawing Number: S-203
		Issue Date: 4/3/2026 · Checked: BEM · Drawn: AJW	

VA FORM 08 - 6231

3/31/2026 11:08:34 AM

C:\Users\PAurel\Desktop\Revit Local Files\Bldg 11 - Struct_ajulian-23EEYLW.rvt

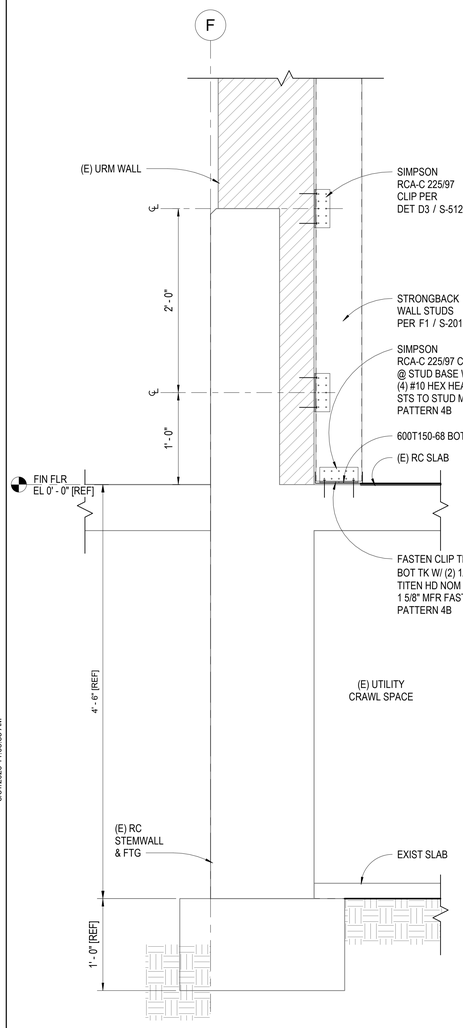

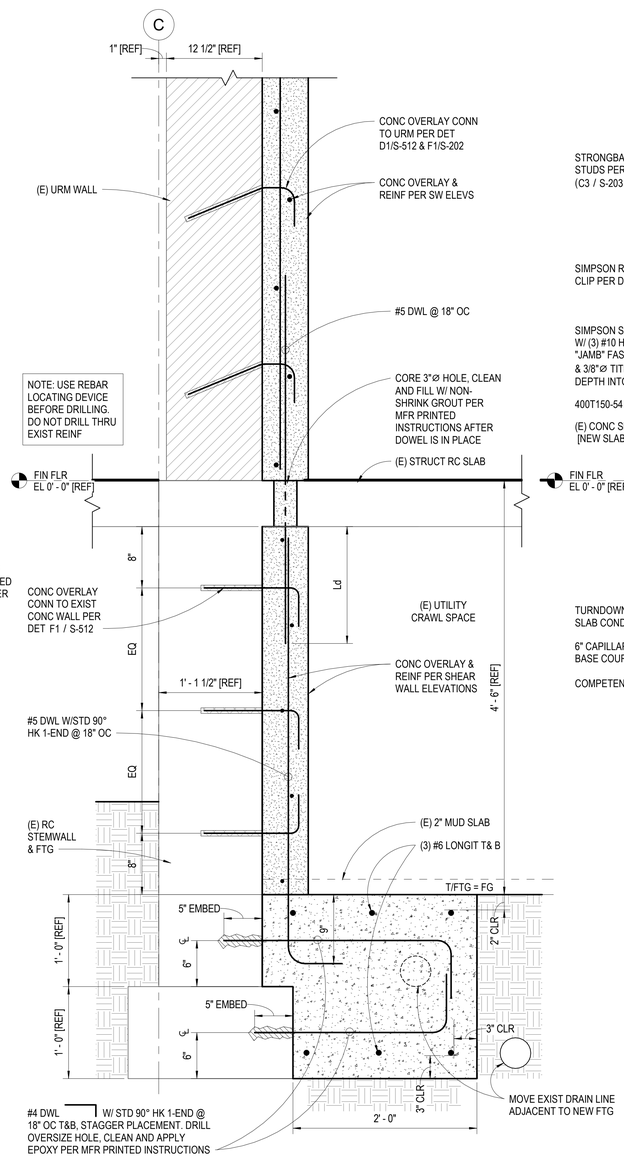

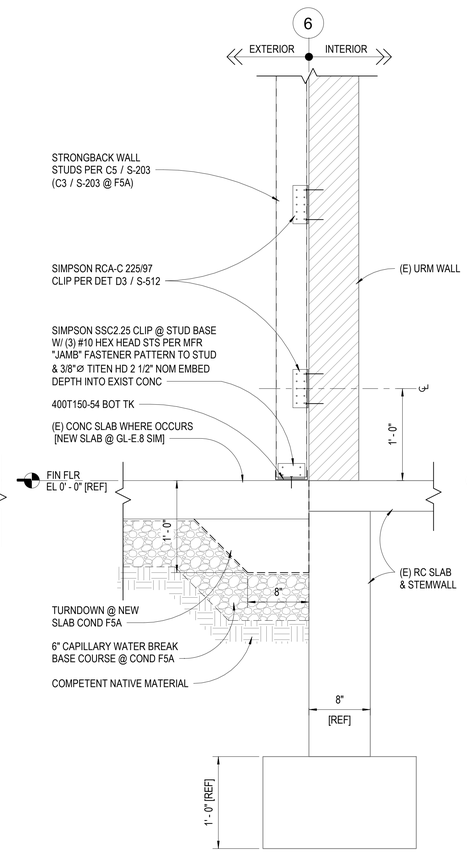

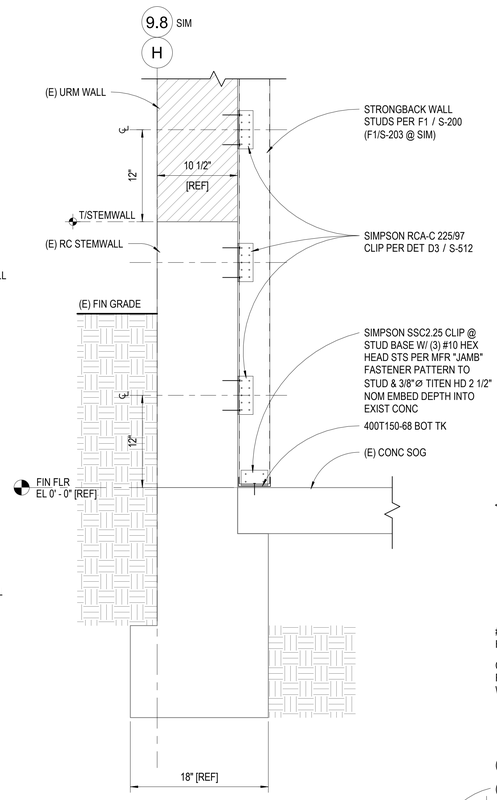

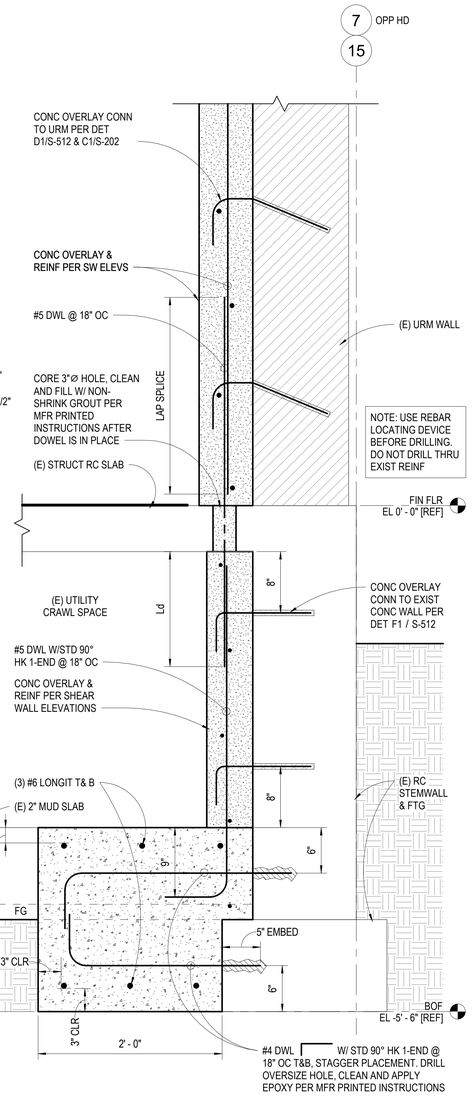

F1 SECTION @ FLOOR
1 1/2" = 1'-0"

F3 SECTION @ FLOOR
1 1/2" = 1'-0"

F5,F5A SECTION @ GL-6 (@ GL-E.8 FOR DET F5A)
1 1/2" = 1'-0"

F7 SECTION @ FLOOR (1976 SOUTH ADDN)
1 1/2" = 1'-0"

F9 SECTION @ FLOOR
1 1/2" = 1'-0"

Revisions:	Date:

CONSULTANT

ARCHITECT/ENGINEER OF RECORD

A/E:
Blue Trident, LLC
Engineering and Construction Services
BLUE TRIDENT, LLC
900 WINSLOW WAY E, SUITE 130
BAINBRIDGE ISLAND, WA 98110
206-972-0645
EMMANUEL (MANNY) BAUTISTA, PE, F.SAME

STAMP

Office of Construction and Facilities Management

VA U.S. Department of Veterans Affairs

Drawing Title: CONCRETE DETAILS

Approved:

Phase: ISSUED FOR CONSTRUCTION

FULLY SPRINKLERED

Project Title: Seismic Retrofit and Renovate Building 11

Location: VA Roseburg Healthcare System

Issue Date: 4/3/2026 | Checked: BEM | Drawn: AJW

Project Number: 653-107

Building Number: B11

Drawing Number: S-501

VA FORM 08 - 6231

3/31/2026 11:08:35 AM

C:\Users\PAura\Desktop\Revit Local Files\Bldg 11 - Struct_djulian23SEEYLW.rvt

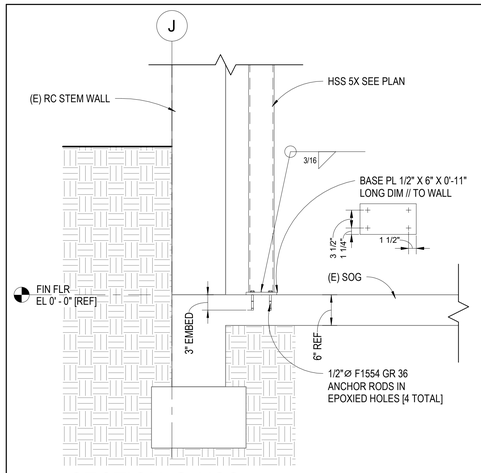

B1 SECTION @ HSS
1" = 1'-0"

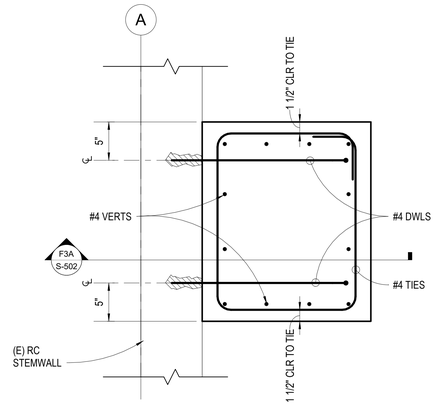

C PLAN

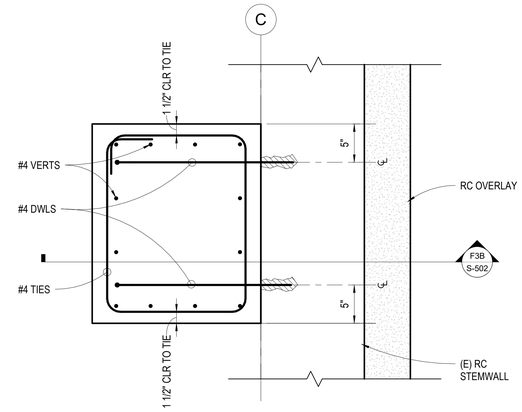

D PLAN

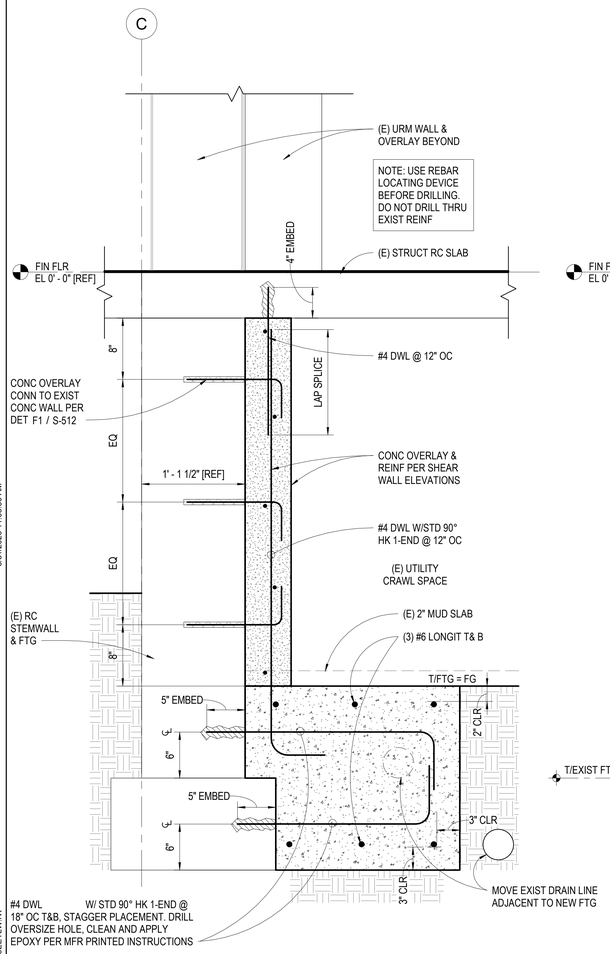

F1 SECTION @ FLOOR
1 1/2" = 1'-0"

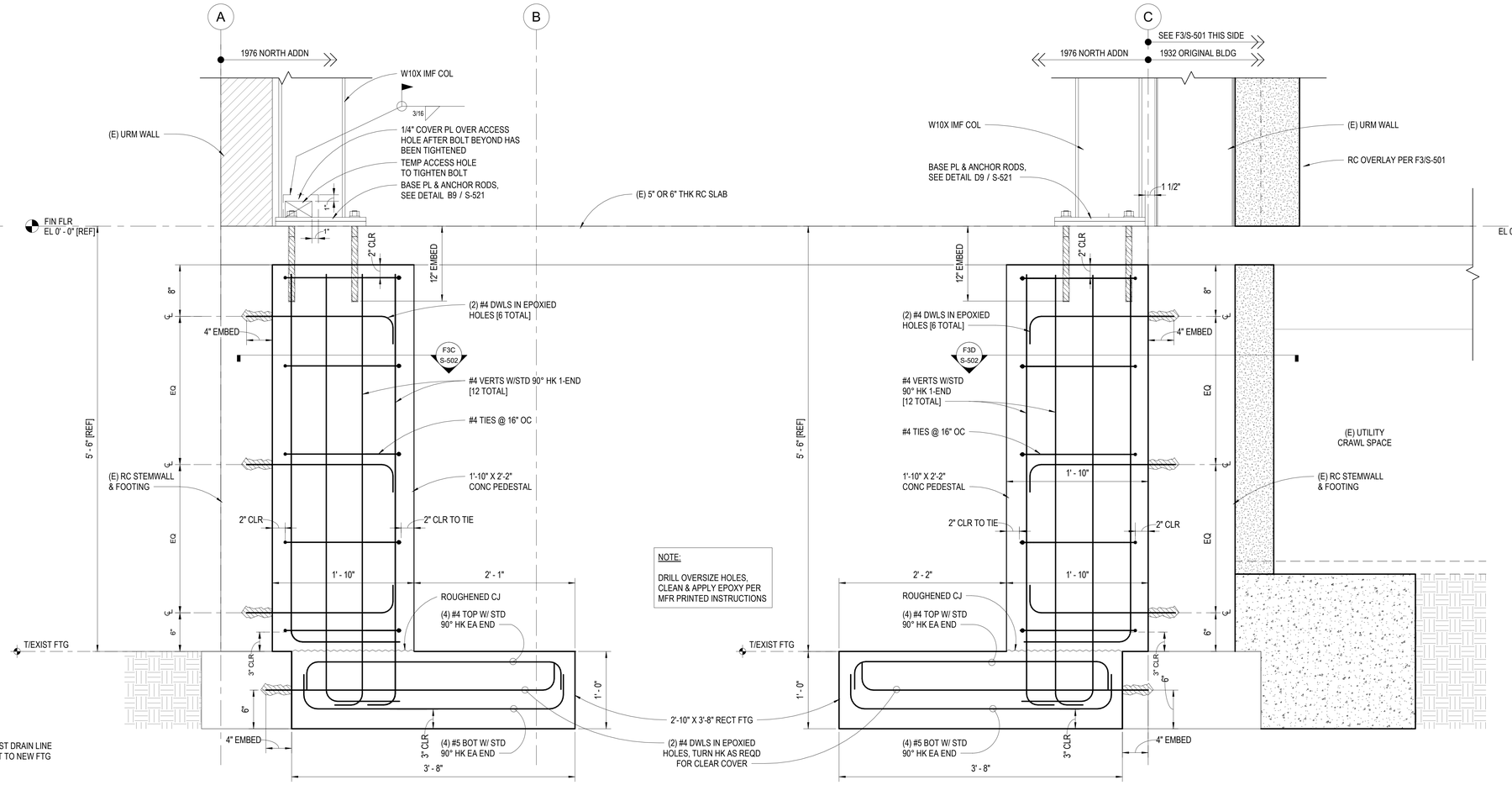

A SECTION

B SECTION

F3 PEDESTALS AT IMF
1 1/2" = 1'-0"

Revisions:	Date:

CONSULTANT

ARCHITECT/ENGINEER OF RECORD

A/E:
BLUE TRIDENT, LLC
900 WINSLOW WAY E, SUITE 130
BAINBRIDGE ISLAND, WA 98110
206-972-0645
EMMANUEL (MANNY) BAUTISTA, PE, F.SAME

STAMP

Office of Construction and Facilities Management

VA U.S. Department of Veterans Affairs

Drawing Title: CONCRETE DETAILS	Phase: ISSUED FOR CONSTRUCTION	Project Title: Seismic Retrofit and Renovate Building 11	Project Number: 653-107
			Building Number: B11
Approved:	FULLY SPRINKLERED	Location: VA Roseburg Healthcare System	Drawing Number: S-502
		Issue Date: 4/3/2026 · Checked: Checker · Drawn: Author	

VA FORM 08 - 6231

C:\Users\PAurin\Desktop\Revit Local Files\Bldg 11 - Struct_ajulian23EE\11.LW.rvt
3/31/2026 11:08:36 AM

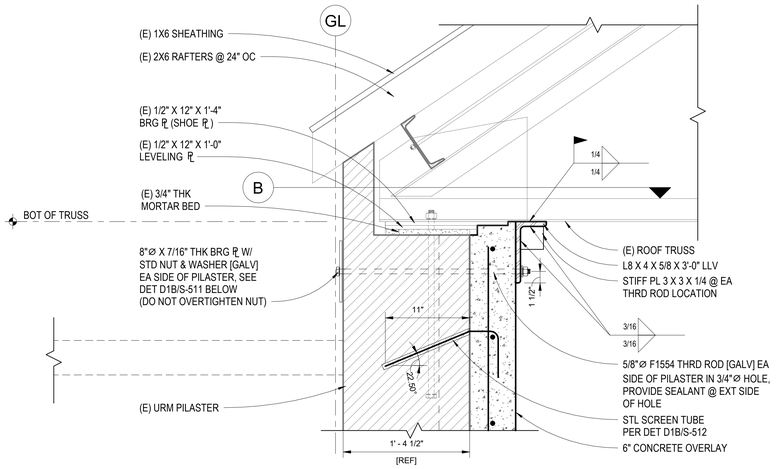

A SECTION @ URM PILASTER TRUSS BRG

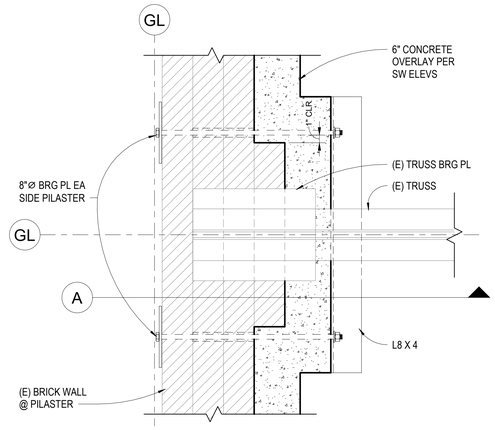

B PLAN @ URM PILASTER TRUSS BRG

NOTE: SEE DET F1 / S-511 FOR ADDL INFO

D1 CONCRETE OVERLAY @ PILASTER (@ TRUSS BRG)

1 1/2" = 1'-0"

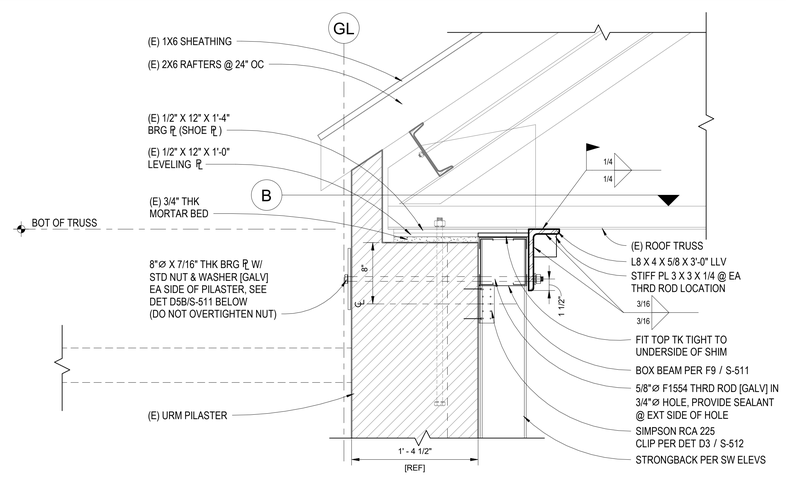

A SECTION @ URM PILASTER TRUSS BRG

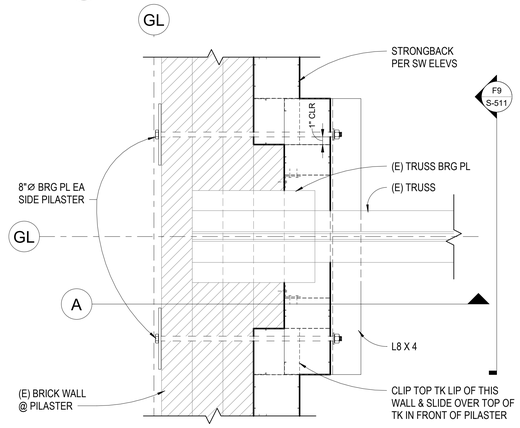

B PLAN @ URM PILASTER TRUSS BRG

NOTE: SEE DET F5 / S-511 FOR ADDL INFO

D5 STRONGBACK @ PILASTER

1 1/2" = 1'-0"

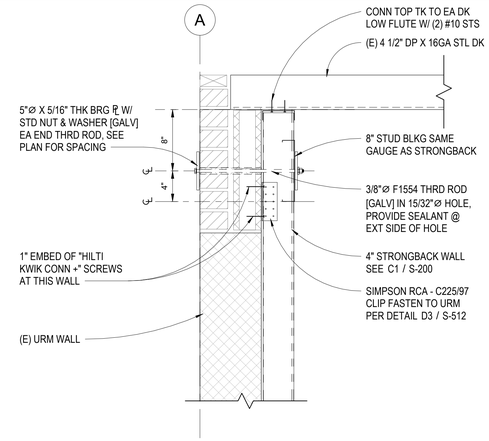

B9 DETAIL - OUT OF PLANE ANCHOR

1 1/2" = 1'-0"

(1976 NORTH ADDITION W/ 1988 REROOF)

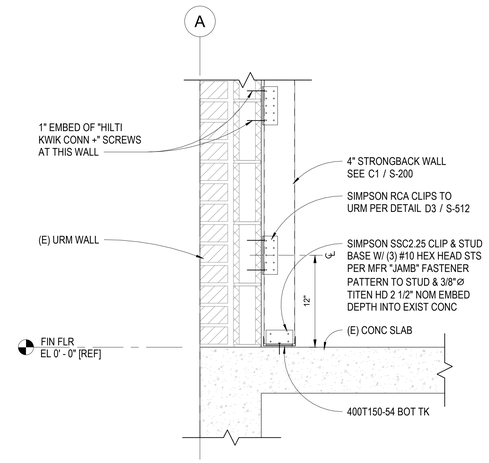

D9 SECTION @ FLOOR

1 1/2" = 1'-0"

(1976 NORTH ADDITION W/ 1988 REROOF)

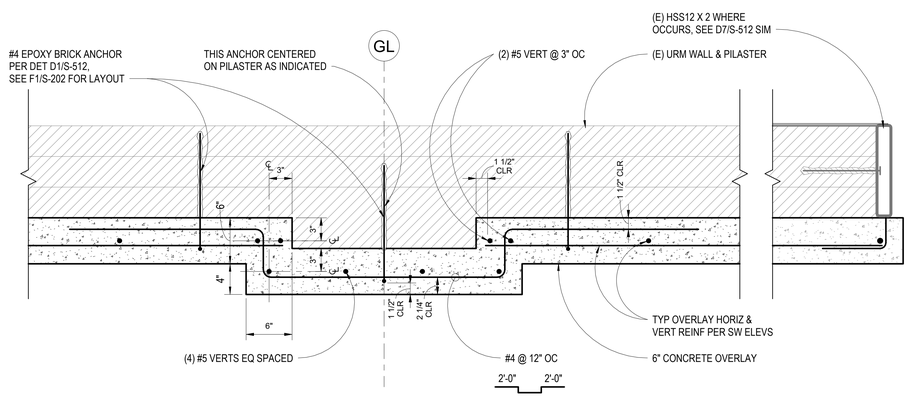

PLAN

F1 OVERLAY @ URM PILASTER

1 1/2" = 1'-0"

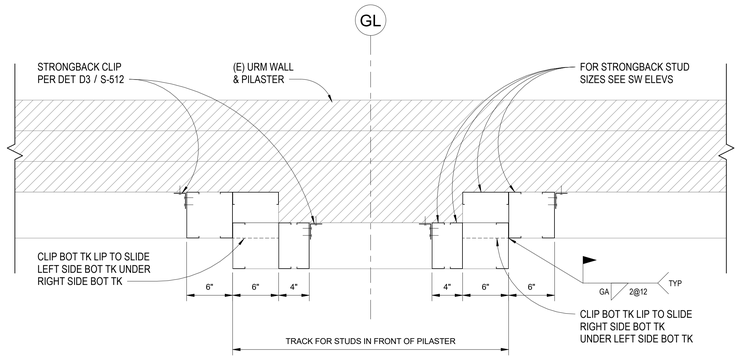

PLAN

F5 STRONGBACK @ URM PILASTER

1 1/2" = 1'-0"

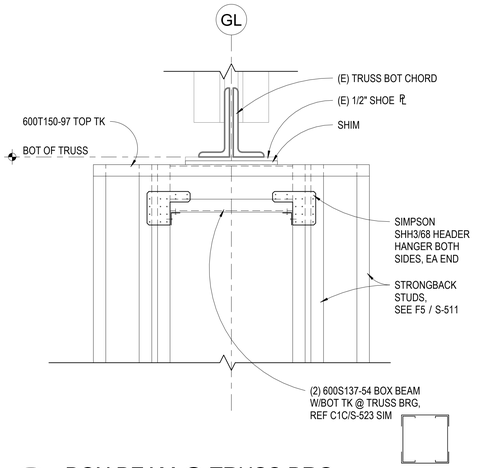

F9 BOX BEAM @ TRUSS BRG

1 1/2" = 1'-0"

Revisions:	Date:

CONSULTANT

ARCHITECT/ENGINEER OF RECORD

A/E:

Blue Trident, LLC
Engineering and Construction Services

BLUE TRIDENT, LLC
900 WINSLOW WAY E, SUITE 130
BAINBRIDGE ISLAND, WA 98110
206-972-0645
EMMANUEL (MANNY) BAUTISTA, PE, F.SAME

STAMP

Office of Construction and Facilities Management

VA U.S. Department of Veterans Affairs

Drawing Title	Phase	Project Title	Project Number
MASONRY DETAILS	ISSUED FOR CONSTRUCTION	Seismic Retrofit and Renovate Building 11	653-107
Approved:	FULLY SPRINKLERED	Location: VA Roseburg Healthcare System	Building Number: B11
		Issue Date: 4/3/2026 · Checked: BEM · Drawn: AJW	Drawing Number: S-511

VA FORM 08 - 6231

3/31/2026 11:08:37 AM

C:\Users\PAurat\Desktop\Revit Local Files\Bldg 11 - Struct_ajulian23EENLW.rvt

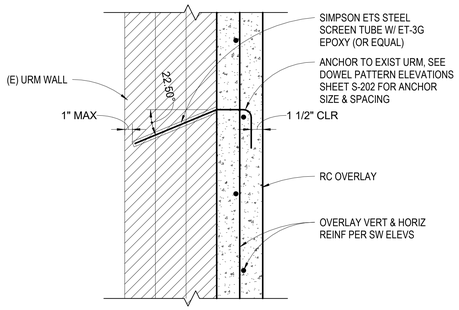

B SECTION (CONFIGURATION "B")

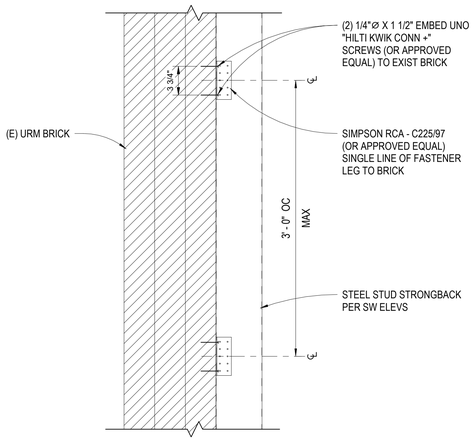

SECTION

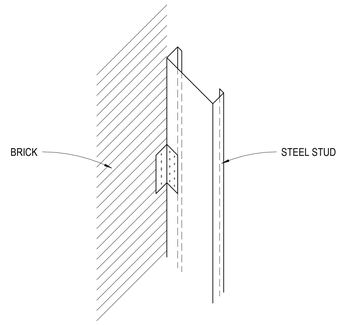

AXONOMETRIC

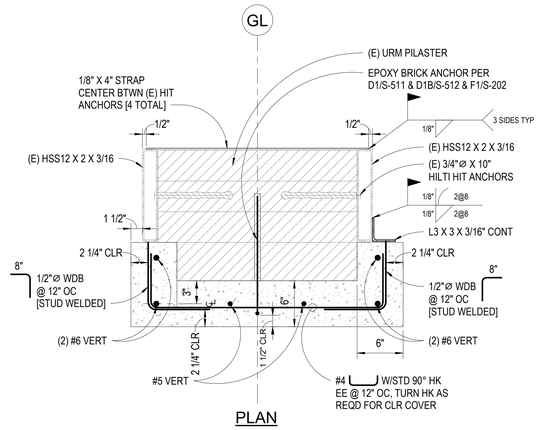

PLAN

B7 TYP GL-C PILASTER RC OVERLAY DETAIL

1 1/2" = 1'-0"

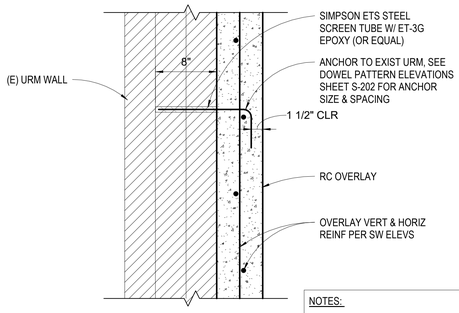

A SECTION (CONFIGURATION "A")

NOTES:

1. DRILL OVERSIZE HOLE W/ CARBIDE-TIPPED DRILL BIT, CLEAN, INSERT SCREEN TUBE & APPLY EPOXY PER MFR PRINTED INSTRUCTIONS.
2. DO NOT USE ROTOHAMMER SETTINGS WHEN DRILLING

D1 CONCRETE OVERLAY TO URM

1 1/2" = 1'-0"

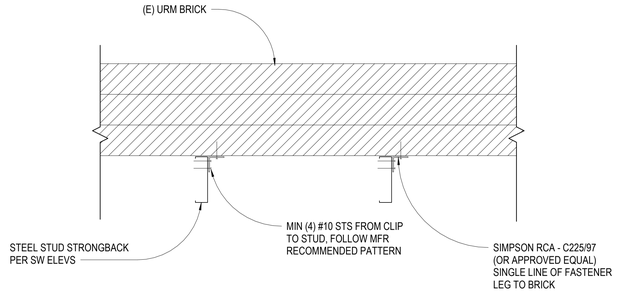

PLAN

D3 STRONGBACK STUD TO URM

1 1/2" = 1'-0"

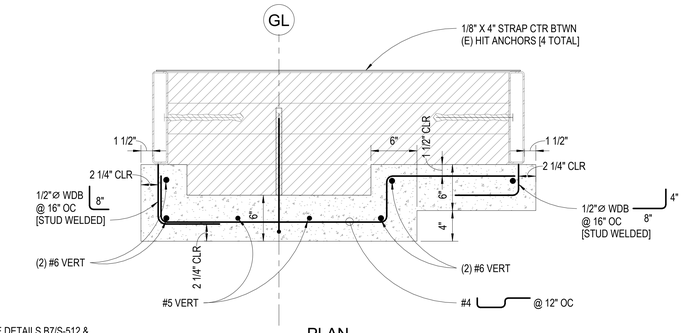

NOTE: SEE DETAILS B7/S-512 & F1/S-511 FOR INFO NOT CALLED OUT

PLAN

D7 GL-C PILASTER RC OVERLAY DETAIL

1 1/2" = 1'-0"

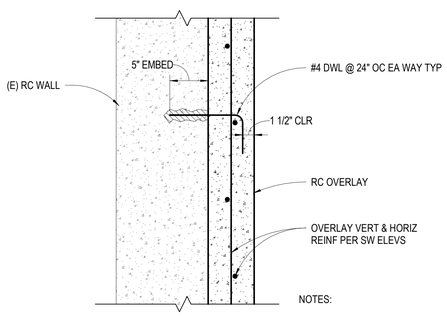

NOTES:

1. USE REBAR LOCATING DEVICE PRIOR TO DRILLING EXIST RC WALL. DO NOT DRILL THROUGH EXIST REINF
2. DRILL OVERSIZE HOLE, CLEAN, & APPLY EPOXY PER MFR PRINTED INSTRUCTIONS

F1 CONCRETE OVERLAY TO EXIST CONC

1 1/2" = 1'-0"

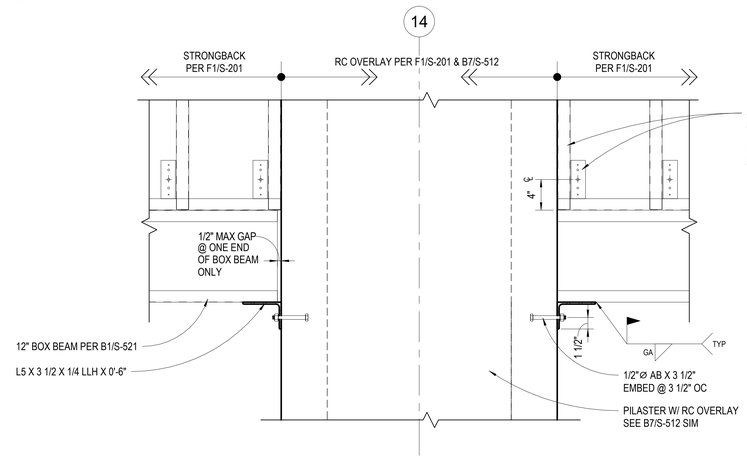

D3 STRONGBACK STUD TO URM

1 1/2" = 1'-0"

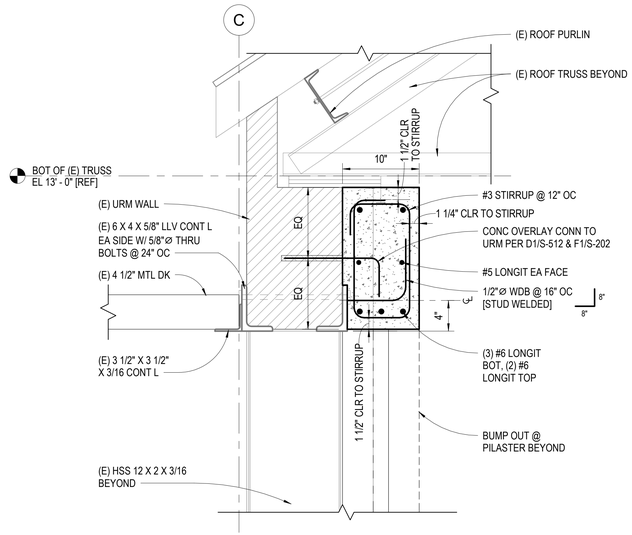

F3 PARTIAL ELEVATION @ GL-F

1 1/2" = 1'-0"

F7 HEAD DTL @ EXIST OPNG

1 1/2" = 1'-0"

Revisions:	Date:

CONSULTANT

ARCHITECT/ENGINEER OF RECORD

A/E:
Blue Trident, LLC
Engineering and Construction Services

BLUE TRIDENT, LLC
900 WINSLOW WAY E, SUITE 130
BAINBRIDGE ISLAND, WA 98110
206-972-0645
EMMANUEL (MANNY) BAUTISTA, PE, F.SAME

STAMP

Office of Construction and Facilities Management

VA U.S. Department of Veterans Affairs

Drawing Title	Phase	Project Title	Project Number
MASONRY DETAILS	ISSUED FOR CONSTRUCTION	Seismic Retrofit and Renovate Building 11	653-107
Approved:	FULLY SPRINKLERED	Location: VA Roseburg Healthcare System	Building Number: B11
		Issue Date: 4/3/2026 · Checked: BEM · Drawn: AJW	Drawing Number: S-512

VA FORM 08 - 6231

3/31/2026 11:08:38 AM

C:\Users\PAurat\Desktop\Revit Local Files\Bldg 11 - Struct_jajulian23EENLW.rvt

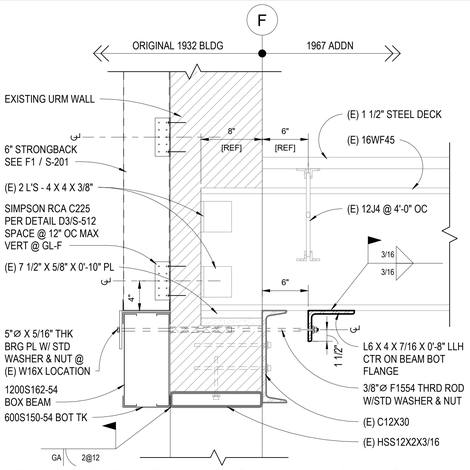

B1 DETAIL - OUT OF PLANE ANCHOR

1 1/2" = 1'-0" (1967 ADDN)

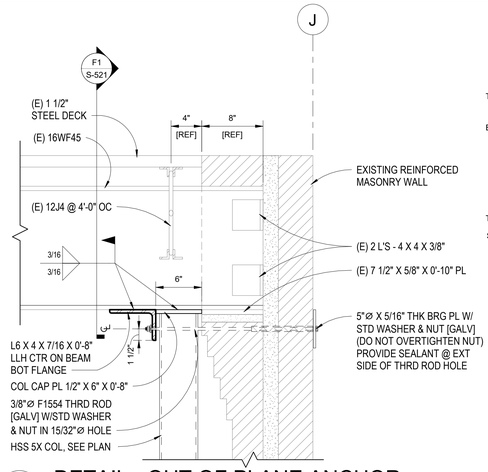

B3 DETAIL - OUT OF PLANE ANCHOR

1 1/2" = 1'-0" (1967 ADDN)

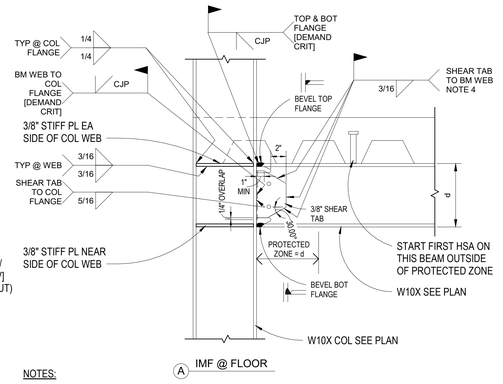

A IMF @ FLOOR

NOTES:

a. SEE DETAIL B5-B/S-521 FOR INFO NOT CALLED OUT

WELD NOTES:

1. ALL WELDS SHALL BE MADE WITH FILLER METAL MEETING THE REQUIREMENTS OF AWS D1.8 CLAUSES 6.1, 6.2, & 6.3
2. DEMAND CRITICAL WELDS SHALL MEET CVN TOUGHNESS OF MIN 20 FT-LBS @ 0°F AND ALSO MIN 40 FT-LBS @ 70° F
3. WELD ACCESS HOLE GEOMETRY SHALL CONFORM TO THE REQUIREMENTS OF AWS D1.8 SECTION 6.11.1.2
4. TERMINATE FILLET WELD 1/2" FROM EDGE OF WELD ACCESS HOLE
5. WELD TABS, IF USED, MUST BE REMOVED AFTER WELDING IN ACCORDANCE WITH AISC 358 PARA 3.4

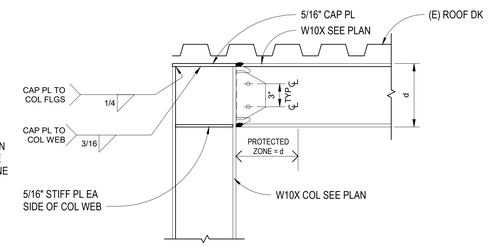

B IMF @ ROOF

NOTES:

a. SEE DETAIL B5-A /S-521 FOR INFO NOT CALLED OUT

B5 TYP INTERMEDIATE MOMENT FRAME (IMF) DETAILS

1 1/2" = 1'-0" (WUF-W) PREQUALIFIED MOMENT CONNECTION

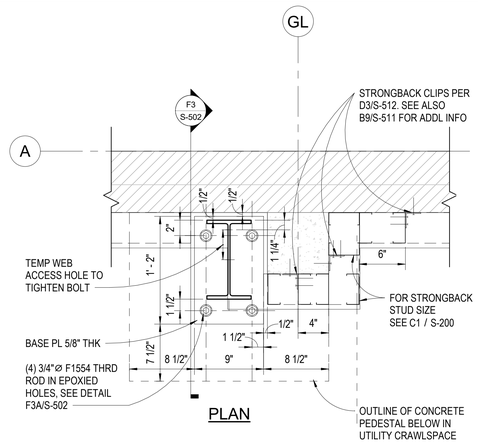

PLAN

B9 IMF BASE PLATE

1 1/2" = 1'-0"

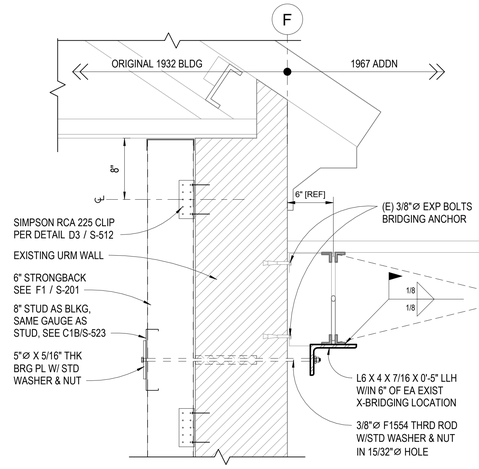

D1 DETAIL - OUT OF PLANE ANCHOR

1 1/2" = 1'-0" (1967 ADDN)

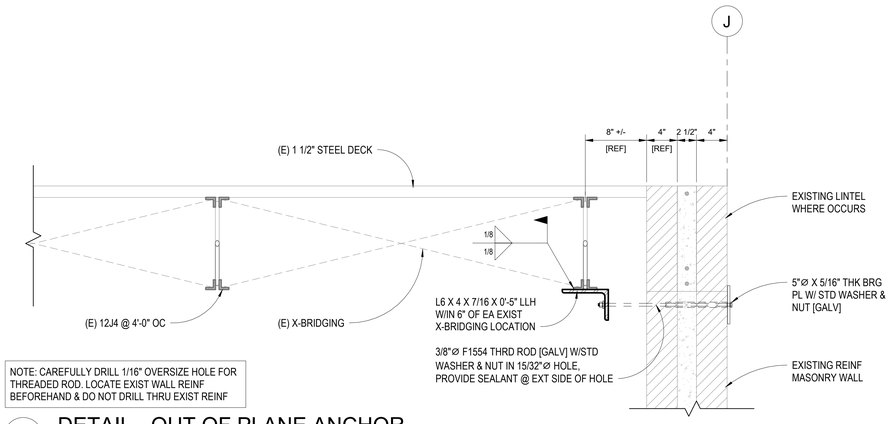

NOTE: CAREFULLY DRILL 1/16" OVERSIZE HOLE FOR THREADED ROD. LOCATE EXIST WALL REINF BEFOREHAND & DO NOT DRILL THRU EXIST REINF

D5 DETAIL - OUT OF PLANE ANCHOR

1 1/2" = 1'-0" (1967 ADDN)

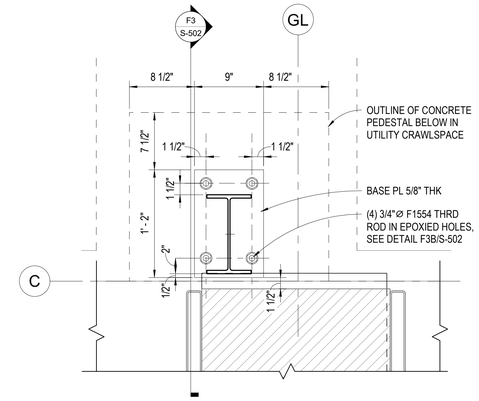

PLAN

D9 IMF BASE PLATE

1 1/2" = 1'-0"

NOTE: FOR ADDL INFO SEE B3 / S-521

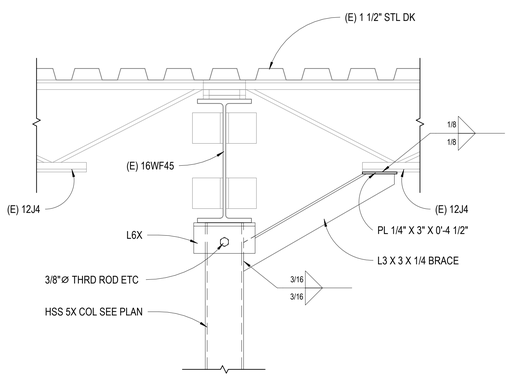

F1 DETAIL

1 1/2" = 1'-0"

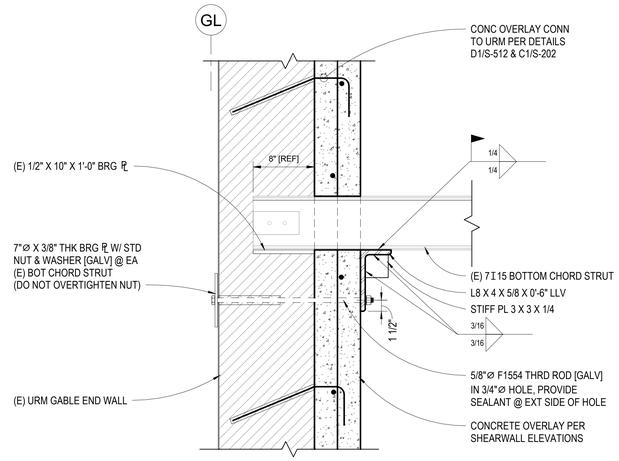

F3 WALL END, BOTTOM CHORD STRUT - OUT OF PLANE ANCHOR

1 1/2" = 1'-0"

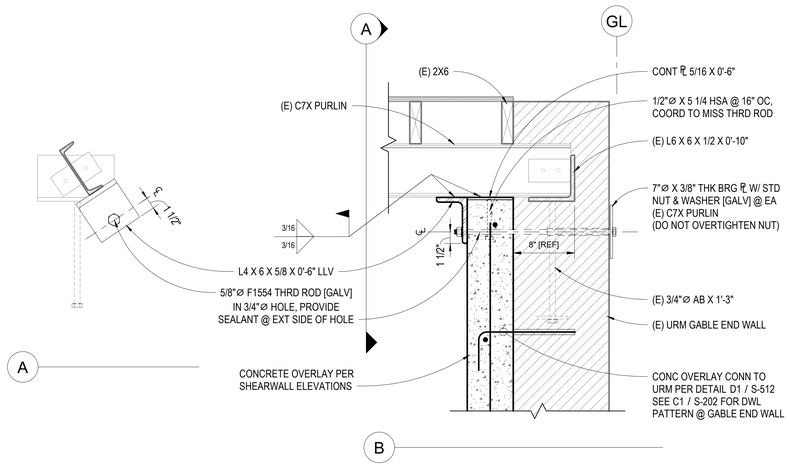

F7 WALL END PURLINS - OUT OF PLANE ANCHOR

1 1/2" = 1'-0"

Revisions:	Date:

CONSULTANT

ARCHITECT/ENGINEER OF RECORD

Blue Trident, LLC
Engineering and Construction Services

A/E:
BLUE TRIDENT, LLC
900 WINSLOW WAY E, SUITE 130
BAINBRIDGE ISLAND, WA 98110
206-972-0645
EMMANUEL (MANNY) BAUTISTA, PE, F.SAME

STAMP

Office of Construction and Facilities Management

VA U.S. Department of Veterans Affairs

Drawing Title	Phase	Project Title	Project Number
STEEL DETAILS	ISSUED FOR CONSTRUCTION	Seismic Retrofit and Renovate Building 11	653-107
Approved:	FULLY SPRINKLERED	Location: VA Roseburg Healthcare System	Building Number: B11
		Issue Date: 4/3/2026 · Checked: BEM · Drawn: AJW	Drawing Number: S-521

VA FORM 08 - 6231

3/31/2026 11:08:39 AM

C:\Users\PAurel\Desktop\Revit Local Files\Bldg 11 - Struct_rjulian23EEYLW.rvt

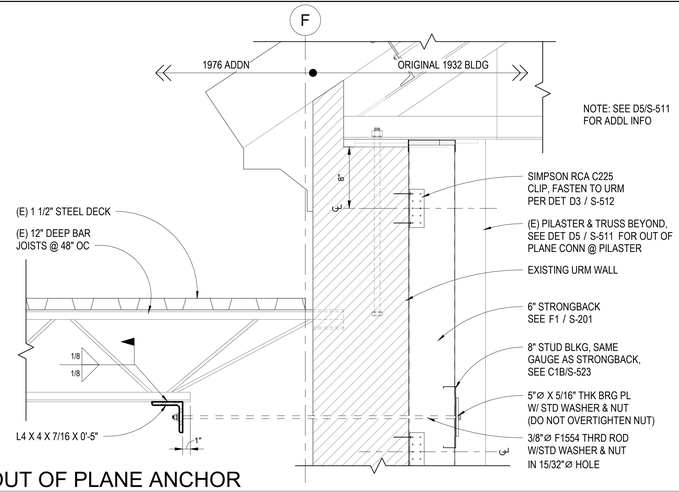

B1 DETAIL - OUT OF PLANE ANCHOR

1 1/2" = 1'-0"

(1976 SOUTH ADDITION)

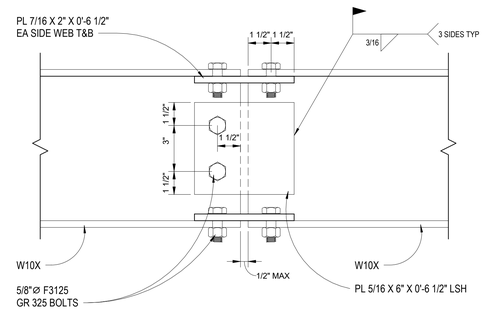

B5 OPTIONAL IMF SPLICE

3" = 1'-0"

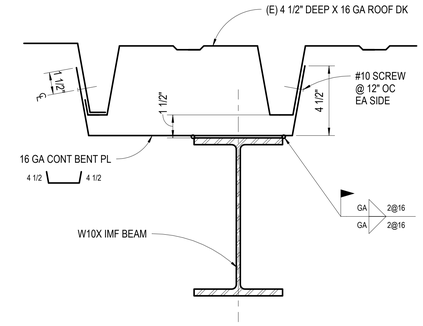

A W10X UNDER LOW FLUTE

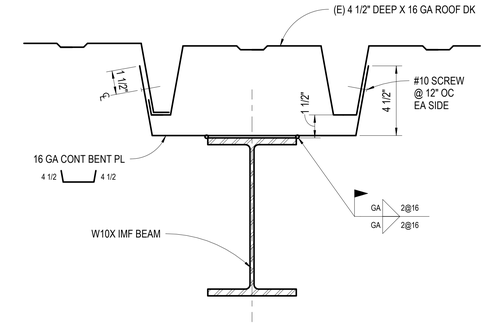

B W10X BTWN LOW FLUTES

NOTE:
EXISTING EQUIPMENT, CONDUIT, DUCTS ETC
LOCATED WHERE THE NEW MOMENT FRAME
WILL BE INSTALLED SHALL BE RELOCATED
BELOW THE W10X BEAM.

B7 W10X @ (E) ROOF DK

3" = 1'-0"

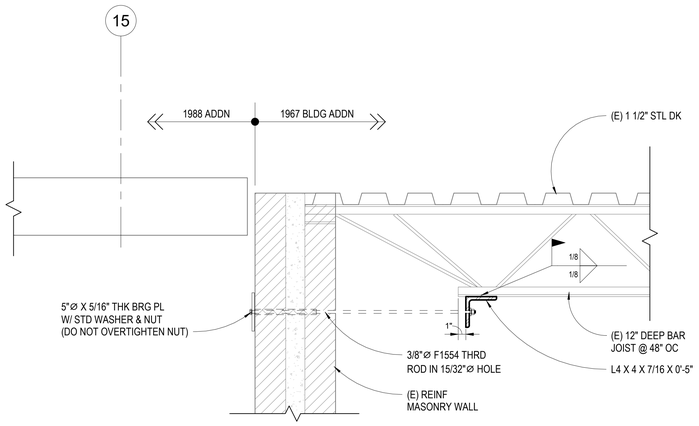

D1 DETAIL - OUT OF PLANE ANCHOR

1 1/2" = 1'-0"

(1967 ADDN)

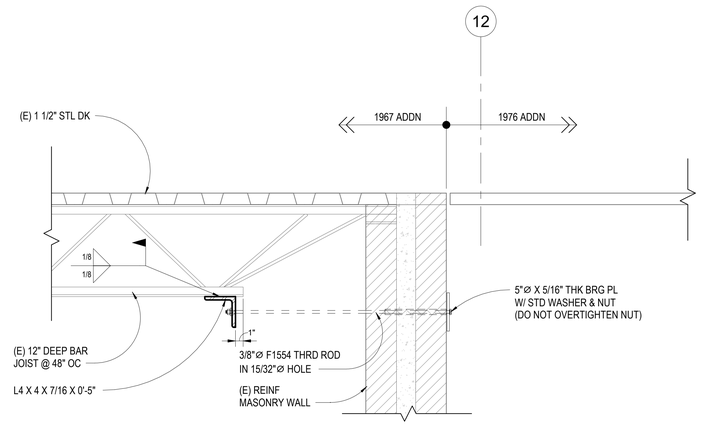

D5 DETAIL - OUT OF PLANE ANCHOR

1 1/2" = 1'-0"

(1967 ADDN)

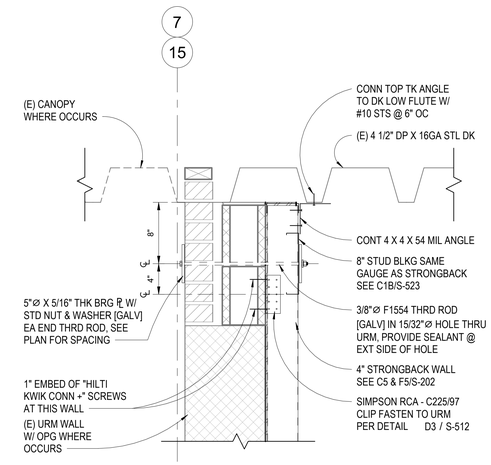

D9 DETAIL - OUT OF PLANE ANCHOR

1 1/2" = 1'-0"

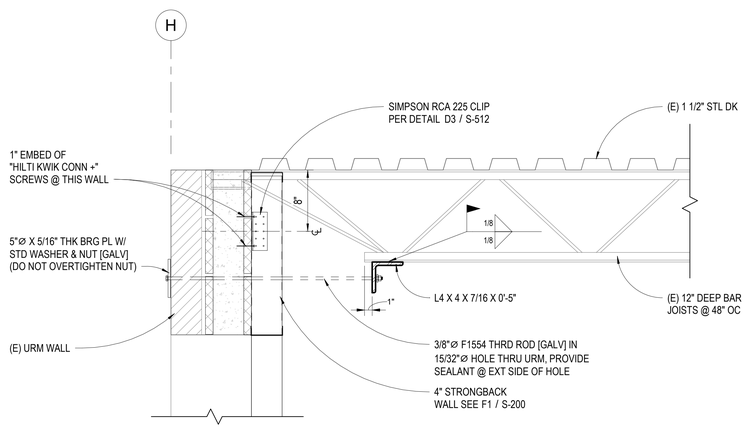

F1 DETAIL - OUT OF PLANE ANCHOR

1 1/2" = 1'-0"

(1976 SOUTH ADDITION)

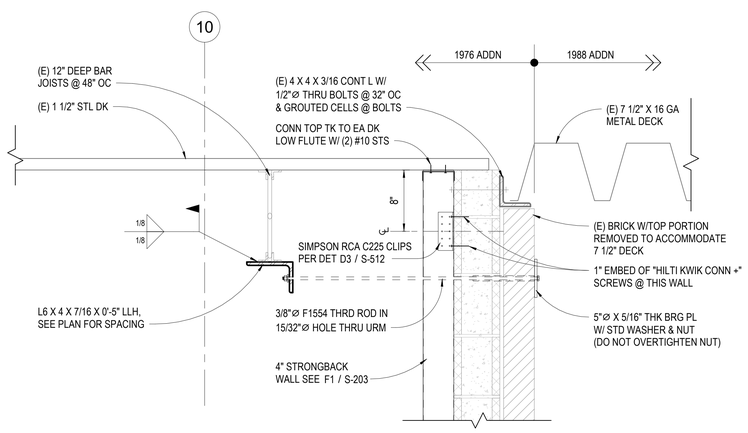

F5 DETAIL - OUT OF PLANE ANCHOR

1 1/2" = 1'-0"

(1976 SOUTH ADDITION)

Revisions:	Date:

CONSULTANT

ARCHITECT/ENGINEER OF RECORD

Blue Trident, LLC
Engineering and Construction Services

A/E:
BLUE TRIDENT, LLC
900 WINSLOW WAY E, SUITE 130
BAINBRIDGE ISLAND, WA 98110
206-972-0645
EMMANUEL (MANNY) BAUTISTA, PE, F.SAME

STAMP

Office of Construction and Facilities Management

VA U.S. Department of Veterans Affairs

Drawing Title	Phase	Project Title	Project Number
STEEL DETAILS	ISSUED FOR CONSTRUCTION	Seismic Retrofit and Renovate Building 11	653-107
Approved:	FULLY SPRINKLERED	Location: VA Roseburg Healthcare System	Building Number: B11
		Issue Date: 4/3/2026 · Checked: BEM · Drawn: AJW	Drawing Number: S-522

VA FORM 08 - 6231

3/31/2026 11:08:39 AM

C:\Users\PAurat\Desktop\Revit Local Files\Bldg 11 - Struct_jajulian23EEN.LW.rvt

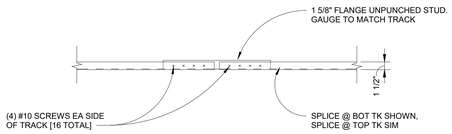

NOTE:

DO NOT USE SPLICES IN WALLS THAT ARE 20' IN LENGTH OR LESS. USE CONTINUOUS TOP & BOT TRACKS

A TRACK SPLICE

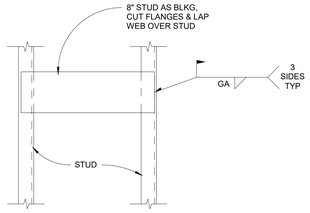

ELEVATION

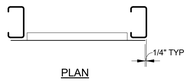

PLAN

B BLKG @ BRG PL

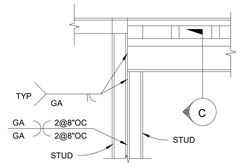

NOTE: SEE C1C/S-523 FOR ADDL INFO

D ELEVATION

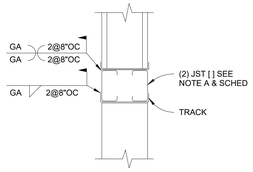

C SECTION @ LINTEL

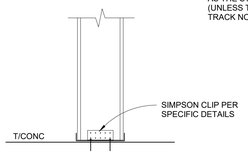

E SECTION @ BOT TK

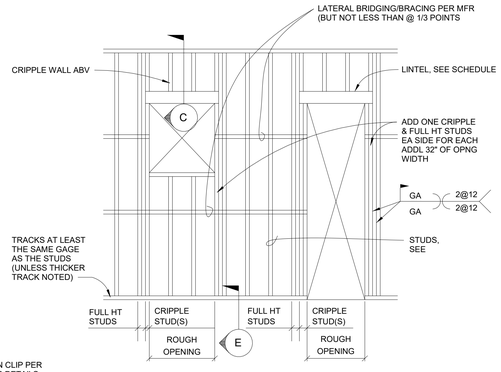

F TYP OPENINGS

LIGHT GAGE STEEL FRAMING:

1. ALL COLD-FORMED STRUCTURAL STUD FRAMING MEMBERS AND STEEL JOISTS SHALL BE OF SIZE AND GAGE AS INDICATED IN DRAWINGS.
2. TRACK OF SIZE AND GAGE TO MATCH STUDS SHALL BE PROVIDED AS CONTINUOUS TOP AND BOTTOM SUPPORT AND SHALL HAVE 1-1/2" FLANGES MIN.
3. ALL STUDS SHALL BE CONNECTED AT EACH LEVEL IN ACCORDANCE WITH DETAILS AND WITHIN TOLERANCE LIMITS.
4. STRUCTURAL STUDS AND JOISTS CALLED OUT ARE SSMA SIZES. THE SSMA SIZES ARE USED TO ESTABLISH STRUCTURAL CAPACITIES AND PERFORMANCE AND ARE NOT INTENDED TO RESTRICT BIDDING. SUBSTITUTIONS ARE ACCEPTABLE PROVIDED THEIR STRUCTURAL CAPACITY AND PERFORMANCE MEET OR EXCEED THOSE LISTED IN THE SSMA CATALOG .
5. FRAMING MEMBERS SHALL BE FABRICATED FROM Fy = 33 ksi STEEL FOR 18 GAGE SECTIONS AND FROM Fy = 50 ksi STEEL FOR 12, 14 AND 16 GAGE SECTIONS.
6. ALL WELDS SHALL BE PERFORMED BY CERTIFIED WELDERS IN ACCORDANCE WITH AWS D1.3.
7. STUDS SHALL BE SEATED SQUARELY IN TRACK AND SHALL BE WELDED TO TOP & BOT OF TRACK W/ 1/8" FILLET WELD PER MFR TYP ASSEMBLY DETAILS UNO.

NON-BEARING/CURTAIN WALL (L.L.) LINTEL SCHEDULE

OPENING SIZE	HEADER SIZE	MIN. Ix IN^4 PER JOIST	MIN. Sx IN^3 PER JOIST
0' TO 4'	(2) 400 S 162-54	REF. SSMA	REF. SSMA
4' TO 8'	(2) 600 S 162-54	REF. SSMA	REF. SSMA
8' TO 11'	(2) 800 S 162-43	REF. SSMA	REF. SSMA
11' TO 13'	(2) 1200 S 162-43	REF. SSMA	REF. SSMA

A. SIZES BASED ON SSMA (STEEL STUD MFR ASSOC) UNPUNCHED "CEE" TYPE JOISTS/STUDS.
B. THESE LINTEL SIZES ARE A MINIMUM MEMBER SIZE. LARGER MEMBERS MAY BE USED AT CONTRACTORS OPTION.
C. ALL LINTELS SHALL HAVE A MINIMUM BEARING OF 1 5/8" AND WEB SHALL BE UNPUNCHED.
D. PROVIDE ALL CONNECTION AS RECOMMENDED BY THE STUD MANUFACTURER, UNO.

NOTE: SEE SPECS FOR ADDITIONAL INFO

C1 TYP LIGHT GAGE FRAMING DETAILS & NOTES

1" = 1'-0"

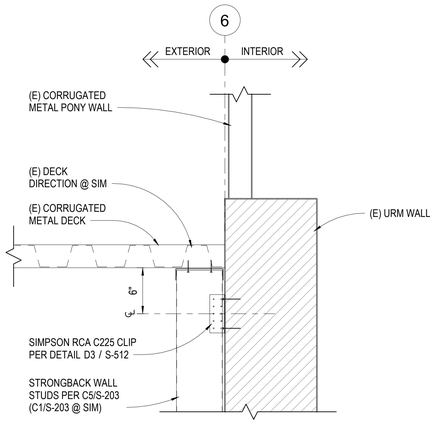

F1 SECTION @ GL-6

1 1/2" = 1'-0"

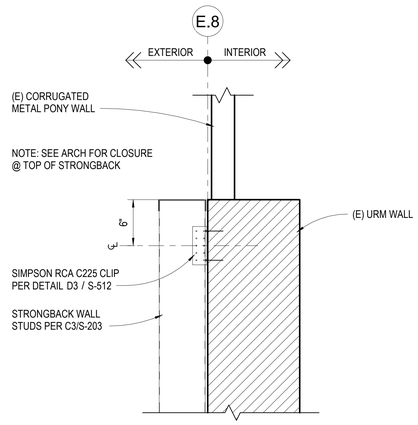

F3 SECTION @ GL-E.8

1 1/2" = 1'-0"

Revisions:	Date:

CONSULTANT

ARCHITECT/ENGINEER OF RECORD

A/E:

Blue Trident, LLC
Engineering and Construction Services

BLUE TRIDENT, LLC
900 WINSLOW WAY E, SUITE 130
BAINBRIDGE ISLAND, WA 98110
206-972-0645
EMMANUEL (MANNY) BAUTISTA, PE, F.SAME

STAMP

Office of Construction and Facilities Management

VA U.S. Department of Veterans Affairs

Drawing Title	Phase	Project Title	Project Number
STEEL DETAILS	ISSUED FOR CONSTRUCTION	Seismic Retrofit and Renovate Building 11	653-107
Approved:	FULLY SPRINKLERED	Location: VA Roseburg Healthcare System	Building Number: B11
		Issue Date: 4/3/2026 · Checked: BEM · Drawn: AJW	Drawing Number: S-523

VA FORM 08 - 6231

3/31/2026 11:08:39 AM

C:\Users\PAurel\Desktop\Revit Local Files\Bldg 11 - Struct_ajulian-23EEYLW.rvt

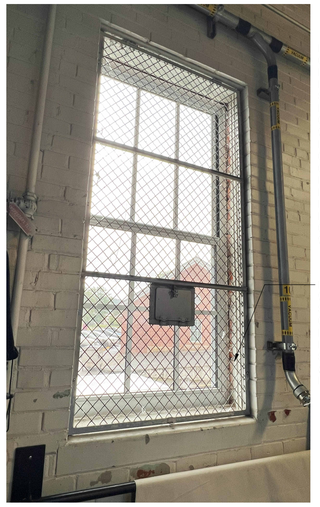

EXISTING OVERHEAD DOOR TO BE REMOVED, SALVAGED, AND REINSTALLED - CLOSE OPENING WITH PLYWOOD DURING CONSTRUCTION OPERATIONS - REPLACE ALL PIECES/ PARTS DAMAGED DURING CONSTRUCTION WITH NEW

EXISTING MESH WINDOW SCREENS AND OTHER TRIM PIECES TO BE REMOVED, SALVAGED, AND REINSTALLED

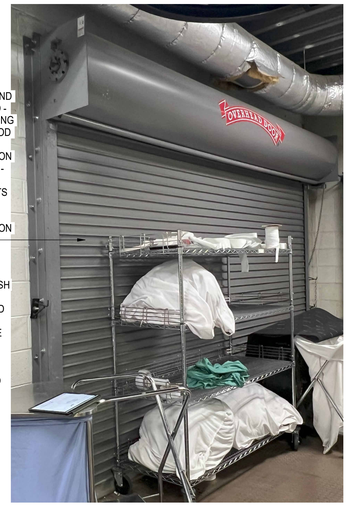

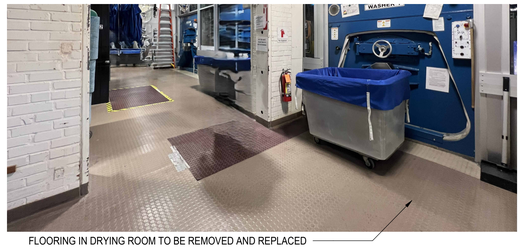

FLOORING IN DRYING ROOM TO BE REMOVED AND REPLACED

EXG FLOOR GRATE TO BE CLEANED AND REINSTALLED

FLOORING IN WASH ROOM TO BE REMOVED AND REPLACED

EXISTING CART WASH TO BE REMOVED AND SALVAGED TO MAKE ROOM FOR SEISMIC MITIGATION AT EXISTING HCT WALL - REASSEMBLE IN SIMILAR LOCATION WITH NEW CONSTRUCTION

EXISTING SUSP ACT CEILNGS, TILE ON GYPSUM WALLS, AND CERAMIC TILE FLOORING TO BE DEMOLISHED AND REMOVED FOR NEW SEISMIC MITIGATION

EXISTING TOILET PARTITIONS, PLUMBING FIXTURES, AND ACCESSORIES TO BE DEMOLISHED AND REMOVED FOR NEW SEISMIC MITIGATION

F1 B11 EXISTING CONDITIONS
1 1/2" = 1'-0"

DEMO DOORS AND FRAMES

NUMBER	DOORS TYPE	DOORS MATL	DOORS FINISH	DOORS GLASS TYPE	DOORS SIZE WIDTH	DOORS SIZE HEIGHT	DOORS THK	FRAMES TYPE	FRAMES MATL	FRAMES FINISH	HARDWARE GROUP	REMARKS
B11 FLOOR PLAN												
D101b	OH	STEEL	EXG	--	12' - 0"	7' - 10"	2"	EXG	STEEL	EXG	EXG	CAREFULLY REMOVE AND SALVAGE EXISTING DOOR AND FRAME - REINSTALL AT NEW CONSTRUCTION
D109	FL	WD	EXG	-	2' - 6"	6' - 8"	1 3/4"	EXG	HM	EXG		
D109a	FL	WD	EXG	-	2' - 6"	6' - 8"	1 3/4"	EXG	HM	EXG		
D110b	OH	STEEL	EXG	--	12' - 0"	7' - 10"	2"	EXG	STEEL	EXG	EXG	CAREFULLY REMOVE AND SALVAGE EXISTING DOOR AND FRAME - REINSTALL AT NEW CONSTRUCTION
D111	FL	WD	EXG	-	2' - 6"	6' - 8"	1 3/4"	EXG	HM	EXG		
D111a	FL	WD	EXG	-	2' - 6"	6' - 8"	1 3/4"	EXG	HM	EXG		
D111b	FL	WD	EXG	-	2' - 6"	6' - 8"	1 3/4"	EXG	HM	EXG		

DEMOLITION KEY NOTES

1. DOORS BEGINNING WITH THE LETTER 'D' ARE TO BE DEMOLISHED AND REMOVED (SALVAGE FOR REINSTALLATION WHERE NOTED). DOORS BEGINNING WITH THE LETTER 'e' ARE EXISTING TO REMAIN IN THE SAME LOCATION AS IS. PROTECT FROM CONSTRUCTION DAMAGE. MATERIALS AND FINISHES IDENTIFIED AS "EXG" WILL NOT BE REPLACED OR REFINISHED.

2. REMOVE PORTION OF EXISTING CMU WALL AND PREP FOR INSTALLATION OF NEW DOOR AND FRAME.

3. REMOVE EXISTING CEILING GRID AND ACOUSTICAL PANELS AND/OR GYPSUM BOARD AND ALL RELATED APPURTANENCES, INCLUDED AIR GRILLS, LIGHT FIXTURES, SMOKE DETECTORS, AND OCCUPANCY SENSORS.

4. DEMOLISH AND REMOVE EXISTING TOILET PARTITIONS..

5. DEMOLISH AND REMOVE FLOOR FINISHES.

6. REMOVE AND SALVAGE ALL MECHANICAL, ELECTRICAL, AND/OR FIRE PROTECTION APPURTENANCES FROM THE FACE OF THE WALL. PREP WALL FINISHES WHERE NOTED IN PREPARATION FOR SHOTCRETE OR STRONGBACK STUD WALL INSTALLATION. REINSTALL IN SAME LOCATION UNLESS NOTED OTHERWISE ON MECHANICAL, ELECTRICAL AND FIRE PROTECTION PLANS (SOME ITEMS MAY BE REPLACED OR ABANDONED IF UNUSED.)

7. CAREFULLY REMOVE INTERIOR TRIM PIECES FROM DOORS AND WINDOWS, INCLUDING WIRE MESH WINDOW SCREENS ON THE INTERIOR , IN PREPARATION FOR SEISMIC MITIGATION. SALVAGE AND LABEL EACH TRIM PIECE FOR RE-INSTALLATION IN THE SAME LOCATION.

8. REMOVE EXISTING OVERHEAD COILING DOOR AND SALVAGE ALL UNDAMAGED PIECES FOR REINSTALLATION. STORE FOR NEW CONSTRUCTION.

9. REMOVE EXISTING METAL STUD AND GYPSUM BOARD WALL FULL HEIGHT.

10. REMOVE EXISTING 12X12 CEILING TILE FINISH, SUBSTRATE, AND STRUCTURE TO PREP FOR SHOTCRETE OR STRONGBACK STUD WALL INSTALLATION.

11. REMOVE EXISTING GYPSUM BOARD CEILING AND STRUCTURE MINIMUM OF 5'-0" FROM EXTERIOR WALL TO PREP FOR SHOTCRETE OR STRONGBACK STUD WALL INSTALLATION.

12. REMOVE EXISTING DOOR, FRAME AND HARDWARE.

13. REMOVE EXISTING PLUMBING FIXTURES, PIPING AND TRIM. RECONFIGURE PIPING FOR NEW FIXTURE INSTALLATION. CAP PIPING NOT BEING REUSED IN WALL OR UNDER SLAB.

14. SAWCUT PORTION OF EXISTING LAMINATE COUNTERTOP AND REMOVE PORTION WITH SINK OPENING.

GENERAL DEMOLITION NOTES

1. COORDINATE WITH ALL PLANS FOR CLARIFICATIONS OF DEMOLITION SCOPE PRIOR TO PROCEEDING. FIELD VERIFY AREA OF WORK.. NOTIFY COR IMMEDIATELY OF ANY DISCREPANCIES BETWEEN DEMOLITION SCOPE AND FIELD CONDITIONS.

2. ALL WALL MOUNTED CONDUIT, PIPING, FIRE ALARM DEVICES, ETC, TO BE REMOVED IN PREPARATION FOR SHOTCRETE INSTALLATION. REFERENCE STRUCTURAL DRAWINGS FOR CONCRETE AND STRONGBACK STUD WALL LOCATIONS. REFERENCE SPECIFIC DISCIPLINE DRAWINGS FOR DEMOLITION SCOPE. REINSTALL IN SAME LOCATION UNLESS NOTED OTHERWISE ON MECHANICAL, ELECTRICAL AND FIRE PROTECTION PLANS (SOME ITEMS MAY BE REPLACED OR ABANDONED IF UNUSED.)

3. FIRE SPRINKLER SYSTEM AND LIFE SAFETY SYSTEM TO REMAIN OPERATIONAL DURING CONSTRUCTION .

4. PROTECT ALL EXISTING CONSTRUCTION TO REMAIN. PATCH AND REPAIR ALL DAMAGE DUE TO DEMOLITION AND/OR NEW WORK. PREPARE SURFACES TO RECEIVE NEW FINISHES IN ACCORDANCE WITH MANUFACTURE'S RECOMMENDATIONS. ALL DAMAGE CAUSED BY THE CONTRACTOR, WHETHER RELATED TO DEMOLITION OR NEW CONSTRUCTION, SHALL BE REPAIRED AT THE CONTRACTOR'S EXPENSE TO MATCH EXISTING ADJACENT FINISH CONDITION. THIS INCLUDES AREAS OF THE BUILDING RELATED TO THE PROJECT BUT NOT DIRECTLY IN THE SCOPE OF WORK, SUCH AS LAY-DOWN AREAS, STORAGE AREAS, AND AREAS WHERE MOVEMENT OF EQUIPMENT AND MATERIALS TAKES PLACE.

5. ALL DEMOLISHED ELECTRICAL DEVICES, HVAC DEVICES, AND PLUMBING LINES NOT BEING REUSED ARE TO BE REMOVED AND TERMINATED AT THEIR SOURCE. REFERENCE MECHANICAL (M) AND ELECTRICAL (E) DRAWING SHEETS FOR INFO.

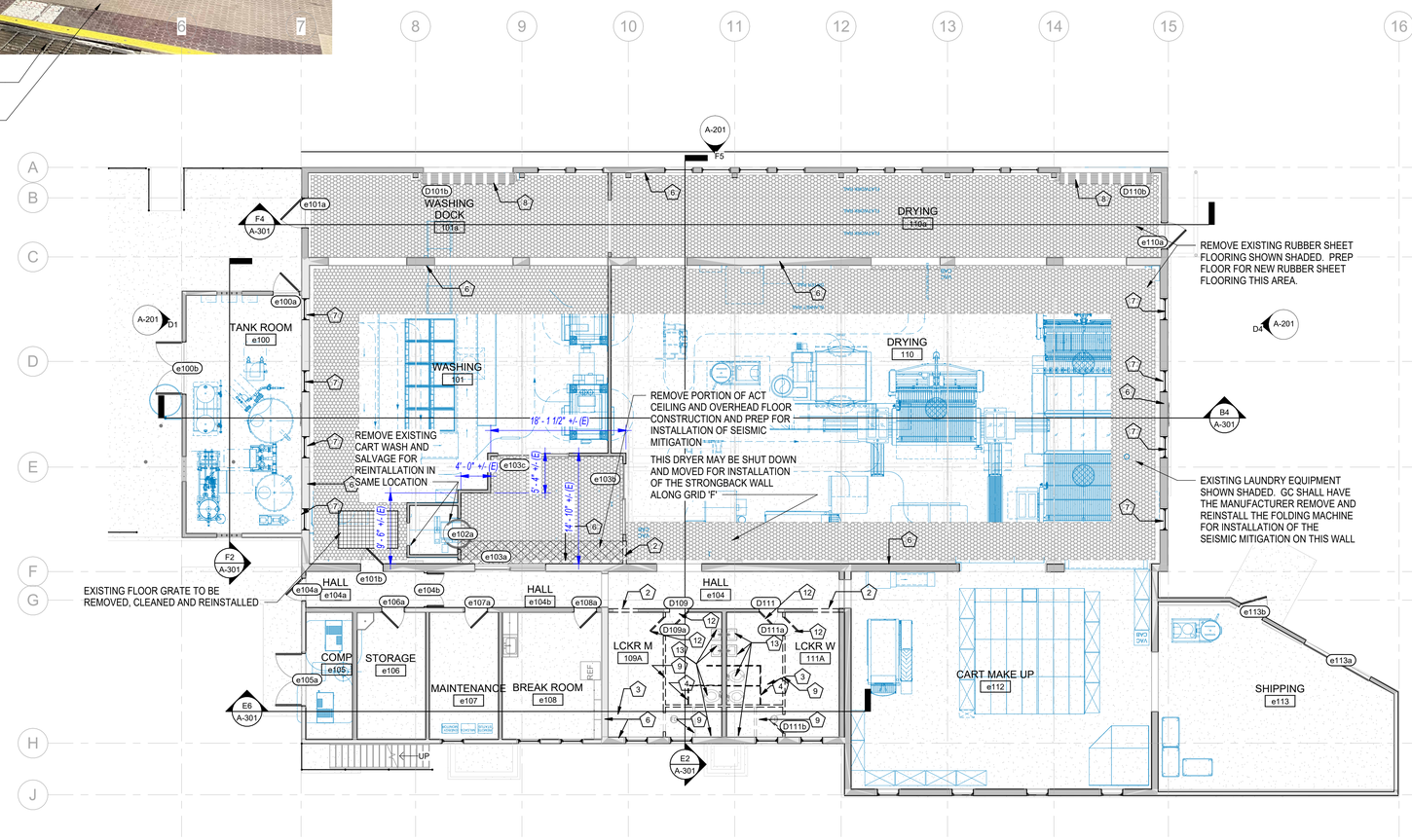

F5 B11 FLOOR PLAN DEMOLITION
1/8" = 1'-0"

Graphic Scale: 1 inch = 8 feet

Revisions:	Date:

CONSULTANT

Consultant:

ARCHITECT/ENGINEER OF RECORD

A/E: Blue Trident, LLC Engineering and Construction Services

BLUE TRIDENT, LLC
900 Winslow Way E, Suite 130
BAINBRIDGE ISLAND, WA 98110
206-972-0645
EMMANUEL (MANNY) BAUTISTA, PE, F.SAME

STAMP

10241 REGISTERED ARCHITECT LAURA M. STRAUSS STATE OF WASHINGTON

Office of Construction and Facilities Management

VA U.S. Department of Veterans Affairs

Drawing Title	Phase	Project Title	Project Number
FIRST FLOOR DEMOLITION PLAN	ISSUED FOR CONSTRUCTION	SEISMIC RETROFIT AND RENOVATE BUILDINGS 11,13 & 16	653-107
Approved: director	FULLY SPRINKLERED	Location: VA Roseburg Healthcare System	Building Number: 11
		Issue Date: 4/3/2026 · Checked: MR · Drawn: LMS	Drawing Number: AD111

VA FORM 08 - 6231

C:\Users\lauri\OneDrive - design2last.com\d2L-Projects\2024-011 - Roseburg Bldgs 11-13-16\04-DESIGN\BIM MODEL AND LINKS\ROSEBURG 11 ARCH 4/3/2026 5:52:36 PM

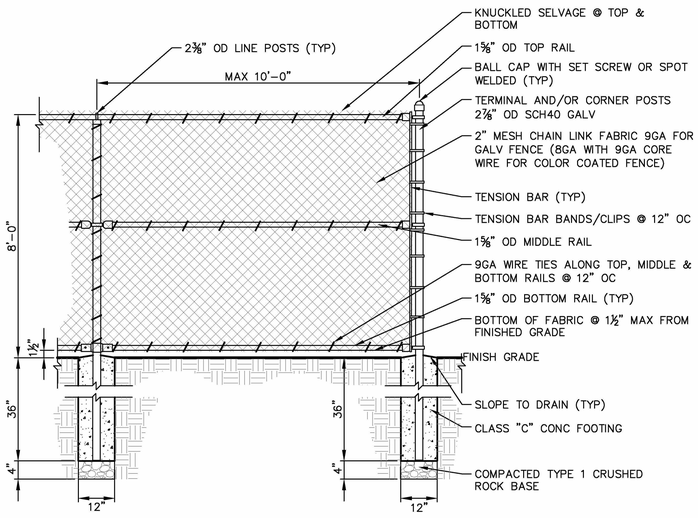

C1 CHAINLINK FENCE DETAIL
1/2" = 1'-0"

WALL TYPES

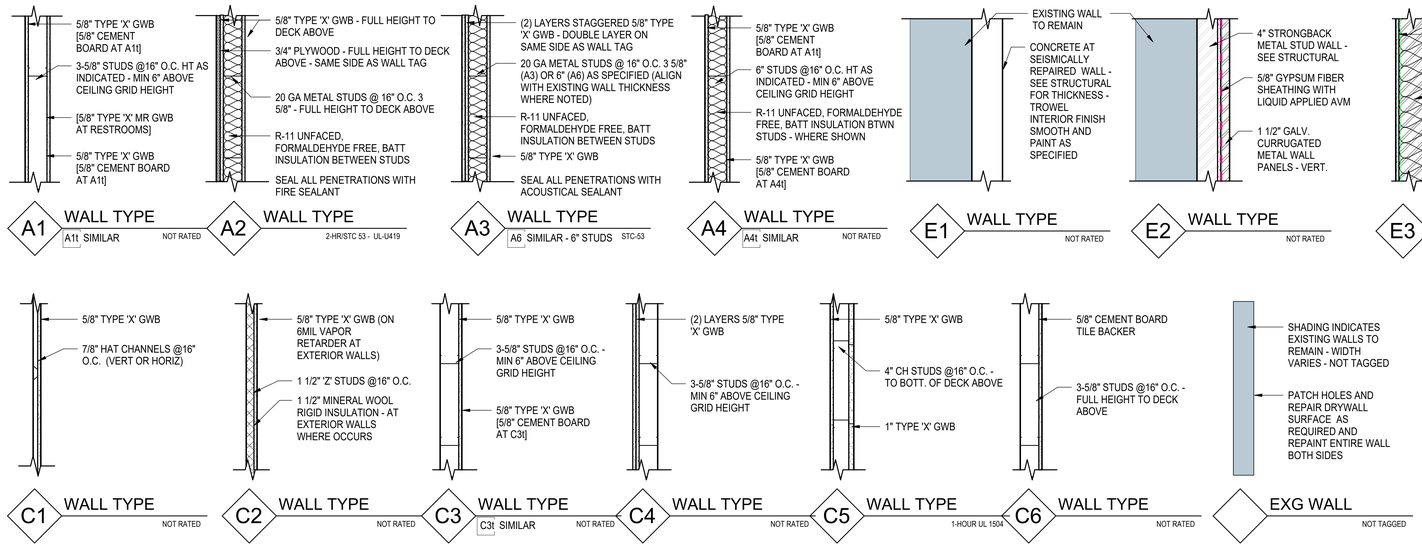

NOTES

1. FINISH MATERIALS SUCH AS CERAMIC TILE, WALL COVERINGS, ETC. ARE NOT TYPICALLY SHOWN AS AN INTEGRAL PART OF THE ASSEMBLY. REFER TO INTERIOR DRAWINGS AND / OR FINISH SCHEDULES FOR FINISH MATERIALS.
2. PARTITIONS EXTENDING TO DECK ABOVE ARE INDICATED ON RCP'S.
3. ALL PENETRATIONS THROUGH ACOUSTICAL ASSEMBLIES TO BE ACOUSTICALLY SEALED.
4. FIRE BLOCKING WILL BE INSTALLED IN ACCORDANCE WITH IBC 717.2, HORIZONTALLY AT INTERVALS NOT EXCEEDING 10 FEET

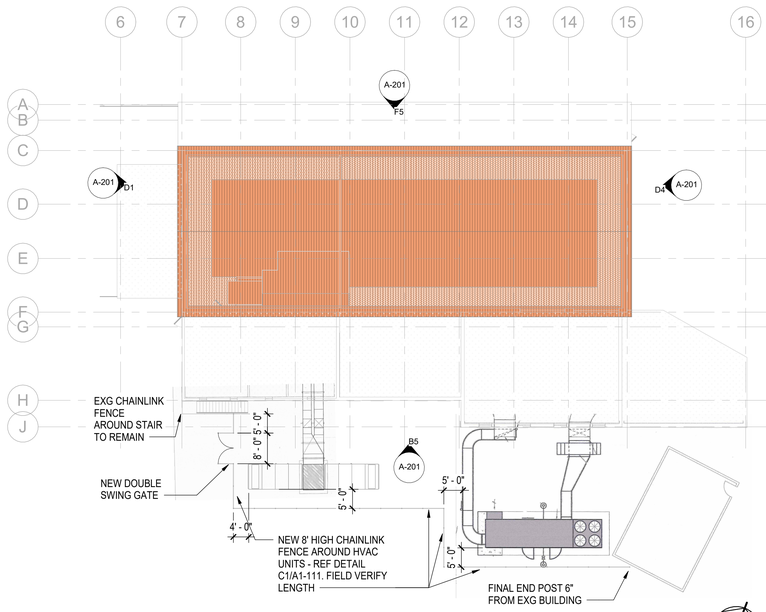

F1 B11 SITE PLAN
1/16" = 1'-0"

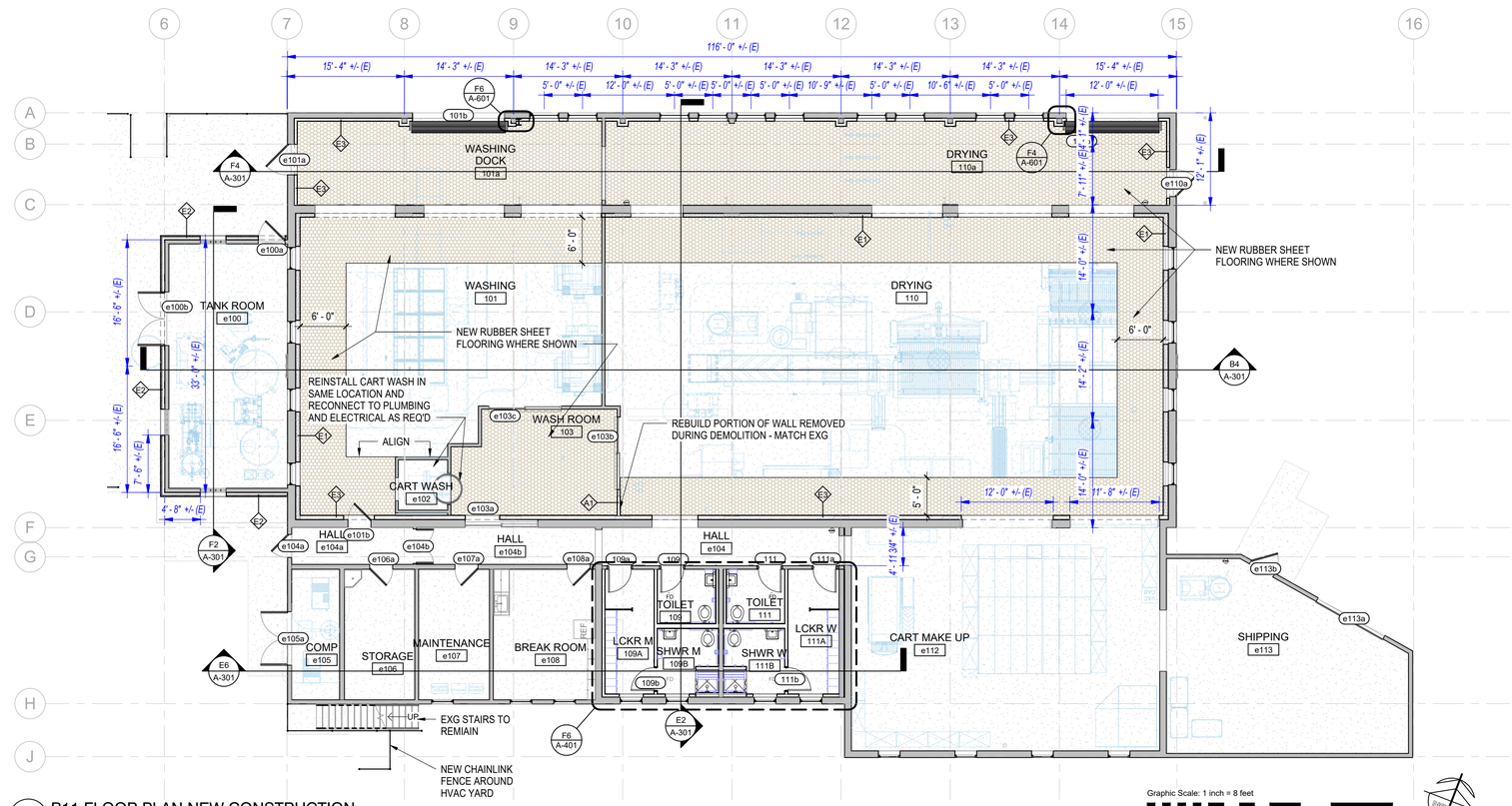

F5 B11 FLOOR PLAN NEW CONSTRUCTION
1/8" = 1'-0"

Graphic Scale: 1 inch = 8 feet
0 8' 16' 24' 32'

Revisions:	Date:

CONSULTANT
Consultant:

ARCHITECT/ENGINEER OF RECORD
A/E:
Blue Trident, LLC
Engineering and Construction Services
BLUE TRIDENT, LLC
900 Winslow Way E, Suite 130
BAINBRIDGE ISLAND, WA 98110
206-972-0645
EMMANUEL (MANNY) BAUTISTA, PE, F.SAME

STAMP
10241 REGISTERED ARCHITECT LAURA M. STRAUSS STATE OF WASHINGTON

Office of Construction and Facilities Management
VA U.S. Department of Veterans Affairs

Drawing Title: B11 FIRST FLOOR PLAN
Approved: director

Phase: ISSUED FOR CONSTRUCTION
FULLY SPRINKLERED

Project Title: SEISMIC RETROFIT AND RENOVATE BUILDINGS 11,13 & 16
Location: VA Roseburg Healthcare System
Issue Date: 4/3/2026
Checked: MR
Drawn: LMS

Project Number: 653-107
Building Number: 11
Drawing Number: A-111

VA FORM 08 - 6231

C:\Users\lauri\OneDrive - design2last.com\d2L-Projects\2024-011 - Roseburg Bldgs 11-13-16\04-DESIGN\BIM MODEL AND LINKS\ROSEBURG 11 ARCH 4/3/2026 5:52:41 PM

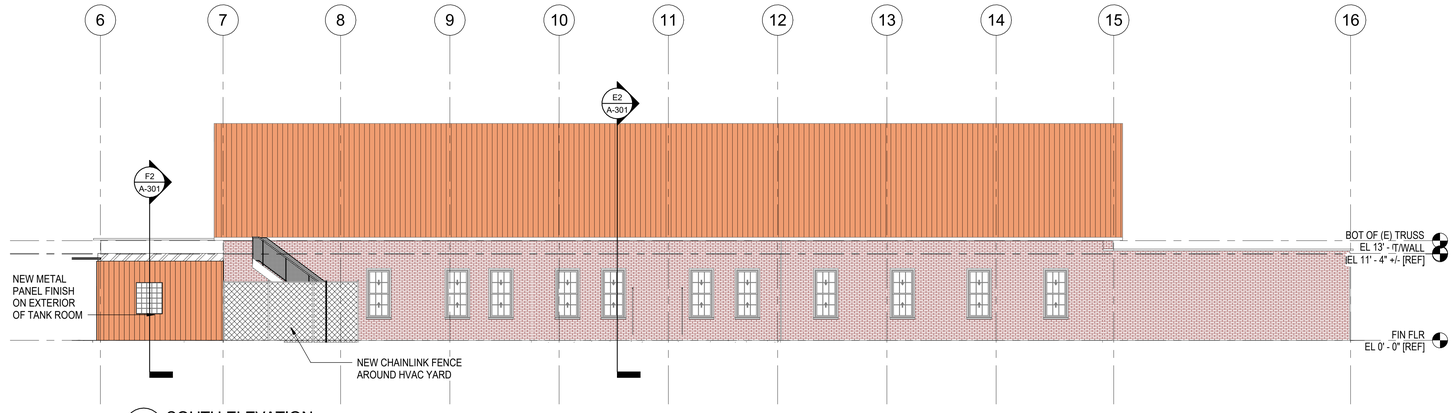

B5 SOUTH ELEVATION
1/8" = 1'-0"

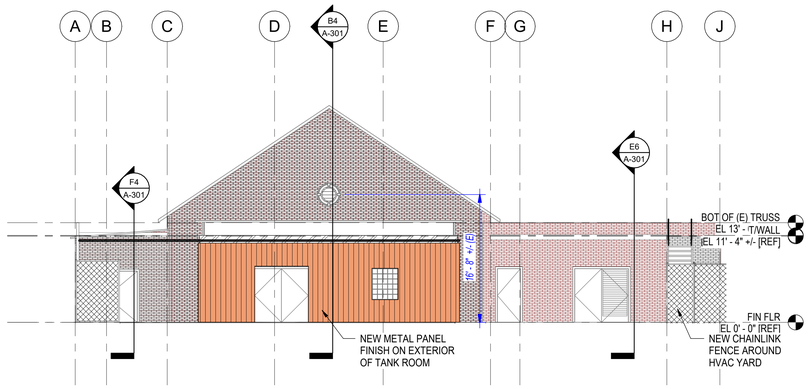

D1 WEST ELEVATION
1/8" = 1'-0"

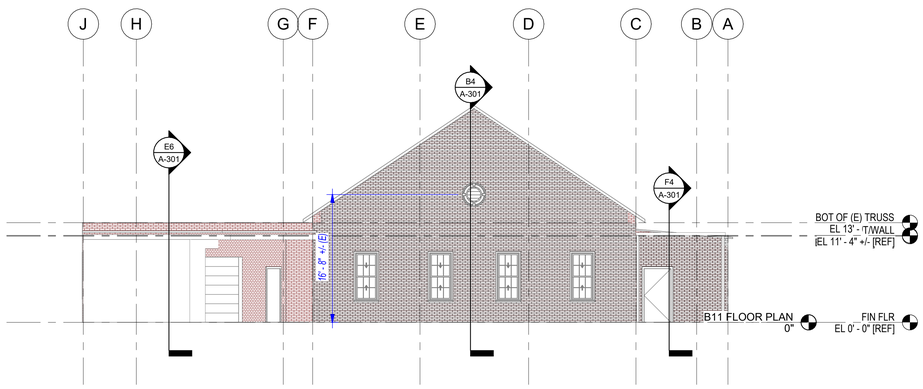

D4 EAST ELEVATION
1/8" = 1'-0"

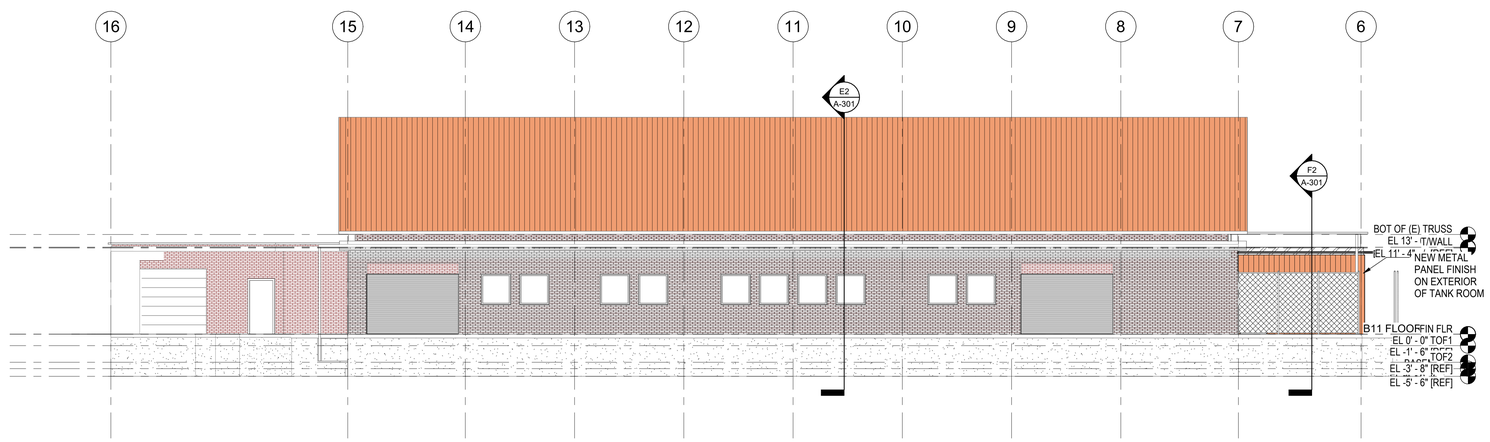

F5 NORTH ELEVATION
1/8" = 1'-0"

Graphic Scale: 1 inch = 8 feet
0 8' 16' 24' 32'

Revisions:	Date:

CONSULTANT

Consultant:

ARCHITECT/ENGINEER OF RECORD

A/E:

Blue Trident, LLC
Engineering and Construction Services

BLUE TRIDENT, LLC
900 Winslow Way E, Suite 130
BAINBRIDGE ISLAND, WA 98110
206-972-0645
EMMANUEL (MANNY) BAUTISTA, PE, F.SAME

STAMP

10241 REGISTERED ARCHITECT
LAURA M. STRAUSS
STATE OF WASHINGTON

Office of Construction and Facilities Management

VA U.S. Department of Veterans Affairs

Drawing Title: EXTERIOR ELEVATIONS

Approved: director

Phase: ISSUED FOR CONSTRUCTION

FULLY SPRINKLERED

Project Title: SEISMIC RETROFIT AND RENOVATE BUILDINGS 11,13 & 16

Location: VA Roseburg Healthcare System

Issue Date: 4/3/2026

Checked: MR

Drawn: LMS

Project Number: 653-107

Building Number: 11

Drawing Number: A-201

VA FORM 08 - 6231

C:\Users\lauri\OneDrive - design2last.com\d2L-Projects\2024-011 - Roseburg Bldgs 11-13-16\04-DESIGN\BIM MODEL AND LINKS\ROSEBURG 11 ARCH 4/3/2026 5:52:46 PM

B1 TANK ROOM ROOF
3" = 1'-0"

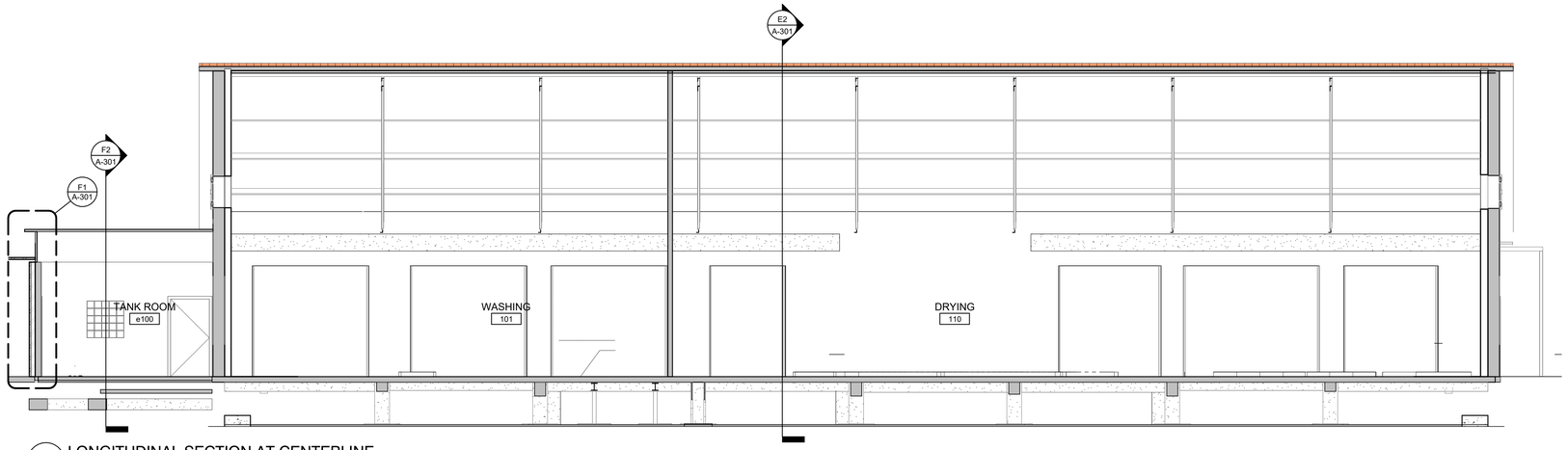

B4 LONGITUDINAL SECTION AT CENTERLINE
3/16" = 1'-0"

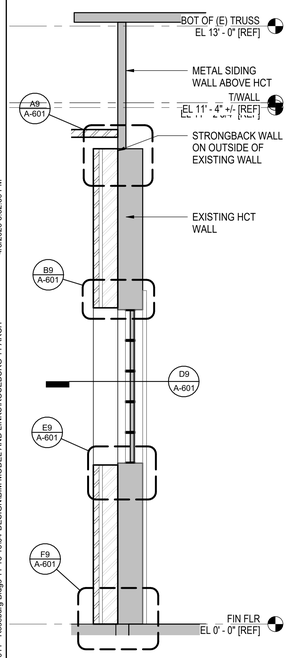

F1 WALL SECTION THRU TANK ROOM
3/4" = 1'-0"

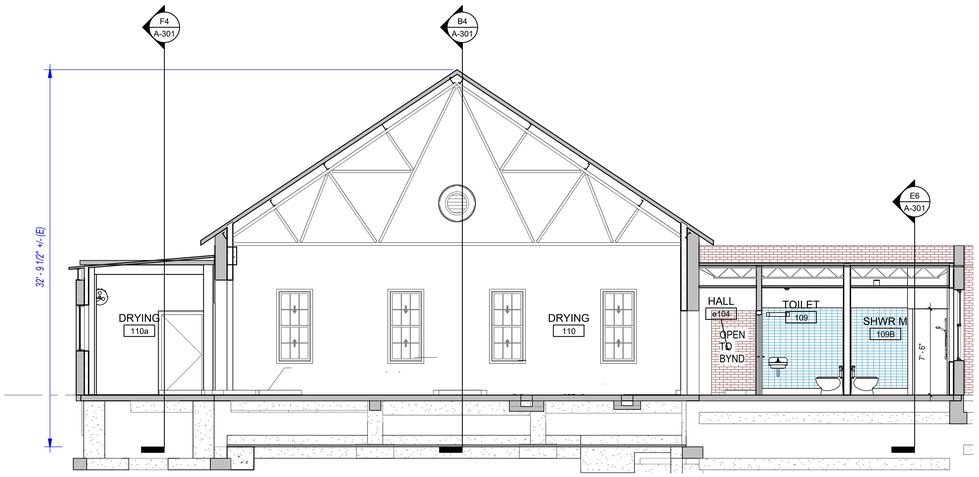

E2 CROSS SECTION
3/16" = 1'-0"

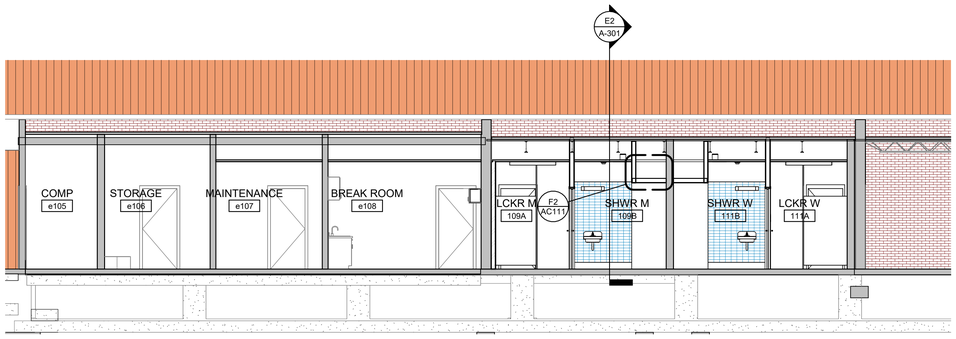

E6 LONG SECTION THRU TOILET ROOMS
3/16" = 1'-0"

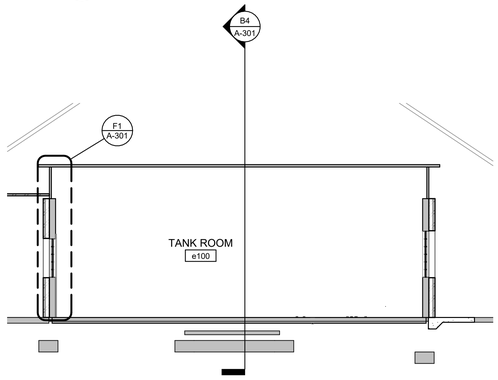

F2 CROSS SECTION THRU TANK ROOM
3/16" = 1'-0"

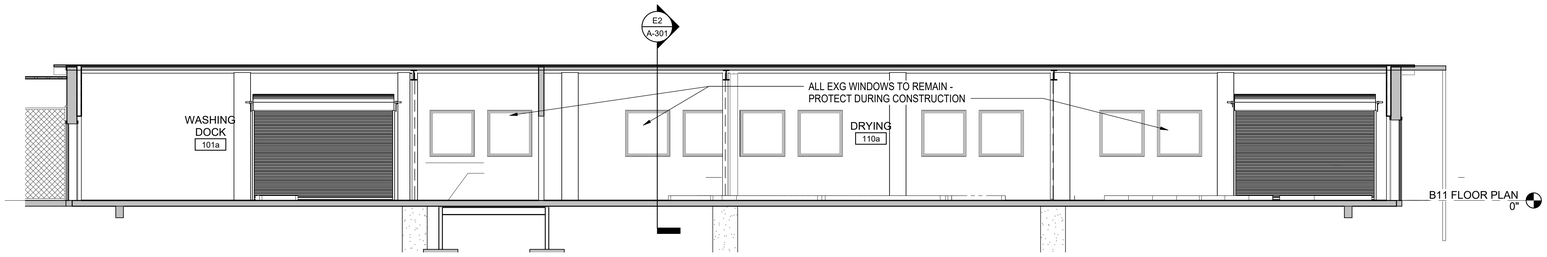

F4 LONGITUDINAL SECTION
3/16" = 1'-0"

0' 1' 2' 3' 4' 8' 16' 24'

Revisions:	Date:

CONSULTANT

Consultant:

ARCHITECT/ENGINEER OF RECORD

A/E: Blue Trident, LLC Engineering and Construction Services

BLUE TRIDENT, LLC
900 Winslow Way E, Suite 130
BAINBRIDGE ISLAND, WA 98110
206-972-0645
EMMANUEL (MANNY) BAUTISTA, PE, F.SAME

STAMP

10241 REGISTERED ARCHITECT LAURA M. STRAUSS STATE OF WASHINGTON

Office of Construction and Facilities Management

VA U.S. Department of Veterans Affairs

Drawing Title: BUILDING SECTIONS

Approved: director

Phase: ISSUED FOR CONSTRUCTION

FULLY SPRINKLERED

Project Title: SEISMIC RETROFIT AND RENOVATE BUILDINGS 11,13 & 16

Location: VA Roseburg Healthcare System

Issue Date: 4/3/2026 | Checked: MR | Drawn: LMS

Project Number: 653-107

Building Number: 11

Drawing Number: A-301

VA FORM 08 - 6231

C:\Users\lauri\OneDrive - design2last.com\d2L-Projects\2024-011 - Roseburg Bldgs 11-13-16\04-DESIGN\BIM MODEL AND LINKS\ROSEBURG 11 ARCH 4/3/2026 5:32:50 PM

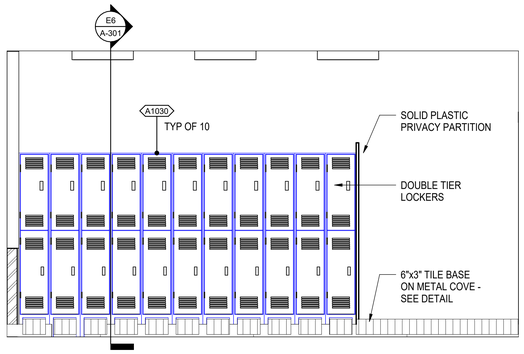

B1 LOCKER M 109A - 4
1/2" = 1'-0"

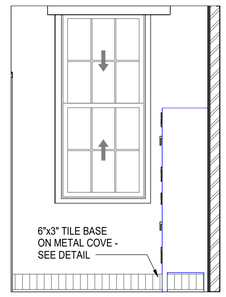

B3 LOCKER M 109A - 3
1/2" = 1'-0"

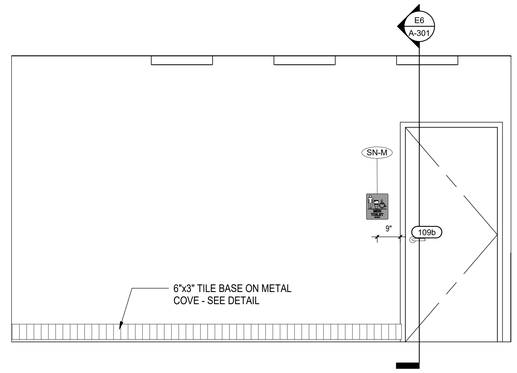

B5 LOCKER M 109A - 2
1/2" = 1'-0"

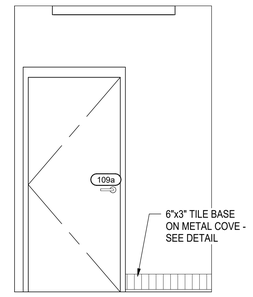

B7 LOCKER M 109A - 1
1/2" = 1'-0"

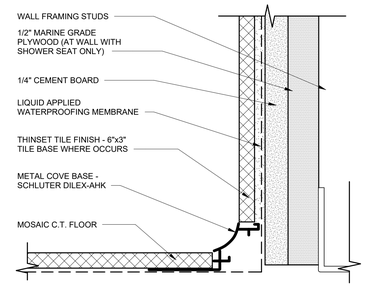

B9 TYP COVE BASE DETAIL
12" = 1'-0"

SPECIALITY EQUIPMENT SCHEDULE C/C, V/C

JSN	NAME	QTY	ACQ/INST	MANUFACTURER	MODEL	REMARKS
A1030	DOUBLE TIER LOCKER	22	C / C	LYON Antimicrobial Healthcare Lockers	12" WIDE x 18" DEEP METAL	Double tier, frames with 6 lockers or 2 lockers
A1066	FRAMED MIRROR - SIZE AS INDICATED	4	C / C	Bobrick Washroom Equipment, Inc.	B-290 2436 SATIN FINISH	
A5082	AUTO OPERATED PAPER TOWEL DISPENSER	4	V / C	VERIFY WITH OWNER		
A5906	GRAB BAR - SIZE AS INDICATED	5	C / C	Bobrick Washroom Equipment, Inc.	B6806 x 'LENGTH' SATIN FINISH	
B27-5	SHOWER SEAT	2	C / C	INPRO	EN275RECSEAT-WH	
B2111	SOAP DISPENSER	4	V / C	VERIFY WITH OWNER		
B2888	TOILET PAPER DISPENSER	4	V / C	VERIFY WITH OWNER		
B3013	SEAT COVER DISPENSER, RECESSED	4	C / C	Bobrick Washroom Equipment, Inc.	B-3013 SATIN FINISH	
B6107	SHOWER CURTAIN ROD	1	C / C	Bobrick Washroom Equipment, Inc.	B6107 - 36"	
B6861	GRAB BAR - SIZE AS INDICATED	2	C / C	Bobrick Washroom Equipment, Inc.	B6861 SATIN FINISH	
B7627	SURFACE-MOUNTED DOUBLE ROBE HOOK	6	C / C	Bobrick Washroom Equipment, Inc.	B-6727	
B9533	Antimicrobial Opaque, Matte White Vinyl Shower curtain	2	C / C	Bradley Corp	9533 - 42"	

C / C = CONTRACTOR FURNISHED CONTRACTOR INSTALLED: V / C = VA PROVIDED, CONTRACTOR INSTALLED: V / V: VA PROVIDED VA INSTALLED

SECIALTY EQUIPMENT NOTES:
1. EQUIPMENT TAGS ARE SHOWN ON INTERIOR ELEVATIONS AND ENLARGED PLANS.

2. GC TO VERIFY ALL QUANTITIES

3. MANUFACTURERS AND MODEL NUMBERS ARE BASIS OF DESIGN. SIMILAR ITEMS THAT MEET THE SPECIFICATIONS WILL BE CONSIDERED.

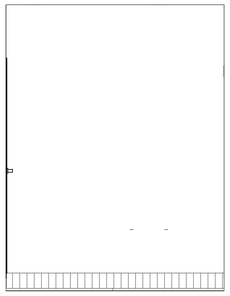

D1 TOILET 109 - 4
1/2" = 1'-0" TOILET 111 SIM - OPP HAND

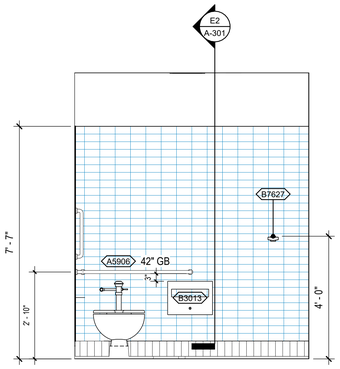

D2 TOILET 109 - 3
1/2" = 1'-0" TOILET 111 SIM - OPP HAND

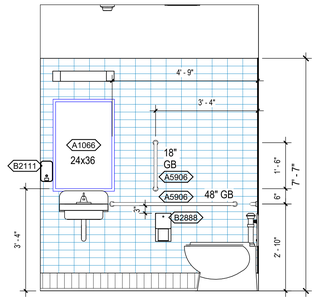

D3 TOILET 109 - 2
1/2" = 1'-0" TOILET 111 SIM - OPP HAND

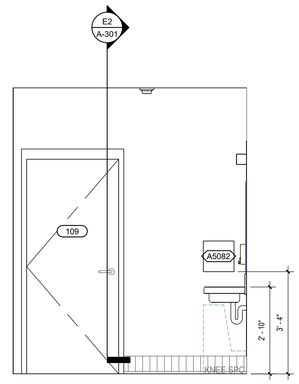

D5 TOILET 109 - 1
1/2" = 1'-0" TOILET 111 SIM - OPP HAND

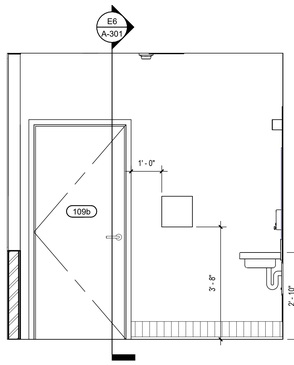

F1 SHOWER 109B - 4
1/2" = 1'-0" SHOWER 111B SIM - OPP HAND

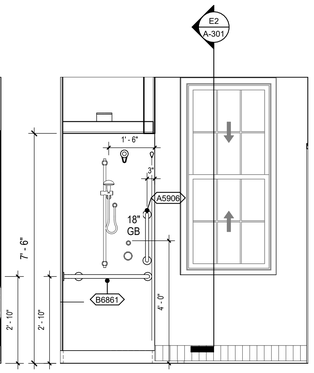

F2 SHOWER 109B - 3
1/2" = 1'-0" SHOWER 111B SIM - OPP HAND

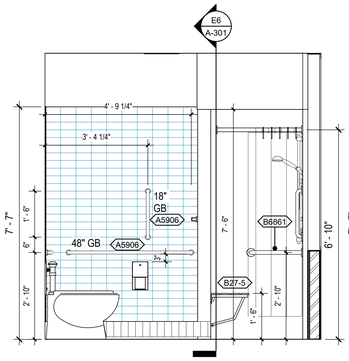

F3 SHOWER 109B - 2
1/2" = 1'-0" SHOWER 111B SIM - OPP HAND

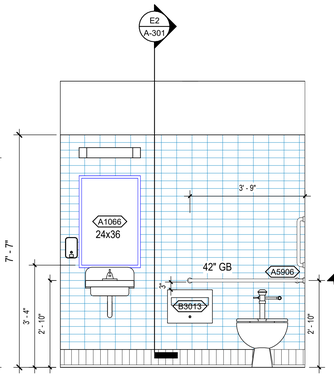

F5 SHOWER 109B - 1
1/2" = 1'-0" SHOWER 111B SIM - OPP HAND

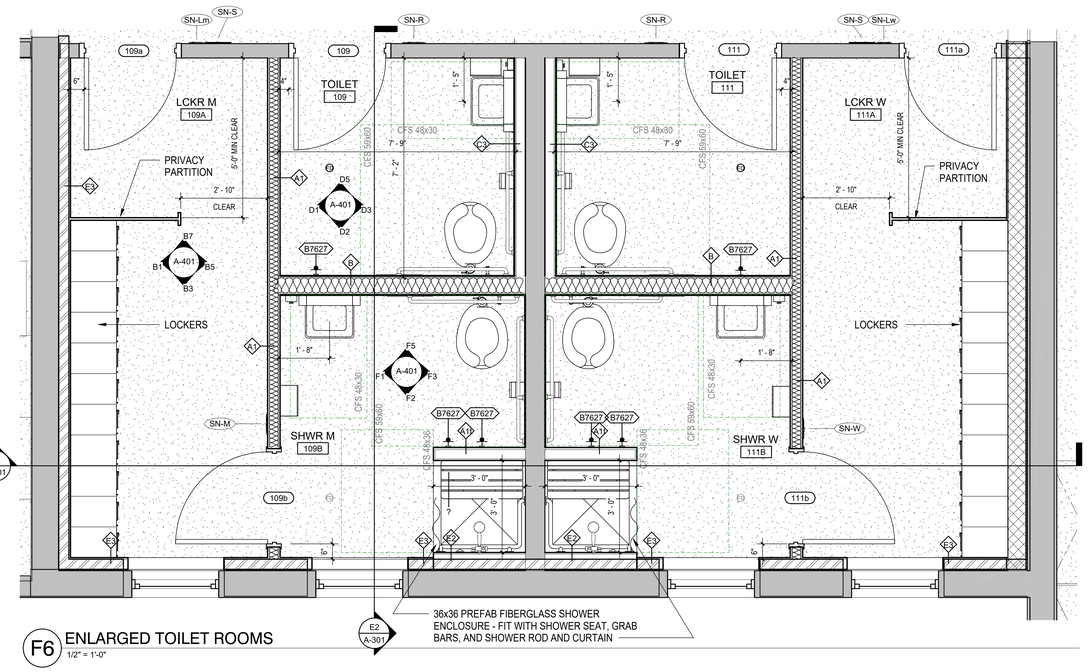

F6 ENLARGED TOILET ROOMS
1/2" = 1'-0"

Revisions:	Date:

CONSULTANT
Consultant:

ARCHITECT/ENGINEER OF RECORD
A/E:
Blue Trident, LLC
Engineering and Construction Services
BLUE TRIDENT, LLC
900 Winslow Way E, Suite 130
BAINBRIDGE ISLAND, WA 98110
206-972-0645
EMMANUEL (MANNY) BAUTISTA, PE, F.SAME

STAMP
10241 REGISTERED ARCHITECT
LAURA M. STRAUSS
STATE OF WASHINGTON

Office of Construction and Facilities Management
VA U.S. Department of Veterans Affairs

Drawing Title: ENLARGED TOILET ROOMS
Approved: director

Phase: ISSUED FOR CONSTRUCTION
FULLY SPRINKLERED

Project Title: SEISMIC RETROFIT AND RENOVATE BUILDINGS 11,13 & 16
Location: VA Roseburg Healthcare System
Issue Date: 4/3/2026
Checked: MR
Drawn: LMS

Project Number: 653-107
Building Number: 11
Drawing Number: A-401

VA FORM 08 - 6231

C:\Users\laun\OneDrive - design2last.com\d2L-Projects\2024-011 - Roseburg Bldgs 11-13-16\04-DESIGN\BIM MODEL AND LINKS\ROSEBURG 11 ARCH
4/3/2026 5:52:56 PM

DOOR AND FRAME SCHEDULE

NUM	DOORS TYPE	MATL	FINISH	GLASS TYPE	SIZE WIDTH	SIZE HEIGHT	FRAMES TYPE	MATL	FINISH	HEAD	JAMB	SILL	HARDWARE GROUP	REMARKS
B11 FLOOR PLAN														
101b	OH	STEEL	EXG	--	144"	94"	EXG	STEEL	EXG	EXG	F4/ A601		EXG	REINSTALL SALVAGED OVERHEAD DOOR AND FRAME - REPLACE BROKEN OR DAMAGED PARTS
109	FL	HM	PNT	--	36"	84"	1	HM	PNT	E3/ A601	F3/ A601	F1/ A601	HW-2D	
109a	FL	HM	PNT	--	36"	84"	1	HM	PNT	E3/ A601	F3/ A601	F1/ A601	HW-1	
109b	FL	HM	PNT	--	36"	84"	1	HM	PNT	D4/ A601	D4/ A601		HW-2D	
110b	OH	STEEL	EXG	--	144"	94"	EXG	STEEL	EXG	EXG	F6/ A601		EXG	REINSTALL SALVAGED OVERHEAD DOOR AND FRAME - REPLACE BROKEN OR DAMAGED PARTS
111	FL	HM	PNT	--	36"	84"	1	HM	PNT	E3/ A601	F3/ A601	F1/ A601	HW-2D	
111a	FL	HM	PNT	--	36"	84"	1	HM	PNT	E3/ A601	F3/ A601	F1/ A601	HW-1	
111b	FL	HM	PNT	--	36"	84"	1	HM	PNT	D4/ A601	D4/ A601		HW-2D	

DOOR TYPES

SEE DOOR SCHEDULE FOR HEAD, JAMB AND SILL DETAILS.

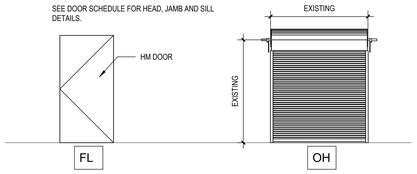

FRAME TYPES

ALL HM DOOR FRAMES TO BE PAINTED PT3 - ALL SIDES

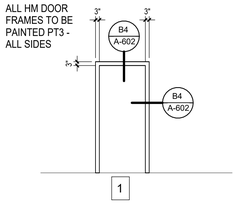

FINISH MATERIAL SCHEDULE

MARK	MATERIAL	MANUFACTURER	STYLE / PRODUCT	COLOR	SIZE	FINISH	NOTES
ACT1	ACOUSTICAL CEILING TILE	ARMSTRONG	OPTIMA	WHITE	24 X 24"	-	-
CT1	CERAMIC TILE	DAL TILE	Retrospace Remix	Mercury Grey Rectangle Undulated	3" x 6" x 5/16"	glossy	INSTALL VERTICAL, INSTALL WALL TILE HORIZONTAL IN STACK BOND
CT4	CERAMIC TILE	DAL TILE	MOSAIC TILE PATTERN DK16 HEXAGON	D617 ARCTIC WHITE / D311 BLACK	1 X 1 HEXAGON MOSAIC		
LK1	LOCKERS	LYON	ANTIMICROBIAL HEALTHCARE LOCKERS	Antimicrobial Monoral Gray	12" X18"		
PT1	PAINT	SHERWIN WILLIAMS	-	SW7005 PURE WHITE	-	-	-
PT4	PAINT	SHERWIN WILLIAMS	-	SW7649 SILVERPLATE	-	-	ALL HOLLOW METAL DOORS AND FRAMES
RB	RUBBER BASE	JOHNSONITE	COLOR MATCH	20 CHARCOAL	4"		
RBT	RUBBER TILE	NORA	NORAMENT 825 ROUND, ARTICLE 1902	RAISED DISCS - COLOR TBD	19 3/4": x 19 3/4" X 1/8"		
SLR	SEALED CONCRETE	TBD					
SS1	SOLID SURFACE	WILSONART	SOLID SURFACE	SEA STONE 9202CS			
TP1	PHENOLIC CORE PARTITIONS	BRADLEY	SENTINEL - FLOOR MOUNTED OVERHEAD BRACED	GRAPHITE 837	-		

ROOM FINISH SCHEDULE

RM NUM	ROOM NAME	FLOOR	BASE	WALLS NORTH	WALLS EAST	WALLS SOUTH	WALLS WEST	CEILING	COMMENTS / NOTES
101	WASHING	RBT	RB	CONC / PNT	EXG GWB / PNT	GWB-PNT	CONC / PNT	EXG	SEE PLAN FOR RBT LAYOUT
101a	WASHING DOCK	RBT	RB	GWB-PNT	EXG GWB / PNT	EXG / PNT	GWB-PNT	EXG	
103	WASH ROOM	RBT	RB	EXG GWB / PNT	EXG GWB / PNT	EXG GWB / PNT	EXG GWB / PNT	EXG	
109	TOILET	CFT	CT/ALUM	GWB-PNT	CT/ GWB-PNT	CT/ GWB-PNT	GWB-PNT	ACT	SEE INTERIOR ELEVATIONS FOR TILE HEIGHT
109A	LCKR M	CFT	CT/ALUM	GWB-PNT	GWB-PNT	GWB-PNT	GWB-PNT	ACT	
109B	SHWR M	CFT	CT/ALUM	CT/ GWB-PNT	CT/ GWB-PNT	GWB-PNT	GWB-PNT	ACT	SEE INTERIOR ELEVATIONS FOR TILE HEIGHT
110	DRYING	RBT	RB	CONC / PNT	CONC / PNT	EXG / PNT	EXG GWB / PNT	EXG	SEE PLAN FOR RBT LAYOUT
110a	DRYING	RBT	RB	GWB-PNT	GWB-PNT	EXG / PNT	EXG GWB / PNT	EXG	
111	TOILET	CFT	CT/ALUM	GWB-PNT	GWB-PNT	CT/ GWB-PNT	CT/ GWB-PNT	ACT	SEE INTERIOR ELEVATIONS FOR TILE HEIGHT
111A	LCKR W	CFT	CT/ALUM	GWB-PNT	GWB-PNT	GWB-PNT	GWB-PNT	ACT	
111B	SHWR W	CFT	CT/ALUM	CT/ GWB-PNT	GWB-PNT	GWB-PNT	CT/ GWB-PNT	ACT	SEE INTERIOR ELEVATIONS FOR TILE HEIGHT

ROOMS NOT SCHEDULED WILL NOT RECEIVE ANY NEW FINISHES.

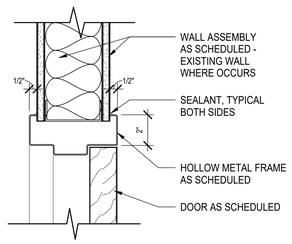

D4 HM INT DOOR HEAD (JAMB SIM)
3" = 1'-0"

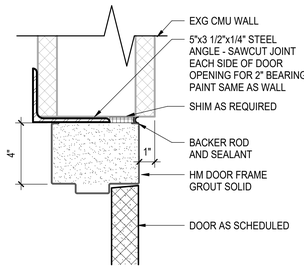

E3 DOOR HEAD CMU
3" = 1'-0"

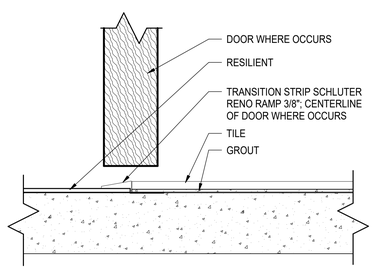

F1 TRANSITION - RESILIENT / TILE
6" = 1'-0"

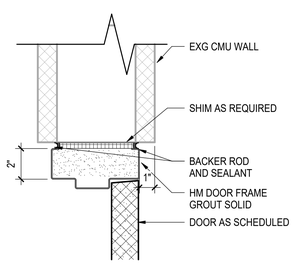

F3 DOOR JAMB CMU
3" = 1'-0"

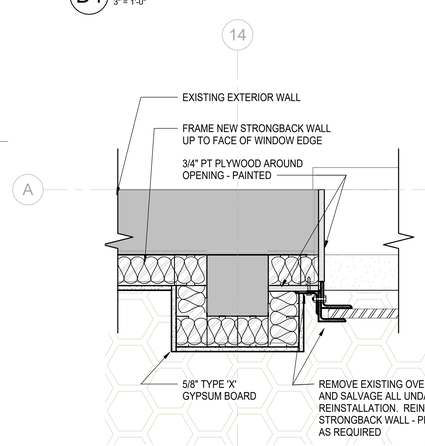

F4 COLUMN GRID A/14
1 1/2" = 1'-0"

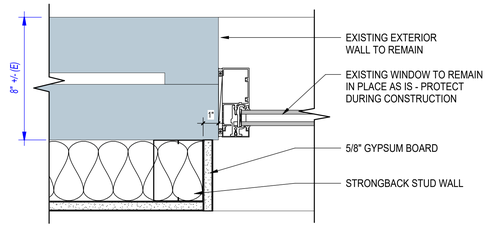

B6 EXG WINDOW HEAD/JAMB
3" = 1'-0"

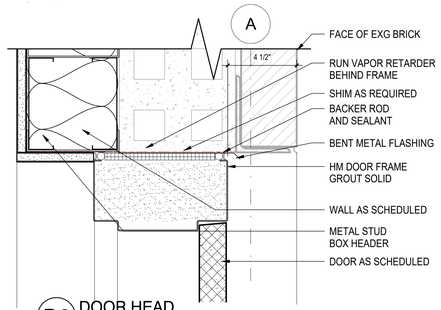

D6 DOOR HEAD
3" = 1'-0"

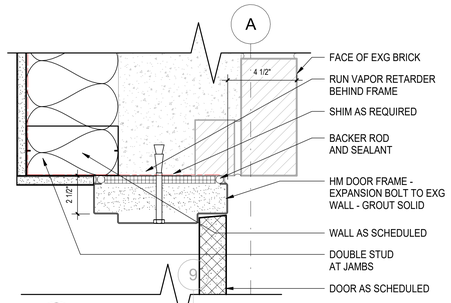

E6 DOOR JAMB
3" = 1'-0"

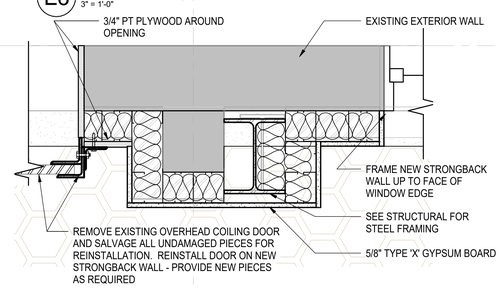

F6 COLUMN GRID A/9
1 1/2" = 1'-0"

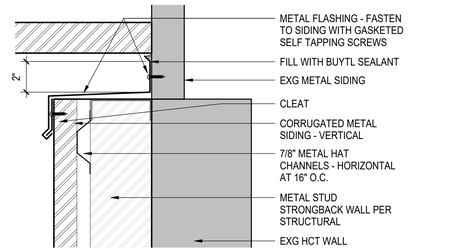

A9 TOP OF WALL
3" = 1'-0"

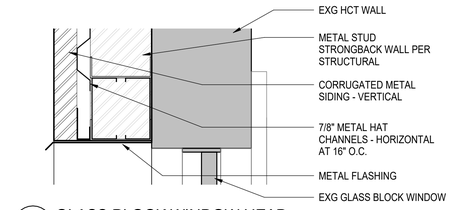

B9 GLASS BLOCK WINDOW HEAD
3" = 1'-0"

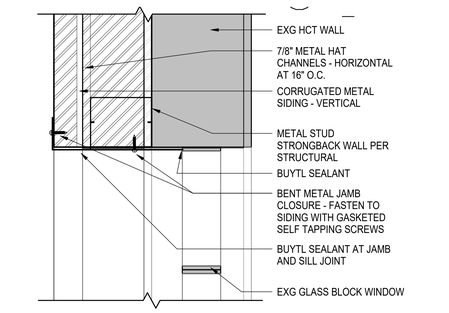

D9 GLASS BLOCK WINDOW JAMB
3" = 1'-0"

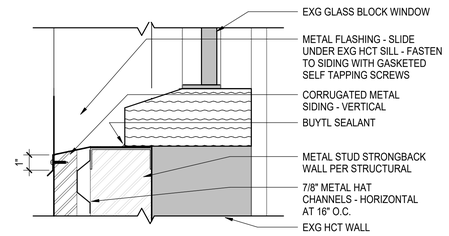

E9 GLASS BLOCK WINDOW SILL
3" = 1'-0"

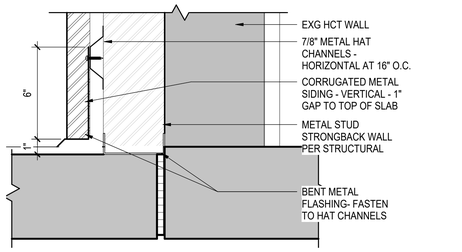

F9 BOTTOM OF WALL
3" = 1'-0"

Revisions:	Date:

CONSULTANT

Consultant:

ARCHITECT/ENGINEER OF RECORD

A/E: Blue Trident, LLC Engineering and Construction Services

BLUE TRIDENT, LLC
900 Winslow Way E, Suite 130
BAINBRIDGE ISLAND, WA 98110
206-972-0645
EMMANUEL (MANNY) BAUTISTA, PE, F.SAME

STAMP

10241 REGISTERED ARCHITECT LAURA M. STRAUSS STATE OF WASHINGTON

Office of Construction and Facilities Management

VA U.S. Department of Veterans Affairs

Drawing Title: SCHEDULES AND DETAILS

Approved: director

Phase: ISSUED FOR CONSTRUCTION

FULLY SPRINKLERED

Project Title: SEISMIC RETROFIT AND RENOVATE BUILDINGS 11,13 & 16

Location: VA Roseburg Healthcare System

Issue Date: 4/3/2026 | Checked: MR | Drawn: LMS

Project Number: 653-107

Building Number: 11

Drawing Number: A-601

VA FORM 08 - 6231

C:\Users\laurl\OneDrive - design2net.com\d2L-Projects\2024-011 - Roseburg Bldgs 11-13-16\04-DESIGN\BIM MODEL AND LINKS\ROSEBURG 11 ARCH 2026.rvt 4/3/2026 5:52:59 PM

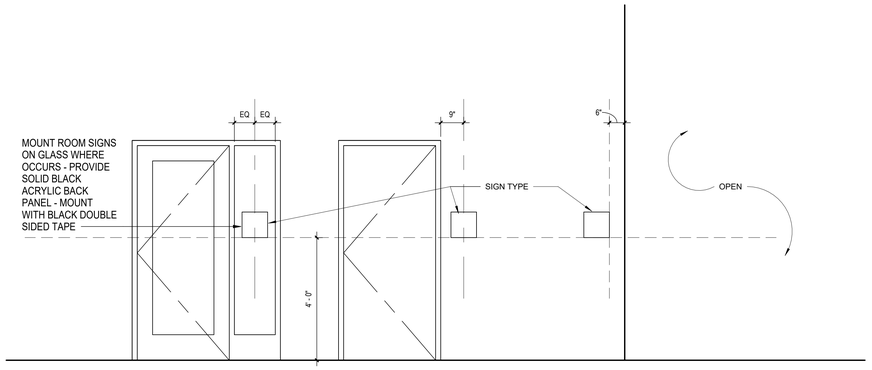

TYPICAL SIGN MOUNTING ELEVATION

SIGN MOUNTING HEIGHT
1/2" = 1'-0"

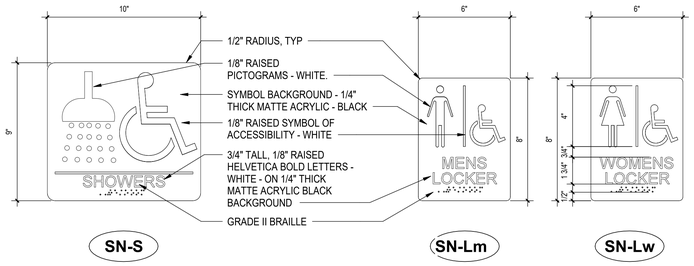

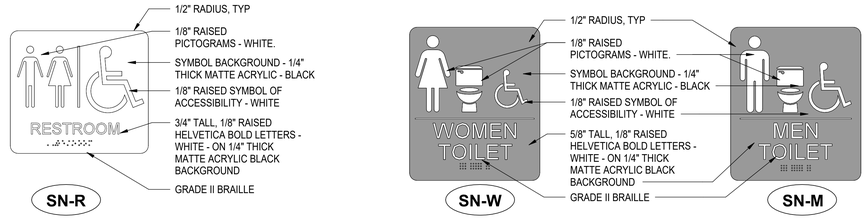

PROJECT SIGNAGE
3" = 1'-0"

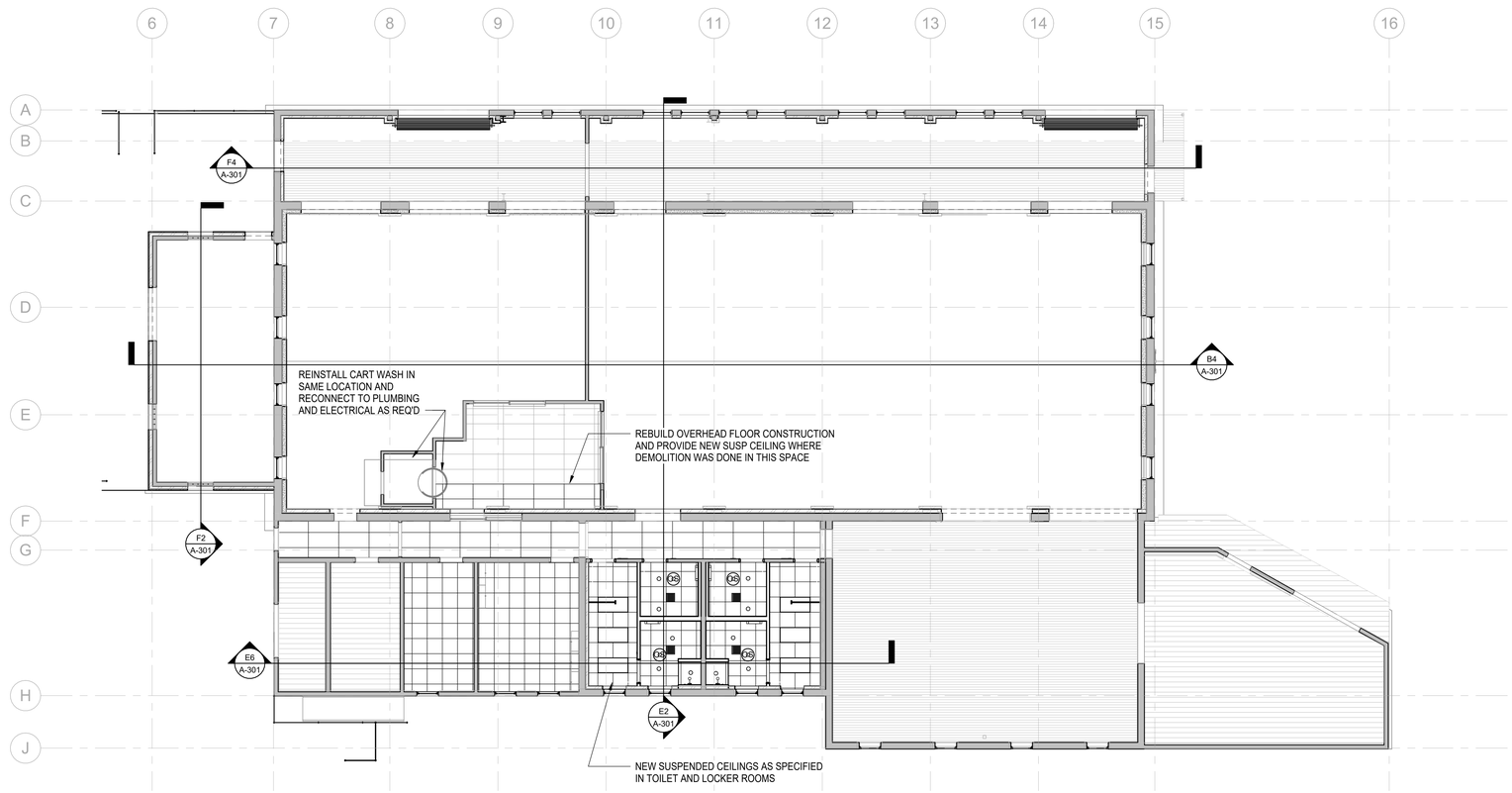

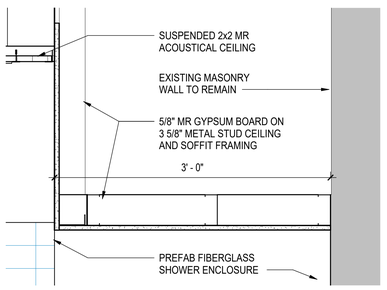

F2 SHOWER SOFFIT DETAIL
1 1/2" = 1'-0"

F5 B11 REFLECTED CEILING PLAN
1/8" = 1'-0"

Graphic Scale: 1 inch = 8 feet
0 8' 16' 24' 32'

Revisions:	Date:

CONSULTANT
Consultant:

ARCHITECT/ENGINEER OF RECORD
A/E:
Blue Trident, LLC
Engineering and Construction Services
BLUE TRIDENT, LLC
900 Winslow Way E, Suite 130
BAINBRIDGE ISLAND, WA 98110
206-972-0645
EMMANUEL (MANNY) BAUTISTA, PE, F.SAME

STAMP
10241 REGISTERED ARCHITECT LAURA M. STRAUSS STATE OF WASHINGTON

Office of Construction and Facilities Management
VA U.S. Department of Veterans Affairs

Drawing Title: REFLECTED CEILING PLAN AND SIGNAGE
Approved: director

Phase: ISSUED FOR CONSTRUCTION
FULLY SPRINKLERED

Project Title: SEISMIC RETROFIT AND RENOVATE BUILDINGS 11,13 & 16
Location: VA Roseburg Healthcare System
Issue Date: 4/3/2026
Checked: MR
Drawn: LMS

Project Number: 653-107
Building Number: 11
Drawing Number: AC111

VA FORM 08 - 6231

C:\Users\lauri\OneDrive - design2heat.com\d2L-Projects\2024-011 - Roseburg Bldgs 11-13-16\04-DESIGN\BIM MODEL AND LINKS\ROSEBURG 11 ARCH 4/3/2026 5:53:01 PM

GENERAL NOTES

A. PERFORM ALL WORK IN ACCORDANCE WITH LOCAL CODES AND ORDINANCES. OBTAIN AND PAY FOR ALL REQUIRED PERMITS AND PAY FOR ALL FEES REQUIRED BY AUTHORITIES HAVING JURISDICTION. PAY ALL ROYALTIES OR FEES REQUIRED IN CONNECTION WITH THE USE OF PATENTED DEVICES AND SYSTEMS.

B. ARRANGE EQUIPMENT SO THAT ACCESS CLEARANCES INDICATED BY DRAWINGS, REQUIRED BY CODES, OR RECOMMENDED BY MANUFACTURER ARE PROVIDED.

C. INSTALL MATERIALS AND SYSTEMS IN ACCORDANCE WITH MANUFACTURER'S INSTRUCTIONS AND ACCEPTED SUBMITTALS. INSTALL MATERIAL IN PROPER RELATION TO ADJACENT CONSTRUCTION AND WITH UNIFORM APPEARANCE FOR EXPOSED WORK.

GENERAL NOTES - DEMOLITION

A. COORDINATE INTERRUPTIONS OF SERVICES PASSING THROUGH WORK AREA TO MINIMIZE DISRUPTION IN ADJACENT SPACES. COORDINATE WITH BUILDING OWNER.

B. DISCONNECT ALL ABANDONED WIRING OF ALL TYPES AT THE DEVICE SOURCE AND COMPLETELY REMOVE ALL ABANDONED WIRING.

C. MAINTAIN AND RESTORE, IF INTERRUPTED, ALL CONDUITS AND CONDUCTORS. PASSING THROUGH RENOVATED AREAS AND SERVICING UNDISTURBED AREAS.

D. DISCONNECT AND RETAIN EXISTING FIRE ALARM AND MASS NOTIFICATION DEVICES AND WIRING FOR REUSE.

ABBREVIATIONS

A	AIR, AMP
ACU	AIR CONDITIONING UNIT
AFF	ABOVE FINISHED FLOOR
AHU	AIR HANDLING UNIT
AL	ALUMINUM, ACOUSTICAL LINING
ARRGT	ARRANGEMENT
ATM	ATMOSPHERE
BC	BLOWER COIL
BDD	BACKDRAFT DAMPER
BFF	BELOW FINISHED FLOOR
BFP	BACKFLOW PREVENTER
BHP	BRAKE HORSEPOWER
BLDG	BUILDING
BOB	BOTTOM OF BEAM
BOD	BOTTOM OF DUCT
BOS	BOTTOM OF STEEL
BTUH	BRITISH THERMAL UNITS PER HOUR
CAP	CAPACITY
CC	COOLING COIL
CD	CEILING DIFFUSER
CFM	CUBIC FEET PER MINUTE
CHR	CHILLED WATER RETURN
CHS	CHILLED WATER SUPPLY
CI	CAST IRON
CLG	CEILING, COOLING
CNTFGL	CENTRIFUGAL
CO	CLEANOUT
CONC	CONCRETE
COND	CONDENSATE
CONT	CONTINUE, CONTROL
COMP	COMPRESSOR
COP	COEFFICIENT OF PERFORMANCE
CP	CIRCULATING PUMP
CRU	CONDENSATE RETURN UNIT
CU	CONDENSING UNIT
CU FT	CUBIC FEET
CV	CONSTANT VOLUME
CVTR	CONVERTER
CW	COLD WATER
dB	DECIBELS
DB	DRY BULB
DCVA	DOUBLE CHECK VALVE ASSEMBLY
DEG	DEGREE
DF	DRINKING FOUNTAIN
DI	DE-IONIZED
DIA	DIAMETER
DMPR	DAMPER
DN	DOWN
DS	DOWNSPOUT
E	EXISTING
EA	EXHAUST AIR
EAT	ENTERING AIR TEMPERATURE
EER	ENERGY EFFICIENCY RATING
EF	EXHAUST FAN
EFF	EFFICIENCY
EG	EXHAUST GRILLE
EL	ELEVATION
EQUIP	EQUIPMENT
ESP	EXTERNAL STATIC PRESSURE
EWT	ENTERING WATER TEMPERATURE
EXH	EXHAUST
EWC	ELECTRIC WATER COOLER
EXIST	EXISTING
EXP	EXPANSION
EXT	EXTERIOR, EXTERNAL
F	FAHRENHEIT, FIRE LINE
FD	FIRE DAMPER, FLOOR DRAIN
FDC	FIRE DEPARTMENT CONNECTION
FLA	FULL LOAD AMPS
FLR	FLOOR
FLTR	FILTER
FM	FLOW METER
FOB	FLAT ON BOTTOM
FO	FLAT OVAL
FOT	FLAT ON TOP
FOUO	FOR OFFICIAL USE ONLY
FPM	FEET PER MINUTE
FPS	FEET PER SECOND
FSD	FIRE SMOKE DAMPER
FT	FEET, FAN TERMINAL
FV	FACE VELOCITY
GA	GAGE
GAL	GALLONS
GALV	GALVANIZED
GPM	GALLONS PER MINUTE
H	HUMIDIFIER, HEIGHT
HB	HOSE BIBB
HC	HEATING COIL
HD	HEAD
HEX	HEAT EXCHANGE
HOA	HAND-OFF-AUTOMATIC
HP	HORSEPOWER, HEAT PUMP
HPS	HIGH PRESSURE STEAM
HTG	HEATING
HW	HOT WATER
HWC	HOT WATER CIRCULATING
HWP	HOT WATER PUMP
HWR	HEATING WATER RETURN
HWS	HEATING WATER SUPPLY
HZ	HERTZ
ID	INSIDE DIAMETER, INDIRECT DRAIN
IE	INVERT ELEVATION
IH	INTAKE HOOD
IN	INCH
INIT	INITIAL
INT	INTERIOR
IPLV	INTEGRATED PART LOAD VALUE
KW	KILOWATT
KWH	KILOWATT HOURS
L	LENGTH
LAT	LEAVING AIR TEMPERATURE
LB	POUND, LINEAR BAR
LBS	POUNDS
LD	LINEAR DIFFUSER
LWT	LEAVING WATER TEMPERATURE
MAX	MAXIMUM
MBH	THOUSAND BTU PER HOUR
MCA	MINIMUM CIRCUIT AMPACITY
MD	MANUAL DAMPER
MECH	MECHANICAL
MFR	MANUFACTURER
MIN	MINIMUM
MOCP	MAXIMUM OVER CURRENT PROTECTION
MOD	MOTOR OPERATED DAMPER
MTR	MOTOR
NC	NORMALLY CLOSED
NEG	NEGATIVE
NIC	NOT IN CONTRACT
NO	NUMBER, NORMALLY OPEN
NTS	NOT TO SCALE
OA	OUTDOOR AIR
OC	ON CENTER
OD	OUTSIDE DIAMETER
OPNG	OPENING
ORD	OVERFLOW ROOF DRAIN
ORL	OVERFLOW RAIN LEADER
P	PUMP, PLUMBING
PD	PRESSURE DROP
PH	PHASE
POC	POINT OF CONNECTION
POS	POSITIVE
PR	PUMPED RETURN
P/T	PRESSURE/TEMPERATURE
PVC	POLYVINYL CHLORIDE
QTY	QUANTITY
RA	RETURN AIR
RD	ROOF DRAIN
REF	REFERENCE
REQD	REQUIRED
RF	RETURN FAN
RG	RETURN GRILLE
RH	RELIEF HOOD, RELATIVE HUMIDITY
RL	RAIN LEADER
RPBFP	REDUCSED PRESSURE BACKFLOW PREVENTER
RPM	REVOLUTIONS PER MINUTE
S	SOIL
SA	SUPPLY AIR
SD	STORM DRAIN, SMOKE DAMPER
SENS	SENSIBLE
SEER	SEASONAL ENERGY EFFICIENCY RATING
SF	SUPPLY FAN, SQUARE FEET
SG	SUPPLY GRILLE
SL	SOUNDLINING
SP	STATIC PRESSURE
SPR	SPRINKLER
SS	STAINLESS STEEL, SANITARY SEWER
STP	STANDPIPE
T	THERMOSTAT
TEMP	TEMPERATURE
TG	TRANSFER GRILLE
TOD	TOP OF DUCT
TOT	TOTAL
TP	TRAP PRIMER, TOTAL PRESSURE
TSP	TOTAL STATIC PRESSURE
TU	TERMINAL UNIT
TYP	TYPICAL
UH	UNIT HEATER
UON	UNLESS OTHERWISE NOTED
V	VENT, VOLT
VA	VALVE
VAV	VARIABLE AIR VOLUME
VEL	VELOCITY
VFD	VARIABLE FREQUENCY DRIVE
VTR	VENT THROUGH ROOF
W	WASTE, WATER, WATT, WIDTH
WB	WET BULB
WG	WATER GAGE
WH	WATER HEATER, WALL HYDRANT
WTR	WATER

FIRE ALARM SYMBOLS

	HEAVY LINEWEIGHT INDICATES NEW WORK
	LIGHT LINEWEIGHT INDICATES EXISTING
	DASH LINE INDICATES DEMOLITION
S	DASH LIGHT FIXTURE/EQUIPMENT/DEVICE TO BE DEMOLISHED
AIM	ADDRESSABLE INPUT MODULE
FAA	FIRE ALARM ANNUNCIATOR, +48"
F	FIRE ALARM PULLSTATION
SD	FIRE ALARM DUCT SMOKE DETECTOR
R/F	FIRE ALARM HEAT DETECTOR - RATE OF RISE
S P	FIRE ALARM SMOKE DETECTOR "P" DENOTES PHOTOELECTRIC
XX	FIRE ALARM COMBINATION AUDIBLE/VISUAL DEVICE, +80" (MIN. ADA COMPLIANCE)
XX	FIRE ALARM VISUAL DEVICE, +80" (MIN. ADA COMPLIANCE)
Z C	FIRE ALARM ADDRESSABLE CONTROL OR MONITORING MODULE "C" DENOTES CONTROL "M" DENOTES MONITOR
	HEAT DETECTOR
M	FIRE ALARM MAGNETIC HOLD OPEN DEVICE, +74"
SP	FIRE ALARM SPEAKER
R	FIRE ALARM INTERFACE RELAY WITH 10AMP MIN. CONTACTS
K	FIRE ALARM KEY OPERATED TEST SWITCH WITH INDICATOR LIGHT, +60"
C	FIRE ALARM CONNECTION TO ELECTRIC DOOR CLOSER
S	FIRE ALARM CONNECTION TO FIRE ALARM SMOKE DAMPER
FACP	FIRE ALARM CONTROL PANEL
BPS	BOOSTER POWER SUPPLY PANEL
FARA	FIRE ALARM REMOTE ANNUNCIATOR
	SMOKE DAMPER
	FIRE SMOKE DAMPER

FIRE ALARM SHEET INDEX

FA001	B11 FIRE ALARM GENERAL NOTES AND LEGEND
FAD111	B11 FIRE ALARM DEMOLITION - FIRST FLOOR PLAN
FA111	B11 FIRE ALARM - FIRST FLOOR PLAN

Revisions: Date:

CONSULTANT

Consultant: SAZAN GROUP
111 SW Fifth Ave., Ste. 3210
Portland, Oregon 97204
Tel 503.416.2400
Fax 503.416.2087
SAZAN # 735-24021

ARCHITECT/ENGINEER OF RECORD

A/E: Blue Trident, LLC Engineering and Construction Services
BLUE TRIDENT, LLC
900 Winslow Way E, Suite 130
BAINBRIDGE ISLAND, WA 98110
206-972-0645
EMMANUEL (MANNY) BAUTISTA, PE, F.SAME

STAMP

REGISTERED PROFESSIONAL ENGINEER 51012PE JAN. 9, 2026 CHRISTOPHER LARSON
Expires: 12/31/2026

Office of Construction and Facilities Management

VA U.S. Department of Veterans Affairs

Drawing Title: B11 FIRE ALARM GENERAL NOTES AND LEGEND	Phase: Issued For Construction	Project Title: Seismic Retrofit and Renovate Building 11	Project Number: 653-107
			Building Number: 11
Approved: director	FULLY SPRINKLERED	Location: VA Roseburg Healthcare System	Drawing Number: FA001
		Issue Date: 04/03/2026 · Checked: PR · Drawn: KS	

Autodesk Docs://PDX 735-24021 Seismic Retrofit Roseburg for Buildings 11, 13 and 16/735-24021 Roseburg SR Building 11 ETFP V24.rvt
4/3/2026 2:28:48 PM
VA FORM 08 - 6231

SHEET NOTES

A. REINSTALL EXISTING FIRE ALARM DEVICES AND REUSE EXISTING WIRING WHERE PRACTICABLE. TEST TO VERIFY EXISTING CABLE INTEGRITY PRIOR TO REUSE. RECORD ALL WIRING BETWEEN DEVICES AND SUBMIT TO EOR FOR AS-BUILT PURPOSES. EXISTING SLC AND MASS NOTIFICATION CABLES MAY BE REUSED IF TESTED AND VERIFIED. SLC CABLING MAY BE T-TAPPED. EXISTING NAC CIRCUIT CABLE MAY BE REUSED IF TESTED AND VERIFIED. IF REUSED CONNECT TO FIRE ALARM (CLEAR LENS) STROBE APPLIANCES.

B. FIRE ALARM DEVICES INSTALLED IN THE ELEVATOR HOISTWAY SHALL BE ACCESSIBLE FOR SERVICING, TESTING, AND MAINTENANCE FROM OUTSIDE THE ELEVATOR HOISTWAY AS REQUIRED BY NFPA 72 21.3.7.

C. REFER TO MECHANICAL CONSULTANT DRAWINGS TO COORDINATE EXACT FIRE DAMPER LOCATIONS.

D. FOR CIRCUITS CROSSING SEISMIC JOINT, PROVIDE EXPANSION DEFLECTION FITTING WITH A MINIMUM OF 1-1/2" DEFLECTION CAPABILITY IN ALL DIRECTIONS.

E. FOR DEVICES INSTALLED ALONG EXISTING EXTERIOR WALL WHERE SHOTCRETE WILL BE APPLIED, ROUGH-IN 3/4" DIAMETER CONDUIT WITH 4SX1-1/2"D BACKBOXES. CONTRACTOR TO NOTIFY STRUCTURAL EOR IF LARGER DIAMETER CONDUIT OR BACKBOX IS REQUIRED.

FLAG NOTES

1. PROVIDE FIRE ALARM CONNECTION TO FIRE SPRINKLER WATER FLOW SWITCH. REFER TO FIRE SPRINKLER DRAWINGS.
2. PROVIDE FIRE ALARM CONNECTION TO FIRE SPRINKLER FIRE SPRINKLER OUTSIDE SCREW AND YOKE VALVE. REFER TO FIRE SPRINKLER DRAWINGS.
3. PROVIDE TWO DEDICATED TELEPHONE LINES FOR DIGITAL ALARM COMMUNICATOR TRANSMITTER.

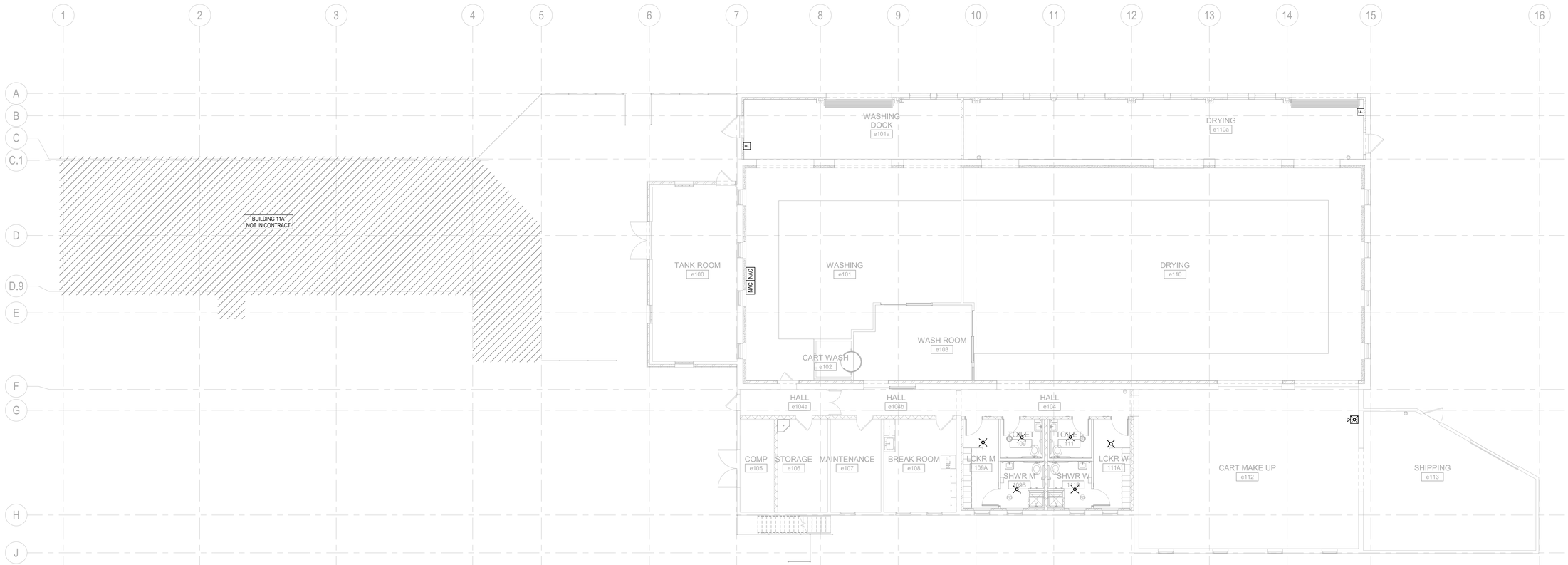

F1 B11 FIRE ALARM - FIRST FLOOR PLAN
1/8" = 1'-0"

Graphic Scale: 1 inch = 8 feet
0 8' 16' 24' 32'

Revisions:	Date:

CONSULTANT

Consultant: SÄZÄN GROUP
111 SW Fifth Ave., Ste. 3210
Portland, Oregon 97204
Tel 503.416.2400
Fax 503.416.2087
SAZAN # 735-24021

ARCHITECT/ENGINEER OF RECORD

A/E: Blue Trident, LLC — Engineering and Construction Services
BLUE TRIDENT, LLC
900 Winslow Way E, Suite 130
BAINBRIDGE ISLAND, WA 98110
206-972-0645
EMMANUEL (MANNY) BAUTISTA, PE, F.SAME

STAMP
REGISTERED PROFESSIONAL ENGINEER 51012PE OREGON JAN. 9, 2026 CHRISTOPHER LASSEN
Expires: 12/31/2026

Office of Construction and Facilities Management
VA U.S. Department of Veterans Affairs

Drawing Title	Phase	Project Title	Project Number
B11 FIRE ALARM - FIRST FLOOR PLAN	Issued For Construction	Seismic Retrofit and Renovate Building 11	653-107
Approved: director	FULLY SPRINKLERED	Location: VA Roseburg Healthcare System	Building Number: 11
		Issue Date: 04/03/2026 · Checked: PR · Drawn: PR	Drawing Number: FA111

VA FORM 08 - 6231

Autodesk Docs://PDX 735-24021 Seismic Retrofit Roseburg for Buildings 11, 13 and 16/735-24021 Roseburg SR Building 11 ETFP V24.rvt
4/3/2026 2:28:47 PM

FLAG NOTES

1. EXISTING PANELBOARD TO BE REPLACED. DEMO PANEL, MAINTAIN EXISTING FEEDER AND BRANCH CIRCUITS FOR RECONNECTION TO NEW PANELBOARD WHERE POSSIBLE. REMOVE EXISTING FEEDER AND/OR BRANCH CIRCUIT CONDUITS IN CONFLICT WITH STRUCTURAL REINFORCING. PROVIDE SPLICE BOX(ES) CLEAR FROM STRUCTURAL AREA OF WORK FOR REINSTALLATION.
2. EXISTING EQUIPMENT TO BE REPLACED. DEMO EXISTING, MAINTAIN EXISTING FEEDER FOR RECONNECTION.
3. EXISTING PANELBOARD TO BE REPLACED AND RELOCATED AT SAME LOCATION ON STRUCTURALLY REINFORCED WALL. REMOVE EXISTING PANEL AND ASSOCIATED CONDUIT AND WIRING FOR STRUCTURAL WORK. PROVIDE NEW SPLICE BOXES AND/OR WIREWAYS AS REQUIRED, EXTEND EXISTING FEEDER AND BRANCH CIRCUIT CONDUIT AND WIRING SERVING EXISTING LOADS TO REMAIN TO NEW PANELBOARD LOCATION.
4. REMOVE EXISTING EQUIPMENT CABINET AND ASSOCIATED CONTROLS AND CONDUIT AND WIRING FOR STRUCTURAL WORK. MAINTAIN FOR REINSTALLATION. PROVIDE SPLICE BOX CLEAR FROM STRUCTURAL AREA OF WORK FOR REINSTALLATION.
5. REMOVE EXISTING TELEPHONE AND METER EQUIPMENT FOR STRUCTURAL WORK. MAINTAIN FOR REINSTALLATION.
6. REMOVE EXISTING ELECTRICAL EQUIPMENT, DEVICES, CONDUIT AND WIRING ALONG WALL TO BE STRUCTURALLY REINFORCED. PROVIDE SPLICE BOX CLEAR FROM STRUCTURAL AREA OF WORK FOR REINSTALLATION OF ALL NEW DEVICES TO REPLACE EXISTING AND ANY ASSOCIATED CONDUIT AND BOXES.
7. REMOVE EXISTING DEVICE, AND ANY ASSOCIATED CONDUIT ON WALL TO BE STRUCTURALLY REINFORCED. RETAIN DEVICE FOR REINSTALLATION.
8. REMOVE DEVICES, CONDUIT AND WIRING ASSOCIATED WITH DOOR CONTROLS ALONG WALL TO BE STRUCTURALLY REINFORCED. PROVIDE SPLICE BOX CLEAR FROM STRUCTURAL AREA OF WORK FOR REINSTALLATION.
9. EXISTING TO REMAIN.
10. DEMO ALL DEVICES AND LIGHTING THIS AREA. RETAIN CIRCUITRY FOR EXTENSION AND REUSE.
11. EXISTING PANELBOARD TO REMAIN AT SAME LOCATION ON STRUCTURALLY REINFORCED WALL. REMOVE ANY EXISTING ASSOCIATED CONDUIT AND WIRING INTERFERING WITH STRUCTURAL REINFORCEMENT OF WALL. PROVIDE NEW SPLICE BOXES AND/OR WIREWAYS AS REQUIRED. EXTEND EXISTING FEEDER AND BRANCH CIRCUIT CONDUIT AND WIRING SERVING EXISTING LOADS TO REMAIN TO EXISTING PANELBOARD AS REQUIRED AND RETERMINATE COMPLETE.
12. DISCONNECT EXISTING "A/C UNIT 1 (CLEAN SIDE)" FROM PANEL HL1 FOR DEMOLITION. SALVAGE CONDUIT AND CONDUCTORS FOR INSTALLATION OF NEW AHU-11 WHERE FEASIBLE. COORDINATE EQUIPMENT DEMOLITION WITH MECHANICAL DRAWINGS.
13. REMOVE EXISTING EXHAUST FAN IN ITS ENTIRETY, INCLUDING ALL ASSOCIATED CONDUIT, WIRING, AND CONNECTIONS.

SHEET NOTES

A. DEMO EXISTING LIGHTING THROUGHOUT THE FACILITY FOR REPLACEMENT. MAINTAIN EXISTING BRANCH CIRCUITING HOMERUNS FOR NEW LIGHTING. FIELD VERIFY EXACT REQUIREMENTS.

B. REFER TO STRUCTURAL PLANS AND SPECIFICATION SECTION 13 05 41 FOR STRUCTURAL WORK.

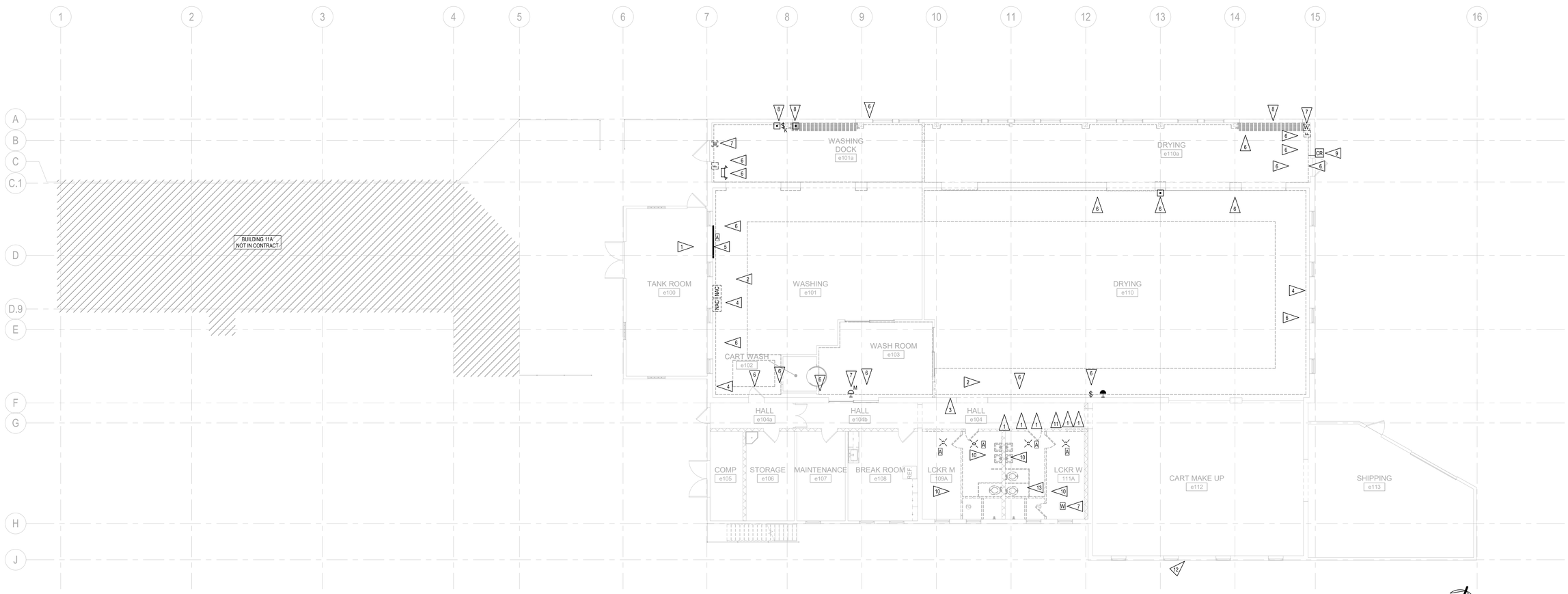

F1 B11 FIRE ALARM DEMOLITION - FIRST FLOOR PLAN
1/8" = 1'-0"

Graphic Scale: 1 inch = 8 feet
0 8' 16' 24' 32'

Revisions:	Date:

CONSULTANT

Consultant: SÄZÄN GROUP
111 SW Fifth Ave., Ste. 3210
Portland, Oregon 97204
Tel 503.416.2400
Fax 503.416.2087
SAZAN # 735-24021

ARCHITECT/ENGINEER OF RECORD

A/E: Blue Trident, LLC — Engineering and Construction Services
BLUE TRIDENT, LLC
900 Winslow Way E, Suite 130
BAINBRIDGE ISLAND, WA 98110
206-972-0645
EMMANUEL (MANNY) BAUTISTA, PE, F.SAME

STAMP

REGISTERED PROFESSIONAL ENGINEER S1012PE OREGON JAN. 9, 2018 CHRISTOPHER LARSEN
Expires: 12/31/2026

Office of Construction and Facilities Management
VA U.S. Department of Veterans Affairs

Drawing Title: B11 FIRE ALARM DEMOLITION - FIRST FLOOR PLAN	Phase: Issued For Construction	Project Title: Seismic Retrofit and Renovate Building 11	Project Number: 653-107
Approved: director	FULLY SPRINKLERED	Location: VA Roseburg Healthcare System	Building Number: 11
		Issue Date: 04/03/2026 · Checked: CL · Drawn: SW	Drawing Number: FAD111

VA FORM 08 - 6231

Autodesk Docs://PDX 735-24021 Seismic Retrofit Roseburg for Buildings 11, 13 and 16/735-24021 Roseburg SR Building 11 ETFP V24.rvt
4/3/2026 2:28:49 PM

SYMBOLS LEGEND - FIRE PROTECTION

SYMBOL	DESCRIPTION
SPR	SPRINKLER PIPING
	PIPE BREAK (CONTINUATION)
FDC	FIRE DEPARTMENT CONNECTION
DCVA	DOUBLE CHECK VALVE ASSEMBLY
	CHECK VALVE
	VALVE
	BALL VALVE
	INDICATING VALVE
	PRESSURE REGULATING VALVE WITH SUPERVISORY SWITCH
	WET SPRINKLER HEAD
	DRY SPRINKLER HEAD
	SIDEWALL SPRINKLER HEAD
FS	FLOW SWITCH

SYMBOLS LEGEND - GENERAL

SYMBOL	DESCRIPTION
#	DRAWING CONSTRUCTION ("FLAG") NOTE
X-XX	EQUIPMENT IDENTIFIER
	MATCHLINE
	REVISION CLOUD (ENCIRCLES DRAWING CHANGES MADE SINCE THE PREVIOUS RELEASE)
1	REVISION REFERENCE
	EXISTING TO BE REMOVED (DASHED)
	HEAVY LINEWEIGHT INDICATES NEW WORK
	LIGHT LINEWEIGHT INDICATES EXISTING INFORMATION
	POINT OF CONNECTION
	LIMIT OF DEMOLITION
X / XX.XX	DETAIL REFERENCE DETAIL IDENTIFICATION NUMBER SHEET WHERE DETAIL IS DRAWN
X / XX.XX	ELEVATION REFERENCE ELEVATION IDENTIFICATION NUMBER SHEET WHERE ELEVATION IS DRAWN
X / XX.XX	SECTION REFERENCE SECTION IDENTIFICATION NUMBER SHEET WHERE SECTION IS DRAWN
NORTH	NORTH REFERENCE

FIRE PROTECTION GENERAL NOTES

1. THE FULL SCOPE OF THE FIRE SPRINKLER WORK IS THE TOTAL OF WORK SHOWN ON THE DRAWINGS AND CALLED FOR IN THE SPECIFICATIONS. IN CASE OF CONFLICT, THE MORE STRINGENT SHALL GOVERN.
2. FIRE SPRINKLER SYSTEM DESIGN, MATERIALS, METHODS AND INSTALLATION SHALL BE IN COMPLIANCE WITH THE FOLLOWING CODES AND STANDARDS:
   VA FIRE PROTECTION DESIGN GUIDE
   NFPA 13 STANDARD FOR THE INSTALLATION OF SPRINKLER SYSTEM
   NFPA 25 INSPECTION, TESTING AND MAINTENANCE OF WATER BASED FIRE PROTECTION SYSTEMS
   NFPA 101 LIFE SAFETY CODE
3. ANY SYSTEM MODIFICATIONS (INCLUDING SEISMIS BRACING) SHALL BE DESIGNED AND CALCULATED IN ACCORDANCE WITH NFPA 13. SHOP DRAWINGS, CALCULATIONS AND MATERIAL SUBMITTALS SHALL BE STAMPED BY A STATE OF OREGON LICENSED FIRE PROTECTION ENGINEER PRIOR TO SUBMITTAL TO THE VA COR FOR APPROVAL PRIOR TO CONSTRUCTION.
4. ARRANGEMENT OF SYSTEMS INDICATED ON THE DRAWINGS IS DIAGRAMMATIC AND INDICATES THE MINIMUM REQUIREMENTS FOR SPRINKLER SEISMIC WORK. SITE CONDITIONS SHALL DETERMINE THE ACTUAL ARRANGEMENT OF THE WORK. TAKE FIELD MEASUREMENTS BEFORE PREPARING SHOP DRAWINGS, OBTAIN APPROVAL OF SHOP DRAWINGS BEFORE BEGINNING FABRICATION. SHOP DRAWINGS SHALL ACCURATELY DEPICT DIMENSIONS AND LAYOUT. PROVIDE A SINGLE SUBMITTAL OF ALL FIRE SPRINKLER COMPONENTS, SHOP DRAWINGS AND CALCULATIONS AS SPECIFIED.
5. THOROUGHLY EXAMINE ALL AREAS WHERE SPRINKLER SEISMIC SYSTEM COMPONENTS WILL BE INSTALLED AND REPORT ANY CONDITION THAT PREVENTS THE PROPER INSTALLATION OF THE WORK.
6. USE EXPERIENCED INSTALLERS. DELIVER, HANDLE, AND STORE MATERIALS IN ACCORDANCE WITH MANUFACTURER'S INSTRUCTIONS.
7. INSTALL MATERIALS IN ACCORDANCE WITH MANUFACTURER'S INSTRUCTIONS AND ACCEPTED SUBMITTALS. INSTALL MATERIAL IN PROPER RELATION TO ADJACENT CONSTRUCTION AND WITH UNIFORM APPEARANCE FOR EXPOSED WORK.
8. CLEAN AND PROTECT ALL EXISTING AND NEW WORK FROM DAMAGE. PROVIDE WATERTIGHT PLUGS OR OTHER APPROVED MEANS OF PROTECTING OPEN ENDS OF PIPE DURING CONSTRUCTION.
9. INSPECTION OF SPRINKLER MODIFICATIONS AND SEISMIC BRACING WITNESSED BY THE VA COR. NO PIPING SHALL BE HIDDEN FROM VIEW UNTIL THE VA COR HAS BEEN NOTIFIED AND GIVEN NO LESS THAN THE REQUIRED LEAD TIME IN WHICH TO INSPECT SUCH INSTALLATION.
10. VA SEISMIC RISK DEFINITIONS FOR ROSEBURG, OREGON:

    LATITUDE: 43.224 AND 43.215
    LONGITUDE: -123.336 AND -123.37
    S_{DS}: 1.02
    S_{D1}: 0.46
    SEISMICITY: H (HIGH)
    SEISMIC IMPORTANCE FACTOR: 1.5

FIRE PROTECTION SCOPE

1. THE SCOPE OF THIS PROJECT IS LIMITED TO WORK NECESSARY TO SEISMICALLY RETROFIT THE BUILDING STRUCTURAL AND NON-STRUCTURAL COMPONENTS AND ADDRESS EXISTING FACILITY CONDITION ASSESSMENT (FCA) DEFICIENCIES IN THE BUILDING.
2. THE FIRE PROTECTION SCOPE OF WORK INCLUDES:
   A. SURVEY AND INSPECTION OF THE FIRE SPRINKLER SYSTEM N ACCORDANCE WITH NFPA 25. PROVIDE AS-BUILT DRAWINGS TO DOCUMENT EXISTING CONDITIONS. AS PART OF THE SURVEY IDENTIFY ON THE DRAWINGS ANY SYSTEM DEFICIENCIES (INCLUDING BUT NOT LIMITED TO INSUFFICIENT SPRINKLER COVERAGE, SEISMIC BRACING, SPRINKLER HEADS, ETC.) THAT DO NOT MEET MINIMUM CODE REQUIREMENTS. PROVIDE SUMMARY OF DEFICIENCIES TO THE VA COR.
   B. PERFORM INTERNAL INSPECTION OF PIPE IN A MINIMUM OF TWO LOCATIONS ON EACH FLOOR LEVEL. REMOVE SECTION OF PIPE AND INSPECT FOR INTERNAL CORROSION OR DETERIORATION. PROVIDE PHOTOGRAPHS OF THE INTERIOR OF EACH SECTION AND NOTE LOCATION OF EACH ON THE AS-BUILT DRAWINGS.
   C. SEISMIC BRACING DESIGN IN ACCORDANCE WITH NFPA 13. PROVIDE BRACING WHERE MISSING ON EXISTING PIPING AND WHERE MODIFICATIONS TO EXISTING PIPING ARE REQUIRED.
   D. SPRINKLER DESIGN FOR REMOVAL AND REISTALLATION, OR RELOCATION, OF SPRINKLER PIPING AND/OR BRACING WHERE THERE IS CONFLICT WITH THE SEISMIC MITIGATION INSTALLATION. MANY WALLS IN THE BUILDING WILL BE REINFORCED WITH CONCRETE AND STRUCTURAL ELEMENTS (COLUMNS, ETC.) WILL BE ADDED. ENSURE REQUIRED CLEARANCE IS PROVIDED AROUND ALL PIPE PENETRATIONS.
   E. SPRINKLER DESIGN FOR THE ADDITION OF SEISMIC BRACING WHERE DEFICIENT.
   F. DESIGN FOR SPRINKLER MODIFICATIONS REQUIRED TO ACCOMMODATE SPACE RECONFIGURATIONS AND NEW CEILING HEIGHTS. REPLACE SPRINKLER HEADS IN AREAS IMPACTED WITH NEW CEILING HEIGHTS. PROVIDE QUICK RESPONSE HEADS. PENDENT OR UPRIGHT TO MATCH EXISITNG. COORDINATE STYLE AND FINISH WITH ARCHITECT.
3. IF DEFICIENCIES IN THE EXISTING SYSTEM ARE FOUND NOTIFY THE ARCHITECT AND ENGINEER. OTHER THAT SEISMIC BRACING AND SEISMIC CLEARANCES, DO NOT WORK ON THESE WITHOUT FURTHER AUTHORIZATION FROM THE VA COR.

FIRE PROTECTION SHEET INDEX

FX001	B11 FIRE PROTECTION GENERAL NOTES AND LEGEND
FX111	B11 FIRE PROTECTION - FIRST FLOOR PLAN

Revisions: Date:

CONSULTANT
Consultant: SÄZÄN GROUP
111 SW Fifth Ave., Ste. 3210
Portland, Oregon 97204
Tel 503.416.2400
Fax 503.416.2087
SAZAN # 735-24021

ARCHITECT/ENGINEER OF RECORD
A/E: Blue Trident, LLC Engineering and Construction Services
BLUE TRIDENT, LLC
900 Winslow Way E, Suite 130
BAINBRIDGE ISLAND, WA 98110
206-972-0645
EMMANUEL (MANNY) BAUTISTA, PE, F.SAME

STAMP
EMMANUEL KRANN STATE OF WASHINGTON 22118 REGISTERED PROFESSIONAL ENGINEER
04/03/2026

Office of Construction and Facilities Management
VA U.S. Department of Veterans Affairs

Drawing Title: B11 FIRE PROTECTION GENERAL NOTES AND LEGEND	Phase: Issued For Construction	Project Title: Seismic Retrofit and Renovate Building 11	Project Number: 653-107
			Building Number: 11
Approved: director	FULLY SPRINKLERED	Location: VA Roseburg Healthcare System	Drawing Number: FX001
		Issue Date: 04/03/2026 · Checked: PR · Drawn: KS	

VA FORM 08 - 6231

Autodesk Docs://PDX 735-24021 Seismic Retrofit Roseburg for Buildings 11, 13 and 16/735-24021 Roseburg SR Building 11 ETFP V24.rvt
4/3/2026 2:34:33 PM

SHEET NOTES

A. EXISTING INFORMATION SHOWN IS BASED ON AVAILABLE RECORD DOCUMENTS AND LIMITED OBSERVATIONS IN THE FIELD AND IS PROVIDED FOR REFERENCE ONLY. CONTRACTOR IS RESPONSIBLE TO FIELD VERIFY AND DOCUMENT EXISTING CONDITIONS PRIOR TO START OF WORK.

B. REMOVE AND REINSTALL SEISMIC BRACING AS REQUIRED TO ACCOMODATE INSTALLATION OF WALL REINFORCEMENT. MODIFY EXISITING OR PROVIDE NEW TO ENSURE ALL SPINKLER PIPING IS ADEQUATELY BRACED IN ACCORDANCE WITH CODE.

C. INSPECT INTERIOR OF PIPES AT MINIMUM 2 PLACES AT OPPOSITE ENDS OF BUILDING.

FLAG NOTES

1. RELOCATE RISER AS REQUIRED TO ACCOMMODATE INSTALLATION OF WALL REINFORCEMENT. COORDINATE NEW PENETRATION THROUGH FLOOR TO ENSURE REQUIRED CLEARANCE IS PROVIDED AROUND PIPE. PROVIDE ESCUTCHEON OR OTHER ACCEPTABLE MEANS TO CONCEAL OPENING.
2. PROTECT PIPING AT PENETRATION THROUGH REINFORCED WALL. PROVIDE PIPE SLEEVE TO ENSURE REQUIRED CLEARANCE IS MAINTAINED AROUND PIPE.
3. MODIFY SPRINKLER PIPING AND HEAD LAYOUT AS REQUIRED TO ACCOMMODATE NEW CEILING CONFIGURATION IN RESTROOM. REPLACE SPRINKLERS AND/OR PROVIDE NEW WHERE NECESSARY.

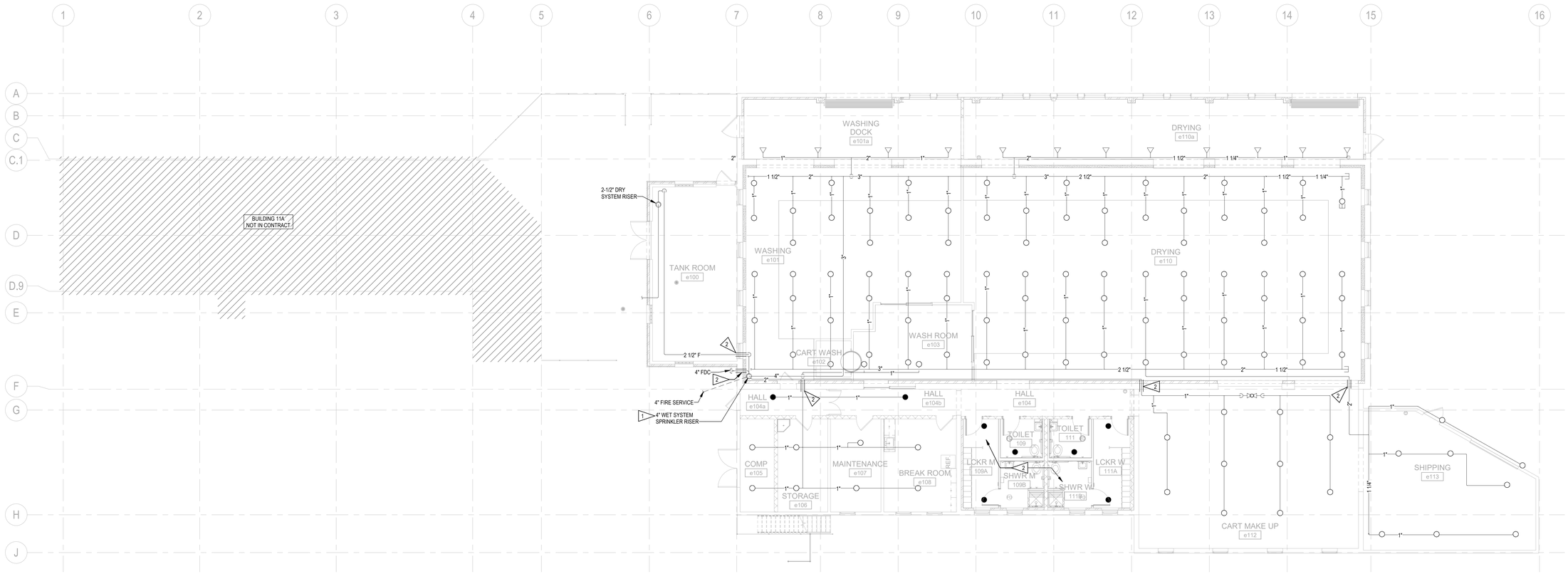

F1 B11 FIRE SPRINKLER - FIRST FLOOR PLAN
1/8" = 1'-0"

Graphic Scale: 1 inch = 8 feet
0 8' 16' 24' 32'

Revisions:	Date:

CONSULTANT

Consultant: SAZAN GROUP
111 SW Fifth Ave., Ste. 3210
Portland, Oregon 97204
Tel 503.416.2400
Fax 503.416.2087
SAZAN # 735-24021

ARCHITECT/ENGINEER OF RECORD

A/E: Blue Trident, LLC Engineering and Construction Services
BLUE TRIDENT, LLC
900 Winslow Way E, Suite 130
BAINBRIDGE ISLAND, WA 98110
206-972-0645
EMMANUEL (MANNY) BAUTISTA, PE, F.SAME

STAMP
EMMANUEL KRAINS BAUTISTA, STATE OF WASHINGTON, 12518, REGISTERED PROFESSIONAL ENGINEER
04/03/2026

Office of Construction and Facilities Management
VA U.S. Department of Veterans Affairs

Drawing Title: B11 FIRE PROTECTION - FIRST FLOOR PLAN
Approved: director

Phase: Issued For Construction
FULLY SPRINKLERED

Project Title: Seismic Retrofit and Renovate Building 11
Location: VA Roseburg Healthcare System
Issue Date: 04/03/2026
Checked: PR
Drawn: KS

Project Number: 653-107
Building Number: 11
Drawing Number: FX111

VA FORM 08 - 6231

Autodesk Docs://PDX 735-24021 Seismic Retrofit Roseburg for Buildings 11, 13 and 16/735-24021 Roseburg SR Building 11 ETFP V24.rvt
4/3/2026 2:34:36 PM

MECHANICAL LEGEND

GENERAL

SYMBOL	ABBREVIATION	DESCRIPTION
——℄——	CL	CENTERLINE
— — — — — —		ITEM TO BE REMOVED
		EXISTING WORK
		NEW WORK OR EXISTING TO BE BRACED
(1)		SHEET KEYNOTE
XXX / 01		MECHANICAL EQUIPMENT TAG
	POC	POINT OF CONNECTION
ø	DIA	DIAMETER OR ROUND
(T)		TEMPERATURE SENSOR
P-X		PLUMBING FIXTURE TAG
		POINT OF DEMOLITION

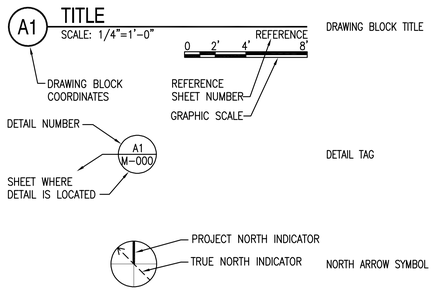

VALVES & FITTINGS

SYMBOL	ABBREVIATION	DESCRIPTION
		PIPE UP AND DOWN (SINGLE LINE)
		PIPE DOWN (SINGLE LINE)
		FLOW DIRECTION
		FLOW DIRECTION (HIGH POINT TO LOW POINT)
		CAP
		FLEXIBLE CONNECTOR
		GATE VALVE

PIPING SYSTEMS

SYMBOL	ABBREVIATION	DESCRIPTION
CW	CW	DOMESTIC COLD WATER
HW	HW	DOMESTIC HOT WATER
W	W	WASTE
V	V	VENT
AW	AW	ACID WASTE
AV	AV	ACID VENT
C	C	CONDENSATE DRAIN
CH	CH	CONDENSATE HIGH PRESSURE
SL	SL	STEAM LOW PRESSURE
SH	SH	STEAM HIGH PRESSURE
G	G	GAS
A	A	COMPRESSED AIR
PV	PV	PROCESS VACUUM
VAC	VAC	CONDENSATE VACUUM RETURN

DUCTWORK

DEVICE	ABBREVIATION	DESCRIPTION
	VD	MANUAL VOLUME DAMPER
	ACD	AUTOMATIC CONTROL DAMPER
AD / AD	AD	ACCESS DOOR IN PLAN OR SIDE
R		DUCT RISES UP (IN DIRECTION OF AIRFLOW)
D		DUCT DROPS DOWN (IN DIRECTION OF AIRFLOW)
		FLEXIBLE CONNECTION
XXX	CD	CEILING DIFFUSER, XXX CFM
XXX	CG	RETURN/EXHAUST GRILLE, XXX CFM

DUCTWORK CONT.

SINGLE LINE	DOUBLE LINE	DESCRIPTION
RECT. / ROUND		CONICAL SPIN-IN TAKEOFF
RECT. / ROUND		TAKEOFF BOOT
ROUND / ROUND		TAKEOFF BOOT
ROUND / ROUND		CONICAL TEE
RECT. / RECT. OR ROUND		45° LATERAL TAKEOFF
ROUND / ROUND		45° LATERAL TAKEOFF
RECT. / RECT.		BRANCH TAKEOFF

MECHANICAL DRAWING INDEX

SHEET NO.	DRAWING TITLE	SHEET #
M-001	GENERAL NOTES, LEGEND, ABBREVIATION AND SHEET INDEX	
MD-102	CRAWLSPACE PIPING DEMO PLAN	
MD-111	FIRST FLOOR MECHANICAL DEMO PLAN	
MD-400	PLUMBING ENLARGED DEMO PLANS	
MD-401	MECHANICAL ENLARGED DEMO PLANS	
M-102	CRAWLSPACE PIPING PLAN	
M-111	FIRST FLOOR MECHANICAL PLAN	
M-112	FIRST FLOOR PIPING PLAN	
M-211	ROOF PLAN	
M-400	MECHANICAL ENLARGED PLANS	
M-401	MECHANICAL ENLARGED PLANS	
M-501	MECHANICAL DETAILS	
M-601	MECHANICAL SCHEDULES	
M-801	MECHANICAL CONTROLS	

GENERAL NOTES

1. ALL WORK SHALL COMPLY WITH THE 2024 INTERNATIONAL BUILDING CODE, 2024 INTERNATIONAL MECHANICAL CODE, 2024 UNIFORM PLUMBING CODE, 2024 OREGON STATE ENERGY CODE, AND OTHER APPLICABLE FEDERAL, STATE, OR LOCAL CODES AS ADOPTED AND ENFORCED BY THE LOCAL JURISDICTION. IN CASE THE PLANS SHOW MORE STRINGENT REQUIREMENTS, THE PLANS SHALL GOVERN THE DESIGN, YET NOTHING ON THE DESIGN DOCUMENTS SHALL BE INTERPRETED AS AUTHORITY TO VIOLATE CODE(S) OR REGULATION(S).
2. SUBMISSION OF BID IN CONNECTION WITH THIS WORK SHALL IMPLY THAT THE BIDDER HAS EXAMINED THE JOB SITE UNDER WHICH THE CONTRACTOR WILL BE OBLIGATED TO OPERATE UNDER THIS CONTRACT. NO EXTRA CHARGE WILL BE ALLOWED FOR FAILURE OF ANY BIDDER TO EXAMINE THE SITE PRIOR TO BID.
3. WHERE USED, THE TERM "PROVIDE" SHALL MEAN "FURNISH AND INSTALL".
4. IN THE EVENT OF A CONFLICT OR INCONSISTENCY BETWEEN ITEMS INDICATED ON DRAWINGS AND SPECIFICATIONS WITH CODE REQUIREMENTS, THE MORE STRINGENT STANDARD SHALL PREVAIL.
5. CARE SHALL BE EXERCISED TO MINIMIZE ANY INCONVENIENCE OR DISTURBANCE TO OTHER AREAS OF THE BUILDING WHICH ARE TO REMAIN IN OPERATION. ISOLATE WORK AREAS TO KEEP DUST AND DIRT WITHIN THE CONSTRUCTION AREA.
6. NO PIPING, EQUIPMENT, ETC. SHALL BE REMOVED, DISCONNECTED OR SHUT DOWN WITHOUT PRIOR REVIEW WITH THE COR TO CONFIRM THAT AREAS TO REMAIN IN OPERATION WILL NOT BE AFFECTED. IF ANY AREAS NOT WITHIN THE SCOPE OF WORK ARE AFFECTED BY ANY SHUTDOWN, REMOVAL OR DISCONNECTION, SUFFICIENT ADVANCE NOTICE MUST BE GIVEN TO THE COR INDICATING WHICH AREAS WILL BE AFFECTED, WHEN THE PROPOSED SHUTDOWN WILL OCCUR, AND FOR HOW LONG A PERIOD OF TIME.
7. THE ARRANGEMENT OF EQUIPMENT AND PIPING SHOWN ON THE DRAWINGS IS BASED UPON INFORMATION AVAILABLE TO THE ENGINEER AT THE TIME OF DESIGN AND IS NOT INTENDED TO SHOW EXACT DIMENSIONS. THIS CONTRACTOR SHALL VERIFY ALL DIMENSIONS AT THE SITE MAKING FIELD MEASUREMENTS AND SHOP DRAWINGS NECESSARY FOR FABRICATION OR ERECTION OF HVAC SYSTEMS. MAKE ALLOWANCE FOR BEAMS, PIPES AND OTHER OBSTRUCTIONS IN BUILDING CONSTRUCTION. CHECK DRAWINGS SHOWING WORK OF OTHER TRADES AND CONSULT WITH THE OWNER'S REPRESENTATIVE IN THE EVENT OF POTENTIAL INTERFERENCE. SHOP DRAWINGS SHALL BE MINIMUM 1/4"=1'-0" SCALE, INDICATING FITTINGS, SIZES, WELDS AND CONFIGURATIONS AND SUBMITTED TO ENGINEER FOR REVIEW.
8. THIS CONTRACTOR SHALL COORDINATE THEIR WORK WITH ALL OTHER TRADES PRIOR TO FABRICATION, PURCHASE AND/OR INSTALLATION OF ALL WORK.
9. EXISTING MATERIALS THAT ARE REMOVED SHALL NOT BE REUSED IN NEW SYSTEMS, EXCEPT WHERE INDICATED AS BEING RELOCATED.
10. ALL EQUIPMENT SHALL BE INSTALLED IN STRICT COMPLIANCE WITH THE MANUFACTURER'S WRITTEN INSTRUCTIONS.
11. THIS CONTRACTOR SHALL NOT BORE, NOTCH, CUT, OR PENETRATE INTO A STRUCTURAL MEMBER WITHOUT WRITTEN APPROVAL FROM A DESIGNATED STRUCTURAL ENGINEER AND THE OWNER.
12. ALL PIPE ELBOWS SHALL BE LONG RADIUS UNLESS OTHERWISE SPECIFICALLY NOTED ON THE DRAWINGS.
13. COORDINATE ACCESS TO EQUIPMENT WITH WORK OF OTHER TRADES. PROVIDE DUCT ACCESS DOORS AND CEILING ACCESS DOORS TO ALLOW ACCESS FOR FILTER CHANGEOUT, CONTROLS ACCESS AND ACCESS TO SERVICE/REMOVE COMPONENTS INCLUDING, BUT NOT LIMITED TO, FANS, PULLEYS, SHEAVES, BELTS, ETC.

MECHANICAL NOTES:

SEISMIC BRACING SPECIAL INSPECTION REQUIREMENTS

DESIGNATED SEISMIC SYSTEMS:
THE BUILDING AND NON-STRUCTURAL ITEMS ARE DESIGNED FOR SEISMIC DESIGN CATEGORY D. THE FOLLOWING SYSTEMS ARE 'DESIGNATED SEISMIC SYSTEMS' THAT SHALL CONTINUE TO OPERATE DURING A SEISMIC EVENT:
- SPRINKLER SYSTEMS

SPECIAL INSPECTIONS:
A SPECIAL INSPECTION AGENCY HIRED BY THE CONTRACTOR, SHALL PROVIDE PERIODIC SPECIAL INSPECTIONS OF SEISMIC RESTRAINTS FOR THE ABOVE SYSTEMS. INSPECTIONS SHALL BE PERFORMED BASED ON IBC 2024 SECTION 1704 AND SHALL VERIFY THAT SYSTEMS ARE BRACED AND SUPPORTED PER IBC 2024, ASCE 7-22 CHAPTER 13 REQUIREMENTS, AND THE MECHANICAL SPECIFICATIONS. THE SPECIAL INSPECTOR SHALL SUBMIT A REPORT TO THE VA CONTRACTING OFFICERS REPRESENTATIVE (COR) FOR EACH SITE VISIT. A FINAL REPORT SHALL ALSO BE SUBMITTED TO THE MECHANICAL INSPECTOR AND COR.

CONTRACTOR'S STATEMENT OF RESPONSIBILITY:
SUBMIT A STATEMENT TO THE VA COR STATING THE FOLLOWING:
- THEY ARE RESPONSIBLE FOR THE DESIGNATED SEISMIC SYSTEMS AND THE SEISMIC RESTRAINT SYSTEMS.
- THEY ARE AWARE OF THE REQUIREMENT FOR SPECIAL INSPECTIONS.
- AN OUTLINE OF QUALITY CONTROL PROCEDURES TO OBTAIN CONFORMANCE WITH THE CONTRACT DOCUMENT REQUIREMENTS.
- IDENTIFICATION OF STAFF RESPONSIBLE FOR QC PROCEDURES.

DESIGN CRITERIA:
SEISMIC REQUIREMENTS FOR MECHANICAL COMPONENTS (PER 2024 IBC AND ASCE 7-22)

- GOVERNING/REFERENCE CODES:
  2022 ASCE 7-22
  2024 INTERNATIONAL BUILDING CODE
  2022 AISC 16TH EDITION
  VA H-18-8 (JULY 2023, REV NOV 2024)
  ASCE 41-23
- FACILITY CRITICALITY DESIGNATION: ESSENTIAL SITE-SPECIFIC SEISMIC RESPONSE SPECTRUM PER THE GEOTECHNICAL GROUND-MOTION STUDY

  RISK CATEGORY = III

  SITE CLASS: C

  Ss=1.02; S1 = 0.46 [ASCE 7]
  BSE-2N: Sxs = 1.16 ; Sx1 = 0.65 [ASCE 41]
  BSE-1N: Sxs = 0.78 ; Sx1 = 0.43 [ASCE 41]

  ANALYSIS PROCEDURE USED = LINEAR STATIC PROCEDURE

  ASCE STRUCTURAL PERFORMANCE OBJECTIVES: IMMEDIATE OCCUPANCY AT THE BSE-1N; LIFE SAFETY AT THE BSE-2N

  ASCE 41 NON-STRUCTURAL PERFORMANCE OBJECTIVE = OPERATIONAL @ BSE-1N; HAZARDS REDUCED @ BSE-2N

SEISMIC BRACING CRITERIA:
- PROVIDE SEISMIC BRACING ON DUCTWORK PER CRITERIA BELOW. DUCTWORK SUSPENDED FROM HANGERS 12 INCHES OR LESS FROM THE TOP OF THE DUCT TO THE SUPPORTING STRUCTURE WILL NOT BE BRACED.
  - RECTANGULAR DUCTWORK 6 SQUARE FEET AND GREATER.
  - ROUND DUCTWORK 28 INCHES DIAMETER AND GREATER.
- PROVIDE SEISMIC BRACING ON PIPING PER CRITERIA BELOW. PIPING SUSPENDED FROM HANGERS 12 INCHES OR LESS FROM THE TOP OF THE PIPE TO THE SUPPORTING STRUCTURE WILL NOT BE BRACED.
  - HVAC PIPING AND PLUMBING OUTSIDE OF MECHANICAL ROOMS 2-1/2 INCHES AND GREATER.
  - HVAC PIPING AND PLUMBING INSIDE OF MECHANICAL ROOMS 1 INCH AND GREATER.
  - COMPRESSED AIR, FUEL GAS, HIGH/LOW PRESSURE STEAM, STEAM CONDENSATE, VACUUM, ACID WASTE AND CHEMICAL FEED PIPING 1 INCH AND GREATER.
- PROVIDE SEISMIC BRACING AND/OR ANCHORAGE FOR MECHANICAL EQUIPMENT PER CRITERIA BELOW. SEE PLANS FOR SPECIFIC METHODS OF BRACING AND/OR ANCHORAGE.
  - FALL-PRONE EQUIPMENT WITH AN OPERATING WEIGHT OVER 20 LBS WHOSE CENTER OF MASS IS MORE THAN 4 FEET ABOVE THE ADJACENT FLOOR LEVEL.
  - IN-LINE EQUIPMENT WITH AN OPERATING WEIGHT OVER 75 LBS.
  - TALL AND NARROW EQUIPMENT OVER 6 FEET HIGH WITH A HEIGHT-TO-DEPTH OR HEIGHT-TO-WIDTH RATIO GREATER THAN 3:1.
  - VIBRATION ISOLATED EQUIPMENT.
  - HEAVY EQUIPMENT WITH AN OPERATING WEIGHT OVER 400 LBS.
- SPACING OF TRANSVERSE AND LONGITUDINAL BRACING PER ASCE 41-23 AND ASCE 7-22.

SEISMIC HAZARD LEVEL SCHEDULE

SYSTEM [2]	SEISMIC HAZARD LEVEL [1]	
	GROUND FLOOR	FIRST FLOOR
STEEL PIPING – THREADED OR GROOVED	C	C
STEEL PIPING – WELDED	C	C
COPPER TUBING – THREADED, SOLDERED, OR GROOVED	C	C
CAST IRON PIPING	C	B
DUCTWORK	C	C

NOTES:
[1] SEE SMACNA SEISMIC RESTRAINT MANUAL FOR BRACING REQUIREMENTS FOR SEISMIC HAZARD LEVEL INDICATED
[2] SEE SPECIFICATION SECTION 13 05 41 FOR REQUIRMENTS AND EXEMPTIONS

Revisions: | Date:

CONSULTANT
Consultant: P2S ENG
Long Beach // Irvine // Los Angeles
San Diego // San Jose // Seattle
p2sinc.com

ARCHITECT/ENGINEER OF RECORD
A/E: Blue Trident, LLC Engineering and Construction Services
BLUE TRIDENT, LLC
7829 NE ESPERIONE LN
BAINBRIDGE ISLAND, WA 98110
206-972-0645
EMMANUEL (MANNY) BAUTISTA, PE, F.SAME

STAMP: PETER ESPERE, STATE OF WASHINGTON, REGISTERED PROFESSIONAL ENGINEER — 04/03/2026

Office of Construction and Facilities Management
VA U.S. Department of Veterans Affairs

Drawing Title: GENERAL NOTES, LEGEND, ABBREVIATIONS AND SHEET INDEX	Phase: ISSUED FOR CONSTRUCTION	Project Title: Seismic Retrofit and Renovate Buildings 11, 13, 16	Project Number: 653-107
			Building Number: B11
Approved:	FULLY SPRINKLERED	Location: VA Roseburg Healthcare System	Drawing Number: M-001
		Issue Date: 04/03/2026 · Checked: PE · Drawn: CN	

VA FORM 08 - 6231

P2S No. J24-0628

C:\Users\kurt\OneDrive\02_Projects\2024-011 - Roseburg Bldgs 11-13-16\04-DESIGN\BIM MODEL AND LINKS\ROSEBURG 11-13-16 ARCH 2026.rvt

12/4/2024 3:30:54 PM

GENERAL NOTES:

1. EXISTING CONDITIONS WERE TAKEN FROM RECORD DRAWINGS AND SELECTIVE FIELD MEASUREMENTS. ACTUAL CONDITIONS AND DIMENSIONS OF DUCTWORK, PIPING, AND OTHER APPURTENANCES ARE TO BE FIELD VERIFIED BY THE CONTRACTOR PRIOR TO STARTING ANY DEMOLITION OR NEW CONSTRUCTION WORK. ADJUSTMENTS MUST BE MADE BY THE CONTRACTOR AS REQUIRED BASED ON CONTRACTOR FIELD VERIFICATION.

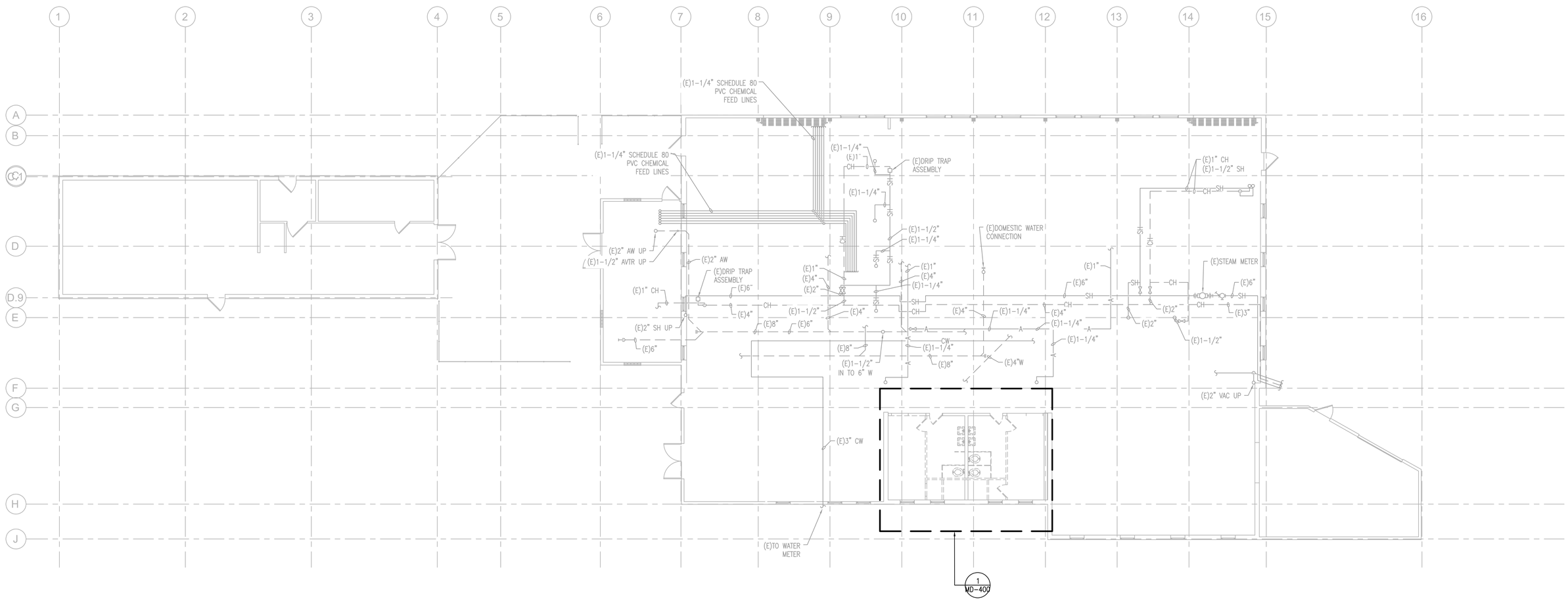

1 CRAWLSPACE PIPING DEMO PLAN
SCALE: 1/8"=1'-0"

0 2' 4' 8'

Revisions:	Date:

CONSULTANT

Consultant: P2S ENG
Long Beach // Irvine // Los Angeles
San Diego // San Jose // Seattle
p2sinc.com

ARCHITECT/ENGINEER OF RECORD

A/E: Blue Trident, LLC
Engineering and Construction Services
BLUE TRIDENT, LLC
7829 NE ESPERIONE LN
BAINBRIDGE ISLAND, WA 98110
206-972-0645
EMMANUEL (MANNY) BAUTISTA, PE, F.SAME

STAMP
PETER EBERLE
STATE OF WASHINGTON
REGISTERED PROFESSIONAL ENGINEER
04/03/2026

Office of Construction and Facilities Management
VA U.S. Department of Veterans Affairs

Drawing Title	Phase	Project Title	Project Number
CRAWLSPACE PIPING DEMO PLAN	ISSUED FOR CONSTRUCTION	Seismic Retrofit and Renovate Buildings 11, 13, 16	653-107
Approved:	FULLY SPRINKLERED	Location: VA Roseburg Healthcare System	Building Number: B11
		Issue Date: 04/03/2026 · Checked: PE · Drawn: CN	Drawing Number: MD-102

VA FORM 08 - 6231

P2S No. J24-0628

C:\Users\taurin\OneDrive\2L-Projects\2024-011 - Roseburg Bldgs 11-13-16\04-DESIGN\BIM MODEL AND LINKS\ROSEBURG 11-13-16 ARCH 2024.rvt 12/4/2024 3:50:54 PM

KEY NOTES:

1. EXISTING STEAM HEATING COIL IS IN A CORRODED STATE AND SHALL BE REPLACED WITH A SIMILAR COIL. PROVIDE DUCTWORK TRANSITIONS BETWEEN POINTS OF CONNECTIONS BETWEEN EXISTING DUCTWORK AND THE REPLACEMENT COIL.

2. EXISTING "ACU-1 IS NEARING END OF OPERATIONAL LIFE AND SHALL BE REPLACED WITH "AHU-11".

GENERAL NOTES:

1. EXISTING CONDITIONS WERE TAKEN FROM RECORD DRAWINGS AND SELECTIVE FIELD MEASUREMENTS. ACTUAL CONDITIONS AND DIMENSIONS OF DUCTWORK, PIPING, AND OTHER APPURTENANCES ARE TO BE FIELD VERIFIED BY THE CONTRACTOR PRIOR TO STARTING ANY DEMOLITION OR NEW CONSTRUCTION WORK. ADJUSTMENTS MUST BE MADE BY THE CONTRACTOR AS REQUIRED BASED ON CONTRACTOR FIELD VERIFICATION.

2. DEMOLISH ALL THE THERMOSTATS LOCATED IN EACH ZONE FOR HC-1, HC-2, HC-3, HC-4 AND HC-5.

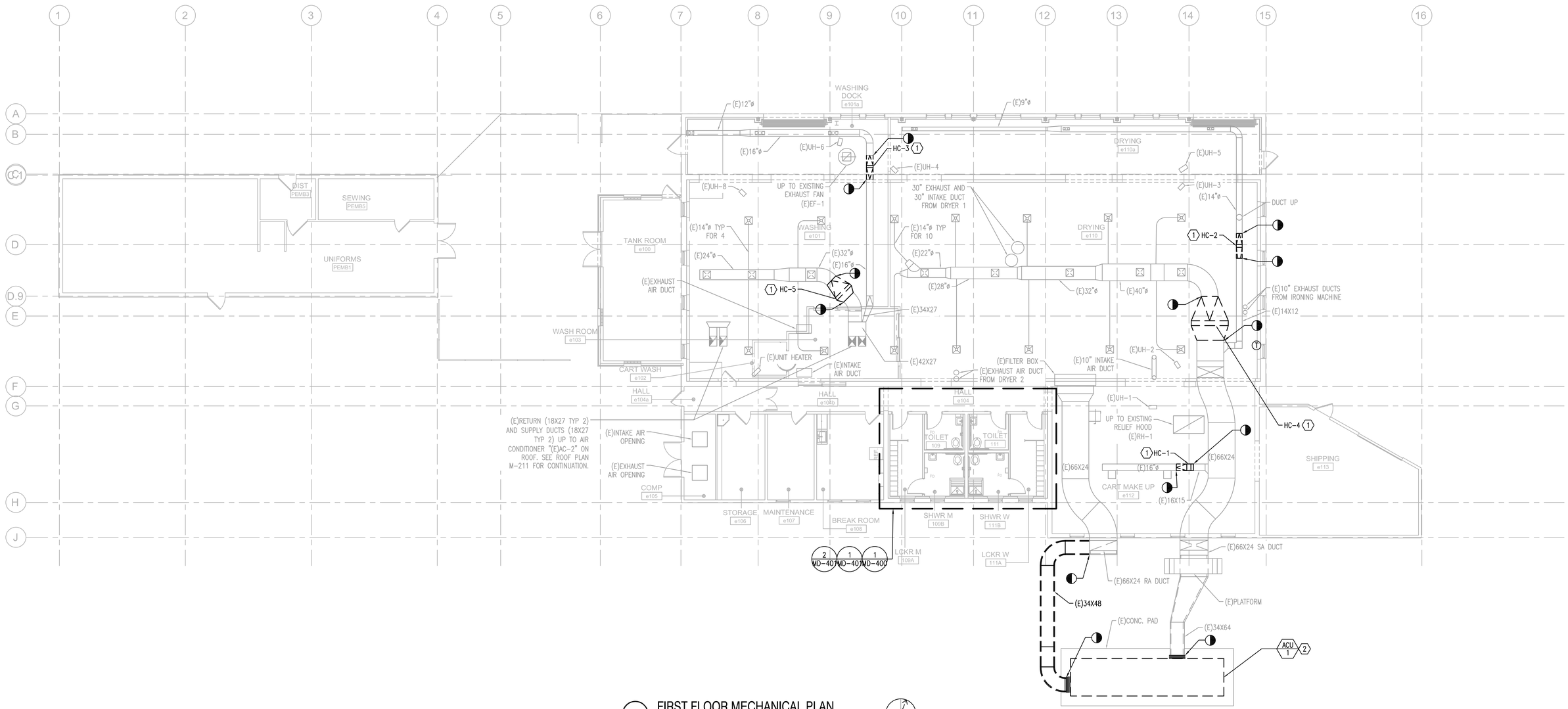

1 FIRST FLOOR MECHANICAL PLAN
SCALE: 1/8"=1'-0"

0 2' 4' 8'

Revisions:	Date:

CONSULTANT

Consultant: P2S ENG
Long Beach // Irvine // Los Angeles
San Diego // San Jose // Seattle
p2sinc.com

ARCHITECT/ENGINEER OF RECORD

A/E: Blue Trident, LLC
Engineering and Construction Services

BLUE TRIDENT, LLC
7829 NE ESPERIONE LN
BAINBRIDGE ISLAND, WA 98110
206-972-0645
EMMANUEL (MANNY) BAUTISTA, PE, F.SAME

STAMP

PETER EBBITT
STATE OF WASHINGTON
47478
REGISTERED PROFESSIONAL ENGINEER
04/03/2026

Office of Construction and Facilities Management

VA U.S. Department of Veterans Affairs

Drawing Title	Phase	Project Title	Project Number
FIRST FLOOR MECHANICAL DEMO PLAN	ISSUED FOR CONSTRUCTION	Seismic Retrofit and Renovate Buildings 11, 13, 16	653-107
Approved:	FULLY SPRINKLERED	Location: VA Roseburg Healthcare System	Building Number: B11
		Issue Date: 04/03/2026 · Checked: PE · Drawn: CN	Drawing Number: MD-111

VA FORM 08 - 6231

P2S No. J24-0628

C:\Users\taurl\OneDrive\02_Projects\2024-011 - Roseburg Bldgs 11-13-16\04-DESIGN\BIM MODEL AND LINKS\ROSEBURG 11-13-16 ARCH 2024.rvt

12/4/2024 3:50:54 PM

GENERAL NOTES:

1. ITEMS SHOWN HEAVY AND DASHED INDICATE UNITS TO BE REMOVED OR DEMOLISHED. ITEMS SHOWN LIGHT INDICATE EXISTING TO REMAIN AND/OR EQUIPMENT TO BE PROTECTED IN PLACE.
2. EXISTING CONDITIONS WERE ASSUMED AS RECORD DRAWINGS WERE NOT AVAILABLE. CONTRACTOR SHALL VERIFY ACTUAL CONDITIONS AND DIMENSIONS OF DUCTWORK, PIPING, AND OTHER APPURTENANCES PRIOR TO STARTING ANY DEMOLITION OR NEW CONSTRUCTION WORK. ADJUSTMENTS MUST BE MADE BY THE CONTRACTOR AS REQUIRED BASED ON FIELD VERIFICATION.

KEY NOTES:

1. DEMOLISH THE EXISTING ROOF VENT IN ITS ENTIRETY. PATCH AND REPAIR THE RESULTING ROOF OPENING TO MATCH EXISTING ROOF CONDITIONS.

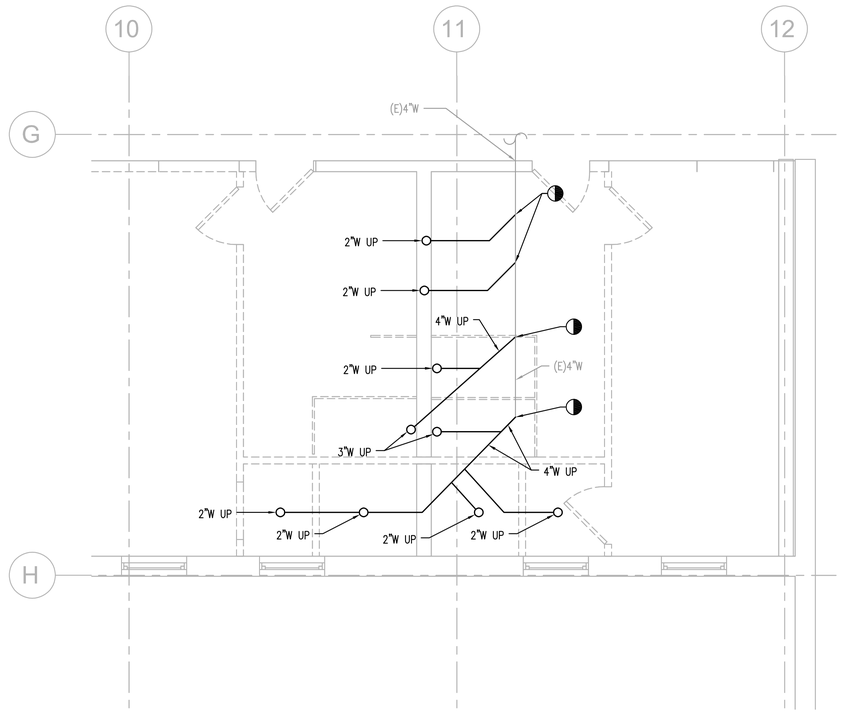

1 CRAWLSPACE ENLARGED PLUMBING DEMO PLAN
SCALE: 3/8"=1'-0"

0 1 2 4 6 8
3/8" = 1'-0"

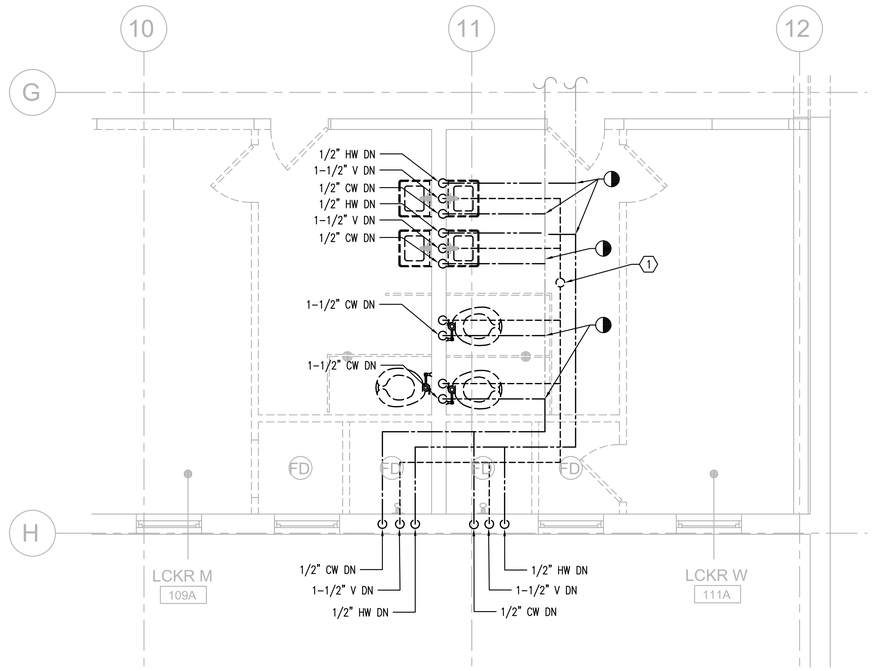

2 FIRST FLOOR ENLARGED PLUMBING DEMO PLAN
SCALE: 3/8"=1'-0"

0 1 2 4 6 8
3/8" = 1'-0"

Revisions:	Date:

CONSULTANT

Consultant: P2S ENG
Long Beach // Irvine // Los Angeles
San Diego // San Jose // Seattle
p2sinc.com

ARCHITECT/ENGINEER OF RECORD

A/E: Blue Trident, LLC
Engineering and Construction Services
BLUE TRIDENT, LLC
7829 NE ESPERIONE LN
BAINBRIDGE ISLAND, WA 98110
206-972-0645
EMMANUEL (MANNY) BAUTISTA, PE, F.SAME

STAMP
PETER EBERLE STATE OF WASHINGTON 24576 REGISTERED PROFESSIONAL ENGINEER
04/03/2026

Office of Construction and Facilities Management
VA U.S. Department of Veterans Affairs

Drawing Title	Phase	Project Title	Project Number
PLUMBING ENLARGED DEMO PLANS	ISSUED FOR CONSTRUCTION	Seismic Retrofit and Renovate Buildings 11, 13, 16	653-107
Approved:	FULLY SPRINKLERED	Location: VA Roseburg Healthcare System	Building Number: B11
		Issue Date: 04/03/2026 · Checked: PE · Drawn: CN	Drawing Number: MD-400

VA FORM 08 - 6231

P2S No. J24-0628

C:\Users\ilaun\OneDrive\02L-Projects\2024\011 - Roseburg Bldgs 11-13-16\04-DESIGN\BIM MODEL AND LINKS\ROSEBURG 11-13-16 ARCH 2024.rvt

12/4/2024 3:50:54 PM

GENERAL NOTES:

1. ITEMS SHOWN HEAVY AND DASHED INDICATE UNITS TO BE REMOVED OR DEMOLISHED. ITEMS SHOWN LIGHT INDICATE EXISTING TO REMAIN AND/OR EQUIPMENT TO BE PROTECTED IN PLACE.
2. EXISTING CONDITIONS WERE ASSUMED AS RECORD DRAWINGS WERE NOT AVAILABLE. CONTRACTOR SHALL VERIFY ACTUAL CONDITIONS AND DIMENSIONS OF DUCTWORK, PIPING, AND OTHER APPURTENANCES PRIOR TO STARTING ANY DEMOLITION OR NEW CONSTRUCTION WORK. ADJUSTMENTS MUST BE MADE BY THE CONTRACTOR AS REQUIRED BASED ON FIELD VERIFICATION.

KEY NOTES:

1. DEMOLISH THE EXISTING EXHAUST FAN UNIT IN ITS ENTIRETY, INCLUDING ALL ASSOCIATED DUCTWORK, ELECTRICAL CONNECTIONS, MOUNTING HARDWARE, AND SUPPORT STRUCTURES.

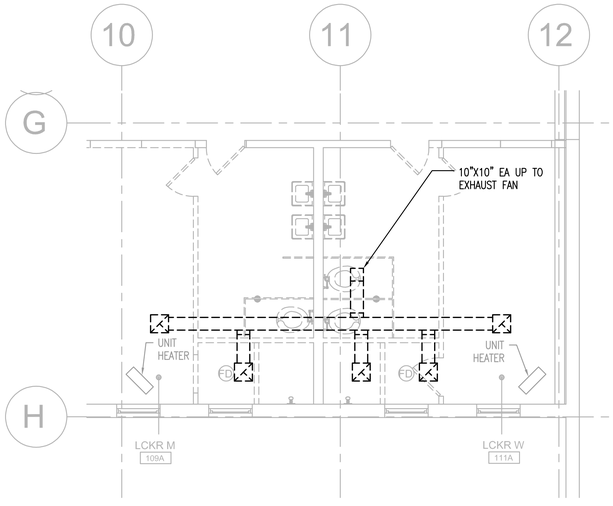

1 FIRST FLOOR ENLARGED MECHANICAL DEMO PLAN
SCALE: 1/4"=1'-0"

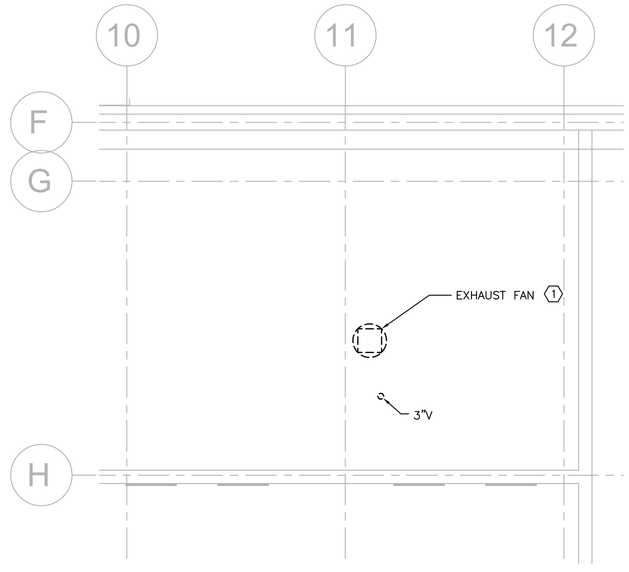

2 ROOF ENLARGED MECHANICAL DEMO PLAN
SCALE: 1/4"=1'-0"

Revisions:	Date:

CONSULTANT
Consultant: P2S ENG
Long Beach // Irvine // Los Angeles
San Diego // San Jose // Seattle
p2sinc.com

ARCHITECT/ENGINEER OF RECORD
A/E: Blue Trident, LLC
Engineering and Construction Services
BLUE TRIDENT, LLC
7829 NE ESPERIONE LN
BAINBRIDGE ISLAND, WA 98110
206-972-0645
EMMANUEL (MANNY) BAUTISTA, PE, F.SAME

STAMP
PETER EBERLE
STATE OF WASHINGTON
REGISTERED PROFESSIONAL ENGINEER
04/03/2026

Office of Construction and Facilities Management
VA U.S. Department of Veterans Affairs

Drawing Title	Phase	Project Title	Project Number
MECHANICAL ENLARGED DEMO PLANS	ISSUED FOR CONSTRUCTION	Seismic Retrofit and Renovate Buildings 11, 13, 16	653-107
Approved:	FULLY SPRINKLERED	Location: VA Roseburg Healthcare System	Building Number: B11
		Issue Date: 04/03/2026 · Checked: PE · Drawn: CN	Drawing Number: MD-401

VA FORM 08 - 6231

P2S No. J24-0628

C:\Users\kurt\OneDrive\P2S_Projects\2024\611 - Roseburg Bldgs 11-13-16\04-DESIGN\BIM MODEL AND LINKS\ROSEBURG 11-13-16 ARCH 2024.rvt 12/4/2024 3:55:54 PM

GENERAL NOTES:

1. EXISTING CONDITIONS WERE TAKEN FROM RECORD DRAWINGS AND SELECTIVE FIELD MEASUREMENTS. ACTUAL CONDITIONS AND DIMENSIONS OF DUCTWORK, PIPING, AND OTHER APPURTENANCES ARE TO BE FIELD VERIFIED BY THE CONTRACTOR PRIOR TO STARTING ANY DEMOLITION OR NEW CONSTRUCTION WORK. ADJUSTMENTS MUST BE MADE BY THE CONTRACTOR AS REQUIRED BASED ON CONTRACTOR FIELD VERIFICATION.
2. MECHANICAL AND PLUMBING EQUIPMENT, DUCTWORK AND PIPING WITH SEISMIC BRACING SHOWN ARE REQUIRED TO HAVE SEISMIC BRACING PER THE REGULATIONS LISTED IN M-001 AND DIVISION 22 & 23 SPECIFICATIONS. ALL OTHER EQUIPMENT, DUCTWORK AND PIPING NOT SHOWN WITH SEISMIC BRACING HAVE BEEN REVIEWED AND DETERMINED TO NOT REQUIRE SEISMIC BRACING.
3. ONLY MAJOR PIPING AND SYSTEMS REQUIRING SEISMIC BRACING ARE SHOWN.
4. SEISMIC BRACING REQUIREMENTS ARE NOT DENOTED ON THIS PLAN FOR SPECIFIC PIPING SECTIONS. PLEASE REFER TO MECHANICAL NOTES ON M-001 FOR GENERAL PIPE BRACING REQUIREMENTS AND MECHANICAL DETAILS M-501.

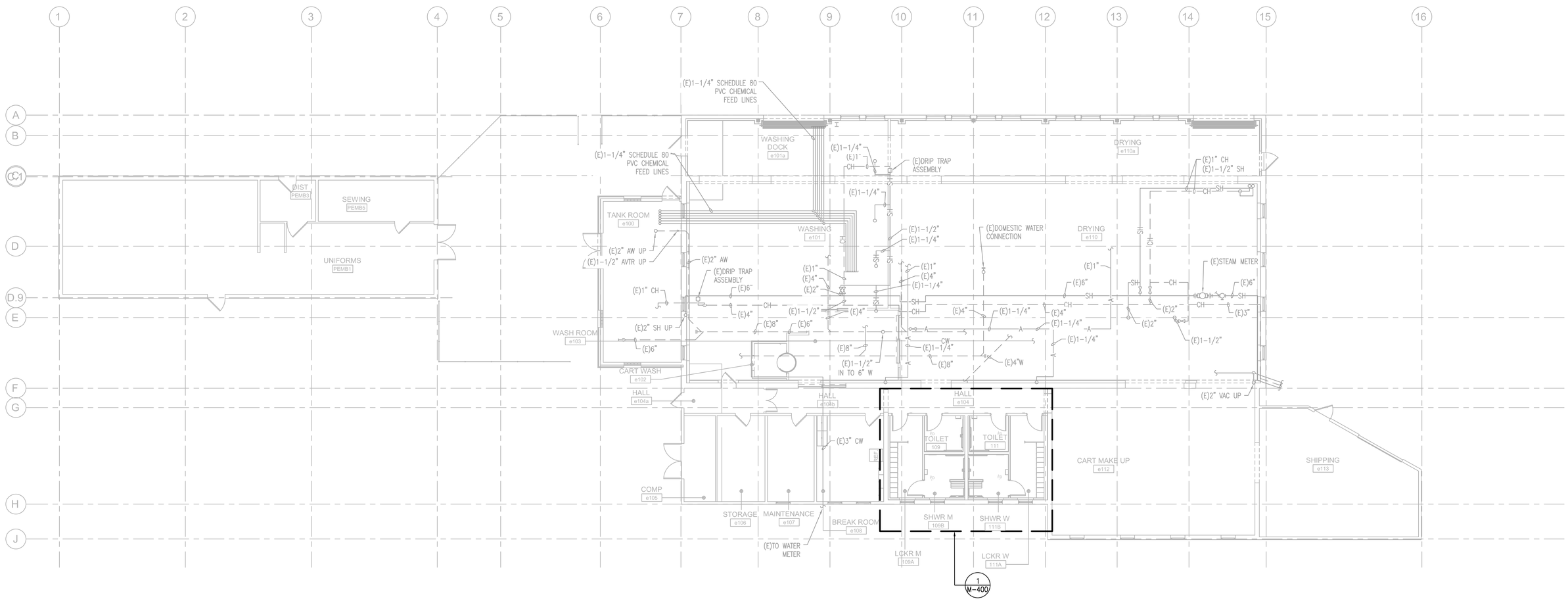

1 CRAWLSPACE PIPING PLAN
SCALE: 1/8"=1'-0"

Revisions:	Date:

CONSULTANT
Consultant: P2S ENG
Long Beach // Irvine // Los Angeles
San Diego // San Jose // Seattle
p2sinc.com

ARCHITECT/ENGINEER OF RECORD
A/E: Blue Trident, LLC Engineering and Construction Services
BLUE TRIDENT, LLC
7829 NE ESPERIONE LN
BAINBRIDGE ISLAND, WA 98110
206-972-0645
EMMANUEL (MANNY) BAUTISTA, PE, F.SAME

STAMP
PETER EBBELE STATE OF WASHINGTON REGISTERED PROFESSIONAL ENGINEER
04/03/2026

Office of Construction and Facilities Management
VA U.S. Department of Veterans Affairs

Drawing Title	Phase	Project Title	Project Number
CRAWLSPACE PIPING PLAN	ISSUED FOR CONSTRUCTION	Seismic Retrofit and Renovate Buildings 11, 13, 16	653-107
Approved:	FULLY SPRINKLERED	Location: VA Roseburg Healthcare System	Building Number: B11
		Issue Date: 04/03/2026 · Checked: PE · Drawn: CN	Drawing Number: M-102

VA FORM 08 - 6231
P2S No. J24-0628

KEY NOTES:

5. EXISTING OVERHEAD DOOR IS BEING REMOVED AND REINSTALLED. IF NECESSARY TO FACILITATE THIS WORK, TEMPORARILY REMOVE ANY INTERFERING DUCTWORK AND PIPING AND REINSTALL IT UPON COMPLETION.

6. EXISTING CART WASH WILL BE REMOVED AND REINSTALLED. IF NECESSARY TO FACILITATE THIS WORK, TEMPORARILY REMOVE ANY INTERFERING DUCTWORK AND PIPING AND REINSTALL IT UPON COMPLETION.

7. EXTEND AND REINFORCE EXISTING CONCRETE PAD AS NECESSARY TO SUPPORT REPLACEMENT UNIT.

KEY NOTES:

1. PROVIDE SEISMIC BRACING AND/OR ANCHORAGE ON INDICATED EQUIPMENT.

2. PROVIDE COMBINATION TRANSVERSE AND LONGITUDINAL BRACES AT 45 DEGREES ON INDICATED DUCTWORK PER DETAIL 4/M-501 AND 6/M-501.

3. EXISTING STEAM HEATING COIL IS IN A CORRODED STATE AND SHALL BE REPLACED WITH A SIMILAR COIL. PROVIDE DUCTWORK TRANSITIONS BETWEEN POINTS OF CONNECTIONS BETWEEN EXISTING DUCTWORK AND THE REPLACEMENT COIL. PROVIDE STEAM AND CONDENSATE PIPING PER DETAIL 2/M-501.

4. EXISTING "ACU-1 IS NEARING END OF OPERATIONAL LIFE AND SHALL BE REPLACED WITH "AHU-11". EXISTING CONCRETE PAD AND DUCTWORK CONNECTIONS SHALL BE REUSED.

GENERAL NOTES:

1. EXISTING CONDITIONS WERE TAKEN FROM RECORD DRAWINGS AND SELECTIVE FIELD MEASUREMENTS. ACTUAL CONDITIONS AND DIMENSIONS OF DUCTWORK, PIPING, AND OTHER APPURTENANCES ARE TO BE FIELD VERIFIED BY THE CONTRACTOR PRIOR TO STARTING ANY DEMOLITION OR NEW CONSTRUCTION WORK. ADJUSTMENTS MUST BE MADE BY THE CONTRACTOR AS REQUIRED BASED ON CONTRACTOR FIELD VERIFICATION.

2. MECHANICAL AND PLUMBING EQUIPMENT, DUCTWORK AND PIPING WITH SEISMIC BRACING SHOWN ARE REQUIRED TO HAVE SEISMIC BRACING PER THE REGULATIONS LISTED IN M-001 AND DIVISION 22 & 23 SPECIFICATIONS. ALL OTHER EQUIPMENT, DUCTWORK AND PIPING NOT SHOWN WITH SEISMIC BRACING HAVE BEEN REVIEWED AND DETERMINED TO NOT REQUIRE SEISMIC BRACING.

3. ONLY MAJOR DUCTWORK AND SYSTEMS REQUIRING SEISMIC BRACING ARE SHOWN.

4. FINAL THERMOSTAT LOCATIONS SHALL BE DETERMINED BASED ON ACTUAL SITE CONDITIONS DURING INSTALLATION.

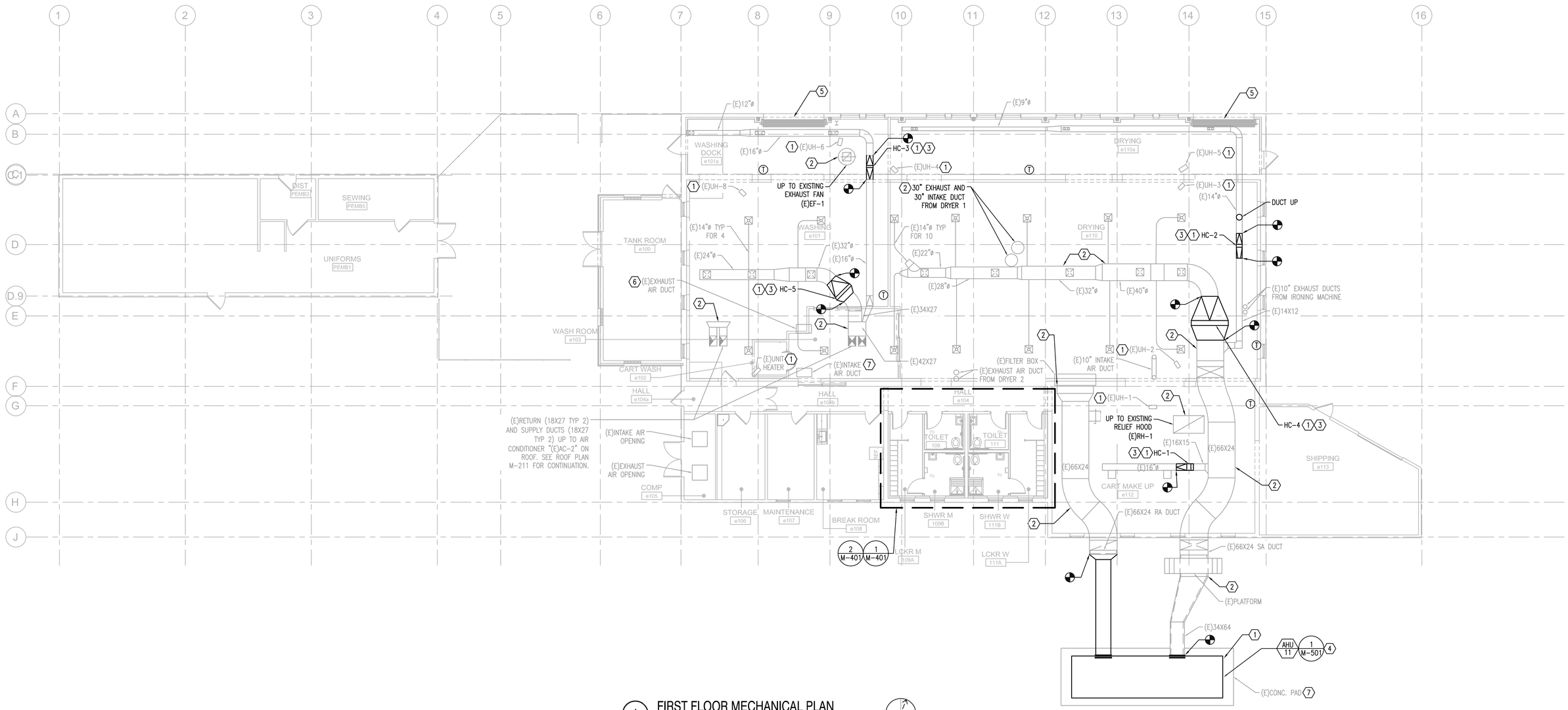

1 FIRST FLOOR MECHANICAL PLAN
SCALE: 1/8"=1'-0"

Revisions:	Date:

CONSULTANT

Consultant: P2S ENG
Long Beach // Irvine // Los Angeles
San Diego // San Jose // Seattle
p2sinc.com

ARCHITECT/ENGINEER OF RECORD

A/E: Blue Trident, LLC Engineering and Construction Services
BLUE TRIDENT, LLC
7829 NE ESPERIONE LN
BAINBRIDGE ISLAND, WA 98110
206-972-0645
EMMANUEL (MANNY) BAUTISTA, PE, F.SAME

STAMP
PETER EBERLE
STATE OF WASHINGTON
48274
REGISTERED PROFESSIONAL ENGINEER
04/03/2026

Office of Construction and Facilities Management
VA U.S. Department of Veterans Affairs

Drawing Title	Phase	Project Title	Project Number
FIRST FLOOR MECHANICAL PLAN	ISSUED FOR CONSTRUCTION	Seismic Retrofit and Renovate Buildings 11, 13, 16	653-107
Approved:	FULLY SPRINKLERED	Location: VA Roseburg Healthcare System	Building Number: B11
		Issue Date: 04/03/2026 · Checked: PE · Drawn: CN	Drawing Number: M-111

VA FORM 08 - 6231

P2S No. J24-0628

C:\Users\taurl\OneDrive\Z1-Projects\2024-011 - Roseburg Bldgs 11-13-16\04-DESIGN\BIM MODEL AND LINKS\ROSEBURG 11-13-16 ARCH 2024.rvt

GENERAL NOTES:

1. EXISTING CONDITIONS WERE TAKEN FROM RECORD DRAWINGS AND SELECTIVE FIELD MEASUREMENTS. ACTUAL CONDITIONS AND DIMENSIONS OF DUCTWORK, PIPING, AND OTHER APPURTENANCES ARE TO BE FIELD VERIFIED BY THE CONTRACTOR PRIOR TO STARTING ANY DEMOLITION OR NEW CONSTRUCTION WORK. ADJUSTMENTS MUST BE MADE BY THE CONTRACTOR AS REQUIRED BASED ON CONTRACTOR FIELD VERIFICATION.
2. MECHANICAL AND PLUMBING EQUIPMENT, DUCTWORK AND PIPING WITH SEISMIC BRACING SHOWN ARE REQUIRED TO HAVE SEISMIC BRACING PER THE REGULATIONS LISTED IN M-001 AND DIVISION 22 & 23 SPECIFICATIONS. ALL OTHER EQUIPMENT, DUCTWORK AND PIPING NOT SHOWN WITH SEISMIC BRACING HAVE BEEN REVIEWED AND DETERMINED TO NOT REQUIRE SEISMIC BRACING.
3. ONLY MAJOR PIPING AND SYSTEMS REQUIRING SEISMIC BRACING ARE SHOWN.
4. SEISMIC BRACING REQUIREMENTS ARE NOT DENOTED ON THIS PLAN FOR SPECIFIC PIPING SECTIONS. PLEASE REFER TO MECHANICAL NOTES ON M-001 FOR GENERAL PIPE BRACING REQUIREMENTS AND MECHANICAL DETAILS M-501.

KEY NOTES:

1. PROVIDE SEISMIC BRACING AND/OR ANCHORAGE ON INDICATED EQUIPMENT.

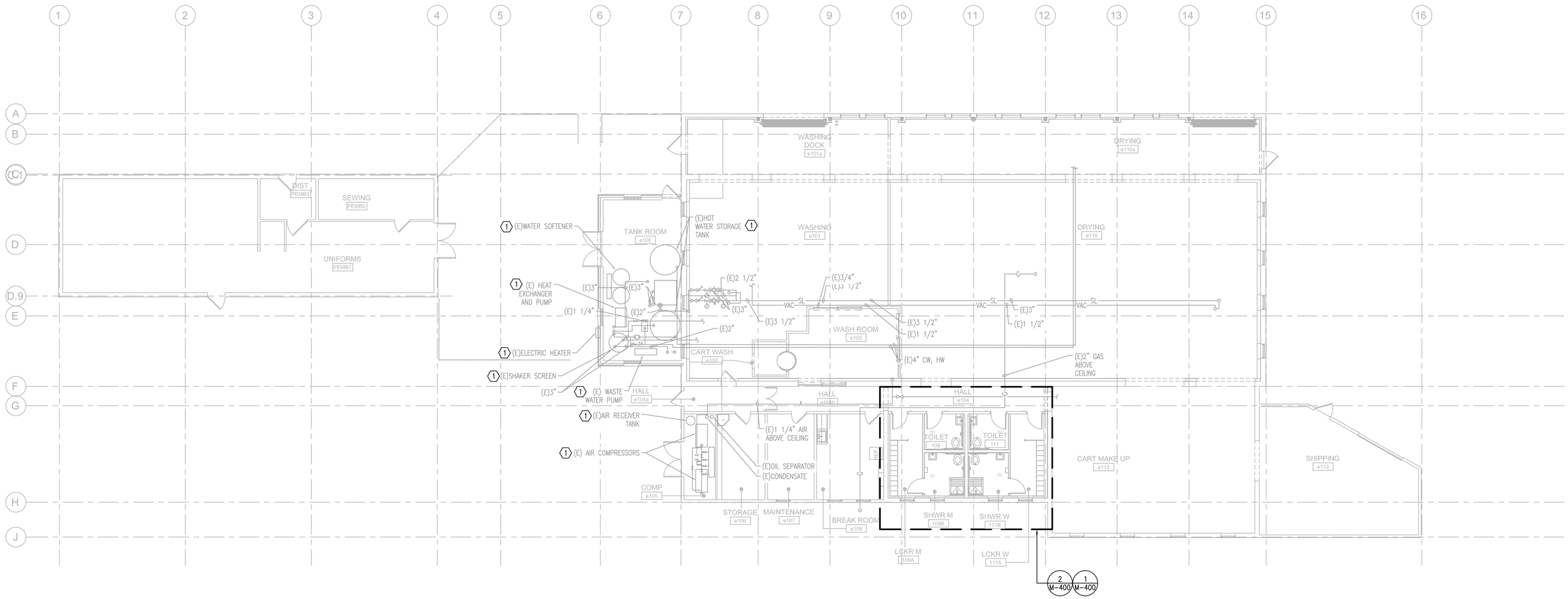

1 FIRST FLOOR PIPING PLAN
SCALE: 1/8"=1'-0"

Revisions:	Date:

CONSULTANT

Consultant: P2S ENG
Long Beach // Irvine // Los Angeles
San Diego // San Jose // Seattle
p2sinc.com

ARCHITECT/ENGINEER OF RECORD

A/E: Blue Trident, LLC Engineering and Construction Services
BLUE TRIDENT, LLC
7829 NE ESPERIONE LN
BAINBRIDGE ISLAND, WA 98110
206-972-0645
EMMANUEL (MANNY) BAUTISTA, PE, F.SAME

STAMP
PETER EBERLE STATE OF WASHINGTON 47472 REGISTERED PROFESSIONAL ENGINEER
04/03/2026

Office of Construction and Facilities Management
VA U.S. Department of Veterans Affairs

Drawing Title: FIRST FLOOR PIPING PLAN	Phase: ISSUED FOR CONSTRUCTION	Project Title: Seismic Retrofit and Renovate Buildings 11, 13, 16	Project Number: 653-107
			Building Number: B11
Approved:	FULLY SPRINKLERED	Location: VA Roseburg Healthcare System	Drawing Number: M-112
		Issue Date: 04/03/2026 · Checked: PE · Drawn: CN	

VA FORM 08 - 6231

P2S No. J24-0628

C:\Users\taurt\OneDrive\02_Projects\2024-011 - Roseburg Bldgs 11-13-16\04-DESIGN\BIM MODEL AND LINKS\ROSEBURG 11-13-16 ARCH 2024.rvt

GENERAL NOTES:

1. EXISTING CONDITIONS WERE TAKEN FROM RECORD DRAWINGS AND SELECTIVE FIELD MEASUREMENTS. ACTUAL CONDITIONS AND DIMENSIONS OF DUCTWORK, PIPING, AND OTHER APPURTENANCES ARE TO BE FIELD VERIFIED BY THE CONTRACTOR PRIOR TO STARTING ANY DEMOLITION OR NEW CONSTRUCTION WORK. ADJUSTMENTS MUST BE MADE BY THE CONTRACTOR AS REQUIRED BASED ON CONTRACTOR FIELD VERIFICATION.
2. MECHANICAL AND PLUMBING EQUIPMENT, DUCTWORK AND PIPING WITH SEISMIC BRACING SHOWN ARE REQUIRED TO HAVE SEISMIC BRACING PER THE REGULATIONS LISTED IN M-001 AND DIVISION 22 & 23 SPECIFICATIONS. ALL OTHER EQUIPMENT, DUCTWORK AND PIPING NOT SHOWN WITH SEISMIC BRACING HAVE BEEN REVIEWED AND DETERMINED TO NOT REQUIRE SEISMIC BRACING.
3. ONLY MAJOR DUCTWORK AND SYSTEMS REQUIRING SEISMIC BRACING ARE SHOWN.

KEY NOTES:

1. PROVIDE SEISMIC BRACING AND/OR ANCHORAGE ON INDICATED EQUIPMENT.
2. PROVIDE COMBINATION TRANSVERSE AND LONGITUDINAL BRACES AT 45 DEGREES ON INDICATED DUCTWORK.

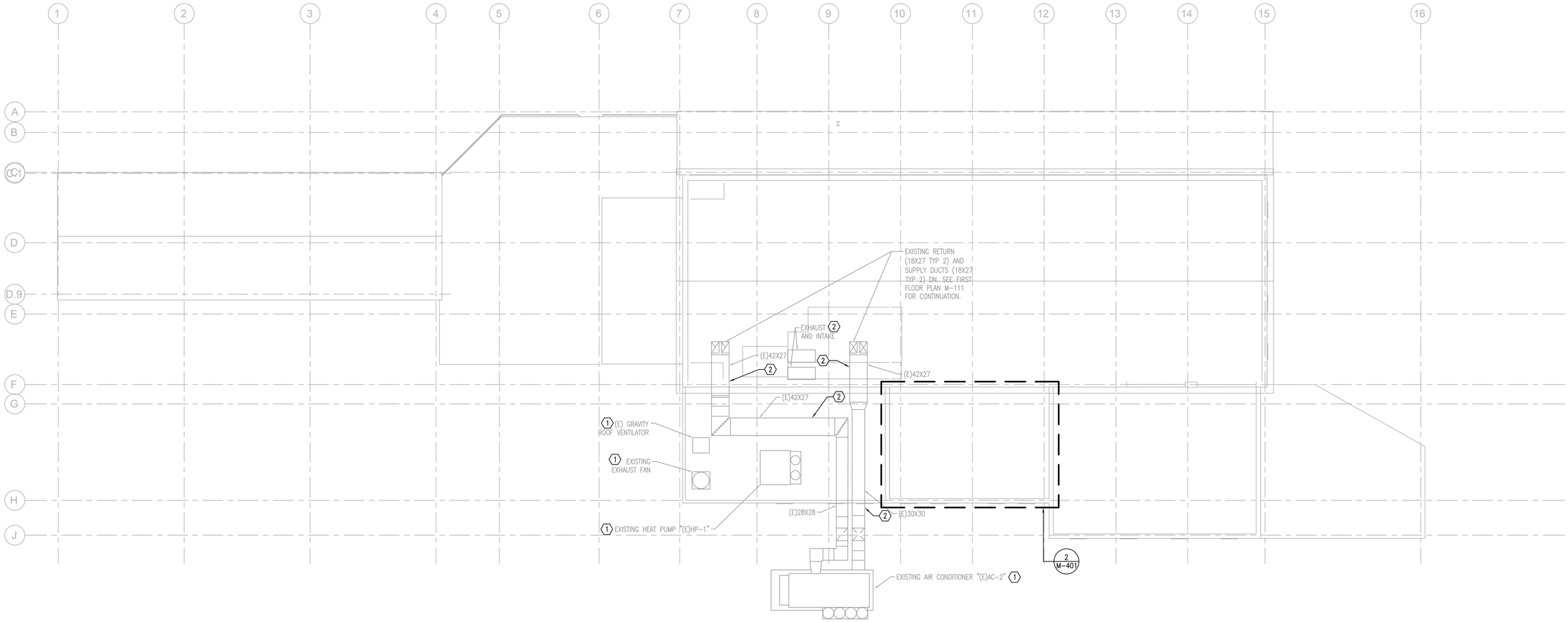

1 ROOF PLAN
SCALE: 1/8"=1'-0"

0 2' 4' 8'

Revisions:	Date:

CONSULTANT

Consultant: P2S ENG

Long Beach // Irvine // Los Angeles
San Diego // San Jose // Seattle

p2sinc.com

ARCHITECT/ENGINEER OF RECORD

A/E: Blue Trident, LLC
Engineering and Construction Services

BLUE TRIDENT, LLC
7829 NE ESPERIONE LN
BAINBRIDGE ISLAND, WA 98110
206-972-0645
EMMANUEL (MANNY) BAUTISTA, PE, F.SAME

STAMP

PETER EBELE
STATE OF WASHINGTON
REGISTERED PROFESSIONAL ENGINEER
04/03/2026

Office of Construction and Facilities Management

VA U.S. Department of Veterans Affairs

Drawing Title	Phase	Project Title	Project Number
ROOF PLAN	ISSUED FOR CONSTRUCTION	Seismic Retrofit and Renovate Buildings 11, 13, 16	653-107
Approved:	FULLY SPRINKLERED	Location: VA Roseburg Healthcare System	Building Number: B11
		Issue Date: 04/03/2026 · Checked: PE · Drawn: CN	Drawing Number: M-211

VA FORM 08 - 6231

P2S No. J24-0628

C:\Users\kurt\OneDrive\02L-Projects\2024-011 - Roseburg Bldgs 11-13-16\04-DESIGN\BIM MODEL AND LINKS\ROSEBURG 11-13-16 ARCH 2024.rvt

12/4/2024 3:35:54 PM

GENERAL NOTES:

1. ITEMS SHOWN HEAVY AND DASHED INDICATE UNITS TO BE REMOVED OR DEMOLISHED. ITEMS SHOWN LIGHT INDICATE EXISTING TO REMAIN AND/OR EQUIPMENT TO BE PROTECTED IN PLACE.
2. EXISTING CONDITIONS WERE ASSUMED AS RECORD DRAWINGS WERE NOT AVAILABLE. CONTRACTOR SHALL VERIFY ACTUAL CONDITIONS AND DIMENSIONS OF DUCTWORK, PIPING, AND OTHER APPURTENANCES PRIOR TO STARTING ANY DEMOLITION OR NEW CONSTRUCTION WORK. ADJUSTMENTS MUST BE MADE BY THE CONTRACTOR AS REQUIRED BASED ON FIELD VERIFICATION.
3. PROVIDE SUSPENDED PIPE SUPPORT PER DETAIL 5/M-501.

KEY NOTES:

1. PROVIDE AND INSTALL PLUMBING FIXTURES AS SPECIFIED IN THE PLUMBING FIXTURE SCHEDULE. CONNECT ALL FIXTURES TO REVISED DOMESTIC WATER, WASTE AND VENT PIPING IN WALLS.

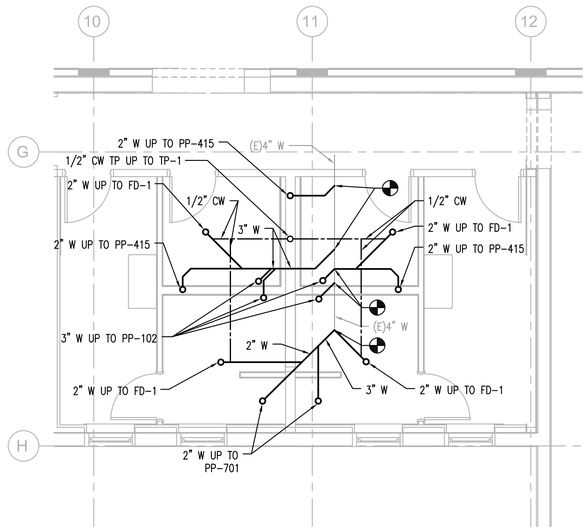

1 BASEMENT ENLARGED PLUMBING PLAN
SCALE: 1/4"=1'-0"

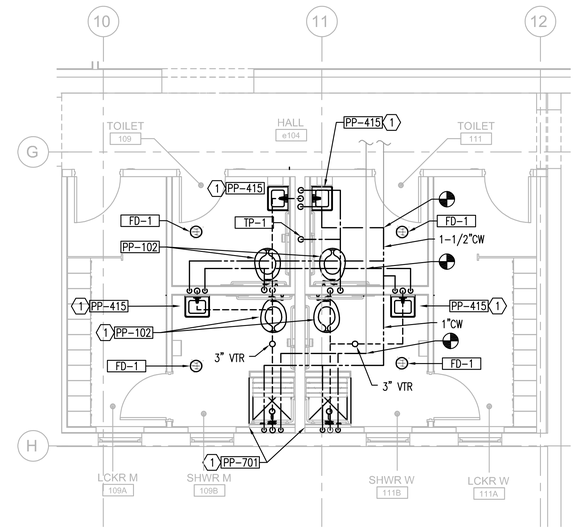

2 FIRST FLOOR ENLARGED PLUMBING PLAN
SCALE: 1/4"=1'-0"

Revisions:	Date:

CONSULTANT

Consultant: P2S ENG
Long Beach // Irvine // Los Angeles
San Diego // San Jose // Seattle
p2sinc.com

ARCHITECT/ENGINEER OF RECORD

A/E: Blue Trident, LLC Engineering and Construction Services
BLUE TRIDENT, LLC
7829 NE ESPERIONE LN
BAINBRIDGE ISLAND, WA 98110
206-972-0645
EMMANUEL (MANNY) BAUTISTA, PE, F.SAME

STAMP
PETER EBERLE STATE OF WASHINGTON 48271 REGISTERED PROFESSIONAL ENGINEER
04/03/2026

Office of Construction and Facilities Management
VA U.S. Department of Veterans Affairs

Drawing Title	Phase	Project Title	Project Number
MECHANICAL ENLARGED PLANS	ISSUED FOR CONSTRUCTION	Seismic Retrofit and Renovate Buildings 11, 13, 16	653-107
Approved:	FULLY SPRINKLERED	Location: VA Roseburg Healthcare System	Building Number: B11
		Issue Date: 04/03/2026 · Checked: PE · Drawn: CN	Drawing Number: M-400

VA FORM 08 - 6231

P2S No. J24-0628

C:\Users\ilauri\OneDrive\P2L-Projects\2024-011 - Roseburg Bldgs 11-13-16\04-DESIGN\BIM MODEL AND LINKS\ROSEBURG 11-13-16 ARCH 2024.rvt

12/4/2024 3:55:54 PM

GENERAL NOTES:

1. ITEMS SHOWN HEAVY AND DASHED INDICATE UNITS TO BE REMOVED OR DEMOLISHED. ITEMS SHOWN LIGHT INDICATE EXISTING TO REMAIN AND/OR EQUIPMENT TO BE PROTECTED IN PLACE.
2. EXISTING CONDITIONS WERE ASSUMED AS RECORD DRAWINGS WERE NOT AVAILABLE. CONTRACTOR SHALL VERIFY ACTUAL CONDITIONS AND DIMENSIONS OF DUCTWORK, PIPING, AND OTHER APPURTENANCES PRIOR TO STARTING ANY DEMOLITION OR NEW CONSTRUCTION WORK. ADJUSTMENTS MUST BE MADE BY THE CONTRACTOR AS REQUIRED BASED ON FIELD VERIFICATION.

KEY NOTES:

1. PROVIDE EXHAUST FAN AND CURB. REUSE EXISTING ROOF OPENING FOR INSTALLATION OF EF-1. ENSURE FAN IS COMPATIBLE WITH THE EXISTING STRUCTURAL AND ELECTRICAL CONDITIONS.

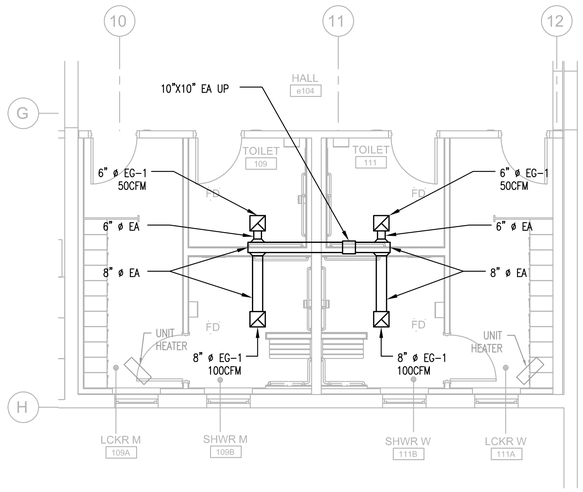

1 FIRST FLOOR ENLARGED MECHANICAL PLAN
SCALE: 1/4"=1'-0"

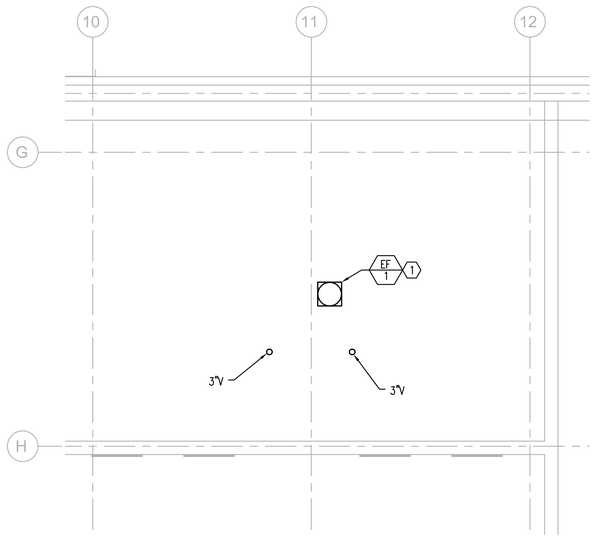

2 ROOF ENLARGED MECHANICAL PLAN
SCALE: 1/4"=1'-0"

Revisions:	Date:

CONSULTANT

Consultant: P2S ENG

Long Beach // Irvine // Los Angeles
San Diego // San Jose // Seattle

p2sinc.com

ARCHITECT/ENGINEER OF RECORD

A/E: Blue Trident, LLC
Engineering and Construction Services

BLUE TRIDENT, LLC
7829 NE ESPERIONE LN
BAINBRIDGE ISLAND, WA 98110
206-972-0645
EMMANUEL (MANNY) BAUTISTA, PE, F.SAME

STAMP

PETER EBERLE
STATE OF WASHINGTON
48274
REGISTERED PROFESSIONAL ENGINEER
04/03/2026

Office of Construction and Facilities Management

VA U.S. Department of Veterans Affairs

Drawing Title: MECHANICAL ENLARGED PLANS	Phase: ISSUED FOR CONSTRUCTION	Project Title: Seismic Retrofit and Renovate Buildings 11, 13, 16	Project Number: 653-107
			Building Number: B11
Approved:	FULLY SPRINKLERED	Location: VA Roseburg Healthcare System	Drawing Number: M-401
		Issue Date: 04/03/2026 · Checked: PE · Drawn: CN	

VA FORM 08 - 6231

P2S No. J24-0628

C:\Users\lauri\OneDrive\2L-Projects\2024-011 - Roseburg Bldgs 11-13-16\04-DESIGN\BIM MODEL AND LINKS\ROSEBURG 11-13-16 ARCH 2024.rvt 12/4/2024 3:30:54 PM

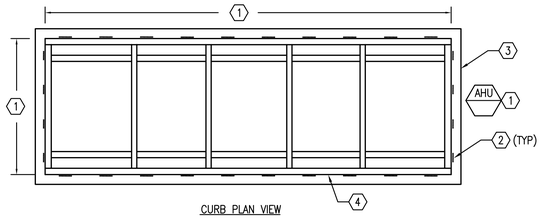

CURB PLAN VIEW

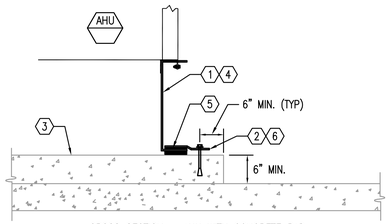

CROSS SECTION – AHU WITH CONCRETE PAD

KEYNOTES

1. PROVIDE AIR HANDLING UNIT WITH MANUFACTURER PROVIDED STRUCTURAL STEEL "C" CHANNEL BASE WELDED TO UNIT STRUCTURAL BASE FRAME (MINIMUM SIZE 8" x 2-1/2") AND SECURE ONTO CONCRETE PAD. REFER TO MECHANICAL SCHEDULES, FLOOR PLANS AND DRAWINGS FOR AIR HANDLING UNIT DIMENSIONS AND WEIGHTS.
2. SECURE AIR HANDLING UNIT TO PAD USING "Z" CLIP. "Z" CLIP SHALL BE WELDED TO AHU "C" CHANNEL BASE. 5/8" DIA HILTI KB-TZ2 WITH SECURE "Z" CLIP TO PAD WITH 3-1/2" MIN EFFECTIVE EMBED (ICC ESR-4266) AT 24" O.C. MAX. CONTRACTOR SHALL PROVIDE ENGINEERING CALCULATIONS SHOWING ADEQUACY OF PROPOSED SUPPORTS.
3. CONCRETE PAD.
4. AIR HANDLING UNIT BASE WITH FACTORY FURNISHED PAD MOUNTING ANGLE FOR MOUNTING ONTO PAD.
5. 3/16 ON EACH SIDE OF pL TO CHANNEL.
6. 1/2" pL (Z CLIP-SEE NOTE 2).

1 AIR HANDLING UNIT MOUNTING

SCALE: NONE

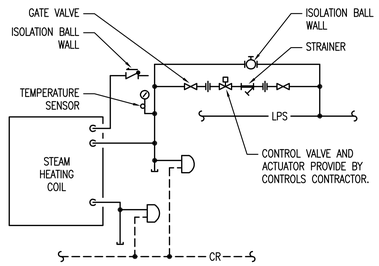

2 STEAM HEATING COIL DETAIL

SCALE: NONE

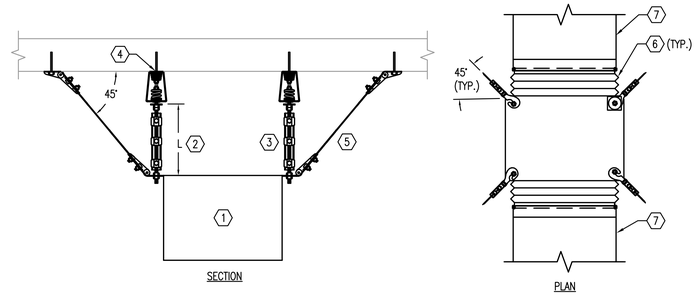

KEYNOTES

1. PROVIDE EQUIPMENT AND SECURE TO STRUCTURE ABOVE WITH 2" DEFLECTION SPRING HANGER. SUPPORT SYSTEM SHALL BE MANUFACTURED BY MASON INDUSTRIES. UP STOP SNUBBER PLATE, ROD STIFFENER ANGLE OR STRUT, ROD TO ANGLE OR STRUT CLAMP (MINIMUM 2 PER ROD).
2. IF 'L' EXCEEDS 20 TIMES THE DIAMETER OF THE ROD, PROVIDE VERTICAL STIFFENER.
3. MINIMUM 1/2" DIA. THREADED ROD (TOTAL OF 4). PROVIDE BOLT ISOLATION WASHER BUSHING SO THAT BOLT AND STRUCTURE ARE NOT IN DIRECT CONTACT. WASHER BUSHING SHALL BE MASON INDUSTRIES OR ENGINEER APPROVED EQUAL.
4. PROVIDE ANCHORING TO STRUCTURE. ANCHORAGE DETAILS TO BE PROVIDED PER 13 05 41 IN DEFERRED SUBMITTAL FOR STRUCTURAL ANCHORAGING AND BRACING.
5. PROVIDE SEISMIC BRACKET WITH PRESTRETCHED STEEL AIRCRAFT CABLE. REFER TO SEISMIC RESTRAINT MANUFACTURER FOR ATTACHMENT REQUIREMENTS.
6. FLEXIBLE CONNECTION DUCTWORK WHERE APPLICABLE.
7. SEE FLOOR PLANS FOR SIZE WHERE APPLICABLE.

3 SUSPENDED EQUIPMENT SUPPORT

SCALE: NONE

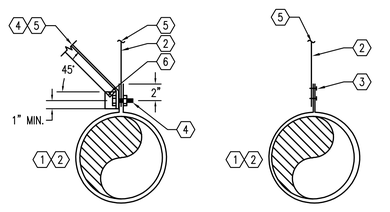

FOR ROUND DUCTS UP TO 24"Ø MAX

KEYNOTES

1. REFER TO DRAWINGS FOR ROUND DUCT SIZES. FOR ADDITIONAL DUCT SUPPORT AND OTHER DUCT CONSTRUCTION REQUIREMENTS REFER TO SMACNA DUCT CONSTRUCTION STANDARDS.
2. GALVANIZED STEEL DUCT HANGER STRAPS, SIZE PER 2020 SMACNA DUCT CONSTRUCTION STANDARDS TABLE 5-2. ROUND DUCT SUPPORTS SHALL BE PROVIDED AT MAXIMUM 12'-0" ON CENTER FOR STRAIGHT LENGTH OF DUCT AND MINIMUM 2'-0" ON CENTER AT ALL ELBOWS AND DUCT TRANSITIONS.
3. SECURE GALVANIZED STEEL HANGER STRAP TO DUCT STRAP WITH TWO (2) #10 x 5/8" TEK SCREW.
4. WHERE REQUIRED TO PREVENT IMPACT BETWEEN DUCT BEING SUPPORTED WITH LARGER DUCTS OR OTHER UTILITIES, PROVIDE L2"x2"x1/4 DIAGONAL ANGLE BRACE AT ALTERNATE SIDES OF HANGERS. SECURE ANGLE BRACE TO HANGER STRAP WITH A307 MACHINE BOLT AND NUT.
5. PROVIDE ANCHORING TO STRUCTURE. ANCHORAGE DETAILS TO BE PROVIDED PER 13 05 41 IN DEFERRED SUBMITTAL FOR STRUCTURAL ANCHORAGING AND BRACING.
6. #8 SMS (TYP.).

4 ROUND DUCT SUPPORT

SCALE: NONE

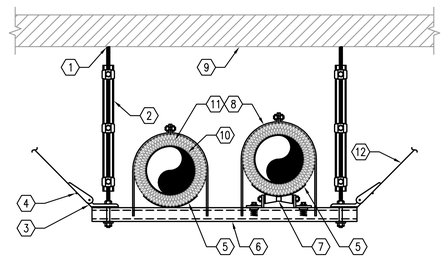

KEYNOTES

1. FOR ATTACHMENT TO STRUCTURE ABOVE.
2. WHERE ROD LENGTH EXCEEDS 50 TIMES THE ROD DIAMETER PROVIDE STIFFENERS
3. BRACE ANGLE
4. HINGE CLIP
5. PIPE SADDLE
6. MANUFACTURED STEEL CHANNEL
7. PIPE ROLLER. FOR PIPES THAT ARE SUBJECT TO MOVEMENT
8. PIPE CLAMP
9. FLOOR OR ROOF STRUCTURE
10. PIPE
11. PIPE INSULATION INSERT
12. CABLE BRACE

GENERAL NOTES

1. ALL TRAPEZE ACCESSORIES SHALL BE PART OF A METAL FRAMING SYSTEM PROVIDED BY A COMMON MANUFACTURER

5 SUSPENDED PIPE SUPPORT

SCALE: NONE

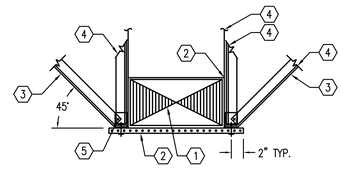

KEYNOTES

1. REFER TO DRAWINGS FOR RECTANGULAR OR SQUARE DUCT SIZES. FOR ADDITIONAL DUCT SUPPORT, BRACING TO STRUCTURE, AND OTHER DUCT CONSTRUCTION REQUIREMENTS REFER TO SMACNA DUCT CONSTRUCTION STANDARDS.
2. PROVIDE UNISTRUT P9000 BELOW DUCTWORK FOR SUPPORT. SECURE DUCTWORK TO UNISTRUT WITH MINIMUM 1-1/2" WIDE, 18 GAUGE, GALVANIZED STEEL DUCT HANGER STRAPS. DUCT SUPPORTS SHALL BE PROVIDED AT MAXIMUM 10'-0" ON CENTER FOR STRAIGHT LENGTH OF DUCT AND MAXIMUM 2'-0" ON CENTER AT ALL ELBOWS AND DUCT TRANSITIONS.
3. PROVIDE 2"X2"X16 GAUGE GALVANIZED STEEL DIAGONAL ANGLE BRACE AND CONNECT TO UNISTRUT AT ALTERNATE SIDES OF EVERY HANGER FOR ADDITIONAL SUPPORT. SECURE DIAGONAL ANGLE AND DUCT HANGER STRAP TO UNISTRUT WITH 5/8" DIA. THREADED ROD AND NUT. BRACING ONLY OCCURS WHERE REQUIRED BY SEISMIC BRACING DELEGATED DESIGN SUBMITTAL.
4. PROVIDE ANCHORING TO STRUCTURE. ANCHORAGE DETAILS TO BE PROVIDED PER 13 05 41 IN DEFERRED SUBMITTAL FOR STRUCTURAL ANCHORAGING AND BRACING.
5. #8 SMS (TYP.).

6 RECTANGULAR DUCT SUPPORT

SCALE: NONE

Revisions:	Date:

CONSULTANT

Consultant: P2S ENG

Long Beach // Irvine // Los Angeles
San Diego // San Jose // Seattle

p2sinc.com

ARCHITECT/ENGINEER OF RECORD

A/E: Blue Trident, LLC
Engineering and Construction Services

BLUE TRIDENT, LLC
7829 NE ESPERIONE LN
BAINBRIDGE ISLAND, WA 98110
206-972-0645
EMMANUEL (MANNY) BAUTISTA, PE, F.SAME

STAMP

PETER ESPERE
STATE OF WASHINGTON
REGISTERED PROFESSIONAL ENGINEER
04/03/2026

Office of Construction and Facilities Management

VA U.S. Department of Veterans Affairs

Drawing Title: MECHANICAL DETAILS	Phase: ISSUED FOR CONSTRUCTION	Project Title: Seismic Retrofit and Renovate Buildings 11, 13, 16	Project Number: 653-107
			Building Number: B11
Approved:	FULLY SPRINKLERED	Location: VA Roseburg Healthcare System	Drawing Number: M-501
		Issue Date: 04/03/2026 · Checked: PE · Drawn: CN	

VA FORM 08 - 6231

P2S No. J24-0628

C:\Users\AuriOneDrive\02_Projects\2024-011 - Roseburg Bldgs 11-13-16\04-DESIGN\BIM MODEL AND LINKS\ROSEBURG 11-13-16 ARCH 2024.rvt

12/4/2024 3:30:54 PM

AIR HANDLING UNIT SCHEDULE

MARK	TYPE [1]	UNIT SERVES	LOCATION	TOTAL AIRFLOW (CFM)	OSA AIRFLOW (CFM)	SUPPLY FAN										COOLING COIL										DX COOLING SYSTEM PERFORMANCE									MERV-8 PRE FILTERS			MERV-13 FINAL FILTERS			ELECTRICAL REQUIREMENT [5]							PHYSICAL INFORMATION				NOTES
						QTY	FAN (CFM)	ESP (IN WC)	TOTAL SP (IN WC)	FAN RPM	FAN FEI	FAN BHP	MOTOR			CAPACITY		EAT (°F)		LAT (°F)		MAX COIL FACE VEL (FPM)	MIN ROWS	COIL FACE AREA (SQFT)	MAX AIR PD (IN WG)	AMBIENT TEMP (°F)		EER	REF. CIRCUIT QTY	COMP. QTY	COND. FAN QTY	REF. TYPE	REF. CHARGE (LBS)	MAX COIL FACE VEL (FPM)	MIN ROWS	QTY / SIZE [6] [7]	INITIAL PD (IN WG)	FINAL PD (IN WG)	QTY / SIZE [6] [7]	INITIAL PD (IN WG)	FINAL PD (IN WG)	NO. OF POWER CONN.	VOLT	PH	FLA	MCA	MOCP	SCCR (KAIC)	OPER. WEIGHT (LBS)	LENGTH (IN)	WIDTH (IN)	HEIGHT (IN)	
													HP	VOLT	PH	TOTAL (MBH)	SENSIBLE (MBH)	DB	WB	DB	WB					DB	WB																										
AHU-11	OUTDOOR PACKAGED UNIT	LAUNDRY	B11 OUTDOORS	16,000	4,800	2	8,000	2.00	3.82	1,501	1.24	6.7	10.0	460	3	481.1	468.4	80.7	63.6	53.3	52.9	293	4	54.7	0.20	94.0	67.0	9.2	2	2	4	R454B	1250	392.0	2	24 / 24X24	0.20	0.50	15 / 24X24	0.40	1.00	1	460	3	109	117	150	5	10,800	360	100	104	[1] [2] [3] [4] [5] [6] [7] [8] [9] [10]

NOTES:
[1] THE AIR HANDLING UNIT CONSISTS OF TWO SUPPLY FANS, AN ECONOMIZER MIXING BOX, A COOLING COIL SERVED BY AN INTEGRAL DX COOLING SYSTEM, MERV-8 PRE-FILTER RACK, AND MERV-13 FINAL FILTER RACK.
[2] THE UNIT REPLACES EXISTING AIR CONDITIONER "AC-1" AT THE SAME LOCATION. PROVIDE DUCT TRANSITIONS NECESSARY TO ACCOMMODATE POINTS OF CONNECTIONS TO EXISTING SUPPLY AND RETURN DUCTS.
[3] THE EXISTING CONCRETE PAD SHALL BE RE-USED. PROVIDE UNIT WITH SEISMIC ANCHORAGE AND VIBRATION ISOLATION TO THE PAD.
[4] THE UNIT DOES NOT INCLUDE A HEATING COIL. HEATING IS PROVIDED SEPARATELY VIA STEAM HEATING COILS DOWNSTREAM. SEE STEAM HEATING COIL SCHEDULE.
[5] PROVIDE WITH A SINGLE POINT OF POWER CONNECTION FOR THE UNIT.
[6] PROVIDE FILTER RACK OPTIONS FOR 2-INCH MERV-8 PRE FILTERS AND 12-INCH CARTRIDGE MERV-13 FINAL FILTERS.
[7] PROVIDE FILTER WITH MAGNEHELIC PRESSURE GAUGE AND CONTROL POINT FOR FILTER MONITORING.
[8] SEE PLANS FOR LOCATION, ORIENTATION OF AIR INTAKE AND DISCHARGE, AND DUCT CONNECTION SIZES. FIELD VERIFY THAT DIMENSIONAL AND CLEARANCE REQUIREMENTS ARE MET PRIOR TO PROCUREMENT.
[9] ELECTRICAL REQUIREMENTS, OPERATING WEIGHT AND PHYSICAL DIMENSIONS REPRESENT THE MAXIMUM ALLOWABLE LIMITS.
[10] PROVIDE AND INSTALL A STAND-ALONE UNIT CONTROLLER AS RECOMMENDED BY THE MANUFACTURER.

STEAM HEATING COIL SCHEDULE

MARK	ROOM	LOCATION	AIRFLOW (CFM)	MAX COIL FACE VEL (FPM)	MAX AIR PD (IN WG)	TOTAL CAPACITY (MBH)	EAT DB (DEG-F)	LAT DB (DEG-F)	CONTROL VALVE PD (PSIG)	COIL PD (PSIG)	STEAM FLOW (LBS/HR)	NOTES
HC-1	112	CART MAKE-UP	1150	690	0.14	57	55	101	15	5	61	[1] [2] [3] [4]
HC-2	110A	DRYING	825	620	0.12	44	55	104	15	5	47	[1] [2] [3] [4]
HC-3	110A	WASHING	1200	640	0.13	63	55	103	15	5	67	[1] [2] [3] [4]
HC-4	110	DRYING	14,025	670	0.13	724	55	102	15	5	748	[1] [2] [3] [4]
HC-5	101/102	WASHING	6195	635	0.12	328	55	104	15	5	339	[1] [2] [3] [4]

NOTES:
[1] PROVIDE DUCT TRANSITIONS NECESSARY TO ACCOMMODATE EXISTING DUCTWORK IMMEDIATELY UPSTREAM AND DOWNSTREAM.
[2] PROVIDE POINTS OF CONNECTIONS TO EXISTING HIGH-PRESSURE STEAM AND CONDENSATE PIPING.
[3] PROVIDE WITH TRANSVERSE AND LONGITUDINAL SEISMIC BRACING AND 45 DEGREE ANGLES.
[4] REPLACE ALL THE TEMPERATURE SENSORS CONNECTED TO THE STEAM COILS WITH NEW ONES.

PLUMBING FIXTURE SCHEDULE

MARK	DESCRIPTION	WASTE PIPE	VENT PIPE	COLD WATER	HOT WATER	WASTE FIXTURE UNITS	WATER FIXTURE UNITS	WRIST BLADE HANDLES	ELECTRIC SENSOR	REMARKS
		IN	IN	IN	IN					
PP-102	WATER CLOSET FLOOR MTD	3	2	1.25	-	6	10	N/A	NO	REAR OUTLET
PP-415	LAVATORY	2	1.5	0.5	0.5	2	2	N/A	NO	ADD TRUBRO TRAP AND SUPPLY INSULATION KIT
FD-1	FLOOR DRAIN	2	1.5	-	-	2	-	N/A	NO	
TP-1	TRAP PRIMER	-	-	0.5	-	-	-	N/A	NO	
PP-701	SHOWER	2	1.5	0.5	0.5	2	2	N/A	NO	

EXHAUST FAN SCHEDULE

MARK	UNIT SERVES	LOCATION	TYPE	DRIVE TYPE	CFM	TSP (IN WG)	FAN RPM	BHP	MOTOR				NOTES	EQUIP WEIGHT (LBS)
									HP	VOLT	PH	MCA		
EF-5	GROUND FLOOR RESTROOMS	PAINT STORAGE 107A	CENTRIFUGAL INLINE FAN	DIRECT	250	0.45	1417	0.05	1/6	208	1	1.9	[1] [2] [3]	40

NOTES:
[1] PROVIDE WITH VARIABLE AIR VOLUME FAN WITH ECM MOTOR.
[2] PROVIDE UNIT WITH A TIMER CONTROLLER. CONFIGURE AN ADJUSTABLE SCHEDULE TO OPERATE DURING SPECIFIED OPERATING HOURS.
[3] FAN SHALL HAVE A FAN EFFICIENCY GRADE (FEG) OF 67 OR HIGHER BASED ON MANUFACTURER CERTIFIED DATA.

Revisions: Date:

CONSULTANT
Consultant: P2S ENG
Long Beach // Irvine // Los Angeles
San Diego // San Jose // Seattle
p2sinc.com

ARCHITECT/ENGINEER OF RECORD
A/E: Blue Trident, LLC Engineering and Construction Services
BLUE TRIDENT, LLC
7829 NE ESPERIONE LN
BAINBRIDGE ISLAND, WA 98110
206-972-0645
EMMANUEL (MANNY) BAUTISTA, PE, F.SAME

STAMP
PETER E. EBERLE STATE OF WASHINGTON REGISTERED PROFESSIONAL ENGINEER
04/03/2026

Office of Construction and Facilities Management
VA U.S. Department of Veterans Affairs

Drawing Title: MECHANICAL SCHEDULES
Approved:
Phase: ISSUED FOR CONSTRUCTION
FULLY SPRINKLERED
Project Title: Seismic Retrofit and Renovate Buildings 11, 13, 16
Location: VA Roseburg Healthcare System
Issue Date: 04/03/2026
Checked: PE
Drawn: CN
Project Number: 653-107
Building Number: B11
Drawing Number: M-601

VA FORM 08 - 6231
P2S No. J24-0628
C:\Users\ieuri\OneDrive\P2L-Projects\2024-011 - Roseburg Bldgs 11-13-16\04-DESIGN\BIM MODEL AND LINKS\RCSEEB.IRG 11-13-16 ARCH 2024.rvt
12/4/2024 3:55:54 PM

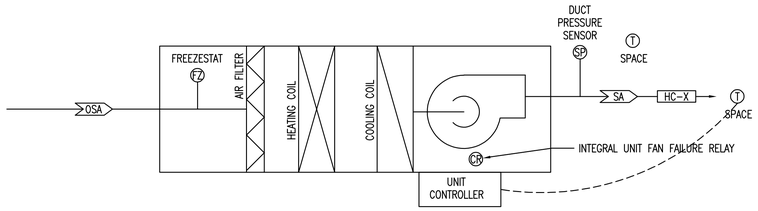

AIR HANDLING UNIT CONTROL SEQUENCE

1. OCCUPIED MODE

   SUPPLY FAN: RUNS CONTINUOUSLY DURING OCCUPIED HOURS.
   OUTSIDE AIR DAMPERS: MAINTAIN MINIMUM OA FOR VENTILATION; MODULATE FOR ECONOMIZER COOLING WHEN OUTDOOR CONDITIONS ALLOW.

   COOLING:
   AHU DISCHARGE AIR TEMPERATURE (DAT) IS RESET BASED ON SPACE TEMPERATURE (52°F–65°F ADJUSTABLE).
   ECONOMIZER PROVIDES FREE COOLING FIRST; DX COOLING STAGES AS NEEDED.

   HEATING:
   NO CENTRAL HEAT; EACH SPACE USES ITS OWN REHEAT COIL (HC–1, HC–2, HC–4) TO MAINTAIN LOCAL HEATING SETPOINT CONTROLLED BY ZONE THERMOSTAT.

   REHEAT:
   EACH COIL SHALL MODULATE TO MAINTAIN ITS RESPECTIVE ZONE TEMPERATURE. THE HEATING SETPOINT SHALL BE 70°F, ADJUSTABLE AS REQUIRED, AND CONTROLLED BY THE CORRESPONDING ZONE THERMOSTAT.

2. UNOCCUPIED MODE

   AHU OFF; DAMPERS CLOSED.
   IF ANY SPACE TEMPERATURE GOES OUTSIDE UNOCCUPIED LIMITS (<60°F OR >80°F), AHU STARTS, AND OPERATES UNTIL ALL THERMOSTATS ARE 2°F INSIDE UNOCCUPIED SETPOINT (I.E. 62°F OR 78°F).

3. SAFETIES

   SMOKE DETECTOR: SHUT DOWN AHU, CLOSE OA DAMPERS.
   FREEZESTAT: STOP FAN, CLOSE OA DAMPERS.
   FILTER DIRTY ALARM, FAN FAILURE ALARM, COMPRESSOR SAFETIES.

4. ADJUSTABLE SETPOINTS

   SPACE COOLING SP: 74°F (ADJUSTABLE)
   SPACE HEATING SP: 70°F (ADJUSTABLE)
   UNOCCUPIED SET POINTS: HEAT 60°F, COOL 80°F
   DAT RESET RANGE: 52–65°F
   ECONOMIZER LOCKOUT: 65°F OAT
   MINIMUM OA POSITION: PER TAB
   FAN CONTROL: DUCT STATIC

5. POINTS SUMMARY

   INPUTS: OAT, DAT, SPACE TEMPS (HC–1, HC–2, HC–4), FAN STATUS, FILTER DP, SAFETIES.
   OUTPUTS: FAN START, OA DAMPER, DX STAGES, REHEAT VALVES (HC–1, HC–2, HC–4).

Revisions: | Date:

CONSULTANT
Consultant: P2S ENG
Long Beach // Irvine // Los Angeles
San Diego // San Jose // Seattle
p2sinc.com

ARCHITECT/ENGINEER OF RECORD
A/E: Blue Trident, LLC
Engineering and Construction Services
BLUE TRIDENT, LLC
7829 NE ESPERIONE LN
BAINBRIDGE ISLAND, WA 98110
206-972-0645
EMMANUEL (MANNY) BAUTISTA, PE, F.SAME

STAMP
PETER ESPERE
STATE OF WASHINGTON
REGISTERED PROFESSIONAL ENGINEER
04/03/2026

Office of Construction and Facilities Management
VA U.S. Department of Veterans Affairs

Drawing Title	Phase	Project Title	Project Number
MECHANICAL CONTROLS	ISSUED FOR CONSTRUCTION	Seismic Retrofit and Renovate Buildings 11, 13, 16	653-107
Approved:	FULLY SPRINKLERED	Location: VA Roseburg Healthcare System	Building Number: B11
		Issue Date: 04/03/2026 · Checked: PE · Drawn: CN	Drawing Number: M-801

VA FORM 08 - 6231

P2S No. J24-0628

C:\Users\kurt\OneDrive\02L-Projects\2024-011 - Roseburg Bldgs 11-13-16\04-DESIGN\BIM MODEL AND LINKS\ROSEBURG 11-13-16 ARCH 2026\4.rvt
12/4/2024 3:30:54 PM

ELECTRICAL SYMBOLS

- XXXXXX — AMPERES SHORT CIRCUIT AVAILABLE (SYMMETRICAL)
- X — KEY NOTES
- 100N — FEEDER SCHEDULE
- 26-SF 3 — BUILDING NO. WHERE EQUIPMENT IS LOCATED.; EQUIPMENT ABBREVIATION (SUPPLY FAN); SUPPLY FAN NO. 3 IN BUILDING NO. 26; TYPICAL UNIT NO.
- HEAVY LINEWEIGHT INDICATES NEW WORK
- LIGHT LINEWEIGHT INDICATES EXISTING
- DASH LINE INDICATES DEMOLITION
- DASH LIGHT FIXTURE/EQUIPMENT/DEVICE TO BE DEMOLISHED
- TRANSFORMER
- WYE CONNECTION
- EARTH GROUND
- PULL BOX
- FUSE WITH RATING
- MOLDED CASE CIRCUIT BREAKER
- DISCONNECT SWITCH, FUSED
- DISCONNECT SWITCH, UNFUSED
- STARTER, COMBINATION WITH DISCONNECT SWITCH
- STARTER OR MOTOR CONTROLLER
- G — GENERATOR, POWER
- M — METER
- A — AMMETER
- V — VOLTMETER
- W — WATTMETER
- WH — WATT-HOUR METER
- MOTOR CONNECTION
- EQUIPMENT CONNECTION
- J — JUNCTION BOX
- AD — MOTORIZED DOOR
- BRANCH CIRCUIT HOMERUN. LINES INDICATE NUMBER OF CIRCUITS, NEUTRAL, AND SWITCH LEG CONDUCTORS. ONE SEPARATE GREEN GROUNDING CONDUCTOR SHALL BE PROVIDED FOR EACH HOMERUN; NOT SHOWN. MINIMUM 3/4" CONDUIT CONCEALED IN CEILING SPACE OR IN WALL WITH #12 AWG CONDUCTORS WITH DEDICATED NEUTRAL EACH CIRCUIT, UNLESS OTHERWISE NOTED ON PLAN. PROVIDE EQUIPMENT GROUNDING CONDUCTORS SIZED PER NFPA 70.
- FACP — FIRE ALARM SYSTEM CONTROL PANEL
  - FACP - FIRE ALARM CONTROL PANEL
  - FAA OR FARA - FIRE ALARM ANNUNCIATOR
  - NAC - POWER SUPPLY
- F — FIRE ALARM PULL STATION
- F — FIRE ALARM HORN ONLY
- XX — FIRE ALARM HORN STROBE
- S — FIRE ALARM SPEAKER ONLY
- XX — FIRE ALARM SPEAKER STROBE
- XX — FIRE ALARM STROBE ONLY - WALL
- XX — FIRE ALARM STROBE ONLY - CEILING
- S — SMOKE DETECTOR
- H — HEAT DETECTOR
- S — FIRE ALARM DUCT SMOKE DETECTOR WITH SAMPLING TUBE
- DH — DOOR HOLDER
- F/S — FIRE SMOKE DAMPER

- a, a, XX, XX — SHADING INDICATES LUMINAIRE CONNECTED TO EMERGENCY SUPPLY SYSTEM - REFER TO LIGHTING LUMINAIRE SCHEDULE; LIGHT FIXTURE IDENTIFIER; SWITCH LEG IDENTIFIER
- a, a, a, XX, XX, XX — 1x4, 2x2, 2x4 LUMINAIRE - REFER TO LIGHTING LUMINAIRE SCHEDULE; LIGHT FIXTURE IDENTIFIER - REFER TO LIGHTING FIXTURE SCHEDULE; SWITCH LEG IDENTIFIER
- WALL MOUNTED LUMINAIRE
- DOWNLIGHT
- WALL MOUNTED LUMINAIRE
- STRIP LUMINAIRE - LED
- PHOTOLUMINESCENT EXIT SIGN - SINGLE FACE ARROW INDICATES DIRECTION OF EGRESS, UNIVERSAL MOUNT
- PHOTOLUMINESCENT EXIT SIGN - DOUBLE FACE ARROW INDICATES DIRECTION OF EGRESS, UNIVERSAL MOUNT
- PUSH BUTTON
- DIST # — DISTRIBUTION PANEL
- PANELBOARD CABINET, FLUSH MOUNTED
- PANELBOARD CABINET, SURFACE MOUNTED
- DUPLEX RECEPTACLE - NEMA 5-20R, +18" AFF UON
- QUADRAPLEX RECEPTACLE - NEMA 5-20R, +18" AFF UON
- RECEPTACLE, DUPLEX WITH GROUND FAULT CIRCUIT INTERRUPTER, +18" AFF UON
- RECEPTACLES - NEMA 5-20R, ON EMERGENCY POWER, +18" AFF UON
- NEMA 5-20R WITH USB CHARGER - (2) TYPE A USB PORTS
- GROUND FAULT CIRCUIT INTERRUPTER (GFCI), ABOVE COUNTER
- ABOVE COUNTER
- RECEPTACLE, SPECIAL PURPOSE
  - A = 120V, 20A, 1 PHASE, 2-POLE, 3W, NEMA 5-20R.
  - B = 208V, 20A, 1 PHASE, 2-POLE, 3W, NEMA 6-20R.
  - C = 120V, 30A, 1 PHASE, 2-POLE, 3W, NEMA 5-30R.
  - D = 208V, 30A, 1 PHASE, 2-POLE, 3W, NEMA 6-30R.
  - E = 208V, 60A, 1 PHASE, 3-POLE, 4W, NEMA 14-60R.
  - F = 208V, 30A, 3 PHASE, 3-POLE 4W, NEMA 15-30R.
  - G = 208V, 50A, 3 PHASE, 3 POLE, 4W, NEMA 15-30R.
  - H = 208V, 60A, 3 PHASE, 3 POLE, 4W, NEMA 15-60R.
- $# — SWITCH (# SUBSCRIPT AS INDICATED BELOW):
  - BLANK = SINGLE POLE; 2 = DOUBLE POLE
  - 3 = THREE-WAY; 4 = FOUR-WAY
  - D = DIMMER; K = KEY OPERATED
  - LV= LOW VOLTAGE; P = WITH PILOT LIGHT
  - LM= LOW VOLTAGE MASTER; RC= REMOTE CONTROL
  - PB= PUSH BUTTON STATION; WP= WEATHER PROOF
  - T = TIMER OPERATED; OS= OCCUPANCY SENSOR
  - a = LOWER CASE LETTERS INDICATE SWITCH LEG CONTROL
- OS — CEILING MOUNTED OCCUPANCY SENSOR WITH POWER PACK - DUAL TECHNOLOGY (POWER PACK NOT SHOWN)

GENERAL NOTES

A. ALL FINAL LOCATIONS AND ARRANGEMENTS OF LIGHTING FIXTURES SHALL BE OBTAINED FROM THE ARCHITECTURAL REFLECTED CEILING PLAN.

B. EACH BRANCH CIRCUIT HOMERUN SHALL HAVE NO MORE THAN THREE CIRCUITS A SEPARATE GREEN INSULATED EQUIPMENT GROUNDING CONDUCTOR SIZED PER NFPA 70. BRANCH CONDUCTORS SHALL BE CONCEALED IN CEILING SPACE OR IN WALL WITH MINIMUM 3/4" CONDUIT #12 AWG CONDUCTORS WITH DEDICATED NEUTRAL EACH CIRCUIT, UNLESS OTHERWISE NOTED ON PLAN.

C. MULTI-GANG BACKBOXES FOR DIFFERENT VOLTAGES AND TYPES OF EMERGENCY AND NORMAL BRANCH WIRING DEVICES SHALL HAVE DIVIDERS BETWEEN DEVICES.

D. COORDINATE WITH OTHER TRADES:

1. REFER TO ELECTRICAL DRAWINGS AND CONFIRM ELECTRICAL CHARACTERISTICS SHOWN FOR MECHANICAL EQUIPMENT (VOLTAGE, PHASE, HZ, ETC.) MATCHES THAT OF THE MECHANICAL EQUIPMENT PROVIDED.
2. PROVIDE ADEQUATE CLEARANCE OF MECHANICAL WORK FROM ELECTRICAL EQUIPMENT. MAINTAIN MINIMUM ACCESS OF 6-INCHES ABOVE CABLE TRAYS AND 18-INCHES TO THE SIDE OF CABLE TRAYS. CLEARANCE ABOVE CABLE TRAY SHOULD BE 1/2 THE WIDTH AND NOT LESS THAN 6-INCHES WHEN RUNNING PARALLEL WITH CABLE TRAY. AND NOT LESS THAN 6-INCHES WHEN RUNNING PERPENDICULAR TO THE CABLE TRAY.

E. ARRANGE EQUIPMENT SO THAT ACCESS CLEARANCES INDICATED BY DRAWINGS, REQUIRED BY CODES, OR RECOMMENDED BY MANUFACTURER ARE PROVIDED.

F. INSTALL MATERIALS AND SYSTEMS IN ACCORDANCE WITH MANUFACTURER'S INSTRUCTIONS AND ACCEPTED SUBMITTALS. INSTALL MATERIAL IN PROPER RELATION TO ADJACENT CONSTRUCTION AND WITH UNIFORM

G. THOROUGHLY EXAMINE ALL AREAS WHERE EQUIPMENT, DUCTWORK, AND PIPING WILL BE INSTALLED AND REPORT ANY CONDITION THAT PREVENTS THE PROPER INSTALLATION OF THE ELECTRICAL WORK.

H. MODIFY AND EXTEND EXISTING SERVICE TO ACCOMMODATE NEW WORK. RELOCATE EXISTING COMPONENTS AS REQUIRED FOR NEW SYSTEM. COORDINATE WITH BUILDING MANAGEMENT.

I. DO NOT CUT STRUCTURAL ELEMENTS WITHOUT PRIOR WRITTEN APPROVAL.

J. DO NOT INSTALL J-BOXES/PULLBOXES IN INACCESSIBLE CEILING.

ELECTRICAL ABBREVIATIONS

1PH SINGLE-PHASE
1P SINGLE POLE
3PH THREE-PHASE
4W FOUR-WIRE

A/C UNIT AIR CONDITIONING UNIT
A/E ARCHITECT/ENGINEER
AAP ALARM ANNUNCIATOR PANEL
AC ALTERNATING CURRENT OR ARMORED CABLE
ADJ ADJACENT, ADJOINING
AF AMPERE FRAME OR AMP FUSE
AFC ABOVE FINISHED COUNTER, AUTOMATIC FREQUENCY CONTROL, OR AVAILABLE FAULT CURRENT
AFF ABOVE FINISHED FLOOR
AH AMPERE HOUR
AHJ AUTHORITY HAVING JURISDICTION
AIC AMPERE INTERRUPTING CAPACITY
ALT ALTERNATE
AMP AMPERE
ARCH ARCHITECT
ASC AMPS SHORT CIRCUIT
AT AMPERE TRIP
ATS AUTOMATIC TRANSFER SWITCH
AUTO AUTOMATIC
AV AUDIO VISUAL

BD BOARD
BLDG BUILDING
BRKR BREAKER
BYP BY PASS

C CONDUIT
CAB CABINET
CALC CALCULATE
CAP CAPACITY
CAT CATALOG
CCR CONTROL CONTACTOR
CD CONSTRUCTION DOCUMENTS
CF CONTRACTOR FURNISHED
CF/CI CONTRACTOR FURNISHED/CONTRACTOR INSTALLED
CKT CIRCUIT
CKT BRKR CIRCUIT BREAKER
CLF CURRENT LIMITING FUSE
CLG CEILING
CMU CONCRETE MASONRY UNIT
COMM COMMUNICATION
CONC CONCRETE
CONT CONTINUE
CONTR CONTRACTOR
COORD COORDINATE
CPT CONTROL POWER TRANSFORMER
CRI COLOR RENDERING INDEX
CT CURRENT TRANSFORMER
CU COPPER
CU FT CUBIC FEET
CUR CURRENT

DB DECIBEL OR DIRECT BURIAL
DC DIRECT CURRENT
DEG C DEGREES CELSIUS
DEG F DEGREES FAHRENHEIT
DEMO DEMOLITION
DIAG DIAGRAM
DISC DISCONNECT
DISTR DISTRIBUTION
DISTR PNL DISTRIBUTION PANEL
DN DOWN
DPDT DOUBLE POLE, DOUBLE THROW
DPST DOUBLE POLE, SINGLE THROW
DRSW DOOR SWITCH
DS DISCONNECT SWITCH
DWG DRAWING

EC EMPTY CONDUIT
EG EQUIPMENT GROUND
EL ELEVATION
ELEC ELECTRIC OR ELECTRICAL
ELEV ELEVATOR
EMER EMERGENCY
EMT ELECTRICAL METALLIC TUBING
ENCL ENCLOSURE
EPO EMERGENCY POWER OFF
EPRF EXPLOSION PROOF
EUSERC ELECTRIC UTILITY SERVICE EQUIPMENT REQUIREMENTS COMMITTEE
EXST/EXIST EXISTING

FA FIRE ALARM
FAAP FIRE ALARM ANNUNCIATOR PANEL
FABX FIRE ALARM BOX
FACP FIRE ALARM CONTROL PANEL
FI FILM ILLUMINATOR
FIXT FIXTURE
FLA FULL LOAD AMPS
FLEX FLEXIBLE METALLIC CONDUIT
FOUTT TELEPHONE FLOOR OUTLET
FP FIRE PROTECTION
FT FEET OR FOOT
FU SW FUSED SWITCH
FVNR FULL VOLTAGE NON-REVERSING
FVR FULL VOLTAGE REVERSING

G OR GND GROUND OR GENERATOR
GEN GENERATOR
GFC GROUND FAULT CIRCUIT INTERRUPTER
GTB GROUND TERMINAL BOX
HOA HAND-OFF-AUTOMATIC
HP HORSEPOWER
HT HEIGHT
HZ HERTZ
IESNA ILLUMINATION ENGINEERING SOCIETY OF NORTH AMERICA
IMC INTERMEDIATE METAL CONDUIT
IR INFRARED

J-BOX JUNCTION BOX

kV KILOVOLT
kVA KILOVOLT AMPERE
kVAH KILOVOLT AMPERE PER HOUR
kVAR KILOVOLT AMPERE REACTIVE
kW KILOWATT
kWH KILOWATT HOUR
kWHM KILOWATT HOUR METER

LED LIGHT EMITTING DIODE
LF LINEAR FEET (FOOT)
LM LUMEN
LRA LOCKED ROTOR AMPS
LTCP LOCAL TEMPERATURE CONTROL PANEL
LT LIGHT
LTG LIGHTING
LTG PNL LIGHTING PANEL
LTNG LIGHTNING
LV LOW VOLTAGE

MAX MAXIMUM
MC METAL-CLAD
MCA MINIMUM CIRCUIT AMPS
MCB MAIN CIRCUIT BREAKER
MCC MOTOR CONTROL CENTER
MDP MAIN DISTRIBUTION PANEL
MECH MECHANICAL
MG MOTOR GENERATOR
MIN MINIMUM
MP METERING POINT
MOCP MAXIMUM OVERCURRENT PROTECTION
MLO MAIN LUGS ONLY
MT MOUNT
MTD MOUNTED
MTG MOUNTING
MTS MANUAL TRANSFER SWITCH

NA NOT APPLICABLE
NEC NATIONAL ELECTRICAL CODE
NEMA NATIONAL ELECTRICAL MANUFACTURERS ASSOCIATION
NEUT NEUTRAL
NFPA NATIONAL FIRE PROTECTION ASSOCIATION
NIC NOT IN CONTRACT
NL NIGHT LIGHT
NO NORMALLY OPEN
NS NO SCALE
NTS NOT TO SCALE

OC ON CENTER
OD OUTSIDE DIAMETER
OL OVERLOAD

P POLE
PB PANELBOARD, PULL BOX, OR PUSHBUTTON
PCB POLYCHLORINATED BIPHENYL
PED PEDESTAL
PEND PENDANT
PF POWER FACTOR
PH PHASE
PNL PANEL
POD POWER OPERATED DAMPER
PT POTENTIAL TRANSFORMER
PTRV POWER TYPE ROOF VENTILATION
PVC POLYVINYL CHLORIDE (PLASTIC)
PWR POWER

RCP REFLECTED CEILING PLAN
RE RESIDENT ENGINEER
REC RECESSED
RECPT RECEPTACLE
RGS RIGID GALVANIZED STEEL
RM ROOM
RMS ROOT MEAN SQUARE
REQD REQUIRED

SCC SHORT CIRCUIT CAPACITY
SES SERVICE ENTRANCE SECTION
SD SMOKE DETECTOR
SF SQUARE FOOT (FEET)
SHT SHEET
SI INTERNATIONAL SYSTEM OF UNITS
SPD SURGE PROTECTIVE DEVICE
SPEC SPECIFICATION
SPST SINGLE POLE, SINGLE THROW
SURF SURFACE
SW SWITCH
SWBD SWITCHBOARD
SWGR SWITCHGEAR

TC TIME CLOCK
TEL TELEPHONE
TP TWISTED PAIR
TPS TWISTED PAIR SHIELDED
TTB TELEPHONE TERMINAL BOARD
TV TELEVISION
TYP TYPICAL

UL UNDERWRITERS LABORATORY
UON UNLESS OTHERWISE NOTED
UPS UNINTERRUPTIBLE POWER SUPPLY
UTIL UTILITY

V VOLT
VA VOLT AMPERE / VETERANS ADMINISTRATION
VAMC VETERANS ADMINISTRATION MEDICAL CENTER
VAR VOLT AMPERE REACTIVE
VFD VARIABLE FREQUENCY DRIVE
VOLT VOLTAGE

W WATT
WH WATER HEATER
WP WEATHERPROOF

XFER TRANSFER
XFMR TRANSFORMER

GENERAL NOTES - DEMOLITION

A. FOR ITEMS, SUCH AS LIGHTING FIXTURES, WIRING DEVICES, ETC., SHOWN ON PLANS TO BE REMOVED, DISCONNECT WIRING AT THE OVERCURRENT PROTECTIVE DEVICE AND REMOVE WIRING AND CONDUIT COMPLETELY.

B. DISCONNECT ALL ABANDONED WIRING OF ALL TYPES AT THE OVERCURRENT PROTECTIVE DEVICE. COMPLETELY REMOVE ALL ABANDONED WIRING AND CONDUIT.

C. MAINTAIN AND RESTORE, IF INTERRUPTED, ALL CONDUITS AND CONDUCTORS PASSING THROUGH RENOVATED AREAS AND SERVICING UNDISTURBED AREAS.

ELECTRICAL SHEET INDEX

EG001	B11 GENERAL NOTES, ABBREV. AND SHEET INDEX
ED111	B11 ELECTRICAL DEMOLITION - FIRST FLOOR PLAN
EL111	B11 ELECTRICAL LIGHTING - FIRST FLOOR PLAN
EP111	B11 ELECTRICAL POWER - FIRST FLOOR PLAN
EL601	B11 ELECTRICAL LIGHTING SCHEDULE
EP621	B11 ELECTRICAL ONE-LINE DIAGRAM AND EQUIPMENT SCHEDULE
EP622	B11 ELECTRICAL PANEL SCHEDULES
EP623	B11 ELECTRICAL PANEL SCHEDULES

SYMBOL LEGEND

- SECURITY CAMERA
- K — KEYPAD DOOR ACCESS
- C — CARD KEY DOOR ACCESS
- EMERGENCY OFF PUSHBUTTON
- PUSHBUTTON CONTROL
- M — MOTORIZED ADA DOOR PUSHBUTTON
- REX — REQUEST TO EXIT DEVICE
- W — WIFI DEVICE
- A — VISUAL/AUDIBLE ALARM NOTIFICATION DEVICE
- TELECOMMUNICATIONS DEVICE
- $K — KEYED SWITCH
- OS — OCCUPANCY SENSOR
- E — EXISTING TO REMAIN
- $M — MOTOR RATED SWITCH

Revisions:	Date:

CONSULTANT

Consultant: SAZAN GROUP
111 SW Fifth Ave., Ste. 3210
Portland, Oregon 97204
Tel 503.416.2400
Fax 503.416.2087
SAZAN # 735-24021

ARCHITECT/ENGINEER OF RECORD

A/E: Blue Trident, LLC — Engineering and Construction Services
BLUE TRIDENT, LLC
900 Winslow Way E, Suite 130
BAINBRIDGE ISLAND, WA 98110
206-972-0645
EMMANUEL (MANNY) BAUTISTA, PE, F.SAME

STAMP
REGISTERED PROFESSIONAL ENGINEER 51012PE JAN. 9, 2026 CHRISTOPHER LARSON
Expires: 12/31/2026

Office of Construction and Facilities Management
VA U.S. Department of Veterans Affairs

Drawing Title: B11 GENERAL NOTES, ABBREV. AND SHEET INDEX
Approved: director
Phase: Issued For Construction
FULLY SPRINKLERED
Project Title: Seismic Retrofit and Renovate Building 11
Location: VA Roseburg Healthcare System
Issue Date: 04/03/2026
Checked: CL
Drawn: SW
Project Number: 653-107
Building Number: 11
Drawing Number: EG001

VA FORM 08 - 6231

Autodesk Docs://PDX 735-24021 Seismic Retrofit Roseburg for Buildings 11, 13 and 18/735-24021 Roseburg SR Building 11 ETFP V24.rvt
4/3/2026 2:31:55 PM

FLAG NOTES

1. EXISTING PANELBOARD TO BE REPLACED. DEMO PANEL, MAINTAIN EXISTING FEEDER AND BRANCH CIRCUITS FOR RECONNECTION TO NEW PANELBOARD WHERE POSSIBLE. REMOVE EXISTING FEEDER AND/OR BRANCH CIRCUIT CONDUITS IN CONFLICT WITH STRUCTURAL REINFORCING. PROVIDE SPLICE BOX(ES) CLEAR FROM STRUCTURAL AREA OF WORK FOR REINSTALLATION.
2. EXISTING EQUIPMENT TO BE REPLACED. DEMO EXISTING, MAINTAIN EXISTING FEEDER FOR RECONNECTION.
3. EXISTING PANELBOARD TO BE REPLACED AND RELOCATED AT SAME LOCATION ON STRUCTURALLY REINFORCED WALL. REMOVE EXISTING PANEL AND ASSOCIATED CONDUIT AND WIRING FOR STRUCTURAL WORK. PROVIDE NEW SPLICE BOXES AND/OR WIREWAYS AS REQUIRED, EXTEND EXISTING FEEDER AND BRANCH CIRCUIT CONDUIT AND WIRING SERVING EXISTING LOADS TO REMAIN TO NEW PANELBOARD LOCATION.
4. REMOVE EXISTING EQUIPMENT CABINET AND ASSOCIATED CONTROLS AND CONDUIT AND WIRING FOR STRUCTURAL WORK. MAINTAIN FOR REINSTALLATION. PROVIDE SPLICE BOX CLEAR FROM STRUCTURAL AREA OF WORK FOR REINSTALLATION.
5. REMOVE EXISTING TELEPHONE AND METER EQUIPMENT FOR STRUCTURAL WORK. MAINTAIN FOR REINSTALLATION.
6. REMOVE EXISTING ELECTRICAL EQUIPMENT, DEVICES, CONDUIT AND WIRING ALONG WALL TO BE STRUCTURALLY REINFORCED. PROVIDE SPLICE BOX CLEAR FROM STRUCTURAL AREA OF WORK FOR REINSTALLATION OF ALL NEW DEVICES TO REPLACE EXISTING AND ANY ASSOCIATED CONDUIT AND BOXES.
7. REMOVE EXISTING DEVICE, AND ANY ASSOCIATED CONDUIT ON WALL TO BE STRUCTURALLY REINFORCED. RETAIN DEVICE FOR REINSTALLATION.
8. REMOVE DEVICES, CONDUIT AND WIRING ASSOCIATED WITH DOOR CONTROLS ALONG WALL TO BE STRUCTURALLY REINFORCED. PROVIDE SPLICE BOX CLEAR FROM STRUCTURAL AREA OF WORK FOR REINSTALLATION.
9. EXISTING TO REMAIN.
10. DEMO ALL DEVICES AND LIGHTING THIS AREA. RETAIN CIRCUITRY FOR EXTENSION AND REUSE.
11. EXISTING PANELBOARD TO REMAIN AT SAME LOCATION ON STRUCTURALLY REINFORCED WALL. REMOVE ANY EXISTING ASSOCIATED CONDUIT AND WIRING INTERFERING WITH STRUCTURAL REINFORCEMENT OF WALL. PROVIDE NEW SPLICE BOXES AND/OR WIREWAYS AS REQUIRED. EXTEND EXISTING FEEDER AND BRANCH CIRCUIT CONDUIT AND WIRING SERVING EXISTING LOADS TO REMAIN TO EXISTING PANELBOARD AS REQUIRED AND RETERMINATE COMPLETE.
12. DISCONNECT EXISTING "A/C UNIT 1 (CLEAN SIDE)" FROM PANEL HL1 FOR DEMOLITION. SALVAGE CONDUIT AND CONDUCTORS FOR INSTALLATION OF NEW AHU-11 WHERE FEASIBLE. COORDINATE EQUIPMENT DEMOLITION WITH MECHANICAL DRAWINGS.
13. REMOVE EXISTING EXHAUST FAN IN ITS ENTIRETY, INCLUDING ALL ASSOCIATED CONDUIT, WIRING, AND CONNECTIONS.

SHEET NOTES

A. DEMO EXISTING LIGHTING THROUGHOUT THE FACILITY FOR REPLACEMENT. MAINTAIN EXISTING BRANCH CIRCUITING HOMERUNS FOR NEW LIGHTING. FIELD VERIFY EXACT REQUIREMENTS.

B. REFER TO STRUCTURAL PLANS AND SPECIFICATION SECTION 13 05 41 FOR STRUCTURAL WORK.

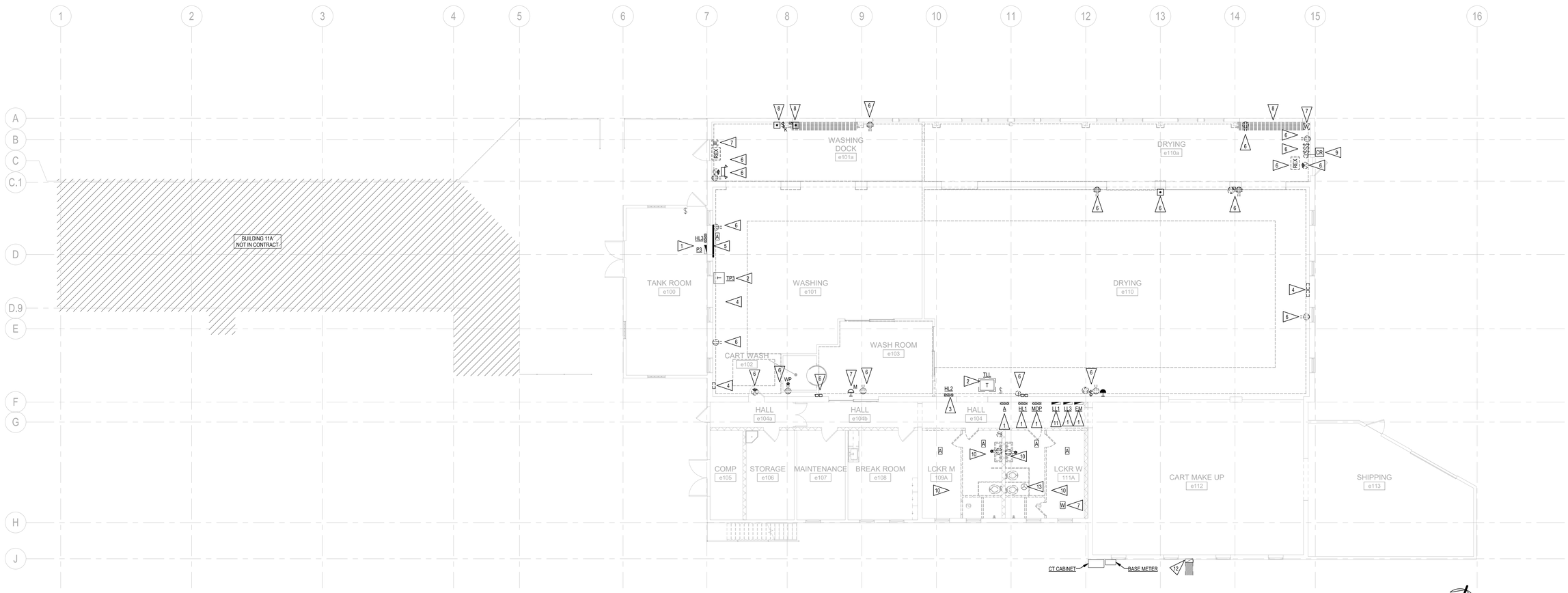

F1 B11 ELECTRICAL DEMOLITION - FIRST FLOOR PLAN
1/8" = 1'-0"

Graphic Scale: 1 inch = 8 feet
0 8' 16' 24' 32'

Revisions:	Date:

CONSULTANT

Consultant: SÄZÄN GROUP
111 SW Fifth Ave., Ste. 3210
Portland, Oregon 97204
Tel 503.416.2400
Fax 503.416.2087
SAZAN # 735-24021

ARCHITECT/ENGINEER OF RECORD

A/E: Blue Trident, LLC Engineering and Construction Services
BLUE TRIDENT, LLC
900 Winslow Way E, Suite 130
BAINBRIDGE ISLAND, WA 98110
206-972-0645
EMMANUEL (MANNY) BAUTISTA, PE, F.SAME

STAMP
REGISTERED PROFESSIONAL ENGINEER 51012PE
JAN. 9, 2026
CHRISTOPHER LARSON
Expires: 12/31/2026

Office of Construction and Facilities Management
VA U.S. Department of Veterans Affairs

Drawing Title	Phase	Project Title	Project Number
B11 ELECTRICAL DEMOLITION - FIRST FLOOR PLAN	Issued For Construction	Seismic Retrofit and Renovate Building 11	653-107
Approved: director	FULLY SPRINKLERED	Location: VA Roseburg Healthcare System	Building Number: 11
		Issue Date: 04/03/2026 · Checked: CL · Drawn: SW	Drawing Number: ED111

VA FORM 08 - 6231

Autodesk Docs://PDX 735-24021 Seismic Retrofit Roseburg for Buildings 11, 13 and 16/735-24021 Roseburg SR Building 11 ETFP V24.rvt
4/3/2026 2:31:57 PM

FLAG NOTES

1. PROVIDE NEW SWITCHES TO REPLACE EXISTING REMOVED DURING DEMOLITION. RECONNECT TO CONTROL EXISTING LIGHTING CONTROL ZONES. PROVIDE NEW CONDUIT AND WIRING AS REQUIRED.
2. REPLACE EXISTING LUMINAIRE. EXTEND CONDUIT AND WIRING AS REQUIRED.
3. REFER TO STRUCTURAL PLANS AND SPECIFICATION SECTION 13 05 41 FOR STRUCTURAL WORK.

SHEET NOTES

A. ALL LIGHTING WILL BE COMPRISED OF LED SOURCE LUMINAIRES.

B. WIRED LIGHTING CONTROLS SHALL MEET THE VA LIGHTING DESIGN MANUAL. WIRELESS CONTROLS ARE PROHIBITED.

C. LOCAL CONTROLS OF LIGHTS WILL BE PROVIDED IN EACH ROOM. ENCLOSED ROOMS WILL BE AUTOMATICALLY CONTROLLED VIA OCCUPANCY SENSORS AND INCLUDE A MANUAL OVERRIDE SWITCH. OCCUPANCY SENSORS WILL UTILIZE PASSIVE INFRARED, ULTRASONIC AND DUAL TECHNOLOGY SENSOR BASED ON THE APPLICATION.

D. EMERGENCY EGRESS LIGHTING WILL BE CONTROLLED BUT WILL INCORPORATE A UL924 LISTED TRANSFER RELAY TO OVERRIDE ANY LIGHTING CONTROLS IN THE EVENT OF A NORMAL POWER SOURCE OUTAGE.

E. PROVIDE LATERAL BRACING FOR ALL LIGHT FIXTURES PER VA GUIDELINES. REFER TO SEISMIC BRACING LEGEND FOR MORE INFORMATION.

F. FOR CIRCUITS CROSSING SEISMIC JOINT, PROVIDE EXPANSION DEFLECTION FITTING WITH A MINIMUM OF 1-1/2" DEFLECTION CAPABILITY IN ALL DIRECTIONS.

G. REFER TO STRUCTURAL PLANS AND SPECIFICATION SECTION 13 05 41 FOR STRUCTURAL WORK.

LEGEND - SEISMIC BRACING

ID CODE	IMPROVEMENT REQUIREMENTS
F+10G	FIXTURE, 10 TO 56 POUNDS, SECURE TO THE CEILING GRID AT FOUR LOCATIONS MINIMUM.
F+10S	FIXTURE, 10 TO 56 POUNDS, ADD TWO SLACK #12 MIN. SAFETY WIRES AT DIAGONALLY OPPOSITE CORNERS AND ATTACHED TO THE STRUCTURE WIRE.
F10G	FIXTURE, LESS THAN 10 POUNDS, PROVIDE FOUR SECURE ATTACHMENTS (OR TIE WIRE ATTACHMENTS) TO THE CEILING GRID.
F10S	FIXTURE, LESS THAN 10 POUNDS, PROVIDE ONE SLACK #12 MIN. SAFETY WIRE ATTACHED TO THE STRUCTURE ABOVE.
FLS	FIXTURE WITH OPEN LAMPS AND/OR UNSECURED LENS. PROVIDE A WIRE CAGE OR SIMILAR PROVISION SUITABLE FOR CATCHING AND SECURING THOSE ITEMS.
F+56	FIXTURE WEIGHING MORE THAN 56 POUNDS, RE-SUPPORT FROM THE STRUCTURE WITH ENGINEERED SUPPORT ELEMENTS AND BRACING.

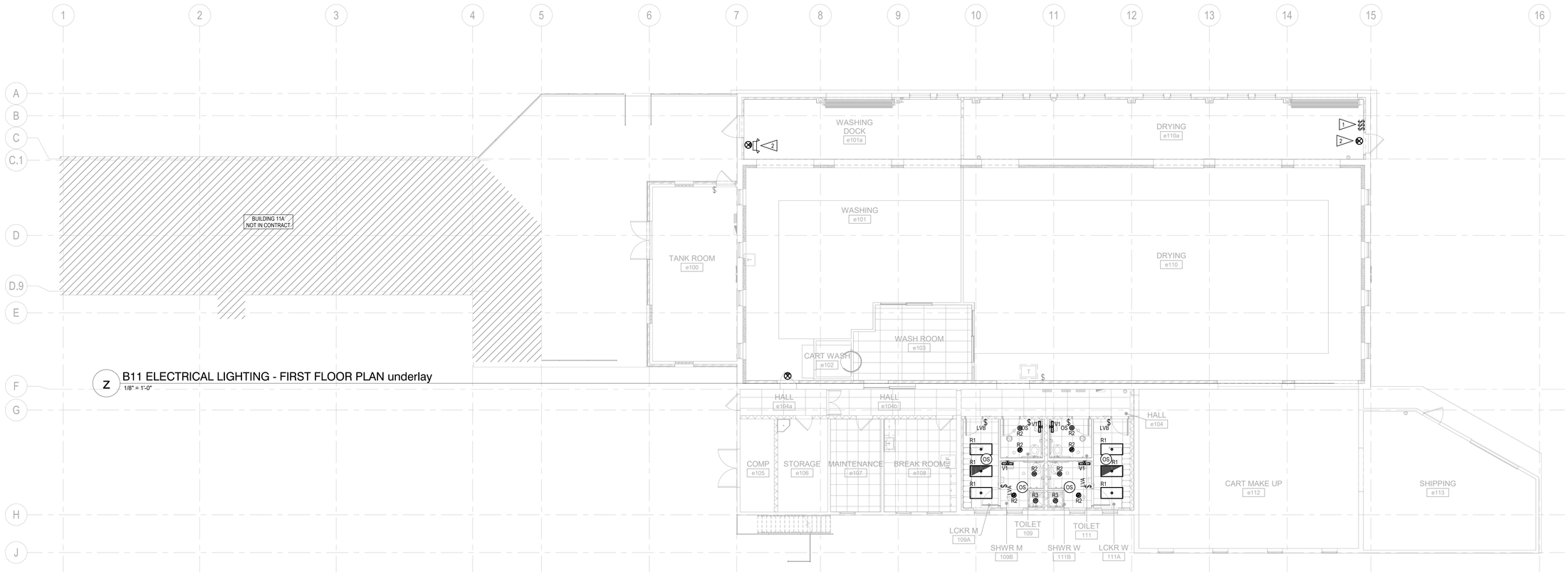

Z B11 ELECTRICAL LIGHTING - FIRST FLOOR PLAN underlay
1/8" = 1'-0"

F1 B11 ELECTRICAL LIGHTING - FIRST FLOOR PLAN
1/8" = 1'-0"

Graphic Scale: 1 inch = 8 feet
0 8' 16' 24' 32'

Revisions:	Date:

CONSULTANT

Consultant: SÄZÄN GROUP
111 SW Fifth Ave., Ste. 3210
Portland, Oregon 97204
Tel 503.416.2400
Fax 503.416.2087
SAZAN # 735-24021

ARCHITECT/ENGINEER OF RECORD

A/E: Blue Trident, LLC Engineering and Construction Services
BLUE TRIDENT, LLC
900 Winslow Way E, Suite 130
BAINBRIDGE ISLAND, WA 98110
206-972-0645
EMMANUEL (MANNY) BAUTISTA, PE, F.SAME

STAMP
REGISTERED PROFESSIONAL ENGINEER S1012PE OREGON JAN. 9, 2018 CHRISTOPHER LARSON
Expires: 12/31/2026

Office of Construction and Facilities Management
VA U.S. Department of Veterans Affairs

Drawing Title: B11 ELECTRICAL LIGHTING - FIRST FLOOR PLAN	Phase: Issued For Construction	Project Title: Seismic Retrofit and Renovate Building 11	Project Number: 653-107
			Building Number: 11
Approved: director	FULLY SPRINKLERED	Location: VA Roseburg Healthcare System	Drawing Number: EL111
		Issue Date: 04/03/2026 · Checked: CL · Drawn: SW	

VA FORM 08 - 6231

Autodesk Docs://PDX 735-24021 Seismic Retrofit Roseburg for Buildings 11, 13 and 16/735-24021 Roseburg SR Building 11 ETFP V24.rvt
4/3/2026 2:32:00 PM

SHEET NOTES

A. REFER TO SPECIFICATION 260923, 265100, 265600 FOR ADDITIONAL INFORMATION AS WELL AS MANUFACTUREER CUTSHEETS FOR ADDITIONAL REQUIREMENTS.
B. INFRASTRUCTURE AND COMPONENTS AS REQUIRED FOR EMERGENCY POWER COMPATIBILITY COORDINATED WITH LIGHTING DRAWINGS. PROVIDE UL924 BYPASS RELAY DEVICES FOR ALL DESIGNATED EMERGENCY EGRESS LIGHTING WITH AUTOMATIC CONTROLS TO AUTOMATICALLY RAISE TO 100% UPON POWER LOSS.
C. ALL VISUAL COMPONENTS OF LUMINAIRE, LUMINAIRE ASSEMBLY AND MOUNTING HARDWARE TO MATCH FINISH INDICATED BY ARCHITECT. SUBMIT RFI FOR UNIQUE SITUATIONS AS REQUIRED PRIOR TO PROCUREMENT.
D. ALL MOUNTING DETAILS TO BE COORDINATED WITH ARCHITECT AND LIGHTING DESIGNER PRIOR TO LUMINAIRE PROCUREMENT, ROUGH-IN, INSTALLATION AND EXECUTION. SUBMIT RFI FOR UNIQUE CIRCUMSTANCES THAT ARISE.
E. CONFIRM ELEVATION OF WALL MOUNTED LUMINAIRES WITH ARCHTIECT AND/OR LIGHTING DESIGNER PRIOR TO INSTALLING.
F. DELIVERED LUMEN OUTPUT IS MINIMUM REQUIRED OUTPUT FOR LUMINAIRE.
G. LUMINAIRES SHALL BE ORDERED WITH NECESSARY POWER SUPPLIES, DRIVERS, LEADER CABLES, JUMPER CABLES, POWER FEEDS, TERMINATORS AND CONTROL INTERFACES FOR INSTALLATION OF A COMPLETE WORKING SYSTEM IF SO REQUIRED.
H. INSTALLING CONTRACTOR TO VERIFY VOLTAGE WITH ELECTRICAL BRANCH CIRCUIT AND COORDINATE TRANSFORMER SIZE AND WIRE GAUGE TO LIMIT VOLTAGE DROP TO ≤2% OVER ENTIRE LENGTH OF RUN.
I. SUBMIT MANUFACTURER SHOP DRAWINGS FOR REVIEW PRIOR TO PROCUREMENT INDICATING FIXTURE LENGTHS AND LOCATION OF SEAMS BETWEEN LUMINAIRES FOR ALL LUMINAIRES WITH CUSTOM LENGTHS.
J. ALL LUMINAIRE FINISHES TO BE VERIFIED BY ARCHITECT / INTERIOR DESIGNER PRIOR TO PROCUREMENT.
K. FOR CUSTOM LENGTH LINEAR LUMINAIRES, PROVIDE NO MORE THAN 3" OF UNLIT LENGTH BETWEEN ANY LINEAR SEGMENTS.
L. ALL LOCATIONS ON LIGHTING PLANS ARE DIAGRAMMATIC. REFER TO ARCHTIECTURAL FOR EXACT LUMINAIRE DIMENSIONS. FIELD VERIFY LENGTHS FOR WALL TO WALL LUMINAIRES PRIOR TO PROCUREMENT.
M. LUMINAIRE MOUNTING HEIGHTS INDICATED IN LUMINAIRE SCHEDULE AND/OR ON DRAWINGS BY FLAGGED NOTES.
N. ELECTRICAL CONTRACTOR AND SELECTED LIGHTING CONTROL MANUFACTURER TO PROVIDE SHOP DRAWINGS AND WIRING DIAGRAMS BASED ON LIGHTING CONTROL SEQUENCE. SHOP DRAWINGS SHALL INCLUDE RECOMMENDED QUANTITIES AND LOCATIONS FOR SENSORS, RELAYS, PANELS, SWITCHES, AND OTHER EQUIPMENT REQUIRED TO ACHIEVE CONTROL

LUMINAIRE SCHEDULE

FIXTURE TYPE	DESCRIPTION	MOUNTING	CCT / CRI	INPUT WATTS (W)	LUMEN OUTPUT	BALLAST / TRANSFORMER / DRIVER	VOLTAGE	LENS / REFLECTOR / BEAM	TRIM / FLANGE / BAFFLE / FINISH	MANUFACTURER / CATALOG #	REMARKS / ACCESSORIES/ OPTIONS
INTERIOR LIGHTING											
R1	2X4 TROFFER LED LUMINAIRE	RECESSED	3500K 80CRI	25	3000	0-10V DIMMING DRIVER	UNV	SOFT WHITE ACRYLIC	STANDARD	MARK ARCHITECTURAL - WHISPER LED SERIES	
R2	4" ROUND MEDIUM DISTRIBUTION DOWNLIGHT LED LUMINAIRE	RECESSED	3500K 80CRI	8	1000	0-10V DIMMING DRIVER	UNV	CLEAR REFLECTOR	BY ARCHITECT	GOTHAM - 4" DOWNLIGHT SERIES	
R3	4" ROUND MEDIUM WIDE DISTRIBUTION SHOWER DOWNLIGHT LED LUMINAIRE	RECESSED	3500K 80CRI	8	1000	0-10V DIMMING DRIVER	UNV	SMOOTH CLEAR LENS	BY ARCHITECT	GOTHAM - 4" SHOWER DOWNLIGHT SERIES	
V1	2'-0" SQUARE LINEAR VANITY LED LUMINAIRE	WALL	3000K 90CRI	18	1304	NON-DIMMABLE	UNV	ACRYLIC DIFFUSER	BRUSHED NICKEL	LITHONIA LIGHTING - CONTEMPORARY SQUARE VANITY SERIES	
X1	SINGLE/DOUBLE FACE EXIT SIGN	UNV	GREEN	5 WATTS	NA	INTEGRAL	UNV	CLEAR ACRYLIC	BRUSHED ALUMINUM	LITHONIA LIGHTING - EDG SERIES	

LIGHTING CONTROL SEQUENCE OF OPERATIONS: INTERIOR

Responsibility Matrix	Factory Representative	Contractor	Owner/ Facilities	Design team
Startup and Programming	Prime	Assist	Review	
Commissioning and Verification	Prime	Demonstrate		
Hours of operation	Prime	Assist	Provide	
Aesthetic dimming/aiming		Aim/Dim	Onsite review	Onsite Review

Basis of Design Manufacturer	Alternate Manufacturer(s)
nLight	Wattstopper DLM, Nlight, Lutron, Cooper Wavelinx

NAME	STANDALONE SYSTEM	NETWORKED SYSTEM	SCHEDULED ON BY TIMECLOCK.	AUTOMATIC FULL OFF USING OCCUPANCY SENSORS	SCHEDULED SHUTOFF BY TIMECLOCK.	LOCAL CONTROL (P=PLANS, T=TIMECLOCK)	MANUAL ON	PARTIAL AUTOMATIC ON TO 50% MAX OUTPUT USING OCCUPANCY SENSORS.	BILEVEL LIGHTING CONTROL (PROVIDE CONTINUOUS DIMMING, SEE LUMINAIRE SCHEDULE)	PHOTOCELL DAYLIGHT CONTROL	PARTIAL AUTOMATIC OFF TO 50% MAX OUTPUT USING OCCUPANCY SENSORS	AUTO FULL ON	MANUAL OFF	NOTES
LOCKER ROOM	X			X		X		X	X					
RESTROOM	X			X		X						X		

GENERAL NOTES

A. REFER TO SPECIFICATION SECTION 2609XX FOR MORE INFORMATION. ELECTRICAL CONTRACTOR AND SELECTED LIGHTING CONTROL MANUFACTURER TO PROVIDE SHOP DRAWINGS AND WIRING DIAGRAMS BASED ON LIGHTING CONTROL SEQUENCE. SHOP DRAWINGS SHALL INCLUDE RECOMMENDED QUANTITIES AND LOCATIONS FOR SENSORS, RELAYS, PANELS, SWITCHES, AND OTHER EQUIPMENT REQUIRED TO ACHIEVE CONTROL FUNCTIONS DESCRIBED.. MANUFACTURER RECOMMENDATIONS SHALL SUPERSEDE SENSOR QUANTITIES AND LOCATIONS ILLUSTRATED ON LIGHTING PLANS.

B. OWNER TO CONFIRM TIMECLOCK SETPOINTS FOR HOURS OF OPERATION.

C. 20 MINUTE TIMEOUT FOR ALL OCCUPANCY SENSORS UNLESS OTHERWISE NOTED.

LIGHTING CONTROL STATIONS

CONTROL STATION DESIGNATION	ZONES CONTROLLED	BUTTON NUMBER	FUNCTION	LABEL	NOTES
$	ALL	1	ALL ON	ON	
		2	ALL OFF	OFF	
$OS	ALL	1	ALL ON	ON	
		2	ALL OFF	OFF	
$LVA	ALL	1	Zone a ON/HOLD DIM UP	↑	
		2	Zone a OFF/HOLD DIM DOWN	V	
$LVB	a	1	Zone a ON/HOLD DIM UP	↑	
	a	2	Zone a OFF/HOLD DIM DOWN	V	
	b	3	Zone b ON/HOLD DIM UP	↑	
	b	4	Zone b OFF/HOLD DIM DOWN	V	

GENERAL NOTES:

A. SWITCH STYLE AND/OR BUTTON NUMBERS CAN BE CONSOLIDATED OR CHANGED BASED ON FINAL CONTROLS MANUFACTURER AS LONG AS CONTROL INTENT FUNCTIONALITY REMAINS.

B. SWITCH PLATE FINISH PER ARCHITECT

C. REFER TO SOO AND DIVISION SPECIFICATIONS FOR ADDITIONAL INFORMATION AND BOD MANUFACTURER.

D. FINAL LABELS TO BE REVIEWED BY OWNER PRIOR TO ENGRAVING.

Revisions: Date:

CONSULTANT

Consultant: SÄZÄN GROUP
111 SW Fifth Ave., Ste. 3210
Portland, Oregon 97204
Tel 503.416.2400
Fax 503.416.2087
SAZAN # 735-24021

ARCHITECT/ENGINEER OF RECORD

A/E: Blue Trident, LLC Engineering and Construction Services
BLUE TRIDENT, LLC
900 Winslow Way E, Suite 130
BAINBRIDGE ISLAND, WA 98110
206-972-0645
EMMANUEL (MANNY) BAUTISTA, PE, F.SAME

STAMP

REGISTERED PROFESSIONAL ENGINEER 51012PE OREGON JAN. 9, 2018 CHRISTOPHER LARSON
Expires: 12/31/2026

Office of Construction and Facilities Management
VA U.S. Department of Veterans Affairs

Drawing Title: B11 ELECTRICAL LIGHTING SCHEDULE
Approved: director
Phase: Issued For Construction
FULLY SPRINKLERED
Project Title: Seismic Retrofit and Renovate Building 11
Location: VA Roseburg Healthcare System
Issue Date: 04/03/2026
Checked: CL
Drawn: SW
Project Number: 653-107
Building Number: 11
Drawing Number: EL601

VA FORM 08 - 6231

Autodesk Docs://FDX 735-24021 Seismic Retrofit Roseburg for Buildings 11, 13 and 16/735-24021 Roseburg SR Building 11 ETFP V24.rvt
4/3/2026 2:32:01 PM

FLAG NOTES

1. REINSTALL EXISTING EQUIPMENT PANEL AND ASSOCIATED CONTROLS, EXTEND CONDUIT AND WIRING AS REQUIRED.
2. DEVICES THIS AREA ARE EXISTING TO REMAIN.
3. EXISTING TO REMAIN.
4. REINSTALL EXISTING TELEPHONE AND METER EQUIPMENT.
5. PROVIDE NEW PANELBOARD TO REPLACE REMOVED PANEL. EXTEND AND/OR PROVIDE NEW CONDUIT AND WIRING TO REPLACE EXISTING REMOVED DURING DEMOLITION. EXTEND NEW CONDUIT AND WIRING AS REQUIRED. RETERMINATE ALL FEEDER AND BRANCH CIRCUITS COMPLETE.
6. PROVIDE NEW EQUIPMENT TO REPLACE EXISTING REMOVED DURING DEMOLITION. EXTEND CONDUIT AND WIRING AS REQUIRED.
7. PROVIDE NEW DEVICES TO MATCH EXISTING REMOVED DURING DEMOLITION. RECONNECT TO EXISTING CIRCUITRY, EXTEND NEW CONDUIT AND WIRING AS REQUIRED, TYPICAL ALONG STRUCTURALLY REINFORCED WALL.
8. REINSTALL EXISTING DEVICE REMOVED DURING DEMOLITION. PROVIDE NEW CONDUIT AS REQUIRED, RECONNECT TO EXISTING CABLE.
9. REINSTALL AND PROVIDE CONNECTIONS TO DOOR CONTROLS THAT WERE REMOVED DURING DEMOLITION. EXTEND CONDUIT AND WIRING AS REQUIRED.
10. STRIP FOOTINGS AND CONCRETE OVERLAY (SHOTCRETE) WILL BE INSTALLED IN THE MECHANICAL CRAWLSPACE ALONG ENTIRETY OF INDICATED GRIDLINE. REFER TO STRUCTURAL AND SPECIFICATION SECTION 13 05 41. REMOVE AND/OR RELOCATE EXISTING CONDUITS IN CONFLICT. PROVIDE SPLICE BOXES AND EXTEND CONDUIT AND WIRING AROUND AREA OF STRUCTURAL WORK.
11. EXISTING PANEL TO REMAIN . EXTEND AND/OR PROVIDE NEW CONDUIT AND WIRING TO REPLACE ANY EXISTING REMOVED DURING DEMOLITION. EXTEND NEW CONDUIT AND WIRING AS REQUIRED. RETERMINATE ALL FEEDER AND BRANCH CIRCUITS COMPLETE AS REQUIRED.
12. CONNECT NEW AIR HANDLING UNIT. UTILIZE EXISTING CONDUIT AND CONDUCTORS WHERE FEASIBLE. COORDINATE EQUIPMENT CONNECTIONS WITH MECHANICAL DRAWINGS AND EQUIPMENT SCHEDULE.
13. PROVIDE AND INSTALL NEW EXHAUST FAN, COMPLETE WITH MOTOR, DISCONNECT SWITCH, CONDUIT, WIRING, AND ALL REQUIRED ELECTRICAL CONNECTIONS FOR A COMPLETE AND OPERATIONAL INSTALLATION. COORDINATE WITH MECHANICAL DRAWINGS AND EQUIPMENT REQUIREMENTS.

SHEET NOTES

A. REFER TO STRUCTURAL PLANS AND SPECIFICATION SECTION 13 05 41 FOR STRUCTURAL WORK.

B. FOR CIRCUITS CROSSING SEISMIC JOINT, PROVIDE EXPANSION DEFLECTION FITTING WITH A MINIMUM OF 1-1/2" DEFLECTION CAPABILITY IN ALL DIRECTIONS.

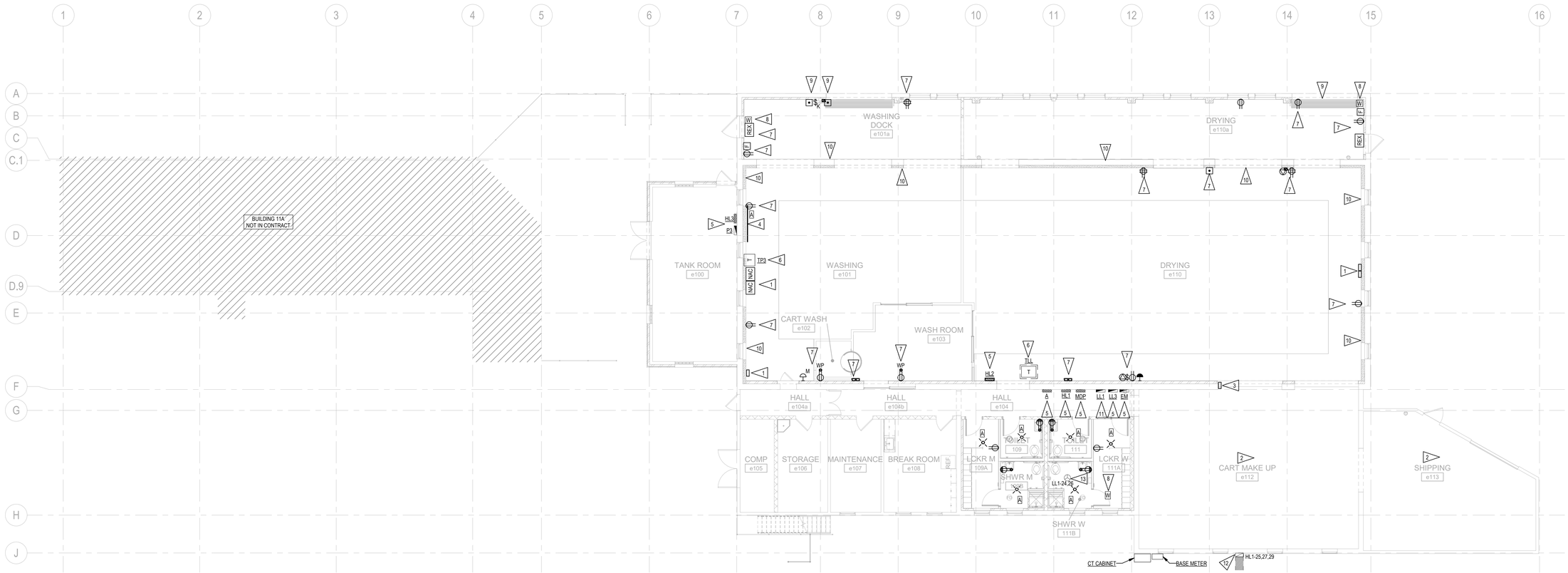

F1 B11 ELECTRICAL POWER - FIRST FLOOR PLAN
1/8" = 1'-0"

Graphic Scale: 1 inch = 8 feet
0 8' 16' 24' 32'

Revisions:	Date:

CONSULTANT

Consultant: SÄZÄN GROUP
111 SW Fifth Ave., Ste. 3210
Portland, Oregon 97204
Tel 503.416.2400
Fax 503.416.2087
SAZAN # 735-24021

ARCHITECT/ENGINEER OF RECORD

A/E: Blue Trident, LLC Engineering and Construction Services
BLUE TRIDENT, LLC
900 Winslow Way E, Suite 130
BAINBRIDGE ISLAND, WA 98110
206-972-0645
EMMANUEL (MANNY) BAUTISTA, PE, F.SAME

STAMP
REGISTERED PROFESSIONAL ENGINEER 51012PE JAN. 9, 2026 CHRISTOPHER LARSON
Expires: 12/31/2026

Office of Construction and Facilities Management
VA U.S. Department of Veterans Affairs

Drawing Title: B11 ELECTRICAL POWER - FIRST FLOOR PLAN	Phase: Issued For Construction	Project Title: Seismic Retrofit and Renovate Building 11	Project Number: 653-107
Approved: director	FULLY SPRINKLERED	Location: VA Roseburg Healthcare System	Building Number: 11
		Issue Date: 04/03/2026 · Checked: CL · Drawn: SW	Drawing Number: EP111

VA FORM 08 - 6231

Autodesk Docs://PDX 735-24021 Seismic Retrofit Roseburg for Buildings 11, 13 and 16/735-24021 Roseburg SR Building 11 ETFP V24.rvt
4/3/2026 2:32:03 PM

3-PHASE FEEDER SCHEDULE COPPER CONDUCTORS				
CONDUCTORS #1 AWG OR SMALLER ARE SIZED BASED ON 60 DEGREE TABLES				
CODE	PARALLEL SETS	CONDUIT SIZE	CONDUCTOR SIZE	GROUND CONDUCTOR
20	1	3/4"	3#12	#12
20N	1	3/4"	3#12, #12N	#12
30	1	3/4"	3#10	#10
30N	1	3/4"	3#10, #10N	#10
40	1	1"	3#8	#10
40N	1	1"	3#8, #8N	#10
50	1	1"	3#6	#10
50N	1	1"	3#6, #6N	#10
60	1	1-1/4"	3#4	#10
60N	1	1-1/4"	3#4, #4N	#10
70	1	1-1/4"	3#4	#8
70N	1	1-1/4"	3#4, #4N	#8
80	1	1-1/4"	3#2	#8
80N	1	1-1/2"	3#2, #2N	#8
90	1	1-1/4"	3#2	#8
90N	1	1-1/2"	3#2, #2N	#8
100	1	1-1/2"	3#1	#8
100N	1	1-1/2"	3#1, #1N	#8
125	1	1-1/2"	3#1	#6
125N	1	1-1/2"	3#1, #1N	#6
150	1	2"	3#1/0	#6
150N	1	2"	3#1/0, #1/0N	#6
175	1	2"	3#2/0	#6
175N	1	2"	3#2/0, #2/0N	#6
200	1	2"	3#3/0	#6
200N	1	2"	3#3/0, #3/0N	#6
225	1	2"	3#4/0	#4
225N	1	2-1/2"	3#4/0, #4/0N	#4
250	1	2-1/2"	3#250	#4
250N	1	3"	3#250, #250N	#4
300	1	3"	3#350	#4
300N	1	3"	3#350, #350N	#4
350	1	3"	3#500	#2
350N	1	3-1/2"	3#500, #500N	#2
380	1	3"	3#500	#2
380N	1	3-1/2"	3#500, #500N	#2
400	2	2"	3#3/0	#2
400N	2	2"	3#3/0, #3/0N	#2
500	2	2-1/2"	3#250	#2
500N	2	2-1/2"	3#250, #250N	#2
600	2	3"	3#350	#1
600N	2	3"	3#350, #350N	#1
700	2	3"	3#500	#1/0
700N	2	3-1/2"	3#500, #500N	#1/0
760	2	3"	3#500	#1/0
760N	2	3-1/2"	3#500, #500N	#1/0
800	3	3"	3#300	#1/0
800N	3	3-1/2"	3#300, #300N	#1/0
1000	3	3"	3#400	#2/0
1000N	3	3"	3#400, #400N	#2/0
1200	4	3"	3#350	#3/0
1200N	4	3"	3#350, #350N	#3/0
1600	5	3"	3#400	#4/0
1600N	5	3"	3#400, #400N	#4/0
2000	6	3"	3#400	#250
2000N	6	3"	3#400, #400N	#250
2500	7	3"	3#500	#350
2500N	7	3-1/2"	3#500, #500N	#350
3000	8	3"	3#500	#400
3000N	8	3-1/2"	3#500, #500N	#400
3500	10	3"	3#500	#400
3500N	10	3-1/2"	3#500, #500N	#400
4000	11	3"	3#500	#500
4000N	11	3-1/2"	3#500, #500N	#500
EXIST	EXISTING FEEDER TO REMAIN			

TRANSFORMER FEEDER SCHEDULE COPPER CONDUCTORS					
CONDUCTORS #1 AWG OR SMALLER ARE SIZED BASED ON 60 DEGREE TABLES					
CODE	TRANSFORMER	PARALLEL SETS	CONDUIT SIZE	CONDUCTOR SIZE	GROUND CONDUCTOR
15T	15KVA PRIMARY	1	3/4"	3#10	#10
	15KVA SECONDARY	1	1"	3#6, #6N	#8
30T	30KVA PRIMARY	1	1"	3#6	#10
	30KVA SECONDARY	1	1-1/2"	3#1, #1N	#6
45T	45KVA PRIMARY	1	1-1/4"	3#4	#8
	45KVA SECONDARY	1	2"	3#1/0, #1/0N	#6
75T	75KVA PRIMARY	1	1-1/2"	3#1	#6
	75KVA SECONDARY	1	2-1/2"	3#250, #250N	#2
112T	112.5KVA PRIMARY	1	2"	(3) #2/0	#6
	112.5KVA SECONDARY	1	3"	3#500, #500N	#1/0
150T	150KVA PRIMARY	1	2"	3#4/0	#4
	150KVA SECONDARY	2	2-1/2"	3#250, #250N	#1/0
225T	225KVA PRIMARY	1	3"	3#500	#2
	225KVA SECONDARY	2	3"	3#500, #500N	#1/0
300T	300KVA PRIMARY	2	2-1/2"	3#250	#2
	300KVA SECONDARY	3	3"	3#400, #400N	#3/0
500T	500KVA PRIMARY	3	3"	3#300	#1/0
	500KVA SECONDARY	5	3"	3#400, #400N	#250

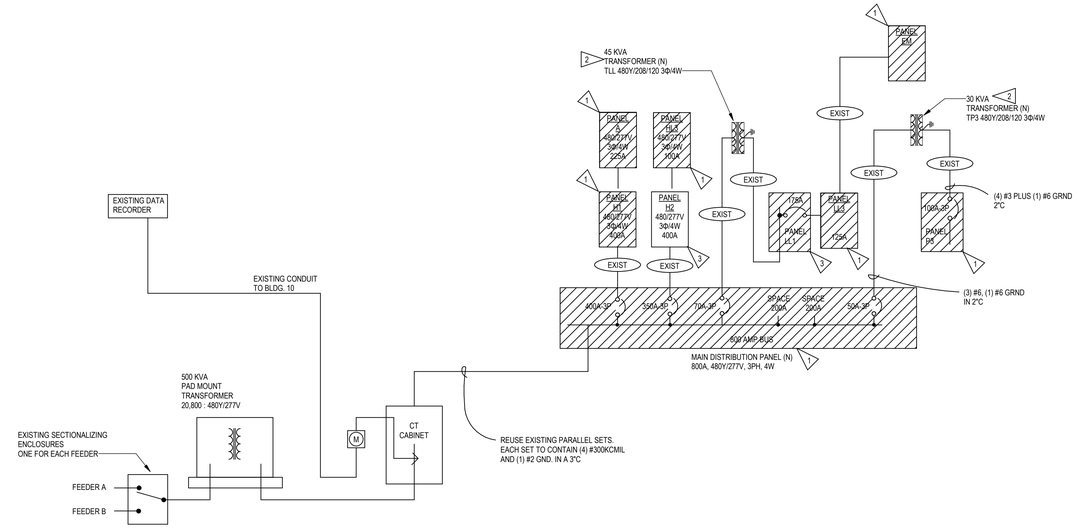

C5 BUILDING 11 DEMOLITION ONE-LINE DIAGRAM
NTS

FLAG NOTES

1. EXISTING PANELBOARD TO BE REPLACED. DEMO PANEL, MAINTAIN EXISTING FEEDER AND BRANCH CIRCUITS FOR RECONNECTION TO NEW PANELBOARD.
2. EXISTING EQUIPMENT TO BE REPLACED. DEMO EXISTING, MAINTAIN EXISTING FEEDER FOR RECONNECTION.
3. EXISTING PANELBOARD TO BE RELOCATED. EXTEND EXISTING FEEDER TO NEW PANELBOARD LOCATION.
4. PROVIDE NEW PANELBOARD TO REPLACE REMOVED PANEL. EXTEND AND/OR PROVIDE NEW CONDUIT AND WIRING TO REPLACE EXISTING REMOVED DURING DEMOLITION. EXTEND NEW CONDUIT AND WIRING AS REQUIRED. RETERMINATE ALL FEEDER AND BRANCH CIRCUITS COMPLETE.
5. PROVIDE NEW EQUIPMENT TO REPLACE EXISTING REMOVED DURING DEMOLITION. EXTEND CONDUIT AND WIRING AS REQUIRED.

MECHANICAL EQUIPMENT CONNECTION SCHEDULE

SCHEDULE NOTES:
1) NEMA-3R FUSED DISCONNECT SWITCH.
2) PROVIDE MOTOR-RATED SWITCH, WITH WP COVER, AS DISCONNECT.
3) PROVIDE MOTOR-RATED SWITCH AS DISCONNECT.
4) EXHAUST FAN SHARES CIRCUIT WITH OTHER EXHAUST FANS.
5) WATER HEATER SHARES CIRCUIT WITH OTHER WATER HEATER.

ABBREVIATION:
FLA: FULL LOAD AMPERES
HP: HORSEPOWER
KVA: KILOVOLT-AMPERES
KW: KILOWATTS
MCA: MINIMUM CIRCUIT AMPACITY
MOCP: MAXIMUM OVERCURRENT PROTECTIVE DEVICE
OFCI: OWNER-FURNISHED, OWNER-INSTALLED
OFCI: OWNER-FURNISHED, CONTRACTOR-INSTALLED
W: WATTS
WP: WEATHERPROOF
VA: VOLT-AMPERE

SCHEDULE GENERAL NOTES
1) DISCONNECTS ARE SHOWN AS FRAME RATING / FUSE SIZE.
2) PROVIDE DUCT SMOKE DETECTORS FOR ALL HVAC UNITS SUPPLYING 2,000 CFM OR MORE. COORDINATE WITH FIRE ALARM CONTRACTOR.
3) ALL 120V, 15A AND 20A RECEPTACLES AND/OR EQUIPMENT CIRCUITS SHALL BE GFCI PROTECTED PER NOTE 2, UNLESS NOTED OTERWISE/

NO.	EQUIPMENT DESCRIPTION	LOCATION	VA	HP	KW	KVA	MCA	MOCP	VOLTAGE	PHASES	CONDUIT SIZE	WIRE SIZE	DISC/FUSE/POLES	CIRCUIT NUMBER	NOTES
AHU-11	AIR HANDLER UNIT	OUTSIDE B11	97270	[redacted]	1.0	97.3	117.0	150 A	480	3	2"	3#1/0, 1#6 GND	200/150/3	HL1 - 25,27,29	1
EF-5	EXHAUST FAN	PAINT STORAGE	416	[redacted]		1.9	20 A	208	1	3/4"	2#12, 1#12 GND			LL1 - 24,26	

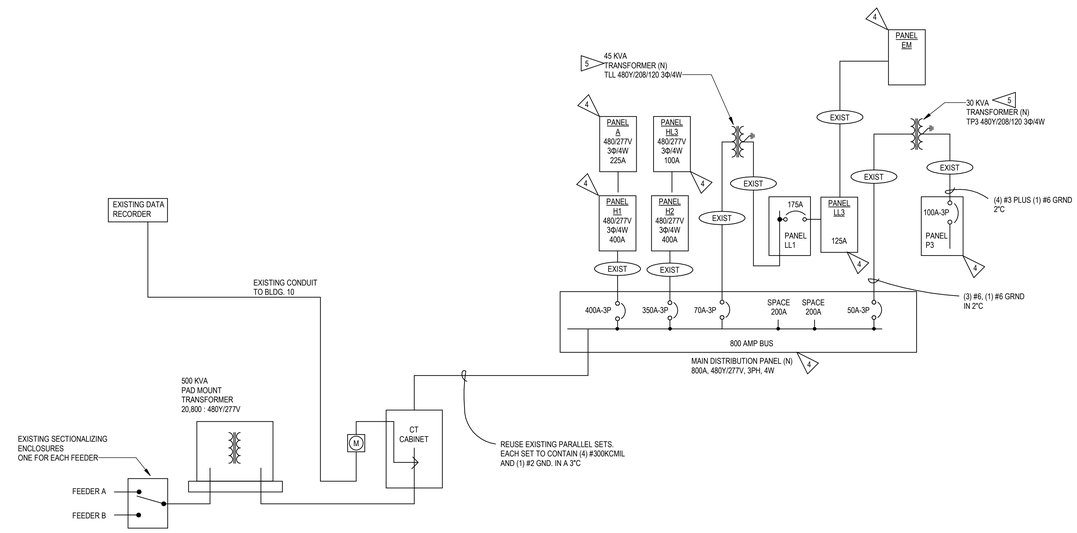

F5 BUILDING 11 NEW ONE-LINE DIAGRAM
NTS

Revisions: Date:

CONSULTANT
Consultant: SAZAN GROUP
111 SW Fifth Ave., Ste. 3210
Portland, Oregon 97204
Tel 503.416.2400
Fax 503.416.2087
SAZAN # 735-24021

ARCHITECT/ENGINEER OF RECORD
A/E: Blue Trident, LLC Engineering and Construction Services
BLUE TRIDENT, LLC
900 Winslow Way E, Suite 130
BAINBRIDGE ISLAND, WA 98110
206-972-0645
EMMANUEL (MANNY) BAUTISTA, PE, F.SAME

STAMP
REGISTERED PROFESSIONAL ENGINEER 51012PE OREGON JAN. 9, 2026 CHRISTOPHER LARSEN
Expires: 12/31/2026

Office of Construction and Facilities Management
VA U.S. Department of Veterans Affairs

Drawing Title	Phase	Project Title	Project Number
B11 ELECTRICAL ONE-LINE DIAGRAM AND EQUIPMENT SCHEDULE	Issued For Construction	Seismic Retrofit and Renovate Building 11	653-107
			Building Number: 11
Approved: director	FULLY SPRINKLERED	Location: VA Roseburg Healthcare System	Drawing Number: EP621
		Issue Date: 04/03/2026 · Checked: CL · Drawn: SW	

VA FORM 08 - 6231

Autodesk Docs://PDX 735-24021 Seismic Retrofit Roseburg for Buildings 11, 13 and 16/735-24021 Roseburg SR Building 11 ETFP V24.rvt
4/3/2026 2:22:05 PM

PANEL MDP SCHEDULE

LOCATION: **HALL e104**
GROUNDING: **EQUIPMENT GROUND BUS**
FED FROM:
VOLTAGE: **480/277 Wye 3-PH, 4-WIRE**
TYPE: **BOLT-ON**
MOUNTING: **SURFACE**
SKIRTS: **NONE**
A.I.C. RATING:

800 A MCB

CKT #	ITEM	NOTE	AMPS	POLE	A		B		C		POLE	AMPS	NOTE	ITEM	CKT #
1	XFMR TLL & PANEL LL1		70 A	3	0 VA	0 VA					3	50 A		XFMR TP3 & PANEL P3	2
3	--	--	--	--			0 VA	0 VA			--	--	--	--	4
5	--	--	--	--					0 VA	0 VA	--	--	--	--	6
7	PANEL HL1		400 A	3	0 VA	0 VA					3	350 A		PANEL HL2	8
9	--	--	--	--			0 VA	0 VA			--	--	--	--	10
11	--	--	--	--					0 VA	0 VA	--	--	--	--	12
13															14
15															16
17															18
19															20
21															22
23															24
25															26
27															28
29															30
31															32
33															34
35															36
37															38
39															40
41															42
			Total Load:		0 VA		0 VA		0 VA						
			Total Amps:		0 A		0 A		0 A						

Load Classification	Connected Load	Demand Factor	Estimated Demand	Panel Totals	
				Total Conn. Load:	0 VA
				Total Est. Demand:	0 VA
				Total Conn. Current:	0 A
				Total Est. Demand Current:	0 A

Notes:

PANEL HL1 SCHEDULE

LOCATION: **HALL e104**
GROUNDING: **EQUIPMENT GROUND BUS**
FED FROM:
VOLTAGE: **480/277 Wye 3-PH, 4-WIRE**
TYPE: **BOLT-ON**
MOUNTING: **SURFACE**
SKIRTS: **NONE**
A.I.C. RATING:

400 A MCB

CKT #	ITEM	NOTE	AMPS	POLE	A		B		C		POLE	AMPS	NOTE	ITEM	CKT #
1	(E) PANEL A		225 A	3	0 VA	0 VA					3	125 A		(E) A/C UNIT 1 CLEAN SIDE	2
3	--	--	--	--			0 VA	0 VA			--	--	--	--	4
5	--	--	--	--					0 VA	0 VA	--	--	--	--	6
7	(E) AIR COMPRESSOR 1		50 A	3	0 VA	0 VA					3	100 A		(E) A/C UNIT 2 DIRTY SIDE	8
9	--	--	--	--			0 VA	0 VA			--	--	--	--	10
11	--	--	--	--					0 VA	0 VA	--	--	--	--	12
13	(E) AIR COMPRESSOR 2		50 A	3	0 VA	0 VA					3	40 A		(E) SPARE	14
15	--	--	--	--			0 VA	0 VA			--	--	--	--	16
17	--	--	--	--					0 VA	0 VA	--	--	--	--	18
19	(E) A/C UNIT 3 OFFICE		20 A	3	0 VA	0 VA					3	20 A		(E) DIRTY SIDE CONV	20
21	--	--	--	--			0 VA	0 VA			--	--	--	--	22
23	--	--	--	--					0 VA	0 VA	--	--	--	--	24
25	AHU-11		20 A	3	32423 VA	--					1	--		SPACE	26
27	--		--	--			32423 VA	--			1	--		SPACE	28
29	--	--	--	--					32423 VA	--	1	--		SPACE	30
31	SPACE		--	1	--	--					1	--		SPACE	32
33	SPACE		--	1			--	--			1	--		SPACE	34
35	SPACE		--	1					--	--	1	--		SPACE	36
37	SPACE		--	1	--	--					1	--		SPACE	38
39	SPACE		--	1			--	--			1	--		SPACE	40
41	SPACE		--	1					--	--	1	--		SPACE	42
			Total Load:		32423 VA		32423 VA		32423 VA						
			Total Amps:		117 A		117 A		117 A						

Load Classification	Connected Load	Demand Factor	Estimated Demand	Panel Totals	
Other	97270 VA	100.00%	97270 VA		
				Total Conn. Load:	97270 VA
				Total Est. Demand:	97270 VA
				Total Conn. Current:	117 A
				Total Est. Demand Current:	117 A

Notes:

PANEL P3 SCHEDULE

LOCATION: **TANK ROOM e100**
GROUNDING: **EQUIPMENT GROUND BUS**
FED FROM:
VOLTAGE: **120/208 Wye 3-PH, 4-WIRE**
TYPE: **BOLT-ON**
MOUNTING: **SURFACE**
SKIRTS: **NONE**
A.I.C. RATING:

60 A MLO

CKT #	ITEM	NOTE	AMPS	POLE	A		B		C		POLE	AMPS	NOTE	ITEM	CKT #
1	(E) SPARE		60 A	3	0 VA	0 VA					1	20 A		(E) MECHANICAL ROOM OUTLETS	2
3	--	--	--	--			0 VA	0 VA			1	20 A		(E) WATER SOFTENER	4
5	--	--	--	--					0 VA	0 VA	1	20 A		(E) FIRE ALARM BOOSTER PANEL	6
7	(E) SPARE		60 A	3	0 VA	0 VA					3	20 A		(E) SPARE	8
9	--	--	--	--			0 VA	0 VA			--	--	--	--	10
11	--	--	--	--					0 VA	0 VA	--	--	--	--	12
13	(E) SPARE		30 A	3	0 VA	--					1	--		SPACE	14
15	--	--	--	--			0 VA	0 VA			2	20 A		(E) SPARE	16
17	--	--	--	--					0 VA	0 VA	--	--	--	--	18
19	(E) WATER HEATER		30 A	3	0 VA	0 VA					3	20 A		(E) SPARE	20
21	--	--	--	--			0 VA	0 VA			--	--	--	--	22
23	--	--	--	--					0 VA	0 VA	--	--	--	--	24
25	SPACE		--	1	--	0 VA					3	20 A		(E) SPARE	26
27	(E) UNKNOWN		20 A	1			0 VA	0 VA			--	--	--	--	28
29	(E) UNKNOWN		20 A	1					0 VA	0 VA	--	--	--	--	30
31	SPACE		--	1	--	0 VA					3	20 A		(E) WELDING OUTLET	32
33	SPACE		--	1			--	0 VA			--	--	--	--	34
35	SPACE		--	1					--	0 VA	--	--	--	--	36
37															38
39															40
41															42
			Total Load:		0 VA		0 VA		0 VA						
			Total Amps:		0 A		0 A		0 A						

Load Classification	Connected Load	Demand Factor	Estimated Demand	Panel Totals	
				Total Conn. Load:	0 VA
				Total Est. Demand:	0 VA
				Total Conn. Current:	0 A
				Total Est. Demand Current:	0 A

Notes:

PANEL A SCHEDULE

LOCATION: **HALL e104**
GROUNDING: **EQUIPMENT GROUND BUS**
FED FROM:
VOLTAGE: **480/277 Wye 3-PH, 4-WIRE**
TYPE: **BOLT-ON**
MOUNTING: **SURFACE**
SKIRTS: **NONE**
A.I.C. RATING:

225 A MCB

CKT #	ITEM	NOTE	AMPS	POLE	A		B		C		POLE	AMPS	NOTE	ITEM	CKT #
1	(E) SMALL PIECE FOLDERS		15 A	3	0 VA	0 VA					3	30 A		(E) WASHER 1	2
3	--	--	--	--			0 VA	0 VA			--	--	--	--	4
5	--	--	--	--					0 VA	0 VA	--	--	--	--	6
7	(E) SHEET CONVEYOR		20 A	3	0 VA	0 VA					3	70 A		(E) SPARE	8
9	--	--	--	--			0 VA	0 VA			--	--	--	--	10
11	--	--	--	--					0 VA	0 VA	--	--	--	--	12
13	SPACE		--	1	--	0 VA					3	15 A		(E) EXHAUST FAN 1	14
15	SPACE		--	1			--	0 VA			--	--	--	--	16
17	SPACE		--	1					--	0 VA	--	--	--	--	18
19															20
21															22
23															24
25															26
27															28
29															30
31															32
33															34
35															36
37															38
39															40
41															42
			Total Load:		0 VA		0 VA		0 VA						
			Total Amps:		0 A		0 A		0 A						

Load Classification	Connected Load	Demand Factor	Estimated Demand	Panel Totals	
				Total Conn. Load:	0 VA
				Total Est. Demand:	0 VA
				Total Conn. Current:	0 A
				Total Est. Demand Current:	0 A

Notes:

Revisions:
Date:

CONSULTANT
Consultant: SÄZÄN GROUP
111 SW Fifth Ave., Ste. 3210
Portland, Oregon 97204
Tel 503.416.2400
Fax 503.416.2087
SAZAN # 735-24021

ARCHITECT/ENGINEER OF RECORD
A/E: Blue Trident, LLC Engineering and Construction Services
BLUE TRIDENT, LLC
900 Winslow Way E, Suite 130
BAINBRIDGE ISLAND, WA 98110
206-972-0645
EMMANUEL (MANNY) BAUTISTA, PE, F.SAME

STAMP
REGISTERED PROFESSIONAL ENGINEER 51012PE OREGON JAN. 9, 2018 CHRISTOPHER LARSON
Expires: 12/31/2026

Office of Construction and Facilities Management
VA U.S. Department of Veterans Affairs

Drawing Title: B11 ELECTRICAL PANEL SCHEDULES
Approved: director
Phase: Issued For Construction
FULLY SPRINKLERED
Project Title: Seismic Retrofit and Renovate Building 11
Location: VA Roseburg Healthcare System
Issue Date: 04/03/2026
Checked: CL
Drawn: SW
Project Number: 653-107
Building Number: 11
Drawing Number: EP622

VA FORM 08 - 6231

Autodesk Docs://FDX 735-24021 Seismic Retrofit Roseburg for Buildings 11, 13 and 16/735-24021 Roseburg SR Building 11 ETFP V24.rvt
4/3/2026 2:32:06 PM

PANEL HL2 SCHEDULE

LOCATION: **DRYING e110**
GROUNDING: **EQUIPMENT GROUND BUS**
FED FROM:
VOLTAGE: **480/277 Wye 3-PH, 4-WIRE**
TYPE: **BOLT-ON**
MOUNTING: **SURFACE**
SKIRTS: **NONE**
A.I.C. RATING:

400 A MCB

CKT #	ITEM	NOTE	AMPS	POLE	A		B		C		POLE	AMPS	NOTE	ITEM	CKT #
1	(E) CENTRAL VACUUM		20 A	3	0 VA	0 VA					3	60 A		(E) WASHER 2	2
3	--	--	--	--			0 VA	0 VA			--	--	--	--	4
5	--	--	--	--					0 VA	0 VA	--	--	--	--	6
7	(E) CART WASHER		40 A	3	0 VA	0 VA					3	60 A		(E) WASHER 3	8
9	--	--	--	--			0 VA	0 VA			--	--	--	--	10
11	--	--	--	--					0 VA	0 VA	--	--	--	--	12
13	(E) WASHER 4		20 A	3	0 VA	0 VA					3	20 A		(E) WASHER 5	14
15	--	--	--	--			0 VA	0 VA			--	--	--	--	16
17	--	--	--	--					0 VA	0 VA	--	--	--	--	18
19	(E) PANEL HL3		100 A	3	0 VA	0 VA					3	15 A		(E) DRYER TAKE AWAY CONVEYOR	20
21	--	--	--	--			0 VA	0 VA			--	--	--	--	22
23	--	--	--	--					0 VA	0 VA	--	--	--	--	24
25	(E) DRYER 2 AND 3		20 A	3	0 VA	0 VA					3	20 A		(E) CLEAN LINEN CONVEYOR	26
27	--	--	--	--			0 VA	0 VA			--	--	--	--	28
29	--	--	--	--					0 VA	0 VA	--	--	--	--	30
31	(E) IRONER		100 A	3	0 VA	0 VA					3	20 A		(E) BLANKET BLASTER	32
33	--	--	--	--			0 VA	0 VA			--	--	--	--	34
35	--	--	--	--					0 VA	0 VA	--	--	--	--	36
37	(E) VIBRA STEAMER		80 A	3	0 VA	0 VA					3	60 A		(E) CLM DRYER	38
39	--	--	--	--			0 VA	0 VA			--	--	--	--	40
41	--	--	--	--					0 VA	0 VA	--	--	--	--	42
				Total Load:	0 VA		0 VA		0 VA						
				Total Amps:	0 A		0 A		0 A						

Load Classification	Connected Load	Demand Factor	Estimated Demand	Panel Totals	
				Total Conn. Load:	0 VA
				Total Est. Demand:	0 VA
				Total Conn. Current:	0 A
				Total Est. Demand Current:	0 A

Notes:

PANEL HL3 SCHEDULE

LOCATION: **TANK ROOM e100**
GROUNDING: **EQUIPMENT GROUND BUS**
FED FROM:
VOLTAGE: **480/277 Wye 3-PH, 4-WIRE**
TYPE: **BOLT-ON**
MOUNTING: **SURFACE**
SKIRTS: **NONE**
A.I.C. RATING:

100 A MCB

CKT #	ITEM	NOTE	AMPS	POLE	A		B		C		POLE	AMPS	NOTE	ITEM	CKT #
1	(E) CONDENSATE PUMP		15 A	3	0 VA	0 VA					3	30 A		(E) HEAT EXCHANGER	2
3	--	--	--	--			0 VA	0 VA			--	--	--	--	4
5	--	--	--	--					0 VA	0 VA	--	--	--	--	6
7	(E) TRIPLE PUMP		50 A	3	0 VA	0 VA					3	40 A		(E) VIBRA STEAMER	8
9	--	--	--	--			0 VA	0 VA			--	--	--	--	10
11	--	--	--	--					0 VA	0 VA	--	--	--	--	12
13	SPACE		--	1	--	0 VA					3	20 A		(E) A/C UNIT 4	14
15	SPACE		--	1			--	0 VA			--	--	--	--	16
17	SPACE		--	1					--	0 VA	--	--	--	--	18
19															20
21															22
23															24
25															26
27															28
29															30
31															32
33															34
35															36
37															38
39															40
41															42
				Total Load:	0 VA		0 VA		0 VA						
				Total Amps:	0 A		0 A		0 A						

Load Classification	Connected Load	Demand Factor	Estimated Demand	Panel Totals	
				Total Conn. Load:	0 VA
				Total Est. Demand:	0 VA
				Total Conn. Current:	0 A
				Total Est. Demand Current:	0 A

Notes:

PANEL LL1 SCHEDULE

LOCATION: **HALL e104**
GROUNDING: **EQUIPMENT GROUND BUS**
FED FROM:
VOLTAGE: **120/208 Wye 3-PH, 4-WIRE**
TYPE: **BOLT-ON**
MOUNTING: **SURFACE**
SKIRTS: **NONE**
A.I.C. RATING:

300 A MLO

CKT #	ITEM	NOTE	AMPS	POLE	A		B		C		POLE	AMPS	NOTE	ITEM	CKT #
1	PANEL LL3		100 A	3	0 VA	0 VA					1	20 A		(E) UNKNOWN	2
3	--	--	--	--			0 VA	0 VA			1	20 A		(E) UNKNOWN	4
5	--	--	--	--					0 VA	0 VA	2	40 A		(E) UNKNOWN	6
7	(E) UNKNOWN		20 A	1	0 VA	0 VA					--	--	--	--	8
9	(E) UNKNOWN		20 A	1			0 VA	0 VA			3	30 A		(E) UNKNOWN	10
11	(E) UNKNOWN		20 A	1					0 VA	0 VA	--	--	--	--	12
13	(E) UNKNOWN		20 A	1	0 VA	0 VA					--	--	--	--	14
15	(E) UNKNOWN		20 A	1			0 VA	0 VA			1	20 A		(E) UNKNOWN	16
17	(E) UNKNOWN		20 A	1					0 VA	0 VA	1	20 A		(E) UNKNOWN	18
19	(E) UNKNOWN		20 A	1	0 VA	0 VA					1	20 A		(E) UNKNOWN	20
21	(E) UNKNOWN		20 A	1			0 VA	0 VA			1	20 A		(E) UNKNOWN	22
23	(E) UNKNOWN		20 A	1					0 VA	208 VA	2	20 A		EF-5	24
25	(E) UNKNOWN		20 A	1	0 VA	208 VA					--	--	--	--	26
27	(E) UNKNOWN		20 A	1			0 VA	--			1	--		SPACE	28
29	(E) UNKNOWN		20 A	1					0 VA	--	1	--		SPACE	30
31	(E) UNKNOWN		20 A	1	0 VA	--					1	--		SPACE	32
33	(E) UNKNOWN		20 A	1			0 VA	--			1	--		SPACE	34
35	(E) UNKNOWN		20 A	1					0 VA	--	1	--		SPACE	36
37	SPACE		--	1	--	--					1	--		SPACE	38
39	SPACE		--	1			--	--			1	--		SPACE	40
41	SPACE		--	1					--	--	1	--		SPACE	42
				Total Load:	208 VA		0 VA		208 VA						
				Total Amps:	2 A		0 A		2 A						

Load Classification	Connected Load	Demand Factor	Estimated Demand	Panel Totals	
Mechanical	416 VA	100.00%	416 VA		
				Total Conn. Load:	416 VA
				Total Est. Demand:	416 VA
				Total Conn. Current:	1 A
				Total Est. Demand Current:	1 A

Notes:

PANEL LL3 SCHEDULE

LOCATION: **HALL e104**
GROUNDING: **EQUIPMENT GROUND BUS**
FED FROM:
VOLTAGE: **120/208 Wye 3-PH, 4-WIRE**
TYPE: **BOLT-ON**
MOUNTING: **SURFACE**
SKIRTS: **NONE**
A.I.C. RATING:

125 A MLO

CKT #	ITEM	NOTE	AMPS	POLE	A		B		C		POLE	AMPS	NOTE	ITEM	CKT #
1	(E) OFFICE LIGHTS		20 A	1	0 VA	0 VA					2	20 A		(E) LINT TIMER #1	2
3	(E) LIGHTS CLEAN SIDE		20 A	1			0 VA	0 VA			--	--	--	--	4
5	(E) LIGHTS CLEAN SIDE		20 A	1					0 VA	0 VA	1	20 A		(E) LIGHTS DIRTY	6
7	(E) LIGHTS CLEAN SIDE		15 A	1	0 VA	0 VA					1	20 A		(E) LIGHTS DIRTY	8
9	(E) SCALE CLEAN SIDE		15 A	1			0 VA	0 VA			1	20 A		(E) LINT BLOW DOWN	10
11	(E) SPARE		15 A	1					0 VA	0 VA	1	20 A		(E) UNDER BLCD LIGHTS	12
13	(E) REC. CLEAN SIDE		20 A	1	0 VA	0 VA					1	20 A		(E) AIR DRYER	14
15	(E) MAINTENANCE PLUGS		20 A	1			0 VA	0 VA			1	20 A		(E) LIGHTS DIRTY	16
17	(E) AIR DRYER		20 A	1					0 VA	0 VA	1	20 A		(E) UNKNOWN	18
19	(E) EXHAUST FAN BATHROOM		20 A	1	0 VA	0 VA					1	20 A		(E) UNKNOWN	20
21	(E) OFFICE REC.		20 A	1			0 VA	0 VA			1	20 A		(E) HALL LIGHTS	22
23	(E) BREAK ROOM REC.		20 A	1					0 VA	0 VA	1	20 A		(E) MAINTENANCE	24
25	(E) BREAK ROOM REC.		20 A	1	0 VA	0 VA					1	20 A		(E) DOCK BOARD DIRTY	26
27	(E) COMPUTER, PRINTER		20 A	1			0 VA	0 VA			1	20 A		(E) DOCK BOARD CLEAN	28
29	(E) LINT TIMER #2		20 A	2					0 VA	0 VA	1	20 A		(E) FLOW BACK LIGHT	30
31	--	--	--	--	0 VA	0 VA					1	20 A		(E) DOCK LIGHTS CLEAN	32
33	(E) 200# DRYER BLOW DOWN		20 A	1			0 VA	0 VA			1	20 A		(E) DOCK DOOR CLEAN	34
35	SPACE		--	1					--	0 VA	1	20 A		(E) DOCK DOOR DIRTY	36
37	SPACE		--	1	--	0 VA					1	20 A		(E) UNKNOWN	38
39	SPACE		--	1			--	0 VA			1	20 A		(E) UNKNOWN	40
41	SPACE		--	1					--	--	1	--		SPACE	42
				Total Load:	0 VA		0 VA		0 VA						
				Total Amps:	0 A		0 A		0 A						

Load Classification	Connected Load	Demand Factor	Estimated Demand	Panel Totals	
				Total Conn. Load:	0 VA
				Total Est. Demand:	0 VA
				Total Conn. Current:	0 A
				Total Est. Demand Current:	0 A

Notes:

Revisions:
Date:

CONSULTANT
Consultant: SÄZÄN GROUP
111 SW Fifth Ave., Ste. 3210
Portland, Oregon 97204
Tel 503.416.2400
Fax 503.416.2087
SAZAN # 735-24021

ARCHITECT/ENGINEER OF RECORD
A/E: Blue Trident, LLC Engineering and Construction Services
BLUE TRIDENT, LLC
900 Winslow Way E, Suite 130
BAINBRIDGE ISLAND, WA 98110
206-972-0645
EMMANUEL (MANNY) BAUTISTA, PE, F.SAME

STAMP
REGISTERED PROFESSIONAL ENGINEER 51012PE OREGON JAN. 9, 2018 CHRISTOPHER LARSON
Expires: 12/31/2026

Office of Construction and Facilities Management
VA U.S. Department of Veterans Affairs

Drawing Title: B11 ELECTRICAL PANEL SCHEDULES
Approved: director
Phase: Issued For Construction
FULLY SPRINKLERED
Project Title: Seismic Retrofit and Renovate Building 11
Location: VA Roseburg Healthcare System
Issue Date: 04/03/2026
Checked: CL
Drawn: SW
Project Number: 653-107
Building Number: 11
Drawing Number: EP623

VA FORM 08 - 6231

Autodesk Docs://FDX 735-24021 Seismic Retrofit Roseburg for Buildings 11, 13 and 18/735-24021 Roseburg SR Building 11 ETFP V24.rvt
4/3/2026 2:32:08 PM