UNCLASSIFIED

Naval Facilities Engineering Systems Command
NAVFAC MID-ATLANTIC

eProjects WO#: 1855890

BUILDING 1100
REPAIR DAMAGED SECONDARY INLET GUIDES

(REVISION 1)

At the

Naval Air Station Oceana,
Virginia Beach, Virginia

PREPARED BY:

NAVFAC MID-ATLANTIC, PWD OCEANA FEAD, PM&E PRA21B2/21B3
NAS Oceana, 953 Hornet Drive, Building 820, Suite 210
Virginia Beach, Virginia 23460-2197

REQUEST FOR PROPOSAL (RFP) PREPARED BY:

DM (Design Manager): Jason L. Picano, P.E.

Submitted By: Christopher B. Morris, P.E. Date: 23 June 2025

REQUEST FOR PROPOSAL (RFP) APPROVED BY:

Design Engineering Branch Manager: Christopher B. Morris, P.E.
Signature/Date:

23 June 2025

MORRIS.CHRISTOPHER.B.1229858510

MORRIS.CHRISTOPHER.B.1229858510
2025.06.23
11:05:54 -04'00'

TABLE OF CONTENTS

PART 2 – GENERAL REQUIREMENTS

PART 3 – STATEMENT OF WORK / PROJECT PROGRAM

PART 4 – MINIMUM MATERIALS, ENGINEERING AND CONSTRUCTION REQUIREMENTS

PART 5 – PRESCRIPTIVE SPECIFICATIONS

(Section 01 31 23.13.20 – ELECTRONIC CONSTRUCTION AND FACILITY SUPPORT CONTRACT MANAGEMENT SYSTEM)

(Section 01 32 16.00 20 – SMALL PROJECT CONSTRUCTION PROGRESS SCHEDULES)

(Section 01 35 26.05 20 – GOVERNMENT REQUIREMENTS FOR DESIGN-BUILD)

PART 6 – ATTACHMENTS

ATTACHMENT 01 – SHEETS S-16 THROUGH S-24 OF DRAWINGS, “JET ENGINE TEST CELL MODERNIZATION”, BY BURNS AND MCDONNEL, 1996

ATTACHMENT 02 – SHOP DRAWINGS TITLED, “SPLITTER BAFFLE DETAILS”, DRAWING NO. 18 BY VITAL LINK, INCORPORATED, MARCH 1999

ATTACHMENT 03 – LIMITS OF WORK AND LAYDOWN AREA

ATTACHMENT 04 – NAVY REGION MID-ATLANTIC ENVIRONMENTAL CHECKLIST

Naval Facilities Engineering Systems Command
NAVFAC MID-ATLANTIC

Engineering Department

eProjects WO#: 1855890

PART 2 – GENERAL REQUIREMENTS

BUILDING 1100 REPAIR DAMAGED SECONDARY INLET GUIDES
NAS OCEANA
VIRGINIA BEACH, VIRGINIA

Part 2 General Requirements

PART 2

GENERAL REQUIREMENTS

TABLE OF CONTENTS

1/20

- 00 00 00 GENERAL REQUIREMENTS
- 01 11 00 SUMMARY OF WORK
- 01 14 00.05 20 WORK RESTRICTIONS
- 01 20 00.05 20 PRICE AND PAYMENT PROCEDURES
- 01 30 00.05 20 ADMINISTRATIVE REQUIREMENTS
- 01 31 19.05 20 POST AWARD MEETINGS
- 01 31 23.13 20 ELECTRONIC CONSTRUCTION AND FACILITY SUPPORT CONTRACT MANAGEMENT SYSTEM
- 01 32 16.00 20 SMALL PROJECT DESIGN AND CONSTRUCTION PROGRESS SCHEDULES
- 01 33 00.05 20 CONSTRUCTION SUBMITTAL PROCEDURES
- 01 33 10.05 20 DESIGN SUBMITTAL PROCEDURES
- 01 35 26.05 20 GOVERNMENT SAFETY REQUIREMENTS FOR DESIGN BUILD
- 01 45 00.05 20 DESIGN AND CONSTRUCTION QUALITY CONTROL
- 01 50 00.05 20 TEMPORARY FACILITIES AND CONTROLS
- 01 57 19 TEMPORARY ENVIRONMENTAL CONTROLS
- 01 74 19 CONSTRUCTION AND WASTE MANAGEMENT AND DISPOSAL
- 01 78 00 CLOSEOUT SUBMITTALS

00 00 00 GENERAL REQUIREMENTS

1.1 Definitions

As used throughout the contract, the following terms have the meaning set forth below:
Contracting Officer (KO): The individual designated to administer the contract. Throughout this contract this individual will be responsible and possess the authority to act on behalf of the Government with respect to the specific contract.

Contracting Officer Representative (COR): The individual designated by the Contracting Officer as the authorized representative of the Contracting Officer. The COR is responsible for monitoring performance and technical management of the effort required and should be contacted regarding questions or problems of a technical nature.

Contract: Contract or task order.

Contractor: The term Contractor refers to both the prime Contractor and all subcontractors, whether in contract with the Prime Contractor or other subcontractors at any tier, including the Designer of Record.

Designer of Record (DOR): Licensed architect/engineer working as subcontractor to or partner with prime Contractor who provides design for this contract.

Quality Control (QC): Contractor's system to control the quality of design, material, equipment and construction.

Quality Assurance (QA) Program: Government's program to evaluate the effectiveness of the Contractor's quality control. The Government's QA Program is not a substitute for the Contractor's QC Program.

Federal Holidays: New Year's Day, Martin Luther King Jr. Day, President's Day, Memorial Day, Juneteenth, Independence Day; Labor Day, Columbus Day, Veterans Day, Thanksgiving Day, and Christmas Day.

1.2 Accessibility

Provide barrier-free design in accordance with UFC 1-200-01, DoD Building Code.

1.3 Changes

No oral statement by any person other than the Contracting Officer, as provided in the Federal Acquisition Regulation (FAR) clause 52.243-5 entitled, "CHANGES AND CHANGED CONDITIONS," will in any manner or degree modify or otherwise affect the terms of this contract.

1.4 No Waiver by the Government

The failure of the Government in any one or more instances to insist upon strict performance to any of the terms of this contract or to exercise any option herein conferred is not to be construed as a waiver or relinquishment to any extent of the right to assert or rely upon such terms or options on any future occasion.

1.5 Equitable Adjustments

a. Whenever the Contractor submits a claim for equitable adjustment under a clause which provides for equitable adjustment of the contract, such claim must include all types of adjustments in the total amounts to which the clause entitles the Contractor, including, but not limited to, adjustment arising out of delays or disruptions.

b. Except as the parties may otherwise expressly agree, the Contractor must be deemed to have waived: (1) any adjustments to which he otherwise might be entitled under the clause where such claim fails to request such adjustments; and (2) any increase in the amount of equitable adjustments additional to those requested in its claim.

c. If required by the Contracting Officer, the Contractor agrees to execute a release, in form

and substance satisfactory to the Contracting Officer, as part of the supplemental agreement setting forth the aforesaid equitable adjustment. The Contractor further agrees that such release will discharge the Government, including its officers, agents, and employees, from any further claims, including, but not limited to, further claims arising out of delays or disruptions caused by the aforesaid change.

1.6 Warranty

Warrant all materials and work for not less than one year after final acceptance of the work, except as otherwise indicated in this RFP. If required to provide remedial repair of previously installed work due to latent defect or unacceptable work performance, warrant the repaired work for one year after the completion and acceptance of the repair. For warranted items, furnish the manufacturer's original written warranty accompanied by a copy of the supplier's receipt showing place of purchase, telephone number of supplier, address, delivery order number if applicable, and ticket number.

01 11 00 SUMMARY OF WORK

1.0 Protection of Government Property

Take special care to protect Government property. Return areas damaged as a result of construction under this contract to their original condition. In addition to FAR 52.236-9, *Protection of Existing Vegetation, Structures, Equipment, Utilities, and Improvements*, perform the following:

a. Remove or alter existing work or facilities in such a manner as to prevent injury or damage to any portion of the existing work or facilities that remain.

b. Repair or replace portions of existing work altered during construction operations to match existing or adjoining work, as approved by the Contracting Officer. At the completion of operations, existing work must be in a condition equal to or better than that which existed before new work started.

c. Preserve the natural resources in accordance with the approved environmental protection plan prepared in accordance with UFGS 01 57 19 *Temporary Environmental Controls*.

1.1 Government Furnished Material and Equipment

If applicable, the Government will furnish the materials and equipment for installation by the Contractor pursuant to contract clause FAR 52.245-2, *Government Property (Fixed Price Contracts)*. Notify the Contracting Officer in writing at least 15 calendar days before the materials and equipment are required. Pick up materials and equipment no later than 30 calendar days after such date. When materials and equipment are not picked up by the 30th day, the Contractor will be charged for storage at the prevailing rate. The Contracting Officer will specify the location of materials and equipment and the delivery location.

01 14 00.05 20 WORK RESTRICTIONS

1.1 Existing Underground Utilities – Not Applicable

1.2 Work Hours, Access and Passes

All Contractor employees, including subcontractors, subcontractors' employees, suppliers, and suppliers' employees are required to comply with the Installation Security Requirements regarding personnel, vehicle, and equipment security passes and access to the jobsite. Nothing in the

contract is to be construed in any way to limit the authority of the Commanding Officer to prescribe new, or to enforce existing security regulations governing the admission or exclusion of persons and the conduct of persons while aboard the station, including but not limited to, the rights of search of all persons or vehicles aboard the station.

Coordinate with the Contracting Officer for specific security and access requirements.

a. Access to Buildings/ Occupied Buildings: The Contractor may work in or around existing occupied buildings. The Contractor is responsible, via the Contracting Officer, to obtain access to building and facilities and arrange for them to be opened and closed. Do not enter the building(s) without prior approval of the Contracting Officer. Keep the existing buildings and their contents secure at all times. Construction work areas must have complete and secure separation from adjacent occupied areas, as approved and directed by the Contracting Officer and Activity's Security Officer. Provide temporary closures as required to maintain security. Contract personnel will not be permitted in security-regulated buildings or areas unless cleared by the Security Officer.

b. Passes and Badges: Contractor employees and representatives performing work under this contract are required to be either United States citizens or documented legal residents (status verified by prime contractor). All Contractor employees must obtain the required employee and vehicle passes. Each employee is required to wear the Government issued badge over the front of the outer clothing. Failure to obtain security and base access passes must not be a cause for contract performance time extension. The Contractor is required to immediately turn in all terminated employee's badges to the issuing office.

Obtain access to Navy installations through participation in the Defense Biometrics Identification System (DBIDS). Requirements for Contractor employee registration, and transition for employees currently under Navy Commercial Access Control System (NCACS), are available at https://www.cnic.navy.mil/om/dbids.html. No fees are associated with obtaining a DBIDS credential. Participation in the DBIDS is not mandatory, and Contractor personnel may apply for One-Day Passes at the Base Visitor Control Office to access an installation. Registration for DBIDS includes: Present a letter or official award document (i.e. DD Form 1155 or SF 1442) from the Contracting Officer, that provides the purpose for access, to the base Visitor Control Center representative.

- Present valid identification, such as a passport or Real ID Act-compliant state driver's license

- Provide completed SECNAV FORM 5512/1 to the base Visitor Control Center representative to obtain a background check. This form is available for download at <URL>https://www.cnic.navy.mil/om/dbids.html</URL >

- Upon successful completion of the background check, the Government will complete the DBIDS enrollment process, which includes Contractor employee photo, fingerprints, base restriction and several other assessments

- Upon successful completion of the enrollment process, the Contractor employee will be issued a DBIDS credential, and will be allowed to proceed to worksite

DBIDS Eligibility Requirements: Throughout the length of the contract, the Contractor employee must continue to meet background screen standards. Periodic background screenings are conducted to verify continued DBIDS participation and installation access privileges. DBIDS access privileges will be immediately suspended or revoked if at any time a Contractor employee becomes ineligible. An adjudication process may be initiated when a background

screen failure results in disqualification from participation in the DBIDS, and Contractor employee does not agree with the reason for disqualification. The Government is the final authority. DBIDS Notification Requirements: Immediately report instances of lost or stolen badges to the Contracting Officer. Immediately collect DBIDS credentials and notify the Contracting Officer in writing under the following circumstances: (1) An employee has departed the company without having properly returned or surrendered their DBIDS credentials. (2) There is a reasonable basis to conclude that an employee, or former employee, might pose a risk, compromise, or threat to the safety or security of the Installation or anyone therein.

c. Contractor Vehicles: All vehicles must display a valid state license plate and safety inspection sticker, if applicable, and must be maintained in good repair. The company name must be displayed in a clearly visible manner and size on each Contractor vehicle used in the course of work. Registration, proof of insurance and driver's licenses are required to obtain a station vehicle pass.

d. Work Hours: Unless otherwise indicated, work will be located on a Government compound, military installation, or station. Contractor work hours are between 0700 and 1530 Monday through Friday. Obtain advance approval from the Contracting Officer for Contractor personnel are to remain on site beyond normal working hours. Notify the Contracting Officer **and the Activity** at least 48 hours in advance to **request** approval for access to the jobsite or work outside of normal working hours or on Saturday, Sunday, and Federal Holidays.

e. Contractor Personnel: Provide the Contracting Officer the name(s) of the supervisory person(s) authorized to act for the Contractor. Provide, and update as required, a list of the key personnel for the Contractor and subcontractors including addresses and telephone numbers for use in the event of an emergency.

f. Contractor employees must conduct themselves in a proper, efficient, courteous and businesslike manner. Remove from the site any individual whose continued employment is deemed by the Contracting Officer to be contrary to the public interest or inconsistent with the best interests of National Security.

1.3 Security Requirements

All security requirements apply to all subcontractors and suppliers associated with this contract. Special or extraordinary security requirements are identified herein. Comply with the following in addition to special or extraordinary security requirements:

a. Do not publicly disclose any information concerning any aspect of the materials or services relating to this contract, without prior written approval of the Contracting Officer.

b. Do not disclose or cause to be disseminated any information concerning the operations of the activity's security or interrupt the continuity of its operations.

c. Do not disclose any information to any person not entitled to receive it. Failure to safeguard any classified information that may come to the Contractor or any person under his control, may subject the Contractor, his agents or employees to criminal liability under 18 U.S.C., Sections 793 and 798.

d. Direct to the Contracting Officer and or Installation Security Officer for resolution all inquiries, comments or complaints arising from any matter observed, experienced, or

learned as a result of or in connection with the performance of this contract, the resolution of which may require the dissemination of official information.

e. Coordinate photography requirements with the Contracting Officer. Some areas restrict or prohibit photographing Government property.

f. Special security requirements apply to this contract. All Contractor personnel associated with this contract must obtain personnel security clearances/badges from the Activity's Security Officer in order to perform work in Building 1100. Strict adherence to the rules and regulations, as set forth by the Activity's Security Officer, must be complied with at all times.

Deviations from or violations of any of the provisions of this paragraph, will, in addition to all other criminal and civil remedies provided by law, subject the Contractor to immediate termination for default and withdrawal of the Government's acceptance and approval of employment of the individuals involved.

01 20 00.05 20 PRICE AND PAYMENT PROCEDURES

1.1 Schedule of Prices

Submit a schedule of prices for approval on forms furnished by the Government. The initial schedule of prices may be preliminary for construction activities until the design is developed. Include a detailed breakdown of the contract price with quantities and unit prices for each work activity or definable feature of work. Include general conditions, profit, and overhead costs within the unit prices. Break down into design and construction is required. The Contractor may invoice for bonds once the Government has approved the bonds, however, no other requests for payment will be processed without an approved schedule of prices and baseline schedule.

1.2 Contractor Invoices

Contractor requests for payment must conform and will be processed in accordance with the requirements of FAR 52.232-5 and FAR 52.232-27.

a. Content of Invoice: Requests for payment in accordance with the terms of the contract must consist of the following: (If NFAS Clause 5252.232-9301 is present in the contract, documents must be provided as attachments in Wide Area Workflow (WAWF). The maximum size limit per attachment is less than 2 megabytes, but there are no limits on the number of attachments. If a document cannot be attached to WAWF due to system or size restrictions it must be provided as instructed by the contracting officer). If NFAS Clause 5252.232.9301 is not present in the contract, follow the invoicing instructions provided in the contract.
   1. Contractor's Invoice on NAVFAC Form 7300/30, must show, in summary form, the basis for arriving at the amount of the invoice.
   2. Contractor's Estimate for Voucher/ Contract Performance Statement on NAVFAC Form 7300/31 furnished by the Government, showing in detail: the estimated cost, percentage of completion, and value of completed performance for each of the construction categories stated in this contract. Use NAVFAC LANT Form 4-330/110 (New 7/84) on NAVFAC Atlantic contracts when a Monthly Estimate for Voucher is required.
   3. Affidavit to accompany invoice (LANTDIV NORVA Form 4-4235/4 (Rev. 5/81)).
   4. Updated copy of submittal register.
   5. Updated copy of progress schedule. Furnish as specified in "FAR 52.236-15,

Schedules for Construction Contracts."

6. Contractor Safety Self Evaluation Checklist (original)
7. Final release (for final payment only). Final invoice must be accompanied by the certification required by DFARS 252.247.7023 TRANSPORTATION OF SUPPLIES BY SEA, and the Contractor's Final Release.

b. Payment:

1. Payment will be made on Contractor's submission of itemized requests and will be subject to reduction for overpayments or increased for underpayments from previous payments. The Government may withhold payment or reduce payments for the following:
   a. Defects in material or workmanship.
   b. Claims the Government may have against the Contractor under or in connection with this contract.
   c. Contractor's failure to submit an updated schedule.
   d. Payroll violations.
   e. Unless otherwise adjusted, repayment to the Government upon demand for overpayments made to the Contractor.

2. Payments will not be made for materials stored off construction sites

1.3 Contractor Project Management

The Prime Contractor must be responsible for Project Management throughout the entire project. Project management must be provided during both the design and construction phases. It is the intent of the Government to partner with the Contractor to maximize project value while strictly controlling contract modifications and maintaining overall fiscal control.

Project Management documentation must be submitted at the design phase kick-off meeting and then expanded upon and updated during the entire design and construction sequencing of the contract. The purpose of project management documentation is to balance scope and value during critical project design decision phase and provide a format to track and update this information as the project progresses to completion. As a minimum, this project management documentation must address:

a. Project Budget:
Break-out major system and components. During the design phases, document that the DoR design has been coordinated with sub-contractors and is consistent with sub-contractor budgets. If there are any discrepancies that cannot be resolved by the General Contractor,
these discrepancies must be identified within the design submissions with proposed resolutions.

All deviations to the RFP and/or UFC/UFGS criteria must be formally submitted in NAVFAC deviation request format, including justification of why the deviation is warranted, schedule impact, and any cost savings to the Government.

b. Project Schedule
Address components and/or systems that have “long-lead” impacts. Identify how these “long-lead” items have been mitigated in the design and construction schedules.

Identify individual Definable-Features-of-Work (DFOW) that must be released for fabrication and/or begin construction prior to the DoR Final Design documents being signed and approved; proceeding only upon written permission by the Contracting Officer to proceed.

Note: Early construction start prior to approval of the Final DOR Design is at the sole risk of the Contractor. Any rework/replacement required in order to meet the requirements of this contract, will be the responsibility of the Contractor at no cost/expense to the Government.

01 30 00.05 20 ADMINISTRATIVE REQUIREMENTS

1.1 Supervision

The Contractor must have a superintendent fluent in English on the job site during working hours.

The Superintendent must have a minimum of 5 years of experience as a Superintendent on previous projects of similar size and complexity. The Superintendent may serve as the Site Safety and Health Officer. Provide a Superintendent Resume for the proposed on-site Project Superintendent describing experience with references and qualifications to the Contracting Officer for approval. The Contracting Officer reserves the right to interview the proposed on-site Project Superintendent at any time in order to verify the submitted qualifications.

1.2 Required Insurance

Within 15 calendar days after award, furnish the Contracting Officer a Certificate of Insurance as evidence of the following insurance coverage amounts not less than the amount specified below in accordance with FAR Clause 52.228-5, *Insurance Work On A Government Installation*:

a. Comprehensive General Liability: $500,000 per occurrence.

b. Automobile Liability: $200,000 per person, $500,000 per occurrence for bodily injury; $20,000 per occurrence for property damage.

c. Worker's Compensation: As required by Federal and State Worker's compensation and occupational disease and other laws.

d. Employer's Liability Coverage: $100,000, except in states where worker's compensation may not be written by private carriers.

e. Others as required by state law.

f. Above insurance coverages are to extend to Contractor personnel operating Government owned equipment and vehicles.

g. The Certificate of Insurance must provide for 30 calendar days written notice to the Contracting Officer by the insurance company prior to cancellation or material change in policy coverage.

For projects which require removal of asbestos containing materials the Asbestos Contractor or Subcontractor, as the case may be is required to provide occurrence-based liability insurance with asbestos coverages in an amount not less than $1,000,000 and must name the Government and Private Qualified Person (PQP) as additional insureds.

01 31 19.05 20 POST AWARD MEETINGS

1.1 Post Award Kick-off Meeting (PAK)

Prior to commencement of design, and within 21 calendar days of award, meet with representatives of the Contracting Officer, installation and client to present the concept design for discussion and acceptance. The project team will develop a mutual understanding relative to the approved proposal, safety program, environmental permits and requirements, quality control

procedures, and design and construction schedule. During the meeting, Contractor must propose and gain acceptance for any critical path work activities requiring advance submittal and approval. If the contract includes work on any fire protection system, including fire alarm and mass notification systems, the Contractor and the appropriate DOR must meet with the NAVFAC Fire Protection Engineer (FPE) to establish clear expectations of fire protection requirements of the project.

The Contractor's key personnel must attend including the Project Manager, Superintendent, Site Safety and Health officer, Construction Quality Control (CQC) Manager, Design Quality Control (DQC) Manager, Designer of Record (DOR), and major subcontractors.

The Contractor must take detailed Meeting Minutes/Notes during the PAK meeting and must distribute the Meeting Minutes to the Contracting Officer/NAVFAC Team within 3 business days after the PAK Meeting was held.

1.2 Partnering

The Contracting Officer will organize initial and follow-up informal partnering sessions with key personnel of the project team, including Contractor's personnel and Government personnel. The initial session may be a part of the PAK Meeting. The initial partnering session will be conducted and facilitated using electronic media provided by the Contracting Officer. Follow-on partnering sessions will be conducted every 6 months or less frequent as determined by the Contracting Officer.

The Contractor must take detailed Meeting Minutes/Notes during any Partnering meetings and must distribute the Meeting Minutes to the Contracting Officer/NAVFAC Team within 3 business days after the Partnering meetings are held.

1.3 OnBoard Review (OBR) Meetings

Contractor must take detailed Meeting Minutes/Notes during any OBR meeting and must distribute the Meeting Minutes to the Contracting Officer/NAVFAC Team within 3 business days after the OBR meeting is held.

1.4 Pre-Construction Conference

Prior to construction or demolition, meet with representatives of the Contracting Officer to discuss and develop mutual understanding relative to administration of the safety programs, environmental issues, safety of building occupants and surrounding area, hazardous materials, waste disposal, construction QC procedures, construction schedule, labor provisions and other construction phase contract procedures.

The Contractor must take detailed Meeting Minutes/Notes during the PRECON conference and must distribute the Meeting Minutes to the Contracting Officer/NAVFAC Team within 3 business days after the PRECON conference was held.

1.5 NAVFAC Red Zone Meeting (NRZ)

Participate in NAVFAC Red Zone (NRZ) meetings with the Contracting Officer to identify strategies to ensure the project is carried to expeditious closure and turnover to the client. The Contracting Officer will provide a template to the Contractor to use to develop a NRZ Checklist. Revise the template to include critical work activities and their planned completion dates based on the project scope of work and schedule. Discuss any progress changes with items listed on the NRZ Checklist during regularly scheduled NRZ Meetings beginning approximately at 75% stage of construction prior to project completion.

The Contractor must take detailed Meeting Minutes/Notes during the Red Zone Meeting and must distribute the Meeting Minutes to the Contracting Officer/NAVFAC Team within 3 business days after the Red Zone Meeting was held.

01 31 23.13 20 ELECTRONIC CONSTRUCTION AND FACILITY SUPPORT CONTRACT MANAGEMENT SYSTEM

See UFGS Section 01 31 23.13 20 Electronic Construction and Facility Support Contract Management System in Part 5 of this RFP for requirements for the use of eCMS.

01 32 16.00 20 SMALL PROJECT DESIGN AND CONSTRUCTION PROGRESS SCHEDULES

Develop and implement a design and construction schedule in accordance with UFGS 01 32 16.00 20 in Part 5 of this RFP. (See PART 5 – PRESCRIPTIVE SPECIFICATIONS).

01 33 00.05 20 CONSTRUCTION SUBMITTAL PROCEDURES

1.1 Construction submittals must be reviewed by the Contractor's Construction Quality Control (CQC) Manager. The CQC Manager must certify that each submittal is in compliance with the contract requirements. In addition, some submittals must be approved by either the DOR or the Government. Submittals that must be approved by the DOR are listed in Subset (a) of this paragraph below. Submittals that must be approved by the Government are listed in Subset (b) of this paragraph below. Prior to submission to either the DOR or the Government, each of these submittals must be certified by the Contractor's CQC Manager as stated above. For each submittal, construction work on that item must not commence until after the submittal has been approved by the appropriate entity as indicated herein.

a. DOR Approval required for:

1. Structural related submittals, including, but not limited to, shop drawings and structural material data sheets

2. Performance Verification and Acceptance Testing

3. Special Inspection Reports, Structural Observation Reports, and the Final Report of IBC Special Inspections

b. Government Approval required for:

1. Government approved submittals as required by UFGS specification sections edited by the DOR.

1.2 Submit the following construction submittals, approved by the DOR, to the Government for Surveillance (Government Surveillance does not prevent the Contractor from proceeding with construction, but allows the Government an opportunity to confirm the submittals have been approved by the DOR, and are in accordance with the contract documents):

a. Submit Performance Verification and Acceptance Testing required by IBC or this RFP.

b. Submit all Interim Special Inspection Reports on a bi-weekly basis until work requiring special inspections is complete. Submit all Structural Observation Reports and the Final Report of IBC Special Inspections.

c. Submit Structural Shop Drawings and structural product data.

1.3 Construction Submittal Process

Provide to the Government submittals as listed. See Section 01 33 10.05 20 "Design Submittal Procedures" for specific design and construction submittal format and approval and surveillance requirements. Design drawings may be prepared more like shop drawings to minimize construction submittals after final designs are approved. Therefore, the Contractor is encouraged to prepare and submit with the design drawings, appropriate connection, fabrication, layout, and product specific drawings.

a. QC Plan, prior to Design/Construction (may be phased).

b. Construction submittals, prior to construction, approved in accordance with QC Plan The DOR or CQC Manager is the approving authority for submittals unless otherwise indicated.

c. DOR-approved construction submittals identified for Government surveillance. Stamp the submittals "FOR SURVEILLANCE ONLY." Submit Surveillance submittals to the Government prior to starting work for that item. Submittals required for surveillance will be returned only if corrective actions are required.

d. Safety Data Sheets (SDS) as applicable.

e. Baseline Schedule: due prior to PAK.

f. Environmental Protection Plan, prior to start of the work.

g. Contractor Safety Self-Evaluation Checklist.

h. Accident Reports - submit if incidence occurs.

i. Accident Prevention Plan and Activity Hazard Analysis: Submit prior to construction.

j. Schedule of Prices, initial due 21 calendar days after award and a detailed due prior to construction.

k. Record Drawings, due at Beneficial Occupancy

l. Operation and Maintenance Information: Due prior to testing as applicable, no later than 30 calendar days before Beneficial Occupancy.

m. Licenses and Permits: Per this section and Part 4.

n. Completed High Performance and Sustainable Building (HPSB) compliance checklists in accordance with UFC 1-200-02, *High Performance and Sustainable Building Requirements and UFGS Section 01 33 29.05 20 Sustainability Reporting for Design-Build.* Attach completed HPSB Checklist to Interim DD 1354.

o. DD Form 1354: NOT USED

p. Construction Submittals:

1) In addition to the design submittals noted in Section 01 33 10.05 20, construction submittals will be required. The list of required submittals will be generated from the Contractor-prepared specifications and indicated in the submittal register.

2) Shop drawing submissions will be governed by UFGS 01 33 00.05 20 Construction Submittal Procedures, available on the Whole Building Design website (www.wbdg.org). Contractor must assume a 15 day review period, and provide 3 hard copies of all submittals (in addition to electronic submittals) to be submitted to FEAD.

1.4 Operations and Maintenance Information (OMSI)

Not Applicable

1.5 Licenses and Permits

Obtain all appointments, licenses and permits (inclusive of all Environmental Permits required for Naval Air Station Oceana/Dam Neck/Fentress Field AOR) required to perform work under this contract at no expense to the Government, prior to commencing any construction activities. Comply with all applicable federal, state, and local laws, and base regulations and procedures. Provide evidence of such permits and licenses to the Contracting Officer before work commences and at other times as requested by the Contracting Officer (see FAR 52.236-7, *Permits and Responsibilities*). Coordinate all permit applications and process with the Navy and the local NAS Oceana Environmental Office.

The contractor must submit a complete PROD form with the first design submittal package. A blank PROD form can be obtained from the NAVFAC Design-Build website at the following link http://www.wbdg.org/FFC/NAVFAC/NDBM/ST/PROD_Form.doc . Contractor must determine correct permit fees and pay said fees. Copies of all permits, permit applications, and the completed PROD form must be forwarded to the Government's Civil Reviewer and Environmental Reviewer.

Contractor is exclusively responsible for his full compliance with patent laws and must affirm that the company is licensed to use equipment and processes the company employs in this project.

1.6 Record Drawings

The as-built modifications must be accomplished by electronic drafting methods on the Contractor-originated DWG design drawings to create a complete set of record drawings. For each record drawing, provide CAD drawing identical to signed Contractor-originated PDF drawing that incorporate modifications to the as-built conditions. After all as-built conditions are recorded on the DWG files, produce a PDF file of each individual record drawing in conformance with FC 1-300-09N. Electronic signatures are not required on record drawings.

01 33 10.05 20 DESIGN SUBMITTAL PROCEDURES

1.1 Summary

This section includes requirements for contractor-originated design documents and design

submittals.

1.2 Reference Standards

This RFP references published standards, the titles of which can be found in the *Unified Master Reference List (UMRL)* on the Whole Building Design Guide at the Unified Facilities Guide Specification (UFGS) Website. The publications referenced form a part of this specification to the extent referenced.

The advisory provisions of all codes, requirements, and standards are mandatory; substitute words such as "must" or "required" for words such as "shall", "should", "may", or "recommended," wherever they appear. The results of these wording substitutions incorporate these code and standard statements as requirements. Reference to the "authority having jurisdiction" is interpreted to mean Contracting Officer or Contracting Officer Representative. Comply with the required and advisory portions of the current edition of the standard at the time of contract solicitation.

Provide work in compliance with the following design standards and codes, as a minimum. Government standards listed in this RFP take precedence over industry standards. The following list of codes and standards is not comprehensive and is augmented by other codes and standards referenced and cross-referenced in the RFP. Refer to Parts 3 and 4 for specific requirements within other UFC's.

a. U.S. Department of Defense (DoD) Unified Facilities Criteria (UFC)

UFC 1-200-01	DoD Building Code (General Building Requirements)
UFC 1-200-02	High Performance and Sustainable Building Requirements
UFC 1-300-08	Criteria for Transfer and Acceptance of DoD Real Property
FC 1-300-09N	Navy and Marine Corps Design Procedures
UFC 3-301-01	Structural Engineering
UFC 3-600-01	Fire Protection Engineering
UFC 3-810-01N	Navy and Marine Corps Environmental Engineering for Facility Construction

b. UFC 1-200-01

UFC 1-200-01, DoD Building Code is a hub document that provides general building requirements and references other critical UFCs. A reference to UFC 1-200-01 in the RFP document requires compliance with the Tri-Service Core UFCs. Refer to the UFC 1-200-01 for a complete list of all applicable Tri-Service Core UFCs at website location http://www.wbdg.org/ffc/dod/unified-facilities-criteria-ufc . Contractor-originated design documents must provide a project design that complies with the Request For Proposal (RFP), FC 1-300-09N, UFC 1-200-01, UFC 3-810-01N, the Core UFCs, and other UFC's listed above.

1.3 Design Requirements

a. Provide design documents that include basis of design, design drawings and design specifications, reports and submittal register in accordance with FC 1-300-09N Navy and Marine Corps Design Procedures. **Scanning of the existing record drawings to create contract drawings for this project is unacceptable.**

b. Design is the work necessary to ensure functionality, quality, and safety for critical facets of the project. Special coordination requirements such as for phone, LAN and cable, are included herein.

c. Part 3 contains the project description, functional and performance requirements, scope items, and expected quality levels that exceed Part 4. Part 4 identifies design criteria, verification requirements, and performance and quality requirements of products.

d. Provide professional registration and design signing and stamping requirements per requirements of FC 1-300-09N, *Design Procedures*. *****Each design drawing must only be signed, sealed, and dated by the Registered Architect or Professional Engineer who is registered to practice in the particular field involved for work depicted on that drawing, and serves as the Designer of Record for work depicted on that drawing!***** Interior Designers must be NCIDQ certified per UFC 3-120-10 *Interior Design*. The design effort must be overseen by a Design Quality Control (DQC) Manager who will ensure that the design meets the requirements of this RFP. The DQC Manager will prepare a DQC Plan describing how the design process will ensure conformance to the RFP.

e. Provide a Contractor-originated design specification that in conjunction with the drawings, demonstrates compliance with requirements of the RFP. The specified products, materials, systems, and equipment that are approved by the DOR; submitted to the Government by the Contractor; and reviewed by the Contracting Officer must be used to construct the project. Prescriptive specification sections contained in RFP Part 5 must become a part of the Contractor-originated specification without modification. The Contractor must prepare design specifications that include a UFGS specification for each product, material, or system on the project. Organize the specifications using Construction Specification Institute (CSI) Masterformat™ .

*****ON DRAWING SPECIFICATIONS WILL NOT BE ACCEPTED*****

Provide project specifications to include the following:

1. Provide the specification cover sheet with the professional seal and signature of the lead licensed architect or engineer of the project design team. Indicate the Contractor's company name and address on the specification coversheet.

2. Also as "**a minimum"**, the following "front end" (Division 0 and Division 1) specifications must be provided:
   00 01 15 List of Drawings
   01 11 00 Summary of Work
   01 14 00 Work Restrictions
   01 20 00 Price and Payment Procedures
   01 30 00 Administrative Requirements
   01 31 23.13 20 Electronic Construction and Facility Support Contract Management System
   01 32 16.00 20 Small Project Construction Progress Schedules
   01 33 00 Submittal Procedures

01 35 26.05 20 Governmental Safety Requirements
01 45 00.00 10 Quality Control *(for Design Build Projects)*
01 45 35 Special Inspections
01 50 00 Temporary Construction Facilities and Controls
01 57 19 Temporary Environmental Controls
01 78 00 Closeout Submittals
01 78 23 Operation and Maintenance Data

The UFGS Specification sections listed above must be edited to accommodate the requirements of this DB/RFP. Edit only the bracketed items of these Front End Division 0 and Division 1 UFGS Specification Sections. Obtain approval from the Contracting Officer prior to the Prefinal Design Submittal for any edits to these sections other than edits to the bracketed items. Edits to any portion of these front end sections other than to the bracketed items are not permitted without prior approval of the Contracting Officer.

Technical Specifications (Divisions 02 and beyond) must be provided on materials/items that will be provided on the project. As a minimum, projects including DEMOLITION work must include UFGS Specification “02 41 00 DEMOLITION AND DECONSTRUCTION”.

3. Table of contents for entire specification.
4. Individual UFGS specification sections for each product, material, and system required by the RFP. Edit UFGS sections in accordance with RFP Part 3 and 4.
5. If proprietary information is provided or required, include a coversheet for the product, material, or system information that is being proprietarily specified. This information must comply with the related UFGS specification.
6. If proprietary information is provided or required, include highlighted and annotated Catalog Cuts, Manufacturer's Product Data, Tests, Certificates, Manufactures information and letters for each product, material, or system that is being proprietary specified.
7. Coordinated submittal register for all products, materials and systems with each design submittal. Provide a cumulative register that identifies the design and construction submittals required by each design package along with previous design submittals. The DOR must assist in developing the submittal register by determining which submittal items are required to be approved by the DOR. Complete all fields in the final submittal register in order to obtain Government approval of the final design.

f. Identification of Manufacturer's Product Data Used as Specifications: Provide complete and legible catalog cut sheets, product data, installation instructions, operation and maintenance instructions, warranty, and certifications for products and equipment for which final material and equipment choices have been made. Indicate, by prominent notation, each product that is being submitted including optional manufacturer's features, and indicate where the product data shows compliance with the RFP. Attach this product data to the end of the applicable UFGS specification section that specifies the material.

g. Specification Software: Submit the final specification source files in either MS Word or SpecsIntact with a Submittal Register generated in Excel or SpecsIntact.

h. Sustainability Requirements: NOT USED

i. Submit design drawings/specifications, calculations and manufacturer's data to demonstrate compliance with contract requirements.

j. Provide hard and electronic copies of design submittal package(s) to allow the

Government 21 calendar days for reviews. The OnBoard review meeting must take place within 7 calendar days of issuance of Government design review comments. The Contractor must submit their DOR Responses to the Government Review Comments a minimum of 3 business days prior to the OnBoard Review Meeting. OnBoard Review Meetings will occur at the 35% and Pre-Final Review stages.

k. Completed Design Packages from each discipline at every Design Submittal Stage must be submitted concurrently, or will be rejected immediately. Specifications submitted during the Pre-Final Design Submittal stage(s) must be fully edited specific to the project, with red-lines on, with all Specsintact bracket reports resolved (and included within the submittal).

l. Prior to the Final Design Submittal, an Interim Final Design Submittal will be submitted for Government review. This will allow a Government review of the Submittal Package and "close out" of all prior review comments, prior to proceeding with the Final Design Submittal. If the Interim Final Design Submittal is acceptable, then the Government will sign the PDF files and return to the DOR/Contractor for printing of the Final Submittal package (with all signatures). If the Interim Final Design Submittal is not acceptable, comments will be returned to the DOR/Contractor for corrective action, and then a re-submittal of the Interim Final Design Submittal must occur back to the Government.

m. The Government will perform a QA (Quality Assurance) review of the submittal package(s) to determine compliance with the intent of the RFP package. These reviews do not replace the General Contractor's and their sub-contractors' QC (Quality Control) process. The Government QA review(s) do not relieve the Contractor and his Designer Of Record (DOR) from compliance with the RFP, UFC, UFGS, state and local codes unless specifically identified and addressed in the submittal package.

ProjNet must be utilized for collecting/tracking/responding to Government and Client QA review comments. The Contractor must set up an Office Account with ProjNet to provide a written response to Government/Client review comments.

	Deliverable	FEAD/CM	FEAD/DM	USER
	Design Development (35% - 65%) - Hardcopies			
	Basis of Design / Calculations / Cut Sheets		3	
	Half-size Drawings		3	1
	Specifications **(With Redline Edits Shown)**		3	1
	Design/Construction Schedule		1	1
	QC Review – Drawings and Specifications		1	1

	Budget Management Summary		1	
	Electronic PDF Files of all documents submitted via DoD SAFE file transfer		1	
	Deliverable	**FEAD/CM**	**FEAD/DM**	**USER**
	Pre-Final Design - Hardcopies			
	Basis of Design / Calculations / Cut Sheets		3	
	Half-size Drawings		3	1
	Specifications **(With Redline Edits Shown)**		3	1
	Design/Construction Schedule		1	1
	QC Review – Drawings and Specifications		1	
	Budget Management Summary		1	
	Electronic PDF Files of all documents submitted via DoD SAFE file transfer		1	
	Deliverable	**FEAD/CM**	**FEAD/DM**	**USER**
	Interim Final Design (Electronic Submission ONLY! On DoD SAFE file transfer)			
	Basis of Design / Calculations / Cut Sheets		1	
	Half-size Drawings or Sketches		1	
	Specifications		1	

	Design/Construction Schedule		1	
	Budget Management Summary		1	
	QC Review – Drawings and Specifications		1	

	Deliverable	FEAD/CM	FEAD/DM	USER
	Final Design – Hardcopies			
	Basis of Design / Calculations / Cut Sheets		3	1
	Half-size Drawings or Sketches	2	3	1
	Specifications	2	3	1
	Budget Management Summary		1	
	Design/Construction Schedule	1	1	1
	QC Review – Drawings and Specifications		1	1
	Electronic PDF Files of all documents submitted, all native CAD files for the final drawings in AutoCAD 2018 format, and native SPECSINTACT Specification files. (Electronic Submission shall be on a DVD and also via DoD SAFE file transfer)		1	

	Deliverable	FEAD/CM	FEAD/DM	USER
	Project Close-Out (Electronic Submission ONLY! On a DVD and also via DoD SAFE file transfer)			
	As-Built Drawings		1	
	Project Specifications		1	
	Record of Materials		1	
	Warranty Documentation		1	
	Record Copies of “Equipment Inventory Forms”		1	

n. The Final DOR Design Submittal must be professionally signed and sealed by the DOR and forwarded to the Contracting Officer and Final Approved by the Government, prior to the start of construction activities. Separated final design packages may only be considered for Government review and approval during the Post Award Kick-off Meeting. The final design submittals must be approved by the Contracting Officer prior to the start of construction.

o. **AS-BUILT DRAWINGS & RECORD OF MATERIALS**: Furnish as-built drawings, final

specifications and record of materials. As-built drawings and specifications consist of updated design drawings, specifications and/or shop drawings. A typical list of materials includes, but would not be limited to, roofing, insulation, and wall coverings. Where several manufacturers' brands, types, or classes of the item listed have been used in the project, designate specific areas where each item was used. Designations must be keyed to the areas and spaces depicted on the drawings. Make all drawing changes in AutoCAD compatible format to the original design drawings. Transfer all signatures, initials, and dates in the title block area on the drawings as text onto the as-built. Electronic signatures are not required. Provide extra sheets as required to accommodate amendments, sketches and field changes. Save all drawing files with the exception of X-ref's with new names reflecting Record Drawing Status (RD). **Provide the Contracting Officer one (1) DVD/CD** containing all files in Adobe PDF, all native AutoCAD drawing files and SpecsIntact files, and all manufacturer's catalog cut sheets.

p. Gain full and complete knowledge of the existing conditions by completely researching the existing building and site and by providing field verifications/site survey investigations.

q. In addition to the statement of work discussed herein, the Prime Contractor and his Designer of Record (DOR) must schedule necessary meetings and site visits with the Activity and associated representative Contractors as required (Utilities, Physical Security, Furniture/Equipment Contractor etc.) in order to fully understand all conditions, needs and requirements, coordinated efforts, and detailed issues relating to the project.

1.4 Order of Precedence

The contract consists of the solicitation, the approved proposal, and the final design. In the event of conflict or inconsistency between any of the below described portions of the conformed contract, precedence must be given in the following order:

a. Any portions of the proposal or final design that exceed the requirements of the solicitation.
   1. Any portion of the proposal that exceeds the final design.
   2. Any portion of the final design that exceeds the proposal.
   3. Where portions within either the proposal or the final design conflict, the portion that most exceeds the requirements of the solicitation has precedence.

b. The requirements of the solicitation, in descending order of precedence:
   1. Standard Form 1442, Price Schedule, and Davis Bacon Wage Rates.
   2. Part 1 - Contract Clauses.
   3. Part 2 - General Requirements.
   4. Part 3 - Project Program Requirements.
   5. Part 6 - Attachments (excluding Concept Drawings).
   6. Part 5 - Prescriptive Specifications exclusive of performance specifications.
   7. Part 4 - Performance Specifications exclusive of prescriptive specifications.
   8. Part 6 - Attachments (Concept Drawings).

c. Within Part 3- Project Program Requirements Section 5.0 ROOM REQUIREMENTS provides detailed requirements on a room by room basis that further defines requirements that are in addition to the ENGINEERING SYSTEMS REQUIREMENTS SECTION.

d. Government review or approval of any portion of the proposal or final design does not relieve the Contractor from responsibility for errors or omissions with respect thereto.

01 35 26.05 20 GOVERNMENT SAFETY REQUIREMENTS FOR DESIGN-BUILD

Develop and implement a safety program in accordance with UFGS 01 35 26.05 20 in Part 5 of this RFP and EM-385-1-1, Safety and Health Requirements Manual.

1.1 Ergonomics Considerations During Design

Design facilities, processes, job tasks, tools and materials to reduce or eliminate work-related musculoskeletal (WMSD) injuries and risk factors in the workplace. Design maintenance access to reduce WMSD risk factors to the lowest level possible. In addition to requirements included in this contract, design must incorporate the requirements of MIL-STD-1472F.

01 45 00.05 20 DESIGN AND CONSTRUCTION QUALITY CONTROL

Establish and maintain a quality control program as described herein.

1.1 Quality Control Plan

Submit a QC Plan for Government review and acceptance prior to the start of construction. Submit the QC Manager's resume for approval prior to all other administrative submittals with the exception of bonds and insurance. The QC plan must include the following:

a. NAMES, QUALIFICATIONS and RESPONSIBILITIES: For each person in the QC organization (design and construction).

b. OUTSIDE ORGANIZATIONS: Outside organizations, including architectural and consulting engineering firms and a description of the services these firms will provide.

c. INITIAL SUBMITTAL REGISTER (DESIGN & CONSTRUCTION): Include submittal reviewer, estimated date of delivery, and identify which design submittals require Government approval prior to construction, and which construction submittals require DOR or Government approval prior to construction.

d. TESTING LABORATORIES: Accredited laboratories as applicable.

e. TESTING PLAN AND LOG: Tests required, referenced by specification paragraph number requiring the test, frequency, and person responsible for each test.

f. LIST OF DEFINABLE FEATURES: A Definable Feature of Work (DFOW) is a task, which is separate and distinct from other tasks, and has the same control requirements and work crews.

g. COMMUNICATION PLAN: Provide a plan for key decisions and possible problems the Contractor and Government may encounter during the design phase of the project. Communication Plan must indicate the frequency of design meetings and what information is covered in those meetings, key design decision points tied to the Network Analysis Schedule and how the DOR plans to include the Government in those decisions, peer review procedures, interdisciplinary coordination, design review procedures, and comment resolution.

h. SPECIAL INSPECTIONS: Special Inspection is required for this project. Provide Special Inspections including, testing, approvals, certifications, observations, and quality

assurance plans as prescribed in Chapter 17 of IBC as modified by UFC 3-301-01. Provide specification section 01 45 35 SPECIAL INSPECTIONS along with a Schedule of Special Inspections and the Statement of Special Inspection. Special Inspection documentation can be found at the following addresss: https://www.wbdg.org/ffc/dod/unified-facilities-guide-specifications-ufgs/ufgs-01-45-35

1.2 Quality Control Manager Qualifications

Appoint a Quality Control Manager responsible for the QC program. The Superintendent may not serve as the Quality Control Manager on this project. The QC Manager must have a minimum 5 years of combined experience as a Project Superintendent, QC Manager, inspector, Project Manager, Project Engineer or Construction Manager on previous projects of similar size and complexity. The QC Manager must possess a current certificate showing successful completion of the NAVFAC Contractor Quality Management (CQM) Training.

1.3 Quality Control Manager Responsibilities

a. Participate in the Post Award Kick-off, Partnering, Design Development and Coordination Meetings and Production Meetings.

b. Ensure that no construction begins before the DOR has signed and stamped the design for that segment of work, and design and construction submittals are approved as required by the QC Plan.

c. Immediately stop any work that does not comply with contract plans and specifications, and direct the removal and replacement of any defective work.

d. Prepare QC Reports.

e. Hold weekly QC meetings with DOR, Superintendent and Government technical team; participation must be suitable for the phase of work.

f. Ensure that safety inspections are performed. Attend weekly Toolbox meetings.

g. Maintain submittal log.

h. Certify that each submittal is in compliance with the contract requirements.

i. Maintain updated as-built drawings on site.

j. Maintain testing plan and log. Ensure that all testing is performed per contract.

k. Maintain deficiency log on site, noting dates deficiency identified, and date corrected.

l. Certify and sign statement on each invoice that all work to be paid under the invoice has been completed in accordance with contract requirements.

m. Perform Punch-out and Pre-final inspections, and participate in Final Inspections. Establish list of deficiencies; correct prior to the Final inspection.

n. Ensure that all required keys, operation and maintenance manuals, warranty certificates, and the As-built drawings are submitted to the Contracting Officer.

o. If Commissioning is part of work, engage Commissioning Authority (CxA), coordinate their oversight of Contractor's work and verify CxA's performance in accordance with

UFGS section 01 45 00.05 20.

1.4 Three Phases of Quality Control

Utilize the Three Phases of Quality Control process consisting of:

a. Preparatory Phase: Review all applicable documents for compliance with all applicable laws, codes, regulations, and the requirements of the contract, including contract drawings and specifications. Determine requirements for testing and certification. Review submittal approvals for materials, equipment, shop drawings, and applicable methods of construction and installation. Include all Preparatory Phase items, along with the Preparatory Phase Checklist and, in the QC Report.

b. Initial Phase: Observe and inspect the initial portion of the work performed under a DFOW to establish the quality of the workmanship, resolve conflicts in construction, ensure that testing is done and certified as required, and to check all work procedures to ascertain the work is in conformance with required safety requirements. Record and report nonconforming work and work not of acceptable quality and requiring correction or rework. Include all Initial Phase items, along with initial phase checklist and, in the QC Report.

c. Follow-Up Phase: Occurs at the completion of each DFOW. Ensure the work is in compliance with contract requirements, quality of workmanship for all work is maintained, and all work performed meets safety requirements. Include all Follow-Up Phase items, including date, in the QC Report.

1.5 Contractor Production Report

Prepare Daily Production Reports on forms furnished for this purpose. Submit reports to the Contracting Officer by 10:00 am the following day. Reports must include:

a. Worker hours by classification, move-on and move-off of construction equipment furnished by the prime, subcontractor or the Government, and materials and equipment delivered to the site.

b. Safety meetings, checks and inspections.

c. Disposition of Construction Waste Material: Per Waste Management Plan and per Environmental Protection Plan.

01 50 00.05 20 TEMPORARY FACILITIES AND CONTROLS

1.1 Contractor Work Site

Limit use of the premises for work and for storage of material and equipment associated with the contract. Unless otherwise specified or separately agreed to, Government owned material handling equipment, transportation equipment or general tools will not be available for Contractor's use. Clean work area daily and after completion of the work, removing all loose debris and disposing of all non-permanent materials in accordance with the contractor's Waste Management Plan.

a. Temporary Facilities: The Contractor may provide his own office facilities; coordinate and obtain advance approval from the Contracting Officer. Provide and maintain suitable

sanitary facilities within the construction limits of the contract. Dispose of sanitary waste in accordance with the applicable laws, and local regulation.

b. Contractor-Furnished Equipment: Equipment is subject to the inspection and approval of the Contracting Officer, prior to and during the life of the contract. All equipment and vehicles must display readily visible Contractor identification markings. Relocate stored Contractor equipment which may interfere with operations of the Government or with others on-site.

c. Contractor-furnished Material: Protect and secure products stored at this site.

1. All replacement units, parts, components, and materials to be used in the maintenance, repair and alteration of facilities and equipment must be new and compatible with the existing equipment on which it is to be used, and must comply with applicable Government, commercial, or industrial standards such as Underwriter's Laboratories, Inc., and National Electrical Manufacturers Association.
2. In addition, submit a current certificate recognized by the State or local authority that states the Contractor has completed at least 10 hours of training in backflow preventer installations.

d. The Contractor Lay-Down Area will be limited to the project site(s) as designated/approved by the Contracting Officer.

e. Secure all construction materials inside of locked areas.

1.2 Temporary Utilities

a. The Government will make available water and power in reasonable quantities, at no cost to the Contractor. Contractor is responsible for all connection and disconnection costs.

b. All labor, material, and equipment necessary to affect temporary utility tie-ins, including transformers if necessary, will be at the expense of the Contractor and under the surveillance of the Contracting Officer.

c. The Contractor will be responsible for any damages to Government, private or public facilities and property that may result from the installation and removal of these temporary utility tie-ins. Corrections and repairs will be made at the Contractor's expense.

d. The actual location and installation of the temporary tie-in, together with any interruptions of utilities systems, must be identified and approved by the Contracting Officer prior to execution. Notify the COR and Station Utilities 15 calendar days prior to any tie-ins.

e. Permanent utility systems, when indicated, will be available for tie-in.

f. Telephone and Data Service: Make arrangements with local telephone company, NMCI and other pertinent base communication departments.

g. Maintain utility services to existing facilities surrounding the site at all times during construction.

h. Contractor must install and certify back flow preventers on all connections to the potable water supply system.

01 57 19 TEMPORARY ENVIRONMENTAL CONTROLS

1.1 Unforeseen Hazardous Conditions

Do not disturb hazardous materials and report condition immediately to the Contracting Officer potentially hazardous conditions that are uncovered or the Contractor becomes aware of that have not been identified in the RFP. This includes hazardous components and materials and contamination (see UFC 3-810-01N, *Navy and Marine Corps Environmental Engineering for Facility Construction*, for more information). This includes conditions that are not only hazardous to humans but wildlife, marine life and the environment. Stop work in the area of the questionable material or condition until identification and direction is provided.

1.2 Environmental Protection Requirements

The Contractor must complete and submit evidence of completion of the Environmental Compliance Assessment Training and Tracking (ECATTS) program. For more detailed information on ECATTS see UFGS 01 57 19.

The DOR must edit and submit UFGS 01 57 19, Temporary Environmental Controls, and UFGS 01 57 19.01 20, Supplementary Temporary Environmental Controls. Comply with state and local regulations within the edited UFGS section.

1.3 Additional Environmental Compliance (Navy Region Mid-Atlantic Environmental Checklist)

See the attached **Navy Region Mid-Atlantic Environmental Checklist** in Part 6 (Attachment 04) of this RFP. Comply with any applicable Comments/Requirements in Paragraph 3.

1.4 Existing Hazardous Materials

Hazardous material test reports are not available for Building 1100 prior to issuance of this Task Order. However, since the building was built prior to 1978 timeframe, it is anticipated that hazardous materials are present within the area of work. The Contractor must avoid disturbing any hazardous materials to the fullest extent possible while being able to accomplish the work. If during the performance of the work, hazardous substances are encountered or evidence is found of the existence of hazardous substances not known before award, immediately stop work in the area suspected of having hazardous substances and inform the Contracting Officer for direction. Do not, under any circumstance, perform the work involving the hazardous materials without notifying and receiving approval of the Contracting Officer. In addition, do not perform the work without taking appropriate measures to protect workers as well as the occupants of the facilities, public health in general, and the environment according to applicable laws and regulations. Adhere to the directions as set forth in PART 4 – PERFORMANCE TECHNICAL SPECIFICATIONS, under “SECTION F2020 – HAZARDOUS COMPONENT ABATEMENT”.

01 74 19 CONSTRUCTION AND WASTE MANAGEMENT AND DISPOSAL

Develop a Waste Management Plan that identifies all recyclable material and disposal methods for all material. Contractor must reduce, recycle or salvage as much waste material as possible with a goal of diverting at least 60% of construction waste from landfill. Address waste reduction, recycling and salvage as part of the waste management plan. Report volume or weight of disposed and recycled materials. Report destination of debris diverted from disposal. The Contractor is responsible for removing and disposing of all waste materials generated. Consider all material recyclable or reusable, unless clearly demonstrated the material requiring disposal is

waste material.

Provide Waste Management Plan according to UFGS section 01 74 19 CONTRUCTION WASTE MANAGEMENT AND DISPOSAL. This UFGS may be found on the UFGS website at www.wbdg.org .

01 78 00 CLOSEOUT SUBMITTALS

Develop and submit As-Built drawings. Document actual conditions, including deviations from the Contract Documents. These deviations and additions may result from coordination required by, but not limited to: contract modifications; official responses to Contractor-submitted RFIs (Requests for Information); direction from the Contracting Officer; designs which are the responsibility of the Contractor, and differing site conditions. Maintain the As-Builts throughout construction as red-lined hard copies on site. As-Built drawings are further defined in NFAS 5252.236-9310. These files serve as the basis for the creation of the record drawings.

Develop and submit Record Drawings – Final compilation of actual conditions reflected in the As-Built drawings.

Submit source drawing files – Provide the full set of electronic drawings in the source format for Record Drawing preparation.

Provide closeout submittals according to UFGS 01 78 00 CLOSEOUT SUBMITTALS.

End of PART 2

Naval Facilities Engineering Systems Command
NAVFAC MID-ATLANTIC

Engineering Department

eProjects WO#: 1855890

PART 3 – STATEMENT OF WORK/ PROJECT PROGRAM

BUILDING 1100 REPAIR DAMAGED SECONDARY INLET GUIDES
NAS OCEANA
VIRGINIA BEACH, VIRGINIA

Part 3 Statement of Work / Project Program

Table of Contents

CHAPTERS

1. PROJECT DESCRIPTION

2. PROJECT OBJECTIVES.....

3. SITE ANALYSIS.....

4. BUILDING/GENERAL REQUIREMENTS.....

5. ROOM REQUIREMENTS..... Not Used

6. ENGINEERING SYSTEMS REQUIREMENTS (ESR)

A10 Foundations
A20 Basement Construction
B10 Superstructure
B20 Exterior Enclosure
B30 Roofing
C10 Interior Construction
C20 Stairs
C30 Interior Finishes
D10 Conveying Systems
D20 Plumbing
D30 HVAC
D40 Fire Protection Systems
D50 Electrical Power and Lighting
E10 Equipment
E20 Furnishings
F10 Special Construction
F20 Selective Building Demolition
G10 Site Preparations
G20 Site Improvements
G30 Site Civil/Mechanical Utilities
G40 Site Electrical Utilities

1.0 PROJECT DESCRIPTION

Building 1100 is used to test jet engines. Original construction was completed in 1972, and there have been several repairs and alterations performed since. The building includes an existing test cell area where jet engines are placed during testing. An existing augmenter (a tunnel into which the jet exhaust is expelled during jet engine tests) extends from the existing test cell area, and an existing exhaust stack occurs at the outlet of the existing augmenter. An existing primary air intake is in place near the front of the existing test cell area, and an existing secondary air intake is in place from the existing roof to the entrance of the existing augmenter where the augmenter meets the test cell area. In 1996, a modernization project was performed and included the fabrication and installation of eight guide vanes within the secondary air intake of the building. These existing guide vanes are constructed of light gauge stainless steel, type 304. All eight existing vanes have been damaged due to high wind speeds in combination with high temperatures. All eight existing vanes exhibit cracking, mostly at the welded connections, and one existing vane has failed such

that existing light gauge steel plate has experienced significant deformations. All testing operations within this building have ceased due to the safety risk of these existing vanes fragmenting and becoming projectiles. This project will demolish the eight existing secondary intake guide vanes and replace them. Constructed guide vanes will match the dimensions of the existing guide vanes being replaced. Stainless steel material will be type 316L stainless steel in lieu of the existing type 304 stainless steel, as type 316L performs better than type 304 at higher temperatures.

For construction limits of work and laydown area, see the site map provided in Part 6, Attachment 03 LIMITS OF WORK AND LAYDOWN AREA.

2.0 PROJECT OBJECTIVES

2.1 APPLICABLE CODES AND STANDARDS

In addition to the codes and standards listed in Part 4, the design and construction must be in accordance with the latest revision/edition of the following referenced codes and standards. The term "Latest Revision/Edition" is defined as the version as of the project award date.

DOD Unified Facilities Criteria (UFC): Documents can be referenced at the following website address: http://wbdg.org/ccb/browse_cat.php?o=29&c=4

DOD Unified Facilities Guide Specifications (UFGS): Documents can be referenced at the following website address: http://wbdg.org/ccb/browse_cat.php?c=3

Secured Areas: Work must be in compliance with the current edition of IC Tech Spec for ICD/ICS 705.

2.2 SUSTAINABLE DESIGN – NOT APPLICABLE

2.3 STORMWATER MANAGMENT - LOW IMPACT DEVELOPMENT (LID) – NOT APPLICABLE

2.4 CYBERSECURITY – NOT APPLICABLE

3.0 SITE ANALYSIS – NOT APPLICABLE

4.0 BUILDING/GENERAL REQUIREMENTS

In addition to the statement of work discussed herein, the Contractor and his Designer of Record (DOR) must schedule necessary meetings and site visits with the Activity and associated representative Contractors as required (Utilities, Physical Security, etc.) in order to fully understand all conditions, needs and requirements, coordinated efforts, and detailed issues relating to the project. The Contractor must completely research the existing building/site and provide field verifications/site survey investigations to gain full and complete knowledge of the existing conditions.

The design-build contract must not exceed the available funding limit as set forth by the Contracting Officer.

Record Drawings are included in “PART 6 - ATTACHMENTS”. These documents are for informational purposes only and may not accurately reflect current as-built conditions and the complete scope of work.

Any/all deviations from this RFP must be clearly identified in the Contractor’s proposal. Any/all deviations must be submitted in writing to the Contracting Officer, and must have prior approval by the Contracting Officer before any action or implementation of the deviation. The Contractor at no expense to the Government must correct any unapproved deviations that are deemed unacceptable by the Government.

All work under this contract must comply with the “Buy American Act”. Any proposed deviations from the “Buy American Act” must be submitted in writing to the Contracting Officer, and must have prior approval by the Contracting Officer before any action is taken on the deviation. If the Contractor submits a written deviation for consideration, it must include a detailed justification including documentation (proof) that the products/materials in question are specialty or unique items that cannot be obtained in order to meet the guidelines of the “Buy American Act”. The Contractor must not use “Costs” as a determining factor on whether products/materials can meet the “Buy American Act”. The Contractor at no expense to the Government must correct any unapproved deviations.

Existing reference drawings are available and may be issued by request, **subject to the availability of a DoD approved means of distribution**. Reference drawings must be used for informational purposes only, and may not accurately reflect current as-built conditions. **The Design Build Contractor must not solely rely on the reference drawings to determine existing conditions, but must field verify all existing conditions pertinent to the project.**

5.0 ROOM REQUIREMENTS – NOT USED

6.0 ENGINEERING SYSTEMS REQUIREMENTS (ESR)

A10 Foundations – NOT APPLICABLE
A20 Basement Construction – NOT APPLICABLE
B10 Superstructure
B20 Exterior Enclosure – NOT APPLICABLE
B30 Roofing – NOT APPLICABLE
C10 Interior Construction – NOT APPLICABLE
C20 Stairs – NOT APPLICABLE
C30 Interior Finishes – NOT APPLICABLE
D10 Conveying Systems – NOT APPLICABLE
D20 Plumbing – NOT APPLICABLE
D30 HVAC – NOT APPLICABLE
D40 Fire Protection Systems – NOT APPLICABLE
D50 Electrical Power and Lighting – NOT APPLICABLE
E10 Equipment – NOT APPLICABLE
E20 Furnishings – NOT APPLICABLE
F10 Special Construction – NOT APPLICABLE
F20 Selective Building Demolition
G10 Site Preparations – NOT APPLICABLE
G20 Site Improvements – NOT APPLICABLE
G30 Site Civil/Mechanical Utilities – NOT APPLICABLE
G40 Site Electrical Utilities – NOT APPLICABLE

A10 FOUNDATIONS – NOT APPLICABLE

A20 BASEMENT CONSTRUCTION – NOT APPLICABLE

B10 SUPERSTRUCTURE

Demolish eight existing stainless steel guide vanes within the secondary air intake. Ensure that existing items to remain are not damaged and remain intact. In addition to the existing connections detailed in Part 6, Attachment 01, some existing guide vanes to be demolished have been welded to the existing structure to remain at discrete locations. Demolition of the existing vanes at these welds must not disturb the existing structure to remain.

Design, construct, and install eight stainless steel guide vanes matching the dimensions and locations of the existing demolished guide vanes. Material composing the vane structures must be stainless steel type 316L, with either ER316L or E316L-16 welding rods as appropriate. Provide insulation within the interiors of each of the guide vanes with insulating properties that match existing, at a minimum. Member sizes and plate thicknesses must not be less than that of the existing demolished guide vanes as detailed in Attachments 01 and 02 of Part 6, with the exception that at the trailing edge (the bottom, approximately 3-foot deep sloped portion) of each guide vane, the outer plates must be a minimum thickness of 14-gauge and the trailing edge stiffeners must be a minimum thickness of 12-gauge. Also, weld sizes and quantities must not be less than that of the existing demolished guide vanes as detailed in Attachments 01 and 02 of Part 6. Member sizes and connection requirements may be greater than that of the existing demolished guide vanes in order to meet design requirements specified herein.

Submit design calculations clearly showing that the guide vanes and connections have been designed for the temperature and wind pressure indicated below, along with all other applicable code-prescribed loads and load combinations.

In addition to complying with the codes indicated in this RFP, design and construction must adhere to the following:

1. Comply with Part 4, Chapter 2.0, Section F20 “Selective Building Demolition”. Existing hazardous materials are not anticipated to be encountered; however, comply with Part 4, Chapter 2.0, Section F2020 “Hazardous Component Abatement” if any hazardous materials are encountered and are affected by the performance of this contract.

2. Comply with Part 6, Attachment 04, NAVY REGION MID-ATLANTIC ENVIRONMENTAL CHECKLIST, for all work on this contract task order.

Select structural sheets from drawings titled, “Jet Engine Test Cell Modernization” by Burns and McDonnell, dated 1996, are provided in Part 6, Attachment 01. Sheet number 18 of shop drawings titled, “Splitter Baffle Details” by Vital Link, Incorporated, dated March 1999, is provided in Part 6, Attachment 02. Attachments 01 and 02 in Part 6 detail the existing guide vanes, with Attachment 01 also showing the existing connections of the existing vanes to the existing structure.

Design the structural system using the following parameters:

Risk Category: II.

Temperature: 500 degrees Fahrenheit maximum

Wind Pressure Generated from Air Intake Due to Tested Jets: 160 psf suction (negative)

Live loads: In accordance with UFC 3-301-01, *Structural Engineering*.

Environmental/Natural Wind loads: Design wind speed: 124 mph; Exposure category C.

Snow loads: Ground snow load: 31 psf; Roof exposure: Fully exposed.

Earthquake loads: Mapped seismic acceleration parameters: SS: 0.10; S1: 0.039.

B20 EXTERIOR ENCLOSURE – NOT APPLICABLE

B30 ROOFING – NOT APPLICABLE

C10 INTERIOR CONSTRUCTION – NOT APPLICABLE

C20 STAIRS – NOT APPLICABLE

C30 INTERIOR FINISHES – NOT APPLICABLE

D10 CONVEYING SYSTEMS – NOT APPLICABLE

D20 PLUMBING NOT APPLICABLE

D30 HVAC – NOT APPLICABLE

D40 FIRE PROTECTION SYSTEMS – NOT APPLICABLE

D50 ELECTRICAL – NOT APPLICABLE

E10 EQUIPMENT – NOT APPLICABLE

E20 FURNISHINGS – NOT APPLICABLE

F10 SPECIAL CONSTRUCTION – NOT APPLICABLE

F20 SELECTIVE BUILDING DEMOLITION

For demolition requirements, refer to Part 3, Chapter 6.0, Section B10 SUPERSTRUCTURE.

F2020 HAZARDOUS COMPONENT ABATEMENT

Refer to 01 57 19 TEMPORARY ENVIRONMENTAL CONTROLS in Part 2.

G10 SITE PREPARATIONS – NOT APPLICABLE

G20 SITE IMPROVEMENTS – NOT APPLICABLE

G30 SITE CIVIL/MECHANICAL UTILITIES – NOT APPLICABLE

G40 SITE ELECTRICAL UTILITIES – NOT APPLICABLE

End of PART 3

Naval Facilities Engineering Systems Command
NAVFAC MID-ATLANTIC

Engineering Department

eProjects WO#: 1855890

PART 4 – MINIMUM MATERIALS, ENGINEERING AND CONSTRUCTION REQUIREMENTS

BUILDING 1100 REPAIR DAMAGED SECONDARY INLET GUIDES
NAS OCEANA
VIRGINIA BEACH, VIRGINIA

Part 4 Minimum Materials, Engineering and Construction Requirements

1.0 GENERAL REQUIREMENTS

The requirements indicated here are minimum performance requirements. More specific project functional and performance requirements, scope items and expected quality levels over and above the standards in Part 4 are identified in Part 3 of the Request for Proposal or Basic Ordering Agreement. The Contractor is encouraged to exceed the minimum requirements. The Contractor's performance evaluation will be based in part on enhancements to materials, engineering, design and construction provided for the contract that exceed minimum requirements.

Part 4 is a general section. Not all items in Part 4 will be required for this project. See Part 3 for project-specific requirements. See "Contract and Order of Precedence" paragraph in Part 2 for relationships between all parts of the RFP.

In general, unless otherwise indicated, provide all labor, equipment and materials necessary to complete the work required for the contract. All work must be in conformance with all applicable referenced criteria, construction standards, laws and regulations, including applicable building fire and life safety codes.

Recycled Materials Considerations:

An Affirmative Procurement Program has been established within the Federal government to promote the purchase of products containing recovered materials. This program promotes the purchase of products containing materials recovered from the solid waste stream. The intent is to conserve resources and reduce solid waste by developing markets for recycled products and encouraging manufacturers to produce quality recycled content products. Use products that meet or exceed the EPA guideline standards for recovered content as required by the Federal Acquisition Regulations (FAR). Availability lists of manufacturers and EPA research on product usage are on the Construction Criteria Base (CCB) at www.wbdg.org/ccb/ccb.php under Documents Library, NAVFAC Criteria. A partial list of products containing recycled materials for possible use is as follows:

- Rock Wool Insulation
- Fiberglass Insulation
- Cellulose Insulation
- Structural Fiberboard and Laminated Paperboard
- Cement and Concrete - Coal Fly Ash
- Carpet including backings and cushions
- Floor Tiles
- Reprocessed and Consolidated Latex Paint
- Crushed Concrete Aggregate for new asphalt, concrete or subgrade

- Recycled glass for terrazzo aggregate
- Acoustical Ceiling Tile
- Gypsum Wallboard
- Steel wall studs
- Cellulose spray applied fireproofing
- HDPE Toilet Partitions

1.1 MATERIALS AND METHODS OF CONSTRUCTION

Only new materials and equipment are to be installed in the work. All materials, equipment and appliances must be of the current manufacturers' products. Do not use obsolete or discontinued materials, equipment and appliances, except that construction materials containing recycled content as described in Paragraph 1 of this Part that completely comply with all materials specifications found elsewhere in this Part may be used.

1.2 APPLICABLE CODES AND STANDARDS

The design and construction must be in accordance with established construction practices, and the latest revision/edition of the following referenced codes and standards. The term "Latest Revision/Edition" is defined as the version as of the project award date. References are available at www.wbdg.org/ndbm/ . The advisory provisions of all codes and standards is mandatory, as though the word "must" had been substituted for "should" wherever it appears. Reference to the "authority having jurisdiction" is to be construed to mean "Contracting Officer". Comply with the required and advisory portions of the current edition of the standard at the time of contract award. All work must comply with UFC 1-200-01, *General Building Requirements*, and IBC 2009 or later edition as modified by applicable NFPA Standard as well as codes and standards listed in RFP Part 2.

1.3 LOCATION-SPECIFIC CODES AND STANDARDS

See Part 3.

1.4 DISCREPANCIES

When discrepancies in the referenced standards and the contract requirements occur, the more stringent requirements govern. The word "should" in all NFPA publications is to be interpreted as a requirement. The Authority Having Jurisdiction in the interpretation of the codes and standards, and approving the exceptions allowed in the referenced standards, is the Contracting Officer, and the parties designated by the Contracting Officer.

2.0 PERFORMANCE TECHNICAL SPECIFICATIONS

Note: The paragraph numbers used correspond with the numbers used in UNIFORMAT II/Work Breakdown Structures (WBS) as listed in the Whole Building Design Guide, Navy Design Build Master, accessible at this website: www.wbdg.org/ndbm .

SECTION A. SUBSTRUCTURE

A10 FOUNDATIONS

Foundations must be reinforced concrete slabs-on-grade with continuous strip footings or isolated spread footings. Concrete slabs must not be less than 4 inches in thickness and footings must not be less than 18 inches below the lowest adjacent grade. Design and construct foundations of reinforced concrete. Comply with IBC, applicable UFGS and with applicable requirements in Section B Shell. For the purposes of interpreting IBC Chapter 18, the "Owner" and "Building Official" is interpreted to mean the "Government", and the "Applicant" is interpreted to mean the "Contractor/Designer of Record".

1. **Contractor-Foundation Design**: The Designer of Record must evaluate the RFP data, and obtain and evaluate all additional data as required to support the design and construction.

2. **Geotechnical Site Data required in Design Drawings**: The Contractor's final design drawings must include:
   a. Notes identifying the soil allowable bearing capacity used in design./li>
   b. Subsurface soil information, be it Government provided or Contractor obtained, that represents subsurface conditions existing on the project site (such as boring logs, test pits, laboratory test results and groundwater observations). The locations of all borings must be indicated on the drawings.

3. **Performance Verification and Acceptance Testing**: Verification of satisfactory construction and system performance is required to be via Performance Verification Testing, as detailed in this part of the RFP.
   a. **Earthwork:** Perform quality assurance for earthwork in accordance with IBC Chapter 17 and applicable UFGS. See Section G1030.

A20 BASEMENT CONSTRUCTION

Provide basement construction in accordance with UFC 3-301-01, *Structural Engineering*. Basement walls include exterior walls below the ground floor level of the building, including walls that are below grade, elevator pits and other pits. Provide basement walls constructed of cast-in-place concrete, precast concrete or masonry. Provide waterproofing and insulation of basement walls. If basement construction is required in Part 3, refer to Standard Design-Build template PTS Section A20 BASEMENT CONSTRUCTION.

SECTION B. SHELL

B10 SUPERSTRUCTURE

Superstructure work includes structural frames, bearing walls, floors, roofs, roof canopies, and balcony construction. Unless otherwise specified in Part 3, superstructures may be designed and constructed using any materials or combination of different materials allowed by applicable codes and standards. Comply with IBC and applicable UFGS. Special inspection, testing, approvals, certifications, observations and quality assurance plans as prescribed in Chapter 17 of the IBC are required.

1. **Concrete**: All concrete must be constructed in accordance with ACI 301. Concrete must have a 28-day minimum compressive strength of 3,000 psi. Slump must be between 2 and 4 inches in accordance with ASTM C143. Provide joints as required to minimize cracking. All concrete must be reinforced. Provide joints as required by applicable ACI

standards. Unless otherwise specified in Part 3 or as indicated by the contracting officer, provide steel trowel finish for all exposed floor surfaces. Exterior surfaces must be a broom finish.

2. **Masonry**:
   a. All concrete masonry must be constructed in accordance with ACI 530.1. Concrete masonry must have a minimum 28-day compressive strength of 1500 psi. Concrete masonry units must conform to ASTM C90, grade A1. Broken blocks are not allowed. Use only standard size and shape blocks. Block may be cut when necessary. Mortar must be Type S.
   b. When used, brick must conform to ASTM C216. In exposed construction, broken brick is not be allowed. Standard size brick may be cut to fit job condition. Use Type S mortar.
   c. Provide metal anchors for masonry and brick, including veneer construction as required by IBC.

3. **Structural Steel**: Structural steel exposed to weathering must be adequately protected to prevent corrosion.

4. **Steel deck**: Steel form deck must have a G90 galvanized finish, and must have a minimum 26-gage thickness. All other steel deck must have a G90 galvanized finish, and must have a minimum 20-gage thickness.

5. **Cold-formed metal framing**: Cold-formed steel studs, joists and track must be galvanized with a minimum thickness of 20-gage.

6. **Wood framing**: Wood framing members must be new lumber, unless otherwise allowed by Part 3. Timber can be Douglas Fir, Douglas Fir-Larch, Hem-Fir, Southern Pine or other structurally competent species allowed by applicable codes and standards. Wood framing must meet the following minimum grading requirements:
   a. Studs - #2
   b. Joists and rafters- #2
   c. Beams, 4x and larger - #1
   d. Posts, 4x and larger - #1
   e. Blocking - #3
   f. Fascia, trim - #1
   g. Wood Structural Panel Sheathing (Exterior Glue)
   h. Roof - APA rated with span index of 24/0 - minimum thickness 1/2 inch
   i. Walls - APA rated with span index of 32/16 - minimum thickness 1/2 inch
   j. Flooring- APA rated with span index of 48/24 - minimum thickness 3/4 inch

B20 EXTERIOR ENCLOSURE

B2010 EXTERIOR WALLS

1. **Exterior Wall Performance**:
   a. **Vapor Transmission Analysis:** Perform a job specific vapor transmission analysis in accordance with ASHRAE 90.1 or WUFI. The conclusion of the analysis must indicate the appropriate locations of needed vapor retarders, air barriers, and anticipated dew-point locations in the exterior enclosure during different critical times of the year.
   b. **Maximum Air Infiltration:** The air leak flow rate must not exceed 0.25 CFM at 75 Pa per square foot (0.076 cm 75 Pa per square meter) of building envelope area including roof or ceiling, walls and floor as provided by the DOR.

Where required in RFP Part 3, provide air barrier testing. Perform testing as required by UFGS 07 08 27.00 10, *Building Air Barrier System Testing for Commissioning.* DOR must edit this section and incorporate into the project specification. Repair leaks and repeat testing until prescribed maximum air leak flow rate is achieved. Provide intermediate and final reports.

c. **Wind Loads:** Provide wind load calculations for exterior cladding in accordance with ASCE-7 with comparative analysis of the cladding system to be provided.

d. **Water Penetration:** No water penetration is acceptable at a pressure of 39 Kg/m2 (8 psf) of fixed area when tested in accordance with ASTM E 331.

e. **Insulating Value:** Provide complete thermal envelope in accordance with ASHRAE 90.1, Chapter 5 with improvements required to meet project energy goals.

Where required in RFP Part 3, provide infrared thermal envelope performance testing. Test the building envelope using Infrared Thermography in accordance with the requirements of ASTM C1060 (latest edition) and ISO 6781. The Contracting Officer will witness the testing. Provide thermography test report including thermographs in color and a color temperature scale to define the temperature indicated by the various colors. The report must identify the high temperature reading, the outdoor air temperature, the building indoor air temperature, and the wind speed and direction. Report to note any areas of compromise in the building envelope, and note all actions required and taken to correct those areas. Repair and repeat testing until discrepancies are demonstrated to be resolved.

2. **Masonry Veneer Exterior Wall Closure Components**: Masonry veneer includes load bearing and non-load bearing exterior walls of the structure, and must include colored mortar, special shapes such as sills, headers, trim units and copings of brick masonry, precast concrete, concrete masonry units, or other approved material. Utilize BIA Technical Notes to design, detail, and construct brick masonry walls. Substitute directive language in the place of BIA suggestive language. The results of these wording substitutions change this document to required procedures. Tie the veneer to the backup wall system with a system that allows the veneer to move independently of the backup wall system, while being structurally supported. The masonry veneer must allow for expansion and contraction of the veneer without cracking the exterior material.

a. **Masonry Veneer Installation:** Conform to ACI 530.1 for masonry veneer installation, including cold weather construction. Antifreeze admixtures are not to be used.

b. **Mortar:** Provide factory-tinted colored mortar conforming to ASTM C270, unless DOR directs otherwise.

c. **Expansion/Control Joints:** Locate expansion/control joints and seal with proper backing material and ASTM C 920 polyurethane sealant, or preformed foam or rubberized expansion joint closure. Conform to UFC 3-101-01, *Architecture* and BIA Technotes 18, 18A.

d. **Brick:** Meet ASTM C216, Grade SW, type FBS, or type FBX for detail work. ASTM C67 test rating shall be "Not effloresced". Use FBA brick only for special architectural effects requiring a non-uniform size.

e. **Split Faced or Ground Faced Masonry:** ASTM C 90

f. **Cast Stone Trim Units:** Cast Stone must meet or exceed the requirements of ASTM C 1364.

g. **Wall Cavity:** shall Comply with the and BIA Technical Notes 21A, 21B, 21C, 28B

h. **Through-Wall Flashing Components:** Through-wall flashing with weep holes must be incorporated in cavity wall construction. Flashing must be 7 ounce copper flashing with a 3 ounce bituminous coating on each side or a fiberglass fabric bonded on each side of the copper sheet; 16-ounce uncoated copper, 28

gauge Type 302 or 304 stainless steel is also acceptable. 'Flexible membrane flashing, plastic or PVC-based membrane flashing is prohibited.

i. **Reinforcing in Veneer Layer:** Reinforcing in the veneer layer must be galvanized in accordance with ASTM A 123/A123M, ASTM A153/A153M, or ASTM A653/A653M, Z275 (G90) coating, and be of sufficient size to eliminate damage to the veneer layer from wind and other live and dead loads imposed on the veneer layer.

j. **Masonry Cleaning:** Clean the masonry in accordance with manufacturer's instructions and BIA Technote 20.

3. **Metal Wall Panel Exterior Closure**

Panels must have factory applied, baked coating to the exterior and interior of metal wall panels and metal accessories. Exterior finish topcoat must be of 70 percent polyvinylidene fluoride (PVDF) resin with not less than 0.8 mil dry film thickness (DFT). Exterior primer must be standard with panel manufacturer with not less than 0.8 mil dry film thickness (DFT).

Wall system and attachments must resist wind loads as determined by ASCE 7, with a factor of safety appropriate for the material holding the anchor. Maximum deflection due to wind on aluminum wall panels must be 1/60. Maximum deflection due to wind on steel wall panels and girts behind aluminum or steel wall panels must be limited to 1/120 of their respective spans, except that when interior finishes are used the maximum allowable deflection must be limited to 1/180 of their respective spans.

Conformations - Non-insulated steel or aluminum wall panels must have configurations for overlapping adjacent sheets or interlocking ribs for securing adjacent sheets and must be fastened to framework using concealed fasteners, or choose the option for exposed fasteners when exposed fasteners are acceptable at the installation. Length of sheets must be sufficient to cover the entire height of any unbroken wall surface.

a. **Steel Wall Panels**:

1) Material and Coating: Form sheets from steel conforming to ASTM A 653/A 653M, Structural Grade 40, galvanized coating conforming to ASTM A 924/A 924M, Class G-90; aluminum-coated steel conforming to SAE AMS 5036; or steel-coated with aluminum-zinc alloy conforming to ASTM A 792/A 792M, except that coating chemical composition must be approximately 55 percent aluminum, 1.6 percent silicon, and 43.4 percent zinc with minimum coating weight of 0.5 ounce per square foot.

2) Gage: Minimum 22 U.S. Standard Gage for wall panels, but in no case lighter than required to meet maximum deflection requirements specified.

b. **Aluminum Wall Panels**:

1) Material and Coating - Form sheets of Alloy 3004 or Alclad 3004 conforming to ASTM B 209 having proper temper to suit respective forming operations.

2) Thickness - Minimum 0.81 mm (0.032 inch) nominal, but in no case thinner than that required to meet maximum deflection requirements specified.

c. **Insulated Aluminum or Steel Wall Panels**: Insulated wall panels must be steel or aluminum factory-fabricated units with insulating core between metal face sheets securely fastened together and uniformly separated with rigid spacers. Panels must have a factory color finish. Wall panels must have edge configurations with interlocking ribs for securing adjacent panels. System must utilize factory fabricated corners and trim pieces at intersections with other materials. Insulated wall panels must be fastened to framework using concealed

fasteners.

1) Insulated Steel Panels - Zinc-coated steel conforming to ASTM A 653/A 653M; or Aluminum-zinc alloy coated steel conforming to ASTM A 792/A 792M, AZ 55 coating. Uncoated wall panels must be 0.61 mm (0.024 inch) thick minimum.

2) Insulated Aluminum Panels - Alloy conforming to ASTM B209, temper as required for the forming operation, minimum 0.81 mm (0.032 inch) thick.

4. **Stucco Exterior Wall Closure**
   a. **Portland Cement Plaster:** ASTM C150, gray Portland cement Type II with 13 mm (1/2 inch) maximum chopped alkali resistant fiberglass strands, minimum 1.5 percent by weight to cement; .68 kg (1 1/2 pounds) per sack of cement. Lime must conform to ASTM C206, Type S. System must utilize stainless steel or zinc corner beads, J-beads and other accessories. Unless specifically deleted, the system must utilize an acrylic admixture or coating to give additional moisture suppression to control fungus growth.
   b. **Exterior Insulation and Finish System (EIFS):** EIMA TM 101 and 01 EIMA TM 101.86. EIFS must be used as the non-primary or the primary exterior finish material only for projects where it is necessary to match existing EIFS.

5. **Precast Concrete Wall Panels**: ACI 211.1 and ACI 301. PCI MNL-116 or PCI MNL-117. Concrete must have a minimum 28-day compressive strength of 281 Kg/cm2 (4000 psi). Joints must include properly sized and placed backing material and fully loaded and tooled sealant joint of no less than 1/4 inch sealant material thickness.

6. **Other Wall Finish Systems**
   a. **Horizontal Wood Siding:** Horizontal Wood Siding: DOC PS 20, exterior, lap type, 6 inches wide, maximum practicable lengths, 11 mm (7/16 inch) thick, smooth face. All surfaces of wood siding and trim must be shop coated with an alkyd primer.

      Species and Grades 1. Grade 1 Common spruce-pine-fir; NELMA, NLGA, WCLIB, or WWPA. 2. Grade Prime or D finish, pressure-preservative-treated hem-fir; NLGA, WCLIB, or WWPA.; 3. Grade D Select (Quality) eastern white pine, eastern hemlock-balsam fir-tamarack, eastern spruce, or white woods; NELMA, NLGA, WCLIB, or WWPA. 4. Grade D Select northern white cedar; NELMA or NLGA. 5. Grade B & B, pressure-preservative-treated southern pine; SPIB.
   b. **Vinyl Siding System:** Integrally colored, vinyl siding complying with ASTM D 3679.
   c. **Manufactured Faced Panels Systems Exterior Wall Siding:** Glass Fiber Reinforced Cementitious Panels System: Siding made from fiber-cement board that does not contain asbestos fibers; complies with ASTM C 1186, Type A, Grade II; horizontal or vertical pattern in plain or beaded-edge style. Texture: Rough sawn or smooth, factory primed.

7. **Exterior Wall Backup Construction**
   a. **Concrete Unit Masonry:** Provide concrete unit masonry to comply with ACI 530.1. Load-bearing units: ASTM C90, Non-load bearing- units: ASTM C129, Type I or II. Provide ground face units, split-faced units, ground-faced units, or split-ribbed units for exposed exterior walls. Provide water repellent admixture to masonry units where the exterior face of the units will not receive a waterproof coating such as paint
   b. **Dampproofing:** Dampproof the cavity-facing wythe of the backup masonry using

asphaltic primer according to ASTM D 41, if dampproofing is not provided by a sprayed on foam or other DOR-approved membrane insulation system.

8. **Load-Bearing Metal Framing System**
If permitted, provide load-bearing metal framing including top and bottom tracks, bracing, fastenings, and other accessories necessary for complete installation. Framing members must have the structural properties indicated. Where physical structural properties are not indicated, they must be as necessary to withstand all imposed loads. Design framing in accordance with AISI SG-673. Install in accordance with DOR-approved shop drawings and manufacturer's installation instructions.

9. **Exterior Studs**:

Max. Deflection Criteria	Exterior Finish
L/360	Cement Plaster, Wood Veneer, Synthetic Plaster, Metal Panels
L/600	Brick Veneer, Stone Panels

Wall deflections must be computed on the basis that studs withstand all lateral forces independent of any composite action from sheathing materials. Studs abutting windows or louvers must also be designed not to exceed 1/4-inch maximum deflection and as required in UFC 4-010-01, DoD Minimum Antiterrorism Standards for Buildings.

1) Studs - ASTM A 1003/ASTM A 1003M, Structural Grade 50, Type H minimum; provide Z180 (G60) galvanized coating in accordance with ASTM A 653/ASTM A 653M. Do not expose studs to direct moisture contact
2) Bracing - Provide horizontal bracing in accordance with design calculations and AISI SG-673, consisting of, as a minimum, runner channel cut to fit between and welded to the studs.
3) Sheathing - Provide sheathing to withstand structural loads imposed on the wall structure. Cover sheathing with either a 15 pound asphalt-impregnated building paper, or air barrier as required by the wall moisture analysis. Sheathing must be one of the following:

a) Plywood: C-D Grade, Exposure 1;
b) Structural-Use and OSB Panels;
c) Gypsum: ASTM C 79/C 79M and ASTM C 1177/C 1177M, 13 mm (1/2 inch) thick fire retardant (Type X) 15 mm (5/8 inch) thick; 1.2 meters (4 feet) wide with square edge for supports 400 mm (16 inches) o.c. with or without corner bracing of framing. Gypsum sheathing must be faced with materials capable of resisting six months of weathering exposure without degradation of the covering or the gypsum. Seal all joints as recommended by the manufacturer.

10. **Wood Framing System**: All materials shall be kiln-dried lumber complying with DOC PS 20. Installation must be in accordance with AF&PA T11. Use preservative pressure treated lumber at sill plates and other members in contact with concrete and masonry surfaces.
    a. **Species and Grades:** Provide species and grades listed: 1) Grade 2 Common spruce-pine-fir; NELMA, NLGA, WCLIB, or WWPA: 2) Grade 2 Common, hem-fir; Douglas-fir; NLGA, WCLIB, or WWPA; 3) Grade 2 Common, southern pine; SPIB.
    b. **Sheathing:** Sheathing must withstand structural loads imposed on the wall

structure. Cover sheathing with either a 15 pound asphalt-impregnated building paper, or air barrier as required by the wall moisture analysis. Sheathing must be as for Metal Studs.

11. **Cast-in-place Concrete System**: Concrete construction must be in accordance with ACI 301.

12. **Insulation and Vapor Retarder**: Insulation, Vapor Retarders, and Air Barrier Systems in or on Exterior Enclosure must include: insulation, liquid, sheet or continuous film materials installed separately in or on wall assemblies to provide resistance to heat loss/gain, and vapor penetration.
    a. **Vapor retarder:** Comply with ASTM C755. Incorporate in the exterior wall system where required by vapor transmission calculations or dew point analysis indicates the need or in conditions of high moisture exposure.
    b. **Bituminous Dampproofing:** Bituminous Dampproofing must be ASTM D449, Type I or Type II bituminous dampproofing on the exterior surface of the interior wythe of masonry in a cavity wall (back-up wall for masonry veneer).
    c. **Building Paper:** FS UU-B-790, Type I, Grade D, Style 1.
    d. **Air Barrier:** Building wrap consisting of air barrier sheeting complying with ASTM E 1677, Type 1, not less than 3 mils thick with a permeance of not less than 575 ng/Pa x s x sq.m. (10 perms). Building wrap must have a flame spread index of less than 25 in accordance with ASTM E 84. Provide building wrap over sheathing of wood or metal framed construction to reduce air penetration and airborne vapor penetration. Provide building wrap tape as recommended by the manufacturer for sealing all joints in the building wrap. Install in accordance with manufacturer's instructions. Air barrier installation at windows must be in accordance with ASTM E 2112.
    e. **Insulation Systems:** Vertical and horizontal polystyrene insulation conforming to ASTM C578 or rigid polyisocyanurate board wall insulating products conforming to ASTM C591 or mineral-fiber blanket insulation conforming to ASTM C 665 must be provided.

13. **Parapets**: Avoid parapets when possible, but when necessary, provide parapets with the same materials as the exterior wall construction. Provide scuppers and wall edge according to SMACNA.

14. **Exterior Louvers and Screens**: If required, provide louvers for Screened Equipment Enclosure or as louvers for exterior doors.

    Storm shutters must comply with ASTM E 1996-03.

15. **Balcony Walls and Handrails**: Balcony walls to match exterior construction. Handrails to comply with the IBC and OSHA.

16. **Exterior Soffits**: Exterior soffit system.

17. **Exterior Painting and Special Finishes**; All painting and coating materials must be low VOC. Painting practices must comply with applicable federal, state and local laws enacted to insure compliance with Federal Clean Air Standards. Apply coating materials in accordance with SSPC PA 1. SSPC PA 1 methods are applicable to all substrates.

    All paint must be in accordance with the Master Painters Institute (MPI) standards for the exterior architectural surface being finished. The current MPI, "Approved Product List" which lists paint by brand, label, product name and product code as of the date of contract award, will be used to determine compliance with the submittal requirements of this specification. Provide paint systems tested to "Detailed Performance Level" standard

as defined by MPI.

18. **Exterior Joint Sealant**: Sealant joint design, priming, tooling, masking, cleaning and application must be in accordance with the general requirements of Sealants: A Professionals' Guide from the Sealant, Waterproofing & Restoration Institute (SWRI). All sealant must conform to ASTM C 920.

19. **Sun Control Devices**: Sun control devices must be manufactured devices to provide sun control on exterior windows and storefronts. Sun control devices must be designed and installed to withstand the wind loads prevailing at the project site.

B2020 EXTERIOR WINDOWS

All windows and doors in new or existing buildings, which are subject to Anti-terrorism Standards, must be blast-resistant as prescribed in UFC 4-010-01, *DoD Minimum Antiterrorism Standards for Buildings*.

Unless otherwise allowed by Part 3, windows for new facilities must be aluminum. In building additions or renovations windows must match existing window materials, except when all windows are to be replaced. If all windows are to be replaced, they shall be aluminum. Exterior windows design, dimension, and construction must meet or exceed the requirements for Anti Terrorism Force Protection requirements. In addition, exterior windows must meet or exceed Energy Star requirements. The design and placement of exterior windows must take into considerations view, natural light, privacy, and protection for the occupants of the facilities. Provide operable hardware and insect screen for exterior windows. Windows must be fabricated by manufacturers normally involved in the manufacturing of windows and be of the current make and model. Do not use obsolete or discontinued windows. Provide weather stripping, STC and IIC rating, commensurate with the intended use of the facility. Submit catalog information and manufacturer's specifications for approval by Contracting Officer prior to purchase of windows.

All window assemblies must meet performance grade CW 60 minimum tested in accordance with AAMA/WDMA/CSA 101/I.S.2/A440-08 or most current edition of this standard.

Where windows separate conditioned spaces from non-conditioned spaces, provide windows bearing NFRC energy label indicating window exceeds current Energy Star criteria. For storefront or curtainwall systems, provide thermally broken framing and insulating glazing with whole-assembly U-value of 0.40 or less. Provide windows exceeding requirements of ASHRAE 90.1, Table 5.5 for project climate zone.

Windows must consist of fixed and operable sash used singly and in multiples. Provide operable sash in spaces occupied by people as a minimum. Include operating hardware, non-corroding framed metal screens for operable sash, integrated blinds set between glass panels and security grilles. Provide jamb support for larger windows where recommended by manufacturer.

1. **Metal Windows**: All windows must conform to ANSI/AAMA/WDMA 101. Metal windows with insulating glass must have thermally broken frames and sash. Factory finish aluminum windows and provide with aluminum frame screens with aluminum mesh at operable sash, hardware and locks, and tinted glazing. Aluminum screens must comply with ANSI/SMA 1004.

2. **Wood Windows**: Clad wood and wood windows must consist of complete units including sash, glass, frame, weatherstripping, insect screen, and hardware. Window units must meet the requirements of AAMA 101, except maximum air infiltration shall not exceed 0.30 CFM per linear foot of sash crack when tested under uniform static air pressure difference of 7.66 Kg/m2 (1.57 psf).

3. **Storefronts**: Provide one-story storefront system fabricated from formed and extruded aluminum and glass components for exterior use. Utilize the specific section of the Standard Design-Build Performance Technical Specifications Section B202002 for the storefront to be provided. Storefront framing must meet or exceed the structural requirements, as measured in accordance with ANSI/ASTM E330: Design system to withstand this as a minimum and comply with design pressure established within the required ASCE 7-05 Wind Speed Calculations determined by the overall average opening within the project.

4. **Glazing**: All exterior glazing must be insulating glass.
   a. Clear Glass - Type I, Class 1 (clear), Quality q4 (A);
   b. Heat-Absorbing Glass - ASTM 1036, Type I, Class 2 Quality q3 (select) ray frames;
   c. Wire Glass - Type II, Class 1, Form 1, Quality q8 Mesh m1 or Form 2, Quality q7;
   d. Laminated Glass - ASTM 1172, total thickness shall be nominally 6 mm (1/4 inch);
   e. Insulating Glass Units - Typically ASTM C 1036, Type I, Class 1, Quality q4, minimum 6 mm;
   f. Tempered Glass - ASTM C 1048, Kind FT (fully tempered);
   g. Patterned Glass - ASTM 1036, Type II, Class 1 (translucent), Form 3 (patterned), Quality q7 (decorative), Finish f1 (patterned one side), Pattern p2 (geometric) 5.55 mm (7/32 inch) thick.

B2030 EXTERIOR DOORS

Exterior doors must be heavy duty insulated steel doors and frames for service access. Provide door frames with welded corners. Use heavy-duty overhead holder and closer to protect doors from wind damage. Steel must have G60 galvanized coating in accordance with ASTM A 924/A 924M and ASTM A 653/A 653M when the job site is located within 300 feet from a body of salt water. Provide commercial quality, coating Class A zinc coating in accordance with ASTM A591 for other steel or steel skin hollow metal doors at other locations. Provide kickplates on the inside face of all exterior doors. Weather-protect all exterior doors and related construction with low infiltration weatherstripping and sealants. Provide threshold with offset to stop water penetration while maintaining accessibility compliance. Conform to the design criteria of ASCE 7. See the hardware schedule for door hardware requirements.

Where doors separate conditioned spaces from non-conditioned spaces, provide doors exceeding current Energy Star criteria. For storefront entrances, provide thermally broken door framing and insulating glazing with whole-assembly U-value of 0.67 or less. Provide doors exceeding requirements of ASHRAE 90.1, Table 5.5 for project climate zone.

1. **Steel Doors**: Exterior doors must comply with ANSI A250.8-1998 (SDI-100). Hardware preparation must be in accordance with ANSI A250.6. Doors must be hung in accordance with ANSI A115.16.
   a. Doors Required:

1) Standard Duty Doors - Level 1, MSG # 20 (IP 0.032", 0.8 mm), physical performance Level C, Model 1 or 2.2) Heavy Duty Doors - MSG # 18 (IP 0,042", 1 mm), physical performance Level B, Model 1 or 2.3) Extra Heavy Duty Doors - Level 3, MSG #16, (0.053", 1.3 mm) physical performance Level A, Model 1, 2, or 3.4) Maximum Duty Doors - Level 4 (IP 0.067", 1.6 mm), physical performance Level A, Model 1 or 2.
   b. Insulated steel doors and frames are required for entrances to dwelling units, and may also be specified as a Contractor's option to Level 1 standard hollow metal doors. Do not use wood doors for exterior doors, unless they are fully protected

from the elements, an exterior grade species, and specially finished. If wood doors are used, provide in accordance with Standard Design-Build Performance Technical Specification Paragraph B203001 2.

2. **Standard Steel Frames**: ANSI A 250.8. Form frames with welded corners for installation in exterior walls. Form stops and beads of 20 gage steel. Frames must be set in accordance with ASTM A250.11. Anchor all frames with a minimum of three jamb anchors and base steel anchors per frame, zinc-coated or painted with rust-inhibitive paint, not lighter than 18 gage. Mortar infill frames in masonry walls, and infill with gypsum board compound at each jamb anchor in metal frame walls. Only use surface exposed bolted anchors in concrete walls.

3. **Door and Frame Finishes**: a) Exterior Doors, Factory-Primed and Field Painted Finish - Doors and frames must be factory primed with a rust inhibitive coating as specified in ANSI A250.8. Factory prime doors on six sides of the door; b) Exterior Doors Galvanized Finish -- Must be Commercial Quality, Coating Class A, zinc coating in accordance with ASTM A 591 when facility is located further than 91 meters (300 feet) from the ocean. When facility is located within 91 meters (300 feet) of the ocean, provide G60 galvanized coating in accordance with ASTM A 924/A 924M and ASTM A 653/A 653M.

4. **Upward Acting Doors**: Upward acting doors must be capable of withstanding the design wind loading of ASCE 7. Provide galvanized steel tracks not lighter than 14 gage for 50 mm (2 inch) tracks and not lighter than 12 gage for 75 mm (3 inch) track. Provide a positive locking device and cylinder lock with two keys on manually operated doors.

5. **Overhead and Roll-up Doors**: Large exterior overhead and roll-up doors system must consist of manual or automatic exterior doors and door assemblies.

6. **Rolling Service Doors and Grilles**: Coiling overhead doors must have minimum 22 gage thermal insulated slats. Electric operators must have three-button switches conforming to NEMA MG 1, NEMA ICS 1, and NEMA ICS 2, and auxiliary hand chain operation, weather-stripping and wind-locks. Doors must be capable of withstanding the design wind loading of ASCE 7 and still operate normally. Finish of the door must be hot-dipped galvanized with a painted finish.

7. **Sectional Overhead Doors**: Sectional overhead doors must conform to NAGDM 102, Residential or Commercial or Industrial door standards. If doors are electrically operated, pushbuttons must be full-guarded to prevent accidental operation, and include limit switches to automatically stop doors at the fully open and closed positions. Limit switch positions must be readily adjustable.

8. **Hardware**: Provide the services of a Certified Door Hardware Consultant to prepare the door hardware schedule.

   Provide all new hardware with satin chrome finish throughout. Hardware must be commercial grade, suitable for the operational requirements and in compliance with life safety code and handicapped accessibility requirements, similar in quality to the hardware shown in C1020 Interior Doors and Hardware below.

   Coordination: Provide a master keying system compatible with the existing base system. Provide an emergency access key box for exterior door fireman key access. Coordinate with the local authority and the Contracting Officer to determine the local requirements for hardware, keying and master keying.

B30 ROOFING

For repair of existing roofing, the cutting of the existing roof shall be kept to a minimum and, where necessary, must be made in a clean and orderly manner to prevent the appearance of a patch.

Repair all damage to existing and new roofing caused by the work of this Contract at no additional cost to the Government. The work must be executed in such a manner as to maintain the integrity of the existing roofing manufacturer's warranty.

1. **Pre-Roofing Conference**: Prior to beginning roofing work, hold a Pre-Roofing Conference with the personnel directly responsible for the roofing systems work, as well as the roofing manufacturer's technical representative.

2. **Roof Design Assurance**: If the roofing project is significant (Significant Roof - A single or group of buildings greater than 1,400 m^2 (15,000 sf)), or where extenuating circumstances of the roof project such as building use, content, safety, or visibility require a roofing consultant, provide the services of a Registered Roof Consultant (RRC) certified by the Roof Consultant Institute, or a Registered Professional architect or Engineer who specializes in roofing, to approve the roof design. The roof consultant must be engaged in roofing design and roofing construction as his primary endeavor. The roof consultant must verify in writing that the design for the project is in accordance with the current edition of *NRCA Roofing and Waterproofing Manual*, UFC's, and RFP, and standard industry practices and building codes.

   If a Roof Design Assurance Consultant is needed, consider using a Registered Roof Observer as a QC specialist.

B3010 ROOF COVERINGS

Roof coverings and procedures must comply with the requirements of UFC 3-110-03, *Roofing*, and NRCA, *Roofing and Waterproofing Manual* found at http://www.nrca.net/rp/technical/manual/manual.aspx as the primary NAVFAC roofing criteria. Roof selection must comply with UFC 3-110-03, *Roofing*. Determine wind uplift using wind speed in accordance with ASCE-7.

1. **STEEP SLOPE ROOF SYSTEMS**: Steep slope systems bare roofs with a pitch greater than 3 in 12. Steep Slope Systems are slate roofing, Asphalt Shingles, Roof Tiles, Foam Set Tiles, Metal Roof Panels (Architectural Standing Seam Metal Roofs on supported substrate), and Structural Standing Seam Metal Roof (SSSMR). Asphalt shingles can only be used for residential construction and light commercial construction.

2. **LOW SLOPE ROOF SYSTEMS**: Low slope systems are roofs with a pitch 3 in 12 or less. Low slope roofing systems must be built-up asphalt roofing (aggregate surfaced, with modified bituminous components), modified bituminous membrane roofing of a minimum of 3 plies with aggregate surface or granular surface modified bitumen cap sheet, or structural standing seam metal roofing. Use EPDM systems only to match existing construction.

3. **ROOF COMPONENTS**:
   a. **Insulation:** For existing structures, provide insulation in accordance with ASHRAE 90.1. For new construction, provide R-30 insulation in the ceilings, attic spaces and soffit areas for interior spaces. Injected polyurethane and Urea Formaldehyde Foam field applied is not permitted. Provide acoustical insulation above walls separating bathroom/restrooms and corridor and adjacent occupied spaces, and between offices and corridors. Insulation must have a minimum sound attenuation rating of STC-55.

Insulation must be Polyisocyanurate Rigid Board Insulation, Mineral Fiber Blanket Insulation to conform to ASTM C 991, with Glass Mat Gypsum Roof Board for use above the deck or insulation conforming to ASTM C 1177/C 1177M, where necessary.

Only on portions of the roof where the sloping of structure does not allow the minimum slopes, provide a factory tapered roof insulation system to provide positive drainage of roof system, and to include drainage around curbs, penetrations, and projections through the roof plane.

Provide Glass Mat Protection Board meeting ASTM C 1177 for use as a thermal barrier (underlayment) or protection board for hot-mopped applications.

b. **Vapor Retarder:** Determine the need and location in the roof assembly for a vapor retarder. Where the mean January temperature is 40 degrees Fahrenheit or less, and the expected interior relative humidity is 45% or greater, use a vapor retarder. Otherwise, use ASHRAE 90.1 for the determination.

1) Vapor Retarders as Integral Facing - Alloy conforming to ASTM B 209, or Vapor Retarders Separate from Insulation - Vapor retarder material must be 10 mil polyethylene sheeting conforming to ASTM D 4397.

2) A slip sheet is required to separate the roofing panels from the insulation facing where the facing would be in direct contact with the roofing panels. If a slip sheet is necessary for use with a vapor retarder, use a 5 lb. per 100 square feet rosin-sized, unsaturated building paper.

c. **EPDM Rubber Boots:** Flashing devices around pipe penetrations& must be flexible, one-piece devices molded from weather-resistant EPDM rubber.

d. **Prefabricated Curbs and Equipment Support:** Provide Prefabricated curbs and equipment supports of structural quality, hot-dipped galvanized or galvanized sheet steel, factory primed and prepared for painting with mitered and welded joints. Provide integral base plates and water diverter crickets. Minimum height of curb must be 8 inches above finish roof.

e. **Fasteners:** Provide fasteners that meet all requirements of the NRCA and Factory Mutual.

f. **Wood Nailers:** Wood nailers shall be pressure-preservative-treated in accordance with AWPA M2 Standards, permanently marked or branded, and installed flush with the top of the adjacent insulation board.

g. **Flashing and Sheet Metal:** Provide flashing and sheet metal work including scuppers, splash pans, and sheet metal roofing. Flashing and sheet metal must be provided in accordance with roof manufacturer's printed installation instructions and in compliance with NRCA and SMACNA recommendations. Fabricate Flashing and sheet metal components from Copper, Lead-Coated Copper sheet, Steel Sheet, Zinc-Coated (Galvanized) - ASTM A 653/ A 653M, Stainless Steel - ASTM A 167, Type 302 or 304, 2D finish, or Pre-Finished Aluminum.

h. **Gutters and Downspouts:** Provide gutters and downspouts compatible with roofing material and finish. Concealed (interior) gutters and downspouts are prohibited. Provide splash guards at points of discharge.

i. **Roof Openings and Supports:** Provide flashings for roof openings and supports as recommended by the NRCA. Assure all penetration flashings extend minimum 200 mm (8 inches) above the finished roof surface.

j. **Roof Hatches:** Provide roof hatch where required by OSHA, and as access to roof when roof mounted equipment is used or other routine roof maintenance is required.

k. **Glazed Roof Openings:** Skylights and other glazed roof openings shall be used

only to supplement interior lighting levels (generally in steep slope or vertical applications), and otherwise, are discouraged from use.

l. **Guards:** Provide rails or guards as required by the OSHA, the International Building Code or other applicable safety standards.

m. **Traffic Pads:** Provide on roof system to protect roof from foot traffic. Provide traffic pads around roof mounted mechanical equipment and underneath removable mechanical equipment access panels. Traffic pads must be of compatible material to roof.

4. **OTHER ROOFING**

a. **Lightning Protection:** Lightning protection component penetrations and attachments must be sealed and flashed and anchored in a permanent manner and in a manner to avoid the degradation of the watertight integrity of the roof system.

b. **Roof Drains (Existing):** Where existing roof drains are to be reused in roof replacement construction, the contractor must provide new, compatible flashing materials, a new drain clamping ring and new bolts for anchorage. Reuse of existing clamping ring and bolts is unacceptable.

SECTION C. INTERIORS

C10 INTERIOR CONSTRUCTION

C1010 PARTITIONS

1. **Fixed Partitions**: wood frame; light gage steel frame; concrete masonry complying with ACI 530.1/ASCE 6/TMS 602 and associated ASTM Standards; or cast-in-place concrete complying with UFC 1-200-01, *General Building Requirements*, ACI 117 and ACI 301/301M. In addition, interior partitions must comply with tables for sound isolation and noise reduction in Chapter 1, "Architectural Graphic Standards". Include a statement of adherence to the applicable criteria.

   Gypsum board/stud partitions may be standard gypsum board, moisture resistant, or impact resistant. Use cement board in showers and other wet areas. Reinforce points where doorknobs can strike a wall and anchorage points for wall mounted equipment.

2. **Demountable or Removable Partitions**: Must be of materials allowed by code and shall be anchored firmly to the structure to carry their own weight as well as impact forces and seismic lateral forces. Sound Transmission Class (STC) rating and Impact Isolation Class (IIC) rating shall be in accordance with ASTM E 90 or ASTM E 413 for frequency data, and shall meet the requirements of the intended use in Part 3. The majority of the components and hardware must be provided by a single manufacturer and on the manufacturer's current GSA price list. The product must be included on the NAVFAC Selection Tool for Movable Walls.

3. **Glazed Partitions and Interior Windows**: Must be of the materials allowed by IBC, and must comply with fire and smoke separation requirements. Provide safety glazing and fire resistant rating where they are required.

C1020 INTERIOR DOORS

1. **Wood Doors**: Stile and rail wood doors must be WDMA I.S.6A-01, premium or custom grade, heavy duty or extra heavy duty. Flush wood doors must be WDMA I.S.1A-04, premium or custom grade, heavy duty or extra heavy duty; or WDMA I.S.-97 (PC-5 5-ply

particleboard core or SCLC-5 5-ply structural composite lumber core). Doors adjacent to paneling or millwork must comply with corresponding AWI millwork grade. Provide interior fire doors in rated walls.

2. **Steel doors**: Must be ANSI A 250.8, Level 1, (occasional use, low abuse types such as closet doors without locks); Level 2, (low use, moderate abuse types such as office/storeroom doors); Level 3, (moderate use, high abuse types such as BEQ sleeping room doors); Level 4, (high use, high abuse types such as corridors, stairways, assembly spaces, and main entry doors), with a physical performance level of 'A'. Maximum door undercut must not exceed 19 mm (3/4 inch).

3. **Sound Insulated Doors and Frames**: Utilize Sound Insulated Doors and Frames with sound control weatherstripping in rooms requiring wall assemblies to be sound insulated with a Sound Transmission Class (STC) rating as required. The STC rating for the door and frame assembly must be not less than the wall assembly STC rating.

4. **Aluminum Doors and Frames**: Provide swing-type aluminum doors and frames complete with framing members, transoms, side-lites, and accessories. Fabricate of ASTM B 221, Alloy 6063-TS for extrusions.

5. **Steel Door Frames**: ANSI A 250.8. Form frames with welded corners for installation in masonry partitions and knock-down field assembled corners for installation in metal stud and GWB partitions. Install frames in accordance with SDI 105. Form stops and beads with 20 gauge steel.

   Provide a minimum of three jamb anchors and base steel anchors per frame, zinc-coated or painted with rust-inhibitive paint, not lighter the 18 gauge. Secure frames to previously installed concrete or masonry with expansion bolts in accordance with SDI 11-F. Provide mortar infill of frames in masonry walls, and gypsum board compound infill at each jamb anchor in metal frame walls.

6. **Fire doors**: Provide in conformance with NFPA 80 an NFPA 105. Fire doors and frames must bear the label of UL, FM or WHI attesting to the rating required. Door and frame assemblies must be tested for conformance per NFPA 252 or UL 10B (for neutral pressure) or UL 10C (for positive pressure). Wood fire doors must also comply with ASTM E 152.

   Provide stainless steel astragals complying with NFPA 80 for fire-rated assemblies and NFPA 105 for smoke control assemblies.

7. **Interior Door Hardware**: Provide the services of a certified door hardware consultant to prepare the door hardware schedule. Unless otherwise noted, interior doors include latch, hinges, door stops and door silencers. Provide closers and kick plates for fire-rated, corridor, stairway and high-use non-residential doors.
   a. **Hinges** - BHMA A156.1, Grade 1, 108 x 108 mm (4 1/2 x 4 1/2 inches) with non-removable pin or anti-friction bearing hinges.
   b. **Locks and Latches** - For non-residential buildings use Series 1000, Operational Grade 1, Security Grade 2 for stairways, building entrances, corridors, assembly spaces, and other high use interior doors. Use Series 4000, Grade 1 for non-residential locations not using Series 1000 hardware. For residential buildings use Series 4000, Grade 2 for interior doors. a) Mortise Locks and Latches - BHMA A 156.13, Series 1000, Operation Grade 1, Security Grade 2. b) Bored Locks and Latches - BHMA A 156.2, Series 4000, Grade 1, or Grade 2.
   c. **Exit Devices** - BHMA A 156.3, Grade 1. Provide touch bars in lieu of conventional crossbars and arms. Use manufacturer's integral touch bars in aluminum storefront doors.

d. **Card Key Access** - Provide card key type access units for specialized entries. Provide lithium battery powered, magnetic stripe keycard locksets that are ANSI/BHMA A156.13, Series 1000, Grade 1, mortise or ANSI/BHMA A156.2, Series 4000, Grade 1, cylindrical locks, tamper resistant, UL listed with 25 mm (1 inch) throw deadbolt, 19 mm (3/4-inch) throw latch bolt, auxiliary dead-locking latch, and 68.75 mm (2-3/4 inch) backset.

Provide hardware keying compatible with the existing base-wide keying system. Replacement interchangeable cores must be compatible with the Best Lock system.

e. **Key Cabinet**: Provide a Key Cabinet with 30% over capacity.

C1030 SPECIALTIES

1. **Compartments, Cubicles, & Toilet Partitions**: FS A-A-60003. Provide toilet compartments at multi-fixture toilet rooms of Type I, Style B-Ceiling Hung, C-Overhead Braced, or F-Overhead braced-alcove. Reinforce panels to receive partition-mounted accessories. Urinal screens must be FS A-A-60003. Type III, Style A, floor supported and wall hung or Style D, wall hung. Wall hung urinal screens must be secured with continuous flanges to urinal screen and wall. Steel and Plastic toilet partitions must have a recovered materials content of 20 to 30 percent. Chrome-plated or stainless steel door latches and coat hooks. Provide one coat hook per compartment door. Latches and hinges for handicapped compartments must comply with ABA Accessibility Standards.

2. **Toilet and Bath Accessories**: Provide toilet and bath accessories and install per ABA Accessibility Standards and manufacturers' requirements.

3. **Marker Boards and Tack Boards**: Provide porcelain enamel marker boards fused to a nominal 28 gauge steel sheet and tack boards of cork, with a tensile strength of at least 40 psi when tested according to ASTM F 152, with woven or vinyl covering.

4. **Signage**: All doors must have an identifying device. All handicap accessible facilities must utilize signage which meets current ABA Accessibility Standards requirements with regard to Braille, raised characters, finishes (contrast), size and mounting height. If room names are subject to frequent change, provide an interchangeable strip to be utilized to facilitate removal and replacement.

5. **Lockers**: Provide lockers to meet FS AA-L-00486 (Rev J), enameled steel with special bases.

6. **Shelving**: Provide steel shelving.

7. **Counters**: Provide solid plastic or plastic laminate counter tops and back splashes, AWI Custom grade.

8. **Cabinets**: Provide cabinetry and millwork items with associated accessories and hardware. Cabinetry must be AWI premium or custom grade and have concealed hinges with adjustable standards for shelves.

9. **Casework**: Provide all built-in premanufactured metal cabinetry for specialized functions such as laboratories, libraries, medical and dental facilities. Casework must comply with Mil Std 1691.

10. **Closets**: Provide premanufactured or millwork closets or prefabricated coat closets.

11. **Fire Extinguisher Cabinets**: Provide fire extinguisher cabinets. Size and locate fire extinguisher cabinets to encase extinguisher as required by NFPA 10 & 101. Fire extinguishers will be provided by the Customer.

12. **Firestopping Penetrations**: Provide all sleeves, caulking, and flashing for firestopping penetrations.

13. **Entrance Floor Grilles and Mats**: Provide recessed pan or surface floor mats at main entrance only or all building entrances.

14. **Ornamental Metal Work**: Provide ornamental metalwork.

15. **Other Interior Specialties**: Motorized projection screen must be wall or ceiling or above-ceiling mounting. Pull-down projection screens must be provided in lieu of motorized projection screens as approved by the Activity.

C20 STAIRS

Provide interior and exterior stair construction. Stair design, materials and construction must comply with IBC, and applicable codes and standards, including NFPA 101. Provide refuge area at top of stair in accordance with applicable Americans with Disability Act Design Guide requirements.

C30 INTERIOR FINISHES

C3010 WALL FINISHES

Unless otherwise noted in the RFP, primary wall finish is painted gypsum wall board. Provide fire resistive construction and finishes for fire separation between areas of the building in accordance with the latest adopted version of the IBC, and NFPA 101. Provide water resistant cementitious board at floors and walls of tubs and showers.

1. **Ceramic Tile**: Provide ceramic tile wall systems as defined in the Tile Council of America (TCA) handbook for ceramic tile installation and materials for the service requirements listed. Provide installation and materials in accordance with ANSI A108/A118 series standards, except do not use organic adhesives. Provide manufacturer's full range of colors and styles. Tile must be a minimum of one grade above base grade. Coordinate with ceramic bath accessories for modularity. Include all trim pieces, caps, stops, and returns to complete installation.

2. **Wallcovering**: Vinyl wallcovering must conform to ASTM F793, Category V Type II, 371 g to 624 g (13.1 to 22 ounces) total weight per square yard and width of 1370 mm (54 inches). Provide ASTM F793, Category VI, Type III, 624 g (22 ounces) and above to cover rough textured walls such as masonry. High performance fabric wallcovering must be woven or non-woven Class A, fire resistive material, a minimum of 1219 mm (48 inches) wide, with a soil repellent finish and a minimum of 340 g (12 ounces) per square yard exclusive of backing. "Tackable" wall covering must be "self-healing" from tack penetration through the covering into the substrate. Acoustical wallcovering must be textured, woven or non-woven, Class A fire resistive material with an acrylic backing, a minimum of 1219 mm (48 inches) wide and a minimum of 454 g (16 ounces) per square yard. The material must have an NRC rating of .15 on gypsum board in accordance with ASTM C423. Do not install wall covering on interior face of exterior walls.

C3020 FLOOR FINISHES

Provide new flooring materials as required. All flooring materials, adhesives, finish coats, sealers and mortar materials must meet or exceed EPA requirements for toxic substance content restrictions and air quality requirements; and meet or exceed fire protection requirements, such as smoke and flame spread requirements. When laying broadloom carpets and resilient flooring, use the widest sheet materials available to avoid or minimize the number and extent of seams. When seams are required, locate seams at infrequent traffic areas. Contractor is required to submit seam layout to Contracting Officer for approval prior to installation.

1. **Ceramic Tile**: Provide ceramic tile floor systems as defined in the Tile Council of America (TCA) handbook for ceramic tile installation and materials for the service requirements listed. Provide installation and materials in accordance with ANSI A108/A118 series standards, except do not use organic adhesives. Provide manufacturer's full range of colors and styles. Tile must be a minimum of one grade above base grade. Provide ceramic or porcelain tile with a minimum breaking strength of 202kg (300 pounds), ASTM C648, and a maximum absorption rate of 0.5%, ASTM C373. Tile must have a minimum coefficient of friction (wet and dry) of 0.6, ASTM C1028.

2. **Resilient Flooring**: Meet or exceed applicable ABA Accessibility Standards horizontal requirements. Install flooring per manufacturer's recommended methods and adhesives. Provide manufacturers full line of color and pattern selections, including multi-color patterns. Linoleum Sheet or Tile Flooring must be 2.5 mm (0.10 inch) gage; minimum 250 psi static load limit, ASTM F970; and with multi-color pattern and color extending throughout thickness, ASTM F2034, Type I. Resilient homogeneous vinyl sheet flooring must be commercial quality, 2.0 mm (0.080 inch) overall gage, with minimum 1.6 mm (.066 inch) thick wear layer, protective urethane finish, ASTM F1303, Type II, Grade 1, Class A. Resilient vinyl composition tile must be commercial grade, 3 mm (.125 inch) gage, ASTM F1066, Comp. 1, Class 2, through pattern.

3. **Carpet**: Carpet manufacturer and installer must be experienced, established and in good standing with the industry. Carpet, broadloom or tile must be installed per the Carpet & Rug Institute's recommendations. Carpet must be tufted, textured loop, cut/loop or tip sheared, a minimum of 26 oz. face weight, minimum density of 6600, 100% premium branded yarn- or solution-dyed, Type 6 or 6.6 continuous hollow filament nylon. Carpet must be multi-color and patterned for soil and wear hiding properties. Carpet must have high performance backing warranted against zippering, edge raveling and delamination, be anti-static and anti-microbial. Carpet must meet Flammability ratings; generate less than a 450 rating, ASTM E662; meet the Critical Radiant Flux Classification of not less than 0.45 W/sq. cm., ASTM E648. Where indicated in the room requirements, provide attached polyurethane cushion or separate polyurethane cushion for double stick pad installations, ASTM 1667 and ASTM 3676.

4. **Wall Base**: Provide porcelain or ceramic tile base for porcelain or ceramic tile floor. Provide solid, through color preformed rubber or vinyl base for carpeted/resilient flooring areas. Provide a sealant between base and floor finish in all wet areas.

C3030 CEILING FINISHES

Unless otherwise noted in the room requirements, acoustical ceiling panels must be 24 inch by 24 inch, with a minimum light reflectance of .75, Class A, flame spread 25 or less and smoke development of 50 or less, ASTM E84. Acoustical ceiling panels must have minimum 60% recycled content and conform to ASTM E1264. Panels must have a factory-applied standard washable painted finish or Type IV with factory-applied plastic membrane-faced vinyl, Form: 1, 2 or 3. Provide square edge except as noted.

Unless otherwise noted in the room requirements for entrance lobby, restrooms and showers, provide a painted, suspended gypsum board ceiling. Exposed structural systems shall be painted.

C3040 INTERIOR COATINGS AND SPECIAL FINISHES

All painting and coating materials must be low VOC, comply with local air quality control laws and, regulations; and conform to the Master's Painters Institute's (MPI) *Architectural, Interior Systems Manual* and the MPI's *Maintenance and Repainting Manual* recommendations for paint systems, surface preparation and applications.

Provide minimum of one prime coat and two finish coats. The prime coat must not be combined with texture or other coatings. Seal and prime all surfaces to cover underlying stains or discoloration that may affect finish paint. Finish coats must provide full coverage of undercoats and substrates. All walls and ceilings in wet area must have semi-gloss paint. All wood or metal cased openings, door trims and casings, window trims and casing, and other finish trim must have semi-gloss paint. All interior walls and ceilings must have satin or eggshell finish. For previously painted surfaces, prime all surfaces to ensure compatibility of finish coats. Do not paint prefinished surfaces except as noted.

Provide Institutional Low Odor/Low VOC Latex paint or High Performance Architectural Latex systems as defined and approved by the MPI Systems Manual for the various substrates required to be painted.

Paint/Color Selection: Provide paint systems tested to "Detailed Performance Level" standard as defined by MPI. Paints must be readily available for purchase in standard colors.

SECTION D. SERVICES

D10 CONVEYING SYSTEMS - Not used

D20 PLUMBING

Provide plumbing fixtures, appliances, and equipment complete and usable as required by Part 3. All plumbing fixtures, appliances and equipment, piping, valves, accessories, and appurtenances must comply with International Plumbing Code (IPC) and all other applicable codes and standards, including energy, water conservation, and local activity regulations and standards. Provide all plumbing fixtures to meet current criteria of EPA Watersense program http://www.epa.gov/watersense

1. **Domestic Water**: Provide ASTM B 88 Type K or L copper tubing and fittings for pipe sizes 4 inches or smaller. Provide Type L tubing above ground with solder fittings. For buried piping, use Type K tubing with solder fittings, or Chlorinated polyvinyl chloride (CPVC) Plastic pipe, fittings, and solvent cement per ASTM D 2846/D 2846M for sizes 4 inches and smaller.

   Provide mineral fiber insulation with vapor barrier on domestic water (hot and cold) supply and recirculation piping. Provide re-circulating pumps or instantaneous water heaters for hot water systems with fixtures greater than 100 ft from hot water source. Provide water hammer arrestors per PDI STD WH-210 as required for rapid water shut off scenarios. All water valves except for fixture shut off valves must be ANSI B16.18 brass, full port ball type. All plumbing fixtures must have separate shut off valves. All piping must be concealed in walls, attic spaces, or in crawl spaces under floors. Provide access panels for valves behind walls. No under slab water piping is allowed. Fittings for annealed copper tubing must conform to ANSI BI6.22. Solder and flux must be lead free.

Exposed exterior piping is prohibited unless otherwise not practical. Provide identification for piping and equipment.

2. **Wall Penetrations**: Piping which penetrates fire rated walls must be completely sealed to maintain fire resistance integrity as required by Code. Penetrations through walls that are not fire rated must be adequately supported and sealed. Pipe penetrations through exterior walls must be sleeved, caulked with weatherproof sealant and provided with finish trim.

D2010 PLUMBING FIXTURES

Provide fixtures complete with fittings, and chromium-plated, or nickel-plated brass (polished bright or satin surface) trim. All fixtures, fittings, and trim, must be from the same manufacturer and must have the same finish. Access panels must be provided for all bathtubs and showers, except at exterior and party walls and where tub or showers are back to back. Provide cleanouts in accordance with the plumbing code. Rotate or extend cleanouts required to facilitate maintenance and clearing of blockage in waste piping.

1. **Faucets**: All faucets must be brass construction, washerless type, with seals and seats combined in one replaceable ceramic disk valve cartridge designed to be interchangeable with all lavatories, bathtubs and kitchen sinks, or having replaceable seals and seats removable either as a seat insert or as a part of a replaceable valve unit. Faucets provided must be of the same type and manufacturer throughout the facility, unless otherwise noted. Lavatory faucets must be U.S. Environmental Protection Agency (EPA) WatersenseÂ® certified and labeled bathroom sink faucets.

2. **Water Closets**: Water closets must be in accordance with ANSI A112.19.2, with trim conforming to A112.19.5. Water closets must be vitreous china and have an elongated bowl with trip lever, unlined tank, close coupled siphon jet, floor outlet with wax gasket, flange and an anti-siphon float valve. Provide white closed front seat and cover for private toilets and open front seat cover for public facilities. Water consumption must be no greater than 1.6 gallon maximum per complete flushing cycle. Provide self-closing metering type flush valve on flush valve type water closets, unless electronic control is specified in Part 3. Maximum flush volume must not exceed 1.28 gallon per flush (GPF) (4.8 Liter per flush (LPF)) for single function flush valves. Dual function flush valves must provide a flush of 0.8 to 1.6 GPF (3.0 to 6.0 LPF) or 1.28 GPF (4.8 LPF) average for 2 low volume flushes and one high volume flush. Tank type water closets must be U.S. Environmental Protection Agency (EPA) WatersenseÂ® certified and labeled toilets.

3. **Urinals**: Provide U.S. Environmental Protection Agency (EPA) WatersenseÂ® certified and labeled ceramic-type urinals.

   Non Water Use Urinals: ASME A112.19.2, white vitreous china, wall-mounted, wall outlet, non-water using, integral drain line connection, with sealed replaceable cartridge or integral liquid seal trap insert. The urinal and trap assembly must maintain a sufficient barrier of a biodegradable immiscible liquid to provide the trap seal and inhibit the backflow of sewer gases. For urinals that use a replaceable cartridge, provide four additional cartridges for each urinal installed. Provide an additional quart of biodegradable liquid for each urinal installed. Provide ASME A112.6.1M concealed chair carriers. Installation and testing must be in accordance with the manufacturers' recommendations. Drain lines that connect to the urinal outlet must not be made of copper tube or pipe. Urinal design and installation must be ABA Accessibility Standards compliant. Slope the sanitary sewer branch line for non-water use urinals a minimum of 1/4-inch per foot. Manufacturer must provide an operating manual and on-site training for the proper care and maintenance of the urinal.

4. **Lavatories**: Unless otherwise specified by Part 3, lavatories must be integral to the vanity countertops. Each lavatory must be provided with hot and cold water tempered by means of a mixing valve or combination faucet.

5. **Sinks**: ASME/ANSI A112.19.3M sink, 20 gage stainless steel with integral mounting rim, minimum dimensions of 840 mm (33 inches) wide for two compartment or 560 mm (21 inches) wide for one compartment by 560 mm (21 inches) front to rear, with ledge back and undersides coated with sound dampening material.

6. **Water Coolers**: ARI 1010, wall-mounted, bubbler style, air-cooled condensing unit, 4.20 mL per second (4.0 gph) minimum capacity, stainless steel splash receptor, double wall heat exchanger, and all stainless steel cabinet. Install in accordance with the manufacturers instructions.

7. **Showers**: Provide U.S. Environmental Protection Agency (EPA) WatersenseÂ® certified and labeled showerheads connected to concealed pipe connected to copper alloy single control type mixing valve with front access integral screwdriver stops. Anchor the mixing valves and the pipe to each showerhead in wall to prevent movement. Unless otherwise specified by Part 3, showers must be supplied with water at a temperature no more than 110Â°F by means of a pressure balance, tempering or mixing valve.

8. **Service sinks**: ASME A112.19.1M, white enameled cast-iron or ASME A112.19.2M white vitreous china, wall mounted and floor supported by wall outlet cast-iron P-trap, minimum dimensions of 560 mm (22 inches) wide by 457 mm (18 inches) front to rear with 230 mm (9 inch) splashback, and stainless steel rim guard. Provide ASME A112.18.1M copper alloy back-mounted combination faucets with vacuum breaker and 20 mm (0.75 inch) external hose threads

9. **Mop Sinks**: Pre-cast terrazzo or ASME A112.19.2M white vitreous china floor-mounted mop sink, 914 mm x 914 mm x 305 mm (36 inches x 36 inches x 12 inches). Terrazzo must be made of marble chips cast in white Portland cement to a compressive strength of not less than 25 mPa (3625 PSI) 7 days after casting. Provide brass body drains with nickel bronze strainers cast integral with mop sink. Provide stainless steel rim guard for mop sink. Provide chrome-plated exposed hot and cold water faucets ASME A112.15.M wall-mounted copper alloy faucets swing spout with 20 mm (3/4 inch) hose connection, vacuum breaker, and pail hook. Provide mop hanger on wall above sink suitable for four mops.

10. **Laundry Sinks**: ANSI Z124.1, plastic, two compartment, minimum dimensions of 1016 mm wide by 533 mm (40 inches wide by 21 inches) front to rear, with floor-supported steel mounting frame secured to wall. Provide ASME A112.18.1M copper alloy centerset faucets, swing spout with aerator, and stainless steel drain outlets with cup strainers, and 40 mm (1.5 inch) adjustable P-trap with drain piping to vertical vent stack.

11. **Emergency Eyewash**: ANSI Z358.1, wall-mounted self-cleaning, non-clogging eye and face wash with quick opening, full-flow valves, stainless steel eye and face wash receptor. Provide copper alloy control valves. Pressure-compensated tempering valve is required for emergency fixtures, with leaving water temperature setpoint adjustable throughout the range 15.5 and 35 degrees C (60 to 95 degrees F) unless cold water supply meets temperature criteria.

D2020 DOMESTIC WATER DISTRIBUTION

1. **Natural Gas or Propane Fired Storage Water Heaters**: Provide high efficiency storage type natural gas or propane fired water heaters per ANSI Z21.10.1 or ANSI Z21.10.3 meeting AGA requirements. For California, unit efficiency must meet or exceed that listed in the Title-24 Standards. Equipment efficiency must be in accordance with Energy Star or FEMP designated products list, http://energy.gov/eere/femp/find?product?categories?coveredefficiency?programs For gas water heaters use Energy Star labeled products. For products not listed by Energy Star or FEMP provide products with efficiency rated in the top 25% of available products. Water heaters must be equipped with glass-lined steel tanks, minimum R-15 polyurethane foam insulation, replaceable anodes, and adjustable range thermostat to allow hot water settings between 43 and 71 degrees C (110 and 160 degrees F). Water heater warranty must be a minimum of 10 years. Provide vent in accordance with NFPA 54. Provide low NOx burners that meet SCAQMD requirements. Install in accordance with manufacturer's instructions and the code. Where earthquake loads are applicable, water heater supports must be designed and installed for seismic forces in accordance with the International Building Code.

2. **Electric Water Heaters**: Provide electric water heaters with double heating element per UL 174. Unit efficiency must meet or exceed that listed for FEMP or ENERGYSTAR, or as listed in ASHRAE 90.1, whichever is greatest. Water heaters must be equipped with glass-lined steel tanks, high efficiency type, insulated with polyurethane foam insulation, replaceable anodes, and adjustable range thermostat to allow hot water settings between 43 and 71 degrees C.

3. **Domestic Water Boilers**: Boilers must be designed, tested, and installed per ASME CSD-1 (Controls and Safety Devices) and ASME BPVC (Boiler and Pressure Vessel Code). The boiler must meet the requirements of the UL 795, NFPA 85, ANSI Z83.3, and ASME CSD. Boilers must be certified by Naval Personnel or a contractor approved by the Contracting Officer.

D2030 SANITARY WASTE

All new sewers below concrete slab must be solid core, minimum schedule 40 (DWV Type), ABS in accordance with ASTM 2661. New waste and vent piping above floor must be Schedule 40 PVC (DWV Type) ASTM 2665 or ABS ASTM 2661. Use of ABS plastic pipe must conform to the IBC and IPC. Provide pipe sizing, configurations, and cleanouts as required by the IPC. Cellular core plastic pipe is not allowed. SOVENT systems are not allowed.

D2040 RAINWATER DRAINAGE

Below concrete slab must be solid core, minimum schedule 40 (DWV Type), ABS in accordance with ASTM 2661. Above floor must be cast iron hubless, or hub and spigot, or Schedule 40 PVC (DWV Type) ASTM 2665 or ABS ASTM 2661 as indicated in Part 3. Pipe materials must conform to the IBC and IPC. Provide pipe sizing, configurations, and cleanouts as required by applicable codes and standards.

D2090 OTHER PLUMBING SYSTEMS

Natural Gas Piping Systems: Exterior above grade natural gas piping must be schedule 40 galvanized steel pipe with threaded fittings and joints. Underground exterior gas piping must be polyethylene pipe that satisfies the requirements of NFPA 54, ASTM D2513-01, and ASME B31-8. Provide warning tape at 12 inches below grade directly above buried gas pipes. Below grade metal gas piping is prohibited. Interior gas piping must be ASTM A 53, schedule 40 black steel with ASME B16.3 threaded fittings and joints. The use of semi-rigid tubing and flexible connectors

for gas equipment and appliances is prohibited except for final connections to the equipment and appliances where they must be provided. Provide flexible gas connections in accordance with ANSI Z21.45 and not more than 40 inches long. Provide accessible gas service with shutoff valve for all equipment. Gas piping must conform to NFPA 54 and must be pressure tested in accordance therewith. Gas piping is considered a fragile utility in the content of UFC 4-010-01, *DOD Minimum Antiterrorism Standards for Buildings*.

D30 HVAC

The HVAC systems must comply with the latest edition of the International Mechanical Code, International Plumbing Code, ASHRAE Standards, National Electrical Code, National Fire Protection Association Publications, International Building Code, and California Title 24 or ASHRAE 90.1 energy efficiency standards (the more stringent of the two) unless otherwise specified in Part 3. All equipment, appliances, ductwork and accessories must comply with applicable codes and standards. For projects located in California, also comply with California Energy Commission (CEC) efficiency rating requirements as stated in Ca. AB 970 Title 24. The Contractor must certify that the installation is in conformance with the applicable codes and standards at the completion of the contract, prior to final invoice being processed and final acceptance. Provide Energy Star rated equipment where available. Provide equipment with performance in excess of Energy Star requirements where specified.

1. **Equipment Clearance**: Provide working space around all equipment. Provide all required fittings, connections and accessories required for a complete and usable system. All equipment shall be installed per the manufacturer's recommendations. Where the word "should" is used in manufacturer's instructions, substitute the word "shall".

2. **Material and Equipment Qualifications**: All materials and equipment must have been in satisfactory commercial or industrial use for 2 years prior to the bid opening. The 2-year use must include applications of equipment and materials under similar circumstances and of similar size. The product must have been for sale on the commercial market through advertisements, manufacturer's catalogs, or brochures during the 2-year period.

3. **Motors**: Single-phase fractional-horsepower alternating-current motors must be high efficiency types corresponding to the applications listed in NEMA MG 11. Select polyphase motors based on high efficiency characteristics relative to the applications as listed in NEMA MG 10. Additionally, all polyphase squirrel-cage medium induction motors with continuous ratings must meet or exceed energy efficient ratings per Table 12-10 of NEMA MG 1.& Provide controllers for 3-phase motors rated 0.75 kW (1 hp) and above with phase voltage monitors designed to protect motors from phase loss and over/under-voltage. Provide means to prevent automatic restart by a time adjustable restart relay. For packaged equipment, the manufacturer must provide controllers including the required monitors and timed restart. Provide reduced voltage starters for all motors 25 hp and larger.

4. **Equipment Support**: Provide housekeeping pads and vibration isolators under all floor-mounted equipment.

5. **Coatings**: When required in Part 3, provide chiller and air handler coils with copper tube/copper fin coil construction or immersion applied, baked phenolic or other approved coating.& Field applied coatings are not acceptable. Mechanical equipment casings must have painted finishes that pass a salt-spray test conducted per ASTM B117 for duration of at least 500 hours.

6. **Equipment Insulation**: Provide insulation on all chilled water equipment. Insulate hot and chilled water pumps and equipment as suitable for the temperature and service in rigid block, semi-rigid board, or flexible unicellular insulation to fit as closely as possible to equipment. Provide vapor retarder for chilled water applications.

7. **Acoustical considerations**: Noise levels in all areas served (supply, return, and exhaust) by a mechanical system must comply with ASHRAE Design Guidelines for HVAC related background sound in rooms as indicated in the lasted ASHRAE Fundamentals Handbook. The RC-rating method must be utilized.

D3020 HEAT GENERATING SYSTEMS

1. **Boilers**: Boilers must be designed, tested, and installed per ASME CSD-1 (Controls and Safety Devices) and ASME BPVC (Boiler and Pressure Vessel Code). The boiler must meet the requirements of the UL 795, NFPA 85, ANSI Z83.3, and ASME CSD. Do not provide watertube boiler(s) for hydronic heating when size permits otherwise. Provide insulated boiler stack in accordance with manufacturer's recommendations and conform to NFPA 211 or provide pre-manufactured, multi-wall stacks complying with NFPA 54 or NFPA 58 and UL-listed. Low pressure boilers must be equipped with one or more pressure relieving devices, adjusted and sealed to discharge at a pressure not to exceed the maximum allowable working pressure of the boiler. The combined capacity of these devices must be such that with the fuel burning equipment installed and operating at maximum capacity, the pressure cannot rise more than 5 psi for steam boilers or 10% for water boilers above the maximum allowable working pressure of the boiler. Pressure relieving devices must be installed as required by the referenced code, be ASME stamped and rated, and must be installed with the valve spindle in the vertical position. Provide with manual lifting device for periodic testing. Boilers must comply with the local air quality regulations. Boilers must be equipped with pressure and temperature gauges as required for proper maintenance and operation. Thermometers must also be provided at the inlet and exit of the boiler, and be visible to the operator from the operating area.

2. **Furnaces**: UL-listed, factory assembled, self contained, forced circulation, furnace. Provide electronic ignition system. Unit must be design certified by AGA, GAMA efficiency rating certified, for gas furnaces and NFPA 31 for oil furnaces. Provide with cooling coil as necessary. Furnaces must comply with the local air quality regulations.

D3030 COOLING GENERATING SYSTEMS

1. **Chillers**: Air-cooled chillers must be type indicated in Part 3 and meet the requirements of ARI 550/590-98. Provide control panel with the manufacturers' standard controls and protection circuits. If DDC system is required in project, provide a control interface for remote monitoring of the chiller's operating parameters, functions and alarms from the DDC control system central workstation. Provide complete start-up and operational testing of chiller equipment.

2. **Direct expansion systems**: Provide units factory assembled, designed, tested, with ducted air distribution and rated in accordance with ARI 210/240 or ARI 340/360. Refrigerant piping size must be per the manufacturer's recommendations. Insulate refrigerant piping suction lines and condensate drain.

3. **Refrigerants**: The use of Ozone Depleting Substances (ODS) as well as the qualifications and credentials of personnel servicing equipment that contains ODS is restricted. Refrigerants must have an Ozone Depletion Potential (ODP) of 0.0 with exception to R-123. The ODP must be in accordance with the "Montreal Protocol on Substances That Deplete the Ozone Layer", September 1987, as amended through

2000, sponsored by the United Nations Environment Programme.

4. **Coils**: If coatings are indicated in Part 3, provide with copper tube/copper fin construction or immersion applied, baked phenolic or other approved coating that passes the 3000 hour salt spray resistance test using ASTM B117 procedure. Field applied coatings are not acceptable.

5. **Variable Refrigerant Flow (VRF) systems**: The system must consist of VRF heat pump units, branch circuit controllers, VRF fan coil units, and associated controls. The system must be designed to provide the facility with simultaneous heating and cooling utilizing hot gas refrigerant or sub-cooled liquid. Provide system with heat recovery. The heat pump units must be inverter driven and must utilize R410A refrigerant. Total capacity of the branch controllers must be between 50% and 150% of the rated capacity. All refrigerant piping must be sized and installed in strict compliance with the manufacturer's requirements. Refrigerant piping& must be clean, dry, and leak free. Prior to installation all refrigerant pipes must remain sealed. During installation and prior to filling, nitrogen must be used to maintain cleanliness and prevent oxidation and scaling while brazing.

D3040 DISTRIBUTION SYSTEMS

1. **Ductwork**: All ductwork must be provided in accordance with the latest SMACNA guidelines. Flexible duct lengths must not exceed 5 feet. Provide galvanized sheet metal ducts except for special exhaust systems and the following:
   a. For fume hood exhaust, kitchen hood exhaust, and dishwasher exhaust, provide stainless steel ductwork.
   b. For shower area exhausts, provide aluminum or stainless steel ductwork and sloped to drain provisions. After the shower exhaust is mixed with a volume of general exhaust air equal to 200% of the shower exhaust rate, standard galvanized construction may be used.
   c. Internal insulation-lined ductwork is prohibited in all areas. For ductwork located exterior to the building, provide externally insulated systems with sheet metal cladding. Provide external thermal insulation for all ductwork. Insulate ductwork in concealed spaces with blanket flexible mineral fiber. Insulate ductwork in Mechanical Rooms and exposed locations with rigid mineral fiber insulation. Provide insulation with factory applied all-purpose jacket with integral vapor retarder. In exposed locations, provide a jacket with white surface suitable for painting. Flame spread/smoke developed rating for all insulation shall not exceed 25/50. Minimum insulation thickness must be the minimum thickness required by ASHRAE 90.1. Insulate the backs of all supply air diffusers with blanket flexible mineral fiber insulation.
   d. The ductwork must be sealed with an approved duct sealer and in accordance with SMACNA standards. If leakage testing is indicated in part 3, the duct leakage must not exceed 2%.
   e. Provide manual volume dampers in each branch take-off from the main duct to control air quantity. Dampers must conform to SMACNA DCS. Dampers must be installed in accessible locations.

2. **Fire Dampers**: Fire dampers must be rated per UL 555. Fire dampers must be dynamic type rated for closure against a moving airstream. Provide fire dampers that do not intrude into the air stream when in the open position.

3. **Piping**:
   a. Provide insulated, steel piping for sizes 4 inches and larger and insulated copper piping for sizes less than 4 inches for water supply and return piping to serve the HVAC equipment throughout the facility.

b. Provide system flushing and start-up for water systems.
c. Oil piping: ANSI/ASTM A53 or A106 piping with associated ASME fittings or ASTM B88, type L or M copper tubing with ASME B16.26 flared fittings or compression type fittings.

4. **Exhaust Fans And Ducts**:
   a. **General:** Exhaust fans must be sized to move the volume of air required to comply with International Mechanical Code for the areas requiring exhaust.
   b. **Bathroom, restrooms and Utility Room Exhaust Fans:** Exhaust fans must be sized to give not less than 10 air changes per hour in the space to be ventilated. Fans must have a maximum sound level of 3 sones and be separately switched from light.
   c. **Flues:** When required, provide new Type B, U.L. listed, double wall flues. Flue installation must be in accordance with the International Mechanical Code.

5. **Air handling units**: Modular construction, double wall air handling units with minimum of 25 mm (1 inch) casing insulation. Provide ARI 430 certified fans and ARI certified coils. Provide stainless steel, positive draining condensate drain pan. For 100% outside air units provide capability for cooling, heating, dehumidification and reheat.

D3050 TERMINAL & PACKAGE UNITS

1. **Unit ventilators**: Unit must be factory assembled unit ventilator capable of up to 100% outdoor air ventilation and UL-listed.

2. **Unit heaters**: ANSI Z83.8 and AGA label. Equip each heater with individually adjustable package discharge louver. Provide with thermostat.

3. **Fan coil units**: UL-Listed, factory assembled and tested fan coils, ARI 440 and ARI certified.

4. **Packaged units**:

   Factory packaged rooftop units in accordance with ARI 430 and suitable for outdoor installation. Provide with manufacturer's roof curb.

   Packaged through wall units must be factory assembled air conditioner or heat pump and rated in accordance with ARI 310 or ARI 380 and ARI certified. Unit must include heat and operate under the standard unit controls. Units must be designed to allow ease of maintenance by use of a wall sleeve. Units must have internal condensate removal (condensate must not be externally drained).

D3060 CONTROLS AND INSTRUMENTATION

1. **General**: Provide stand-alone or distributed direct digital controls, as required in Part 3.

2. **Distributed Direct Digital Controls (DDC)**: DDC hardware must be UL-916 rated. Use controllers in a distributed control manner. Controllers must be stand alone with an internal clock and modem. The total number of I/O hardware points shall not exceed 48 in any controller. Provide sufficient memory for each controller to support required control, communication, trends, alarms, and messages. Provide communications ports for controller to controller interface and on-site interface. When providing a partial DDC system or connecting to an existing DDC system, provide a laptop computer with all necessary software for user interface.

D3070 SYSTEMS TESTING AND BALANCING

All HVAC water and air systems, both new and retrofit, must be TABed in accordance with NEBB or AABC standards. As part of any TAB air balancing effort, acceptable air quantity variations must be 0 to -10% for exhaust systems and 0 to +10% for supply air systems.

D40 FIRE PROTECTION SYSTEMS

Provide new or extend existing Automatic Fire Sprinkler systems, Smoke and Heat detection systems, Fire Alarm and Mass Notification systems as required. The work for fire sprinklers, fire alarm, smoke detection, and heat detection must be provided by contractors licensed to perform such work.

Project Requirements: Prior to the start of design, the Designer of Record must meet with the Government's Fire Protection Engineer to determine the extent and types of fire protection required**.**

D4010 FIRE ALARM AND DETECTION SYSTEMS

Fire alarm system includes manual stations, system smoke detectors, duct smoke detectors, heat detectors, audio/visual alarms, connection to basewide fire alarm monitoring, electrical supervision of fire pump controllers, and electrical supervision of all sprinkler system alarm and supervisory devices as required.

D4020 FIRE SUPPRESSION WATER SUPPLY AND EQUIPMENT

The water supply information is provided for bidding purposes. The design point of connection to existing water supply will require the approval of the Contracting Officer. The FPE DOR must conduct additional flow tests after contract award prior to any design submissions. Tests must be coordinated through the Contracting Officer.

D4040 SPRINKLERS

Areas subject to freezing must be provided with a dry pipe system.

D50 ELECTRICAL

D5010 ELECTRICAL SERVICE & DISTRIBUTION

Provide interior electrical wiring, fixtures, switches, outlets, and apparatus in accordance with applicable codes and standards. The electrical system must conform to NFPA 70. Power and lighting circuits must be separate.

1. **Wiring**: All wiring must be in electrical metal conduits and must be concealed except in the industrial spaces and at locations indicated in Part 3. No conductors are permitted to be smaller than No. 12 AWG, copper wires. Wiring below slab or underground must be in Schedule 40 PVC with ground wire. Exposed conduits on the exterior of the building are prohibited. Provide a ground conductor for each circuit; conduits must not be used as the sole means of grounding. Cable assemblies Types AC, MC, or MI and flat conductors may only be used in locations allowed by UFC 3-520-01. Circuit breakers must be bolt-on type. Series rated circuit breakers and fusible panelboards must not be used.

2. **Outlet Circuits** Lighting and convenience outlets must be on separate circuits. Install GFI protected receptacles at all wet or damp areas. Location of outlets must be as required by applicable codes and standards. Provide extra outlets for maintenance and service staffs in spaces such as corridors, hallways and other public spaces as identified below. All exterior outlets must be on separate circuits, be GFI protected, and equipped with a cover to prevent accidental water infiltration into the devices.

   In addition to the location requirements specified by NFPA 70, locate general purpose and dedicated outlets in accordance with the following:

   a. Mechanical equipment: Provide receptacle within 7.6 m (25 ft) of mechanical equipment on the interior and exterior of buildings.
   b. Office, staff support spaces, and other workstation locations: One receptacle for each workstation with a minimum of one for every 3050 mm (10 ft) of wall space. When less than 3500 mm (10 ft) of wall at the floor line, provide a minimum of two receptacles spaced appropriately to anticipate furniture relocations. Limit loads to a maximum of four workstations per 20 amp circuit. See Appendix C, Table C1 for workstation load data.
   c. Conference rooms and training rooms: One for every 3.6 m (12 ft) of wall space at the floor line. Ensure one receptacle is located next to each voice/data outlet. Provide one receptacle above the ceiling to support video projection device. Extend circuit to wall location for connection to motorized screen. When it is expected that a conference room table will be specifically dedicated to floor space in a conference room, locate a floor-mounted receptacle under the table. This receptacle may be part of combination power/communications outlet.
   d. Provide power outlets throughout the building to serve all proposed equipment, including government furnished equipment, and allow for future reconfiguration of equipment layout. Provide power connections to all ancillary office equipment such as printers, faxes, plotters, and shredders. Provide dedicated circuits where warranted.
   e. In each telecommunications room provide a dedicated 20 amp circuit with a receptacle adjacent to each rack or backboard for each of the following:

      1) CCTV for training systems

      2) CCSTV for security systems

      3) CATV

      4) Voice systems

      5) Data systems.
   f. Provide dedicated receptacles as required throughout the facility for television monitors. These outlets will typically be located at the ceiling level for wall mounted television monitors.
   g. Provide dedicated receptacles as required throughout the facility for tape players and disc players.
   h. Corridors: One every 15 m (50 ft) maximum with a minimum of one per corridor.
   i. Janitor's closet and toilet rooms: One GFI receptacle per closet. Provide GFI receptacles at counter height for each counter in toilets such that there is a minimum of one outlet for each two sinks.
   j. Space with counter tops: One for every 1.200 m (4 ft) of countertop, with a minimum of one outlet. Provide GFI protection of outlets when located within 1.8 m (6 ft) of plumbing fixtures.
   k. Building exterior: One for each wall, GFI protected and weatherproof.
   l. Kitchen non-residential: One for each 3.05 m (10 ft) of wall space at the floor line. Provide GFI protection when located within 1.8 m (6 ft) of plumbing fixture.

m. Child occupied spaces (including toilets): One for every 3.6 m (12 ft) of wall space. Use child safety type such as those that require rotating an integral surface cover plate to access current. Removable caps and plugs are not acceptable.
n. All other rooms: One for every 7.6 m (25 ft) of wall space at the floor line. When 7.6 m (25 ft) or less of wall at the floor line exists in a room, provide a minimum of two receptacles spaced appropriately to anticipate furniture relocations.
o. Special purpose receptacles: Designer of Record must coordinate with the user to provide any special purpose outlets required. Provide outlets to allow connection of equipment in special use rooms.

3. **Service Entrance Equipment**: When a switchboard or switchgear is required, the Designer of Record must utilize UFGS Section 26 23 00, *Low Voltage Switchgear or UFGS 26 24 13 Switchboards*, for the project specification, and must submit the edited specification section as a part of the design submittal for the project.

D5020 LIGHTING & BRANCH WIRING

1. **Lighting Fixtures**: All lighting fixtures must be energy conservation compact fluorescent or Light Emitting Diode (LED)except where indicated by Part 3.
   a. **Fixtures for Administrative and Commercial Spaces**: For offices, commercial and administrative spaces and facilities provide high efficiency ballast, and instant or rapid start recessed fluorescent fixtures or LED fixtures.
   b. **Three-Way and Four-Way Switches**: Provide three-way or four-way switching of light fixtures as necessary to facilitate movement between adjacent spaces to allow efficient energy management.

2. **Exterior Lighting Fixtures for Large Open Areas**: Exterior lighting fixtures for large open areas such as parking lots, streets and playgrounds must be energy efficient High-Intensity Discharge (HID) or compact fluorescent fixtures and must comply with local regulations regarding low lighting levels to avoid light pollution.
   a. Photocell Overriding Switch: Provide photocell-overriding switch for all outdoor light fixtures.

D5030 COMMUNICATIONS & SECURITY

1. **Telecommunications Systems**: Provide a horizontal distribution system including, but not necessarily limited to, all wiring, pathway systems, connector blocks, protectors for all copper service entrance pairs, terminators for all fiber optic cables, outlet boxes, telephone jacks, and data jacks cover plates in accordance with EIA/TIA standards. Provide Category 6 UTP telephone premise wiring where telephones are required.

2. **Public Address Systems**: Provide a Public Address system with speakers in all locations identified in Part 3.

3. **Intercommunications Systems**: Provide an Intercommunication System to allow two-way communications between all locations identified in Part 3.

4. **Television Systems**: Provide television systems to the extent specified in Part 3. Coordinate with the local Cable Company, Local users and Local Authority at the Activity for other specific requirements. The interior cable outlets and wiring must be complete and ready for use. Wiring must not be run exposed on any surface of the building.

5. **Security Systems**: Provide an Intrusion Detection System (IDS) to sense all perimeter doors and windows and the interior volume in at least two locations. System must have a

minimum 90-minute battery back-up and annunciate both locally and at the Base Security Office via a telephone dialer. System must have entry/exit timer. Provide wall mounted keypad control at two locations.

D5090 OTHER ELECTRICAL SERVICES

1. **Surge Protective Device (SPD)**: Provide SPD in accordance with UFC 3-501-01, *Electrical Engineering*.

2. **Variable Frequency Drives**: When variable frequency drives are required, the Designer of Record must utilize UFGS Section 26 29 23 20 for the project specification, and must submit the edited specification section as a part of the design submittal for the project.

3. **Emergency Generators**: When an emergency generator is required, the Designer of Record must utilize UFGS Section 26 32 13.00 20 for the project specification, and must submit the edited specification section as a part of the design submittal for the project.

4. **Automatic Transfer and Bypass/Isolation Switches**: When an Automatic Transfer Switch is required, the Designer of Record must utilize UFGS Section 26 36 23.00 20 for the project specification, and must submit the edited specification section as a part of the design submittal for the project.

5. **Uninterruptible Power Supply (UPS) System:** When a UPS system is required, the Designer of Record must utilize UFGS Section 26 33 53.00 20 and must submit the edited specification section as a part of the design submittal for the project.

6. **400 Hertz Systems**: The Designer of Record must utilize UFGS Section 26 32 26 or 26 35 43 for the project specification, and must submit the edited specification section as a part of the design submittal for the project.

7. **Lightning Protection**: When lightning protection is required, the Designer of Record must utilize UFGS Section 26 41 00.00 20 for the project specification, and must submit the edited specification section as a part of the design submittal for the project.

8. **Building Photovoltaic System:** When a PV system is required, the Designer of Record must utilize UFGS Section 26 31 00 for the project specification, and must submit the edited specification section as part of the design submittal for the project.

SECTION E. EQUIPMENT AND FURNISHINGS

E10 EQUIPMENT

Equipment and Appliances: Provide appliances and equipment to fulfill the work for Part 3. Whenever possible, all appliances and equipment provided for the facilities in the contract must be by the same manufacturer and must be the current model available at the time of proposals. Discontinued makes and models are prohibited. All appliances and equipment must comply with applicable Energy Star efficiency rating requirements and must be rated as high efficiency models. Appliances and equipment on California projects must comply with California Title 24 and be rated as high efficiency. All appliances must be of the same manufacturer and shall be the same, or similar in color. Submit catalog information for approval by the Contracting Officer prior to purchasing, delivery and installation of the appliances at the job site. Equipment and appliances such as dishwashers, ice machines with drains, garbage disposers, and ovens/ranges are not considered FF&E.

E20 FURNISHINGS

E20 1.1 FURNISHINGS

The Contractor must have an Interior Designer, certified by the National Council for Interior Design Qualification (NCIDQ) or a state and/or jurisdiction Certified, Registered, or Licensed Interior Designer prepare both the FF&E and the SID Package and participate in any design charrettes to develop the building floor plan. As required, the Contractor must obtain services of equipment specialists to specify the audiovisual, shop, or specialty equipment. The Interior Designer and any specialists must not be affiliated with any furniture dealership/vendor or manufacturer. The Government Interior Designer reserves the right to approve/disapprove the qualifications of the Contractor's Interior Designer.

Systems furnishings installers must be the systems furniture manufacturer's approved dealer of record. In addition, installation dealers must be located within a 100 mile radius of the project site unless approved by the government Interior Designer.

For renovation projects, contractor to re-purpose/recycle existing furniture if not relocated by the government. Contractor to provide verification that the existing furniture was not disposed of at the landfill.

WINDOW TREATMENTS

Provide interior window coverings, associated hardware and controls at each exterior window and at any interior view window where privacy may be required. Refer to the Project Program for size, pattern and style of window treatments. At a minimum, functional window coverings are required on all projects.

Provide energy efficient solar shading systems for exterior windows. The system shall maintain visibility while reducing glare, solar heat gain during the summer and heat loss during the winter. Openness configuration shall be no more than 5% for most areas. The system fabrics and components must be dimensionally stable and must be manufactured to withstand fading, fire, mildew, and soiling. Product must have a minimum 10 year commercial warranty.

AUDITORIUM, LECTURE AND CLASSROOM SEATING

The system must permit the standards to be installed on radial lines from a common center for which concentric circles are determined with each row of units utilizing common middle standards. Standards in each row must be placed laterally so the aisle-end standards will be in alignment as indicated on seating layout drawing. The angle of inclination of backs must be adjusted for variations in sightlines. Mechanical attachment of components must be of sufficient flexibility so that when permanently assembled they will compensate for the changing dimensions laterally between standards caused by convergence toward the center. Seat and back attachments must absorb inaccuracies in lateral spacing of standards at point of attachment caused by unevenness of floor. Varying lateral dimensions of backs and seats must be in accordance with approved seating layout. Minimum width of seating unit must be 20 inches and may be used only to complete a specific row dimension.

TABLES FOR AUDITORIUM, LECTURE AND CLASSROOMS

Provide worksurfaces mounted to floor standards of tubular steel, sheet steel, or cast iron. The standards must be formed to fit the floor incline so that the standards will be vertical. The feet must be formed to eliminate tripping hazards and must have holes for bolt attachment to the floor. Provide riser standards, cantilevered standards and aisle and end standards as required. Provide communications, data and power routing as required. Provide a high-pressure plastic laminate

over medium density particleboard for the worksurfaces with coordinating vinyl or resin edge detail.

MOVABLE FURNISHINGS

Furnishings, Fixtures, and Equipment (FF&E) includes furniture, shop equipment, audiovisual equipment, and specialty equipment. Weapon racks, drying cages, and lockers are not considered FF&E. FF&E must be fully integrated with the building systems and finishes. FF&E may also include specialty items for which the customer activity will be responsible for specifying.

Design and provide as required FF&E for all areas as developed during client programming. Design an FF&E package and prepare supporting plans and procurement data in accordance with the general interior design requirements in UFC 3-120-10.

FF&E PACKAGE

Design and provide a fully usable and complete facility to include a FF&E movable furnishings package from Government supply sources according to Federal Acquisition Regulations The FF&E will include, but not limited to, systems and modular furniture, training and conference furniture, seating, tables, artwork, decorative window covering, specialty furniture and equipment, dormitory room furnishings, and accessories. NAVSUP Blanket Purchase Agreements (BPA) must be used. The government will provide separate funding for the FF&E package. Construction funds will not be used. The FF&E Package must include shipping, freight, handling, installation and the HAR percentage as applied to the final FF&E total cost.

Authorization

When the purchase of the FF&E is an upfront requirement as an option to award at a later date, the government will provide separate funding for procurement of the FF&E package. Upon receipt of required funding, the Contractor must be authorized by the Contracting Officer as a planned line item modification to procure all FF&E using predominately negotiated price schedules from GSA or other Federal contracts. The amount of the modification will be the actual cost of these items from the Federal price schedules or NAVSUP BPAs, including any freight and installation charges from the furniture supplier as well as the contractor's FF&E Handling and Administration Rate (HAR). The HAR includes all of the prime contractor's effort related to storage, project management, handling, administration of subcontractors, and all other associated costs and profit for the procurement of FF&E. The prime contractor will propose in the contract/task order solicitation the FF&E HAR. The contractor's proposed HAR may not exceed 5% of the total FF&E costs, as noted on the bid schedule. No other charges, expenses, fees, or markups will be authorized.

The government Interior Designer will approve the final FF&E submittal. The FF&E package will be presented to the Contracting Officer and the Contractor must provide the FF&E exactly as specified and approved.

The Contractor will receive a letter of authorization from the Contracting Officer citing the name of the furniture dealer and other information to use when accessing the government supply sources. FF&E items are subject to the Trade Agreement Act and Buy American Act.

PURCHASE AND INSTALLATION

The Contractor must coordinate the building completion date with the installation dealer specified

in the FF&E Package. The Contractor or contractor's representative is responsible for the following: issuing purchase orders, receiving acknowledgements, sending copies of purchase orders to the installation dealer(s) specified in the FF&E package, and providing necessary deposits to furniture manufacturers.

The FF&E installation dealer(s) is responsible for the following: Receiving and installing all FF&E specified in the FF&E package, coordinating delivery and installation with the Contractor, inspecting for damage, providing delivery receipts to the Contractor, filing necessary freight claims, hanging artwork, bulletin boards, etc., removing packaging material, cleaning up the site upon completion, and adhering to Contractor's safety requirements.

Use of GSA Schedules and Blanket Purchase Agreements (BPAs)

The prime contractor or FF&E dealer will be authorized to purchase supplies or services from the Navy Furniture BPAs for FF&E requirements under the terms of the contract. The Contractor will receive a letter of authorization from the contracting officer citing the name of the furniture dealer and other information to use when accessing the government supply sources or BPAs.

Deposits

The Contractor should anticipate providing a deposit of between 30% to 50% of the furniture costs when placing their order.

The Contractor must also anticipate possible manufacturer price increases. Recommend ordering FF&E product once funds are received to avoid incurring additional costs. Delayed production and delivery dates can be noted at the time of order placement to coincide with building completion dates. Any costs incurred due to manufacturer price increases will be the burden of the contractor.

Davis Bacon Wages

Davis Bacon Wages do not apply to the FF&E installer from the government supply sources. The workforce for the FF&E installation and delivery shall be separate and distinct from the labor workforce performing under the construction contract.

Sales Tax

Exemptions for certain State or Local taxes may be available to the contractor and/or its subcontractors. The contractor must take maximum advantage of all exemptions, including obtaining a resale permit, from State and Local taxation authorities whether available to it directly or available to the contractor based on an exemption afforded the government. The responsibility for paying applicable taxes rests with the contractor. State and local taxes applicable to the FF&E line will be included with the subcontractor's quote, if applicable. Any items purchased as building materials such as carpet are taxable.

Bonds

FF&E line item is not considered construction and the prime contractor shall not be required to secure any additional bond for the award of the FF&E line item unless otherwise indicated in the RFP. If any additional bond is required for the FF&E line item it is to be included in the prime contractor's FF&E HAR.

Unique item identification and valuation is a system of marking and valuing items delivered to DoD that enhances logistics, contracting, and financial business transactions.

The IUID policy is mandatory for all DoD contracts that require the delivery of items. An item is a single article or a single unit formed by a grouping of subassemblies, components or constituent parts The contractor must provide DoD Unique item identification, valuation and delivery of data for all required FF&E items for which the government's unit acquisition cost is $5,000 or more.

Buy American and Trade Agreement Acts

All supplies under the FF&E line item are subject to the Buy American Act and Trade Agreement Act as indicated in the project contract. The GSA contracts and NAVSUP Blanket Purchase Agreements are required to comply with the Buy American Act and Trade Agreement Act

Small Business Requirements

The FF&E is subject to the Contractor's Small Business Goals however the government requires the furniture be purchased from NAVSUP Blanket Purchase Agreements (BPA). Most manufacturers on the Office Furniture BPA are large business and most manufacturers on the Dorm and Quarters BPA are small business. Installation dealers are small business. Under the terms of the BPA, the FF&E must be ordered directly through the GSA manufacturer. Using pass-through companies to achieve Small Business Goals will not provide the Contractor credit unless they manufacturer 20% or provide 50% of the service purchased. The government will not incur additional costs to use small business.

Installation

The FF&E package includes the installation of all furniture and furnishings as specified in the FF&E package. The installation dealer specified in the FF&E package will receive, store, if required, transport to the project site, off load, inside deliver, unpack, assemble, place/install, clean, if required, and dispose of all the trash for all furniture and furnishings. The Contractor's Interior Designer will be responsible for specifying installation services and warehousing, as required, for all collateral equipment. It is the Contractor's responsibility to coordinate the building completion, occupancy, and furniture installation dates with the installation dealer specified in the FF&E package. Any costs associated with storing or delaying furniture shipments is the responsibility of the construction contractor.

Installation Warranty

All movable furnishings must be installed in accordance with the manufacturer's instructions and warranty requirements. All movable furnishings must be level and aligned and all doors, drawers and accessories must be level and aligned to open, close and otherwise operate smoothly and securely. All systems furniture must be installed by the systems furniture manufacturer's dealer of record and not the general Contractor. The Contractor must repair, to the customer's satisfaction, any/all damage to any facility finish that is a result of the furniture installation and correct all punch list items for the furniture/furnishings.

Ordering Documentation

Two copies of all ordering documentation must be provided to the contracting officer including Factory Order number (FO) and warranty information.

Post Award Changes

After award of the FF&E line item modification, any request to change the FF&E items must be submitted on the Contracting Officer. The FF&E modification has been accepted, priced, and negotiated based on specific line items as detailed in the final package. Those items have been agreed to considering color, specific type and quality of material, price, sustainability, life cycle, and dealership service. The Government will expect and require the contractor to provide exactly those items. Should changes become necessary, careful consideration is required to ensure that equivalent quality, price and other aspects of the item is maintained. Otherwise, price adjustments must be negotiated. The Contracting Officer will obtain approval from the Government Interior Designer/Collateral Equipment Manager in consultation with the client for any changes to the FF&E.

Post award FF&E manufacturer's price increases are the responsibility of the Contractor and must not be transferred to the government. Recommend ordering FF&E product once funds are received to avoid incurring additional costs. Delayed production and delivery dates can be noted at the time of order placement to coincide with building completion dates.

BEST VALUE DETERMINATION

A best value determination (BVD) is required by FAR 8.404 when placing orders against Federal Supply Schedules for the selection of furniture and furnishings. A BVD must also be provided for FF&E installation services. Best Value is defined in FAR 2.101 as ensuring that the order to be placed under a Federal Supply Schedule results in the lowest overall cost alternative (considering price, special features, administrative costs and client’s needs) to meet the government's needs.

The Contractor's Interior Designer is responsible for the following written BVD justifications:

$3,000 or less: For any procurement in the FF&E package with a value of $3,000 or less, the interior designer may utilize any BPA holder. If the BPA holders cannot supply the item, then any other manufacturer may be utilized.

Greater than $3,000 and $150,000 or less: for any procurement in the FF&E package with a value greater than $3,000 and $150,000 or less, the contractor's interior designer shall always review pricing from at least three manufacturers as well as UNICOR. In addition to the review of published list prices, the contractor's interior designer must confirm the pricing with the vendor. Manufacturer's quotes are NOT required. The BVD form must be completed and submitted for all FF&E procurements greater than $3,000 and $150,000 or less.

Greater than $150,000: The contractor's interior designer shall solicit proposals from all BPA holders under the applicable group for FF&E procurements greater than $150,000. UNICOR must always be solicited. The contractor's interior designer shall develop performance criteria and project requirements based on a generic design for the BPA holders and UNICOR to develop a price and performance proposal. The BVD form must be completed and submitted for all FF&E procurements greater than $150,000 and manufacturer's quotes and a summary of all proposals must be attached.

Federal Prison Industries (UNICOR) must be considered as part of all BVDs. This must be done by sending an email with the requirements and evaluation criteria if they are not comparable in one or more areas of price, quality, and time of delivery, the designer can specify product under NAVSUP BPA or GSA schedule.

The best value determination must address issues such as space planning; human factors data related to anthropometrics (reach, clearance, adjustability), space, and acoustics; ergonomics; product quality (including construction and materials); sustainability features, product warranties; history of the product and/or manufacturer; ability to service products through dealers or others within a certain geographical range of the project; price (including freight); aesthetics;

appropriateness; and lighting, power and telecommunications systems management and/or coordination as related to the facility (when applicable); and other project specific factors as identified and/or required. Emphasis must be to create a fully integrated design solution by providing quality products to meet the functional needs of the customer. Customer preferences must be considered. The focus must be on the best overall value. Use the GSA Best Value Determination forms provided in Part 6 of this RFP as guidelines for information to be provided.

SECTION F. SPECIAL CONSTRUCTION AND DEMOLITION

F10 SPECIAL CONSTRUCTION

F1010 SPECIAL STRUCTURES

1. Pre-Engineered Buildings

Provide the design and installation in accordance with the UFC 3-101-01, *Architecture* and UFC 3-301-01, *Structural Engineering.*

a. **Design Requirements -** The metal building manufacturer must be accredited by the International Accreditation Services (IAS) AC472. The Metal Building System design must be in accordance with the Metal Building Manufacturers Association (MBMA) *Metal Building Systems Manual*. All structural design must comply with the provisions of Section B10, "Superstructures", above.

b. **Additional Roof Design Requirements -** Roof Decking - In addition to any other load requirements, roof decking must be designed to support a 91 kg (200-pound) concentrated load at mid-span on a 300 mm (12-inch) wide section of deck.

c. **Deflection -** the maximum deflection for -

1) Structural Members - main framing members must be L/240.

2) Purlins and Roof Panels: The deflection due to live, snow, or wind must not exceed L/180.

3) For buildings with masonry infill, limit frame sway to L/600th of building eave height.

4) Wall Panels - Maximum deflection of wall panels due to wind loads must be limited to L/120th of their respective spans except that when interior finishes are used the maximum allowable deflection must be limited to L/180th of their respective spans.

d. **Wall and Roof materials -**

1) Alum/Zinc-Coated Steel Sheet: ASTM A792/ A792M, AZ 55.

2) Aluminum Sheet: Alloy 3004 Alclad conforming to ASTM B209.

3) Framing and Structural Members - Steel - ASTM A992 / A992M, ASTM A529/ A529M, ASTM A572/ A572M, or ASTM A588/ A588M.

4) Framing and Structural Members, Aluminum: ASTM B221 or ASTM C308

e. **Structural Tube:** ASTM A500 or ASTM B221.

f. **Fasteners -** Must be compatible with the materials they are fastening to, be gasketed when exposed to weather to prevent leaks, and provide both shear and tensile strengths not less than 3,336 N (750 pounds) per fastener. The main

fastening system must use concealed fasteners, however, when exposed fasteners are needed, color fasteners must be color coated to match wall/roof panels.

g. **Light Transmitting Roof Panels (Non-Insulated):** ASTM D3841, Type II, Grade 1.

h. **Insulation:** Blanket-type fiberglass insulation with a factory applied facing on one side and having a permeance rating of 0.05 or less in accordance with ASTM E96. Flame Spread Rating 75 or less, and a Smoke Developed Rating of 150 or less when tested in accordance with ASTM E84.

i. **Panel Finish -** Factory Color Finish - Provide factory applied baked coatings to the exterior and interior of metal wall panels and metal accessories. Provide exterior primer standard with panel manufacturer but not less than 0.8 mil dry film thickness (DFT). Provide PVDF exterior finish top coat of 70 percent inorganic pigments with 0.8 mil DFT. Provide factory-applied clear finish over the color topcoat and edge coating for projects within 91 meters of a water shoreline or industrial environments. Field apply 70 percent PVDF clear coat to unfinished panel edges or field cut panels. Interior finish exposed to sun or rain must be the same coating and DFT as the exterior coating. Interior finish protected from sun or rain exposure must receive 1.0 mil DFT coating of siliconized polyester (SMP) resin coating with organic or blended pigments and manufacturer's standard primer.

F20 SELECTIVE BUILDING DEMOLITION

In general terms, demolition work must include the removal and effective management and disposition of existing construction and or structures. Take care to prevent damage to existing utilities and construction that are not scheduled for demolition. If damage occurs, make repairs to the satisfaction of the Contracting Officer and at no cost to the Government. Comply with local Activity and Installation local requirements regarding demolition and removal. Unless otherwise specified in Part 3, all demolished materials and equipment must be removed from government property in accordance with applicable laws and regulations, including local Activity or Installation regulations. Selling of demolished or salvaged materials and equipment on government properties is prohibited.

Demolition Plan: No demolition work is permitted to take place until a Demolition Plan has been submitted to, and approved by, the Contracting Officer. The Plans must take into consideration, and indicate method of removal, disposition, and abatement of environmentally hazardous materials. Demolition, disposition, and abatement of hazardous materials must comply with all applicable Local, State, and Federal regulations and laws. If destructive investigation is to occur, the Contracting Officer shall approve a Destructive Investigation Plan.

When hazardous materials such as asbestos, lead paint, PCB and other hazardous materials are involved in the performance of the work, the contractor must abate, remove and manage the hazardous materials in construction and finish materials such as insulation, flooring, wall materials, ceiling materials, roofing materials, heating, plumbing, ventilation, air conditioning equipment and installations in accordance with National as well as local Environmental Protection Laws and Regulations.

F2020 HAZARDOUS COMPONENT ABATEMENT

1. Asbestos in Schools and Child Occupied Facilities: For projects that require removal or disturbance of asbestos containing materials within schools and child occupied facilities, perform work in accordance with the edited UFGS 02 82 00, Asbestos Remediation.

2. Asbestos Materials: Asbestos must be removed, transported and managed in

accordance with the edited UFGS 02 82 00, Asbestos Remediation.

3. Lead Based Paint in Target Housing and Child Occupied Facilities: Perform work for projects that require removal or disturbance of painted surfaces within target housing and a child occupied facilities in accordance with the edited UFGS 02 83 00, Lead Remediation.

4. Paint Related Work: Perform work which requires the disturbance of paint that have been determined to contain all or any of the following: lead, cadmium and chromium in accordance with the edited UFGS 02 83 00, Lead Remediation.

5. LLR Components: Perform work which requires removal of mercury and LLR components in accordance with the edited UFGS 01 57 19, Temporary Environmental Controls.

6. PCBs: Perform work which requires removal of PCB containing components or materials in accordance with the edited UFGS 02 84 33, Removal and Disposal of Polychlorinated Biphenyls (PCBs).

7. Animal Droppings: Perform work which requires removal of animal droppings in accordance with the edit UFGS 01 57 19, Temporary Environmental Controls.

8. Mold and Spores: Perform work which requires removal, disposal and remediation of mold contaminated areas in accordance with the edit UFGS 02 85 00, Mold Remediation.

9. Radon: Perform work which involves implementation of a radon mitigation system in accordance with the edited UFGS 31 21 13, Radon Mitigation.

10. Mercury: Perform work which requires the removal of mercury containing equipment in accordance with the edited UFGS 02 84 16, Handling of Lighting Ballasts and Lamps Containing PCBs and Mercury.

11. Hazardous Materials Reporting:

    a. Daily Report: Notify the Contracting Officer of work involving hazardous materials abatement and removal, including the quantities involved, on daily reports.
    b. Hazardous Material Inventory Report: The Contractor must provide a list of all hazardous materials used on the site.

SECTION G. BUILDING SITEWORK

G10 SITE PREPARATIONS

1. **General Requirements**: Building site work includes site preparation, site improvements, site civil/mechanical utilities, site electrical utilities, exterior furnishings, landscaping, and irrigation. Provide site work in accordance with UFC 3-201-01, *Civil Engineering*.

2. **Project Limitations**: Prior to the start of design, determine the exact limit-of-work line for the project periphery, considering items such as, but not limited to, utility work, landscape re-vegetation of disturbed areas, and lay down areas. The Civil Engineer of Record in coordination with other design team disciplines must determine limit-of-work lines. Minimize the impact of construction activity on operations and neighboring facilities.

3. **Geotechnical Data**: A geotechnical engineer must conduct the subsurface exploration, investigation/evaluation, testing, and analysis that the Designer of Record deems

necessary for the design and construction of the proposed facilities, including building pad, structure, pavement sections, repairs, overlays, stormwater management facilities, utility structure foundations, septic systems, and other features requiring soil support.

3. **Temporary Erosion & Sediment Control:** Develop and implement temporary erosion and sediment control measures and other Best Management Practices (BMPs) prior to or in conjunction with commencement of earthwork in accordance with the state Erosion and Sediment Control Laws and Regulations. Remove all non-permanent erosion control measures after vegetation is fully established. Maintain temporary erosion control measures in accordance with state Erosion and Sediment Control Laws and Regulations throughout the project until areas are fully stabilized.

G1010 SITE CLEARING

1. **Existing Utilities**: When the Contractor is to work at a site that has existing utilities, the contractor is responsible for coordination with Contracting Officer and utility companies for staking out, capping, connection and relocation of any existing utility systems or traffic interruption. Notify utility locator service for area where Project is located before site clearing.

2. **Interruption**: All interruption to the existing utilities and traffic must be coordinated with and approved by the Contracting Officer not less than 14 calendar days in advance of such interruption.

G1020 SITE DEMOLITION & RELOCATIONS

Abandon utility systems in-place conforming to applicable codes and regulations, removing their presence from the ground surface and clearly indicating that they have been abandoned. Remove utilities underneath or within 3.0 m (10 feet) of any new facilities. Fill abandoned gravity systems with flowable fill. Fill abandoned utility system piping under pavements subject to potential vehicle loading with flowable fill.

Remove existing utility structures to 900 mm (3 feet) below existing or new adjacent grade, whichever is greater.& Break up bases to permit drainage. Fill with clean sand.

Comply with the requirements of the utility provider concerning utility relocation.

G1030 SITE EARTHWORK

The DOR must utilize UFGS Section 31 23 00.00 20 for the project specification and must submit the edited section as a part of the design submittal. Perform quality assurance for earthwork in accordance with UFGS Section 31 23 00.00 20. If sheeting/shoring or dewatering is required, the Contractor must provide a registered Professional Engineer to provide excavation, sheeting, shoring, and dewatering plans and inspection of excavations and soil/groundwater conditions throughout construction. The Engineer must be responsible for performing pre-construction and periodic site visits throughout construction to assess site conditions. The Engineer, with the concurrence of the contractor and the Contracting Officer, must update the excavation, sheeting, shoring, and dewatering plans as construction progresses to reflect actual site conditions and must submit the updated plan and a written report (with professional seal) at least monthly informing the Contractor and the Contracting Officer of the status of the plan and an accounting of Contractor adherence to the plan; specifically addressing any present or potential problems. The Engineer must be available to meet with the Contracting Officer at any time throughout the contract duration.

G20 SITE IMPROVEMENTS

Provide site improvements as required to make a useable facility that meets functional and operational requirements, incorporates all applicable anti-terrorism, force protection and physical security requirements and blends into the existing environment.

Provide site improvements in conformance with applicable requirements of the Uniform Federal Accessibility Standards.

1. **Pavements**: For work in and adjacent to existing pavements, the Contractor is required to match the existing adjacent finish elevation, materials, paving section and texture, and pavement markings, unless otherwise indicated in Part 3 or directed by the Contracting Officer.

   Provide pavement design and pavement section materials in accordance with UFC 3-201-01, *Civil Engineering*. Provide pavement markings in accordance with the SHS. Design materials for life expectancy of at least 3 years under an average daily traffic count per lane of approximately 9000 vehicles. Water based paints must have durability rating of at least 4 when determined in the wheel path area. Provide a half-rate initial marking application on bituminous pavements. Provide the remaining application at the end of the normal curing period.

2. **Traffic Control**: If the site work involves interference with normal vehicular and or pedestrian traffic, the Contractor must coordinate with the authority having jurisdiction, propose and obtain approval for traffic control measures that may be required in performance of the work required by the contract.

3. **Performance Verification And Acceptance Testing**:
   a. **Subgrade Preparation:** If required by the Designer of Record, perform proof rolling. Proof rolling must be performed in the presence of the Contracting Officer. Rutting or pumping of material must be undercut as directed by the Contracting Officer and replaced with satisfactory soil materials as defined by the Geotechnical Engineer.
   b. **Base Course Performance Verification**: At a minimum, Contractor must perform visual performance verification. Surface must be smooth with no ruts, sloped or crowned to not pond water.
   c. **Bituminous Concrete Pavement Performance Verification**: At a minimum, Contractor must perform visual performance verification. Finished surface must be uniform in texture and appearance, free of defects such as cracks and creases, and be sloped or crowned so as to not pond water.
   d. **Portland Cement Concrete Pavement Performance Verification**: At a minimum, Contractor must perform visual performance verification. Finished surface must be uniform in texture and appearance, free of defects such as cracks and spalls, and be sloped or crowned so as to not pond water.
   e. **Concrete Joint Performance Verification**: Joint sealer that fails to cure properly, or fails to bond to joint walls, or reverts to uncured state or fails in cohesion, or shows excessive air voids, blisters, or has surface defects, swells, or other deficiencies, or is not recessed within indicated tolerances will be rejected. Remove rejected sealer, re-clean and reseal joints.

4. **Bases and Subbases:**
   a. Prepare subgrade in accordance with Section G10, *Site Preparation*. Geotextiles may be used for separation or reinforcement in accordance with manufacturer's instructions. Provide base course under paved areas in accordance with the State Highway specifications (SHS) in the state where the project is located.

b. Place base course in accordance with the SHS for that particular base course and in layers of equal thickness with no compacted layer more than 6 inches (150 mm) thick. Compact base course at optimum moisture content to 100 percent ASTM D 1557 maximum dry density.

c. Where SHS are not available or applicable, the Designer of Record must utilize the applicable UFGS Specification Sections referenced under paragraph 1.1.2 entitled "Government Standards" for the project specification. Submit these specifications in edited form as a part of the design submittal for the project.

5. **Curbs and Gutters:** Provide concrete curbs and gutters in accordance with the SHS and standards or as specified in UFC 3-201-01, *Civil Engineering*, whichever is more stringent. Where the SHS do not include concrete materials for curbs and gutters, provide concrete in accordance with the applicable standard mix of the SHS for a minimum compressive strength at 28 days of 3500 psi (25 MPa) concrete.

6. **Paved Surfaces:** Where SHS are not available or applicable, the Designer of Record must utilize the applicable UFGS Specification Sections for the project specification. Submit these specifications in edited form as a part of the design submittal for the project.

7. **Pavement Mix:**

a. **Bituminous Concrete Pavement:** Provide bituminous concrete pavement in accordance with the applicable standard mix of the SHS based on the pavement design and vehicle loading indicated in this RFP.

b. **Bituminous Concrete Placement:** Provide bituminous concrete placement, including minimum temperature during placement, joints, and maximum lift thickness in accordance with the SHS. Compact bituminous concrete in accordance with the SHS, modified to 96 percent of maximum laboratory density.

c. **Portland Cement Concrete Pavement:** If reinforced, provide the welded wire fabric in conformance to ASTM A185. Provide bar reinforcement in conformance to ASTM A615/A615M, Grade 400 (Grade 60). Provide concrete in accordance with the applicable standard mix of the SHS for the design strength required by UFC 3-201-01, *Civil Engineering*, plus any allowable deviations. Unless noted otherwise in Part 3 or Part 6, provide a minimum compressive strength at 28 days of 3500 psi (25 MPa) concrete. If required for applicable sustainability goal, provide Portland cement concrete pavement with a Solar Reflectance Index (SRI) greater than or equal to 29.

8. **Joints for Portland Cement Concrete Pavement:** Provide joints in accordance with SHS and the applicable portions of UFC 3-250-01, *Pavement Design for Roads and Parking Areas*. Install joints in a manner and at such time to prevent random or uncontrolled cracking. Joints must form a regular rectangular pattern. Wherever curved pavement edges occur, make joints to intersect tangents to curve at right angles.

a. **Expansion Joints:** Provide thickened edge expansion joints at the intersection of two rigid pavements. Use preformed joint filler, ASTM D1751. Filler must be compatible with joint sealer material. Securely hold preformed joint filler in position during concreting operations.

b. **Isolation Joints:** Provide thickened edge isolation joints by placing a 1/2-inch (12 mm) preformed joint filler (ASTM D 1751) around each structure that extends into or through the pavement before concrete is placed at that location.

c. **Contraction Joints:** Saw joint lines within specified tolerance, straight, and extend for width of transverse joint, and for entire length of longitudinal joint.

d. **Construction Joints:** If an emergency stop occurs remove the concrete back to location of transverse joint and install a construction joint.

e. **Joint Sealants:** ASTM D5893/D5893M; provide single component cold-applied silicone. Silicone sealant must be self-leveling and non-acid curing.

f. **Preformed Compression Seals:** Use preformed compression seals in areas

where silicone joint sealant does not perform, such as areas subject to water inundation, blasts, or constant/repeated fuel spillage. ASTM D 2628. ASTM D 2835, for lubricant.

9. **Prime Coat:** Use prime coat in accordance with the SHS. Prime coat must be emulsified asphalt materials.

10. **Tack Coat:** Tack coat is required for bituminous pavement overlays and on vertical cut faces of pavement patches. Provide tack coat in accordance with the SHS.

11. **Pavement Patches:** Provide pavement patches for existing pavements where required for installation of utility trenches. Sawcut 12 inches beyond edge of trench. Provide thicknesses of pavement materials equal to or greater than the existing pavement section. For spalls or repairs of existing concrete pavement, perform repairs in conformance with UFC 3-270-03, *Concrete Crack and Partial Depth Spall Repair*, and UFC 3-270-04, *Concrete Repair*. Spall repair materials must be either Rapid Setting Cementitious Concrete (RSCC), epoxy concrete, or polymer-modified Portland Cement (non-sag mortar) products specially formulated for spall repairs, with a proven record (in service at least three years) of satisfactory use under loading and environmental conditions similar to those at the location of intended use. Provide a manufacturer's data sheet and certificate supporting the satisfactory use to the Contracting Officer with the design. A product manufacturer's representative is required to be present during the initial two days of product application to verify that manufacturer's instructions for use are adhered to by the contractor. Give the Contracting Officer 7 days notice prior to the initial application in order to be present.

12. **Markings and Signage:** Provide pavement markings in accordance with the SHS. Design materials for life expectancy of at least 3 years under an average daily traffic count per lane of approximately 9000 vehicles. Water based paints must have durability rating of at least 4 when determined in the wheel path area. Provide a half-rate initial marking application on bituminous pavements. Provide the remaining application at the end of the normal curing period. Provide signage in accordance with the MUTCD.

13. **Guardrails and Barriers:** Provide guard (guide) rails in accordance with the SHS. Where the SHS do not include materials for guardrails, provide guardrails in accordance with the applicable portions of the *AASHTO Roadside Design Guide*.

14. **Bollards:** For bollards to prevent damage, provide minimum 4 feet height, 4 inch diameter steel pipe filled with concrete, painted, and embedded in a portland cement concrete foundation. For bollards located at building entries or other high-visibility areas provide decorative bollards matching the design of the facility or consistent with the Base Exterior Architecture Plan (BEAP) and the Installation Appearance Plan.

15. **Resurfacing:** Adjust rims of existing utility structures to match proposed grades after resurfacing.
    a. **Slurry Seal:** ASTM D 3910 and in accordance with the SHS.
    b. **Bituminous Concrete Overlay:** Remove old pavement by cold milling to depths required to provide new surface and leave underlying materials intact. Clean the pavement of excessive dirt, clay or other foreign matter with power brooms and hand brooms immediately prior to the milling operation. Repair or replace damaged utility structures, valve boxes, or pavement that is torn, cracked, gouged, rutted, broken or undercut at no addition expense to the government. Provide bituminous concrete overlay produced from hot or cold recycling of the milled material or from virgin materials in accordance with the applicable provisions of UFC 3-201-01, *Civil Engineering*, and the standard mix of the SHS based on the pavement design and vehicle loading as indicated in this RFP.

c. **Crack Sealing:** Use fiber reinforced crack sealer for sealing cracks in asphalt pavement after milling and prior to resurfacing. Provide crack sealing conforming to the following requirements in UFC 3-270-01, *Asphalt Maintenance and Repair*, and UFC 3-270-02, *Asphalt Crack Repair*.

16. **Parking Lots:** Refer to Pavements above.

17. **Permeable Pavements:** Provide permeable concrete pavers of solid interlocking paving units complying with ASTM C936, resistant to freezing and thawing when tested according to ASTM C67, and made from normal-weight aggregates. If required for applicable sustainability goal, provide permeable concrete pavers with a Solar Reflectance Index (SRI) greater than or equal to 29. Provide pervious concrete in accordance with UFGS Specification Section 32 13 43, *Pervious Concrete Paving*. Do not use asphalt-surfaced porous pavement.
    a. **Bases and Subbases:** Refer to Bases and Subbases paragraph above.
    b. **Curbs and Gutters:** Refer to Curbs and Gutters paragraph above**.**
    c. **Paved Surfaces:** Refer to Paved Surfaces paragraph above**.**
    d. **Markings and Signage:** Refer to Markings and Signage paragraph above. Provide water-based paints only.& Mark neatly to denote traffic lanes and parking spaces; mark in accordance with the requirements of UFC 3-201-01, *Civil Engineering*.
    e. **Guardrails and Barriers:** Refer to Guardrails and Barriers paragraph above**.**
    f. **Wheelstops:** Provide precast concrete wheelstops.

18. **Pedestrian Paving:** Locate new sidewalks such that they maintain continuity of pedestrian traffic to and from the existing sidewalks adjacent to the site(s).
    a. **Bases & Subbases:** Provide as required by local standards or geotechnical report; refer to Bases and Subbases paragraph above.
    b. **Paved Surfaces:**
    c. **Concrete Sidewalks:** Provide sidewalks of Portland cement concrete pavement with 4 inches (100 mm) thick minimum or permeable pavement. Provide concrete and permeable pavement in accordance with Section G201003 and G2020, respectively. For PCC sidewalks, provide a broomed finish. Provide sidewalks of at least 5 feet (1.5 meters) wide, except that sidewalks connecting entry points of housing units to the housing unit's parking are required to be at least 36 inches (900 mm) wide. In housing areas, offset sidewalks paralleling streets to maintain a minimum grassed separation of 5 feet (1.5 meters) from the back face of the curb to the closest edge of the sidewalk Unless indicated otherwise, provide a transverse slope of 1/48. Limit variation in cross section to 0.25 inch in 5 feet (6 mm in 1.50 m). Submit samples boards per ESR G2050 and PTS G2050 and finish schedule on final plans. Provide contraction joints spaced at intervals equivalent to the width of the sidewalk. Provide 0.5 inch (13 mm) thick transverse expansion joints at changes in direction where sidewalk abuts curb, steps, rigid pavement, or other similar structures; space expansion joints every 50 feet (15 m) maximum. Provide isolation joints by placing a 1/2-inch (12 mm) preformed expansion joint filler around each structure that extends into or through the sidewalk before concrete is placed at that location.
    d. **Concrete Pavers as Sidewalk:** Concrete pavers shall meet ASTM C936. Install in accordance with manufacturers recommendations.

19. **Chain Link Fencing and Gates:** Chain link fence fabric must be at least 9 gauge (3 mm) steel wire mesh material (before any coating) with mesh openings not larger than 2 inches (51 mm). Do not use aluminum fabric, posts or accessories. Install fence in accordance with ASTM F567 and the manufacturer's written installation instructions. Provide rails in accordance with FS RR-F-191/3, Class 1, steel pipe, Grade A. Provide gates in accordance with FS RR-F-191/2 with posts and fabric as specified for fence.

Provide posts and braces in accordance with FS RR-F-191/3, Class 1, steel pipe, Grade A. Each gate, terminal and end post will be braced with truss rods. Provide fencing accessories in accordance with FS RR-F-191/4. If PVC coating is required, provide accessories with PVC color coating similar to that specified for chain-link fabric or framework.

20. **Security Fencing:** Provide security fencing systems in accordance with UFC 4-022-03, *Security Fences and Gates*, and this RFP. Provide chain link fence in accordance with paragraphs above, except as noted otherwise. Ensure that the fabric has twisted and barbed selvage at the top and bottom. Do not provide top rails. Locate all posts and structural supports on the inner side of the fencing. Install outriggers facing outward except when the fence must be mounted directly on the property line. Provide signage at a minimum of 200 foot (61 m) intervals along the entire perimeter. Provide protective measures to prevent access through culverts, storm drains, sewers, air intakes, exhaust tunnels and utility openings or across drainage ditches or swales as required in UFC 4-022-03. Do not cover, block or lace openings in perimeter fencing and security fencing with material which would prevent a clear view of personnel, vehicles or material in the outer or inner vicinity of the fence line.

21. **Fence Grounding:** Grounding and bonding of the fencing must be in accordance with the National Electric Safety Code (NESC) - IEEE C2 and UFC 4-022-03. Ground fencing on either side of every gate and at other locations when the fencing is near and parallel to high tension power lines. Grounding is also required at intervals of 1000 feet (305 meters) to 1500 feet (457 meters) when the fencing runs through isolated areas and at lesser distances depending on the proximity of the fencing to public roads, highways and buildings where the fencing is around or within any explosive storage, production, operating or handling areas.

22. **Enclosures for Utility Equipment:** Where fencing is used to provide an enclosure for utility equipment, ensure a minimum clearance is provided no less than 3 feet (900 mm) around the equipment to permit maintenance access and ventilation. Provide stone, gravel or concrete paving within the enclosure.

G2040 SITE DEVELOPMENT

All site furnishings must be permanently attached to concrete pads. Site furnishings must conform to the Base Exterior Architecture Plan (BEAP) or Installation Appearance Plan (IAP) for each Activity. If no product guidance is given, coordinate material, finish and color with architecture (fiberglass and aluminum are not acceptable) and provide to the greatest extent possible, materials with industrial recycled content, preferably from regionally local manufacturers. At a minimum, provide a trash and ash receptacle at each entry and gathering/smoking area.

G2050 LANDSCAPING

G30 SITE CIVIL/MECHANICAL UTILITIES

Develop the site to provide water, fire protection, sanitary sewer, storm drainage, heating, cooling and fuel distribution services that meet the requirements of each utility provider and each applicable regulatory agency that governs and issues permits for the construction and operation of these systems. Site design must also comply with Department of Defense requirements concerning Low Impact Development (LID) per UFC 3-210-10, *Low Impact Development*, as well as state or local stormwater management regulations, and applicable project sustainability goals. Submit sealed calculations with narrative to the Government for civil and environmental review documenting all assumptions and which criteria governs the design.

Coordinate with the local utility providers and pay any fees or charges required to connect to their utility. Identify and obtain all permits to comply with all federal, state, and local regulatory requirements associated with this work. Coordinate all reports, submittals, and permit applications through the Contracting Officer. Perform work in accordance with the obtained permits.

Provide all required fittings, connections and accessories required for a complete and usable system. All equipment must be installed per the criteria indicated in this RFP and the manufacturer's recommendations. Where the word "should" is used in the manufacturer's recommendations, substitute the word "must".

G3010 WATER SUPPLY

1. **Water System Design and Construction**: Provide the new water system and connections to the existing water system in accordance with UFC 3-230-01, *Water Storage, Distribution, and Transmission*; the utility provider's requirements; or the state waterworks' regulations; whichever is more stringent.

2. **Notifications**: Notify the utility provider of the additional demand generated by the proposed facility. Provide a copy of all correspondence with the utility provider to the Government's Civil/Mechanical Reviewer.

3. **Performance Verification And Acceptance Testing**: Provide testing on water mains and service lines in accordance with the state waterworks' regulations and the following:
   a. Ductile iron and other materials: AWWA C600.
   b. PVC: AWWA C605.

      Whichever is more stringent. Do not begin testing on any section of a pipeline where concrete thrust blocks have been provided until at least 5 days after placing of the concrete.

4. **Disinfection:** Disinfect new water piping and existing water piping affected by Contractor's operations in accordance with the state waterworks' regulations and AWWA C651.

5. **Water Distribution Mains:** For underground applications, water mains 12 inches (300 mm) in diameter and less must be ductile iron or PVC. Water mains deeper than 10 feet (3.0 m) or larger than 12 inches (300 mm) in diameter must be ductile iron. For aboveground applications, water mains shall be flanged ductile iron pipe.
   a. Ductile Iron Pressure Pipe:
      1) Pipe: AWWA C151, Pressure Class 350.
      2) Fittings: AWWA C110 or AWWA C153.
      3) Interior Lining: AWWA C104.
      4) Exterior Protection (if required): AWWA C105, polyethylene encasement.
   b. PVC Pressure Pipe:
      1) Pipe: AWWA C900, Pressure Class 150.
      2) Fittings: Ductile Iron (AWWA C110 or AWWA C153).
   c. Flanged Ductile Iron Pipe:
      1) Pipe: AWWA C115 and its appendices.
      2) Fittings: AWWA C110 or AWWA C153.
      3) Lining: AWWA C104.

6. **Installation of Water Distribution Mains:**
   a. Ductile Iron: AWWA C600.
   b. PVC: AWWA C605.
   c. Provide nondetectable warning tape and a continuous length of tracer wire for

the full length of each run of nonmetallic piping below grade. Warning tape to be color coded with warning and identification of utility type imprinted in bold black letters continuously over the entire tape length. Warning and identification to read, "CAUTION, BURIED (utility type) LINE BELOW" or similar wording. Color to be blue for potable water systems and purple for nonpotable, reclaimed water, and irrigation lines. Terminate tracer wire above grade at valve boxes and at exterior of building.

7. **Connections to Existing Water Lines:** Make connections to existing water lines after approval from the system owner is obtained and with a minimum interruption of service on the existing line. Make connections to existing lines under pressure in accordance with the recommended procedures of the manufacturer of the pipe being tapped.

8. **Water Service Lines:** Water service lines less than 4 inches (100 mm) in diameter must be copper tubing or PVC. Water service lines 4 inches (100 mm) and 6 inches (150 mm) in diameter must be ductile iron pipe and PVC pressure pipe; see paragraph "Water Distribution Mains" for additional requirements for ductile iron and PVC piping.
   a. Copper Tubing
      1) Pipe: ASTM B 88/B 88M, Type K.
      2) Fittings for Solder-Type Joint: ANSI B16.8 or ASME B16.22.
      3) Fittings for Compression-Type Joint: ASME B16.26, flared tube type.
   b. PVC Pressure Pipe
      1) Pipe: ASTM D1785, Schedule 40 or ASTM D 2241, with SDR rating for 160 psi (1.1 MPa) pressure rating.
      2) Fittings: ASTM D 2466.
      3) Joints: Elastomeric gaskets for pressure rating; solvent cement joints, ASTM D 2564.
   c. Service Connections: Connect service lines 2-inch (50 mm) diameter or less to the main by a corporation stop and install a gate valve on service line below the frostline.
      1) Ductile-iron water mains: AWWA C600.
      2) PVC water mains: UBPPA UNI-PUB-8 and the recommendations of AWWA M23, Chapter 9, "Service Connections."

9. **Installation of Water Service Lines:** Install pipe, fittings and accessories in accordance with manufacturer's instructions.
   a. Metallic Piping: applicable requirements of AWWA C600.
   b. PVC: ASTM D 2774 and ASTM D 2855.

10. **Corrosion Protection:** Provide insulating joints to prevent contact between dissimilar metals at the joint between adjacent sections of piping in accordance with the pipe manufacturer's recommendations. Ensure that there is no metal-to-metal contact between dissimilar metals after the joint has been assembled. To prevent the possibility of bi-metallic corrosion, service lines of dissimilar metal to the water mains and the attendant corporation stops must be wrapped with polyethylene or suitable dielectric tape for a minimum clear distance of 3 feet (900 mm) from the main.

11. **Valves:** Install valves with the same diameter and have the same joint ends as the mains to which they are installed. Each type of valve must be of one manufacturer.
   a. **Gate Valves:** Install valves at all new points of connection. At a minimum, locate valves to ensure that no more than two fire hydrants will be out of service in the event of a single break in a water main. Locate valves outside of pavement and heavy traffic areas whenever possible.
   b. **Gate Valves 3-inch (75 mm) and Larger in Diameter:**
      1) Valves (20-inch and smaller in diameter): AWWA C509 or AWWA C515, nonrising stem and of one manufacturer.

2) Valves (greater than 20-inch in diameter): AWWA C500.
3) Valves for Indicator Post: AWWA C509 or AWWA C500, as indicated above, with indicator post flange in accordance with applicable requirements of UL 262.
4) Interior Coating: AWWA C550.

c. **Gate Valves Smaller than 3-inch (75 mm) in Diameter:** MSS SP-80, Class 150, solid wedge. Provide valves with flanged or threaded end connections, with unions on both sides of the valve and a handwheel operator.

d. **Valve Box:** Provide a cast iron, adjustable, valve box for each gate valve on buried piping. Provide valve boxes of a size suitable for the valve on which it is to be used with a minimum diameter of 5-1/4 inches (130 mm). Provide a round head and cast the word "WATER" on the lid.

e. **Check Valves:** Provide check valves sized 2-inches (50 mm) to 24-inches (600 mm) as swing-check type (AWWA C508) and with a protective epoxy interior coating conforming to AWWA C550. For underground applications, provide check valve in a valve vault.

f. **Air Release, Air/Vacuum, and Combination Air Valves:** AWWA C512 and AWWA M51.

g. **Corporation Stops:** If service lines 2-inch diameter or less are tapping water mains, provide corporation stops. The corporation stops must be ground key type, bronze, ASTM B61 or ASTM B62.

h. **Installation of Valves:** Make and assemble joints to valves as specified for making and assembling the same type of joints between pipe and fittings.

12. **Water Meters:** Provide water meter and remote reading as required by the utility provider and in accordance with AWWA standards.

13. **Backflow Prevention:** Provide backflow prevention and cross connection control in accordance with AWWA M-14 and governing local/state plumbing codes and waterworks' regulations.

14. **Fire Hydrants:** Fire hydrants must be of one manufacturer and in accordance with UFC 3-600-01, *Fire Protection Engineering*. Coordinate with the project's fire protection designer of record. Provide protection for fire hydrants located in areas subject to vehicle damage. Fire hydrants must have National Standard threads on hose and pumper connections. Provide a 6 inch (150 mm) inlet, two 2.5 inch (62 mm) hose connections and one pumper connection sized to accommodate local fire department equipment requirements. Paint hydrants with at least one coat of primer and two coats of enamel paint. Barrel and bonnet colors shall be in accordance with UFC 3-600-01. Stencil hydrant number and main size on the hydrant barrel using black stencil paint.

a. Dry Barrel Fire Hydrants: AWWA C502 with frangible sections.

b. Wet Barrel Fire Hydrants AWWA C503 or UL 246, "Wet Barrel" design, with breakable features.

c. Installation: Install hydrants with the pumper connection facing the adjacent paved surface. If there are two, paved adjacent surfaces, contact the Contracting Officer for further direction.

15. **Thrust Restraint:** Provide thrust restraint for all piping, valves, fittings, and other appurtenances of the water distribution system. Provide thrust restraint using restrained joints in accordance with pipe manufacturer's recommendations, AWWA C600 and if for fire service main, NFPA 24.

16. **Fire Protection Water Distribution:** Refer to applicable portions of this Section and Section D40, *Fire Protection Systems*. Water main piping, service lines, fittings, valves, accessories and all other materials must meet the American Water Works Association (AWWA) standards for a minimum system working pressure of 200 psi (1380 kPa).

a. **Detector Checks:** UL 312; detector check includes bypass meter, piping, gate

valves, check valve and connections to detector check valve. Set valve to allow minimal water flow through bypass meter when major water flow is required.

b. **Fire Department Connections:** UL 405.

c. **Indicator Posts:** UL 789.

G3020 SANITARY SEWER

1. **Sanitary System Design and Construction:** Provide the new sanitary sewer system and connections to the existing sanitary sewer collection system in accordance with UFC 3-240-01, *Wastewater Collection*; the utility provider's requirements; or the state sewerage regulations; whichever is more stringent.

2. **Notifications:** Notify the utility provider of the additional wastewater flow generated by the proposed facility. Provide a copy of all correspondence with the utility provider to the Government Civil Reviewer.

3. **Wastewater Pump Station:** Where required, provide a duplex, grinder pump station in accordance with the utility provider's requirements. Provide pump station wet well of fiberglass construction. Provide adjacent valve vault of precast concrete construction.

   Provide automatic control to start and stop the pump system. Provide automatic level control by floats in accordance with the preferences of the system owner to fill and prevent overflow of the wet well. Provide an emergency pump connection.

   Provide a telephone dialer in the control panel capable of accepting up to 8 telephone numbers. At the control panel provide an alarm horn and light with battery backup. Alarms shall include high liquid wet well level; loss of main power; no flow as sensed by current sensor; and pump failure via overload or motor heat sensor trip. Provide seal failure indicator lights and elapsed time meters.

   Provide electrical connections for a portable emergency generator hook-up sized to start up and maintain the total rated running capacity of the station, including the pumps, controls, lighting, and other auxiliary equipment.

4. **Performance Verification And Acceptance Testing:**

   a. Sanitary Sewer Distribution System Performance Verification: Provide testing on sewer mains and laterals in accordance with the state sewerage regulations. At a minimum, perform the following:

      1) Visual Test: Remove manhole covers and conducts a visual inspection as follows:

         a) Inspect for visible leaks in lines or manholes.
         b) Inspect condition of grout in the interior joints of the manholes.
         c) Inspect manhole frames and covers for proper type and installation.
         d) Inspect to see if lines are free of debris.
         e) Inspect manhole benches and inverts.
         f) Check alignment and grade of gravity lines by laser or by introducing sufficient water into the line to verify the absence of sags, as directed by the Contracting Officer.
         g) Mirror test: Check each straight run of pipeline for gross deficiencies by holding a light in a manhole; it shall show a full circle of light through the pipeline when viewed from the adjoining end of line.

      2) Leakage Tests: Test lines for leakage by either infiltration tests or exfiltration tests, or by low-pressure air tests in accordance with the following:

a) Exfiltration Tests: ASTM C 969M (ASTM C 969) and perform calculations in accordance with its Appendix.
b) Low-pressure Air Tests: Pipelines: ASTM C 924M (ASTM C 924) and perform calculations in accordance with its Appendix. PVC plastic pipelines: UBPPA UNI-B-6 and perform calculations in accordance with its Appendix.

3) Cross Connection Tests: Cross connection tests must be observed by the Contracting Officer and the utility provider's inspector.

a) Perform a tracer study from the project sewer connection to the first manhole downstream on the active sewer system. Use a nontoxic, non-staining sewer tracing dye. Testing must continue until the dye visually confirms the design connection is appropriate. During the test, the contractor must monitor the storm drainage system (structures and outfalls) downstream from the project for any sign of cross connection.
b) Perform a smoke test on the project sewer to verify that project storm drainage inlets or drains have not been connected to the sanitary sewer.

b Sanitary Sewer Manholes Verification Testing: Provide testing on sanitary sewer manholes in accordance with the state sewerage regulations. At minimum, perform hydraulic testing in accordance with ASTM C 969M (ASTM C 969).

c. Wastewater Pump Station Verification Testing: Test the wastewater pump station in accordance with the state sewerage regulations. Conduct testing on discharge piping and force main in accordance with tests for water distribution mains; see G30, paragraph 1.3.2. Test pumps, controls, and alarms, in operation, under design conditions to ensure proper operation of all equipment.

d. TV Inspection for Sanitary Sewer: Post-installation TV inspection will be performed on all segments of the installed system when the total footage of sanitary sewer mains installed in the contract is in excess of 300 feet. Complete the post-installation TV inspection to confirm that the completed lines are free of defects. For video recordings include an audio track recorded by the inspection technician during the actual inspection work describing the parameters of the line being inspected. The minimum information to be included is the pipe material, pipe size, starting and stopping manholes and descriptions of any features as they occur. Video recording playback must be at the same speed that it was recorded. Permanently label CDs / DVDs according to their contents; CDs / DVDs will become the property of the Government. Provide all TV inspections of sanitary sewer mains in accordance with the Pipeline Assessment and Certification Program as sponsored by the National Association of Sewer Service Companies (NASSCO). Prior to initiating CCTV inspection, provide copies of PACP Certification of the operators that will be performing the work. Complete pipe segments and manhole work, including pipe penetrations, manhole benches, main line and manhole visual inspection, pressure testing, deflection and leakage tests on a section of line (manhole to manhole) prior to performing TV. Complete post-installation TV inspection in the presence of the Contracting Officer or his designated representative. The importance of accurate measurements is emphasized. The meter device must be accurate to one tenth of a foot. Utilize the full capabilities of the camera equipment to document the completion and the conformance of the work to the Contract Documents. Provide a full 360Ã‚Â° view of the pipe, joints and service connections. Move the camera through the line in either direction at a moderate rate, stopping when necessary to permit proper documentation of the sewer's condition. The maximum speed must be no greater than 30 feet per minute. Use manual winches, power

winches, TV cable and powered rewinds or other devices that do not obstruct the camera view or interfere with the proper documentation of the sewer conditions to move the camera through the sewer line. Once video recording has commenced, the recording must be continuous, without interruption, until the termination manhole is reached. Provide a color video showing the completed work. Prepare and submit Television Inspection Logs providing location of service connections along with the location of any discrepancies. Keep computer printed location records (Television Inspection Logs) and clearly show the location and orientation in relation to an adjacent manhole for each point observed during the TV inspection. Record features of significance such as locations and orientations of service connections, pipe deflections, leaks, rolled or dislodged gaskets, sags or bellies in the line, or wide joints. Document noted defects and lateral connections as color digital files and color hard copy prints. Photo logs must accompany each photo submitted. Prior to submission of the TV inspection video, Television Inspection Logs, and digital photographs to the Contracting Officer, review the submittal items to ensure that they meet the quality criteria set forth in this specification. A copy of such video along with the Television Inspection Logs and Digital photographs must be supplied to the Contracting Officer within five (5) business days of completion of the video-inspection. In the event that the video, Television Inspection Logs or digital photographs are deemed of poor quality or substandard by the Contracting Officer, the videos, and / or Television Logs, or digital photographs will be returned and a re-inspection provided by the Contractor, at no additional cost to the Government.

5. **Gravity Sewer Piping:** Gravity sanitary sewer mains and laterals must be Ductile Iron, PVC or Polypropylene sewer pipe and fittings. Use Ductile Iron under roadways or at depths greater than 10 feet (3.0 m). PVC and Polypropylene may only be used under roadways or at depths greater than 10 feet (3.0 m) when written approval is received by the Government's Civil Reviewer or indicated in another part of the RFP.
   a. PVC Gravity Sewer Pipe
      1) Piping and Fittings: ASTM D3034 or ASTM F679, SDR 35.
      2) Joints: ASTM D3212 and ASTM F477.
   b. Ductile Iron Gravity Sewer Pipe
      1) Piping: ASTM A746. Provide required Thickness Class based on design information and methods in ASTM A746.
      2) Fittings: AWWA C110 or AWWA C153.
      3) Joints: AWWA C111.
      4) Interior Coating: AWWA C104.
      5) Exterior Protection (if required): AWWA C105, polyethylene encasement.
   c. Dual Wall and Triple Wall Polypropylene Sewer Pipe 12" to 60"
      1) Piping and Fittings: ASTM F2736 and ASTMF2764/F2764M.
      2) Joints: ASTM D3212 and ASTM F477.

6. **Connections to Existing Lines:** Obtain approval from the Contracting Officer before making a connection to an existing line. Conduct work so that there is minimum interruption of service on existing line and provide a new manhole at the connection point.

7. **Gravity Sewer Installation:** Install pipe, fittings and accessories in accordance with manufacturer's instructions.
   a. PVC and Dual and Triple Wall Polypropylene: ASTM D2321. Do not use ASTM D2321 Class IV or V materials for bedding, haunching or initial backfill materials.
   b. Ductile Iron: AWWA C600.
   c. Provide nondetectable warning tape and a continuous length of tracer wire for the full length of each run of nonmetallic piping below grade. Warning tape to be

color coded with warning and identification of utility type imprinted in bold black letters continuously over the entire tape length. Warning and identification to read, "CAUTION, BURIED (utility type) LINE BELOW" or similar wording. Color to be green for sewer systems. Terminate tracer wire above grade at valve boxes and at exterior of building.

8. **Piping for Gravity Sewer Cleanouts:** Install cast iron pipe and fittings in accordance with the recommendations of the pipe manufacturer.
   a. Cast-Iron Soil Pipe for Cleanouts
      1) Pipe: ASTM A 74, service.
      2) Joints: ASTM C 564 compression-type rubber gaskets.
      3) Exterior Protection (if required): AWWA C105, polyethylene encasement.

9. **Sanitary Sewer Manholes and Cleanouts:** Provide all materials, equipment, labor, testing, and miscellaneous related items for the sanitary manholes in accordance with the following:
   a. Set manhole rim elevations flush with finished surface of paved areas or 1 inch (25 mm) above finished grade in unpaved areas.
   b. Resilient connectors for making joints between manhole and pipes entering manhole must conform to ASTM C 923/C 923M.
   c. Provide drop manholes when a gravity sewer pipe enters a manhole at an elevation of 24 inches (610 mm) or more above the manhole invert.
   d. Precast Concrete Manholes: ASTM C 478/C 478M; base and first riser must be monolithic. Precast manhole sections must have:
      1) ASTM C 990/C 990M butyl gaskets;
      2) ASTM C 443/C 443M rubber O-ring joints; or
      3) ASTM C 443, Type B gaskets.
   e. Cast-in-Place Concrete Manholes: Reinforced concrete; designed according to ASTM C 890 for A-16 (AASHTO HS20-44), heavy-traffic, structural loading. Provide concrete work in accordance with ACI 301/301M and ACI 350-01; provide a minimum compressive strength of 4000 psi (28 MPa).
   f. Manhole Frames and Covers: Frame and cover must be cast gray iron, ASTM A48/A48M, Class 35B, cast ductile iron, ASTM A536, Grade 65-45-12, or reinforced concrete, ASTM C478 ASTM C478M. Frame and cover must be designed to accommodate the imposed live load. Stamp or cast the words "Sanitary Sewer" into covers so that it is plainly visible.
   g. Manhole Steps:
      1) Zinc-coated steel: 29 CFR 1910.27.
      2) Plastic or rubber coating pressure molded to steel: ASTM D 4101, copolymer polypropylene; or ASTM C 443/C 443M, except shore A durometer hardness must be 70 plus or minus 5.
      3) Aluminum steps or rungs will not be permitted. Steps are not required in manholes less than 4 feet (1.2 m) deep.

10. **Manhole Construction:** Where a new manhole is constructed on an existing line, remove existing pipe as necessary to construct the manhole. Cut existing pipe so that pipe ends are approximately flush with the interior face of manhole wall, but not protruding into the manhole. For changes in direction of the sewer and entering branches into the manhole, make a circular curve in the manhole invert of as large a radius as manhole size will permit. For cast-in-place concrete, no parging will be permitted on interior manhole walls.

11. **Connections to Existing Manholes:** Center pipe connections to existing manholes on the manhole. Holes for the new pipe must be of sufficient diameter to allow packing cement mortar around the entire periphery of the pipe but no larger than 1.5 times the diameter of the pipe. Cut the manhole in a manner that will cause the least damage to the

walls.

12. **Cleanouts:** Construct cleanouts of cast iron soil pipe and fittings; see paragraph, "Piping for Gravity Sewer Cleanouts" above.

13. **Lift Stations and Pumping Stations:** If a pump station is allowed, provide all materials, equipment, labor, testing and miscellaneous related items for a packaged lift or pump station system for the facility in compliance with the UFC 3-240-01, *Wastewater Collection*; the state sewerage regulations; and the utility provider's requirements.
    a. **Submersible Pumps:** Provide pumps capable of handling raw wastewater and passing spheres of at least 3 inches (75 mm) in diameter. The pump's suction and discharge openings must be at least 4 inches (100 mm) in diameter. Provide submersible type sewage pumps, with guide rail system. Include ASTM A48/A48M, Class 25, nonclog, cast-iron impeller; and hermetically sealed motor with moisture-sensing probe, mechanical seals, and waterproof power cable. Construct the guide rail system of stainless steel. Provide a stainless steel lifting chain for raising and lowering the pump in the basin.
    b. **Grinder Pumps:** Provide grinder-type sewage pumps, with guide rail system. Include stainless steel or bronze impeller and hermetically sealed motor with moisture-sensing probe, mechanical seals, and waterproof power cable. Construct the guide rail system of stainless steel. Provide a stainless steel lifting chain for raising and lowering the pump in the basin.
    c. **Suction Lift Pumps:** Provide pumps capable of handling raw wastewater and passing spheres of at least 3 inches (75 mm) in diameter. The pump's suction and discharge openings must be at least 4 inches (100 mm) in diameter. Provide dry-chamber-mounting, vacuum-primed, nonclog sewage pumps located in dry compartment above wet pit. Include ASTM A48/A48M, Class 25, nonclog, cast iron impeller; mechanical or stuffing box seals; pedestal mounted motor; and suction piping extending to bottom of wet pit. Provide suction-lift pumps capable of automatic rapid self priming and re-priming at the "lead pump on" elevation. Suction piping must not exceed 25 feet (7.6 meters) in total length. Priming lift at the "lead pump on" elevation must include a safety factor of at least 4 feet (1.2 meters) from the maximum allowable priming lift for the specific equipment at design operating conditions. The combined total of dynamic suction-lift at the "pump off" elevation and the required net positive suction head at design operating conditions must not exceed 22 feet (6.7 meters).
    d. **Pump Motors:** Provide pump motor sized to accommodate pump operation along the entire impeller curve.
    e. **Station Piping Within Wet Well and Valve Vault:**
       Piping Less than 4-Inch (100 mm) in Diameter
       1) PVC Pressure Pipe

          a. Pipe: ASTM D 1785, Schedule 80.b. Fittings: Schedule 80 socket fittings, ASTM D 2467; Schedule 80 threaded fittings, ASTM D 2464.**Piping 4 inch (100 mm) Diameter and Larger**

       2) Flanged Ductile Iron Pipe

          a. Pipe: AWWA C115 and its appendices.
          b. Fittings: AWWA C110 or AWWA C153.c. Lining: AWWA C104.

14. **Force Mains:**
    a. **Force Mains for Submersible and Suction Lift Pumps:** Force mains must be at least 4 inches (100 mm) in diameter and must be either ductile iron or PVC pressure pipe.
       1) Ductile Iron Pressure Pipe

a. Pipe: AWWA C151, Pressure Class 350.
b. Fittings: AWWA C110 or AWWA C153.
c. Interior Lining: AWWA C104.d. Exterior Protection (if required): AWWA C105, polyethylene encasement.

2) PVC Pressure Pipe

a. Pipe: AWWA C900, Pressure Class 150. AWWA C905.
b. Fittings: Ductile Iron (AWWA C110 or AWWA C153).b. **Force Mains for Grinder Pumps:** Force mains less than 4 inches (100 mm) in diameter must be PVC pressure pipe:
1) PVC Pressure Pipe

a. Pipe: ASTM D 1785, Schedule 40 or ASTM D 2241, with SDR rating for 160 psi (1.1 MPa) pressure rating.
b. Fittings: ASTM D 2466.c. Joints: Elastomeric gaskets for pressure rating; solvent cement joints, ASTM D 2564.15. **Piping Accessories:**

b. **Insulating Joints:** Provide between pipes of dissimilar metals a rubber gasket or other approved type of insulating joint or dielectric coupling to effectively prevent metal-to-metal contact between adjacent sections of piping.

c. **Accessories:** Provide flanges, connecting pieces, transition glands, transition sleeves, and other adapters as required.

d **Flexible Flanged Coupling:** Provide flexible flanged coupling applicable for sewage as indicated. Use flexible flanged coupling designed for a working pressure of 350 psi (2400 kPa).

16. **Valves:** Provide suitable shutoff and check valves on the discharge line of each pump. Locate the check valve between the shutoff valve and the pump. Locate valves in accordance with state sewerage regulations. Check valves must be suitable for the material being handled and placed on the horizontal portion of the discharge piping except for ball check valves, which may be placed in the vertical run. Provide valves capable of withstanding normal pressure and water hammer. Use valves from one manufacturer.

a. **Shut Off Valves**
Shut Off Valves Less than 4 Inch (100 mm) in Diameter
PVC ball valves.
1) Shut Off Valves 4 Inch (100 mm) and Larger in Diameter
AWWA C509 or AWWA C515, nonrising stem, and flanged. Provide valves with handwheels that open by counterclockwise rotation of the valve stem. Provide epoxy coating in accordance with AWWA C550.

b. **Check Valves**
1) Check Valves Less than 4-Inch (100 mm) in Diameter
Neoprene ball check valve with integral hydraulic sealing flange, designed for a hydraulic working pressure of 175 psi (1200 kPa).

Check Valves 4-Inch (100 mm) and Larger in Diameter
AWWA C508, flanged. Provide a nonclog, swing check valve rated for not less than 175 psig (1200 kPa) working pressure capable of passing 3-inch (75 mm) diameter solids.

2) Air Relief Valves: Provide air relief valves at high points in the force main to prevent air locking in accordance with AWWA M51. Provide vacuum relief valves, where required, to relieve negative pressures on force mains.

17. **Identification Tags and Plates:** Provide valves with tags or plates numbered and

stamped for their usage. Use plates and tags of brass or nonferrous material and mounted or attached to the valve.

18. **Thrust Restraint:** Provide thrust restraint for force mains, valves and other features of the wastewater distribution system. Provide thrust restraint using restrained joints in accordance with pipe manufacturer's recommendations, AWWA C600 and if for fire service main, NFPA 24.

19. **Station Control System:** Provide alarms for all pumping and lift stations; at minimum provide alarms for high level, power failure, pump failure, unauthorized entry or any cause of station malfunction. Provide alarms as required by the pump manufacturer to obtain warranty. If required, provide a telemetry system in accordance with state sewer collection and treatment regulations and system owner's requirements to relay alarms to a facility that is manned 24 hours a day.

20. **Station Accessories:**
    a. **Ventilation:** Provide covered wet wells with provisions for air displacement venting to the outside. Provide galvanized ASTM A 53/A 53M pipe with insect screening. Provide adequate ventilation for all pump stations.
    b. **Metering:** Provide devices for measuring wastewater flow at all pumping stations. Provide indicating, totalizing and recording flow measurement at pumping stations with a 1200 gpm (76 l/s) or greater design peak hourly flow. For smaller stations, provide elapsed time meters in conjunction with pumping rate tests.
    c. **Pipe and Valve Supports:** Use schedule 40 galvanized steel piping conforming to ASTM A 53/A 53M for pipe and valve supports. Provide either ANSI B16.3 or ANSI B16.11 galvanized threaded fittings.
    d. **Miscellaneous Metals:** Use stainless steel bolts, nuts, washers, anchors, and supports for installation of equipment.

G3030 STORM SEWER

1. **Storm System Design and Construction**: Provide the new storm sewer system and connections to the existing storm sewer system in accordance with UFC 3-201-01, *Civil Engineering*; the utility provider's requirements; UFC 3-210-10, *Low Impact Development*; the state stormwater management laws and regulations; and applicable sustainability requirements; whichever is more stringent.

   The Contractor must make necessary adjustments to the drainage design in order to avoid disruption to existing utilities and to protect existing trees to remain.

   Confirm that the existing receiving system has adequate capacity to receive the additional stormwater flow generated by the project.

2. **Storm Sewer System Performance Verification**: At a minimum, perform the following:
    a. Visual Test: Remove drainage structure covers and conduct a visual inspection as follows:

       1) Inspect for visible leaks in lines or structures.
       2) Inspect condition of grout in the interior joints of the structures.
       3) Inspect structure frames and covers for proper type and installation.
       4) Inspect to see if lines are free of debris.
       5) Inspect structure inverts.
       6) Check alignment and grade of gravity lines by laser or by introducing sufficient water into the line to verify the absence of sags, as directed by the

Contracting Officer.

7) Mirror test: Check each straight run of pipeline for gross deficiencies by holding a light in a structure; it must show a full circle of light through the pipeline when viewed from the adjoining end of the line.8) TV Inspection for Storm Sewer Under Pavements: Post-installation TV inspection will be performed on all segments of the installed system when the total footage of storm sewer lines installed in the contract is in excess of 300 feet. Complete the post-installation TV inspection to confirm that the completed lines are free of defects. For video recordings include an audio track recorded by the inspection technician during the actual inspection work describing the parameters of the line being inspected. The minimum information to be included is the pipe material, pipe size, starting and stopping manholes and descriptions of any features as they occur. Video recording playback must be at the same speed that it was recorded. Permanently label CDs / DVDs according to their contents; CDs / DVDs will become the property of the Government. Provide all TV inspections of storm sewer lines in accordance with the Pipeline Assessment and Certification Program as sponsored by the National Association of Sewer Service Companies (NASSCO). Prior to initiating CCTV inspection, provide copies of PACP Certification of the operators that will be performing the work. Complete pipe segments and manhole work, including pipe penetrations, manhole benches, main line and manhole visual inspection, pressure testing, and deflection test on a section of line (manhole to manhole) prior to performing TV. Complete post-installation TV inspection in the presence of the Contracting Officer or his designated representative. The importance of accurate measurements is emphasized. The meter device must be accurate to one tenth of a foot. Utilize the full capabilities of the camera equipment to document the completion and the conformance of the work to the Contract Documents. Provide a full 360Ã‚Â° view of the pipe, joints and service connections. Move the camera through the line in either direction at a moderate rate, stopping when necessary to permit proper documentation of the sewer's condition. The maximum speed must be no greater than 30 feet per minute. Use manual wenches, power winches, TV cable and powered rewinds or other devices that do not obstruct the camera view or interfere with the proper documentation of the sewer conditions to move the camera through the sewer line. Once video recording has commenced, the recording must be continuous, without interruption, until the termination manhole is reached. Provide a color video showing the completed work. Prepare and submit Television Inspection Logs providing location of service connections along with the location of any discrepancies. Keep computer printed location records (Television Inspection Logs) and clearly show the location and orientation in relation to an adjacent manhole for each point observed during the TV inspection. Record features of significance such as locations and orientations of service connections, pipe deflections, leaks, rolled or dislodged gaskets, sags or bellies in the line, or wide joints. Document noted defects and lateral connections as color digital files and color hard copy prints. Photo logs must accompany each photo submitted. Prior to submission of the TV inspection video, Television Inspection Logs, and digital photographs to the Contracting Officer, review the submittal items to insure that they meet the quality criteria set forth in this specification. A copy of such video along with the Television Inspection Logs and Digital photographs must be supplied to the Contracting Officer within five (5) business days of completion of the video -inspection. In the event that the video, Television Inspection Logs or digital photographs are deemed of poor quality or substandard by the Contracting Officer, the videos, and / or Television Logs, or digital photographs will be returned and a re-inspection provided by the Contractor, at no additional cost to the Government.

3. **Piping:** Storm sewer piping 12 inches (300 mm) and larger in diameter shall be reinforced concrete, ductile iron or corrugated steel; PVC, corrugated aluminum, polyethylene and polypropylene pipe may only be used when written approval is received by the Government's Civil Reviewer or indicated in another part of the RFP. Subsurface drainage piping shall be perforated PVC or HDPE.

4. **Piping Materials:**
   a. PVC Pipe
      1) Piping and Fittings: ASTM D3034, SDR 35.
      2) Joints: ASTM D3212 and ASTM F477.
   b. Ductile Iron Pipe
      1) Piping: ASTM A746. Provide required Thickness Class based on design information and methods in ASTM A746.
      2) Fittings: AWWA C110 or AWWA C153.
      3) Joints: AWWA C111.
      4) Interior Coating: AWWA C104.
      5) Exterior Protection (if required): AWWA C105, polyethylene encasement.
   c. Reinforced Concrete Pipe:
      1) Circular Pipe: ASTM C76/C76M. Provide required Class based on design information and methods in ASTM C76/C76M. Class III minimum.
      2) Elliptical Pipe: ASTM C507/C507M. Provide required Class based on design information and methods in ASTM C76/C76M.
      3) Joints:
         a) ASTM C990/C990M butyl gaskets;
         b) ASTM C 443/C 443M rubber O-ring joints; or c) AASHTO M 198, Type B preformed plastic gaskets.
   d. Corrugated Aluminum Pipe:
      1) Piping: ASTM B745/B745M.
      2) Joints: Coupling bands conforming to ASTM B745/B745M.
      3) Coating: Fully bituminous coated for all applications in accordance with ASTM A849. For applications where piping is part of a piped storm sewer system (not a culvert), provide pipe fully bituminous coated, invert (half) paved with concrete lining in accordance with ASTM A849.
   e. Corrugated Steel Pipe:
      1) Piping: ASTM A760/A760M.
      2) Joints: Coupling bands conforming to ASTM A760/A760M.
      3) Coating: Fully bituminous coated for all applications in accordance with ASTM A849. For applications where piping is part of a piped storm sewer system (not a culvert), provide pipe fully bituminous coated, invert (half) paved with concrete lining in accordance with ASTM A849.
   f. Polyetheylene (PE) Pipe
      1) Piping 12" to 60" and Fittings: ASTM 2648/F2648M and AASHTO M 294 Type S, corrugated.
      2) Joints: ASTM F477 and ASTM D3212
   g. Dual and Triple Wall Polypropylene (PP) Pipe
      1) Piping 12" to 60" and Fittings: ASTM F2736, ASTM F2764/F2764M, ASTM F2881 and AASHTO M 330 Type S or D
      2) Joints: ASTM F477 and ASTM D3212
   h. Perforated PVC Pipe: ASTM D 2729.
   i. Perforated PE Pipe
      1) Piping and Fittings: AASHTO M 294, Type SP, corrugated.
      2) Joints: AASHTO M 294, Soiltight.

5. **Installation:** Install piping in accordance with manufacturer's recommendations and the following standards:
   a. PVC, PE and Dual and Triple Wall PP: ASTM D 2321. Do not use ASTM D 2321 Class IV or V materials for bedding, haunching or initial backfill materials.
   b. Ductile Iron: AWWA C600.
   c. Reinforced Concrete: ACPA 01-102 and 01-103.
   d. Corrugated Aluminum: ASTM B 788/B 788M.
   e. Corrugated Steel: ASTM A 798/A 798M.
   f. Perforated PVC and Perforated PE: ASTM D 2321. Do not use ASTM D 2321

Class IV or V materials for bedding, haunching or initial backfill materials.

Provide nondetectable warning tape and a continuous length of tracer wire for the full length of each run of nonmetallic piping below grade. Warning tape to be color coded with warning and identification of utility type imprinted in bold black letters continuously over the entire tape length. Warning and identification to read, "CAUTION, BURIED (utility type) LINE BELOW" or similar wording. Color to be green for sewer systems. Terminate tracer wire above grade at valve boxes and at exterior of building.

6. **Piping for Cleanouts: Materials**
   a. Cast-Iron Soil Pipe for Cleanouts
      1) Pipe: ASTM A 74, service.
      2) Joints: ASTM C 564 compression-type rubber gaskets.
      3) Exterior Protection (if required): AWWA C105, polyethylene encasement.
   b. Installation: Install cast iron pipe and fittings in accordance with the recommendations of the pipe manufacturer.

7. **Storm Sewer Structures:** Provide all materials, equipment, labor, testing, and miscellaneous related items for the drainage structures in accordance with the following:
   a. Set structure rim elevations flush with finished surface of paved areas or 1 inch (25 mm) above finished grade in unpaved areas.
   b. Provide resilient connectors for making joints between manhole and pipes entering manhole in conformance with ASTM C 923/C 923M.
   c. Provide precast or cast-in-place concrete drainage structures, except cast-in-place concrete is required for airfield drainage structures, headwalls and gutters.

8. **Precast Concrete Inlets:** Provide work and materials in accordance with applicable requirements of the State Highway Specifications (SHS) and standards where the project is located.

9. **Cast-In-Place Concrete Drainage Structures:** Provide work and materials in accordance with drainage structures indicated in the State Highway Specifications (SHS) and standards where the project is located. For airfield drainage structures, provide work and materials in accordance with FAA ACA 150/5370-10B.

10. **Drainage Structure Frames And Covers:** Frame and cover for gratings shall be cast gray iron, ASTM A48/A48M, Class 35B; cast ductile iron, ASTM A536, Grade 65-45-12; or cast aluminum, ASTM B26/B26M, Alloy 356.OT6. Frame and cover must be designed to accommodate the imposed live loads. Stamp or cast the words "Storm Sewer" into covers so that it is plainly visible. For airfield drainage structures, fabricate frames and covers of standard commercial grade steel welded by qualified welders in accordance with AWS D1.1/D1.1M. Provide covers of rolled steel floor plate having an approved anti-slip surface. Steel frames and covers must be hot dipped galvanized after fabrication. At the contractor's option, ductile iron covers and frames may be used for airfield drainage structures if designed for a minimum proof load of 100,000 pounds (45,000 kg) in lieu of the steel frames and covers. Covers must be of the same material as the frames (i.e. ductile iron frame with ductile iron cover, galvanized steel frame with galvanized steel cover). Perform proof loading in accordance with ASTM A 48/A 48M. Physically stamp proof loads into the cover. Provide the Contracting Officer copies of previous proof load test results performed on the same frames and covers as proposed for this contract. Modify the top of the structure to accept the ductile iron structure in lieu of the steel structure indicated. The finished structure must be level and non-rocking, with the top flush with the surrounding pavement.

11. **Drainage Structure Steps:**

a. Zinc-coated steel: 29 CFR 1910.27.
b. Plastic or rubber coating pressure molded to steel: ASTM D 4101, copolymer polypropylene; or ASTM C 443/C 443M, except shore A durometer hardness shall be 70 plus or minus 5.
c. Aluminum steps or rungs will not be permitted. Steps are not required in structures less than 4 feet (1.2 m) deep.

12. **Drainage Structure Construction:** Where a new structure is constructed on an existing line, remove existing pipe as necessary to construct the structure. Cut existing pipe so that pipe ends are approximately flush with the interior face of structure wall, but not protruding into the structure.

13. **Connections to Existing Structures:** Center pipe connections to existing structures on the structure. Holes for the new pipe must be of sufficient diameter to allow packing cement mortar around the entire periphery of the pipe but no larger than 1.5 times the diameter of the pipe. Cut the structure in a manner that will cause the least damage to the walls.

14. **Cleanouts:** Construct cleanouts of cast iron soil pipe and fittings; see paragraph 6 above.

15. **Lift Stations:** A stormwater pump station(s) will not be allowed.

16. **Culverts:** Culverts 12 inches (300 mm) and larger in diameter shall be reinforced concrete or corrugated steel; PVC, corrugated aluminum, polyethylene and polypropylene pipe may only be used when written approval is received by the Government's Civil Reviewer or indicated in another part of the RFP. See G303001, paragraphs above for material and installation requirements. Flared end sections must be the same material as pipe material. Provide erosion control in accordance with the State Erosion and Sedimentation Control Standards or EPA guidance where State Standards are unavailable.

17. **Headwalls:** Provide cast-in-place concrete headwalls in accordance with the State Highway Specification (SHS) and standards where the project is located.

18. **Erosion & Sediment Control Measures:** Refer to Section G10.

19. **Stormwater Management:**
    a. **Stormwater Collection And Storage:** Provide permanent stormwater management (i.e., detention and retention ponds, LID and other drainage features) to control stormwater runoff in accordance with UFC 3-201-01, *Civil Engineering*, UFC 3-210-10, *Low Impact Development*, FC 1-300-09N Navy and Marine Corps Design Procedures, State and local stormwater management Laws and Regulations and applicable project sustainability goals. Integrate permanent stormwater management features into the site design in accordance with UFC 3-201-01, *Civil Engineering*. Parking areas, roads, walks, courtyards, training areas and similar site features may not be used to detain or retain stormwater. Manage stormwater within detention or retention ponds and the LID features indicated in Part 3 of this RFP. Prevent upstream and downstream property damage.

20. **OIL/WATER SEPARATOR:** Provide an oil/water separator to remove free oil from oil-in-water mixtures originating from proposed facility operations. Provide grit protection upstream of the oil/water separator. Provide an oil/water separator utilizing coalescing media and conforming to the applicable guidelines of the American Petroleum Institute (API). Provide materials or a coating system which will protect the separator from the oil-

in-water mixture, atmosphere, and in-situ soil conditions. Use a separator with a completely removable cover.

G3060 FUEL DISTRIBUTION

Gas Distribution System: Refer to Section D20 for requirements.

G40 SITE ELECTRICAL UTILITIES

G4010 ELECTRICAL DISTRIBUTION

1. **Electrical Utilities Design and Construction**: Site electrical utilities include all exterior electrical work, including the connection to the primary distribution system. This also includes telephone and cable television supplies.

   Provide electrical overhead and underground, distribution systems in accordance with IEEE C2 (National Electrical Safety Code), NFPA 70, local utilities company requirements, and local Activity guidelines.

2. **Coordination With Local Utilities Company and Local Activity**: Service meters for electrical services must be provided and installed in conformance with the local utilities company requirements and local activity guidelines.

3. **Substations**: When secondary unit substations are required, the Designer of Record must utilize UFGS Section 26 11 13, *Secondary Unit Substation*, and UFGS Section 26 23 00, *Low Voltage Switchgear*, or UFGS 26 24 13, *Switchboards*, for the project specification, and must submit the edited specification section as a part of the design submittal for the project.

4. **Transformers**: When transformers are required, the Designer of Record must utilize UFGS Section 26 12 19.10, *Three-Phase Pad Mounted Transformers*, UFGS Section 26 12 21, *Single-Phase Pad Mounted Transformers*, or UFGS Section 33 71 01, *Overhead Transmission and Distribution*, for the project specification, and must submit the edited specification section as a part of the design submittal for the project.

5. **Switches, Controls and Devices**: When switches or control devices are required, the Designer of Record must utilize UFGS Section 26 13 00, SF6 *Insulated Pad Mounted Switchgear*, or UFGS Section 33 71 01, *Overhead Transmission and Distribution*, for the project specification, and must submit the edited specification section as a part of the design submittal for the project.

G4020 EXTERIOR LIGHTING FIXTURES AND CONTROLS

1. Utilize broad spectrum (white light) sources such as metal halide, induction, Light Emitting Diode (LED), and fluorescent to provide good visibility at low light levels, unless lighting is required to match existing sources. The IESNA 10th Edition Handbook has developed a methodology to apply white light.

2. Comply with ANSI/ASHRAE/IES 90.1 for all exterior lighting applications and controls.

3. Comply with EPACT 2005, the exterior lighting power density must be below ASHRAE by 30% if considered a building load and 20% if considered a non-building load.

4. Provide surge protective device (SPD) at panelboards that include circuits feeding

exterior lighting systems.

5. Coordinate the design and luminaire selection with the landscape designer. Such coordination should include the location of poles which may conflict with tree locations.

6. When exterior lighting is required the designer of record must utilize UFGS Section 26 51 00 for the project specification section as part of the design submittal for the project and must submit the edited specification section as a part of the design submittal for the project. Provide “dark-sky” compliant exterior light fixtures and design to minimize light trespass and light pollution.

G4030 SITE COMMUNICATION & SECURITY

1. **Telephone Distribution System**: Provide all telephone distribution systems in accordance with EIA/TIA Standards, NFPA 70, and the cognizant telephone company requirements.

2. **Cable Television System**: Provide all cable television systems in accordance with NFPA 70, and the cognizant cable television company requirements and BICSI recommendations.

** End of Part 4 **

Naval Facilities Engineering Systems Command
NAVFAC MID-ATLANTIC

Engineering Department

eProjects WO#: 1855890

PART 5 – PRESCRIPTIVE SPECIFICATIONS

BUILDING 1100 REPAIR DAMAGED SECONDARY INLET GUIDES
NAS OCEANA
VIRGINIA BEACH, VIRGINIA

SECTION 01 31 23.13 20

ELECTRONIC CONSTRUCTION AND FACILITY SUPPORT CONTRACT MANAGEMENT SYSTEM
05/17

PART 1 GENERAL

1.1 CONTRACT ADMINISTRATION

Utilize the Naval Facilities Engineering Command's (NAVFAC's) Electronic Construction and Facility Support Contract Management System (eCMS) for the transfer, sharing and management of electronic technical submittals and documents. The web-based eCMS is the designated means of transferring technical documents between the Contractor and the Government. Paper media or e-mail submission, including originals or copies, of the documents identified in Table 1 are not permitted, except where eCMS is unavailable, non-functional or specifically requested in addition to electronic submission. When specifically requested to provide documents outside of eCMS, upload all final project documentation (e.g. documents that are signed and/or adjudicated by the Government) mentioned in Table 1 into the subject eCMS document management folders that are associated with that document type. Include the identification number of the document, type of document; the name/subject or title; and for daily reports the date (day of work) with format YYYY/MM/DDin the filename. For example for RFI's 0011_RFI_Roof_Leaking.doc; For submittals 0032a_Submittals_Light_Fixture.pdf; For Daily Reports 0132_Daily_Report_20190504.xls. Contact the Contracting Officer's Representative (COR) regarding availability of eCMS training and reference materials.

1.2 USER PRIVILEGES

The Contractor will be provided access to eCMS. All technical submittals and documents must be transmitted to the Government via the COR. Project roles and system roles will be established to control each user's menu, application, and software privileges, including the ability to create, edit, or delete objects.

1.3 SUBMITTALS

Government approval is required for submittals with a "G" designation; submittals not having a "G" designation are for Contractor Quality Control approval. Submit the following in accordance with Section 01 33 00 SUBMITTAL PROCEDURES:

SD-01 Preconstruction Submittals

List of Contractor's Personnel; G

1.4 SYSTEM REQUIREMENTS AND CONNECTIVITY

1.4.1 General

The eCMS requires a web-browser (platform-neutral) and Internet connection. Obtain from an approved vendor an External Certification Authority (ECA), Primary Key Infrastructure (PKI) certificate, or other similar digital identification to support two-factor authentication and access to eCMS. Provide and maintain computer hardware and software for

the eCMS access throughout the duration of the contract for all Contractor-designated users. Provide connectivity, speed, bandwidth, and access to the Internet to ensure adequate functionality. Neither upgrading of the Contractor's computer system nor delays associated from the usage of the eCMS will be justification or grounds for a time extension or cost adjustment to the Contract.

1.4.2 Contractor Personnel List

Within 20 calendar days of contract award, provide to the Contracting Officer a list of Contractor's personnel who will have the responsibility for the transfer, sharing and management of electronic design, technical submittals and documents and will require access to the eCMS. Project personnel roles to be filled in the eCMS include the Contractor's Project Manager, Designer of Record, Superintendent, Quality Control (QC) Manager, and Site Safety and Health Officer (SSHO). Personnel must be capable of electronic document management. Notify the COR immediately of any personnel changes to the project. The Contracting Officer reserves the right to perform a security check on all potential users. Provide the following information:

First Name
Last Name
E-mail Address
Office Address
Project Role (e.g. Project Manager, QC Manager, Superintendent)

1.4.3 Field Administration

Within 30 days of Contract Award, provide a tablet computer with a Common Access Card (CAC) reader at the job site for Government use only. The tablet computer must have a web-browser, built-in camera, and cellular data connectivity. Provide tablet computer with a rugged case suitable for use in a construction environment. The tablet computer must be fully charged and made available at all times for Government use to facilitate the input of construction data at the job site. The tablet will be given back to the contractor prior to leaving the jobsite for charging, maintaining and securing. After completion of the work, reset the tablet computer to factory default settings. The tablet computer remains the property of the Contractor and must be removed from the site. There are restrictions on use of WIFI on military bases. Cellular data connectivity and availability, and use of WIFI requires coordination with and approval by the Contracting Officer.

1.5 SECURITY CLASSIFICATION

In accordance with Department of Navy guidance, all military construction contract data are unclassified, unless specified otherwise by a properly designated Original Classification Authority (OCA) and in accordance with an established Security Classification Guide (SCG). Refer to the project's OCA when questions arise about the proper classification of information.

The eCMS and tablet computer must only be used for the transaction of unclassified information associated with construction projects. In conformance with the Freedom of Information Act (FOIA), Department of Defense Manual 5200.01-V4: DoD Information Security Program: Controlled Unclassified Information (CUI), and DoD requirements, any unclassified project documentation uploaded into the eCMS must be designated either "U - UNCLASSIFIED" (U) or "FOUO - UNCLASSIFIED-FOR OFFICIAL USE ONLY" (FOUO).

1.6 ECMS UTILIZATION

Establish, maintain, and update data and documentation in the eCMS throughout the duration of the contract.

Personally Identifiable Information (PII) transmittal is not permitted in the eCMS.

1.6.1 Information Security Classification/Identification

The eCMS must be used for the transmittal of the following documents. This requirement supersedes conflicting requirements in other sections, however, submittal review times in Section 01 33 00 SUBMITTAL PROCEDURES remain applicable. Table 1 - Project Documentation Types provides the appropriate U and FOUO designations for various types of project documents. Construction documents requiring FOUO status must be marked accordingly. Apply the appropriate markings before any document is uploaded into eCMS. Markings are not required on U documents.

Table 1 also identifies which eCMS application is to be used in the transmittal of data (these are subject to change based on the latest software configuration). If a designated application is not functional within 4 hours of initial attempt, defer to the Submittal application and submit the required data as an uploaded portable document (e.g. PDF), word processor, spreadsheet, drawing, or other appropriate format. Hard copy or e-mail submission of these items is acceptable only if eCMS is documented to be not available or not functional or specifically requested in addition to electronic submission. After uploading documents to the Submittal application, transmit the submittals and attachments to the COR via the Transmittal application. For Submittals, select the following:

Preparation by = Contractor personnel assigned to prepare the submittal
Approval by = Contracting Officer Representative (COR)
Returned by = Design Lead/Manager
Forwarded to = Contractor project manager

Table 1 - Project Documentation Types

SUBJECT/NAME	CLASS	REMARKS	ECMS APPLICATION
As-Built Drawings	U	Locations of sensitive areas must be labeled as either "Controlled Area" or "Restricted Area" and may be shown on unclassified documents with the approval from Site Security Manager	Submittals and Transmittals

SUBJECT/NAME	CLASS	REMARKS	ECMS APPLICATION
Building Information Modeling (BIM)	U	1. Locations of sensitive areas must be labeled as either "Controlled Area" or "Restricted Area" and may be shown on unclassified documents with the approval from Site Security Manager 2. Design reviews will be performed in existing "Dr Checks"	Submittals and Transmittals
Construction Permits	U	Refer to rules of the issuing activity, state or jurisdiction	Submittals and Transmittals
Construction Schedules (Activities and Milestones)	U	After the schedule submittal is approved by the COR, import the schedule file into the scheduling application, and select "Approve" to establish a new schedule baseline	Submittals, Transmittals and Scheduling App
Construction Schedules (Cost-Loaded)	FOUO	After the schedule submittal is approved by the COR, import the schedule file into the scheduling application, and select "Approve" to establish a new schedule baseline	Submittals, Transmittals and Scheduling App
Construction Schedules (3-Week Lookahead)	U	Import the schedule file into the scheduling application, and select "Approve" to establish a new schedule baseline	Scheduling App
DD 1354 Transfer of Real Property	U		Submittals and Transmittals
Daily Production Reports	FOUO	Provide weather conditions, crew size, man-hours, equipment, and materials information	Daily Report
Daily Quality Control (QC) Reports	FOUO	Provide QC Phase, Definable Features of Work Identify visitors	Daily Report
Designs and Specifications	U	1. Locations of sensitive areas must be labeled as either "Controlled Area" or "Restricted Area" and may be shown on unclassified documents with the approval from Site Security Manager 2. Design reviews will be performed in existing "Dr Checks"	Submittals and Transmittals

SUBJECT/NAME	CLASS	REMARKS	ECMS APPLICATION
Environmental Notice of Violation (NOV), Corrective Action Plan	U	Refer to rules of the issuing activity, state or jurisdiction	Submittals and Transmittals
Environmental Protection Plan (EPP)	FOUO		Submittals and Transmittals
Invoice (Supporting Documentation)	FOUO	Applies to supporting documentation only. Invoices are submitted in Wide-Area Workflow (WAWF)	Submittals and Transmittals
Jobsite Documentation, Bulletin Board, Labor Laws, SDS	U		Submittals and Transmittals
Meeting Minutes	FOUO		Meeting Minutes
Modification Documents	FOUO	Provide final modification documents for the project. Upload into "Modifications -	Document Management
Operations & Maintenance Support Information (OMSI/eOMSI), Facility Data Worksheet	U	1. Locations of sensitive areas must be labeled as either "Controlled Area" or "Restricted Area" and may be shown on unclassified documents with the approval from Site Security Manager 2. Design reviews will be performed in existing "Dr Checks"	Submittals and Transmittals
Photographs	U	Subject to base/installation restrictions	Submittals and Transmittals
QCM Initial Phase Checklists	FOUO		Checklists (Site Management)
QCM Preparatory Phase Checklists	FOUO		Checklists (Site Management)
Quality Control Plans	FOUO		Submittals and Transmittals
QC Certifications	U		Submittals and Transmittals

SUBJECT/NAME	CLASS	REMARKS	ECMS APPLICATION
QC Punch List	U		Punch Lists (Testing Logs)
Red-Zone Checklist	U		Checklists (Site Management)
Rework Items List	FOUO		Punch Lists (Testing Logs)
Request for Information (RFI) Post-Award	FOUO		RFIs
Safety Plan	FOUO		Daily Report
Safety - Activity Hazard Analyses (AHA)	FOUO		Daily Report
Safety - Mishap Reports	FOUO		Daily Report
SCIF/SAPF Accreditation Support Documents	FOUO	Note: Some Construction Security plans may be classified as Secret. Classified information must not be uploaded into eCMS. Refer to the Site Security Manager, as applicable.	Submittals and Transmittals
Shop Drawings	U	Locations of sensitive areas must be labeled as either "Controlled Area" or "Restricted Area" and may be shown on unclassified documents with the approval from Site Security Manager	Submittals and Transmittals
Storm Water Pollution Prevention (Notice of Intent - Notice of Termination)	U	Refer to rules of the issuing activity, state or jurisdiction	Submittals and Transmittals
Submittals and Submittal Log	U		Submittals and Transmittals
Testing Plans, Logs, and Reports	FOUO		Submittals and Transmittals
Training/Reference Materials	U		Submittals and Transmittals

SUBJECT/NAME	CLASS	REMARKS	ECMS APPLICATION
Training Records (Personnel)	FOUO		Submittals and Transmittals
Utility Outage/Tie-In Request/Approval	FOUO		Submittals and Transmittals
Warranties/BOD Letter	FOUO		Submittals and Transmittals
Quality Assurance Reports	FOUO		Checklists (Government initiated)
Non-Compliance Notices	FOUO		Non-Compliance Notices (Government initiated)
Other Government-prepared	FOUO		GOV ONLY
All Othere Documents	FOUO	Refer to FOIA guidelines and contact the FOIA official to determine whether exemptions exist	As applicable

1.6.2 Markings on FOUO documents

a. Only FOUO documents being electronically uploaded into the eCMS (.docx, .xlsx, .pptx and others as appropriate), and associated paper documents described in the paragraph CONTRACT ADMINISTRATION require FOUO markings as indicated in the subparagraphs below.

b. FOUO documents that are originally created within the eCMS application using the web-based forms (RFIs, Daily Reports, and others as appropriate) will be automatically watermarked by the eCMS software, and these do not require additional markings.

c. FOUO documents must be marked "UNCLASSIFIED//FOR OFFICIAL USE ONLY" at the bottom of the outside of the front cover (if there is one), the title page, the first page, and the outside of the back cover (if there is one).

d. FOUO documents must be marked on the internal pages of the document as "UNCLASSIFIED//FOR OFFICIAL USE ONLY"' at top and bottom.

e. Where Installations require digital photographs to be designated FOUO, place the markings on the face of the photograph.

f. For visual documentation, other than photographs and audio documentation, mark with either visual or audio statements as appropriate at both the beginning and end of the file.

1.7 QUALITY ASSURANCE

Requested Government response dates on Transmittals and Submittals must be in accordance with the terms and conditions of the Contract. Requesting response dates earlier than the required review and response time, without concurrence by the Government COR, may be cause for rejection.

Incomplete submittals will be rejected without further review and must be resubmitted. Required Government response dates for resubmittals must reflect the date of resubmittal, not the original submittal date.

PART 2 PRODUCTS

Not Used.

PART 3 EXECUTION

Not Used.

-- End of Section --

SECTION 01 32 16.00 20

SMALL PROJECT CONSTRUCTION PROGRESS SCHEDULES
08/18

PART 1 GENERAL

1.1 SUBMITTALS

Government approval is required for submittals with a "G" designation; submittals not having a "G" designation are for Contractor Quality Control approval. Submit the following in accordance with Section 01 33 00 SUBMITTAL PROCEDURES:

SD-01 Preconstruction Submittals

Baseline Construction Schedule; G

Baseline Design Schedule; G

SD-07 Certificates

Monthly Updates

1.2 PRE-CONSTRUCTION SCHEDULE REQUIREMENT

Prior to the start of work, prepare and submit to the Contracting Officer a Baseline Design Schedule and Baseline Construction Schedule in the form of a Network Analysis Schedule (NAS)in accordance with the terms in Contract Clause FAR 52.236-15 Schedules for Construction Contracts, except as modified in this contract. The approval of a Baseline Construction Schedule is a condition precedent to:

a. The Contractor starting demolition work or construction stage(s) of the contract.

b. Processing Contractor's invoice(s) for construction activities/items of work.

c. Review of any schedule updates.

Submittal of the Baseline Design and Construction Schedule, and subsequent schedule updates, is understood to be the Contractor's certification that the submitted schedule meets the requirements of the Contract Documents, represents the Contractor's plan on how the work will be accomplished, and accurately reflects the work that has been accomplished and how it was sequenced (as-built logic).

1.3 SCHEDULE FORMAT

1.3.1 Network Analysis Schedule (NAS)

Use the critical path method (CPM) to schedule and control project activities. Prepare and maintain project schedules using Primavera P6. Importing data into the scheduling program using data conversion techniques or third party software is cause for rejection of the submitted schedule.

Within 15 calendar days after approval of the Initial Schedule or approval

of the final design for a design build project, submit to the Contracting Officer a final NAS schedule.

1.3.1.1 Activity Requirements

a. At a minimum, identify the following in the schedule:

(1) Design and Construction time for major systems and components

(2) Each activity assigned with its appropriate Responsibility Code

(3) Each activity assigned with its appropriate Phase and Area Codes

(4) Major submittals and submittal processing time

(5) Major equipment lead time

b. Build the Schedule as follows:

(1) Show design periods, submittals, Government review periods, material/equipment delivery, utility outages, on-site construction, inspection, testing, and closeout activities. Government and Contractor on-site work activities must be driven by calendars that reflect Saturdays, Sundays and all Federal Holidays as non-work days for 5-day work week calendars.

(2) With the exception of the Contract Award and End Contract milestone activities, use of open-ended activities is not allowed; each activity must have predecessor and successor ties. No activity must have open start or open finish (dangling) logic. Minimize redundant logic ties. Once an activity exists on the schedule it must not be deleted or renamed to change the scope of the activity and must not be removed from the schedule logic without approval from the Contracting Officer. While an activity cannot be deleted, where said activity is no longer applicable to the schedule but must remain within the logic stream for historical record, it can be changed to a milestone. Document any such change in the milestone's "Notebook," including a date and explanation for the change. The ID number for a deleted activity must not be re-used for another activity.

(3) Assign each activity its appropriate Responsibility Code and Area Code, indicating location and responsibility to accomplish the work indicated by the activity, Phase Code, and Work Location Code. Include anticipated tasks to be assigned Government responsibility.

(4) Date/time constraints or lags, other than those required by the contract, are not allowed unless approved by the Contracting Officer. Include as the last activity in the contract schedule, a milestone activity named "Contract Completion Date".

(5) Include the following Contract Milestones:

(a) Include as the first activity on the schedule a start milestone titled "Contract Award", which must have a Mandatory Start constraint equal to the Contract Award Date;

(b) Include Interim or Phased Completion Milestones required by

the Contract or as approved by the Contracting Officer;

(c) Include Facility Turnover Planning Meeting Milestones;

(d) Include an unconstrained finish milestone on the schedule titled "Substantial Completion". Substantial Completion is defined as the point in time the Government would consider the project ready for beneficial occupancy wherein by mutual agreement of the Government and Contractor. Government use of the facility is allowed while construction access continues in order to complete remaining items (e.g. punch list and other close out submittals).

(e) Include an unconstrained finish milestone on the schedule titled "Projected Completion". Projected Completion is defined as the point in time the Government would consider the project complete. This milestone must have the Contract Completion Date (CCD) milestone as its only successor.

(f) Include as the last activity on the schedule a finish milestone titled "Contract Completion (CCD)" with constraint type "Must Finish No Later Than". Calculation of schedule updates must be such that if the finish of the "Projected Completion" milestone falls after the contract completion date, then negative float will be calculated on the longest path and if the finish of the "Projected Completion" milestone falls before the contract completion date, the float calculation must reflect positive float on the longest path. This milestone must be set to 5:00 pm.

(6) Provide lead time for major equipment.

1.3.1.2 Anticipated Weather Lost Work Days

Assign the Weather Calendar to any activity that could be impacted by adverse weather. The Contracting Officer will issue a modification in accordance with the contract clauses, giving the Contractor a time extension for the difference of days between the anticipated and actual adverse weather delay if the number of actual adverse weather delay days exceeds the number of days anticipated for the month in which the delay occurs and the adverse weather delayed activities are critical to contract completion. A lost workday due to weather conditions is defined as a day in which the Contractor cannot work at least 50 percent of the day on the impacted activity.

1.3.1.3 Activity Identification

a. Identify Government, Construction Quality Management (CQM), Construction activities planned for the project and other activities that could impact project completion if delayed.

b. Identify administrative type activity/milestones including pre-construction submittal and permit requirements prior to demolition or construction stage.

c. Create separate activities for each Phase, Area, Floor Level, and Location the activity is occurring.

d. Do not use construction category activity to represent non-work type reference (Such as, Serial Letter or Request for Information) in NAS.

e. Place non-work reference within P6 activity details notebook. Activity categories included in the schedule are specified below.

1.3.1.4 Responsibility Code

Assign each activity its appropriate Responsibility Code indicating responsibility to accomplish the work indicated by the activity, Phase Code and Work Location Code.

1.3.1.5 Primavera P6 Settings and Parameters

Use the following Primavera P6 settings and parameters in preparing the Baseline Schedule. Deviation from these settings and parameters, without prior consent of the Contracting Officer, is cause for rejection of schedule submission.

a. General: Define or establish Calendars and Activity Codes at the "Project" level, not the "Global" level.

b. Admin Drop-Down Menu, Admin Preferences, Time Periods Tab:

(1) Set time periods for P6 to 8.0 Hours/Day, 40.0 Hours/Week, 172.0 Hours/Month and 2000.0 Hours/Year.

(2) Use assigned calendar to specify the number of work hours for each time period: Must be checked.

c. Admin Drop-Down Menu, Admin Preferences, Earned Value Tab: Earned Value Calculation: Use "Budgeted values with current dates".

d. Project Level, Dates Tab: Set "Must Finish By" date to "Contract Completion Date", and set "Must Finish By" time to 05:00pm.

e. Project Level, Defaults Tab:

(1) Duration Type: Set to "Fixed Duration & Units".

(2) Percent Complete Type: Set to "Physical".

(3) Activity Type: Set to "Task Dependent".

(4) Calendar: Set to "Standard 5 Day Workweek". Calendar must reflect Saturday, Sunday and all Federal holidays as non-work days. Alternative calendars may be used with Contracting Officer approval.

f. Project Level, Calculations Tab:

(1) Activity percent complete based on activity steps: Must be Checked.

(2) Reset Remaining Duration and Units to Original: Must be Checked.

(3) Subtract Actual from At Completion: Must be Checked.

(4) Recalculate Actual units and Cost when duration percent (%) complete changes: Must be Checked.

(5) Link Actual to Date and Actual This Period Units and Cost: Must be

Checked.

(6) Price/Unit: Set to "$1/h".

(7) Update units when costs change on resource assignments: Must be Unchecked.

g. Project Level, Settings Tab:

(1) Define Critical Activities: Check "Longest Path".

h. The NAS must have a minimum of 30 construction activities. No on-site construction activity may have durations in excess of 20 working days.

1.3.2 Schedule Submittals and Procedures

Submit Schedules and updates in hard copy and on electronic media that is acceptable to the Contracting Officer. Submit an electronic back-up of the project schedule in an import format compatible with the Government's scheduling program.

1.4 SCHEDULE MONTHLY UPDATES

Update the Design and Construction Schedule at monthly intervals or when the schedule has been revised. Keep the updated schedule current, reflecting actual activity progress and plan for completing the remaining work. Submit copies of purchase orders and confirmation of delivery dates as directed by the Contracting Officer.

a. Narrative Report: Identify and justify the following:

(1) Progress made in each area of the project;

(2) Longest Path: Include printed copy on 11 by 17 inch paper, landscape setting;

(3) Date/time constraint(s), other than those required by the contract;

(4) Listing of changes made between the previous schedule and current updated schedule including: added or removed activities, original and remaining durations for activities that have not started, logic (sequence, constraint, lag/lead), milestones, planned sequence of operations, longest path, calendars or calendar assignments, and cost loading.

(5) Any decrease in previously reported activity Earned Amount;

(6) Pending items and status thereof, including permits, changes orders, and time extensions;

(7) Status of Contract Completion Date and interim milestones;

(8) Current and anticipated delays (describe cause of delay and corrective actions(s) and mitigation measures to minimize);

(9) Description of current and future schedule problem areas.

For each entry in the narrative report, cite the respective Activity ID and Activity Name, the date and reason for the change, and description of the

change.

1.5 3-WEEK LOOK AHEAD SCHEDULE

Prepare and issue a 3-Week Look Ahead schedule to provide a more detailed day-to-day plan of upcoming work identified on the Construction Schedule. Key the work plans to activity numbers when a NAS is required and update each week to show the planned work for the current and following two-week period. Additionally, include upcoming outages, closures, preparatory meetings, and initial meetings. Identify critical path activities on the Three-Week Look Ahead Schedule. The detail work plans are to be bar chart type schedules, maintained separately from the Construction Schedule on an electronic spreadsheet program and printed on 8-1/2 by 11 inch sheets as directed by the Contracting Officer. Activities must not exceed 5 working days in duration and have sufficient level of detail to assign crews, tools and equipment required to complete the work. Deliver three hard copies and one electronic file of the 3-Week Look Ahead Schedule to the Contracting Officer no later than 8 a.m. each Monday, and review during the weekly CQC Coordination or Production Meeting.

1.6 CORRESPONDENCE AND TEST REPORTS:

Correspondence (e.g., letters, Requests for Information (RFIs), e-mails, meeting minute items, Production and QC Daily Reports, material delivery tickets, photographs) must reference Schedule Activities that are being addressed. Test reports (e.g., concrete, soil compaction, weld, pressure) must reference Schedule Activities that are being addressed.

1.7 ADDITIONAL SCHEDULING REQUIREMENTS

Any references to additional scheduling requirements, including systems to be inspected, tested and commissioned, that are located throughout the remainder of the Contract Documents, are subject to all requirements of this section.

PART 2 PRODUCTS

Not used.

PART 3 EXECUTION

Not used.

-- End of Section --

SECTION 01 35 26.05 20

GOVERNMENT SAFETY REQUIREMENTS FOR DESIGN-BUILD
12/15

PART 1 GENERAL

1.1 REFERENCES

The publications listed below form a part of this specification to the extent referenced. The publications are referred to within the text by the basic designation only.

AMERICAN SOCIETY OF SAFETY PROFESSIONALS (ASSP)

ASSP A10.34	(2001; R 2012) Protection of the Public on or Adjacent to Construction Sites
ASSP A10.44	(2014) Control of Energy Sources (Lockout/Tagout) for Construction and Demolition Operations
ASSP A1264.1	(2017) Safety Requirements for Workplace Walking/Working Surfaces and Their Access; Workplace, Floor, Wall and Roof Openings; Stairs and Guardrail/Handrail Systems
ASSP Z244.1	(2016) The Control of Hazardous Energy Lockout, Tagout and Alternative Methods
ASSP Z359.0	(2012) Definitions and Nomenclature Used for Fall Protection and Fall Arrest
ASSP Z359.1	(2016) The Fall Protection Code
ASSP Z359.2	(2017) Minimum Requirements for a Comprehensive Managed Fall Protection Program
ASSP Z359.3	(2017) Safety Requirements for Lanyards and Positioning Lanyards
ASSP Z359.4	(2013) Safety Requirements for Assisted-Rescue and Self-Rescue Systems, Subsystems and Components
ASSP Z359.6	(2016) Specifications and Design Requirements for Active Fall Protection Systems
ASSP Z359.7	(2011) Qualification and Verification Testing of Fall Protection Products
ASSP Z359.11	(2014) Safety Requirements for Full Body Harnesses
ASSP Z359.12	(2009) Connecting Components for Personal Fall Arrest Systems

ASSP Z359.13	(2013) Personal Energy Absorbers and Energy Absorbing Lanyards
ASSP Z359.14	(2014) Safety Requirements for Self-Retracting Devices for Personal Fall Arrest and Rescue Systems
ASSP Z359.15	(2014) Safety Requirements for Single Anchor Lifelines and Fall Arresters for Personal Fall Arrest Systems

ASME INTERNATIONAL (ASME)

ASME B30.3	(2016) Tower Cranes
ASME B30.5	(2014) Mobile and Locomotive Cranes
ASME B30.8	(2015) Floating Cranes and Floating Derricks
ASME B30.9	(2014; INT Feb 2011 - Nov 2013) Slings
ASME B30.20	(2013; INT Oct 2010 - May 2012) Below-the-Hook Lifting Devices
ASME B30.22	(2016) Articulating Boom Cranes
ASME B30.26	(2015; INT Jun 2010 - Jun 2014) Rigging Hardware

ASTM INTERNATIONAL (ASTM)

ASTM F855	(2015) Standard Specifications for Temporary Protective Grounds to Be Used on De-energized Electric Power Lines and Equipment

INSTITUTE OF ELECTRICAL AND ELECTRONICS ENGINEERS (IEEE)

IEEE 1048	(2003) Guide for Protective Grounding of Power Lines
IEEE C2	(2017; Errata 1-2 2017; INT 1 2017) National Electrical Safety Code

NATIONAL FIRE PROTECTION ASSOCIATION (NFPA)

NFPA 1	(2018) Fire Code
NFPA 10	(2018; TIA 18-1) Standard for Portable Fire Extinguishers
NFPA 51B	(2014) Standard for Fire Prevention During Welding, Cutting, and Other Hot Work
NFPA 70	(2017; ERTA 1-2 2017; TIA 17-1; TIA 17-2; TIA 17-3; TIA 17-4; TIA 17-5; TIA 17-6; TIA 17-7; TIA 17-8; TIA 17-9; TIA 17-10;

	TIA 17-11; TIA 17-12; TIA 17-13; TIA 17-14; TIA 17-15; TIA 17-16; TIA 17-17) National Electrical Code
NFPA 70E	(2018; TIA 18-1; TIA 81-2) Standard for Electrical Safety in the Workplace
NFPA 241	(2013; Errata 2015) Standard for Safeguarding Construction, Alteration, and Demolition Operations

U.S. ARMY CORPS OF ENGINEERS (USACE)

EM 385-1-1	(2014) Safety and Health Requirements Manual

U.S. NATIONAL ARCHIVES AND RECORDS ADMINISTRATION (NARA)

10 CFR 20	Standards for Protection Against Radiation
29 CFR 1910	Occupational Safety and Health Standards
29 CFR 1910.146	Permit-required Confined Spaces
29 CFR 1910.147	The Control of Hazardous Energy (Lock Out/Tag Out)
29 CFR 1910.333	Selection and Use of Work Practices
29 CFR 1915	Confined and Enclosed Spaces and Other Dangerous Atmospheres in Shipyard Employment
29 CFR 1915.89	Control of Hazardous Energy (Lockout/Tags-Plus)
29 CFR 1926	Safety and Health Regulations for Construction
29 CFR 1926.16	Rules of Construction
29 CFR 1926.450	Scaffolds
29 CFR 1926.500	Fall Protection
29 CFR 1926.1400	Cranes and Derricks in Construction
49 CFR 173	Shippers - General Requirements for Shipments and Packagings
CPL 2.100	(1995) Application of the Permit-Required Confined Spaces (PRCS) Standards, 29 CFR 1910.146

1.2 DEFINITIONS

1.2.1 Competent Person (CP)

The CP is a person designated in writing, who, through training, knowledge

and experience, is capable of identifying, evaluating, and addressing existing and predictable hazards in the working environment or working conditions that are dangerous to personnel, and who has authorization to take prompt corrective measures with regards to such hazards.

1.2.2 Competent Person, Confined Space

The CP, Confined Space, is a person meeting the competent person requirements as defined EM 385-1-1 Appendix Q, with thorough knowledge of OSHA's Confined Space Standard, 29 CFR 1910.146, and designated in writing to be responsible for the immediate supervision, implementation and monitoring of the confined space program, who through training, knowledge and experience in confined space entry is capable of identifying, evaluating and addressing existing and potential confined space hazards and, who has the authority to take prompt corrective measures with regard to such hazards.

1.2.3 Competent Person, Cranes and Rigging

The CP, Cranes and Rigging, as defined in EM 385-1-1 Appendix Q, is a person meeting the competent person, who has been designated in writing to be responsible for the immediate supervision, implementation and monitoring of the Crane and Rigging Program, who through training, knowledge and experience in crane and rigging is capable of identifying, evaluating and addressing existing and potential hazards and, who has the authority to take prompt corrective measures with regard to such hazards.

1.2.4 Competent Person, Excavation/Trenching

A CP, Excavation/Trenching, is a person meeting the competent person requirements as defined in EM 385-1-1 Appendix Q and 29 CFR 1926, who has been designated in writing to be responsible for the immediate supervision, implementation and monitoring of the excavation/trenching program, who through training, knowledge and experience in excavation/trenching is capable of identifying, evaluating and addressing existing and potential hazards and, who has the authority to take prompt corrective measures with regard to such hazards.

1.2.5 Competent Person, Fall Protection

The CP, Fall Protection, is a person meeting the competent person requirements as defined in EM 385-1-1 Appendix Q and in accordance with ASSP Z359.0, who has been designated in writing by the employer to be responsible for immediate supervising, implementing and monitoring of the fall protection program, who through training, knowledge and experience in fall protection and rescue systems and equipment, is capable of identifying, evaluating and addressing existing and potential fall hazards and, who has the authority to take prompt corrective measures with regard to such hazards.

1.2.6 Competent Person, Scaffolding

The CP, Scaffolding is a person meeting the competent person requirements in EM 385-1-1 Appendix Q, and designated in writing by the employer to be responsible for immediate supervising, implementing and monitoring of the scaffolding program. The CP for Scaffolding has enough training, knowledge and experience in scaffolding to correctly identify, evaluate and address existing and potential hazards and also has the authority to take prompt corrective measures with regard to these hazards. CP qualifications must

be documented and include experience on the specific scaffolding systems/types being used, assessment of the base material that the scaffold will be erected upon, load calculations for materials and personnel, and erection and dismantling. The CP for scaffolding must have a documented, minimum of 8-hours of scaffold training to include training on the specific type of scaffold being used (e.g. mast-climbing, adjustable, tubular frame), in accordance with EM 385-1-1 Section 22.B.02.

1.2.7 Competent Person (CP) Trainer

A competent person trainer as defined in EM 385-1-1 Appendix Q, who is qualified in the material presented, and who possesses a working knowledge of applicable technical regulations, standards, equipment and systems related to the subject matter on which they are training Competent Persons. A competent person trainer must be familiar with the typical hazards and the equipment used in the industry they are instructing. The training provided by the competent person trainer must be appropriate to that specific industry. The competent person trainer must evaluate the knowledge and skills of the competent persons as part of the training process.

1.2.8 High Risk Activities

High Risk Activities are activities that involve work at heights, crane and rigging, excavations and trenching, scaffolding, electrical work, and confined space entry.

1.2.9 High Visibility Accident

A High Visibility Accident is any mishap which may generate publicity or high visibility.

1.2.10 Load Handling Equipment (LHE)

LHE is a term used to describe cranes, hoists and all other hoisting equipment (hoisting equipment means equipment, including crane, derricks, hoists and power operated equipment used with rigging to raise, lower or horizontally move a load).

1.2.11 Medical Treatment

Medical Treatment is treatment administered by a physician or by registered professional personnel under the standing orders of a physician. Medical treatment does not include first aid treatment even through provided by a physician or registered personnel.

1.2.12 Near Miss

A Near Miss is a mishap resulting in no personal injury and zero property damage, but given a shift in time or position, damage or injury may have occurred (e.g., a worker falls off a scaffold and is not injured; a crane swings around to move the load and narrowly misses a parked vehicle).

1.2.13 Operating Envelope

The Operating Envelope is the area surrounding any crane or load handling equipment. Inside this "envelope" is the crane, the operator, riggers and crane walkers, other personnel involved in the operation, rigging gear between the hook, the load, the crane's supporting structure (i.e. ground

or rail), the load's rigging path, the lift and rigging procedure.

1.2.14 Qualified Person (QP)

The QP is a person designated in writing, who, by possession of a recognized degree, certificate, or professional standing, or extensive knowledge, training, and experience, has successfully demonstrated their ability to solve or resolve problems related to the subject matter, the work, or the project.

1.2.15 Qualified Person, Fall Protection (QP for FP)

A QP for FP is a person meeting the requirements of EM 385-1-1 Appendix Q, and ASSP Z359.0, with a recognized degree or professional certificate and with extensive knowledge, training and experience in the fall protection and rescue field who is capable of designing, analyzing, and evaluating and specifying fall protection and rescue systems.

1.2.16 Recordable Injuries or Illnesses

Recordable Injuries or Illnesses are any work-related injury or illness that results in:

a. Death, regardless of the time between the injury and death, or the length of the illness;

b. Days away from work (any time lost after day of injury/illness onset);

c. Restricted work;

d. Transfer to another job;

e. Medical treatment beyond first aid;

f. Loss of consciousness; or

g. A significant injury or illness diagnosed by a physician or other licensed health care professional, even if it did not result in (a) through (f) above.

1.2.17 USACE Property and Equipment

Interpret "USACE" property and equipment specified in USACE EM 385-1-1 as Government property and equipment.

1.2.18 Load Handling Equipment (LHE) Accident or Load Handling Equipment Mishap

A LHE accident occurs when any one or more of the eight elements in the operating envelope fails to perform correctly during operation, including operation during maintenance or testing resulting in personnel injury or death; material or equipment damage; dropped load; derailment; two-blocking; overload; or collision, including unplanned contact between the load, crane, or other objects. A dropped load, derailment, two-blocking, overload and collision are considered accidents, even though no material damage or injury occurs. A component failure (e.g., motor burnout, gear tooth failure, bearing failure) is not considered an accident solely due to material or equipment damage unless the component failure

results in damage to other components (e.g., dropped boom, dropped load, or roll over). Document any mishap that meets the criteria described in the Contractor Significant Incident Report (CSIR).

1.3 SUBMITTALS

Government approval is required for submittals with a "G" designation; submittals not having a "G" designation are for Contractor Quality Control approval. Submit the following in accordance with Section 01 33 00.05 20 CONSTRUCTION SUBMITTAL PROCEDURES and 01 33 10.05 20 DESIGN SUBMITTAL PROCEDURES:

SD-01 Preconstruction Submittals

APP - Pre-Design Submittal; G

APP - Pre-Construction Submittal; G

SD-06 Test Reports

Monthly Exposure Reports

Notifications and Reports

Accident Reports; G

LHE Inspection Reports

SD-07 Certificates

Crane Operators/Riggers

Standard Lift Plan; G

Critical Lift Plan ; G

Naval Architecture Analysis; G

Activity Hazard Analysis (AHA)

Confined Space Entry Permit

Hot Work Permit

Certificate of Compliance

License Certificates

Radiography Operation Planning Work Sheet; G

1.4 MONTHLY EXPOSURE REPORTS

Provide a Monthly Exposure Report and attach to the monthly billing request. This report is a compilation of employee-hours worked each month for all site workers, both Prime and subcontractor. Failure to submit the report may result in retention of up to 10 percent of the voucher.

1.5 REGULATORY REQUIREMENTS

In addition to the detailed requirements included in the provisions of this contract, comply with the most recent edition of USACE EM 385-1-1, and the following federal, state, and local laws, ordinances, criteria, rules and regulations. Submit matters of interpretation of standards to the appropriate administrative agency for resolution before starting work. Where the requirements of this specification, applicable laws, criteria, ordinances, regulations, and referenced documents vary, the most stringent requirements govern.

1.6 SITE QUALIFICATIONS, DUTIES, AND MEETINGS

1.6.1 Personnel Qualifications

1.6.1.1 Site Safety and Health Officer (SSHO)

Provide an SSHO that meets the requirements of EM 385-1-1 Section 1. The SSHO must ensure that the requirements of 29 CFR 1926.16 are met for the project. Provide a Safety oversight team that includes a minimum of one (1) person at each project site to function as the Site Safety and Health Officer (SSHO). The SSHO or an equally-qualified Alternate SSHO must be at the work site at all times to implement and administer the Contractor's safety program and government-accepted Accident Prevention Plan. The SSHO and Alternate SSHO must have the required training, experience, and qualifications in accordance with EM 385-1-1 Section 01.A.17, and all associated sub-paragraphs.

If the SSHO is off-site for a period longer than 24 hours, an equally-qualified alternate SSHO must be provided and must fulfill the same roles and responsibilities as the primary SSHO. When the SSHO is temporarily (up to 24 hours) off-site, a Designated Representative (DR), as identified in the AHA may be used in lieu of an Alternate SSHO, and must be on the project site at all times when work is being performed. Note that the DR is a collateral duty safety position, with safety duties in addition to their full time occupation.

1.6.1.2 Contractor Quality Control (QC) Manager:

The Contractor Quality Control Manager can be the SSHO on this project.

1.6.1.3 Competent Person Qualifications

Provide Competent Persons in accordance with EM 385-1-1, Appendix Q and herein. Competent Persons for high risk activities include confined space, cranes and rigging, excavation/trenching, fall protection, and electrical work. The CP for these activities must be designated in writing, and meet the requirements for the specific activity (i.e. competent person, fall protection).

The Competent Person identified in the Contractor's Safety and Health Program and accepted Accident Prevention Plan, must be on-site at all times when the work that presents the hazards associated with their professional expertise is being performed. Provide the credentials of the Competent Persons(s) to the the Contracting Officer for information in consultation with the Safety Office.

1.6.1.3.1 Competent Person for Confined Space Entry

Provide a Confined Space (CP) Competent Person who meets the requirements of EM 385-1-1, Appendix Q, and herein. The CP for Confined Space Entry must supervise the entry into each confined space.

1.6.1.3.2 Competent Person for Scaffolding

Provide a Competent Person for Scaffolding who meets the requirements of EM 385-1-1, Section 22.B.02 and herein.

1.6.1.3.3 Competent Person for Fall Protection

Provide a Competent Person for Fall Protection who meets the requirements of EM 385-1-1, Section 21.C.04, 21.B.03, and herein.

1.6.1.4 Qualified Trainer Requirements

Individuals qualified to instruct the 40 hour contract safety awareness course, or portions thereof, must meet the definition of a Competent Person Trainer, and, at a minimum, possess a working knowledge of the following subject areas: EM 385-1-1, Electrical Standards, Lockout/Tagout, Fall Protection, Confined Space Entry for Construction; Excavation, Trenching and Soil Mechanics, and Scaffolds in accordance with 29 CFR 1926.450, Subpart L.

Instructors are required to:

a. Prepare class presentations that cover construction-related safety requirements.

b. Ensure that all attendees attend all sessions by using a class roster signed daily by each attendee. Maintain copies of the roster for at least five (5) years. This is a certification class and must be attended 100 percent. In cases of emergency where an attendee cannot make it to a session, the attendee can make it up in another class session for the same subject.

c. Update training course materials whenever an update of the EM 385-1-1 becomes available.

d. Provide a written exam of at least 50 questions. Students are required to answer 80 percent correctly to pass.

e. Request, review and incorporate student feedback into a continuous course improvement program.

1.6.1.5 Crane Operators/Riggers

Provide Operators meeting the requirements in EM 385-1-1, Section 15.B for Riggers and Section 16.B for Crane Operators. In addition, for mobile cranes with Original Equipment Manufacturer (OEM) rated capacities of 50,000 pounds or greater, designate crane operators qualified by a source that qualifies crane operators (i.e., union, a government agency, or an organization that tests and qualifies crane operators). Provide proof of current qualification.

1.6.2 Personnel Duties

1.6.2.1 Duties of the Site Safety and Health Officer (SSHO)

The SSHO must:

a. Conduct daily safety and health inspections and maintain a written log which includes area/operation inspected, date of inspection, identified hazards, recommended corrective actions, estimated and actual dates of corrections. Attach safety inspection logs to the Contractors' daily production report.

b. Conduct mishap investigations and complete required accident reports. Report mishaps and near misses.

c. Use OSHA's Form 300 to log work-related injuries and illnesses occurring on the project site for Prime Contractors and subcontractors. Post and maintain the Form 300 on the site Safety Bulletin Board.

d. Maintain applicable safety reference material on the job site.

e. Attend the pre-construction conference, pre-work meetings including preparatory meetings, and periodic in-progress meetings.

f. Review the APP and AHAs for compliance with EM 385-1-1, and approve, sign, implement and enforce them.

g. Establish a Safety and Occupational Health (SOH) Deficiency Tracking System that lists and monitors outstanding deficiencies until resolution.

h. Ensure subcontractor compliance with safety and health requirements.

i. Maintain a list of hazardous chemicals on site and their material Safety Data Sheets (SDS).

j. Maintain a weekly list of high hazard activities involving energy, equipment, excavation, entry into confined space, and elevation, and be prepared to discuss details during QC Meetings.

k. Provide and keep a record of site safety orientation and indoctrination for Contractor employees, subcontractor employees, and site visitors.

Superintendent, QC Manager, and SSHO are subject to dismissal if the above duties are not being effectively carried out. If Superintendent, QC Manager, or SSHO are dismissed, project work will be stopped and will not be allowed to resume until a suitable replacement is approved and the above duties are again being effectively carried out.

1.6.3 Meetings

1.6.3.1 PreConstruction Conference

a. Contractor representatives who have a responsibility or significant role in accident prevention on the project must attend the Prework Conference. This includes the project superintendent, Site Safety and Occupational Health officer, quality control manager, or any other assigned safety and health professionals who participated in the

development of the APP (including the Activity Hazard Analyses (AHAs) and special plans, program and procedures associated with it).

b. Discuss the details of the submitted APP to include incorporated plans, programs, procedures and a listing of anticipated AHAs that will be developed and implemented during the performance of the contract. This list of proposed AHAs will be reviewed at the conference and an agreement will be reached between the Contractor and the Contracting Officer as to which phases will require an analysis. In addition, establish a schedule for the preparation, submittal, and Government review of AHAs to preclude project delays.

c. Deficiencies in the submitted APP, identified during the Contracting Officer's review, must be corrected, and the APP re-submitted for review prior to the scheduling the Prework Conference. Work is not permitted to begin until an APP is established that is acceptable to the Contracting Officer.

1.6.3.2 Safety Meetings

Conduct safety meetings to review past activities, plan for new or changed operations, review pertinent aspects of appropriate AHA (by trade), establish safe working procedures for anticipated hazards, and provide pertinent Safety and Occupational Health (SOH) training and motivation. Conduct meetings at least once a month for all supervisors on the project location. The SSHO, supervisors, foremen, or CDSOs must conduct meetings at least once a week for the trade workers. Document meeting minutes to include the date, persons in attendance, subjects discussed, and names of individual(s) who conducted the meeting. Maintain documentation on-site and furnish copies to the Contracting Officer on request. Notify the Contracting Officer of all scheduled meetings 7 calendar days in advance.

1.7 ACCIDENT PREVENTION PLAN (APP)

1.7.1 Plans and Submissions

1.7.1.1 APP - Pre-Design Submittal

Provide a site-specific Accident Prevention Plan (APP), including Activity Hazard Analyses (AHA), in accordance with the US Army Corps of Engineers Safety and Health Manual EM 385-1-1 Appendix A, paragraph 3.k for the design team to follow during site visits and investigations. For subsequent visits, update the form if there are changes in the personnel who will be attending, or the tasks to be performed. Submit the APP for review and acceptance by the Government at least 15 calendar days prior to the start of the design field work. Field work may not begin until the pre-design APP is accepted by the Contracting Officer.

If the design scope includes borings or other subsurface investigations, as part of the APP identify the type of field investigation and verification techniques, such as visual, local utility locating service scanning and third party/subcontractor scanning, potholing, or hand digging within two feet of a known utility. Mark underground utilities before starting any ground-disturbing actions. Notify the Contracting Officer 15 days prior to the start of soil borings or sub-surface investigations.

Prior to the start of construction incorporate the Pre-Design APP into the Pre-Construction APP so that one site specific APP exists for the project and submit to the Contracting Officer for acceptance

1.7.1.2 APP - Pre-Construction Submittal

A qualified person must prepare the written site-specific APP. Prepare the APP in accordance with the format and requirements of EM 385-1-1, Appendix A, and as supplemented herein. Cover all paragraph and subparagraph elements in EM 385-1-1, Appendix A. The APP must be job-specific and address any unusual or unique aspects of the project or activity for which it is written. The APP must interface with the Contractor's overall safety and health program referenced in the APP in the applicable APP element, and made site-specific. Describe the methods to evaluate past safety performance of potential subcontractors in the selection process. Also, describe innovative methods used to ensure and monitor safe work practices of subcontractors. The Government considers the Prime Contractor to be the "controlling authority" for all work site safety and health of the subcontractors. Contractors are responsible for informing their subcontractors of the safety provisions under the terms of the contract and the penalties for noncompliance, coordinating the work to prevent one craft from interfering with or creating hazardous working conditions for other crafts, and inspecting subcontractor operations to ensure that accident prevention responsibilities are being carried out. The APP must be signed by an officer of the firm (Prime Contractor senior person), the individual preparing the APP, the on-site superintendent, the designated SSHO, the Contractor Quality Control Manager, and any designated Certified Safety Professional (CSP) or Certified Health Physicist (CHP). The SSHO must provide and maintain the APP and a log of signatures by each subcontractor foreman, attesting that they have read and understand the APP, and make the APP and log available on-site to the Contracting Officer. If English is not the foreman's primary language, the Prime Contractor must provide an interpreter.

Submit the APP to the Contracting Officer 15 calendar days prior to the date of the preconstruction conference for acceptance. Work cannot proceed without an accepted APP. Once reviewed and accepted by the Contracting Officer, the APP and attachments will be enforced as part of the contract. Disregarding the provisions of this contract or the accepted APP is cause for stopping of work, at the discretion of the Contracting Officer, until the matter has been rectified. Continuously review and amend the APP, as necessary, throughout the life of the contract. Changes to the accepted APP must be made with the knowledge and concurrence of the Contracting Officer, project superintendent, SSHO and Quality Control Manager. Incorporate unusual or high-hazard activities not identified in the original APP as they are discovered. Should any severe hazard exposure (i.e. imminent danger) become evident, stop work in the area, secure the area, and develop a plan to remove the exposure and control the hazard. Notify the Contracting Officer within 24 hours of discovery. Eliminate and remove the hazard. In the interim, take all necessary action to restore and maintain safe working conditions in order to safeguard onsite personnel, visitors, the public (as defined by ASSP A10.34), and the environment.

1.7.2 Names and Qualifications

Provide plans in accordance with the requirements outlined in Appendix A of EM 385-1-1, including the following:

a. Names and qualifications (resumes including education, training, experience and certifications) of site safety and health personnel designated to perform work on this project to include the designated

Site Safety and Health Officer and other competent and qualified personnel to be used. Specify the duties of each position.

b. Qualifications of competent and of qualified persons. As a minimum, designate and submit qualifications of competent persons for each of the following major areas: excavation; scaffolding; fall protection; hazardous energy; confined space; health hazard recognition, evaluation and control of chemical, physical and biological agents; and personal protective equipment and clothing to include selection, use and maintenance.

1.7.3 Plans

Provide plans in the APP in accordance with the requirements outlined in Appendix A of EM 385-1-1, including the following:

1.7.3.1 Confined Space Entry Plan

Develop a confined or enclosed space entry plan in accordance with EM 385-1-1, applicable OSHA standards 29 CFR 1910, 29 CFR 1915, and 29 CFR 1926, OSHA Directive CPL 2.100, and any other federal, state and local regulatory requirements identified in this contract. Identify the qualified person's name and qualifications, training, and experience. Delineate the qualified person's authority to direct work stoppage in the event of hazardous conditions. Include procedure for rescue by contractor personnel and the coordination with emergency responders. (If there is no confined space work, include a statement that no confined space work exists and none will be created.)

1.7.3.2 Standard Lift Plan (SLP)

Plan lifts to avoid situations where the operator cannot maintain safe control of the lift. Prepare a written SLP in accordance with EM 385-1-1, Section 16.A.03, using Form 16-2 for every lift or series of lifts (if duty cycle or routine lifts are being performed). The SLP must be developed, reviewed and accepted by all personnel involved in the lift in conjunction with the associated AHA. Signature on the AHA constitutes acceptance of the plan. Maintain the SLP on the LHE for the current lift(s) being made. Maintain historical SLPs for a minimum of 3 months.

1.7.3.3 Critical Lift Plan - Crane or Load Handling Equipment

Provide a Critical Lift Plan as required by EM 385-1-1, Section 16.H.01, using Form 16-3. Critical lifts require detailed planning and additional or unusual safety precautions. Develop and submit a critical lift plan to the Contracting Officer 30 calendar days prior to critical lift. Comply with load testing requirements in accordance with EM 385-1-1, Section 16.F.03.

In addition to the requirements of EM 385-1-1, Section 16.H.02, the critical lift plan must include the following:

a. For lifts of personnel, demonstrate compliance with the requirements of 29 CFR 1926.1400 and EM 385-1-1, Section 16.T.

b. For barge mounted mobile cranes, provide a Naval Architecture Analysis and include an LHE Manufacturer's Floating Service Load Chart in accordance with the criteria from the selected standard in EM 385-1-1, Section 16.L.02. The Floating Service Load Chart must provide a table

of rated load versus boom angle and radius. The Floating Service Load Chart must also provide the maximum allowable machine list and trim associated with the tabular loads and radii provided. If the Manufacturer's Floating Service Load Chart is not available, a floating service load chart may be developed and provided by a qualified Registered Professional Engineer (RPE), competent in the field of floating cranes. The Load Chart must be in accordance with the criteria from the selected standard in EM 385-1-1, Section 16.L; provide a table of rated load versus boom angle and radius; provide the maximum allowable machine list and machine trim associated with the tabular loads and radii provided; and be stamped by a RPE qualified and competent in the field of floating cranes. The RPE, competent in the field of floating cranes must stamp and certify (sign) that the Naval Architectural Analysis (NAA) meets the requirements of EM 385-1-1, Section 16.L.03.

c. Multi-purpose machines, material handling equipment, and construction equipment used to lift loads that are suspended by rigging gear, require proof of authorization from the machine OEM that the machine is capable of making lifts of loads suspended by rigging equipment. Demonstrate that the operator is properly trained and that the equipment is properly configured to make such lifts and is equipped with a load chart.

1.7.3.4 Fall Protection and Prevention (FP&P) Plan

The plan must comply with the requirements of EM 385-1-1, Section 21.D and ASSP Z359.2, be site specific, and address all fall hazards in the work place and during different phases of construction. Address how to protect and prevent workers from falling to lower levels when they are exposed to fall hazards above 6 feet. A competent person or qualified person for fall protection must prepare and sign the plan documentation. Include fall protection and prevention systems, equipment and methods employed for every phase of work, roles and responsibilities, assisted rescue, self-rescue and evacuation procedures, training requirements, and monitoring methods. Review and revise, as necessary, the Fall Protection and Prevention Plan documentation as conditions change, but at a minimum every six months, for lengthy projects, reflecting any changes during the course of construction due to changes in personnel, equipment, systems or work habits. Keep and maintain the accepted Fall Protection and Prevention Plan documentation at the job site for the duration of the project. Include the Fall Protection and Prevention Plan documentation in the Accident Prevention Plan (APP).

1.7.3.5 Rescue and Evacuation Plan

Provide a Rescue and Evacuation Plan in accordance with EM 385-1-1 Section 21.N and ASSP Z359.2, and include in the FP&P Plan and as part of the APP. Include a detailed discussion of the following: methods of rescue; methods of self-rescue; equipment used; training requirement; specialized training for the rescuers; procedures for requesting rescue and medical assistance; and transportation routes to a medical facility.

1.7.3.6 Hazardous Energy Control Program (HECP)

Develop a HECP in accordance with EM 385-1-1 Section 12, 29 CFR 1910.147, 29 CFR 1910.333, 29 CFR 1915.89, ASSP Z244.1, and ASSP A10.44. Submit this HECP as part of the Accident Prevention Plan (APP). Conduct a preparatory meeting and inspection with all effected personnel to coordinate all HECP activities. Document this meeting and inspection in accordance with

EM 385-1-1, Section 12.A.02. Ensure that each employee is familiar with and complies with these procedures.

1.7.3.7 Excavation Plan

Identify the safety and health aspects of excavation, and provide and prepare the plan in accordance with EM 385-1-1, Section 25.A and Section 31 00 00 EARTHWORK.

1.7.3.8 Occupant Protection Plan

Identify the safety and health aspects of lead-based paint removal, prepared in accordance with Section 02 83 00 LEAD REMEDIATION.

1.7.3.9 Asbestos Hazard Abatement Plan

Identify the safety and health aspects of asbestos work, and prepare in accordance with Section 02 82 00 ASBESTOS REMEDIATION.

1.7.3.10 Site Safety and Health Plan

Identify the safety and health aspects, and prepare in accordance with Section 01 35 29.13 HEALTH, SAFETY, AND EMERGENCY RESPONSE PROCEDURES FOR CONTAMINATED SITES.

1.7.3.11 PCB Plan

Identify the safety and health aspects of Polychlorinated Biphenyls work, and prepare in accordance with Sections 02 84 33 REMOVAL AND DISPOSAL OF POLYCHLORINATED BIPHENYLS (PCBs) and 02 61 23 REMOVAL AND DISPOSAL OF PCB CONTAMINATED SOILS.

1.7.3.12 Site Demolition Plan

Identify the safety and health aspects, and prepare in accordance with Section 02 41 00 DEMOLITION AND DECONSTRUCTION and referenced sources. Include engineering survey as applicable.

1.8 ACTIVITY HAZARD ANALYSIS (AHA)

Before beginning each activity, task or Definable Feature of Work (DFOW) involving a type of work presenting hazards not experienced in previous project operations, or where a new work crew or subcontractor is to perform the work, the Contractor(s) performing that work activity must prepare an AHA. AHAs must be developed by the Prime Contractor, subcontractor, or supplier performing the work, and provided for Prime Contractor review and approval before submitting to the Contracting Officer. AHAs must be signed by the SSHO, Superintendent, QC Manager and the subcontractor Foreman performing the work. Format the AHA in accordance with EM 385-1-1, Section 1 or as directed by the Contracting Officer. Submit the AHA for review at least 15 working days prior to the start of each activity task, or DFOW. The Government reserves the right to require the Contractor to revise and resubmit the AHA if it fails to effectively identify the work sequences, specific anticipated hazards, site conditions, equipment, materials, personnel and the control measures to be implemented.

AHAs must identify competent persons required for phases involving high risk activities, including confined entry, crane and rigging, excavations, trenching, electrical work, fall protection, and scaffolding.

1.8.1 AHA Management

Review the AHA list periodically (at least monthly) at the Contractor supervisory safety meeting, and update as necessary when procedures, scheduling, or hazards change. Use the AHA during daily inspections by the SSHO to ensure the implementation and effectiveness of the required safety and health controls for that work activity.

1.8.2 AHA Signature Log

Each employee performing work as part of an activity, task or DFOW must review the AHA for that work and sign a signature log specifically maintained for that AHA prior to starting work on that activity. The SSHO must maintain a signature log on site for every AHA. Provide employees whose primary language is other than English, with an interpreter to ensure a clear understanding of the AHA and its contents.

1.9 DISPLAY OF SAFETY INFORMATION

1.9.1 Safety Bulletin Board

Within one calendar day(s) after commencement of work, erect a safety bulletin board at the job site. Where size, duration, or logistics of project do not facilitate a bulletin board, an alternative method, acceptable to the Contracting Officer, that is accessible and includes all mandatory information for employee and visitor review, may be deemed as meeting the requirement for a bulletin board. Include and maintain information on safety bulletin board as required by EM 385-1-1, Section 01.A.06. Additional items required to be posted include:

a. Confined space entry permit.

b. Hot work permit.

1.9.2 Safety and Occupational Health (SOH) Deficiency Tracking System

Establish a SOH deficiency tracking system that lists and monitors the status of SOH deficiencies in chronological order. Use the tracking system to evaluate the effectiveness of the APP. A monthly evaluation of the data must be discussed in the QC or SOH meeting with everyone on the project. The list must be posted on the project bulletin board and updated daily, and provide the following information:

a. Date deficiency identified;

b. Description of deficiency;

c. Name of person responsible for correcting deficiency;

d. Projected resolution date;

e. Date actually resolved.

1.10 SITE SAFETY REFERENCE MATERIALS

Maintain safety-related references applicable to the project, including those listed in paragraph REFERENCES. Maintain applicable equipment manufacturer's manuals.

1.11 EMERGENCY MEDICAL TREATMENT

Contractors must arrange for their own emergency medical treatment. Government has no responsibility to provide emergency medical treatment.

1.12 NOTIFICATIONS and REPORTS

1.12.1 Mishap Notification

Notify the Contracting Officer as soon as practical, but no more than twenty-four hours, after any mishaps, including recordable accidents, incidents, and near misses, as defined in EM 385-1-1 Appendix Q, any report of injury, illness, load handling equipment (LHE) or rigging mishaps, or any property damage. The Contractor is responsible for obtaining appropriate medical and emergency assistance and for notifying fire, law enforcement, and regulatory agencies. Immediate reporting is required for electrical mishaps, to include Arc Flash; shock; uncontrolled release of hazardous energy (includes electrical and non-electrical); load handling equipment or rigging; fall from height (any level other than same surface); and underwater diving. These mishaps must be investigated in depth to identify all causes and to recommend hazard control measures.

Within notification include Contractor name; contract title; type of contract; name of activity, installation or location where accident occurred; date and time of accident; names of personnel injured; extent of property damage, if any; extent of injury, if known, and brief description of accident (for example, type of construction equipment used and PPE used). Preserve the conditions and evidence on the accident site until the Government investigation team arrives on-site and Government investigation is conducted. Assist and cooperate fully with the Government's investigation(s) of any mishap.

1.12.2 Accident Reports

a. Conduct an accident investigation for recordable injuries and illnesses, property damage, and near misses as defined in EM 385-1-1, to establish the root cause(s) of the accident. Complete the applicable NAVFAC Contractor Incident Reporting System (CIRS), and electronically submit via the NAVFAC Enterprise Safety Applications Management System (ESAMS). The Contracting Officer will provide copies of any required or special forms.

b. Near Misses: For Navy Projects, complete the applicable documentation in NAVFAC Contractor Incident Reporting System (CIRS), and electronically submit via the NAVFAC Enterprise Safety Applications Management System (ESAMS). Near miss reports are considered positive and proactive Contractor safety management actions.

c. Conduct an accident investigation for any load handling equipment accident (including rigging gear accidents) to establish the root cause(s) of the accident. Complete the LHE Accident Report (Crane and Rigging Gear) form and provide the report to the Contracting Officer within 30 calendar days of the accident. Do not proceed with crane operations until cause is determined and corrective actions have been implemented to the satisfaction of the Contracting Officer. The Contracting Officer will provide a blank copy of the accident report form.

1.12.3 LHE Inspection Reports

Submit LHE inspection reports required in accordance with EM 385-1-1 and as specified herein with Daily Reports of Inspections.

1.12.4 Certificate of Compliance and Pre-lift Plan/Checklist for LHE and Rigging

Provide a FORM 16-1 Certificate of Compliance for LHE entering an activity under this contract and in accordance with EM 385-1-1. Post certifications on the crane.

Develop a Standard Lift Plan (SLP) in accordance with EM 385-1-1, Section 16.H.03 using Form 16-2 Standard Pre-Lift Crane Plan/Checklist for each lift planned. Submit SLP to the Contracting Officer for approval within 15 calendar days in advance of planned lift.

1.13 HOT WORK

1.13.1 Permit and Personnel Requirements

Submit and obtain a written permit prior to performing "Hot Work" (i.e. welding or cutting) or operating other flame-producing/spark producing devices, from the Fire Division. A permit is required from the Explosives Safety Office for work in and around where explosives are processed, stored, or handled. CONTRACTORS ARE REQUIRED TO MEET ALL CRITERIA BEFORE A PERMIT IS ISSUED. Provide at least two 20 pound 4A:20 BC rated extinguishers for normal "Hot Work". The extinguishers must be current inspection tagged, and contain an approved safety pin and tamper resistant seal. It is also mandatory to have a designated FIRE WATCH for any "Hot Work" done at this activity. The Fire Watch must be trained in accordance with NFPA 51B and remain on-site for a minimum of one hour after completion of the task or as specified on the hot work permit.

When starting work in the facility, require personnel to familiarize themselves with the location of the nearest fire alarm boxes and place in memory the emergency Fire Division phone number. REPORT ANY FIRE, NO MATTER HOW SMALL, TO THE RESPONSIBLE FIRE DIVISION IMMEDIATELY.

1.13.2 Work Around Flammable Materials

Obtain services from a NFPA Certified Marine Chemist for "HOT WORK" within or around flammable materials (such as fuel systems or welding/cutting on fuel pipes) or confined spaces (such as sewer wet wells, manholes, or vaults) that have the potential for flammable or explosive atmospheres.

Whenever these materials, except beryllium and chromium (VI), are encountered in indoor operations, local mechanical exhaust ventilation systems that are sufficient to reduce and maintain personal exposures to within acceptable limits must be used and maintained in accordance with manufacturer's instruction and supplemented by exceptions noted in EM 385-1-1, Section 06.H

1.14 RADIATION SAFETY REQUIREMENTS

Submit License Certificates, employee training records, and Leak Test Reports for radiation materials and equipment to the Contracting Officer and Radiation Safety Office (RSO), and Contracting Oversight Technician (COT) for all specialized and licensed material and equipment proposed for

use on the construction project. Maintain on-site records whenever licensed radiological materials or ionizing equipment are on government property.

Protect workers from radiation exposure in accordance with 10 CFR 20, ensuring any personnel exposures are maintained As Low As Reasonably Achievable.

1.14.1 Radiography Operation Planning Work Sheet

Submit a Gamma and X-Ray Radiography Operation Planning Work Sheet to Contracting Officer 14 days prior to commencement of operations involving radioactive materials or radiation generating devices. For portable machine sources of ionizing radiation, including moisture density and XRF, use and submit the Portable Gauge Operations Planning Worksheet instead. The Contracting Officer and COT will review the submitted worksheet and provide questions and comments.

Contractors must use primary dosimeters process by a National Voluntary Laboratory Accreditation Program (NVLAP) accredited laboratory.

1.14.2 Site Access and Security

Coordinate site access and security requirements with the Contracting Officer and COT for all radiological materials and equipment containing ionizing radiation that are proposed for use on a government facility. For gamma radiography materials and equipment, a Government escort is required for any travels on the Installation. The Navy COT or authorized representative will meet the Contractor at a designated location outside the installation, ensure safety of the materials being transported, and will escort the Contractor to the job site and return upon completion of the work. For portable machine sources of ionizing radiation, including moisture density and XRF, the Navy COT or Government authorized representative will meet the Contractor at the job site.

Provide a copy of all calibration records, and utilization records to the COT for radiological operations performed on the site.

1.14.3 Loss or Release and Unplanned Personnel Exposure

Loss or release of radioactive materials, and unplanned personnel exposures must be reported immediately to the Contracting Officer, RSO, and Base Security Department Emergency Number.

1.14.4 Site Demarcation and Barricade

Properly demark and barricade an area surrounding radiological operations to preclude personnel entrance, in accordance with EM 385-1-1, Nuclear Regulatory Commission, and Applicable State regulations and license requirements, and in accordance with requirements established in the accepted Radiography Operation Planning Work Sheet.

Do not close or obstruct streets, walks, and other facilities occupied and used by the Government without written permission from the Contracting Officer.

1.14.5 Security of Material and Equipment

Properly secure the radiological material and ionizing radiation equipment

at all times, including keeping the devices in a properly marked and locked container, and secondarily locking the container to a secure point in the Contractor's vehicle or other approved storage location during transportation and while not in use. While in use, maintain a continuous visual observation on the radiological material and ionizing radiation equipment. In instances where radiography is scheduled near or adjacent to buildings or areas having limited access or one-way doors, make no assumptions as to building occupancy. Where necessary, the Contracting Officer will direct the Contractor to conduct an actual building entry, search, and alert. Where removal of personnel from such a building cannot be accomplished and it is otherwise safe to proceed with the radiography, position a fully instructed employee inside the building or area to prevent exiting while external radiographic operations are in process.

1.14.6 Transportation of Material

Comply with 49 CFR 173 for Transportation of Regulated Amounts of Radioactive Material. Notify Local Fire authorities and the site Radiation Safety officer (RSO) of any Radioactive Material use.

1.14.7 Schedule for Exposure or Unshielding

Actual exposure of the radiographic film or unshielding the source must not be initiated until after 5 p.m. on weekdays.

1.14.8 Transmitter Requirements

Adhere to the base policy concerning the use of transmitters, such as radios and cell phones. Obey Emissions control (EMCON) restrictions.

1.15 CONFINED SPACE ENTRY REQUIREMENTS.

Confined space entry must comply with Section 34 of EM 385-1-1, OSHA 29 CFR 1926, OSHA 29 CFR 1910, OSHA 29 CFR 1910.146, and OSHA Directive CPL 2.100. Any potential for a hazard in the confined space requires a permit system to be used.

1.15.1 Entry Procedures

Prohibit entry into a confined space by personnel for any purpose, including hot work, until the qualified person has conducted appropriate tests to ensure the confined or enclosed space is safe for the work intended and that all potential hazards are controlled or eliminated and documented. Comply with EM 385-1-1, Section 34 for entry procedures. Hazards pertaining to the space must be reviewed with each employee during review of the AHA.

1.15.2 Forced Air Ventilation

Forced air ventilation is required for all confined space entry operations and the minimum air exchange requirements must be maintained to ensure exposure to any hazardous atmosphere is kept below its action level.

1.15.3 Sewer Wet Wells

Sewer wet wells require continuous atmosphere monitoring with audible alarm for toxic gas detection.

1.15.4 Rescue Procedures and Coordination with Local Emergency Responders

Develop and implement an on-site rescue and recovery plan and procedures. The rescue plan must not rely on local emergency responders for rescue from a confined space.

1.16 DIVE SAFETY REQUIREMENTS

Develop a Dive Operations Plan, AHA, emergency management plan, and personnel list that includes qualifications, for each separate diving operation. Submit these documents to the District Dive Coordinator (DDC) for review and acceptance at least 15 working days prior to commencement of diving operations. These documents must be at the diving location at all times. Provide each of these documents as a part of the project file.

1.17 SEVERE STORM PLAN

In the event of a severe storm warning, the Contractor must:

a. Secure outside equipment and materials and place materials that could be damaged in protected areas.

b. Check surrounding area, including roof, for loose material, equipment, debris, and other objects that could be blown away or against existing facilities.

c. Ensure that temporary erosion controls are adequate.

PART 2 PRODUCTS

PART 3 EXECUTION

3.1 CONSTRUCTION AND OTHER WORK

Comply with EM 385-1-1, NFPA 70, NFPA 70E, NFPA 241, the APP, the AHA, Federal and State OSHA regulations, and other related submittals and activity fire and safety regulations. The most stringent standard prevails.

PPE is governed in all areas by the nature of the work the employee is performing. Use personal hearing protection at all times in designated noise hazardous areas or when performing noise hazardous tasks. Safety glasses must be worn or carried/available on each person. Mandatory PPE includes:

a. Hard Hat

b. Long Pants

c. Appropriate Safety Shoes

d. Appropriate Class Reflective Vests

3.1.1 Worksite Communication

Employees working alone in a remote location or away from other workers must be provided an effective means of emergency communications (i.e., cellular phone, two-way radios, land-line telephones or other acceptable means). The selected communication must be readily available (easily within the immediate reach) of the employee and must be tested prior to the

start of work to verify that it effectively operates in the area/environment. An employee check-in/check-out communication procedure must be developed to ensure employee safety.

3.1.2 Hazardous Material Exclusions

Notwithstanding any other hazardous material used in this contract, radioactive materials or instruments capable of producing ionizing/non-ionizing radiation (with the exception of radioactive material and devices used in accordance with EM 385-1-1 such as nuclear density meters for compaction testing and laboratory equipment with radioactive sources) as well as materials which contain asbestos, mercury or polychlorinated biphenyls, di-isocyanates, lead-based paint, and hexavalent chromium, are prohibited. The Contracting Officer, upon written request by the Contractor, may consider exceptions to the use of any of the above excluded materials. Low mercury lamps used within fluorescent lighting fixtures are allowed as an exception without further Contracting Officer approval. Notify the Radiation Safety Officer (RSO) prior to excepted items of radioactive material and devices being brought on base.

3.1.3 Unforeseen Hazardous Material

Contract documents identify materials such as PCB, lead paint, and friable and non-friable asbestos and other OSHA regulated chemicals (i.e. 29 CFR Part 1910.1000). If material(s) that may be hazardous to human health upon disturbance are encountered during construction operations, stop that portion of work and notify the Contracting Officer immediately. Within 14 calendar days the Government will determine if the material is hazardous. If material is not hazardous or poses no danger, the Government will direct the Contractor to proceed without change. If material is hazardous and handling of the material is necessary to accomplish the work, the Government will issue a modification pursuant to FAR 52.243-4, "Changes" and FAR 52.236-2, "Differing Site Conditions."

3.2 UTILITY OUTAGE REQUIREMENTS

Apply for utility outages at least 15 days in advance. At a minimum, the written request must include the location of the outage, utilities being affected, duration of outage, any necessary sketches, and a description of the means to fulfill energy isolation requirements in accordance with EM 385-1-1, Section 11.A.02 (Isolation). Some examples of energy isolation devices and procedures are highlighted in EM 385-1-1, Section 12.D. In accordance with EM 385-1-1, Section 12.A.01, where outages involve Government or Utility personnel, coordinate with the Government on all activities involving the control of hazardous energy.

These activities include, but are not limited to, a review of HECP and HEC procedures, as well as applicable Activity Hazard Analyses (AHAS). In accordance with EM 385-1-1, Section 11.A.02 and NFPA 70E, work on energized electrical circuits must not be performed without prior government authorization. Government permission is considered through the permit process and submission of a detailed AHA. Energized work permits are considered only when de-energizing introduces additional or increased hazard or when de-energizing is infeasible.

3.3 OUTAGE COORDINATION MEETING

After the utility outage request is approved and prior to beginning work on the utility system requiring shut-down, conduct a pre-outage coordination

meeting in accordance with EM 385-1-1, Section 12.A. This meeting must include the Prime Contractor, the Prime and subcontractors performing the work, the Contracting Officer, and the Installation Representative. All parties must fully coordinate HEC activities with one another. During the coordination meeting, all parties must discuss and coordinate on the scope of work, HEC procedures (specifically, the lock-out/tag-out procedures for worker and utility protection), the AHA, assurance of trade personnel qualifications, identification of competent persons, and compliance with HECP training in accordance with EM 385-1-1, Section 12.C. Clarify when personal protective equipment is required during switching operations, inspection, and verification.

3.4 CONTROL OF HAZARDOUS ENERGY (LOCKOUT/TAGOUT)

Provide and operate a Hazardous Energy Control Program (HECP) in accordance with EM 385-1-1 Section 12, 29 CFR 1910.333, 29 CFR 1915.89, ASSP A10.44, NFPA 70E, and paragraph HAZARDOUS ENERGY CONTROL PROGRAM (HECP).

3.4.1 Safety Preparatory Inspection Coordination Meeting with the Government or Utility

For electrical distribution equipment that is to be operated by Government or Utility personnel, the Prime Contractor and the subcontractor performing the work must attend the safety preparatory inspection coordination meeting, which will also be attended by the Contracting Officer's Representative, and required by EM 385-1-1, Section 12.A.02. The meeting will occur immediately preceding the start of work and following the completion of the outage coordination meeting. Both the safety preparatory inspection coordination meeting and the outage coordination meeting must occur prior to conducting the outage and commencing with lockout/tagout procedures.

3.4.2 Lockout/Tagout Isolation

Where the Government or Utility performs equipment isolation and lockout/tagout, the Contractor must place their own locks and tags on each energy-isolating device and proceed in accordance with the HECP. Before any work begins, both the Contractor and the Government or Utility must perform energy isolation verification testing while wearing required PPE detailed in the Contractor's AHA and required by EM 385-1-1, Sections 05.I and 11.B. Install personal protective grounds, with tags, to eliminate the potential for induced voltage in accordance with EM 385-1-1, Section 12.E.06.

3.4.3 Lockout/Tagout Removal

Upon completion of work, conduct lockout/tagout removal procedure in accordance with the HECP. In accordance with EM 385-1-1, Section 12.E.08, each lock and tag must be removed from each energy isolating device by the authorized individual or systems operator who applied the device. Provide formal notification to the Government (by completing the Government form if provided by Contracting Officer's Representative), confirming that steps of de-energization and lockout/tagout removal procedure have been conducted and certified through inspection and verification. Government or Utility locks and tags used to support the Contractor's work will not be removed until the authorized Government employee receives the formal notification.

3.5 FALL PROTECTION PROGRAM

Establish a fall protection program, for the protection of all employees exposed to fall hazards. Within the program include company policy, identify roles and responsibilities, education and training requirements, fall hazard identification, prevention and control measures, inspection, storage, care and maintenance of fall protection equipment and rescue and evacuation procedures in accordance with ASSP Z359.2 and EM 385-1-1, Sections 21.A and 21.D.

3.5.1 Training

Institute a fall protection training program. As part of the Fall Protection Program, provide training for each employee who might be exposed to fall hazards. Provide training by a competent person for fall protection in accordance with EM 385-1-1, Section 21.C. Document training and practical application of the competent person in accordance with EM 385-1-1, Section 21.C.04 and ASSP Z359.2 in the AHA.

3.5.2 Fall Protection Equipment and Systems

Enforce use of personal fall protection equipment and systems designated (to include fall arrest, restraint, and positioning) for each specific work activity in the Site Specific Fall Protection and Prevention Plan and AHA at all times when an employee is exposed to a fall hazard. Protect employees from fall hazards as specified in EM 385-1-1, Section 21.

Provide personal fall protection equipment, systems, subsystems, and components that comply with EM 385-1-1 Section 21.I, 29 CFR 1926.500 Subpart M,ASSP Z359.0, ASSP Z359.1, ASSP Z359.2, ASSP Z359.3, ASSP Z359.4, ASSP Z359.6, ASSP Z359.7, ASSP Z359.11, ASSP Z359.12, ASSP Z359.13, ASSP Z359.14, and ASSP Z359.15.

3.5.2.1 Additional Personal Fall Protection

In addition to the required fall protection systems, other protection such as safety skiffs, personal floatation devices, and life rings, are required when working above or next to water in accordance with EM 385-1-1, Sections 21.O through 21.O.06. Personal fall protection systems and equipment are required when working from an articulating or extendible boom, swing stages, or suspended platform. In addition, personal fall protection systems are required when operating other equipment such as scissor lifts. The need for tying-off in such equipment is to prevent ejection of the employee from the equipment during raising, lowering, travel, or while performing work.

3.5.2.2 Personal Fall Protection Harnesses

Only a full-body harness with a shock-absorbing lanyard or self-retracting lanyard is an acceptable personal fall arrest body support device. The use of body belts is not acceptable. Harnesses must have a fall arrest attachment affixed to the body support (usually a Dorsal D-ring) and specifically designated for attachment to the rest of the system. Snap hooks and carabiners must be self-closing and self-locking, capable of being opened only by at least two consecutive deliberate actions and have a minimum gate strength of 3,600 lbs in all directions. Use webbing, straps, and ropes made of synthetic fiber. The maximum free fall distance when using fall arrest equipment must not exceed 6 feet, unless the proper energy absorbing lanyard is used. Always take into consideration the total

fall distance and any swinging of the worker (pendulum-like motion), that can occur during a fall, when attaching a person to a fall arrest system. All full body harnesses must be equipped with Suspension Trauma Preventers such as stirrups, relief steps, or similar in order to provide short-term relief from the effects of orthostatic intolerance in accordance with EM 385-1-1, Section 21.I.06.

3.5.3 Fall Protection for Roofing Work

Implement fall protection controls based on the type of roof being constructed and work being performed. Evaluate the roof area to be accessed for its structural integrity including weight-bearing capabilities for the projected loading.

a. Low Sloped Roofs:

(1) For work within 6 feet of an edge, on a roof having a slope less than or equal to 4:12 (vertical to horizontal), protect personnel from falling by use of personal fall arrest/restraint systems, guardrails, or safety nets. A safety monitoring system is not adequate fall protection and is not authorized. Provide in accordance with 29 CFR 1926.500.

(2) For work greater than 6 feet from an edge, erect and install warning lines in accordance with 29 CFR 1926.500 and EM 385-1-1, Section L.

b. Steep-Sloped Roofs: Work on a roof having a slope greater than 4:1 (vertical to horizontal) requires a personal fall arrest system, guardrails with toe-boards, or safety nets. This requirement also applies to residential or housing type construction.

3.5.4 Horizontal Lifelines (HLL)

Provide HLL in accordance with EM 385-1-1, Section 21.I.08.d.2. Commercially manufactured horizontal lifelines (HLL) must be designed, installed, certified and used, under the supervision of a qualified person, for fall protection as part of a complete fall arrest system which maintains a safety factor of 2 (29 CFR 1926.500). The competent person for fall protection may (if deemed appropriate by the qualified person) supervise the assembly, disassembly, use and inspection of the HLL system under the direction of the qualified person. Locally manufactured HLLs are not acceptable unless they are custom designed for limited or site specific applications by a Registered Professional Engineer who is qualified in designing HLL systems.

3.5.5 Guardrails and Safety Nets

Design, install and use guardrails and safety nets in accordance with EM 385-1-1, Section 21.F.01 and 29 CFR 1926 Subpart M.

3.5.6 Rescue and Evacuation Plan and Procedures

When personal fall arrest systems are used, ensure that the mishap victim can self-rescue or can be rescued promptly should a fall occur. Prepare a Rescue and Evacuation Plan and include a detailed discussion of the following: methods of rescue; methods of self-rescue or assisted-rescue; equipment used; training requirement; specialized training for the rescuers; procedures for requesting rescue and medical assistance; and

transportation routes to a medical facility. Include the Rescue and Evacuation Plan within the Activity Hazard Analysis (AHA) for the phase of work, in the Fall Protection and Prevention (FP&P) Plan, and the Accident Prevention Plan (APP). The plan must comply with the requirements of EM 385-1-1, ASSP Z359.2, and ASSP Z359.4.

3.5.7 Fall Prevention During Design Phase

During design phase the Contractor must consider and eliminate fall hazards anticipated during the operation and maintenance evolutions of the facility. If it is not feasible to eliminate or prevent the need to work at heights with the subsequent exposure to fall hazards, control measures must be included in the design to protect personnel conducting maintenance work after completion of the project. In addition to the detailed requirements included in the provisions of this contract, the design work must incorporate the requirements of 29 CFR 1910 and ASSP Z359.0, ASSP Z359.1, ASSP Z359.2, ASSP Z359.3, ASSP Z359.4, ASSP A1264.1, and NFPA 1.

3.6 WORK PLATFORMS

3.6.1 Scaffolding

Provide employees with a safe means of access to the work area on the scaffold. Climbing of any scaffold braces or supports not specifically designed for access is prohibited. Comply with the following requirements:

a. Scaffold platforms greater than 20 feet in height must be accessed by use of a scaffold stair system.

b. Ladders commonly provided by scaffold system manufacturers are prohibited for accessing scaffold platforms greater than 20 feet maximum in height.

c. An adequate gate is required.

d. Employees performing scaffold erection and dismantling must be qualified.

e. Scaffold must be capable of supporting at least four times the maximum intended load, and provide appropriate fall protection as delineated in the accepted fall protection and prevention plan.

f. Stationary scaffolds must be attached to structural building components to safeguard against tipping forward or backward.

g. Special care must be given to ensure scaffold systems are not overloaded.

h. Side brackets used to extend scaffold platforms on self-supported scaffold systems for the storage of material are prohibited. The first tie-in must be at the height equal to 4 times the width of the smallest dimension of the scaffold base.

i. Scaffolding other than suspended types must bear on base plates upon wood mudsills (2 in x 10 in x 8 in minimum) or other adequate firm foundation.

j. Scaffold or work platform erectors must have fall protection during the erection and dismantling of scaffolding or work platforms that are more

than six feet.

k. Delineate fall protection requirements when working above six feet or above dangerous operations in the Fall Protection and Prevention (FP&P) Plan and Activity Hazard Analysis (AHA) for the phase of work.

3.6.2 Elevated Aerial Work Platforms (AWPs)

Workers must be anchored to the basket or bucket in accordance with manufacturer's specifications and instructions (anchoring to the boom may only be used when allowed by the manufacturer and permitted by the CP). Lanyards used must be sufficiently short to prohibit worker from climbing out of basket. The climbing of rails is prohibited. Lanyards with built-in shock absorbers are acceptable. Self-retracting devices are not acceptable. Tying off to an adjacent pole or structure is not permitted unless a safe device for 100 percent tie-off is used for the transfer.

Use of AWPs must be operated, inspected, and maintained as specified in the operating manual for the equipment and delineated in the AHA. Operators of AWPs must be designated as qualified operators by the Prime Contractor. Maintain proof of qualifications on site for review and include in the AHA.

3.7 EQUIPMENT

3.7.1 Material Handling Equipment (MHE)

a. Material handling equipment such as forklifts must not be modified with work platform attachments for supporting employees unless specifically delineated in the manufacturer's printed operating instructions. Material handling equipment fitted with personnel work platform attachments are prohibited from traveling or positioning while personnel are working on the platform.

b. The use of hooks on equipment for lifting of material must be in accordance with manufacturer's printed instructions. Material Handling Equipment Operators must be trained in accordance with OSHA 29 CFR 1910, Subpart N.

c. Operators of forklifts or power industrial trucks must be licensed in accordance with OSHA.

3.7.2 Load Handling Equipment (LHE)

The following requirements apply. In exception, these requirements do not apply to commercial truck mounted and articulating boom cranes used solely to deliver material and supplies (not prefabricated components, structural steel, or components of a system-engineered metal building) where the lift consists of moving materials and supplies from a truck or trailer to the ground; to cranes installed on mechanical trucks that are used solely in the repair of shred based equipment; to cranes that enter the activity, but are not used for lifting; nor to other machines not used to lift loads suspended by rigging equipment. However, LHE accidents occurring during such operations must be reported.

a. Equip cranes and derricks as specified in EM 385-1-1, Section 16.

b. Notify the Contracting Officer 15 working days in advance of any LHE entering the activity, in accordance with EM 385-1-1, Section 16.A.02, so that necessary quality assurance spot checks can be coordinated.

Contractor's operator must remain with the crane during the spot check. Rigging gear must comply with OSHA, ASME B30.9 Standards safety standards.

c. Comply with the LHE manufacturer's specifications and limitations for erection and operation of cranes and hoists used in support of the work. Perform erection under the supervision of a designated person (as defined in ASME B30.5). Perform all testing in accordance with the manufacturer's recommended procedures.

d. Comply with ASME B30.5 for mobile and locomotive cranes, ASME B30.22 for articulating boom cranes, ASME B30.3 for construction tower cranes, ASME B30.8 for floating cranes and floating derricks, ASME B30.9 for slings, ASME B30.20 for below the hook lifting devices and ASME B30.26 for rigging hardware.

e. Under no circumstance must a Contractor make a lift at or above 90 percent of the cranes rated capacity in any configuration.

f. When operating in the vicinity of overhead transmission lines, operators and riggers must be alert to this special hazard and follow the requirements of EM 385-1-1 Section 11, and ASME B30.5 or ASME B30.22 as applicable.

g. Do not use crane suspended personnel work platforms (baskets) unless the Contractor proves that using any other access to the work location would provide a greater hazard to the workers or is impossible. Do not lift personnel with a line hoist or friction crane. Additionally, submit a specific AHA for this work to the Contracting Officer. Ensure the activity and AHA are thoroughly reviewed by all involved personnel.

h. Inspect, maintain, and recharge portable fire extinguishers as specified in NFPA 10, Standard for Portable Fire Extinguishers.

i. All employees must keep clear of loads about to be lifted and of suspended loads.

j. Use cribbing when performing lifts on outriggers.

k. The crane hook/block must be positioned directly over the load. Side loading of the crane is prohibited.

l. A physical barricade must be positioned to prevent personnel access where accessible areas of the LHE's rotating superstructure poses a risk of striking, pinching or crushing personnel.

m. Maintain inspection records in accordance by EM 385-1-1, Section 16.D, including shift, monthly, and annual inspections, the signature of the person performing the inspection, and the serial number or other identifier of the LHE that was inspected. Records must be available for review by the Contracting Officer.

n. Maintain written reports of operational and load testing in accordance with EM 385-1-1, Section 16.F, listing the load test procedures used along with any repairs or alterations performed on the LHE. Reports must be available for review by the Contracting Officer.

o. Certify that all LHE operators have been trained in proper use of all safety devices (e.g. anti-two block devices).

p. Take steps to ensure that wind speed does not contribute to loss of control of the load during lifting operations. At wind speeds greater than 20 mph, the operator, rigger and lift supervisor must cease all crane operations, evaluate conditions and determine if the lift may proceed. Base the determination to proceed or not on wind calculations per the manufacturer and a reduction in LHE rated capacity if applicable. Include this maximum wind speed determination as part of the activity hazard analysis plan for that operation.

3.7.3 Machinery and Mechanized Equipment

a. Proof of qualifications for operator must be kept on the project site for review.

b. Manufacture specifications or owner's manual for the equipment must be on-site and reviewed for additional safety precautions or requirements that are sometimes not identified by OSHA or USACE EM 385-1-1. Incorporate such additional safety precautions or requirements into the AHAs.

3.7.4 USE OF EXPLOSIVES

Explosives must not be used or brought to the project site without prior written approval from the Contracting Officer. Such approval does not relieve the Contractor of responsibility for injury to persons or for damage to property due to blasting operations.

Storage of explosives, when permitted on Government property, must be only where directed and in approved storage facilities. These facilities must be kept locked at all times except for inspection, delivery, and withdrawal of explosives.

3.8 EXCAVATIONS

Soil classification must be performed by a competent person in accordance with 29 CFR 1926 and EM 385-1-1.

3.8.1 Utility Locations

Provide a third party, independent, private utility locating company to positively identify underground utilities in the work area in addition to any station locating service and coordinated with the station utility department.

3.8.2 Utility Location Verification

Physically verify underground utility locations, including utility depth, by hand digging using wood or fiberglass handled tools when any adjacent construction work is expected to come within three feet of the underground system.

3.8.3 Utilities Within and Under Concrete, Bituminous Asphalt, and Other Impervious Surfaces

Utilities located within and under concrete slabs or pier structures, bridges, parking areas, and the like, are extremely difficult to identify. Whenever contract work involves chipping, saw cutting, or core drilling through concrete, bituminous asphalt or other impervious surfaces, the

existing utility location must be coordinated with station utility departments in addition to location and depth verification by a third party, independent, private locating company. The third party, independent, private locating company must locate utility depth by use of Ground Penetrating Radar (GPR), X-ray, bore scope, or ultrasound prior to the start of demolition and construction. Outages to isolate utility systems must be used in circumstances where utilities are unable to be positively identified. The use of historical drawings does not alleviate the Contractor from meeting this requirement.

3.9 ELECTRICAL

Perform electrical work in accordance with EM 385-1-1, Appendix A, Sections 11 and 12.

3.9.1 Conduct of Electrical Work

As delineated in EM 385-1-1, electrical work is to be conducted in a de-energized state unless there is no alternative method for accomplishing the work. In those cases obtain an energized work permit from the Contracting Officer. The energized work permit application must be accompanied by the AHA and a summary of why the equipment/circuit needs to be worked energized. Underground electrical spaces must be certified safe for entry before entering to conduct work. Cables that will be cut must be positively identified and de-energized prior to performing each cut. Attach temporary grounds in accordance with ASTM F855 and IEEE 1048. Perform all high voltage cable cutting remotely using hydraulic cutting tool. When racking in or live switching of circuit breakers, no additional person other than the switch operator is allowed in the space during the actual operation. Plan so that work near energized parts is minimized to the fullest extent possible. Use of electrical outages clear of any energized electrical sources is the preferred method.

When working in energized substations, only qualified electrical workers are permitted to enter. When work requires work near energized circuits as defined by NFPA 70, high voltage personnel must use personal protective equipment that includes, as a minimum, electrical hard hat, safety shoes, insulating gloves and electrical arc flash protection for personnel as required by NFPA 70E. Insulating blankets, hearing protection, and switching suits may also be required, depending on the specific job and as delineated in the Contractor's AHA. Ensure that each employee is familiar with and complies with these procedures and 29 CFR 1910.147.

3.9.2 Qualifications

Electrical work must be performed by QP personnel with verifiable credentials who are familiar with applicable code requirements. Verifiable credentials consist of State, National and Local Certifications or Licenses that a Master or Journeyman Electrician may hold, depending on work being performed, and must be identified in the appropriate AHA. Journeyman/Apprentice ratio must be in accordance with State, Local requirements applicable to where work is being performed.

3.9.3 Arc Flash

Conduct a hazard analysis/arc flash hazard analysis whenever work on or near energized parts greater than 50 volts is necessary, in accordance with NFPA 70E.

All personnel entering the identified arc flash protection boundary must be QPs and properly trained in NFPA 70E requirements and procedures. Unless permitted by NFPA 70E, no Unqualified Person is permitted to approach nearer than the Limited Approach Boundary of energized conductors and circuit parts. Training must be administered by an electrically qualified source and documented.

3.9.4 Grounding

Ground electrical circuits, equipment and enclosures in accordance with NFPA 70 and IEEE C2 to provide a permanent, continuous and effective path to ground unless otherwise noted by EM 385-1-1.

Check grounding circuits to ensure that the circuit between the ground and a grounded power conductor has a resistance low enough to permit sufficient current flow to allow the fuse or circuit breaker to interrupt the current.

3.9.5 Testing

Temporary electrical distribution systems and devices must be inspected, tested and found acceptable for Ground-Fault Circuit Interrupter (GFCI) protection, polarity, ground continuity, and ground resistance before initial use, before use after modification and at least monthly. Monthly inspections and tests must be maintained for each temporary electrical distribution system and signed by the electrical CP or QP.

-- End of Section --

Naval Facilities Engineering Systems Command
NAVFAC MID-ATLANTIC

Engineering Department

eProjects WO#: 1855890

PART 6 - ATTACHMENTS

BUILDING 1100 REPAIR DAMAGED SECONDARY INLET GUIDES
NAS OCEANA
VIRGINIA BEACH, VIRGINIA

PART 6 – ATTACHMENTS – TABLE OF CONTENTS

ATTACHMENT 01 – SHEETS S-16 THROUGH S-24 OF DRAWINGS, “JET ENGINE TEST CELL MODERNIZATION”, BY BURNS AND MCDONNEL, 1996

ATTACHMENT 02 –SHOP DRAWINGS TITLED, “SPLITTER BAFFLE DETAILS”, DRAWING NO. 18 BY VITAL LINK, INCORPORATED, MARCH 1999

ATTACHMENT 03 – LIMITS OF WORK AND LAYDOWN AREA

ATTACHMENT 04 – NAVY REGION MID-ATLANTIC ENVIRONMENTAL CHECKLIST

ATTACHMENT 01

SHEETS S-16 THROUGH S-24

OF

“JET ENGINE TEST CELL MODERNIZATION”

BY BERNS AND MCDONNELL

1996

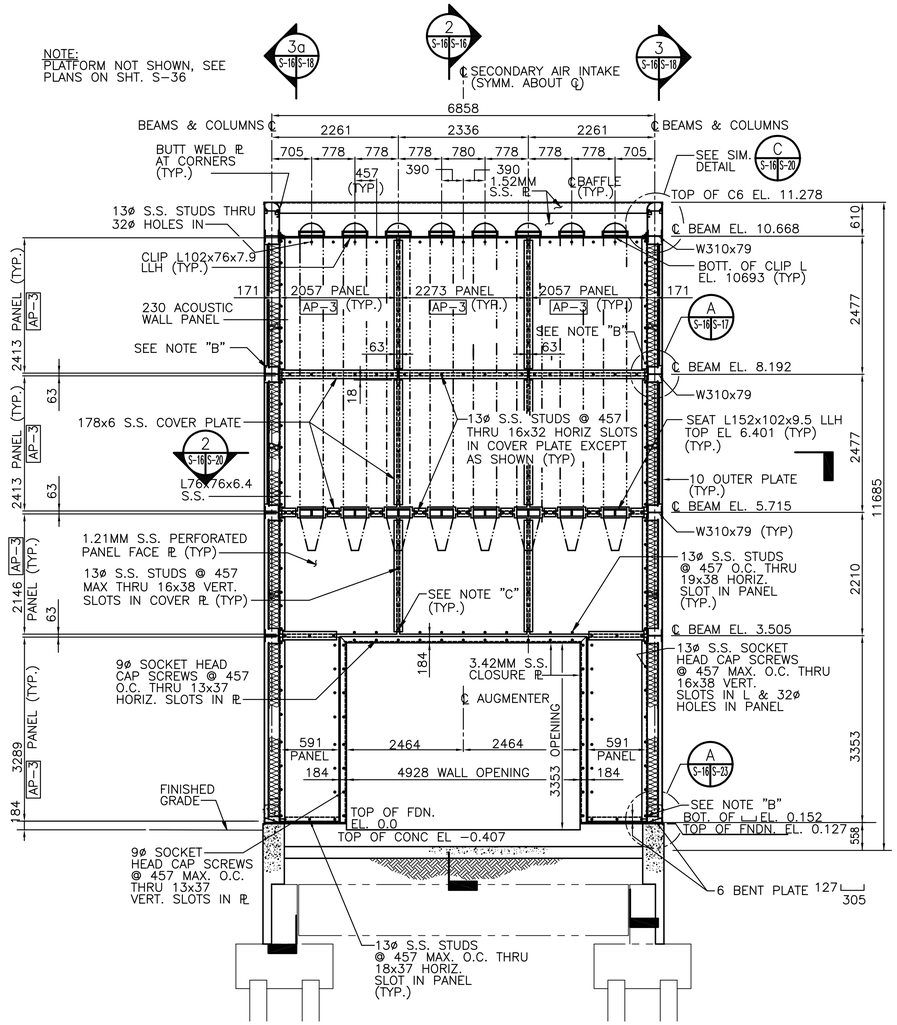

SECTION 1
1:50

ONLY AT LOCATIONS SHOWN:
- NOTE "B": PROVIDE 16ø HOLE IN ANGLE (INSTEAD OF SLOTS)
- NOTE "C": PROVIDE 16ø HOLE IN COVER ⅊ (INSTEAD OF SLOTS)

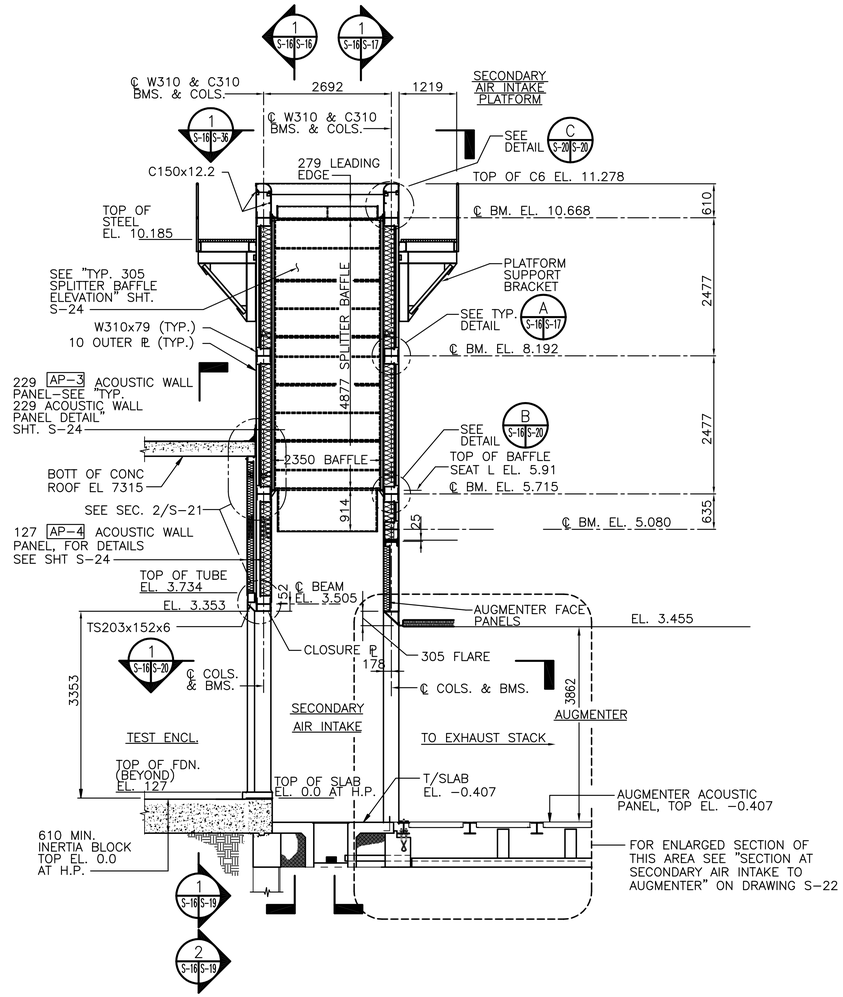

SECTION 2
1:50

1:50 0 1000 3000 5000mm

RECORD DRAWING - 11/13/2000

REVISIONS			
4	RECORD DRAWING	11/13/00	MER
3			
2			
1			
	DESCRIPTION	DATE	APPROVED

EFD: BKS DESIGN, AGB DRAWN, MJC REVIEW, RLB QC, MER CHIEF ARCH/ ENGR, MER PROJECT MANAGER, STM FIRE PROTECTION, BRANCH MANAGER, DESIGN DIRECTOR

Burns & McDonnell
9400 Ward Parkway
Kansas City, Missouri 64114
A/E CONTRACT NO. N62470-96-C-8042

APPROVED DATE
ACTIVITY - SATISFACTORY TO DATE
APPROVED
FOR BID FOR COMMANDER NAVFAC

SEAL

DEPARTMENT OF THE NAVY
NAVAL FACILITIES ENGINEERING COMMAND
NAVAL STATION ATLANTIC DIVISION NORFOLK, VIRGINIA
NAVAL AIR STATION OCEANA VIRGINIA BEACH, VIRGINIA

JET ENGINE TEST CELL MODERNIZATION

SECONDARY AIR INTAKE SECTIONS & DETAILS - 1

CODE ID. NO. 80091 SIZE D
SCALE: AS NOTED
EFD NO. 482158
STA. PROJ. NO. P-453
SPEC. NO. 05-96-6177
CONSTR. CONTR. NO. N62470-96-B-6177
NAVFAC DRAWING NO. 4382158
SHEET 43 OF 125

S-16

6177S7A.DWG 07-02-1998 14:35 AGB
DRAWFORM REVISION 25 SEPT 96

COPYRIGHT © 1998 BURNS & McDONNELL ENGINEERING COMPANY, INC.

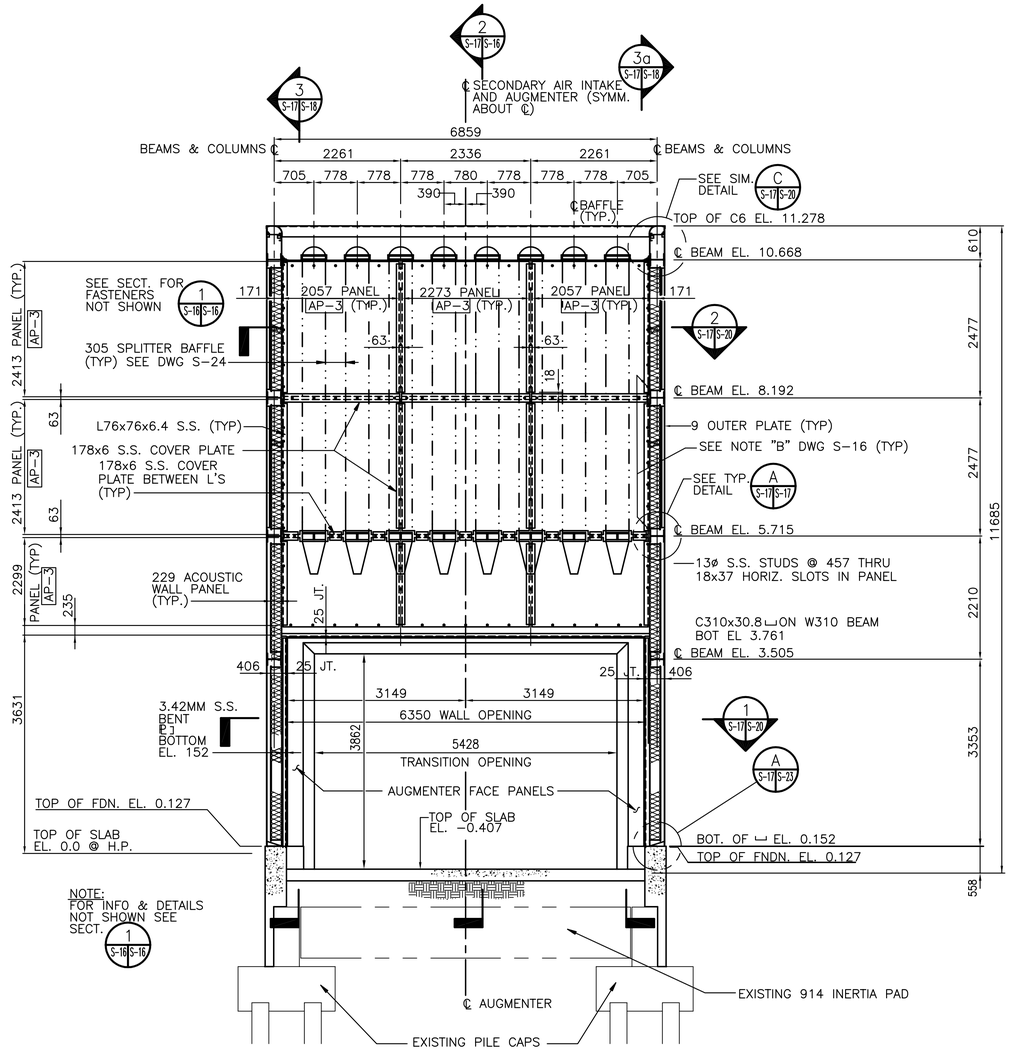

SECTION 1 S-16/S-17
1:50

S-15

NOTE:
PLATFORM NOT SHOWN, SEE PLANS ON SHT. S-36

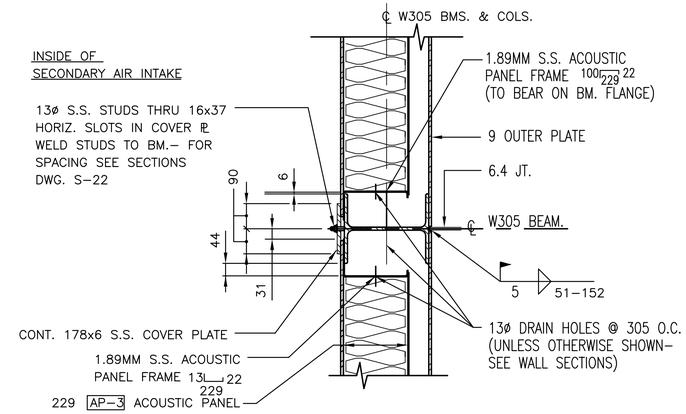

DETAIL A S-17/S-17
1:10

S–16

NOTE
1. FOR GENERAL NOTES, LEGEND, AND ABBREVATIONS, SEE SHEET S–1.

1:10 0 100 500 1000mm

1:50 0 1000 3000 5000mm

RECORD DRAWING - 11/13/2000

1	RECORD DRAWING	11/13/00	MER

REVISIONS

	DESCRIPTION	DATE	APPROVED

EFD BKS DESIGN, AGB DRAWN, MJC REVIEW, RLB QC, MER CHIEF ARCH/ ENGR, MER PROJECT MANAGER, STM FIRE PROTECTION, BRANCH MANAGER, DESIGN DIRECTOR

Burns & McDonnell
9400 Ward Parkway
Kansas City, Missouri 64114
A/E CONTRACT NO. N62470-94-C-8042

APPROVED DATE
ACTIVITY – SATISFACTORY TO
APPROVED DATE
FOR BID FOR COMMANDER NAVFAC
SEAL

DEPARTMENT OF THE NAVY
NAVAL STATION
ATLANTIC DIVISION
NAVAL FACILITIES ENGINEERING COMMAND
NORFOLK, VIRGINIA
NAVAL AIR STATION OCEANA
VIRGINIA BEACH, VIRGINIA
JET ENGINE TEST CELL MODERNIZATION
SECONDARY AIR INTAKE SECTIONS – 2

CODE ID. NO. 80091 SIZE D
SCALE: AS NOTED
EFD NO. 482159
STA. PROJ. NO. P–453
SPEC. NO. 05–96–6177
CONSTR. CONTR. NO. N62470–96–B–6177
NAVFAC DRAWING NO. 4382159
SHEET 44 OF 125
S–17

6177S8.DWG 07–02–1998 13:34 AGB
DRAWFORM REVISION 25 SEPT 96

COPYRIGHT © 1998 BURNS & McDONNELL ENGINEERING COMPANY, INC.

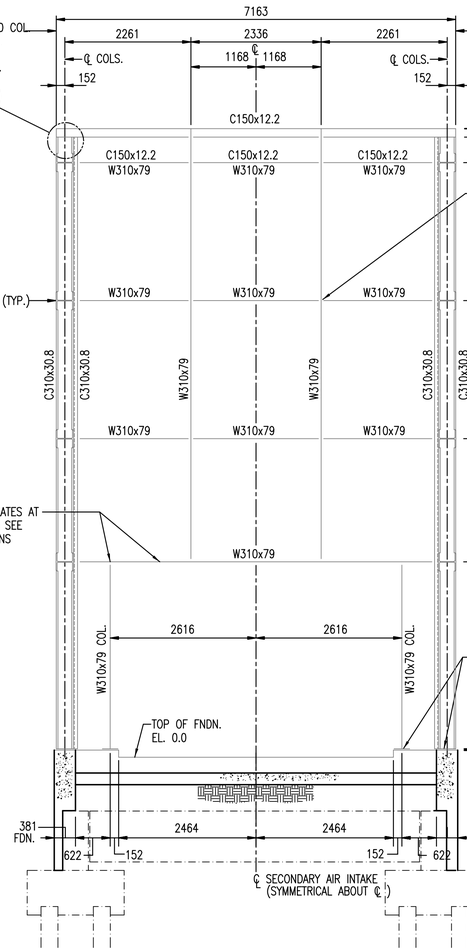

SECTION 1
1:50
(SHOWING STRUCTURAL FRAMING)

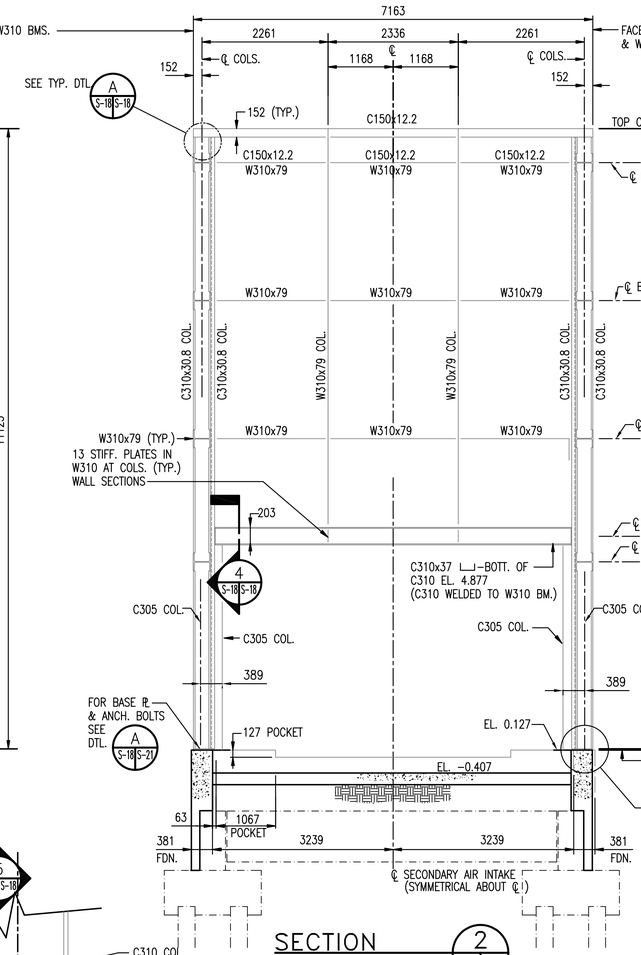

SECTION 2
1:50
(SHOWING STRUCTURAL FRAMING)

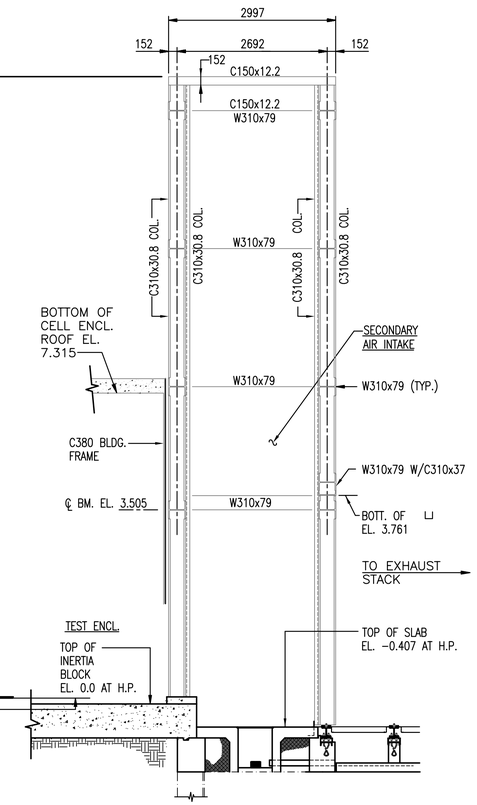

SECTION 3
1:50

SECTION 3a
1:50

(SHOWING STRUCTURAL FRAMING)
SECTION 3 AS SHOWN
SECTION 3a OPP. HAND

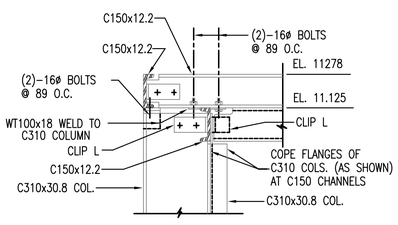

DETAIL A

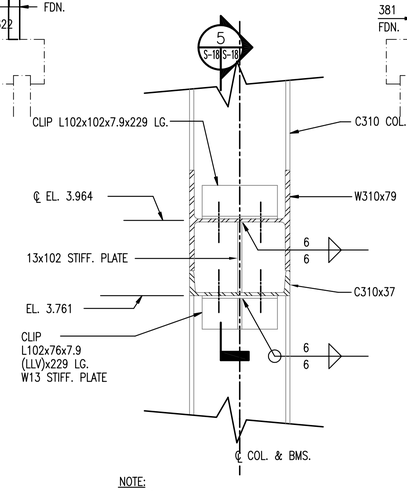

NOTE:
CLIP L'S TO BE FIELD WELDED WITH 13 FILLET ALL AROUND OR BOLTED TO STRUCT. STEEL W/ (2)−19ø A325 BOLTS AT EA. CLIP L LEG.

SECTION 4

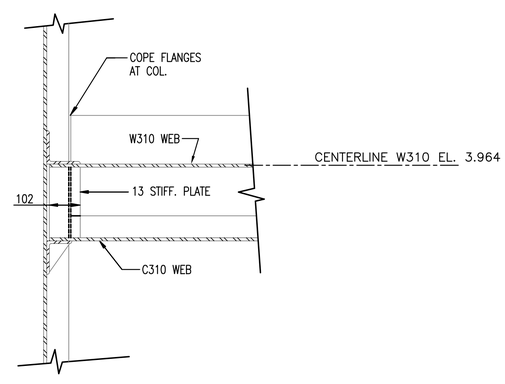

SECTION 5

1:50 0 1000 3000 5000mm

RECORD DRAWING - 11/13/2000

REVISIONS

DESCRIPTION	DATE	APPROVED
RECORD DRAWING	11/13/00	MER

DESIGN BKS
DRAWN AGB
REVIEW MJC
QC RLB
CHIEF ARCH/ ENGR MER
PROJECT MANAGER MER
FIRE PROTECTION
BRANCH MANAGER
DESIGN DIRECTOR

Burns & McDonnell
9400 Ward Parkway
Kansas City, Missouri 64114
A/E CONTRACT NO. N62470-94-C-8042
APPROVED DATE
ACTIVITY – SATISFACTORY TO
DATE
AUTHORIZED
FOR BFD FOR COMMANDER NAVFAC

DEPARTMENT OF THE NAVY
NAVAL FACILITIES ENGINEERING COMMAND
NAVAL STATION ATLANTIC DIVISION NORFOLK, VIRGINIA
NAVAL AIR STATION OCEANA VIRGINIA BEACH, VIRGINIA
JET ENGINE TEST CELL MODERNIZATION
SECONDARY AIR INTAKE SECTIONS – 3

CODE ID. NO. 80091 SIZE D
SCALE: AS NOTED
EFD NO. 482160
STA. PROJ. NO. P-453
SPEC. NO. 05-96-6177
CONSTR. CONTR. NO. N62470-96-B-6177
NAVFAC DRAWING NO. 4382160
SHEET 45 OF 125
S-18

6177S9.DWG 05-18-1998 16:43 AGB
DRAWFORM REVISION 25 SEPT 96

COPYRIGHT © 1998 BURNS & McDONNELL ENGINEERING COMPANY, INC.

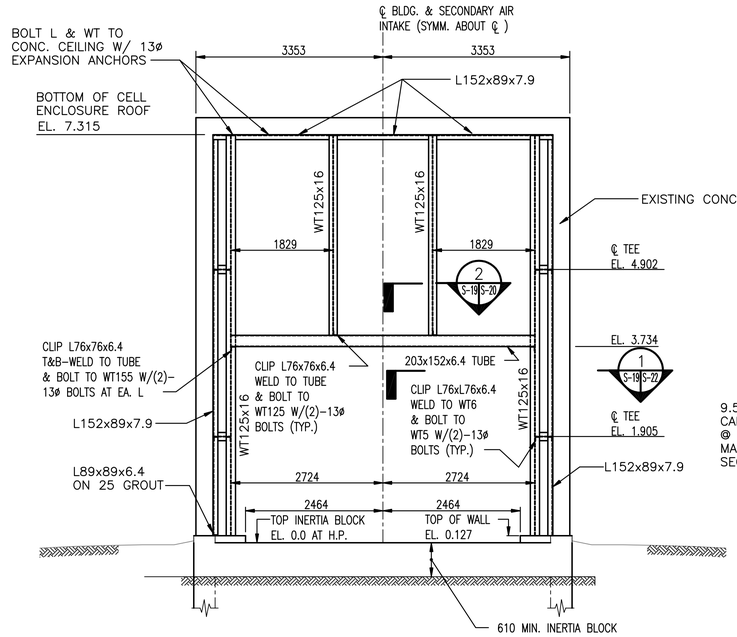

SHOWING ACOUSTIC PANEL SUPPORT STEEL ONLY

NOTE:
127 ACOUSTIC PANELS NOT SHOWN-SEE DWG. S-24

SECTION 1 (S-16 / S-19)
1:50

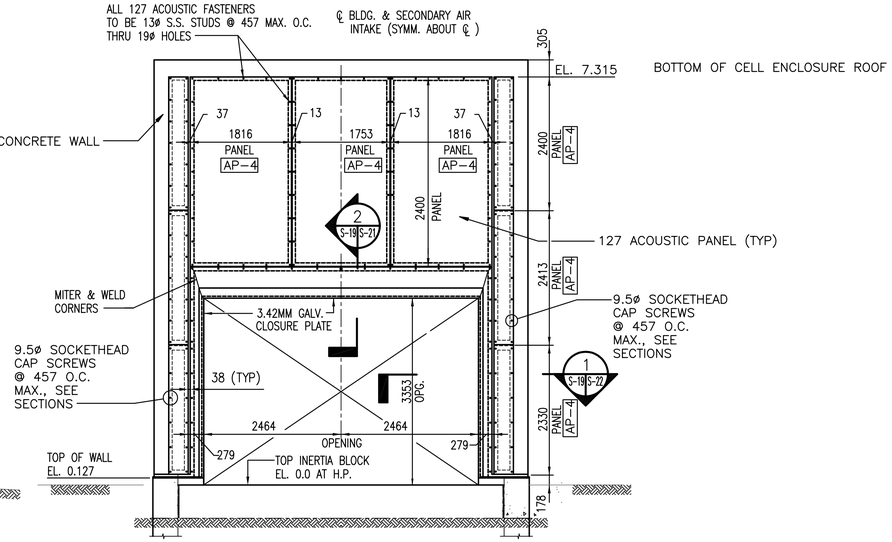

SHOWING 127 ACOUSTIC PANEL

SECTION 2 (S-16 / S-19)
1:50

1:50 0 1000 3000 5000mm

RECORD DRAWING - 11/13/2000

1	RECORD DRAWING	11/13/00	MER	

REVISIONS

DESIGN	BKS		
DRAWN	AGB		
REVIEW	MJC		
DC CHIEF	RLB		
APPR / ENGR	MER		
PROJECT MANAGER	MER		
FIRE PROTECTION BRANCH MANAGER			
DESIGN DIRECTOR			

Burns & McDonnell
9400 Ward Parkway
Kansas City, Missouri 64114
A/E CONTRACT NO. N62470-96-C-8042

APPROVED DATE
ACTIVITY - SATISFACTORY TO
APPROVED DATE
FOR RED FOR COMMANDER NAVFAC

SEAL

DEPARTMENT OF THE NAVY
NAVAL FACILITIES ENGINEERING COMMAND
NAVAL STATION ATLANTIC DIVISION NORFOLK, VIRGINIA

NAVAL AIR STATION OCEANA VIRGINIA BEACH, VIRGINIA
JET ENGINE TEST CELL MODERNIZATION
SECONDARY AIR INTAKE SECTIONS - 4

CODE ID. NO. 80091 SIZE D
SCALE: AS NOTED
EFD NO. 482161
STA. PROJ. NO. P-453
SPEC. NO. 05-96-6177
CONSTR. CONTR. NO. N62470-96-B-6177
NAVFAC DRAWING NO. 4382161
SHEET 46 OF 125

S-19

6177S9A.DWG 07-02-1998 13:27 AGB
DRAWFORM REVISION 25 SEPT 96

COPYRIGHT © 1998 BURNS & McDONNELL ENGINEERING COMPANY, INC.

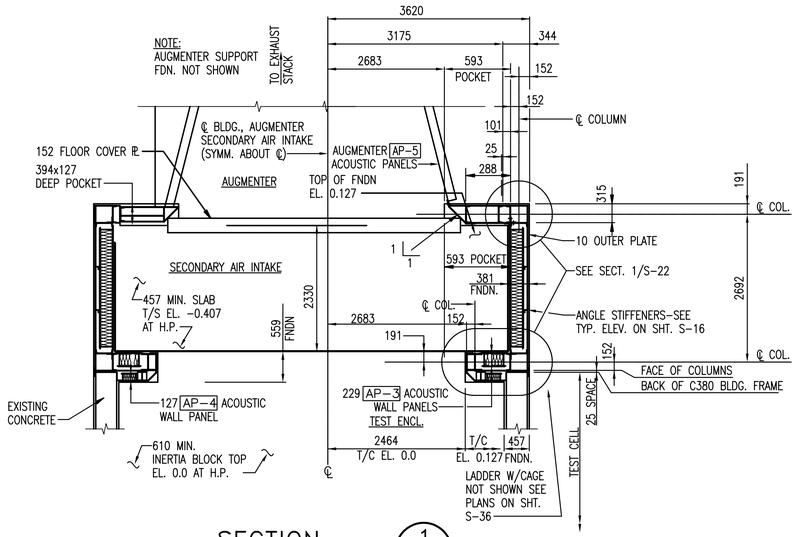

SECTION 1 (S-16 / S-20)
1:50

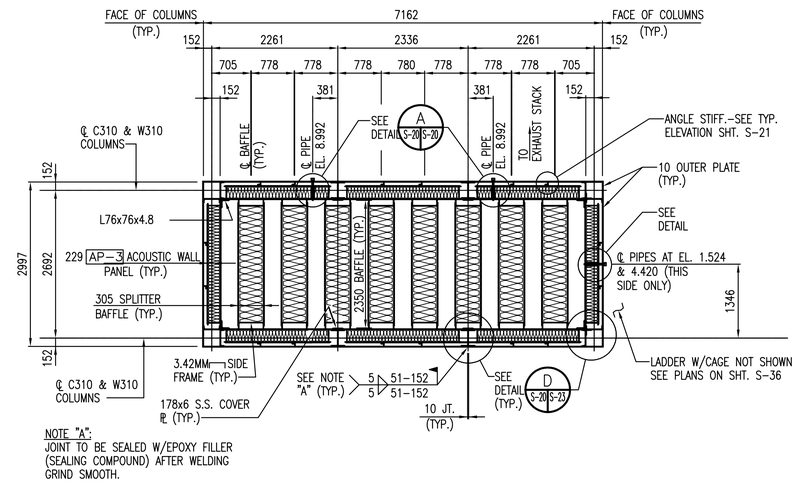

SECTION 2 (S-16 / S-20; S-17)
1:50

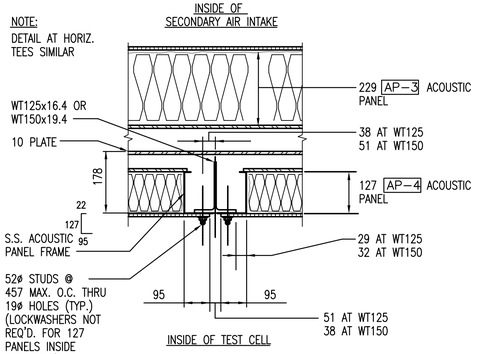

SECTION 2 (S-19 / S-20)

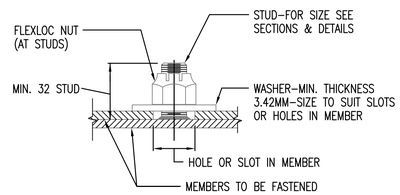

TYP. FASTENER DETAIL

NOT TO SCALE

ALL STUDS, SCREWS, NUTS & WASHERS TO BE CAD. PLATED EXCEPT WHERE S.S. STUDS OR SCREWS ARE INDICATED OR SPECIFIED THEN WASHERS & NUTS TO BE S.S.

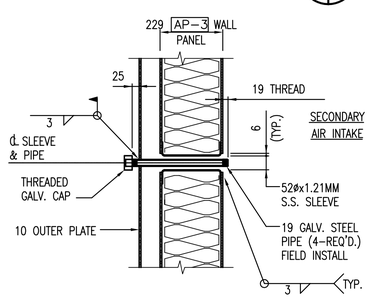

DETAIL A (S-20 / S-20)
1:10

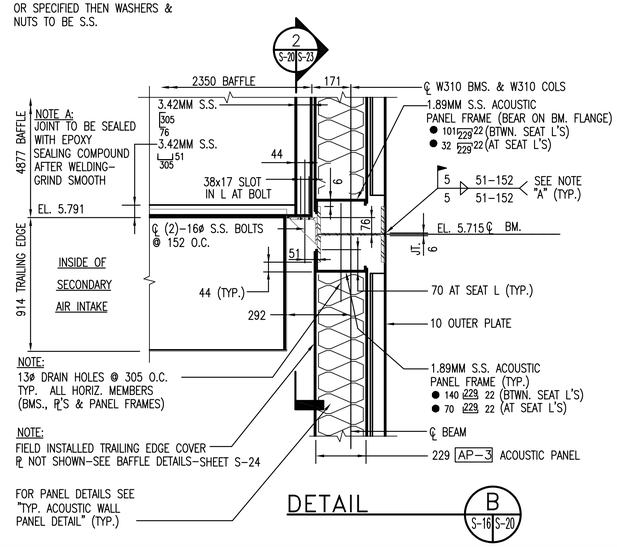

DETAIL B (S-16 / S-20)

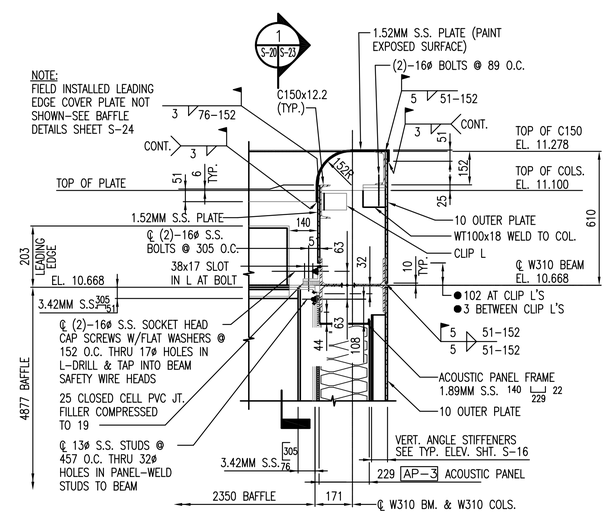

DETAIL C (S-16 / S-20)

1:10 0 100 500 1000mm

1:50 0 1000 3000 5000mm

NOTE

1. FOR GENERAL NOTES, LEGEND AND ABBREVIATIONS, SEE SHEET S-1
2. ALL NUTS, BOLTS, PINS, SCREWS, AND WASHERS TO BE CAD PLATED UNLESS OTHERWISE SHOWN OR SPECIFIED.

RECORD DRAWING - 11/13/2000

1	RECORD DRAWING	11/13/00	MER

REVISIONS

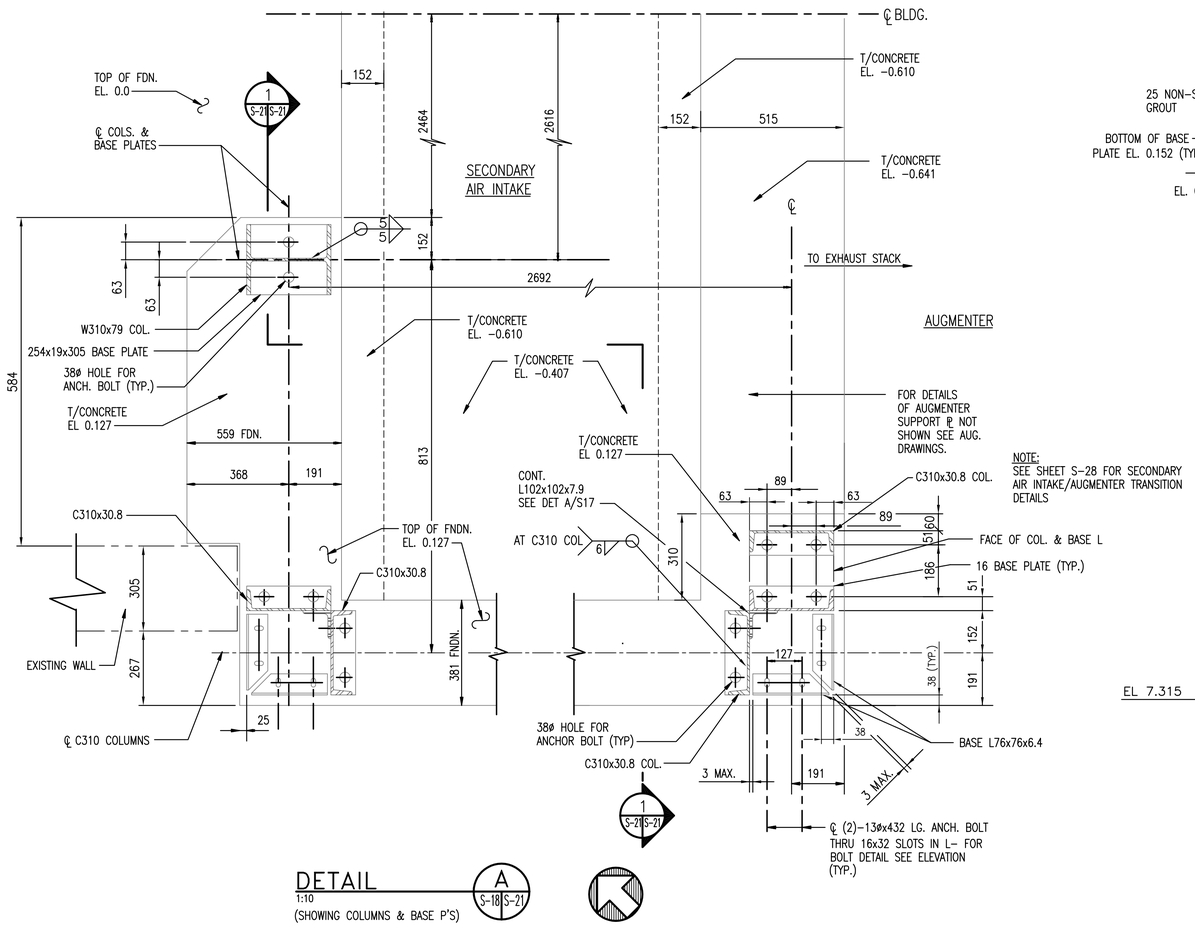

NOTE:
SEE SHEET S-28 FOR SECONDARY AIR INTAKE/AUGMENTER TRANSITION DETAILS

DETAIL A
1:10
(SHOWING COLUMNS & BASE P'S)

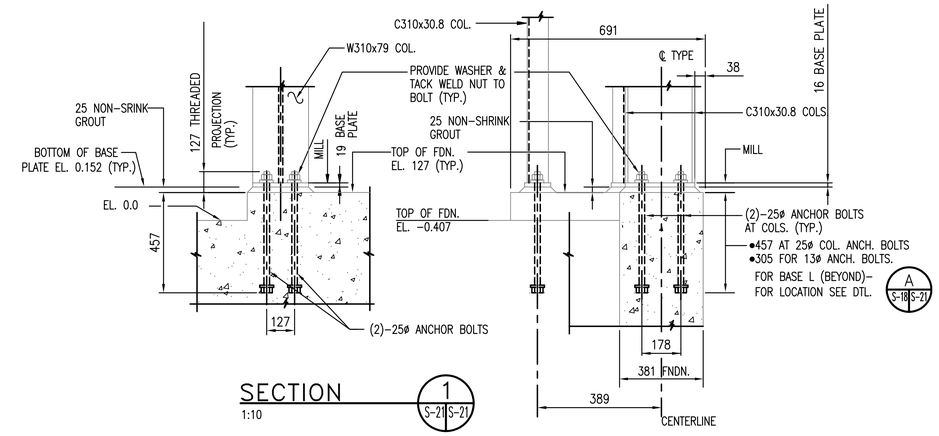

SECTION 1
1:10

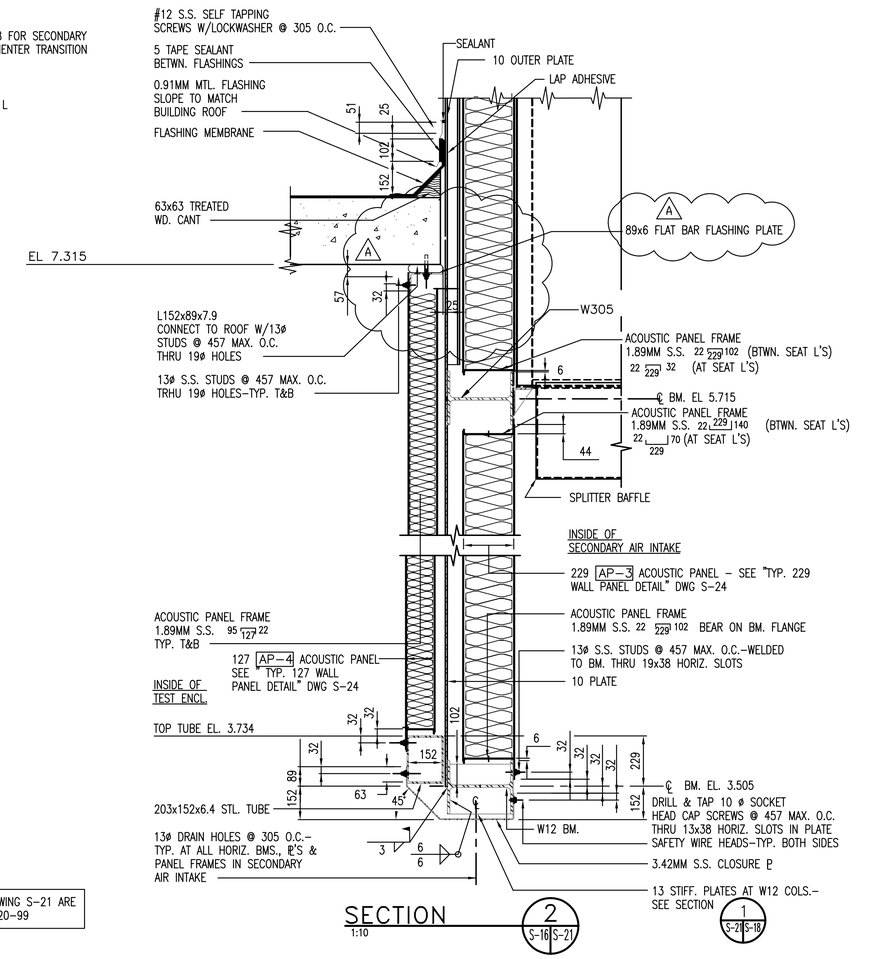

SECTION 2
1:10

NOTE: DRAWINGS REFERENCED TO DRAWING S-21 ARE SUPERCEDED BY THIS SKETCH SK-S-020-99

1:10 0 100 500 1000mm

RECORD DRAWING - 11/13/2000

1	RECORD DRAWING	11/13/00	MER

REVISIONS

Burns & McDonnell
9400 Ward Parkway
Kansas City, Missouri 64114
A/E CONTRACT NO. N62470-96-C-8042

ACTIVITY - SATISFACTORY TO

DEPARTMENT OF THE NAVY
NAVAL STATION
ATLANTIC DIVISION
NAVAL FACILITIES ENGINEERING COMMAND
NORFOLK, VIRGINIA
NAVAL AIR STATION OCEANA
VIRGINIA BEACH, VIRGINIA
JET ENGINE TEST CELL MODERNIZATION
SECONDARY AIR INTAKE SECTIONS & DETAILS - 6

CODE ID. NO. 80091 SIZE D
SCALE: AS NOTED
EFD NO. 482163
STA. PROJ. NO. P-453
SPEC. NO. 05-96-6177
CONSTR. CONTR. NO. N62470-96-B-6177
NAVFAC DRAWING NO. 4382163
SHEET 48 OF 125
S-21

6177S11.dwg 02-17-1999 09:12 GTM

COPYRIGHT © 1998 BURNS & McDONNELL ENGINEERING COMPANY, INC.

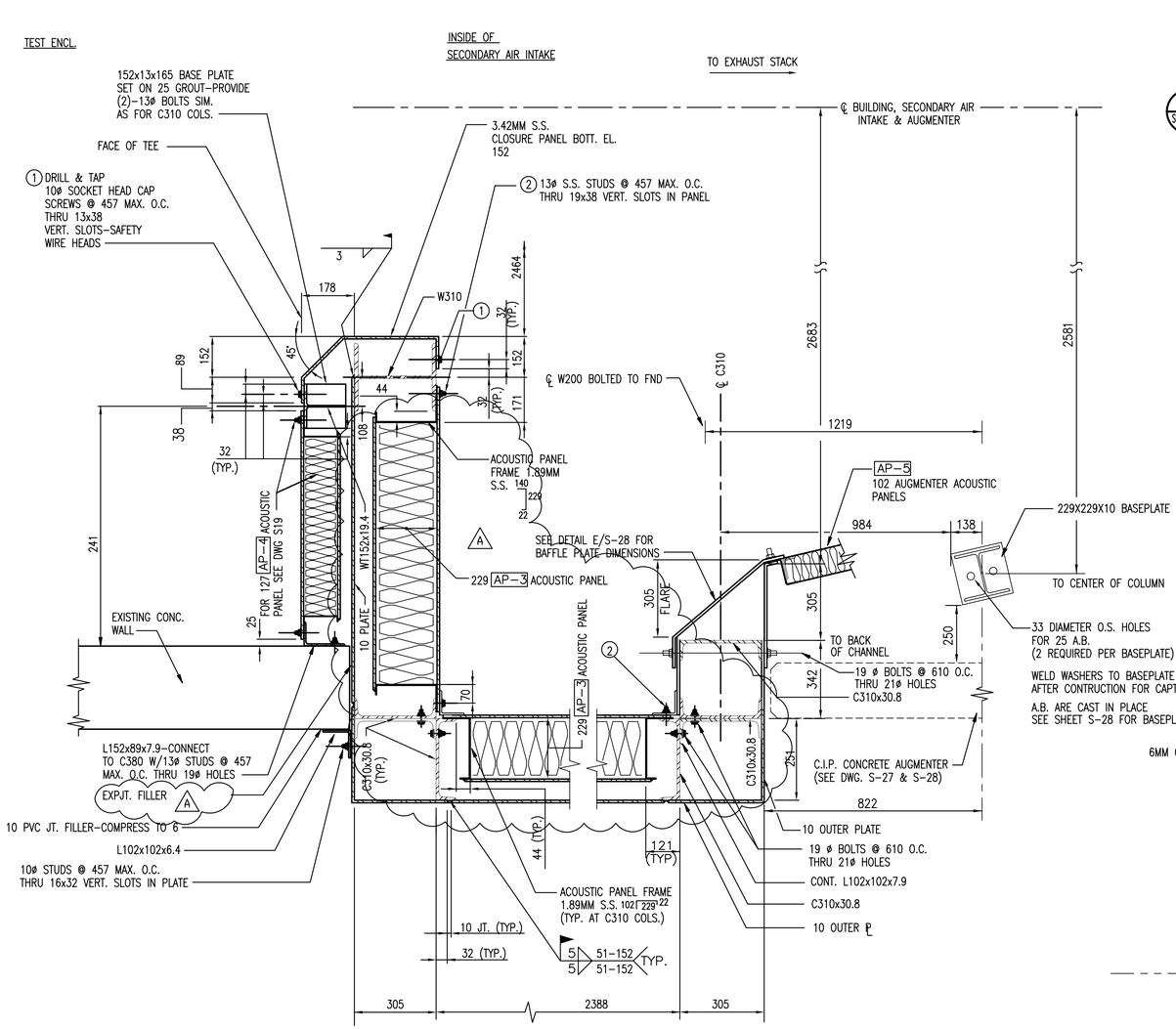

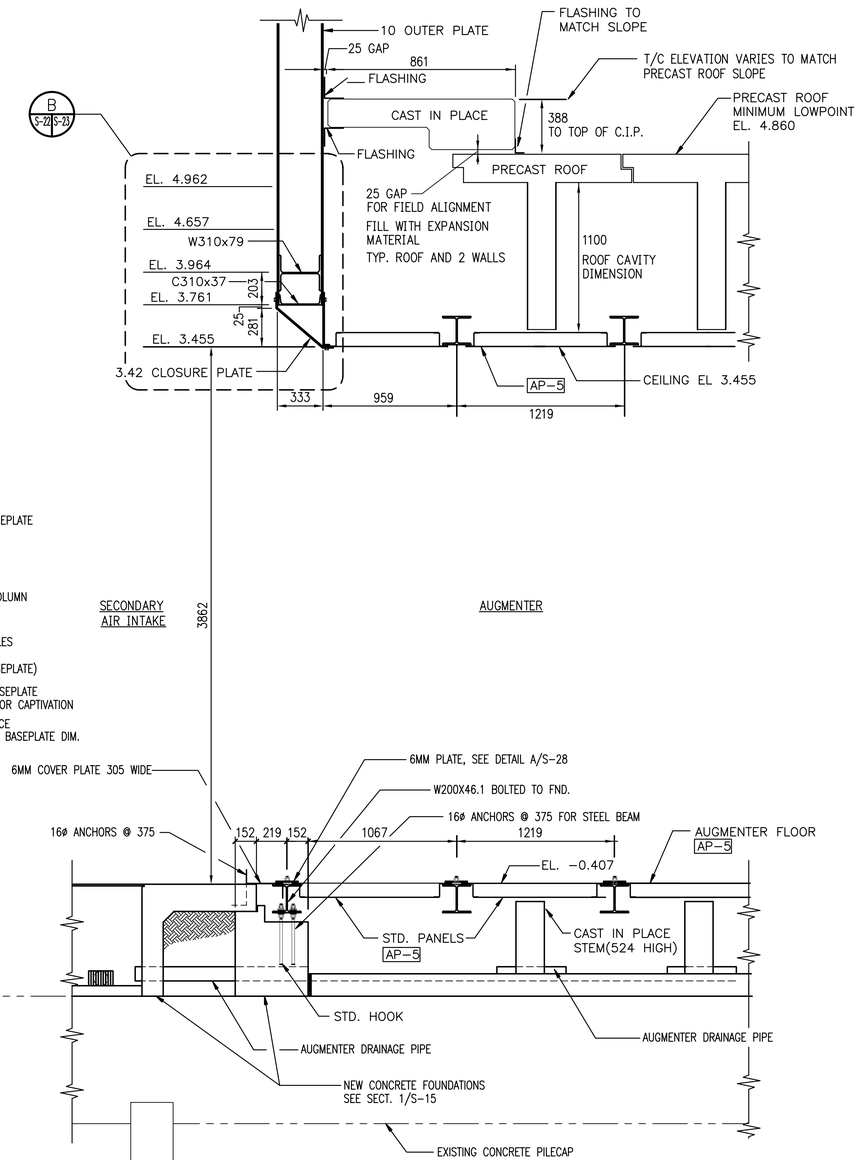

NOTE: DRAWINGS REFERENCED TO S–22 ARE SUPERCEDED BY THIS SKETCH SK–S–021–99

1:10 0 100 500 1000mm

1:20 0 500 1000 2000mm

RECORD DRAWING - 11/13/2000

1	RECORD DRAWING	11/13/00	MER

REVISIONS

DESIGN BKS
DRAWN AGB
REVIEW MJC
QC RLB
CHIEF MER
PROJECT MANAGER MER
FIRE PROTECTION
BRANCH MANAGER
DESIGN DIRECTOR

Burns & McDonnell
9400 Ward Parkway
Kansas City, Missouri 64114
A/E CONTRACT NO. N62470–96–C–8042
APPROVED DATE
ACTIVITY – SATISFACTORY TO
APPROVED DATE
FOR BID FOR COMMANDER NAVFAC

DEPARTMENT OF THE NAVY
NAVAL STATION
ATLANTIC DIVISION
NAVAL FACILITIES ENGINEERING COMMAND
NORFOLK, VIRGINIA
NAVAL AIR STATION OCEANA
VIRGINIA BEACH, VIRGINIA
JET ENGINE TEST CELL MODERNIZATION
SECONDARY AIR INTAKE SECTIONS & DETAILS – 7

CODE ID. NO. 80091 SIZE D
SCALE: AS NOTED
EFD NO. 482164
STA. PROJ. NO. P–453
SPEC. NO. 05–96–6177
CONSTR. CONTR. NO. N62470–96–B–6177
NAVFAC DRAWING NO. 4382164
SHEET 49 OF 125
S–22

6177S11B.DWG 07–06–1998 09:38 AGB

DRAWFORM REVISION 25 SEPT 96

COPYRIGHT © 1998 BURNS & McDONNELL ENGINEERING COMPANY, INC.

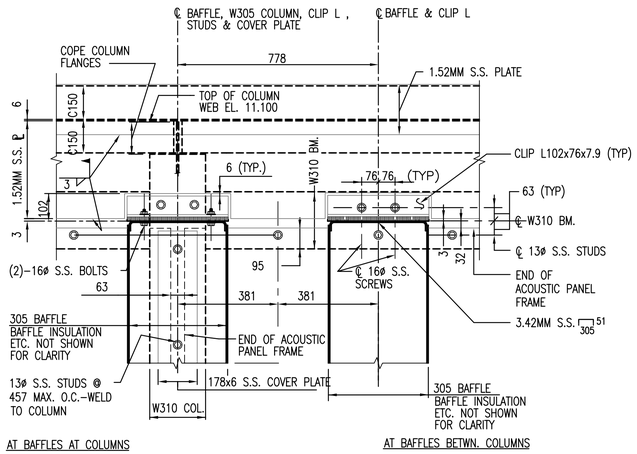

SECTION 1 (S-20 | S-23)
1:10

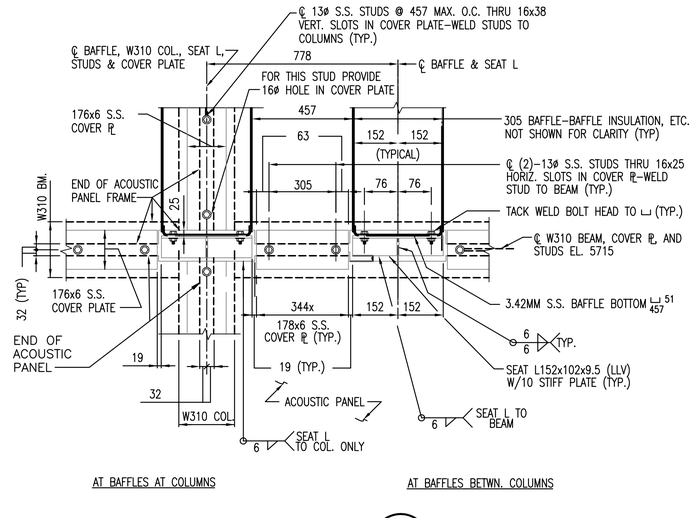

SECTION 2 (S-20 | S-23)
1:10

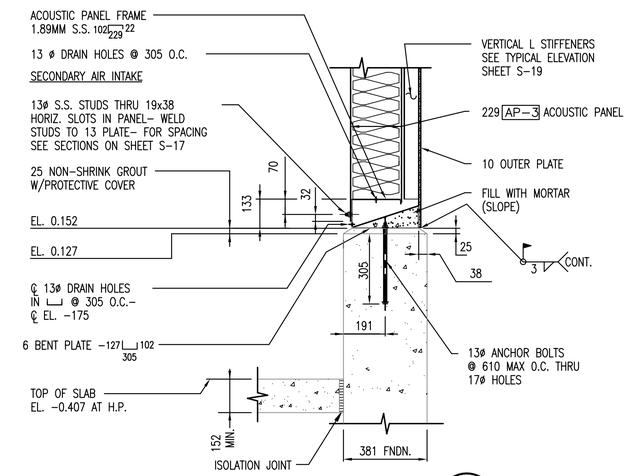

DETAIL A (S-18 | S-23)
1:10
S-16, S-17

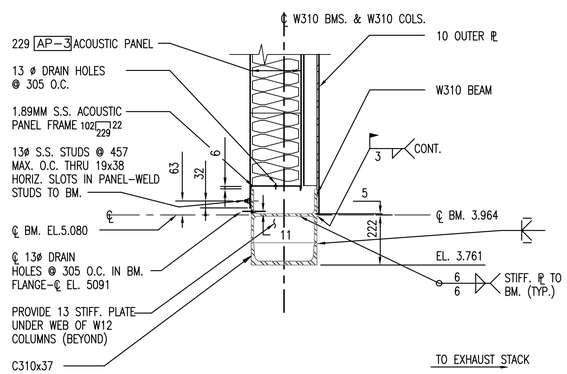

DETAIL B (S-22 | S-23)
1:10

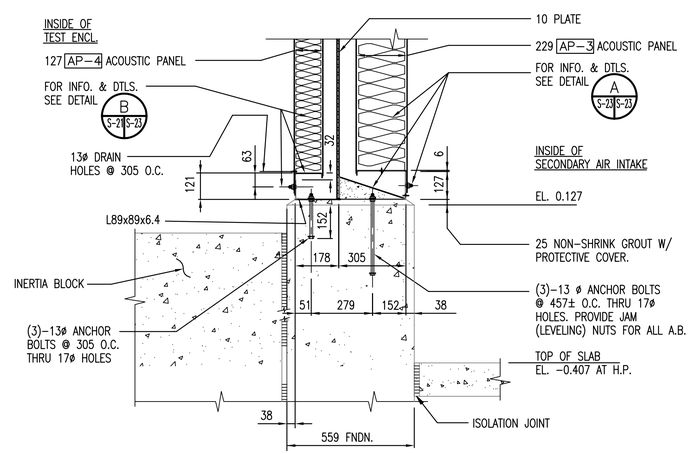

DETAIL C (S-17 | S-23)
1:10

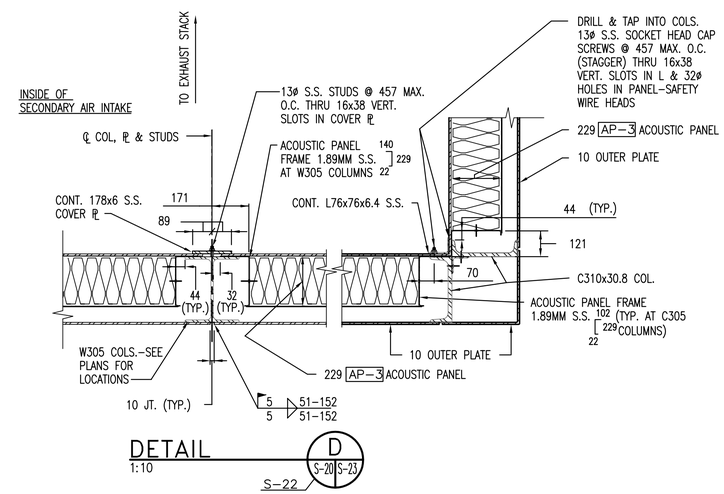

DETAIL D (S-20 | S-23)
1:10
S-22

1:10 0 100 500 1000mm

RECORD DRAWING - 11/13/2000

1	RECORD DRAWING	11/13/00	MER	

REVISIONS

Burns & McDonnell
9400 Ward Parkway
Kansas City, Missouri 64114
N62470-96-C-8042

ACTIVITY – SATISFACTORY TO

DEPARTMENT OF THE NAVY
NAVAL STATION
ATLANTIC DIVISION
NAVAL FACILITIES ENGINEERING COMMAND
NORFOLK, VIRGINIA
NAVAL AIR STATION OCEANA
VIRGINIA BEACH, VIRGINIA
JET ENGINE TEST CELL MODERNIZATION
SECONDARY AIR INTAKE SECTIONS & DETAILS – 8

CODE ID. NO. 80091	SIZE 0
SCALE:	AS NOTED
EFD NO.	482165
STA. PROJ. NO.	P-453
SPEC. NO.	05-96-6177
CONSTR. CONTR. NO.	N62470-96-B-6177
NAVFAC DRAWING NO.	4382165
SHEET 50 OF 125	

S-23

6177S12.DWG 07-02-1998 13:24 AGB

COPYRIGHT © 1998 BURNS & McDONNELL ENGINEERING COMPANY, INC.

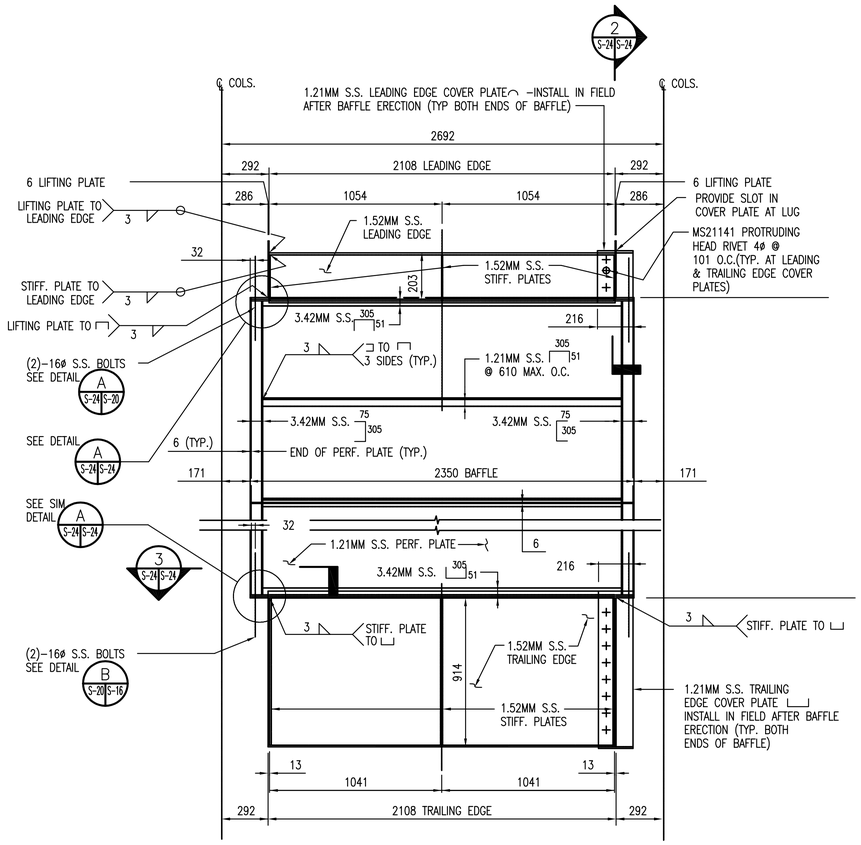

TYPICAL 305MM SPLITTER BAFFLE ELEVATION

NOT TO SCALE

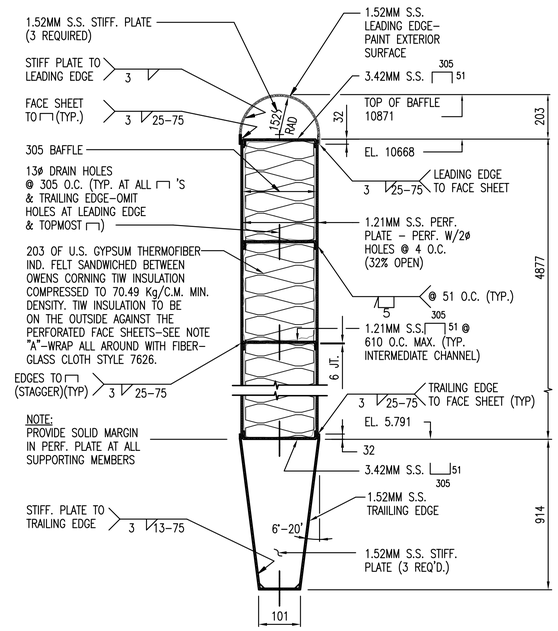

TYPICAL 305MM SPLITTER BAFFLE SECTION

NOT TO SCALE

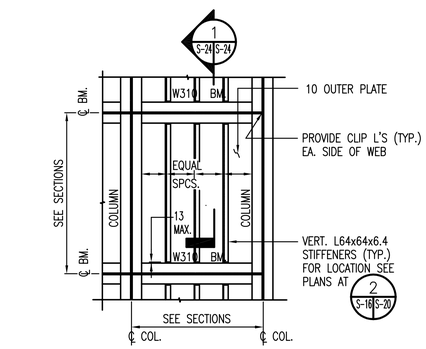

TYP. ELEVATION OF OUTER PLATE SHOWING ANGLE STIFFENERS

NOT TO SCALE

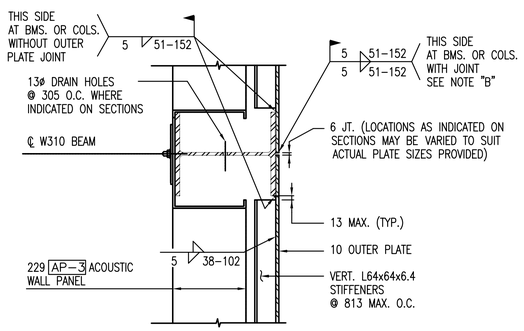

SECTION 1 (S-24/S-24)

NOT TO SCALE

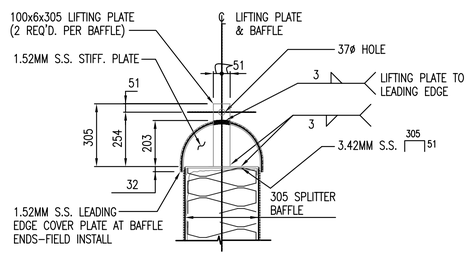

SECTION 2 (S-24/S-24)

NOT TO SCALE

NOTE "A":
THICKNESS INDICATED FOR TYPE TIW IS MIN. PROVIDE ADITIONAL THICKNESS AS REQ'D. TO MEET SPEC. REQUIREMENTS

NOTE "B":
JOINT TO BE SEALED W/EPOXY FILLER (SEALING COMPOUND) AFTER WELDING-GRIND SMOOTH

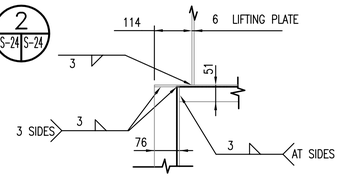

SHOWING CHANNEL WELDING

DETAIL A (S-24/S-24)

NOT TO SCALE

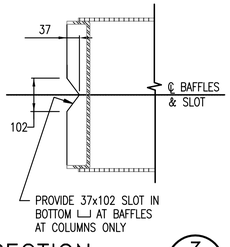

SECTION 3 (S-24/S-24)

NOT TO SCALE

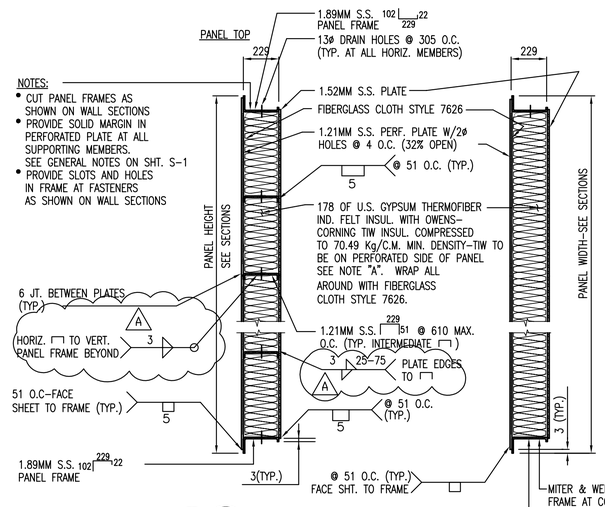

TYP. 229MM AP-3 ACOUSTIC WALL PANEL DETAILS

NOT TO SCALE

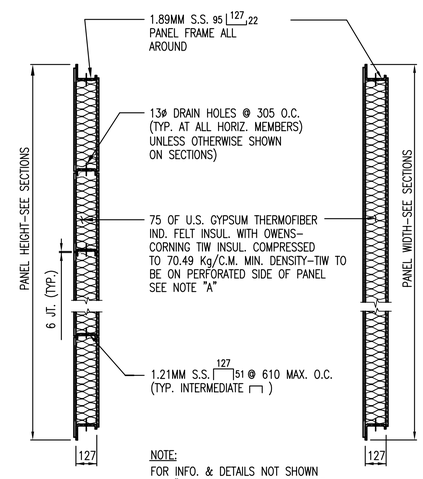

NOTE:
FOR INFO. & DETAILS NOT SHOWN SEE "TYP.229 ACOUSTIC WALL PANEL DETAILS" THIS SHEET

TYP. 127MM AP-4 ACOUSTIC WALL PANEL DETAILS

NOT TO SCALE

NOTE:
SEE SHEET S-29 FOR TYPICAL ACOUSTICAL PILLOW DETAIL

RECORD DRAWING - 11/13/2000

1	RECORD DRAWING	11/13/00	MER

REVISIONS

Burns & McDonnell
9400 Ward Parkway
Kansas City, Missouri 64114
A/E CONTRACT NO. N62470-96-C-8042

ACTIVITY - SATISFACTORY TO

DEPARTMENT OF THE NAVY
NAVAL STATION
ATLANTIC DIVISION
NAVAL FACILITIES ENGINEERING COMMAND
NORFOLK, VIRGINIA
NAVAL AIR STATION OCEANA
VIRGINIA BEACH, VIRGINIA
JET ENGINE TEST CELL MODERNIZATION
SECONDARY AIR INTAKE SECTIONS & DETAILS - 9

CODE ID. NO. 80091 SIZE D
SCALE: AS NOTED
EFD NO. 482166
STA. PROJ. NO. P-453
SPEC. NO. 05-96-6177
CONSTR. CONTR. NO. N62470-96-B-6177
NAVFAC DRAWING NO. 4382166
SHEET 51 OF 125

S-24

6177S13.DWG 07-06-1998 13:45 AGB

COPYRIGHT © 1998 BURNS & McDONNELL ENGINEERING COMPANY, INC.

ATTACHMENT 02

SHOP DRAWINGS TITLED,

“SPLITTER BAFFLE DETAILS”,

DRAWING NO. 18

BY

VITAL LINK, INCORPORATED

MARCH 1999

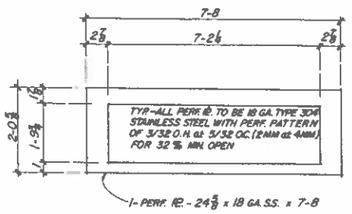

16 – COVER RE.S – MK a18

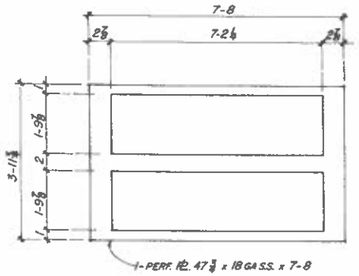

48 – COVER RE.S – MK b18

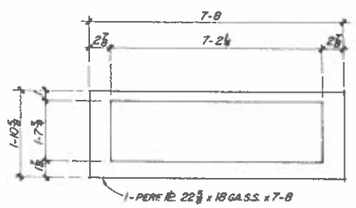

16 – COVER RE.S – MK c18

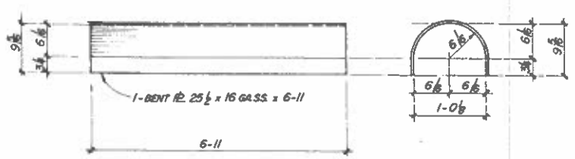

8 – LEADING EDGE COVER RE.S – MK m18

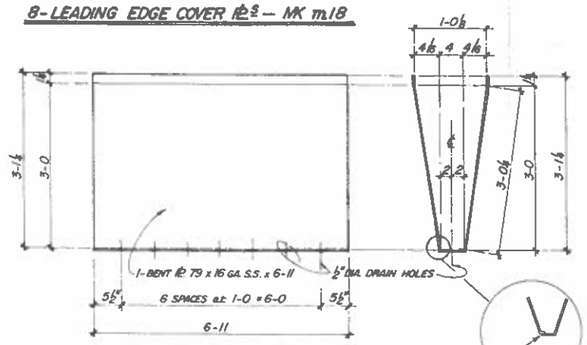

8 – TRAILING EDGE COVER RE.S – MK p18

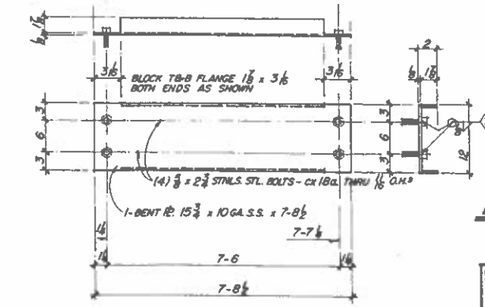

8 – TOP RE.S – MK d18

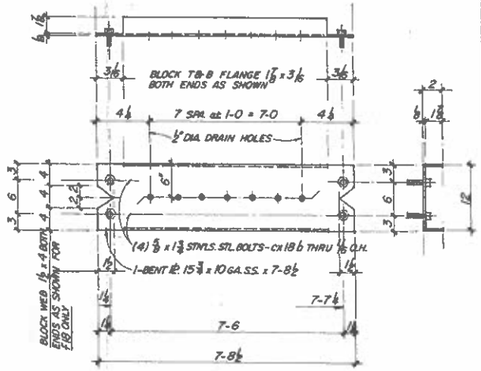

6 – BOTTOM RE.S – AS SHOWN & NOTED – MK e18

2 – BOTTOM RE.S – do. ——————— – MK f18

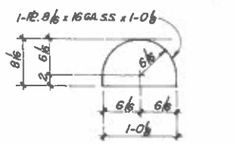

24 – STIFFENER RE. – MK n18

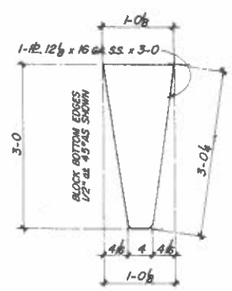

24 – STIFFENER RE.S – MK q18

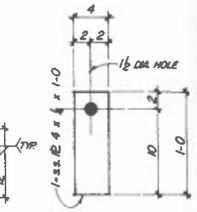

16 – LIFT RE.S – MK h18

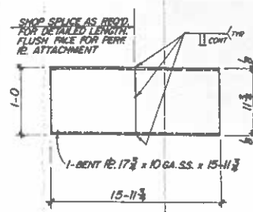

16 – SIDE RE.S – MK h18

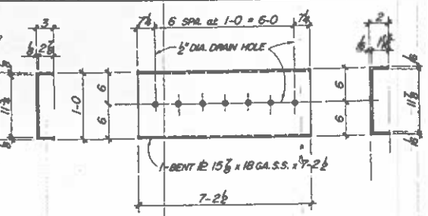

56 – INT. HORIZ. RE.S – MK g18

SECONDARY AIR INTAKE - SPLITTER BAFFLE COMPONENTS

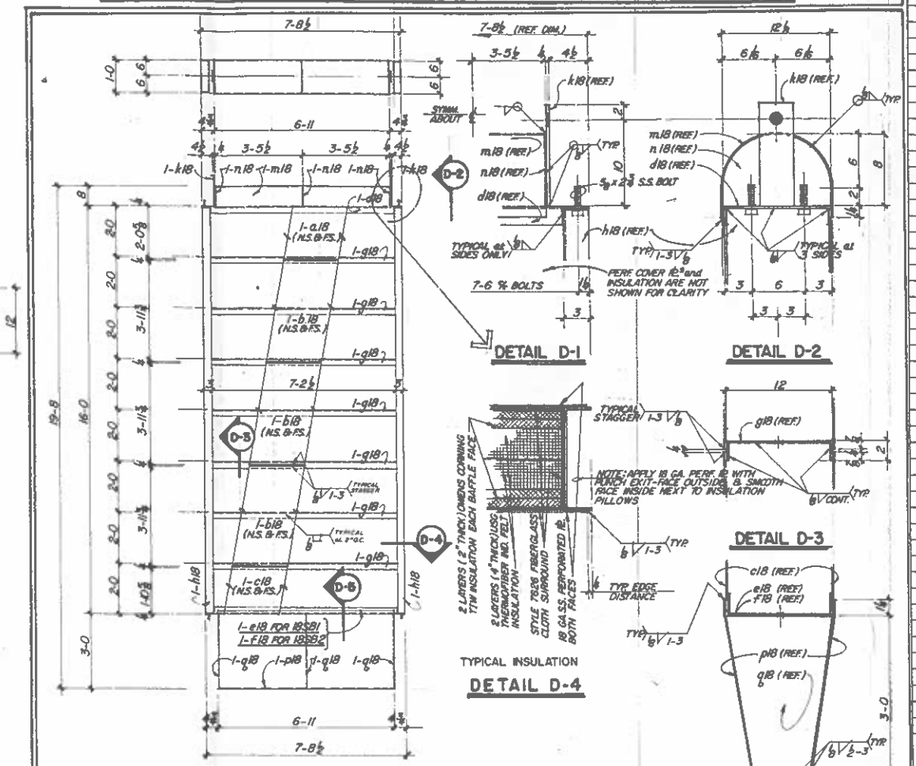

DETAIL D-1

DETAIL D-2

DETAIL D-3

DETAIL D-4

DETAIL D-5

6 – SPLITTER BAFFLES – AS SHOWN & NOTED – MK 18SB1

2 – SPLITTER BAFFLES – do. ——————— – MK 18SB2

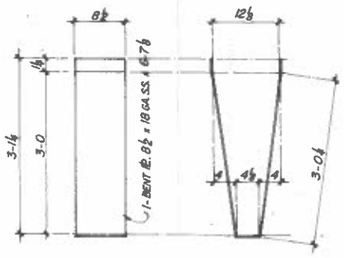

16 – BOTTOM COVER RE.S – MK 18SB4

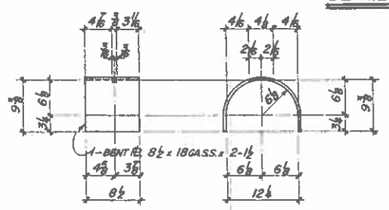

16 – TOP COVER RE.S – MK 18SB3

BILL OF MATERIAL

SHIPPING MARK	SHOP MARK	NO. PCS.	DESCRIPTION	LENGTH FT.	LENGTH IN.	REMARKS	WEIGHT	LINE
18 SB 1		6	SPLITTER BAFFLES					1
	a 18	12	Perf 18Ga (S.S.) x 24 7/8	7	8			2
	b 18	36	Perf 18Ga (S.S.) x 47 3/4	7	8			3
	c 18	12	Perf 18Ga (S.S.) x 22 7/8	7	8			4
	d 18	6	10Ga PL (S.S.) x 15 3/4	7	8 1/2	BENT		5
	cx 18a	32	5/8 x 2 3/4 S.S. Bolts					6
	e 18	6	10Ga PL (S.S.) x 15 3/4	7	8 1/2	BENT		7
	cx 18b	24	5/8 x 1 3/4 S.S. Bolts					8
	g 18	42	18 GA (S.S.) x 15 7/8	7	2 1/2	BENT		9
	h 18	12	10Ga PL (S.S.) x 17 3/4	15	11 3/4	BENT		10
	k 18	12	PL 1/4 (S.S.) x 4	1	0			11
	m 18	6	PL16 Ga (S.S.) x 25 1/2	6	11	ROLLED		12
	n 18	18	PL16 Ga (S.S.) x 8 11/16	1	0 1/8			13
	p 18	6	PL16 Ga (S.S.) x 79	6	11	BENT		14
	q 18	18	PL16 Ga (S.S.) x 12 1/8	3	0			15
								16
18 SB 2		2	SPLITTER BAFFLES					17
	a 18	4	Perf 18Ga (S.S.) x 24 7/8	7	8	304		18
	b 18	12	Perf 18Ga (S.S.) x 47 3/4	7	8	304		19
	c 18	4	Perf 18Ga (S.S.) x 22 7/8	7	8	304		20
	d 18	2	10Ga PL (S.S.) x 15 3/4	7	8 1/2	BENT		21
	cx 18a	8	5/8 x 2 3/4 S.S. Bolts			S.S.		22
	f 18	2	10Ga PL (S.S.) x 15 3/4	7	8 1/2	BENT		23
	cx 18b	8	5/8 x 1 3/4 S.S. Bolts			S.S.		24
	g 18	14	18 GA (S.S.) x 15 7/8	7	2 1/2	BENT		25
	h 18	4	10Ga PL (S.S.) x 17 3/4	15	11 3/4	BENT		26
	k 18	4	PL 1/4 (S.S.) x 4	1	0			27
	m 18	2	PL16 Ga (S.S.) x 25 1/2	6	11	ROLLED		28
	n 18	6	PL16 Ga (S.S.) x 8 11/16	1	0 1/8			29
	p 18	2	PL16 Ga (S.S.) x 79	6	11	BENT		30
	q 18	6	PL16 Ga (S.S.) x 12 1/8	3	0			31
								32
								33
18 SB 3		16	TOP COVER PLATES					34
		16	18Ga PL (S.S.) x 8 1/2	2	1 1/2	ROLLED		35
								36
								37
18 SB 4		16	BOTTOM COVER PLATES					38
		16	18Ga PL (S.S.) x 8 1/2	6	7 1/8	BENT		39
								40
								41
								42
								43
								44
								45
								46
								47
								48
								49
								50
								51
								52
								53
								54
								55
								56
								57
								58

JET ENGINE TEST CELL
NAS OCEANA
Virginia Beach, VA
N62470-96-C-6177
Spec. Section No. 13100
Burns & McDonnell Eng. Co.
Kansas City, MO
97-803-3 USOCEANA
Date Received: MAY 11 1999
Checked By: BKC
Date Checked: 7-7-99
ACTION RECOMMENDED
✓ Approved
Disapproval
Approved as Noted
Receipt Acknowledged
Comments
Resubmit
References Only

GENERAL NOTES:

1. Ref. Specification Section 13100
2. Ref. Design Drawing : 520 - 524

SHOP NOTES:

1. WELDING ELECTRODES TO BE ER308 (U.N.O.).
2. ALL MATERIAL TO BE 304 STAINLESS STEEL.
3. PERF PATTERN: 3/32" DIA @ 5/32" OC (32% OPEN)
4. PERF. TO BE INSTALLED WITH ROUGH SIDE OUT.
5. Min 1/2" RADIUS ON ALL RE-ENTRANT CORNERS.
6. ALL WELDS TO BE 3/16" CONT. FILLET (UNO).

OPEN HOLES. U.N. 13/160 SHOP PAINT

REVISION	DATE	BY	DESCRIPTION
A	4-22-99	ci	SUBMITTED FOR APPROVAL

56

This drawing is the property of VITAL LINK, INC. and is loaned on condition it is not reproduced or disclosed to a third party whole or in part without the written consent of VITAL LINK, INC.

	INITIAL	DATE
DRAWN BY	bm	2/99
CHECKED BY	JV	3/99
ENG. APPROVAL		

CUSTOMER: S W DAY CONSTRUCTION CORP

CONTRACT/P.O. NO. N62470-96-C-6177

VITAL LINK INCORPORATED
P.O. Box 303
San Felipe, Texas 77473
409/885-4151

TITLE: SPLITTER BAFFLE DETAILS

JET ENGINE TEST CELL MODERNIZATION
NAVAL AIR STATION OCEANA, VIRGINIA BEACH, VA.

SIZE D | FSCM 02V99 | DRAWING NO. 18 | REVISION A

SCALE N/A | SHEET OF | JOB NO. 246

ATTACHMENT 03

LIMITS OF WORK AND LAYDOWN AREA

1102
LIMITS OF WORK
AND LAYDOWN
AREA = 2,000 S.F.

ATTACHMENT 04

NAVY REGION MID-ATLANTIC ENVIRONMENTAL CHECKLIST

RECORD OF ENVIRONMENTAL DECISION

Date	04/22/2025
Project Title	Repair Damaged Secondary Inlet Guides
Project Location	Bldg. 1100
Installation	NAS Oceana
Project Proponent	Jason Picano
Customer Ref. No.	757-433-2630 / jason.l.picano.civ@us.navy.mil
Prepared By	Logan Miller
Contact	757-433-8989 / Logan.s.miller22.civ@us.navy.mil

1. Project Description:
This project will replace the (8) existing damaged stainless steel inlet guides with intact stainless steel guides. These guides are in place at the primary air inlet to help direct the air flow during jet engine tests within the building. High heat, along with strong air currents, have caused damage to these inlet guides. Contractor will remove the existing guides through the top of the air inlet opening at the roof and install the new guides. No ground disturbance.

2. Affected Environment: The proposed project may have impacts related to the following:

- ☐ Lead/Asbestos
- ☒ Hazardous Materials/Waste
- ☐ Stormwater/Wastewater
- ☐ Drinking Water
- ☐ Air Quality
- ☐ CR
- ☐ Archaeological Resources
- ☐ Environmental Restoration Sites
- ☒ Natural Resources
- ☐ Wetlands
- ☐ Tanks
- ☐ BAGEPA/MBTA/BASH
- ☐ CZMA
- ☐ POL
- ☐ MS4

3. Assessment/Comments:
If equipment maneuvering at project site, laydown area, or associated transit result in damage to vegetation/soil (e.g., rutting), the damage to vegetation/landscaping will require grading and replanting to bring back to original conditions utilizing native species.

Hazardous waste (HW) generation is not anticipated based on current project scope. If any material is recycled during this project, provide a copy of the shipping documentation to the environmental office. In the event HW generation is expected, contact the installation environmental office (757-433-3438) prior to work start for waste determination, management and disposal method/requirements.

4. Applicable Categorical Exclusion: In accordance with OPNAV M-5090.1, the proposed action is within the scope of the Categorical Exclusion (CATEX) listed below. None of the exclusions from reliance on a CATEX apply in this case. Therefore, the proposed action is excluded from the requirement for further NEPA analysis. The applicable CATEX is as follows:

8. Routine repair and maintenance of buildings, facilities, vessels, aircraft, ranges, and equipment associated with existing operations and activities (e.g., localized pest management activities, minor erosion control measures, painting, refitting, general building/structural repair, landscaping, grounds maintenance);

Reviewed by:

Logan Miller 22 APR 2025

Logan Miller Date

Approved by:

22Apr25

Andrea Arredondo Date