SCADA SYSTEM FOR THE INDUSTRIAL WASTE TREATMENT PLANT FA8201-09-D-0004-0005

90% SUBMITTAL

12 DECEMBER 2011

HILL AIR FORCE BASE

OGDEN, UTAH

DEPARTMENT OF THE AIR FORCE

OGDEN AIR LOGISTICS CENTER

75TH CIVIL ENGINEER GROUP

ELECTRICAL ENGINEER

BOWEN, COLLINS AND ASSOCIATES
154 EAST 14000 SOUTH
DRAPER, UTAH 84020
PHONE 801.495.2224
FAX 801.495.2225

TETRA TECH
136 EAST SOUTH TEMPLE, SUITE 910
SALT LAKE CITY, UT 84111
PHONE 801.364.1064
FAX 801.364.2012

REVISION	DATE	DESCRIPTION	BY

CIVIL/STRUCTURAL REVIEW DATE
MECHANICAL REVIEW DATE
ELECTRICAL REVIEW DATE
ARCHITECTURAL COMPATIBILITY DATE
PHYS HANDICAPINT DESIGN DATE
BASE COMPREHENSIVE PLANNER DATE
ENERGY CONSERVATION REVIEW DATE
FIRE PROTECTION REVIEW DATE
CORROSION ENGINEER DATE
CUSTOMER-FUNCTIONAL REVIEW DATE
SECURITY FORCES DATE

DEPARTMENT OF THE AIR FORCE
OGDEN AIR LOGISTICS CENTER
75TH CIVIL ENGINEER GROUP
HILL AIR FORCE BASE
OGDEN, UTAH

COVER SHEET

G001

BIOENVIRONMENTAL REVIEW DATE
ENVIRONMENTAL REVIEW DATE
SAFETY DATE
COMMUNICATIONS DATE
FIRE DEPARTMENT DATE
MAINTENANCE ENGINEERING DATE
CHIEF PROJECT MANAGEMENT DATE
CHIEF ENGINEER DATE
775 CES COMMANDER DATE
APPROVED-75 CEG DATE

A-E FIRM: BC&A/TT
DESIGNER: D. WINGER
ENGINEERING ASSISTANT: D. LAMPH
PROJECT MANAGER: D. DUNNING
DATE: 12/07/11
PROJECT NO.: FA8201-09-D-0004-0005
BASE FILE NO.: FILE NAME

VICINITY MAP

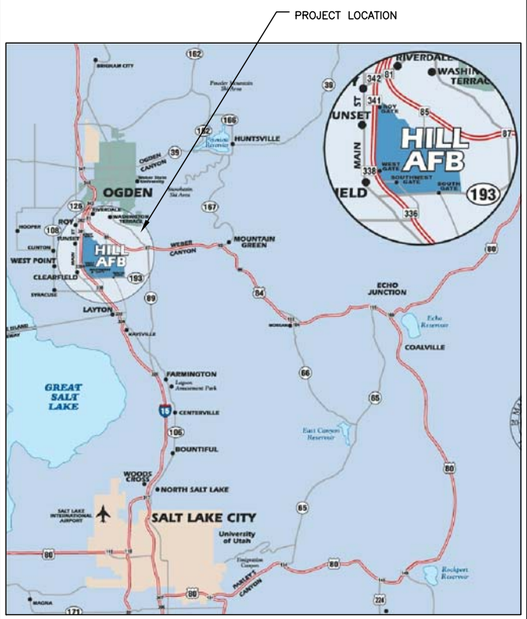

LOCATION MAP

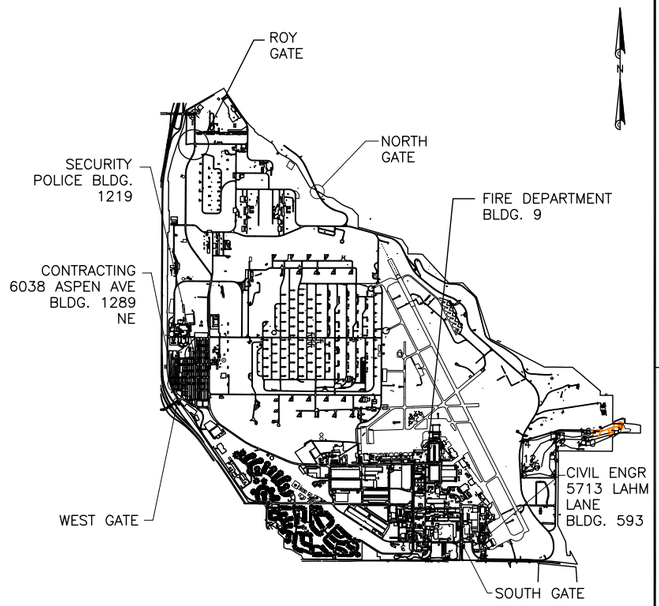

CODE CRITERIA

FIRE RESISTIVE REQUIREMENTS

BUILDING ELEMENT	
EXTERIOR BEARING WALLS	N
INTERIOR BEARING WALLS	N
STRUCTURAL FRAME	N
PARTITIONS – PERMANENT	N
SHAFT ENCLOSURES	N
FLOORS – CEILINGS/FLOORS	N
ROOFS – CEILINGS/FLOORS	N
EXTERIOR DOORS & WINDOWS	N

N = NO REQUIREMENT

CODE REVIEW CRITERIA

OCCUPANCY GROUP(S)	N
TYPE(S) OF CONSTRUCTION	NON–RATED
FIRE SPRINKERS	N
PROJECT AREA	N
SCOPE OF WORK	TENANT IMPROVEMENT
MIXED OCCUPANCY RATIO	N
NUMBER OF STORIES	N

SCOPE OF WORK SUMMARY

BRIEFLY AND WITHOUT FORCE OR EFFECT UPON THE CONTRACT DOCUMENTS, THE WORK OF THIS CONTRACT CAN BE SUMMARIZED AS FOLLOWS:
1. ELECTRICAL

HAZARDOUS MATERIALS

LEAD AND/OR ASBESTOS MAY BE PRESENT ON SITE. IF ENCOUNTERED, CONTACT HAFB PROJECT MANAGER IMMEDIATELY.

DRAWING INDEX

GENERAL
1 G001 COVER SHEET
2 G002 DRAWING INDEX, CODE CRITERIA, MAPS, ABBREVIATIONS

ELECTRICAL
3 E1600 TO BE ADDED AFTER CONSTRUCTION (AS NEEDED)
4 E1601 TO BE ADDED AFTER CONSTRUCTION (AS NEEDED)
5 E1602 TO BE ADDED AFTER CONSTRUCTION (AS NEEDED)
6 E1603 MAIN PANEL DIAGRAM
7 E1604 MAIN PANEL DIAGRAM MODULE 1
8 E1605 MAIN PANEL DIAGRAM MODULE 1
9 E1606 MAIN PANEL DIAGRAM MODULE 2
10 E1607 MAIN PANEL DIAGRAM MODULE 2
11 E1608 MAIN PANEL DIAGRAM MODULE 3
12 E1609 MAIN PANEL DIAGRAM MODULE 3
13 E1610 MAIN PANEL DIAGRAM MODULE 4
14 E1611 MAIN PANEL DIAGRAM MODULE 4
15 E1612 MAIN PANEL DIAGRAM MODULE 5
16 E1613 MAIN PANEL DIAGRAM MODULE 5
17 E1614 MAIN PANEL DIAGRAM MODULE 6
18 E1615 MAIN PANEL DIAGRAM MODULE 7
19 E1616 MAIN PANEL DIAGRAM MODULE 8
20 E1617 MAIN PANEL DIAGRAM MODULE 8
21 E1618 MAIN PANEL DIAGRAM MODULE 9
22 E1619 MAIN PANEL DIAGRAM MODULE 11
23 E1620 TO BE ADDED AFTER CONSTRUCTION (AS NEEDED)
24 E1621 TO BE ADDED AFTER CONSTRUCTION (AS NEEDED)
25 E1622 TTO PANEL DIAGRAM
26 E1623 TTO–1 PANEL DIAGRAM MODULE 1
27 E1624 TTO–1 PANEL DIAGRAM MODULE 2
28 E1625 TTO–1 PANEL DIAGRAM MODULE 3
29 E1626 TTO–1 PANEL DIAGRAM MODULE 3
30 E1627 TTO–1 PANEL DIAGRAM MODULE 4
31 E1628 TTO–1 PANEL DIAGRAM MODULE 4
32 E1629 TTO–1 PANEL DIAGRAM MODULE 5
33 E1630 TTO–1 PANEL DIAGRAM MODULE 5
34 E1631 TTO–1 PANEL DIAGRAM MODULE 6
35 E1632 TTO–2 PANEL DIAGRAM MODULE 1
36 E1633 TTO–2 PANEL DIAGRAM MODULE 2
37 E1634 TTO–2 PANEL DIAGRAM MODULE 3

ABBREVIATIONS

#	NUMBER
@	AT
℄	CENTER LINE
ø	DIAMETER
∠	ANGLE
A.B.	ANCHOR BOLT
ABV.	ABOVE
ADJ.	ADJUSTABLE
A.F.F.	ABOVE FINISH FLOOR
ALUM.	ALUMINUM
APPROX.	APPROXIMATE
ARCH.	ARCHITECTURAL
A.S.T.M.	AMERICAN SOCIETY FOR TESTING MATERIALS
BD.	BOARD
BITUM.	BITUMINOUS
BLDG.	BUILDING
B.M.	BENCHMARK
B.O.	BOTTOM OF
BOT.	BOTTOM
B.P.	BASE PLATE
BRG.	BEARING
BTWN.	BETWEEN
CER.	CERAMIC
C.J.	CONSTRUCTION JOINT
CLG.	CEILING
CLR.	CLEAR
CMU	CONCRETE MASONRY UNIT
COL.	COLUMN
CONC.	CONCRETE
CONT.	CONTINUOUS
CONST.	CONSTRUCTION
COORD.	COORDINATE
C.T.J.	CONTRACTION JOINT
DBL.	DOUBLE
DEPT	DEPARTMENT
DET.	DETAIL
DIA.	DIAMETER
DTL.	DETAIL
DWGS.	DRAWINGS
D.B.A.	DEFORMED BAR ANCHOR
EA.	EACH
E.F.	EACH FACE
E.J.	EXPANSION JOINT
EL.	ELEVATION
ELEV.	ELEVATION
EQ.	EQUAL
E.S.	EACH SIDE
E.W.	EACH WAY
EXIST.	EXISTING
EXPAN.	EXPANSION
EXT.	EXTERIOR
E.W.C.	ELECTRIC WATER COOLER
F.S.C.	FAMILY SUPPORT CENTER
F.D.	FLOOR DRAIN
FDN.	FOUNDATION
F.E.	FIRE EXTINGUISHER
F.E.C.	FIRE EXTINGUISHER CABINET
F.F.	FINISH FLOOR
FIN.	FINISH
FLR.	FLOOR
FT.	FEET
FTG.	FOOTING
F.R.F.	FRAGMENT RETENTION FILM
GA.	GAGE/GAUGE
GAL.	GALLON
GALV.	GALVANIZED
G.C.	GENERAL CONTRACTOR
GFCI	GOVERNMENT FURNISHED CONTRACTOR INSTALLED
GFGI	GOVERNMENT FURNISHED GOVERNMENT INSTALLED
GPM	GALLONS PER MINUTE
GND.	GROUND
GOVT.	GOVERNMENT
GWB.	GYPSUM WALL BOARD
GYP. BD.	GYPSUM WALL BOARD
H.A.F.B.	HILL AIR FORCE BASE
HC.	HANDICAPPED
HDW.	HARDWARE
H.M.	HOLLOW METAL
HORIZ.	HORIZONTAL
HR.	HOUR
H.S.A.	HEADED STUD ANCHOR
HT.	HEIGHT
HVAC	HEATING/VENTILATION/ AIR CONDITIONING
HYD	HYDRANT
I.D.	INSIDE DIAMETER
I.F.	INSIDE FACE
IN.	INCHES
INFO.	INFORMATION
INSUL.	INSULATION
LAV.	LAVATORY
LT.	LIGHT
LT. WT.	LIGHT WEIGHT
MAINT.	MAINTENANCE
MANUF.	MANUFACTURER
MAX.	MAXIMUM
MAT.	MATERIAL
M.C.J.	MASONRY CONTROL JOINT
MECH.	MECHANICAL
MFR.	MANUFACTURER
MIN.	MINIMUM
MISC.	MISCELLANEOUS
M.O.	MASONRY OPENING
MTL.	METAL
N.I.C.	NOT IN CONTRACT
NO.	NUMBER
N.T.S.	NOT TO SCALE
O.C.	ON CENTER
O.D.	OUTSIDE DIAMETER
O.F.	OUTSIDE FACE
O.H.	OVERHEAD
OHD	OVERHEAD DOOR
OPP.	OPPOSITE
PART.	PARTITION
P.C.F.	POUNDS PER CUBIC FOOT
PERP.	PERPENDICULAR
PL. LAM.	PLASTIC LAMINATE
P.L.F.	POUNDS PER LINEAL FOOT
PNTD.	PAINTED
PROT.	PROTECTION
P.S.F.	POUNDS PER SQUARE FOOT
P.S.I.	POUNDS PER SQUARE INCH
QTY.	QUANTITY
R.D.	ROOF DRAIN
RAD.	RADIUS
REINF.	REINFORCED
REQ'D	REQUIRED
RM.	ROOM
R.O.	ROUGH OPENING
SCHED.	SCHEDULE
SHR.	SHOWER
SHT.	SHEET
SIM.	SIMILAR
SQ.	SQUARE
SPEC.	SPECIFICATION
ST	STEEL
STC	SOUND TRANSMISSION COEF
STD.	STANDARD
STR.	STRUCTURAL
SUPER.	SUPERVISER
SUSP.	SUSPENDED
T	TEMPERED GLASS
THRU	THROUGH
T.O.	TOP OF
T.O.A.	TOP OF ASPHALT
T.O.C.	TOP OF CURB
T.O.F.	TOP OF FOOTING
T.O.S.	TOP OF SLAB OR SIDEWALK
T.O.W.	TOP OF WALL
TYP.	TYPICAL
TV	TELEVISION
U.N.O.	UNLESS NOTED OTHERWISE
VCR	VIDEO CASSETTE RECORDER
VCT	VINYL COMPOSITION TILE
VERT.	VERTICAL
VEST.	VESTIBULE
VNR.	VENEER
W/	WITH
WD.	WOOD

GRAPHIC SYMBOLS

- GRID LINES
- DETAIL SYMBOL — DETAIL NUMBER; SHEET WHERE DETAIL IS DRAWN
- BUILDING/WALL SECTION SYMBOL — SECTION REFERENCE; SHEET WHERE SECTION IS DRAWN
- ELEVATION SYMBOL — ELEVATION IDENTIFICATION; SHEET WHERE ELEVATION IS DRAWN
- 100'–0"A.F.F. / 96'–0" — ELEVATION CONTROL POINT OR DATUM POINT
- NAME 12 — ROOM NUMBER
- FINISH FLOOR
- DOOR NUMBER
- WINDOW TYPE
- KEYNOTE
- REVISION

MATERIALS/LEGEND

- CONCRETE MANSONRY UNIT
- FACE BRICK
- CONCRETE (POURED IN PLACE)
- GYPSUM BOARD OR SETTING BEDS
- INSULATION (BATT & BLANKET)
- INSULATION (RIGID/SEMI–RIGID)
- PLYWOOD
- CONTINUOUS ROUGH WOOD
- BLOCKING, ROUGH WOOD
- METAL (LARGE SCALE)
- GRAVEL
- EARTH
- QUARRY/CERAMIC TILE

DESCRIPTION	DATE	APPR	MARK

DESIGNED BY: D. WINGER
DRAWN BY: D. LAMPH
CHECKED BY: D. STEWART
PROJECT NUMBER: FA8201–09–D–0004–0005
GOVERNMENT REVIEWER:

HILL AIR FORCE BASE

DEPARTMENT OF THE AIR FORCE
OGDEN AIR LOGISTICS CENTER
75TH CIVIL ENGINEER GROUP

SCADA SYSTEM FOR THE IWTP
BUILDING 575

DRAWING INDEX, CODE CRITERIA, MAPS, ABBREVIATIONS

G-002

SHEET 2 OF 37

NOTES:

1. TERMINAL NUMBERS ARE PRELIMINARY. ACTUAL TERMINAL NUMBERS WILL BE UPDATED AFTER INSTALLATION.
2. TERM = TERMINAL NUMBER TO BE FIELD ASSIGNED DURING INSTALLATION.
3. ALL MISSING NUMBERS AND MISSING DRAWING NUMBERS TO BE FIELD ASSIGNED DURING INSTALLATION.
4. ALL FUSES TO BE 1 AMP FAST BLOW UNLESS OTHERWISE SPECIFIED.

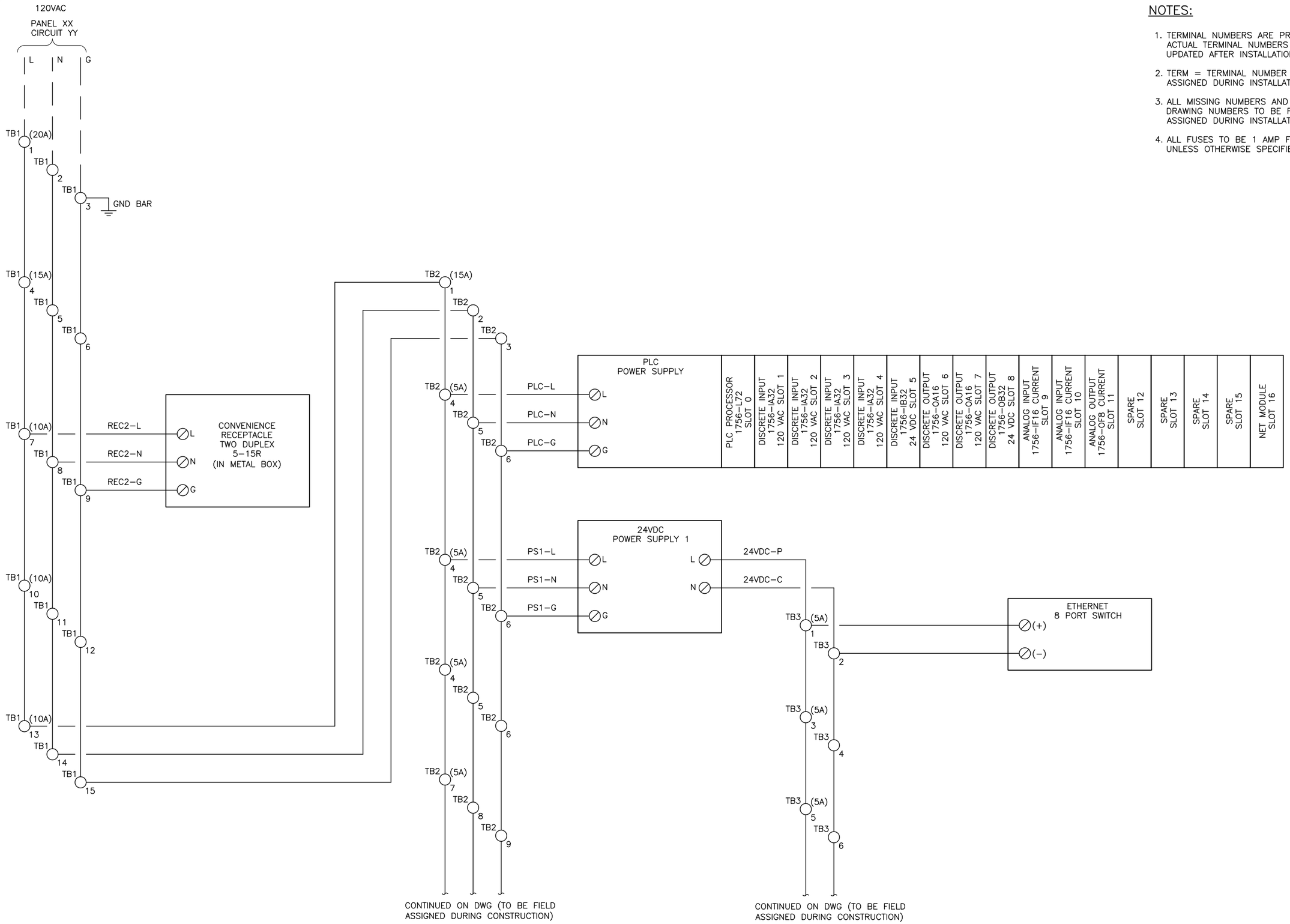

MARK	APPR	DATE	DESCRIPTION

DESIGNED BY: D. WINGER
DRAWN BY: D. LAMPH
CHECKED BY: D. STEWART
PROJECT NUMBER: FA8201-09-D-0004-0005
GOVERNMENT REVIEWER:

HILL AIR FORCE BASE

DEPARTMENT OF THE AIR FORCE
OGDEN AIR LOGISTICS CENTER
75TH CIVIL ENGINEER GROUP

SCADA SYSTEM FOR THE IWTP
BUILDING 575

MAIN PANEL DIAGRAM

EI-603

SHEET 6 OF 37

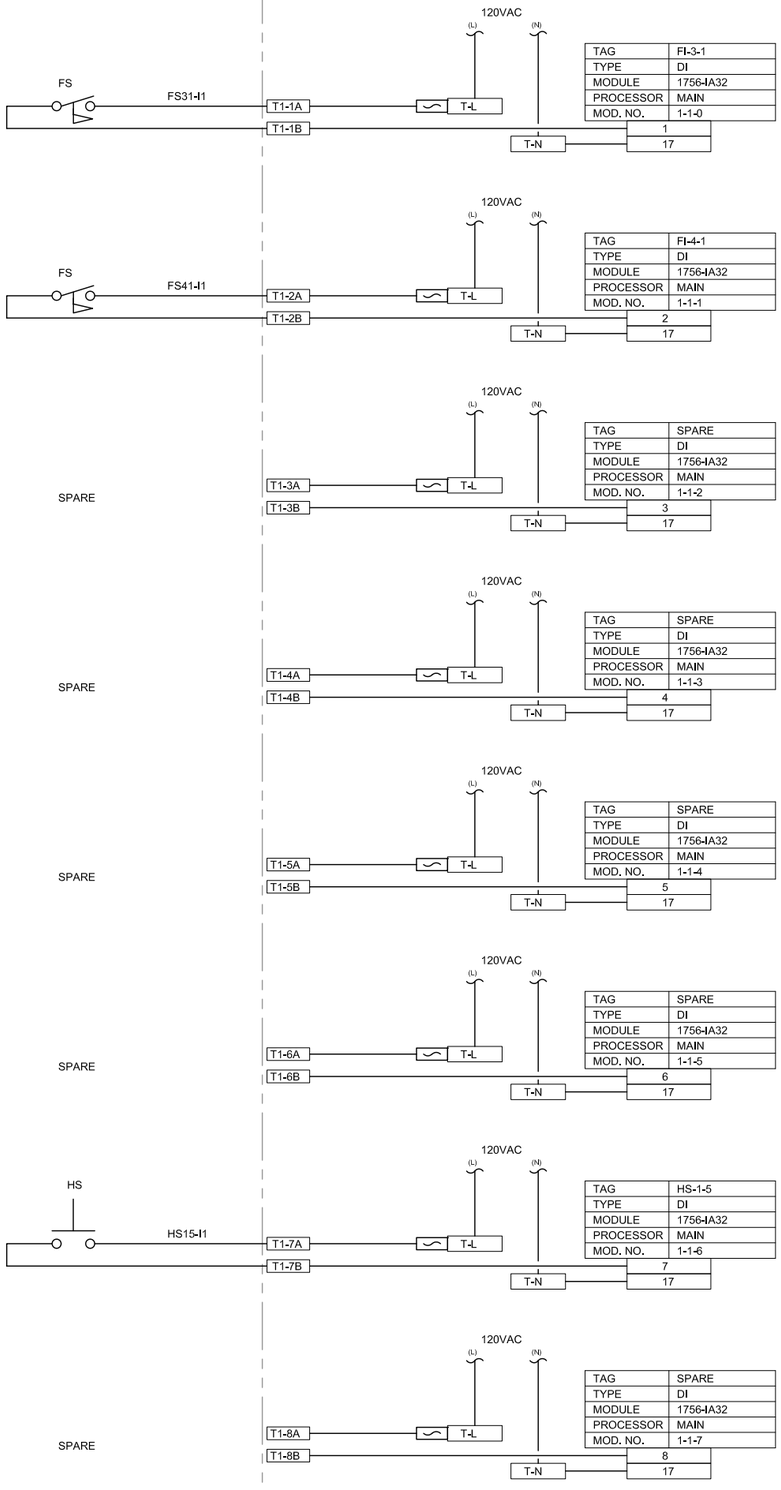

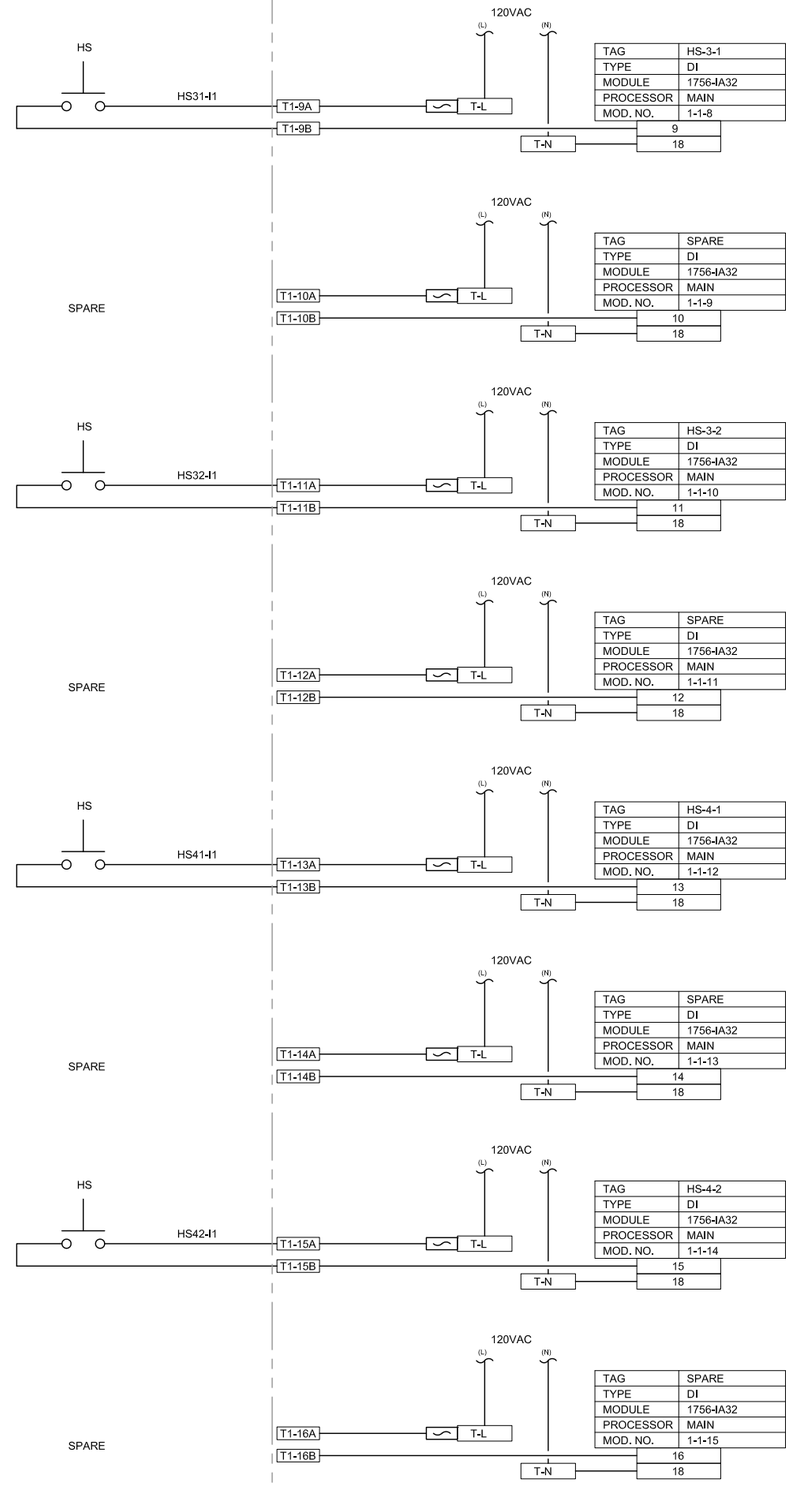

NOTES:

1. TERMINAL NUMBERS ARE PRELIMINARY. ACTUAL TERMINAL NUMBERS WILL BE UPDATED AFTER INSTALLATION.
2. TERM = TERMINAL NUMBER TO BE FIELD ASSIGNED DURING INSTALLATION.
3. ALL MISSING NUMBERS AND MISSING DRAWING NUMBERS TO BE FIELD ASSIGNED DURING INSTALLATION.
4. ALL FUSES TO BE 1 AMP FAST BLOW UNLESS OTHERWISE SPECIFIED.

MARK	APPR	DATE	DESCRIPTION

DESIGNED BY: D. WINGER
DRAWN BY: D. LAMPH
CHECKED BY: D. STEWART
PROJECT NUMBER: FA8201-09-D-0004-0005
GOVERNMENT REVIEWER:

HILL AIR FORCE BASE

DEPARTMENT OF THE AIR FORCE
OGDEN AIR LOGISTICS CENTER
75TH CIVIL ENGINEER GROUP

SCADA SYSTEM FOR THE IWTP
BUILDING 575

MAIN PANEL DIAGRAM MODULE 1

EI-604

SHEET 7 OF 37

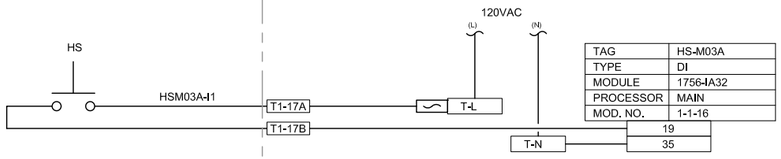

TAG	HS-M03A
TYPE	DI
MODULE	1756-IA32
PROCESSOR	MAIN
MOD. NO.	1-1-16

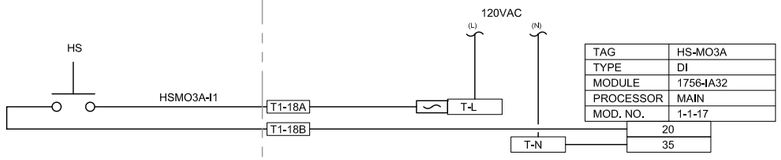

TAG	HS-MO3A
TYPE	DI
MODULE	1756-IA32
PROCESSOR	MAIN
MOD. NO.	1-1-17

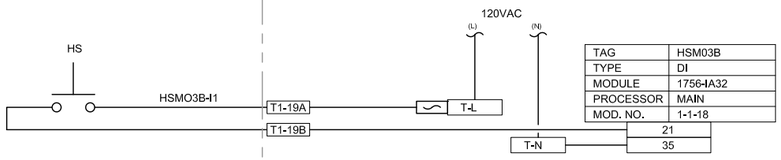

TAG	HSM03B
TYPE	DI
MODULE	1756-IA32
PROCESSOR	MAIN
MOD. NO.	1-1-18

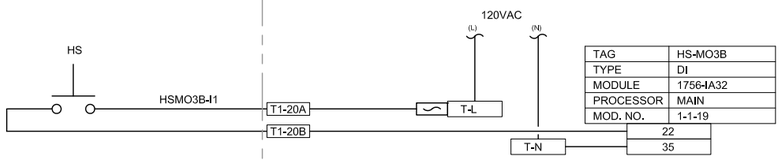

TAG	HS-MO3B
TYPE	DI
MODULE	1756-IA32
PROCESSOR	MAIN
MOD. NO.	1-1-19

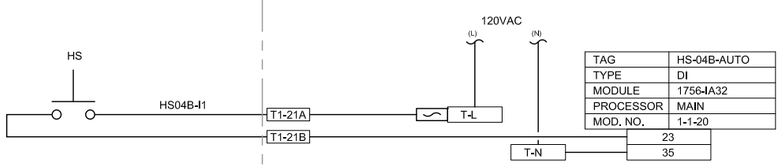

TAG	HS-04B-AUTO
TYPE	DI
MODULE	1756-IA32
PROCESSOR	MAIN
MOD. NO.	1-1-20

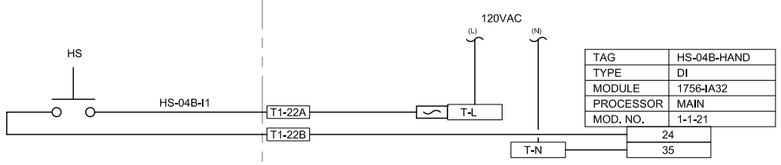

TAG	HS-04B-HAND
TYPE	DI
MODULE	1756-IA32
PROCESSOR	MAIN
MOD. NO.	1-1-21

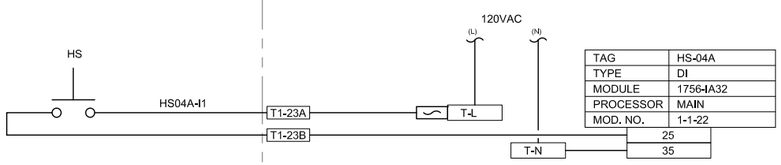

TAG	HS-04A
TYPE	DI
MODULE	1756-IA32
PROCESSOR	MAIN
MOD. NO.	1-1-22

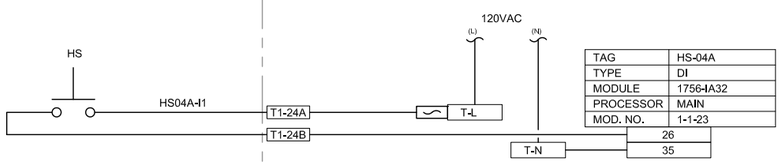

TAG	HS-04A
TYPE	DI
MODULE	1756-IA32
PROCESSOR	MAIN
MOD. NO.	1-1-23

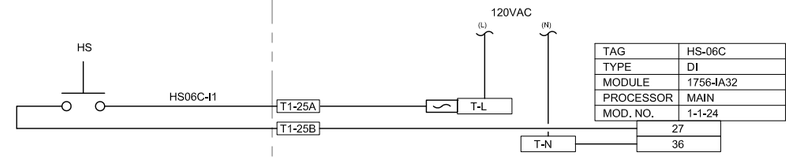

TAG	HS-06C
TYPE	DI
MODULE	1756-IA32
PROCESSOR	MAIN
MOD. NO.	1-1-24

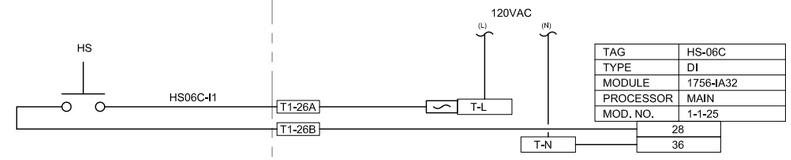

TAG	HS-06C
TYPE	DI
MODULE	1756-IA32
PROCESSOR	MAIN
MOD. NO.	1-1-25

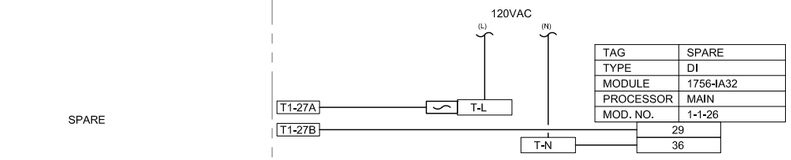

TAG	SPARE
TYPE	DI
MODULE	1756-IA32
PROCESSOR	MAIN
MOD. NO.	1-1-26

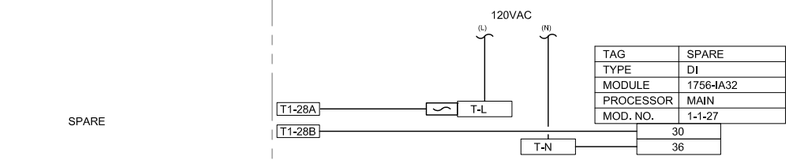

TAG	SPARE
TYPE	DI
MODULE	1756-IA32
PROCESSOR	MAIN
MOD. NO.	1-1-27

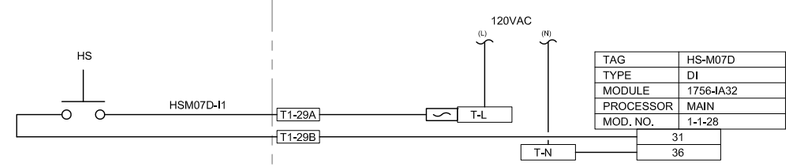

TAG	HS-M07D
TYPE	DI
MODULE	1756-IA32
PROCESSOR	MAIN
MOD. NO.	1-1-28

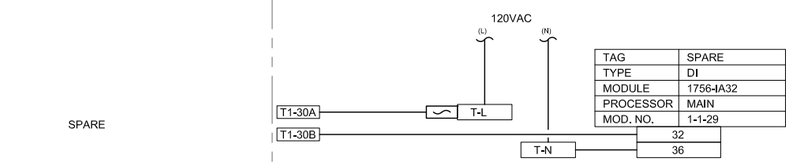

TAG	SPARE
TYPE	DI
MODULE	1756-IA32
PROCESSOR	MAIN
MOD. NO.	1-1-29

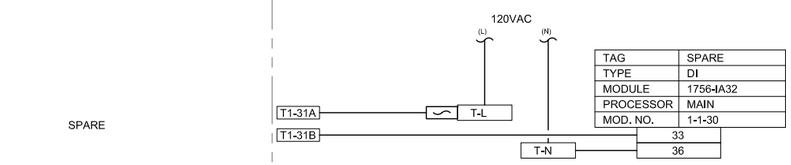

TAG	SPARE
TYPE	DI
MODULE	1756-IA32
PROCESSOR	MAIN
MOD. NO.	1-1-30

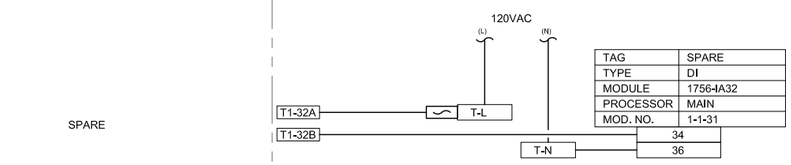

TAG	SPARE
TYPE	DI
MODULE	1756-IA32
PROCESSOR	MAIN
MOD. NO.	1-1-31

NOTES:

1. TERMINAL NUMBERS ARE PRELIMINARY. ACTUAL TERMINAL NUMBERS WILL BE UPDATED AFTER INSTALLATION.
2. TERM = TERMINAL NUMBER TO BE FIELD ASSIGNED DURING INSTALLATION.
3. ALL MISSING NUMBERS AND MISSING DRAWING NUMBERS TO BE FIELD ASSIGNED DURING INSTALLATION.
4. ALL FUSES TO BE 1 AMP FAST BLOW UNLESS OTHERWISE SPECIFIED.

DESCRIPTION	DATE	APPR	MARK

DESIGNED BY: D. WINGER
DRAWN BY: D. LAMPH
CHECKED BY: D. STEWART
PROJECT NUMBER: FA8201-09-D-0004-0005
GOVERNMENT REVIEWER:

HILL AIR FORCE BASE

DEPARTMENT OF THE AIR FORCE
OGDEN AIR LOGISTICS CENTER
75TH CIVIL ENGINEER GROUP

SCADA SYSTEM FOR THE IWTP
BUILDING 575

MAIN PANEL DIAGRAM MODULE 1

EI-605

SHEET 8 OF 37

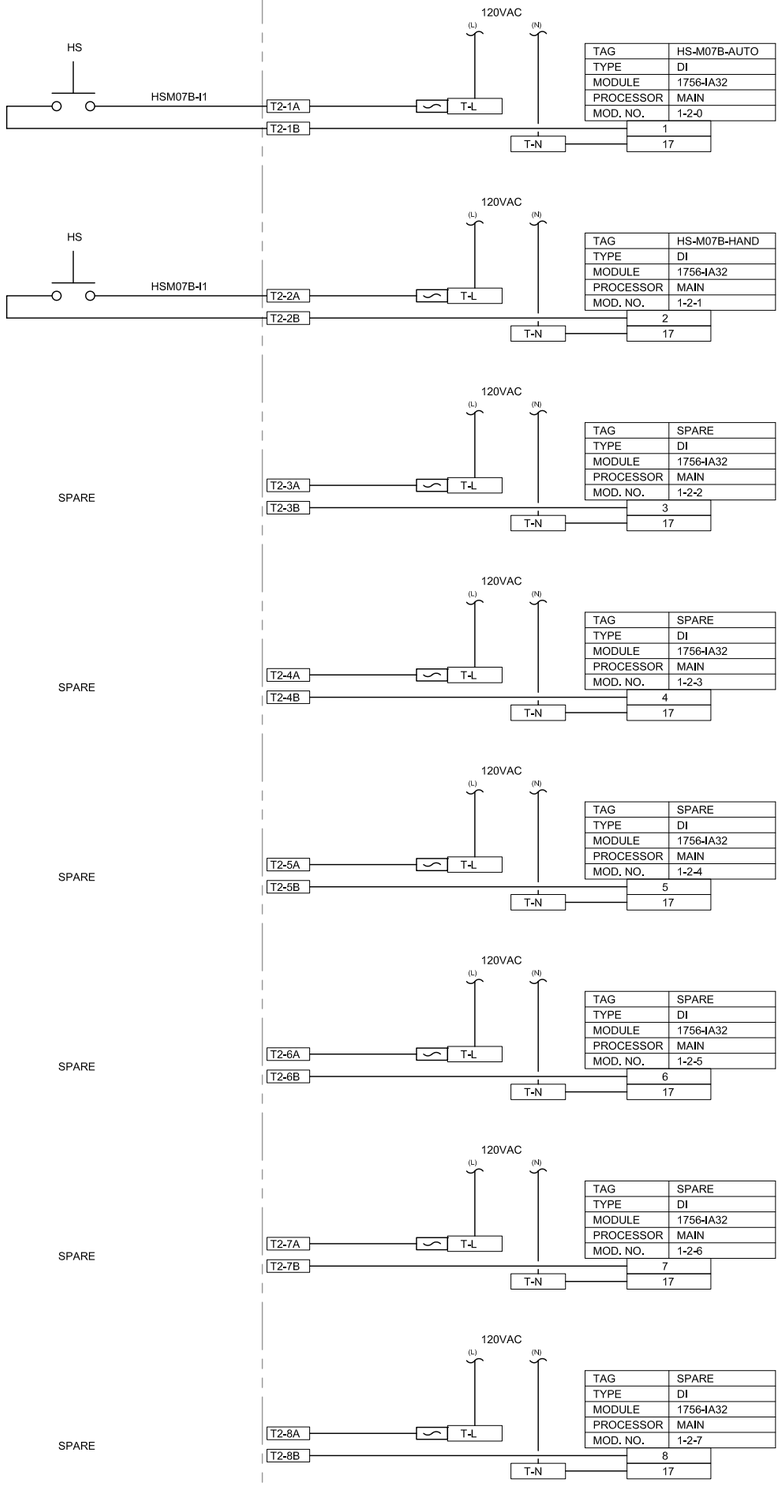

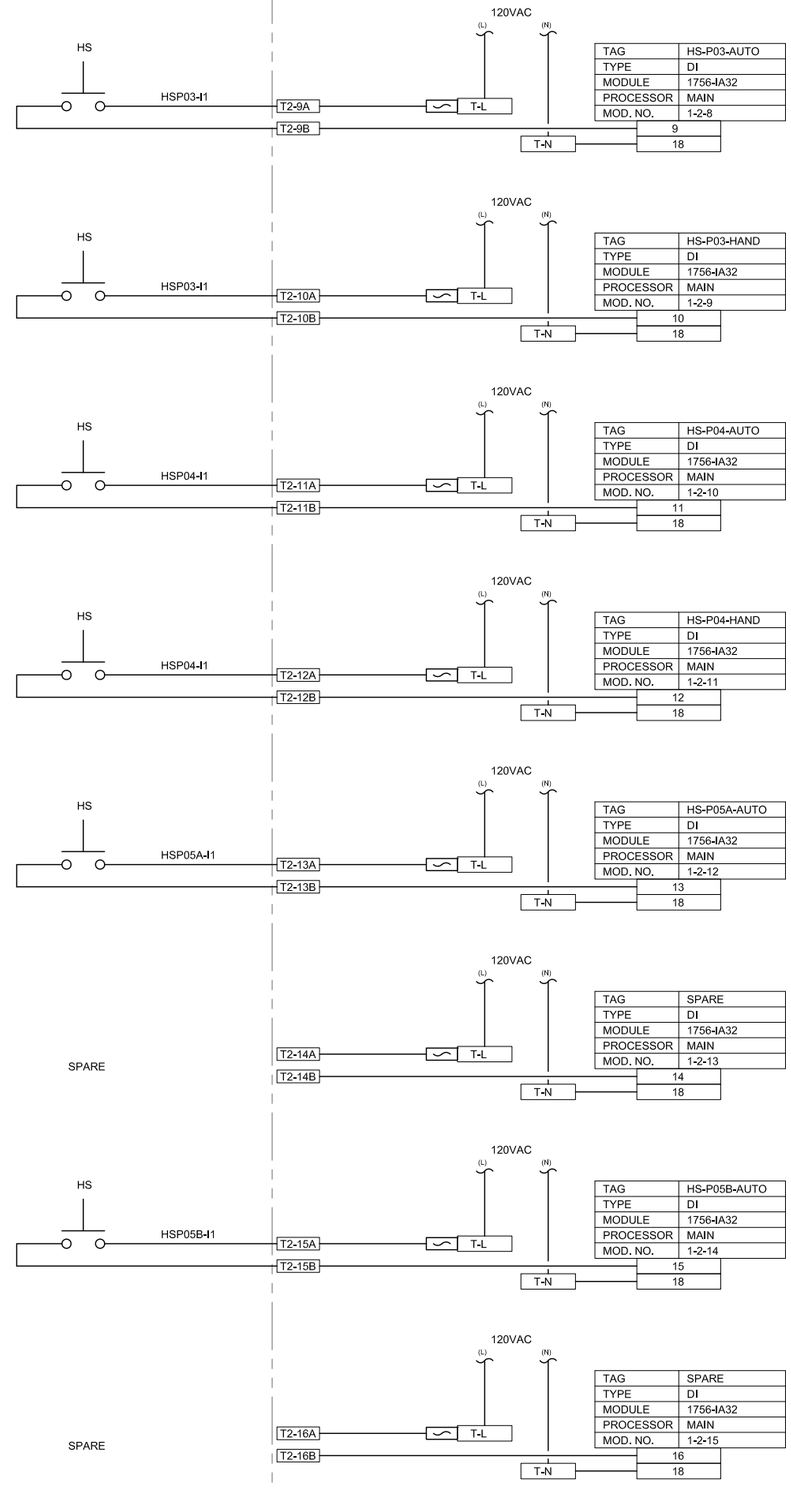

NOTES:

1. TERMINAL NUMBERS ARE PRELIMINARY. ACTUAL TERMINAL NUMBERS WILL BE UPDATED AFTER INSTALLATION.
2. TERM = TERMINAL NUMBER TO BE FIELD ASSIGNED DURING INSTALLATION.
3. ALL MISSING NUMBERS AND MISSING DRAWING NUMBERS TO BE FIELD ASSIGNED DURING INSTALLATION.
4. ALL FUSES TO BE 1 AMP FAST BLOW UNLESS OTHERWISE SPECIFIED.

DESCRIPTION	DATE	APPR	MARK

DESIGNED BY: D. WINGER
DRAWN BY: D. LAMPH
CHECKED BY: D. STEWART
PROJECT NUMBER: FAB201-09-D-0004-0005
GOVERNMENT REVIEWER:

HILL AIR FORCE BASE

DEPARTMENT OF THE AIR FORCE
OGDEN AIR LOGISTICS CENTER
75TH CIVIL ENGINEER GROUP

SCADA SYSTEM FOR THE IWTP
BUILDING 575

MAIN PANEL DIAGRAM MODULE 2

EI-606

SHEET 9 OF 37

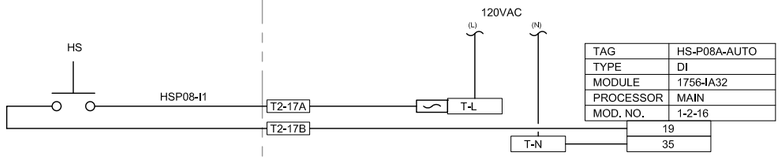

TAG	HS-P08A-AUTO
TYPE	DI
MODULE	1756-IA32
PROCESSOR	MAIN
MOD. NO.	1-2-16

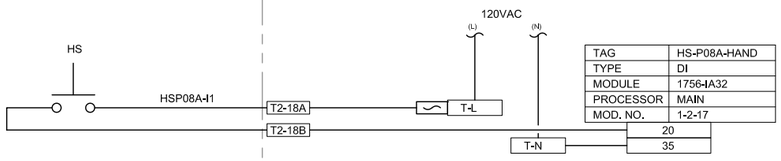

TAG	HS-P08A-HAND
TYPE	DI
MODULE	1756-IA32
PROCESSOR	MAIN
MOD. NO.	1-2-17

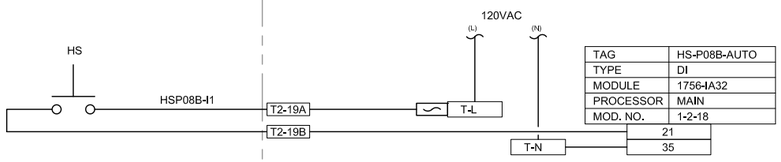

TAG	HS-P08B-AUTO
TYPE	DI
MODULE	1756-IA32
PROCESSOR	MAIN
MOD. NO.	1-2-18

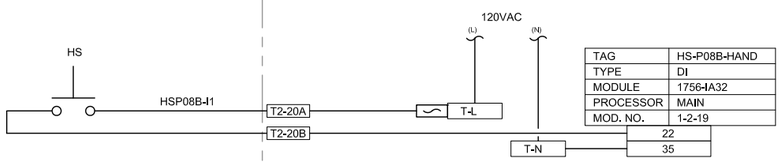

TAG	HS-P08B-HAND
TYPE	DI
MODULE	1756-IA32
PROCESSOR	MAIN
MOD. NO.	1-2-19

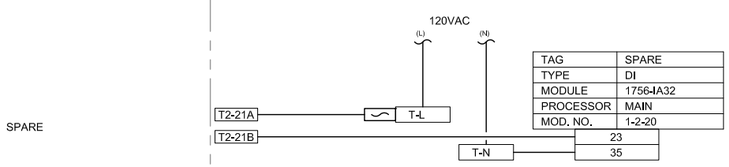

TAG	SPARE
TYPE	DI
MODULE	1756-IA32
PROCESSOR	MAIN
MOD. NO.	1-2-20

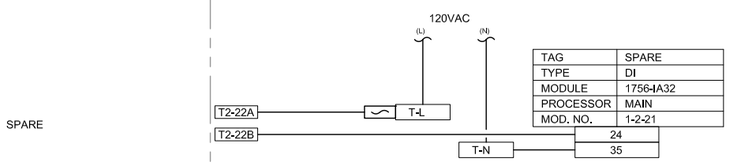

TAG	SPARE
TYPE	DI
MODULE	1756-IA32
PROCESSOR	MAIN
MOD. NO.	1-2-21

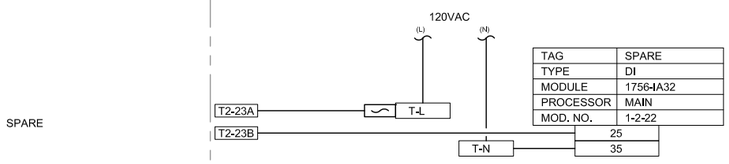

TAG	SPARE
TYPE	DI
MODULE	1756-IA32
PROCESSOR	MAIN
MOD. NO.	1-2-22

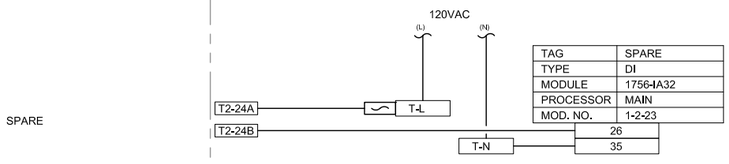

TAG	SPARE
TYPE	DI
MODULE	1756-IA32
PROCESSOR	MAIN
MOD. NO.	1-2-23

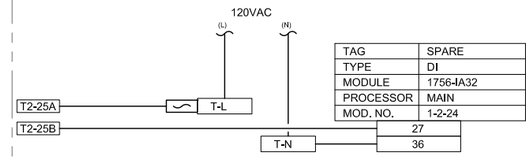

TAG	SPARE
TYPE	DI
MODULE	1756-IA32
PROCESSOR	MAIN
MOD. NO.	1-2-24

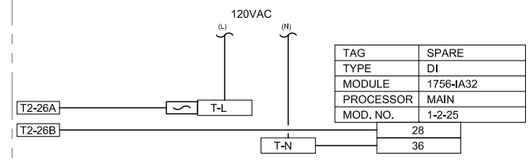

TAG	SPARE
TYPE	DI
MODULE	1756-IA32
PROCESSOR	MAIN
MOD. NO.	1-2-25

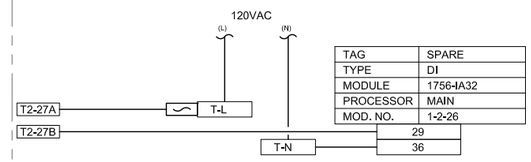

TAG	SPARE
TYPE	DI
MODULE	1756-IA32
PROCESSOR	MAIN
MOD. NO.	1-2-26

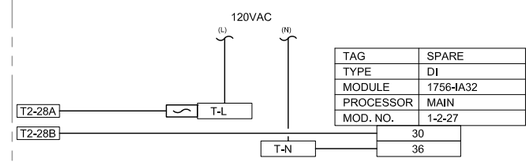

TAG	SPARE
TYPE	DI
MODULE	1756-IA32
PROCESSOR	MAIN
MOD. NO.	1-2-27

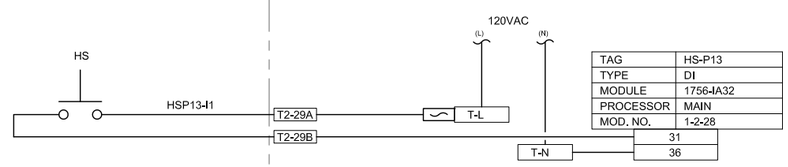

TAG	HS-P13
TYPE	DI
MODULE	1756-IA32
PROCESSOR	MAIN
MOD. NO.	1-2-28

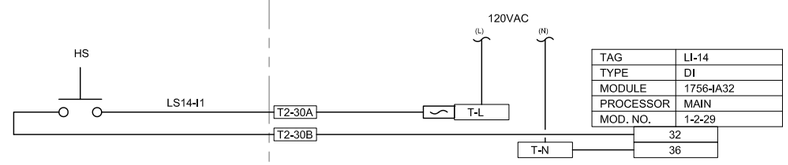

TAG	LI-14
TYPE	DI
MODULE	1756-IA32
PROCESSOR	MAIN
MOD. NO.	1-2-29

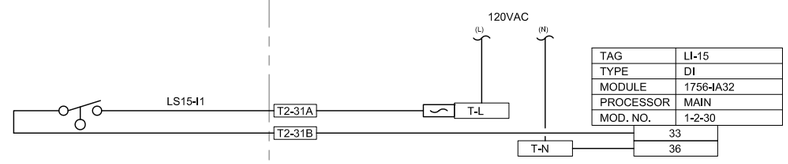

TAG	LI-15
TYPE	DI
MODULE	1756-IA32
PROCESSOR	MAIN
MOD. NO.	1-2-30

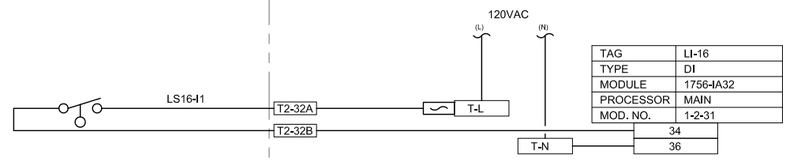

TAG	LI-16
TYPE	DI
MODULE	1756-IA32
PROCESSOR	MAIN
MOD. NO.	1-2-31

NOTES:

1. TERMINAL NUMBERS ARE PRELIMINARY. ACTUAL TERMINAL NUMBERS WILL BE UPDATED AFTER INSTALLATION.
2. TERM = TERMINAL NUMBER TO BE FIELD ASSIGNED DURING INSTALLATION.
3. ALL MISSING NUMBERS AND MISSING DRAWING NUMBERS TO BE FIELD ASSIGNED DURING INSTALLATION.
4. ALL FUSES TO BE 1 AMP FAST BLOW UNLESS OTHERWISE SPECIFIED.

MARK	APPR	DATE	DESCRIPTION

DESIGNED BY: D. WINGER
DRAWN BY: D. LAMPH
CHECKED BY: D. STEWART
PROJECT NUMBER: FA8201-09-D-0004-0005
GOVERNMENT REVIEWER:

HILL AIR FORCE BASE

DEPARTMENT OF THE AIR FORCE
OGDEN AIR LOGISTICS CENTER
75TH CIVIL ENGINEER GROUP

SCADA SYSTEM FOR THE IWTP
BUILDING 575

MAIN PANEL DIAGRAM MODULE 2

EI-607

SHEET 10 OF 37

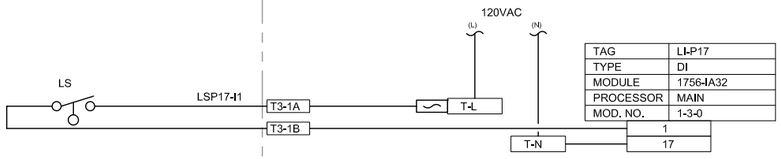

TAG	LI-P17
TYPE	DI
MODULE	1756-IA32
PROCESSOR	MAIN
MOD. NO.	1-3-0

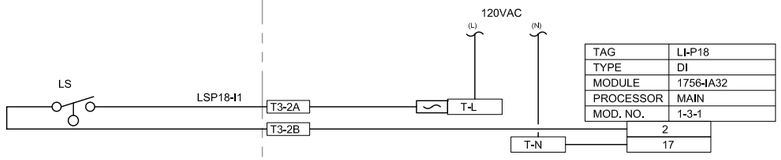

TAG	LI-P18
TYPE	DI
MODULE	1756-IA32
PROCESSOR	MAIN
MOD. NO.	1-3-1

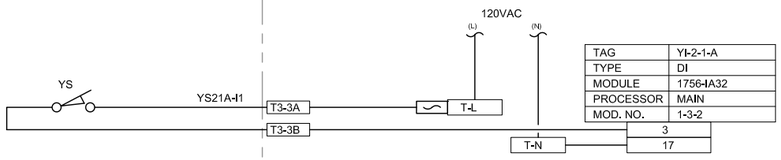

TAG	YI-2-1-A
TYPE	DI
MODULE	1756-IA32
PROCESSOR	MAIN
MOD. NO.	1-3-2

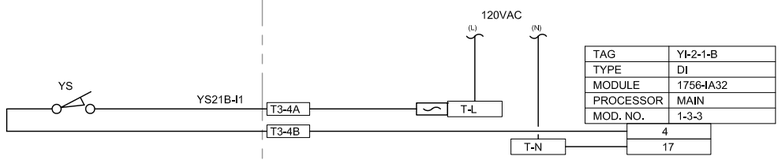

TAG	YI-2-1-B
TYPE	DI
MODULE	1756-IA32
PROCESSOR	MAIN
MOD. NO.	1-3-3

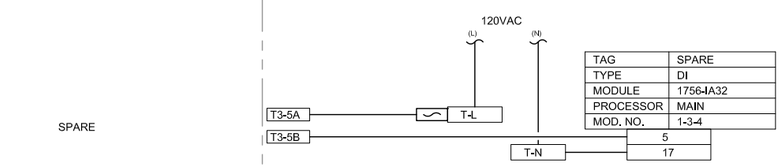

TAG	SPARE
TYPE	DI
MODULE	1756-IA32
PROCESSOR	MAIN
MOD. NO.	1-3-4

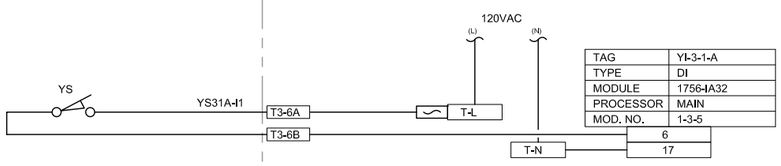

TAG	YI-3-1-A
TYPE	DI
MODULE	1756-IA32
PROCESSOR	MAIN
MOD. NO.	1-3-5

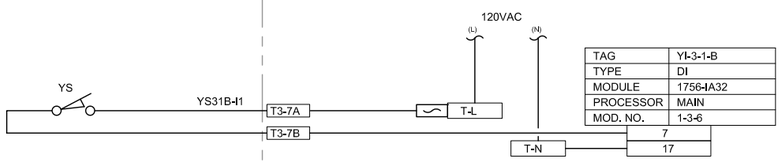

TAG	YI-3-1-B
TYPE	DI
MODULE	1756-IA32
PROCESSOR	MAIN
MOD. NO.	1-3-6

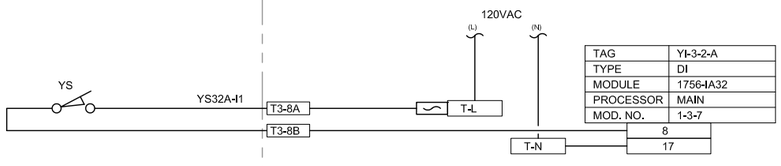

TAG	YI-3-2-A
TYPE	DI
MODULE	1756-IA32
PROCESSOR	MAIN
MOD. NO.	1-3-7

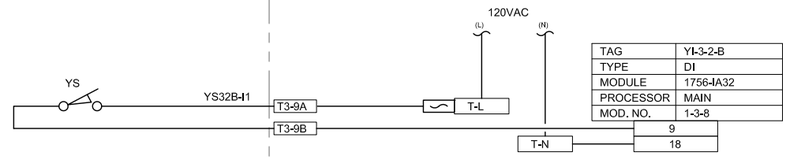

TAG	YI-3-2-B
TYPE	DI
MODULE	1756-IA32
PROCESSOR	MAIN
MOD. NO.	1-3-8

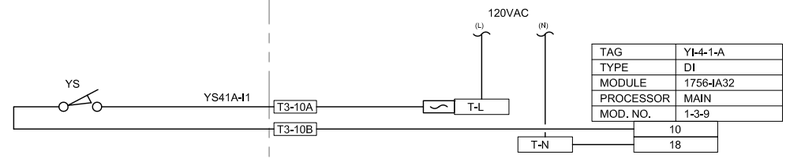

TAG	YI-4-1-A
TYPE	DI
MODULE	1756-IA32
PROCESSOR	MAIN
MOD. NO.	1-3-9

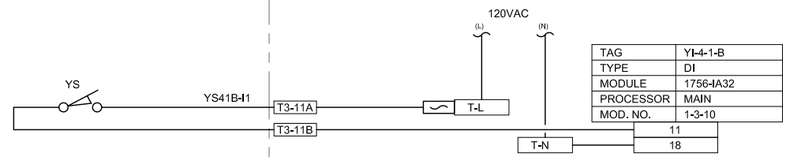

TAG	YI-4-1-B
TYPE	DI
MODULE	1756-IA32
PROCESSOR	MAIN
MOD. NO.	1-3-10

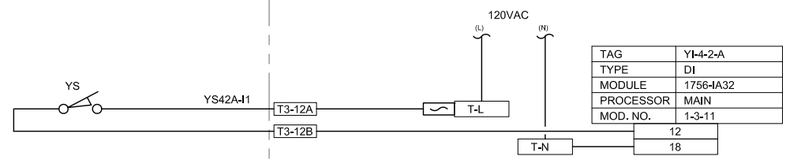

TAG	YI-4-2-A
TYPE	DI
MODULE	1756-IA32
PROCESSOR	MAIN
MOD. NO.	1-3-11

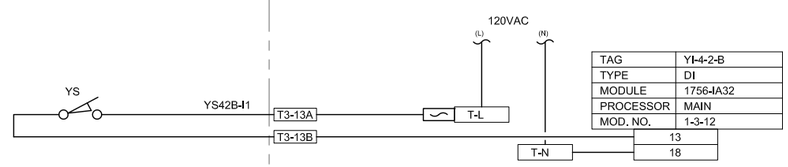

TAG	YI-4-2-B
TYPE	DI
MODULE	1756-IA32
PROCESSOR	MAIN
MOD. NO.	1-3-12

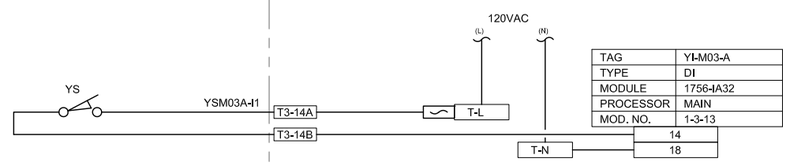

TAG	YI-M03-A
TYPE	DI
MODULE	1756-IA32
PROCESSOR	MAIN
MOD. NO.	1-3-13

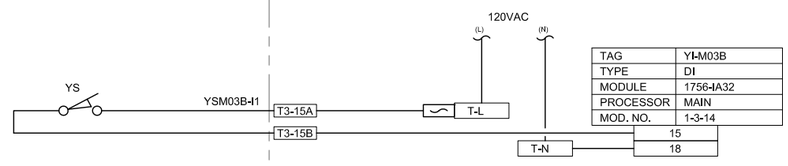

TAG	YI-M03B
TYPE	DI
MODULE	1756-IA32
PROCESSOR	MAIN
MOD. NO.	1-3-14

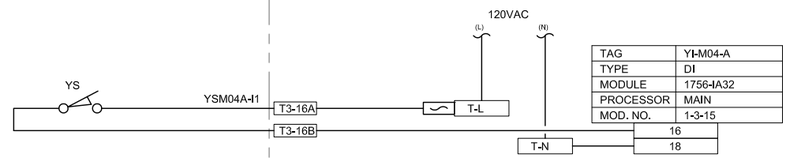

TAG	YI-M04-A
TYPE	DI
MODULE	1756-IA32
PROCESSOR	MAIN
MOD. NO.	1-3-15

NOTES:

1. TERMINAL NUMBERS ARE PRELIMINARY. ACTUAL TERMINAL NUMBERS WILL BE UPDATED AFTER INSTALLATION.
2. TERM = TERMINAL NUMBER TO BE FIELD ASSIGNED DURING INSTALLATION.
3. ALL MISSING NUMBERS AND MISSING DRAWING NUMBERS TO BE FIELD ASSIGNED DURING INSTALLATION.
4. ALL FUSES TO BE 1 AMP FAST BLOW UNLESS OTHERWISE SPECIFIED.

DESCRIPTION	DATE	APPR	MARK

DESIGNED BY: D. WINGER
DRAWN BY: D. LAMPH
CHECKED BY: D. STEWART
PROJECT NUMBER: FA8201-09-D-0004-0005
GOVERNMENT REVIEWER:

HILL AIR FORCE BASE

DEPARTMENT OF THE AIR FORCE
OGDEN AIR LOGISTICS CENTER
75TH CIVIL ENGINEER GROUP

SCADA SYSTEM FOR THE IWTP
BUILDING 575

MAIN PANEL DIAGRAM MODULE 3

EI-608

SHEET 11 OF 37

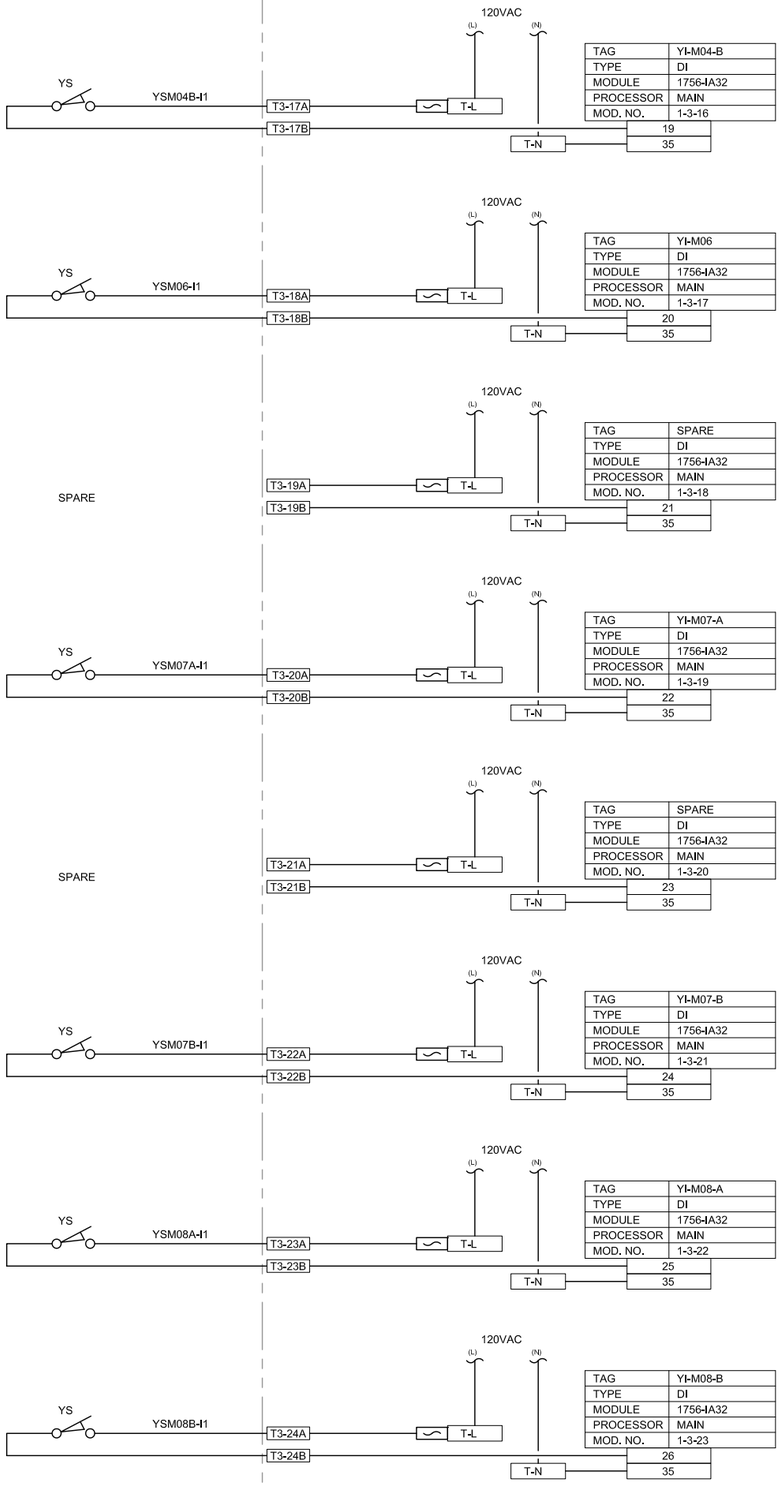

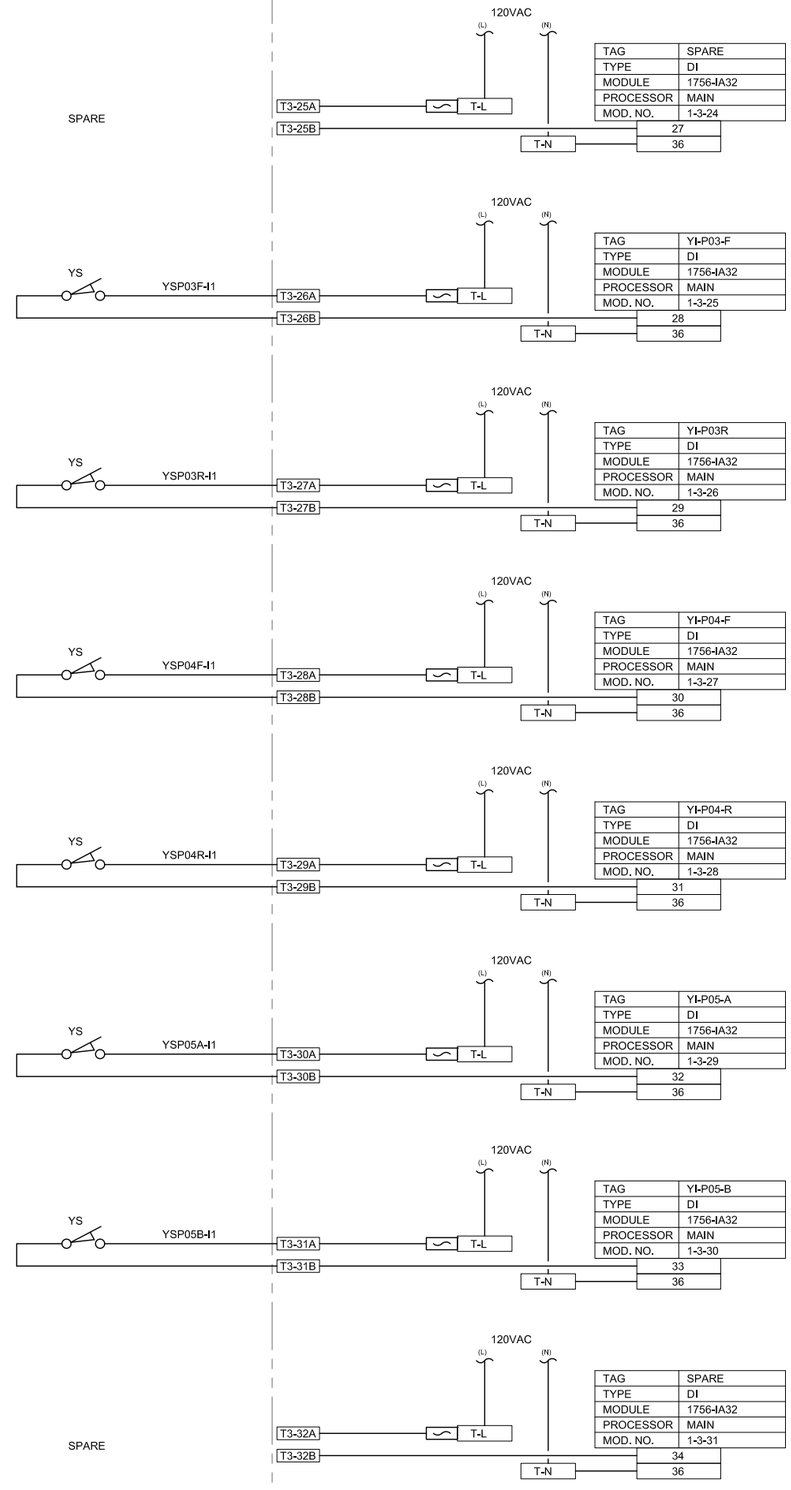

NOTES:

1. TERMINAL NUMBERS ARE PRELIMINARY. ACTUAL TERMINAL NUMBERS WILL BE UPDATED AFTER INSTALLATION.
2. TERM = TERMINAL NUMBER TO BE FIELD ASSIGNED DURING INSTALLATION.
3. ALL MISSING NUMBERS AND MISSING DRAWING NUMBERS TO BE FIELD ASSIGNED DURING INSTALLATION.
4. ALL FUSES TO BE 1 AMP FAST BLOW UNLESS OTHERWISE SPECIFIED.

MARK	APPR	DATE	DESCRIPTION

DESIGNED BY: D. WINGER
DRAWN BY: D. LAMPH
CHECKED BY: D. STEWART
PROJECT NUMBER: FA8201-09-D-0004-0005
GOVERNMENT REVIEWER:

HILL AIR FORCE BASE

DEPARTMENT OF THE AIR FORCE
OGDEN AIR LOGISTICS CENTER
75TH CIVIL ENGINEER GROUP

SCADA SYSTEM FOR THE IWTP
BUILDING 575

MAIN PANEL DIAGRAM MODULE 3

EI-609

SHEET 12 OF 37

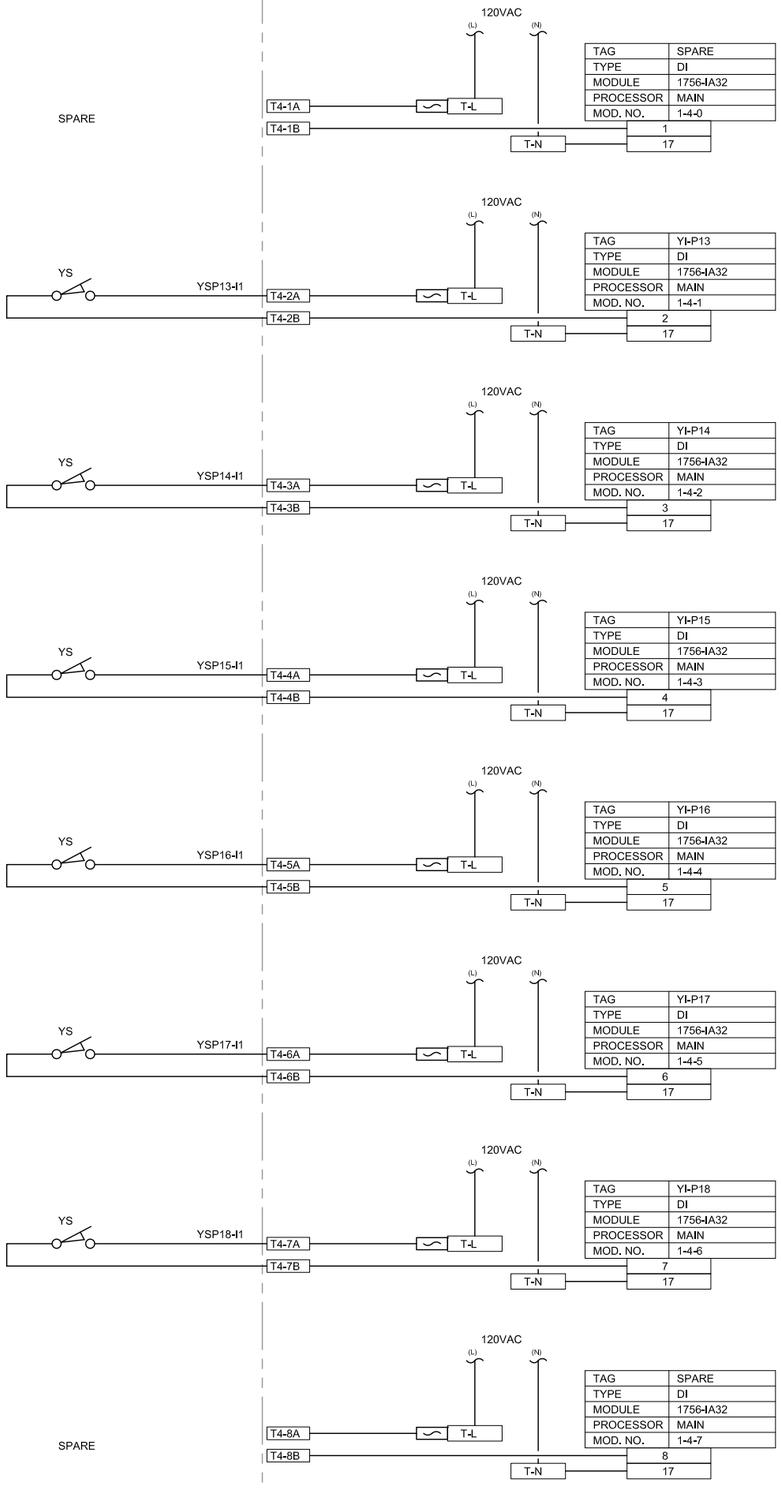

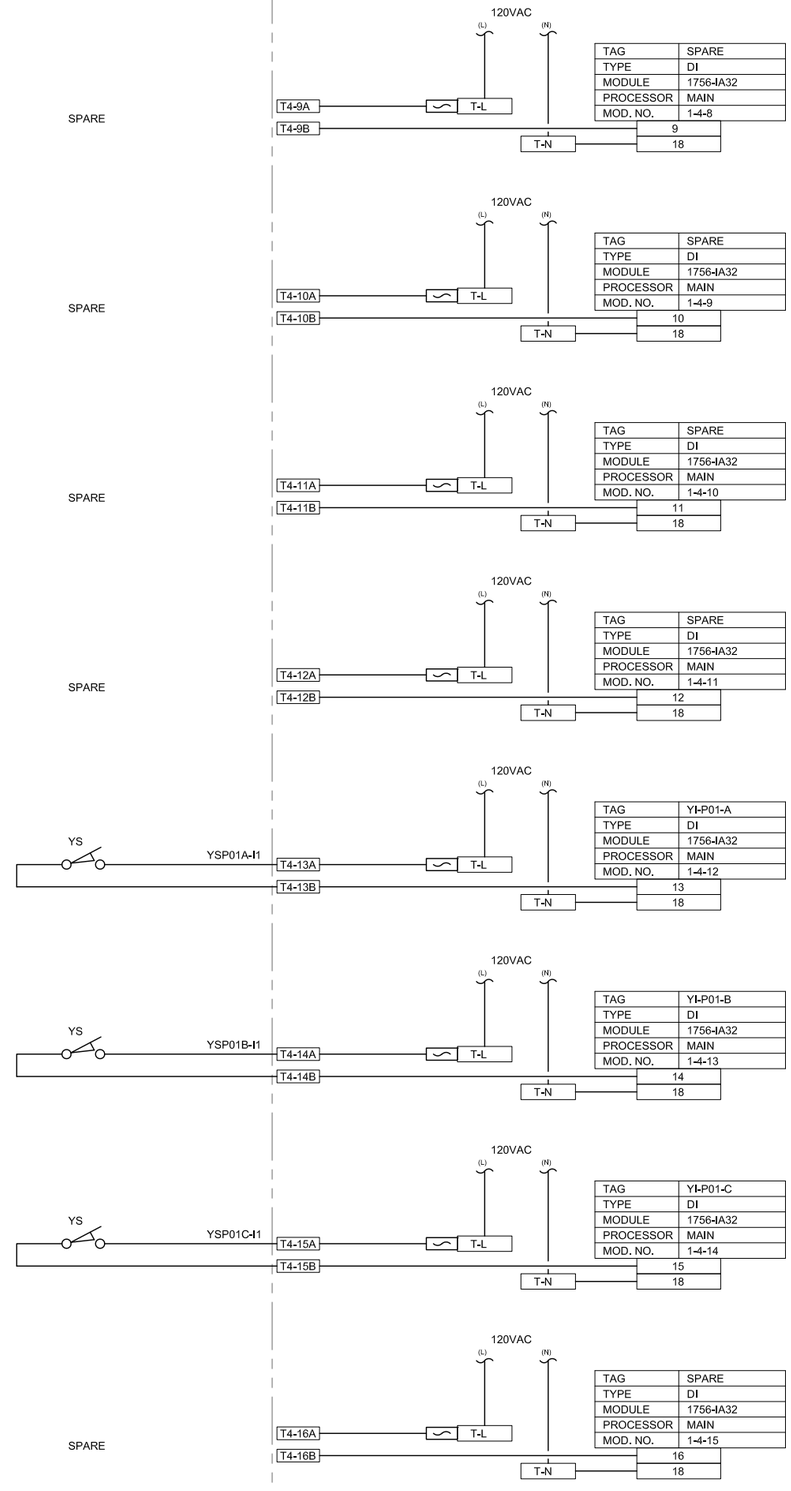

NOTES:

1. TERMINAL NUMBERS ARE PRELIMINARY. ACTUAL TERMINAL NUMBERS WILL BE UPDATED AFTER INSTALLATION.
2. TERM = TERMINAL NUMBER TO BE FIELD ASSIGNED DURING INSTALLATION.
3. ALL MISSING NUMBERS AND MISSING DRAWING NUMBERS TO BE FIELD ASSIGNED DURING INSTALLATION.
4. ALL FUSES TO BE 1 AMP FAST BLOW UNLESS OTHERWISE SPECIFIED.

MARK	APPR	DATE	DESCRIPTION

DESIGNED BY: D. WINGER
DRAWN BY: D. LAMPH
CHECKED BY: D. STEWART
PROJECT NUMBER: FA8201-09-D-0004-0005
GOVERNMENT REVIEWER:

HILL AIR FORCE BASE

DEPARTMENT OF THE AIR FORCE
OGDEN AIR LOGISTICS CENTER
75TH CIVIL ENGINEER GROUP

SCADA SYSTEM FOR THE IWTP
BUILDING 575

MAIN PANEL DIAGRAM MODULE 4

EI-610

SHEET 13 OF 37

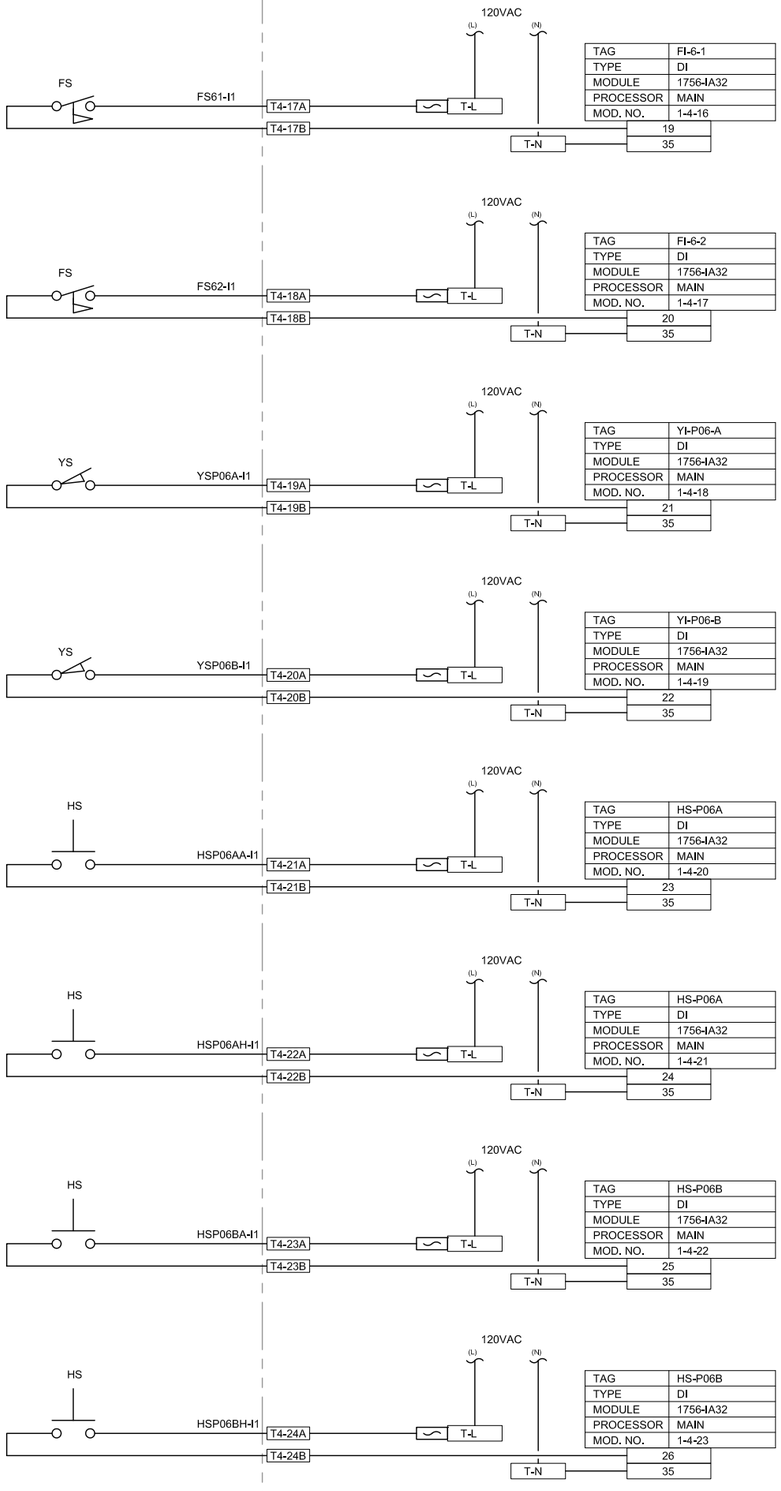

TAG	FI-6-1
TYPE	DI
MODULE	1756-IA32
PROCESSOR	MAIN
MOD. NO.	1-4-16

TAG	FI-6-2
TYPE	DI
MODULE	1756-IA32
PROCESSOR	MAIN
MOD. NO.	1-4-17

TAG	YI-P06-A
TYPE	DI
MODULE	1756-IA32
PROCESSOR	MAIN
MOD. NO.	1-4-18

TAG	YI-P06-B
TYPE	DI
MODULE	1756-IA32
PROCESSOR	MAIN
MOD. NO.	1-4-19

TAG	HS-P06A
TYPE	DI
MODULE	1756-IA32
PROCESSOR	MAIN
MOD. NO.	1-4-20

TAG	HS-P06A
TYPE	DI
MODULE	1756-IA32
PROCESSOR	MAIN
MOD. NO.	1-4-21

TAG	HS-P06B
TYPE	DI
MODULE	1756-IA32
PROCESSOR	MAIN
MOD. NO.	1-4-22

TAG	HS-P06B
TYPE	DI
MODULE	1756-IA32
PROCESSOR	MAIN
MOD. NO.	1-4-23

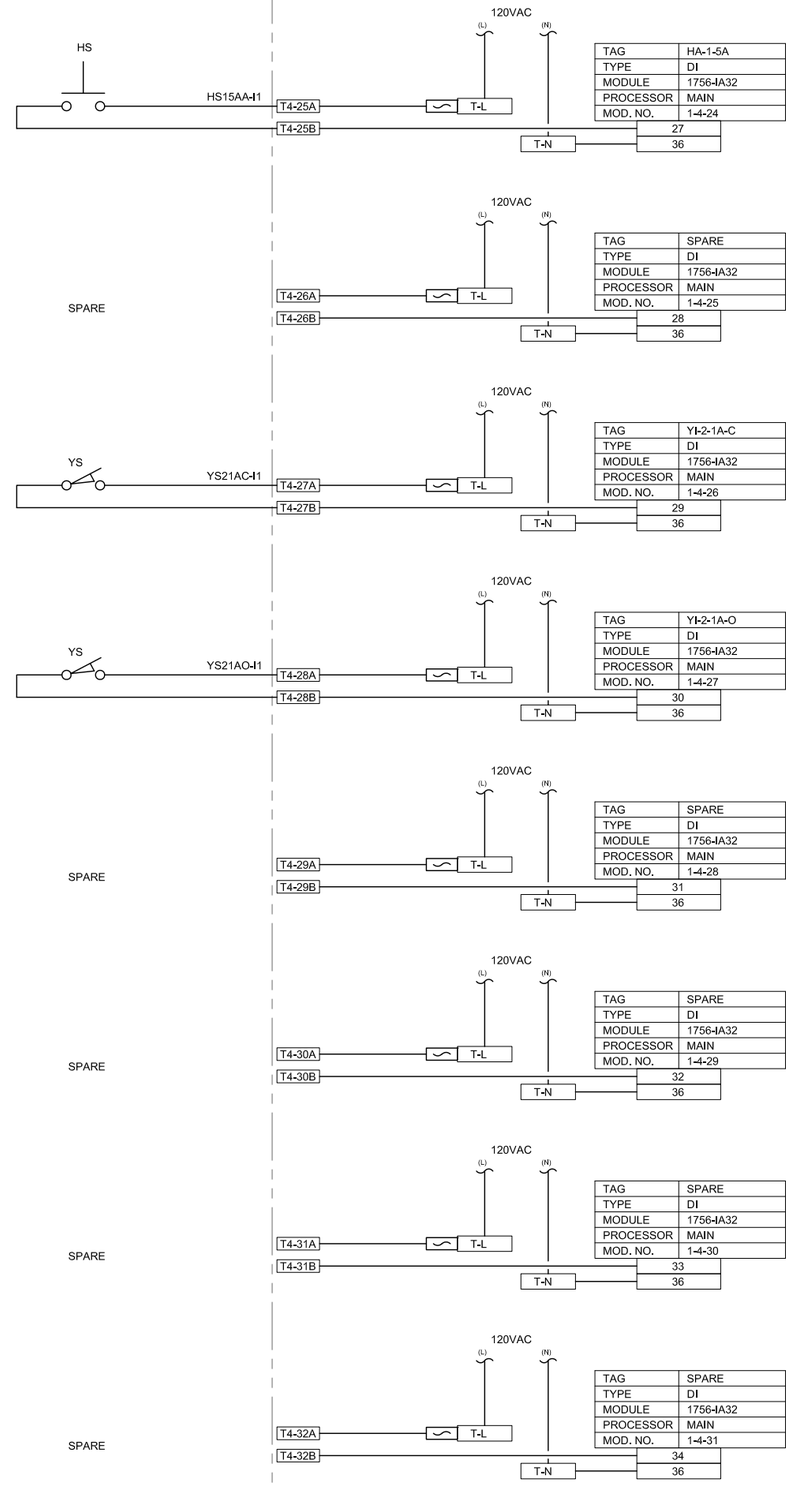

TAG	HA-1-5A
TYPE	DI
MODULE	1756-IA32
PROCESSOR	MAIN
MOD. NO.	1-4-24

TAG	SPARE
TYPE	DI
MODULE	1756-IA32
PROCESSOR	MAIN
MOD. NO.	1-4-25

TAG	YI-2-1A-C
TYPE	DI
MODULE	1756-IA32
PROCESSOR	MAIN
MOD. NO.	1-4-26

TAG	YI-2-1A-O
TYPE	DI
MODULE	1756-IA32
PROCESSOR	MAIN
MOD. NO.	1-4-27

TAG	SPARE
TYPE	DI
MODULE	1756-IA32
PROCESSOR	MAIN
MOD. NO.	1-4-28

TAG	SPARE
TYPE	DI
MODULE	1756-IA32
PROCESSOR	MAIN
MOD. NO.	1-4-29

TAG	SPARE
TYPE	DI
MODULE	1756-IA32
PROCESSOR	MAIN
MOD. NO.	1-4-30

TAG	SPARE
TYPE	DI
MODULE	1756-IA32
PROCESSOR	MAIN
MOD. NO.	1-4-31

NOTES:

1. TERMINAL NUMBERS ARE PRELIMINARY. ACTUAL TERMINAL NUMBERS WILL BE UPDATED AFTER INSTALLATION.
2. TERM = TERMINAL NUMBER TO BE FIELD ASSIGNED DURING INSTALLATION.
3. ALL MISSING NUMBERS AND MISSING DRAWING NUMBERS TO BE FIELD ASSIGNED DURING INSTALLATION.
4. ALL FUSES TO BE 1 AMP FAST BLOW UNLESS OTHERWISE SPECIFIED.

MARK	APPR	DATE	DESCRIPTION

DESIGNED BY: D. WINGER
DRAWN BY: D. LAMPH
CHECKED BY: D. STEWART
PROJECT NUMBER: FA8201-09-D-0004-0005
GOVERNMENT REVIEWER:

HILL AIR FORCE BASE

DEPARTMENT OF THE AIR FORCE
OGDEN AIR LOGISTICS CENTER
75TH CIVIL ENGINEER GROUP

SCADA SYSTEM FOR THE IWTP
BUILDING 575

MAIN PANEL DIAGRAM MODULE 4

EI-611

SHEET 14 OF 37

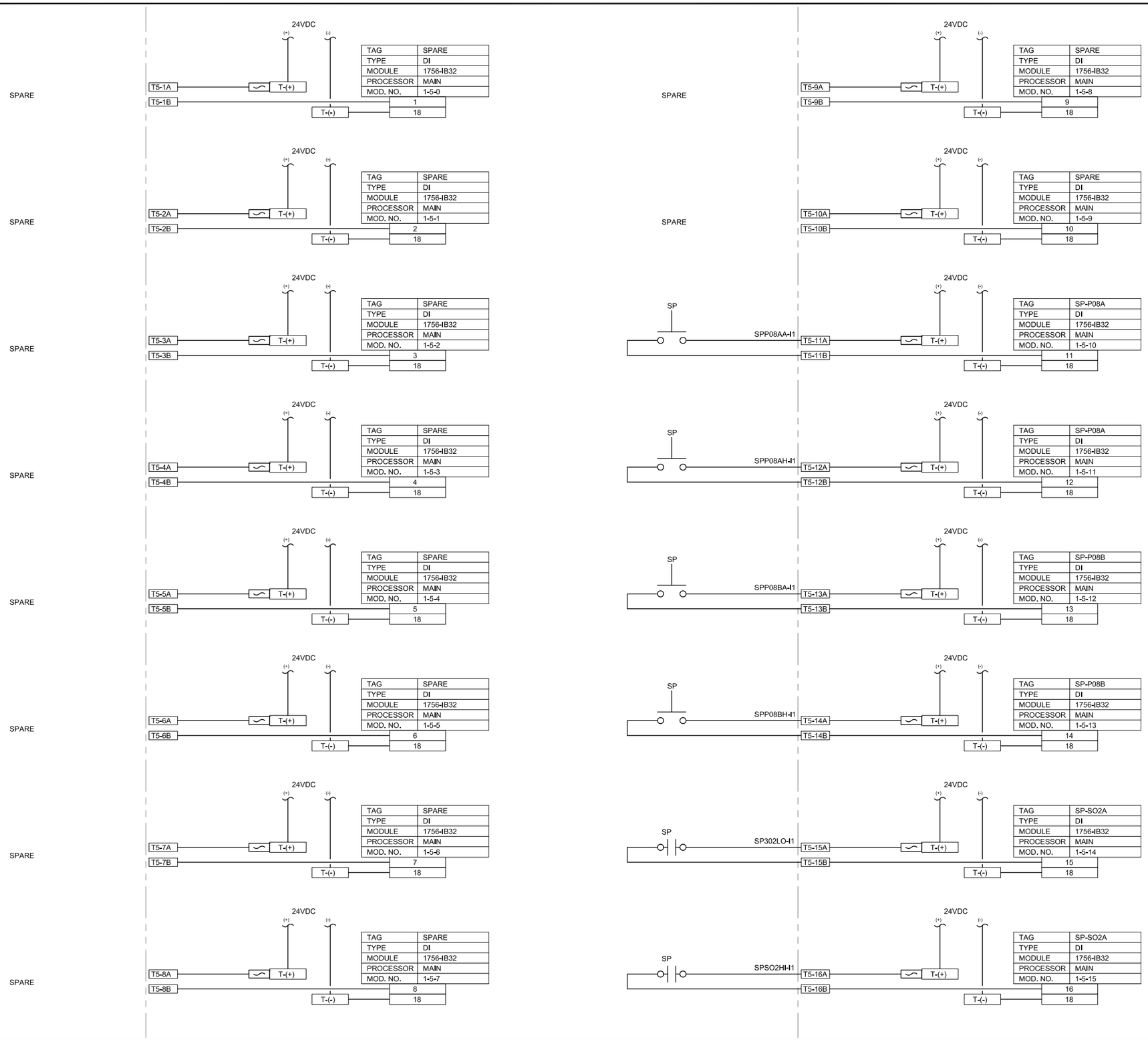

NOTES:

1. TERMINAL NUMBERS ARE PRELIMINARY. ACTUAL TERMINAL NUMBERS WILL BE UPDATED AFTER INSTALLATION.
2. TERM = TERMINAL NUMBER TO BE FIELD ASSIGNED DURING INSTALLATION.
3. ALL MISSING NUMBERS AND MISSING DRAWING NUMBERS TO BE FIELD ASSIGNED DURING INSTALLATION.
4. ALL FUSES TO BE 1 AMP FAST BLOW UNLESS OTHERWISE SPECIFIED.

MARK	APPR	DATE	DESCRIPTION

DESIGNED BY: D. WINGER
DRAWN BY: D. LAMPH
CHECKED BY: D. STEWART
PROJECT NUMBER: FA8201-09-D-0004-0005
GOVERNMENT REVIEWER:

HILL AIR FORCE BASE

DEPARTMENT OF THE AIR FORCE
OGDEN AIR LOGISTICS CENTER
75TH CIVIL ENGINEER GROUP

SCADA SYSTEM FOR THE IWTP
BUILDING 575

MAIN PANEL DIAGRAM MODULE 5

EI-612

SHEET 15 OF 37

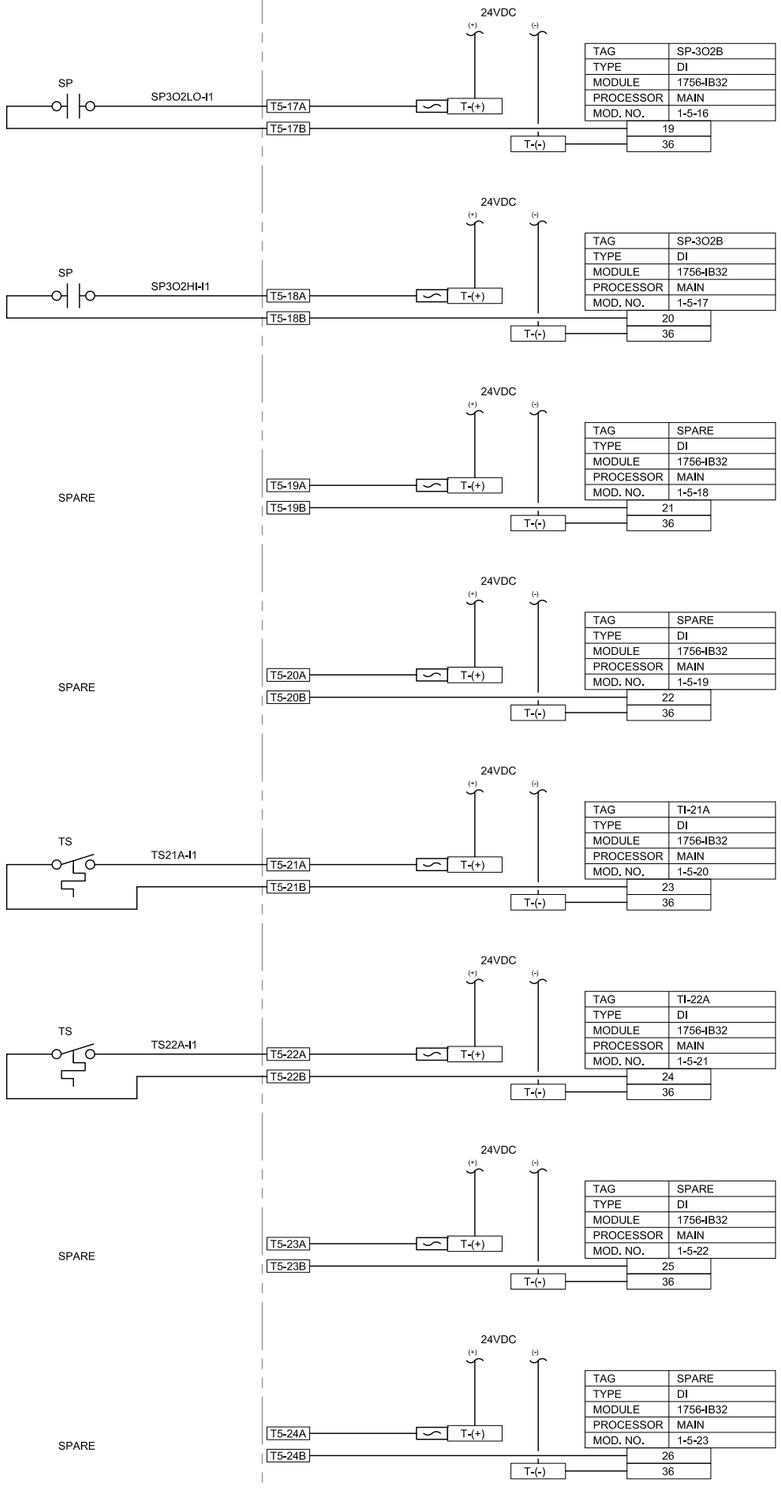

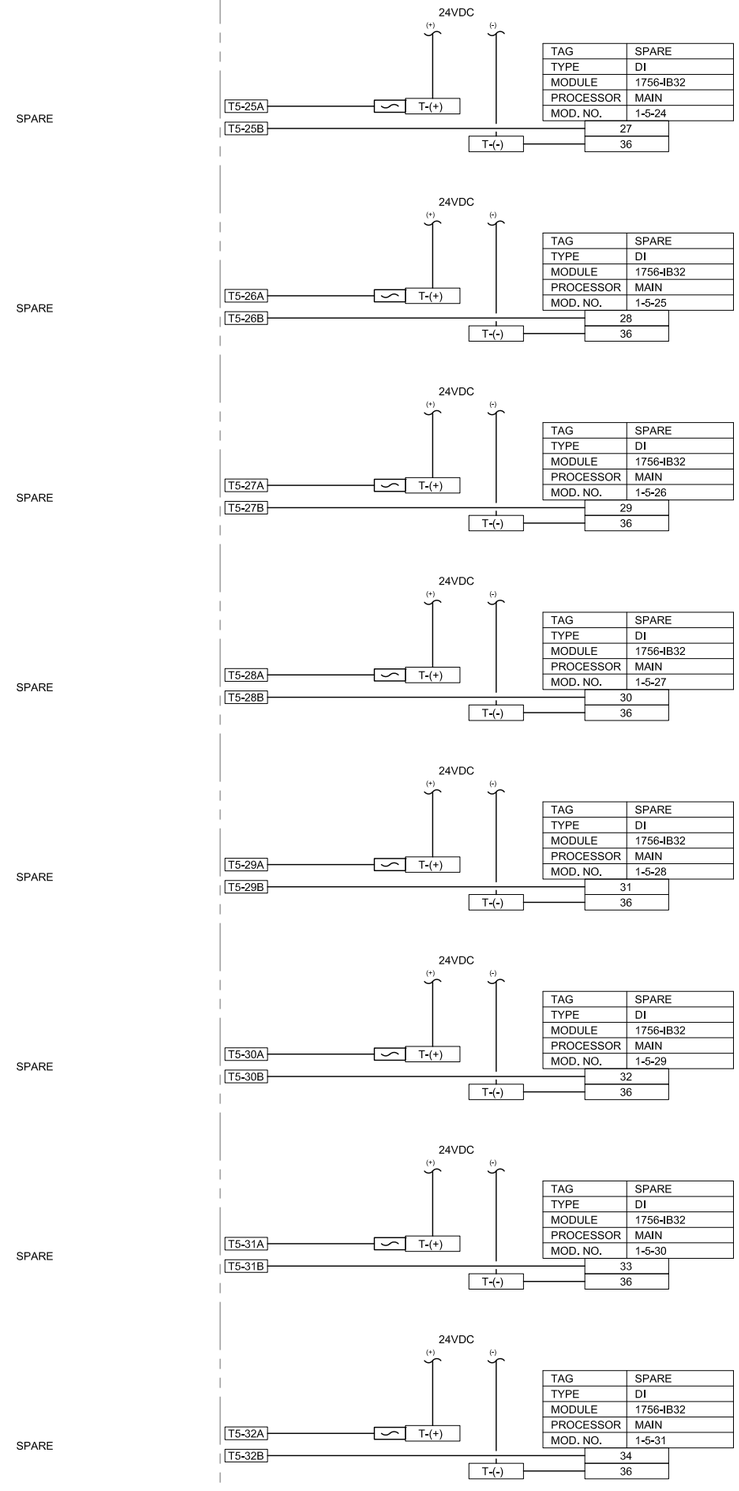

NOTES:

1. TERMINAL NUMBERS ARE PRELIMINARY. ACTUAL TERMINAL NUMBERS WILL BE UPDATED AFTER INSTALLATION.
2. TERM = TERMINAL NUMBER TO BE FIELD ASSIGNED DURING INSTALLATION.
3. ALL MISSING NUMBERS AND MISSING DRAWING NUMBERS TO BE FIELD ASSIGNED DURING INSTALLATION.
4. ALL FUSES TO BE 1 AMP FAST BLOW UNLESS OTHERWISE SPECIFIED.

MARK	APPR	DATE	DESCRIPTION

DESIGNED BY: D. WINGER
DRAWN BY: D. LAMPH
CHECKED BY: D. STEWART
PROJECT NUMBER: FA8201-09-D-0004-0005
GOVERNMENT REVIEWER:

HILL AIR FORCE BASE

DEPARTMENT OF THE AIR FORCE
OGDEN AIR LOGISTICS CENTER
75TH CIVIL ENGINEER GROUP

SCADA SYSTEM FOR THE IWTP
BUILDING 575

MAIN PANEL DIAGRAM MODULE 5

EI-613

SHEET 16 OF 37

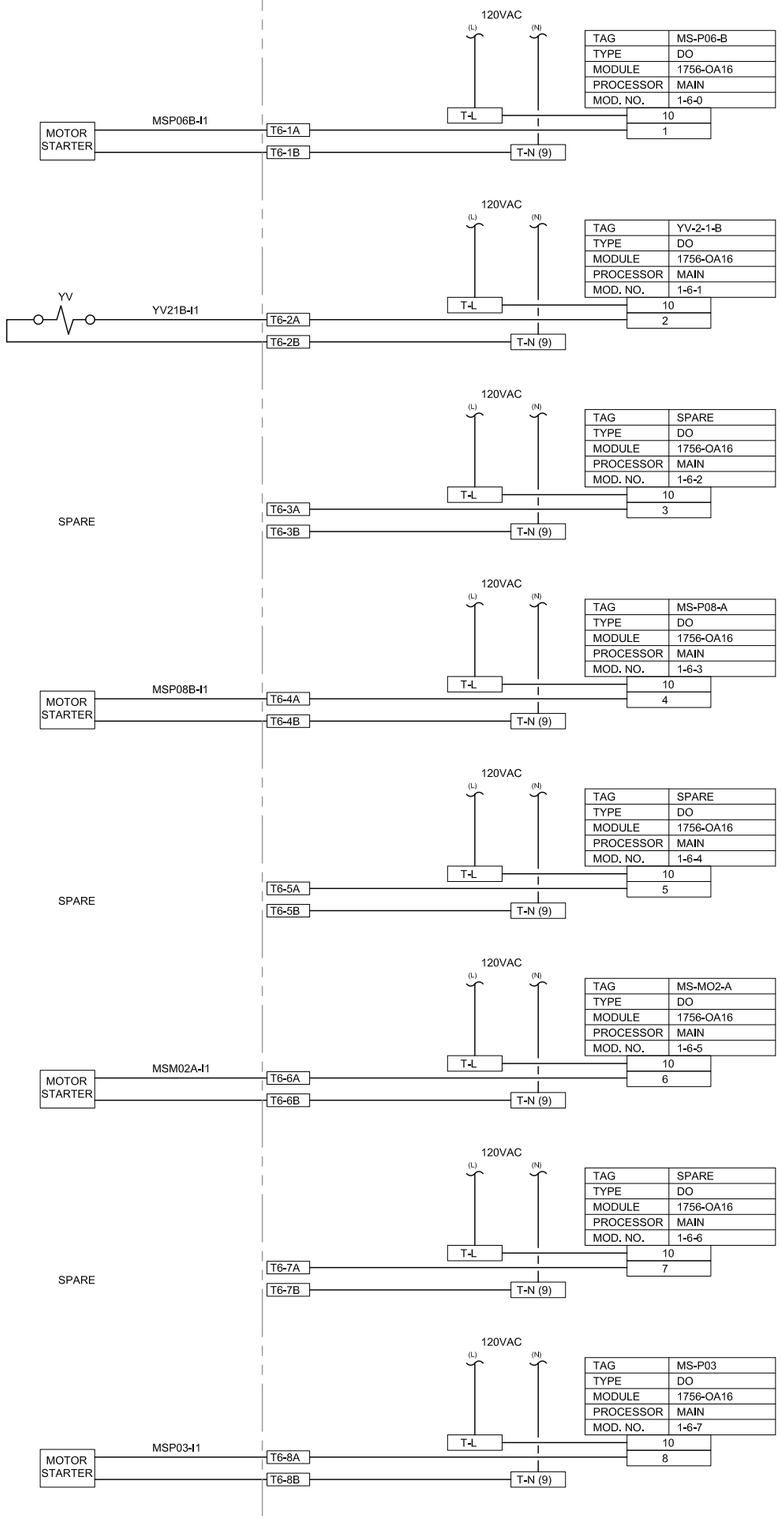

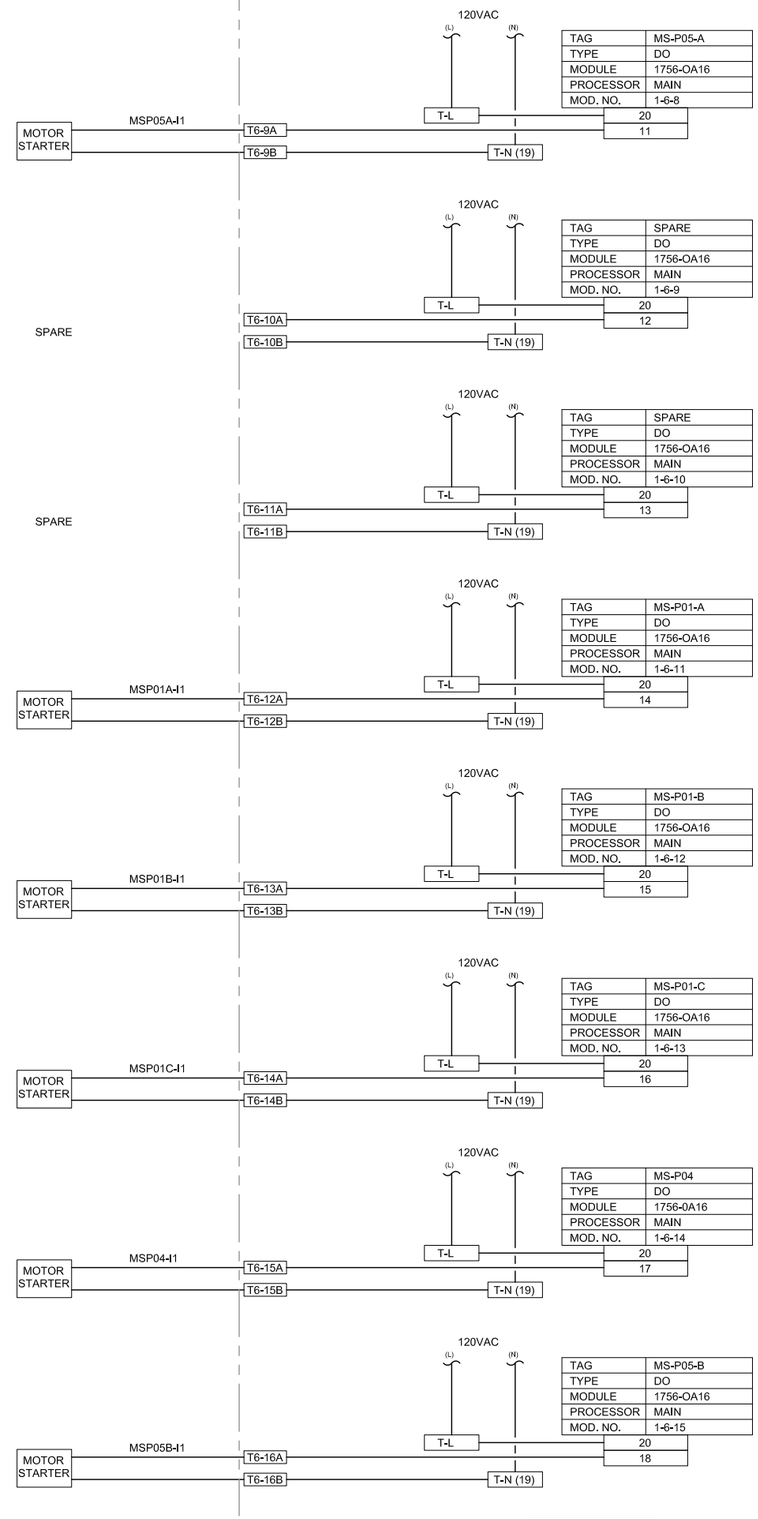

NOTES:

1. TERMINAL NUMBERS ARE PRELIMINARY. ACTUAL TERMINAL NUMBERS WILL BE UPDATED AFTER INSTALLATION.
2. TERM = TERMINAL NUMBER TO BE FIELD ASSIGNED DURING INSTALLATION.
3. ALL MISSING NUMBERS AND MISSING DRAWING NUMBERS TO BE FIELD ASSIGNED DURING INSTALLATION.
4. ALL FUSES TO BE 1 AMP FAST BLOW UNLESS OTHERWISE SPECIFIED.

MARK	APPR	DATE	DESCRIPTION

DESIGNED BY: D. WINGER
DRAWN BY: D. LAMPH
CHECKED BY: D. STEWART
PROJECT NUMBER: FA8201-09-D-0004-0005
GOVERNMENT REVIEWER:

HILL AIR FORCE BASE

DEPARTMENT OF THE AIR FORCE
OGDEN AIR LOGISTICS CENTER
75TH CIVIL ENGINEER GROUP

SCADA SYSTEM FOR THE IWTP
BUILDING 575

MAIN PANEL DIAGRAM MODULE 6

EI-614

SHEET 17 OF 37

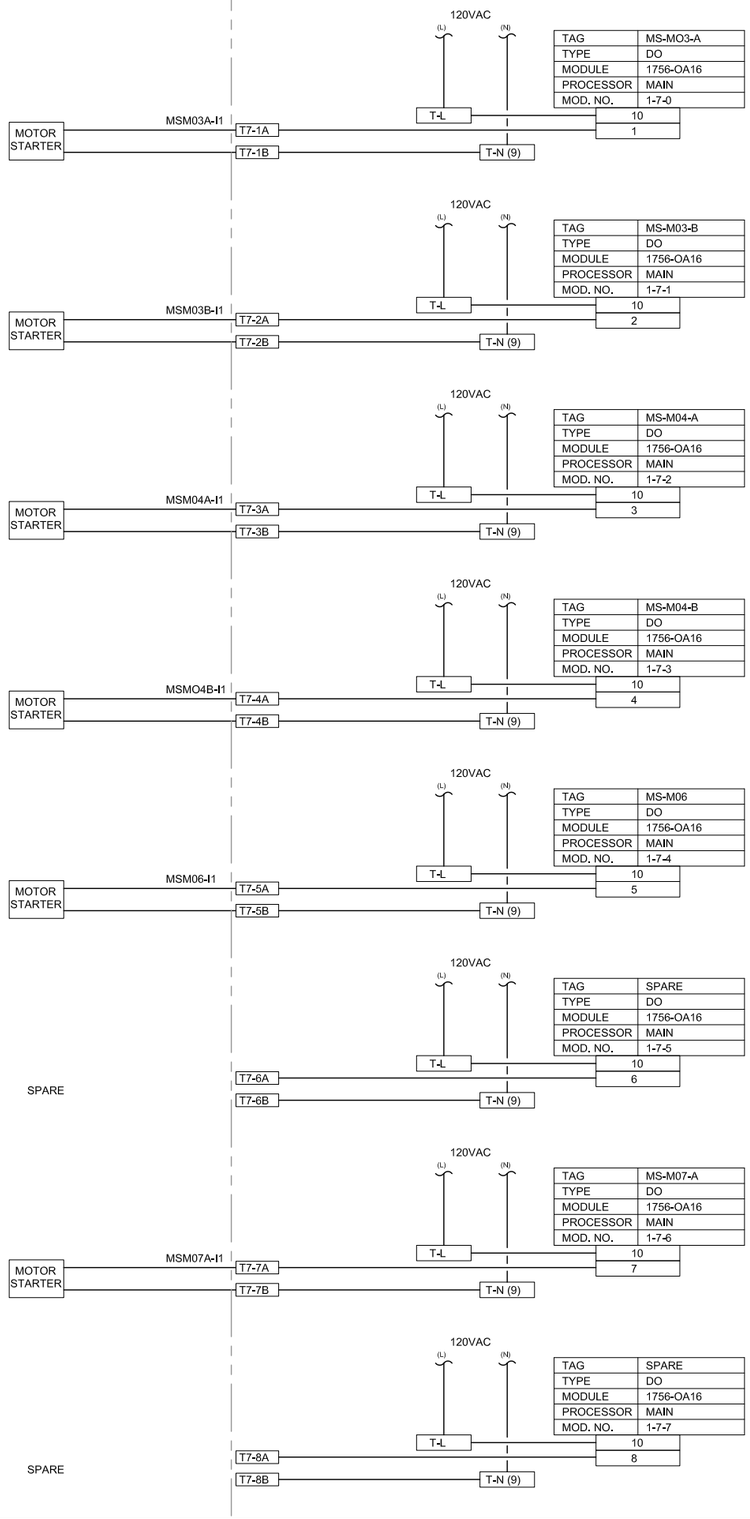

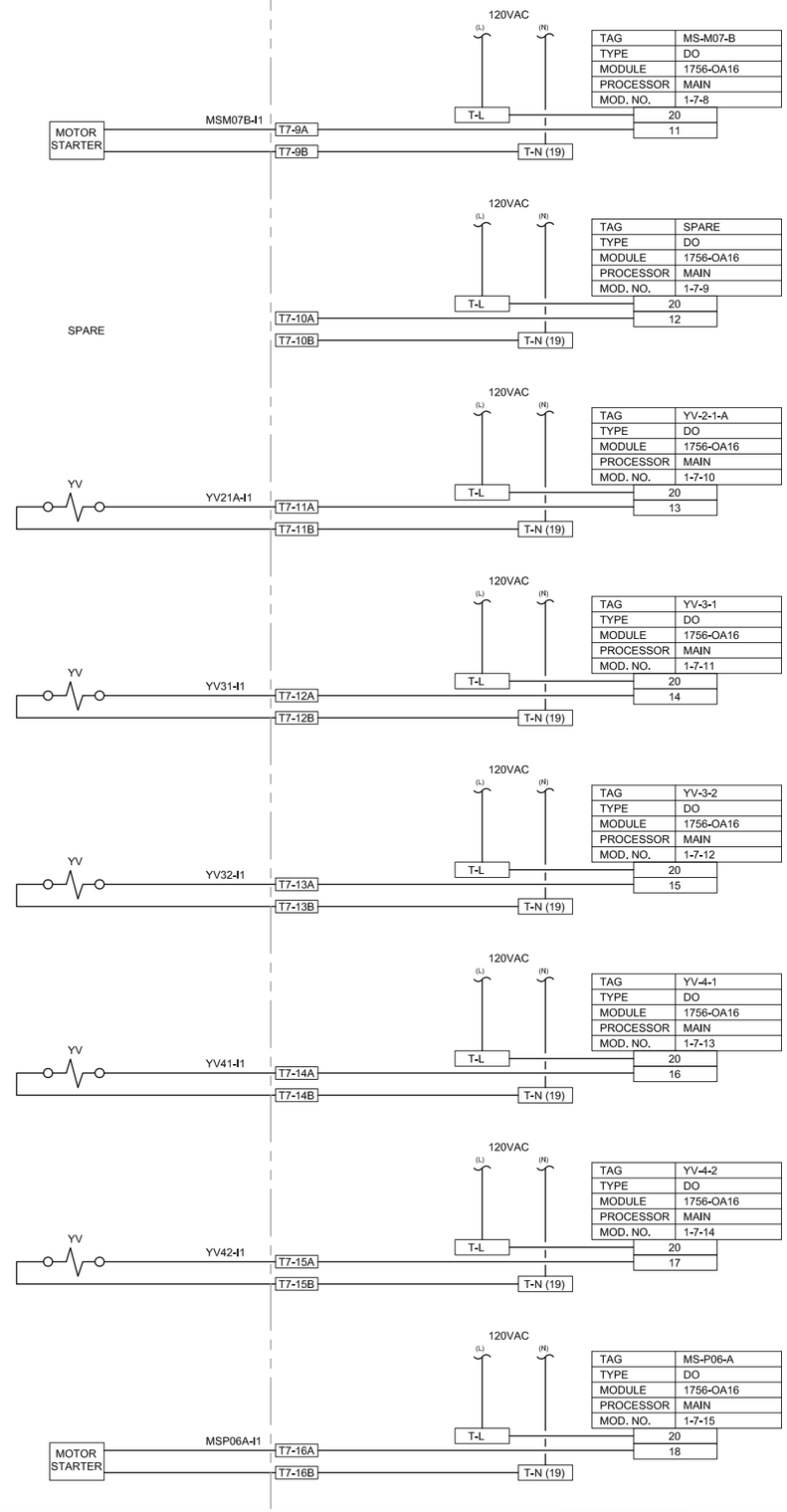

NOTES:

1. TERMINAL NUMBERS ARE PRELIMINARY. ACTUAL TERMINAL NUMBERS WILL BE UPDATED AFTER INSTALLATION.
2. TERM = TERMINAL NUMBER TO BE FIELD ASSIGNED DURING INSTALLATION.
3. ALL MISSING NUMBERS AND MISSING DRAWING NUMBERS TO BE FIELD ASSIGNED DURING INSTALLATION.
4. ALL FUSES TO BE 1 AMP FAST BLOW UNLESS OTHERWISE SPECIFIED.

MARK	APPR	DATE	DESCRIPTION

DESIGNED BY: D. WINGER
DRAWN BY: D. LAMPH
CHECKED BY: D. STEWART
PROJECT NUMBER: FA8201-09-D-0004-0005
GOVERNMENT REVIEWER:

HILL AIR FORCE BASE

DEPARTMENT OF THE AIR FORCE
OGDEN AIR LOGISTICS CENTER
75TH CIVIL ENGINEER GROUP

SCADA SYSTEM FOR THE IWTP
BUILDING 575

MAIN PANEL DIAGRAM MODULE 7

EI-615

SHEET 18 OF 37

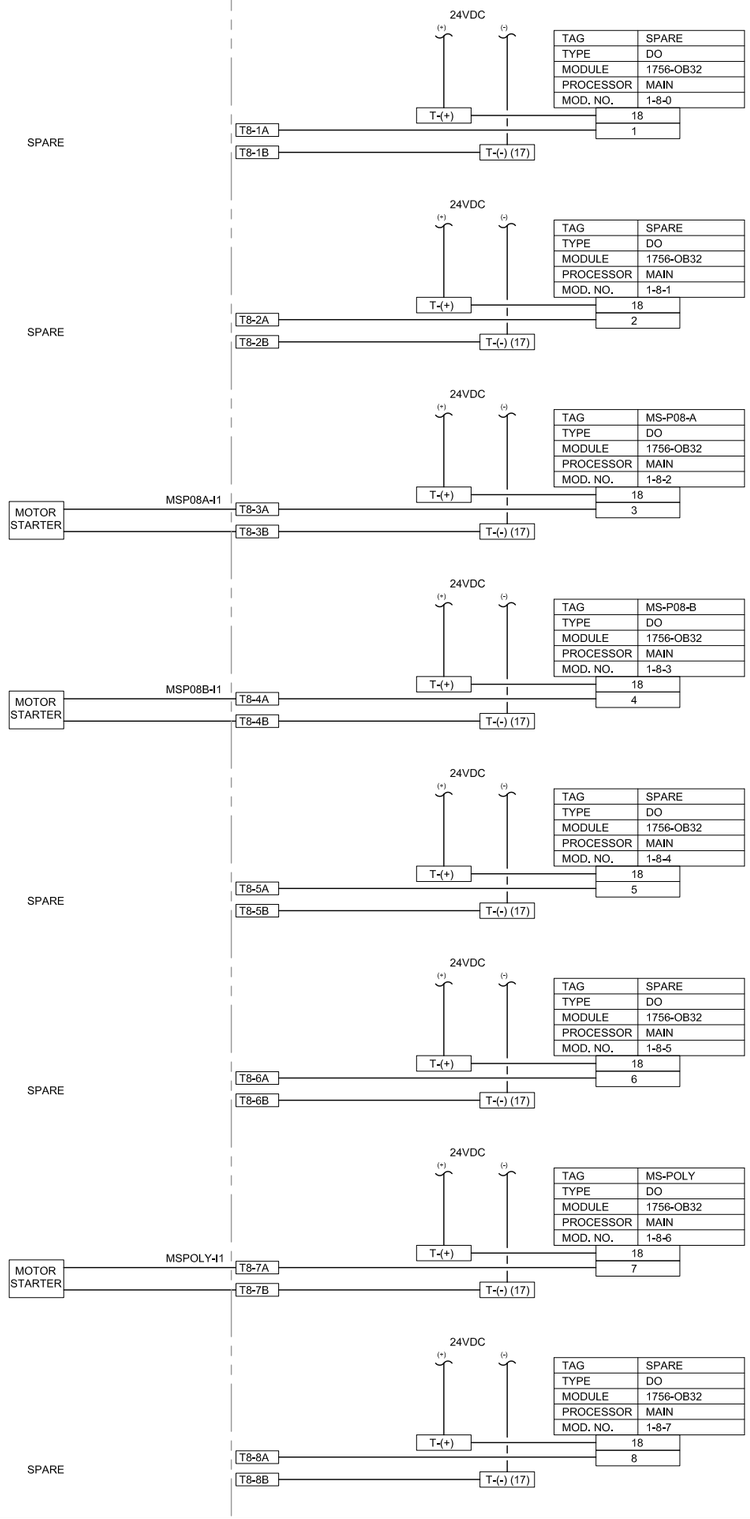

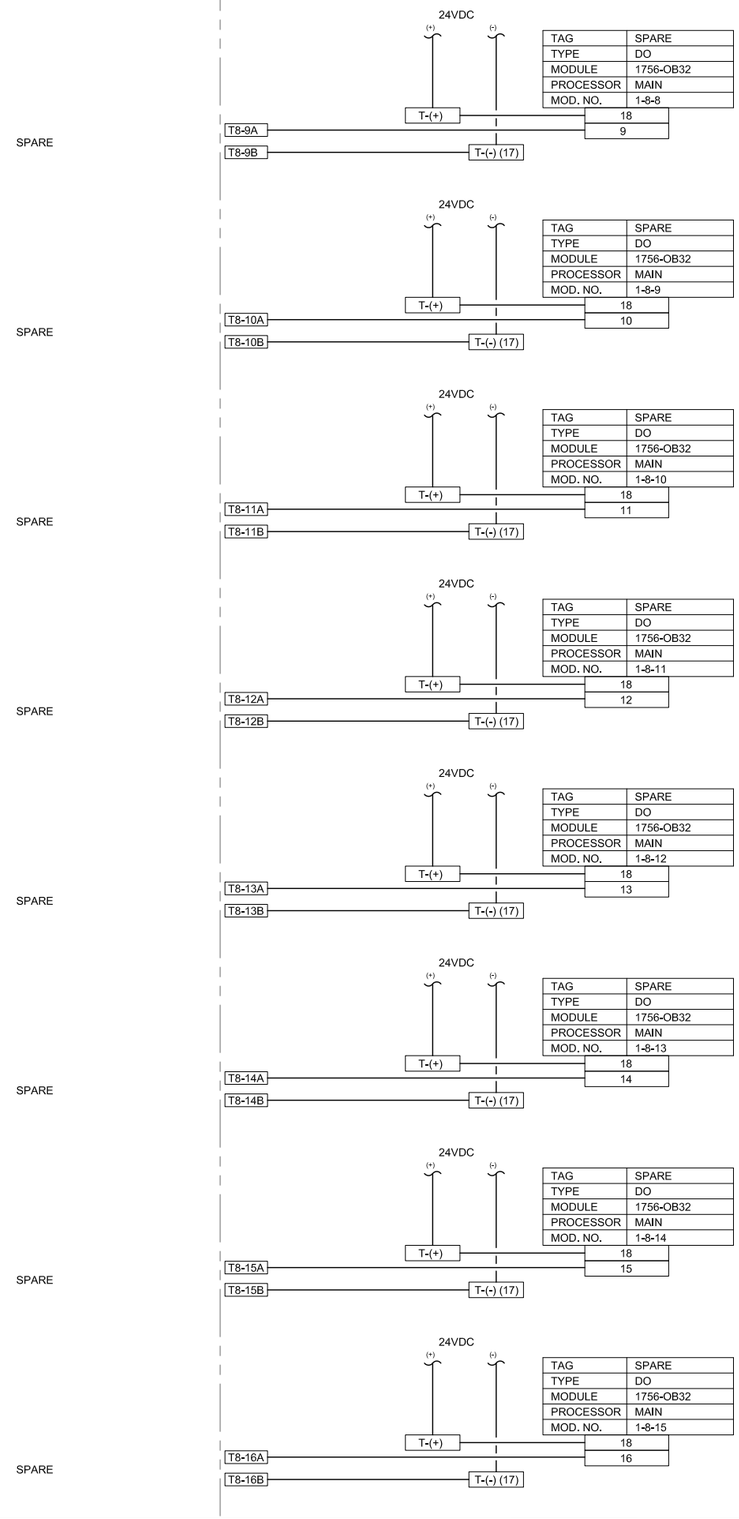

NOTES:

1. TERMINAL NUMBERS ARE PRELIMINARY. ACTUAL TERMINAL NUMBERS WILL BE UPDATED AFTER INSTALLATION.
2. TERM = TERMINAL NUMBER TO BE FIELD ASSIGNED DURING INSTALLATION.
3. ALL MISSING NUMBERS AND MISSING DRAWING NUMBERS TO BE FIELD ASSIGNED DURING INSTALLATION.
4. ALL FUSES TO BE 1 AMP FAST BLOW UNLESS OTHERWISE SPECIFIED.

MARK	APPR	DATE	DESCRIPTION

DESIGNED BY: D. WINGER
DRAWN BY: D. LAMPH
CHECKED BY: D. STEWART
PROJECT NUMBER: FA8201-09-D-0004-0005
GOVERNMENT REVIEWER:

HILL AIR FORCE BASE

DEPARTMENT OF THE AIR FORCE
OGDEN AIR LOGISTICS CENTER
75TH CIVIL ENGINEER GROUP

SCADA SYSTEM FOR THE IWTP
BUILDING 575

MAIN PANEL DIAGRAM MODULE 8

EI-616

SHEET 19 OF 37

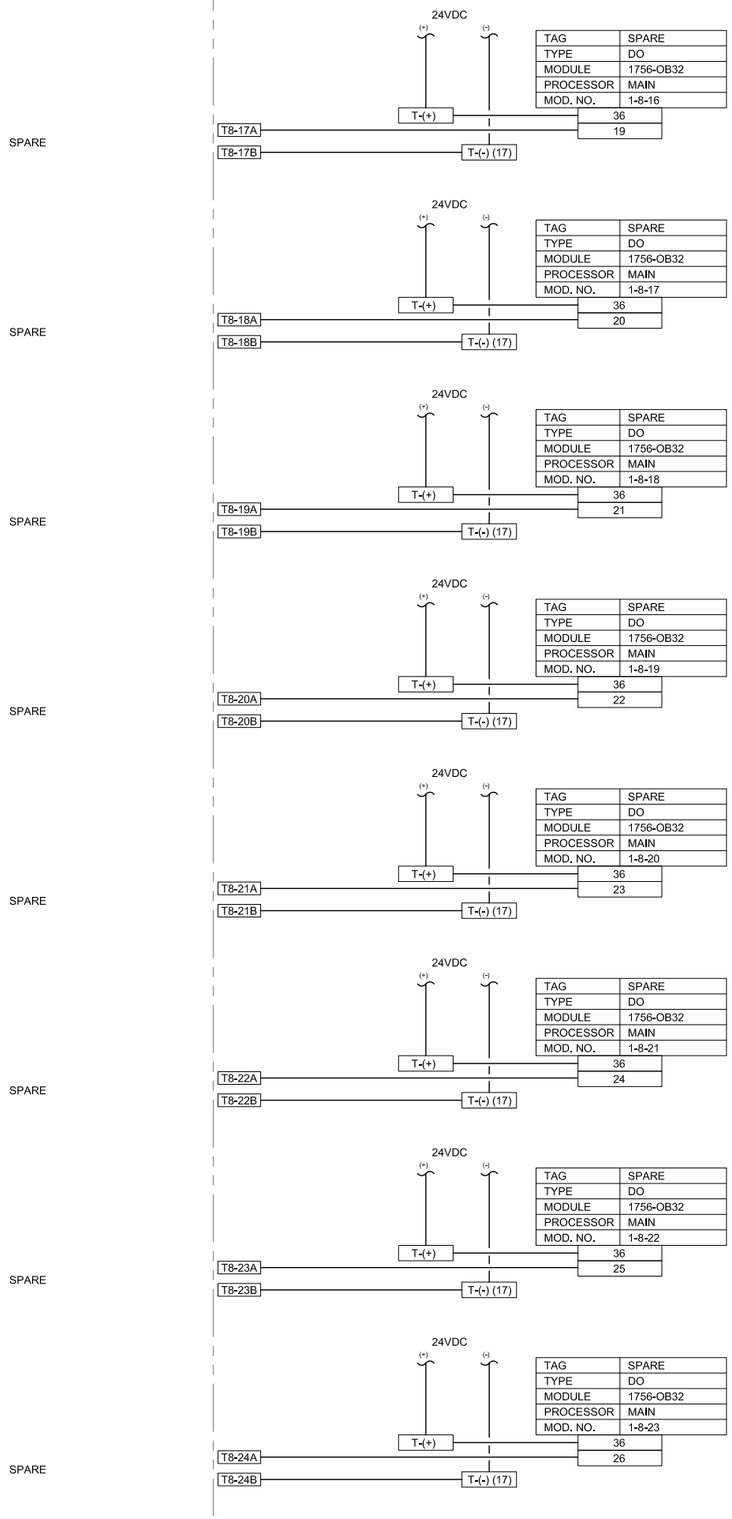

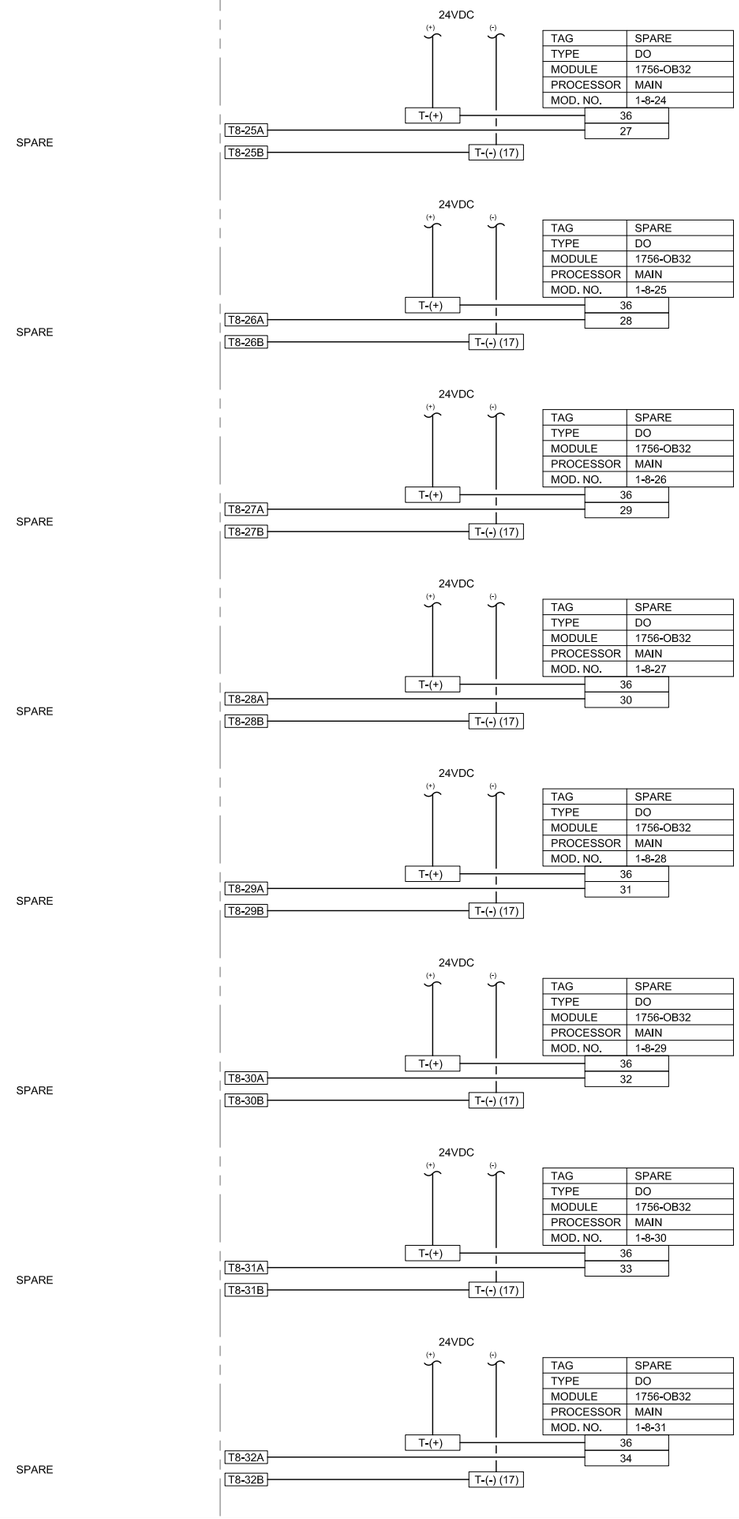

NOTES:

1. TERMINAL NUMBERS ARE PRELIMINARY. ACTUAL TERMINAL NUMBERS WILL BE UPDATED AFTER INSTALLATION.
2. TERM = TERMINAL NUMBER TO BE FIELD ASSIGNED DURING INSTALLATION.
3. ALL MISSING NUMBERS AND MISSING DRAWING NUMBERS TO BE FIELD ASSIGNED DURING INSTALLATION.
4. ALL FUSES TO BE 1 AMP FAST BLOW UNLESS OTHERWISE SPECIFIED.

MARK	APPR	DATE	DESCRIPTION

DESIGNED BY: D. WINGER
DRAWN BY: D. LAMPH
CHECKED BY: D. STEWART
PROJECT NUMBER: FA8201-09-D-0004-0005
GOVERNMENT REVIEWER:

HILL AIR FORCE BASE

DEPARTMENT OF THE AIR FORCE
OGDEN AIR LOGISTICS CENTER
75TH CIVIL ENGINEER GROUP

SCADA SYSTEM FOR THE IWTP
BUILDING 575

MAIN PANEL DIAGRAM MODULE 8

EI-617

SHEET 20 OF 37

SPARE

TAG	SPARE
TYPE	AI 4-20mA
MODULE	1756-IF16
PROCESSOR	MAIN
MOD. NO.	1-9-0

T9-1A — T9-1B: 2, 1, T9-1C GND

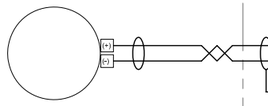

TAG	-
TYPE	AI 4-20mA
MODULE	1756-IF16
PROCESSOR	MAIN
MOD. NO.	1-9-1

T9-2A — T9-2B: 4, 3, T9-2C GND

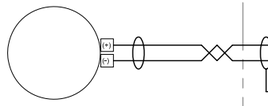

TAG	-
TYPE	AI 4-20mA
MODULE	1756-IF16
PROCESSOR	MAIN
MOD. NO.	1-9-2

T9-3A — T9-3B: 6, 5, T9-3C GND

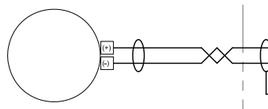

TAG	-
TYPE	AI 4-20mA
MODULE	1756-IF16
PROCESSOR	MAIN
MOD. NO.	1-9-3

T9-4A — T9-4B: 8, 7, T9-4C GND

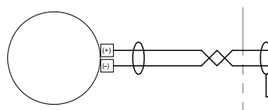

TAG	-
TYPE	AI 4-20mA
MODULE	1756-IF16
PROCESSOR	MAIN
MOD. NO.	1-9-4

T9-5A — T9-5B: 12, 11, T9-5C GND

SPARE

TAG	SPARE
TYPE	AI 4-20mA
MODULE	1756-IF16
PROCESSOR	MAIN
MOD. NO.	1-9-5

T9-6A — T9-6B: 14, 13, T9-6C GND

SPARE

TAG	SPARE
TYPE	AI 4-20mA
MODULE	1756-IF16
PROCESSOR	MAIN
MOD. NO.	1-9-6

T9-7A — T9-7B: 16, 15, T9-7C GND

SPARE

TAG	SPARE
TYPE	AI 4-20mA
MODULE	1756-IF16
PROCESSOR	MAIN
MOD. NO.	1-9-7

T9-8A — T9-8B: 18, 17, T9-8C GND

SPARE

TAG	SPARE
TYPE	AI 4-20mA
MODULE	1756-IF16
PROCESSOR	MAIN
MOD. NO.	1-9-8

T9-9A — T9-9B: 20, 19, T9-9C GND

SPARE

TAG	SPARE
TYPE	AI 4-20mA
MODULE	1756-IF16
PROCESSOR	MAIN
MOD. NO.	1-9-9

T9-10A — T9-10B: 22, 21, T9-10C GND

SPARE

TAG	SPARE
TYPE	AI 4-20mA
MODULE	1756-IF16
PROCESSOR	MAIN
MOD. NO.	1-9-10

T9-11A — T9-11B: 24, 23, T9-11C GND

SPARE

TAG	SPARE
TYPE	AI 4-20mA
MODULE	1756-IF16
PROCESSOR	MAIN
MOD. NO.	1-9-11

T9-12A — T9-12B: 26, 25, T9-12C GND

SPARE

TAG	SPARE
TYPE	AI 4-20mA
MODULE	1756-IF16
PROCESSOR	MAIN
MOD. NO.	1-9-12

T9-13A — T9-13B: 30, 29, T9-13C GND

SPARE

TAG	SPARE
TYPE	AI 4-20mA
MODULE	1756-IF16
PROCESSOR	MAIN
MOD. NO.	1-9-13

T9-14A — T9-14B: 32, 31, T9-14C GND

SPARE

TAG	SPARE
TYPE	AI 4-20mA
MODULE	1756-IF16
PROCESSOR	MAIN
MOD. NO.	1-9-14

T9-15A — T9-15B: 34, 33, T9-15C GND

SPARE

TAG	SPARE
TYPE	AI 4-20mA
MODULE	1756-IF16
PROCESSOR	MAIN
MOD. NO.	1-9-15

T9-16A — T9-16B: 36, 35, T9-16C GND

NOTES:

1. TERMINAL NUMBERS ARE PRELIMINARY. ACTUAL TERMINAL NUMBERS WILL BE UPDATED AFTER INSTALLATION.
2. TERM = TERMINAL NUMBER TO BE FIELD ASSIGNED DURING INSTALLATION.
3. ALL MISSING NUMBERS AND MISSING DRAWING NUMBERS TO BE FIELD ASSIGNED DURING INSTALLATION.
4. ALL FUSES TO BE 1 AMP FAST BLOW UNLESS OTHERWISE SPECIFIED.

DESCRIPTION	DATE	APPR	MARK

DESIGNED BY: D. WINGER
CHECKED BY: D. STEWART
DRAWN BY: D. LAMPH
PROJECT NUMBER: FA8201-09-D-0004-0005
GOVERNMENT REVIEWER:

HILL AIR FORCE BASE

DEPARTMENT OF THE AIR FORCE
OGDEN AIR LOGISTICS CENTER
75TH CIVIL ENGINEER GROUP

SCADA SYSTEM FOR THE IWTP
BUILDING 575

MAIN PANEL DIAGRAM MODULE 9

EI-618

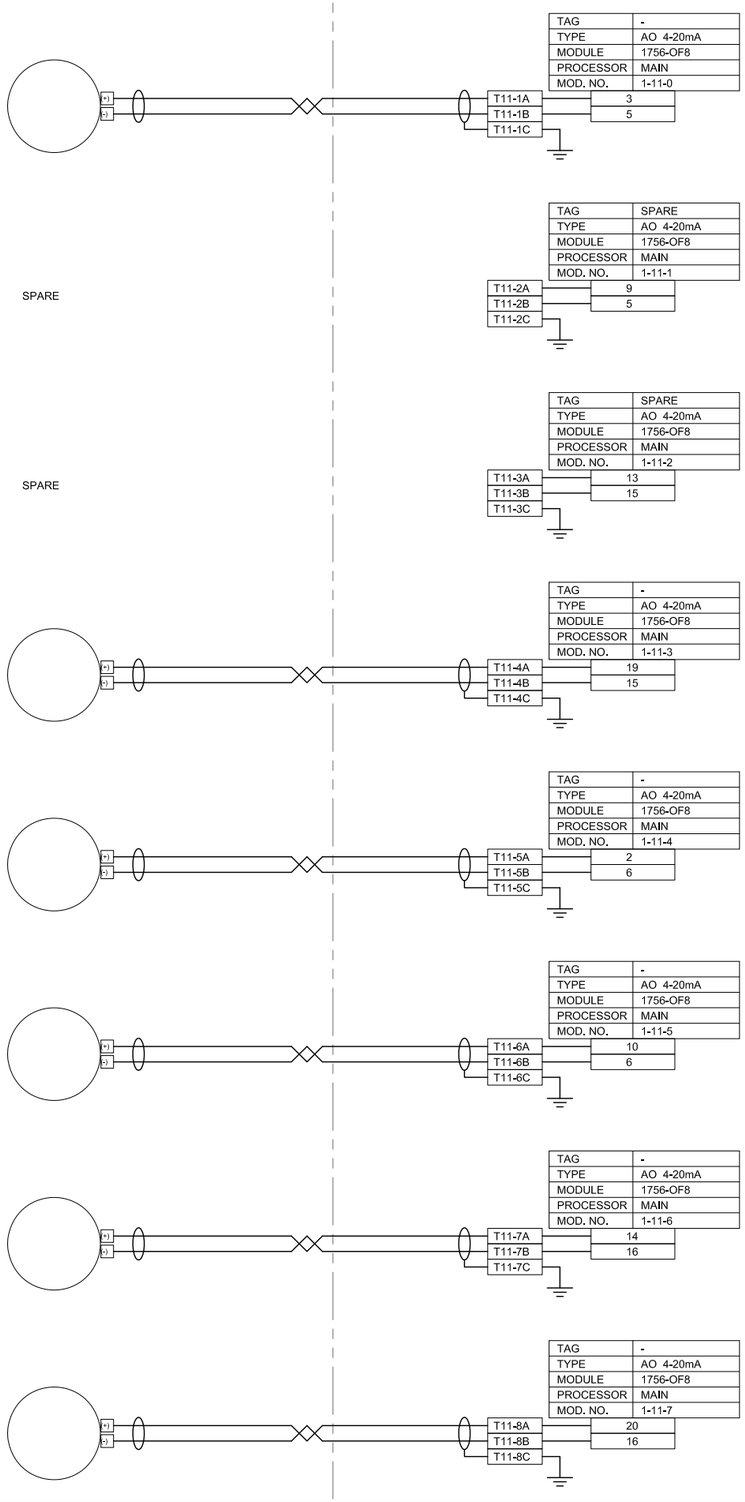

NOTES:

1. TERMINAL NUMBERS ARE PRELIMINARY. ACTUAL TERMINAL NUMBERS WILL BE UPDATED AFTER INSTALLATION.
2. TERM = TERMINAL NUMBER TO BE FIELD ASSIGNED DURING INSTALLATION.
3. ALL MISSING NUMBERS AND MISSING DRAWING NUMBERS TO BE FIELD ASSIGNED DURING INSTALLATION.
4. ALL FUSES TO BE 1 AMP FAST BLOW UNLESS OTHERWISE SPECIFIED.

MARK	APPR	DATE	DESCRIPTION

DESIGNED BY: D. WINGER
CHECKED BY: D. STEWART
DRAWN BY: D. LAMPH
PROJECT NUMBER: FA8201-09-D-0004-0005
GOVERNMENT REVIEWER:

HILL AIR FORCE BASE

DEPARTMENT OF THE AIR FORCE
OGDEN AIR LOGISTICS CENTER
75TH CIVIL ENGINEER GROUP

SCADA SYSTEM FOR THE IWTP
BUILDING 575

MAIN PANEL DIAGRAM MODULE 11

EI-619

SHEET 22 OF 37

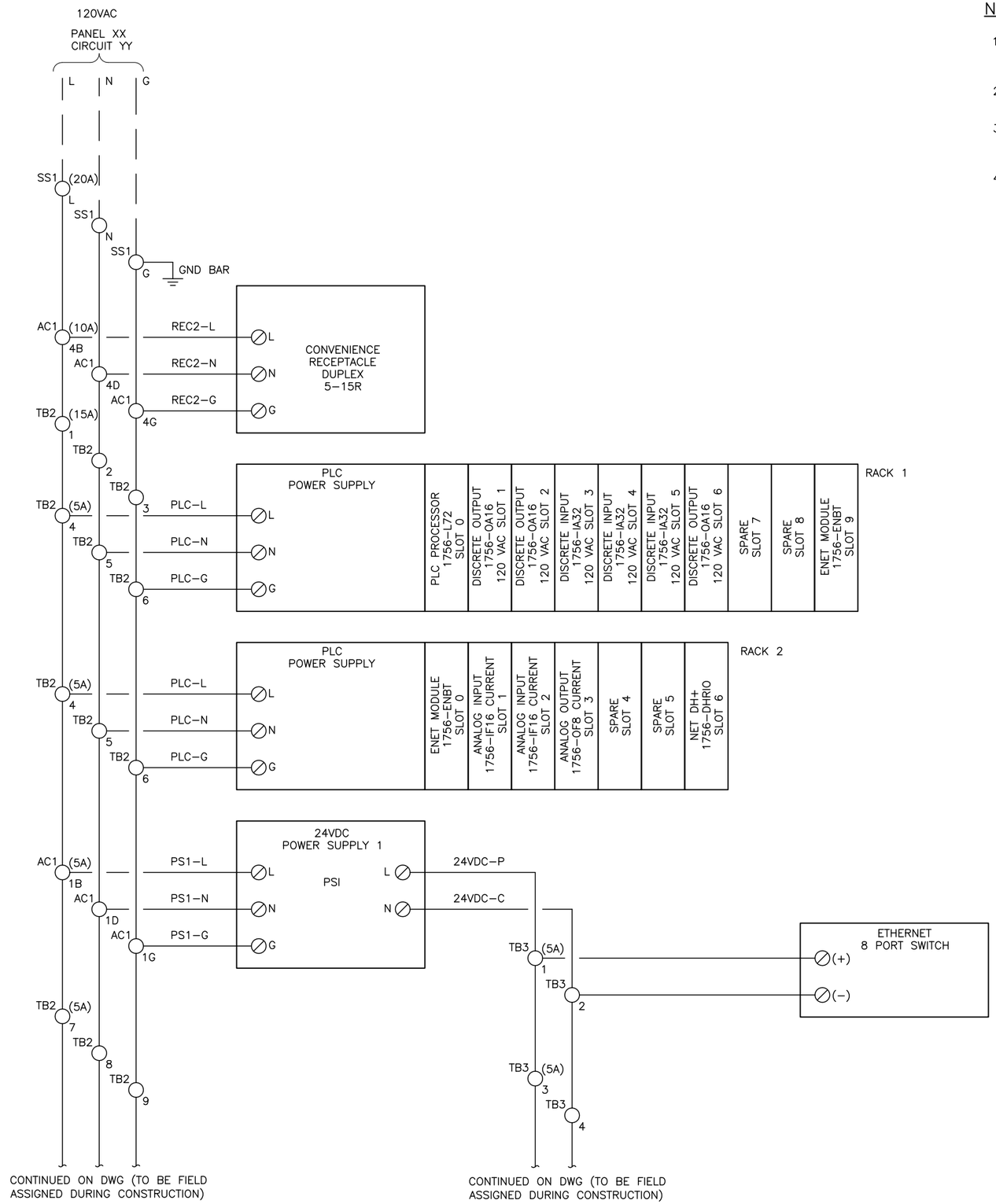

NOTES:

1. TERMINAL NUMBERS ARE PRELIMINARY. ACTUAL TERMINAL NUMBERS WILL BE UPDATED AFTER INSTALLATION.
2. TERM = TERMINAL NUMBER TO BE FIELD ASSIGNED DURING INSTALLATION.
3. ALL MISSING NUMBERS AND MISSING DRAWING NUMBERS TO BE FIELD ASSIGNED DURING INSTALLATION.
4. ALL FUSES TO BE 1 AMP FAST BLOW UNLESS OTHERWISE SPECIFIED.

DESCRIPTION	DATE	APPR	MARK

DESIGNED BY: D. WINGER
DRAWN BY: D. LAMPH
CHECKED BY: D. STEWART
PROJECT NUMBER: FA8201-09-D-0004-0005
GOVERNMENT REVIEWER:

HILL AIR FORCE BASE

DEPARTMENT OF THE AIR FORCE
OGDEN AIR LOGISTICS CENTER
75TH CIVIL ENGINEER GROUP

SCADA SYSTEM FOR THE IWTP
BUILDING 575

TTO PANEL DIAGRAM

EI-622

SHEET 25 OF 37

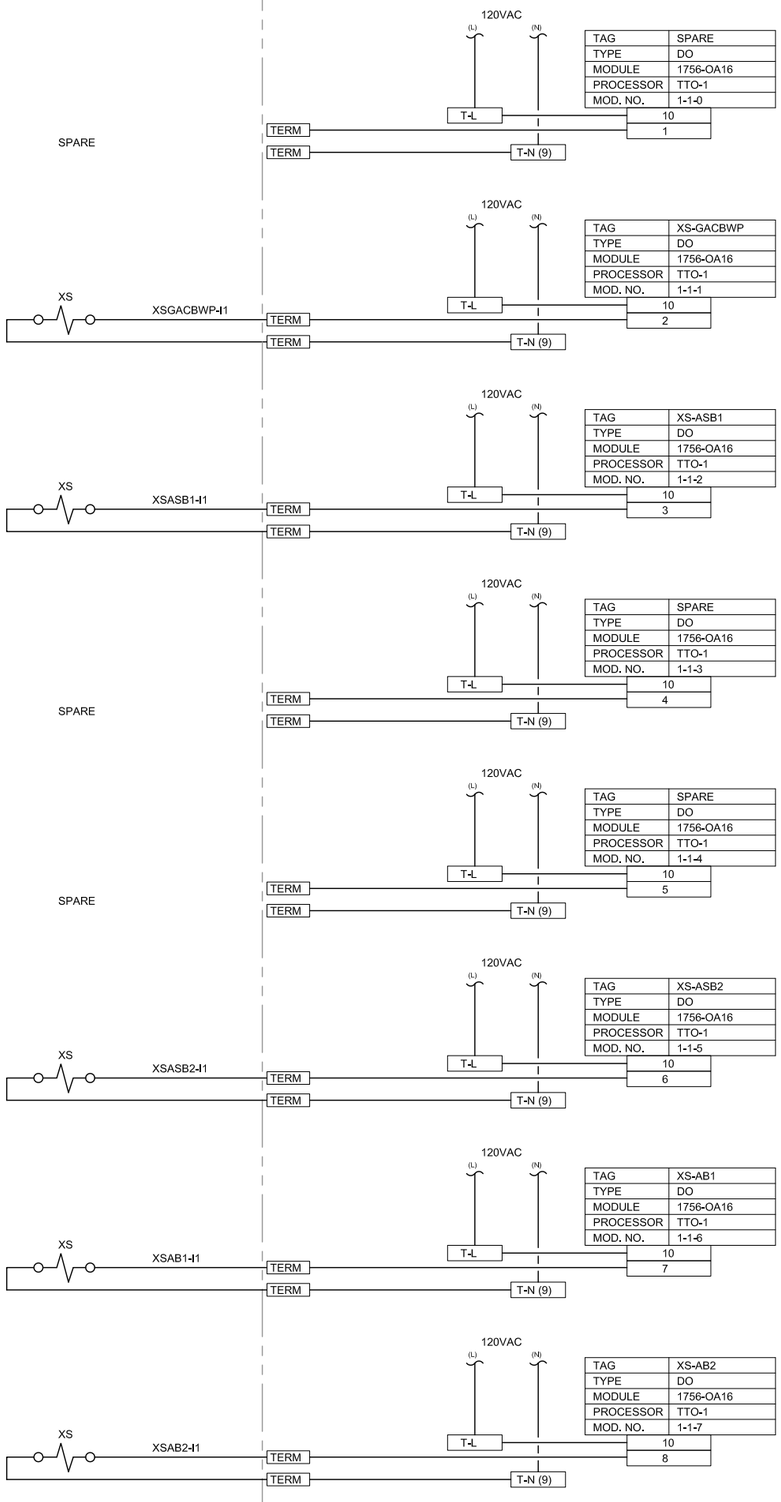

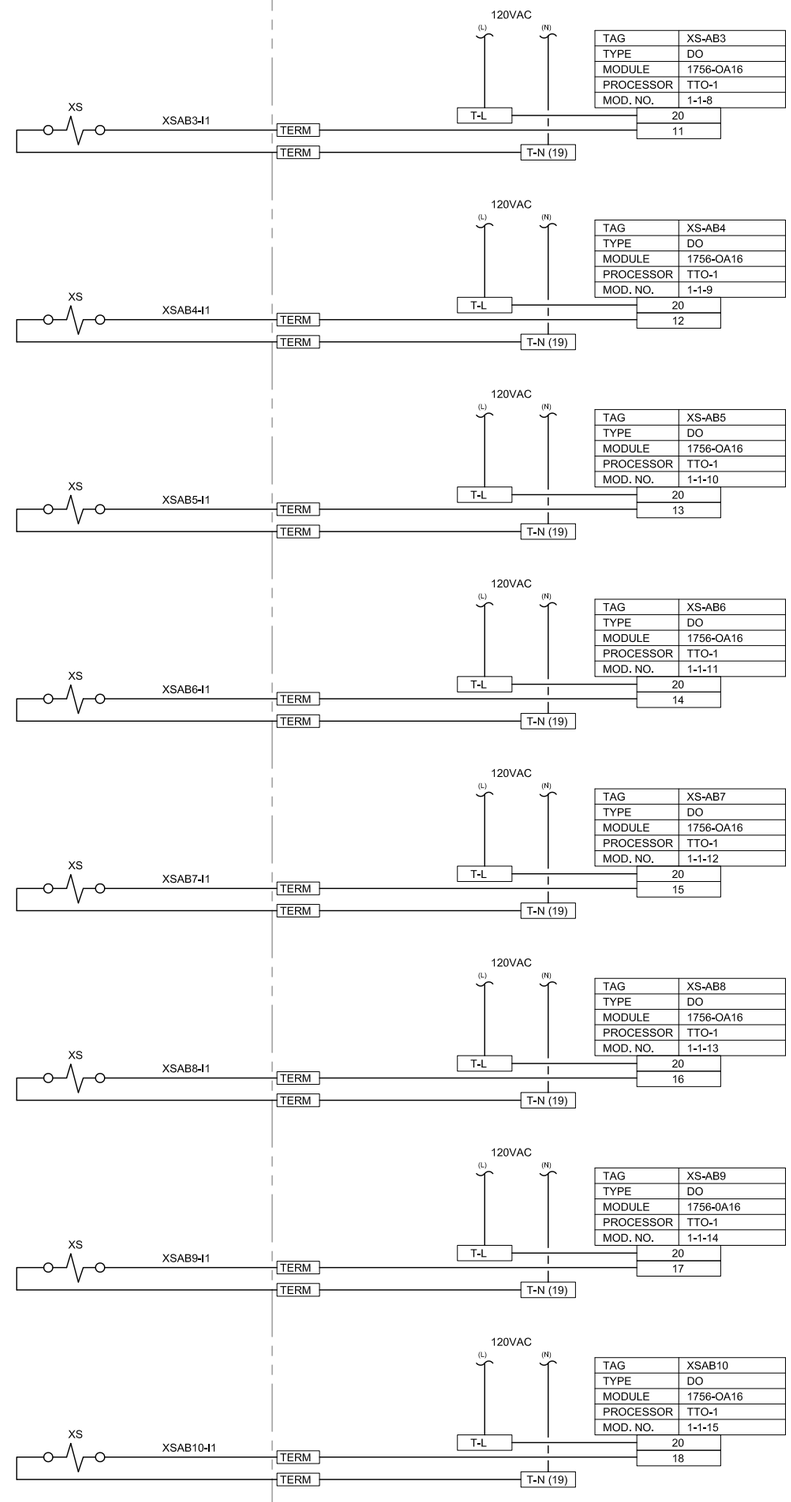

NOTES:

1. TERMINAL NUMBERS ARE PRELIMINARY. ACTUAL TERMINAL NUMBERS WILL BE UPDATED AFTER INSTALLATION.
2. TERM = TERMINAL NUMBER TO BE FIELD ASSIGNED DURING INSTALLATION.
3. ALL MISSING NUMBERS AND MISSING DRAWING NUMBERS TO BE FIELD ASSIGNED DURING INSTALLATION.
4. ALL FUSES TO BE 1 AMP FAST BLOW UNLESS OTHERWISE SPECIFIED.

MARK	APPR	DATE	DESCRIPTION

DESIGNED BY: D. WINGER
DRAWN BY: D. LAMPH
CHECKED BY: D. STEWART
PROJECT NUMBER: FA8201-09-D-0004-0005
GOVERNMENT REVIEWER:

HILL AIR FORCE BASE

DEPARTMENT OF THE AIR FORCE
OGDEN AIR LOGISTICS CENTER
75TH CIVIL ENGINEER GROUP

SCADA SYSTEM FOR THE IWTP
BUILDING 575

TTO-1 PANEL DIAGRAM MODULE 1

EI-623

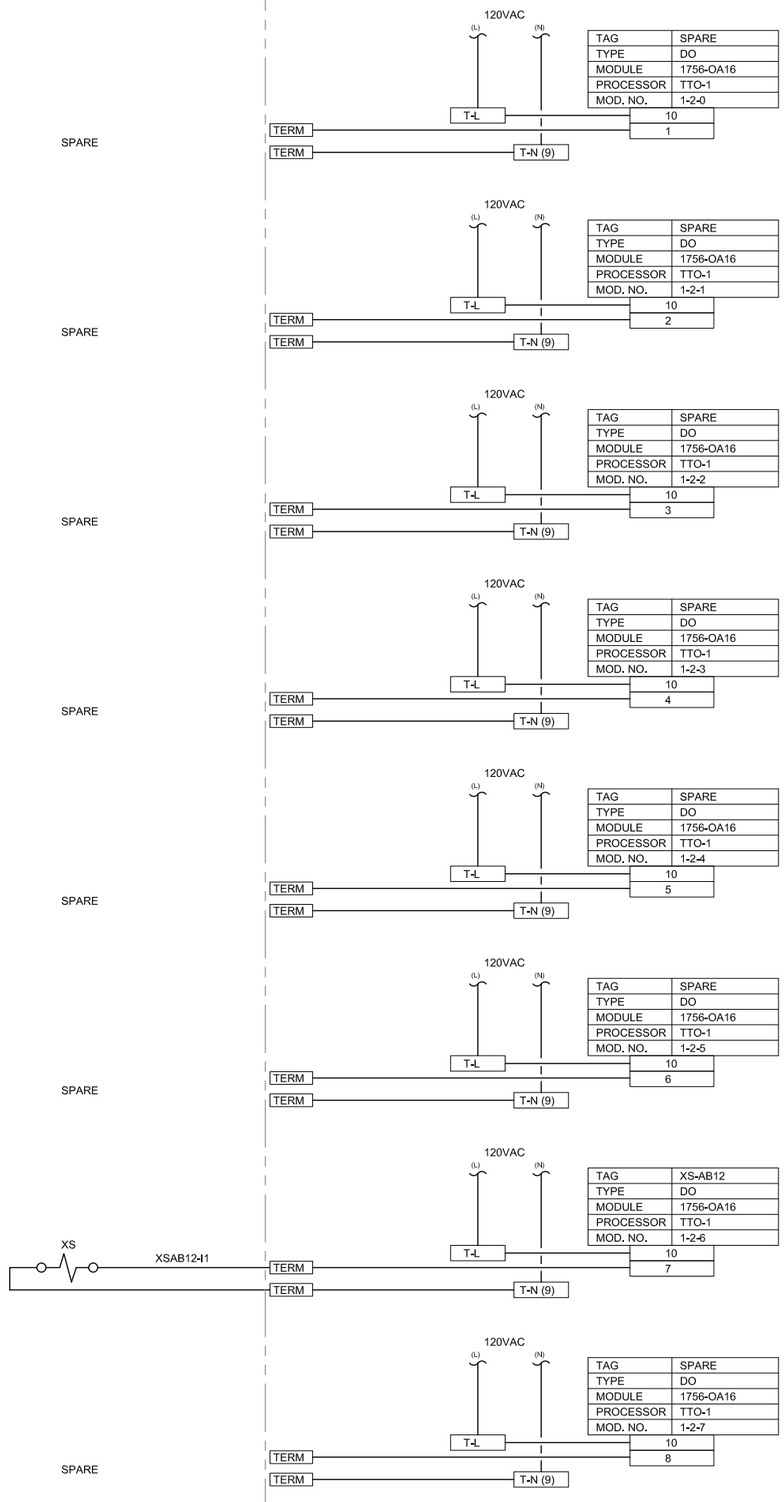

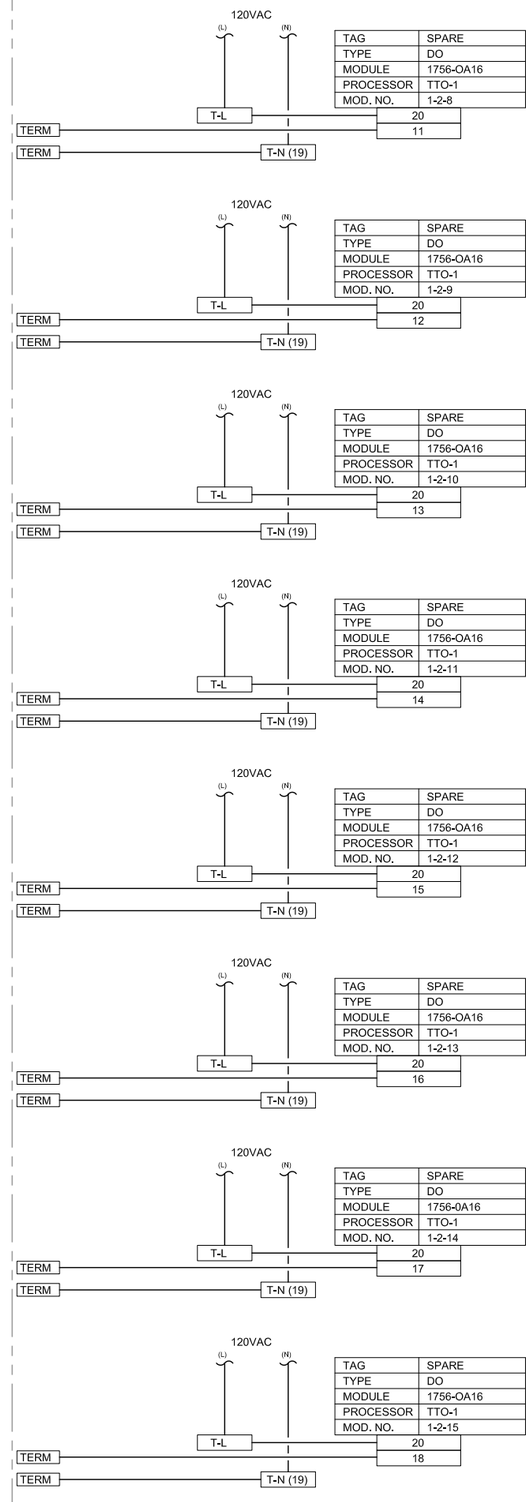

NOTES:

1. TERMINAL NUMBERS ARE PRELIMINARY. ACTUAL TERMINAL NUMBERS WILL BE UPDATED AFTER INSTALLATION.
2. TERM = TERMINAL NUMBER TO BE FIELD ASSIGNED DURING INSTALLATION.
3. ALL MISSING NUMBERS AND MISSING DRAWING NUMBERS TO BE FIELD ASSIGNED DURING INSTALLATION.
4. ALL FUSES TO BE 1 AMP FAST BLOW UNLESS OTHERWISE SPECIFIED.

MARK	APPR	DATE	DESCRIPTION

DESIGNED BY: D. WINGER
DRAWN BY: D. LAMPH
CHECKED BY: D. STEWART
PROJECT NUMBER: FA8201-09-D-0004-0005
GOVERNMENT REVIEWER:

HILL AIR FORCE BASE

DEPARTMENT OF THE AIR FORCE
OGDEN AIR LOGISTICS CENTER
75TH CIVIL ENGINEER GROUP

SCADA SYSTEM FOR THE IWTP
BUILDING 575

TTO-1 PANEL DIAGRAM MODULE 2

EI-624

SHEET 27 OF 37

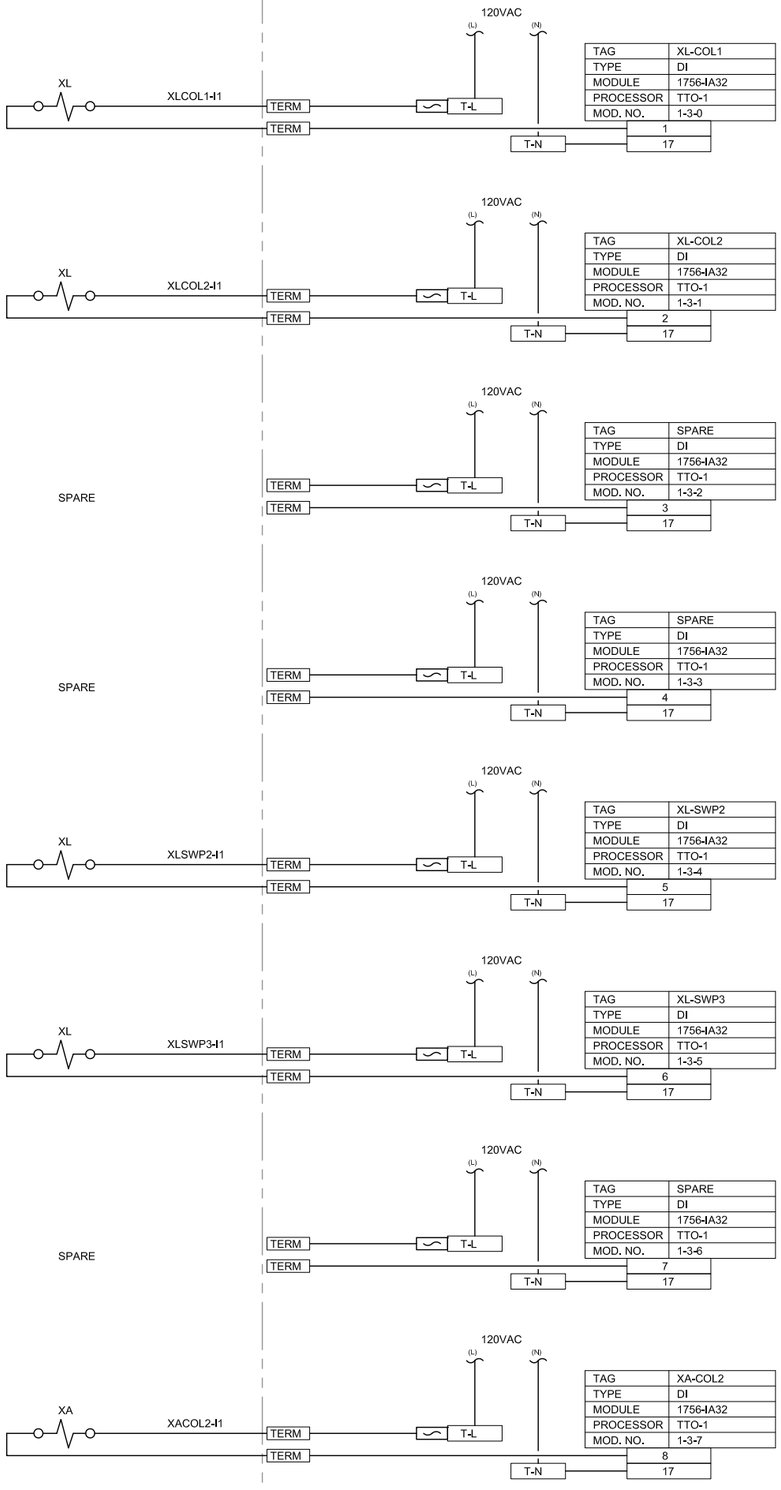

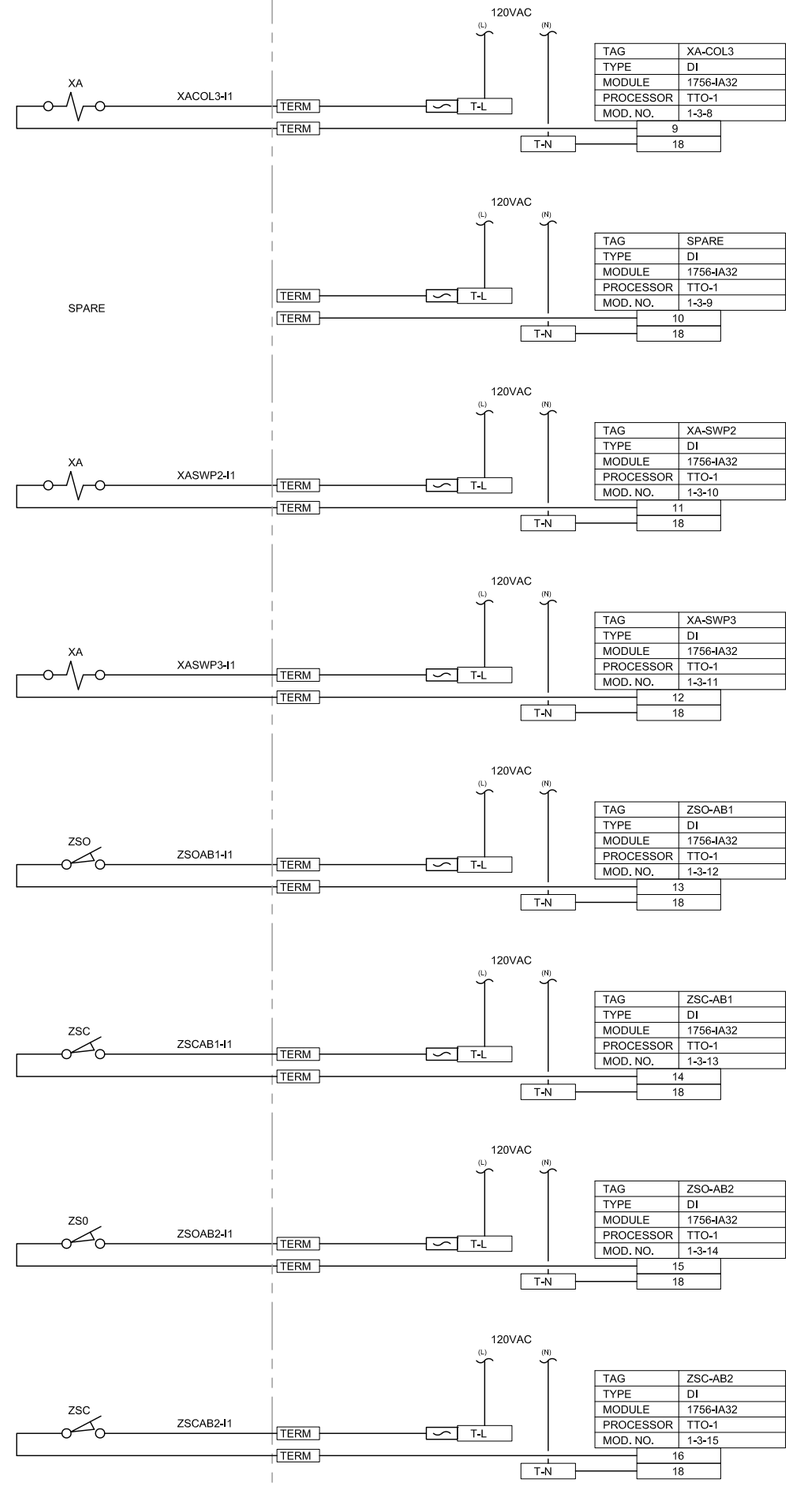

NOTES:

1. TERMINAL NUMBERS ARE PRELIMINARY. ACTUAL TERMINAL NUMBERS WILL BE UPDATED AFTER INSTALLATION.
2. TERM = TERMINAL NUMBER TO BE FIELD ASSIGNED DURING INSTALLATION.
3. ALL MISSING NUMBERS AND MISSING DRAWING NUMBERS TO BE FIELD ASSIGNED DURING INSTALLATION.
4. ALL FUSES TO BE 1 AMP FAST BLOW UNLESS OTHERWISE SPECIFIED.

MARK	APPR	DATE	DESCRIPTION

DESIGNED BY: D. WINGER
DRAWN BY: D. LAMPH
CHECKED BY: D. STEWART
PROJECT NUMBER: FA8201-09-D-0004-0005
GOVERNMENT REVIEWER:

HILL AIR FORCE BASE

DEPARTMENT OF THE AIR FORCE
OGDEN AIR LOGISTICS CENTER
75TH CIVIL ENGINEER GROUP

SCADA SYSTEM FOR THE IWTP
BUILDING 575

TTO-1 PANEL DIAGRAM MODULE 3

EI-625

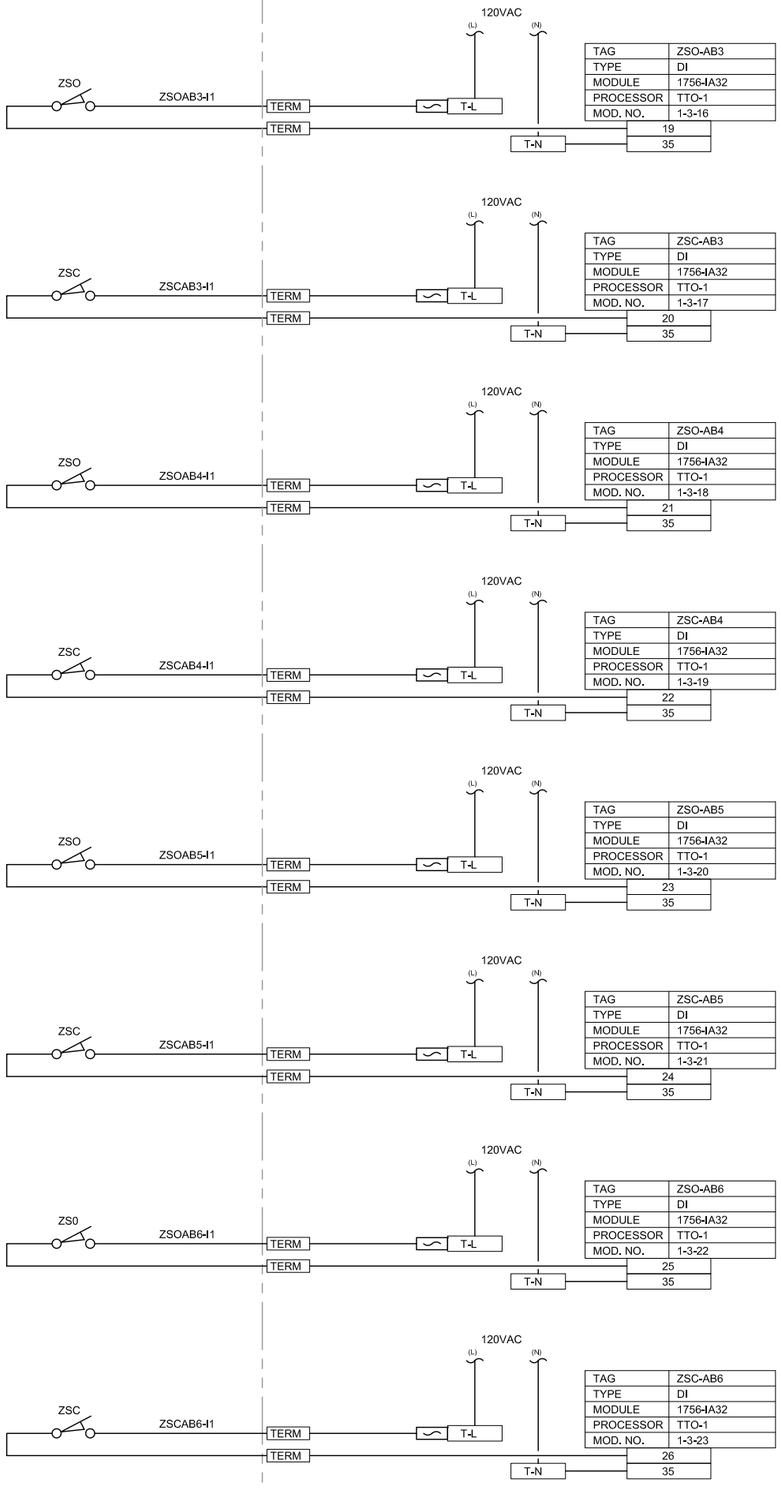

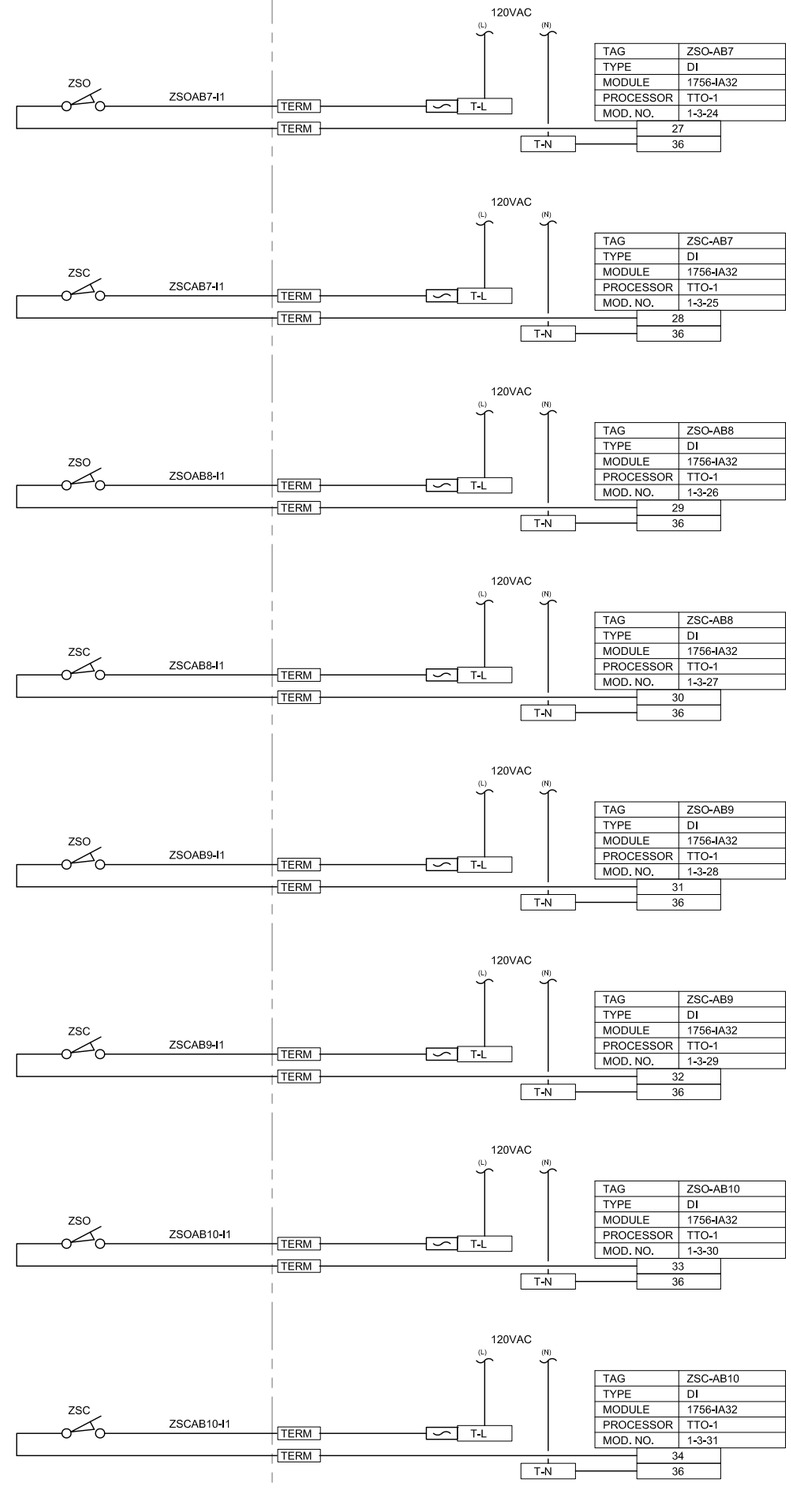

NOTES:

1. TERMINAL NUMBERS ARE PRELIMINARY. ACTUAL TERMINAL NUMBERS WILL BE UPDATED AFTER INSTALLATION.
2. TERM = TERMINAL NUMBER TO BE FIELD ASSIGNED DURING INSTALLATION.
3. ALL MISSING NUMBERS AND MISSING DRAWING NUMBERS TO BE FIELD ASSIGNED DURING INSTALLATION.
4. ALL FUSES TO BE 1 AMP FAST BLOW UNLESS OTHERWISE SPECIFIED.

DESCRIPTION	DATE	APPR	MARK

DESIGNED BY: D. WINGER
DRAWN BY: D. LAMPH
CHECKED BY: D. STEWART
PROJECT NUMBER: FA8201-09-D-0004-0005
GOVERNMENT REVIEWER:

HILL AIR FORCE BASE

DEPARTMENT OF THE AIR FORCE
OGDEN AIR LOGISTICS CENTER
75TH CIVIL ENGINEER GROUP

SCADA SYSTEM FOR THE IWTP
BUILDING 575

TTO-1 PANEL DIAGRAM MODULE 3

EI-626

SHEET 29 OF 37

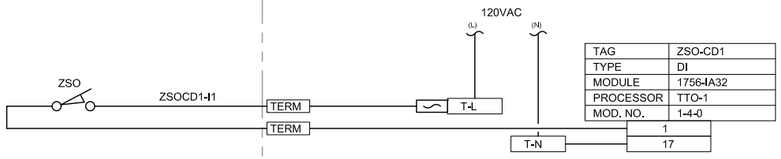

TAG	ZSO-CD1
TYPE	DI
MODULE	1756-IA32
PROCESSOR	TTO-1
MOD. NO.	1-4-0

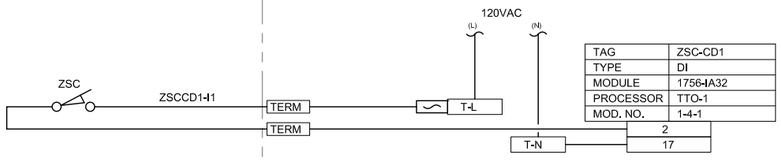

TAG	ZSC-CD1
TYPE	DI
MODULE	1756-IA32
PROCESSOR	TTO-1
MOD. NO.	1-4-1

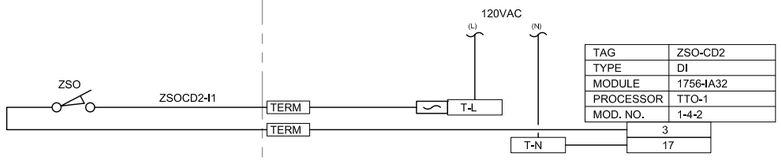

TAG	ZSO-CD2
TYPE	DI
MODULE	1756-IA32
PROCESSOR	TTO-1
MOD. NO.	1-4-2

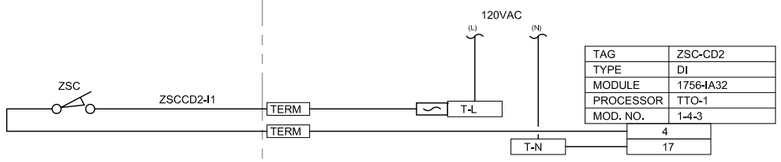

TAG	ZSC-CD2
TYPE	DI
MODULE	1756-IA32
PROCESSOR	TTO-1
MOD. NO.	1-4-3

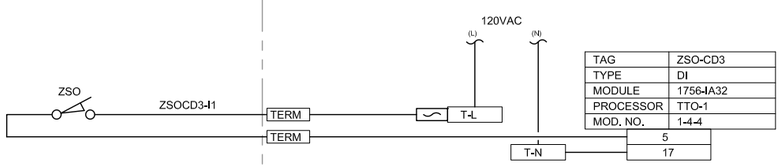

TAG	ZSO-CD3
TYPE	DI
MODULE	1756-IA32
PROCESSOR	TTO-1
MOD. NO.	1-4-4

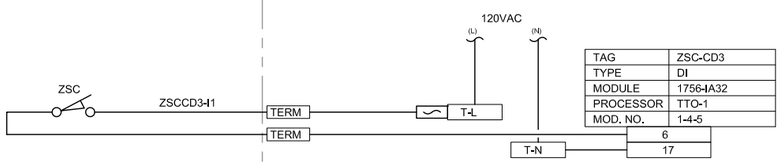

TAG	ZSC-CD3
TYPE	DI
MODULE	1756-IA32
PROCESSOR	TTO-1
MOD. NO.	1-4-5

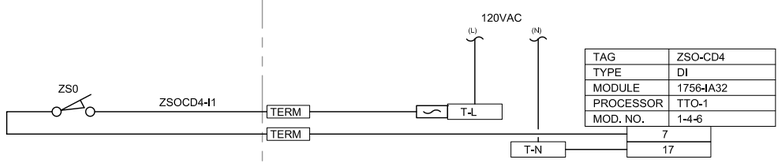

TAG	ZSO-CD4
TYPE	DI
MODULE	1756-IA32
PROCESSOR	TTO-1
MOD. NO.	1-4-6

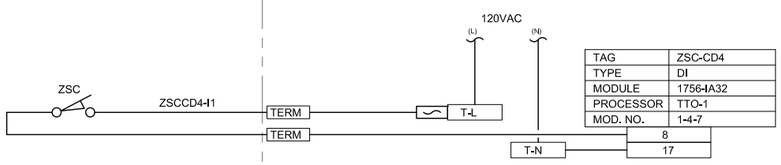

TAG	ZSC-CD4
TYPE	DI
MODULE	1756-IA32
PROCESSOR	TTO-1
MOD. NO.	1-4-7

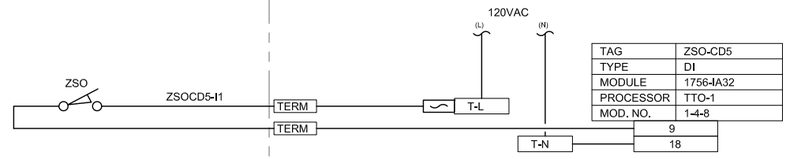

TAG	ZSO-CD5
TYPE	DI
MODULE	1756-IA32
PROCESSOR	TTO-1
MOD. NO.	1-4-8

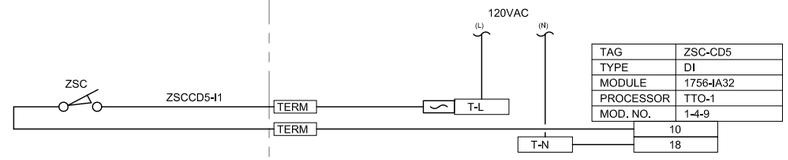

TAG	ZSC-CD5
TYPE	DI
MODULE	1756-IA32
PROCESSOR	TTO-1
MOD. NO.	1-4-9

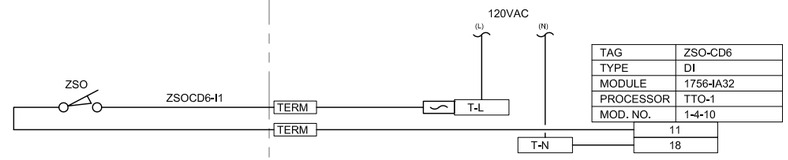

TAG	ZSO-CD6
TYPE	DI
MODULE	1756-IA32
PROCESSOR	TTO-1
MOD. NO.	1-4-10

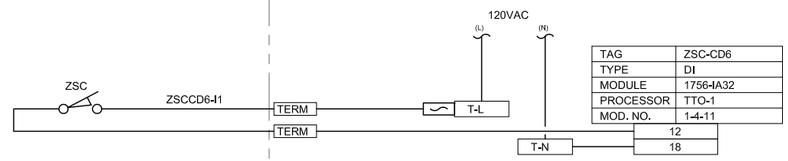

TAG	ZSC-CD6
TYPE	DI
MODULE	1756-IA32
PROCESSOR	TTO-1
MOD. NO.	1-4-11

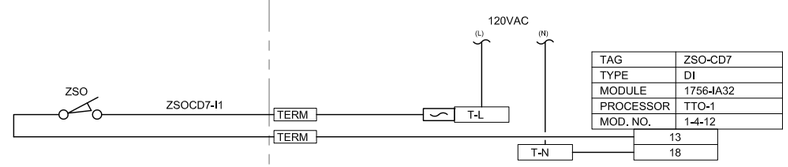

TAG	ZSO-CD7
TYPE	DI
MODULE	1756-IA32
PROCESSOR	TTO-1
MOD. NO.	1-4-12

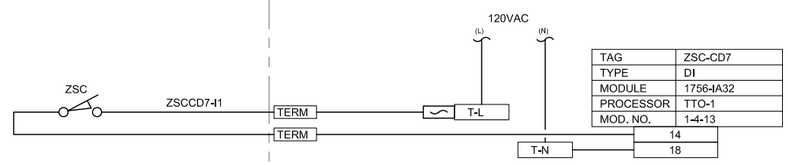

TAG	ZSC-CD7
TYPE	DI
MODULE	1756-IA32
PROCESSOR	TTO-1
MOD. NO.	1-4-13

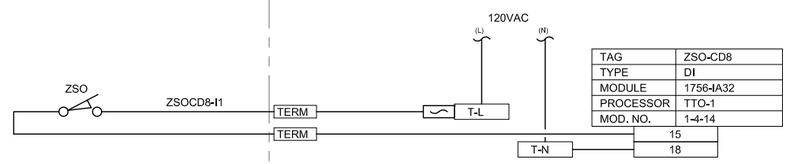

TAG	ZSO-CD8
TYPE	DI
MODULE	1756-IA32
PROCESSOR	TTO-1
MOD. NO.	1-4-14

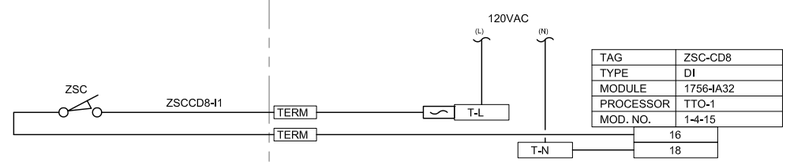

TAG	ZSC-CD8
TYPE	DI
MODULE	1756-IA32
PROCESSOR	TTO-1
MOD. NO.	1-4-15

NOTES:

1. TERMINAL NUMBERS ARE PRELIMINARY. ACTUAL TERMINAL NUMBERS WILL BE UPDATED AFTER INSTALLATION.
2. TERM = TERMINAL NUMBER TO BE FIELD ASSIGNED DURING INSTALLATION.
3. ALL MISSING NUMBERS AND MISSING DRAWING NUMBERS TO BE FIELD ASSIGNED DURING INSTALLATION.
4. ALL FUSES TO BE 1 AMP FAST BLOW UNLESS OTHERWISE SPECIFIED.

DESCRIPTION	DATE	APPR	MARK

DESIGNED BY: D. WINGER
DRAWN BY: D. LAMPH
CHECKED BY: D. STEWART
PROJECT NUMBER: FA8201-09-D-0004-0005
GOVERNMENT REVIEWER:

HILL AIR FORCE BASE

DEPARTMENT OF THE AIR FORCE
OGDEN AIR LOGISTICS CENTER
75TH CIVIL ENGINEER GROUP

SCADA SYSTEM FOR THE IWTP
BUILDING 575

TTO-1 PANEL DIAGRAM MODULE 4

EI-627

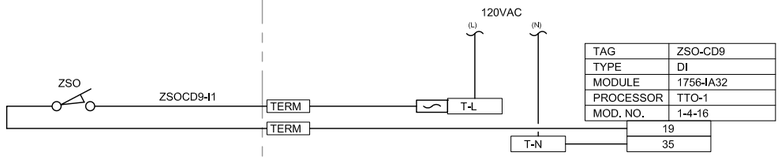

TAG	ZSO-CD9
TYPE	DI
MODULE	1756-IA32
PROCESSOR	TTO-1
MOD. NO.	1-4-16

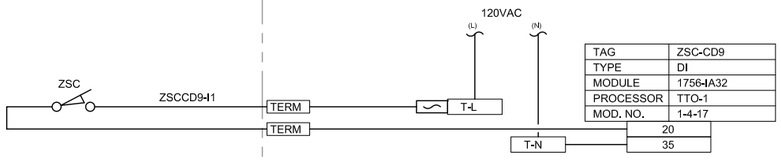

TAG	ZSC-CD9
TYPE	DI
MODULE	1756-IA32
PROCESSOR	TTO-1
MOD. NO.	1-4-17

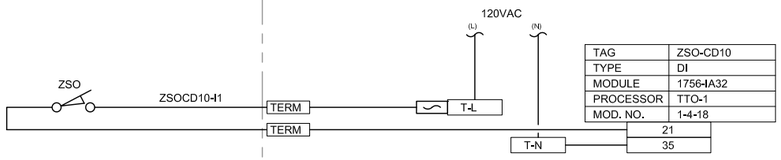

TAG	ZSO-CD10
TYPE	DI
MODULE	1756-IA32
PROCESSOR	TTO-1
MOD. NO.	1-4-18

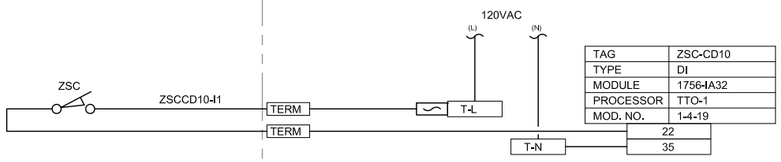

TAG	ZSC-CD10
TYPE	DI
MODULE	1756-IA32
PROCESSOR	TTO-1
MOD. NO.	1-4-19

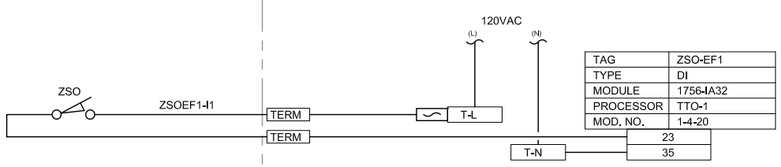

TAG	ZSO-EF1
TYPE	DI
MODULE	1756-IA32
PROCESSOR	TTO-1
MOD. NO.	1-4-20

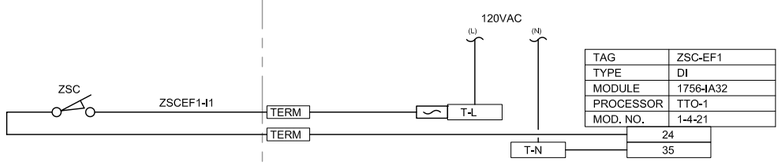

TAG	ZSC-EF1
TYPE	DI
MODULE	1756-IA32
PROCESSOR	TTO-1
MOD. NO.	1-4-21

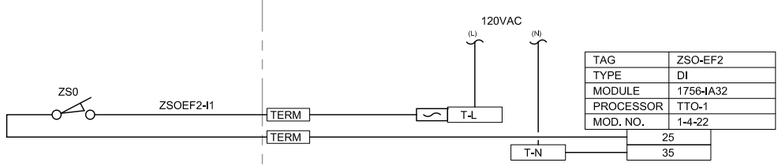

TAG	ZSO-EF2
TYPE	DI
MODULE	1756-IA32
PROCESSOR	TTO-1
MOD. NO.	1-4-22

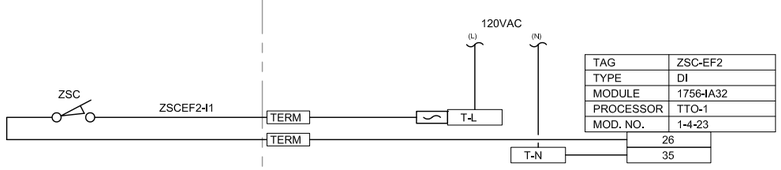

TAG	ZSC-EF2
TYPE	DI
MODULE	1756-IA32
PROCESSOR	TTO-1
MOD. NO.	1-4-23

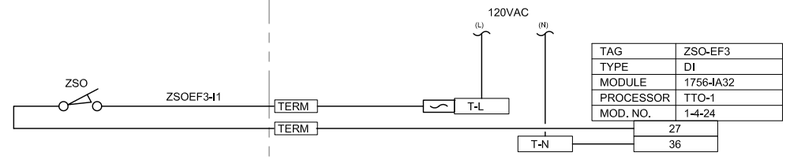

TAG	ZSO-EF3
TYPE	DI
MODULE	1756-IA32
PROCESSOR	TTO-1
MOD. NO.	1-4-24

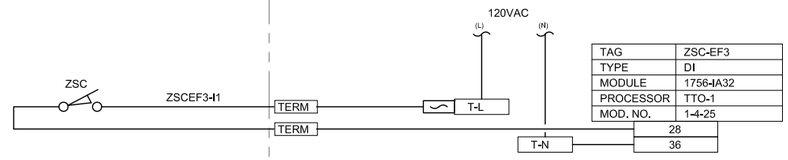

TAG	ZSC-EF3
TYPE	DI
MODULE	1756-IA32
PROCESSOR	TTO-1
MOD. NO.	1-4-25

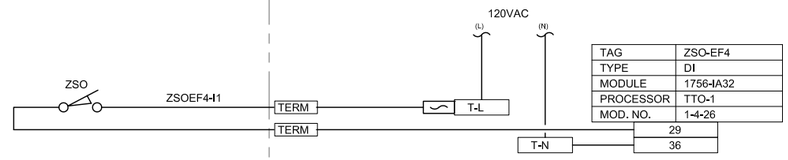

TAG	ZSO-EF4
TYPE	DI
MODULE	1756-IA32
PROCESSOR	TTO-1
MOD. NO.	1-4-26

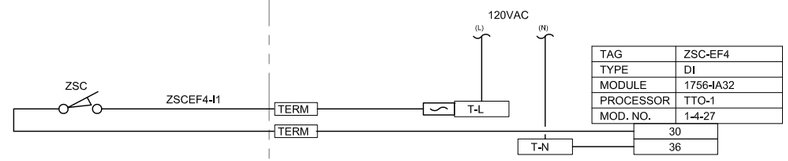

TAG	ZSC-EF4
TYPE	DI
MODULE	1756-IA32
PROCESSOR	TTO-1
MOD. NO.	1-4-27

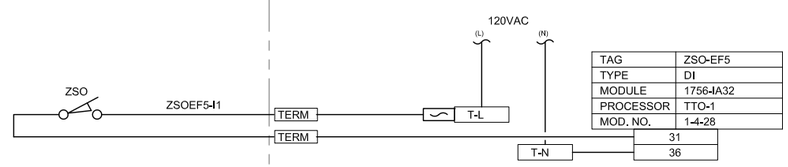

TAG	ZSO-EF5
TYPE	DI
MODULE	1756-IA32
PROCESSOR	TTO-1
MOD. NO.	1-4-28

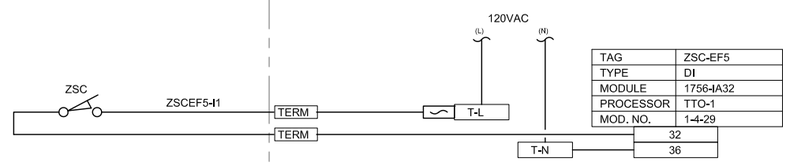

TAG	ZSC-EF5
TYPE	DI
MODULE	1756-IA32
PROCESSOR	TTO-1
MOD. NO.	1-4-29

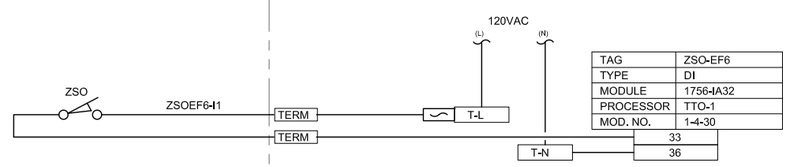

TAG	ZSO-EF6
TYPE	DI
MODULE	1756-IA32
PROCESSOR	TTO-1
MOD. NO.	1-4-30

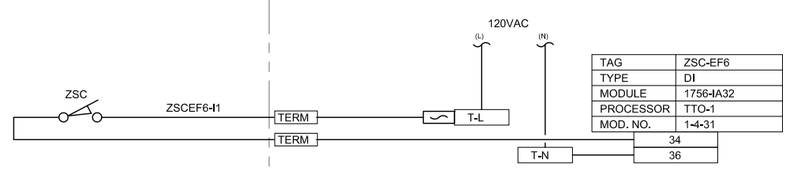

TAG	ZSC-EF6
TYPE	DI
MODULE	1756-IA32
PROCESSOR	TTO-1
MOD. NO.	1-4-31

NOTES:

1. TERMINAL NUMBERS ARE PRELIMINARY. ACTUAL TERMINAL NUMBERS WILL BE UPDATED AFTER INSTALLATION.
2. TERM = TERMINAL NUMBER TO BE FIELD ASSIGNED DURING INSTALLATION.
3. ALL MISSING NUMBERS AND MISSING DRAWING NUMBERS TO BE FIELD ASSIGNED DURING INSTALLATION.
4. ALL FUSES TO BE 1 AMP FAST BLOW UNLESS OTHERWISE SPECIFIED.

DESCRIPTION	DATE	APPR	MARK

DESIGNED BY: D. WINGER
DRAWN BY: D. LAMPH
CHECKED BY: D. STEWART
PROJECT NUMBER: FAB201-09-D-0004-0005
GOVERNMENT REVIEWER:

HILL AIR FORCE BASE

DEPARTMENT OF THE AIR FORCE
OGDEN AIR LOGISTICS CENTER
75TH CIVIL ENGINEER GROUP

SCADA SYSTEM FOR THE IWTP
BUILDING 575

TTO-1 PANEL DIAGRAM

EI-628

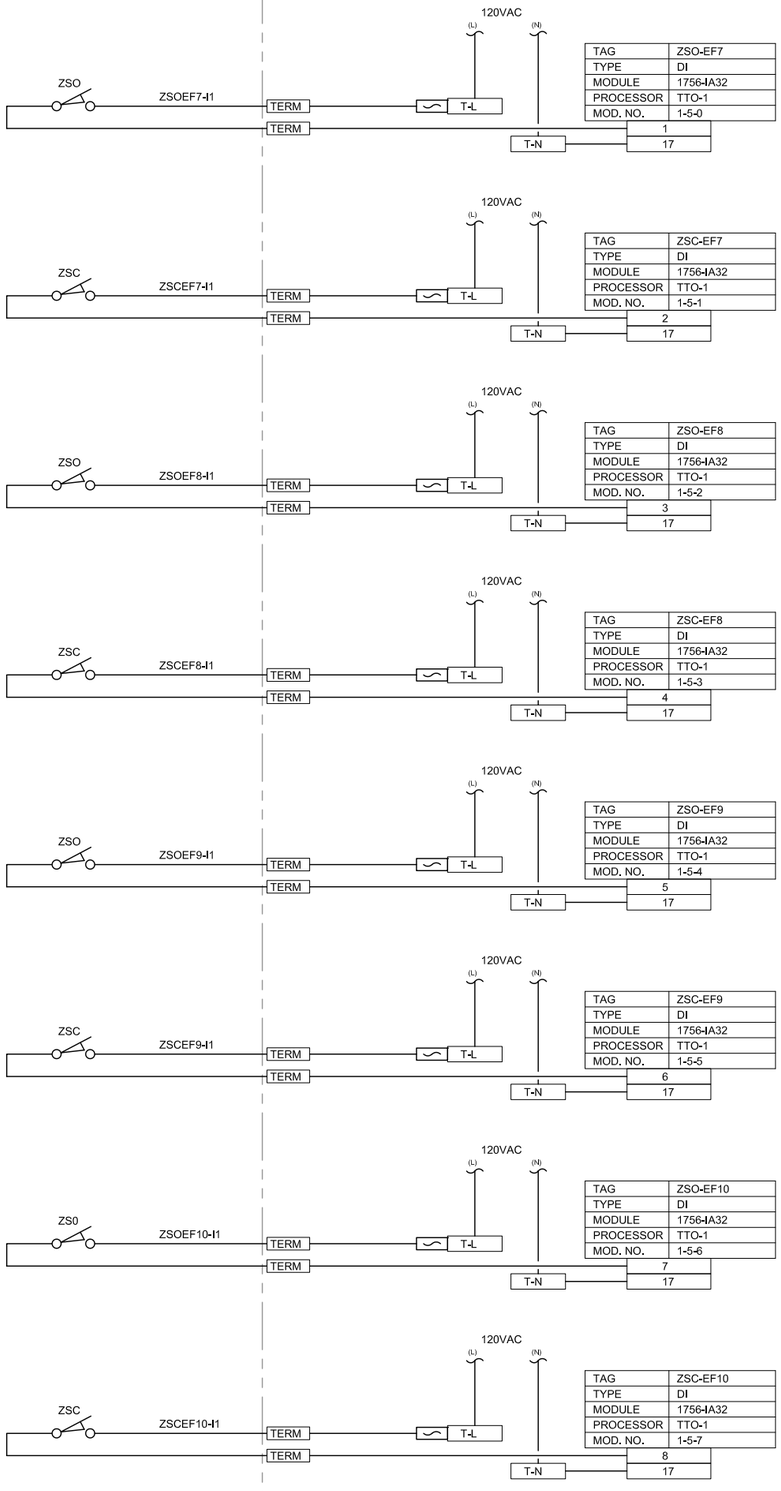

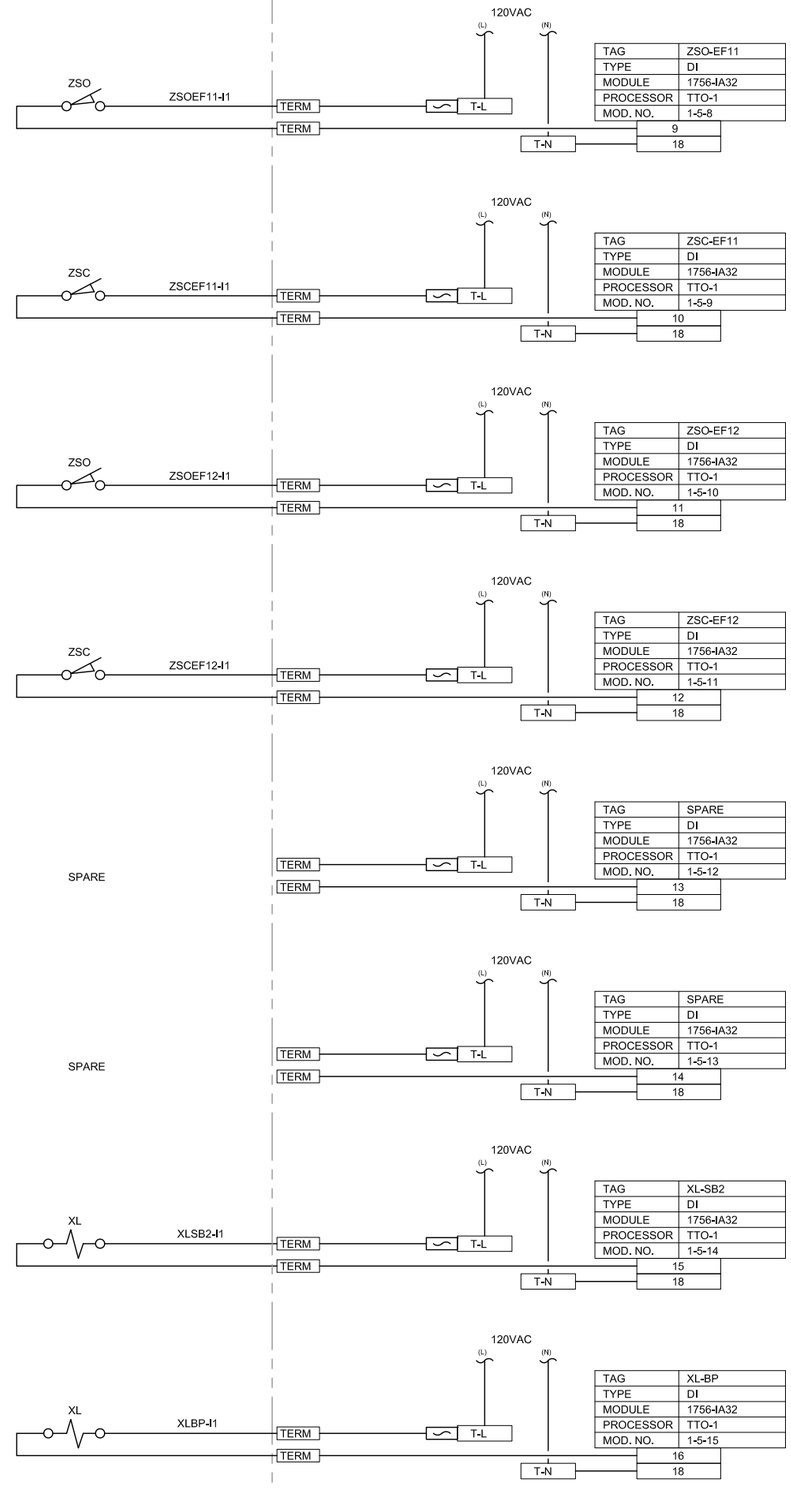

NOTES:

1. TERMINAL NUMBERS ARE PRELIMINARY. ACTUAL TERMINAL NUMBERS WILL BE UPDATED AFTER INSTALLATION.
2. TERM = TERMINAL NUMBER TO BE FIELD ASSIGNED DURING INSTALLATION.
3. ALL MISSING NUMBERS AND MISSING DRAWING NUMBERS TO BE FIELD ASSIGNED DURING INSTALLATION.
4. ALL FUSES TO BE 1 AMP FAST BLOW UNLESS OTHERWISE SPECIFIED.

MARK	APPR	DATE	DESCRIPTION

DESIGNED BY: D. WINGER
DRAWN BY: D. LAMPH
CHECKED BY: D. STEWART
PROJECT NUMBER: FA8201-09-D-0004-0005
GOVERNMENT REVIEWER:

HILL AIR FORCE BASE

DEPARTMENT OF THE AIR FORCE
OGDEN AIR LOGISTICS CENTER
75TH CIVIL ENGINEER GROUP

SCADA SYSTEM FOR THE IWTP
BUILDING 575

TTO-1 PANEL DIAGRAM MODULE 5

EI-629

SHEET 32 OF 37

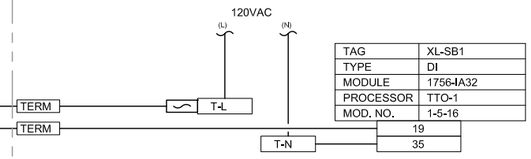

TAG	XL-SB1
TYPE	DI
MODULE	1756-IA32
PROCESSOR	TTO-1
MOD. NO.	1-5-16

SPARE

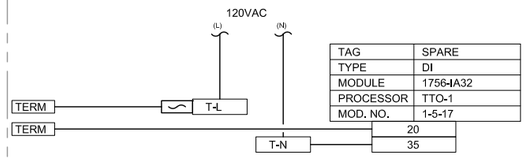

TAG	SPARE
TYPE	DI
MODULE	1756-IA32
PROCESSOR	TTO-1
MOD. NO.	1-5-17

SPARE

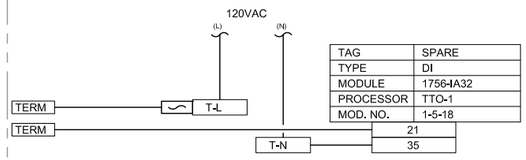

TAG	SPARE
TYPE	DI
MODULE	1756-IA32
PROCESSOR	TTO-1
MOD. NO.	1-5-18

SPARE

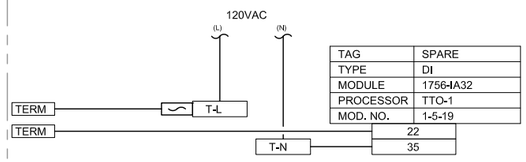

TAG	SPARE
TYPE	DI
MODULE	1756-IA32
PROCESSOR	TTO-1
MOD. NO.	1-5-19

SPARE

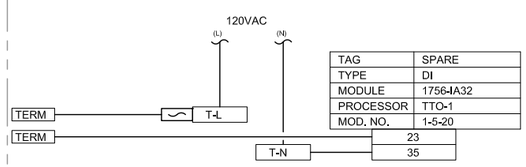

TAG	SPARE
TYPE	DI
MODULE	1756-IA32
PROCESSOR	TTO-1
MOD. NO.	1-5-20

SPARE

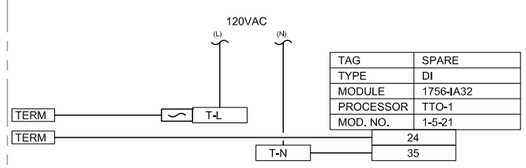

TAG	SPARE
TYPE	DI
MODULE	1756-IA32
PROCESSOR	TTO-1
MOD. NO.	1-5-21

SPARE

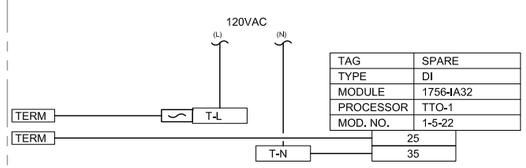

TAG	SPARE
TYPE	DI
MODULE	1756-IA32
PROCESSOR	TTO-1
MOD. NO.	1-5-22

SPARE

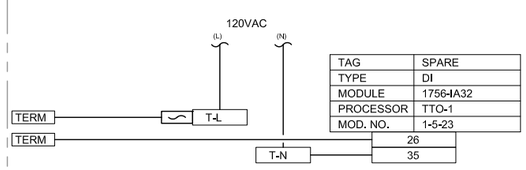

TAG	SPARE
TYPE	DI
MODULE	1756-IA32
PROCESSOR	TTO-1
MOD. NO.	1-5-23

SPARE

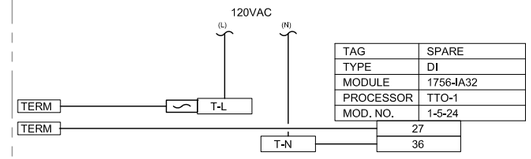

TAG	SPARE
TYPE	DI
MODULE	1756-IA32
PROCESSOR	TTO-1
MOD. NO.	1-5-24

SPARE

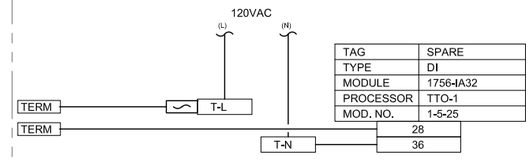

TAG	SPARE
TYPE	DI
MODULE	1756-IA32
PROCESSOR	TTO-1
MOD. NO.	1-5-25

SPARE

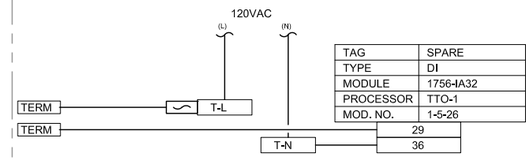

TAG	SPARE
TYPE	DI
MODULE	1756-IA32
PROCESSOR	TTO-1
MOD. NO.	1-5-26

SPARE

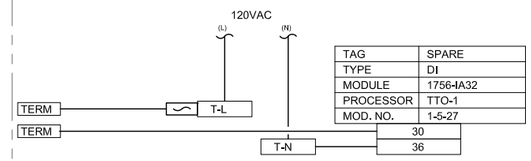

TAG	SPARE
TYPE	DI
MODULE	1756-IA32
PROCESSOR	TTO-1
MOD. NO.	1-5-27

SPARE

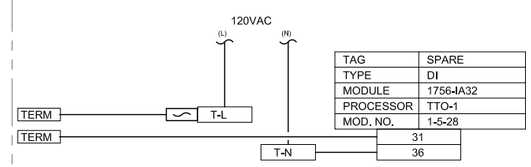

TAG	SPARE
TYPE	DI
MODULE	1756-IA32
PROCESSOR	TTO-1
MOD. NO.	1-5-28

SPARE

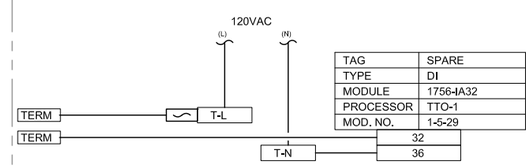

TAG	SPARE
TYPE	DI
MODULE	1756-IA32
PROCESSOR	TTO-1
MOD. NO.	1-5-29

SPARE

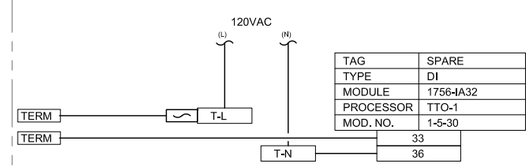

TAG	SPARE
TYPE	DI
MODULE	1756-IA32
PROCESSOR	TTO-1
MOD. NO.	1-5-30

SPARE

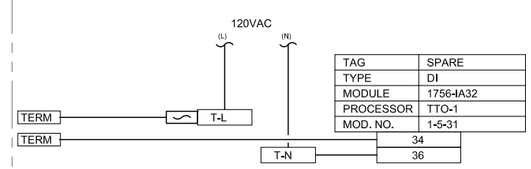

TAG	SPARE
TYPE	DI
MODULE	1756-IA32
PROCESSOR	TTO-1
MOD. NO.	1-5-31

SPARE

NOTES:

1. TERMINAL NUMBERS ARE PRELIMINARY. ACTUAL TERMINAL NUMBERS WILL BE UPDATED AFTER INSTALLATION.
2. TERM = TERMINAL NUMBER TO BE FIELD ASSIGNED DURING INSTALLATION.
3. ALL MISSING NUMBERS AND MISSING DRAWING NUMBERS TO BE FIELD ASSIGNED DURING INSTALLATION.
4. ALL FUSES TO BE 1 AMP FAST BLOW UNLESS OTHERWISE SPECIFIED.

DESCRIPTION	DATE	APPR	MARK

DESIGNED BY: D. WINGER
DRAWN BY: D. LAMPH
CHECKED BY: D. STEWART
PROJECT NUMBER: FA8201-09-D-0004-0005
GOVERNMENT REVIEWER:

HILL AIR FORCE BASE

DEPARTMENT OF THE AIR FORCE
OGDEN AIR LOGISTICS CENTER
75TH CIVIL ENGINEER GROUP

SCADA SYSTEM FOR THE IWTP
BUILDING 575

TTO-1 PANEL DIAGRAM MODULE 5

EI-630

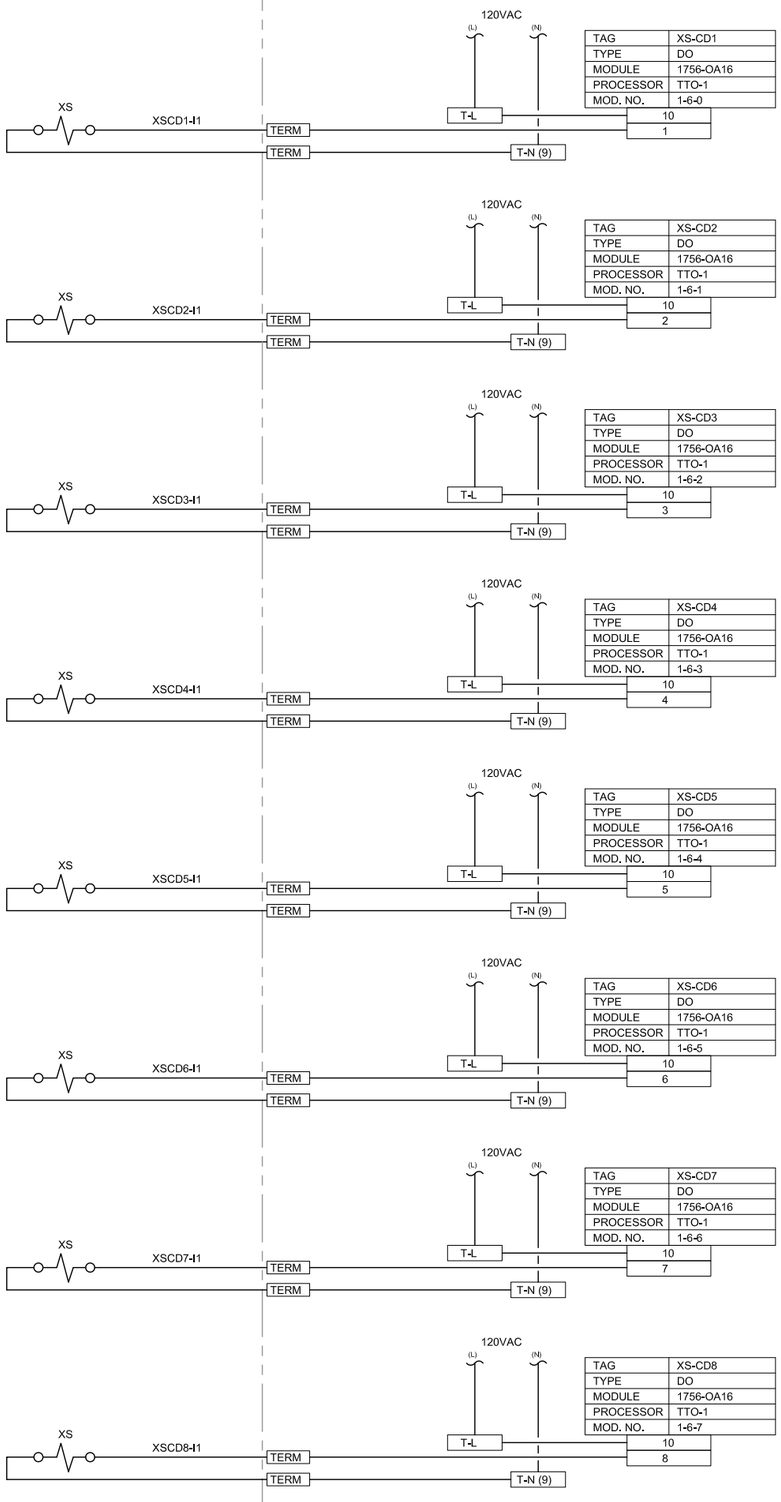

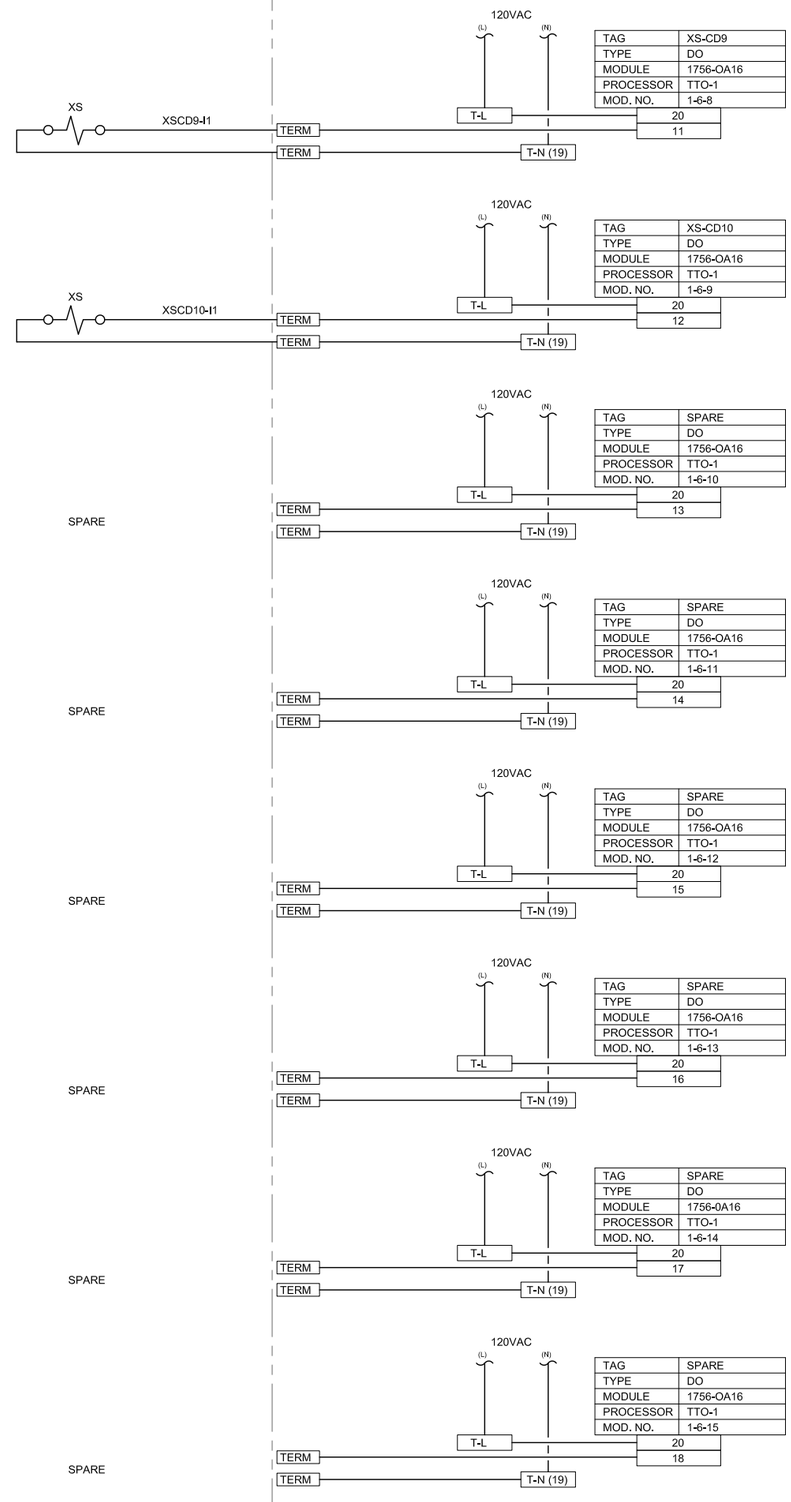

NOTES:

1. TERMINAL NUMBERS ARE PRELIMINARY. ACTUAL TERMINAL NUMBERS WILL BE UPDATED AFTER INSTALLATION.
2. TERM = TERMINAL NUMBER TO BE FIELD ASSIGNED DURING INSTALLATION.
3. ALL MISSING NUMBERS AND MISSING DRAWING NUMBERS TO BE FIELD ASSIGNED DURING INSTALLATION.
4. ALL FUSES TO BE 1 AMP FAST BLOW UNLESS OTHERWISE SPECIFIED.

MARK	APPR	DATE	DESCRIPTION

DESIGNED BY: D. WINGER
DRAWN BY: D. LAMPH
CHECKED BY: D. STEWART
PROJECT NUMBER: FA8201-09-D-0004-0005
GOVERNMENT REVIEWER:

HILL AIR FORCE BASE

DEPARTMENT OF THE AIR FORCE
OGDEN AIR LOGISTICS CENTER
75TH CIVIL ENGINEER GROUP

SCADA SYSTEM FOR THE IWTP
BUILDING 575

TTO-1 PANEL DIAGRAM MODULE 6

EI-631

SPARE

TAG	SPARE
TYPE	AI 4-20mA
MODULE	1756-IF16
PROCESSOR	TTO-2
MOD. NO.	2-1-0

T9-1A — T9-1B — 2 — 1 — T9-1C GND

SPARE

TAG	SPARE
TYPE	AI 4-20mA
MODULE	1756-IF16
PROCESSOR	TTO-2
MOD. NO.	2-1-1

T9-2A — T9-2B — 4 — 3 — T9-2C GND

SPARE

TAG	SPARE
TYPE	AI 4-20mA
MODULE	1756-IF16
PROCESSOR	TTO-2
MOD. NO.	2-1-2

T9-3A — T9-3B — 6 — 5 — T9-3C GND

SPARE

TAG	SPARE
TYPE	AI 4-20mA
MODULE	1756-IF16
PROCESSOR	TTO-2
MOD. NO.	2-1-3

T9-4A — T9-4B — 8 — 7 — T9-4C GND

SPARE

TAG	SPARE
TYPE	AI 4-20mA
MODULE	1756-IF16
PROCESSOR	TTO-2
MOD. NO.	2-1-4

T9-5A — T9-5B — 12 — 11 — T9-5C GND

SPARE

TAG	SPARE
TYPE	AI 4-20mA
MODULE	1756-IF16
PROCESSOR	TTO-2
MOD. NO.	2-1-5

T9-6A — T9-6B — 14 — 13 — T9-6C GND

SPARE

TAG	SPARE
TYPE	AI 4-20mA
MODULE	1756-IF16
PROCESSOR	TTO-2
MOD. NO.	2-1-6

T9-7A — T9-7B — 16 — 15 — T9-7C GND

SPARE

TAG	SPARE
TYPE	AI 4-20mA
MODULE	1756-IF16
PROCESSOR	TTO-2
MOD. NO.	2-1-7

T9-8A — T9-8B — 18 — 17 — T9-8C GND

ST — (+) (-) — T9-9A — T9-9B

TAG	SI-COL1
TYPE	AI 4-20mA
MODULE	1756-IF16
PROCESSOR	TTO-2
MOD. NO.	2-1-8

20 — 19 — T9-9C GND

ST — (+) (-) — T9-10A — T9-10B

TAG	SI-COL2
TYPE	AI 4-20mA
MODULE	1756-IF16
PROCESSOR	TTO-2
MOD. NO.	2-1-9

22 — 21 — T9-10C GND

SPARE

TAG	SPARE
TYPE	AI 4-20mA
MODULE	1756-IF16
PROCESSOR	TTO-2
MOD. NO.	2-1-10

T9-11A — T9-11B — 24 — 23 — T9-11C GND

SPARE

TAG	SPARE
TYPE	AI 4-20mA
MODULE	1756-IF16
PROCESSOR	TTO-2
MOD. NO.	2-1-11

T9-12A — T9-12B — 26 — 25 — T9-12C GND

ST — (+) (-) — T9-13A — T9-13B

TAG	SI-SWP2
TYPE	AI 4-20mA
MODULE	1756-IF16
PROCESSOR	TTO-2
MOD. NO.	2-1-12

30 — 29 — T9-13C GND

ST — (+) (-) — T9-14A — T9-14B

TAG	SI-SWP3
TYPE	AI 4-20mA
MODULE	1756-IF16
PROCESSOR	TTO-2
MOD. NO.	2-1-13

32 — 31 — T9-14C GND

SPARE

TAG	SPARE
TYPE	AI 4-20mA
MODULE	1756-IF16
PROCESSOR	TTO-2
MOD. NO.	2-1-14

T9-15A — T9-15B — 34 — 33 — T9-15C GND

SPARE

TAG	SPARE
TYPE	AI 4-20mA
MODULE	1756-IF16
PROCESSOR	TTO-2
MOD. NO.	2-1-15

T9-16A — T9-16B — 36 — 35 — T9-16C GND

NOTES:

1. TERMINAL NUMBERS ARE PRELIMINARY. ACTUAL TERMINAL NUMBERS WILL BE UPDATED AFTER INSTALLATION.
2. TERM = TERMINAL NUMBER TO BE FIELD ASSIGNED DURING INSTALLATION.
3. ALL MISSING NUMBERS AND MISSING DRAWING NUMBERS TO BE FIELD ASSIGNED DURING INSTALLATION.
4. ALL FUSES TO BE 1 AMP FAST BLOW UNLESS OTHERWISE SPECIFIED.

MARK	APPR	DATE	DESCRIPTION

DESIGNED BY: D. WINGER
DRAWN BY: D. LAMPH
CHECKED BY: D. STEWART
PROJECT NUMBER: FA8201-09-D-0004-0005
GOVERNMENT REVIEWER:

HILL AIR FORCE BASE

DEPARTMENT OF THE AIR FORCE
OGDEN AIR LOGISTICS CENTER
75TH CIVIL ENGINEER GROUP

SCADA SYSTEM FOR THE IWTP
BUILDING 575

TTO-2 PANEL DIAGRAM MODULE 1

EI-632

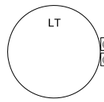

T9-1A

T9-1B

TAG	LI-COL
TYPE	AI 4-20mA
MODULE	1756-IF16
PROCESSOR	TTO-2
MOD. NO.	2-2-0

2
1
T9-1C GND

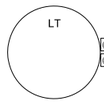

T9-2A

T9-2B

TAG	LI-STPD
TYPE	AI 4-20mA
MODULE	1756-IF16
PROCESSOR	TTO-2
MOD. NO.	2-2-1

4
3
T9-2C GND

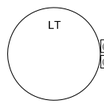

T9-3A

T9-3B

TAG	LI-BACKWASH
TYPE	AI 4-20mA
MODULE	1756-IF16
PROCESSOR	TTO-2
MOD. NO.	2-2-2

6
5
T9-3C GND

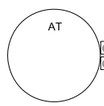

T9-4A

T9-4B

TAG	AI-H2S
TYPE	AI 4-20mA
MODULE	1756-IF16
PROCESSOR	TTO-2
MOD. NO.	2-2-3

8
7
T9-4C GND

SPARE

T9-5A

T9-5B

TAG	SPARE
TYPE	AI 4-20mA
MODULE	1756-IF16
PROCESSOR	TTO-2
MOD. NO.	2-2-4

12
11
T9-5C GND

SPARE

T9-6A

T9-6B

TAG	SPARE
TYPE	AI 4-20mA
MODULE	1756-IF16
PROCESSOR	TTO-2
MOD. NO.	2-2-5

14
13
T9-6C GND

SPARE

T9-7A

T9-7B

TAG	SPARE
TYPE	AI 4-20mA
MODULE	1756-IF16
PROCESSOR	TTO-2
MOD. NO.	2-2-6

16
15
T9-7C GND

SPARE

T9-8A

T9-8B

TAG	SPARE
TYPE	AI 4-20mA
MODULE	1756-IF16
PROCESSOR	TTO-2
MOD. NO.	2-2-7

18
17
T9-8C GND

SPARE

T9-9A

T9-9B

TAG	SPARE
TYPE	AI 4-20mA
MODULE	1756-IF16
PROCESSOR	TTO-2
MOD. NO.	2-2-8

20
19
T9-9C GND

SPARE

T9-10A

T9-10B

TAG	SPARE
TYPE	AI 4-20mA
MODULE	1756-IF16
PROCESSOR	TTO-2
MOD. NO.	2-2-9

22
21
T9-10C GND

SPARE

T9-11A

T9-11B

TAG	SPARE
TYPE	AI 4-20mA
MODULE	1756-IF16
PROCESSOR	TTO-2
MOD. NO.	2-2-10

24
23
T9-11C GND

SPARE

T9-12A

T9-12B

TAG	SPARE
TYPE	AI 4-20mA
MODULE	1756-IF16
PROCESSOR	TTO-2
MOD. NO.	2-2-11

26
25
T9-12C GND

SPARE

T9-13A

T9-13B

TAG	SPARE
TYPE	AI 4-20mA
MODULE	1756-IF16
PROCESSOR	TTO-2
MOD. NO.	2-2-12

30
29
T9-13C GND

SPARE

T9-14A

T9-14B

TAG	SPARE
TYPE	AI 4-20mA
MODULE	1756-IF16
PROCESSOR	TTO-2
MOD. NO.	2-2-13

32
31
T9-14C GND

SPARE

T9-15A

T9-15B

TAG	SPARE
TYPE	AI 4-20mA
MODULE	1756-IF16
PROCESSOR	TTO-2
MOD. NO.	2-2-14

34
33
T9-15C GND

SPARE

T9-16A

T9-16B

TAG	SPARE
TYPE	AI 4-20mA
MODULE	1756-IF16
PROCESSOR	TTO-2
MOD. NO.	2-2-15

36
35
T9-16C GND

NOTES:

1. TERMINAL NUMBERS ARE PRELIMINARY. ACTUAL TERMINAL NUMBERS WILL BE UPDATED AFTER INSTALLATION.
2. TERM = TERMINAL NUMBER TO BE FIELD ASSIGNED DURING INSTALLATION.
3. ALL MISSING NUMBERS AND MISSING DRAWING NUMBERS TO BE FIELD ASSIGNED DURING INSTALLATION.
4. ALL FUSES TO BE 1 AMP FAST BLOW UNLESS OTHERWISE SPECIFIED.

MARK	APPR	DATE	DESCRIPTION

DESIGNED BY: D. WINGER
DRAWN BY: D. LAMPH
CHECKED BY: D. STEWART
PROJECT NUMBER: FA8201-09-D-0004-0005
GOVERNMENT REVIEWER:

HILL AIR FORCE BASE

DEPARTMENT OF THE AIR FORCE
OGDEN AIR LOGISTICS CENTER
75TH CIVIL ENGINEER GROUP

SCADA SYSTEM FOR THE IWTP
BUILDING 575

TTO-2 PANEL DIAGRAM MODULE 2

EI-633

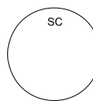

TAG	SC-COL1
TYPE	AO 4-20mA
MODULE	1756-OF8
PROCESSOR	TTO-2
MOD. NO.	2-3-0

T11-1A	3
T11-1B	5
T11-1C	

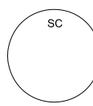

TAG	SC-COL2
TYPE	AO 4-20mA
MODULE	1756-OF8
PROCESSOR	TTO-2
MOD. NO.	2-3-1

T11-2A	9
T11-2B	5
T11-2C	

SPARE

TAG	SPARE
TYPE	AO 4-20mA
MODULE	1756-OF8
PROCESSOR	TTO-2
MOD. NO.	2-3-2

T11-3A	13
T11-3B	15
T11-3C	

SPARE

TAG	SPARE
TYPE	AO 4-20mA
MODULE	1756-OF8
PROCESSOR	TTO-2
MOD. NO.	2-3-3

T11-4A	19
T11-4B	15
T11-4C	

SPARE

TAG	SPARE
TYPE	AO 4-20mA
MODULE	1756-OF8
PROCESSOR	TTO-2
MOD. NO.	2-3-4

T11-5A	2
T11-5B	6
T11-5C	

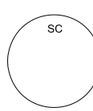

TAG	SC-SWP2
TYPE	AO 4-20mA
MODULE	1756-OF8
PROCESSOR	TTO-2
MOD. NO.	2-3-5

T11-6A	10
T11-6B	6
T11-6C	

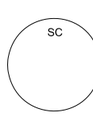

TAG	SC-SWP3
TYPE	AO 4-20mA
MODULE	1756-OF8
PROCESSOR	TTO-2
MOD. NO.	2-3-6

T11-7A	14
T11-7B	16
T11-7C	

SPARE

TAG	SPARE
TYPE	AO 4-20mA
MODULE	1756-OF8
PROCESSOR	TTO-2
MOD. NO.	2-3-7

T11-8A	20
T11-8B	16
T11-8C	

NOTES:

1. TERMINAL NUMBERS ARE PRELIMINARY. ACTUAL TERMINAL NUMBERS WILL BE UPDATED AFTER INSTALLATION.
2. TERM = TERMINAL NUMBER TO BE FIELD ASSIGNED DURING INSTALLATION.
3. ALL MISSING NUMBERS AND MISSING DRAWING NUMBERS TO BE FIELD ASSIGNED DURING INSTALLATION.
4. ALL FUSES TO BE 1 AMP FAST BLOW UNLESS OTHERWISE SPECIFIED.

MARK	APPR	DATE	DESCRIPTION

DESIGNED BY: D. WINGER
DRAWN BY: D. LAMPH
CHECKED BY: D. STEWART
PROJECT NUMBER: FA8201-09-D-0004-0005
GOVERNMENT REVIEWER:

HILL AIR FORCE BASE

DEPARTMENT OF THE AIR FORCE
OGDEN AIR LOGISTICS CENTER
75TH CIVIL ENGINEER GROUP

SCADA SYSTEM FOR THE IWTP
BUILDING 575

TTO-2 PANEL DIAGRAM MODULE 3

EI-634