SCADA SYSTEM FOR THE INDUSTRIAL WASTE TREATMENT PLANT FA8201-09-D-0004-0005

RECORD DRAWINGS

31 MAY 2012

HILL AIR FORCE BASE

OGDEN, UTAH

DEPARTMENT OF THE AIR FORCE

OGDEN AIR LOGISTICS CENTER

75TH CIVIL ENGINEER GROUP

ELECTRICAL ENGINEER

BOWEN, COLLINS AND ASSOCIATES
154 EAST 14000 SOUTH
DRAPER, UTAH 84020
PHONE 801.495.2224
FAX 801.495.2225

TETRA TECH
136 EAST SOUTH TEMPLE, SUITE 910
SALT LAKE CITY, UT 84111
PHONE 801.364.1064
FAX 801.364.2012

RECORD DRAWINGS

Revisions Drawn by DEE LAMPH Date 5-31-2012

THESE RECORD DRAWINGS HAVE BEEN PREPARED, IN PART, ON THE BASIS OF INFORMATION COMPILED BY OTHERS. THEY ARE NOT INTENDED TO REPRESENT IN DETAIL THE EXACT LOCATION, TYPE OF COMPONENT NOR MANNER OF CONSTRUCTION. THE ENGINEER WILL NOT BE RESPONSIBLE FOR ANY ERRORS OR OMISSIONS WHICH HAVE BEEN INCORPORATED INTO THE RECORD DRAWINGS.

REVISION	DATE	DESCRIPTION	BY

DEPARTMENT OF THE AIR FORCE
OGDEN AIR LOGISTICS CENTER
75TH CIVIL ENGINEER GROUP

HILL AIR FORCE BASE — OGDEN, UTAH

COVER SHEET

G001

CIVIL/STRUCTURAL REVIEW DATE			A-E FIRM: BC&A/TT
MECHANICAL REVIEW DATE			DESIGNER: D. WINGER
ELECTRICAL REVIEW DATE			ENGINEERING ASSISTANT: D. LAMPH
ARCHITECTURAL COMPATIBILITY DATE			PROJECT MANAGER: D. DUNNING
PHYS HANDICAP/INT DESIGN DATE			DATE: 12/31/12
BASE COMPREHENSIVE PLANNER DATE			PROJECT NO.: FA8201-09-D-0004-0005
ENERGY CONSERVATION REVIEW DATE	BIOENVIRONMENTAL REVIEW DATE	MAINTENANCE ENGINEERING DATE	BASE FILE NO.: FILE NAME
FIRE PROTECTION REVIEW DATE	ENVIRONMENTAL REVIEW DATE	CHIEF PROJECT MANAGEMENT DATE	
CORROSION ENGINEER DATE	SAFETY DATE	CHIEF ENGINEER DATE	
CUSTOMER-FUNCTIONAL REVIEW DATE	COMMUNICATIONS DATE	775 CES COMMANDER DATE	
SECURITY FORCES DATE	FIRE DEPARTMENT DATE	APPROVED-75 CEG DATE	SHEET 1 OF 37

VICINITY MAP

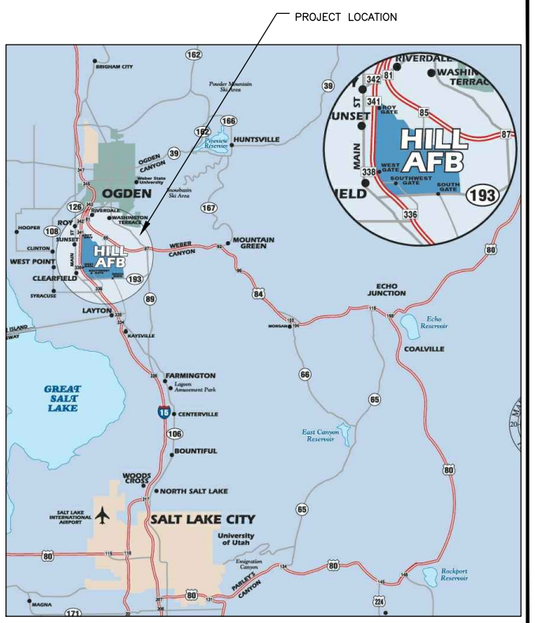

LOCATION MAP

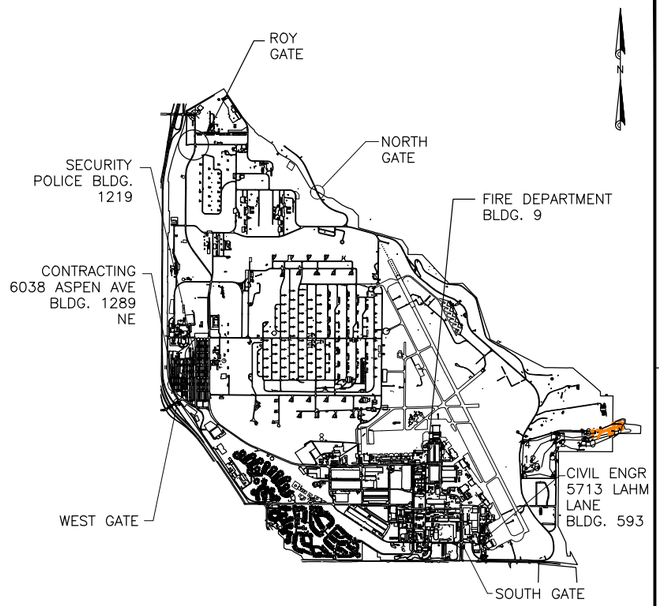

CODE CRITERIA

FIRE RESISTIVE REQUIREMENTS

BUILDING ELEMENT	
EXTERIOR BEARING WALLS	N
INTERIOR BEARING WALLS	N
STRUCTURAL FRAME	N
PARTITIONS – PERMANENT	N
SHAFT ENCLOSURES	N
FLOORS – CEILINGS/FLOORS	N
ROOFS – CEILINGS/FLOORS	N
EXTERIOR DOORS & WINDOWS	N

N = NO REQUIREMENT

CODE REVIEW CRITERIA

OCCUPANCY GROUP(S)	N
TYPE(S) OF CONSTRUCTION	NON–RATED
FIRE SPRINKERS	N
PROJECT AREA	N
SCOPE OF WORK	TENANT IMPROVEMENT
MIXED OCCUPANCY RATIO	N
NUMBER OF STORIES	N

SCOPE OF WORK SUMMARY

BRIEFLY AND WITHOUT FORCE OR EFFECT UPON THE CONTRACT DOCUMENTS, THE WORK OF THIS CONTRACT CAN BE SUMMARIZED AS FOLLOWS:
1. ELECTRICAL

HAZARDOUS MATERIALS

LEAD AND/OR ASBESTOS MAY BE PRESENT ON SITE. IF ENCOUNTERED, CONTACT HAFB PROJECT MANAGER IMMEDIATELY.

DRAWING INDEX

GENERAL
1 G001 COVER SHEET
2 G002 DRAWING INDEX, CODE CRITERIA, MAPS, ABBREVIATIONS

ELECTRICAL
3 EI600 TO BE ADDED AFTER CONSTRUCTION (AS NEEDED)
4 EI601 TO BE ADDED AFTER CONSTRUCTION (AS NEEDED)
5 EI602 TO BE ADDED AFTER CONSTRUCTION (AS NEEDED)
6 EI603 SYMBOLS LEGEND
7 EI604 MAIN PANEL DIAGRAM MODULE 1
8 EI605 MAIN PANEL DIAGRAM MODULE 1
9 EI606 MAIN PANEL DIAGRAM MODULE 2
10 EI607 MAIN PANEL DIAGRAM MODULE 2
11 EI608 MAIN PANEL DIAGRAM MODULE 3
12 EI609 MAIN PANEL DIAGRAM MODULE 3
13 EI610 MAIN PANEL DIAGRAM MODULE 4
14 EI611 MAIN PANEL DIAGRAM MODULE 4
15 EI612 MAIN PANEL DIAGRAM MODULE 5
16 EI613 MAIN PANEL DIAGRAM MODULE 5
17 EI614 MAIN PANEL DIAGRAM MODULE 6
18 EI615 MAIN PANEL DIAGRAM MODULE 7
19 EI616 MAIN PANEL DIAGRAM MODULE 8
20 EI617 MAIN PANEL DIAGRAM MODULE 8
21 EI618 MAIN PANEL DIAGRAM MODULE 9
22 EI619 MAIN PANEL DIAGRAM MODULE 10
23 EI620 MAIN PANEL DIAGRAM MODULE 11
24 EI621 TO BE ADDED AFTER CONSTRUCTION (AS NEEDED)
25 EI622 TO BE ADDED AFTER CONSTRUCTION (AS NEEDED)
26 EI623 TTO–1 PANEL DIAGRAM MODULE 1
27 EI624 TTO–1 PANEL DIAGRAM MODULE 2
28 EI625 TTO–1 PANEL DIAGRAM MODULE 3
29 EI626 TTO–1 PANEL DIAGRAM MODULE 3
30 EI627 TTO–1 PANEL DIAGRAM MODULE 4
31 EI628 TTO–1 PANEL DIAGRAM MODULE 4
32 EI629 TTO–1 PANEL DIAGRAM MODULE 5
33 EI630 TTO–1 PANEL DIAGRAM MODULE 5
34 EI631 TTO–1 PANEL DIAGRAM MODULE 6
35 EI632 TTO–2 PANEL DIAGRAM MODULE 1
36 EI633 TTO–2 PANEL DIAGRAM MODULE 2
37 EI634 TTO–2 PANEL DIAGRAM MODULE 3

ABBREVIATIONS

#	NUMBER
@	AT
℄	CENTER LINE
ø	DIAMETER
∠	ANGLE
A.B.	ANCHOR BOLT
ABV.	ABOVE
ADJ.	ADJUSTABLE
A.F.F.	ABOVE FINISH FLOOR
ALUM.	ALUMINUM
APPROX.	APPROXIMATE
ARCH.	ARCHITECTURAL
A.S.T.M.	AMERICAN SOCIETY FOR TESTING MATERIALS
BD.	BOARD
BITUM.	BITUMINOUS
BLDG.	BUILDING
B.M.	BENCHMARK
B.O.	BOTTOM OF
BOT.	BOTTOM
B.P.	BASE PLATE
BRG.	BEARING
BTWN.	BETWEEN
CER.	CERAMIC
C.J.	CONSTRUCTION JOINT
CLG.	CEILING
CLR.	CLEAR
CMU	CONCRETE MASONRY UNIT
COL.	COLUMN
CONC.	CONCRETE
CONT.	CONTINUOUS
CONST.	CONSTRUCTION
COORD.	COORDINATE
C.T.J.	CONTRACTION JOINT
DBL.	DOUBLE
DEPT	DEPARTMENT
DET.	DETAIL
DIA.	DIAMETER
DTL.	DETAIL
DWGS.	DRAWINGS
D.B.A.	DEFORMED BAR ANCHOR
EA.	EACH
E.F.	EACH FACE
E.J.	EXPANSION JOINT
EL.	ELEVATION
ELEV.	ELEVATION
EQ.	EQUAL
E.S.	EACH SIDE
E.W.	EACH WAY
EXIST.	EXISTING
EXPAN.	EXPANSION
EXT.	EXTERIOR
E.W.C.	ELECTRIC WATER COOLER
F.S.C.	FAMILY SUPPORT CENTER
F.D.	FLOOR DRAIN
FDN.	FOUNDATION
F.E.	FIRE EXTINGUISHER
F.E.C.	FIRE EXTINGUISHER CABINET
F.F.	FINISH FLOOR
FIN.	FINISH
FLR.	FLOOR
FT.	FEET
FTG.	FOOTING
F.R.F.	FRAGMENT RETENTION FILM
GA.	GAGE/GAUGE
GAL.	GALLON
GALV.	GALVANIZED
G.C.	GENERAL CONTRACTOR
GFCI	GOVERNMENT FURNISHED CONTRACTOR INSTALLED
GFGI	GOVERNMENT FURNISHED GOVERNMENT INSTALLED
GPM	GALLONS PER MINUTE
GND.	GROUND
GOVT.	GOVERNMENT
GWB.	GYPSUM WALL BOARD
GYP. BD.	GYPSUM WALL BOARD
H.A.F.B.	HILL AIR FORCE BASE
HC.	HANDICAPPED
HDW.	HARDWARE
H.M.	HOLLOW METAL
HORIZ.	HORIZONTAL
HR.	HOUR
H.S.A.	HEADED STUD ANCHOR
HT.	HEIGHT
HVAC	HEATING/VENTILATION/ AIR CONDITIONING
HYD	HYDRANT
I.D.	INSIDE DIAMETER
I.F.	INSIDE FACE
IN.	INCHES
INFO.	INFORMATION
INSUL.	INSULATION
LAV.	LAVATORY
LT.	LIGHT
LT. WT.	LIGHT WEIGHT
MAINT.	MAINTENANCE
MANUF.	MANUFACTURER
MAX.	MAXIMUM
MAT.	MATERIAL
M.C.J.	MASONRY CONTROL JOINT
MECH.	MECHANICAL
MFR.	MANUFACTURER
MIN.	MINIMUM
MISC.	MISCELLANEOUS
M.O.	MASONRY OPENING
MTL.	METAL
N.I.C.	NOT IN CONTRACT
NO.	NUMBER
N.T.S.	NOT TO SCALE
O.C.	ON CENTER
O.D.	OUTSIDE DIAMETER
O.F.	OUTSIDE FACE
O.H.	OVERHEAD
OHD	OVERHEAD DOOR
OPP.	OPPOSITE
PART.	PARTITION
P.C.F.	POUNDS PER CUBIC FOOT
PERP.	PERPENDICULAR
PL. LAM.	PLASTIC LAMINATE
P.L.F.	POUNDS PER LINEAL FOOT
PNTD.	PAINTED
PROT.	PROTECTION
P.S.F.	POUNDS PER SQUARE FOOT
P.S.I.	POUNDS PER SQUARE INCH
QTY.	QUANTITY
R.D.	ROOF DRAIN
RAD.	RADIUS
REINF.	REINFORCED
REQ'D	REQUIRED
RM.	ROOM
R.O.	ROUGH OPENING
SCHED.	SCHEDULE
SHR.	SHOWER
SHT.	SHEET
SIM.	SIMILAR
SQ.	SQUARE
SPEC.	SPECIFICATION
ST	STEEL
STC	SOUND TRANSMISSION COEF
STD.	STANDARD
STR.	STRUCTURAL
SUPER.	SUPERVISER
SUSP.	SUSPENDED
T	TEMPERED GLASS
THRU	THROUGH
T.O.	TOP OF
T.O.A.	TOP OF ASPHALT
T.O.C.	TOP OF CURB
T.O.F.	TOP OF FOOTING
T.O.S.	TOP OF SLAB OR SIDEWALK
T.O.W.	TOP OF WALL
TYP.	TYPICAL
TV	TELEVISION
U.N.O.	UNLESS NOTED OTHERWISE
VCR	VIDEO CASSETTE RECORDER
VCT	VINYL COMPOSITION TILE
VERT.	VERTICAL
VEST.	VESTIBULE
VNR.	VENEER
W/	WITH
WD.	WOOD

GRAPHIC SYMBOLS

1 / A	GRID LINES
A3.6 / A101	DETAIL SYMBOL DETAIL NUMBER SHEET WHERE DETAIL IS DRAWN
A3.6 / A101	BUILDING/WALL SECTION SYMBOL SECTION REFERENCE SHEET WHERE SECTION IS DRAWN
A / B A6 A201 D / C	ELEVATION SYMBOL ELEVATION IDENTIFICATION SHEET WHERE ELEVATION IS DRAWN
100'–0"A.F.F. / 96'–0"	ELEVATION CONTROL POINT OR DATUM POINT
NAME / 12	ROOM NUMBER
1	FINISH FLOOR
1	DOOR NUMBER
1	WINDOW TYPE
1	KEYNOTE
1	REVISION

MATERIALS/LEGEND

- CONCRETE MANSONRY UNIT
- FACE BRICK
- CONCRETE (POURED IN PLACE)
- GYPSUM BOARD OR SETTING BEDS
- INSULATION (BATT & BLANKET)
- INSULATION (RIGID/SEMI–RIGID)
- PLYWOOD
- CONTINUOUS ROUGH WOOD
- BLOCKING, ROUGH WOOD
- METAL (LARGE SCALE)
- GRAVEL
- EARTH
- QUARRY/CERAMIC TILE

RECORD DRAWINGS

Revisions Drawn by DEE LAMPH Date 5–31–2012

THESE RECORD DRAWINGS HAVE BEEN PREPARED, IN PART, ON THE BASIS OF INFORMATION COMPILED BY OTHERS. THEY ARE NOT INTENDED TO REPRESENT IN DETAIL THE EXACT LOCATION, TYPE OF COMPONENT NOR MANNER OF CONSTRUCTION. THE ENGINEER WILL NOT BE RESPONSIBLE FOR ANY ERRORS OR OMISSIONS WHICH HAVE BEEN INCORPORATED INTO THE RECORD DRAWINGS.

OGDEN AIR LOGISTICS CENTER

DESCRIPTION	DATE	APPR	MARK

RECORD DRAWING

DESIGNED BY: D. WINGER
DRAWN BY: D. LAMPH
CHECKED BY: D. STEWART
PROJECT NUMBER: FA2201–09–D–0004–0005
GOVERNMENT REVIEWER:

HILL AIR FORCE BASE

DEPARTMENT OF THE AIR FORCE
OGDEN AIR LOGISTICS CENTER
75TH CIVIL ENGINEER GROUP

SCADA SYSTEM FOR THE IWTP
BUILDING 575

DRAWING INDEX, CODE CRITERIA, MAPS, ABBREVIATIONS

G-002

SYMBOLS LEGEND

SYMBOL	DESCRIPTION
T*-** T-*	TERMINAL
	FUSE
	FLOW SWITCH
	RELAY NORMALLY OPEN (NO)
	RELAY NORMALLY CLOSED (NC)
	RELAY COIL
	DUAL HAND SWITCH
	SINGLE HAND SWITCH
	LEVEL SWITCH
	LIMIT SWITCH
	THERMO SWITCH
	PRESSURE SWITCH
	MOMENTARY PUSH BUTTONS
	EMERGENCY STOP
MOTOR STARTER	MOTOR STARTER
	SOLENOID
	FIELD TERMINATION DEVICE (TYPICALLY ANALOG)

NOTES:

1. TERMINAL NUMBERS ARE PRELIMINARY. ACTUAL TERMINAL NUMBERS WILL BE UPDATED AFTER INSTALLATION.
2. TERM = TERMINAL NUMBER TO BE FIELD ASSIGNED DURING INSTALLATION.
3. ALL MISSING NUMBERS AND MISSING DRAWING NUMBERS TO BE FIELD ASSIGNED DURING INSTALLATION.
4. ALL FUSES TO BE 1 AMP FAST BLOW UNLESS OTHERWISE SPECIFIED.

DESCRIPTION	DATE	APPR	MARK

RECORD DRAWING

DESIGNED BY: D. WINGER
DRAWN BY: D. LAMPH
CHECKED BY: D. STEWART
PROJECT NUMBER: FA8201-09-D-0004-0005
GOVERNMENT REVIEWER:

HILL AIR FORCE BASE

DEPARTMENT OF THE AIR FORCE
OGDEN AIR LOGISTICS CENTER
75TH CIVIL ENGINEER GROUP

SCADA SYSTEM FOR THE IWTP
BUILDING 575

MAIN PANEL DIAGRAM

EI-603

SHEET 6 OF 37

RECORD DRAWINGS

Revisions Drawn by DEE LAMPH Date 5-31-2012

THESE RECORD DRAWINGS HAVE BEEN PREPARED, IN PART, ON THE BASIS OF INFORMATION COMPILED BY OTHERS. THEY ARE NOT INTENDED TO REPRESENT IN DETAIL THE EXACT LOCATION, TYPE OF COMPONENT NOR MANNER OF CONSTRUCTION. THE ENGINEER WILL NOT BE RESPONSIBLE FOR ANY ERRORS OR OMISSIONS WHICH HAVE BEEN INCORPORATED INTO THE RECORD DRAWINGS.

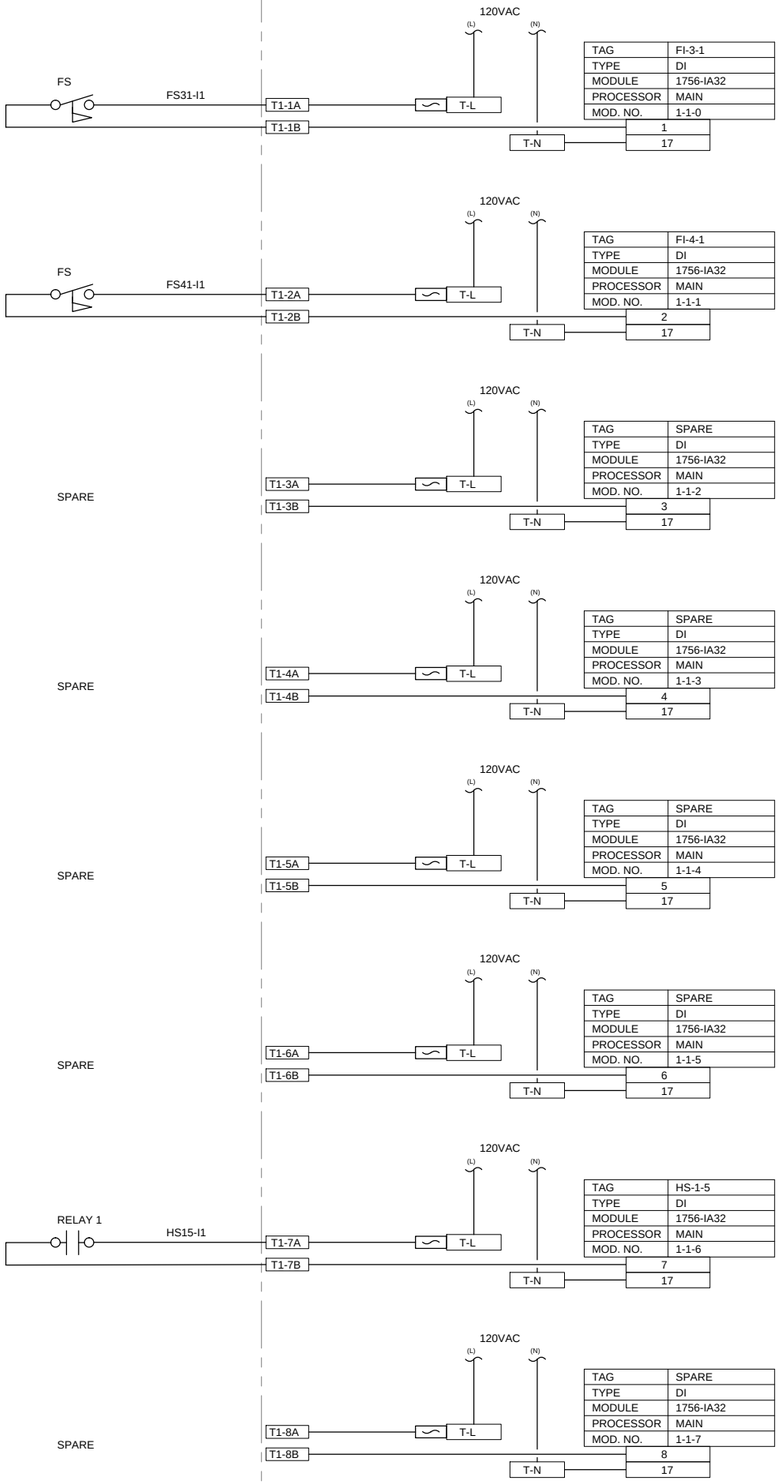

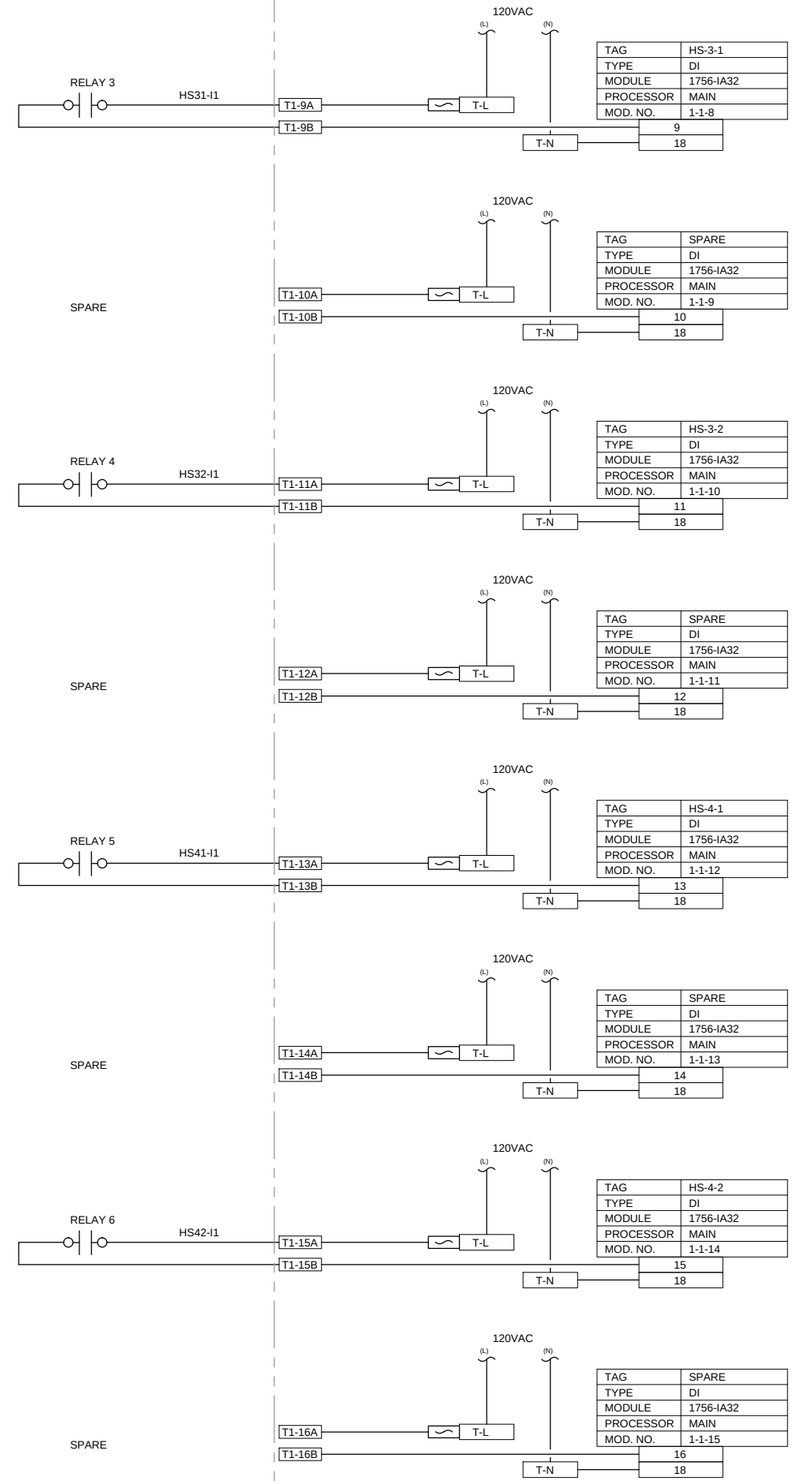

NOTES:

1. TERMINAL NUMBERS ARE PRELIMINARY. ACTUAL TERMINAL NUMBERS WILL BE UPDATED AFTER INSTALLATION.
2. TERM = TERMINAL NUMBER TO BE FIELD ASSIGNED DURING INSTALLATION.
3. ALL MISSING NUMBERS AND MISSING DRAWING NUMBERS TO BE FIELD ASSIGNED DURING INSTALLATION.
4. ALL FUSES TO BE 1 AMP FAST BLOW UNLESS OTHERWISE SPECIFIED.

RECORD DRAWINGS

Revisions Drawn by DEE LAMPH Date 5-31-2012

THESE RECORD DRAWINGS HAVE BEEN PREPARED, IN PART, ON THE BASIS OF INFORMATION COMPILED BY OTHERS. THEY ARE NOT INTENDED TO REPRESENT IN DETAIL THE EXACT LOCATION, TYPE OF COMPONENT NOR MANNER OF CONSTRUCTION. THE ENGINEER WILL NOT BE RESPONSIBLE FOR ANY ERRORS OR OMISSIONS WHICH HAVE BEEN INCORPORATED INTO THE RECORD DRAWINGS.

DESCRIPTION	DATE	APPR	MARK

RECORD DRAWING

DESIGNED BY: D. WINGER
DRAWN BY: D. LAMPH
CHECKED BY: D. STEWART
PROJECT NUMBER: FA8201-09-D-0004-0005
GOVERNMENT REVIEWER:

HILL AIR FORCE BASE

DEPARTMENT OF THE AIR FORCE
OGDEN AIR LOGISTICS CENTER
75TH CIVIL ENGINEER GROUP

SCADA SYSTEM FOR THE IWTP
BUILDING 575

MAIN PANEL DIAGRAM MODULE 1

EI-604

SHEET 7 OF 37

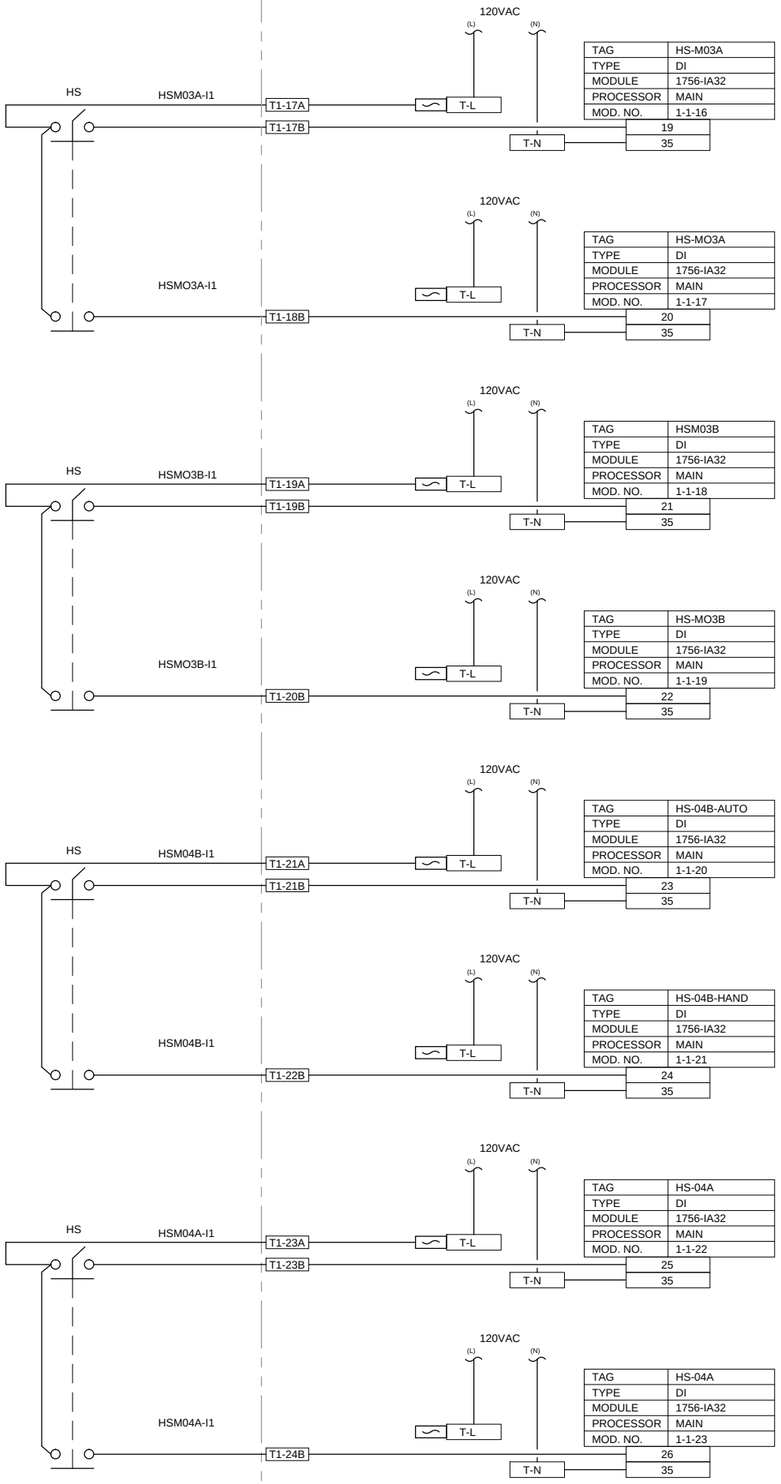

TAG	HS-M03A
TYPE	DI
MODULE	1756-IA32
PROCESSOR	MAIN
MOD. NO.	1-1-16

TAG	HS-MO3A
TYPE	DI
MODULE	1756-IA32
PROCESSOR	MAIN
MOD. NO.	1-1-17

TAG	HSM03B
TYPE	DI
MODULE	1756-IA32
PROCESSOR	MAIN
MOD. NO.	1-1-18

TAG	HS-MO3B
TYPE	DI
MODULE	1756-IA32
PROCESSOR	MAIN
MOD. NO.	1-1-19

TAG	HS-04B-AUTO
TYPE	DI
MODULE	1756-IA32
PROCESSOR	MAIN
MOD. NO.	1-1-20

TAG	HS-04B-HAND
TYPE	DI
MODULE	1756-IA32
PROCESSOR	MAIN
MOD. NO.	1-1-21

TAG	HS-04A
TYPE	DI
MODULE	1756-IA32
PROCESSOR	MAIN
MOD. NO.	1-1-22

TAG	HS-04A
TYPE	DI
MODULE	1756-IA32
PROCESSOR	MAIN
MOD. NO.	1-1-23

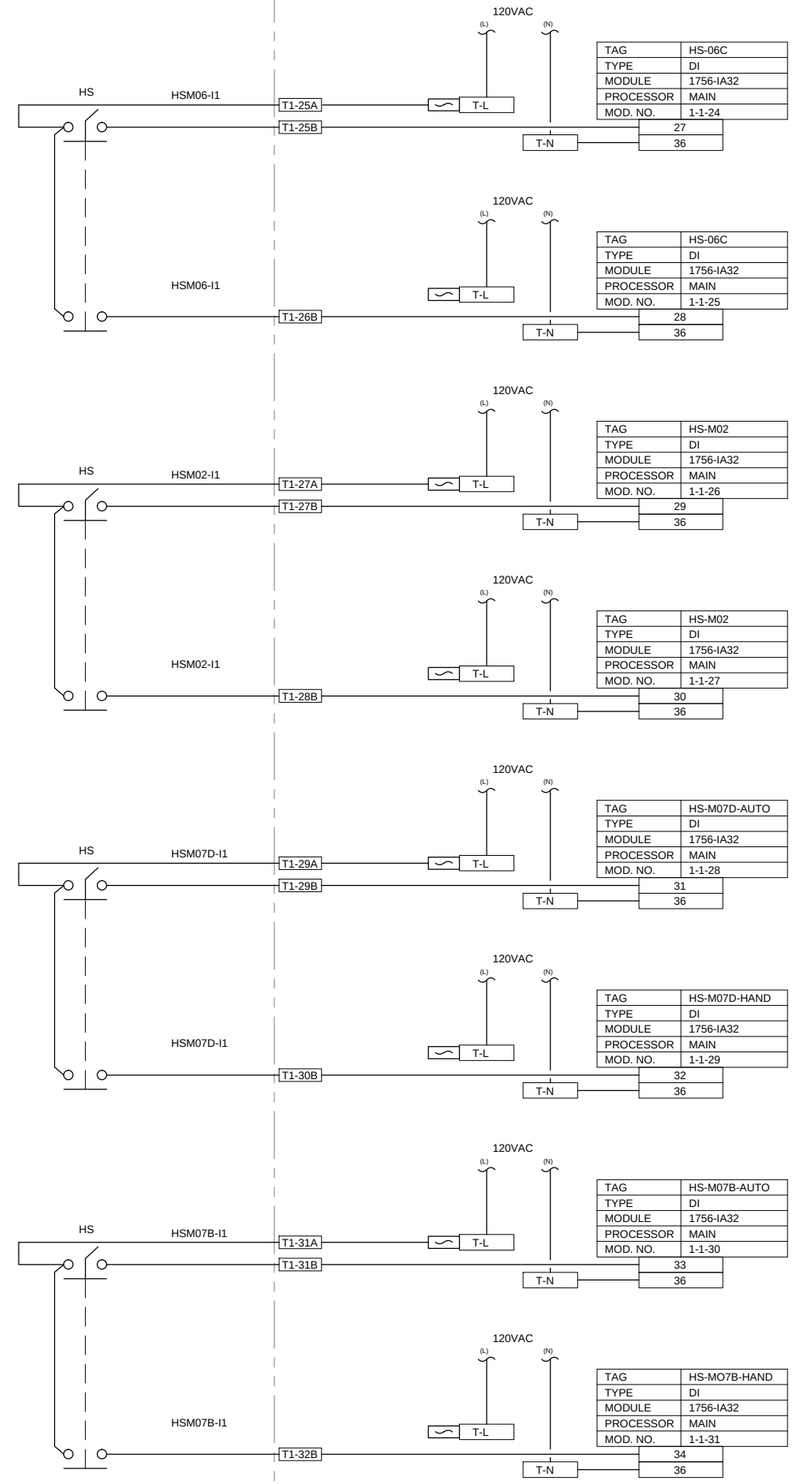

TAG	HS-06C
TYPE	DI
MODULE	1756-IA32
PROCESSOR	MAIN
MOD. NO.	1-1-24

TAG	HS-06C
TYPE	DI
MODULE	1756-IA32
PROCESSOR	MAIN
MOD. NO.	1-1-25

TAG	HS-M02
TYPE	DI
MODULE	1756-IA32
PROCESSOR	MAIN
MOD. NO.	1-1-26

TAG	HS-M02
TYPE	DI
MODULE	1756-IA32
PROCESSOR	MAIN
MOD. NO.	1-1-27

TAG	HS-M07D-AUTO
TYPE	DI
MODULE	1756-IA32
PROCESSOR	MAIN
MOD. NO.	1-1-28

TAG	HS-M07D-HAND
TYPE	DI
MODULE	1756-IA32
PROCESSOR	MAIN
MOD. NO.	1-1-29

TAG	HS-M07B-AUTO
TYPE	DI
MODULE	1756-IA32
PROCESSOR	MAIN
MOD. NO.	1-1-30

TAG	HS-MO7B-HAND
TYPE	DI
MODULE	1756-IA32
PROCESSOR	MAIN
MOD. NO.	1-1-31

NOTES:

1. TERMINAL NUMBERS ARE PRELIMINARY. ACTUAL TERMINAL NUMBERS WILL BE UPDATED AFTER INSTALLATION.
2. TERM = TERMINAL NUMBER TO BE FIELD ASSIGNED DURING INSTALLATION.
3. ALL MISSING NUMBERS AND MISSING DRAWING NUMBERS TO BE FIELD ASSIGNED DURING INSTALLATION.
4. ALL FUSES TO BE 1 AMP FAST BLOW UNLESS OTHERWISE SPECIFIED.

RECORD DRAWINGS

Revisions Drawn by DEE LAMPH Date 5-31-2012

THESE RECORD DRAWINGS HAVE BEEN PREPARED, IN PART, ON THE BASIS OF INFORMATION COMPILED BY OTHERS. THEY ARE NOT INTENDED TO REPRESENT IN DETAIL THE EXACT LOCATION, TYPE OF COMPONENT NOR MANNER OF CONSTRUCTION. THE ENGINEER WILL NOT BE RESPONSIBLE FOR ANY ERRORS OR OMISSIONS WHICH HAVE BEEN INCORPORATED INTO THE RECORD DRAWINGS.

MARK	DATE	APPR	DESCRIPTION

RECORD DRAWING

DESIGNED BY: D. WINGER
DRAWN BY: D. LAMPH
CHECKED BY: D. STEWART
PROJECT NUMBER: F42201-09-D-0004-0005
GOVERNMENT REVIEWER:

HILL AIR FORCE BASE

DEPARTMENT OF THE AIR FORCE
OGDEN AIR LOGISTICS CENTER
75TH CIVIL ENGINEER GROUP

SCADA SYSTEM FOR THE IWTP
BUILDING 575

MAIN PANEL DIAGRAM MODULE 1

EI-605

SHEET 8 OF 37

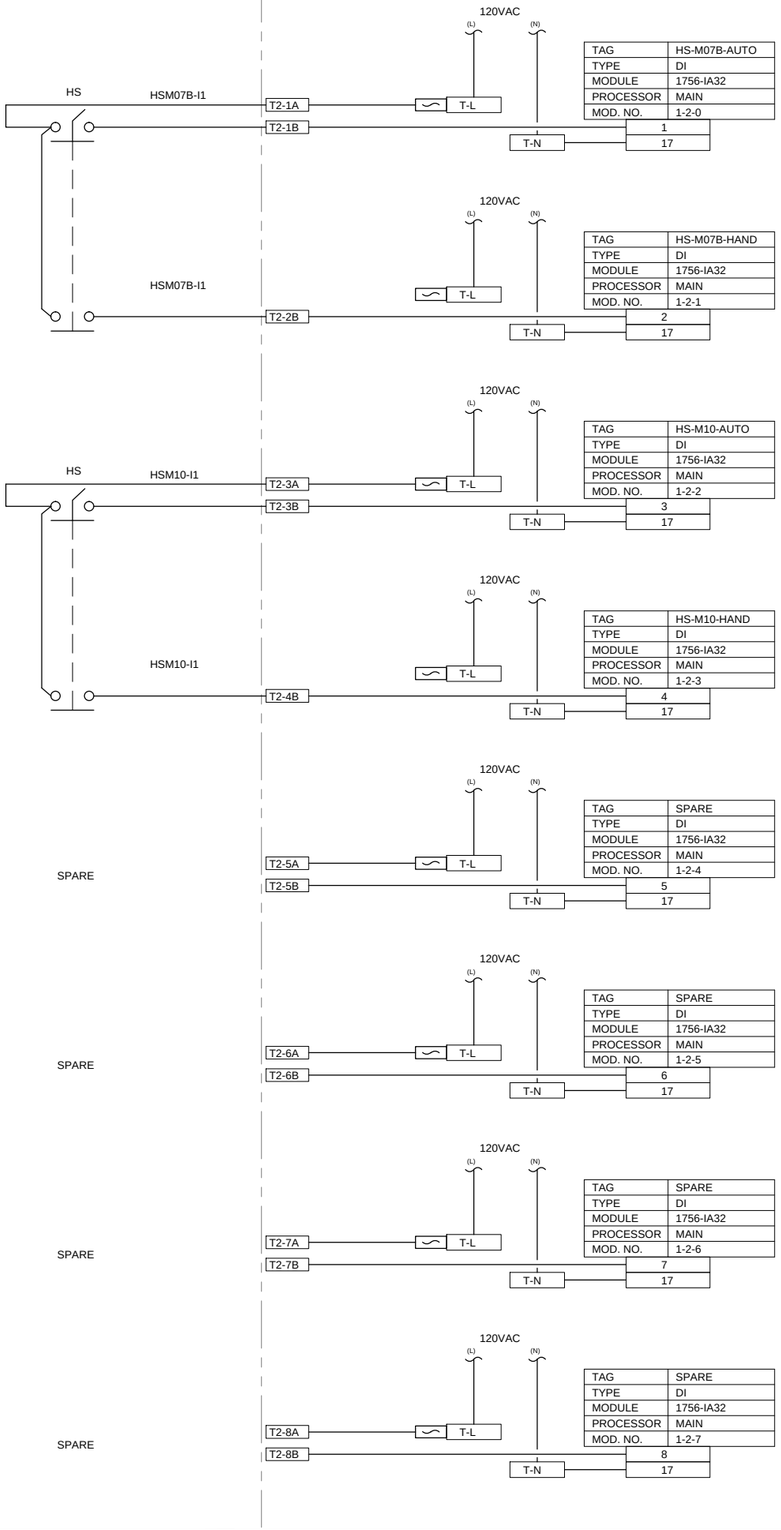

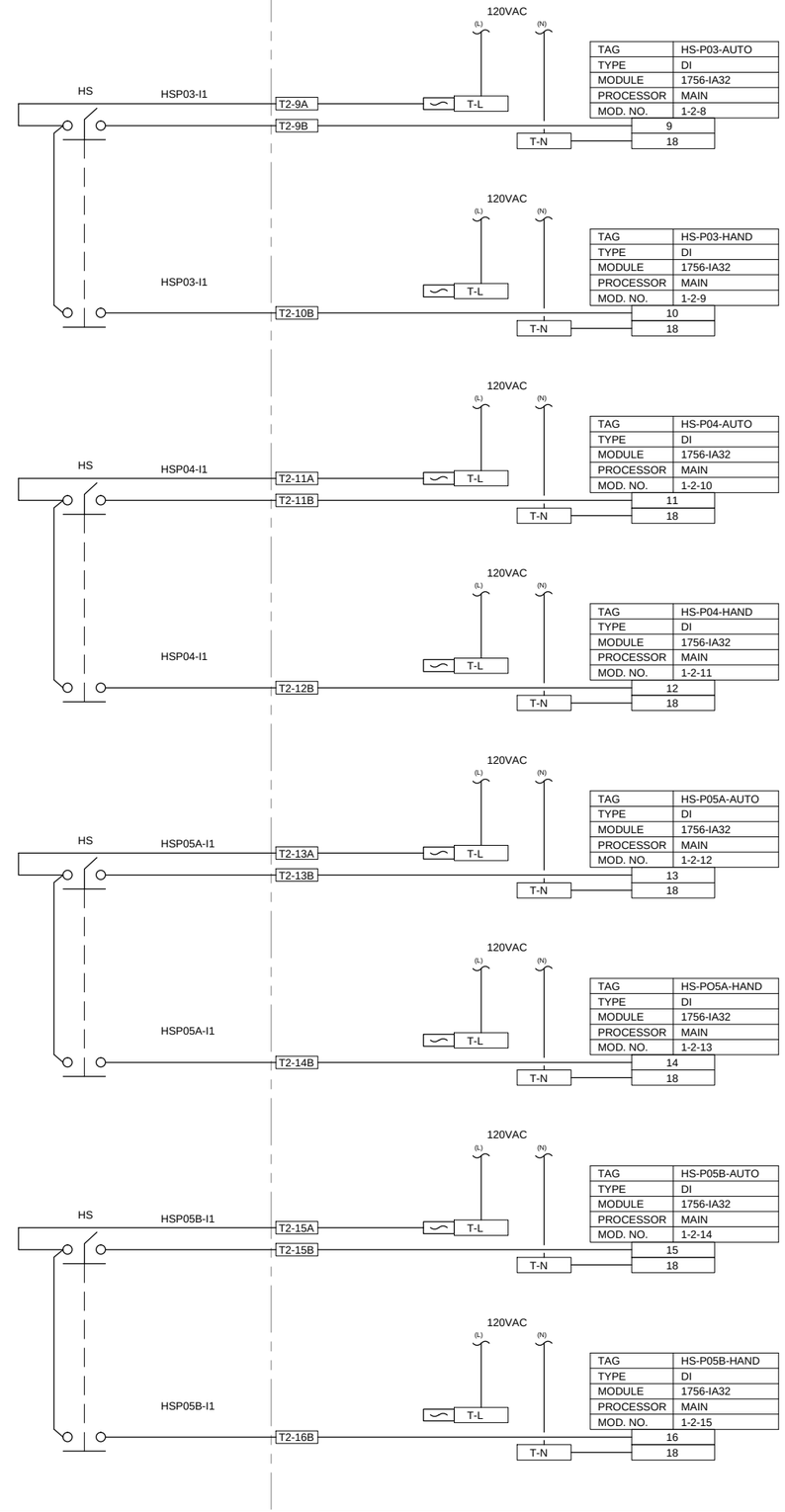

NOTES:

1. TERMINAL NUMBERS ARE PRELIMINARY. ACTUAL TERMINAL NUMBERS WILL BE UPDATED AFTER INSTALLATION.
2. TERM = TERMINAL NUMBER TO BE FIELD ASSIGNED DURING INSTALLATION.
3. ALL MISSING NUMBERS AND MISSING DRAWING NUMBERS TO BE FIELD ASSIGNED DURING INSTALLATION.
4. ALL FUSES TO BE 1 AMP FAST BLOW UNLESS OTHERWISE SPECIFIED.

RECORD DRAWINGS

Revisions Drawn by DEE LAMPH Date 5-31-2012

THESE RECORD DRAWINGS HAVE BEEN PREPARED, IN PART, ON THE BASIS OF INFORMATION COMPILED BY OTHERS. THEY ARE NOT INTENDED TO REPRESENT IN DETAIL THE EXACT LOCATION, TYPE OF COMPONENT NOR MANNER OF CONSTRUCTION. THE ENGINEER WILL NOT BE RESPONSIBLE FOR ANY ERRORS OR OMISSIONS WHICH HAVE BEEN INCORPORATED INTO THE RECORD DRAWINGS.

MARK	APPR	DATE	DESCRIPTION

RECORD DRAWING

DESIGNED BY: D. WINGER
DRAWN BY: D. LAMPH
CHECKED BY: D. STEWART
PROJECT NUMBER: F42201-09-D-0004-0005
GOVERNMENT REVIEWER:

HILL AIR FORCE BASE

DEPARTMENT OF THE AIR FORCE
OGDEN AIR LOGISTICS CENTER
75TH CIVIL ENGINEER GROUP

SCADA SYSTEM FOR THE IWTP
BUILDING 575

MAIN PANEL DIAGRAM MODULE 2

EI-606

SHEET 9 OF 37

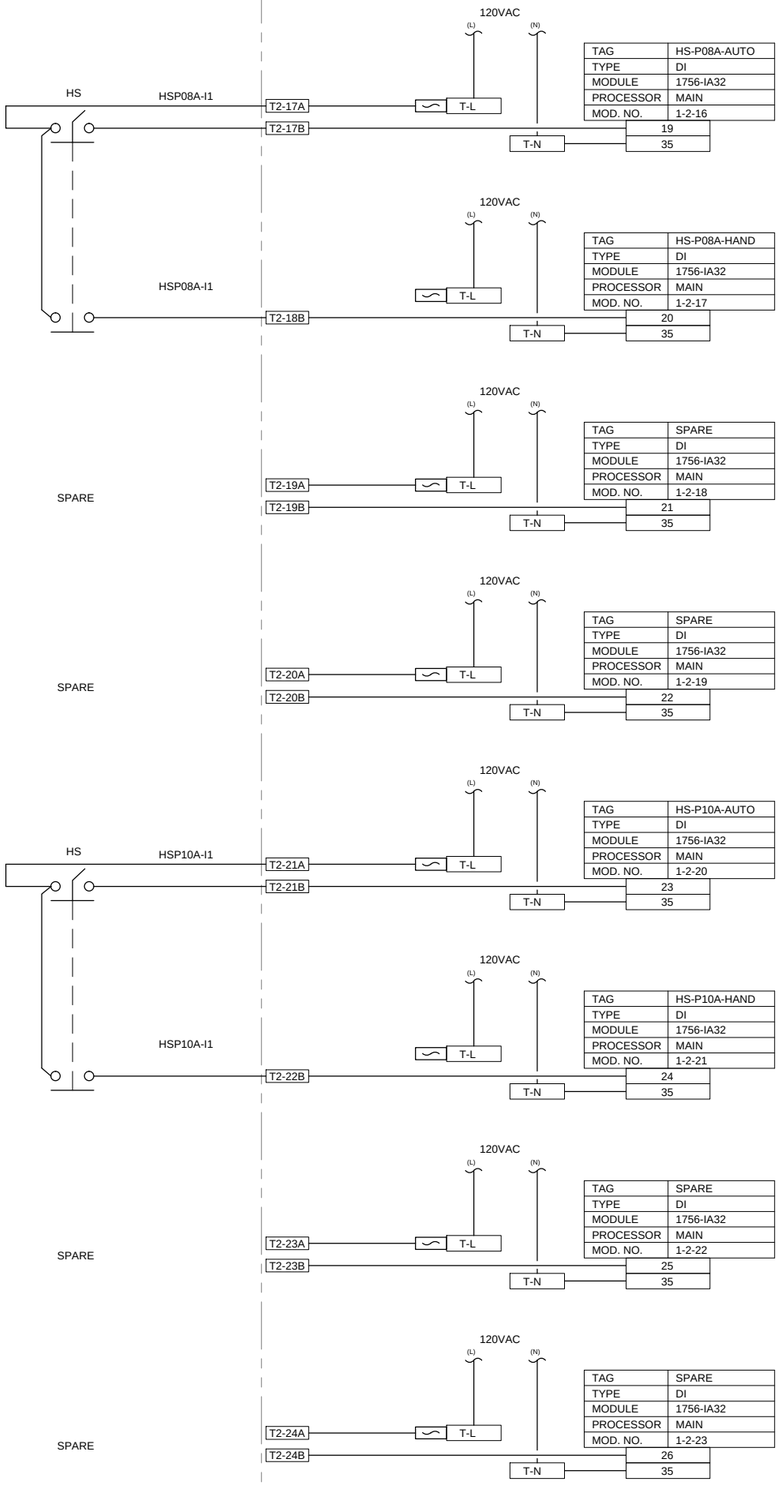

NOTES:

1. TERMINAL NUMBERS ARE PRELIMINARY. ACTUAL TERMINAL NUMBERS WILL BE UPDATED AFTER INSTALLATION.
2. TERM = TERMINAL NUMBER TO BE FIELD ASSIGNED DURING INSTALLATION.
3. ALL MISSING NUMBERS AND MISSING DRAWING NUMBERS TO BE FIELD ASSIGNED DURING INSTALLATION.
4. ALL FUSES TO BE 1 AMP FAST BLOW UNLESS OTHERWISE SPECIFIED.

RECORD DRAWINGS

Revisions Drawn by DEE LAMPH Date 5-31-2012

THESE RECORD DRAWINGS HAVE BEEN PREPARED, IN PART, ON THE BASIS OF INFORMATION COMPILED BY OTHERS. THEY ARE NOT INTENDED TO REPRESENT IN DETAIL THE EXACT LOCATION, TYPE OF COMPONENT NOR MANNER OF CONSTRUCTION. THE ENGINEER WILL NOT BE RESPONSIBLE FOR ANY ERRORS OR OMISSIONS WHICH HAVE BEEN INCORPORATED INTO THE RECORD DRAWINGS.

MARK	APPR	DATE	DESCRIPTION

RECORD DRAWING

DESIGNED BY: D. WINGER
DRAWN BY: D. LAMPH
CHECKED BY: D. STEWART
PROJECT NUMBER: FA8201-09-D-0004-0005
GOVERNMENT REVIEWER:

HILL AIR FORCE BASE

DEPARTMENT OF THE AIR FORCE
OGDEN AIR LOGISTICS CENTER
75TH CIVIL ENGINEER GROUP

SCADA SYSTEM FOR THE IWTP
BUILDING 575

MAIN PANEL DIAGRAM MODULE 2

EI-607

SHEET 10 OF 37

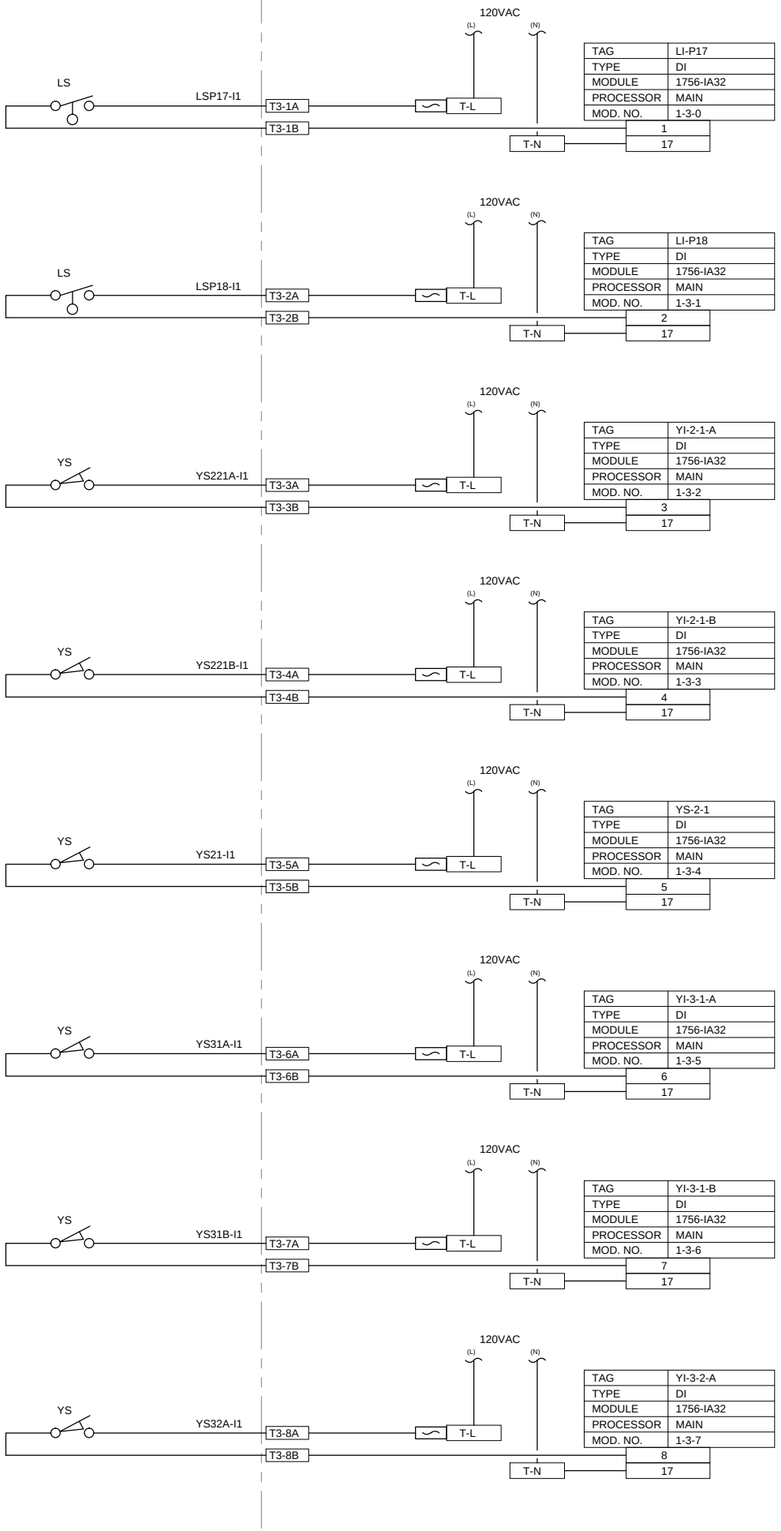

TAG	LI-P17
TYPE	DI
MODULE	1756-IA32
PROCESSOR	MAIN
MOD. NO.	1-3-0

TAG	LI-P18
TYPE	DI
MODULE	1756-IA32
PROCESSOR	MAIN
MOD. NO.	1-3-1

TAG	YI-2-1-A
TYPE	DI
MODULE	1756-IA32
PROCESSOR	MAIN
MOD. NO.	1-3-2

TAG	YI-2-1-B
TYPE	DI
MODULE	1756-IA32
PROCESSOR	MAIN
MOD. NO.	1-3-3

TAG	YS-2-1
TYPE	DI
MODULE	1756-IA32
PROCESSOR	MAIN
MOD. NO.	1-3-4

TAG	YI-3-1-A
TYPE	DI
MODULE	1756-IA32
PROCESSOR	MAIN
MOD. NO.	1-3-5

TAG	YI-3-1-B
TYPE	DI
MODULE	1756-IA32
PROCESSOR	MAIN
MOD. NO.	1-3-6

TAG	YI-3-2-A
TYPE	DI
MODULE	1756-IA32
PROCESSOR	MAIN
MOD. NO.	1-3-7

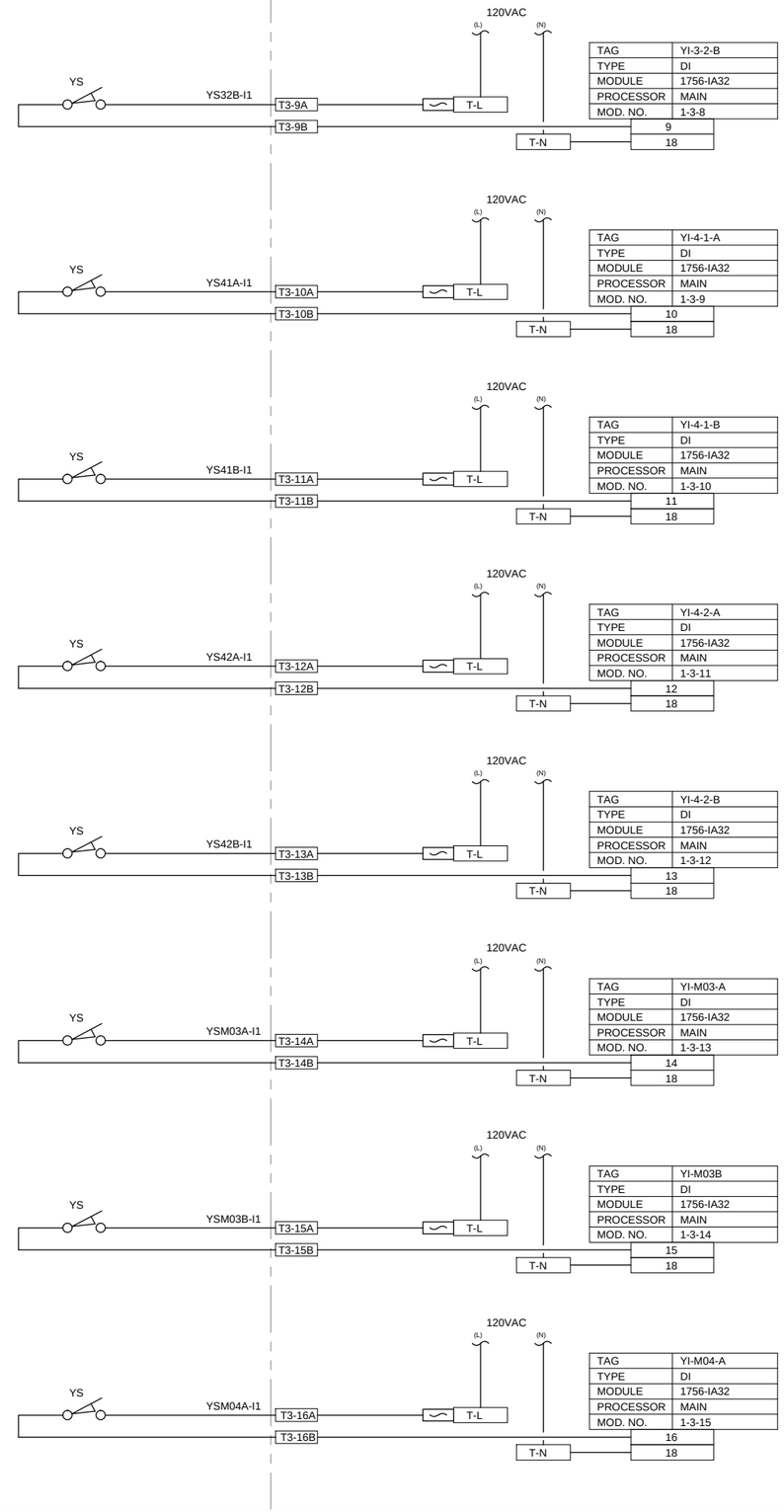

TAG	YI-3-2-B
TYPE	DI
MODULE	1756-IA32
PROCESSOR	MAIN
MOD. NO.	1-3-8

TAG	YI-4-1-A
TYPE	DI
MODULE	1756-IA32
PROCESSOR	MAIN
MOD. NO.	1-3-9

TAG	YI-4-1-B
TYPE	DI
MODULE	1756-IA32
PROCESSOR	MAIN
MOD. NO.	1-3-10

TAG	YI-4-2-A
TYPE	DI
MODULE	1756-IA32
PROCESSOR	MAIN
MOD. NO.	1-3-11

TAG	YI-4-2-B
TYPE	DI
MODULE	1756-IA32
PROCESSOR	MAIN
MOD. NO.	1-3-12

TAG	YI-M03-A
TYPE	DI
MODULE	1756-IA32
PROCESSOR	MAIN
MOD. NO.	1-3-13

TAG	YI-M03B
TYPE	DI
MODULE	1756-IA32
PROCESSOR	MAIN
MOD. NO.	1-3-14

TAG	YI-M04-A
TYPE	DI
MODULE	1756-IA32
PROCESSOR	MAIN
MOD. NO.	1-3-15

NOTES:

1. TERMINAL NUMBERS ARE PRELIMINARY. ACTUAL TERMINAL NUMBERS WILL BE UPDATED AFTER INSTALLATION.
2. TERM = TERMINAL NUMBER TO BE FIELD ASSIGNED DURING INSTALLATION.
3. ALL MISSING NUMBERS AND MISSING DRAWING NUMBERS TO BE FIELD ASSIGNED DURING INSTALLATION.
4. ALL FUSES TO BE 1 AMP FAST BLOW UNLESS OTHERWISE SPECIFIED.

RECORD DRAWINGS

Revisions Drawn by DEE LAMPH Date 5-31-2012

THESE RECORD DRAWINGS HAVE BEEN PREPARED, IN PART, ON THE BASIS OF INFORMATION COMPILED BY OTHERS. THEY ARE NOT INTENDED TO REPRESENT IN DETAIL THE EXACT LOCATION, TYPE OF COMPONENT NOR MANNER OF CONSTRUCTION. THE ENGINEER WILL NOT BE RESPONSIBLE FOR ANY ERRORS OR OMISSIONS WHICH HAVE BEEN INCORPORATED INTO THE RECORD DRAWINGS.

MARK	APPR	DATE	DESCRIPTION

RECORD DRAWING

DESIGNED BY: D. WINGER
DRAWN BY: D. LAMPH
CHECKED BY: D. STEWART
PROJECT NUMBER: FA8201-09-D-0004-0005
GOVERNMENT REVIEWER:

HILL AIR FORCE BASE

DEPARTMENT OF THE AIR FORCE
OGDEN AIR LOGISTICS CENTER
75TH CIVIL ENGINEER GROUP

SCADA SYSTEM FOR THE IWTP
BUILDING 575

MAIN PANEL DIAGRAM MODULE 3

EI-608

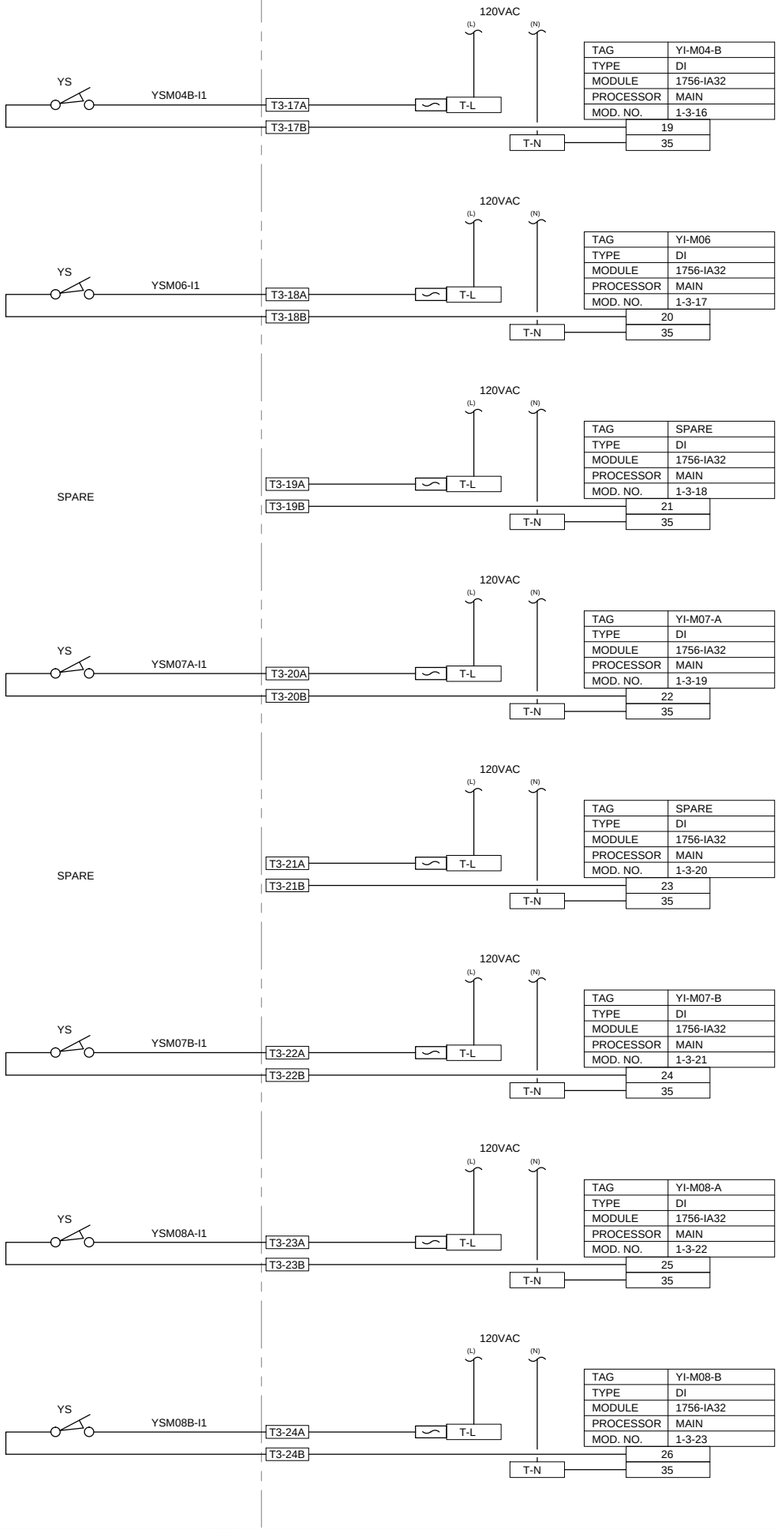

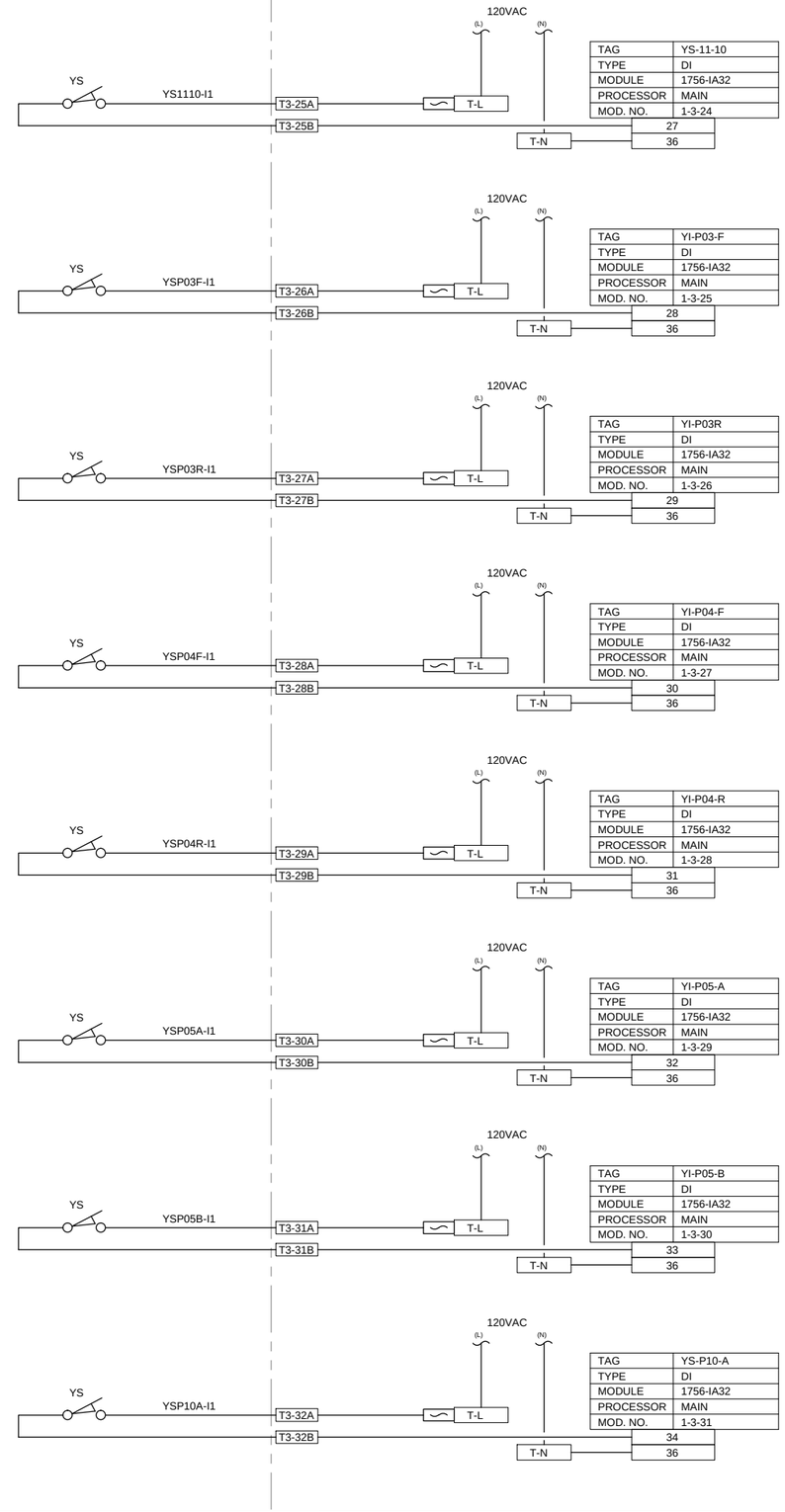

NOTES:

1. TERMINAL NUMBERS ARE PRELIMINARY. ACTUAL TERMINAL NUMBERS WILL BE UPDATED AFTER INSTALLATION.
2. TERM = TERMINAL NUMBER TO BE FIELD ASSIGNED DURING INSTALLATION.
3. ALL MISSING NUMBERS AND MISSING DRAWING NUMBERS TO BE FIELD ASSIGNED DURING INSTALLATION.
4. ALL FUSES TO BE 1 AMP FAST BLOW UNLESS OTHERWISE SPECIFIED.

RECORD DRAWINGS

Revisions Drawn by DEE LAMPH Date 5-31-2012

THESE RECORD DRAWINGS HAVE BEEN PREPARED, IN PART, ON THE BASIS OF INFORMATION COMPILED BY OTHERS. THEY ARE NOT INTENDED TO REPRESENT IN DETAIL THE EXACT LOCATION, TYPE OF COMPONENT NOR MANNER OF CONSTRUCTION. THE ENGINEER WILL NOT BE RESPONSIBLE FOR ANY ERRORS OR OMISSIONS WHICH HAVE BEEN INCORPORATED INTO THE RECORD DRAWINGS.

DESCRIPTION	DATE	APPR	MARK

RECORD DRAWING

DESIGNED BY: D. WINGER
DRAWN BY: D. LAMPH
CHECKED BY: D. STEWART
PROJECT NUMBER: FA8201-09-D-0004-0005
GOVERNMENT REVIEWER:

HILL AIR FORCE BASE

DEPARTMENT OF THE AIR FORCE
OGDEN AIR LOGISTICS CENTER
75TH CIVIL ENGINEER GROUP

SCADA SYSTEM FOR THE IWTP
BUILDING 575

MAIN PANEL DIAGRAM MODULE 3

EI-609

SHEET 12 OF 37

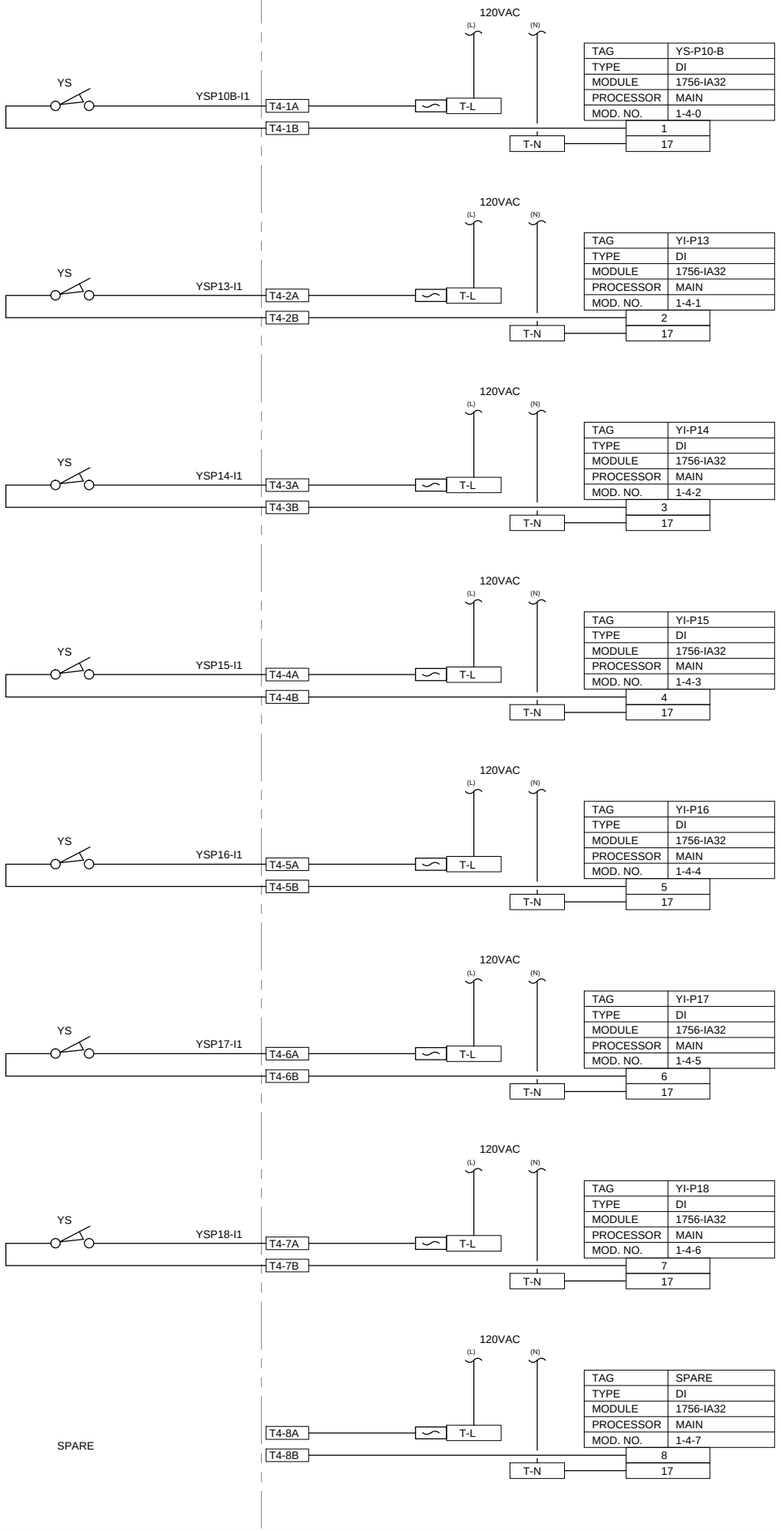

NOTES:

1. TERMINAL NUMBERS ARE PRELIMINARY. ACTUAL TERMINAL NUMBERS WILL BE UPDATED AFTER INSTALLATION.
2. TERM = TERMINAL NUMBER TO BE FIELD ASSIGNED DURING INSTALLATION.
3. ALL MISSING NUMBERS AND MISSING DRAWING NUMBERS TO BE FIELD ASSIGNED DURING INSTALLATION.
4. ALL FUSES TO BE 1 AMP FAST BLOW UNLESS OTHERWISE SPECIFIED.

RECORD DRAWINGS

Revisions Drawn by DEE LAMPH Date 5-31-2012

THESE RECORD DRAWINGS HAVE BEEN PREPARED, IN PART, ON THE BASIS OF INFORMATION COMPILED BY OTHERS. THEY ARE NOT INTENDED TO REPRESENT IN DETAIL THE EXACT LOCATION, TYPE OF COMPONENT NOR MANNER OF CONSTRUCTION. THE ENGINEER WILL NOT BE RESPONSIBLE FOR ANY ERRORS OR OMISSIONS WHICH HAVE BEEN INCORPORATED INTO THE RECORD DRAWINGS.

MARK	APPR	DATE	DESCRIPTION

RECORD DRAWING

DESIGNED BY: D. WINGER
DRAWN BY: D. LAMPH
CHECKED BY: D. STEWART
PROJECT NUMBER: FA8201-09-D-0004-0005
GOVERNMENT REVIEWER:

HILL AIR FORCE BASE

DEPARTMENT OF THE AIR FORCE
OGDEN AIR LOGISTICS CENTER
75TH CIVIL ENGINEER GROUP

SCADA SYSTEM FOR THE IWTP
BUILDING 575

MAIN PANEL DIAGRAM MODULE 4

EI-610

SHEET 13 OF 37

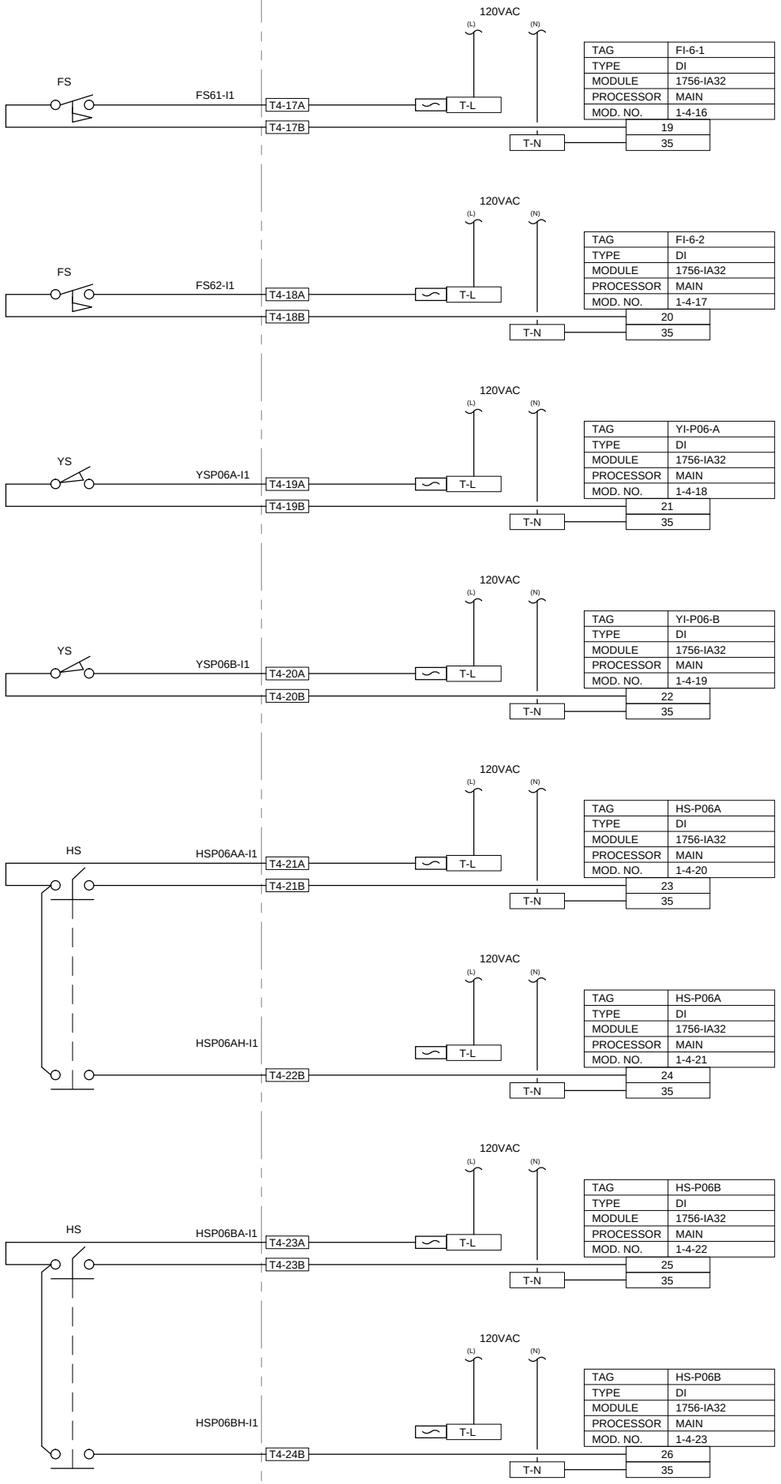

TAG	FI-6-1
TYPE	DI
MODULE	1756-IA32
PROCESSOR	MAIN
MOD. NO.	1-4-16

TAG	FI-6-2
TYPE	DI
MODULE	1756-IA32
PROCESSOR	MAIN
MOD. NO.	1-4-17

TAG	YI-P06-A
TYPE	DI
MODULE	1756-IA32
PROCESSOR	MAIN
MOD. NO.	1-4-18

TAG	YI-P06-B
TYPE	DI
MODULE	1756-IA32
PROCESSOR	MAIN
MOD. NO.	1-4-19

TAG	HS-P06A
TYPE	DI
MODULE	1756-IA32
PROCESSOR	MAIN
MOD. NO.	1-4-20

TAG	HS-P06A
TYPE	DI
MODULE	1756-IA32
PROCESSOR	MAIN
MOD. NO.	1-4-21

TAG	HS-P06B
TYPE	DI
MODULE	1756-IA32
PROCESSOR	MAIN
MOD. NO.	1-4-22

TAG	HS-P06B
TYPE	DI
MODULE	1756-IA32
PROCESSOR	MAIN
MOD. NO.	1-4-23

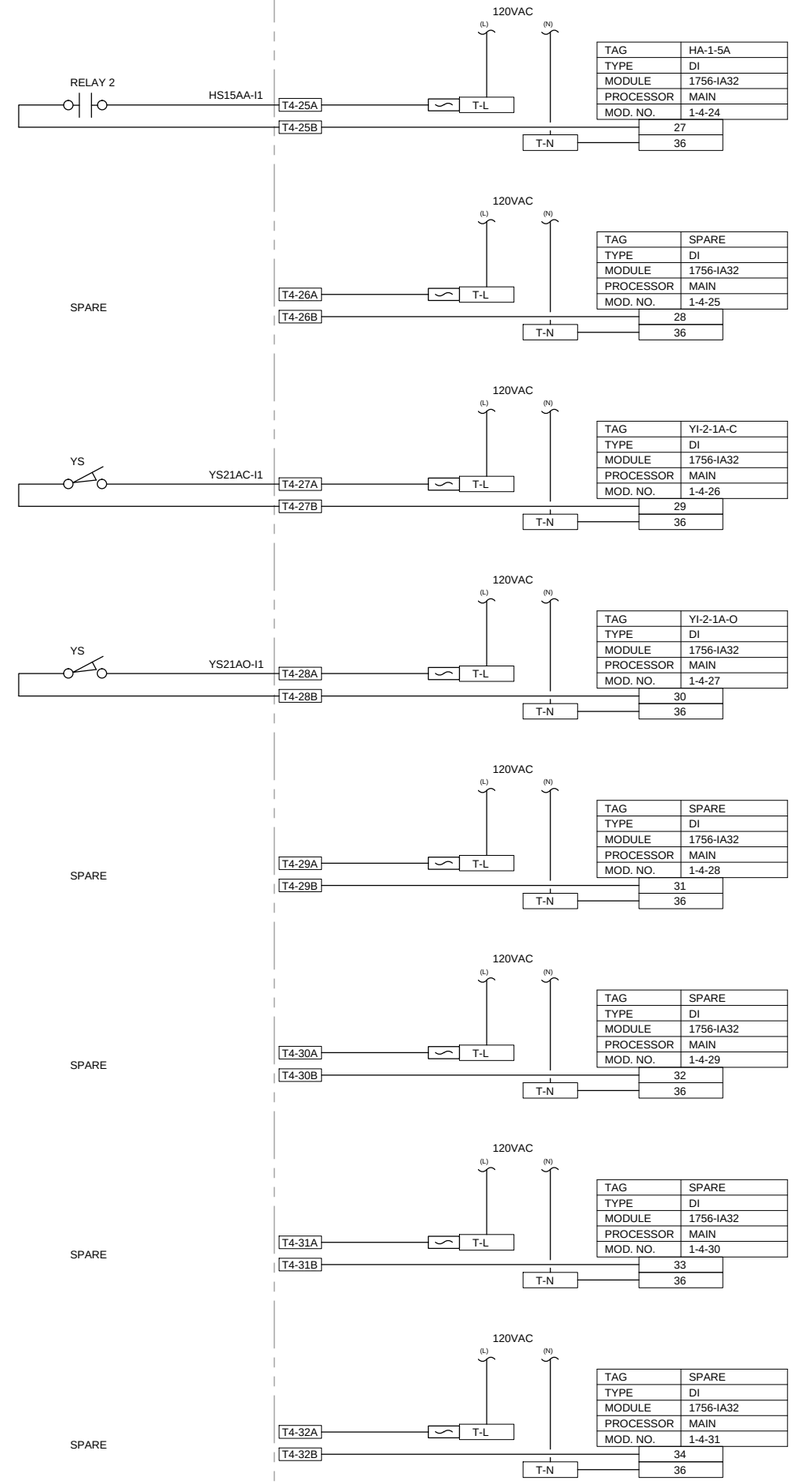

TAG	HA-1-5A
TYPE	DI
MODULE	1756-IA32
PROCESSOR	MAIN
MOD. NO.	1-4-24

TAG	SPARE
TYPE	DI
MODULE	1756-IA32
PROCESSOR	MAIN
MOD. NO.	1-4-25

TAG	YI-2-1A-C
TYPE	DI
MODULE	1756-IA32
PROCESSOR	MAIN
MOD. NO.	1-4-26

TAG	YI-2-1A-O
TYPE	DI
MODULE	1756-IA32
PROCESSOR	MAIN
MOD. NO.	1-4-27

TAG	SPARE
TYPE	DI
MODULE	1756-IA32
PROCESSOR	MAIN
MOD. NO.	1-4-28

TAG	SPARE
TYPE	DI
MODULE	1756-IA32
PROCESSOR	MAIN
MOD. NO.	1-4-29

TAG	SPARE
TYPE	DI
MODULE	1756-IA32
PROCESSOR	MAIN
MOD. NO.	1-4-30

TAG	SPARE
TYPE	DI
MODULE	1756-IA32
PROCESSOR	MAIN
MOD. NO.	1-4-31

NOTES:

1. TERMINAL NUMBERS ARE PRELIMINARY. ACTUAL TERMINAL NUMBERS WILL BE UPDATED AFTER INSTALLATION.
2. TERM = TERMINAL NUMBER TO BE FIELD ASSIGNED DURING INSTALLATION.
3. ALL MISSING NUMBERS AND MISSING DRAWING NUMBERS TO BE FIELD ASSIGNED DURING INSTALLATION.
4. ALL FUSES TO BE 1 AMP FAST BLOW UNLESS OTHERWISE SPECIFIED.

RECORD DRAWINGS

Revisions Drawn by DEE LAMPH Date 5-31-2012

THESE RECORD DRAWINGS HAVE BEEN PREPARED, IN PART, ON THE BASIS OF INFORMATION COMPILED BY OTHERS. THEY ARE NOT INTENDED TO REPRESENT IN DETAIL THE EXACT LOCATION, TYPE OF COMPONENT NOR MANNER OF CONSTRUCTION. THE ENGINEER WILL NOT BE RESPONSIBLE FOR ANY ERRORS OR OMISSIONS WHICH HAVE BEEN INCORPORATED INTO THE RECORD DRAWINGS.

DESCRIPTION	DATE	APPR	MARK

RECORD DRAWING

DESIGNED BY: D. WINGER
DRAWN BY: D. LAMPH
CHECKED BY: D. STEWART
PROJECT NUMBER: FA8201-09-D-0004-0005
GOVERNMENT REVIEWER:

HILL AIR FORCE BASE

DEPARTMENT OF THE AIR FORCE
OGDEN AIR LOGISTICS CENTER
75TH CIVIL ENGINEER GROUP

SCADA SYSTEM FOR THE IWTP
BUILDING 575

MAIN PANEL DIAGRAM MODULE 4

EI-611

SHEET 14 OF 37

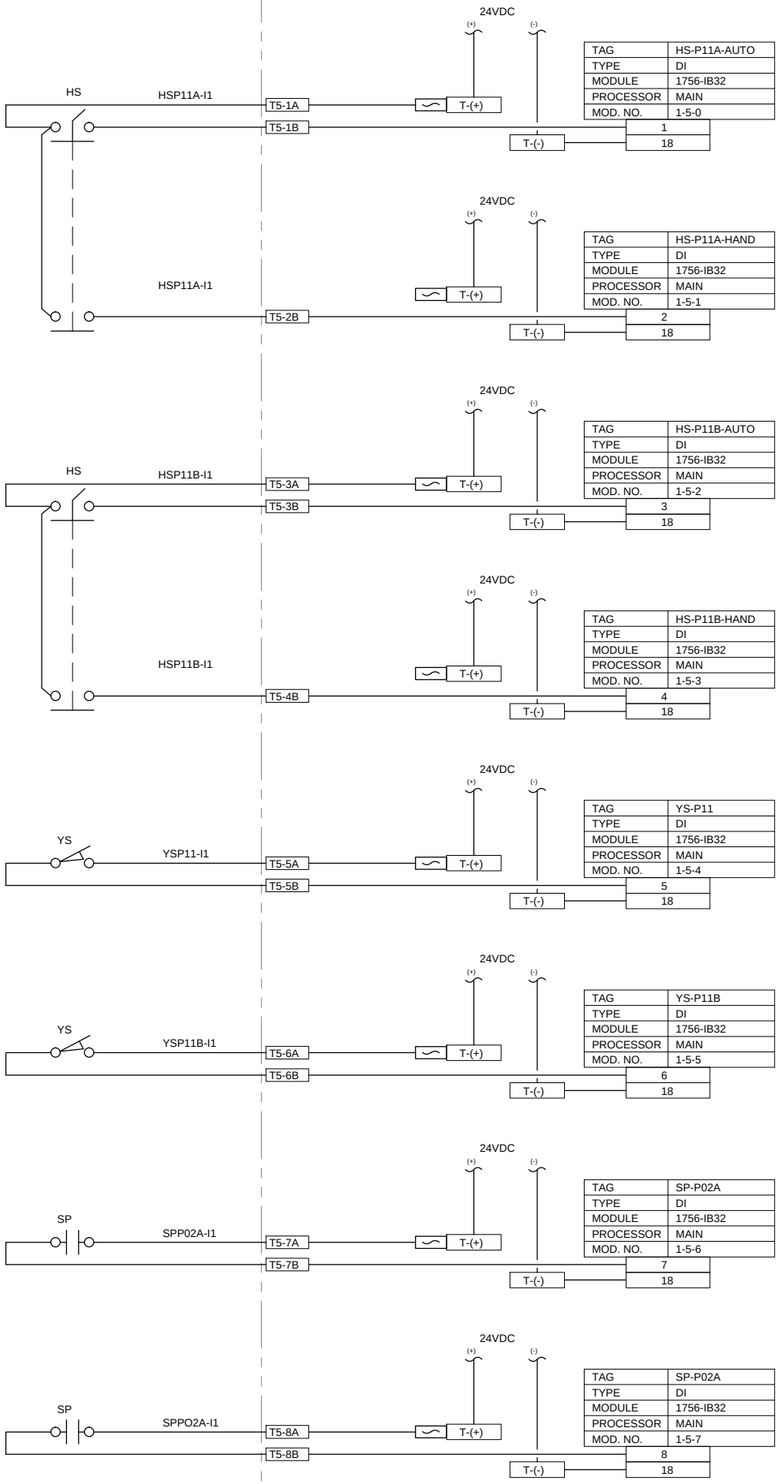

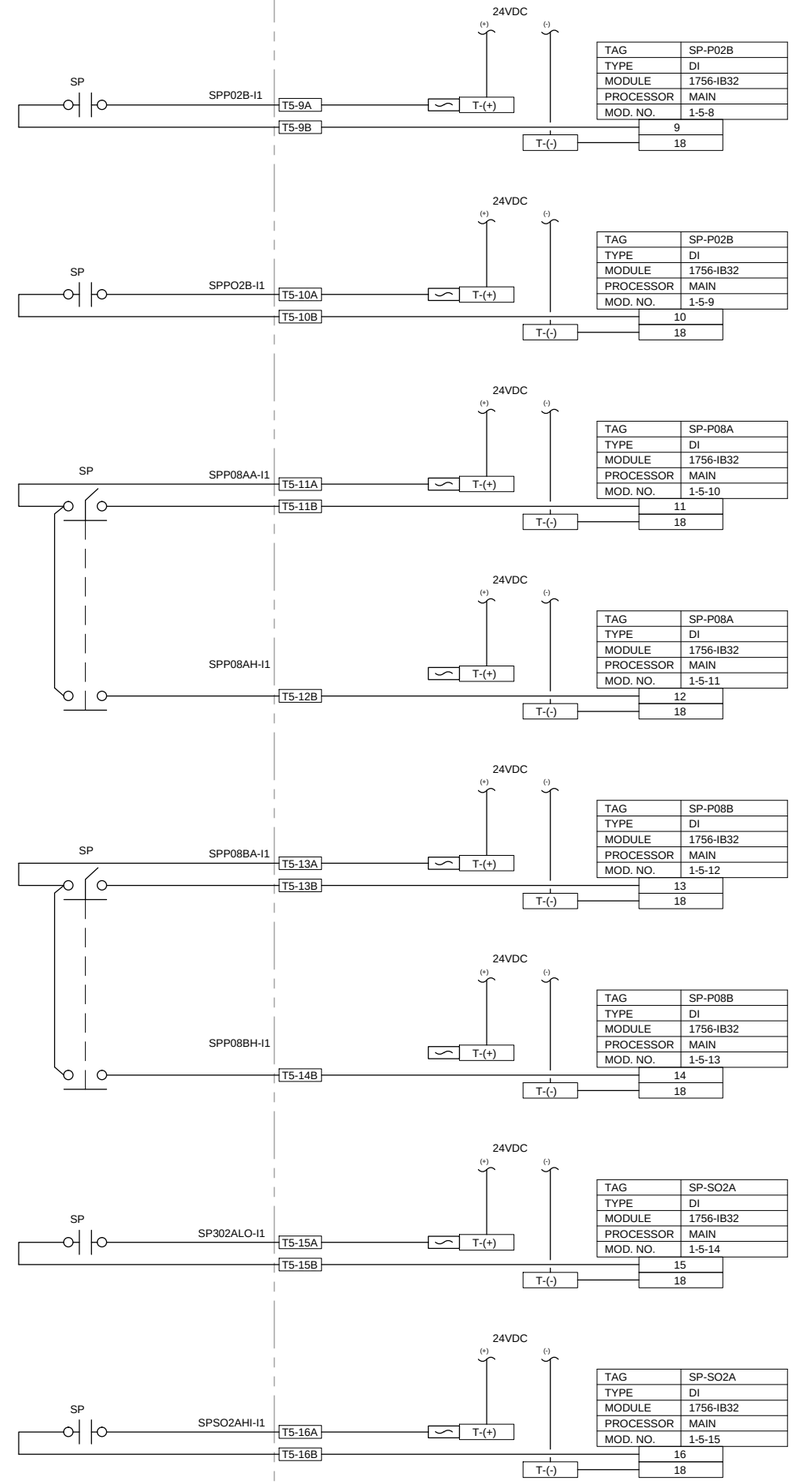

NOTES:

1. TERMINAL NUMBERS ARE PRELIMINARY. ACTUAL TERMINAL NUMBERS WILL BE UPDATED AFTER INSTALLATION.
2. TERM = TERMINAL NUMBER TO BE FIELD ASSIGNED DURING INSTALLATION.
3. ALL MISSING NUMBERS AND MISSING DRAWING NUMBERS TO BE FIELD ASSIGNED DURING INSTALLATION.
4. ALL FUSES TO BE 1 AMP FAST BLOW UNLESS OTHERWISE SPECIFIED.

RECORD DRAWINGS

Revisions Drawn by DEE LAMPH Date 5-31-2012

THESE RECORD DRAWINGS HAVE BEEN PREPARED, IN PART, ON THE BASIS OF INFORMATION COMPILED BY OTHERS. THEY ARE NOT INTENDED TO REPRESENT IN DETAIL THE EXACT LOCATION, TYPE OF COMPONENT NOR MANNER OF CONSTRUCTION. THE ENGINEER WILL NOT BE RESPONSIBLE FOR ANY ERRORS OR OMISSIONS WHICH HAVE BEEN INCORPORATED INTO THE RECORD DRAWINGS.

MARK	APPR	DATE	DESCRIPTION

RECORD DRAWING

DESIGNED BY: D. WINGER
DRAWN BY: D. LAMPH
CHECKED BY: D. STEWART
PROJECT NUMBER: FA8201-09-D-0004-0005
GOVERNMENT REVIEWER:

HILL AIR FORCE BASE

DEPARTMENT OF THE AIR FORCE
OGDEN AIR LOGISTICS CENTER
75TH CIVIL ENGINEER GROUP

SCADA SYSTEM FOR THE IWTP
BUILDING 575

MAIN PANEL DIAGRAM MODULE 5

EI-612

SHEET 15 OF 37

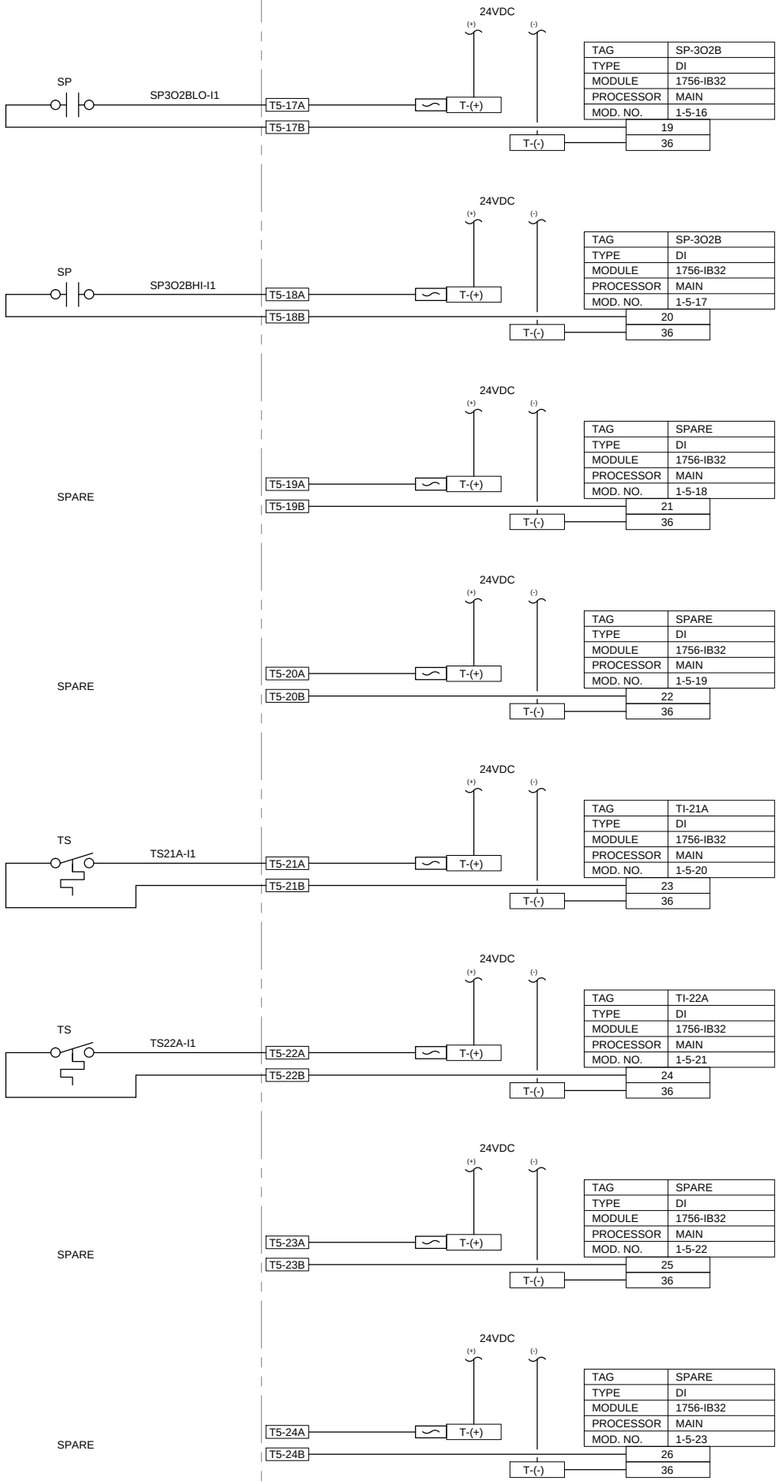

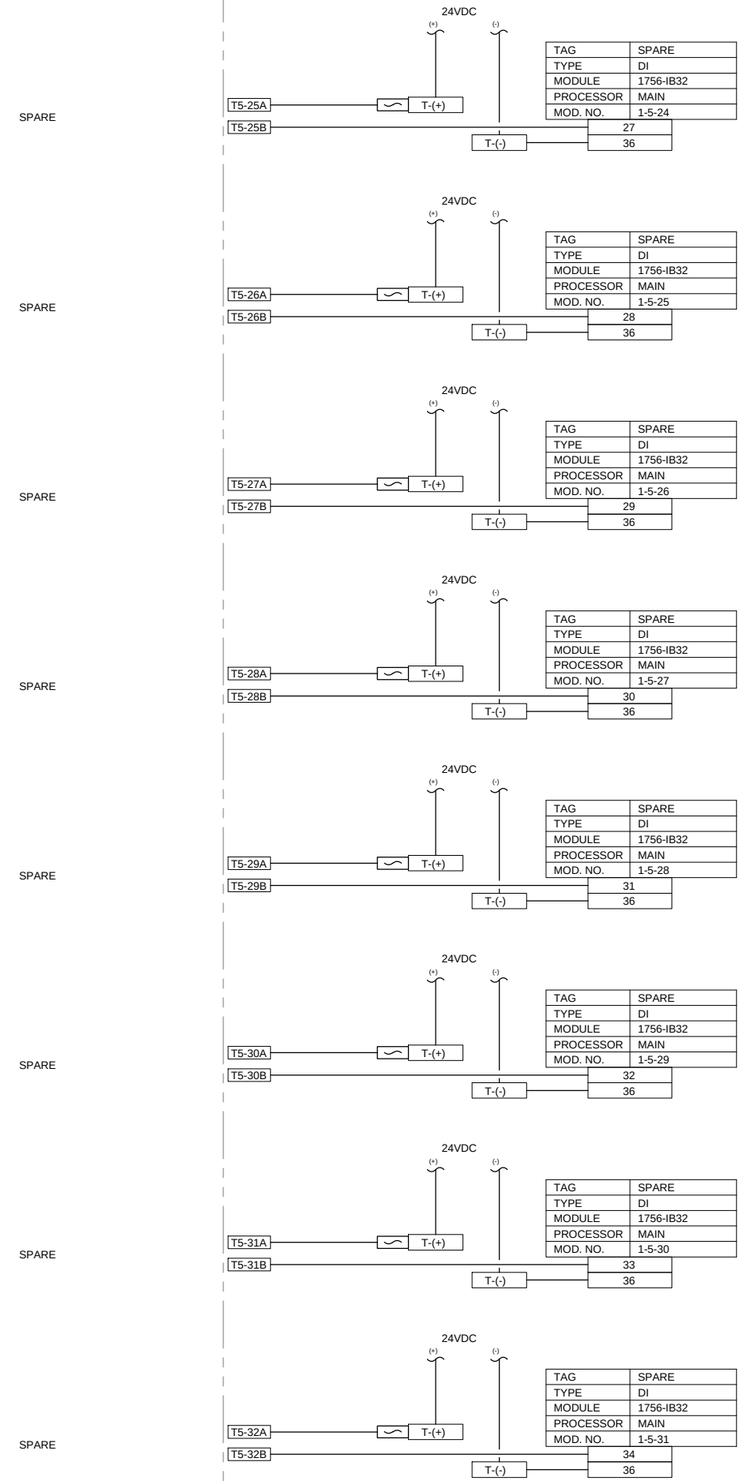

NOTES:

1. TERMINAL NUMBERS ARE PRELIMINARY. ACTUAL TERMINAL NUMBERS WILL BE UPDATED AFTER INSTALLATION.
2. TERM = TERMINAL NUMBER TO BE FIELD ASSIGNED DURING INSTALLATION.
3. ALL MISSING NUMBERS AND MISSING DRAWING NUMBERS TO BE FIELD ASSIGNED DURING INSTALLATION.
4. ALL FUSES TO BE 1 AMP FAST BLOW UNLESS OTHERWISE SPECIFIED.

RECORD DRAWINGS

Revisions Drawn by DEE LAMPH Date 5-31-2012

THESE RECORD DRAWINGS HAVE BEEN PREPARED, IN PART, ON THE BASIS OF INFORMATION COMPILED BY OTHERS. THEY ARE NOT INTENDED TO REPRESENT IN DETAIL THE EXACT LOCATION, TYPE OF COMPONENT NOR MANNER OF CONSTRUCTION. THE ENGINEER WILL NOT BE RESPONSIBLE FOR ANY ERRORS OR OMISSIONS WHICH HAVE BEEN INCORPORATED INTO THE RECORD DRAWINGS.

DESCRIPTION	DATE	APPR	MARK

RECORD DRAWING

DESIGNED BY: D. WINGER
DRAWN BY: D. LAMPH
CHECKED BY: D. STEWART
PROJECT NUMBER: FA8201-09-D-0004-0005
GOVERNMENT REVIEWER:

HILL AIR FORCE BASE

DEPARTMENT OF THE AIR FORCE
OGDEN AIR LOGISTICS CENTER
75TH CIVIL ENGINEER GROUP

SCADA SYSTEM FOR THE IWTP
BUILDING 575

MAIN PANEL DIAGRAM MODULE 5

EI-613

SHEET 16 OF 37

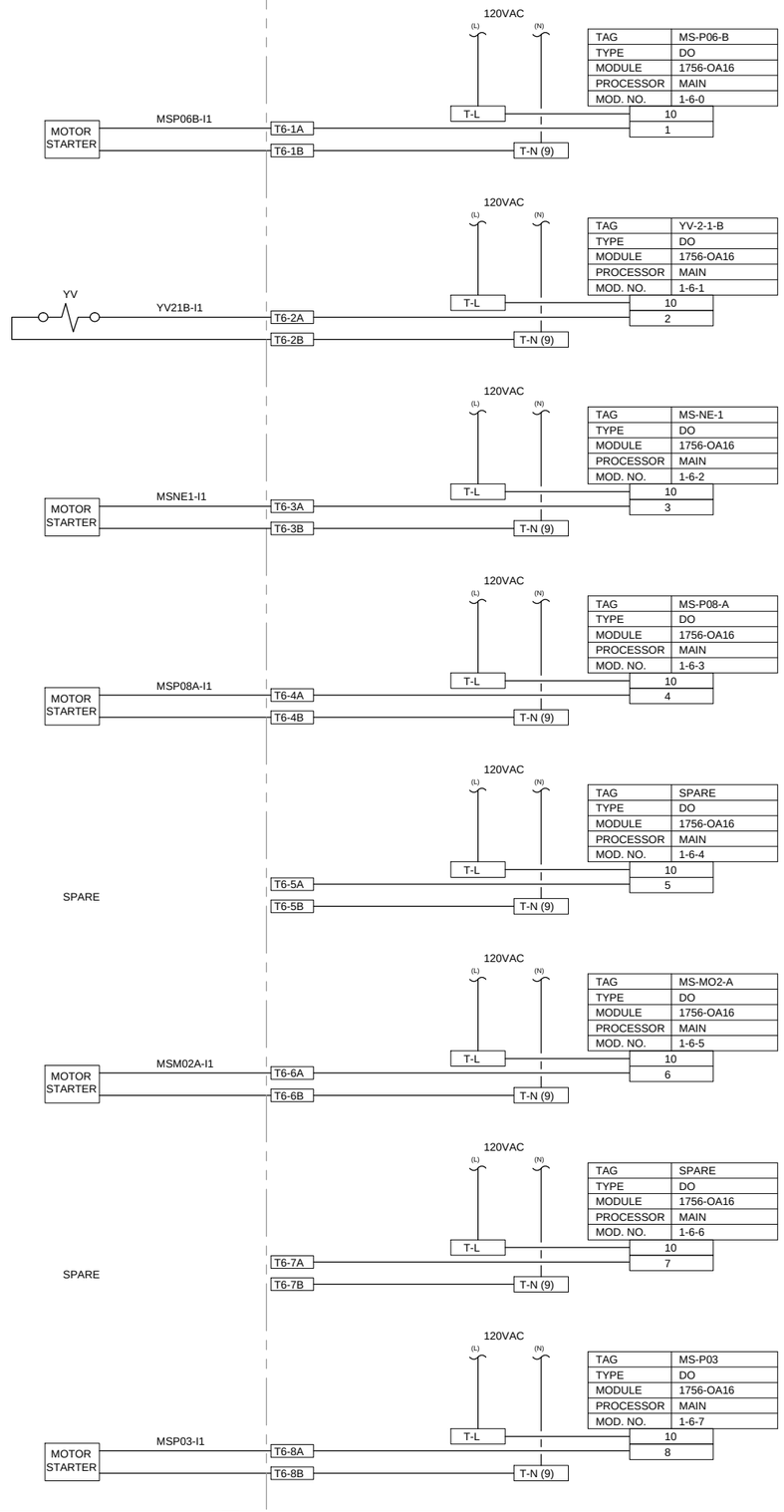

NOTES:

1. TERMINAL NUMBERS ARE PRELIMINARY. ACTUAL TERMINAL NUMBERS WILL BE UPDATED AFTER INSTALLATION.
2. TERM = TERMINAL NUMBER TO BE FIELD ASSIGNED DURING INSTALLATION.
3. ALL MISSING NUMBERS AND MISSING DRAWING NUMBERS TO BE FIELD ASSIGNED DURING INSTALLATION.
4. ALL FUSES TO BE 1 AMP FAST BLOW UNLESS OTHERWISE SPECIFIED.

RECORD DRAWINGS

Revisions Drawn by DEE LAMPH Date 5-31-2012

THESE RECORD DRAWINGS HAVE BEEN PREPARED, IN PART, ON THE BASIS OF INFORMATION COMPILED BY OTHERS. THEY ARE NOT INTENDED TO REPRESENT IN DETAIL THE EXACT LOCATION, TYPE OF COMPONENT NOR MANNER OF CONSTRUCTION. THE ENGINEER WILL NOT BE RESPONSIBLE FOR ANY ERRORS OR OMISSIONS WHICH HAVE BEEN INCORPORATED INTO THE RECORD DRAWINGS.

MARK	DESCRIPTION	DATE	APPR

RECORD DRAWING

DESIGNED BY: D. WINGER
DRAWN BY: D. LAMPH
CHECKED BY: D. STEWART
PROJECT NUMBER: FA8201-09-D-0004-0005
GOVERNMENT REVIEWER:

HILL AIR FORCE BASE

DEPARTMENT OF THE AIR FORCE
OGDEN AIR LOGISTICS CENTER
75TH CIVIL ENGINEER GROUP

SCADA SYSTEM FOR THE IWTP
BUILDING 575

MAIN PANEL DIAGRAM MODULE 6

EI-614

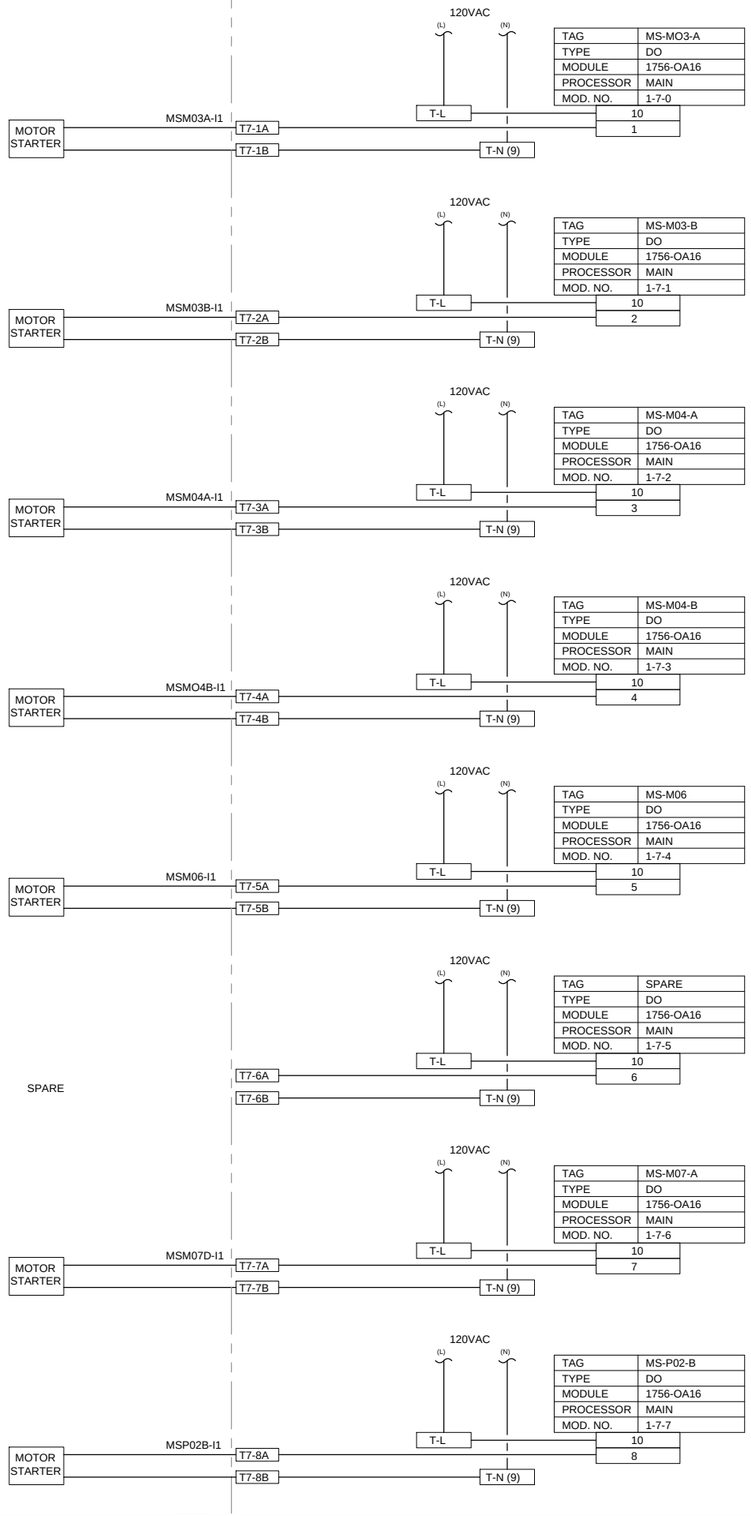

TAG	MS-MO3-A
TYPE	DO
MODULE	1756-OA16
PROCESSOR	MAIN
MOD. NO.	1-7-0

TAG	MS-M03-B
TYPE	DO
MODULE	1756-OA16
PROCESSOR	MAIN
MOD. NO.	1-7-1

TAG	MS-M04-A
TYPE	DO
MODULE	1756-OA16
PROCESSOR	MAIN
MOD. NO.	1-7-2

TAG	MS-M04-B
TYPE	DO
MODULE	1756-OA16
PROCESSOR	MAIN
MOD. NO.	1-7-3

TAG	MS-M06
TYPE	DO
MODULE	1756-OA16
PROCESSOR	MAIN
MOD. NO.	1-7-4

TAG	SPARE
TYPE	DO
MODULE	1756-OA16
PROCESSOR	MAIN
MOD. NO.	1-7-5

TAG	MS-M07-A
TYPE	DO
MODULE	1756-OA16
PROCESSOR	MAIN
MOD. NO.	1-7-6

TAG	MS-P02-B
TYPE	DO
MODULE	1756-OA16
PROCESSOR	MAIN
MOD. NO.	1-7-7

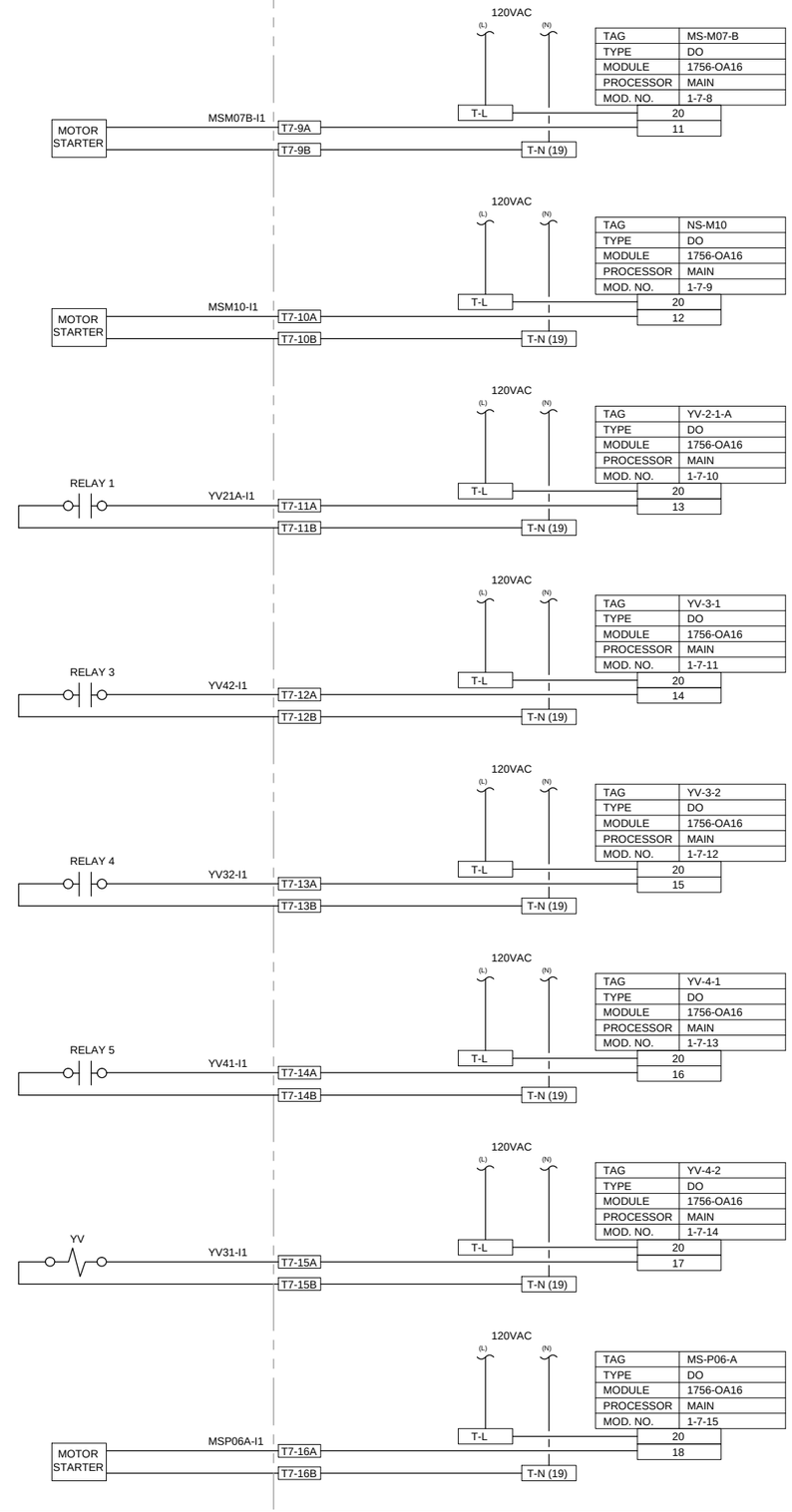

TAG	MS-M07-B
TYPE	DO
MODULE	1756-OA16
PROCESSOR	MAIN
MOD. NO.	1-7-8

TAG	NS-M10
TYPE	DO
MODULE	1756-OA16
PROCESSOR	MAIN
MOD. NO.	1-7-9

TAG	YV-2-1-A
TYPE	DO
MODULE	1756-OA16
PROCESSOR	MAIN
MOD. NO.	1-7-10

TAG	YV-3-1
TYPE	DO
MODULE	1756-OA16
PROCESSOR	MAIN
MOD. NO.	1-7-11

TAG	YV-3-2
TYPE	DO
MODULE	1756-OA16
PROCESSOR	MAIN
MOD. NO.	1-7-12

TAG	YV-4-1
TYPE	DO
MODULE	1756-OA16
PROCESSOR	MAIN
MOD. NO.	1-7-13

TAG	YV-4-2
TYPE	DO
MODULE	1756-OA16
PROCESSOR	MAIN
MOD. NO.	1-7-14

TAG	MS-P06-A
TYPE	DO
MODULE	1756-OA16
PROCESSOR	MAIN
MOD. NO.	1-7-15

NOTES:

1. TERMINAL NUMBERS ARE PRELIMINARY. ACTUAL TERMINAL NUMBERS WILL BE UPDATED AFTER INSTALLATION.
2. TERM = TERMINAL NUMBER TO BE FIELD ASSIGNED DURING INSTALLATION.
3. ALL MISSING NUMBERS AND MISSING DRAWING NUMBERS TO BE FIELD ASSIGNED DURING INSTALLATION.
4. ALL FUSES TO BE 1 AMP FAST BLOW UNLESS OTHERWISE SPECIFIED.

RECORD DRAWINGS

Revisions Drawn by DEE LAMPH Date 5-31-2012

THESE RECORD DRAWINGS HAVE BEEN PREPARED, IN PART, ON THE BASIS OF INFORMATION COMPILED BY OTHERS. THEY ARE NOT INTENDED TO REPRESENT IN DETAIL THE EXACT LOCATION, TYPE OF COMPONENT NOR MANNER OF CONSTRUCTION. THE ENGINEER WILL NOT BE RESPONSIBLE FOR ANY ERRORS OR OMISSIONS WHICH HAVE BEEN INCORPORATED INTO THE RECORD DRAWINGS.

DESCRIPTION	DATE	APPR	MARK

RECORD DRAWING

DESIGNED BY: D. WINGER
DRAWN BY: D. LAMPH
CHECKED BY: D. STEWART
PROJECT NUMBER: FA8201-09-D-0004-0005
GOVERNMENT REVIEWER:

HILL AIR FORCE BASE
DEPARTMENT OF THE AIR FORCE
OGDEN AIR LOGISTICS CENTER
75TH CIVIL ENGINEER GROUP

SCADA SYSTEM FOR THE IWTP
BUILDING 575

MAIN PANEL DIAGRAM MODULE 7

EI-615

SHEET 18 OF 37

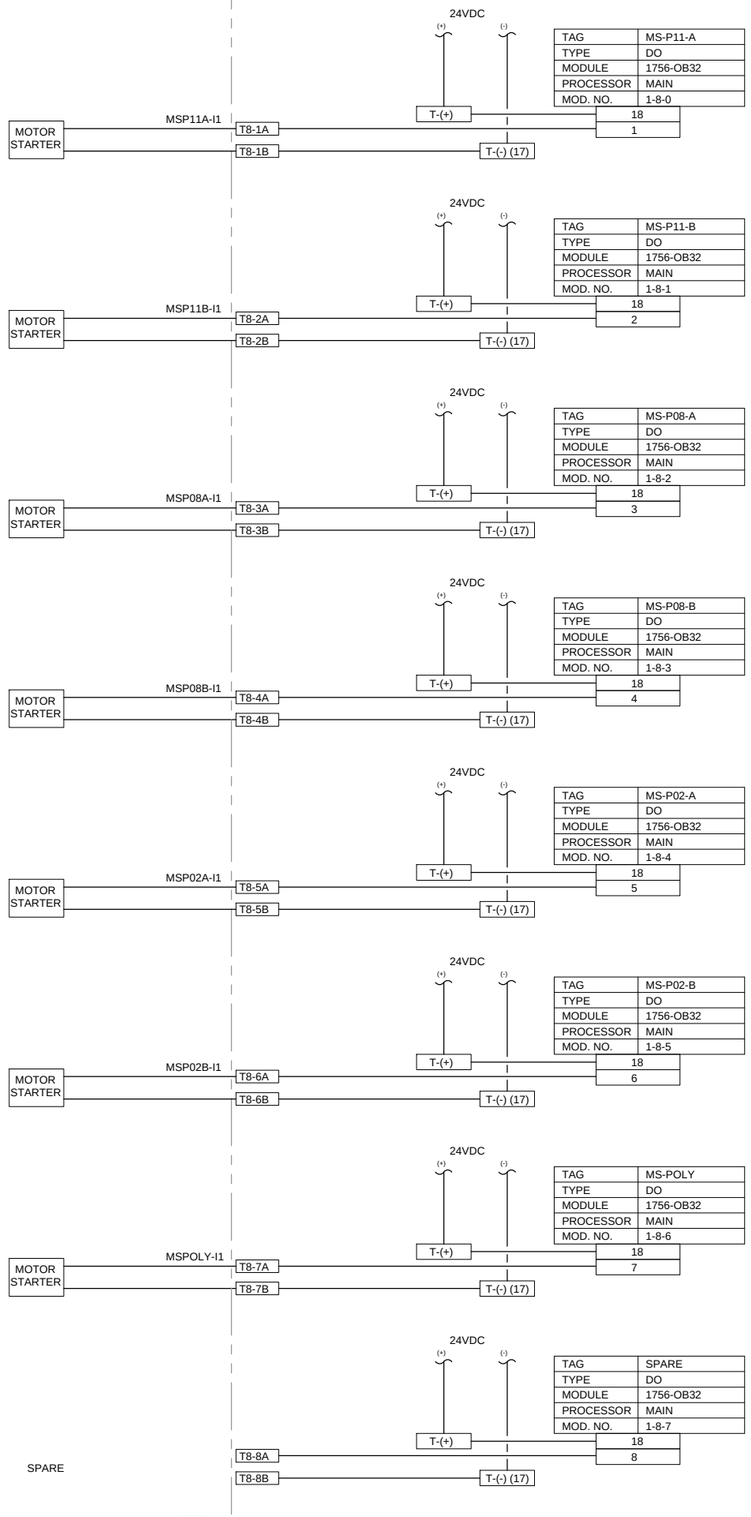

NOTES:

1. TERMINAL NUMBERS ARE PRELIMINARY. ACTUAL TERMINAL NUMBERS WILL BE UPDATED AFTER INSTALLATION.
2. TERM = TERMINAL NUMBER TO BE FIELD ASSIGNED DURING INSTALLATION.
3. ALL MISSING NUMBERS AND MISSING DRAWING NUMBERS TO BE FIELD ASSIGNED DURING INSTALLATION.
4. ALL FUSES TO BE 1 AMP FAST BLOW UNLESS OTHERWISE SPECIFIED.

RECORD DRAWINGS

Revisions Drawn by DEE LAMPH Date 5-31-2012

THESE RECORD DRAWINGS HAVE BEEN PREPARED, IN PART, ON THE BASIS OF INFORMATION COMPILED BY OTHERS. THEY ARE NOT INTENDED TO REPRESENT IN DETAIL THE EXACT LOCATION, TYPE OF COMPONENT NOR MANNER OF CONSTRUCTION. THE ENGINEER WILL NOT BE RESPONSIBLE FOR ANY ERRORS OR OMISSIONS WHICH HAVE BEEN INCORPORATED INTO THE RECORD DRAWINGS.

MARK	DESCRIPTION	DATE	APPR

RECORD DRAWING

DESIGNED BY: D. WINGER
DRAWN BY: D. LAMPH
CHECKED BY: D. STEWART
PROJECT NUMBER: FA8201-09-D-0004-0005
GOVERNMENT REVIEWER:

HILL AIR FORCE BASE

DEPARTMENT OF THE AIR FORCE
OGDEN AIR LOGISTICS CENTER
75TH CIVIL ENGINEER GROUP

SCADA SYSTEM FOR THE IWTP
BUILDING 575

MAIN PANEL DIAGRAM MODULE 8

EI-616

SHEET 19 OF 37

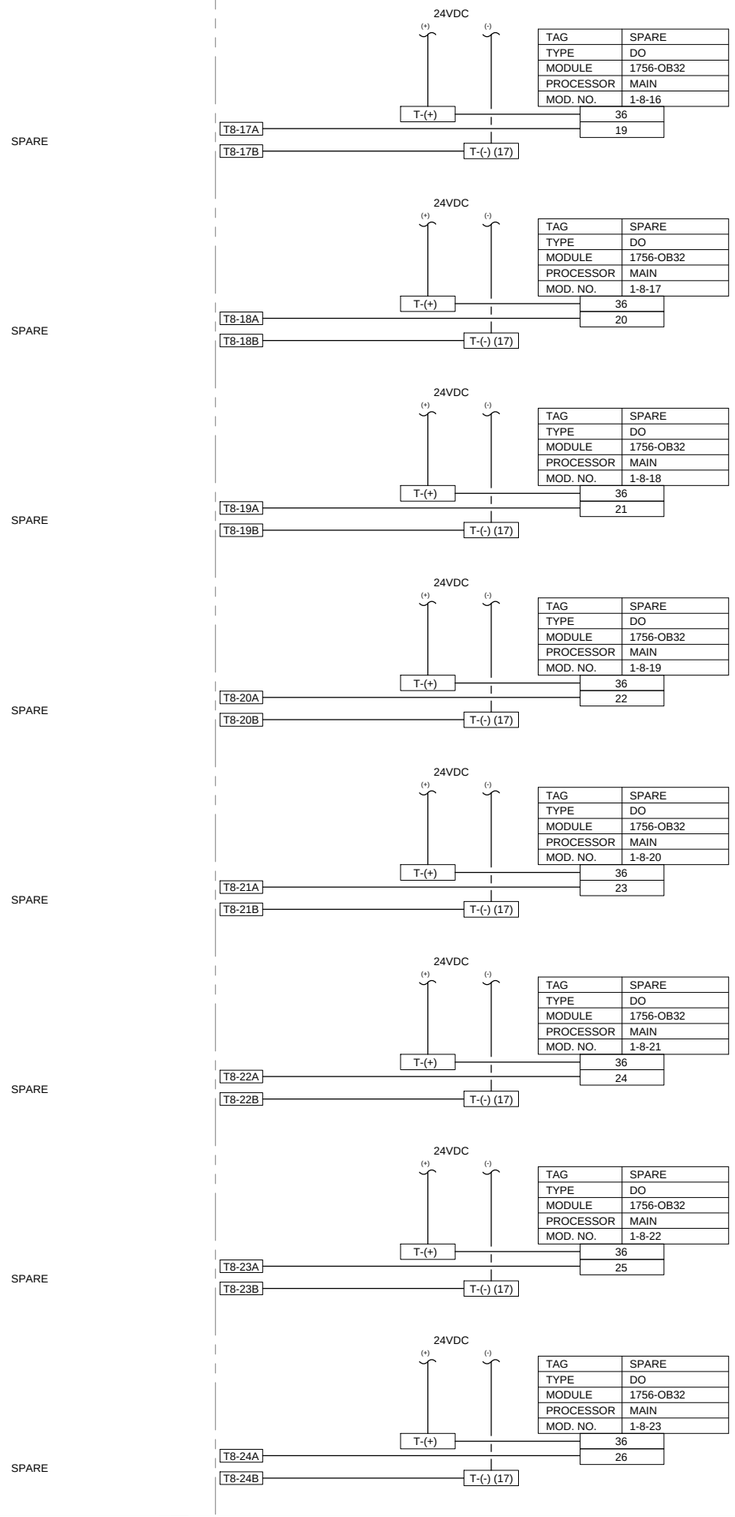

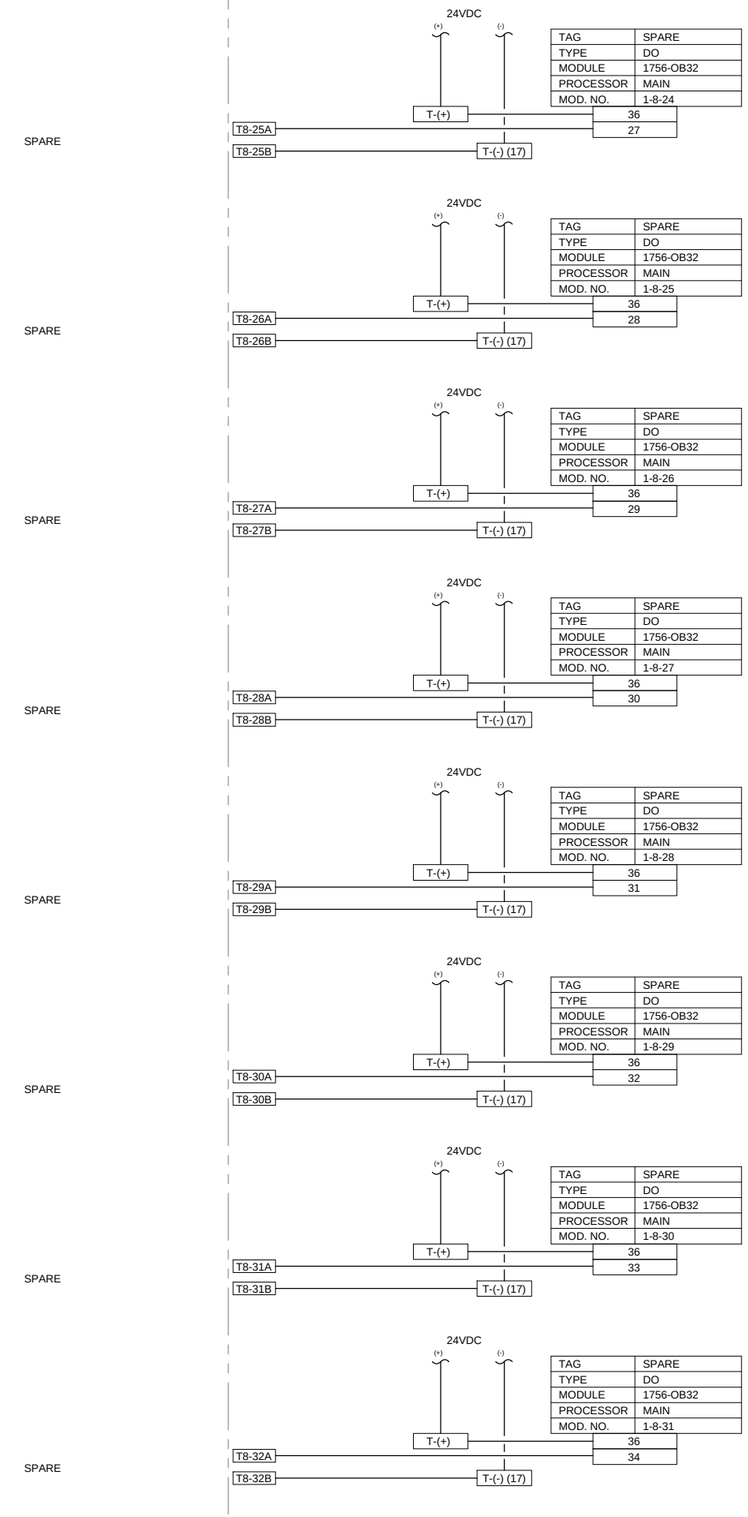

NOTES:

1. TERMINAL NUMBERS ARE PRELIMINARY. ACTUAL TERMINAL NUMBERS WILL BE UPDATED AFTER INSTALLATION.
2. TERM = TERMINAL NUMBER TO BE FIELD ASSIGNED DURING INSTALLATION.
3. ALL MISSING NUMBERS AND MISSING DRAWING NUMBERS TO BE FIELD ASSIGNED DURING INSTALLATION.
4. ALL FUSES TO BE 1 AMP FAST BLOW UNLESS OTHERWISE SPECIFIED.

RECORD DRAWINGS

Revisions Drawn by DEE LAMPH Date 5-31-2012

THESE RECORD DRAWINGS HAVE BEEN PREPARED, IN PART, ON THE BASIS OF INFORMATION COMPILED BY OTHERS. THEY ARE NOT INTENDED TO REPRESENT IN DETAIL THE EXACT LOCATION, TYPE OF COMPONENT NOR MANNER OF CONSTRUCTION. THE ENGINEER WILL NOT BE RESPONSIBLE FOR ANY ERRORS OR OMISSIONS WHICH HAVE BEEN INCORPORATED INTO THE RECORD DRAWINGS.

MARK	DESCRIPTION	DATE	APPR

RECORD DRAWING

DESIGNED BY: D. WINGER
DRAWN BY: D. LAMPH
CHECKED BY: D. STEWART
PROJECT NUMBER: FA8201-09-D-0004-0005
GOVERNMENT REVIEWER:

HILL AIR FORCE BASE

DEPARTMENT OF THE AIR FORCE
OGDEN AIR LOGISTICS CENTER
75TH CIVIL ENGINEER GROUP

SCADA SYSTEM FOR THE IWTP
BUILDING 575

MAIN PANEL DIAGRAM MODULE 8

EI-617

SHEET 20 OF 37

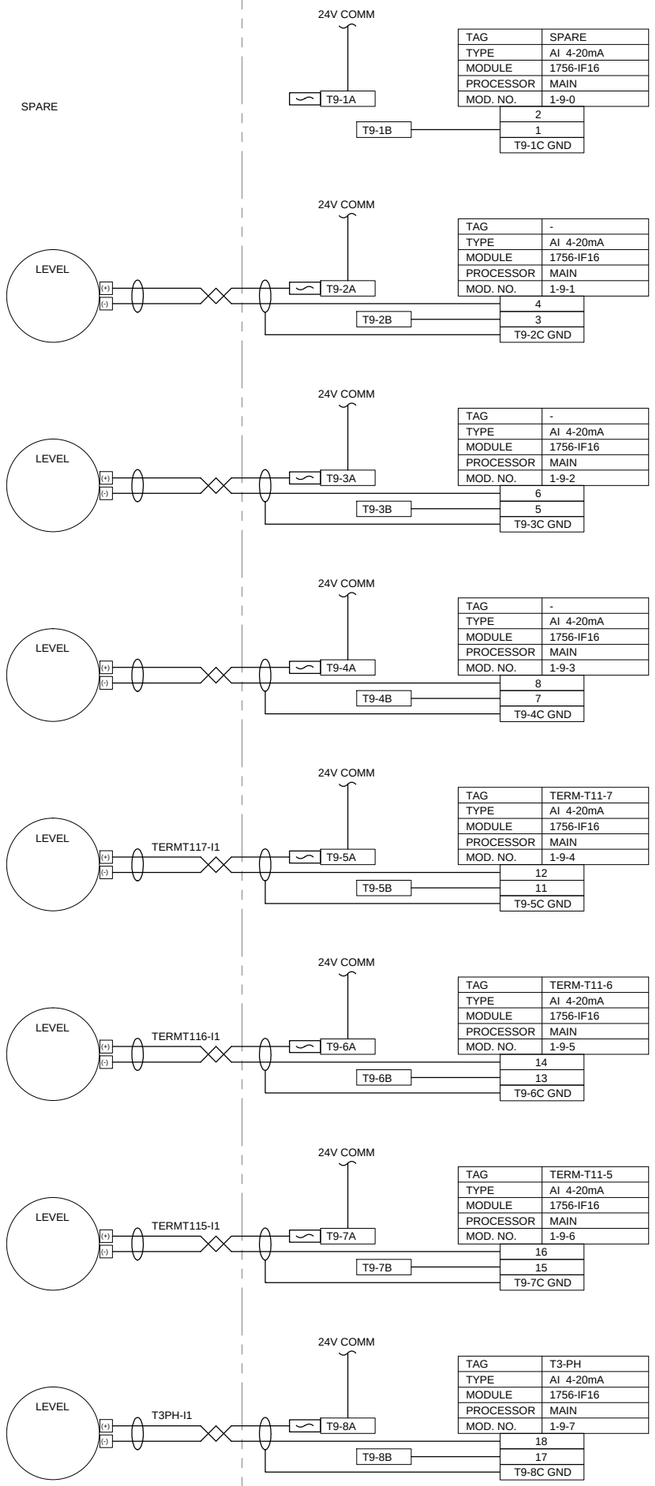

NOTES:

1. TERMINAL NUMBERS ARE PRELIMINARY. ACTUAL TERMINAL NUMBERS WILL BE UPDATED AFTER INSTALLATION.
2. TERM = TERMINAL NUMBER TO BE FIELD ASSIGNED DURING INSTALLATION.
3. ALL MISSING NUMBERS AND MISSING DRAWING NUMBERS TO BE FIELD ASSIGNED DURING INSTALLATION.
4. ALL FUSES TO BE 1 AMP FAST BLOW UNLESS OTHERWISE SPECIFIED.

RECORD DRAWINGS

Revisions Drawn by DEE LAMPH Date 5-31-2012

THESE RECORD DRAWINGS HAVE BEEN PREPARED, IN PART, ON THE BASIS OF INFORMATION COMPILED BY OTHERS. THEY ARE NOT INTENDED TO REPRESENT IN DETAIL THE EXACT LOCATION, TYPE OF COMPONENT NOR MANNER OF CONSTRUCTION. THE ENGINEER WILL NOT BE RESPONSIBLE FOR ANY ERRORS OR OMISSIONS WHICH HAVE BEEN INCORPORATED INTO THE RECORD DRAWINGS.

MARK	APPR	DATE	DESCRIPTION

RECORD DRAWING

DESIGNED BY: D. WINGER
DRAWN BY: D. LAMPH
CHECKED BY: D. STEWART
PROJECT NUMBER: FA8201-09-D-0004-0005
GOVERNMENT REVIEWER:

HILL AIR FORCE BASE

DEPARTMENT OF THE AIR FORCE
OGDEN AIR LOGISTICS CENTER
75TH CIVIL ENGINEER GROUP

SCADA SYSTEM FOR THE IWTP
BUILDING 575

MAIN PANEL DIAGRAM MODULE 9

EI-618

SHEET 21 OF 37

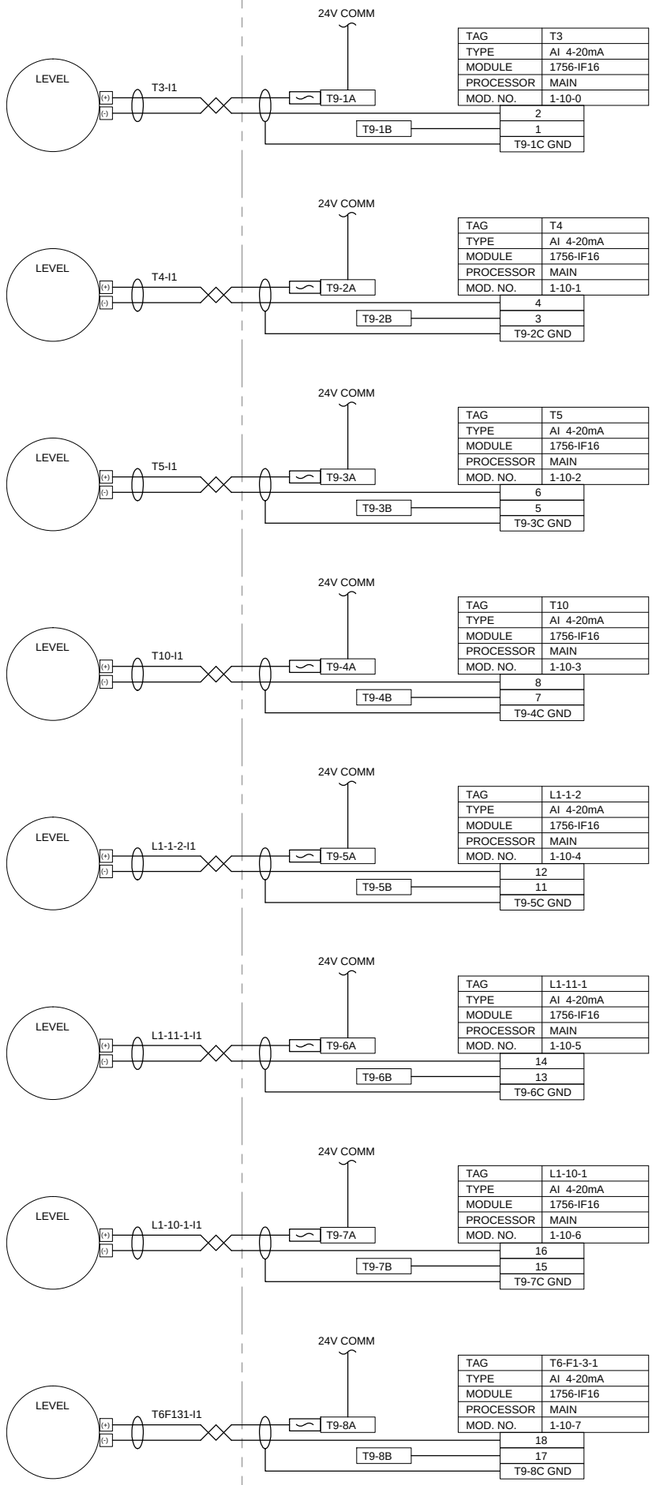

TAG	T3
TYPE	AI 4-20mA
MODULE	1756-IF16
PROCESSOR	MAIN
MOD. NO.	1-10-0

TAG	T4
TYPE	AI 4-20mA
MODULE	1756-IF16
PROCESSOR	MAIN
MOD. NO.	1-10-1

TAG	T5
TYPE	AI 4-20mA
MODULE	1756-IF16
PROCESSOR	MAIN
MOD. NO.	1-10-2

TAG	T10
TYPE	AI 4-20mA
MODULE	1756-IF16
PROCESSOR	MAIN
MOD. NO.	1-10-3

TAG	L1-1-2
TYPE	AI 4-20mA
MODULE	1756-IF16
PROCESSOR	MAIN
MOD. NO.	1-10-4

TAG	L1-11-1
TYPE	AI 4-20mA
MODULE	1756-IF16
PROCESSOR	MAIN
MOD. NO.	1-10-5

TAG	L1-10-1
TYPE	AI 4-20mA
MODULE	1756-IF16
PROCESSOR	MAIN
MOD. NO.	1-10-6

TAG	T6-F1-3-1
TYPE	AI 4-20mA
MODULE	1756-IF16
PROCESSOR	MAIN
MOD. NO.	1-10-7

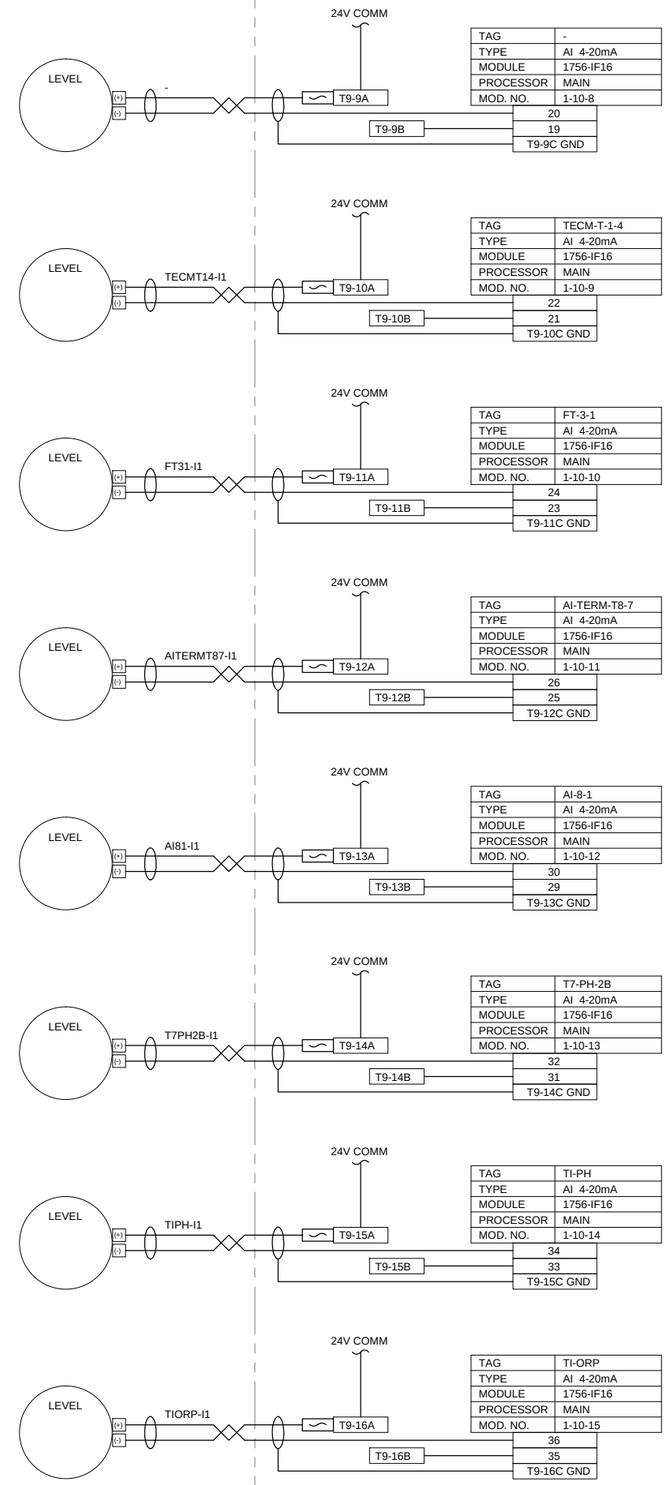

TAG	-
TYPE	AI 4-20mA
MODULE	1756-IF16
PROCESSOR	MAIN
MOD. NO.	1-10-8

TAG	TECM-T-1-4
TYPE	AI 4-20mA
MODULE	1756-IF16
PROCESSOR	MAIN
MOD. NO.	1-10-9

TAG	FT-3-1
TYPE	AI 4-20mA
MODULE	1756-IF16
PROCESSOR	MAIN
MOD. NO.	1-10-10

TAG	AI-TERM-T8-7
TYPE	AI 4-20mA
MODULE	1756-IF16
PROCESSOR	MAIN
MOD. NO.	1-10-11

TAG	AI-8-1
TYPE	AI 4-20mA
MODULE	1756-IF16
PROCESSOR	MAIN
MOD. NO.	1-10-12

TAG	T7-PH-2B
TYPE	AI 4-20mA
MODULE	1756-IF16
PROCESSOR	MAIN
MOD. NO.	1-10-13

TAG	TI-PH
TYPE	AI 4-20mA
MODULE	1756-IF16
PROCESSOR	MAIN
MOD. NO.	1-10-14

TAG	TI-ORP
TYPE	AI 4-20mA
MODULE	1756-IF16
PROCESSOR	MAIN
MOD. NO.	1-10-15

NOTES:

1. TERMINAL NUMBERS ARE PRELIMINARY. ACTUAL TERMINAL NUMBERS WILL BE UPDATED AFTER INSTALLATION.
2. TERM = TERMINAL NUMBER TO BE FIELD ASSIGNED DURING INSTALLATION.
3. ALL MISSING NUMBERS AND MISSING DRAWING NUMBERS TO BE FIELD ASSIGNED DURING INSTALLATION.
4. ALL FUSES TO BE 1 AMP FAST BLOW UNLESS OTHERWISE SPECIFIED.

RECORD DRAWINGS

Revisions Drawn by DEE LAMPH Date 5-31-2012

THESE RECORD DRAWINGS HAVE BEEN PREPARED, IN PART, ON THE BASIS OF INFORMATION COMPILED BY OTHERS. THEY ARE NOT INTENDED TO REPRESENT IN DETAIL THE EXACT LOCATION, TYPE OF COMPONENT NOR MANNER OF CONSTRUCTION. THE ENGINEER WILL NOT BE RESPONSIBLE FOR ANY ERRORS OR OMISSIONS WHICH HAVE BEEN INCORPORATED INTO THE RECORD DRAWINGS.

DESCRIPTION	DATE	APPR	MARK

RECORD DRAWING

DESIGNED BY: D. WINGER
DRAWN BY: D. LAMPH
CHECKED BY: D. STEWART
PROJECT NUMBER: FA8201-09-D-0004-0005
GOVERNMENT REVIEWER:

HILL AIR FORCE BASE

DEPARTMENT OF THE AIR FORCE
OGDEN AIR LOGISTICS CENTER
75TH CIVIL ENGINEER GROUP

SCADA SYSTEM FOR THE IWTP
BUILDING 575

MAIN PANEL DIAGRAM MODULE 10

EI-619

SHEET 22 OF 37

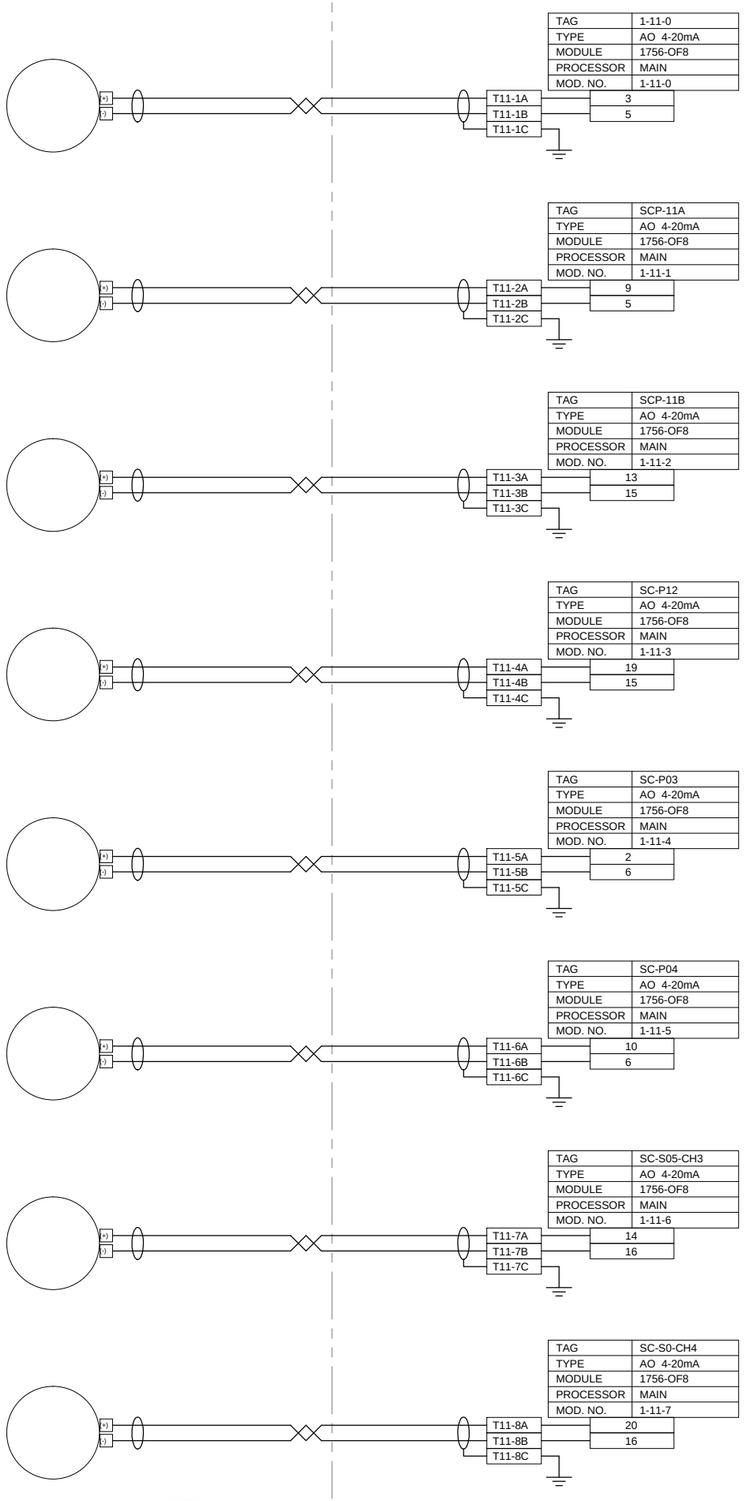

NOTES:

1. TERMINAL NUMBERS ARE PRELIMINARY. ACTUAL TERMINAL NUMBERS WILL BE UPDATED AFTER INSTALLATION.
2. TERM = TERMINAL NUMBER TO BE FIELD ASSIGNED DURING INSTALLATION.
3. ALL MISSING NUMBERS AND MISSING DRAWING NUMBERS TO BE FIELD ASSIGNED DURING INSTALLATION.
4. ALL FUSES TO BE 1 AMP FAST BLOW UNLESS OTHERWISE SPECIFIED.

RECORD DRAWINGS

Revisions Drawn by DEE LAMPH Date 5-31-2012

THESE RECORD DRAWINGS HAVE BEEN PREPARED, IN PART, ON THE BASIS OF INFORMATION COMPILED BY OTHERS. THEY ARE NOT INTENDED TO REPRESENT IN DETAIL THE EXACT LOCATION, TYPE OF COMPONENT NOR MANNER OF CONSTRUCTION. THE ENGINEER WILL NOT BE RESPONSIBLE FOR ANY ERRORS OR OMISSIONS WHICH HAVE BEEN INCORPORATED INTO THE RECORD DRAWINGS.

DESCRIPTION	DATE	APPR	MARK

RECORD DRAWING

DESIGNED BY: D. WINGER
DRAWN BY: D. LAMPH
CHECKED BY: D. STEWART
PROJECT NUMBER: F42201-09-D-0004-0005
GOVERNMENT REVIEWER:

HILL AIR FORCE BASE
DEPARTMENT OF THE AIR FORCE
OGDEN AIR LOGISTICS CENTER
75TH CIVIL ENGINEER GROUP

SCADA SYSTEM FOR THE IWTP
BUILDING 575

MAIN PANEL DIAGRAM MODULE 11

EI-620

SHEET 23 OF 37

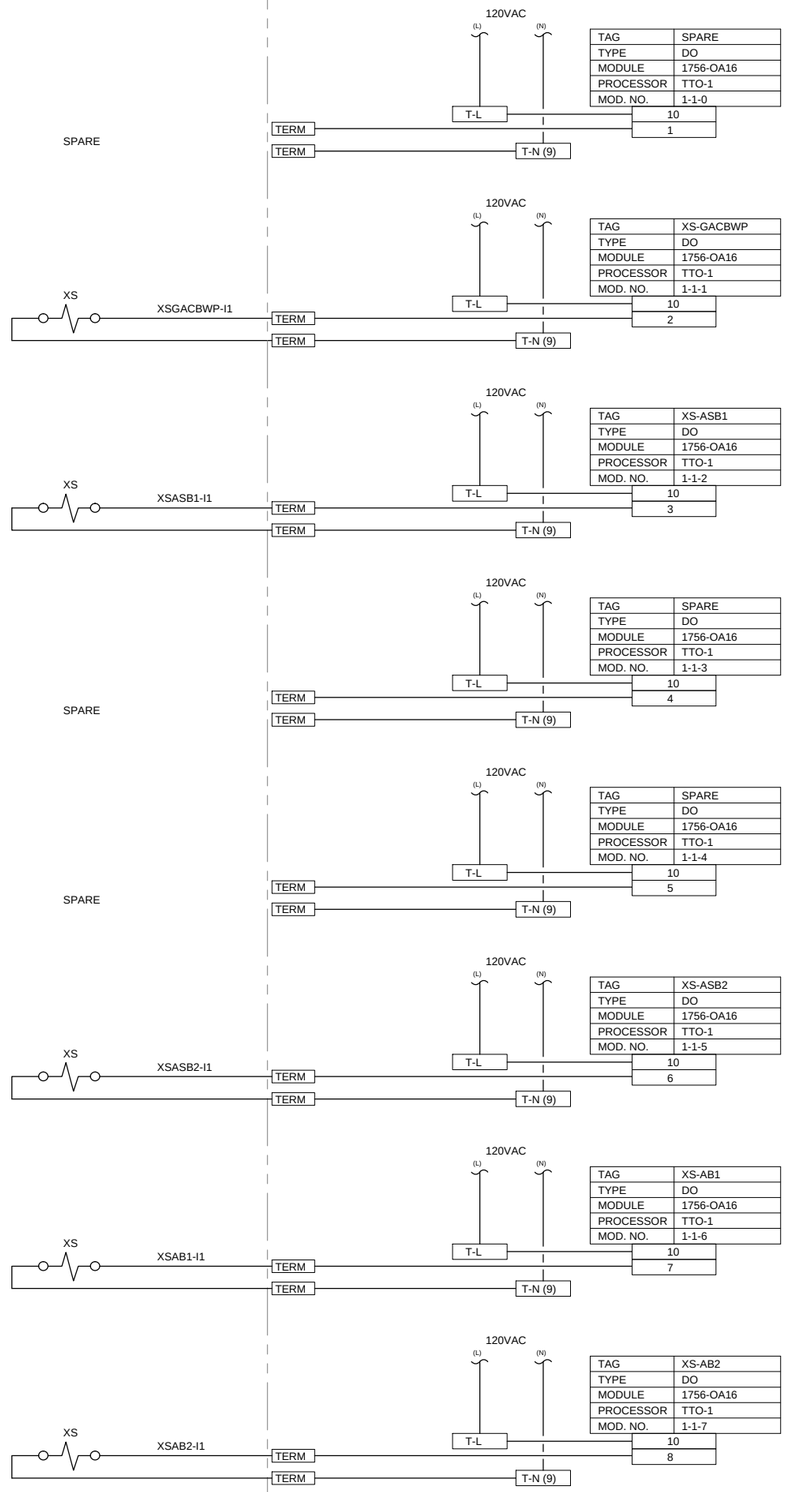

TAG	SPARE
TYPE	DO
MODULE	1756-OA16
PROCESSOR	TTO-1
MOD. NO.	1-1-0

TAG	XS-GACBWP
TYPE	DO
MODULE	1756-OA16
PROCESSOR	TTO-1
MOD. NO.	1-1-1

TAG	XS-ASB1
TYPE	DO
MODULE	1756-OA16
PROCESSOR	TTO-1
MOD. NO.	1-1-2

TAG	SPARE
TYPE	DO
MODULE	1756-OA16
PROCESSOR	TTO-1
MOD. NO.	1-1-3

TAG	SPARE
TYPE	DO
MODULE	1756-OA16
PROCESSOR	TTO-1
MOD. NO.	1-1-4

TAG	XS-ASB2
TYPE	DO
MODULE	1756-OA16
PROCESSOR	TTO-1
MOD. NO.	1-1-5

TAG	XS-AB1
TYPE	DO
MODULE	1756-OA16
PROCESSOR	TTO-1
MOD. NO.	1-1-6

TAG	XS-AB2
TYPE	DO
MODULE	1756-OA16
PROCESSOR	TTO-1
MOD. NO.	1-1-7

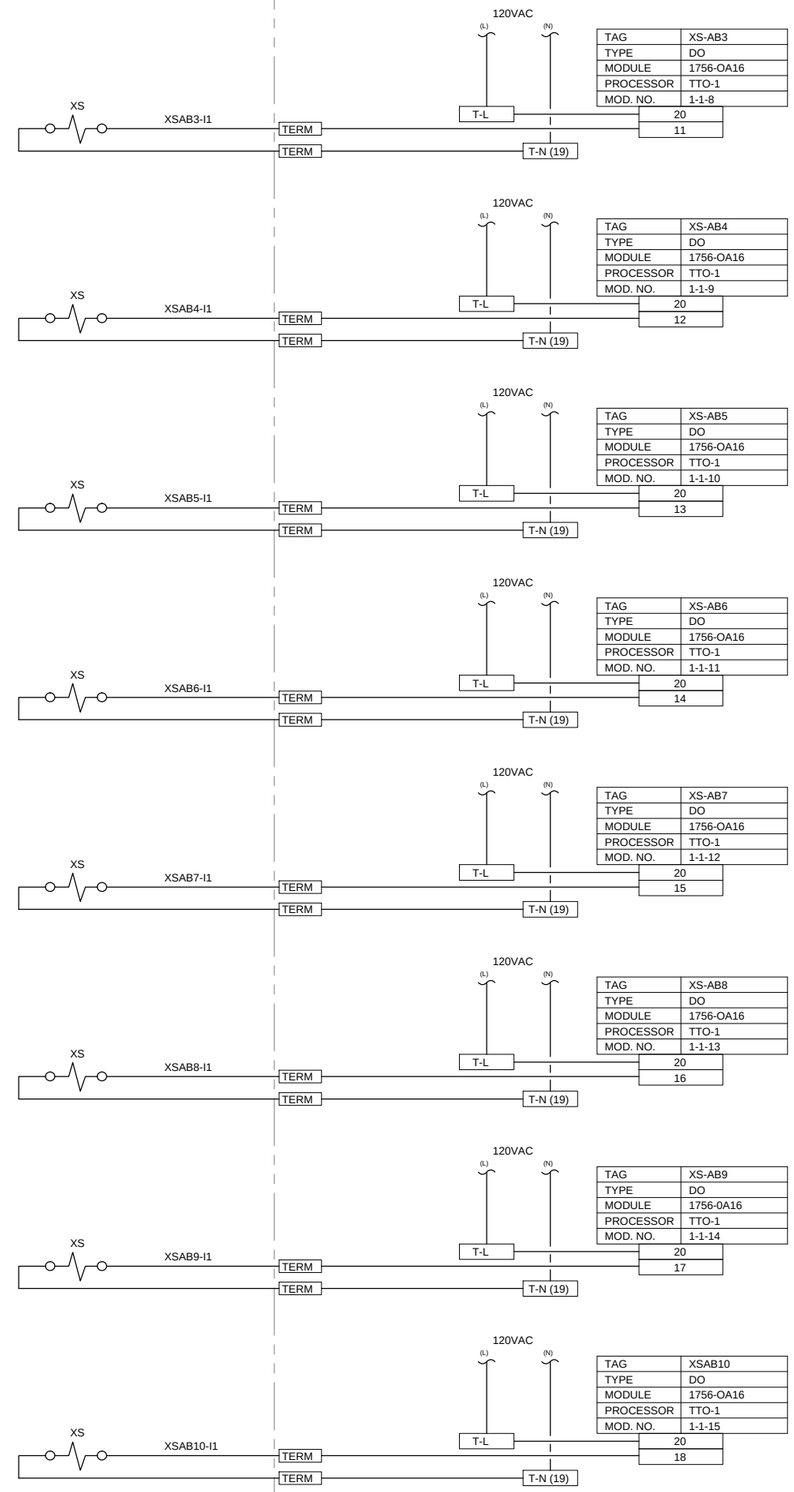

TAG	XS-AB3
TYPE	DO
MODULE	1756-OA16
PROCESSOR	TTO-1
MOD. NO.	1-1-8

TAG	XS-AB4
TYPE	DO
MODULE	1756-OA16
PROCESSOR	TTO-1
MOD. NO.	1-1-9

TAG	XS-AB5
TYPE	DO
MODULE	1756-OA16
PROCESSOR	TTO-1
MOD. NO.	1-1-10

TAG	XS-AB6
TYPE	DO
MODULE	1756-OA16
PROCESSOR	TTO-1
MOD. NO.	1-1-11

TAG	XS-AB7
TYPE	DO
MODULE	1756-OA16
PROCESSOR	TTO-1
MOD. NO.	1-1-12

TAG	XS-AB8
TYPE	DO
MODULE	1756-OA16
PROCESSOR	TTO-1
MOD. NO.	1-1-13

TAG	XS-AB9
TYPE	DO
MODULE	1756-0A16
PROCESSOR	TTO-1
MOD. NO.	1-1-14

TAG	XSAB10
TYPE	DO
MODULE	1756-OA16
PROCESSOR	TTO-1
MOD. NO.	1-1-15

NOTES:

1. TERMINAL NUMBERS ARE PRELIMINARY. ACTUAL TERMINAL NUMBERS WILL BE UPDATED AFTER INSTALLATION.
2. TERM = TERMINAL NUMBER TO BE FIELD ASSIGNED DURING INSTALLATION.
3. ALL MISSING NUMBERS AND MISSING DRAWING NUMBERS TO BE FIELD ASSIGNED DURING INSTALLATION.
4. ALL FUSES TO BE 1 AMP FAST BLOW UNLESS OTHERWISE SPECIFIED.

RECORD DRAWINGS

Revisions Drawn by DEE LAMPH Date 5-31-2012

THESE RECORD DRAWINGS HAVE BEEN PREPARED, IN PART, ON THE BASIS OF INFORMATION COMPILED BY OTHERS. THEY ARE NOT INTENDED TO REPRESENT IN DETAIL THE EXACT LOCATION, TYPE OF COMPONENT NOR MANNER OF CONSTRUCTION. THE ENGINEER WILL NOT BE RESPONSIBLE FOR ANY ERRORS OR OMISSIONS WHICH HAVE BEEN INCORPORATED INTO THE RECORD DRAWINGS.

DESCRIPTION	DATE	APPR	MARK

RECORD DRAWING

DESIGNED BY: D. WINGER
DRAWN BY: D. LAMPH
CHECKED BY: D. STEWART
PROJECT NUMBER: FA8201-09-D-0004-0005
GOVERNMENT REVIEWER:

HILL AIR FORCE BASE

DEPARTMENT OF THE AIR FORCE
OGDEN AIR LOGISTICS CENTER
75TH CIVIL ENGINEER GROUP

SCADA SYSTEM FOR THE IWTP
BUILDING 575

TTO-1 PANEL DIAGRAM MODULE 1

EI-623

SHEET 26 OF 37

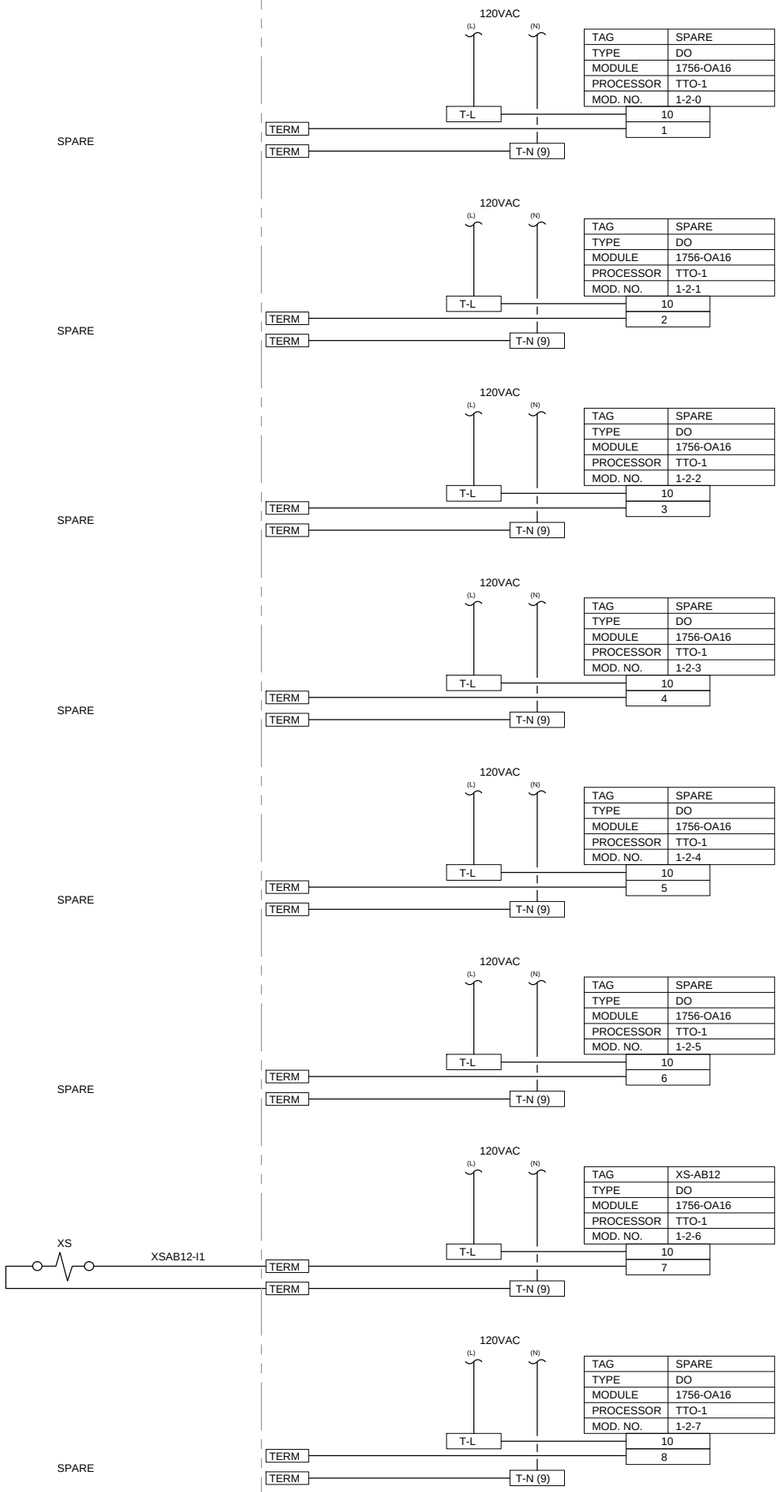

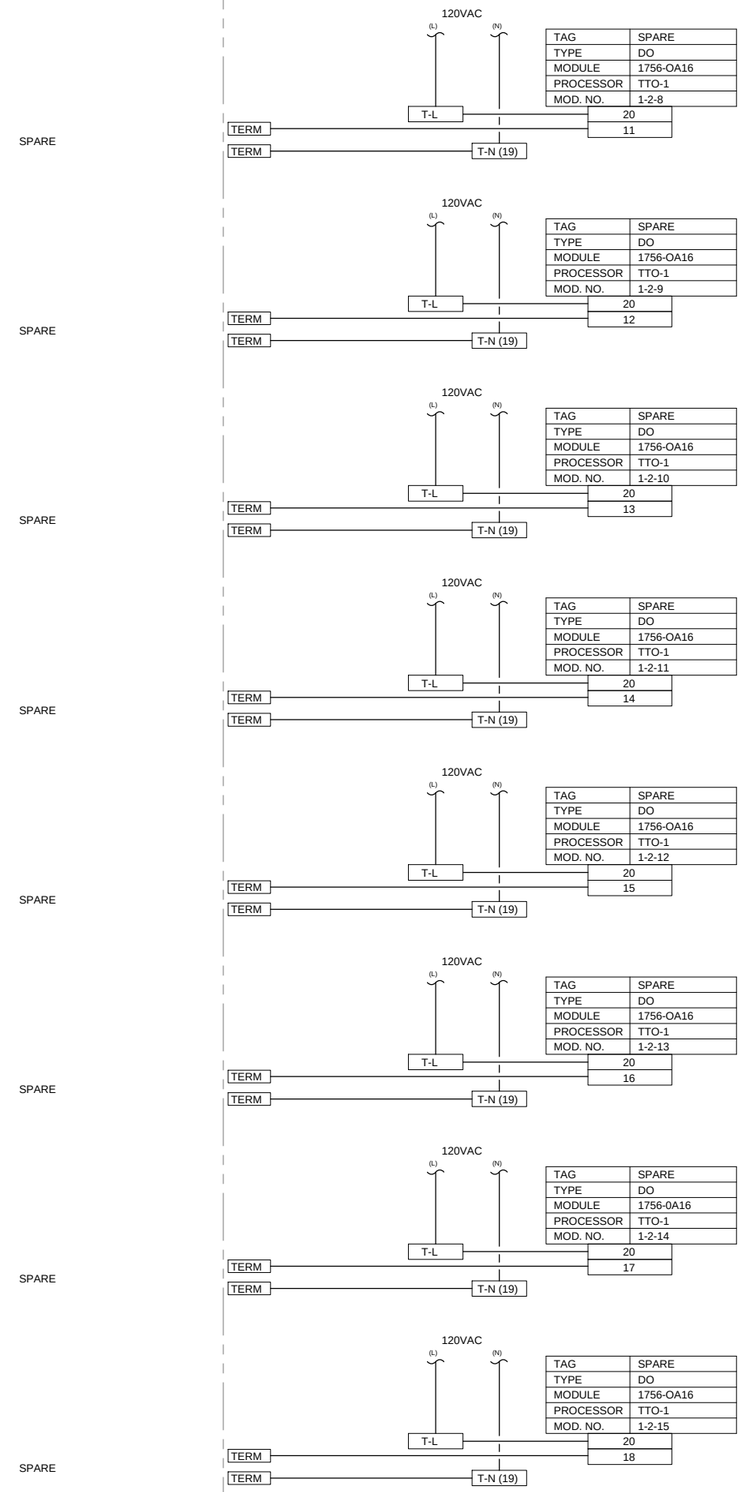

NOTES:

1. TERMINAL NUMBERS ARE PRELIMINARY. ACTUAL TERMINAL NUMBERS WILL BE UPDATED AFTER INSTALLATION.
2. TERM = TERMINAL NUMBER TO BE FIELD ASSIGNED DURING INSTALLATION.
3. ALL MISSING NUMBERS AND MISSING DRAWING NUMBERS TO BE FIELD ASSIGNED DURING INSTALLATION.
4. ALL FUSES TO BE 1 AMP FAST BLOW UNLESS OTHERWISE SPECIFIED.

RECORD DRAWINGS

Revisions Drawn by DEE LAMPH Date 5-31-2012

THESE RECORD DRAWINGS HAVE BEEN PREPARED, IN PART, ON THE BASIS OF INFORMATION COMPILED BY OTHERS. THEY ARE NOT INTENDED TO REPRESENT IN DETAIL THE EXACT LOCATION, TYPE OF COMPONENT NOR MANNER OF CONSTRUCTION. THE ENGINEER WILL NOT BE RESPONSIBLE FOR ANY ERRORS OR OMISSIONS WHICH HAVE BEEN INCORPORATED INTO THE RECORD DRAWINGS.

MARK	DESCRIPTION	DATE	APPR

RECORD DRAWING

DESIGNED BY: D. WINGER
DRAWN BY: D. LAMPH
CHECKED BY: D. STEWART
PROJECT NUMBER: FA8201-09-D-0004-0005
GOVERNMENT REVIEWER:

HILL AIR FORCE BASE

DEPARTMENT OF THE AIR FORCE
OGDEN AIR LOGISTICS CENTER
75TH CIVIL ENGINEER GROUP

SCADA SYSTEM FOR THE IWTP
BUILDING 575

TTO-1 PANEL DIAGRAM MODULE 2

EI-624

SHEET 27 OF 37

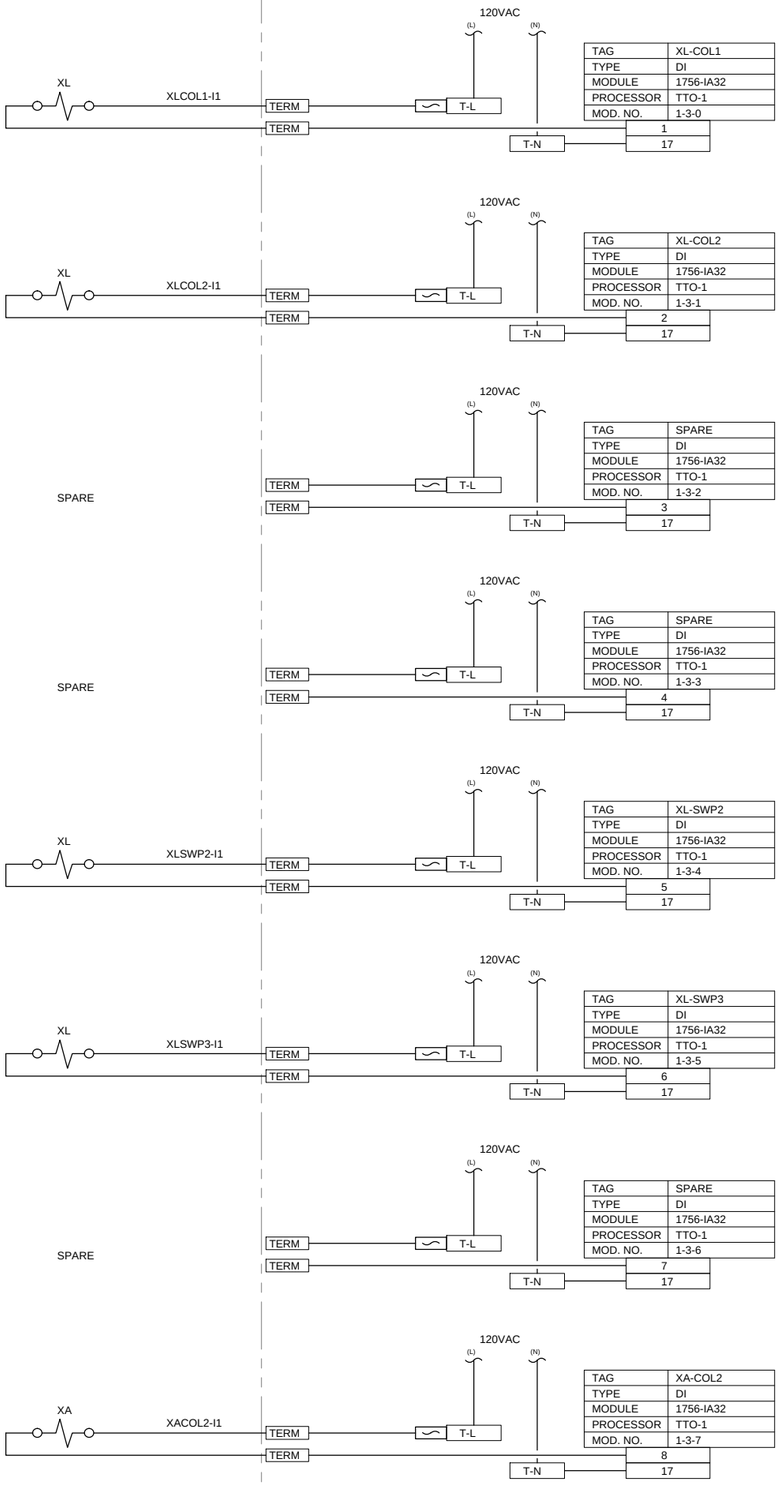

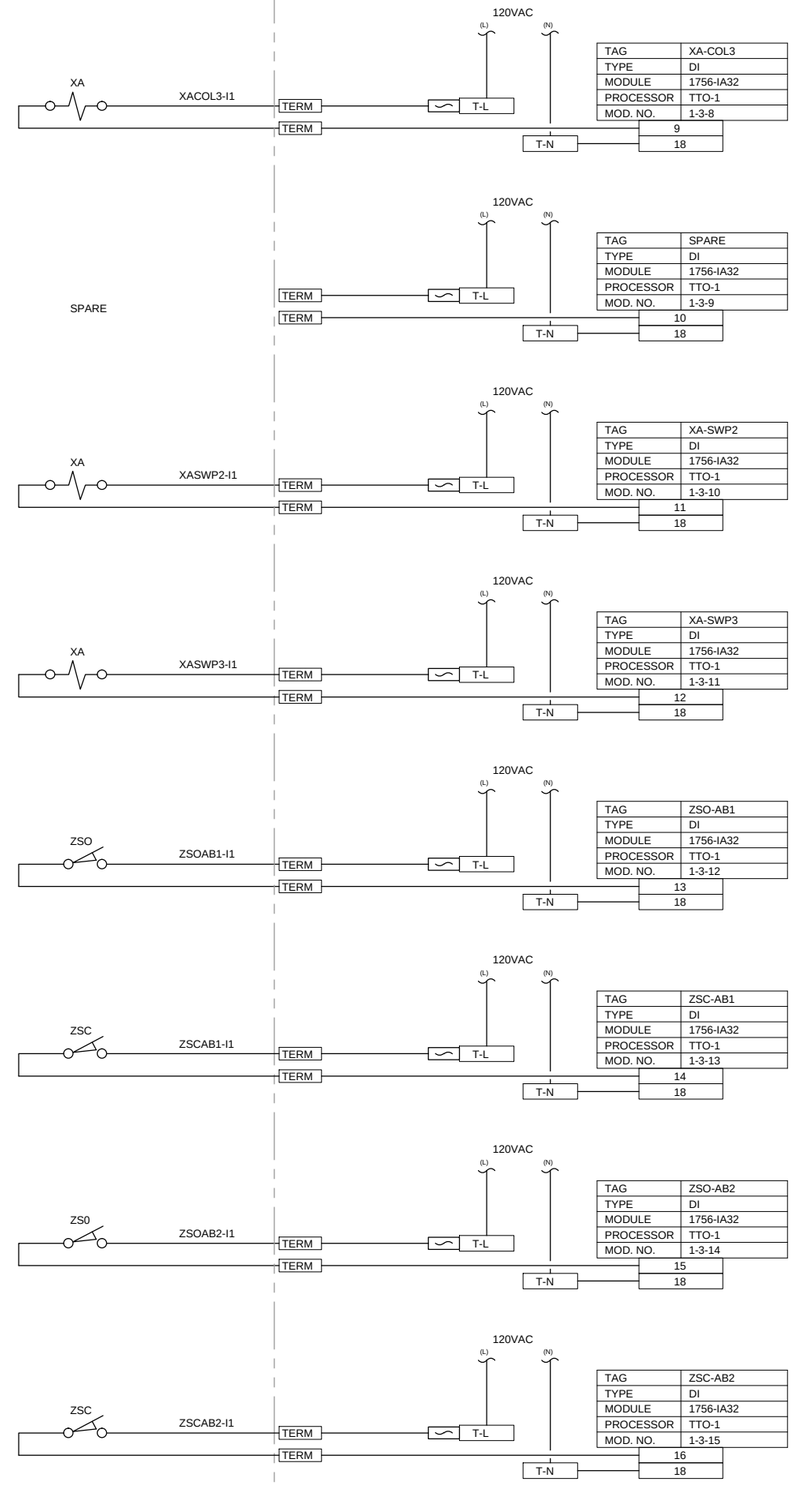

NOTES:

1. TERMINAL NUMBERS ARE PRELIMINARY. ACTUAL TERMINAL NUMBERS WILL BE UPDATED AFTER INSTALLATION.
2. TERM = TERMINAL NUMBER TO BE FIELD ASSIGNED DURING INSTALLATION.
3. ALL MISSING NUMBERS AND MISSING DRAWING NUMBERS TO BE FIELD ASSIGNED DURING INSTALLATION.
4. ALL FUSES TO BE 1 AMP FAST BLOW UNLESS OTHERWISE SPECIFIED.

RECORD DRAWINGS

Revisions Drawn by DEE LAMPH Date 5-31-2012

THESE RECORD DRAWINGS HAVE BEEN PREPARED, IN PART, ON THE BASIS OF INFORMATION COMPILED BY OTHERS. THEY ARE NOT INTENDED TO REPRESENT IN DETAIL THE EXACT LOCATION, TYPE OF COMPONENT NOR MANNER OF CONSTRUCTION. THE ENGINEER WILL NOT BE RESPONSIBLE FOR ANY ERRORS OR OMISSIONS WHICH HAVE BEEN INCORPORATED INTO THE RECORD DRAWINGS.

MARK	APPR	DATE	DESCRIPTION

RECORD DRAWING

DESIGNED BY: D. WINGER
DRAWN BY: D. LAMPH
CHECKED BY: D. STEWART
PROJECT NUMBER: F42201-09-D-0004-0005
GOVERNMENT REVIEWER:

HILL AIR FORCE BASE

DEPARTMENT OF THE AIR FORCE
OGDEN AIR LOGISTICS CENTER
75TH CIVIL ENGINEER GROUP

SCADA SYSTEM FOR THE IWTP
BUILDING 575

TTO-1 PANEL DIAGRAM MODULE 3

EI-625

SHEET 28 OF 37

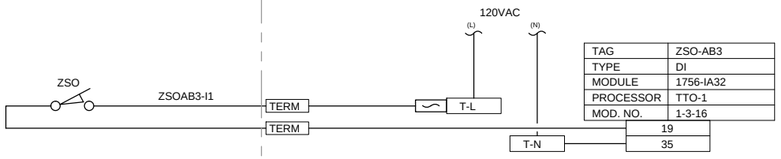

TAG	ZSO-AB3
TYPE	DI
MODULE	1756-IA32
PROCESSOR	TTO-1
MOD. NO.	1-3-16

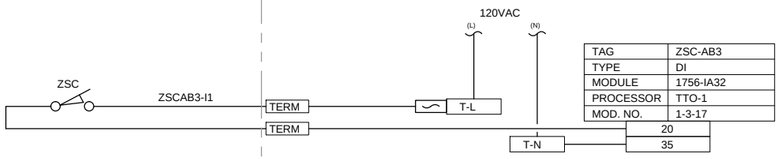

TAG	ZSC-AB3
TYPE	DI
MODULE	1756-IA32
PROCESSOR	TTO-1
MOD. NO.	1-3-17

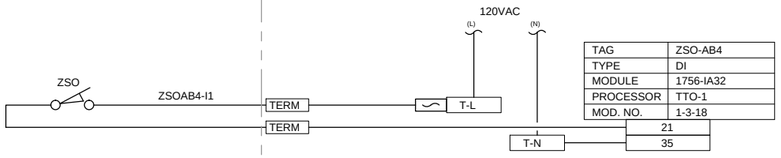

TAG	ZSO-AB4
TYPE	DI
MODULE	1756-IA32
PROCESSOR	TTO-1
MOD. NO.	1-3-18

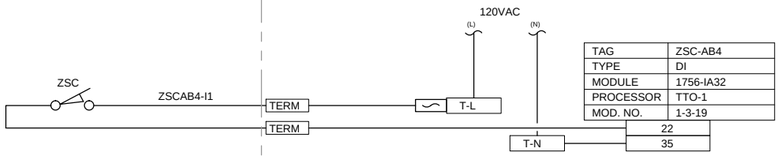

TAG	ZSC-AB4
TYPE	DI
MODULE	1756-IA32
PROCESSOR	TTO-1
MOD. NO.	1-3-19

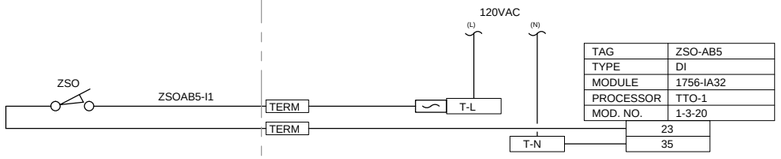

TAG	ZSO-AB5
TYPE	DI
MODULE	1756-IA32
PROCESSOR	TTO-1
MOD. NO.	1-3-20

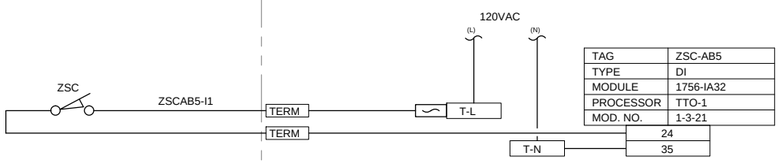

TAG	ZSC-AB5
TYPE	DI
MODULE	1756-IA32
PROCESSOR	TTO-1
MOD. NO.	1-3-21

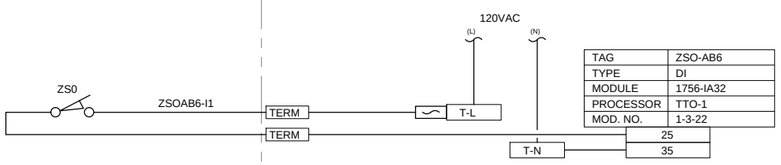

TAG	ZSO-AB6
TYPE	DI
MODULE	1756-IA32
PROCESSOR	TTO-1
MOD. NO.	1-3-22

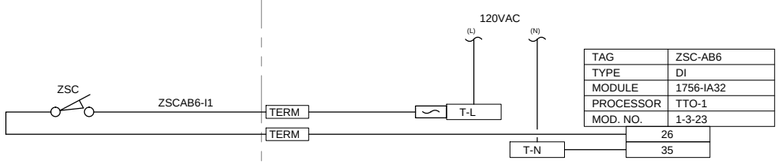

TAG	ZSC-AB6
TYPE	DI
MODULE	1756-IA32
PROCESSOR	TTO-1
MOD. NO.	1-3-23

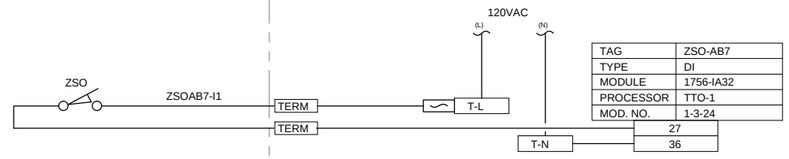

TAG	ZSO-AB7
TYPE	DI
MODULE	1756-IA32
PROCESSOR	TTO-1
MOD. NO.	1-3-24

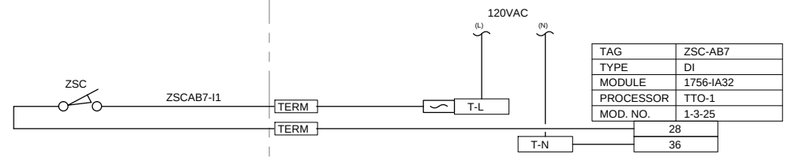

TAG	ZSC-AB7
TYPE	DI
MODULE	1756-IA32
PROCESSOR	TTO-1
MOD. NO.	1-3-25

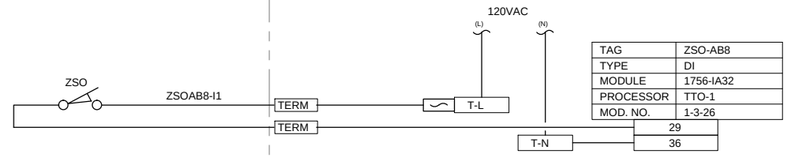

TAG	ZSO-AB8
TYPE	DI
MODULE	1756-IA32
PROCESSOR	TTO-1
MOD. NO.	1-3-26

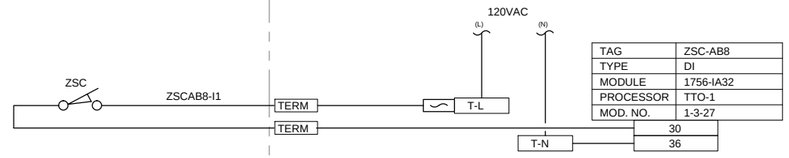

TAG	ZSC-AB8
TYPE	DI
MODULE	1756-IA32
PROCESSOR	TTO-1
MOD. NO.	1-3-27

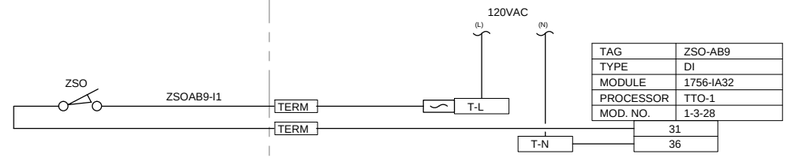

TAG	ZSO-AB9
TYPE	DI
MODULE	1756-IA32
PROCESSOR	TTO-1
MOD. NO.	1-3-28

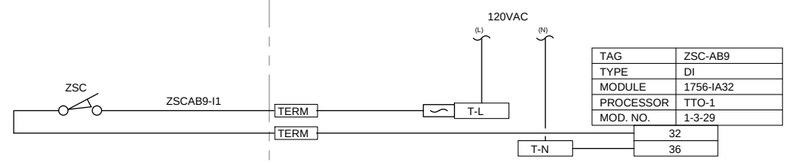

TAG	ZSC-AB9
TYPE	DI
MODULE	1756-IA32
PROCESSOR	TTO-1
MOD. NO.	1-3-29

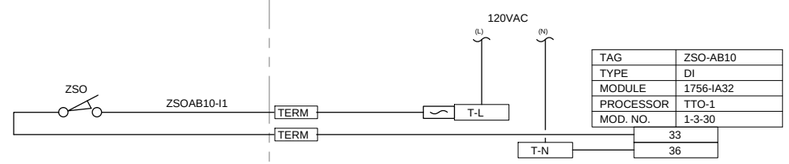

TAG	ZSO-AB10
TYPE	DI
MODULE	1756-IA32
PROCESSOR	TTO-1
MOD. NO.	1-3-30

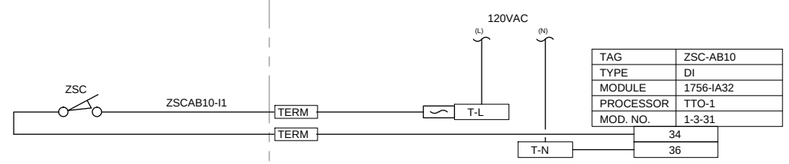

TAG	ZSC-AB10
TYPE	DI
MODULE	1756-IA32
PROCESSOR	TTO-1
MOD. NO.	1-3-31

NOTES:

1. TERMINAL NUMBERS ARE PRELIMINARY. ACTUAL TERMINAL NUMBERS WILL BE UPDATED AFTER INSTALLATION.
2. TERM = TERMINAL NUMBER TO BE FIELD ASSIGNED DURING INSTALLATION.
3. ALL MISSING NUMBERS AND MISSING DRAWING NUMBERS TO BE FIELD ASSIGNED DURING INSTALLATION.
4. ALL FUSES TO BE 1 AMP FAST BLOW UNLESS OTHERWISE SPECIFIED.

RECORD DRAWINGS

Revisions Drawn by DEE LAMPH Date 5-31-2012

THESE RECORD DRAWINGS HAVE BEEN PREPARED, IN PART, ON THE BASIS OF INFORMATION COMPILED BY OTHERS. THEY ARE NOT INTENDED TO REPRESENT IN DETAIL THE EXACT LOCATION, TYPE OF COMPONENT NOR MANNER OF CONSTRUCTION. THE ENGINEER WILL NOT BE RESPONSIBLE FOR ANY ERRORS OR OMISSIONS WHICH HAVE BEEN INCORPORATED INTO THE RECORD DRAWINGS.

MARK	DATE	APPR	DESCRIPTION

RECORD DRAWING

DESIGNED BY: D. WINGER
DRAWN BY: D. LAMPH
CHECKED BY: D. STEWART
PROJECT NUMBER: FA8201-09-D-0004-0005
GOVERNMENT REVIEWER:

HILL AIR FORCE BASE

DEPARTMENT OF THE AIR FORCE
OGDEN AIR LOGISTICS CENTER
75TH CIVIL ENGINEER GROUP

SCADA SYSTEM FOR THE IWTP
BUILDING 575

TTO-1 PANEL DIAGRAM MODULE 3

EI-626

SHEET 29 OF 37

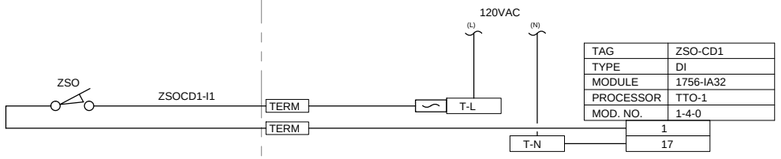

TAG	ZSO-CD1
TYPE	DI
MODULE	1756-IA32
PROCESSOR	TTO-1
MOD. NO.	1-4-0

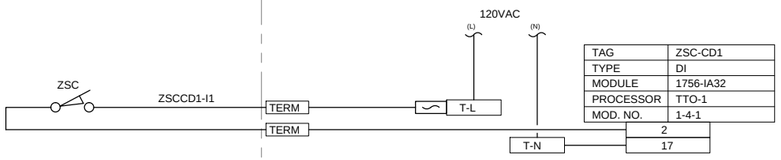

TAG	ZSC-CD1
TYPE	DI
MODULE	1756-IA32
PROCESSOR	TTO-1
MOD. NO.	1-4-1

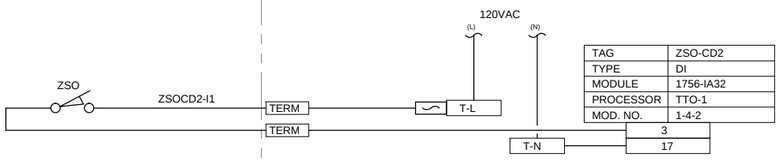

TAG	ZSO-CD2
TYPE	DI
MODULE	1756-IA32
PROCESSOR	TTO-1
MOD. NO.	1-4-2

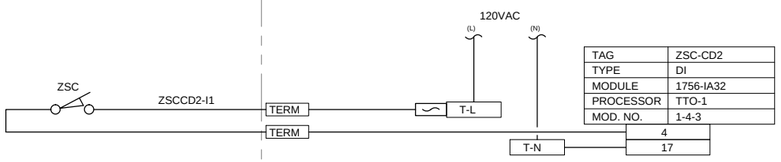

TAG	ZSC-CD2
TYPE	DI
MODULE	1756-IA32
PROCESSOR	TTO-1
MOD. NO.	1-4-3

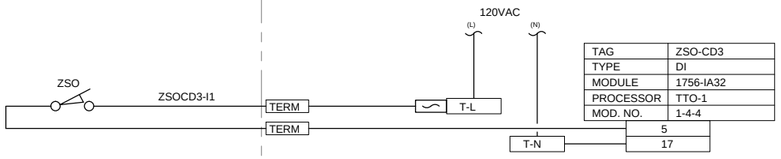

TAG	ZSO-CD3
TYPE	DI
MODULE	1756-IA32
PROCESSOR	TTO-1
MOD. NO.	1-4-4

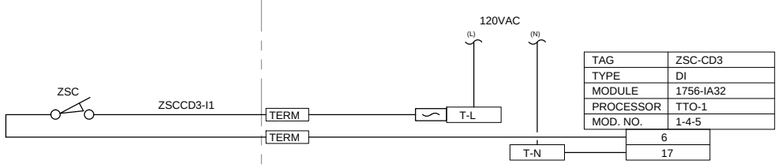

TAG	ZSC-CD3
TYPE	DI
MODULE	1756-IA32
PROCESSOR	TTO-1
MOD. NO.	1-4-5

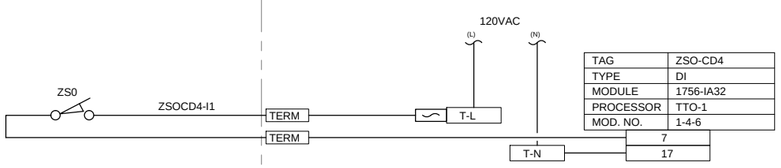

TAG	ZSO-CD4
TYPE	DI
MODULE	1756-IA32
PROCESSOR	TTO-1
MOD. NO.	1-4-6

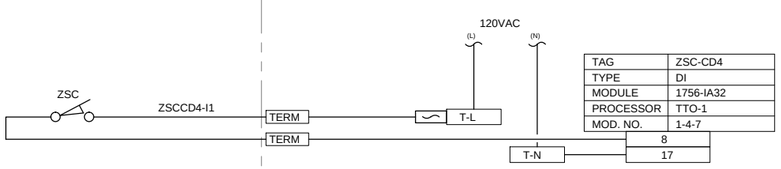

TAG	ZSC-CD4
TYPE	DI
MODULE	1756-IA32
PROCESSOR	TTO-1
MOD. NO.	1-4-7

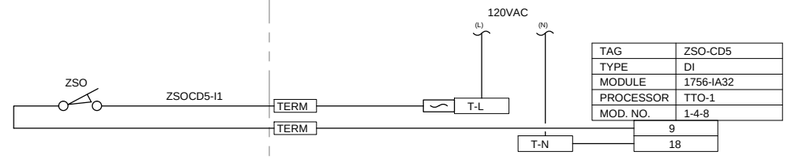

TAG	ZSO-CD5
TYPE	DI
MODULE	1756-IA32
PROCESSOR	TTO-1
MOD. NO.	1-4-8

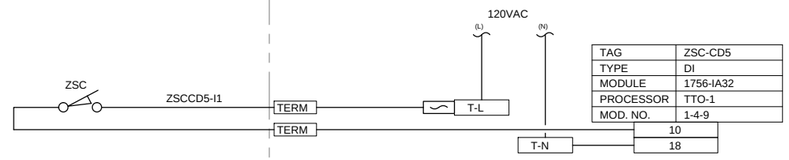

TAG	ZSC-CD5
TYPE	DI
MODULE	1756-IA32
PROCESSOR	TTO-1
MOD. NO.	1-4-9

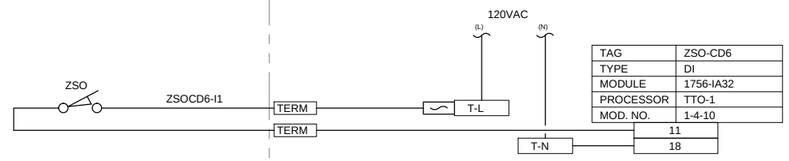

TAG	ZSO-CD6
TYPE	DI
MODULE	1756-IA32
PROCESSOR	TTO-1
MOD. NO.	1-4-10

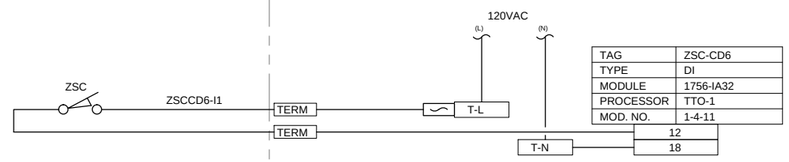

TAG	ZSC-CD6
TYPE	DI
MODULE	1756-IA32
PROCESSOR	TTO-1
MOD. NO.	1-4-11

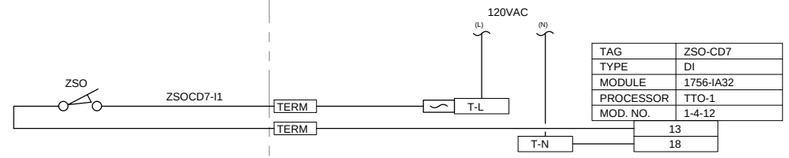

TAG	ZSO-CD7
TYPE	DI
MODULE	1756-IA32
PROCESSOR	TTO-1
MOD. NO.	1-4-12

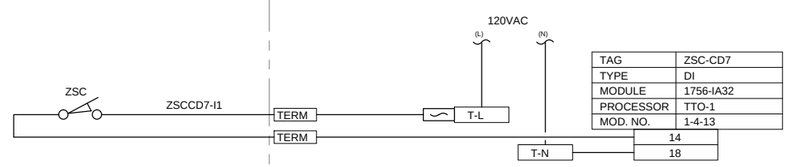

TAG	ZSC-CD7
TYPE	DI
MODULE	1756-IA32
PROCESSOR	TTO-1
MOD. NO.	1-4-13

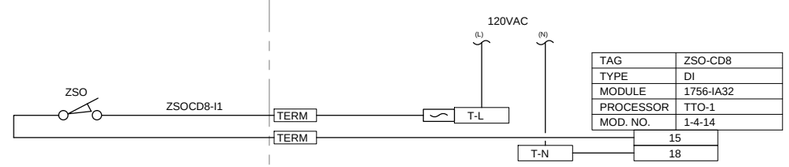

TAG	ZSO-CD8
TYPE	DI
MODULE	1756-IA32
PROCESSOR	TTO-1
MOD. NO.	1-4-14

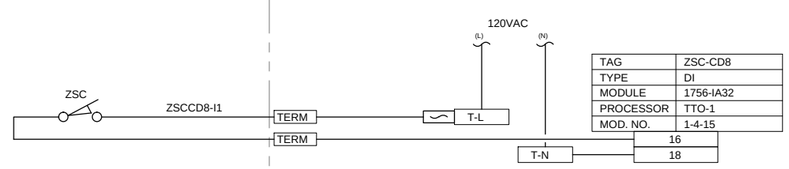

TAG	ZSC-CD8
TYPE	DI
MODULE	1756-IA32
PROCESSOR	TTO-1
MOD. NO.	1-4-15

NOTES:

1. TERMINAL NUMBERS ARE PRELIMINARY. ACTUAL TERMINAL NUMBERS WILL BE UPDATED AFTER INSTALLATION.
2. TERM = TERMINAL NUMBER TO BE FIELD ASSIGNED DURING INSTALLATION.
3. ALL MISSING NUMBERS AND MISSING DRAWING NUMBERS TO BE FIELD ASSIGNED DURING INSTALLATION.
4. ALL FUSES TO BE 1 AMP FAST BLOW UNLESS OTHERWISE SPECIFIED.

RECORD DRAWINGS

Revisions Drawn by DEE LAMPH Date 5-31-2012

THESE RECORD DRAWINGS HAVE BEEN PREPARED, IN PART, ON THE BASIS OF INFORMATION COMPILED BY OTHERS. THEY ARE NOT INTENDED TO REPRESENT IN DETAIL THE EXACT LOCATION, TYPE OF COMPONENT NOR MANNER OF CONSTRUCTION. THE ENGINEER WILL NOT BE RESPONSIBLE FOR ANY ERRORS OR OMISSIONS WHICH HAVE BEEN INCORPORATED INTO THE RECORD DRAWINGS.

DESCRIPTION	DATE	APPR	MARK

RECORD DRAWING

DESIGNED BY: D. WINGER
DRAWN BY: D. LAMPH
CHECKED BY: D. STEWART
PROJECT NUMBER: FA8201-09-D-0004-0005
GOVERNMENT REVIEWER:

HILL AIR FORCE BASE

DEPARTMENT OF THE AIR FORCE
OGDEN AIR LOGISTICS CENTER
75TH CIVIL ENGINEER GROUP

SCADA SYSTEM FOR THE IWTP
BUILDING 575

TTO-1 PANEL DIAGRAM MODULE 4

EI-627

SHEET 30 OF 37

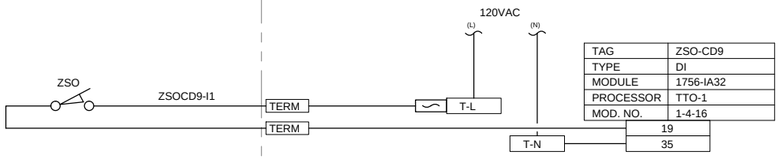

TAG	ZSO-CD9
TYPE	DI
MODULE	1756-IA32
PROCESSOR	TTO-1
MOD. NO.	1-4-16

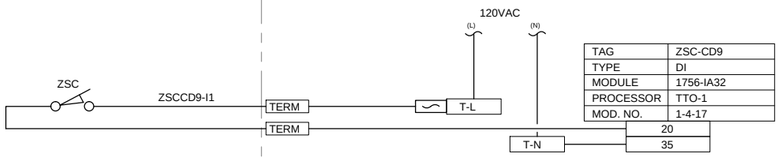

TAG	ZSC-CD9
TYPE	DI
MODULE	1756-IA32
PROCESSOR	TTO-1
MOD. NO.	1-4-17

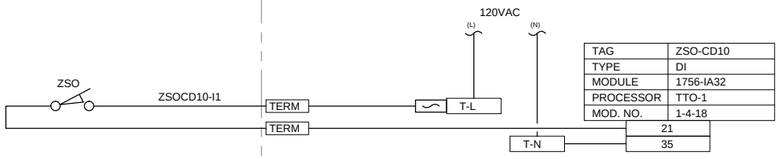

TAG	ZSO-CD10
TYPE	DI
MODULE	1756-IA32
PROCESSOR	TTO-1
MOD. NO.	1-4-18

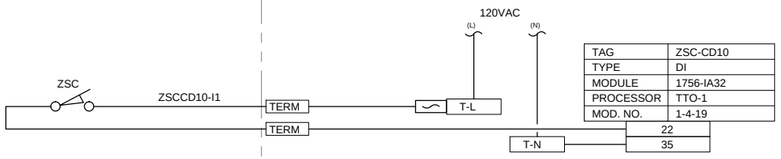

TAG	ZSC-CD10
TYPE	DI
MODULE	1756-IA32
PROCESSOR	TTO-1
MOD. NO.	1-4-19

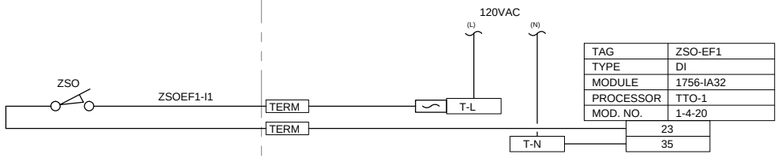

TAG	ZSO-EF1
TYPE	DI
MODULE	1756-IA32
PROCESSOR	TTO-1
MOD. NO.	1-4-20

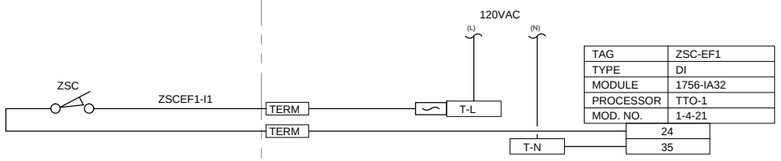

TAG	ZSC-EF1
TYPE	DI
MODULE	1756-IA32
PROCESSOR	TTO-1
MOD. NO.	1-4-21

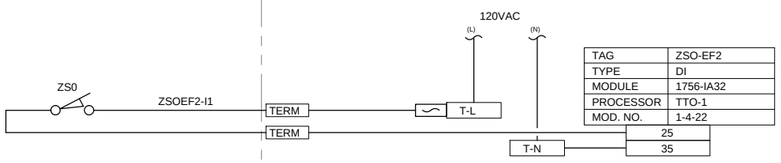

TAG	ZSO-EF2
TYPE	DI
MODULE	1756-IA32
PROCESSOR	TTO-1
MOD. NO.	1-4-22

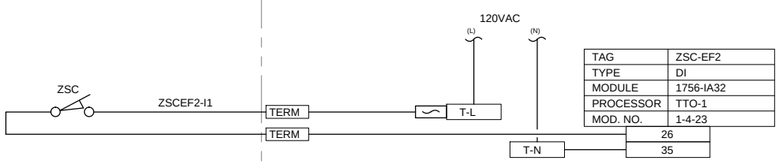

TAG	ZSC-EF2
TYPE	DI
MODULE	1756-IA32
PROCESSOR	TTO-1
MOD. NO.	1-4-23

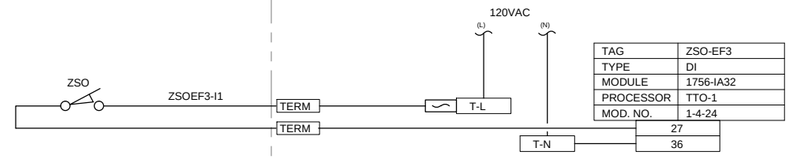

TAG	ZSO-EF3
TYPE	DI
MODULE	1756-IA32
PROCESSOR	TTO-1
MOD. NO.	1-4-24

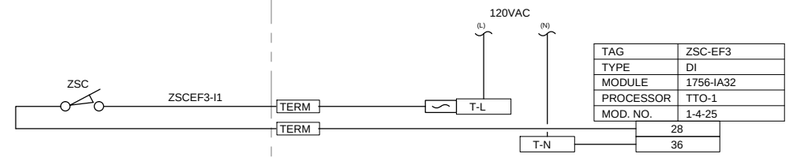

TAG	ZSC-EF3
TYPE	DI
MODULE	1756-IA32
PROCESSOR	TTO-1
MOD. NO.	1-4-25

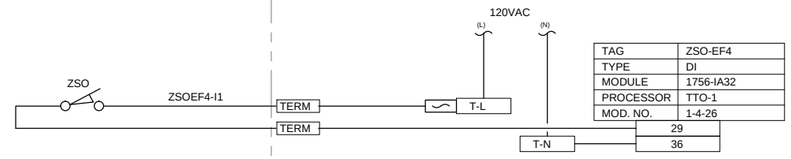

TAG	ZSO-EF4
TYPE	DI
MODULE	1756-IA32
PROCESSOR	TTO-1
MOD. NO.	1-4-26

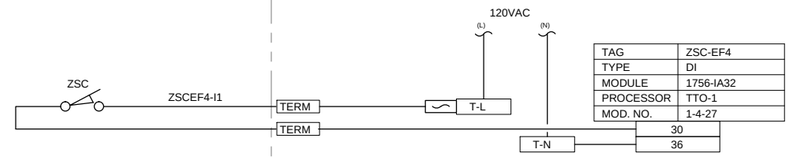

TAG	ZSC-EF4
TYPE	DI
MODULE	1756-IA32
PROCESSOR	TTO-1
MOD. NO.	1-4-27

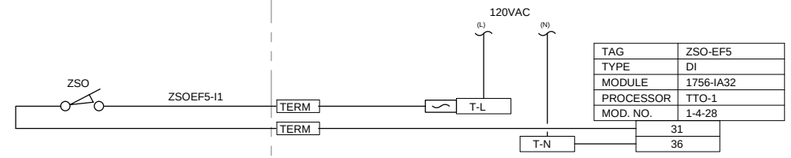

TAG	ZSO-EF5
TYPE	DI
MODULE	1756-IA32
PROCESSOR	TTO-1
MOD. NO.	1-4-28

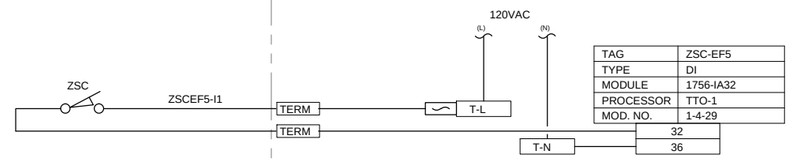

TAG	ZSC-EF5
TYPE	DI
MODULE	1756-IA32
PROCESSOR	TTO-1
MOD. NO.	1-4-29

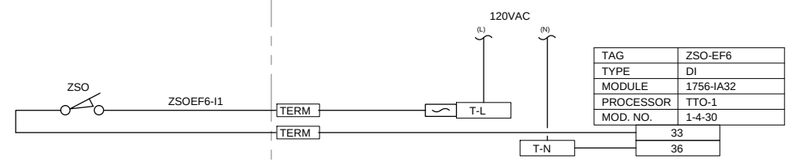

TAG	ZSO-EF6
TYPE	DI
MODULE	1756-IA32
PROCESSOR	TTO-1
MOD. NO.	1-4-30

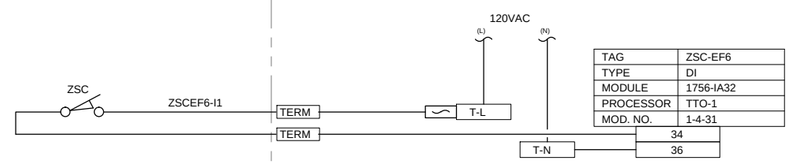

TAG	ZSC-EF6
TYPE	DI
MODULE	1756-IA32
PROCESSOR	TTO-1
MOD. NO.	1-4-31

NOTES:

1. TERMINAL NUMBERS ARE PRELIMINARY. ACTUAL TERMINAL NUMBERS WILL BE UPDATED AFTER INSTALLATION.
2. TERM = TERMINAL NUMBER TO BE FIELD ASSIGNED DURING INSTALLATION.
3. ALL MISSING NUMBERS AND MISSING DRAWING NUMBERS TO BE FIELD ASSIGNED DURING INSTALLATION.
4. ALL FUSES TO BE 1 AMP FAST BLOW UNLESS OTHERWISE SPECIFIED.

RECORD DRAWINGS

Revisions Drawn by DEE LAMPH Date 5-31-2012

THESE RECORD DRAWINGS HAVE BEEN PREPARED, IN PART, ON THE BASIS OF INFORMATION COMPILED BY OTHERS. THEY ARE NOT INTENDED TO REPRESENT IN DETAIL THE EXACT LOCATION, TYPE OF COMPONENT NOR MANNER OF CONSTRUCTION. THE ENGINEER WILL NOT BE RESPONSIBLE FOR ANY ERRORS OR OMISSIONS WHICH HAVE BEEN INCORPORATED INTO THE RECORD DRAWINGS.

DESCRIPTION	DATE	APPR	MARK

RECORD DRAWING

DESIGNED BY: D. WINGER
DRAWN BY: D. LAMPH
CHECKED BY: D. STEWART
PROJECT NUMBER: FA8201-09-D-0004-0005
GOVERNMENT REVIEWER:

HILL AIR FORCE BASE

DEPARTMENT OF THE AIR FORCE
OGDEN AIR LOGISTICS CENTER
75TH CIVIL ENGINEER GROUP

SCADA SYSTEM FOR THE IWTP
BUILDING 575

TTO-1 PANEL DIAGRAM

EI-628

SHEET 31 OF 37

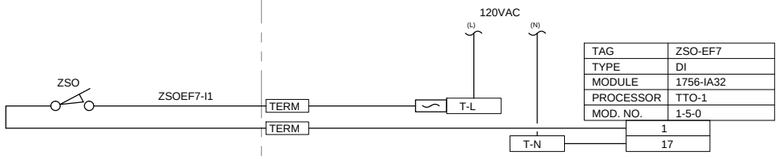

TAG	ZSO-EF7
TYPE	DI
MODULE	1756-IA32
PROCESSOR	TTO-1
MOD. NO.	1-5-0

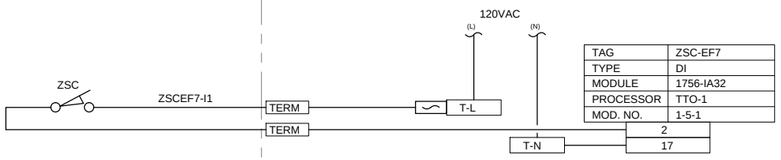

TAG	ZSC-EF7
TYPE	DI
MODULE	1756-IA32
PROCESSOR	TTO-1
MOD. NO.	1-5-1

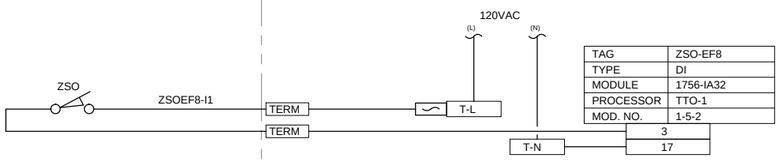

TAG	ZSO-EF8
TYPE	DI
MODULE	1756-IA32
PROCESSOR	TTO-1
MOD. NO.	1-5-2

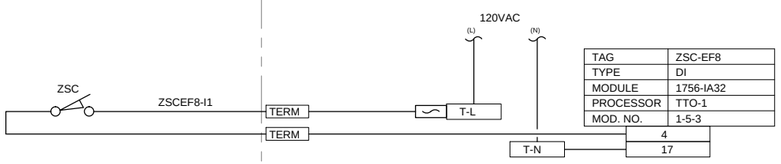

TAG	ZSC-EF8
TYPE	DI
MODULE	1756-IA32
PROCESSOR	TTO-1
MOD. NO.	1-5-3

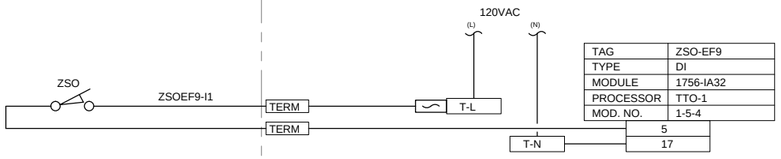

TAG	ZSO-EF9
TYPE	DI
MODULE	1756-IA32
PROCESSOR	TTO-1
MOD. NO.	1-5-4

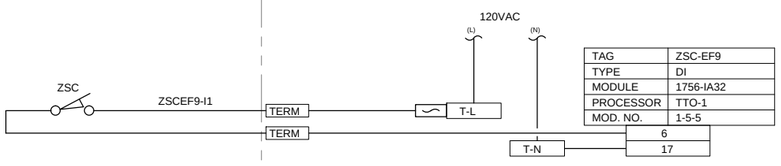

TAG	ZSC-EF9
TYPE	DI
MODULE	1756-IA32
PROCESSOR	TTO-1
MOD. NO.	1-5-5

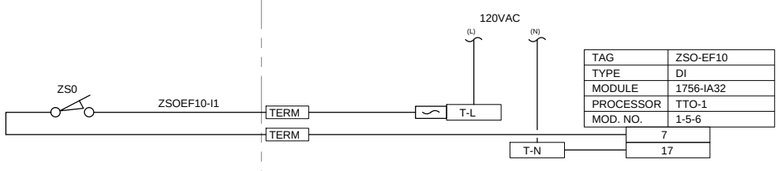

TAG	ZSO-EF10
TYPE	DI
MODULE	1756-IA32
PROCESSOR	TTO-1
MOD. NO.	1-5-6

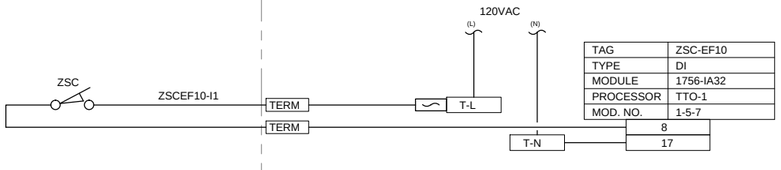

TAG	ZSC-EF10
TYPE	DI
MODULE	1756-IA32
PROCESSOR	TTO-1
MOD. NO.	1-5-7

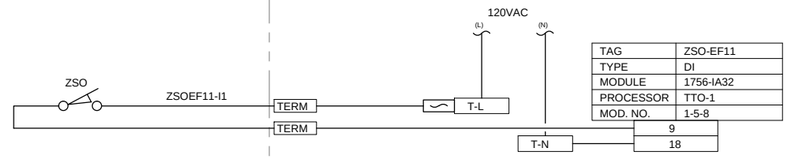

TAG	ZSO-EF11
TYPE	DI
MODULE	1756-IA32
PROCESSOR	TTO-1
MOD. NO.	1-5-8

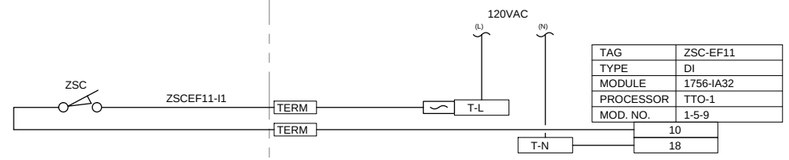

TAG	ZSC-EF11
TYPE	DI
MODULE	1756-IA32
PROCESSOR	TTO-1
MOD. NO.	1-5-9

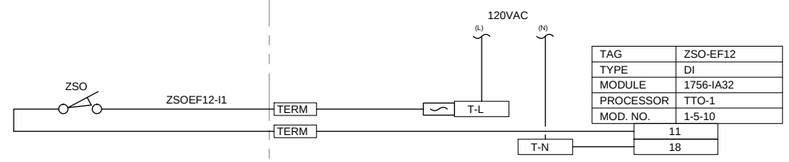

TAG	ZSO-EF12
TYPE	DI
MODULE	1756-IA32
PROCESSOR	TTO-1
MOD. NO.	1-5-10

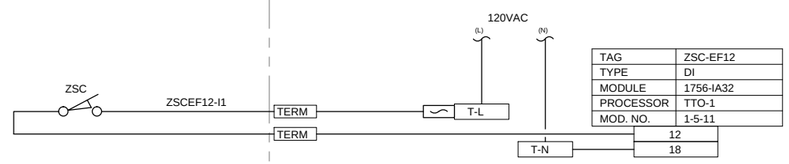

TAG	ZSC-EF12
TYPE	DI
MODULE	1756-IA32
PROCESSOR	TTO-1
MOD. NO.	1-5-11

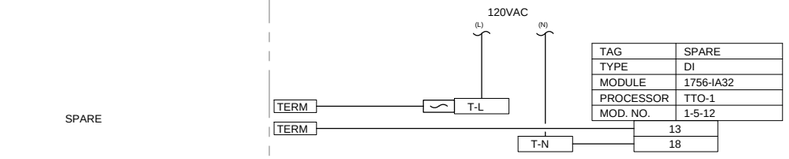

TAG	SPARE
TYPE	DI
MODULE	1756-IA32
PROCESSOR	TTO-1
MOD. NO.	1-5-12

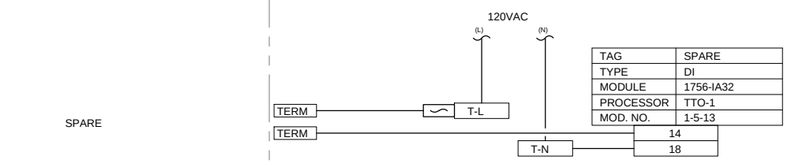

TAG	SPARE
TYPE	DI
MODULE	1756-IA32
PROCESSOR	TTO-1
MOD. NO.	1-5-13

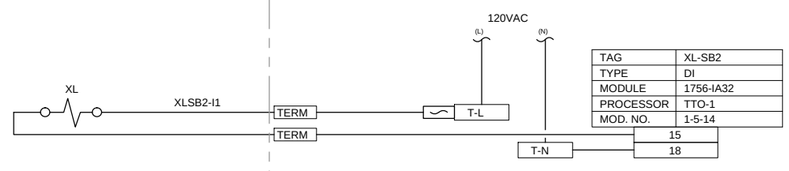

TAG	XL-SB2
TYPE	DI
MODULE	1756-IA32
PROCESSOR	TTO-1
MOD. NO.	1-5-14

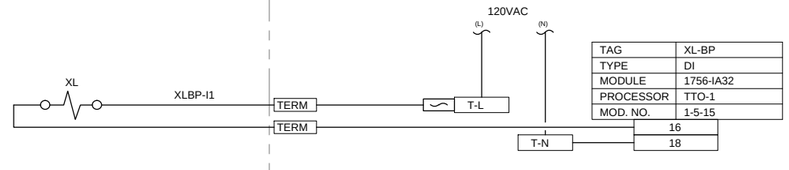

TAG	XL-BP
TYPE	DI
MODULE	1756-IA32
PROCESSOR	TTO-1
MOD. NO.	1-5-15

NOTES:

1. TERMINAL NUMBERS ARE PRELIMINARY. ACTUAL TERMINAL NUMBERS WILL BE UPDATED AFTER INSTALLATION.
2. TERM = TERMINAL NUMBER TO BE FIELD ASSIGNED DURING INSTALLATION.
3. ALL MISSING NUMBERS AND MISSING DRAWING NUMBERS TO BE FIELD ASSIGNED DURING INSTALLATION.
4. ALL FUSES TO BE 1 AMP FAST BLOW UNLESS OTHERWISE SPECIFIED.

RECORD DRAWINGS

Revisions Drawn by DEE LAMPH Date 5-31-2012

THESE RECORD DRAWINGS HAVE BEEN PREPARED, IN PART, ON THE BASIS OF INFORMATION COMPILED BY OTHERS. THEY ARE NOT INTENDED TO REPRESENT IN DETAIL THE EXACT LOCATION, TYPE OF COMPONENT NOR MANNER OF CONSTRUCTION. THE ENGINEER WILL NOT BE RESPONSIBLE FOR ANY ERRORS OR OMISSIONS WHICH HAVE BEEN INCORPORATED INTO THE RECORD DRAWINGS.

DESCRIPTION	DATE	APPR	MARK

RECORD DRAWING

DESIGNED BY: D. WINGER
DRAWN BY: D. LAMPH
CHECKED BY: D. STEWART
PROJECT NUMBER: FA8201-09-D-0004-0005
GOVERNMENT REVIEWER:

HILL AIR FORCE BASE

DEPARTMENT OF THE AIR FORCE
OGDEN AIR LOGISTICS CENTER
75TH CIVIL ENGINEER GROUP

SCADA SYSTEM FOR THE IWTP
BUILDING 575

TTO-1 PANEL DIAGRAM MODULE 5

EI-629

SHEET 32 OF 37

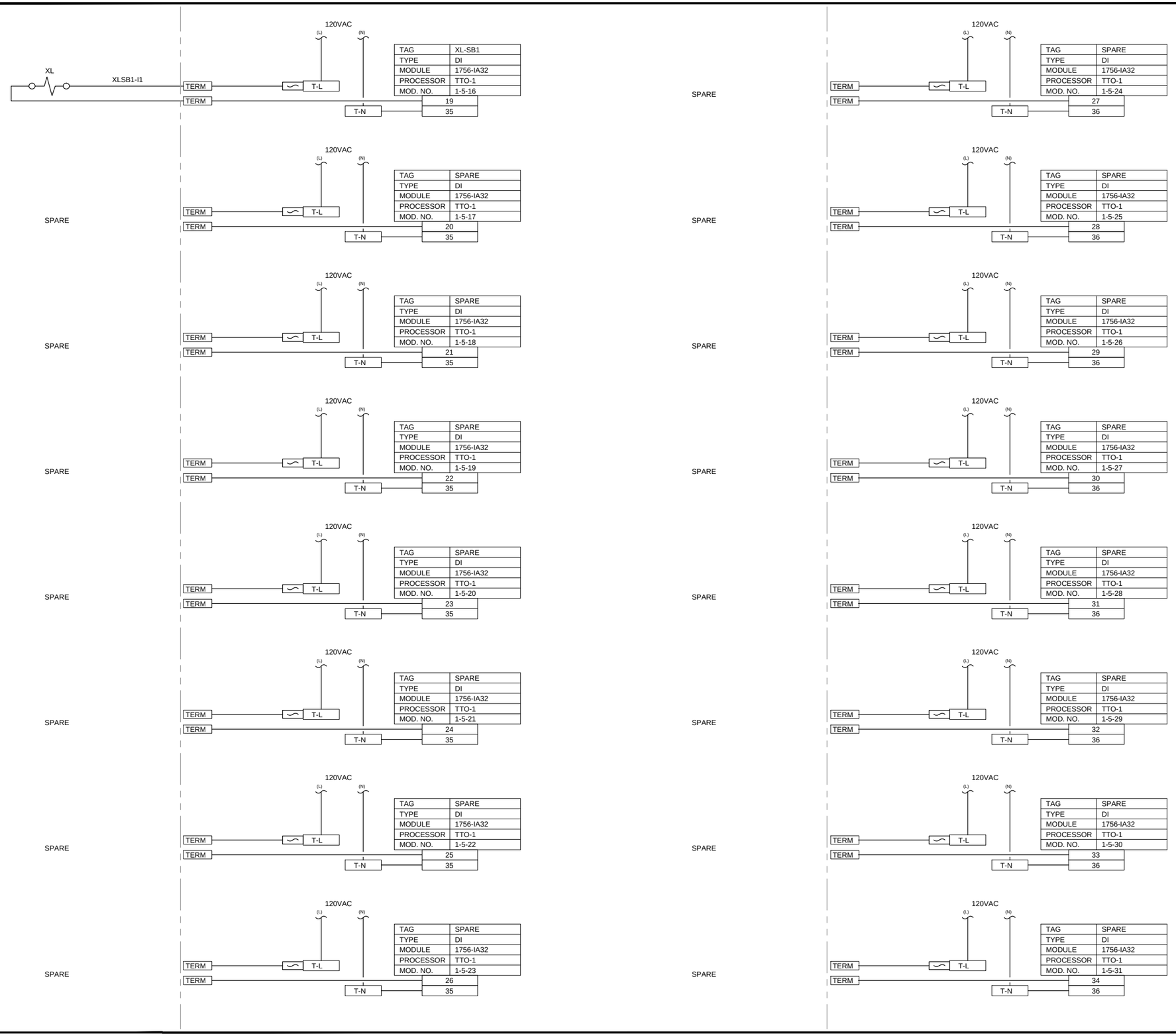

NOTES:

1. TERMINAL NUMBERS ARE PRELIMINARY. ACTUAL TERMINAL NUMBERS WILL BE UPDATED AFTER INSTALLATION.
2. TERM = TERMINAL NUMBER TO BE FIELD ASSIGNED DURING INSTALLATION.
3. ALL MISSING NUMBERS AND MISSING DRAWING NUMBERS TO BE FIELD ASSIGNED DURING INSTALLATION.
4. ALL FUSES TO BE 1 AMP FAST BLOW UNLESS OTHERWISE SPECIFIED.

RECORD DRAWINGS

Revisions Drawn by DEE LAMPH Date 5-31-2012

THESE RECORD DRAWINGS HAVE BEEN PREPARED, IN PART, ON THE BASIS OF INFORMATION COMPILED BY OTHERS. THEY ARE NOT INTENDED TO REPRESENT IN DETAIL THE EXACT LOCATION, TYPE OF COMPONENT NOR MANNER OF CONSTRUCTION. THE ENGINEER WILL NOT BE RESPONSIBLE FOR ANY ERRORS OR OMISSIONS WHICH HAVE BEEN INCORPORATED INTO THE RECORD DRAWINGS.

DESCRIPTION	DATE	APPR	MARK

RECORD DRAWING

DESIGNED BY: D. WINGER
DRAWN BY: D. LAMPH
CHECKED BY: D. STEWART
PROJECT NUMBER: FA8201-09-D-0004-0005
GOVERNMENT REVIEWER:

HILL AIR FORCE BASE

DEPARTMENT OF THE AIR FORCE
OGDEN AIR LOGISTICS CENTER
75TH CIVIL ENGINEER GROUP

SCADA SYSTEM FOR THE IWTP
BUILDING 575

TTO-1 PANEL DIAGRAM MODULE 5

EI-630

SHEET 33 OF 37

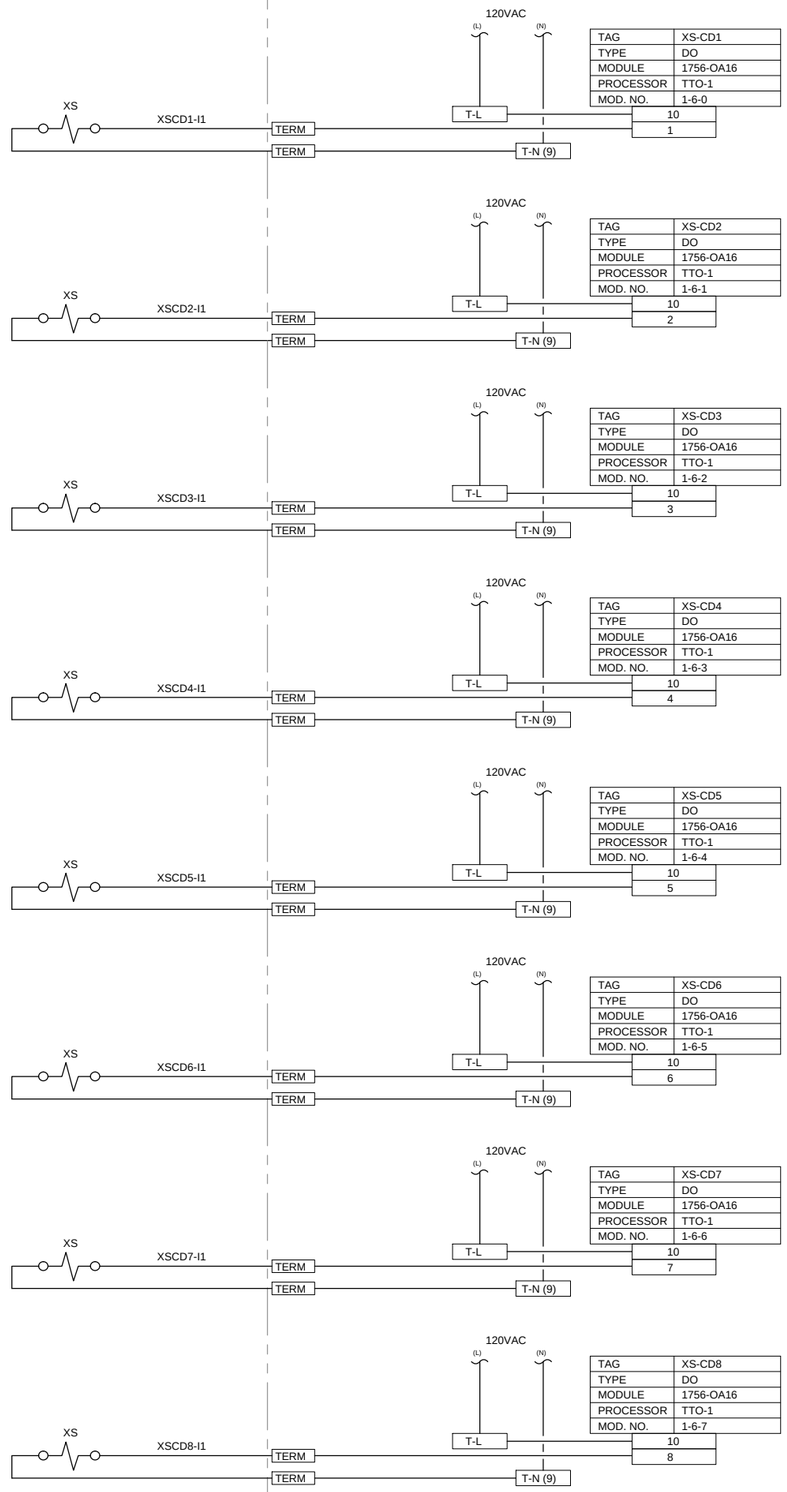

TAG	XS-CD1
TYPE	DO
MODULE	1756-OA16
PROCESSOR	TTO-1
MOD. NO.	1-6-0

TAG	XS-CD2
TYPE	DO
MODULE	1756-OA16
PROCESSOR	TTO-1
MOD. NO.	1-6-1

TAG	XS-CD3
TYPE	DO
MODULE	1756-OA16
PROCESSOR	TTO-1
MOD. NO.	1-6-2

TAG	XS-CD4
TYPE	DO
MODULE	1756-OA16
PROCESSOR	TTO-1
MOD. NO.	1-6-3

TAG	XS-CD5
TYPE	DO
MODULE	1756-OA16
PROCESSOR	TTO-1
MOD. NO.	1-6-4

TAG	XS-CD6
TYPE	DO
MODULE	1756-OA16
PROCESSOR	TTO-1
MOD. NO.	1-6-5

TAG	XS-CD7
TYPE	DO
MODULE	1756-OA16
PROCESSOR	TTO-1
MOD. NO.	1-6-6

TAG	XS-CD8
TYPE	DO
MODULE	1756-OA16
PROCESSOR	TTO-1
MOD. NO.	1-6-7

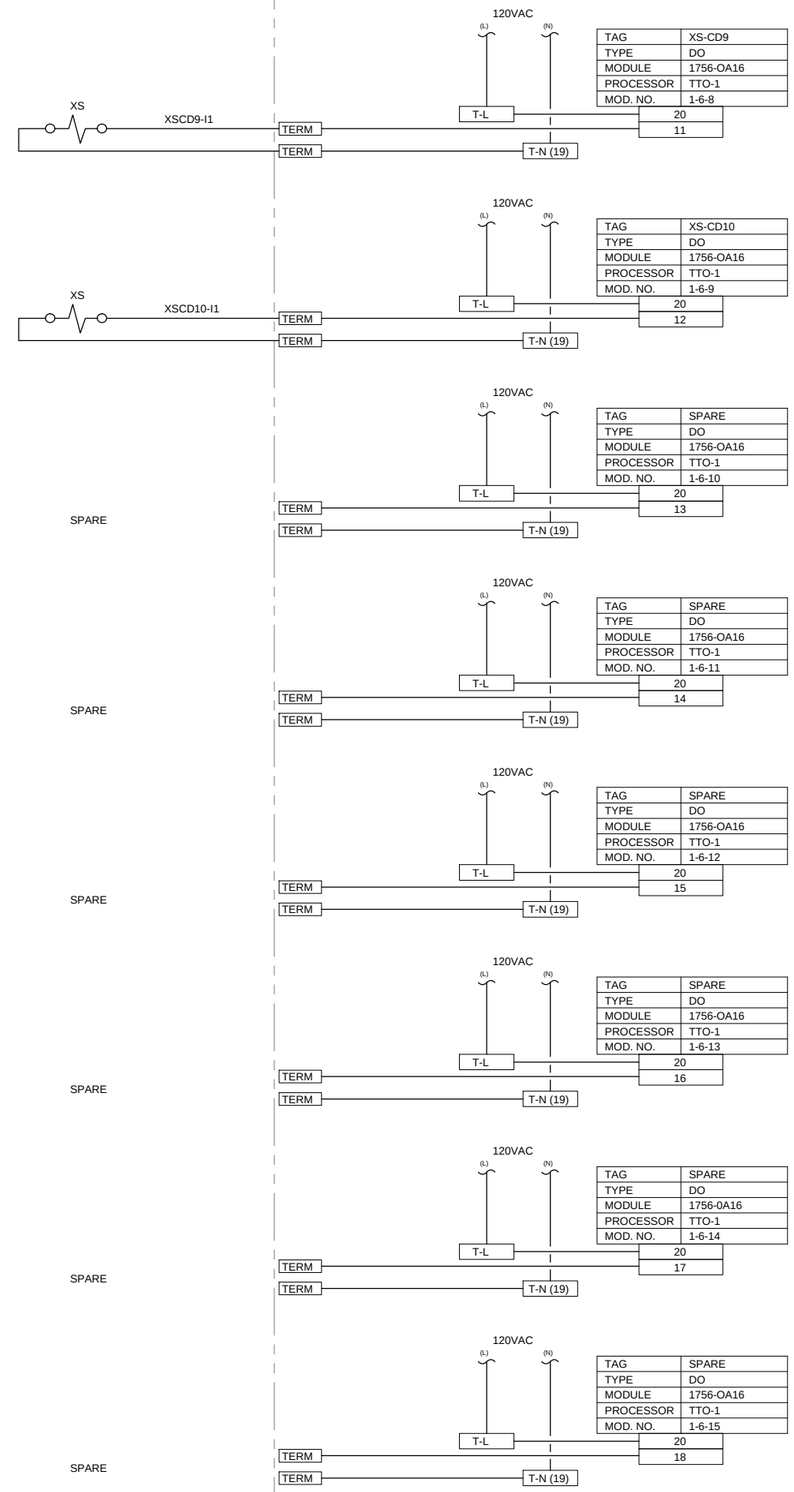

TAG	XS-CD9
TYPE	DO
MODULE	1756-OA16
PROCESSOR	TTO-1
MOD. NO.	1-6-8

TAG	XS-CD10
TYPE	DO
MODULE	1756-OA16
PROCESSOR	TTO-1
MOD. NO.	1-6-9

TAG	SPARE
TYPE	DO
MODULE	1756-OA16
PROCESSOR	TTO-1
MOD. NO.	1-6-10

TAG	SPARE
TYPE	DO
MODULE	1756-OA16
PROCESSOR	TTO-1
MOD. NO.	1-6-11

TAG	SPARE
TYPE	DO
MODULE	1756-OA16
PROCESSOR	TTO-1
MOD. NO.	1-6-12

TAG	SPARE
TYPE	DO
MODULE	1756-OA16
PROCESSOR	TTO-1
MOD. NO.	1-6-13

TAG	SPARE
TYPE	DO
MODULE	1756-0A16
PROCESSOR	TTO-1
MOD. NO.	1-6-14

TAG	SPARE
TYPE	DO
MODULE	1756-OA16
PROCESSOR	TTO-1
MOD. NO.	1-6-15

NOTES:

1. TERMINAL NUMBERS ARE PRELIMINARY. ACTUAL TERMINAL NUMBERS WILL BE UPDATED AFTER INSTALLATION.
2. TERM = TERMINAL NUMBER TO BE FIELD ASSIGNED DURING INSTALLATION.
3. ALL MISSING NUMBERS AND MISSING DRAWING NUMBERS TO BE FIELD ASSIGNED DURING INSTALLATION.
4. ALL FUSES TO BE 1 AMP FAST BLOW UNLESS OTHERWISE SPECIFIED.

RECORD DRAWINGS

Revisions Drawn by DEE LAMPH Date 5-31-2012

THESE RECORD DRAWINGS HAVE BEEN PREPARED, IN PART, ON THE BASIS OF INFORMATION COMPILED BY OTHERS. THEY ARE NOT INTENDED TO REPRESENT IN DETAIL THE EXACT LOCATION, TYPE OF COMPONENT NOR MANNER OF CONSTRUCTION. THE ENGINEER WILL NOT BE RESPONSIBLE FOR ANY ERRORS OR OMISSIONS WHICH HAVE BEEN INCORPORATED INTO THE RECORD DRAWINGS.

DESCRIPTION	DATE	APPR	MARK

RECORD DRAWING

DESIGNED BY: D. WINGER
DRAWN BY: D. LAMPH
CHECKED BY: D. STEWART
PROJECT NUMBER: FA8201-09-D-0004-0005
GOVERNMENT REVIEWER:

HILL AIR FORCE BASE
DEPARTMENT OF THE AIR FORCE
OGDEN AIR LOGISTICS CENTER
75TH CIVIL ENGINEER GROUP

SCADA SYSTEM FOR THE IWTP
BUILDING 575

TTO-1 PANEL DIAGRAM MODULE 6

EI-631

SHEET 34 OF 37

SPARE

TAG	SPARE
TYPE	AI 4-20mA
MODULE	1756-IF16
PROCESSOR	TTO-2
MOD. NO.	2-1-0

T9-1A — 2
T9-1B — 1
T9-1C GND

SPARE

TAG	SPARE
TYPE	AI 4-20mA
MODULE	1756-IF16
PROCESSOR	TTO-2
MOD. NO.	2-1-1

T9-2A — 4
T9-2B — 3
T9-2C GND

SPARE

TAG	SPARE
TYPE	AI 4-20mA
MODULE	1756-IF16
PROCESSOR	TTO-2
MOD. NO.	2-1-2

T9-3A — 6
T9-3B — 5
T9-3C GND

SPARE

TAG	SPARE
TYPE	AI 4-20mA
MODULE	1756-IF16
PROCESSOR	TTO-2
MOD. NO.	2-1-3

T9-4A — 8
T9-4B — 7
T9-4C GND

SPARE

TAG	SPARE
TYPE	AI 4-20mA
MODULE	1756-IF16
PROCESSOR	TTO-2
MOD. NO.	2-1-4

T9-5A — 12
T9-5B — 11
T9-5C GND

SPARE

TAG	SPARE
TYPE	AI 4-20mA
MODULE	1756-IF16
PROCESSOR	TTO-2
MOD. NO.	2-1-5

T9-6A — 14
T9-6B — 13
T9-6C GND

SPARE

TAG	SPARE
TYPE	AI 4-20mA
MODULE	1756-IF16
PROCESSOR	TTO-2
MOD. NO.	2-1-6

T9-7A — 16
T9-7B — 15
T9-7C GND

SPARE

TAG	SPARE
TYPE	AI 4-20mA
MODULE	1756-IF16
PROCESSOR	TTO-2
MOD. NO.	2-1-7

T9-8A — 18
T9-8B — 17
T9-8C GND

ST (+) (-) — T9-9A, T9-9B

TAG	SI-COL1
TYPE	AI 4-20mA
MODULE	1756-IF16
PROCESSOR	TTO-2
MOD. NO.	2-1-8

20
19
T9-9C GND

ST (+) (-) — T9-10A, T9-10B

TAG	SI-COL2
TYPE	AI 4-20mA
MODULE	1756-IF16
PROCESSOR	TTO-2
MOD. NO.	2-1-9

22
21
T9-10C GND

SPARE

TAG	SPARE
TYPE	AI 4-20mA
MODULE	1756-IF16
PROCESSOR	TTO-2
MOD. NO.	2-1-10

T9-11A — 24
T9-11B — 23
T9-11C GND

SPARE

TAG	SPARE
TYPE	AI 4-20mA
MODULE	1756-IF16
PROCESSOR	TTO-2
MOD. NO.	2-1-11

T9-12A — 26
T9-12B — 25
T9-12C GND

ST (+) (-) — T9-13A, T9-13B

TAG	SI-SWP2
TYPE	AI 4-20mA
MODULE	1756-IF16
PROCESSOR	TTO-2
MOD. NO.	2-1-12

30
29
T9-13C GND

ST (+) (-) — T9-14A, T9-14B

TAG	SI-SWP3
TYPE	AI 4-20mA
MODULE	1756-IF16
PROCESSOR	TTO-2
MOD. NO.	2-1-13

32
31
T9-14C GND

SPARE

TAG	SPARE
TYPE	AI 4-20mA
MODULE	1756-IF16
PROCESSOR	TTO-2
MOD. NO.	2-1-14

T9-15A — 34
T9-15B — 33
T9-15C GND

SPARE

TAG	SPARE
TYPE	AI 4-20mA
MODULE	1756-IF16
PROCESSOR	TTO-2
MOD. NO.	2-1-15

T9-16A — 36
T9-16B — 35
T9-16C GND

NOTES:

1. TERMINAL NUMBERS ARE PRELIMINARY. ACTUAL TERMINAL NUMBERS WILL BE UPDATED AFTER INSTALLATION.
2. TERM = TERMINAL NUMBER TO BE FIELD ASSIGNED DURING INSTALLATION.
3. ALL MISSING NUMBERS AND MISSING DRAWING NUMBERS TO BE FIELD ASSIGNED DURING INSTALLATION.
4. ALL FUSES TO BE 1 AMP FAST BLOW UNLESS OTHERWISE SPECIFIED.

RECORD DRAWINGS

Revisions Drawn by DEE LAMPH Date 5-31-2012

THESE RECORD DRAWINGS HAVE BEEN PREPARED, IN PART, ON THE BASIS OF INFORMATION COMPILED BY OTHERS. THEY ARE NOT INTENDED TO REPRESENT IN DETAIL THE EXACT LOCATION, TYPE OF COMPONENT NOR MANNER OF CONSTRUCTION. THE ENGINEER WILL NOT BE RESPONSIBLE FOR ANY ERRORS OR OMISSIONS WHICH HAVE BEEN INCORPORATED INTO THE RECORD DRAWINGS.

DESCRIPTION	DATE	APPR	MARK

RECORD DRAWING

DESIGNED BY: D. WINGER
DRAWN BY: D. LAMPH
CHECKED BY: D. STEWART
PROJECT NUMBER: F42201-09-D-0004-0005
GOVERNMENT REVIEWER:

HILL AIR FORCE BASE
DEPARTMENT OF THE AIR FORCE
OGDEN AIR LOGISTICS CENTER
75TH CIVIL ENGINEER GROUP

SCADA SYSTEM FOR THE IWTP
BUILDING 575

TTO-2 PANEL DIAGRAM MODULE 1

EI-632

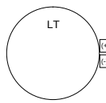

T9-1A

T9-1B

TAG	LI-COL
TYPE	AI 4-20mA
MODULE	1756-IF16
PROCESSOR	TTO-2
MOD. NO.	2-2-0

2
1
T9-1C GND

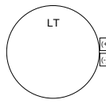

T9-2A

T9-2B

TAG	LI-STPD
TYPE	AI 4-20mA
MODULE	1756-IF16
PROCESSOR	TTO-2
MOD. NO.	2-2-1

4
3
T9-2C GND

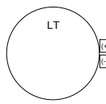

T9-3A

T9-3B

TAG	LI-BACKWASH
TYPE	AI 4-20mA
MODULE	1756-IF16
PROCESSOR	TTO-2
MOD. NO.	2-2-2

6
5
T9-3C GND

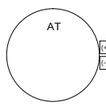

T9-4A

T9-4B

TAG	AI-H2S
TYPE	AI 4-20mA
MODULE	1756-IF16
PROCESSOR	TTO-2
MOD. NO.	2-2-3

8
7
T9-4C GND

SPARE

T9-5A

T9-5B

TAG	SPARE
TYPE	AI 4-20mA
MODULE	1756-IF16
PROCESSOR	TTO-2
MOD. NO.	2-2-4

12
11
T9-5C GND

SPARE

T9-6A

T9-6B

TAG	SPARE
TYPE	AI 4-20mA
MODULE	1756-IF16
PROCESSOR	TTO-2
MOD. NO.	2-2-5

14
13
T9-6C GND

SPARE

T9-7A

T9-7B

TAG	SPARE
TYPE	AI 4-20mA
MODULE	1756-IF16
PROCESSOR	TTO-2
MOD. NO.	2-2-6

16
15
T9-7C GND

SPARE

T9-8A

T9-8B

TAG	SPARE
TYPE	AI 4-20mA
MODULE	1756-IF16
PROCESSOR	TTO-2
MOD. NO.	2-2-7

18
17
T9-8C GND

SPARE

T9-9A

T9-9B

TAG	SPARE
TYPE	AI 4-20mA
MODULE	1756-IF16
PROCESSOR	TTO-2
MOD. NO.	2-2-8

20
19
T9-9C GND

SPARE

T9-10A

T9-10B

TAG	SPARE
TYPE	AI 4-20mA
MODULE	1756-IF16
PROCESSOR	TTO-2
MOD. NO.	2-2-9

22
21
T9-10C GND

SPARE

T9-11A

T9-11B

TAG	SPARE
TYPE	AI 4-20mA
MODULE	1756-IF16
PROCESSOR	TTO-2
MOD. NO.	2-2-10

24
23
T9-11C GND

SPARE

T9-12A

T9-12B

TAG	SPARE
TYPE	AI 4-20mA
MODULE	1756-IF16
PROCESSOR	TTO-2
MOD. NO.	2-2-11

26
25
T9-12C GND

SPARE

T9-13A

T9-13B

TAG	SPARE
TYPE	AI 4-20mA
MODULE	1756-IF16
PROCESSOR	TTO-2
MOD. NO.	2-2-12

30
29
T9-13C GND

SPARE

T9-14A

T9-14B

TAG	SPARE
TYPE	AI 4-20mA
MODULE	1756-IF16
PROCESSOR	TTO-2
MOD. NO.	2-2-13

32
31
T9-14C GND

SPARE

T9-15A

T9-15B

TAG	SPARE
TYPE	AI 4-20mA
MODULE	1756-IF16
PROCESSOR	TTO-2
MOD. NO.	2-2-14

34
33
T9-15C GND

SPARE

T9-16A

T9-16B

TAG	SPARE
TYPE	AI 4-20mA
MODULE	1756-IF16
PROCESSOR	TTO-2
MOD. NO.	2-2-15

36
35
T9-16C GND

NOTES:

1. TERMINAL NUMBERS ARE PRELIMINARY. ACTUAL TERMINAL NUMBERS WILL BE UPDATED AFTER INSTALLATION.
2. TERM = TERMINAL NUMBER TO BE FIELD ASSIGNED DURING INSTALLATION.
3. ALL MISSING NUMBERS AND MISSING DRAWING NUMBERS TO BE FIELD ASSIGNED DURING INSTALLATION.
4. ALL FUSES TO BE 1 AMP FAST BLOW UNLESS OTHERWISE SPECIFIED.

RECORD DRAWINGS

Revisions Drawn by DEE LAMPH Date 5-31-2012

THESE RECORD DRAWINGS HAVE BEEN PREPARED, IN PART, ON THE BASIS OF INFORMATION COMPILED BY OTHERS. THEY ARE NOT INTENDED TO REPRESENT IN DETAIL THE EXACT LOCATION, TYPE OF COMPONENT NOR MANNER OF CONSTRUCTION. THE ENGINEER WILL NOT BE RESPONSIBLE FOR ANY ERRORS OR OMISSIONS WHICH HAVE BEEN INCORPORATED INTO THE RECORD DRAWINGS.

DESCRIPTION	DATE	APPR	MARK

RECORD DRAWING

DESIGNED BY: D. WINGER
DRAWN BY: D. LAMPH
CHECKED BY: D. STEWART
PROJECT NUMBER: F4B201-09-D-0004-0005
GOVERNMENT REVIEWER:

HILL AIR FORCE BASE
DEPARTMENT OF THE AIR FORCE
OGDEN AIR LOGISTICS CENTER
75TH CIVIL ENGINEER GROUP

SCADA SYSTEM FOR THE IWTP
BUILDING 575

TTO-2 PANEL DIAGRAM MODULE 2

EI-633

SHEET 36 OF 37

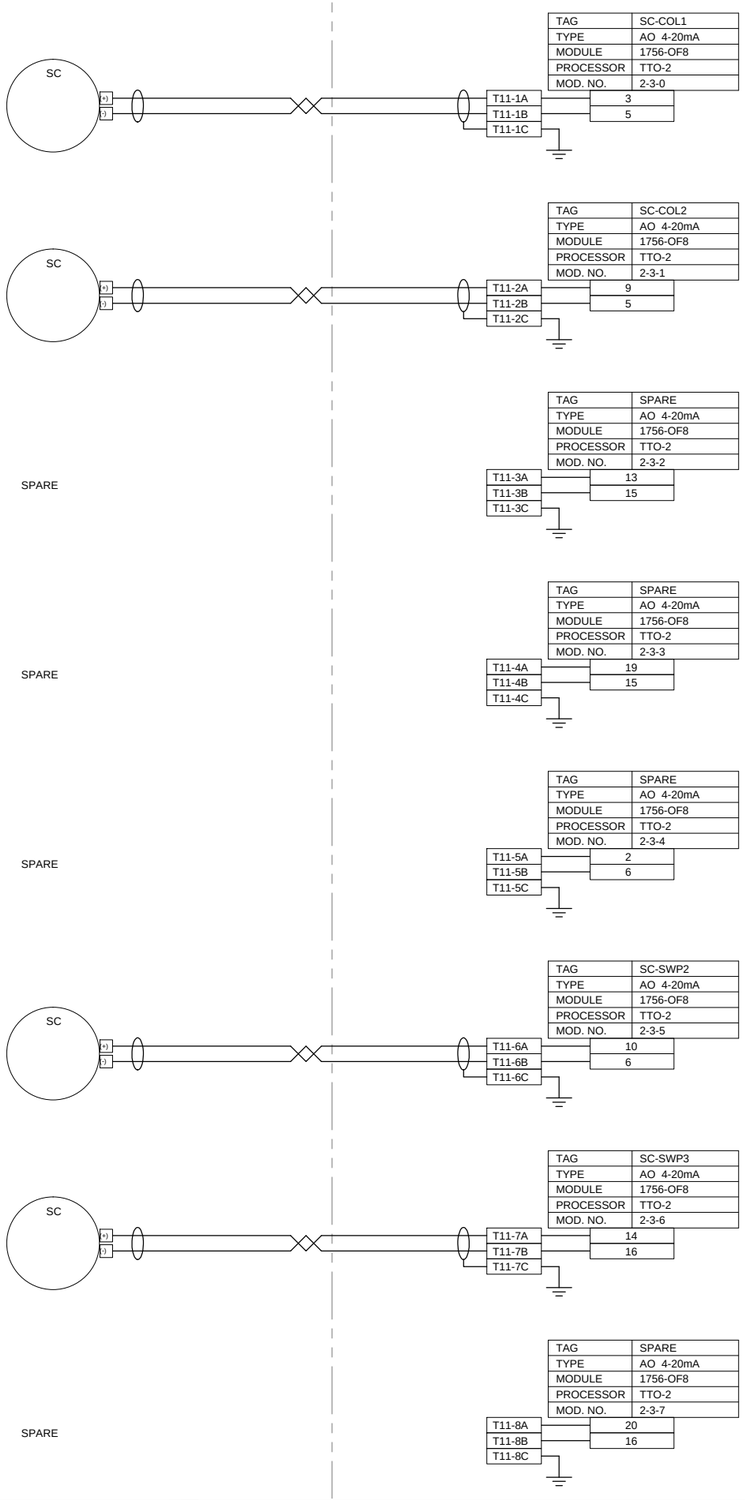

NOTES:

1. TERMINAL NUMBERS ARE PRELIMINARY. ACTUAL TERMINAL NUMBERS WILL BE UPDATED AFTER INSTALLATION.
2. TERM = TERMINAL NUMBER TO BE FIELD ASSIGNED DURING INSTALLATION.
3. ALL MISSING NUMBERS AND MISSING DRAWING NUMBERS TO BE FIELD ASSIGNED DURING INSTALLATION.
4. ALL FUSES TO BE 1 AMP FAST BLOW UNLESS OTHERWISE SPECIFIED.

RECORD DRAWINGS

Revisions Drawn by DEE LAMPH Date 5-31-2012

THESE RECORD DRAWINGS HAVE BEEN PREPARED, IN PART, ON THE BASIS OF INFORMATION COMPILED BY OTHERS. THEY ARE NOT INTENDED TO REPRESENT IN DETAIL THE EXACT LOCATION, TYPE OF COMPONENT NOR MANNER OF CONSTRUCTION. THE ENGINEER WILL NOT BE RESPONSIBLE FOR ANY ERRORS OR OMISSIONS WHICH HAVE BEEN INCORPORATED INTO THE RECORD DRAWINGS.

DESCRIPTION	DATE	APPR	MARK

RECORD DRAWING

DESIGNED BY: D. WINGER
DRAWN BY: D. LAMPH
CHECKED BY: D. STEWART
PROJECT NUMBER: FA8201-09-D-0004-0005
GOVERNMENT REVIEWER:

HILL AIR FORCE BASE

DEPARTMENT OF THE AIR FORCE
OGDEN AIR LOGISTICS CENTER
75TH CIVIL ENGINEER GROUP

SCADA SYSTEM FOR THE IWTP
BUILDING 575

TTO-2 PANEL DIAGRAM MODULE 3

EI-634

SHEET 37 OF 37