REVOLUTIONARY "SURE-BOARD"® SERIES 200S IS THE NON-COMBUSTIBLE FLOOR/ROOF SHEATHING THAT WILL IMPROVE THE FIRE RESISTANCE OF YOUR BUILDING USING STANDARD CONSTRUCTION METHODS AND PRACTICES.

SURE-BOARD®
Series 200S
For Floor/Roof Non-Combustible Sheathing

U.S. PATENT #7,770,346

IAPMO ES ER-185 **LARR #26040**
DSA IR A-5 **LA FAB #2109**

ROOF FRAMING

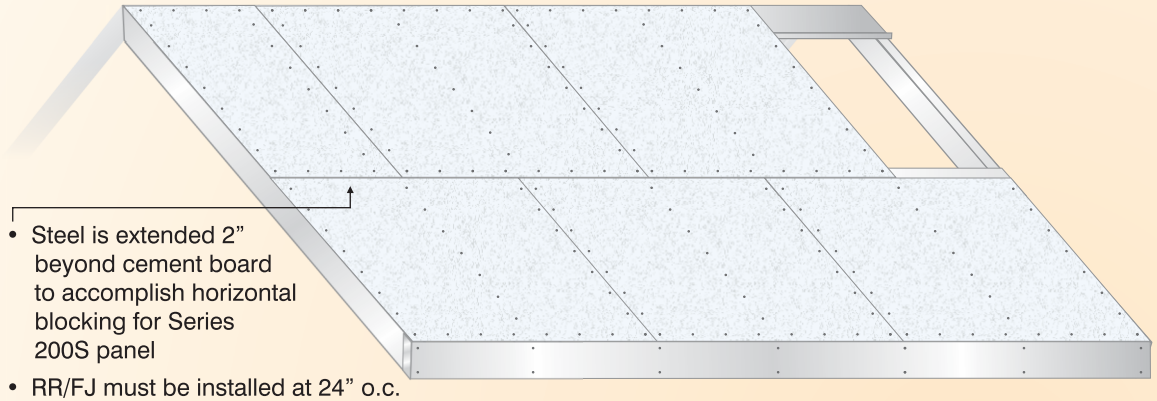

- Steel is extended 2" beyond cement board to accomplish horizontal blocking for Series 200S panel
- RR/FJ must be installed at 24" o.c. maximum when installing 3/4" Series 200S-F
- RR must be installed at 16" o.c. maximum when installing 1/2" Series 200S-P

SAVINGS TO CONTRACTOR:

- Cost for labor and materials is approximately 20% less than any existing non-combustable sheathing currently available today.
- Panel size is 48" x 48" dimension and can be laid in place by one installer.

FLOOR FRAMING

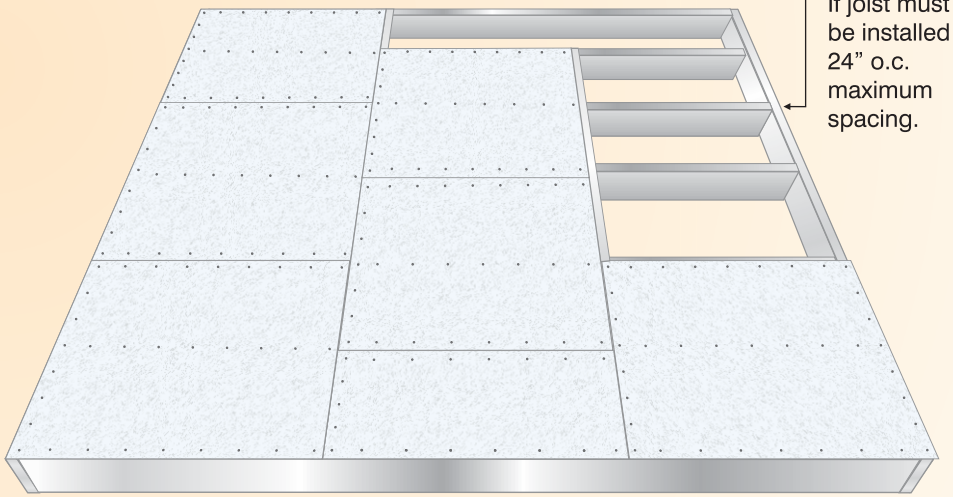

- NOTE: If joist must be installed 24" o.c. maximum spacing.

ADDITIONAL CERTIFICATIONS:

SOUND:

- Improves Sound/Impact Results on Typical CFS Framed Assembly.

FIRE:

- UL Listed Fire Rating using Single Layer of 5/8" Type C Gypsum Test Under ASTM E119 with Applied Load *(Assembly yielded over 81 minutes protection.)* and non-combustibility under ASTM E136.

CEMCO®
Expanding Your Solutions

SURE-BOARD® SERIES 200S NON-COMBUSTIBLE SHEATHING WILL IMPROVE THE PERFORMANCE OF YOUR CFS STRUCTURE, WHILE REDUCING THE CONSTRUCTION COSTS TO YOU.

SURE-BOARD® IS A CLEAR WINNER.

REV. 2/2024

Features

- 190 narrow stile has 2-1/8" (54) vertical stile, 2-1/4" (57.2) top and 3-7/8" (98.4) bottom rail
- 350 medium stile has 3-1/2" (88.9) vertical stile, 3-1/2" (88.9) top and 6-1/2" (165.1) bottom rail
- 500 wide stile has 5" (127) vertical stile, 5" (127) top and 6-1/2" (165.1) bottom rail
- Door is 1-3/4" (44.5) deep
- Dual moment welded corner construction
- Single or double acting
- Infills range from 1/4" (6.4) to 1" (25.4)
- Offset pivots, butt hinges, continuous geared hinge or center pivots
- MS locks or panic hardware
- Surface mounted or concealed closers
- Architects Classic push/pulls
- Adjustable astragal utilizing pile weathering with polymeric fin at meeting stiles
- Polymeric bulb weatherstripping in door frames
- Permanodic® anodized finishes option
- Painted finishes in standard and custom choices

Optional Features

- Paneline® exit device or Paneline® MEL exit device
- Wide variety of bottom rail and cross rail

10" BTTM. RAIL OPTION

Product Applications

- 190 narrow stile - engineered for moderate traffic in applications such as offices and stores
- 350 medium stile - provides extra strength for schools, institutions and other high traffic applications
- 500 wide stile - creates a monumental visual statement for banks, libraries or buildings that experience heavy traffic conditions

For specific product applications,
consult your Kawneer representative.

Laws and building and safety codes governing the design and use of Kawneer products, such as glazed entrance, window, and curtain wall products, vary widely. Kawneer does not control the selection of product configurations, operating hardware, or glazing materials, and assumes no responsibility therefor.

Kawneer reserves the right to change configuration without prior notice when deemed necessary for product improvement.

© 2015, Kawneer Company, Inc.

Laws and building and safety codes governing the design and use of Kawneer products, such as glazed entrance, window, and curtain wall products, vary widely. Kawneer does not control the selection of product configurations, operating hardware, or glazing materials, and assumes no responsibility therefor.

PICTORIAL VIEW 5
DOOR TYPES/SECT. DIMENSIONS 6
CONSTRUCTION DETAILS 7,8
STANDARD ENTRANCE PACKAGES 10, 11
ENTRANCE OFFERINGS.....12, 13
APPLICATION CRITERIA.....13
PUSH PULL HARDWARE 14
PANELINE®/PANELINE® MEL EXIT DEVICE.....15, 16
AUTO SHOWROOM DOOR 17, 18
INTERMEDIATE RAILS 19
INFILL OPTIONS 19
ACCESSORIES 19
HANDICAP ACCESSIBLE ITEMS.....20
BOTTOM RAILS 21
THERMAL CHARTS 22-40

Metric (SI) conversion figures are included throughout these details for reference. Numbers in parentheses ( ) are millimeters unless otherwise noted.

The following metric (SI) units are found in these details:

m – meter
cm – centimeter
mm – millimeter
s – second
Pa – pascal
MPa – megapascal

Kawneer reserves the right to change configuration without prior notice when deemed necessary for product improvement.
© 2015, Kawneer Company, Inc.

190/350/500 Standard Entrances

PICTORIAL VIEW

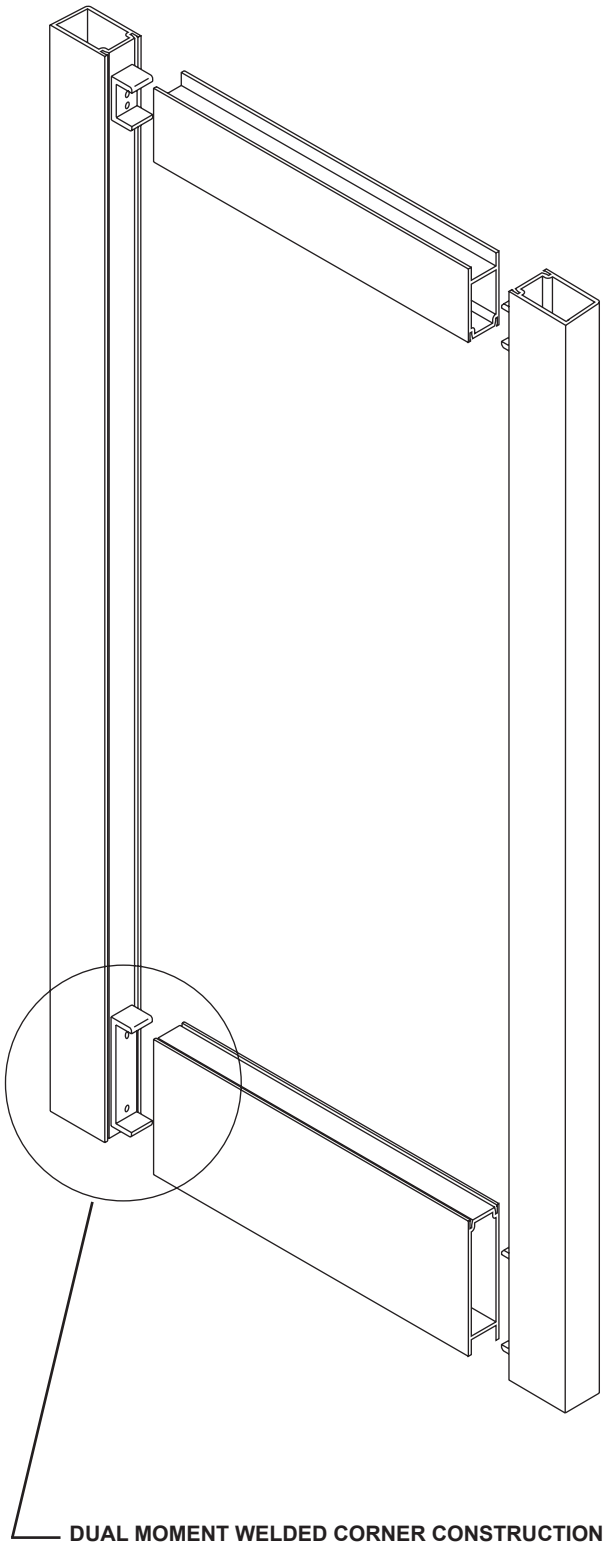

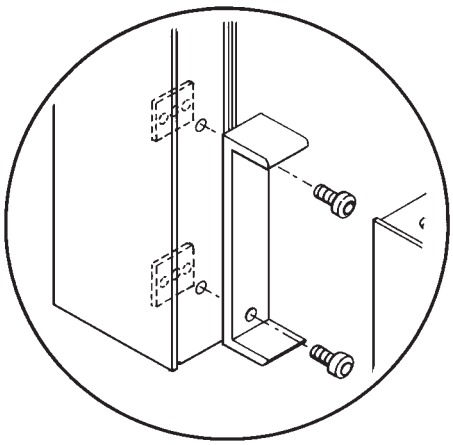

#1 MECHANICAL FASTENING is accomplished by attaching a 5/16" (7.9) thick extruded aluminum channel clip to the vertical stile with 1/4"-20 heat strengthened bolts and 3/16" thick steel nut plates for a high strength welding base for attachment horizontal member.

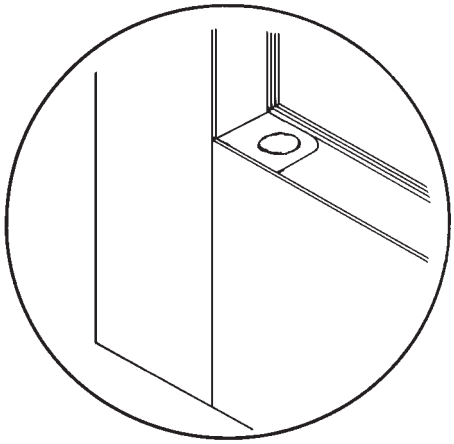

#2 SIGMA* DEEP PENETRATION PLUG WELDS are made top and bottom after the horizontal is properly positioned over the channel clip to help provide the strongest door corner joint currently available.

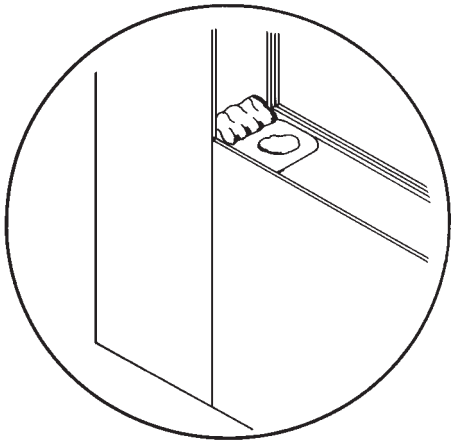

#3 SIGMA* FILLET WELDS along both top and bottom webs of the rail extrusion complete the welded corner construction.

*** An arc welding process known as Shielded Inert Gas Metal Arc (SIGMA) or also known as Metal Inert Gas (MIG).**

Laws and building and safety codes governing the design and use of Kawneer products, such as glazed entrance, window, and curtain wall products, vary widely. Kawneer does not control the selection of product configurations, operating hardware, or glazing materials, and assumes no responsibility therefor.

Kawneer reserves the right to change configuration without prior notice when deemed necessary for product improvement.

© 2015, Kawneer Company, Inc.

Additional information and CAD details are available at www.kawneer.com

190 NARROW STILE

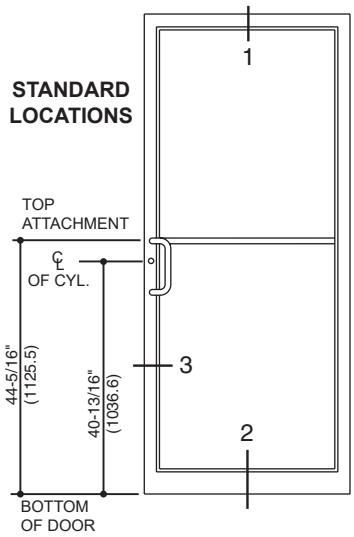

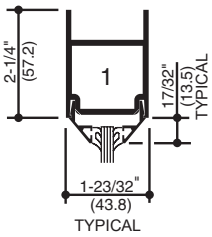

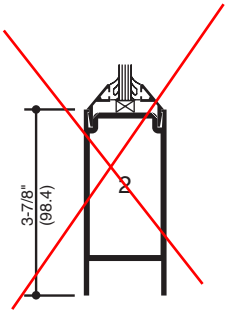

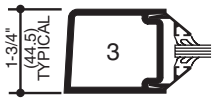

SINGLE ACTING

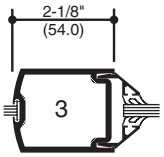

DOUBLE ACTING

350 MEDIUM STILE

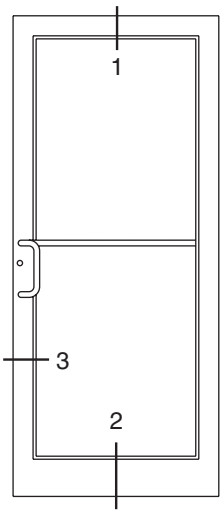

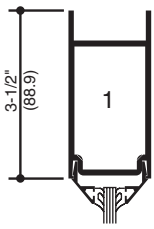

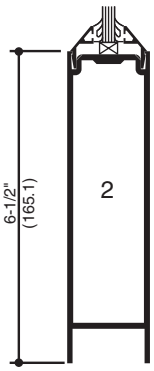

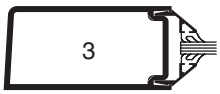

SINGLE ACTING

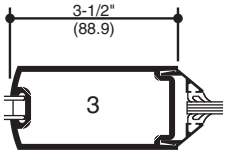

DOUBLE ACTING

500 WIDE STILE

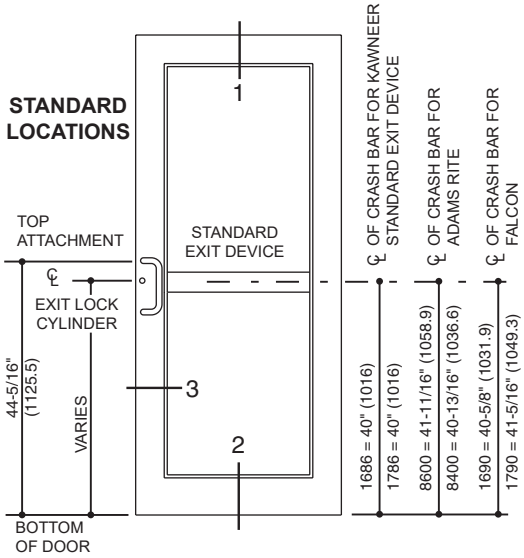

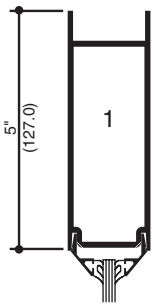

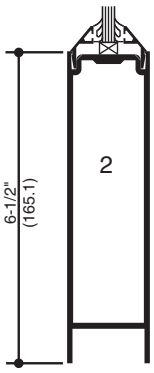

SINGLE ACTING

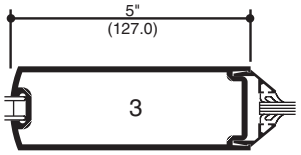

DOUBLE ACTING

Laws and building and safety codes governing the design and use of Kawneer products, such as glazed entrance, window, and curtain wall products, vary widely. Kawneer does not control the selection of product configurations, operating hardware, or glazing materials, and assumes no responsibility therefor.

Kawneer reserves the right to change configuration without prior notice when deemed necessary for product improvement.

© 2015, Kawneer Company, Inc.

Additional information and CAD details are available at www.kawneer.com

NOTE:

1. SERIES 190 NARROW STILE DOORS ARE DETAILED, MEDIUM STILE 350 DOORS AND WIDE STILE 500 DOORS ALSO MAY BE USED.

2. TRIFAB® VERSAGLAZE® 450 CENTER, 1-3/4" X 4-1/2" (44.5 X 114.3) FRAMING IS DETAILED WITH THE DOORS FOR REFERENCE. OTHER KAWNEER FRAMING SERIES OR CURTAIN WALL SYSTEMS MAY BE USED. REFER TO THE CATALOG INDEX FOR THE APPROPRIATE DETAIL SECTION.

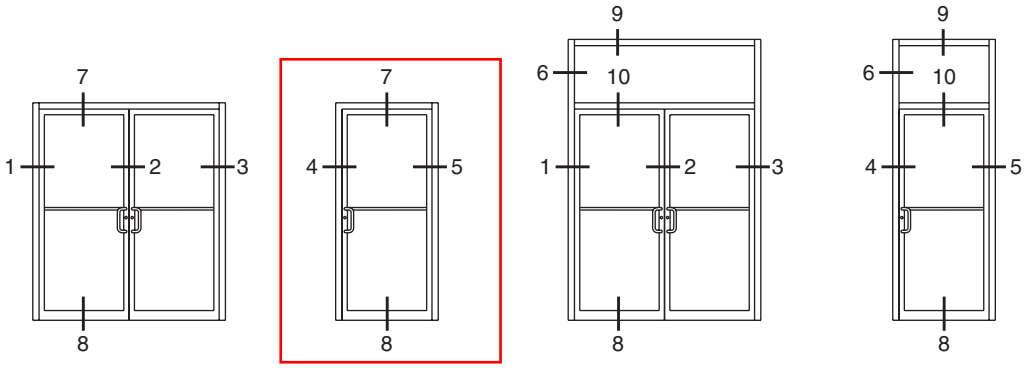

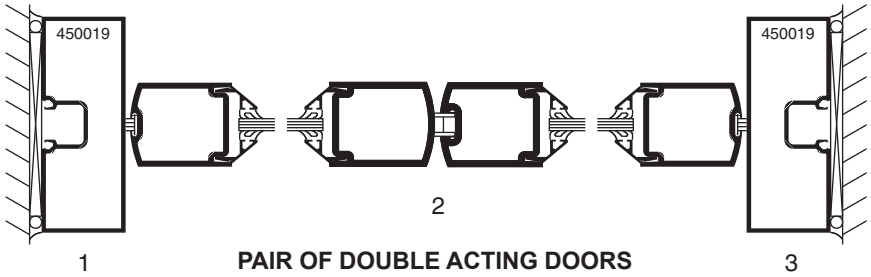

PAIR OF DOUBLE ACTING DOORS

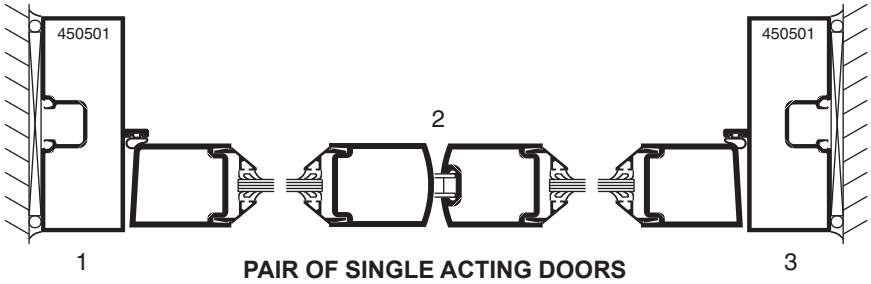

PAIR OF SINGLE ACTING DOORS

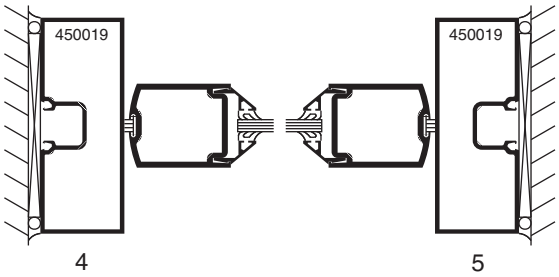

DOUBLE ACTING DOOR

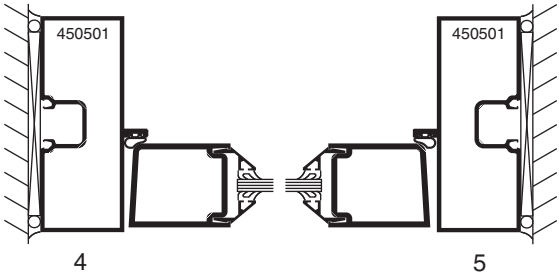

SINGLE ACTING DOOR

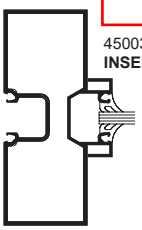

Laws and building and safety codes governing the design and use of Kawneer products, such as glazed entrance, window, and curtain wall products, vary widely. Kawneer does not control the selection of product configurations, operating hardware, or glazing materials, and assumes no responsibility therefor.

Kawneer reserves the right to change configuration without prior notice when deemed necessary for product improvement.

© 2015, Kawneer Company, Inc.

Additional information and CAD details are available at www.kawneer.com

DOUBLE ACTING DOORS

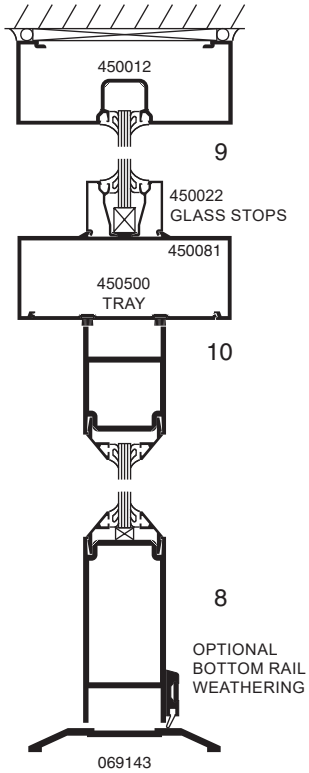

OVERHEAD CLOSER

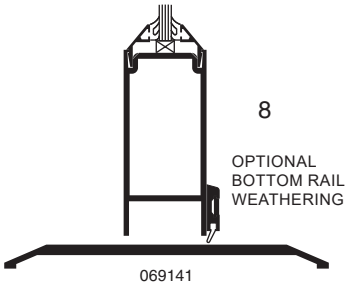

FLOOR CLOSER

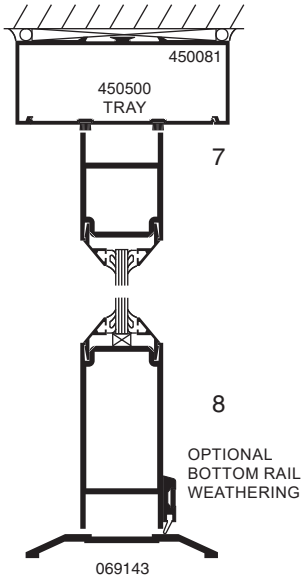

OVERHEAD CLOSER

SINGLE ACTING DOORS

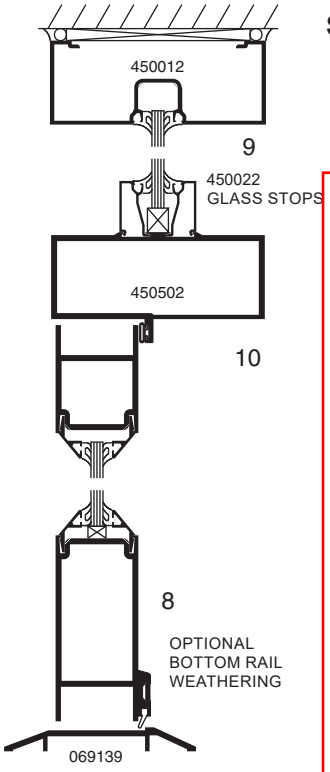

OVERHEAD CLOSER

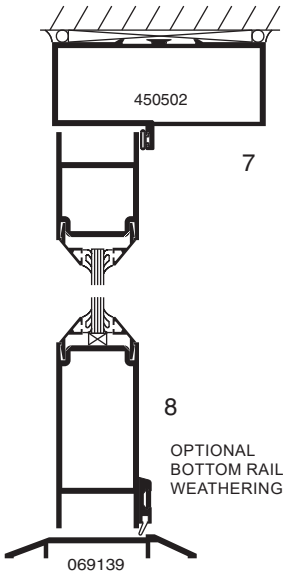

OVERHEAD CLOSER

COC WITH SINGLE ACTING OFFSET ARM

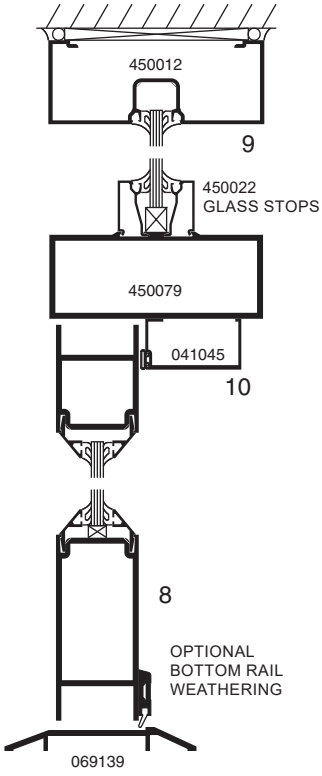

OVERHEAD CLOSER

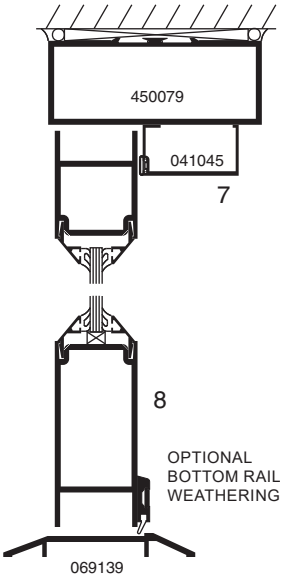

OVERHEAD CLOSER

Laws and building and safety codes governing the design and use of Kawneer products, such as glazed entrance, window, and curtain wall products, vary widely. Kawneer does not control the selection of product configurations, operating hardware, or glazing materials, and assumes no responsibility therefor.

Kawneer reserves the right to change configuration without prior notice when deemed necessary for product improvement.

© 2015, Kawneer Company, Inc.

Additional information and CAD details are available at www.kawneer.com

Trifab® VersaGlaze® 450 center door frames shown, Trifab® VersaGlaze® 451 center door frames similar.

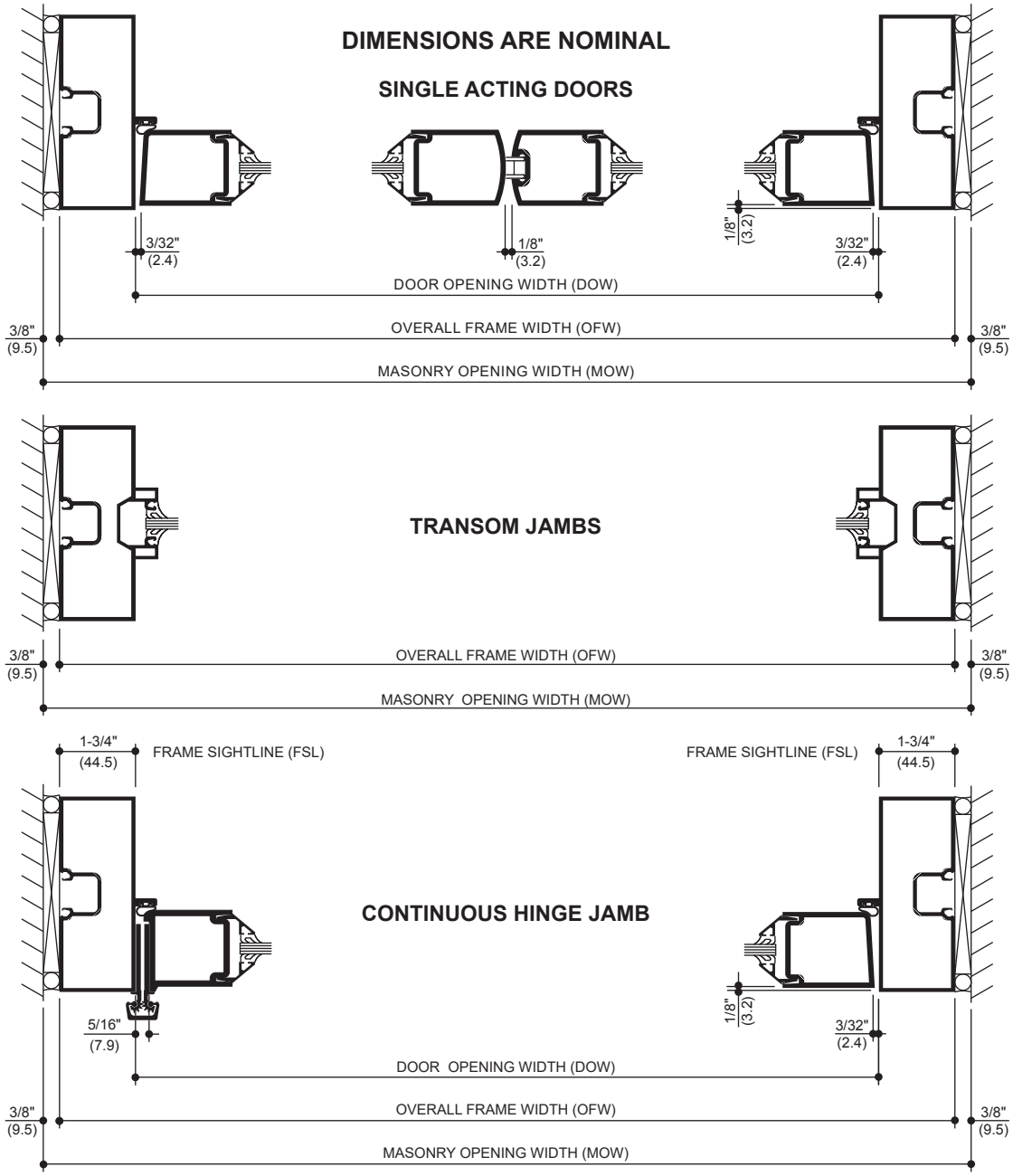

STANDARD SIZES (TRIFAB® 400 & TRIFAB® VG 450 CENTER FRAMES)					
WITH AND WITHOUT TRANSOM					
Door Opening Dimension (DOW)		**Overall Frame Dimension** (OFW)		**Masonry Opening Dimension** (MOW)	
3' 0"	(914)	3' 3-1/2"	(1,003)	3' 4-1/4"	(1,022)
3' 6"	(1,067)	3' 9-1/2"	(1,156)	3' 10-1/4"	(1,175)
6' 0"	(1,829)	6' 3-3/4"	(1,924)	6' 4-1/4"	(1,937)

STANDARD SIZES (TRIFAB® VG 451 CENTER FRAMES)					
WITH AND WITHOUT TRANSOM					
Door Opening Dimension (DOW)		**Overall Frame Dimension** (OFW)		**Masonry Opening Dimension** (MOW)	
3' 0"	(914)	3' 4"	(1,016)	3' 4-3/4"	(1,035)
3' 6"	(1,067)	3' 10"	(1,168)	3' 10-3/4"	(1,187)
6' 0"	(1,829)	6' 4"	(1,930)	6' 4-3/4"	(1,949)

WITH AND WITHOUT TRANSOM

OFW = DOW + 2 FSL

MOW = OFW + 3/4"

Note: Dimensions shown above reflect A1 Price Book standard stock door frame height with transom at 10' 3-1/2" (3,137).

Laws and building and safety codes governing the design and use of Kawneer products, such as glazed entrance, window, and curtain wall products, vary widely. Kawneer does not control the selection of product configurations, operating hardware, or glazing materials, and assumes no responsibility therefor.

Kawneer reserves the right to change configuration without prior notice when deemed necessary for product improvement.

© 2015, Kawneer Company, Inc.

Additional information and CAD details are available at www.kawneer.com

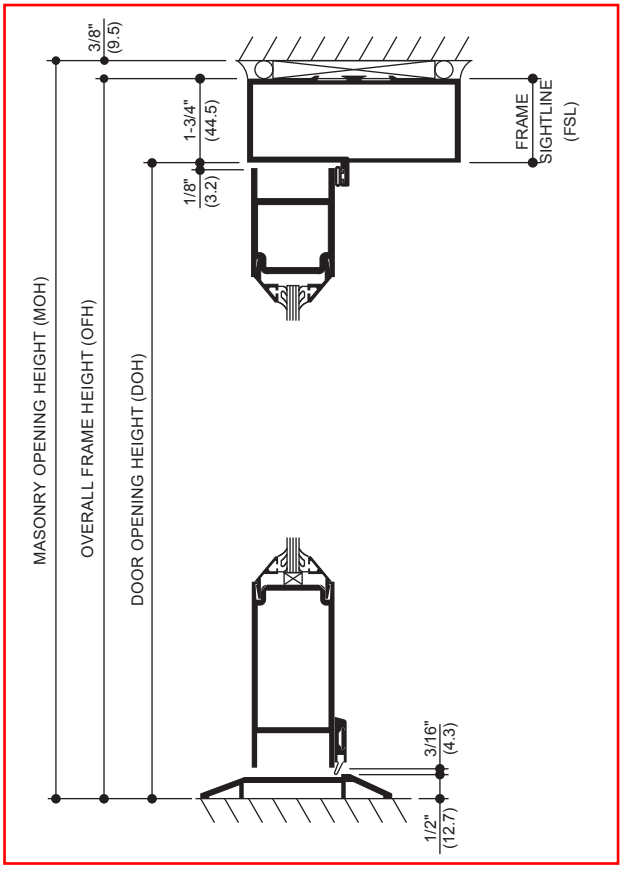

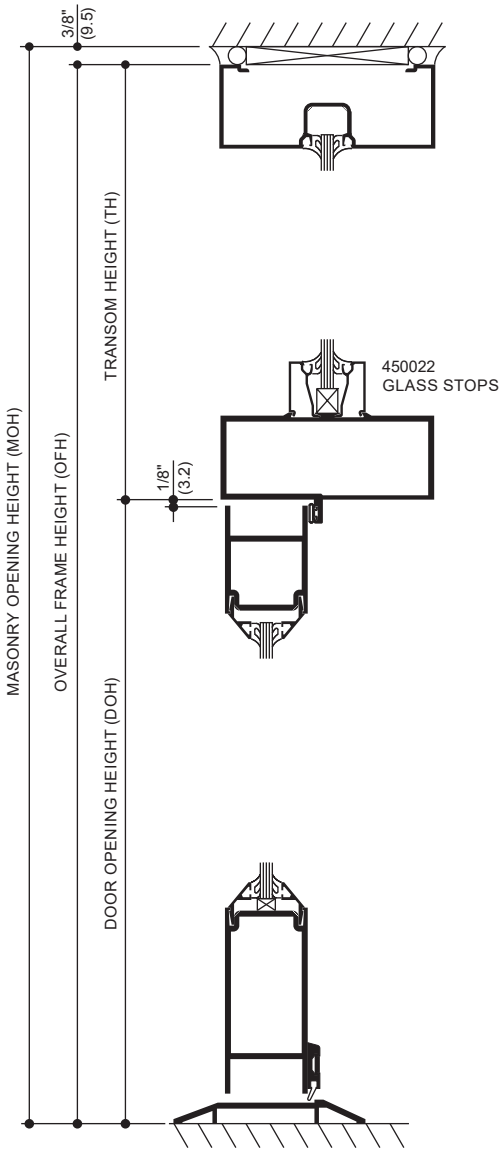

STANDARD SIZES (TRIFAB® 400 & TRIFAB® VG 450 CENTER FRAMES)					
WITHOUT TRANSOM					
Door Opening Dimension (DOH)		**Overall Frame Dimension** (OFH)		**Masonry Opening Dimension** (MOH)	
7' 0"	(2,134)	7' 1-3/4"	(2,178)	7' 2-1/8"	(2,188)
7' 0"	(2,134)	7' 1-3/4"	(2,178)	7' 2-1/8"	(2,188)
7' 0"	(2,134)	7' 1-3/4"	(2,178)	7' 2-1/8"	(2,188)

STANDARD SIZES (TRIFAB® VG 451 CENTER FRAMES)					
WITHOUT TRANSOM					
Door Opening Dimension (DOH)		**Overall Frame Dimension** (OFH)		**Masonry Opening Dimension** (MOH)	
7' 0"	(2,134)	7' 2"	(2,184)	7' 2-3/8"	(2,194)
7' 0"	(2,134)	7' 2"	(2,184)	7' 2-3/8"	(2,194)
7' 0"	(2,134)	7' 2"	(2,184)	7' 2-3/8"	(2,194)

WITHOUT TRANSOM

OFH = DOH + FSL
MOH = OFH + 3/8"

WITH TRANSOM

OFH = DOH +TH
MOH = OFH + 3/8"

Note: Dimensions shown above reflect A1 Price Book standard stock door frame height with transom at 10' 3-1/2" (3,137).

Laws and building and safety codes governing the design and use of Kawneer products, such as glazed entrance, window, and curtain wall products, vary widely. Kawneer does not control the selection of product configurations, operating hardware, or glazing materials, and assumes no responsibility therefor.

Kawneer reserves the right to change configuration without prior notice when deemed necessary for product improvement.

© 2015, Kawneer Company, Inc.

	STANDARD	OPTIONAL
Doors	Narrow stile 190 doors prepared for attachment hardware.	Medium stile 350 or wide stile 500.
Door Sizes Std.	Standard sizes shown on pages 10 and 11.	Any size up to 4' 0" x 8' 0" (1,219 x 2,438).
Glass Stops	Beveled glass stops for 1/4" (6.4) or 3/16" (4.0) infill.	Square glass stops for 3/16" (4.0) or 1/4" (6.4) infill. Also 1" (25.4) stops.
Door Frames	**Trifab® 400** - 1-3/4" x 4" (44.5 x 101.6) for single glazing. **Trifab® VG 450** Center - 1-3/4" x 4-1/2" (44.5 x 114.3) for single glazing or **Trifab® VG 451** Center - 2" x 4-1/2" (50.8 x 114.3) for double glazing.	Any Kawneer framing system suitable for door frames may be selected, but manufactured per order.
Push-Pulls	**Single Acting:** Architects Classic Hardware CO-9 Pull and CP-II Push Bar. Architects Classic Hardware CO-9 Pull and CP Push Bar. **Double Acting:** Architects Classic Hardware CP Push Bars.	**Single Acting:** Architects Classic Hardware CO-12 and CP-II push bar. Architects Classic Hardware CO-12 and CP push bar. Architects Classic Hardware CO-9/CO-9 Pulls. Architects Classic Hardware CO-12/CO-12 Pulls. **Double Acting:** Architects Classic Hardware CO-9/CO-9 Pulls. Architects Classic Hardware CO-12/CO-12 Pulls.
Door Closers	**Single Acting:** Norton 1601 adjustable or 1601 BF adjustable surface closer with back-check and with or without adjustable hold-open. Standard concealed overhead closer with single acting offset arm. **Double Acting:** Standard concealed overhead closer with 90 degree or 105 degree hold-open or without hold open. For heavy traffic & high wind applications, a supplemental door stop is recommended.	**Single Acting:** LCN 4040 surface closer with or without adjustable hold-open. LCN 2030 or 5010 concealed overhead closers with or without hold-open. LCN 1260 adjustable surface closer. Norton 8100 surface closer with a 50% spring power adjustment (for opening forces of less than 8 pounds). Closer is available with standard back-checks and with or without the hold-open feature. International single acting concealed overhead closer. Falcon SC 60 Surface closer. **Double Acting:** International overhead concealed closer.
Hinging	**Single Acting:** Kawneer top and bottom offset pivots (or) Kawneer top and bottom 4 1/2" x 4" (114.3 x 101.6) ball bearing butt hinge with non-removable pin (NRP) (or) Kawneer continuous gear hinge. **Double Acting:** Kawneer bottom center pivots for use with concealed overhead closer.	**Double Acting:** Kawneer top center (walking beam) pivot for use with floor closers.
Intermediate Pivots/Butts	**Single Acting:** Kawneer intermediate offset pivot (or) Kawneer 4-1/2" x 4" (114.3 x 101.6) ball bearing butt hinge with non-removable pin (NRP).	**Single Acting:** Rixson M-19 or IVES #7215-INT intermediate offset pivot.
Power Transfers	**Single Acting:** Kawneer EL intermediate offset pivot (or) Kawneer EL 4 1/2" x 4" (114.3 x 101.6) ball bearing butt hinge with wire transfer (or) EPT (Electric Power Transfer).	
Power Supply	**SP-1000X Power Supply:** For use with Paneline® EL exit devices. For use with Falcon EL 1690 and EL 1790 exit devices. **SP-2000 Power Supply:** For use with Paneline® MEL exit devices.	**NP1 Power Supply:** For use with Kawneer 1686 MEL and 1786 MEL exit devices only.
Locks - Active Leaf	Adams-Rite MS 1850A deadlock with two 1-5/32" (29.4) diameter 5 pin cylinders.	Adams-Rite #4510 latch lock. Adams-Rite #1850A-500 short throw deadlock. Adams-Rite #1850A-505 hookbolt lock. Adams-Rite #4015 two-point Lock. Adams-Rite #4085 three-point Lock. Adams-Rite #4089 exit indicator. Kawneer cylinder guard. Kawneer thumbturn (in lieu of cylinder).

Laws and building and safety codes governing the design and use of Kawneer products, such as glazed entrance, window, and curtain wall products, vary widely. Kawneer does not control the selection of product configurations, operating hardware, or glazing materials, and assumes no responsibility therefor.

Kawneer reserves the right to change configuration without prior notice when deemed necessary for product improvement.

© 2015, Kawneer Company, Inc.

	STANDARD	OPTIONAL
Locks - Inactive Leaf	One pair of Kawneer flush bolts in the inactive leaf of a pair of doors.	**Controller®** is a 3-point locking system consisting of a two point locking device in the inactive leaf in lieu of flush bolts, working in conjunction with the MS 1850A deadlock in the active leaf. This combination provides for greater security than possible with flush bolts and complies with the life safety considerations of building codes which prohibit the use of flush bolts.
Thresholds	A 1/2" x 4" (12.7 x 101.6) aluminum mill finish threshold.	A 1/2" x 6-3/4" (12.7 x 171.5) aluminum mill finish threshold.
Weathering	**Single Acting:** Weathering system in the door and frame consisting of a dense, bulb polymeric material, which remains resilient and retains its weathering ability under temperature extremes. (The system is complete with an optional EPDM blade gasket sweep strip applied to the bottom door rail with concealed fasteners). **Double Acting:** Pile cloth weathering in the door and frame.	Bottom Door Sweep
Exit Device	**Kawneer 1686 Concealed Rod Exit Device** with or without a mortised type cylinder. **Kawneer 1786 Rim Exit Device** is a rim type exit device with or without a rim type cylinder. Pairs of doors require a Kawneer RM-86 removable mullion. **Paneline®** exit device is a concealed rod exit device applicable to single or pairs of doors. It features an activating panel contained within the door cross rail.	**Kawneer 1686 MEL Concealed Rod Exit Device** electric modification is available. **Kawneer 1786 MEL Rim Exit Device** electric modification is available. **Kawneer 1686 CD Concealed Rod Exit Device** available with cylinder dogging. **Kawneer 1786 CD Rim Exit Device** available with cylinder dogging. **Kawneer 1686 Lever Handle** is available for the Kawneer 1686 concealed rod exit device. **Kawneer 1786 Lever Handle** is available for the Kawneer 1786 rim type exit device. **Falcon 1690 Concealed Rod Exit Device** with or without a mortised type cylinder. **Falcon 1790 Rim Exit Device** is a rim type exit device with or without a rim type cylinder. **Falcon EL 1690** electric modification is also available. **Falcon EL 1790** electric modification is also available **Paneline® MEL** electric modification is also available. **Falcon 1990** is a concealed rod exit device with or without a rim type cylinder. **Falcon 2090** is a rim type exit device with or without a rim type cylinder. Pairs of doors require a removable aluminum mullion. RM-70 with the Falcon 2090 exit device.
	Exit Device Pulls: Architects Classic CO-9 Pull with Kawneer 1686 and 1786 exit devices. Architects Classic CPN Pull for Paneline® and Paneline® MEL exit devices.	**Optional Exit Device Pulls:** Architects Classic CO-12 Pull with Kawneer 1686 and 1786 exit devices.

APPLICATION CRITERIA

As indicated on Page 10, the standard sizes of swing doors are 3' 0" x 7' 0" (914.4 x 2,133.6) or 3' 6" x 7' 0" (1,067 x 2,134) for single doors and 6' 0" x 7' 0" (1,828.8 x 2,133.6) for pairs of doors. When these sizes are exceeded the following criteria should be administered.

1. Larger doors should not be subject to heavy traffic or strong prevailing wind conditions.
2. Larger doors should use a door closer with a good back check action.
3. When a 190 door exceeds 9' 0" (2,743) or a 350/500 door exceeds 10' 0" (3048) in height, a cross rail or push bar should be used to reinforce the vertical stiles.
4. When an offset hung door exceeds 7' 6" (2,286.0) in height, an intermediate butt or offset pivot should be used.
5. Tall doors should be prevented from racking by proper utilization of hardware, including door closers, door holders and door stops.

NOTE:
CONTACT YOUR FACTORY REPRESENTATIVE FOR APPLICATION ASSISTANCE.

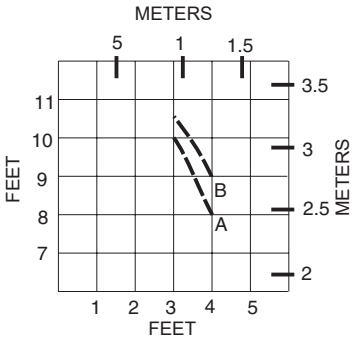

MAXIMUM SIZE DOOR LEAFS GLAZED WITH 1/4" (6.4) GLASS

A = NARROW STILE 190

B = MEDIUM STILE 350 OR WIDE STILE 500

MAXIMUM DOOR HEIGHT FOR PANELINE® MEL = 8' 0"

Laws and building and safety codes governing the design and use of Kawneer products, such as glazed entrance, window, and curtain wall products, vary widely. Kawneer does not control the selection of product configurations, operating hardware, or glazing materials, and assumes no responsibility therefor.

Kawneer reserves the right to change configuration without prior notice when deemed necessary for product improvement.

© 2015, Kawneer Company, Inc.

REFER TO **HARDWARE SECTION** FOR COMPLETE HARDWARE INFORMATION.

ARCHITECTS CLASSIC (PUSH PULL SETS)

SINGLE ACTING DOORS USE A PULL HANDLE AND PUSH BAR AS STANDARD
DOUBLE ACTING DOORS USE CP PUSH BARS BACK TO BACK AS STANDARD.

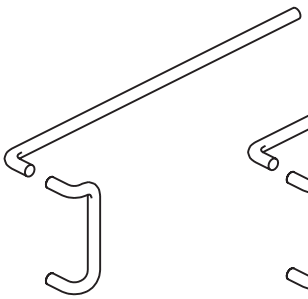

CO-9/CP
CO-12/CP

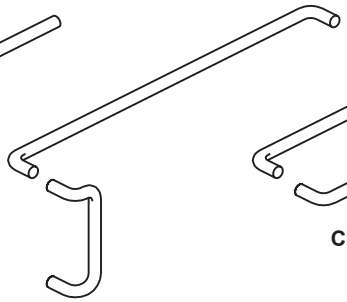

CO-9/CP-II
CO-12 /CP-II

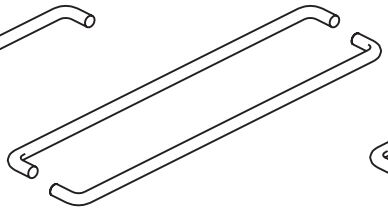

CP-II/CP-II*

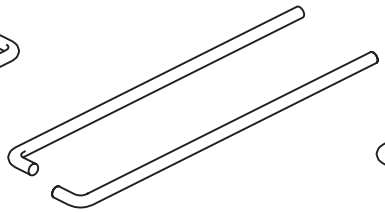

CP/CP

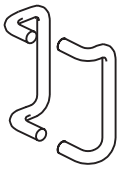

CO-9/CO-9
CO-12/CO-12

ARCHITECTS CLASSIC (COMPONENTS)

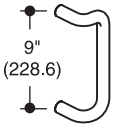

CO-9 PULL

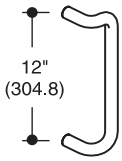

CO-12 PULL

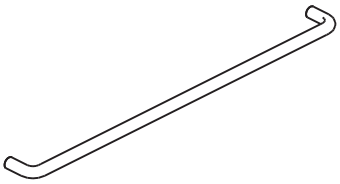

CP-II* PUSH BAR

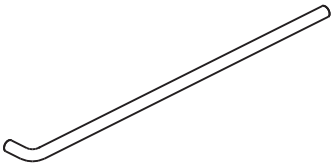

CP PUSH BAR

* CP-II PUSH BAR IS NOT TO BE USED FOR BACK TO BACK MOUNTING ON D/A DOORS.

EXIT DEVICES

KAWNEER PANELINE® / PANELINE® MEL

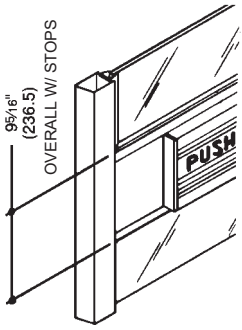

c UL US LISTED

CPN PULL ON EXTERIOR OF DOOR

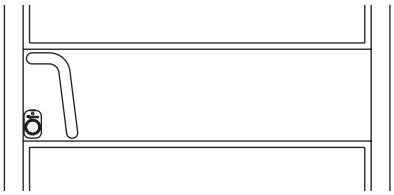

EXTERIOR VIEW OF 190 DOOR (350/500 SIMILAR)
CPN PULL AND OPTIONAL CYLINDER GUARD SHOWN.

SEE PAGE 15 AND 16 FOR COMPLETE PANELINE® INFORMATION

EXIT DEVICES AND PULLS

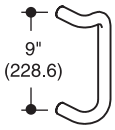

CO-9 PULL

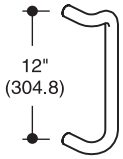

CO-12 PULL

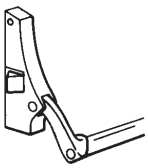

RIM LATCH
Falcon 2090

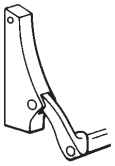

CONCEALED ROD
Falcon 1990

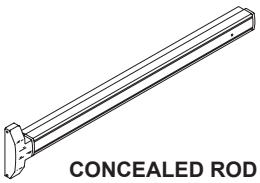

CONCEALED ROD
Falcon 1690
Falcon EL 1690

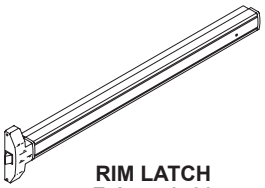

RIM LATCH
Falcon 1790
Falcon EL 1790

c UL US LISTED

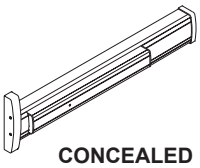

CONCEALED ROD
Kawneer 1686
Kawneer 1686 MEL
Kawneer 1686 CD

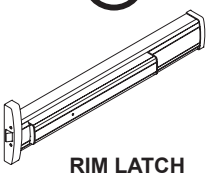

RIM LATCH
Kawneer 1786
Kawneer 1786 MEL
Kawneer 1786 CD

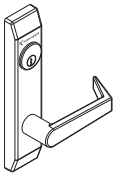

LEVER HANDLE
Kawneer 1686
Kawneer 1786

Laws and building and safety codes governing the design and use of Kawneer products, such as glazed entrance, window, and curtain wall products, vary widely. Kawneer does not control the selection of product configurations, operating hardware, or glazing materials, and assumes no responsibility therefor.

Kawneer reserves the right to change configuration without prior notice when deemed necessary for product improvement.

© 2015, Kawneer Company, Inc.

The Paneline® concealed rod exit device for 190, 350 and 500 doors will accommodate variations in stile width and door width as shown in the following illustrations. Sidelites adjacent to Paneline® equipped doors not requiring exit devices may be fitted with fixed panels as detailed below to match the general appearance of the Paneline® cross rail.

The Optional Paneline® MEL device is designed for electrified access control and is compatible with most key pad and card reader systems.

See **Hardware Section** for complete description of Paneline® hardware, including finish of units.

Paneline® uses mortise cylinder in lieu of the normal rim-type.
Dummy Paneline® units are not for use with any type of lock.

INTERIOR ELEVATIONS

NOTE: Sidelites must be stop glazed above and below rail.

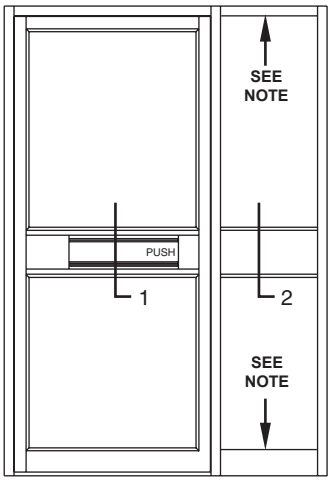

ACTIVE DOOR **SIDELITE**

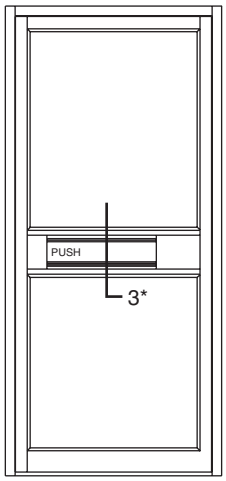

***VESTIBULE DOOR**
(Without Exit Device or Lock)

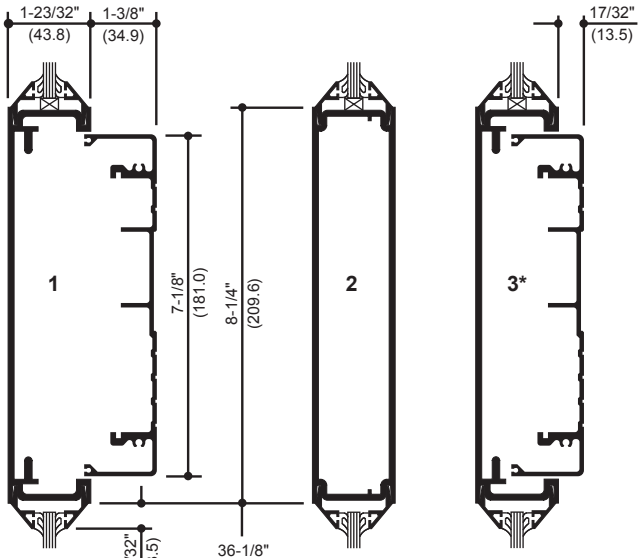

CROSSRAIL WITH EXIT DEVICE AND CPN PULL HANDLE **SIDELITE CROSSRAIL** **CROSSRAIL WITH FIXED PANEL**

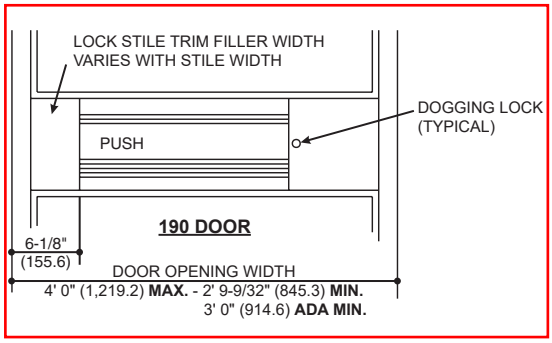

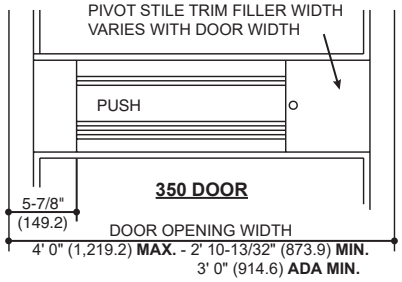

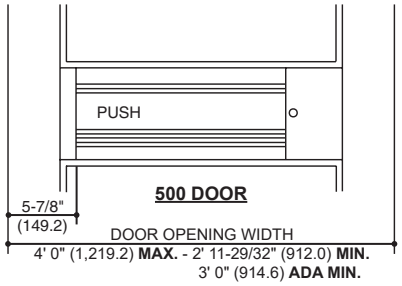

PANELINE® MEL COMPONENTS

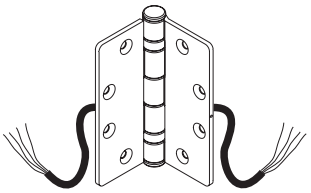

POWER TRANSFER INTERMEDIATE BUTT HINGE

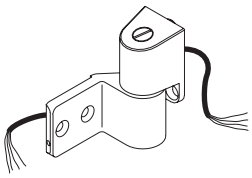

POWER TRANSFER INTERMEDIATE OFFSET PIVOT

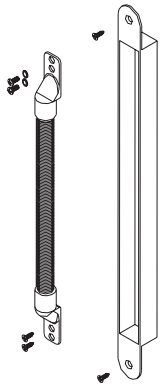

ELECTRIC POWER TRANSFER (EPT)

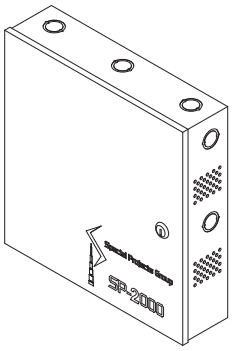

SP-2000 POWER SUPPLY

Laws and building and safety codes governing the design and use of Kawneer products, such as glazed entrance, window, and curtain wall products, vary widely. Kawneer does not control the selection of product configurations, operating hardware, or glazing materials, and assumes no responsibility therefor.

Kawneer reserves the right to change configuration without prior notice when deemed necessary for product improvement.

© 2015, Kawneer Company, Inc.

Sidelites adjacent to Paneline® equipped doors not requiring exit devices may be fitted with fixed panels as detailed below to match the general appearance of the Paneline® cross rail.

See **Hardware Section** for complete description of Paneline® hardware, including finish of units.

Paneline® uses mortise cylinder in lieu of the normal rim-type.
Dummy Paneline® units should not use any type of lock.

INTERIOR ELEVATION

NOTE: Sidelites must be stop glazed above and below rail.

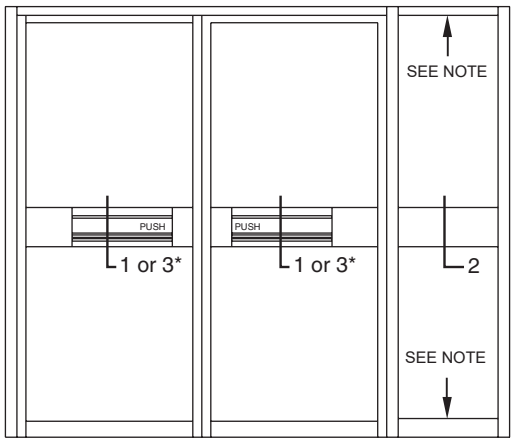

*** ALTERNATE CROSSRAIL FOR VESTIBULE DOORS (Without Exit Device or Lock)**

C UL US LISTED

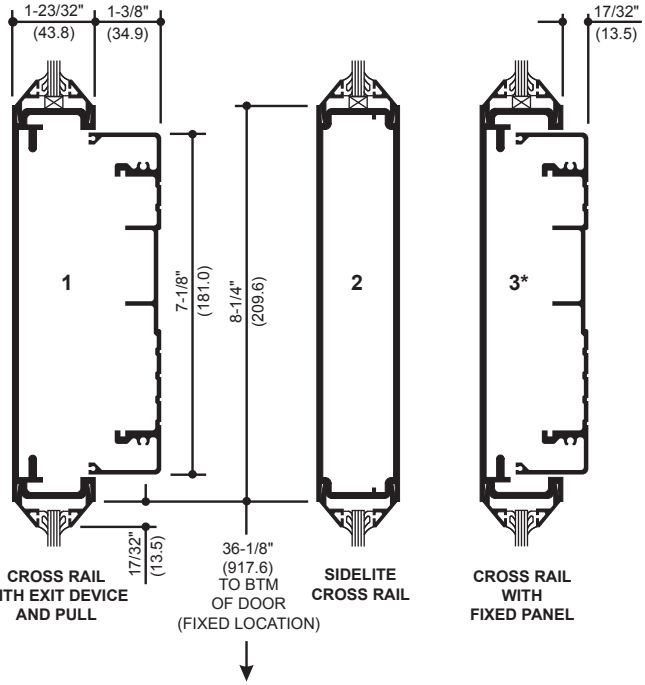

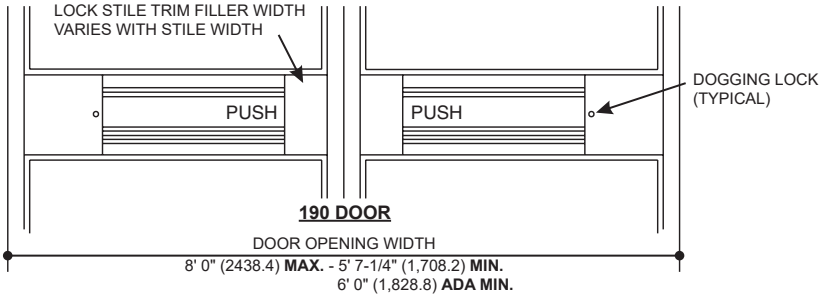

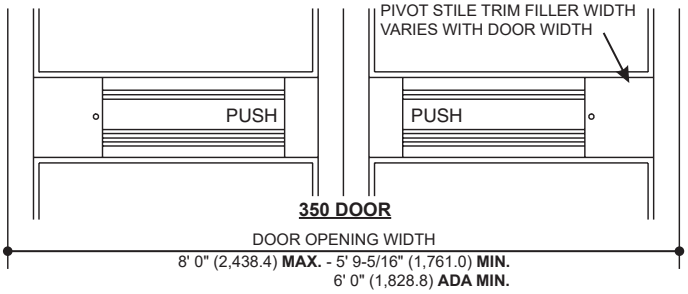

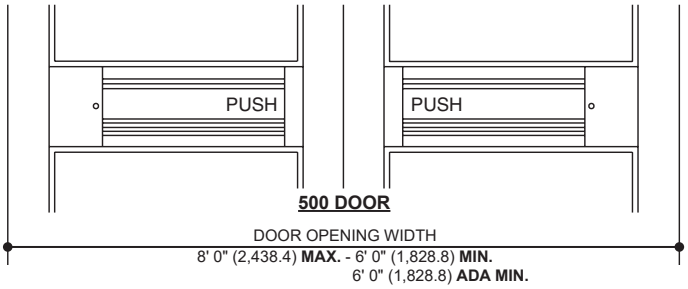

CPN PULL ON EXTERIOR OF DOOR

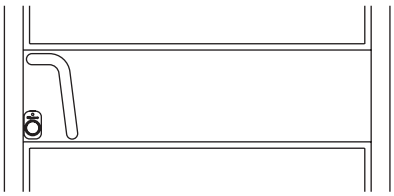

EXTERIOR VIEW OF 190 DOOR (350-500 SIMILAR) WITH CPN PULL AND STANDARD CYLINDER GUARD SHOWN

Laws and building and safety codes governing the design and use of Kawneer products, such as glazed entrance, window, and curtain wall products, vary widely. Kawneer does not control the selection of product configurations, operating hardware, or glazing materials, and assumes no responsibility therefor.

Kawneer reserves the right to change configuration without prior notice when deemed necessary for product improvement.

© 2015, Kawneer Company, Inc.

NOTE: 1/4" GLAZING INFILL ONLY

SWING TYPE

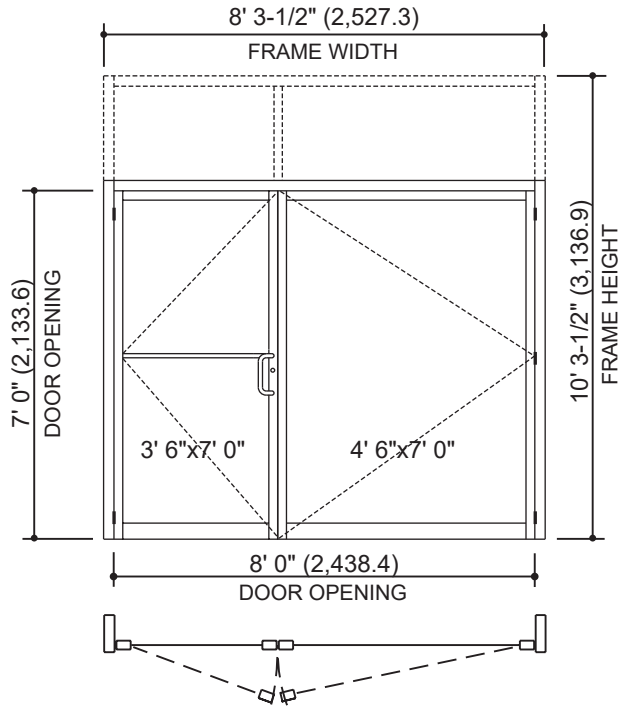

BIFOLD TYPE

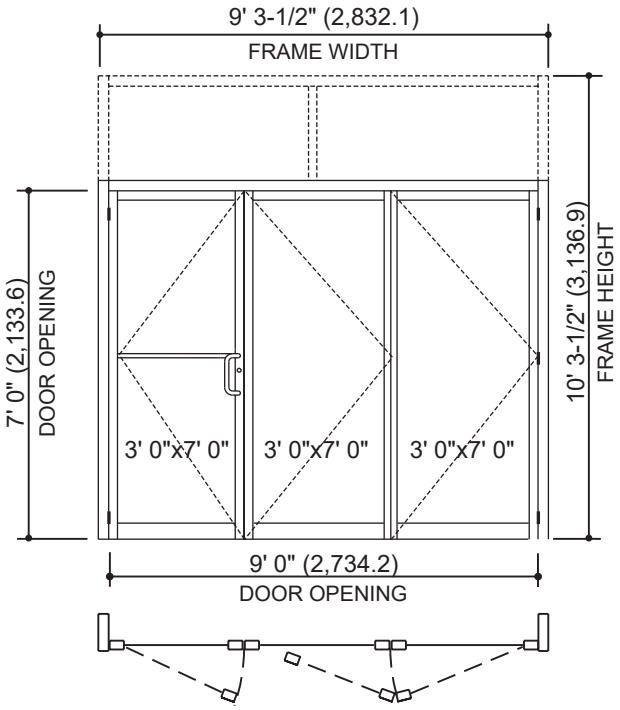

MAXIMUM ALLOWABLE SIZES

- DOOR OPENING WIDTH TO 9' 0" (2,743.2) [SWING] OR 10' 0" (3,048) [BI-FOLD]
- DOOR OPENING HEIGHT TO 8' 0" (2,438.4)
- OVERALL FRAME HEIGHT TO 8' 1-3/4" (2,482.9) W/O TRANSOM
- OVERALL FRAME HEIGHT TO 12' 0" (3,657.6) WITH TRANSOM

AUTO SHOWROOM PACKAGE

DOORS ..... 190 NARROW STILE, 350 MEDIUM STILE AND 500 WIDE STILE DOORS.

FRAME..... TRIFAB® VERSAGLAZE® 450 CENTER.

CLOSER..... NORTON 1601 ADJUSTABLE OR 1601 BF ADJUSTABLE SURFACE CLOSER (ACTIVE LEAF ONLY).

BUTT HINGES ..... ONE PAIR 4-1/2" x 4" (114.3 x 101.6) BALL BEARING BUTTS ON ACTIVE LEAF, ONE AND ONE HALF PAIR ON INACTIVE LEAVES AT HINGE JAMB. CONTINUOUS HINGE ON INACTIVE LEAVES.

LOCKS..... ADAMS-RITE MS1850A WITH (2) CYLINDERS ON ACTIVE LEAF.

FLUSHBOLTS..... ONE PAIR EDGE MOUNTED FOR INACTIVE LEAVES (FACE MOUNTED ON #2 INACTIVE LEAF OF BIFOLD TYPE).

THRESHOLD ..... 1/2" x 4" (12.7 x 101.6) ALUMINUM.

RISER BLOCK..... EXTRUDED ALUMINUM BLOCK APPLIED TO BOTTOM RAIL OF EACH INACTIVE LEAF.

OPTIONAL CASTER ..... IN LIEU OF RISER BLOCK, FACE APPLIED CASTER TO LEADING STILE OF INACTIVE LEAF.

Laws and building and safety codes governing the design and use of Kawneer products, such as glazed entrance, window, and curtain wall products, vary widely. Kawneer does not control the selection of product configurations, operating hardware, or glazing materials, and assumes no responsibility therefor.

Kawneer reserves the right to change configuration without prior notice when deemed necessary for product improvement.

© 2015, Kawneer Company, Inc.

Additional information and CAD details are available at www.kawneer.com

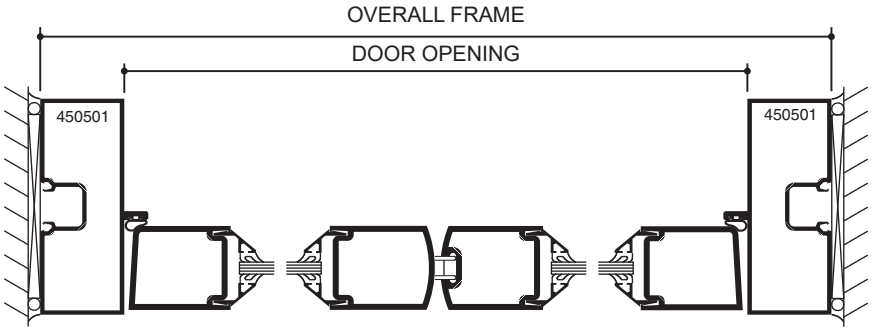

SWING TYPE

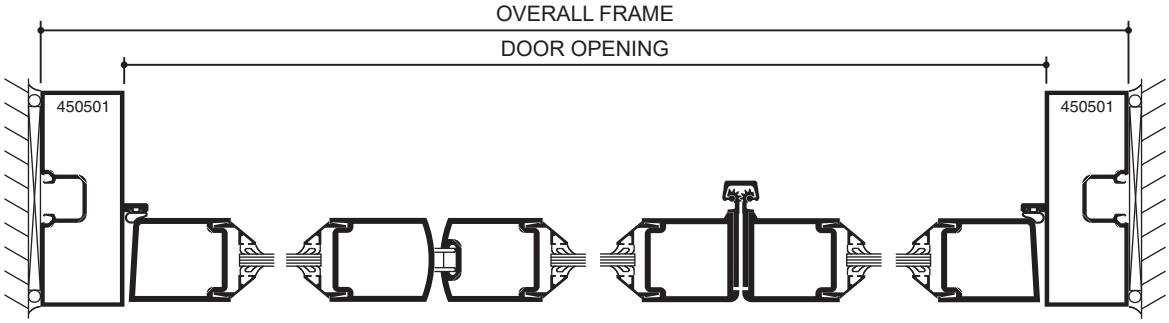

BIFOLD TYPE

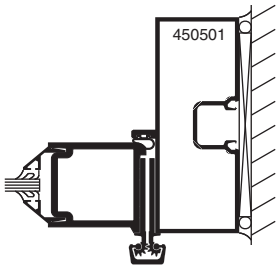

OPTIONAL CONTINUOUS HINGE JAMB

Laws and building and safety codes governing the design and use of Kawneer products, such as glazed entrance, window, and curtain wall products, vary widely. Kawneer does not control the selection of product configurations, operating hardware, or glazing materials, and assumes no responsibility therefor.

Kawneer reserves the right to change configuration without prior notice when deemed necessary for product improvement.

© 2015, Kawneer Company, Inc.

Additional information and CAD details are available at www.kawneer.com

HORIZONTAL / VERTICAL CROSS RAILS

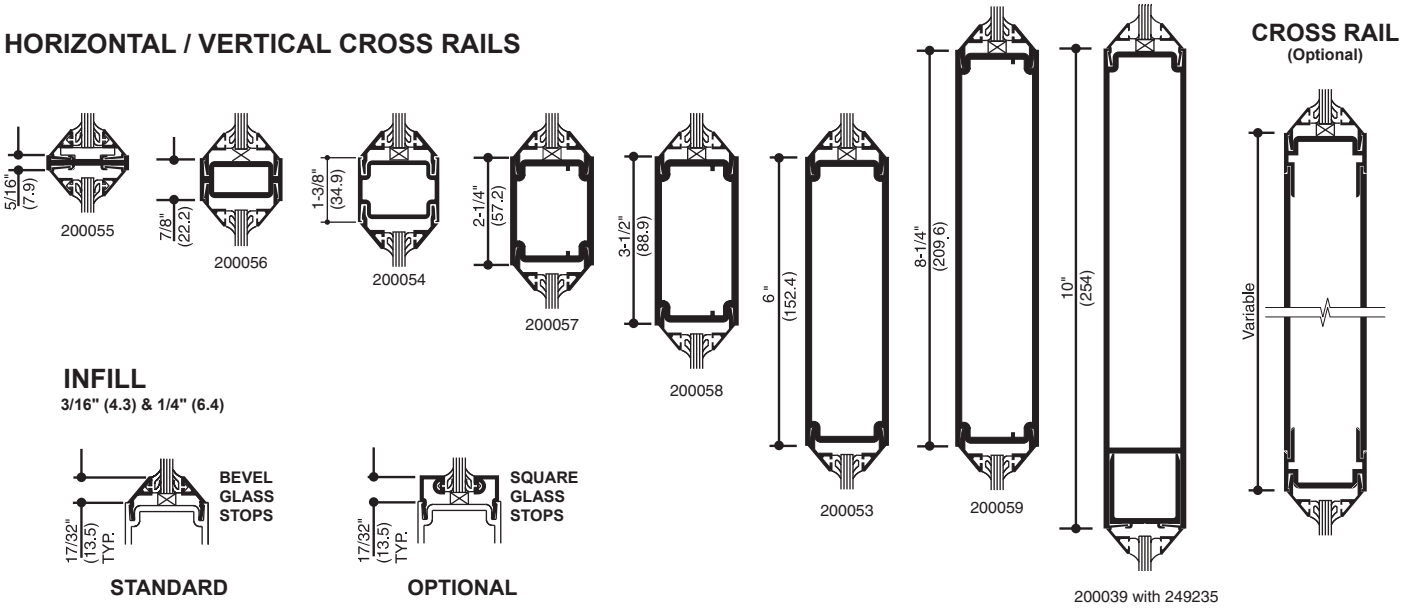

INFILL OPTIONS

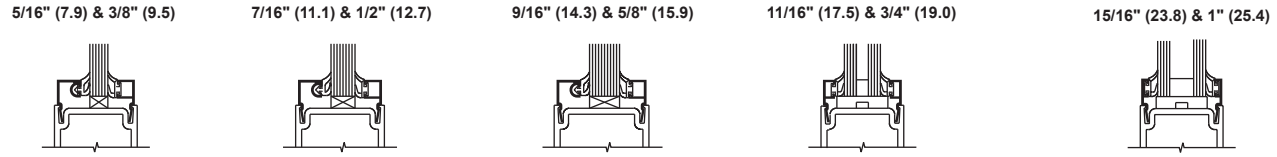

ACCESSORY ITEMS

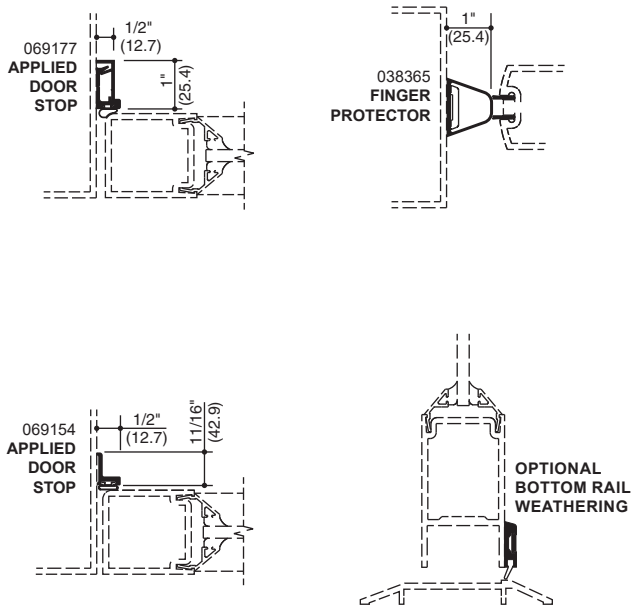

THRESHOLDS

APPLICATION

FOR SINGLE ACTING DOOR

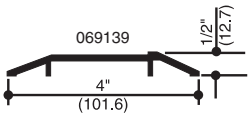

FOR CENTER HUNG CONCEALED CLOSER

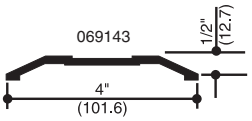

APPLIED STOP FOR SINGLE ACTING DOOR

FOR CENTER HUNG FLOOR CLOSERS

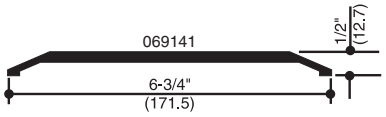

***SOME BUILDING CODES LIMIT THRESHOLD HEIGHT TO 1/2" (12.7) MAX.**

Laws and building and safety codes governing the design and use of Kawneer products, such as glazed entrance, window, and curtain wall products, vary widely. Kawneer does not control the selection of product configurations, operating hardware, or glazing materials, and assumes no responsibility therefor.

Kawneer reserves the right to change configuration without prior notice when deemed necessary for product improvement.

© 2015, Kawneer Company, Inc.

PUSH-PULLS

	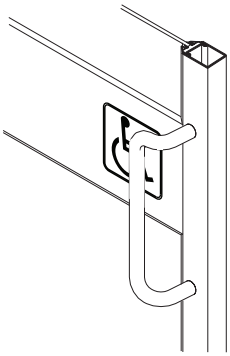	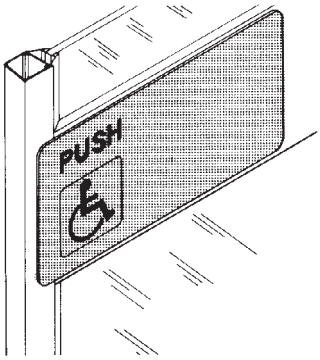
Description	Architects Classic CO-12 Pull	BF3 Push Shield with symbol
Application	Door with or without exit device	Door cross rail (omit w/exit device)
Length/Size	12" OC Pull attachment	15-7/8" x 7-7/8" (403.2 x 200.0) 1/8" (3.2) Thick
Height Location	44-5/16" from Top Mounting Hole to Btm. of Door	
Total Projection	3-1/4" (82.6)	1/8" (3.2)
Material / Finish	See Hardware Section	Black Plastic Pebble Finish

Note: The symbol of access is an adhesive backed decal applied to the surface of the optional cross rail. Letters and symbols on plastic push shield are engraved and filled with white epoxy enamel.

Laws and building and safety codes governing the design and use of Kawneer products, such as glazed entrance, window, and curtain wall products, vary widely. Kawneer does not control the selection of product configurations, operating hardware, or glazing materials, and assumes no responsibility therefor.

Kawneer reserves the right to change configuration without prior notice when deemed necessary for product improvement.

© 2015, Kawneer Company, Inc.

Additional information and CAD details are available at www.kawneer.com

STANDARD BOTTOM RAILS

Rail heights shown may be used on 190, 350, and 500 doors.

NOTE:
See Page 19 for available Horizontal Intermediate Members.

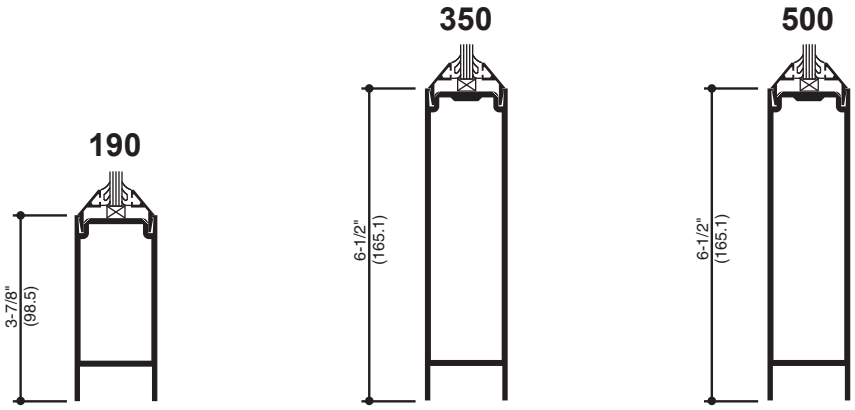

OPTIONAL BOTTOM RAILS

Rail heights shown may be used on 190, 350, and 500 doors.
Custom heights available.

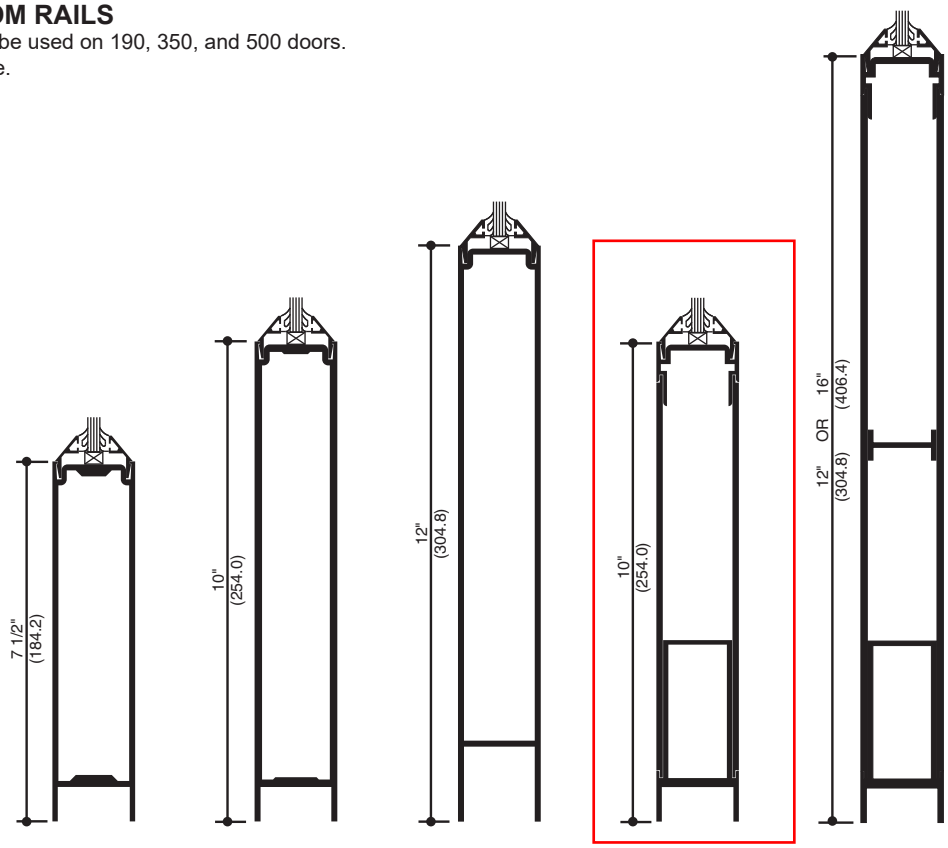

Laws and building and safety codes governing the design and use of Kawneer products, such as glazed entrance, window, and curtain wall products, vary widely. Kawneer does not control the selection of product configurations, operating hardware, or glazing materials, and assumes no responsibility therefor.

Kawneer reserves the right to change configuration without prior notice when deemed necessary for product improvement.

© 2015, Kawneer Company, Inc.

Generic Project Specific U-factor Example Calculation
(Percent of Glass will vary on specific products depending on sitelines)

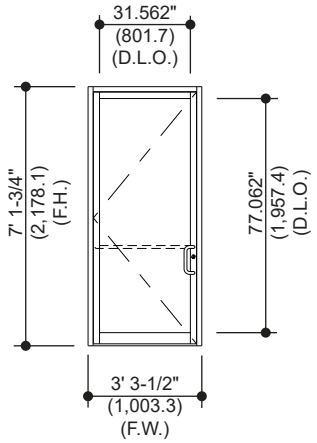

Example Glass U-Factor = 0.28 Btu/hr • ft² • °F

Total Daylight Opening = 31.562" x 77.062" = 16.89 ft²

Total Projected Area = 3' 3-1/2 x 7' 1-3/4" = 23.52 ft²

Percent of Glass = (Total Daylight Opening ÷ Total Projected Area)100
= (16.89 ÷ 23.52)100 = 72%

System U-factor vs Percent of Glass Area

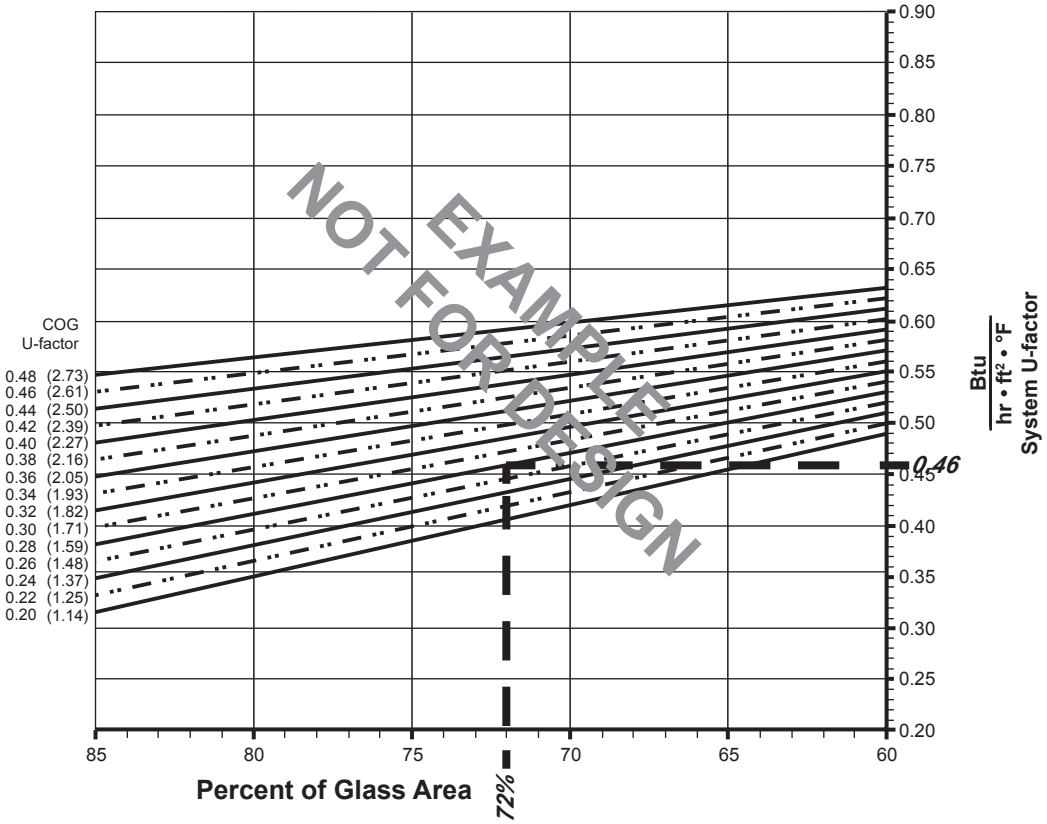

Based on 72% glass and center of glass (COG) U-factor of 0.28
System U-factor is equal to 0.46 Btu/hr • ft² • °F

Laws and building and safety codes governing the design and use of Kawneer products, such as glazed entrance, window, and curtain wall products, vary widely. Kawneer does not control the selection of product configurations, operating hardware, or glazing materials, and assumes no responsibility therefor.

Kawneer reserves the right to change configuration without prior notice when deemed necessary for product improvement.

© 2015, Kawneer Company, Inc.

190 (SINGLE DOOR)

System U-factor vs Percent of Glass Area

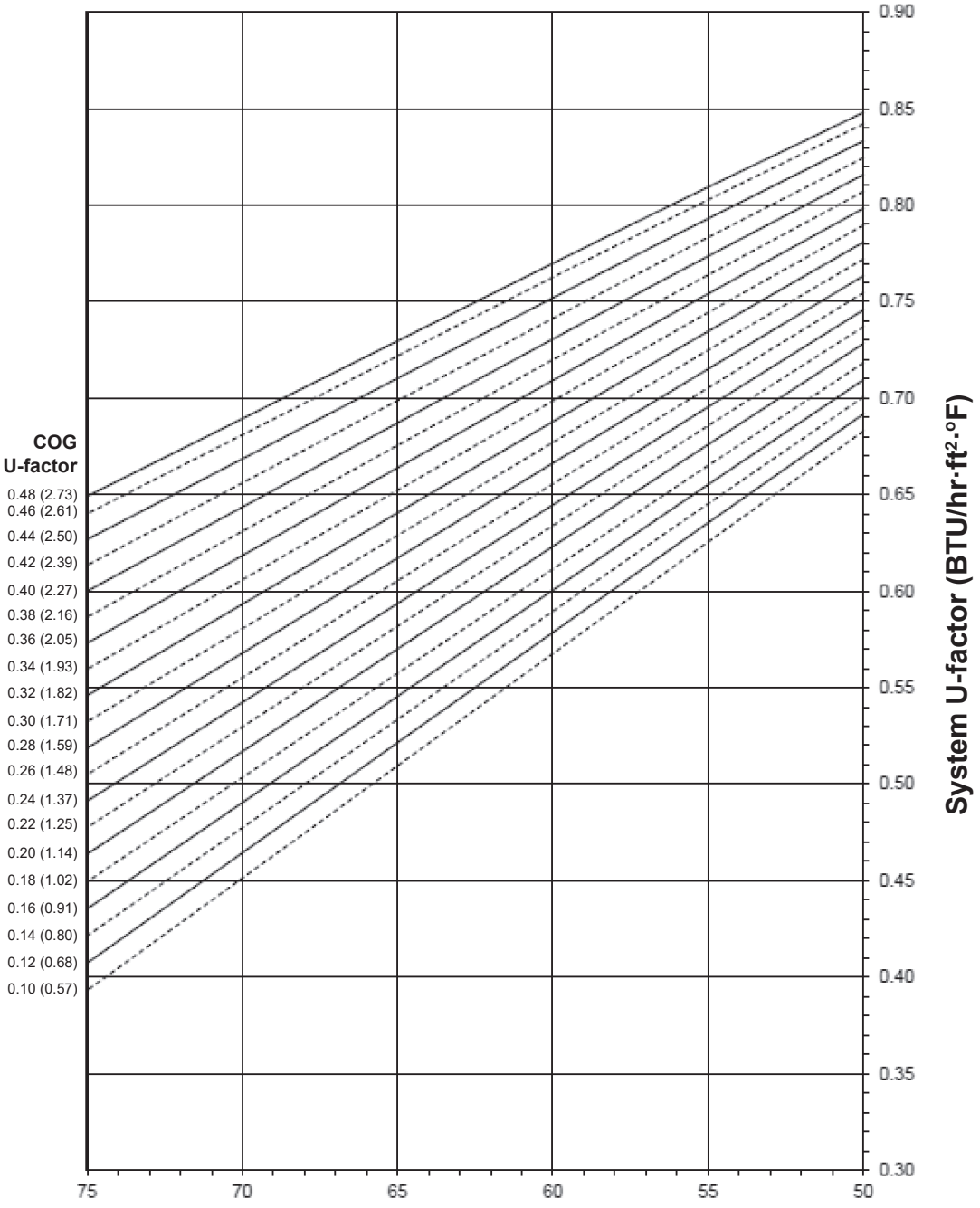

Percent of Glass = Vision Area/Total Area
(Total Daylight Opening / Projected Area)

Notes for System U-Factor, SHGC and VT charts:

For glass values that are not listed, linear interpolation is permitted.
Glass properties are based on center of glass values (winter conditions) and are obtained from your glass supplier.

Laws and building and safety codes governing the design and use of Kawneer products, such as glazed entrance, window, and curtain wall products, vary widely. Kawneer does not control the selection of product configurations, operating hardware, or glazing materials, and assumes no responsibility therefor.

Kawneer reserves the right to change configuration without prior notice when deemed necessary for product improvement.

© 2015, Kawneer Company, Inc.

190 (SINGLE DOOR)

System Solar Heat Gain Coefficient (SHGC) vs Percent of Vision Area

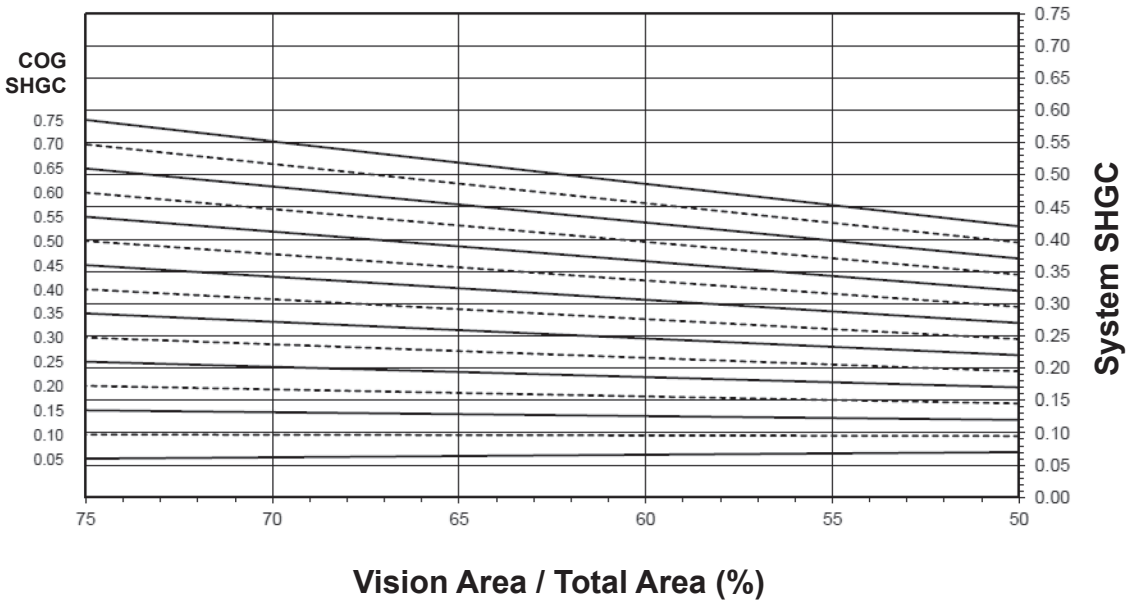

System Visible Transmittance (VT) vs Percent of Vision Area

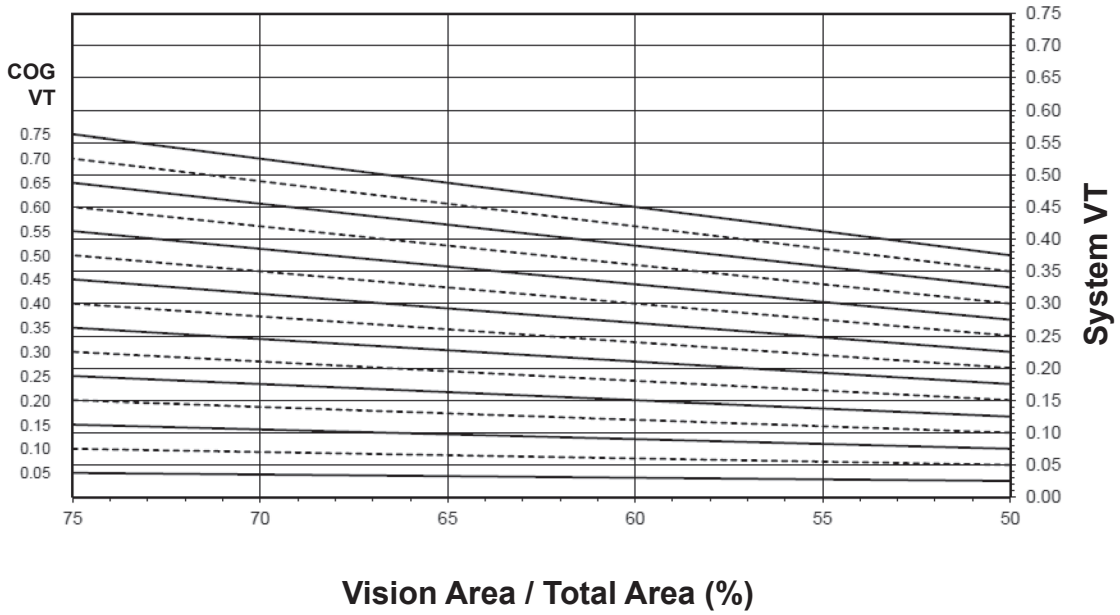

Laws and building and safety codes governing the design and use of Kawneer products, such as glazed entrance, window, and curtain wall products, vary widely. Kawneer does not control the selection of product configurations, operating hardware, or glazing materials, and assumes no responsibility therefor.

Kawneer reserves the right to change configuration without prior notice when deemed necessary for product improvement.

© 2015, Kawneer Company, Inc.

190 (SINGLE DOOR)

Thermal Transmittance [1] (BTU/hr • ft [2] • °F)

Glass U-Factor [3]	Overall U-Factor [4]
0.48	0.78
0.46	0.77
0.44	0.76
0.42	0.75
0.40	0.74
0.38	0.73
0.36	0.72
0.34	0.71
0.32	0.70
0.30	0.69
0.28	0.68
0.26	0.67
0.24	0.66
0.22	0.65
0.20	0.65
0.18	0.63
0.16	0.61
0.14	0.60
0.12	0.59
0.10	0.58

NOTE: For glass values that are not listed, linear interpolation is permitted.

1. U-Factors are determined in accordance with NFRC 100.
2. SHGC and VT values are determined in accordance with NFRC 200.
3. Glass properties are based on center of glass values and are obtained from your glass supplier.
4. Overall U-Factor, SHGC, and VT Matricies are based on the standard NFRC specimen size of 960 mm wide by 2,090 mm high (37-3/4" by 82-3/8").

SHGC Matrix [2]

Glass SHGC [3]	Overall SHGC [4]
0.75	0.48
0.70	0.45
0.65	0.42
0.60	0.39
0.55	0.36
0.50	0.33
0.45	0.30
0.40	0.27
0.35	0.24
0.30	0.21
0.25	0.18
0.20	0.15
0.15	0.13
0.10	0.10
0.05	0.07

Visible Transmittance [2]

Glass VT [3]	Overall VT [4]
0.75	0.44
0.70	0.41
0.65	0.38
0.60	0.35
0.55	0.32
0.50	0.29
0.45	0.26
0.40	0.23
0.35	0.21
0.30	0.18
0.25	0.15
0.20	0.12
0.15	0.09
0.10	0.06
0.05	0.03

Laws and building and safety codes governing the design and use of Kawneer products, such as glazed entrance, window, and curtain wall products, vary widely. Kawneer does not control the selection of product configurations, operating hardware, or glazing materials, and assumes no responsibility therefor.

Kawneer reserves the right to change configuration without prior notice when deemed necessary for product improvement.

© 2015, Kawneer Company, Inc.

190 (PAIR OF DOORS)

System U-factor vs Percent of Glass Area

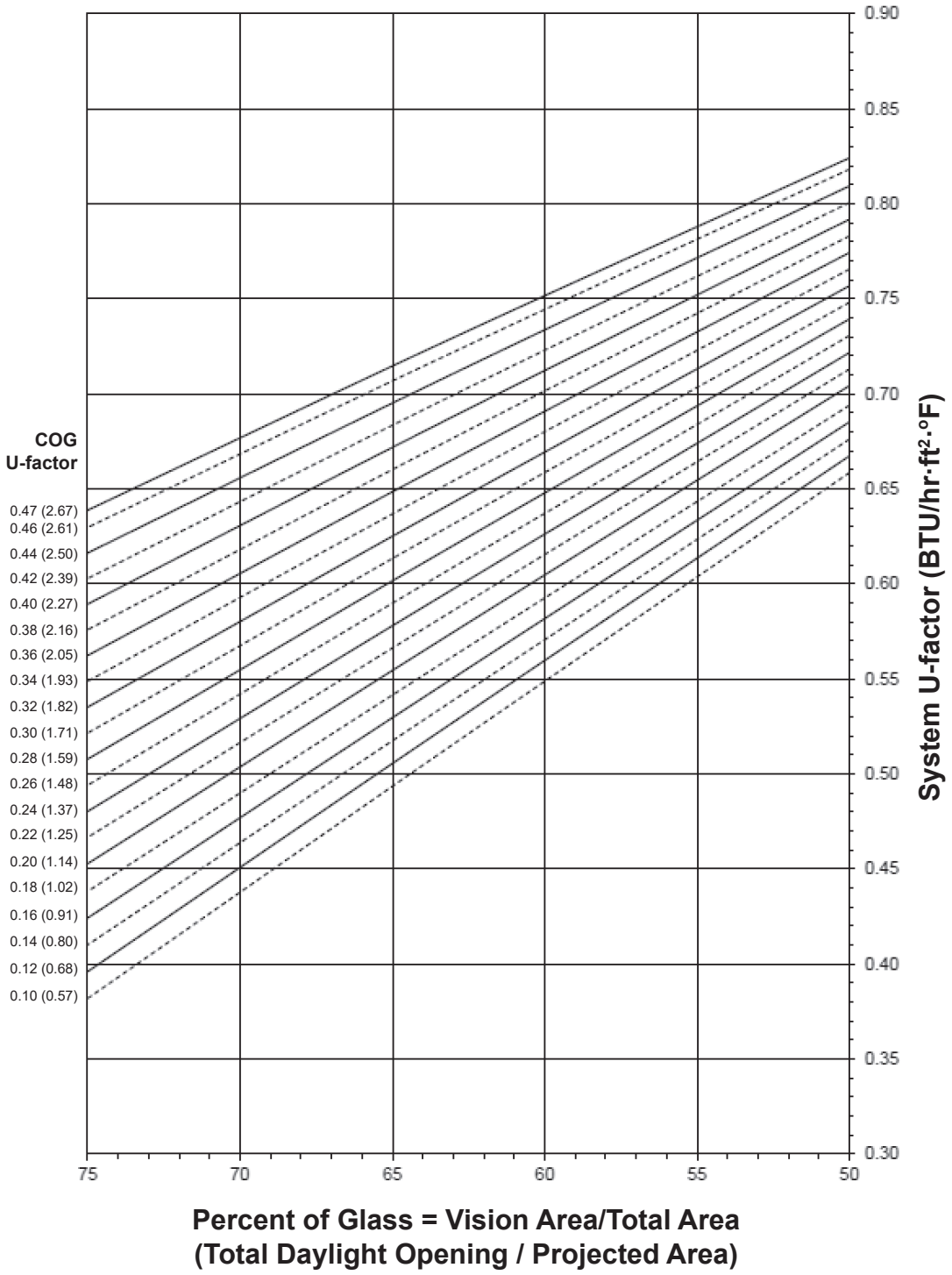

Notes for System U-Factor, SHGC and VT charts:

For glass values that are not listed, linear interpolation is permitted.

Glass properties are based on center of glass values (winter conditions) and are obtained from your glass supplier.

Laws and building and safety codes governing the design and use of Kawneer products, such as glazed entrance, window, and curtain wall products, vary widely. Kawneer does not control the selection of product configurations, operating hardware, or glazing materials, and assumes no responsibility therefor.

Kawneer reserves the right to change configuration without prior notice when deemed necessary for product improvement.

© 2015, Kawneer Company, Inc.

190 (PAIR OF DOORS)

System Solar Heat Gain Coefficient (SHGC) vs Percent of Vision Area

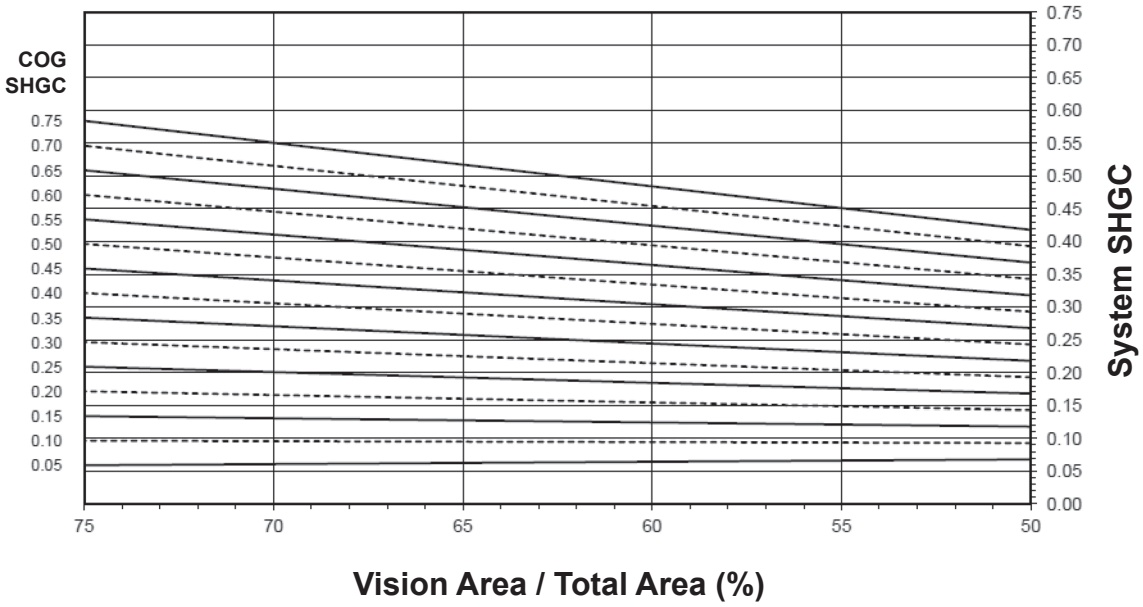

System Visible Transmittance (VT) vs Percent of Vision Area

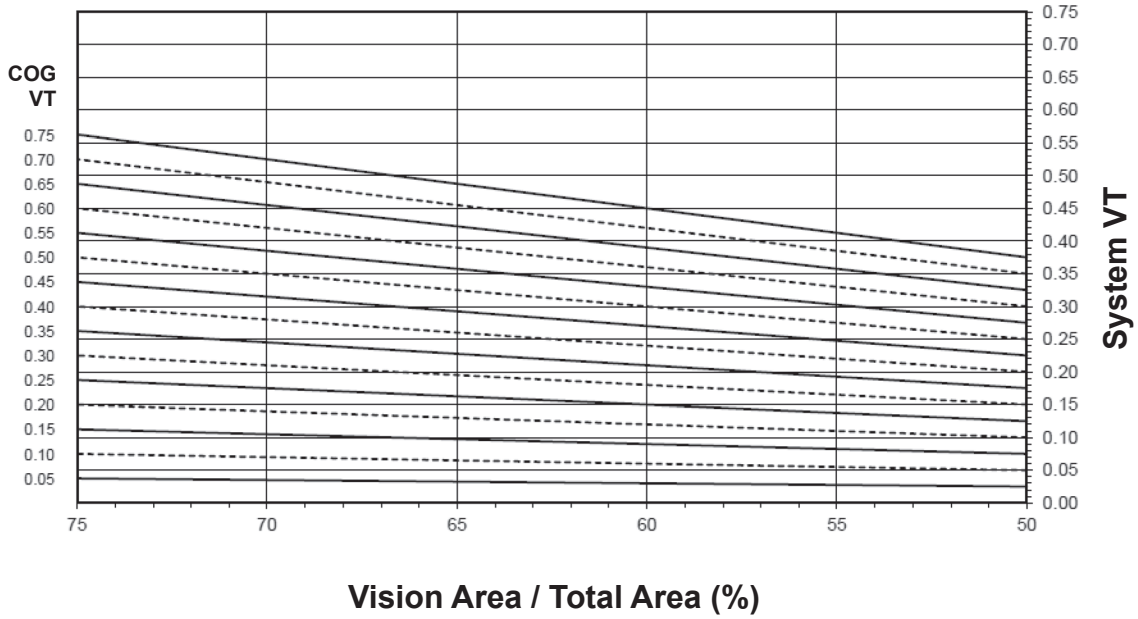

Laws and building and safety codes governing the design and use of Kawneer products, such as glazed entrance, window, and curtain wall products, vary widely. Kawneer does not control the selection of product configurations, operating hardware, or glazing materials, and assumes no responsibility therefor.

Kawneer reserves the right to change configuration without prior notice when deemed necessary for product improvement.

© 2015, Kawneer Company, Inc.

190 (PAIR OF DOORS)

Thermal Transmittance [1] (BTU/hr • ft [2] • °F)

Glass U-Factor [3]	Overall U-Factor [4]
0.47	0.73
0.46	0.72
0.44	0.71
0.42	0.70
0.40	0.69
0.38	0.68
0.36	0.67
0.34	0.66
0.32	0.64
0.30	0.63
0.28	0.62
0.26	0.61
0.24	0.60
0.22	0.59
0.20	0.58
0.18	0.56
0.16	0.55
0.14	0.54
0.12	0.53
0.10	0.52

NOTE: For glass values that are not listed, linear interpolation is permitted.

1. U-Factors are determined in accordance with NFRC 100.
2. SHGC and VT values are determined in accordance with NFRC 200.
3. Glass properties are based on center of glass values and are obtained from your glass supplier.
4. Overall U-Factor, SHGC, and VT Matricies are based on the standard NFRC specimen size of 1,920 mm wide by 2,090 mm high (75-1/2" by 82-3/8").

SHGC Matrix [2]

Glass SHGC [3]	Overall SHGC [4]
0.75	0.50
0.70	0.47
0.65	0.44
0.60	0.41
0.55	0.38
0.50	0.35
0.45	0.31
0.40	0.28
0.35	0.25
0.30	0.22
0.25	0.19
0.20	0.16
0.15	0.13
0.10	0.09
0.05	0.06

Visible Transmittance [2]

Glass VT [3]	Overall VT [4]
0.75	0.47
0.70	0.44
0.65	0.41
0.60	0.38
0.55	0.35
0.50	0.31
0.45	0.28
0.40	0.25
0.35	0.22
0.30	0.19
0.25	0.16
0.20	0.13
0.15	0.09
0.10	0.06
0.05	0.03

Laws and building and safety codes governing the design and use of Kawneer products, such as glazed entrance, window, and curtain wall products, vary widely. Kawneer does not control the selection of product configurations, operating hardware, or glazing materials, and assumes no responsibility therefor.

Kawneer reserves the right to change configuration without prior notice when deemed necessary for product improvement.

© 2015, Kawneer Company, Inc.

350 (SINGLE DOOR)

System U-factor vs Percent of Glass Area

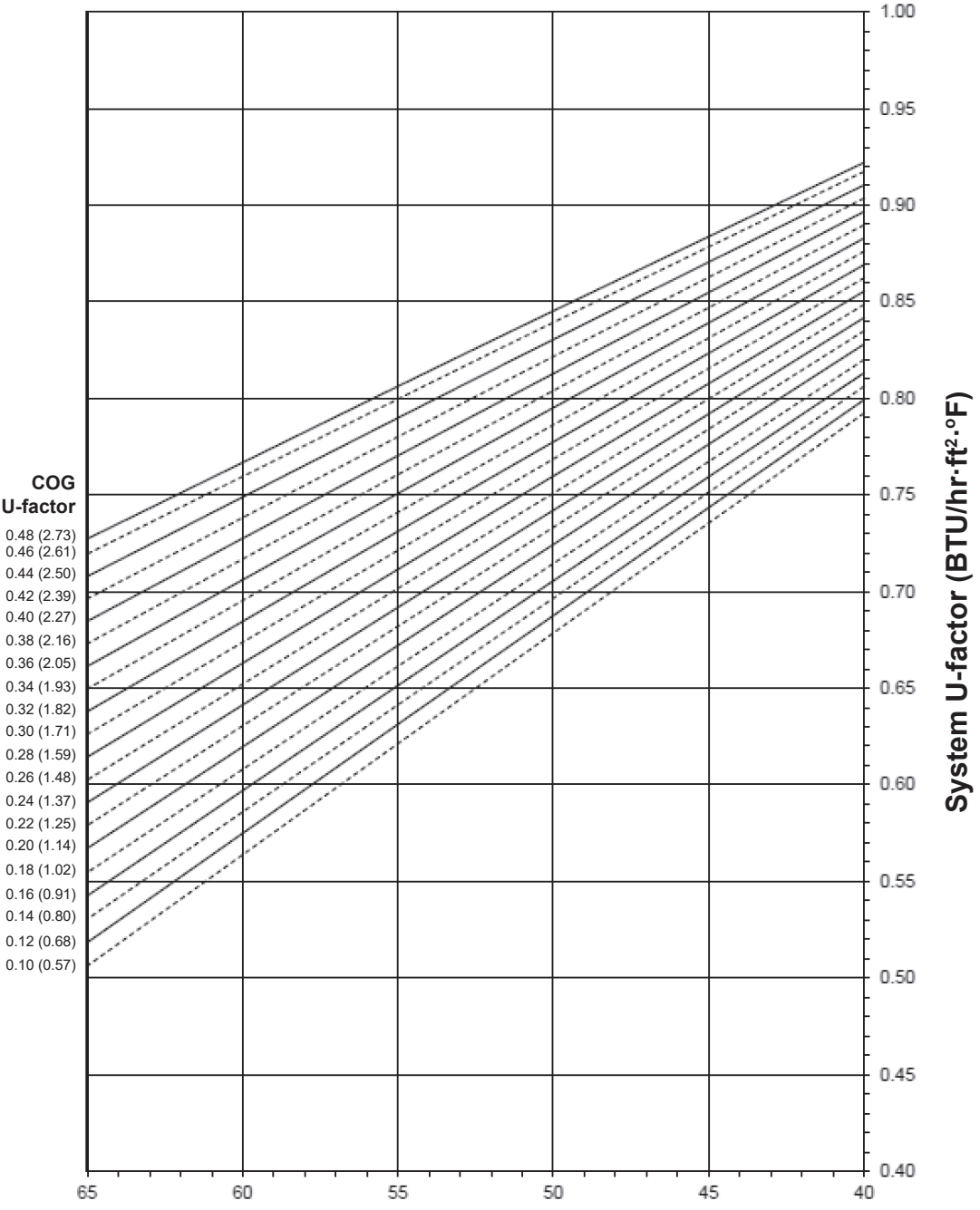

Percent of Glass = Vision Area/Total Area
(Total Daylight Opening / Projected Area)

Notes for System U-Factor, SHGC and VT charts:

For glass values that are not listed, linear interpolation is permitted.
Glass properties are based on center of glass values (winter conditions) and are obtained from your glass supplier.

Laws and building and safety codes governing the design and use of Kawneer products, such as glazed entrance, window, and curtain wall products, vary widely. Kawneer does not control the selection of product configurations, operating hardware, or glazing materials, and assumes no responsibility therefor.

Kawneer reserves the right to change configuration without prior notice when deemed necessary for product improvement.

© 2015, Kawneer Company, Inc.

350 (SINGLE DOOR)

System Solar Heat Gain Coefficient (SHGC) vs Percent of Vision Area

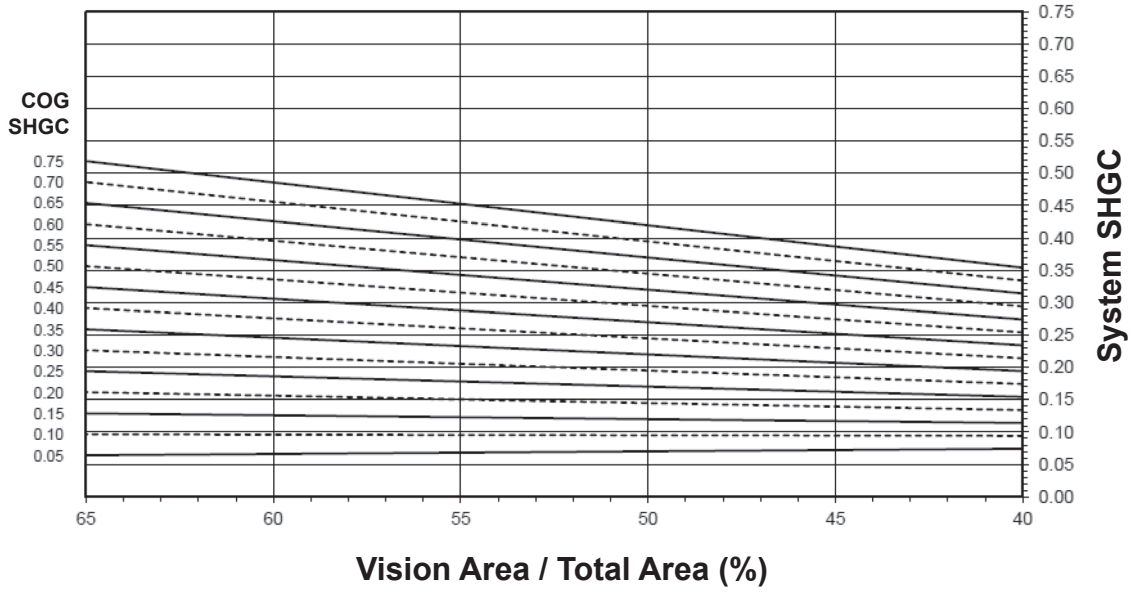

System Visible Transmittance (VT) vs Percent of Vision Area

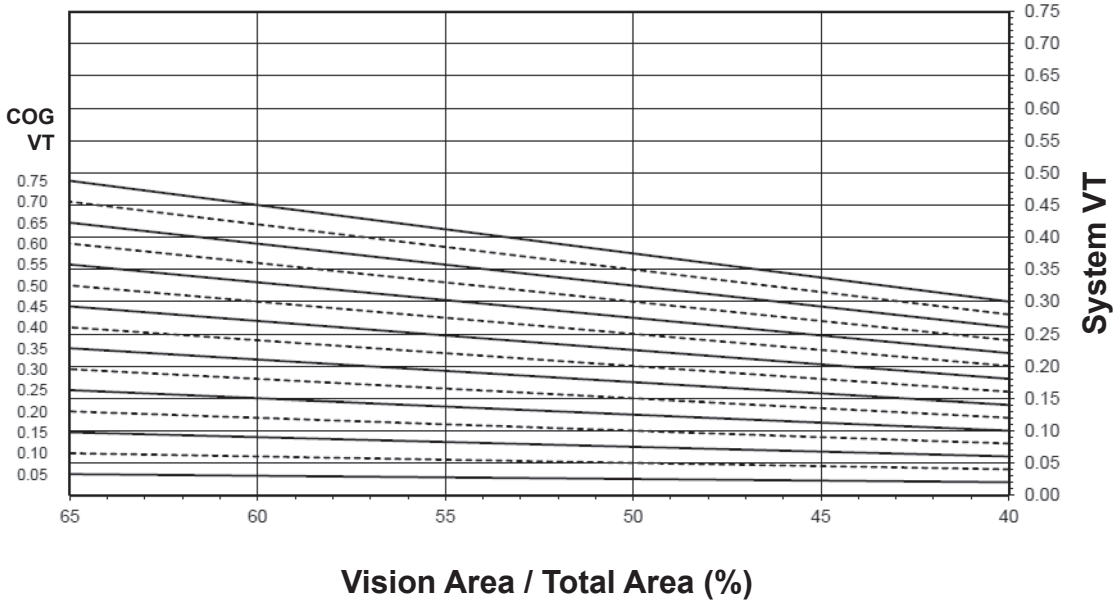

Laws and building and safety codes governing the design and use of Kawneer products, such as glazed entrance, window, and curtain wall products, vary widely. Kawneer does not control the selection of product configurations, operating hardware, or glazing materials, and assumes no responsibility therefor.

Kawneer reserves the right to change configuration without prior notice when deemed necessary for product improvement.

© 2015, Kawneer Company, Inc.

350 (SINGLE DOOR)

Thermal Transmittance [1] (BTU/hr • ft [2] • °F)

Glass U-Factor [3]	Overall U-Factor [4]
0.48	0.83
0.46	0.82
0.44	0.81
0.42	0.81
0.40	0.80
0.38	0.79
0.36	0.78
0.34	0.77
0.32	0.76
0.30	0.75
0.28	0.74
0.26	0.73
0.24	0.72
0.22	0.71
0.20	0.70
0.18	0.69
0.16	0.68
0.14	0.68
0.12	0.67
0.10	0.66

NOTE: For glass values that are not listed, linear interpolation is permitted.

1. U-Factors are determined in accordance with NFRC 100.
2. SHGC and VT values are determined in accordance with NFRC 200.
3. Glass properties are based on center of glass values and are obtained from your glass supplier.
4. Overall U-Factor, SHGC, and VT Matricies are based on the standard NFRC specimen size of 960 mm wide by 2,090 mm high (37-3/4" by 82-3/8").

SHGC Matrix [2]

Glass SHGC [3]	Overall SHGC [4]
0.75	0.43
0.70	0.41
0.65	0.38
0.60	0.36
0.55	0.33
0.50	0.30
0.45	0.28
0.40	0.25
0.35	0.23
0.30	0.20
0.25	0.17
0.20	0.15
0.15	0.12
0.10	0.10
0.05	0.07

Visible Transmittance [2]

Glass VT [3]	Overall VT [4]
0.75	0.39
0.70	0.36
0.65	0.34
0.60	0.31
0.55	0.29
0.50	0.26
0.45	0.23
0.40	0.21
0.35	0.18
0.30	0.16
0.25	0.13
0.20	0.10
0.15	0.08
0.10	0.05
0.05	0.03

Laws and building and safety codes governing the design and use of Kawneer products, such as glazed entrance, window, and curtain wall products, vary widely. Kawneer does not control the selection of product configurations, operating hardware, or glazing materials, and assumes no responsibility therefor.

Kawneer reserves the right to change configuration without prior notice when deemed necessary for product improvement.

© 2015, Kawneer Company, Inc.

350 (PAIR OF DOORS)

System U-factor vs Percent of Glass Area

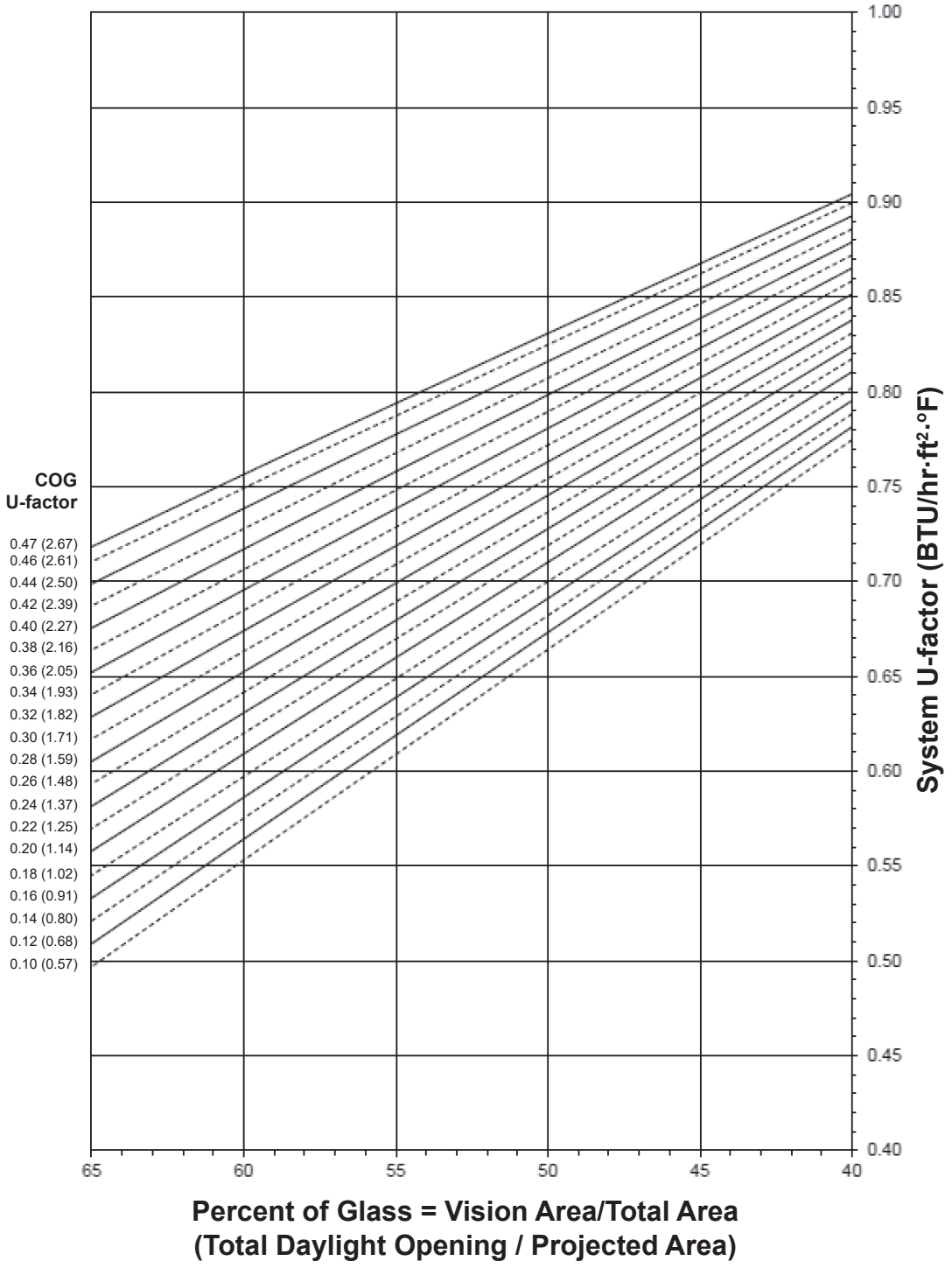

Notes for System U-Factor, SHGC and VT charts:

For glass values that are not listed, linear interpolation is permitted.

Glass properties are based on center of glass values (winter conditions) and are obtained from your glass supplier.

Laws and building and safety codes governing the design and use of Kawneer products, such as glazed entrance, window, and curtain wall products, vary widely. Kawneer does not control the selection of product configurations, operating hardware, or glazing materials, and assumes no responsibility therefor.

Kawneer reserves the right to change configuration without prior notice when deemed necessary for product improvement.

© 2015, Kawneer Company, Inc.

350 (PAIR OF DOORS)

System Solar Heat Gain Coefficient (SHGC) vs Percent of Vision Area

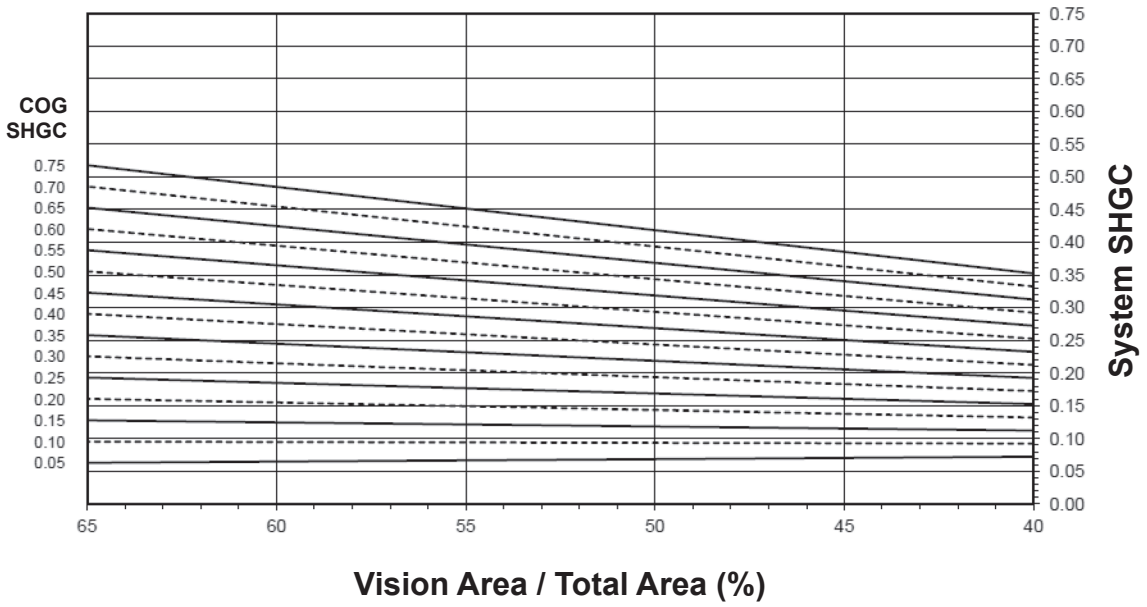

System Visible Transmittance (VT) vs Percent of Vision Area

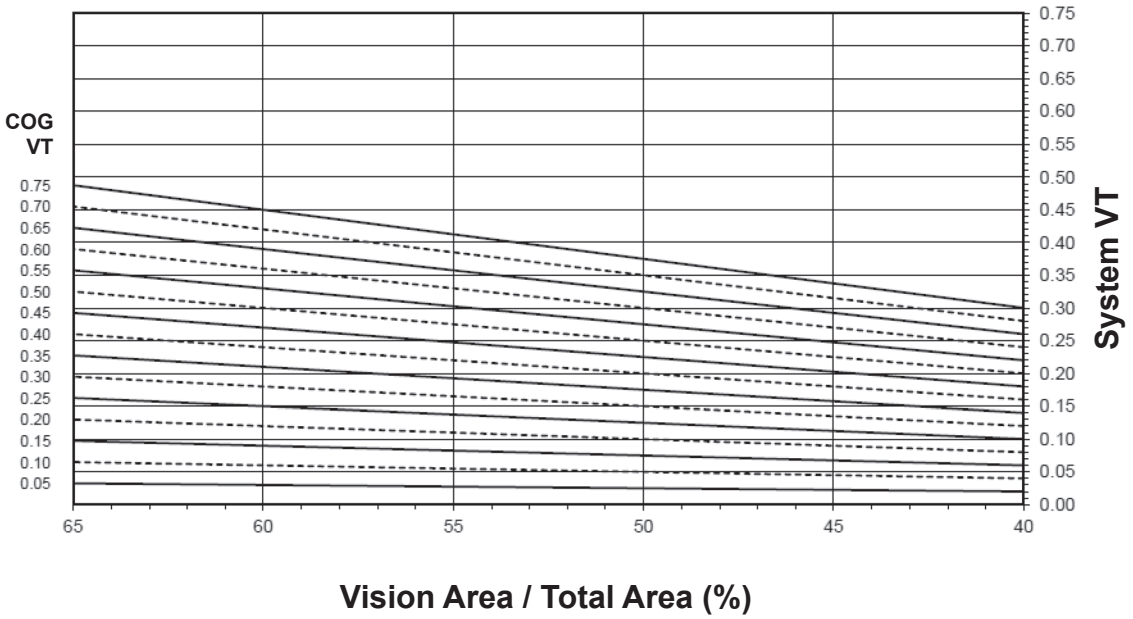

Laws and building and safety codes governing the design and use of Kawneer products, such as glazed entrance, window, and curtain wall products, vary widely. Kawneer does not control the selection of product configurations, operating hardware, or glazing materials, and assumes no responsibility therefor.

Kawneer reserves the right to change configuration without prior notice when deemed necessary for product improvement.

© 2015, Kawneer Company, Inc.

350 (PAIR OF DOORS)

Thermal Transmittance [1] (BTU/hr • ft [2] • °F)

Glass U-Factor [3]	Overall U-Factor [4]
0.47	0.79
0.46	0.78
0.44	0.77
0.42	0.76
0.40	0.75
0.38	0.74
0.36	0.73
0.34	0.72
0.32	0.71
0.30	0.70
0.28	0.69
0.26	0.68
0.24	0.67
0.22	0.66
0.20	0.65
0.18	0.64
0.16	0.63
0.14	062
0.12	0.61
0.10	0.60

NOTE: For glass values that are not listed, linear interpolation is permitted.

1. U-Factors are determined in accordance with NFRC 100.
2. SHGC and VT values are determined in accordance with NFRC 200.
3. Glass properties are based on center of glass values and are obtained from your glass supplier.
4. Overall U-Factor, SHGC, and VT Matricies are based on the standard NFRC specimen size of 1,920 mm wide by 2,090 mm high (75-1/2" by 82-3/8").

SHGC Matrix [2]

Glass SHGC [3]	Overall SHGC [4]
0.75	0.46
0.70	0.43
0.65	0.40
0.60	0.37
0.55	0.35
0.50	0.32
0.45	0.29
0.40	0.26
0.35	0.23
0.30	0.21
0.25	0.18
0.20	0.15
0.15	0.12
0.10	0.09
0.05	0.07

Visible Transmittance [2]

Glass VT [3]	Overall VT [4]
0.75	0.42
0.70	0.39
0.65	0.36
0.60	0.34
0.55	0.31
0.50	0.28
0.45	0.25
0.40	0.22
0.35	0.20
0.30	0.17
0.25	0.14
0.20	0.11
0.15	0.08
0.10	0.06
0.05	0.03

Laws and building and safety codes governing the design and use of Kawneer products, such as glazed entrance, window, and curtain wall products, vary widely. Kawneer does not control the selection of product configurations, operating hardware, or glazing materials, and assumes no responsibility therefor.

Kawneer reserves the right to change configuration without prior notice when deemed necessary for product improvement.

© 2015, Kawneer Company, Inc.

500 (SINGLE DOOR)

System U-factor vs Percent of Glass Area

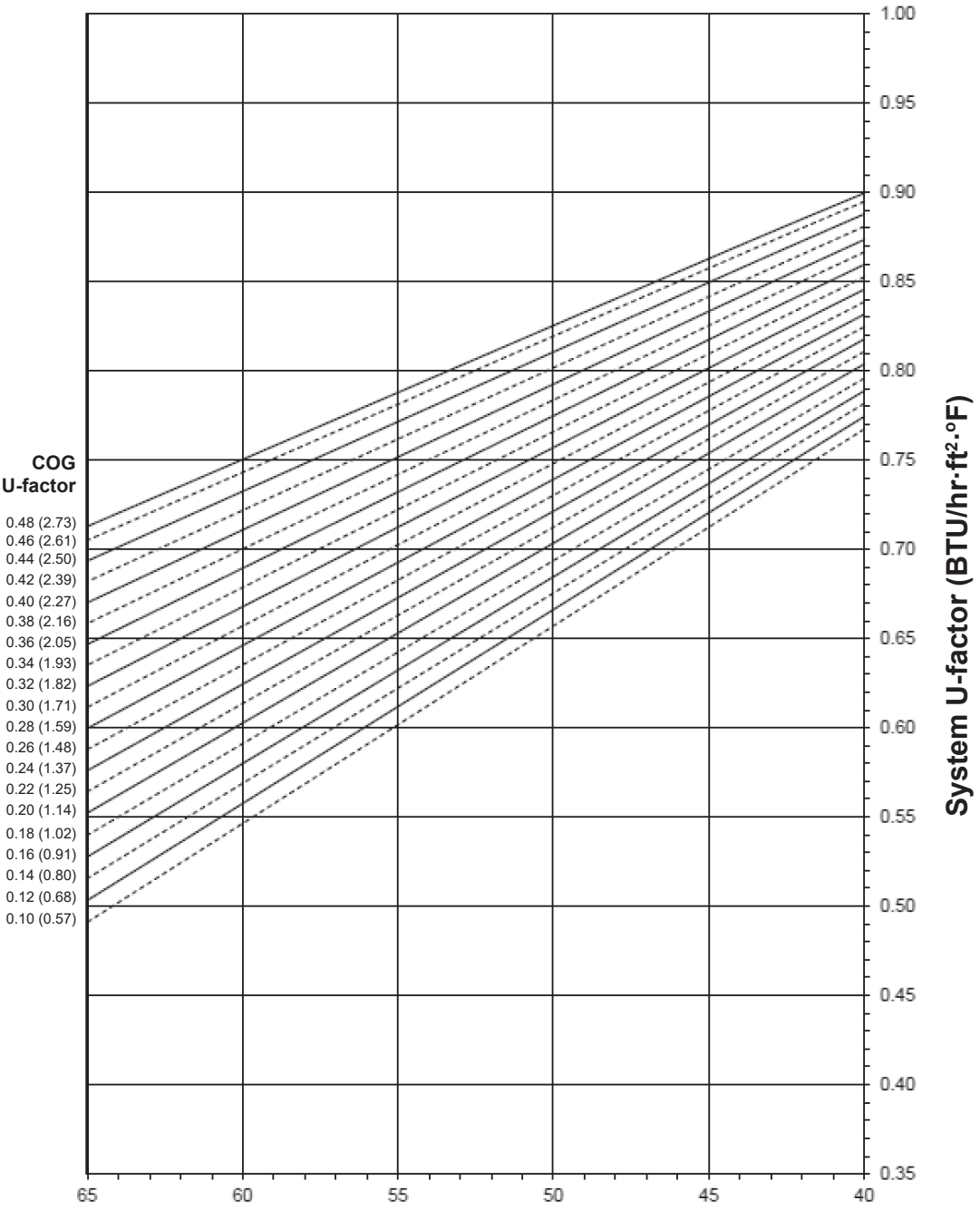

Notes for System U-Factor, SHGC and VT charts:

For glass values that are not listed, linear interpolation is permitted.
Glass properties are based on center of glass values (winter conditions) and are obtained from your glass supplier.

Laws and building and safety codes governing the design and use of Kawneer products, such as glazed entrance, window, and curtain wall products, vary widely. Kawneer does not control the selection of product configurations, operating hardware, or glazing materials, and assumes no responsibility therefor.

Kawneer reserves the right to change configuration without prior notice when deemed necessary for product improvement.

© 2015, Kawneer Company, Inc.

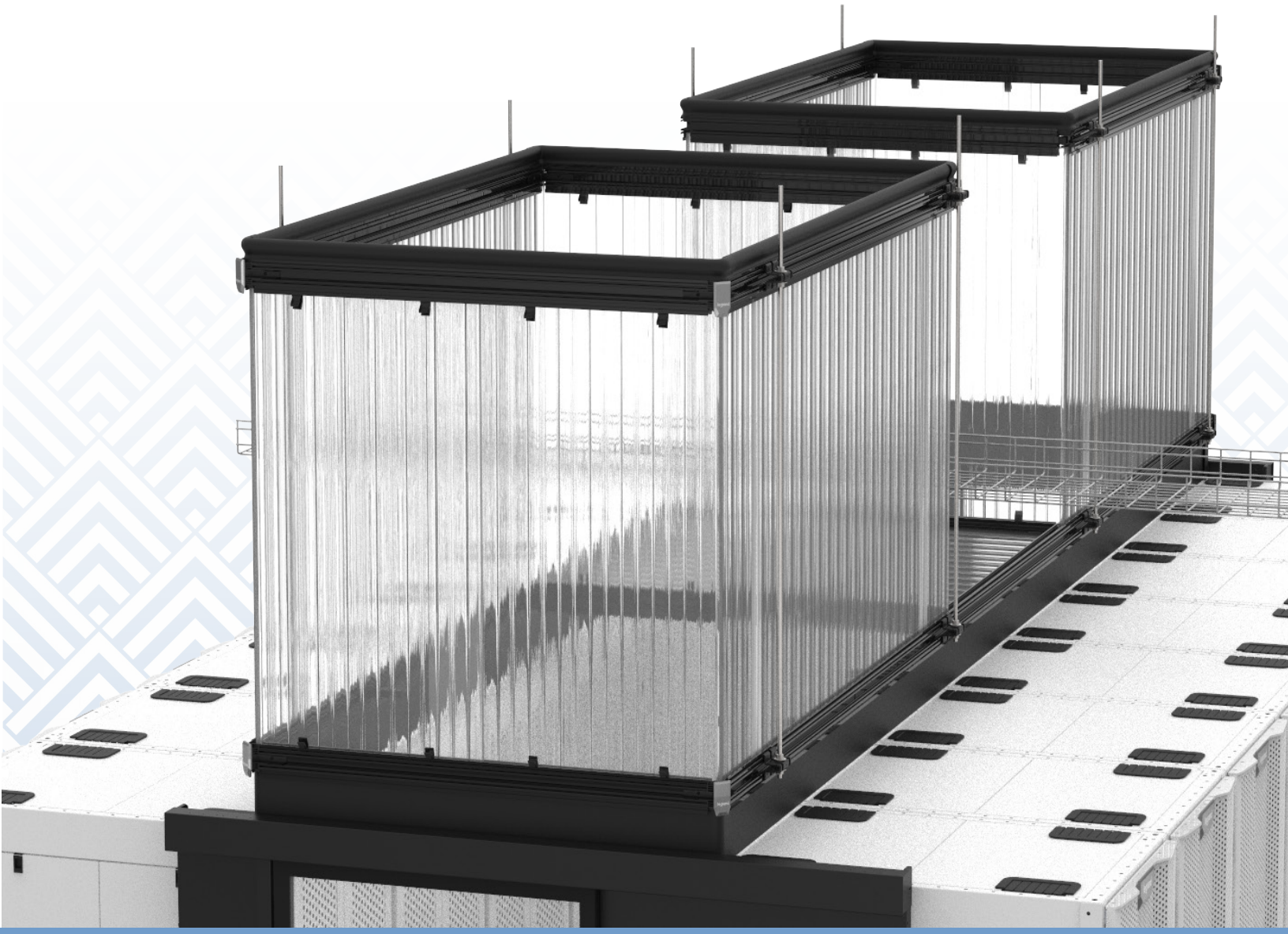

CONTAIN-IT™ FLEX

AISLE CONTAINMENT SOLUTION

APPLICATION GUIDE

designed to be better.™

legrand®

TABLE OF CONTENTS:

02 System Integrity
03 How to Specify
04 Contain-IT™ FLEX Components
06 Aisle Kit Part Numbers
08 Component Part Numbers
09 End-of-Row Door Selection
10 End-of-Row Door Part Numbers
12 Overcoming Obstructions
16 Auxiliary Load Hanging
18 Build Your Solution
21 Flammability and Smoke Ratings

Vertical to Horizontal Containment

DESIGNED TO MAXIMIZE **EFFICIENCY & RELIABILITY**

CONTAIN-IT™ FLEX
AISLE CONTAINMENT SOLUTION

All data centers require proper airflow management for maximum efficiency and reliability, but each data center has a unique set of parameters. This application guide will help you choose the appropriate kits and components for integrating Legrand's Contain-IT FLEX solution in your greenfield or brownfield installation. The Contain-IT FLEX solution has been designed to be adaptable to any situation or challenge that may arise in the designing or installation of a containment solution, many of which we share in this guide.

CONTAIN-IT FLEX BENEFITS:

- Horizontal and vertical solutions
- Ideal for hot aisle, cold aisle or stratification applications
- Roof supported, cabinet supported or attached to Cablofil basket tray
- Modular solution for maximum adaptability
- Pre-configured aisle sizes
- Configure to order for non-uniform aisles
- Snap-to-fit for ease of installation
- Minimal installation time
- Cost effective
- Ability to support 8 pounds per linear foot of auxiliary equipment
- Ability to overcome obstacles including:
  - Building columns
  - City-scape aisles
  - Gaps in rows
  - Overhead cable management
  - Overhead trades
  - In row cooling

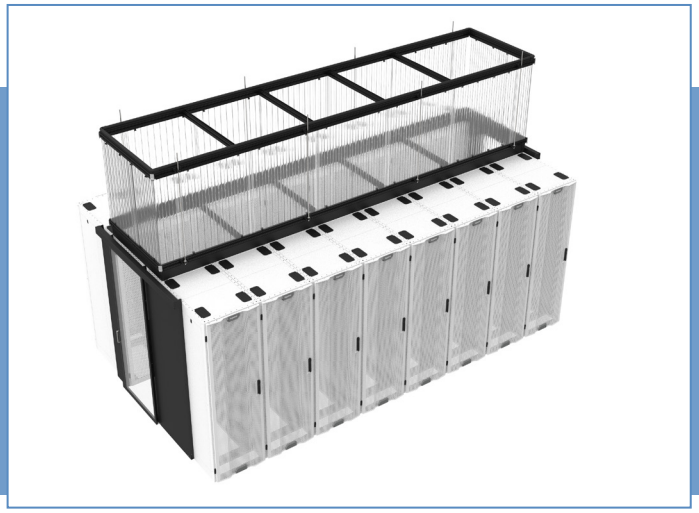

Vertical Containment

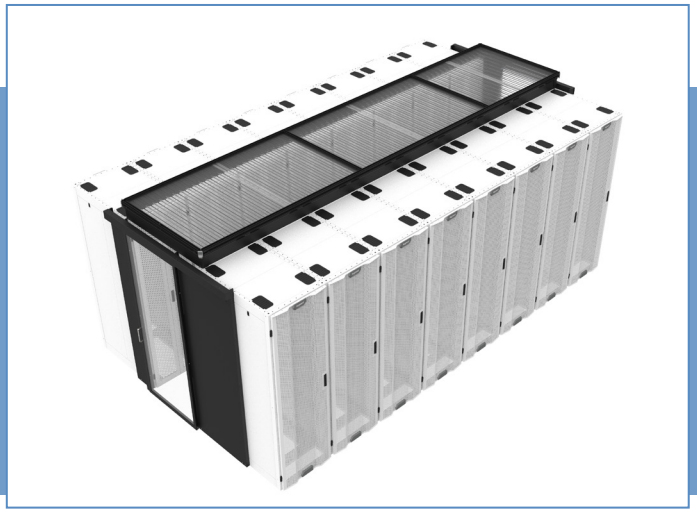

Horizontal Containment

SYSTEM INTEGRITY:

Contain-IT™ FLEX was tested in the horizontal and vertical application. The superior design allows for all joints to be sealed, which provides a high level of system integrity. The test results are:

HORIZONTAL CONTAINMENT:

The system contained 98.7% of the volumetric flow at 0.03 inches of water at 2000 CFM per cabinet for a 4' wide, 24' long aisle, inclusive of two 92" tall end of row doors.

VERTICAL CONTAINMENT:

The system contained 97.7% of the volumetric flow at 0.03 inches of water at 2000 CFM per cabinet for a 4' tall, 4' wide aisle, 24' long aisle, inclusive of two 92" tall end of row doors.

For more information, please contact customer support.

SYSTEM WEIGHT PER LINEAR FOOT:

Vertical Containment, 4' tall , 4' wide (not including doors):

- Plastic beam: weighs less than 10 lbs per aisle foot
- Aluminum beam: weighs less than 15 lbs per aisle foot

Horizontal Containment, 4' wide (not including doors):

- Plastic beam: weighs less than 7 lbs per aisle foot
- Aluminum beam: weighs less than 12 lbs per aisle foot

LOAD CARRYING CAPACITY:

Cross members must be loaded symmetrically about the beam web, to avoid a twisting load on the beam.

- Plastic beam: capable of carrying 7.5 lbs per aisle foot, 30 lbs maximum per cross member.
- Aluminum beam: capable of carrying 10 lbs per aisle foot, 40 lbs maximum per cross member.

Vertical Containment

HOW TO SPECIFY:

There are several attributes that need to be considered when building a containment specification. The following is a list of those attributes that need to be specified for a full containment solution.

- **Containment Type:** Horizontal, Vertical, or Mixed Containment
- **Aisle Type:** Cabinet-to-Cabinet or Cabinet-to-Wall
- **Beam Type:** Plastic or Aluminum
- **Panel Type:** Multi-Wall or Drop Away (Horizontal Only)
- **Support Method:** Cabinet, Roof (Threaded Rod) or Cablofil
- **Length of Aisle:** Length in Feet
- **Width of Aisle:** Width in Feet
- **Door Type:** Left-Sliding, Right-Sliding, Dual-Sliding, Cabinet-to-Wall (Left or Right-Sliding)
- **Special Considerations:** Obstructions or Obstacles
- **Additional Load:** Auxiliary Load Required
- **Fire Suppression:** Contact the local fire authority to ensure codes are followed with the containment installation.

See pages 18-20 for additional information on specifying.

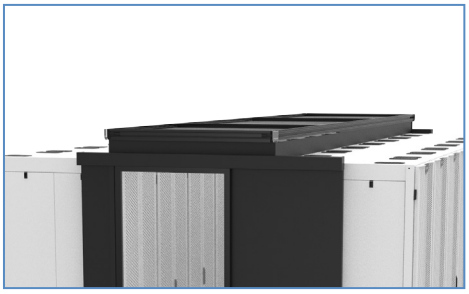

Horizontal Containment

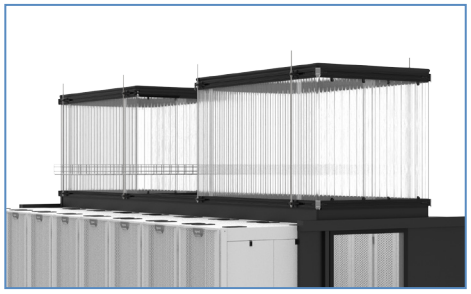

Mixed Containment

Plastic Beam

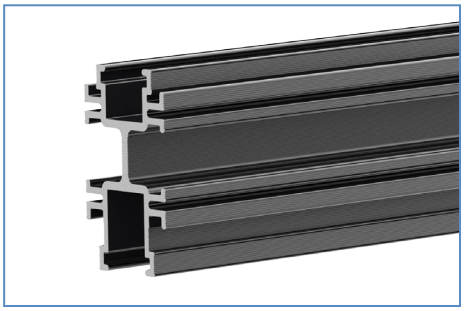

Aluminum Beam

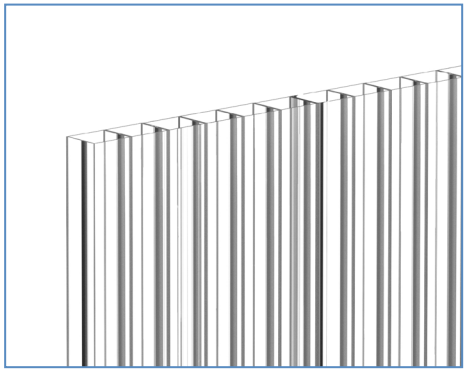

Multi-Wall Panel

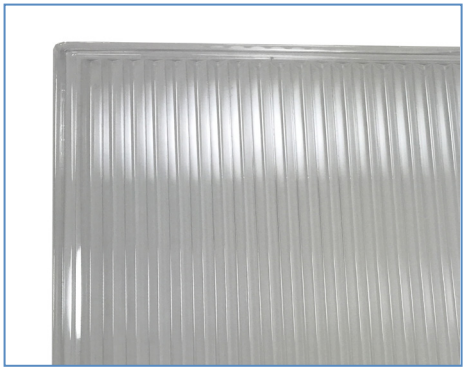

Drop Away Panel

Dual Sliding Door

Left Sliding Door

Cabinet to Wall

CONTAIN-IT™ FLEX COMPONENTS

Contain-IT FLEX is available in pre-configured kits for uniform aisles. The components are also available individually. The components can be selected and configured into solutions to overcome obstacles such as missing cabinets within a row. Containing a unique row can be accomplished by ordering a kit and some components for a relatively uniform aisle. If the aisle is non-uniform the components can be selected and configured to overcome the obstacles and contain the aisle.

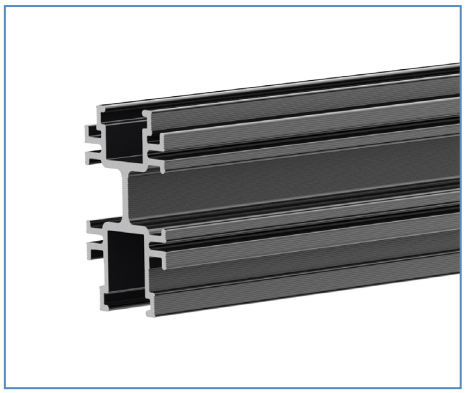

CFB90A: Beam, Containment, 90"L, Aluminum, kit of 1

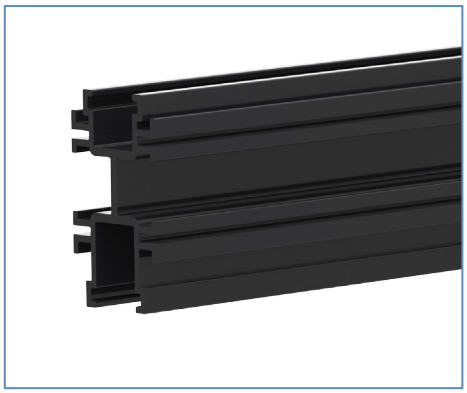

CFB90P: Beam, Containment, 90"L, Plastic, kit of 1

CFCI4: Inside Corner Connector, kit of 4

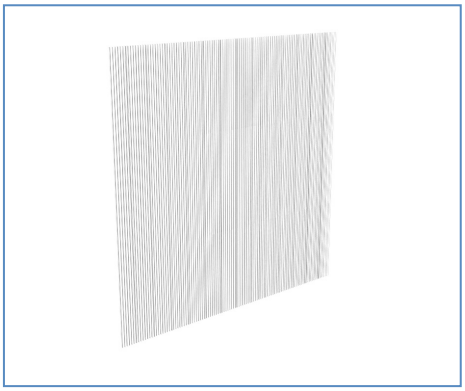

CFPMW4848: Multi-Wall Panel, 48" x 48"

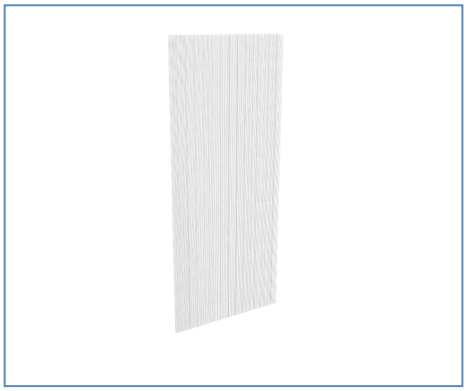

CFPMW48108: Multi-Wall Panel, 48" x 108"

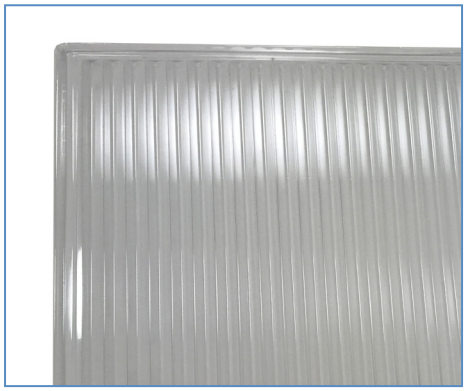

CFCP2448: Panel,Drop Away, 24"X48", Clear, kit of 1

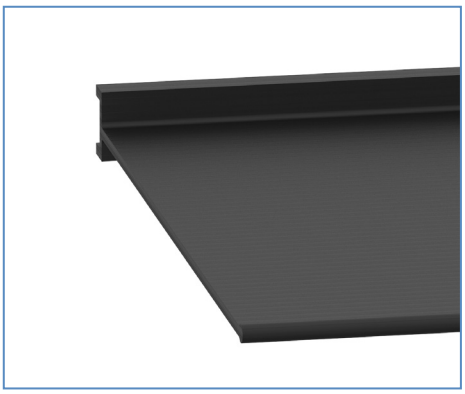

CFSC96: Seal, Cabinet, 96"L, kit of 1

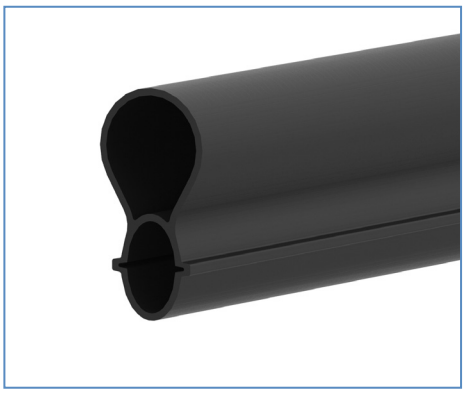

CFBS296: Bulb Seal, 2" x 96", kit of 1

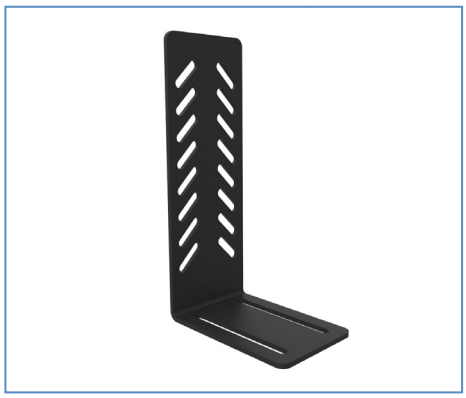

CFBC: Cabinet Bracket, kit of 1

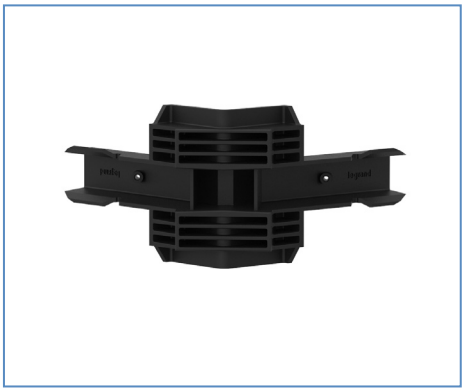

CFCO4: Outside Corner, kit of 4

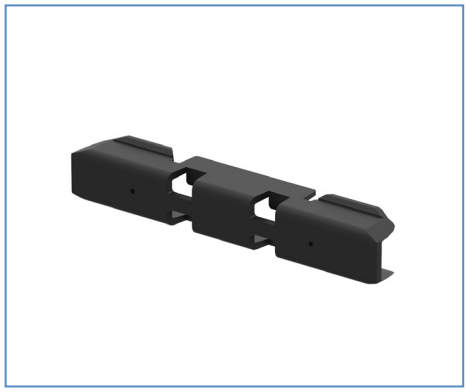

CFSB4: Splice, kit of 4

CFBHB8: Hanger, kit of 8

CFRC12: Panel Clip, kit of 12

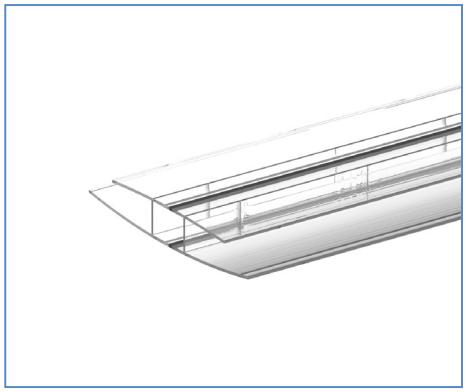

CFSP3108: Splice, Panel, 3"W x 108"L, kit of 1
CFSP348: Splice, Panel, 3"W x 48"L, kit of 1

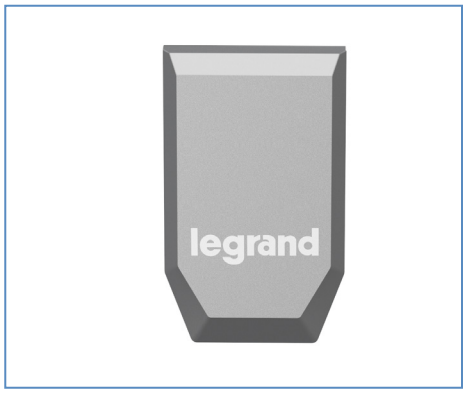

CFCAP4: Badge, Legrand kit of 4

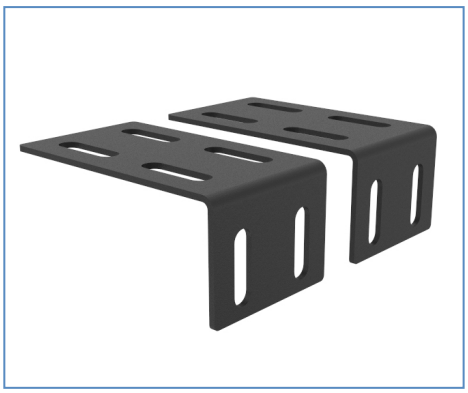

CFAB2: Anchor Bracket, Kit of 2

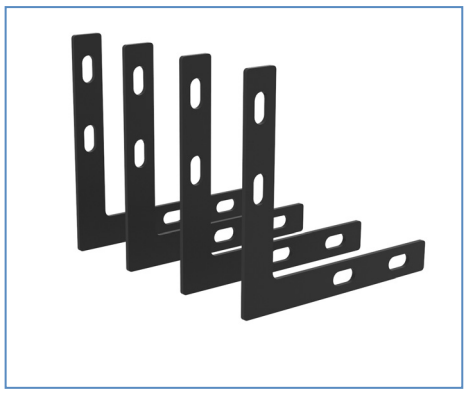

CFBSF4: Flat Support Bracket, kit of 4

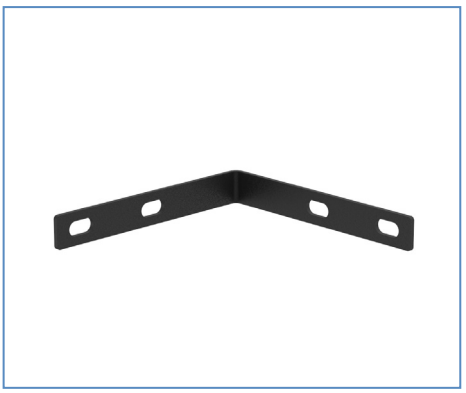

CFCSB4: Corner Support Bracket, kit of 4

AISLE KIT PART NUMBERS

Ordering Contain-IT™ FLEX is easy with pre-configured kits that are available for horizontal and vertical containment. Kits are available for 15, 20, 30 and 40 foot aisle lengths. Horizontal kits are available for up to a four foot wide aisle while vertical kits are available for heights up to 8 feet. Field engineers are available to create solutions using standard components for non-uniform aisles.

PART NUMBER	DESCRIPTION - HORIZONTAL ROOF SUPPORTED
CFHZA415RSP	Horizontal Containment, 4'W X 15'L Plastic, Roof Supported
CFHZA420RSP	Horizontal Containment, 4'W X 20'L Plastic, Roof Supported
CFHZA430RSP	Horizontal Containment, 4'W X 30'L Plastic, Roof Supported
CFHZA440RSP	Horizontal Containment, 4'W X 40'L Plastic, Roof Supported
CFHZA415RSA	Horizontal Containment, 4'W X 15'L Aluminum, Roof Supported
CFHZA420RSA	Horizontal Containment, 4'W X 20'L Aluminum, Roof Supported
CFHZA430RSA	Horizontal Containment, 4'W X 30'L Aluminum, Roof Supported
CFHZA440RSA	Horizontal Containment, 4'W X 40'L Aluminum, Roof Supported

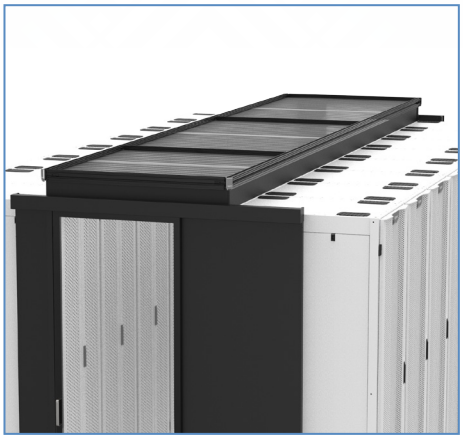

Horizontal, Cabinet Supported

PART NUMBER	DESCRIPTION - HORIZONTAL CABINET SUPPORTED
CFHZA415CSP	Horizontal Containment, 4'W X 15'L Plastic, Cabinet Supported
CFHZA420CSP	Horizontal Containment, 4'W X 20'L Plastic, Cabinet Supported
CFHZA430CSP	Horizontal Containment, 4'W X 30'L Plastic, Cabinet Supported
CFHZA440CSP	Horizontal Containment, 4'W X 40'L Plastic, Cabinet Supported
CFHZA415CSA	Horizontal Containment, 4'W X 15'L Aluminum, Cabinet Supported
CFHZA420CSA	Horizontal Containment, 4'W X 20'L Aluminum, Cabinet Supported
CFHZA430CSA	Horizontal Containment, 4'W X 30'L Aluminum, Cabinet Supported
CFHZA440CSA	Horizontal Containment, 4'W X 40'L Aluminum, Cabinet Supported

Aisle Kits include all materials required to build the standard aisles (except threaded rods). Doors are ordered separately.

PART NUMBER	DESCRIPTION - VERTICAL ROOF SUPPORTED
CFVTA815RSP	Vertical Containment, 8'H X 15'L Plastic, Roof Supported
CFVTA820RSP	Vertical Containment, 8'H X 20'L Plastic, Roof Supported
CFVTA830RSP	Vertical Containment, 8'H X 30'L Plastic, Roof Supported
CFVTA840RSP	Vertical Containment, 8'H X 40'L Plastic, Roof Supported
CFVTA415RSP	Vertical Containment, 4'H X 15'L Plastic, Roof Supported

AISLE KIT PART NUMBERS

PART NUMBER	DESCRIPTION - VERTICAL ROOF SUPPORTED (cont.)
CFVTA420RSP	Vertical Containment, 4'H X 20'L Plastic, Roof Supported
CFVTA430RSP	Vertical Containment, 4'H X 30'L Plastic, Roof Supported
CFVTA440RSP	Vertical Containment, 4'H X 40'L Plastic, Roof Supported
CFVTA815RSA	Vertical Containment, 8'H X 15'L Aluminum, Roof Supported
CFVTA820RSA	Vertical Containment, 8'H X 20'L Aluminum, Roof Supported
CFVTA830RSA	Vertical Containment, 8'H X 30'L Aluminum, Roof Supported
CFVTA840RSA	Vertical Containment, 8'H X 40'L Aluminum, Roof Supported
CFVTA415RSA	Vertical Containment, 4'H X 15'L Aluminum, Roof Supported
CFVTA420RSA	Vertical Containment, 4'H X 20'L Aluminum, Roof Supported
CFVTA430RSA	Vertical Containment, 4'H X 30'L Aluminum, Roof Supported
CFVTA440RSA	Vertical Containment, 4'H X 40'L Aluminum, Roof Supported

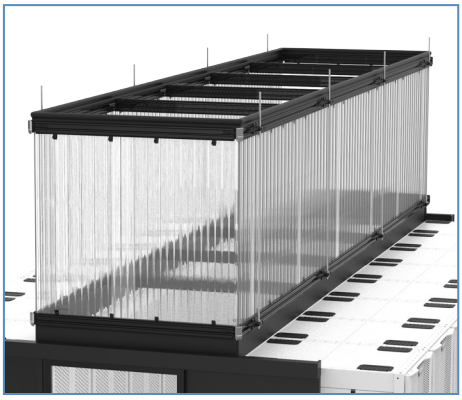

Vertical, Roof Supported

PART NUMBER	DESCRIPTION - VERTICAL CABINET SUPPORTED
CFVTA815CSP	Vertical Containment, 8'H X 15'L Plastic, Cabinet Supported
CFVTA820CSP	Vertical Containment, 8'H X 20'L Plastic, Cabinet Supported
CFVTA830CSP	Vertical Containment, 8'H X 30'L Plastic, Cabinet Supported
CFVTA840CSP	Vertical Containment, 8'H X 40'L Plastic, Cabinet Supported
CFVTA415CSP	Vertical Containment, 4'H X 15'L Plastic, Cabinet Supported
CFVTA420CSP	Vertical Containment, 4'H X 20'L Plastic, Cabinet Supported
CFVTA430CSP	Vertical Containment, 4'H X 30'L Plastic, Cabinet Supported
CFVTA440CSP	Vertical Containment, 4'H X 40'L Plastic, Cabinet Supported
CFVTA815CSA	Vertical Containment, 8'H X 15'L Aluminum, Cabinet Supported
CFVTA820CSA	Vertical Containment, 8'H X 20'L Aluminum, Cabinet Supported
CFVTA830CSA	Vertical Containment, 8'H X 30'L Aluminum, Cabinet Supported
CFVTA840CSA	Vertical Containment, 8'H X 40'L Aluminum, Cabinet Supported
CFVTA415CSA	Vertical Containment, 4'H X 15'L Aluminum, Cabinet Supported
CFVTA420CSA	Vertical Containment, 4'H X 20'L Aluminum, Cabinet Supported
CFVTA430CSA	Vertical Containment, 4'H X 30'L Aluminum, Cabinet Supported
CFVTA440CSA	Vertical Containment, 4'H X 40'L Aluminum, Cabinet Supported

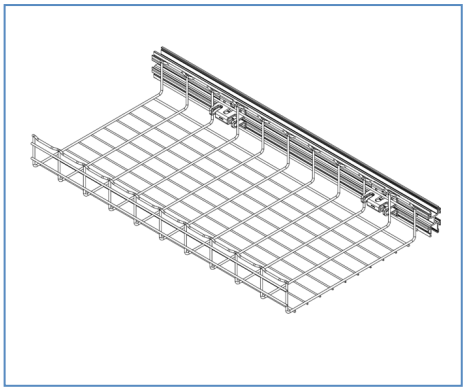

Cablofil Supported (order roof supported kit)

ALTERNATE SUPPORTING METHOD

Hangers can be used to mount the containment beams to Cablofil tray, as shown above. The hangers snap into the wire mesh pattern of the tray and can be fully supported from the tray alone. Contact customer support for more information.

COMPONENT PART NUMBERS

The lightweight containment system is comprised of components that snap together providing a savings in time and labor. The snap together features are:

- The panel retention clip is open ended for ease of install and to maintain a consistent pressure allowing for a tool-less install of containment panels.
- The inside and outside corners snap into the rail geometry forming an airtight corner while providing a time and labor savings.
- The beams are spliced together with a snap in joint splice allowing for modularity in length of height of the containment system.
- The hanger bracket snaps onto the rail over the threaded rod allowing for the trades to install the threaded before containment installation.
- The ability of the bracket to be placed anywhere along the beam also allows for the threaded rod to be deployed before installation.
- All joints are covered eliminating leakage points.

PART NUMBER	DESCRIPTION
CFB90P	Containment Beam, 90"L, Plastic, Black
CFB90A	Containment Beam, 90"L, Aluminum, Black
CFCO4	Outside Corner, Qty 4, Black
CFCI4	Inside Corner, Qty 4, Black
CFSB4	Splice, Beam, Qty 4, Black
CFPMW48108	Multi-Wall Panel, 4'X 9', Qty 1
CFPMW4848	Multi-Wall Panel, 4'X 4', Qty 1
CFSP3108	Panel Splice,3"W X 9'L, Qty 1
CFSP348	Panel Splice, 3"W X 4'L, Qty 1
CFRC12	Panel Retention Clip, Qty 12, Black
CFSC96	Cabinet Seal, 6"H X 8'L, Qty1, Black
CFBS296	Bulb Seal, 2"H X 8'L, Qty 1, Black
CFCAP4	Badge, Containment, Qty 4 Silver
CFBHB8	Hanger Bracket, Qty 8, Black
CFBC	Cabinet Bracket, Qty 1, Black
CFCSB4	Corner Support Bracket, Qty 4, Black
CFBSF4	Support Bracket, Flat, Qty 4, Black
CFAB2	Anchor Bracket, Qty 2, Black

See pages 4 and 5 for component images.

END-OF-ROW DOOR SELECTION

HEIGHT OF DOOR:

To determine the height of the end-of-row door, use the below charts when used in conjunction with Legrand's GX or LX cabinets. For third-party cabinets, measure the cabinet height and find the corresponding height-range in the following tables.

AISLE TYPE	AISLE WIDTH	DOORS
Cabinet-to-Cabinet	36" – 48"	Left Sliding (LS) or Right Sliding (RS)
	48" – 72"	Dual Sliding (DS)
Cabinet to Wall	38" – 56"	Left Sliding Wall (LSCW) or Right Sliding (RSCW)

End of Row Door, Right-Sliding

WIDTH AND TYPE OF DOOR:

The choice of a right or left-sliding door for a cabinet-to-cabinet aisle is dependent on which cabinet you wish to have more access to on the end of the row. Left-sliding doors will cover more of the left cabinet of the containment aisle and vice-versa for the right-sliding doors.

For a cabinet-to-wall application, the choice is dependent on which side the building wall is on (left or right side). For walls on the left side of the aisle, a right-sliding door should be selected and vice-versa for the right.

GX CABINET "U" HEIGHT	END-OF-ROW DOOR HEIGHT
42	78.5" – 82"
45	82.1" – 85.5"
48	89.1" – 92.5"

LX CABINET "U" HEIGHT	END-OF-ROW DOOR HEIGHT
42	78.5" – 82"
45	85.6" – 89"
47	89.1" – 92.5"
52	96.6" – 99"

END-OF-ROW DOOR PART NUMBERS

Replace "#" with either "T" for Multi-Wall or "C" for Clear
Replace "*" with either "B" for Black or "W" for White

PART NUMBER	DESCRIPTION - DUAL SLIDING DOORS
CFDS7848#-*	Dual Sliding Door, 78.5-82"H, Fits 48-72"W Aisle
CFDS8248#-*	Dual Sliding Door, 82.1-85.5"H, Fits 48-72"W Aisle
CFDS8548#-*	Dual Sliding Door, 85.6-89"H, Fits 48-72"W Aisle
CFDS8948#-*	Dual Sliding Door, 89.1-92.5"H, Fits 48-72"W Aisle
CFDS9248#-*	Dual Sliding Door, 92.6-96"H, Fits 48-72"W Aisle
CFDS9948#-*	Dual Sliding Door, 96.6-99"H, Fits 48-72"W Aisle

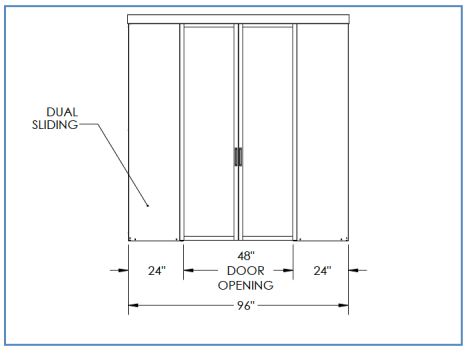

Dual Sliding Doors

PART NUMBER	DESCRIPTION - LEFT SLIDING DOORS
CFLS7836#-*	Left Sliding Door, 78.5-82"H,Fits 36-48"W Aisle
CFLS8236#-*	Left Sliding Door, 82.1-85.5"H,Fits 36-48"W Aisle
CFLS8536#-*	Left Sliding Door, 85.6-89"H,Fits 36-48"W Aisle
CFLS8936#-*	Left Sliding Door, 89.1-92.5"H,Fits 36-48"W Aisle
CFLS9236#-*	Left Sliding Door, 92.6-96"H,Fits 36-48"W Aisle
CFLS9936#-*	Left Sliding Door, 96.6-99"H,Fits 36-48"W Aisle

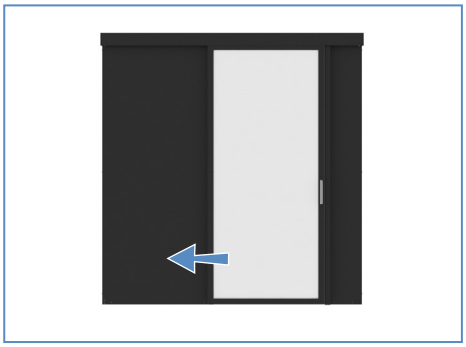

Left Sliding Door

PART NUMBER	DESCRIPTION - RIGHT SLIDING DOORS
CFRS7836#-*	Right Sliding Door, 78.5-82"H,Fits 36-48"W Aisle
CFRS8236#-*	Right Sliding Door, 82.1-85.5"H,Fits 36-48"W Aisle
CFRS8536#-*	Right Sliding Door, 85.6-89"H,Fits 36-48"W Aisle
CFRS8936#-*	Right Sliding Door, 89.1-92.5"H,Fits 36-48"W Aisle
CFRS9236#-*	Right Sliding Door, 92.6-96"H,Fits 36-48"W Aisle
CFRS9936#-*	Right Sliding Door, 96.6-99"H,Fits 36-48"W Aisle

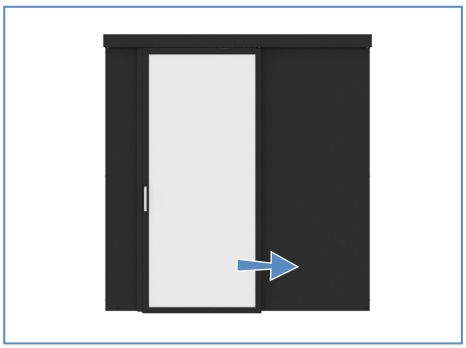

Right Sliding Door

END-OF-ROW DOOR PART NUMBERS

Replace "#" with either "T" for Multi-Wall or "C" for Clear
Replace "*" with either "B" for Black or "W" for White

PART NUMBER	DESCRIPTION - RIGHT SLIDING DOORS, CABINET TO WALL
CFRSCW7836#-*	Right Sliding Door, Cabinet to Wall, 78.5-82"H,Fits 38-56"W Aisle
CFRSCW8236#-*	Right Sliding Door, Cabinet to Wall, 82.1-85.5"H,Fits 38-56"W Aisle
CFRSCW8536#-*	Right Sliding Door, Cabinet to Wall, 85.6-89"H,Fits 38-56"W Aisle
CFRSCW8936#-*	Right Sliding Door, Cabinet to Wall, 89.1-92.5"H,Fits 38-56"W Aisle
CFRSCW9236#-*	Right Sliding Door, Cabinet to Wall, 92.6-96"H,Fits 38-56"W Aisle
CFRSCW9936#-*	Right Sliding Door, Cabinet to Wall, 96.6-99"H,Fits 38-56"W Aisle

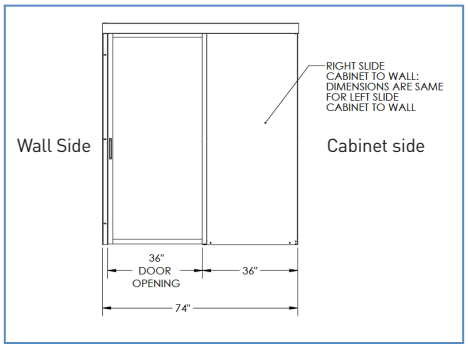

Right Sliding Door - Cabinet to Wall

PART NUMBER	DESCRIPTION - LEFT SLIDING DOORS, CABINET TO WALL
CFLSCW7836#-*	Left Sliding Door, Cabinet to Wall, 78.5-82"H,Fits 38-56"W Aisle
CFLSCW8236#-*	Left Sliding Door, Cabinet to Wall, 82.1-85.5"H,Fits 38-56"W Aisle
CFLSCW8536#-*	Left Sliding Door, Cabinet to Wall, 85.6-89"H,Fits 38-56"W Aisle
CFLSCW8936#-*	Left Sliding Door, Cabinet to Wall, 89.1-92.5"H,Fits 38-56"W Aisle
CFLSCW9236#-*	Left Sliding Door, Cabinet to Wall, 92.6-96"H,Fits 38-56"W Aisle
CFLSCW9936#-*	Left Sliding Door, Cabinet to Wall, 96.6-99"H,Fits 38-56"W Aisle

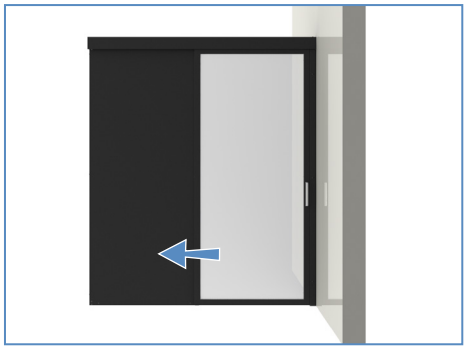

Left Sliding Doors, Cabinet to Wall

OVERCOMING OBSTRUCTIONS

IN ROW COOLER OR CITY SCAPE:

To create a custom blanking panel requires the following components:

- CFB90P or CFB90A (plastic and aluminum beams)
- CFPMW4848 (multi-wall panel)
- CFC14 (inside corner connector)
- CFBSF4 (flat support bracket)
- CFHWPHPS (hardware)

BLANKING PANEL PART NUMBERS:

- **CFBLANKA:** Blanking Panel Kit, Aluminum, 51"W X 90"H Max
- **CFBLANKP:** Blanking Panel Kit, Plastic, 51"W X 90"H Max

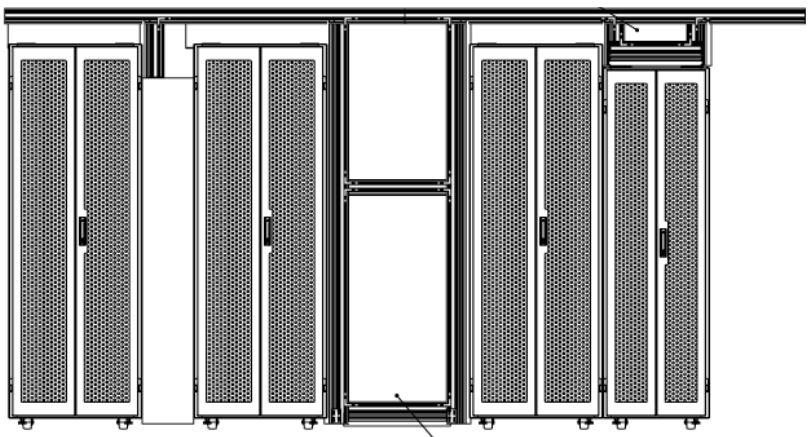

City Scape Containment

OVERCOMING OBSTRUCTIONS

TRANSITIONING FROM VERTICAL TO HORIZONTAL:

To transition from vertical containment to horizontal containment, the following components are needed for the transition to horizontal:

- CFC14 (inside corner)
- CFC04 (outside corner)
- CFCAP4 (cap, containment)
- CFHWTRX (hardware)
- Adequate linear footage of CFB90P or CFB90A (beam)
- Adequate square footage of CFPMW48108 or CFPMW4848 (multi-wall panels).

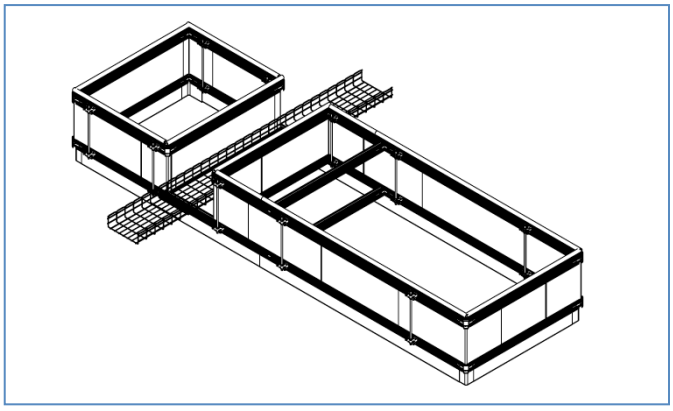

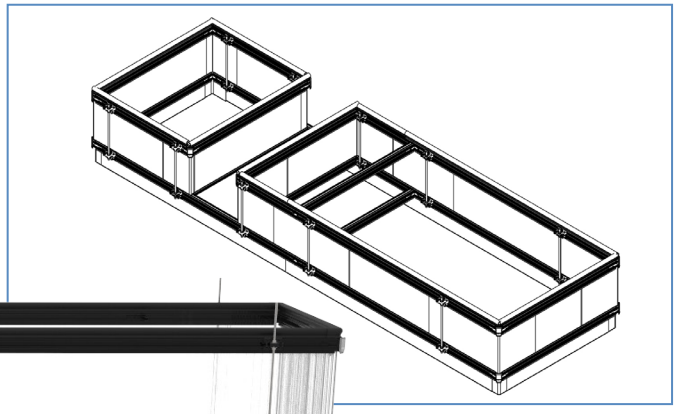

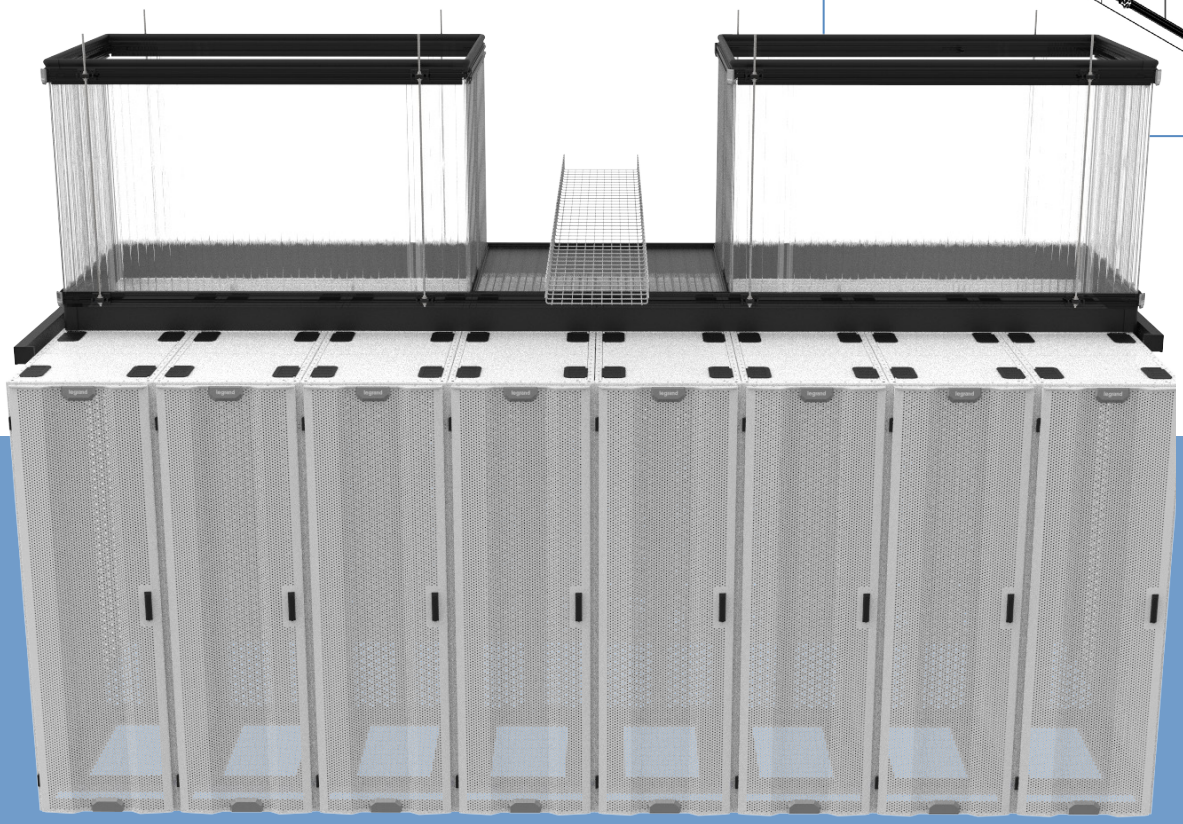

Vertical to Horizontal

OVERCOMING OBSTRUCTIONS

VERTICAL OBSTRUCTION:

To overcome a vertical obstruction, the following components are needed:

- Two CFCO4 & CFCI4 (outside and inside corner kits)
- One CFBHB8, CFHWTRX & CFHWPHPS (hanger brackets and hardware)
- Adequate length of CFB90x and CFBS296 (beam and bulb seal)
- Adequate square footage of CFPMW4848 or CFPMW48108 (multi-wall panels)

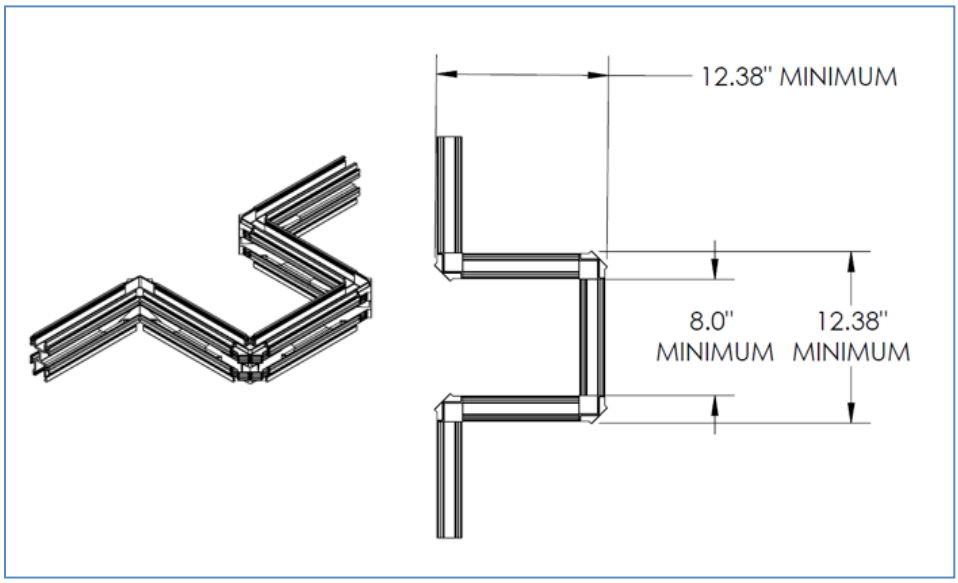

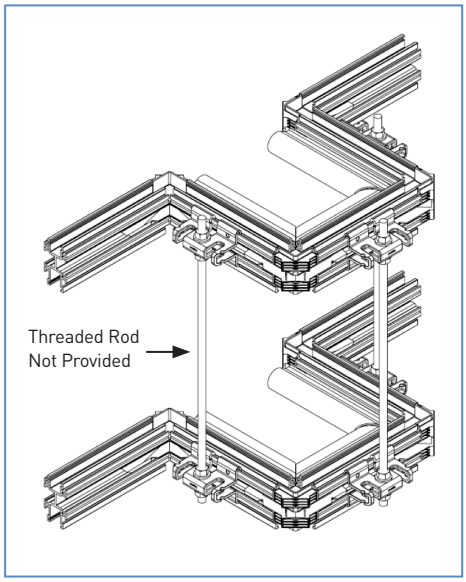

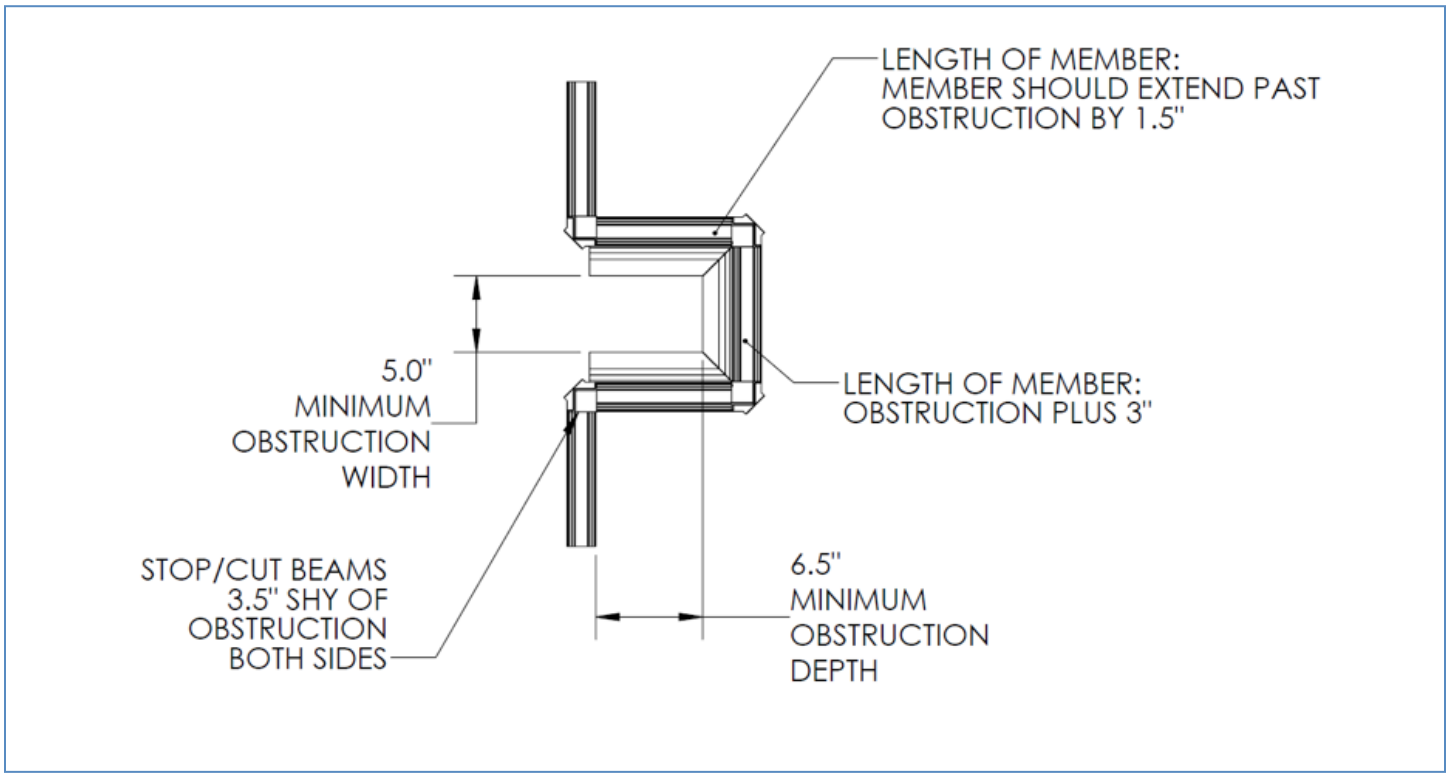

OVERCOMING OBSTRUCTIONS

HORIZONTAL OBSTRUCTION:

To overcome a horizontal obstruction, the following components are needed:

- One CFBSF4, CFCI4, CFHWTRX & CFHWPHPS (flat support bracket, inside corner kit, and hardware)
- Adequate length of CFSC96 & CFBS296 (flap seal and bulb seal)
- Adequate length of CFB90X (beam)

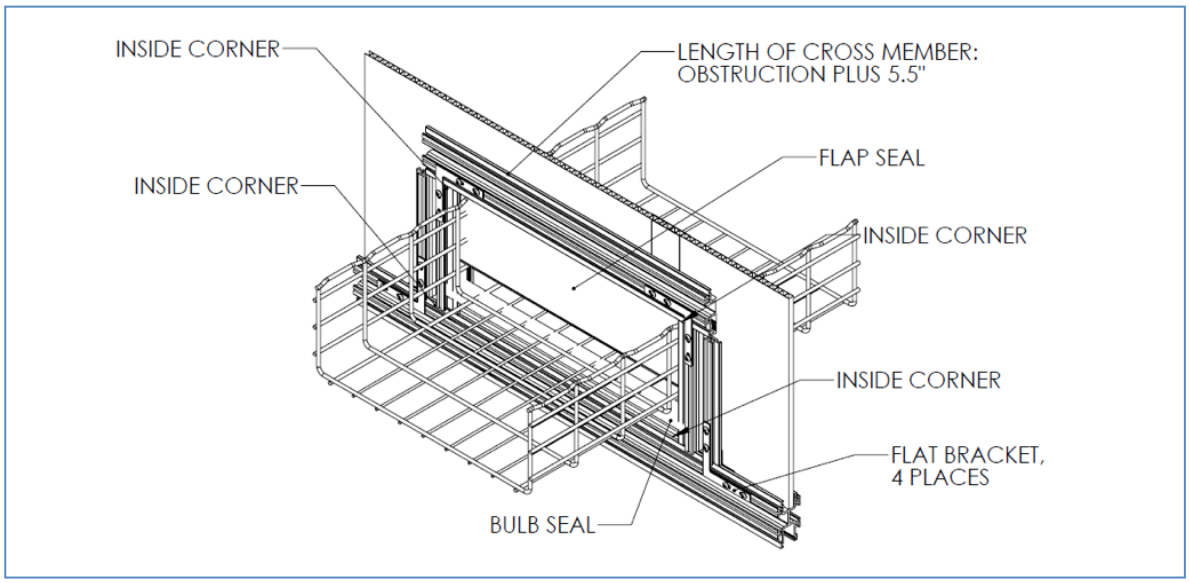

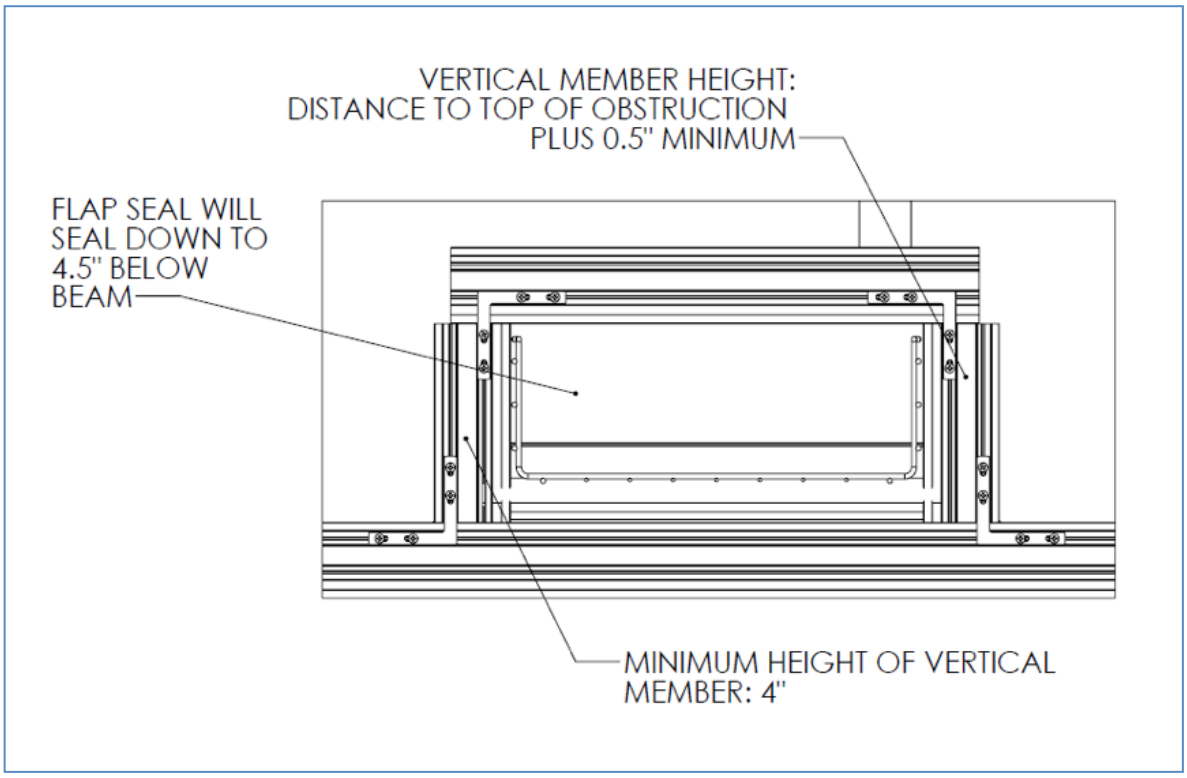

AUXILIARY LOAD HANGING

VERTICAL CONTAINMENT:

- Adequate length of CFB90X (beam)
- Proper quantity of CFB4B8 (hanger brackets)
- Proper quantity of CFC14 (inside corners)

*U bolts not provided

LOAD CARRYING CAPACITY:

Cross members must be loaded symmetrically about the beam web, to avoid a twisting load on the beam.

- Plastic beam: capable of carrying 7.5 lbs per aisle foot, 30 lbs maximum per cross member.
- Aluminum beam: capable of carrying 10 lbs per aisle foot, 40 lbs maximum per cross member.

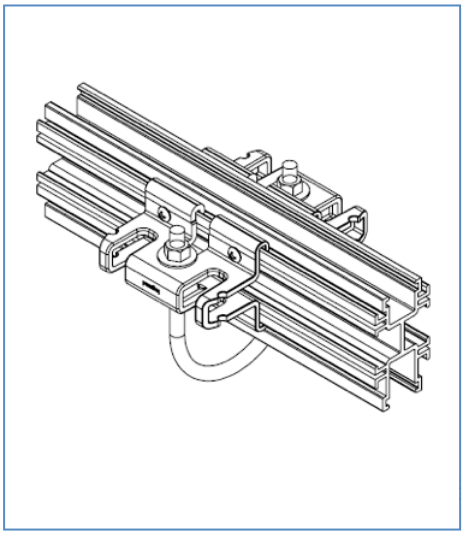

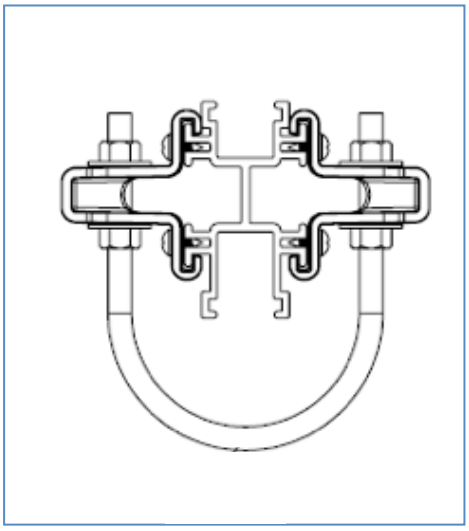

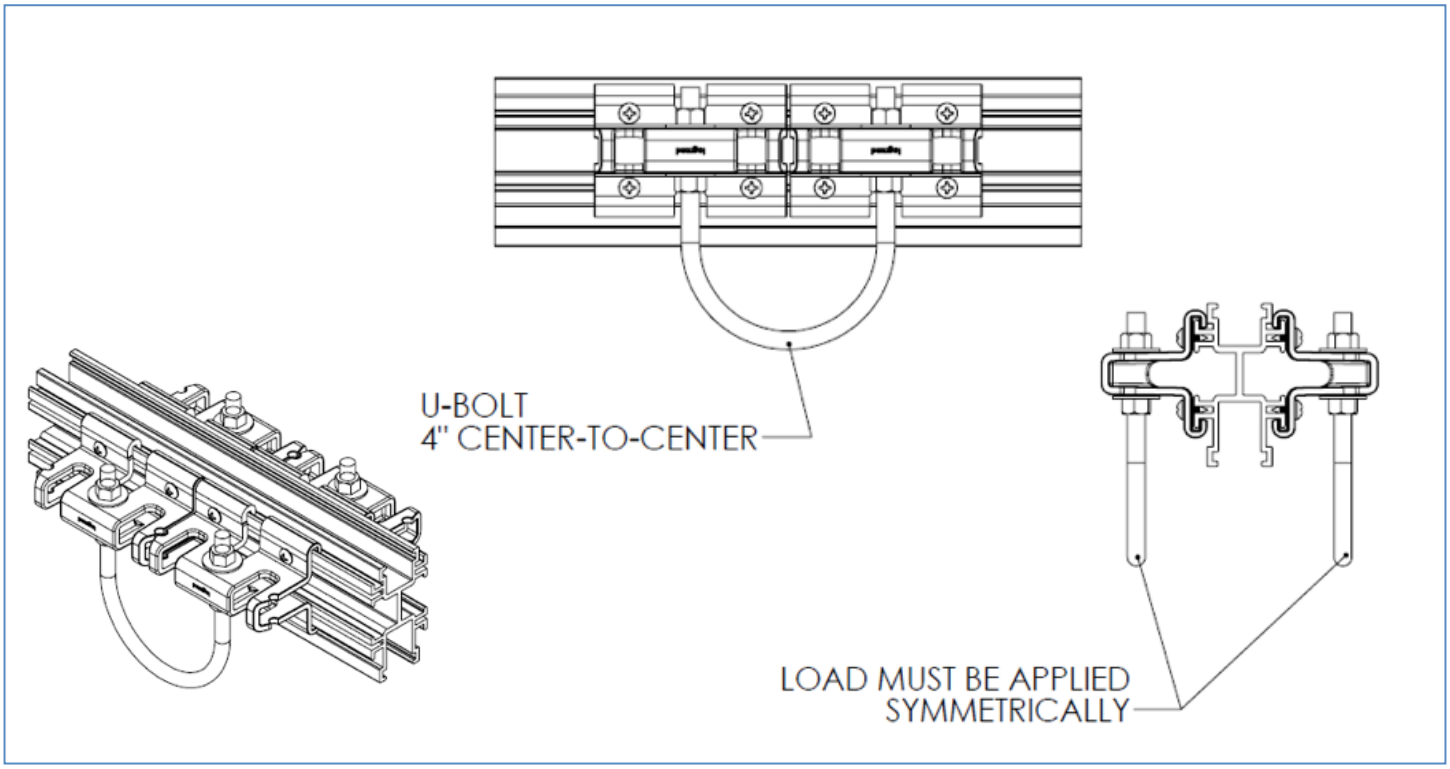

AUXILIARY LOAD HANGING

HORIZONTAL CONTAINMENT:

- Adequate length of CFB90X (beam)
- Proper quantity of CFB4B8 (hanger brackets)
- Proper quantity of CFC14 (inside corners)

*U bolts not provided

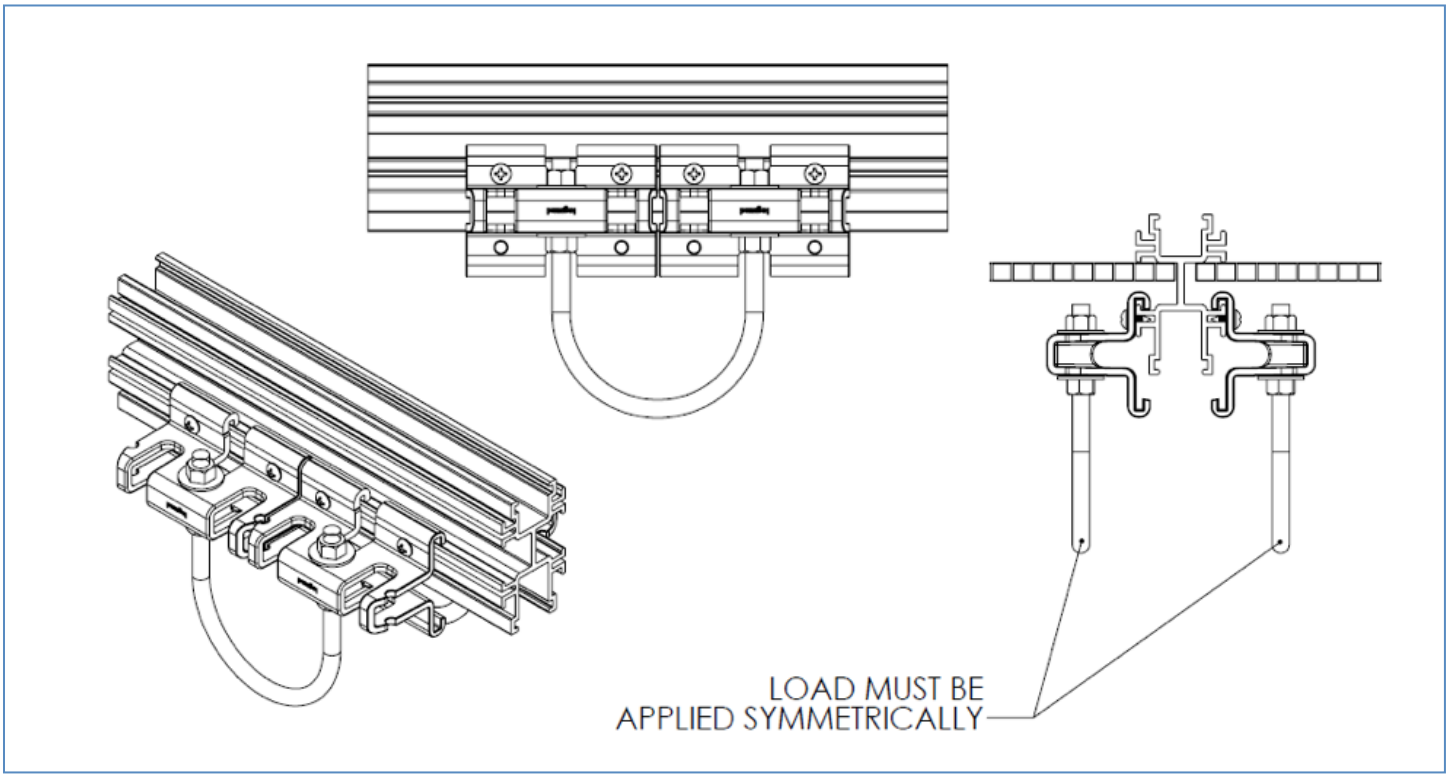

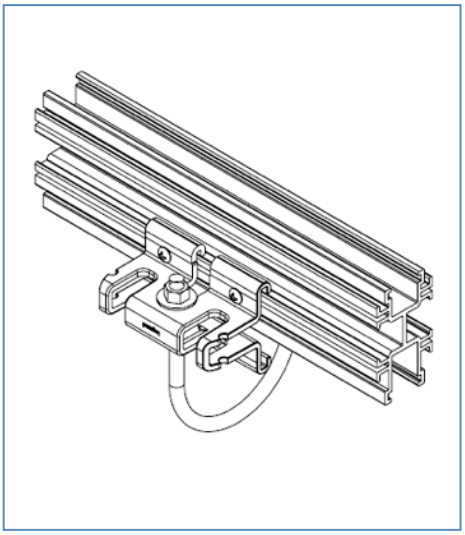

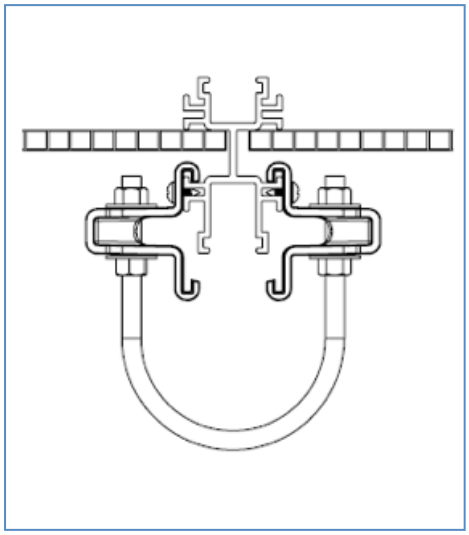

LOAD CARRYING CAPACITY:

Cross members must be loaded symmetrically about the beam web, to avoid a twisting load on the beam.

- Plastic beam: capable of carrying 7.5 lbs per aisle foot, 30 lbs maximum per cross member.
- Aluminum beam: capable of carrying 10 lbs per aisle foot, 40 lbs maximum per cross member.

BUILD YOUR SOLUTION

DETERMINE YOUR AISLE TYPE:

- Cabinet to Cabinet
- Cabinet to Wall

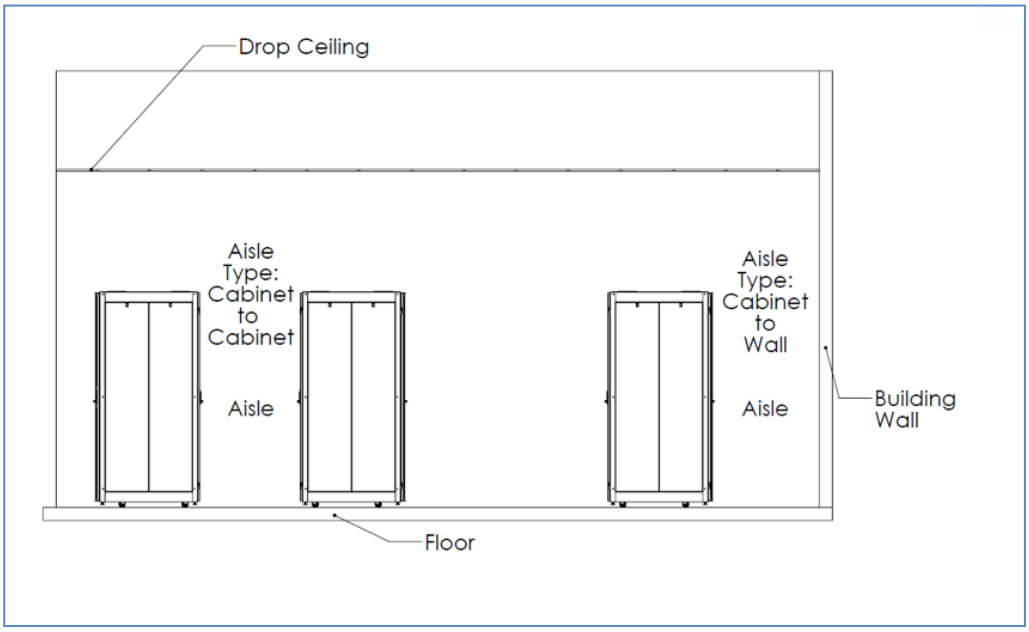

DETERMINE YOUR SUPPORT TYPE:

- Roof Supported
- Cabinet Supported

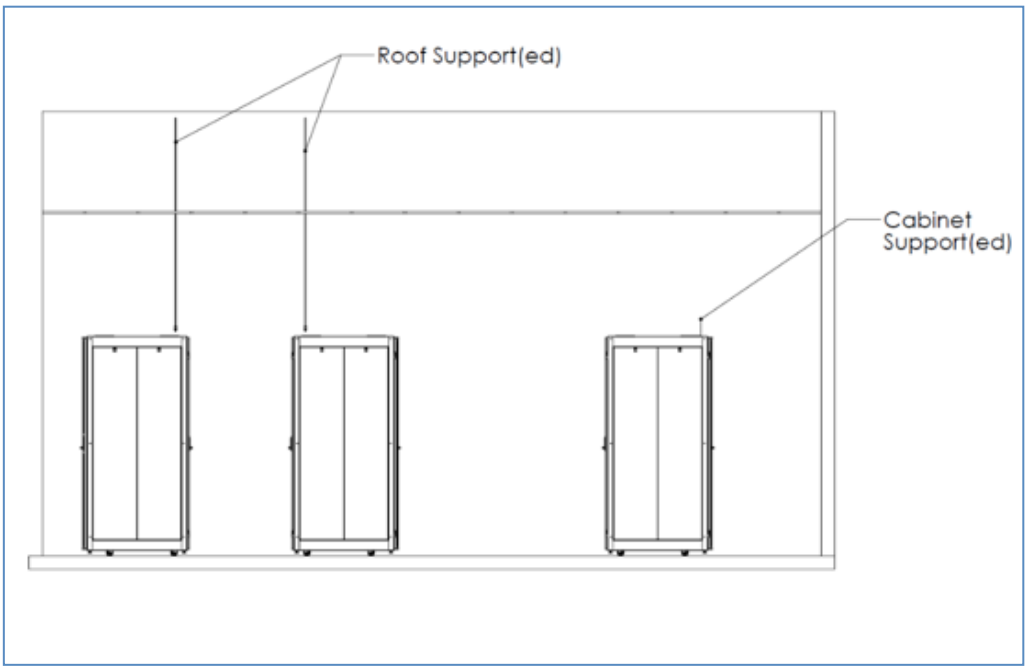

Note: Fire detection and suppression must be considered before implementing any containment solution.

Check with the authority having jurisdiction prior to deployment.

BUILD YOUR SOLUTION

DETERMINE YOUR CONTAINMENT DIMENSIONS:

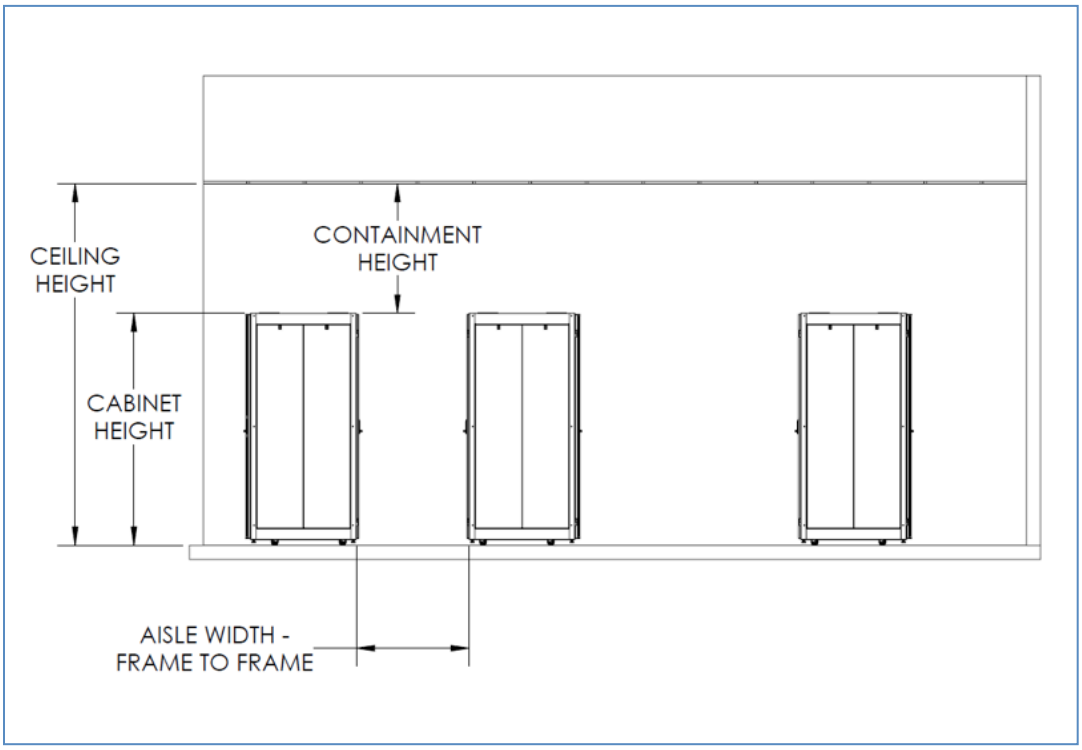

AISLE BEST PRACTICES

It is recommended to keep the cabinets at the end of the aisle coplanar; this makes the installation of the end-of-row-doors easier. Gaps that appear within the aisle are easier to accommodate for.

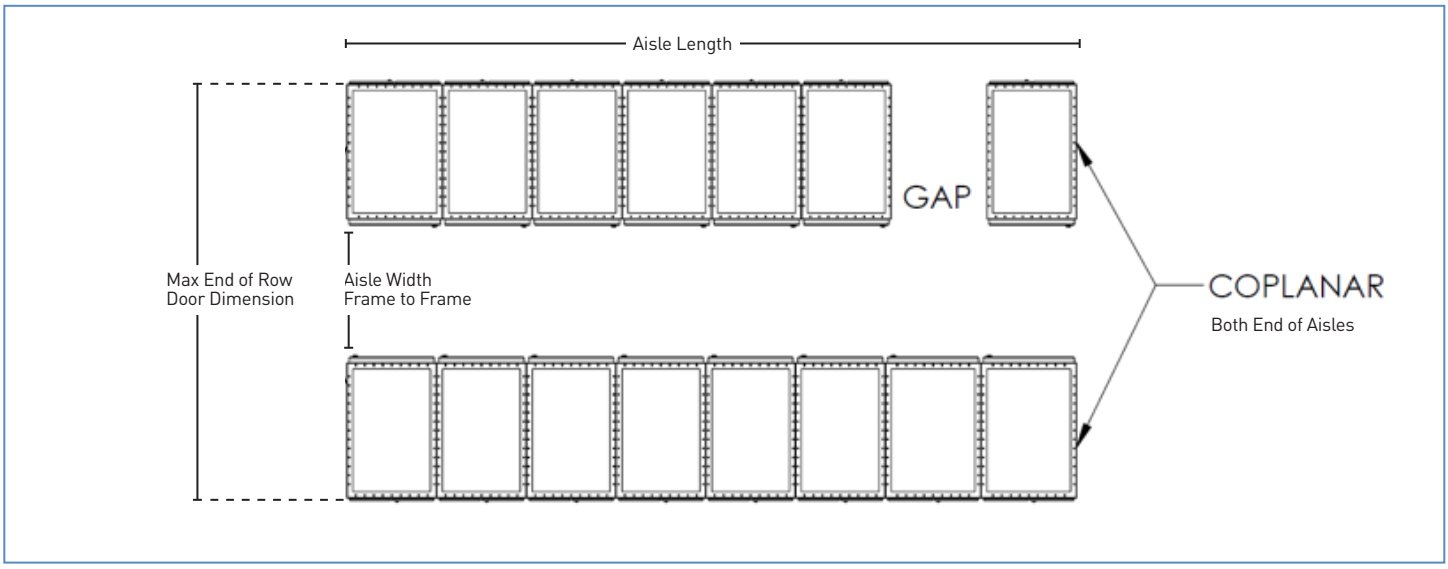

BUILD YOUR SOLUTION

DETERMINING AISLE DIMENSIONS:

Aisle Length:

- To determine the length of the Containment Aisle, measure the length to the farthest extent of the cabinets of both sides of the aisle, and add 4 inches to it.
  - Order the length of Aisle Kit that is the next larger size than the Containment Aisle.

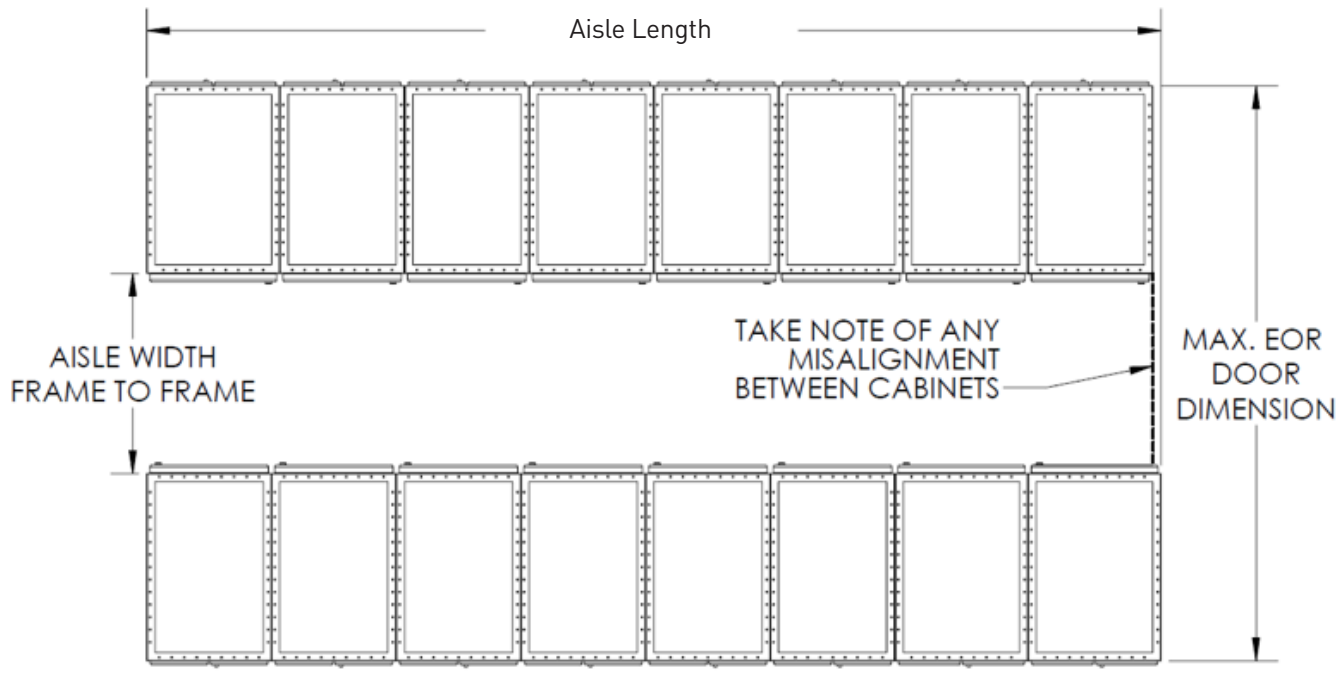

Aisle Width:

- The aisle width is from frame-to-frame, not door-to-door
- Standard horizontal aisle kits can accommodate aisles up to 48" wide
  - For horizontal aisles wider than 48", please contact Customer Service
- Standard vertical aisle kits can accommodate aisles up to 54" wide
  - For vertical aisles wider than 54", please contact Customer Service

Containment Height (Vertical Aisle Kits Only):

- For containment height between 8" and 54", order a 4' tall aisle kit
  - For heights less than 8", please contact Customer Service
- For containment heights between 54" and 100", order an 8' tall aisle kit

For heights outside the range listed please contact customer service.

FLAMMABILITY AND SMOKE RATINGS:

PART NUMBER	DESCRIPTION	RATING
CFB90A	Beam, Aluminum	N/A
CFB90P	Beam, Plastic	UL 94V-0
CFSC96	Flap Seal	UL 94V-0
CFSB296	Bulb Seal	UL 94V-0
CFSB3108	H-Splice, 108"	ASTM E84 Class A
CFSP348	H-Splice, 48"	ASTM E84 Class A
CFBHB8	Hanger, kit of 8	UL 94V-0
CFCI4	Inside Corner, kit of 4	UL 94V-0
CFCAP4	Cap, kit of 4	UL 94V-0
CFCO4	Outside Corner, kit of 4	UL 94V-0
CFSB4	Splice, kit of 4	UL 94V-0
CFRC12	Panel Clip, kit of 12	UL 94V-0
CFPMW4808	Multi-Wall Panel, 48" x 48"	ASTM E84 Class A
CFPMW48108	Multi-Wall Panel, 48" x 108"	ASTM E84 Class A

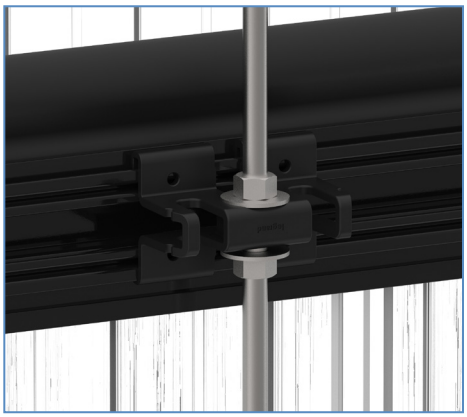

Hanger and Threaded Rod

Plastic Beams and Seal

MATERIAL SPECIFICATION SHEETS:

To access the material specification sheets for the Contain-IT™ FLEX components, navigate to the component product SKU web-pages and download the sheet from the resources section. Links to the individual components can be found on the bottom of the Contain-IT page:
www.legrand.us/contain-it-flex

Panel Clips, Beams, and Bulb Seal

©2017 Legrand All Rights Reserved rev. 03|17 CONTAIN-IT FLEX

designed to be better.™

legrand®

Data Communications

125 Eugene O'Neill Drive
New London, CT 06320
800.934.5432
www.legrand.us

570 Applewood Crescent
Vaughan, Ontario L4K 4B4
905.738.9195
www.legrand.ca

Follow Us