APPENDIX D - MECHANICAL CUTSHEETS

Documents following

EHRM INFRASTRUCTURE UPGRADES DESIGN
WHITE RIVER JUNCT. VA MED. CENTER – WHITE RIVER JUNCTION VT
PROJECT #: 405-22-700-95 % CD1
BOD APPENDIX D- MECHANICAL CUT SHEETS

Integrated Water Boosting Pump

GRUNDFOS SCALA2

SCALA2 is a fully integrated water booster pump providing perfect water pressure in up to 8 taps—even with multiple taps and showers running at the same time. It packs pump, motor, tank, sensor, drive and non-return valve into one compact unit. And with its intelligent pump control, SCALA2 automatically adjusts performance to both inlet pressure and water consumption in the home. Thanks to a water-cooled motor, SCALA2 even offers one of the lowest noise levels of any booster on the market.

SCALA2 features a built-in sensor, which constantly measures the discharge pressure. If the pressure drops below the desired level, SCALA2 boosts its operation immediately to compensate for the loss of pressure. We call it intelligent pump control and the result is perfect water pressure.

SCALA2 is developed to deliver trouble-free operation and ensure a long lifetime. It is built from high-grade materials, and every pump is thoroughly tested to guarantee the best possible performance and quality.

KEY FEATURES AND BENEFITS

- Perfect water pressure: Intelligent pump control adjusts operation automatically
- Low noise: 44 dB(A) in typical use
- Easy selection: One variant for all residential boosting needs
- Easy installation: Compact, all-in-one solution, plug-and-pump
- Easy to operate: User-friendly control panel
- Reliable operation: Dry-running protection, anti-cycling
- Long lifetime: Quality-tested to perfection, maintenance-free
- Highly efficient with ECM motor
- Self priming and suitable for both indoor and outdoor applications

APPLICATIONS

- Boosting from mains: increases the water pressure delivered by city mains
- Boosting from tanks: increases water pressure from roof tanks, break tanks and ground tanks, including rainwater tanks
- Boosting from wells: pumps water from a depth of up to 26 feet (8 meters)
- Indoor and outdoor installation: X4D IP Rating

GRUNDFOS

Possibility in every drop

© Grundfos Holding A/S 04.2024

TECHNICAL DATA

SCALA2	
AMBIENT TEMPERATURE:	max. 113°F (45°C)
LIQUID TEMPERATURE:	max. 113°F (45°C)
SYSTEM PRESSURE:	max. 145 psi (10 bar)
FLOORS:	3
SIMULTANOUSLY OPEN TAPS:	max. 8
DIMENSIONS:	H: 11.9 in (302 mm) L: 15.9 in (403 mm) W: 7.6 in (193 mm)
WEIGHT:	22 lbs (10 kg)

93013251	SCALA2 3-45 1x115V 60 Hz
93013250	SCALA2 3-45 1x208-230V 60 Hz

PERFORMANCE DATA

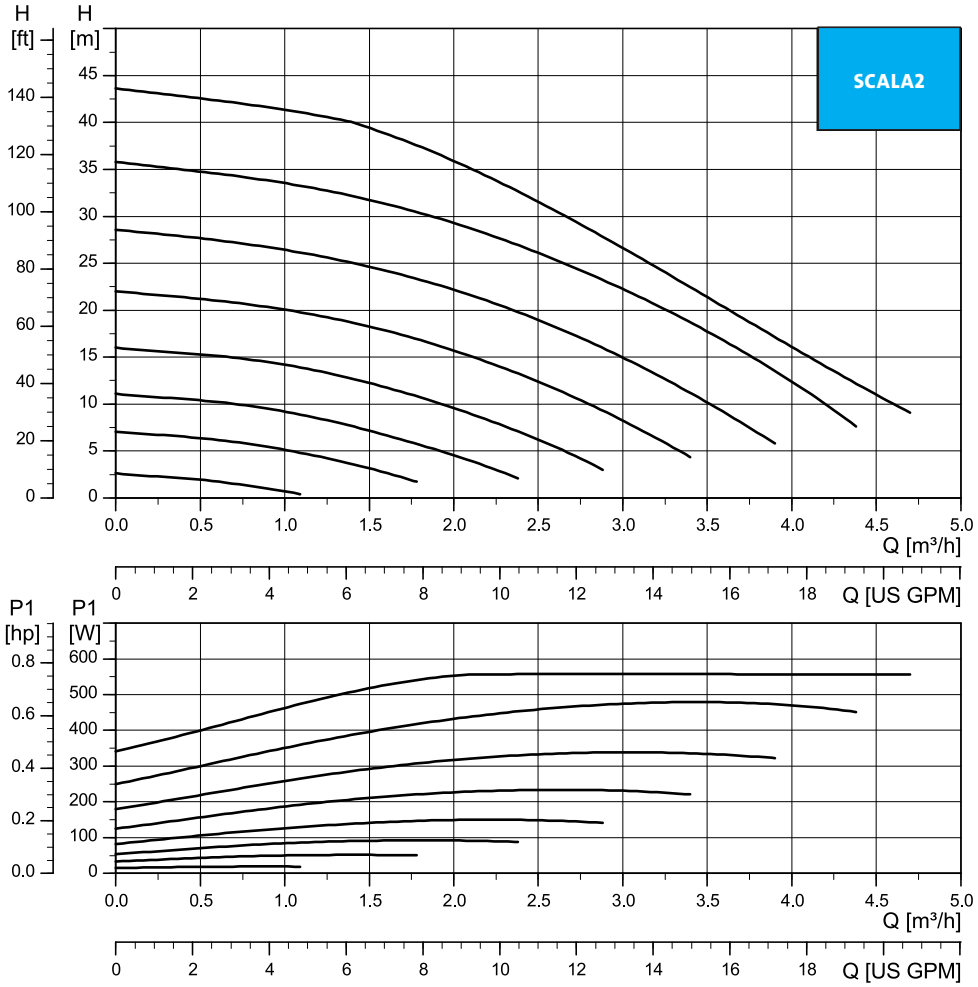

Electrical data

Supply voltage [V]	Frequency [Hz]	$I_{max.}$ [A]	P1 [W]	Stand-by power [W]
1 × 200-240	50/60	2.8	550	2
				2
				2
				2
1 × 208-230	60	2.8	550	2
1 × 115	60	4.9	550	2

Supply voltage [V]	Frequency [Hz]	Plug
1 × 200-240	50/60	Schuko
		Schuko EAC
		Schuko SNI
		AUS
		UK
		ARG
		Chile
		Thailand
		India
		None
		No plug CN
		No plug AR1
		No plug AR2
1 × 208-230	60	NEMA 6-15P
1 × 115	60	IEC, type B, NEMA 5-15P
		Japan
		None

Safety approvals

Drinking water approvals

WATER QUALITY
Drinking water system component
NSF/ANSI 61
NSF/ANSI 372

Visit **grundfos.us/pei** to learn more about Department of Energy (DOE) pump energy index (PEI) requirements and PEI ratings on specific Grundfos models.

GRUNDFOS

EHRM INFRASTRUCTURE UPGRADES DESIGN
WHITE RIVER JUNCT. VA MED. CENTER – WHITE RIVER JUNCTION VT
PROJECT #: 405-22-700-95 % CD1
BOD APPENDIX D- MECHANICAL CUT SHEETS

Installation Check List

SCALA2

External Supply

Domestic boosters cannot compensate for undersized meters and water lines. Increasing pressure does not increase volume. Ensure the incoming volume is sufficient for the demand of the home.

1. Meter size
2. Supply line diameter and length
3. Protection from freezing

Internal System

- ☐ A properly sized thermal expansion tank or equivalent is required for tank heater systems.
- ☐ Tank pre charge adjusted to new boost static pressure. *
- ☐ RO systems must be down stream of booster.
- ☐ 12”- 15” of open space in front of the Scala 2 unit is required
- ☐ 1” x 24” Braided flexible connection lines. Do not kink.
- ☐ Scala unit is securely mounted to the floor.
- ☐ Min 10” straight pipe to suction port.
- ☐ No hard 90˚on discharge (use sweeps) after 10” straight pipe.
- ☐ Min 24” before transition to smaller diameter pipe
- ☐ No pipe dope or hard sealants on poly threads
- ☐ Hand tight unions. No tools.
- ☐ Pump is fully primed before activation.
- ☐ Scala 2 internal tank set to 70% new static pressure.
- ☐ Scala unit is not connected to a GCFI outlet.
- ☐ Water hammer protection may be necessary.

*Expansion tank pressures can only be measured and adjusted when the tank is isolated from the plumbing system. Remove before pressurizing.

GRUNDFOS

Possibility in every drop

EHRM INFRASTRUCTURE UPGRADES DESIGN
WHITE RIVER JUNCT. VA MED. CENTER – WHITE RIVER JUNCTION VT
PROJECT #: 405-22-700-95 % CD1
BOD APPENDIX D- MECHANICAL CUT SHEETS

Product description

TM085889

Grundfos SCALA2 is a fully integrated, high-efficiency, self-priming pressure booster.

SCALA2 incorporates integrated speed control, enabling constant water pressure at the taps. The electronically controlled inverter limits the starting and operating currents, providing soft starts and high energy savings.

The water-cooled motor and pump design offer a very low noise level down to 44 dB(A) in typical usage.

Applications

SCALA2 is designed for pressure boosting in one- and two-family homes, apartment buildings and light commercial buildings. We recommend using SCALA2 for the following applications:

- pressure boosting of city mains water
- pressure boosting of water from roof tank, break tank or ground tank
- water supply from shallow wells (<8 m).

Pumped liquids

The pump is designed for pumping clean, thin, fresh water with a pH value between 4 and 9, a maximum chloride content of 300 ppm and free chlorine content below 1 ppm, for example:

- drinking or tap water
- rainwater
- groundwater
- river and lake water
- softened water.

Sand and other impurities in the water can cause wear to the pump and pump blockage. Therefore, we recommend that you install a filter on the inlet side or apply a floating strainer to protect the pump.

Features and benefits

Perfect water pressure

SCALA2 has an integrated pressure sensor that monitors the pump outlet pressure and continuously adjusts the pump speed to maintain a constant water pressure at all taps.

Low noise

SCALA2 stands out as one of the quietest boosters in its size category in the market. The motor is water cooled and equipped with sealed, greased-for-life ball bearings, ensuring silent operation (44 dB(A) in typical usage).

High energy efficiency

SCALA2 is equipped with variable-speed drive which increases the entire pump system efficiency by eliminating wasted head and flow, and allows the pump to operate closer to its best efficiency point (BEP).

Compact and easy to install

SCALA2 is an all-in-one fully integrated plug-and-pump solution, eliminating any uncertainties found in traditional installations. SCALA pumps can be installed in four easy steps:

1. Connect the pipes. The inlet and outlet connections are adjustable by up to 5°, making the installation even easier.
2. Prime the pump.
3. Plug the pump into a power outlet, and start the pump. The default pressure setting is 3 bar (43 psi).
4. Adjust the tank precharge pressure according to the setpoint

Robust design

The pump is designed for long and trouble-free operation. The aluminium pump and stator housing combined with excellent corrosion-resistant internal components ensure high robustness in operation.

Protective features and benefits

SCALA2 is equipped with the following advanced protective features:

- dry-running protection
- thermal protection
- micro-leakage detection.

Dimensions and weights

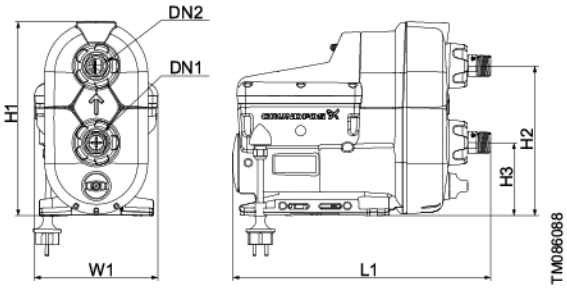

Dimensions of SCALA2

	H1 [mm] [inch]	H2 [mm] [inch]	H3 [mm] [inch]	L1 [mm] [inch]	W1 [mm] [inch]	DN1	DN2	Weight [kg] [lb]
SCALA2	302 11.9	234 9.2	114 4.5	403 15.9	193 7.6	R 1 NPT 1"	R 1 NPT 1"	10 22

EHRM INFRASTRUCTURE UPGRADES DESIGN
WHITE RIVER JUNCT. VA MED. CENTER – WHITE RIVER JUNCTION VT
PROJECT #: 405-22-700-95 % CD1
BOD APPENDIX D- MECHANICAL CUT SHEETS

Performance curves

SCALA2 is designed for single-pump households with up to 3 floors and 6-10 tapping points. Accurate sizing of the pump can be based on the pump curve below and local norms and standards.

The performance curves comply with ISO 9906 grade 2B.

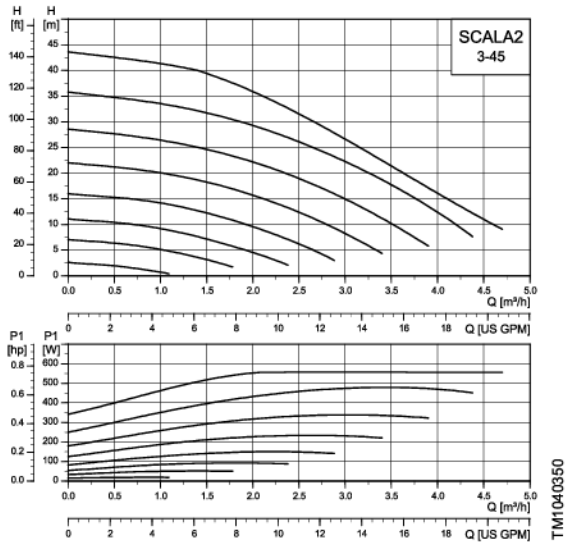

Operating panel

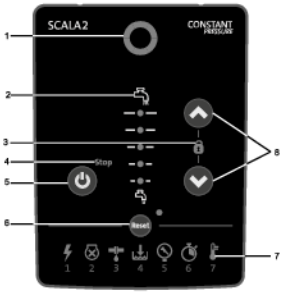

Pos.	Description
1	**Grundfos Eye**
2	Pressure indicator
3	**Lock** button
4	**Stop** button
5	**On/off** button
6	**Reset** button
7	Fault indicator
8	**Up** and **Down** buttons to set the pressure

Operating conditions

Temperature	[°C (°F)]
Max. ambient temperature	
1 × 208-230 V, 60 Hz:	45 (113)
1 × 115 V, 60 Hz:	45 (113)
1 × 200-240 V, 50/60 Hz:	55 (131)
Max. liquid temperature	45 (113)

Pressure	[bar (psi)]	[MPa]
Max. system pressure	10 (145)	1
Max. inlet pressure	6 (87)	0.6

Other operating data	
Max. head	45 m (147 ft)
IP rating	X4D (outdoor installation)
Pumped liquid	Clean water
Noise level	< 44 dB(A) [1]

1) 44 dB(A) is measured in a typical application with pressure control mode (2.5 bar (36 psi) and 1 m^3/h).

Approvals and markings

Safety approvals

Drinking water approvals

Furthermore, the product has been approved in accordance with UBA and AWQC standards.

PN	Description
93013251	SCALA2 3-45 AVCBDF 1X115V 60HZ
93013250	SCALA2 3-45 AMCJDF 1X208-230V 60HZ

98880509
ECM: 1381469

GRUNDFOS Holding A/S
Poul Due Jensens Vej 7
DK-8850 Bjerringbro
Tel: +45 87 50 14 00
www.grundfos.com

© 2023 Grundfos Holding A/S
Trademarks displayed in this material, including but not limited to Grundfos and the Grundfos logo, are registered trademarks owned by The Grundfos Group.

EHRM INFRASTRUCTURE UPGRADES DESIGN
WHITE RIVER JUNCT. VA MED. CENTER – WHITE RIVER JUNCTION VT
PROJECT #: 405-22-700-95 % CD1
BOD APPENDIX D- MECHANICAL CUT SHEETS

The VCMA-20 is ideal for automatic collection and removal of condensate from air conditioning, refrigeration and de-humidification equipment when gravity drainage is not possible or practical.

Item:	554435
Model:	VCMA-20ULST (115V)

Ratings

HP	1/30 hp
Frequency	60 Hz
Amps - Full Load	1.5 A
Full Load Watts	93 W
Volts	115 VAC
Cord Length	6 ft
Maximum Flow Rate - 60Hz	1.33 gpm / 80 gph
Flow Rate At 1ft	1.33 gpm / 80 gph
Max PSIG	8.7 PSI
Shut-Off	20 ft
Safety Switch	Yes
Tank Capacity	0.5 gal

Liquid

Max Fluid Temperature	140 °F

Materials of Construction

Pump Base Material	Plastic
Pump Body Material	Plastic
Impeller Material	GF Polypropylene
Check Valve	Yes

EHRM INFRASTRUCTURE UPGRADES DESIGN
WHITE RIVER JUNCT. VA MED. CENTER – WHITE RIVER JUNCTION VT
PROJECT #: 405-22-700-95 % CD1
BOD APPENDIX D- MECHANICAL CUT SHEETS

Installation

Discharge Type	Barb
Discharge	0.38 ″
Product Length	11 ″
Product Width	5 ″
Product Height	7 ″
Pump Length	11 ″
Product Weight	5.5 lb
Product Weight w/ Pack	6 lb
Carton Length	12 ″
Carton Width	7.44 ″
Carton Height	7.13 ″
Tubing Included	Yes

Other

Accessories / Repair Kits	•Tank 154401 •Cover, Motor 154421 •Float Arm 154452 •Switch Holder 154471 •Switch 950337 •T-20/25 ne carton of 25 pieces of 20′ (6.01m) length 3/8″″ (9.5 mm) ID VC tubing 599033 •T-3/8 100′ (640.1 m) of 3/8″″ (9.5 mm) ID x1/2″″ (12.37 mm) OD clear tubing 599107 •CV-10 1/4″″ FNPT (6.35 mm) to 3/8″″ (9.5 mm) ID vinyl tubing 599065 •CV-14/24 1/4″″ MNPT (6.35 mm) to 3/8″″ (9.5 mm) OD rigid plastic or copper tubing 599069 •CV-15/20 1/4″″ MNPT (6.35 mm) to 3/8″″ (9.5 mm) OD rigid plastic or copper tubing 599033 •Check Valve 3/8″″ NPT x 1/4″″ OD 154708
Electrical Agency Approvals	CSA/UL
Standard Warranty	12 Months
	Warranty Terms Link

EHRM INFRASTRUCTURE UPGRADES DESIGN
WHITE RIVER JUNCT. VA MED. CENTER – WHITE RIVER JUNCTION VT
PROJECT #: 405-22-700-95 % CD1
BOD APPENDIX D- MECHANICAL CUT SHEETS

ASME DRAWDOWN TANKS | SUBMITTAL

File No: 62.70
Date: SEPTEMBER 1, 2025
Supersedes: 62.70
Date: JANUARY 22, 2019

FEATURES

- FDA approved, NSF listed bladder material
- 100% (full) acceptance volume
- Bladder can be easily replaced
- Water and air separation eliminates corrosion
- Bottom system connection
- Both vertical & horizontal mounting acceptable
- Integral bladder integrity monitor (except 700L tanks)
- Integral Air pressure gauge

SPECIFICATIONS

Tank type: ASME Sect. VIII Rated Bladder Tank

Factory precharge: 40 psig; adjustable in field (700L shipped with Factory Precharge of 30 psig)

System connection: Epoxy lined

Shell and head material: Carbon Steel

Bladder material: Heavy Duty Butyl

APPLICATIONS

Booster systems or other potable water applications.

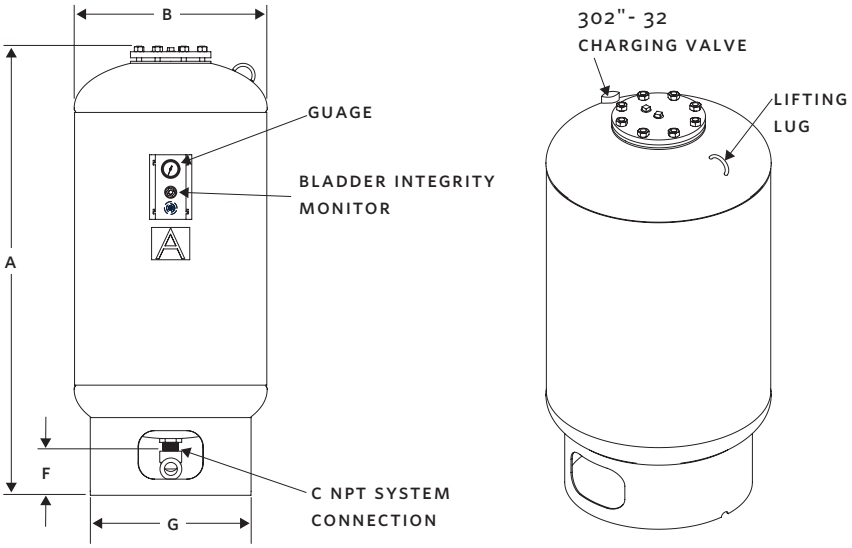

MODEL	TANK SIZE US GALLONS (L)	DIMENSIONS inches (mm)					WEIGHT	MAX WP*	MAX WT
		A	B	C	F	G	lbs (kg)	psig (bar)	°F (°C)
85L	23 (87)	37.00 (940)	16.00 (406)	1	5.50 (140)	12.00 (305)	90 (40.8)	125 (8.6)	240 (115.6)
130L	35 (132)	37.00 (940)	20.00 (508)	1	5.50 (140)	16.00 (406)	125 (56.7)		
200L	53 (200)	43.00 (1092)	24.00 (610)	1½	5.25 (133)	20.00 (508)	210 (95.2)		
300L	79 (300)	55.00 (1397)	24.00 (610)	1½	5.25 (133)	20.00 (508)	225 (102.0)		
400L	106 (401)	49.00 (1245)	30.00 (762)	1½	5.25 (133)	24.00 (610)	300 (136.1)		
500L	132 (500)	57.00 (1448)	30.00 (762)	2	5.25 (133)	24.00 (610)	335 (151.9)		
600L	158 (598)	65.00 (1651)	30.00 (762)	2	5.25 (133)	24.00 (610)	360 (163.3)		
700L	185 (700)	80.00 (2032)	30.00 (762)	1½	13.00 (330)	19.00 (483)	600 (272.2)	200 (13.8)	
800L	211 (799)	76.00 (1930)	32.00 (813)	2	5.25 (133)	28.00 (711)	475 (215.5)	125 (8.6)	

NOTES: All dimensions are subject to change without notice.

EHRM INFRASTRUCTURE UPGRADES DESIGN
WHITE RIVER JUNCT. VA MED. CENTER – WHITE RIVER JUNCTION VT
PROJECT #: 405-22-700-95 % CD1
BOD APPENDIX D- MECHANICAL CUT SHEETS

TORONTO

23 BERTRAND AVENUE,
TORONTO, ONTARIO,
CANADA, M1L 2P3
+1 416 755 2291

BUFFALO

93 EAST AVENUE, NORTH
TONAWANDA, NEW YORK,
USA, 14120-6594
+1 716 693 8813

DROITWICH SPA

POINTON WAY, STONEBRIDGE CROSS
BUSINESS PARK, DROITWICH SPA,
WORCESTERSHIRE,
UNITED KINGDOM, WR9 OLW
+44 8444 145 145

MANCHESTER

WOLVERTON STREET, MANCHESTER
UNITED KINGDOM, M11 2ET
+44 8444 145 145

BANGALORE

#18, LEWIS WORKSPACE, 3RD FLOOR,
OFF MILLERS - NANDIDURGA ROAD,
JAYAMAHAL CBD, BENSON TOWN,
BANGALORE, INDIA 560 046
+91 80 6510 3555

SHANGHAI

UNIT 903, 888 NORTH SICHUAN RD.
HONGKOU DISTRICT, SHANGHAI
CHINA, 200085
+86 21 5237 0909

BEIJING

ROOM 1612, NANYIN BUILDING NO.2
NORTH EAST THRID RING ROAD
CHAOYANG DISTRICT, BEIJING,
CHINA 100027
+86 21 5237 0909

SÃO PAULO

RUA JOSÉ SEMIÃO RODRIGUES
AGOSTINHO, 1370 GALPÃO 6 EMBU
DAS ARTES, SAO PAULO, BRAZIL
+55 11 4785 1330

LYON

93 RUE DE LA VILLETTE
LYON, 69003 FRANCE
+33 4 20 10 26 21

DUBAI

JAFZA VIEW 19, OFFICE 402
P.O.BOX 18226 JAFZA,
DUBAI - UNITED ARAB EMIRATES
+971 4 887 6775

JIMBOLIA

STR CALEA MOTILOR NR. 2C
JIMBOLIA 305400, JUD.TIMIS
ROMANIA
+40 256 360 030

FRANKFURT

WESTERBACHSTRASSE 32,
D-61476 KRONBERG IM TAUNUS
GERMANY
+49 6173 999 77 55

ARMSTRONG FLUID TECHNOLOGY®
ESTABLISHED 1934

ARMSTRONGFLUIDTECHNOLOGY.COM

Job Name/Location: Tag No:

Date:

For: ☐ File ☐ Resubmit ☐ Approval ☐ Other_____

PO No.:

Architect: GC:

Engr: Mech:

Rep:
(Company) (Project Manager)

KSUDB121A

R32 Single Zone 2x2 Four-Way Cassette

Indoor Unit (IDU) - KNUDB121A, Outdoor Unit (ODU) - KUSXB121A

Performance:

Cooling:

Cooling Capacity (Min~Rated~Max) (Btu/h)	3,600~11,100~12,400
SEER2	21.5
EER2	13.00

SEER - Seasonal Energy Efficiency Ratio EER - Energy Efficiency Ratio

Heating:

Heating Capacity (Min~Rated~Max) (Btu/h)	4,400~14,000~16,500
HSPF2	10.1
Max. Heating @ Indoor 70°F DB	
Outdoor 17°F WB	12,700
Outdoor 5°F WB	10.700
Outdoor -4°F WB	9.800

HSPF - Heating Seasonal Performance Factor

Electrical:

Power Supply (V¹/Hz/Ø)	208-230/60/1
MOP (A)	15
MCA (A)	13.4
Cooling Rated Amps (A)	9.65
Heating Rated Amps (A)	9.65
Compressor (A)	9.0
Fan Motor (IDU + ODU) (A)	0.25 + 0.4
Cooling Power Input (Min~Rated~Max @95°F) (kW)	0.19~0.85~1.10
Heating Power Input (Min~Rated~Max @47°F) (kW)	0.15~1.210~1.62

MOP - Maximum Overcurrent Protection MCA - Minimum Circuit Ampacity

Piping:

Liquid (in., O.D., Connection Size/Pipe Size)	1/4 / 1/4
Vapor (in., O.D., Connection Size/Pipe Size)	3/8 / 3/8
Additional Refrigerant (oz./ft.)	0.22
Max. Pipe Length (ft.)²	65.6
Piping Length (no add'l refrig., ft.)	24.6
Max. Elevation (ft.)	49.2

Features:

- Inverter (Variable Speed) Compressor
- Internal Condensate Pump
- Swirl Wind / Jet Cool
- IDU compatible with Multi F ODUs
- Auto Restart / Auto Changeover
- R32 Leak Detection Sensor
- Ultra-quiet Turbo Fan
- Optional Wi-Fi Control

Included Accessories:

☐ Wireless Remote Controller — PQWRHQ0FDB

Required Accessories:

☐ Panel (24-13/32" x 24-13/32") - PT-QAGW0

Optional Accessories:

☐ Ventilation Flange³ - PTVK430
☐ Auxiliary Heater Kit - PRARH1
☐ Wi-Fi Module - PWFMDD200
☐ Single-Port Shutoff Valve - PRHPZ010A
☐ Low Ambient Wind Baffle (Cooling operation to -4°F) -ZLABGP01A
☐ Drain Pan Heater - POSH1202

Controller Options:

☐ MultiSITE™ CRC* Controllers
☐ Simple Remote Controllers
☐ Standard III Remote Controllers
☐ Deluxe Remote Controller
☐ Remote Temperature Button Sensor
☐ Dry Contacts

Operating Range:

Outdoor Unit:

Cooling (°F DB)	5 ~ 118
Heating (°F WB)	-4 ~ +64

Indoor Unit:

Cooling (°F WB)	57 ~ 77
Heating (°F DB)	59 ~ 81

System Data:

Refrigerant Type	R32
Refrigerant Control	EEV
Refrigerant Charge (lbs.)	2.43
IDU Sound Pressure (H/M/L) (±3 dB[A])³	38 / 35 / 32
ODU Sound Pressure Max. (Cooling / Heating) (±3 dB[A])³	49 / 52
ODU Net / Shipping Weight (lbs.)	75 / 79.4
IDU Net / Shipping Weight (lbs.)	28.4 / 34
Grille Net / Shipping Weight (lbs.)	6.3 / 8.6

Fan:

ODU Type	Axial
IDU Type	Turbo
Fan Speeds (Fan/Cool/Heat)	4 / 5 / 4
Quantity (ODU + IDU)	1 + 1
Motor/Drive	Brushless Digitally Controlled/Direct
ODU Air Flow Rate (CFM)	988
IDU Air Flow (CFM, H/M/L)	335 / 283 / 247
Dehumidification (pts./hr.)	2.5

Notes:

1. Acceptable operating voltage: 187V-253V.
2. Piping lengths are equivalent.
3. Must comply with applicable codes for fire isolation dampers.
4. Sound Pressure levels are tested in an anechoic chamber under ISO Standard 3745.
5. All power supply wiring to the outdoor unit is field supplied, solid or stranded. The power wiring and the communication wiring from the outdoor unit to the indoor unit is field supplied and must be stranded, shielded or unshielded (if shielded, it must be grounded to the chassis of the outdoor unit only). All wiring must comply with applicable local and national codes.
   a. Power Supply Wiring to Outdoor Unit (No. x AWG): 3 x 12 for 9k, 12k, 18k, and 24k; 3 x 10 for 30k, 36k, 42k, and 48k.
   b. Power Wiring and Communication Wiring from Outdoor Unit to Indoor Unit (No. x AWG) 3 x 14 / 2 x 18.
6. This unit comes with a dry helium charge.
7. Nominal data is rated 0 ft. above sea level, with 25 ft. of refrigerant line and a 0 ft. level difference between outdoor and indoor units.
8. Must follow installation instructions in the applicable LG installation manual.
9. Multi-compatible IDUs include socket adapters for refrigerant pipe connection with Single Zone systems.

ENERGY STAR

ENERGY STAR COLD CLIMATE

C US

AHRI CERTIFIED® www.ahridirectory.org
Unitary Small HP
AHRI Standard 210/240
Certification applies only when the complete system is listed with AHRI.

Proper sizing and installation of equipment is critical to achieve optimal performance. Split system air conditioners and heat pumps (excluding ductless systems) must be matched with appropriate coil components to meet ENERGY STAR® criteria. Ask your contractor for details or visit www.energystar.gov. (ENERGY STAR and the ENERGY STAR mark are registered trademarks owned by the U.S. Environmental Protection Agency.)

For a complete list of available accessories, contact your LG representative.
For continual product development, LG reserves the right to change specifications without notice.
© LG Electronics U.S.A., Inc., Englewood Cliffs, NJ. All rights reserved. "LG Life's Good" is a registered trademark of LG Corp. /www.lghvac.com

EPM INFRASTRUCTURE UPGRADES DESIGN
WHITE RIVER JUNCT. VA MED. CENTER – WHITE RIVER JUNCTION VT
PROJECT #: 405-22-700-95 % CD1
BOD APPENDIX D- MECHANICAL CUT SHEETS

Job Name/Location: _____

KSUDB121A

R32 Single Zone 2x2 Four-Way Cassette

Indoor Unit (IDU) - KNUDB121A, Outdoor Unit (ODU) - KUSXB121A

Tag No.: _____

Date: _____

PO No.: _____

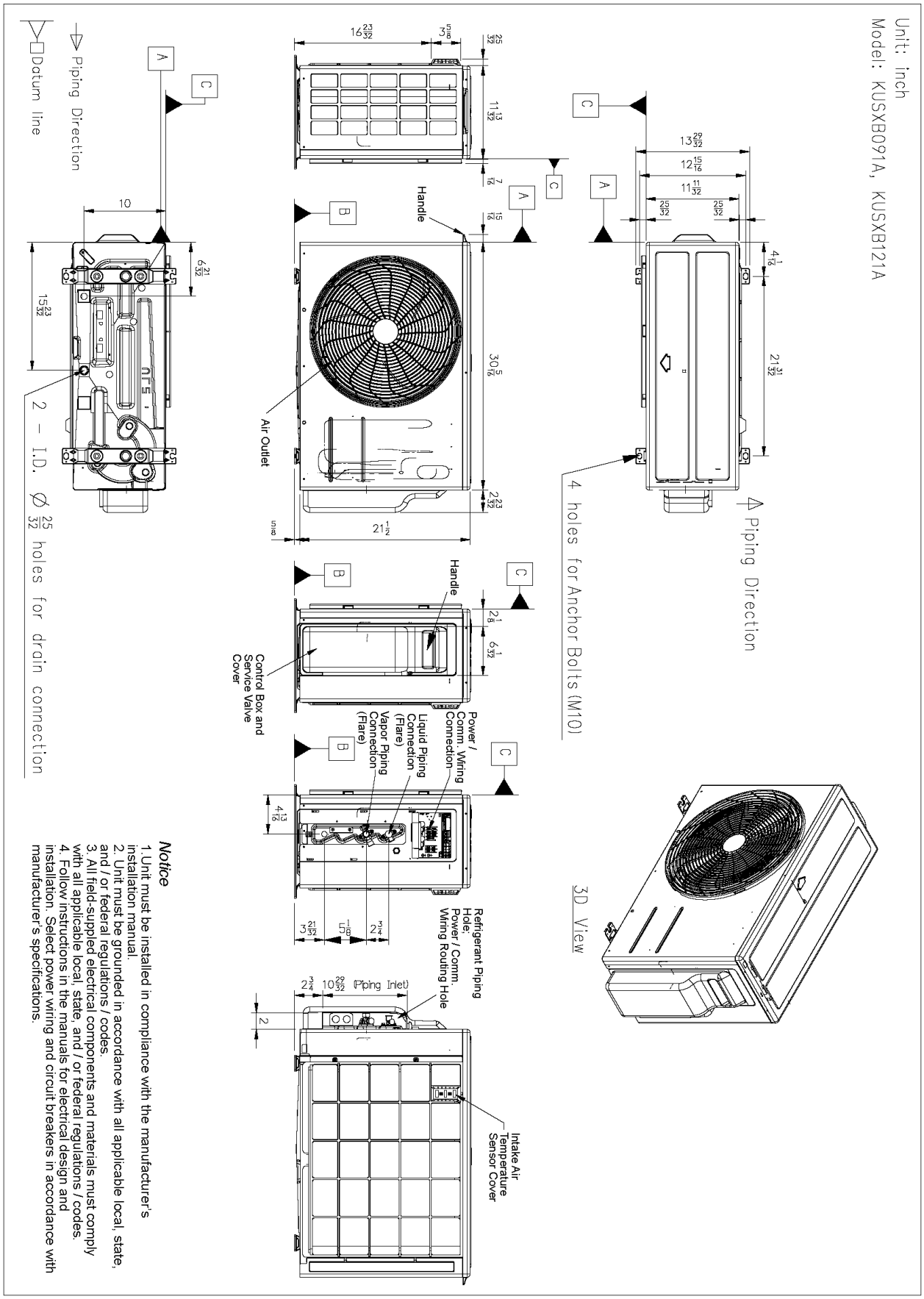

Notice

1. Unit must be installed in compliance with the manufacturer's installation manual.
2. Unit must be grounded in accordance with all applicable local, state, and / or federal regulations / codes.
3. All field-supplied electrical components and materials must comply with all applicable local, state, and / or federal regulations / codes.
4. Follow instructions in the manuals for electrical design and installation. Select power wiring and circuit breakers in accordance with manufacturer's specifications.

EDGE INFRASTRUCTURE UPGRADES DESIGN
WHITE RIVER JUNCT. VA MED. CENTER – WHITE RIVER JUNCTION VT
PROJECT #: 405-22-700-95 % CD1
BOD APPENDIX D- MECHANICAL CUT SHEETS

For continual product development, LG reserves the right to change specifications without notice.
© LG Electronics U.S.A., Inc., Englewood Cliffs, NJ. All rights reserved. "LG Life's Good" is a registered trademark of LG Corp. /www.lghvac.com

Job Name/Location: _____

KSUDB121A

R32 Single Zone 2x2 Four-Way Cassette

Indoor Unit (IDU) - KNUDB121A, Outdoor Unit (ODU) - KUSXB121A

Tag No.: _____

Date: _____

PO No.: _____

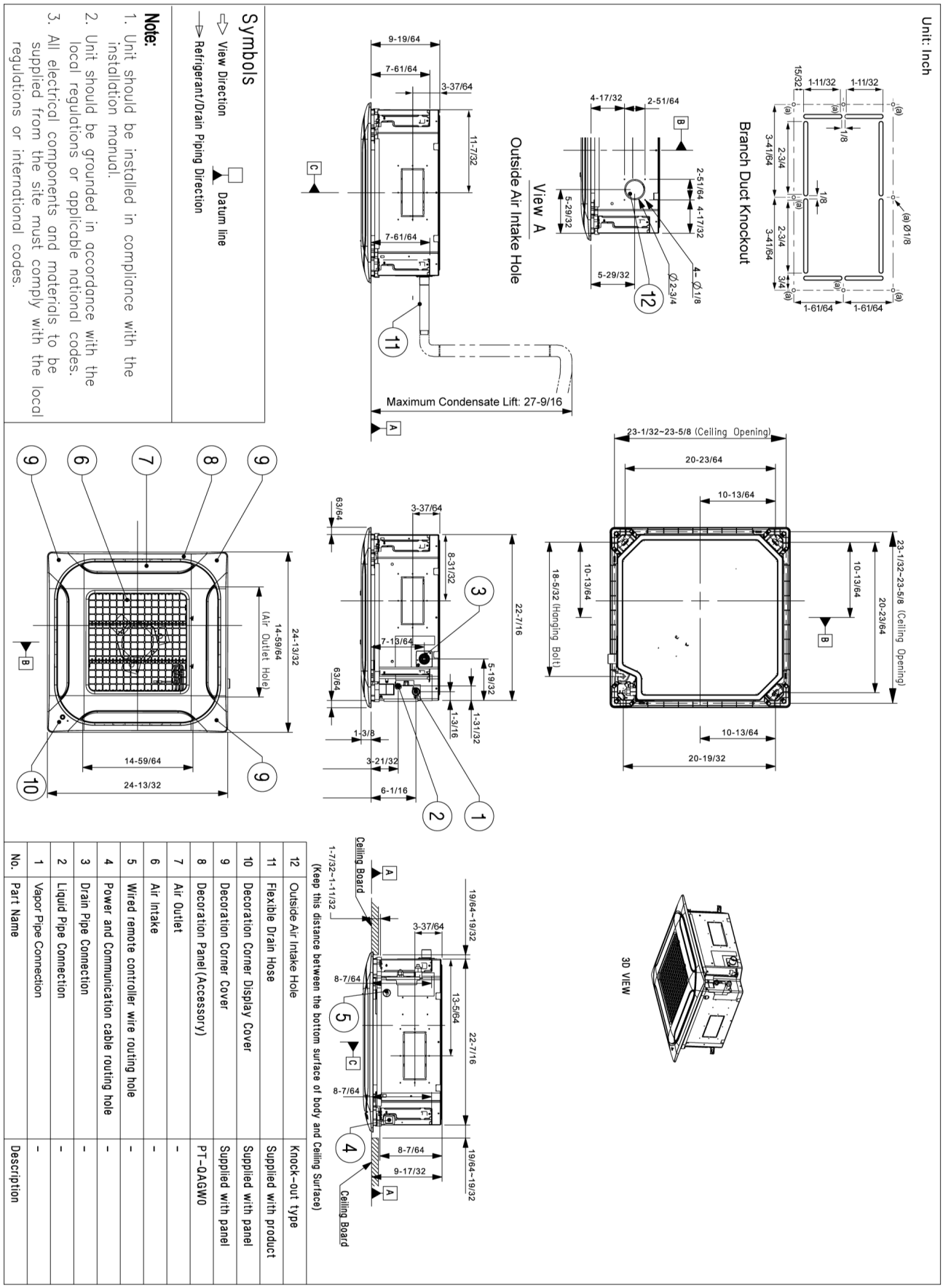

No.	Part Name	Description
12	Outside Air Intake Hole	Knock-out type
11	Flexible Drain Hose	Supplied with product
10	Decoration Corner Display Cover	Supplied with panel
9	Decoration Corner Cover	Supplied with panel
8	Decoration Panel(Accessory)	PT-QAGW0
7	Air Outlet	-
6	Air Intake	-
5	Wired remote controller wire routing hole	-
4	Power and Communication cable routing hole	-
3	Drain Pipe Connection	-
2	Liquid Pipe Connection	-
1	Vapor Pipe Connection	-

EPR: INFRASTRUCTURE UPGRADES DESIGN
WHITE RIVER JUNCT. VA MED. CENTER – WHITE RIVER JUNCTION VT
PROJECT #: 405-22-700-95 % CD1
BOD APPENDIX D- MECHANICAL CUT SHEETS

For continual product development, LG reserves the right to change specifications without notice.
© LG Electronics U.S.A., Inc., Englewood Cliffs, NJ. All rights reserved. "LG Life's Good" is a registered trademark of LG Corp. /www.lghvac.com

Job Name/Location: **Tag #:**

Date:

For: ☐ File ☐ Resubmit ☐ Approval ☐ Other_____

PO No.:

Architect: GC:

Engr: Mech:

Rep:
(Company) (Project Manager)

ZRNU183SKSA

R32 Multi V™ Standard Wall Mounted Unit

19,100 Btu/h Indoor Unit

Performance:

Total Cooling Capacity (Btu/h)[1]	19,100
Heating Capacity (Btu/h)[1]	21.500
Max Power Input (W)[2]	53
H / M / L Power Input at Factory Default (W)	32 / 26 / 16

Rated capacity is certified under AHRI Standard 1230. Ratings are subject to change without notice. Current certified ratings are available at www.ahridirectory.org.

Electrical:

Power Supply (V/Hz/Ø)	208-230 / 60 / 1
Rated Amps	0.52

Piping:

Refrigerant	
Liquid Line (in., O.D.)	1/4 Flare
Vapor Line (in., O.D.)	1/2 Flare
Condensate	
Condensate Line (in., I.D.)	1
Factory Installed Pump	No

Features:

- Auto changeover (Heat Recovery only)
- Auto operation
- Auto restart
- Dual thermistor control
- Dual setpoint control
- Multiple auxillary heater applications
- Timer (on/off)
- Weekly schedule
- Auto direction/ swing (up/down)
- Fan speed control
- Jet cool (fast cooling)
- Filter life display
- Child lock
- Group control
- Hot start
- Self diagnostics
- External on/off control
- Wi-Fi (built-in)
- Auto Fan
- R32 leak detection sensor

Optional Accessories:

☐ Wireless Remote Controller - PWLSSB21H
☐ Auxillary Heater Kit - PRARS1

Controller Options:

☐ MultiSITE™ CRC* Controllers
☐ Simple Remote Controller
☐ Standard III Remote Controllers
☐ Dry Contacts

Unit Data:

Refrigerant Type	R32
Refrigerant Control	EEV
Sound Pressure dB(A) (H/M/L)[3]	43 / 39 / 34
Primary Filter Type	Washable
Unit Net Weight (lbs.)	28.7
Unit Shipping Weight (lbs.)	31.7

Fan:

Type	Cross Flow
Quantity	1
Motor/Drive	Brushless Digitally Controlled/Direct
Motor Quantity	1
Air Flow Rate H/M/L (CFM)	494 / 424 / 371

Notes:

1. See Engineering Manual for sensible and latent capacities.
2. Max. power input is rated at maximum setting value.
3. Sound Pressure levels are tested in an anechoic chamber under ISO Standard 3745.
4. All communication cable must be minimum 18 AWG, 2-conductor, twisted, stranded, shielded and must comply with applicable local and national codes. Ensure the communication cable is properly grounded at the main outdoor unit only. Do not ground the outdoor unit to indoor units / heat recovery units communication cable at any other point. Wiring must comply with all applicable local and national codes.
5. Power wiring is field provided and must comply with the applicable local and national codes.
6. This unit comes with a dry nitrogen charge.
7. All capacities are net with a combination ratio between 95 – 105%.
8. Must follow installation instructions in the applicable LG installation manual.

C US

EDM INFRASTRUCTURE UPGRADES DESIGN
WHITE RIVER JUNCT. VA MED. CENTER – WHITE RIVER JUNCTION VT
PROJECT #: 405-22-700-95 % CD1
BOD APPENDIX D- MECHANICAL CUT SHEETS

For a complete list of available accessories, contact your LG representative.
For continual product development, LG reserves the right to change specifications without notice.
© LG Electronics U.S.A., Inc., Englewood Cliffs, NJ. All rights reserved. "LG Life's Good" is a registered trademark of LG Corp. /www.lghvac.com

Job Name/Location: _____

ZRNU183SKSA

R32 Multi V™ Standard Wall Mounted Unit

19,100 Btu/h Indoor Unit

Tag No.: _____

Date: _____

PO No.: _____

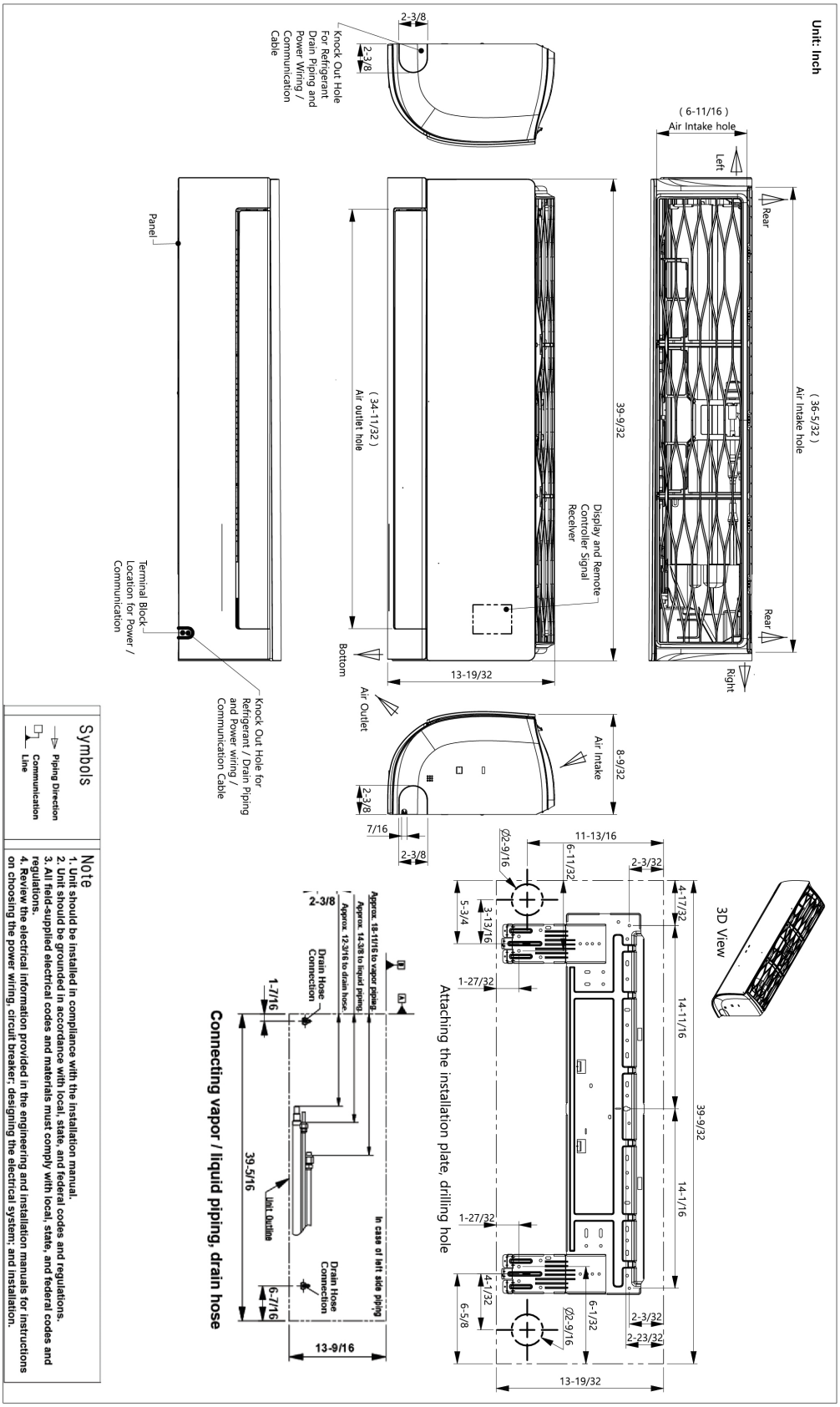

For continual product development, LG reserves the right to change specifications without notice.
© LG Electronics U.S.A., Inc., Englewood Cliffs, NJ. All rights reserved. "LG Life's Good" is a registered trademark of LG Corp. /www.lghvac.com

EGRM INFRASTRUCTURE UPGRADES DESIGN
WHITE RIVER JUNCT. VA MED. CENTER – WHITE RIVER JUNCTION VT
PROJECT #: 405-22-700-95 % CD1
BOD APPENDIX D- MECHANICAL CUT SHEETS

Job Name/Location: **Tag #:**

Date:

PO No.:

For: ☐ File ☐ Resubmit ☐ Approval ☐ Other_____

Architect: GC:

Engr: Mech:

Rep:
(Company) (Project Manager)

ZRNU243SKSA

R32 Multi V™ Standard Wall Mounted Unit

24,200 Btu/h Indoor Unit

Performance:

Total Cooling Capacity (Btu/h)[1]	24,200
Heating Capacity (Btu/h)[1]	25.600
Max Power Input (W)[2]	53
H / M / L Power Input at Factory Default (W)	39 / 26 / 16

Rated capacity is certified under AHRI Standard 1230. Ratings are subject to change without notice. Current certified ratings are available at www.ahridirectory.org.

Electrical:

Power Supply (V/Hz/Ø)	208-230 / 60 / 1
Rated Amps	0.52

Piping:

Refrigerant	
Liquid Line (in., O.D.)	1/4 Flare
Vapor Line (in., O.D.)	1/2 Flare
Condensate	
Condensate Line (in., I.D.)	1
Factory Installed Pump	No

Features:

- Auto changeover (Heat Recovery only)
- Auto operation
- Auto restart
- Dual thermistor control
- Dual setpoint control
- Multiple auxillary heater applications
- Timer (on/off)
- Weekly schedule
- Auto direction/ swing (up/down)
- Fan speed control
- Jet cool (fast cooling)
- Filter life display
- Child lock
- Group control
- Hot start
- Self diagnostics
- External on/off control
- Wi-Fi (built-in)
- Auto Fan
- R32 leak detection sensor

Optional Accessories:

☐ Wireless Remote Controller - PWLSSB21H
☐ Auxillary Heater Kit - PRARS1

Controller Options:

☐ MultiSITE™ CRC* Controllers
☐ Simple Remote Controller
☐ Standard III Remote Controllers
☐ Dry Contacts

Unit Data:

Refrigerant Type	R32
Refrigerant Control	EEV
Sound Pressure dB(A) (H/M/L)[3]	46 / 41 / 34
Primary Filter Type	Washable
Unit Net Weight (lbs.)	28.7
Unit Shipping Weight (lbs.)	31.7

Fan:

Type	Cross Flow
Quantity	1
Motor/Drive	Brushless Digitally Controlled/Direct
Motor Quantity	1
Air Flow Rate H/M/L (CFM)	537 / 449 /371

Notes:

1. See Engineering Manual for sensible and latent capacities.
2. Max. power input is rated at maximum setting value.
3. Sound Pressure levels are tested in an anechoic chamber under ISO Standard 3745.
4. All communication cable must be minimum 18 AWG, 2-conductor, twisted, stranded, shielded and must comply with applicable local and national codes. Ensure the communication cable is properly grounded at the main outdoor unit only. Do not ground the outdoor unit to indoor units / heat recovery units communication cable at any other point. Wiring must comply with all applicable local and national codes.
5. Power wiring is field provided and must comply with the applicable local and national codes.
6. This unit comes with a dry nitrogen charge.
7. All capacities are net with a combination ratio between 95 – 105%.
8. Must follow installation instructions in the applicable LG installation manual.

C US

EDM INFRASTRUCTURE UPGRADES DESIGN
WHITE RIVER JUNCT. VA MED. CENTER – WHITE RIVER JUNCTION VT
PROJECT #: 405-22-700-95 % CD1
BOD APPENDIX D- MECHANICAL CUT SHEETS

For a complete list of available accessories, contact your LG representative.
For continual product development, LG reserves the right to change specifications without notice.
© LG Electronics U.S.A., Inc., Englewood Cliffs, NJ. All rights reserved. "LG Life's Good" is a registered trademark of LG Corp. /www.lghvac.com

Job Name/Location: _____

ZRNU243SKSA

R32 Multi V™ Standard Wall Mounted Unit

24,200 Btu/h Indoor Unit

Tag No.: _____

Date: _____

PO No.: _____

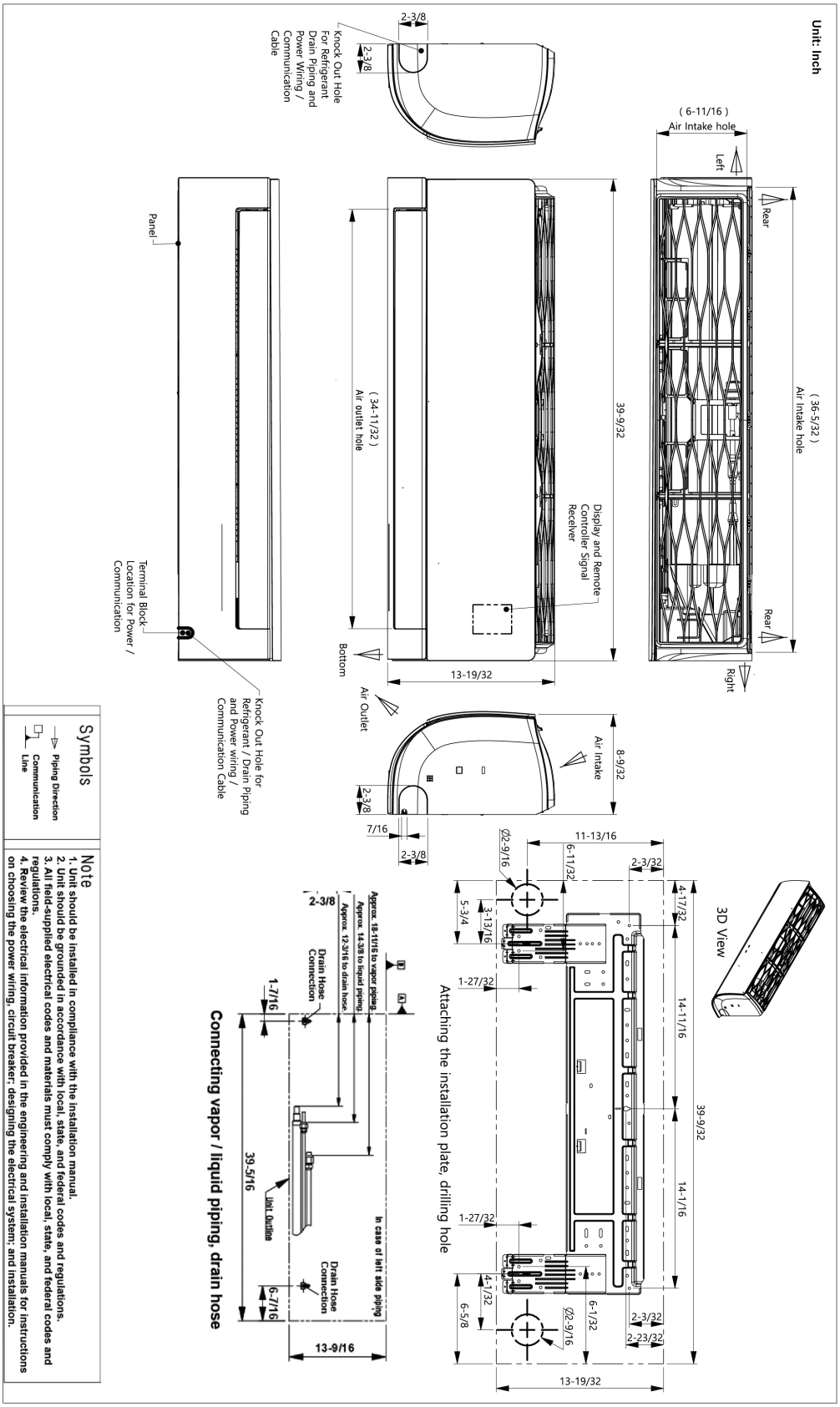

© LG Electronics U.S.A., Inc., Englewood Cliffs, NJ. All rights reserved. "LG Life's Good" is a registered trademark of LG Corp. /www.lghvac.com

EGRM INFRASTRUCTURE UPGRADES DESIGN
WHITE RIVER JUNCT. VA MED. CENTER – WHITE RIVER JUNCTION VT
PROJECT #: 405-22-700-95 % CD1
BOD APPENDIX D- MECHANICAL CUT SHEETS

Job Name/Location: **Tag #:**

Date:

For: ☐ File ☐ Resubmit ☐ Approval ☐ Other_____

PO No.:

Architect: GC:

Engr: Mech:

Rep:
(Company) (Project Manager)

ZRNU303SRAA

R32 Multi V™ Standard Wall Mounted Unit

30,000 Btu/h Indoor Unit

Performance:

Total Cooling Capacity (Btu/h)[1]	30,000
Heating Capacity (Btu/h)[1] Max	32,000
Max Power Input (W)[2]	65
H / M / L Power Input at Factory Default (W)	45 / 30 / 23

Rated capacity is certified under AHRI Standard 1230. Ratings are subject to change without notice. Current certified ratings are available at www.ahridirectory.org.

Electrical:

Power Supply (V/Hz/Ø)	208-230 / 60 / 1
Rated Amps	0.90

Piping:

Refrigerant	
Liquid Line (in., O.D.)	1/4 Flare
Vapor Line (in., O.D.)	1/2 Flare
Condensate	
Condensate Line (in., I.D.)	1
Factory Installed Pump	No

Features:

- Auto changeover (Heat Recovery only)
- Auto operation
- Auto restart
- Dual thermistor control
- Dual setpoint control
- Multiple auxillary heater applications
- Timer (on/off)
- Weekly schedule
- Auto direction/ swing (up/down)
- Fan speed control
- Jet cool (fast cooling)
- Filter life display
- Child lock
- Group control
- Hot start
- Self diagnostics
- External on/off control
- Wi-Fi (built-in)
- Auto Fan
- R32 leak detection sensor

Optional Accessories:

☐ Auxillary Heater Kit - PRARS1

Controller Options:

☐ MultiSITE™ CRC* Controllers Simple
☐ Remote Controller Standard III Remote
☐ Controllers Dry Contacts
☐ Wireless Remote Controller - PWLSSB21H

Unit Data:

Refrigerant Type	R32
Refrigerant Control	EEV
Sound Pressure dB(A) (H/M/L)[3]	46 / 42 / 38
Primary Filter Type	Washable
Unit Net Weight (lbs.)	20.1
Unit Shipping Weight (lbs.)	22.8

Fan:

Type	Cross Flow
Quantity	1
Motor/Drive	Brushless Digitally Controlled/Direct
Motor Quantity	1
Air Flow Rate H/M/L (CFM)	742 / 600 / 459

Notes:

1. See Engineering Manual for sensible and latent capacities.
2. Max. power input is rated at maximum setting value.
3. Sound Pressure levels are tested in an anechoic chamber under ISO Standard 3745.
4. If a Third-Party Dry Contact and an LG internal heater or an LG Auxiliary Heater Kit is installed, supplemental heat capability cannot be controlled by the Third-Party Thermostat.
5. All communication cable must be minimum 18 AWG, 2-conductor, twisted, stranded, shielded and must comply with applicable local and national codes. Ensure the communication cable is properly grounded at the main outdoor unit only. Do not ground the outdoor unit to indoor units / heat recovery units communication cable at any other point. Wiring must comply with all applicable local and national codes.
6. Power wiring is field provided and must comply with the applicable local and national codes.
7. This unit comes with a dry nitrogen charge.
8. All capacities are net with a combination ratio between 95 – 105%.
9. Must follow installation instructions in the applicable LG installation manual.

C US

EDM INFRASTRUCTURE UPGRADES DESIGN
WHITE RIVER JUNCT. VA MED. CENTER – WHITE RIVER JUNCTION VT
PROJECT #: 405-22-700-95 % CD1
BOD APPENDIX D- MECHANICAL CUT SHEETS

For a complete list of available accessories, contact your LG representative.
For continual product development, LG reserves the right to change specifications without notice.
© LG Electronics U.S.A., Inc., Englewood Cliffs, NJ. All rights reserved. "LG Life's Good" is a registered trademark of LG Corp. /www.lghvac.com

Job Name/Location: _____

ZRNU303SRAA

R32 Multi V™ Standard Wall Mounted Unit

30,000 Btu/h Indoor Unit

Tag No.: _____

Date: _____

PO No.: _____

Unit: Inch (mm)
SR Frame

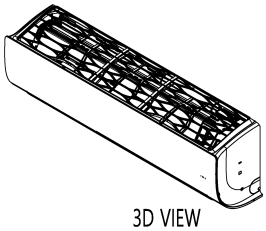

3D VIEW

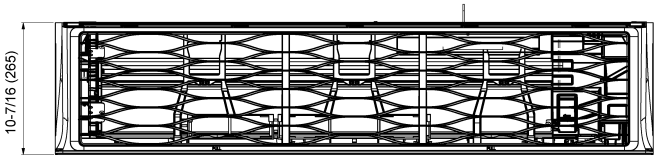

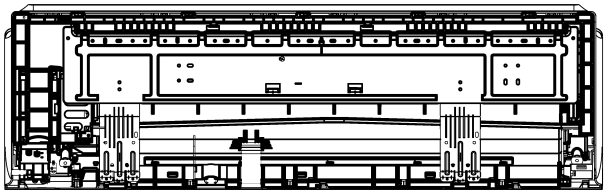

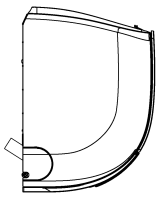

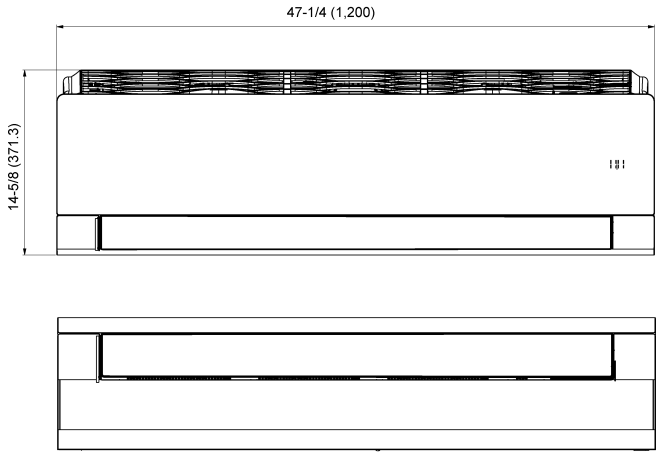

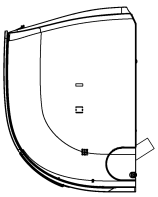

Indoor Unit Frame

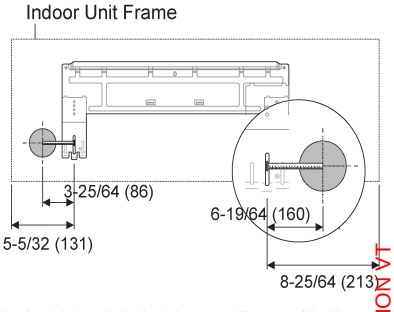

Note:

1. Unit should be installed in compliance with the installation manual.
2. Unit should be grounded in accordance with the local regulations or applicable national codes.
3. All electrical components and materials to be supplied from the site must comply with the local regulations or international codes.

For continual product development, LG reserves the right to change specifications without notice.
© LG Electronics U.S.A., Inc., Englewood Cliffs, NJ. All rights reserved. "LG Life's Good" is a registered trademark of LG Corp. /www.lghvac.com

EGRM INFRASTRUCTURE UPGRADES DESIGN
WHITE RIVER JUNCT. VA MED. CENTER – WHITE RIVER JUNCTION VT
PROJECT #: 405-22-700-95 % CD1
BOD APPENDIX D- MECHANICAL CUT SHEETS

Job Name/Location: **Tag #:**

Date:

For: ☐ File ☐ Resubmit ☐ Approval ☐ Other_____

PO No.:

Architect: GC:

Engr: Mech:

Rep:
(Company) (Project Manager)

ZRNU363SRAA

R32 Multi V™ Standard Wall Mounted Unit

35,000 Btu/h Indoor Unit

Performance:

Total Cooling Capacity (Btu/h)[1]	35,000
Heating Capacity (Btu/h)[1] Max	37,000
Max Power Input (W)[2]	123
H / M / L Power Input at Factory Default (W)	65 / 45 / 30

Rated capacity is certified under AHRI Standard 1230. Ratings are subject to change without notice. Current certified ratings are available at www.ahridirectory.org.

Electrical:

Power Supply (V/Hz/Ø)	208-230 / 60 / 1
Rated Amps	0.90

Piping:

Refrigerant	
Liquid Line (in., O.D.)	3/8 Flare
Vapor Line (in., O.D.)	5/8 Flare
Condensate	
Condensate Line (in., I.D.)	1
Factory Installed Pump	No

Features:

- Auto changeover (Heat Recovery only)
- Auto operation
- Auto restart
- Dual thermistor control
- Dual setpoint control
- Multiple auxillary heater applications
- Timer (on/off)
- Weekly schedule
- Auto direction/ swing (up/down)
- Fan speed control
- Jet cool (fast cooling)
- Filter life display
- Child lock
- Group control
- Hot start
- Self diagnostics
- External on/off control
- Wi-Fi (built-in)
- Auto Fan
- R32 leak detection sensor

Optional Accessories:

☐ Auxillary Heater Kit - PRARS1

Controller Options:

☐ MultiSITE™ CRC* Controllers Simple
☐ Remote Controller Standard III Remote
☐ Controllers Dry Contacts
☐ Wireless Remote Controller - PWLSSB21H

Unit Data:

Refrigerant Type	R32
Refrigerant Control	EEV
Sound Pressure dB(A) (H/M/L)[3]	51 / 46 / 42
Primary Filter Type	Washable
Unit Net Weight (lbs.)	20.1
Unit Shipping Weight (lbs.)	22.8

Fan:

Type	Cross Flow
Quantity	1
Motor/Drive	Brushless Digitally Controlled/Direct
Motor Quantity	1
Air Flow Rate H/M/L (CFM)	883 / 742 / 600

Notes:

1. See Engineering Manual for sensible and latent capacities.
2. Max. power input is rated at maximum setting value.
3. Sound Pressure levels are tested in an anechoic chamber under ISO Standard 3745.
4. If a Third-Party Dry Contact and an LG internal heater or an LG Auxiliary Heater Kit is installed, supplemental heat capability cannot be controlled by the Third-Party Thermostat.
5. All communication cable must be minimum 18 AWG, 2-conductor, twisted, stranded, shielded and must comply with applicable local and national codes. Ensure the communication cable is properly grounded at the main outdoor unit only. Do not ground the outdoor unit to indoor units / heat recovery units communication cable at any other point. Wiring must comply with all applicable local and national codes.
6. Power wiring is field provided and must comply with the applicable local and national codes.
7. This unit comes with a dry nitrogen charge.
8. All capacities are net with a combination ratio between 95 – 105%.
9. Must follow installation instructions in the applicable LG installation manual.

C US

EPM INFRASTRUCTURE UPGRADES DESIGN
WHITE RIVER JUNCT. VA MED. CENTER – WHITE RIVER JUNCTION VT
PROJECT #: 405-22-700-95 % CD1
BOD APPENDIX D- MECHANICAL CUT SHEETS

For a complete list of available accessories, contact your LG representative.
For continual product development, LG reserves the right to change specifications without notice.
© LG Electronics U.S.A., Inc., Englewood Cliffs, NJ. All rights reserved. "LG Life's Good" is a registered trademark of LG Corp. /www.lghvac.com

Job Name/Location: _____

ZRNU363SRAA

R32 Multi V™ Standard Wall Mounted Unit

35,000 Btu/h Indoor Unit

Tag No.: _____

Date: _____

PO No.: _____

Unit: Inch (mm)
SR Frame

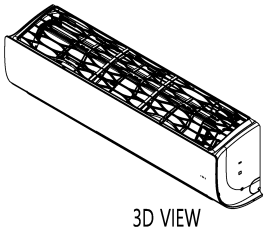

3D VIEW

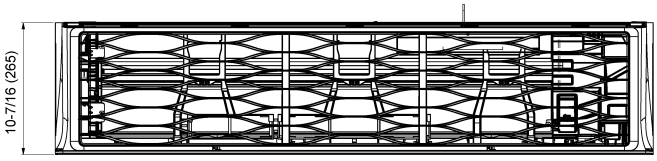

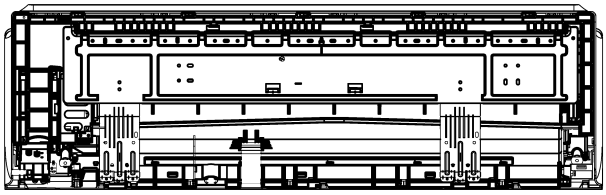

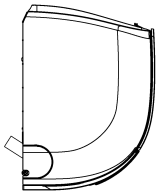

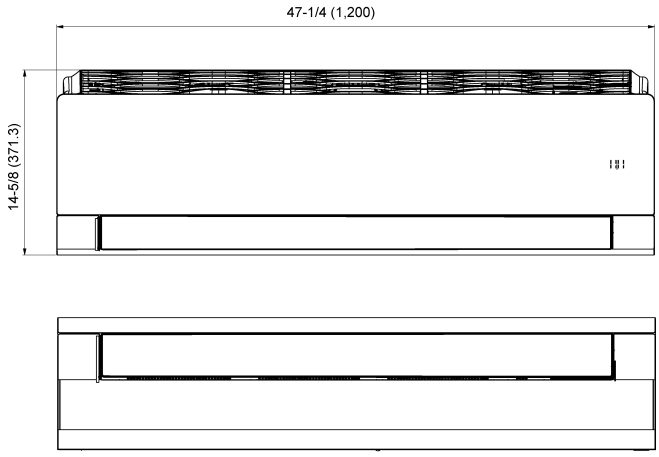

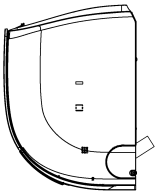

Indoor Unit Frame

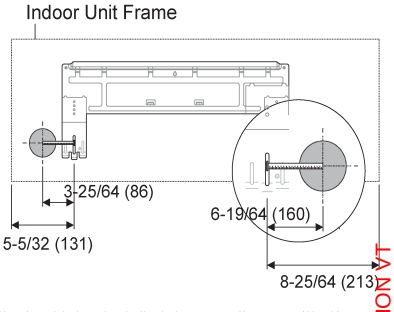

Note:

1. Unit should be installed in compliance with the installation manual.
2. Unit should be grounded in accordance with the local regulations or applicable national codes.
3. All electrical components and materials to be supplied from the site must comply with the local regulations or international codes.

EGRM INFRASTRUCTURE UPGRADES DESIGN
WHITE RIVER JUNCT. VA MED. CENTER – WHITE RIVER JUNCTION VT
PROJECT #: 405-22-700-95 % CD1
BOD APPENDIX D- MECHANICAL CUT SHEETS

For continual product development, LG reserves the right to change specifications without notice.
© LG Electronics U.S.A., Inc., Englewood Cliffs, NJ. All rights reserved. “LG Life’s Good” is a registered trademark of LG Corp. /www.lghvac.com

Job Name/Location: Tag No:

Date:

PO No.:

For: ☐ File ☐ Resubmit ☐ Approval ☐ Other

Architect: GC:

Engr: Mech:

Rep:
(Company) (Project Manager)

ZRUM036GSS0

R32 Multi V™ S with LGRED° Outdoor Unit
3.0 Ton Heat Pump and Heat Recovery

Performance:

Cooling Mode:

Rated Capacity (Btu/h)	36,000
Power Input (kW, Non-Ducted)	2.32

Heating Mode:

Rated Capacity (Btu/h)	42,000
Power Input (kW, Non-Ducted)	2.20

Rated Capacity is based on the following conditions:

Cooling
Indoor: 80°F DB / 67°F WB
Outdoor: 95°F DB

Heating:
Indoor: 70°F DB
Outdoor: 47°F DB / 43°F WB

Electrical:

Power Supply (V/Hz/Ø)[1]	208-230V, 60, 1
MOP (A)	40
MCA (A)	31
Rated Amps (A)	
Compressor Amps (A)	24
Fan (A) x Qty.	0.5 x 2

Piping / Connections:[2]

Refrigerant Charge (lbs.)	6
Piping / Connections for Heat Recovery Operation[3]	
Liquid Line (in., O.D.)	3/8 Braze
Low Pressure Vapor Line (in., O.D.)	3/4 Braze
High Pressure Vapor Line (in., O.D.)	5/8 Braze
Piping / Connections for Heat Pump Operation	
Liquid Line (in., O.D.)	3/8 Braze
Vapor Line (in., O.D.)	5/8 Braze
Total Pipe Length (ft.)	984
Maximum Elevation between ODU and IDU (ft.)	164 - ODU Higher than IDU; 131 - ODU Lower than IDU
Maximum Elevation between HRU to IDU and IDU to IDU (ft.)	49

Standard Features:

- Night Quiet Operation
- Fault Detection and Diagnosis
- Smart Load Control
- Smart Oil Management
- Drain Pan Heater Built In

Optional Accessories:

☐ Low Ambient Baffle Kit - ZLABGP04A (2 required)[4]

Operating Range:

Cooling (°F DB)[4]	23 to 122
Heating (°F WB)	-13 to +61
Synchronous	
Cooling Based (°F DB)	14 to 81
Heating Based (°F WB)	14 to 61

Unit Data:

Refrigerant Type	R32
Refrigerant Control	EEV
Max. Number of Indoor Units[5]	6
Sound Pressure dB(A)[6] (Cooling / Heating)	50 / 52
Weight	
Net (lbs.)	257
Shipping (lbs.)	286
Communication Cable (No x AWG)[7]	2 x 18
Heat Exchanger Coating	Black Coated Fin™

Compressor:

Type	Hermetically Sealed Scroll
Quantity	1
Oil / Type	PVE / FW68L

Fan:

Type	Axial Flow
Quantity	2
Motor / Drive	Brushless Digitally Controlled / Direct
Air Flow Rate (CFM)	2 x 2,114

Notes:

1. Power wiring size must comply with the applicable local and national codes.
2. For main pipe segment size, refer to the LATS Multi V tree diagram.
3. A heat recovery unit is required for Heat Recovery Operations
4. Installation of an optional Low Ambient Wind Baffle Kit will allow operation down to -9.9°F in cooling mode.
5. The combination ratio must be between 50 - 130%.
6. Sound pressure levels are tested in an anechoic chamber under ISO Standard 3745.
7. Communication cable between ODU, IDU(s) / HRU(s) must be a minimum of 2-conductor, 18 AWG, twisted, stranded, and shielded. Ensure the communication cable shield is properly grounded to the ODU chassis only. ⃠ **DO NOT** ground the communication cable at any other point. Wiring must comply with all applicable local and national codes.
8. Data is rated 0 ft above sea level, with 25 ft. of refrigerant line per indoor unit and a 0 ft level difference between outdoor and indoor units. All capacities are net with a combination ratio between 95-105%.
9. Power wiring cable size must comply with the applicable local and national codes.
10. The voltage tolerance is ± 10%.

Proper sizing and installation of equipment is critical to achieve optimal performance. Split system air conditioners and heat pumps (excluding ductless systems) must be matched with appropriate coil components to meet ENERGY STAR® criteria. Ask your contractor for details or visit www.energystar.gov. (ENERGY STAR and the ENERGY STAR mark are registered trademarks owned by the U.S. Environmental Protection Agency.)

LGRED°

ENERGY STAR

ENERGY STAR COLD CLIMATE

AHRI CERTIFIED
www.ahridirectory.org
Unitary Small HP
AHRI Standard 210/240
Certification applies only when the complete system is listed with AHRI.

For continual product development, LG reserves the right to change specifications without notice.
© LG Electronics U.S.A., Inc., Englewood Cliffs, NJ. All rights reserved. "LG Life's Good" is a registered trademark of LG Corp. /www.lghvac.com

EDRR INFRASTRUCTURE UPGRADES DESIGN
WHITE RIVER JUNCT. VA MED. CENTER – WHITE RIVER JUNCTION VT
PROJECT #: 405-22-700-95 % CD1
BOD APPENDIX D- MECHANICAL CUT SHEETS

Job Name/Location: _____

ZRUM036GSS0

R32 Multi V™ S with LGRED° Outdoor Unit

3.0 Ton Heat Pump and Heat Recovery

Tag No.: _____

Date: _____

PO No.: _____

Outdoor Unit

ZRUM036GSS0,
ZRUM048GSS0,
ZRUM060GSS0

CHASSIS CODE: U60A

Unit: Inches (mm)

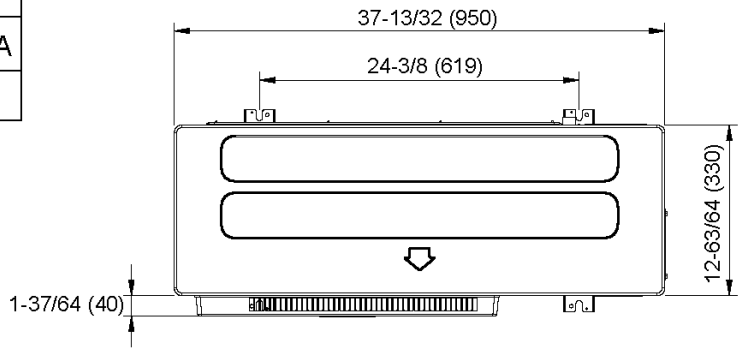

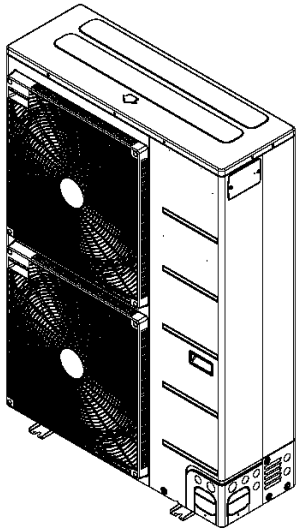

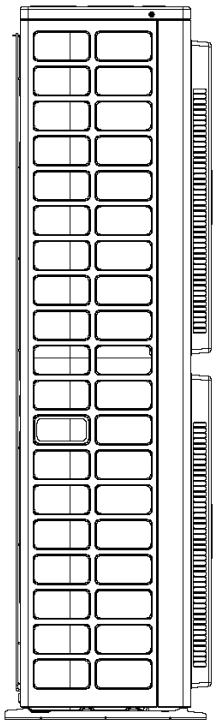

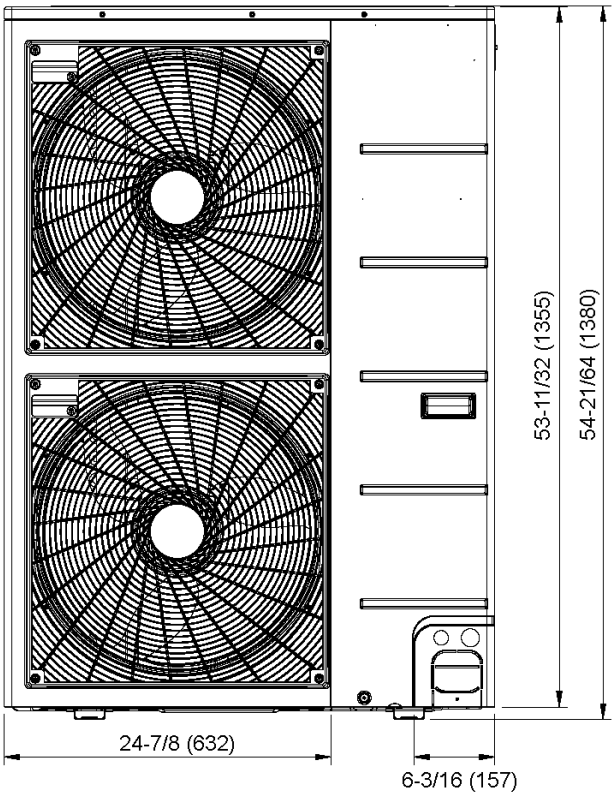

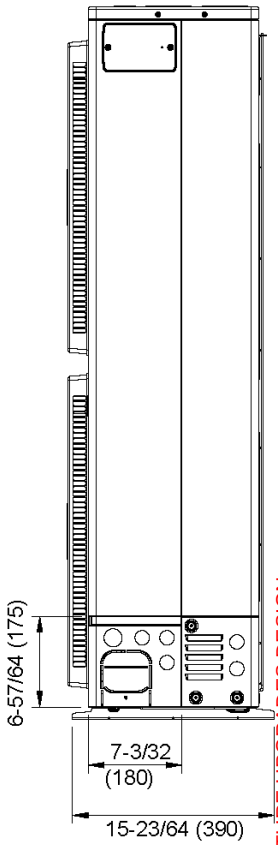

For continual product development, LG reserves the right to change specifications without notice.
© LG Electronics U.S.A., Inc., Englewood Cliffs, NJ. All rights reserved. "LG Life's Good" is a registered trademark of LG Corp. /www.lghvac.com

EDRR INFRASTRUCTURE UPGRADES DESIGN
WHITE RIVER JUNCT. VA MED. CENTER – WHITE RIVER JUNCTION VT
PROJECT #: 405-22-700-95 % CD1
BOD APPENDIX D- MECHANICAL CUT SHEETS

Job Name/Location: _____

ZRUM036GSS0

R32 Multi V™ S with LGRED° Outdoor Unit
3.0 Ton Heat Pump and Heat Recovery

Tag No.: _____

Date: _____

PO No.: _____

AHRI Data:

Indoor Unit Type	Cooling Capacity (95°F)	EER2 (95°F)	SEER2	Heating Capacity (47°F)	COP (47°F)	Heating Capacity (17°F)	COP (17°F)	HSPF2	Maximum Heating Capacity (5°F)	COP (5°F)
Non-Ducted Indoor Units	36,000	15.50	23.00	42,000	5.60	26,000	3.50	10.60	42,000	2.30
Ducted Indoor Units	36,000	13.50	17.00	42,000	4.00	27,000	2.60	10.10	42,000	2.20

EPR INFRASTRUCTURE UPGRADES DESIGN
WHITE RIVER JUNCT. VA MED. CENTER – WHITE RIVER JUNCTION VT
PROJECT #: 405-22-700-95 % CD1
BOD APPENDIX D- MECHANICAL CUT SHEETS

For continual product development, LG reserves the right to change specifications without notice.
© LG Electronics U.S.A., Inc., Englewood Cliffs, NJ. All rights reserved. "LG Life's Good" is a registered trademark of LG Corp. /www.lghvac.com

Job Name/Location: Tag No:

Date:

PO No.:

For: ☐ File ☐ Resubmit ☐ Approval ☐ Other

Architect: GC:

Engr: Mech:

Rep:
(Company) (Project Manager)

ZRUM048GSS0

R32 Multi V™ S with LGRED° Outdoor Unit
4.0 Ton Heat Pump and Heat Recovery

Performance:

Cooling Mode:

Rated Capacity (Btu/h)	48,000
Power Input (kW, Non-Ducted)	3.56

Heating Mode:

Rated Capacity (Btu/h)	54,000
Power Input (kW, Non-Ducted)	3.10

Rated Capacity is based on the following conditions:

Cooling
Indoor: 80°F DB / 67°F WB
Outdoor: 95°F DB

Heating:
Indoor: 70°F DB
Outdoor: 47°F DB / 43°F WB

Electrical:

Power Supply (V/Hz/Ø)[1]	208-230V, 60, 1
MOP (A)	40
MCA (A)	31
Rated Amps (A)	
Compressor Amps (A)	24
Fan (A) x Qty.	0.5 x 2

Piping / Connections:[2]

Refrigerant Charge (lbs.)	6
Piping / Connections for Heat Recovery Operation[3]	
Liquid Line (in., O.D.)	3/8 Braze
Low Pressure Vapor Line (in., O.D.)	3/4 Braze
High Pressure Vapor Line (in., O.D.)	5/8 Braze
Piping / Connections for Heat Pump Operation	
Liquid Line (in., O.D.)	3/8 Braze
Vapor Line (in., O.D.)	5/8 Braze
Total Pipe Length (ft.)	984
Maximum Elevation between ODU and IDU (ft.)	164 - ODU Higher than IDU; 131 - ODU Lower than IDU
Maximum Elevation between HRU to IDU and IDU to IDU (ft.)	49

Standard Features:

- Night Quiet Operation
- Fault Detection and Diagnosis
- Smart Load Control
- Smart Oil Management
- Drain Pan Heater Built In

Optional Accessories:

☐ Low Ambient Baffle Kit - ZLABGP04A (2 required)[4]

Operating Range:

Cooling (°F DB)[4]	23 to 122
Heating (°F WB)	-13 to +61
Synchronous	
Cooling Based (°F DB)	14 to 81
Heating Based (°F WB)	14 to 61

Unit Data:

Refrigerant Type	R32
Refrigerant Control	EEV
Max. Number of Indoor Units[5]	8
Sound Pressure dB(A)[6] (Cooling / Heating)	53 / 54
Weight	
Net (lbs.)	257
Shipping (lbs.)	286
Communication Cable (No x AWG)[7]	2 x 18
Heat Exchanger Coating	Black Coated Fin™

Compressor:

Type	Hermetically Sealed Scroll
Quantity	1
Oil / Type	PVE / FW68L

Fan:

Type	Axial Flow
Quantity	2
Motor / Drive	Brushless Digitally Controlled / Direct
Air Flow Rate (CFM)	2 x 2,114

Notes:

1. Power wiring size must comply with the applicable local and national codes.
2. For main pipe segment size, refer to the LATS Multi V tree diagram.
3. A heat recovery unit is required for Heat Recovery Operations
4. Installation of an optional Low Ambient Wind Baffle Kit will allow operation down to -9.9°F in cooling mode.
5. The combination ratio must be between 50 - 130%.
6. Sound pressure levels are tested in an anechoic chamber under ISO Standard 3745.
7. Communication cable between ODU, IDU(s) / HRU(s) must be a minimum of 2-conductor, 18 AWG, twisted, stranded, and shielded. Ensure the communication cable shield is properly grounded to the ODU chassis only. ⃠ **DO NOT** ground the communication cable at any other point. Wiring must comply with all applicable local and national codes.
8. Data is rated 0 ft above sea level, with 25 ft. of refrigerant line per indoor unit and a 0 ft level difference between outdoor and indoor units. All capacities are net with a combination ratio between 95-105%.
9. Power wiring cable size must comply with the applicable local and national codes.
10. The voltage tolerance is ± 10%.

Proper sizing and installation of equipment is critical to achieve optimal performance. Split system air conditioners and heat pumps (excluding ductless systems) must be matched with appropriate coil components to meet ENERGY STAR® criteria. Ask your contractor for details or visit www.energystar.gov. (ENERGY STAR and the ENERGY STAR mark are registered trademarks owned by the U.S. Environmental Protection Agency.)

LGRED°

ENERGY STAR

ENERGY STAR COLD CLIMATE

AHRI CERTIFIED
www.ahridirectory.org
Unitary Small HP
AHRI Standard 210/240
Certification applies only when the complete system is listed with AHRI.

For continual product development, LG reserves the right to change specifications without notice.
© LG Electronics U.S.A., Inc., Englewood Cliffs, NJ. All rights reserved. "LG Life's Good" is a registered trademark of LG Corp. /www.lghvac.com

EDRN INFRASTRUCTURE UPGRADES DESIGN
WHITE RIVER JUNCT. VA MED. CENTER – WHITE RIVER JUNCTION VT
PROJECT #: 405-22-700-95 % CD1
BOD APPENDIX D- MECHANICAL CUT SHEETS

Job Name/Location: _____

ZRUM048GSS0

R32 Multi V™ S with LGRED° Outdoor Unit

4.0 Ton Heat Pump and Heat Recovery

Tag No.: _____

Date: _____

PO No.: _____

Outdoor Unit

ZRUM036GSS0,
ZRUM048GSS0,
ZRUM060GSS0

CHASSIS CODE: U60A

Unit: Inches (mm)

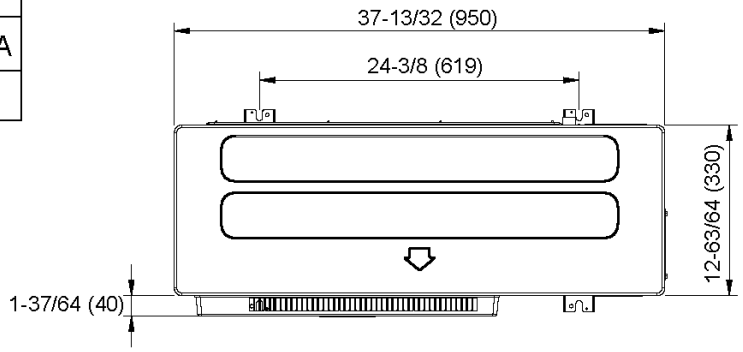

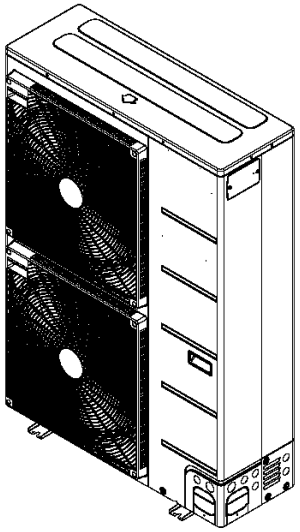

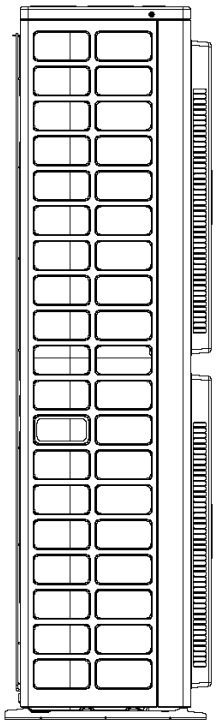

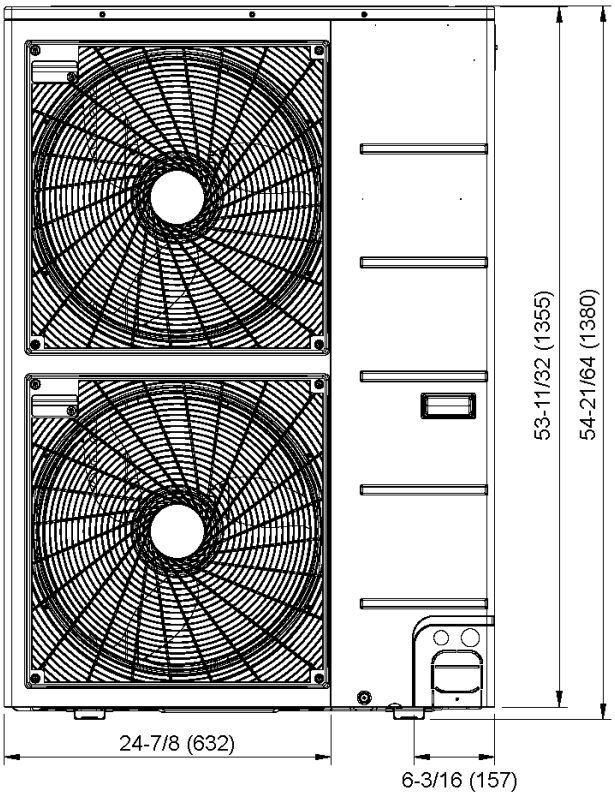

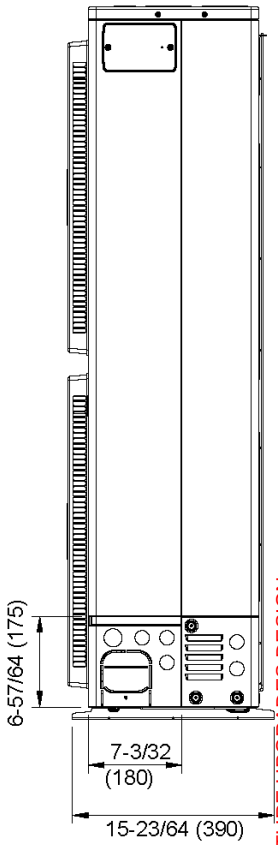

For continual product development, LG reserves the right to change specifications without notice.
© LG Electronics U.S.A., Inc., Englewood Cliffs, NJ. All rights reserved. "LG Life's Good" is a registered trademark of LG Corp. /www.lghvac.com

EDR- INFRASTRUCTURE UPGRADES DESIGN
WHITE RIVER JUNCT. VA MED. CENTER – WHITE RIVER JUNCTION VT
PROJECT #: 405-22-700-95 % CD1
BOD APPENDIX D- MECHANICAL CUT SHEETS

Job Name/Location: _____

ZRUM048GSS0

R32 Multi V™ S with LGRED° Outdoor Unit
4.0 Ton Heat Pump and Heat Recovery

Tag No.: _____

Date: _____

PO No.: _____

AHRI Data:

Indoor Unit Type	Cooling Capacity (95°F)	EER2 (95°F)	SEER2	Heating Capacity (47°F)	COP (47°F)	Heating Capacity (17°F)	COP (17°F)	HSPF2	Maximum Heating Capacity (5°F)	COP (5°F)
Non-Ducted Indoor Units	48,000	13.50	23.30	54,000	5.10	33,000	3.20	10.30	54,000	2.10
Ducted Indoor Units	48,000	12.20	17.00	54,000	4.00	36,000	2.70	10.00	54,000	2.00

EPR INFRASTRUCTURE UPGRADES DESIGN
WHITE RIVER JUNCT. VA MED. CENTER – WHITE RIVER JUNCTION VT
PROJECT #: 405-22-700-95 % CD1
BOD APPENDIX D- MECHANICAL CUT SHEETS

For continual product development, LG reserves the right to change specifications without notice.
© LG Electronics U.S.A., Inc., Englewood Cliffs, NJ. All rights reserved. "LG Life's Good" is a registered trademark of LG Corp. /www.lghvac.com

Job Name/Location: Tag No:

Date:

PO No.:

For: ☐ File ☐ Resubmit ☐ Approval ☐ Other

Architect: GC:

Engr: Mech:

Rep:
(Company) (Project Manager)

ZRUM060GSS0

R32 Multi V™ S with LGRED° Outdoor Unit
5.0 Ton Heat Pump and Heat Recovery

Performance:

Cooling Mode:

Rated Capacity (Btu/h)	60,000
Power Input (kW, Non-Ducted)	4.26

Heating Mode:

Rated Capacity (Btu/h)	67,000
Power Input (kW, Non-Ducted)	4.60

Rated Capacity is based on the following conditions:

Cooling
Indoor: 80°F DB / 67°F WB
Outdoor: 95°F DB

Heating:
Indoor: 70°F DB
Outdoor: 47°F DB / 43°F WB

Electrical:

Power Supply (V/Hz/Ø)[1]	208-230V, 60, 1
MOP (A)	40
MCA (A)	32.9
Rated Amps (A)	
Compressor Amps (A)	25.5
Fan (A) x Qty.	0.5 x 2

Piping / Connections:[2]

Refrigerant Charge (lbs.)	6.9
Piping / Connections for Heat Recovery Operation[3]	
Liquid Line (in., O.D.)	3/8 Braze
Low Pressure Vapor Line (in., O.D.)	3/4 Braze
High Pressure Vapor Line (in., O.D.)	5/8 Braze
Piping / Connections for Heat Pump Operation	
Liquid Line (in., O.D.)	3/8 Braze
Vapor Line (in., O.D.)	3/4 Braze
Total Pipe Length (ft.)	984
Maximum Elevation between ODU and IDU (ft.)	164 - ODU Higher than IDU; 131 - ODU Lower than IDU
Maximum Elevation between HRU to IDU and IDU to IDU (ft.)	49

Standard Features:

- Night Quiet Operation
- Fault Detection and Diagnosis
- Smart Load Control
- Smart Oil Management
- Drain Pan Heater Built In

Optional Accessories:

☐ Low Ambient Baffle Kit - ZLABGP04A (2 required)[4]

Operating Range:

Cooling (°F DB)[4]	23 to 122
Heating (°F WB)	-13 to +61
Synchronous	
Cooling Based (°F DB)	14 to 81
Heating Based (°F WB)	14 to 61

Unit Data:

Refrigerant Type	R32
Refrigerant Control	EEV
Max. Number of Indoor Units[5]	12
Sound Pressure dB(A)[6] (Cooling / Heating)	57 / 59
Weight	
Net (lbs.)	267
Shipping (lbs.)	296
Communication Cable (No x AWG)[7]	2 x 18
Heat Exchanger Coating	Black Coated Fin™

Compressor:

Type	Hermetically Sealed Scroll
Quantity	1
Oil / Type	PVE / FW68L

Fan:

Type	Axial Flow
Quantity	2
Motor / Drive	Brushless Digitally Controlled / Direct
Air Flow Rate (CFM)	2 x 2,114

Notes:

1. Power wiring size must comply with the applicable local and national codes.
2. For main pipe segment size, refer to the LATS Multi V tree diagram.
3. A heat recovery unit is required for Heat Recovery Operations
4. Installation of an optional Low Ambient Wind Baffle Kit will allow operation down to -9.9°F in cooling mode.
5. The combination ratio must be between 50 - 130%.
6. Sound pressure levels are tested in an anechoic chamber under ISO Standard 3745.
7. Communication cable between ODU, IDU(s) / HRU(s) must be a minimum of 2-conductor, 18 AWG, twisted, stranded, and shielded. Ensure the communication cable shield is properly grounded to the ODU chassis only. ⃠ **DO NOT** ground the communication cable at any other point. Wiring must comply with all applicable local and national codes.
8. Data is rated 0 ft above sea level, with 25 ft. of refrigerant line per indoor unit and a 0 ft level difference between outdoor and indoor units. All capacities are net with a combination ratio between 95-105%.
9. Power wiring cable size must comply with the applicable local and national codes.
10. The voltage tolerance is ± 10%.

Proper sizing and installation of equipment is critical to achieve optimal performance. Split system air conditioners and heat pumps (excluding ductless systems) must be matched with appropriate coil components to meet ENERGY STAR® criteria. Ask your contractor for details or visit www.energystar.gov. (ENERGY STAR and the ENERGY STAR mark are registered trademarks owned by the U.S. Environmental Protection Agency.)

LGRED°

ENERGY STAR

ENERGY STAR COLD CLIMATE

AHRI CERTIFIED
www.ahridirectory.org
Unitary Small HP
AHRI Standard 210/240
Certification applies only when the complete system is listed with AHRI.

For continual product development, LG reserves the right to change specifications without notice.
© LG Electronics U.S.A., Inc., Englewood Cliffs, NJ. All rights reserved. "LG Life's Good" is a registered trademark of LG Corp. /www.lghvac.com

ERRIN INFRASTRUCTURE UPGRADES DESIGN
WHITE RIVER JUNCT. VA MED. CENTER – WHITE RIVER JUNCTION VT
PROJECT #: 405-22-700-95 % CD1
BOD APPENDIX D- MECHANICAL CUT SHEETS

Job Name/Location: _____

ZRUM060GSS0

R32 Multi V™ S with LGRED° Outdoor Unit

5.0 Ton Heat Pump and Heat Recovery

Tag No.: _____

Date: _____

PO No.: _____

Outdoor Unit

ZRUM036GSS0,
ZRUM048GSS0,
ZRUM060GSS0

CHASSIS CODE: U60A

Unit: Inches (mm)

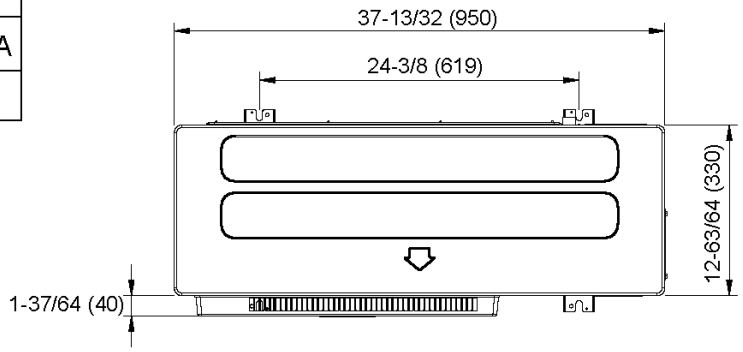

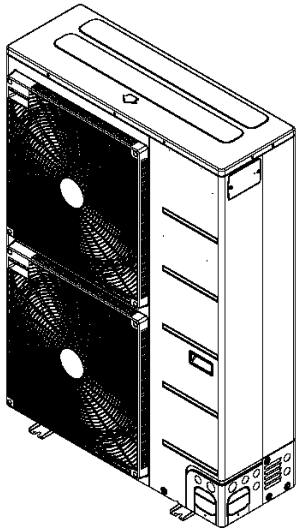

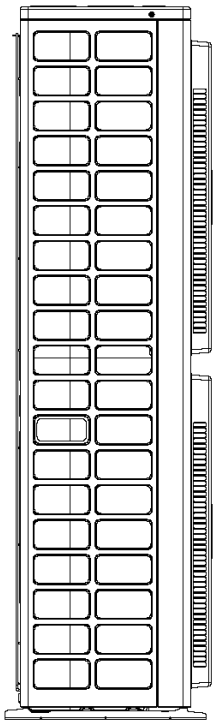

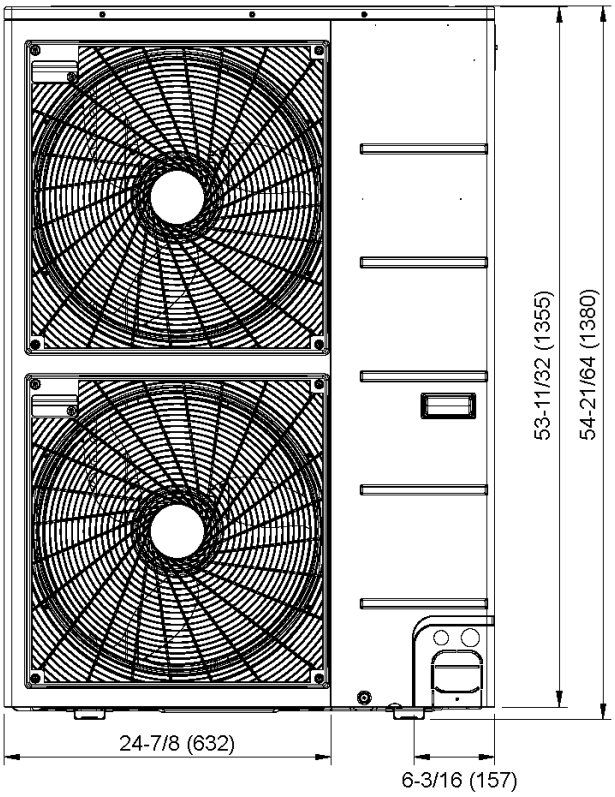

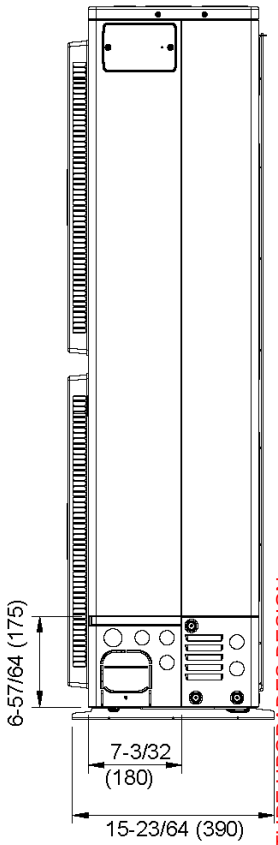

For continual product development, LG reserves the right to change specifications without notice.
© LG Electronics U.S.A., Inc., Englewood Cliffs, NJ. All rights reserved. "LG Life's Good" is a registered trademark of LG Corp. /www.lghvac.com

EDR- INFRASTRUCTURE UPGRADES DESIGN
WHITE RIVER JUNCT. VA MED. CENTER – WHITE RIVER JUNCTION VT
PROJECT #: 405-22-700-95 % CD1
BOD APPENDIX D- MECHANICAL CUT SHEETS

Job Name/Location: _____

ZRUM060GSS0

R32 Multi V™ S with LGRED° Outdoor Unit
5.0 Ton Heat Pump and Heat Recovery

Tag No.: _____

Date: _____

PO No.: _____

AHRI Data:

Indoor Unit Type	Cooling Capacity (95°F)	EER2 (95°F)	SEER2	Heating Capacity (47°F)	COP (47°F)	Heating Capacity (17°F)	COP (17°F)	HSPF2	Maximum Heating Capacity (5°F)	COP (5°F)
Non-Ducted Indoor Units	60,000	13.00	23.00	67,000	4.30	37,000	2.60	10.00	54,000	2.10
Ducted Indoor Units	60,000	11.70	16.20	67,000	3.90	43,000	2.70	9.10	54,000	2.00

EPR INFRASTRUCTURE UPGRADES DESIGN
WHITE RIVER JUNCT. VA MED. CENTER – WHITE RIVER JUNCTION VT
PROJECT #: 405-22-700-95 % CD1
BOD APPENDIX D- MECHANICAL CUT SHEETS

For continual product development, LG reserves the right to change specifications without notice.
© LG Electronics U.S.A., Inc., Englewood Cliffs, NJ. All rights reserved. "LG Life's Good" is a registered trademark of LG Corp. /www.lghvac.com

Job Name/Location

Tag No.:

Date:

PO No.:

For: ☐ File ☐ Resubmit ☐ Approval ☐ Other _____

Architect: GC:

Engr: Mech:

Rep:
(Company) (Project Manager)

ZRUN024GSS0

R32 Multi V™ S with LGRED° Outdoor Unit
2.0 Ton Heat Pump

Performance:

Cooling Mode:

Rated Capacity (Btu/h)	24,000
Power Input (kW, Non-Ducted)	1.62

Heating Mode:

Rated Capacity (Btu/h)	27,000
Power Input (kW, Non-Ducted)	1.98

Rated Capacity is based on the following conditions:

Cooling
Indoor: 80°F DB / 67°F WB
Outdoor: 95°F DB

Heating:
Indoor: 70°F DB
Outdoor: 47°F DB / 43°F WB

Electrical:

Power Supply (V/Hz/Ø)	208-230V / 60 / 1
MOP (A)	30
MCA (A)	26.4
Rated Amps (A)	
Compressor (A)	20.5
Fan (A) x Qty.	0.7 x 1

Piping:

Refrigerant Charge (lbs.)	3.3
Liquid Line (in., O.D.)	Ø3/8 Braze
Vapor Line (in., O.D.)	Ø5/8 Braze
Total Pipe Length (ft.)	984
Maximum Elevation between ODU and IDU (ft.)	164 - ODU Higher than IDU; 131 - ODU Lower than IDU
Maximum Elevation between IDU and IDU (ft.)	49

Standard Features:

- Night Quiet Operation
- Fault Detection and Diagnosis
- Drain Pan Heater Built in

Optional Accessories:

☐ Low Ambient Baffle Kit ZLABGP04A (1 required)

Operating Range:

Cooling (°F DB)[1]	23 - 122
Heating (°F WB)	-13 to +61

Unit Data:

Refrigerant Type	R32
Refrigerant Control	EEV
Max. Number of Indoor Units[2]	4
Sound Pressure[3] dB(A) (Cooling / Heating)	50 / 52
Net Unit Weight (lbs.)	148
Shipping Weight (lbs.)	167
Communication Cable[4] (No x AWG)	2 x 18
Heat Exchanger Coating	Black Coated Fin™

Compressor:

Type	Hermetically Sealed Scroll
Quantity	1
Oil / Type	PVE / FW68L

Fan:

Type	Propeller
Quantity	1
Motor / Drive	Brushless Digitally Controlled/Direct
Air Flow Rate (CFM)	2,119

Notes:

1. Installation of an optional Low Ambient Wind Baffle Kit will allow operation down to -9.9°F in cooling mode.
2. The combination ratio must be between 50 – 130%.
3. Sound Pressure levels are tested in an anechoic chamber under ISO Standard 3745.
4. Communication cable between ODU, IDU(s), and Central Controller must be a minimum of 2-conductor, 18 AWG, twisted, stranded, and shielded. Ensure the communication cable shield is properly grounded to the ODU chassis only. ⦸DO NOT ground the communication cable at any other point. Wiring must comply with all applicable local and national codes.
5. Data is rated 0 ft. above sea level, with 25 ft. of refrigerant line per indoor unit and a 0 ft. level difference between outdoor and indoor units. All capacities are net with a combination ratio between 95-105%.
6. Power wiring cable size must comply with the applicable local and national codes.
7. The voltage tolerance is ± 10%.

Proper sizing and installation of equipment is critical to achieve optimal performance. Split system air conditioners and heat pumps (excluding ductless systems) must be matched with appropriate coil components to meet ENERGY STAR® criteria. Ask your contractor for details or visit www.energystar.gov. (ENERGY STAR and the ENERGY STAR mark are registered trademarks owned by the U.S. Environmental Protection Agency.)

For continual product development, LG reserves the right to change specifications without notice.
© LG Electronics U.S.A., Inc., Englewood Cliffs, NJ. All rights reserved. "LG Life's Good" is a registered trademark of LG Corp. /www.lghvac.com

EFRO INFRASTRUCTURE UPGRADES DESIGN
WHITE RIVER JUNCT. VA MED. CENTER – WHITE RIVER JUNCTION VT
PROJECT #: 405-22-700-95 % CD1
BOD APPENDIX D- MECHANICAL CUT SHEETS

Job Name/Location: _____

ZRUN024GSS0

R32 Multi V™ S with LGRED° Outdoor Unit

2.0 Ton Heat Pump

Tag No.: _____

Date: _____

PO No.: _____

Outdoor Unit

ZRUN024GSS0

CHASSIS CODE: U36A

Unit: Inches (mm)

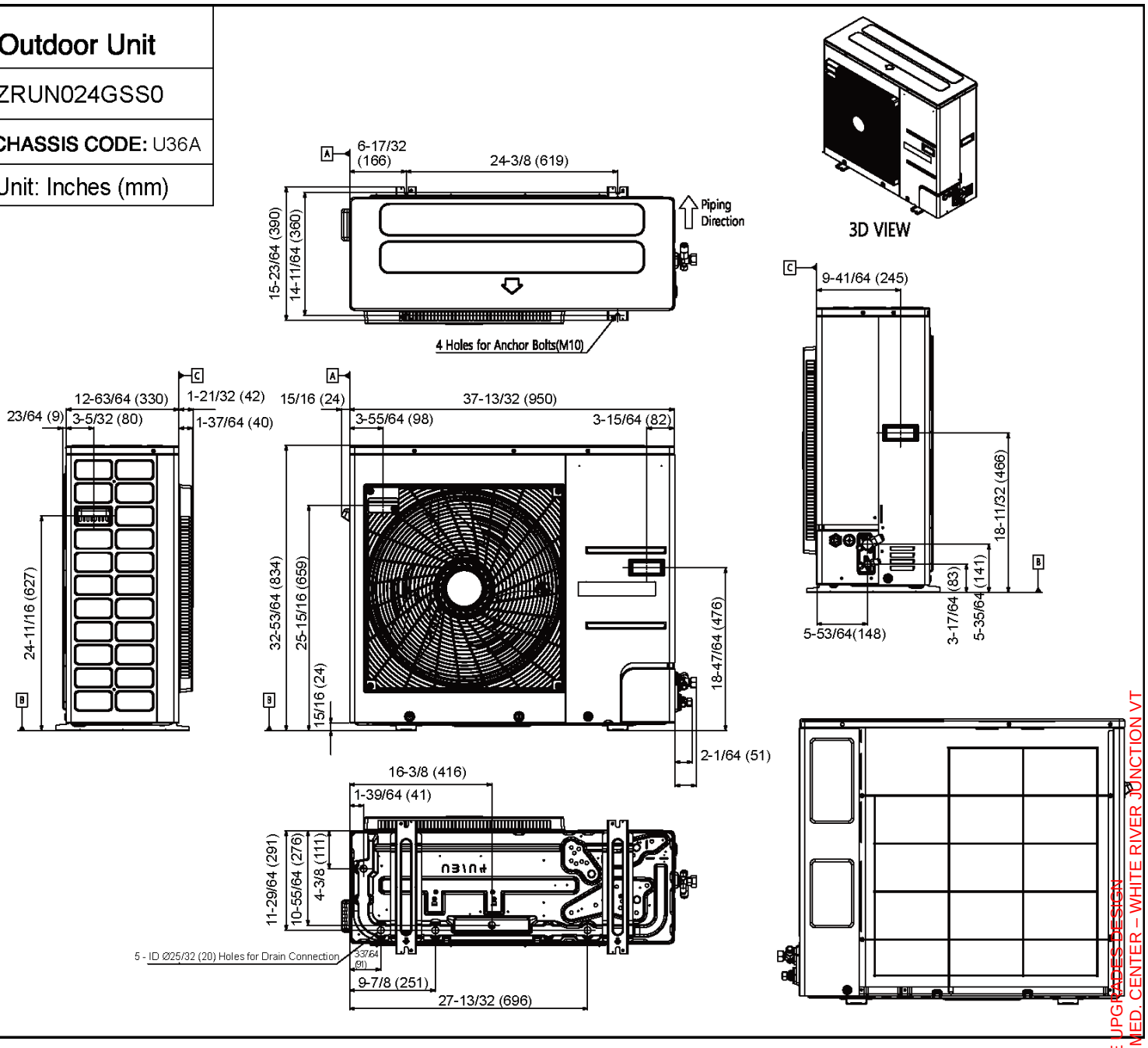

For continual product development, LG reserves the right to change specifications without notice.
© LG Electronics U.S.A., Inc., Englewood Cliffs, NJ. All rights reserved. "LG Life's Good" is a registered trademark of LG Corp. /www.lghvac.com

EFPCI INFRASTRUCTURE UPGRADES DESIGN
WHITE RIVER JUNCT. VA MED. CENTER – WHITE RIVER JUNCTION VT
PROJECT #: 405-22-700-95 % CD1
BOD APPENDIX D- MECHANICAL CUT SHEETS

Job Name/Location: _____

ZRUN024GSS0

R32 Multi V™ S with LGRED° Outdoor Unit

2.0 Ton Heat Pump

Tag No.: _____

Date: _____

PO No.: _____

AHRI Data:

Indoor Unit Type	Cooling Capacity (95°F)	EER2 (95°F)	SEER2	Heating Capacity (47°F)	COP (47°F)	Heating Capacity (17°F)	COP (17°F)	HSPF2	Maximum Heating Capacity (5°F)	COP (5°F)
Non-Ducted Indoor Units	24,000	14.80	20.05	27,000	4.00	17,000	2.60	10.20	27,000	2.16
Ducted Indoor Units	24,000	14.80	18.15	27,000	4.00	18,000	2.60	10.20	27,000	2.00

For continual product development, LG reserves the right to change specifications without notice.
© LG Electronics U.S.A., Inc., Englewood Cliffs, NJ. All rights reserved. "LG Life's Good" is a registered trademark of LG Corp. /www.lghvac.com

EPSI INFRASTRUCTURE UPGRADES DESIGN
WHITE RIVER JUNCT. VA MED. CENTER – WHITE RIVER JUNCTION VT
PROJECT #: 405-22-700-95 % CD1
BOD APPENDIX D- MECHANICAL CUT SHEETS

Unit Overview

Model Number	Cabinet Style	Unit Cabinet Size	Design Airflow	Elevation	External Dimensions			Weight	
					Length	Width	Height	Shipping	Operating
FCDB100	Horizontal cabinet	Size 100	900 cfm	381.00 ft	75.000 in	26.000 in	10.000 in	200.0 lb	218.0 lb

Unit Features

Inlet Style	Bottom stamped louver inlet
Outlet Style	Front bar grille outlet
Unit Mounted Disconnect Switch	With disconnect switch
Filter Type	1" MERV 8 filter
Piping System/Placement	W/o pipe, rt hand, w/ aux drn pan
Drain Pan	Stainless steel
Cabinet Color	Deluxe beige
Tamperproof Locks/ Leveling Feet	W/o tamperproof locks or leveling ft

Motor/Electrical Information

Unit voltage	115v/60hz/1ph
Short circuit current rating	5 kA RMS Symmetrical, 115V Maximum
ESP	0.000 in H2O
Motor type	Free discharge ECM
Motor speed	High
Motor power	189.0 W
Min circuit ampacity	6.07 A
Max fuse size	15.00 A

	Nameplate	Calculated BHP	Max BHP
Motor #1 HP	0.130 hp	0.052 hp	0.172 hp
Motor #2 HP	0.220 hp	0.101 hp	0.219 hp
Speed	**CFM**	**TSP**	**RPM**
High	900 cfm	0.343 in H2O	1309 rpm
Medium	765 cfm	0.248 in H2O	1113 rpm
Low	594 cfm	0.149 in H2O	864 rpm

Coil Information

Main Coil Type	3 row cooling only	**Cooling Fluid Type**	Water
Coil Air Vent	Manual		

Coil Performance - Cooling			
Total Capacity	21.00 MBh	**Entering Fluid Temp**	48.00 F
Sensible Capacity	18.50 MBh	**Leaving Fluid Temp**	60.06 F
Entering Dry Bulb	80.00 F	**Fluid Pressure Drop**	3.54 ft H2O
Entering Wet Bulb	67.00 F	**Fluid Flow Rate**	3.47 gpm
Leaving Dry Bulb	60.88 F	**Fluid Delta T**	12.06 F
Leaving Wet Bulb	59.69 F		

Controls, Sensors and Valves

Control type	CS T-Stat Interface
Zone Sensor Type	Unit mounted variable speed control

Acoustics

Sound Path	63 Hz	125 Hz	250 Hz	500 Hz	1 kHz	2 kHz	4 kHz	8 kHz
Total Sound - High	61 dB	71 dB	70 dB	66 dB	64 dB	61 dB	58 dB	49 dB

Note: Sound power level data in dB (re 1pW).

Note: Acoustical data has been obtained from tests in accordance with AHRI Standard 350-2000.

Factory Controls Addressing

Unit Tag	Controller Address	WCI Address
FC-1	0	11

Note: Please confirm each unit selected with Factory Addressing has the correct controller and WCI address.

EHRM INFRASTRUCTURE UPGRADES DESIGN
WHITE RIVER JUNCT. VA MED. CENTER – WHITE RIVER JUNCTION VT
PROJECT #: 405-22-700-95 % CD1

Trane Select Assist Version Number:	285
Data Generation Date:	07/19/2024

EHRM INFRASTRUCTURE UPGRADES DESIGN
WHITE RIVER JUNCT. VA MED. CENTER – WHITE RIVER JUNCTION VT
PROJECT #: 405-22-700-95 % CD1

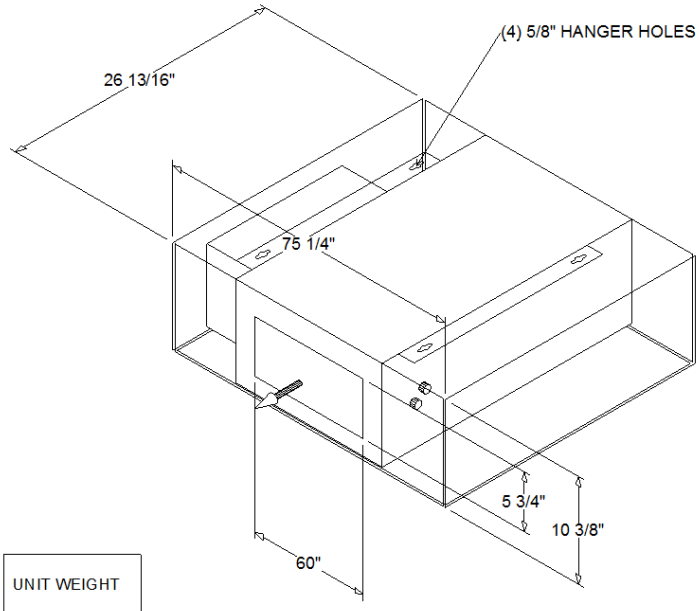

ISO1 VIEW

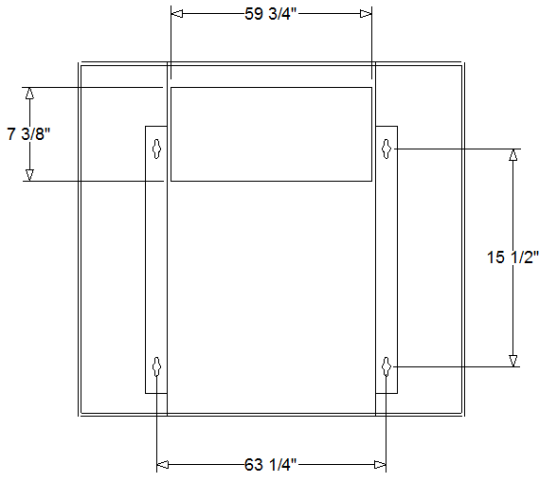

BOTTOM VIEW

UNIT WEIGHT
218.0 lb

AFANCOIL000035

NOTES:

1. ARROW(S) INDICATE THE DIRECTION OF AIRFLOW.

2. FILTERS ARE ACCESSED THROUGH THE BOTTOM OF UNIT.

3. CONTROL WIRES SHOULD ENTER CONTROL BOX THROUGH TOP FRONT KNOCKOUT.

4. POWER WIRES ARE TO ENTER CONTROL BOX THROUGH FRONT BOTTOM CONDUIT ENTRANCE KNOCKOUTS.

5. PIPING CONNECTIONS ARE 5/8" OD COPPER.

6. AUXILIARY DRAINPAN CONN:
MAIN: 7/8" OD TUBE & CLAMP
SECONDARY: 3/8" ID TUBE

7. STANDARD ENDPOCKET WIDTH IS 8".

LEFT VIEW

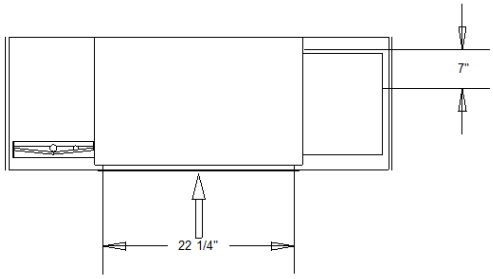

BACK VIEW

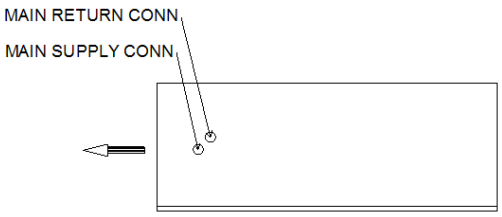

RIGHT VIEW

EHRM INFRASTRUCTURE UPGRADES DESIGN
WHITE RIVER JUNCT. VA MED. CENTER – WHITE RIVER JUNCTION VT
PROJECT #: 405-22-700-95 % CD1

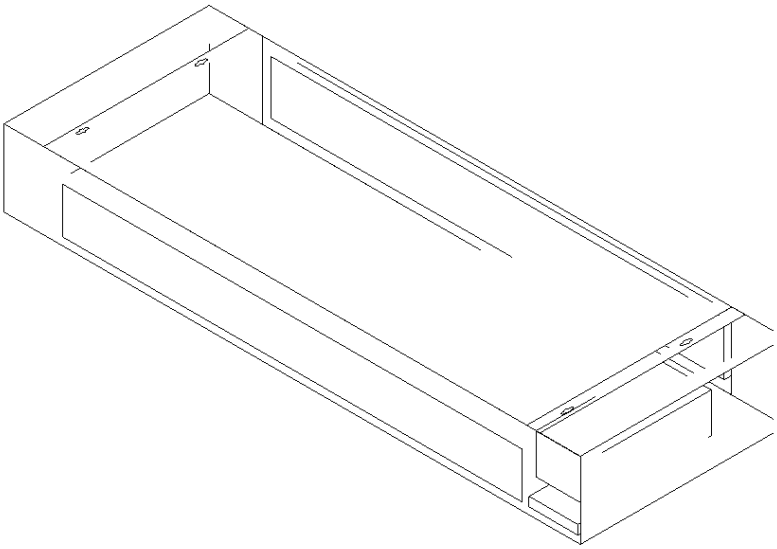

ISO VIEW

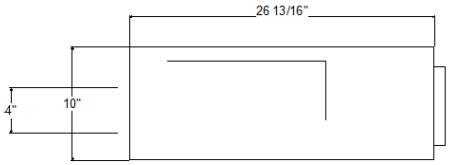

RIGHT VIEW

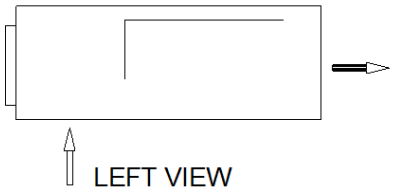

LEFT VIEW

UNIT WEIGHT
218.0 lb

NOTES:

1. ARROW(S) INDICATE THE DIRECTION OF AIRFLOW.

2. FILTERS ARE ACCESSED THROUGH THE BOTTOM OF UNIT.

3. CONTROL WIRES SHOULD ENTER CONTROL BOX THROUGH TOP FRONT KNOCKOUT.

4. POWER WIRES ARE TO ENTER CONTROL BOX THROUGH FRONT BOTTOM CONDUIT ENTRANCE KNOCKOUTS.

5. PIPING CONNECTIONS ARE 5/8" OD COPPER.

6. AUXILIARY DRAINPAN CONN:
MAIN: 7/8" OD TUBE & CLAMP
SECONDARY: 3/8" ID TUBE

7. STANDARD ENDPOCKET WIDTH IS 8".

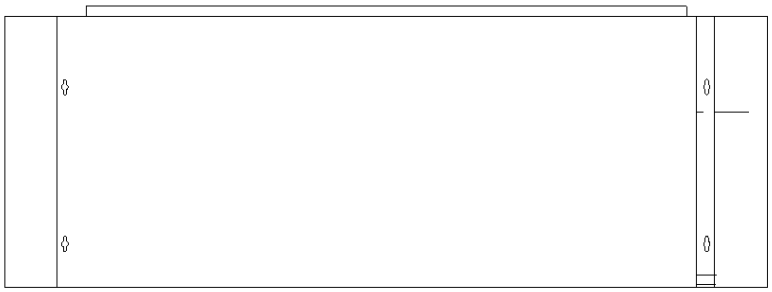

TOP VIEW

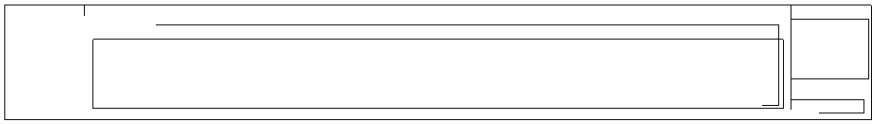

FRONT VIEW

EHRM INFRASTRUCTURE UPGRADES DESIGN
WHITE RIVER JUNCT. VA MED. CENTER – WHITE RIVER JUNCTION VT
PROJECT #: 405-22-700-95 % CD1

POWER WIRING

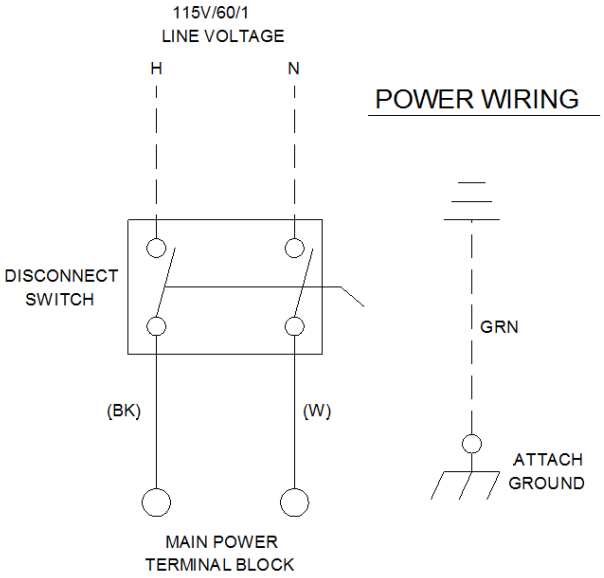

NOTES:

1. ALL FIELD WIRING MUST BE IN ACCORDANCE WITH THE NATIONAL ELECTRIC CODE (NEC), STATE AND LOCAL REQUIREMENTS.

2. DASHED LINES INDICATE RECOMMENDED FIELD WIRING BY OTHERS. DASHED LINE ENCLOSURES AND / OR DASHED DEVICE OUTLINES INDICATE COMPONENTS PROVIDED BY THE FIELD. SOLID LINES INDICATE WIRING BY TRANE COMPANY.

3. ALL FIELD POWER AND CONTROL WIRING SHOULD HAVE AN INSULATION RATING GREATER THAN OR EQUAL TO THE UNIT VOLTAGE RATING.

4. LINE VOLTAGE CONNECTIONS ARE TO BE SPLICED TO WIRES OR CONNECTED TO TERMINAL BLOCK INSIDE OF UNIT CONTROL BOX.

MCA: 6.07 A

MFS: 15.00 A

NOTICE

USE COPPER CONDUCTORS ONLY!

UNIT TERMINALS ARE NOT DESIGNED TO ACCEPT OTHER TYPES OF CONDUCTORS.

FAILURE TO DO THE ABOVE COULD RESULT IN EQUIPMENT DAMAGE.

AVIS

N'UTILISER QUE DES CONDUCTEURS EN CUIVRE!

LES BORNES DE L'UNITÉ NE SONT PAS CONÇUES POUR RECEVOIR D'AUTRES TYPES DE CONDUCTEURS.

FAIRE DÉFAUT À LA PROCÉDURE CI-DESSUS PEUT ENTRAÎNER DES DOMMAGES À L'ÉQUIPEMENT.

AVISO

¡UTILICE ÚNICAMENTE CONDUCTORES DE COBRE!

LAS TERMINALES DE LA UNIDAD NO ESTÁN DISEÑADAS PARA ACEPTAR OTROS TIPOS DE CONDUCTORES.

NO SEGUIR LAS INSTRUCCIONES ANTERIORES PUEDE PROVOCAR DAÑOS EN EL EQUIPO.

⚠ WARNING

HAZARDOUS VOLTAGE!

DISCONNECT ALL ELECTRIC POWER INCLUDING REMOTE DISCONNECTS AND FOLLOW LOCK OUT AND TAG PROCEDURES BEFORE SERVICING. INSURE THAT ALL MOTOR CAPACITORS HAVE DISCHARGED STORED VOLTAGE. UNITS WITH VARIABLE SPEED DRIVE, REFER TO DRIVE INSTRUCTIONS FOR CAPACITOR DISCHARGE.

FAILURE TO DO THE ABOVE BEFORE SERVICING COULD RESULT IN DEATH OR SERIOUS INJURY.

⚠ AVERTISSEMENT

TENSION DANGEREUSE!

COUPER TOUTES LES TENSIONS ET OUVRIR LES SECTIONNEURS À DISTANCE, PUIS SUIVRE LES PROCÉDURES DE VERROUILLAGE ET DES ÉTIQUETTES AVANT TOUTE INTERVENTION. VÉRIFIER QUE TOUS LES CONDENSATEURS DES MOTEURS SONT DÉCHARGÉS. DANS LE CAS D'UNITÉS COMPORTANT DES ENTRAÎNEMENTS À VITESSE VARIABLE, SE REPORTER AUX INSTRUCTIONS DE L'ENTRAÎNEMENT POUR DÉCHARGER LES CONDENSATEURS.

NE PAS RESPECTER CES MESURES DE PRÉCAUTION PEUT ENTRAÎNER DES BLESSURES GRAVES POUVANT ÊTRE MORTELLES.

⚠ ADVERTENCIA

¡VOLTAJE PELIGROSO!

DESCONECTE TODA LA ENERGÍA ELÉCTRICA, INCLUSO LAS DESCONEXIONES REMOTAS Y SIGA LOS PROCEDIMIENTOS DE CIERRE Y ETIQUETADO ANTES DE PROCEDER AL SERVICIO. ASEGÚRESE DE QUE TODOS LOS CAPACITORES DEL MOTOR HAYAN DESCARGADO EL VOLTAJE ALMACENADO. PARA LAS UNIDADES CON EJE DE DIRECCIÓN DE VELOCIDAD VARIABLE, CONSULTE LAS INSTRUCCIONES PARA LA DESCARGA DEL CONDENSADOR.

EL NO REALIZAR LO ANTERIORMENTE INDICADO, PODRÍA OCASIONAR LA MUERTE O SERIAS LESIONES PERSONALES.

CONTROL WIRING

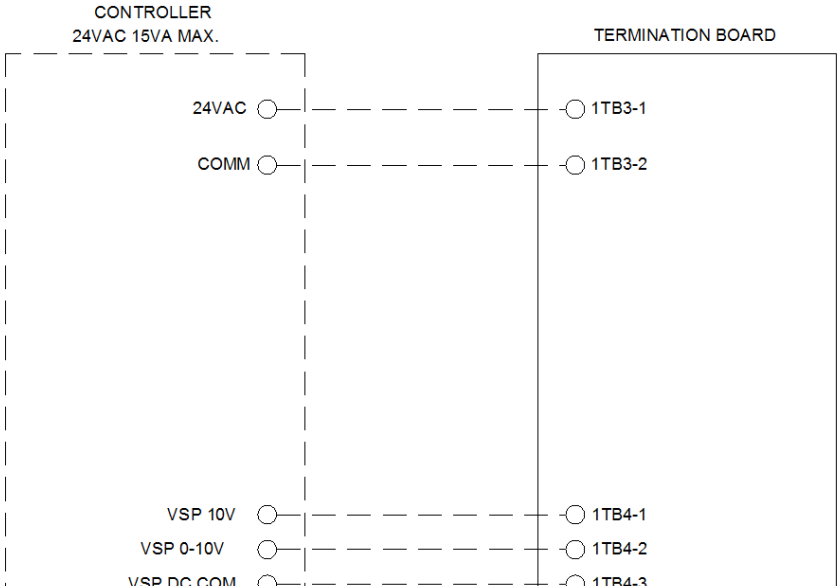

EHRM INFRASTRUCTURE UPGRADES DESIGN
WHITE RIVER JUNCT. VA MED. CENTER – WHITE RIVER JUNCTION VT
PROJECT #: 405-22-700-95 % CD1

SINGLE PHASE

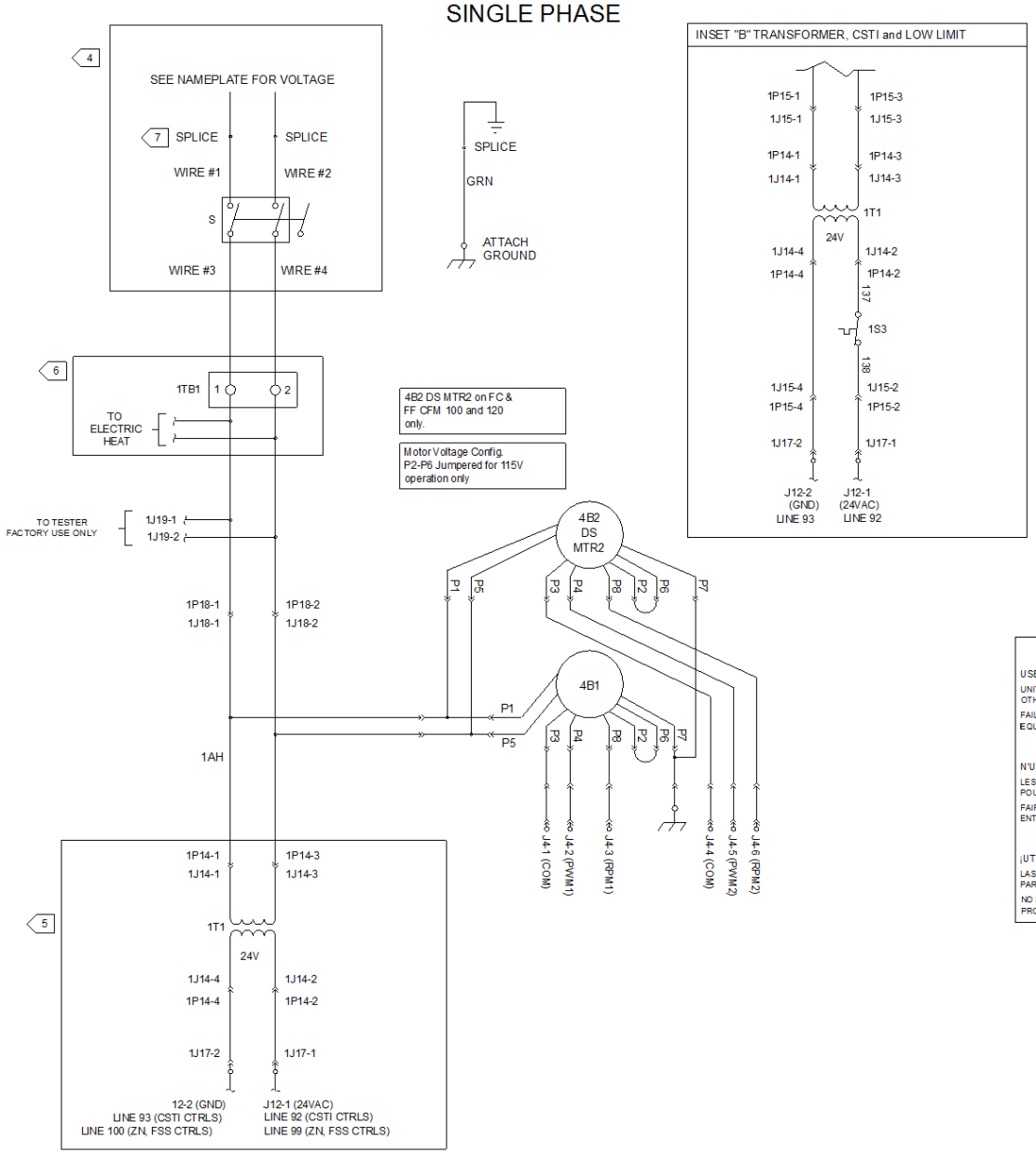

⚠ WARNING

HAZARDOUS VOLTAGE!

DISCONNECT ALL ELECTRIC POWER INCLUDING REMOTE DISCONNECTS AND FOLLOW LOCK OUT AND TAG PROCEDURES BEFORE SERVICING. INSURE THAT ALL MOTOR CAPACITORS HAVE DISCHARGED STORED VOLTAGE. UNITS WITH VARIABLE SPEED DRIVE, REFER TO DRIVE INSTRUCTIONS FOR CAPACITOR DISCHARGE.

FAILURE TO DO THE ABOVE BEFORE SERVICING COULD RESULT IN DEATH OR SERIOUS INJURY.

⚠ AVERTISSEMENT

TENSION DANGEREUSE!

COUPER TOUTES LES TENSIONS ET OUVRIR LES SECTIONNEURS À DISTANCE, PUIS SUIVRE LES PROCÉDURES DE VERROUILLAGE ET DES ÉTIQUETTES AVANT TOUTE INTERVENTION. VÉRIFIER QUE TOUS LES CONDENSATEURS DES MOTEURS SONT DÉCHARGÉS. DANS LE CAS D'UNITÉS COMPORTANT DES ENTRAÎNEMENTS À VITESSE VARIABLE, SE REPORTER AUX INSTRUCTIONS DE L'ENTRAÎNEMENT POUR DÉCHARGER LES CONDENSATEURS.

NE PAS RESPECTER CES MESURES DE PRÉCAUTION PEUT ENTRAÎNER DES BLESSURES GRAVES POUVANT ÊTRE MORTELLES.

⚠ ADVERTENCIA

¡VOLTAJE PELIGROSO!

DESCONECTE TODA LA ENERGÍA ELÉCTRICA, INCLUSO LAS DESCONEXIONES REMOTAS Y SIGA LOS PROCEDIMIENTOS DE CIERRE Y ETIQUETADO ANTES DE PROCEDER AL SERVICIO. ASEGÚRESE DE QUE TODOS LOS CAPACITORES DEL MOTOR HAYAN DESCARGADO EL VOLTAJE ALMACENADO. PARA LAS UNIDADES CON EJE DE DIRECCIÓN DE VELOCIDAD VARIABLE, CONSULTE LAS INSTRUCCIONES PARA LA DESCARGA DEL CONDENSADOR.

EL NO REALIZAR LO ANTERIORMENTE INDICADO, PODRÍA OCASIONAR LA MUERTE O SERIAS LESIONES PERSONALES.

NOTICE

USE COPPER CONDUCTORS ONLY

UNIT TERMINALS ARE NOT DESIGNED TO ACCEPT OTHER TYPES OF CONDUCTORS.

FAILURE TO DO THE ABOVE COULD RESULT IN EQUIPMENT DAMAGE.

AVIS

N'UTILISER QUE DES CONDUCTEURS EN CUIVRE!

LES BORNES DE L'UNITÉ NE SONT PAS CONÇUES POUR RECEVOIR D'AUTRES TYPES DE CONDUCTEURS.

FAIRE DEFAUT À LA PROCÉDURE CI-DESSUS PEUT ENTRAÎNER DES DOMMAGES À L'ÉQUIPEMENT.

AVISO

¡UTILICE ÚNICAMENTE CONDUCTORES DE COBRE!

LAS TERMINALES DE LA UNIDAD NO ESTÁN DISEÑADAS PARA ACEPTAR OTROS TIPOS DE CONDUCTORES.

NO SEGUIR LAS INSTRUCCIONES ANTERIORES PUEDE PROVOCAR DAÑOS EN EL EQUIPO.

DEVICE PREFIX LOCATION CODE	
AREA	LOCATION
1	CONTROL PANEL
2	CONTROL END
3	PIPING END
4	FAN SECTION
5	COIL SECTION
6	CUSTOMER INSTALLED
7	FIELD SUPPLIED DEVICE

NOTES:

1. UNLESS OTHERWISE NOTED. ALL SWITCHES ARE SHOWN AT 25° C (77° F), AT ATMOSPHERIC PRESSURE, AT 50 % RELATIVE HUMIDITY., WITH ALL UTILITIES TURNED OFF, AND AFTER NORMAL SHUTDOWN HAS OCCURED.
2. DASHED LINES INDICATE RECOMMENDED FIELD WIRING BY OTHERS. DASHED LINE ENCLOSURES AND/OR DASHED DEVICE OUTLINES INDICATE COMPONENTS PROVIDED BY THE FIELD. PHANTOM LINE ENCLOSURES INDICATE ALTERNATE CIRCUITRY OR AVAILABLE SALES OPTIONS. SOLID LINES INDICATE WIRING BY TRANE CO.
3. ALL FIELD WIRING MUST BE IN ACCORDANCE WITH THE NATIONAL ELECTRIC CODE (NEC) STATE AND LOCAL REQUIREMENTS.

4 WIRING SHOWN IS FOR UNITS WITH DISCONNECT SWITCH. UNITS WITHOUT DISCONNECT SWITCH OMIT SWITCH AND REPLACE WITH SPLICE.

5 WIRING SHOWN IS FOR UNITS WHEN CONTROL TYPES WITH NO FAULT SENSORS. SEE INSET "B" FOR UNITS WHEN CSTI IS WITH LOW LIMIT SENSORS.

6 1TB1 ONLY PRESENT IF UNIT HAS ELECTRIC HEAT. ADDITIONAL ELECTRIC HEAT WIRING SHOWN ON SHEETS 23114699 THRU 23114714.

7 SPLICE END LOCATED IN JUNCTION BOX.

LEGEND		
DEVICE DESIGNATION	DESCRIPTION	LINE NUMBER
1S1	DISCONNECT SWITCH	14
1TB1	EH TERMINAL BLOCK	20
4B2	MOTOR 2	24
4B1	MOTOR 1	29
1S3	CSTI LOW LIMIT SENSOR	35
1T1	TRANSFORMER	31,37

VOLTAGE SELECTION				
DESCRIPTION	WIRE #1	WIRE #2	WIRE #3	WIRE #4
115V/60HZ/1PH	L1/BLK	N/WHT	1AA/BLK	2AA/WHT
208V/60HZ/1PH	L1/BLK	L2/BLK	1AA/BLK	2AC/BLK
277V/60HZ/1PH	L1/BLK	N/WHT	1AA/BLK	2AA/WHT
230V/60HZ/1PH	L1/BLK	L2/BLK	1AA/BLK	2AC/BLK
220-240/50/1	L1/BLK	N/WHT	1AA/BLK	2AA/WHT

EHRM INFRASTRUCTURE UPGRADES DESIGN
WHITE RIVER JUNCT. VA MED. CENTER – WHITE RIVER JUNCTION VT
PROJECT #: 405-22-700-95 % CD1

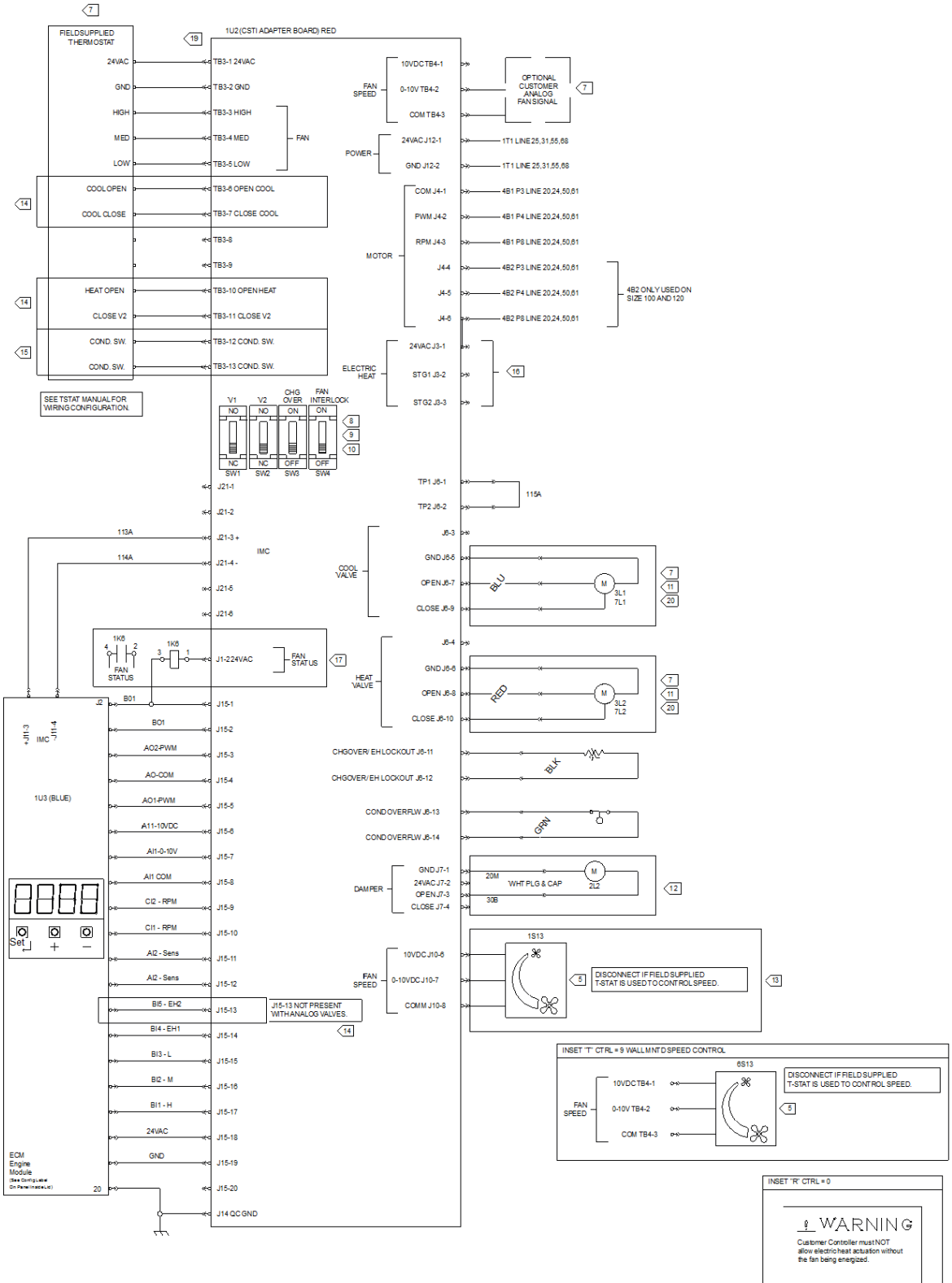

EHRM INFRASTRUCTURE UPGRADES DESIGN
WHITE RIVER JUNCT. VA MED. CENTER – WHITE RIVER JUNCTION VT
PROJECT #: 405-22-700-95 % CD1

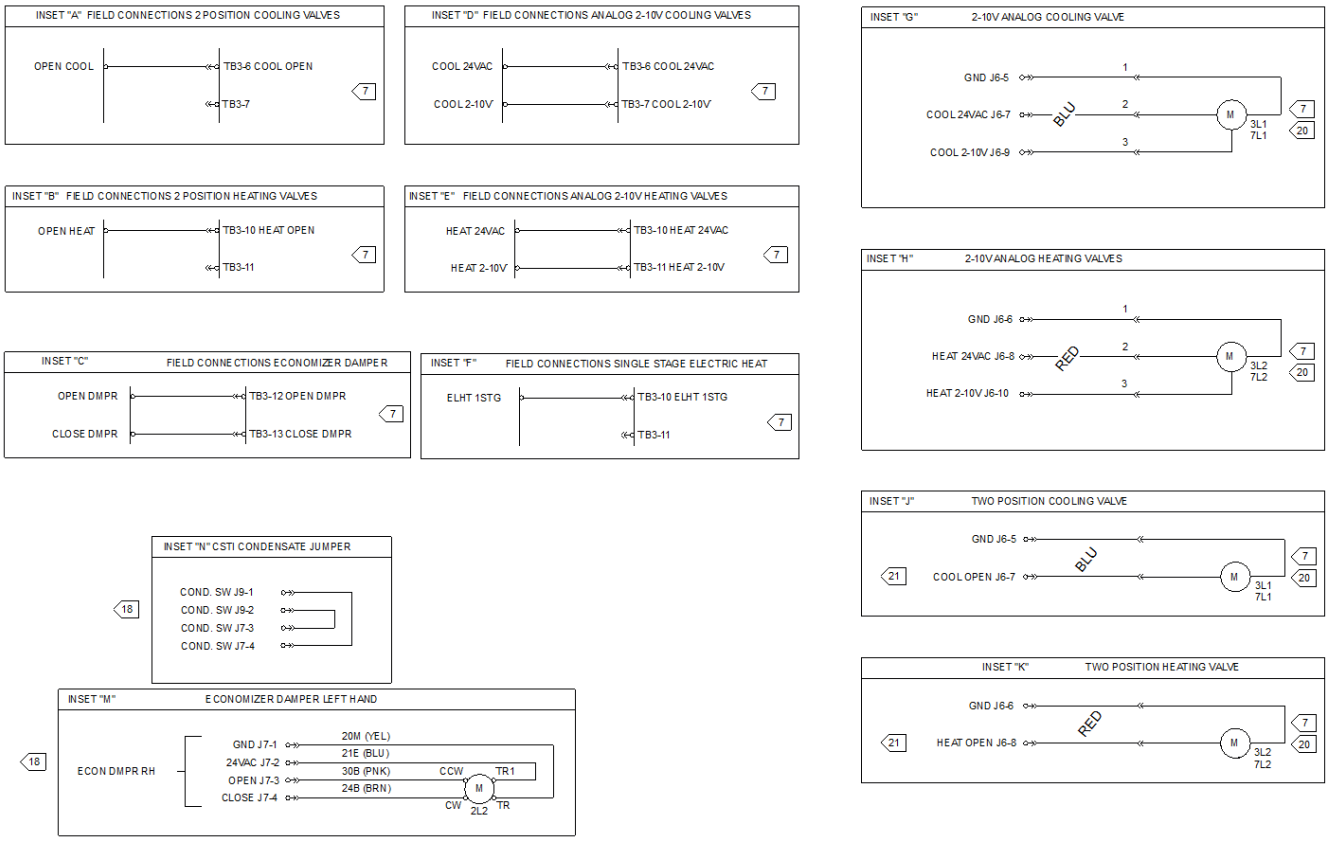

NOTES (SHEET TWO):

1. UNLESS OTHERWISE NOTED. ALL SWITCHES ARE SHOWN AT 25° C (77° F), AT ATMOSPHERIC PRESSURE, AT 50 % RELATIVE HUMIDITY, WITH ALL UTILITIES TURNED OFF, AND AFTER A NORMAL SHUTDOWN HAS OCCURRED.
2. DASHED LINES INDICATE RECOMMENDED FIELD WIRING BY OTHERS. DASHED LINED ENCLOSURES AND/OR DASHED DEVICE OUTLINES INDICATE COMPONENTS PROVIDED BY THE FIELD. PHANTOM LINE ENCLOSURES INDICATE ALTERNATE CIRCUITRY OR AVAILABLE SALES OPTIONS. SOLID LINES INDICATE WIRING BY TRANE.
3. NUMBERS ALONG THE LEFT SIDE OF SCHEMATIC DESIGNATE THE LOCATION OF CONPONENTS BY LINE NUMBER.
4. ALL FIELD WIRING MUST BE IN ACCORDANCE WITH THE NATIONAL ELECTRIC CODE (NEC), STATE AND LOCAL REQUIREMENTS. ALL FIELD WIRING MUST HAVE AN INSULATION VOLTAGE RATING THAT EQUALS OR EXCEEDS UNIT RATED VOLTAGE.
5. VALVE ACTUATOR POWER CONSUMPTION IS 4 WATTS MAXIMUM @24 VAC (DURING VALVE POSITION CHANGE).

7 USE CLASS 2 WIRING.

8 SW1 AND SW2 ARE SHOWN IN THE NC POSITION. SW1 AND OR SW2 ARE IN THE NC POSITION WHEN VALVES ARE NORMALLY CLOSED OR MODULATING. SW1 AND/OR SW2 ARE IN THE NO POSITION WHEN VALVES ARE NORMALLY OPEN. SW1 IS MAIN VALVE (COOLING) AND SW2 IS AUX VALVE (HEATING) FOR FANCOIL AND LOWBOY. SW2 IS MAIN VALVE (HEATING) FOR FF.

9 SW3 IS SHOWN IN THE OFF POSITION. SW3 IS TURNED ON WHEN CHANGE OVER COILS ARE SELECTED.

10 SW4 IS SHOWN IN THE OFF POSITION. SW4 IS TURNED ON WHEN UNIT HAS ELECTRIC HEAT.

11 WIRING SHOWN IS FOR MODULATING VALVES.
SEE INSETS "G" AND "H" FOR 2-10V ANALOG VALVE WIRING. SEE INSETS "J" AND "K" FOR 2 POSITION VALVE WIRING. FIELD SUPPLIED ACTUATOR UTILIZES THE SAME CONNECTION POINTS AS FACTORY WIRING.

12 WIRING SHOWN IS FOR TWO POSITION DAMPER. SEE INSET "M" FOR ECONOMIZER DAMPER WIRING.
SEE INSET "N" FOR CONDENSATE OVERFLOW WIRING.

13 WIRING SHOWN IS FOR UNIT MOUNTED VARIABLE SPEED CONTROL (CTRL =8). SEE INSET "R" FOR UNITS WITH NO SPEED CONTROL (CTRL = 0). SEE INSET "T" FOR WALL MOUNTED VARIABLE SPEED CONTROL WIRING (CTRL = 9).

14 FIELD CONNECTIONS SHOWN ON TB3-6 TB3-7, TB3-10 AND TB3-11 ARE FOR UNITS WITH MODULATING VALVES. SEE INSETS "A" AND "B" FOR TWO POSITION VALVE WIRING. SEE INSETS "D" AND "E" FOR ANALOG VALVES. FIELD SUPPLIED ACTUATOR UTILIZES THE SAME CONNECTION POINTS AS FACTORY WIRING.
SEE INSET "F" FOR SINGLE STAGE ELECTRIC HEAT FIELD WIRING.

15 FIELD CONNECTIONS SHOWN ON TB3-12 AND TB3-13 ARE FOR UNITS WITH CONDENSATE OVERFLOW.
SEE INSET "C" FOR ECONOMIZER DAMPER WIRING.

16 ELECTRIC HEAT WIRING SHOWN ON SHEETS 23114699 THRU 23114714.

17 WIRING SHOWN IS FOR CSTI WITH FAN STATUS (CTYP = N).

18 OPTION NOT AVAILABLE ON LOW VERTICAL (MODL=K,L).

19 24V OUTPUT IS RATED 15VA

20 FIELD SUPPLIED ACTUATOR WIRING UTILIZES THE SAME CONNECTION POINTS AS FACTORY ACTUATOR WIRING.

21 VALVES SHOWN IN NORMALLY CLOSED POSITION, FOR NORMALLY OPEN POSITION, THE VALVE SIGNAL BECOMES CLOSE.

DEVICE PREFIX LOCATION CODE	
AREA	LOCATION
1	CONTROL PANEL
2	CONTROL END
3	PIPING END
4	FAN SECTION
5	COIL SECTION
6	CUSTOMER INSTALLED
7	FIELD SUPPLIED DEVICE

LEGEND		
DEVICE DESIGNATION	DESCRIPTION	LINE NUMBER
1U2	CSTI ADAPTER BOARD	88
1U3	ECM ENGINE BOARD	114
3L1	COOLING/ CHANGEOVER VALVE	87,100,110
7L1	COOLING/ CHANGEOVER VALVE	87,100,110
3L2	HEATING COIL VALVE	94,103,114
7L2	HEATING COIL VALVE	94,103,114
2L2	ECON DAMPER ACTUATOR	119
2L2	DAMPER ACTUATOR	121
1K6	CSTI FAN STATUS RELAY	111,112
3RT1	AUTO CHG TEMP SENSOR	116
3S8	CONDENSATE OVERFLOW	118
1S13	CSTI UNIT MNTD FAN SWITCH	124
6S13	CSTI WALL MNTD FAN SWITCH	124

EHRM INFRASTRUCTURE UPGRADES DESIGN
WHITE RIVER JUNCT. VA MED. CENTER – WHITE RIVER JUNCTION VT
PROJECT #: 405-22-700-95 % CD1

Performance Data
Capacity: Unit capacities are certified under the Industry Room Fan Coil Air Conditioner Certification Program in accordance with AHRI standard 440-97.

Safety: All standard units are UL and CUL approved.

Horizontal Cabinet Basic Construction
The basic unit includes a chassis, coil(s), fan wheel(s), fan casing(s), fan board and motor(s). Units also include a positively sloped (multi-plane), stainless steel main drain pan with closed cell insulation. A thermoplastic auxiliary drain pan is included on fan coils with standard piping packages. The fan board assembly and both drain pans are removable. The fan board assembly includes a quick disconnect motor plug. The chassis is the structural frame constructed of 18 ga. galvanized steel. The unit is acoustically and thermally insulated with closed cell insulation. The bottom panel is fabricated from 16 ga. galvanized steel. All other panels are fabricated from 18 ga. galvanized steel. All panels are made rigid by channel forming. Side panels are removable for piping access. The discharge grille is recessed to resist condensate formation. The hinged access door is flush with the unit.

Bar Grille Outlet
Supply air grilles are supplied on cabinet style units. The grille is constructed of 18 gauge steel construction with black paint finish. Louvers are formed at a 15.00 Deg angle and fixed in one discharge direction.

Unit Finish
All cabinet parts are cleaned, bonderized, phosphatized and painted with one of six decorator colors. Standard finish meets ASTM B117 specifications (salt spray test).

Fan
The galvanized steel fan wheels are centrifugal forward-curved and double-width. Fan wheels and housings are corrosion resistant. Fan housings are constructed of formed sheet metal.

Electronically Commutated Motors (ECM)
All motors are brushless DC (BLDC) electronically commutated motors (ECM) factory programmed and run tested in assembled units. The motor controller is mounted in a control box with a built in integrated user interface and LED tachometer. If adjustments are needed, motor parameters can be adjusted through momentary contact switches accessible without factory service personnel on the motor control board. Motors will soft ramp between speeds to lessen the acoustics due to sudden speed changes. Motors can be operated at three speeds or at variable speed with factory supplied or field supplied controllers. The motor will choose the highest speed if there are simultaneous or conflicting speed requests. All motors have integral overload protection with a maximum ambient operating temperature of 104.0 F and use permanently sealed ball bearings. Motors can operate at plus or minus 10 percent of rated voltage on all speed settings.

Coil
All water coils are burst tested at 450.00 psi (air) and leak tested at 100.00 psi (air under water). Maximum main coil working pressure is 300.00 psi. Maximum entering water temperature is 200.0 F. Tubes and U-bends are 3/8" OD copper. Fins are aluminum and are mechanically bonded to the copper tubes. Coil connections are 5/8" OD copper tubing.

Coil Air Vents - Manual
Manual air vents are rated at 300 psig.

Coil Connections - (RH)
Right hand coil connection with no interconnecting piping is provided.

Installation Note
Unit leveling and drain line pitch: Set unit level by checking the casing. The Trane Company and the industry in general recommends a drain line pitch of 1" (25mm) drop per ten feet.

WARNING: Tighten all unions when piping units. Factory tightens unions, but they may loosen during shipping.

Variable Speed Control

EHRM INFRASTRUCTURE UPGRADES DESIGN
WHITE RIVER JUNCT. VA MED. CENTER – WHITE RIVER JUNCTION VT
PROJECT #: 405-22-700-95 % CD1

The Speed Control incorporates a 0-10VDC signal providing limitless control of the motor RPM between the factory set low and high speeds.

CSTI - Thermostat Interface
The control interface is intended to be used with a field-supplied, low-voltage thermostat or controller. The control box contains a relay board which includes a line voltage to 24-volt transformer; quiet contactors (for electric heat units); and an optional disconnect switch. All end devices are wired to a low voltage terminal block and run tested, so the only a power connection and thermostat connection is needed to commission the unit. Changeover sensors and controls are provided whenever a change over coil is selected. When NO valves are selected, inverting relays are provided for use with standard thermostats.

Disconnect Switch
A unit mounted, non-fused disconnect switch is available as a standard option on all units.

End Pockets
Standard end pockets are provided.

1" MERV 8 Filter
The filter is concealed from sight and easily removable. A 1" MERV 8 filter is provided in the unit. The MERV 8 filters have a rating based on ASHRAE Standard 52.2. The average dust spot efficiency is no less than 35 to 40 percent when tested in accordance with ASHRAE 52.1 atmospheric dust spot method.

EHRM INFRASTRUCTURE UPGRADES DESIGN
WHITE RIVER JUNCT. VA MED. CENTER – WHITE RIVER JUNCTION VT
PROJECT #: 405-22-700-95 % CD1

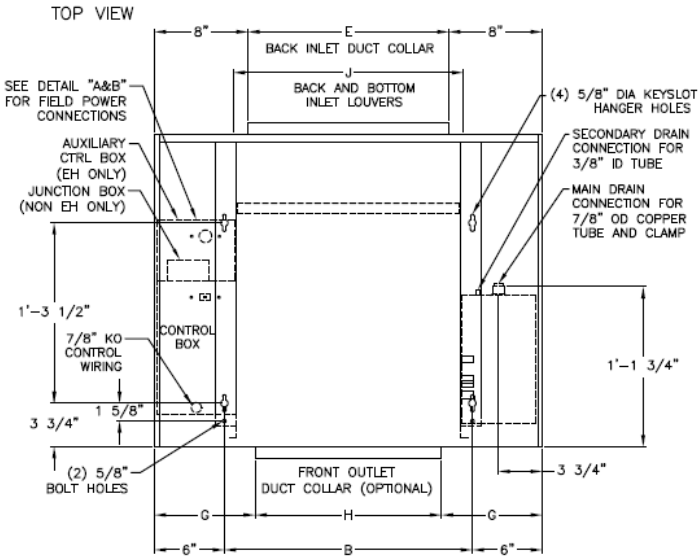

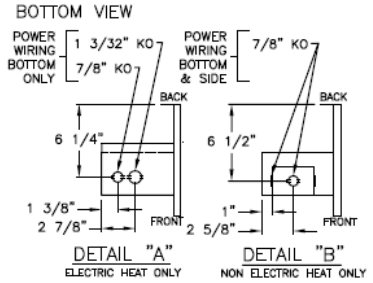

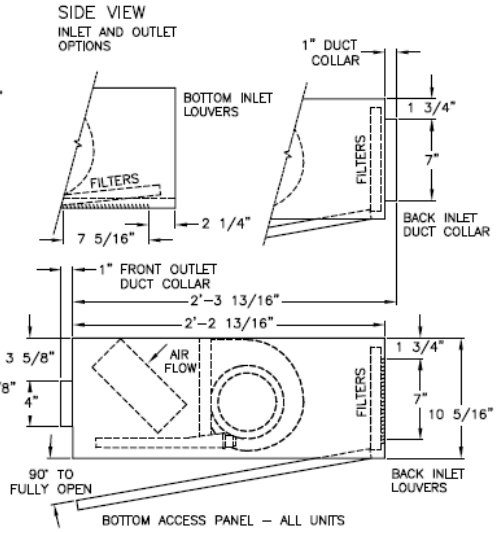

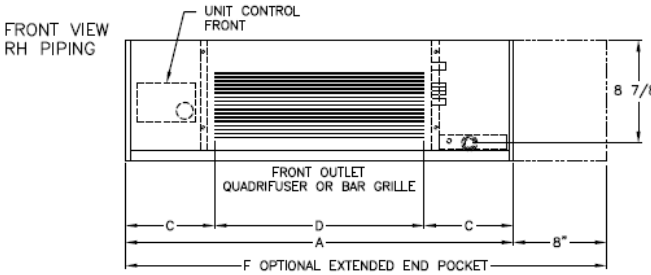

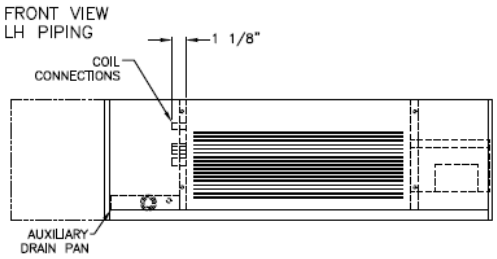

UNIT SIZE	200–300	400	600	800	1000–1200
NO. OF FANS	1	1	2	2	3
NO. OF MOTORS	1	1	1	1	2
A	2'–9 5/16"	3'–2 5/16"	3'–11 3/16"	4'–8 5/16"	6'–3 5/16"
B	1'–9 5/16"	2'–2 5/16"	2'–11 13/16"	3'–8 5/16"	5'–3 5/16"
C	7 5/8"	7 1/8"	8 7/8"	7 1/8"	7 5/8"
D	1'–6"	2'–0"	2'–6"	3'–6"	5'–0"
E	1'–5 1/4"	1'–10 1/4"	2'–7 3/4"	3'–4 1/4"	4'–11 1/4"
F	3'–5 5/16"	3'–10 5/16"	4'–7 3/16"	5'–4 5/16"	6'–11 5/16"
G	8 5/8"	8 1/8"	9 7/8"	8 1/8"	8 5/8"
H	1'–4"	1'–10"	2'–4"	3'–4"	4'–10"
J	1'–7 3/4"	1'–11 3/4"	2'–7 3/4"	3'–3 3/4"	4'–11 3/4"

NOTE:

1. COIL CONNECTIONS ARE ALWAYS ON THE DRAIN PAN SIDE AND OPPOSITE THE CONTROL BOX.
2. COIL CONNECTIONS ARE 5/8" O.D. SWEAT. SEE PAGES XXXXX FOR LOCATIONS.
3. ALL DUCT COLLAR DIMENSIONS ARE TO THE OUTSIDE OF THE COLLAR.
4. SEE PAGES XXXXXX FOR DIMENSIONS FOR OUTSIDE AIR OPENINGS.

EHRM INFRASTRUCTURE UPGRADES DESIGN
WHITE RIVER JUNCT. VA MED. CENTER – WHITE RIVER JUNCTION VT
PROJECT #: 405-22-700-95 % CD1
BOD APPENDIX D- MECHANICAL CUT SHEETS

Table 1. UniTrane® Fan-Coil general data

Unit Size	02	03	04	06	08	10	12
Coil Data							
Face Area—ft² (cm²)	0.8 (743)	0.8 (743)	1.1 (1020)	1.6 (1490)	2.1 (1950)	3.2 (2970)	3.2 (2970)
L x D x H—in. (cm)							
2-Row	15 x 1.7 x 8 (38 x 4 x 20)	15 x 1.7 x 8 (38 x 4 x 20)	20 x 1.7 x 8 (51 x 4 x 20)	29.5 x 1.7 x 8 (75 x 4 x 20)	38 x 1.7 x 8 (97 x 4 x 20)	57 x 1.7 x 8 (145 x 4 x 20)	57 x 1.7 x 8 (145 x 4 x 20)
3-Row	15 x 2.6 x 8 (38 x 7 x 20)	15 x 2.6 x 8 (38 x 7 x 20)	20 x 2.6 x 8 (51 x 7 x 20)	29.5 x 2.6 x 8 (75 x 7 x 20)	38 x 2.6 x 8 (97 x 7 x 20)	57 x 2.6 x 8 (145 x 7 x 20)	57 x 2.6 x 8 (145 x 7 x 20)
4-Row	15 x 3.5 x 8 (38 x 9 x 20)	15 x 3.5 x 8 (38 x 9 x 20)	20 x 3.5 x 8 (51 x 9 x 20)	29.5 x 3.5 x 8 (75 x 9 x 20)	38 x 3.5 x 8 (97 x 9 x 20)	57 x 3.5 x 8 (145 x 9 x 20)	57 x 3.5 x 8 (145 x 9 x 20)
Volume—gal (L)							
1-Row (Heat)	0.06 (0.23)	0.06 (0.23)	0.08 (0.30)	0.11 (0.42)	0.14 (0.53)	0.21 (0.79)	0.21 (0.79)
2-Row	0.12 (0.45)	0.12 (0.45)	0.15 (0.57)	0.22 (0.83)	0.28 (1.06)	0.42 (1.59)	0.42 (1.59)
3-Row	0.18 (0.68)	0.18 (0.68)	0.23 (0.87)	0.33 (1.25)	0.42 (1.59)	0.62 (2.35)	0.62 (2.35)
4-Row	0.24 (0.91)	0.24 (0.91)	0.30 (1.14)	0.44 (1.67)	0.56 (2.12)	0.83 (3.14)	0.83 (3.14)
Fins/ft (cm)							
2-Row	144 (4.7)	144 (4.7)	144 (4.7)	144 (4.7)	144 (4.7)	144 (4.7)	144 (4.7)
3-Row	144 (4.7)	144 (4.7)	144 (4.7)	144 (4.7)	144 (4.7)	144 (4.7)	144 (4.7)
4-Row	144 (4.7)	144 (4.7)	144 (4.7)	144 (4.7)	144 (4.7)	144 (4.7)	144 (4.7)
Reheat Coil Data (1-Row)							
Hot Water or Steam							
Face Area—ft² (cm²)	0.6 (557)	0.6 (557)	0.8 (743)	1.2 (1120)	1.6 (1490)	2.4 (2230)	2.4 (2230)
L x D x H—in. (cm)	15 x 1.5 x 6 (38 x 4 x 15)	15 x 1.5 x 6 (38 x 4 x 15)	20 x 1.5 x 6 (51 x 4 x 15)	29.5 x 1.5 x 6 (75 x 4 x 15)	38 x 1.5 x 6 (97 x 4 x 15)	57 x 1.5 x 6 (145 x 4 x 15)	57 x 1.5 x 6 (145 x 4 x 15)
Volume—gal (L)	0.12 (0.45)	0.12 (0.45)	0.15 (0.57)	0.22 (0.83)	0.28 (1.06)	0.42 (1.59)	0.42 (1.59)
Fins/ft (cm)	48 (1.6)	48 (1.6)	48 (1.6)	48 (1.6)	48 (1.6)	48 (1.6)	48 (1.6)
Fan/Motor Data							
Fan Quantity	1	1	1	2	2	3	3
Size—Dia" x Width" (cm)	6.31 x 4 (16 x 10)	6.31 x 6.5 (16 x 17)	6.31 x 7.5 (16 x 19)	6.31 x 6.5 (16 x 17)	6.31 x 7.5 (16 x 19)	(1) 6.31 x 7.5 (16 x 19)	6.31 x 7.5 (16 x 19)
Size—Dia" x Width" (cm)						(2) 6.31x6.5 (16 x 6.5)	
Motor Quantity	1	1	1	1	1	2	2
Filter Data							
1" (cm) TA and Pl. Media							
Quantity	1	1	1	1	1	1	1
Size—in. (cm)	8-7/8 x 19-1/8 (23 x 49)	8-7/8 x 19-1/8 (23 x 49)	8-7/8 x 24-1/8 (23 x 61)	8-7/8 x 33-5/8 (23 x 85)	8-7/8 x 42-1/8 (23 x 107)	8-7/8 x 61-1/8 (23 x 155)	8-7/8 x 61-1/8 (23 x 155)
1" Fresh Air Filter (only on cabinet styles D, E, and H with bottom return and fresh air opening)							
Quantity	1	1	1	1	1	1	1
Size—in. (cm)	5-1/2 x 19-1/8 (14 x 49)	5-1/2 x 19-1/8 (14 x 49)	5-1/2 x 24-1/8 (14 x 61)	5-1/2 x 33-5/8 (14 x 85)	5-1/2 x 42-1/8 (14 x 107)	5-1/2 x 61-1/8 (14 x 156)	5-1/2 x 61-1/8 (14 x 156)

Fan Speed Switch

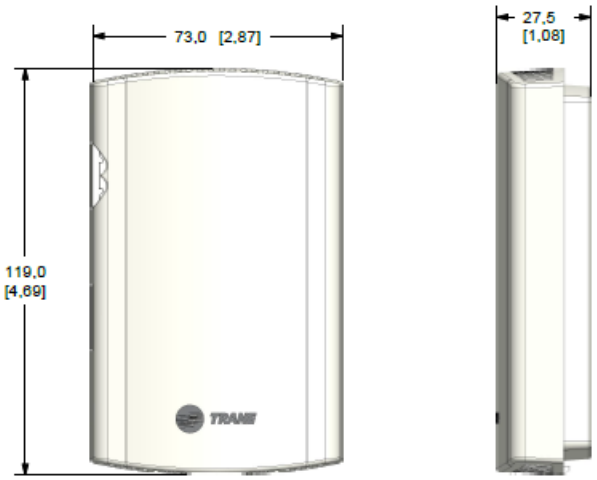

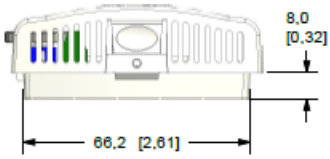

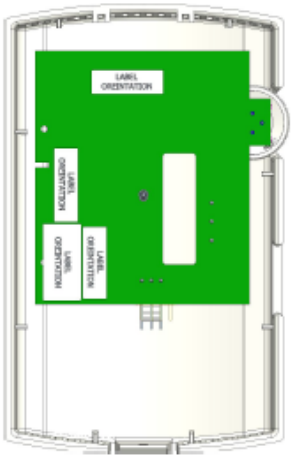

FRONT VIEW
COVER
REMOVED

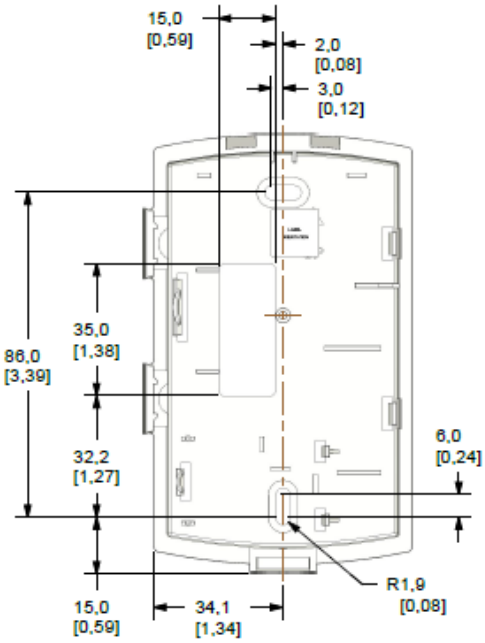

FRONT VIEW
MOUNTING BASE

EHRM INFRASTRUCTURE UPGRADES DESIGN
WHITE RIVER JUNCT. VA MED. CENTER – WHITE RIVER JUNCTION VT
PROJECT #: 405-22-700-95 % CD1
BOD APPENDIX D- MECHANICAL CUT SHEETS

Fan Details

Unit Size	Size 100	**Operating Brake Power**	0.052 hp
Operating Airflow	900	**Altitude**	381.00 ft
Operating Static Pressure	0.343 in H2O	**Design Temp.**	80.00 F
Operating RPM	1,309 rpm		

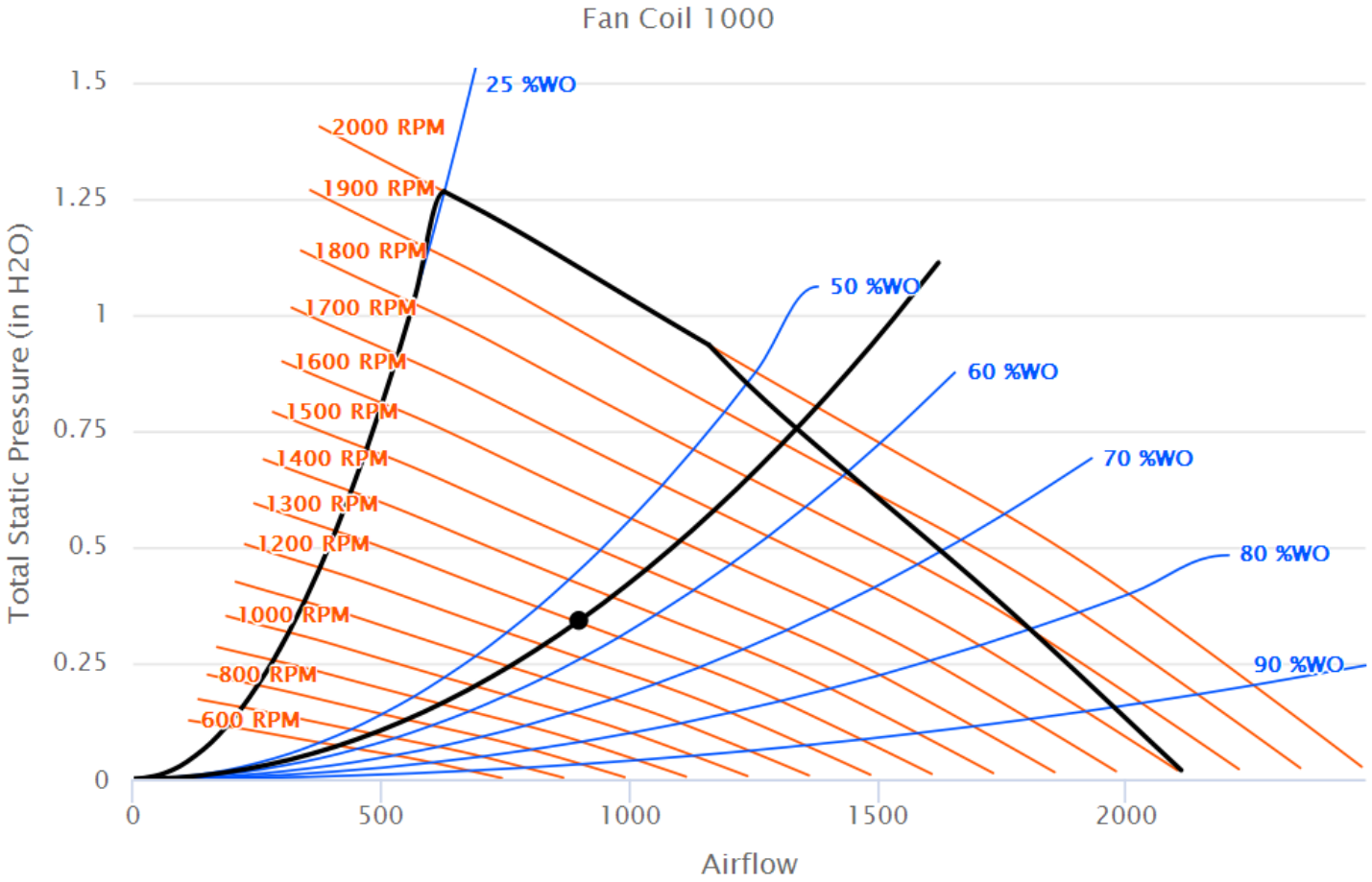

EUPM INFRASTRUCTURE UPGRADES DESIGN
WHITE RIVER JUNCT. VA MED. CENTER – WHITE RIVER JUNCTION VT
PROJECT #: 405-22-700-95 % CD1

Unit Overview

Model Number	Cabinet Style	Unit Cabinet Size	Design Airflow	Elevation	External Dimensions			Weight	
					Length	Width	Height	Shipping	Operating
FCDB100	Horizontal cabinet	Size 100	1200 cfm	381.00 ft	75.000 in	26.000 in	10.000 in	200.0 lb	218.0 lb

Unit Features

Inlet Style	Bottom stamped louver inlet
Outlet Style	Front bar grille outlet
Unit Mounted Disconnect Switch	With disconnect switch
Filter Type	1" MERV 8 filter
Piping System/Placement	W/o pipe, rt hand, w/ aux drn pan
Drain Pan	Stainless steel
Cabinet Color	Deluxe beige
Tamperproof Locks/ Leveling Feet	W/o tamperproof locks or leveling ft

Motor/Electrical Information

Unit voltage	115v/60hz/1ph
Short circuit current rating	5 kA RMS Symmetrical, 115V Maximum
ESP	0.000 in H2O
Motor type	Free discharge ECM
Motor speed	High
Motor power	395.0 W
Min circuit ampacity	6.07 A
Max fuse size	15.00 A

	Nameplate	Calculated BHP	Max BHP
Motor #1 HP	0.130 hp	0.119 hp	0.152 hp
Motor #2 HP	0.220 hp	0.230 hp	0.270 hp
Speed	**CFM**	**TSP**	**RPM**
High	1200 cfm	0.580 in H2O	1718 rpm
Medium	1020 cfm	0.419 in H2O	1460 rpm
Low	792 cfm	0.253 in H2O	1134 rpm

Coil Information

Main Coil Type	4 row cooling only	**Cooling Fluid Type**	Water
Coil Air Vent	Manual		

Coil Performance - Cooling			
Total Capacity	30.00 MBh	**Entering Fluid Temp**	48.00 F
Sensible Capacity	25.67 MBh	**Leaving Fluid Temp**	65.34 F
Entering Dry Bulb	80.00 F	**Fluid Pressure Drop**	4.30 ft H2O
Entering Wet Bulb	67.00 F	**Fluid Flow Rate**	3.45 gpm
Leaving Dry Bulb	60.11 F	**Fluid Delta T**	17.34 F
Leaving Wet Bulb	59.13 F		

Controls, Sensors and Valves

Control type	CS T-Stat Interface
Zone Sensor Type	Unit mounted variable speed control

Acoustics

Sound Path	63 Hz	125 Hz	250 Hz	500 Hz	1 kHz	2 kHz	4 kHz	8 kHz
Total Sound - High	65 dB	76 dB	76 dB	71 dB	70 dB	68 dB	67 dB	56 dB

Note: Sound power level data in dB (re 1pW).

Note: Acoustical data has been obtained from tests in accordance with AHRI Standard 350-2000.

Factory Controls Addressing

Unit Tag	Controller Address	WCI Address
FC-2	0	11

Note: Please confirm each unit selected with Factory Addressing has the correct controller and WCI address.

EHRM INFRASTRUCTURE UPGRADES DESIGN
WHITE RIVER JUNCT. VA MED. CENTER – WHITE RIVER JUNCTION VT
PROJECT #: 405-22-700-95 % CD1

Trane Select Assist Version Number:	285
Data Generation Date:	07/19/2024

EHRM INFRASTRUCTURE UPGRADES DESIGN
WHITE RIVER JUNCT. VA MED. CENTER – WHITE RIVER JUNCTION VT
PROJECT #: 405-22-700-95 % CD1

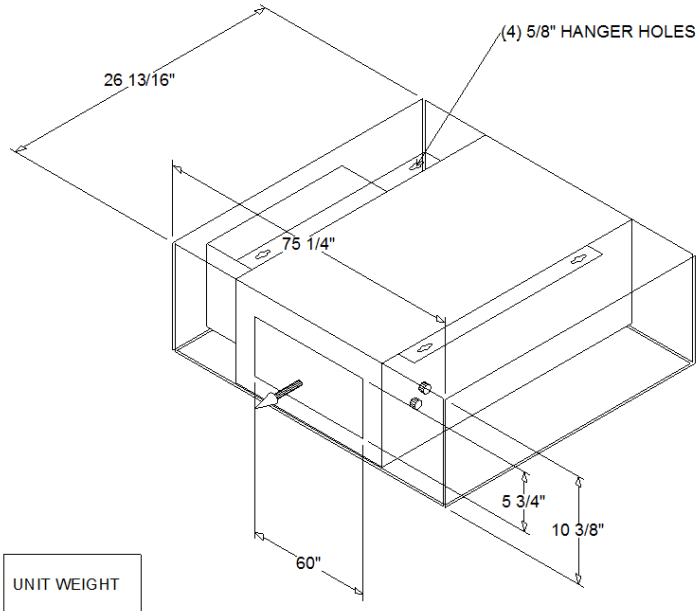

ISO1 VIEW

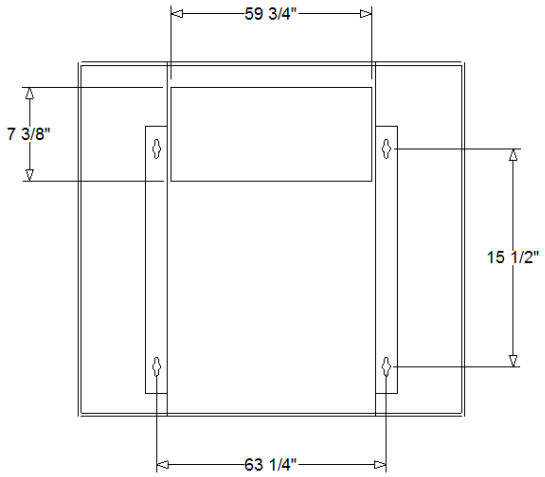

BOTTOM VIEW

UNIT WEIGHT
218.0 lb

AFANCOIL000035

NOTES:

1. ARROW(S) INDICATE THE DIRECTION OF AIRFLOW.

2. FILTERS ARE ACCESSED THROUGH THE BOTTOM OF UNIT.

3. CONTROL WIRES SHOULD ENTER CONTROL BOX THROUGH TOP FRONT KNOCKOUT.

4. POWER WIRES ARE TO ENTER CONTROL BOX THROUGH FRONT BOTTOM CONDUIT ENTRANCE KNOCKOUTS.

5. PIPING CONNECTIONS ARE 5/8" OD COPPER.

6. AUXILIARY DRAINPAN CONN:
MAIN: 7/8" OD TUBE & CLAMP
SECONDARY: 3/8" ID TUBE

7. STANDARD ENDPOCKET WIDTH IS 8".

LEFT VIEW

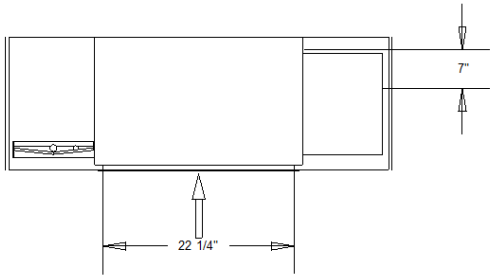

BACK VIEW

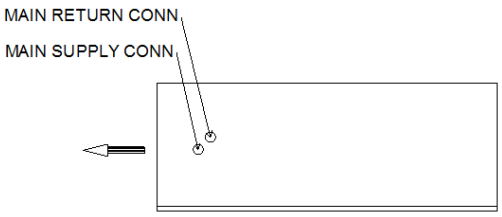

RIGHT VIEW

EHRM INFRASTRUCTURE UPGRADES DESIGN
WHITE RIVER JUNCT. VA MED. CENTER – WHITE RIVER JUNCTION VT
PROJECT #: 405-22-700-95 % CD1

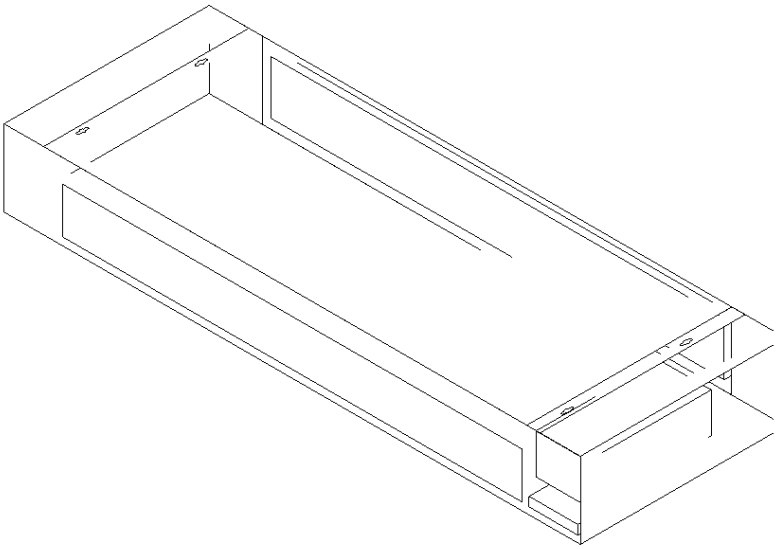

ISO VIEW

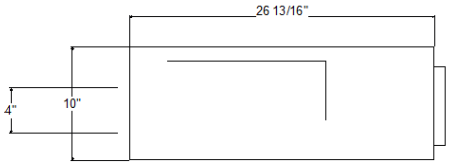

RIGHT VIEW

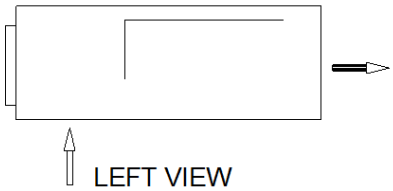

LEFT VIEW

UNIT WEIGHT
218.0 lb

NOTES:

1. ARROW(S) INDICATE THE DIRECTION OF AIRFLOW.

2. FILTERS ARE ACCESSED THROUGH THE BOTTOM OF UNIT.

3. CONTROL WIRES SHOULD ENTER CONTROL BOX THROUGH TOP FRONT KNOCKOUT.

4. POWER WIRES ARE TO ENTER CONTROL BOX THROUGH FRONT BOTTOM CONDUIT ENTRANCE KNOCKOUTS.

5. PIPING CONNECTIONS ARE 5/8" OD COPPER.

6. AUXILIARY DRAINPAN CONN:
MAIN: 7/8" OD TUBE & CLAMP
SECONDARY: 3/8" ID TUBE

7. STANDARD ENDPOCKET WIDTH IS 8".

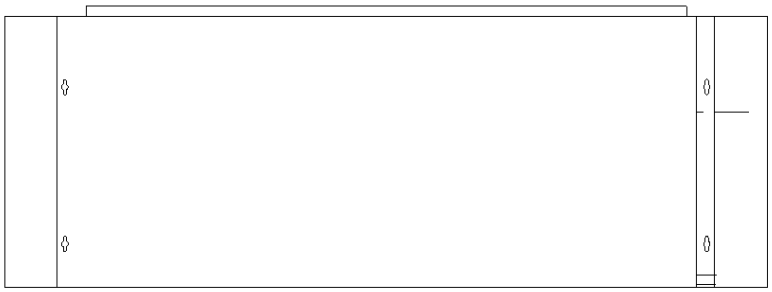

TOP VIEW

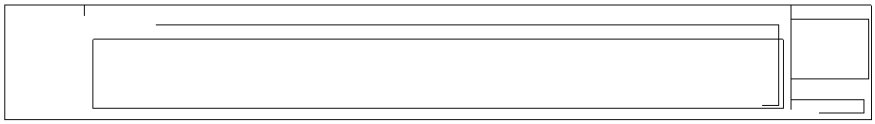

FRONT VIEW

EHRM INFRASTRUCTURE UPGRADES DESIGN
WHITE RIVER JUNCT. VA MED. CENTER – WHITE RIVER JUNCTION VT
PROJECT #: 405-22-700-95 % CD1

POWER WIRING

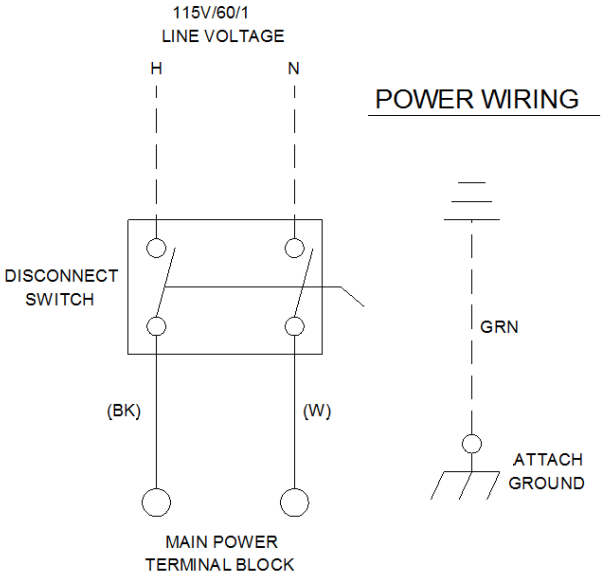

NOTES:

1. ALL FIELD WIRING MUST BE IN ACCORDANCE WITH THE NATIONAL ELECTRIC CODE (NEC), STATE AND LOCAL REQUIREMENTS.

2. DASHED LINES INDICATE RECOMMENDED FIELD WIRING BY OTHERS. DASHED LINE ENCLOSURES AND / OR DASHED DEVICE OUTLINES INDICATE COMPONENTS PROVIDED BY THE FIELD. SOLID LINES INDICATE WIRING BY TRANE COMPANY.

3. ALL FIELD POWER AND CONTROL WIRING SHOULD HAVE AN INSULATION RATING GREATER THAN OR EQUAL TO THE UNIT VOLTAGE RATING.

4. LINE VOLTAGE CONNECTIONS ARE TO BE SPLICED TO WIRES OR CONNECTED TO TERMINAL BLOCK INSIDE OF UNIT CONTROL BOX.

MCA: 6.07 A

MFS: 15.00 A

NOTICE

USE COPPER CONDUCTORS ONLY!

UNIT TERMINALS ARE NOT DESIGNED TO ACCEPT OTHER TYPES OF CONDUCTORS.

FAILURE TO DO THE ABOVE COULD RESULT IN EQUIPMENT DAMAGE.

AVIS

N'UTILISER QUE DES CONDUCTEURS EN CUIVRE!

LES BORNES DE L'UNITÉ NE SONT PAS CONÇUES POUR RECEVOIR D'AUTRES TYPES DE CONDUCTEURS.

FAIRE DÉFAUT À LA PROCÉDURE CI-DESSUS PEUT ENTRAÎNER DES DOMMAGES À L'ÉQUIPEMENT.

AVISO

¡UTILICE ÚNICAMENTE CONDUCTORES DE COBRE!

LAS TERMINALES DE LA UNIDAD NO ESTÁN DISEÑADAS PARA ACEPTAR OTROS TIPOS DE CONDUCTORES.

NO SEGUIR LAS INSTRUCCIONES ANTERIORES PUEDE PROVOCAR DAÑOS EN EL EQUIPO.

⚠ WARNING

HAZARDOUS VOLTAGE!

DISCONNECT ALL ELECTRIC POWER INCLUDING REMOTE DISCONNECTS AND FOLLOW LOCK OUT AND TAG PROCEDURES BEFORE SERVICING. INSURE THAT ALL MOTOR CAPACITORS HAVE DISCHARGED STORED VOLTAGE. UNITS WITH VARIABLE SPEED DRIVE, REFER TO DRIVE INSTRUCTIONS FOR CAPACITOR DISCHARGE.

FAILURE TO DO THE ABOVE BEFORE SERVICING COULD RESULT IN DEATH OR SERIOUS INJURY.

⚠ AVERTISSEMENT

TENSION DANGEREUSE!

COUPER TOUTES LES TENSIONS ET OUVRIR LES SECTIONNEURS À DISTANCE, PUIS SUIVRE LES PROCÉDURES DE VERROUILLAGE ET DES ÉTIQUETTES AVANT TOUTE INTERVENTION. VÉRIFIER QUE TOUS LES CONDENSATEURS DES MOTEURS SONT DÉCHARGÉS. DANS LE CAS D'UNITÉS COMPORTANT DES ENTRAÎNEMENTS À VITESSE VARIABLE, SE REPORTER AUX INSTRUCTIONS DE L'ENTRAÎNEMENT POUR DÉCHARGER LES CONDENSATEURS.

NE PAS RESPECTER CES MESURES DE PRÉCAUTION PEUT ENTRAÎNER DES BLESSURES GRAVES POUVANT ÊTRE MORTELLES.

⚠ ADVERTENCIA

¡VOLTAJE PELIGROSO!

DESCONECTE TODA LA ENERGÍA ELÉCTRICA, INCLUSO LAS DESCONEXIONES REMOTAS Y SIGA LOS PROCEDIMIENTOS DE CIERRE Y ETIQUETADO ANTES DE PROCEDER AL SERVICIO. ASEGÚRESE DE QUE TODOS LOS CAPACITORES DEL MOTOR HAYAN DESCARGADO EL VOLTAJE ALMACENADO. PARA LAS UNIDADES CON EJE DE DIRECCIÓN DE VELOCIDAD VARIABLE, CONSULTE LAS INSTRUCCIONES PARA LA DESCARGA DEL CONDENSADOR.

EL NO REALIZAR LO ANTERIORMENTE INDICADO, PODRÍA OCASIONAR LA MUERTE O SERIAS LESIONES PERSONALES.

CONTROL WIRING

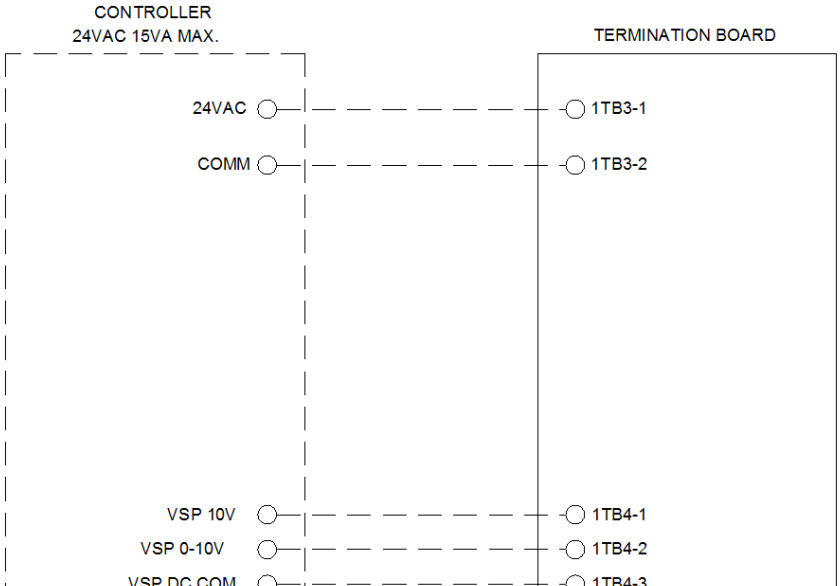

EHRM INFRASTRUCTURE UPGRADES DESIGN
WHITE RIVER JUNCT. VA MED. CENTER – WHITE RIVER JUNCTION VT
PROJECT #: 405-22-700-95 % CD1

SINGLE PHASE

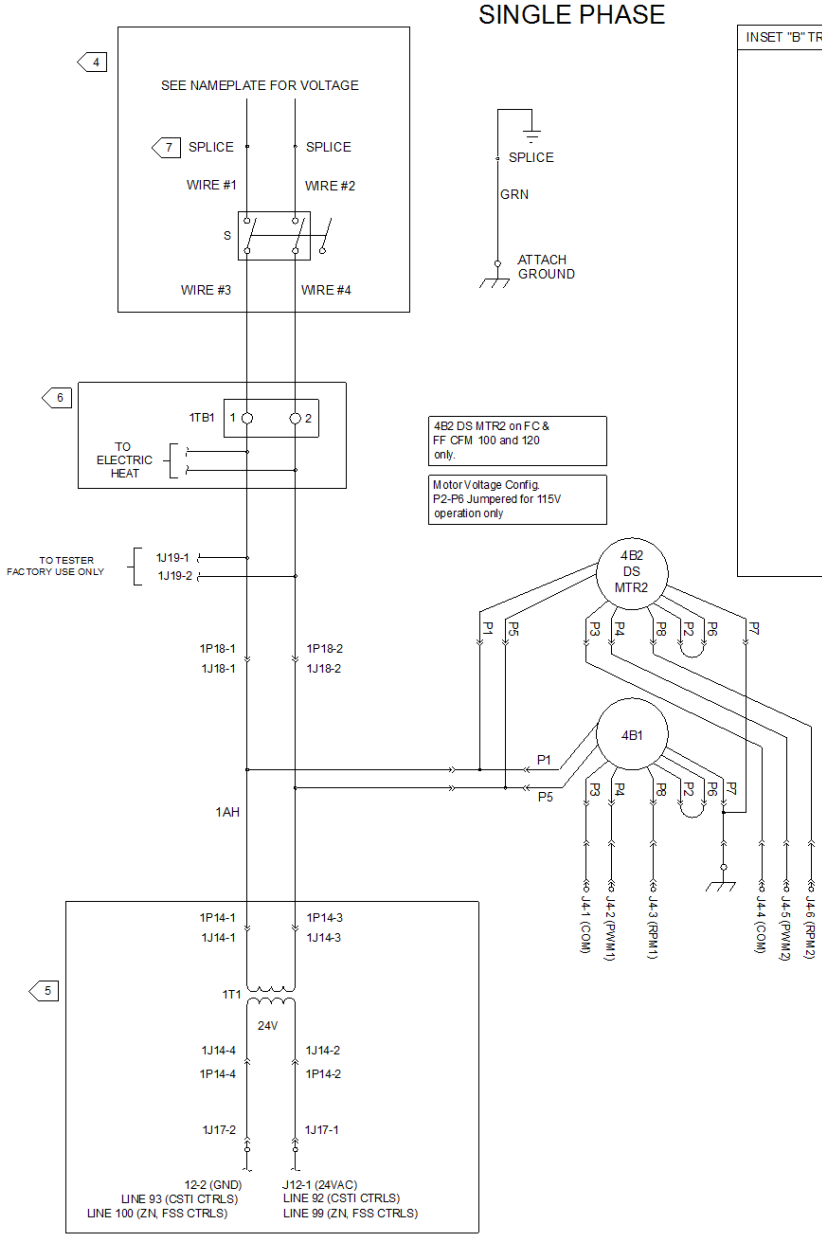

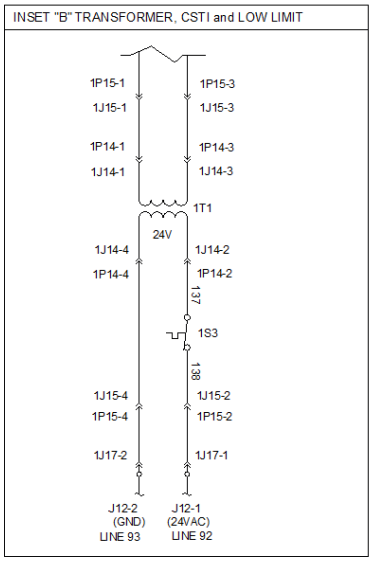

⚠ WARNING

HAZARDOUS VOLTAGE!

DISCONNECT ALL ELECTRIC POWER INCLUDING REMOTE DISCONNECTS AND FOLLOW LOCK OUT AND TAG PROCEDURES BEFORE SERVICING. INSURE THAT ALL MOTOR CAPACITORS HAVE DISCHARGED STORED VOLTAGE. UNITS WITH VARIABLE SPEED DRIVE, REFER TO DRIVE INSTRUCTIONS FOR CAPACITOR DISCHARGE.

FAILURE TO DO THE ABOVE BEFORE SERVICING COULD RESULT IN DEATH OR SERIOUS INJURY.

⚠ AVERTISSEMENT

TENSION DANGEREUSE!

COUPER TOUTES LES TENSIONS ET OUVRIR LES SECTIONNEURS À DISTANCE, PUIS SUIVRE LES PROCÉDURES DE VERROUILLAGE ET DES ÉTIQUETTES AVANT TOUTE INTERVENTION. VÉRIFIER QUE TOUS LES CONDENSATEURS DES MOTEURS SONT DÉCHARGÉS. DANS LE CAS D'UNITÉS COMPORTANT DES ENTRAÎNEMENTS À VITESSE VARIABLE, SE REPORTER AUX INSTRUCTIONS DE L'ENTRAÎNEMENT POUR DÉCHARGER LES CONDENSATEURS.

NE PAS RESPECTER CES MESURES DE PRÉCAUTION PEUT ENTRAÎNER DES BLESSURES GRAVES POUVANT ÊTRE MORTELLES.

⚠ ADVERTENCIA

¡VOLTAJE PELIGROSO!

DESCONECTE TODA LA ENERGÍA ELÉCTRICA, INCLUSO LAS DESCONEXIONES REMOTAS Y SIGA LOS PROCEDIMIENTOS DE CIERRE Y ETIQUETADO ANTES DE PROCEDER AL SERVICIO. ASEGÚRESE DE QUE TODOS LOS CAPACITORES DEL MOTOR HAYAN DESCARGADO EL VOLTAJE ALMACENADO. PARA LAS UNIDADES CON EJE DE DIRECCIÓN DE VELOCIDAD VARIABLE, CONSULTE LAS INSTRUCCIONES PARA LA DESCARGA DEL CONDENSADOR.

EL NO REALIZAR LO ANTERIORMENTE INDICADO, PODRÍA OCASIONAR LA MUERTE O SERIAS LESIONES PERSONALES.

NOTICE

USE COPPER CONDUCTORS ONLY

UNIT TERMINALS ARE NOT DESIGNED TO ACCEPT OTHER TYPES OF CONDUCTORS.

FAILURE TO DO THE ABOVE COULD RESULT IN EQUIPMENT DAMAGE.

AVIS

N'UTILISER QUE DES CONDUCTEURS EN CUIVRE!

LES BORNES DE L'UNITÉ NE SONT PAS CONÇUES POUR RECEVOIR D'AUTRES TYPES DE CONDUCTEURS.

FAIRE DEFAUT À LA PROCÉDURE CI-DESSUS PEUT ENTRAÎNER DES DOMMAGES À L'ÉQUIPEMENT.

AVISO

¡UTILICE ÚNICAMENTE CONDUCTORES DE COBRE!

LAS TERMINALES DE LA UNIDAD NO ESTÁN DISEÑADAS PARA ACEPTAR OTROS TIPOS DE CONDUCTORES.

NO SEGUIR LAS INSTRUCCIONES ANTERIORES PUEDE PROVOCAR DAÑOS EN EL EQUIPO.

DEVICE PREFIX LOCATION CODE	
AREA	LOCATION
1	CONTROL PANEL
2	CONTROL END
3	PIPING END
4	FAN SECTION
5	COIL SECTION
6	CUSTOMER INSTALLED
7	FIELD SUPPLIED DEVICE

NOTES:

1. UNLESS OTHERWISE NOTED. ALL SWITCHES ARE SHOWN AT 25° C (77° F), AT ATMOSPHERIC PRESSURE, AT 50 % RELATIVE HUMIDITY., WITH ALL UTILITIES TURNED OFF, AND AFTER NORMAL SHUTDOWN HAS OCCURED.
2. DASHED LINES INDICATE RECOMMENDED FIELD WIRING BY OTHERS. DASHED LINE ENCLOSURES AND/OR DASHED DEVICE OUTLINES INDICATE COMPONENTS PROVIDED BY THE FIELD. PHANTOM LINE ENCLOSURES INDICATE ALTERNATE CIRCUITRY OR AVAILABLE SALES OPTIONS. SOLID LINES INDICATE WIRING BY TRANE CO.
3. ALL FIELD WIRING MUST BE IN ACCORDANCE WITH THE NATIONAL ELECTRIC CODE (NEC) STATE AND LOCAL REQUIREMENTS.

4 WIRING SHOWN IS FOR UNITS WITH DISCONNECT SWITCH. UNITS WITHOUT DISCONNECT SWITCH OMIT SWITCH AND REPLACE WITH SPLICE.

5 WIRING SHOWN IS FOR UNITS WHEN CONTROL TYPES WITH NO FAULT SENSORS. SEE INSET "B" FOR UNITS WHEN CSTI IS WITH LOW LIMIT SENSORS.

6 1TB1 ONLY PRESENT IF UNIT HAS ELECTRIC HEAT. ADDITIONAL ELECTRIC HEAT WIRING SHOWN ON SHEETS 23114699 THRU 23114714.

7 SPLICE END LOCATED IN JUNCTION BOX.

LEGEND		
DEVICE DESIGNATION	DESCRIPTION	LINE NUMBER
1S1	DISCONNECT SWITCH	14
1TB1	EH TERMINAL BLOCK	20
4B2	MOTOR 2	24
4B1	MOTOR 1	29
1S3	CSTI LOW LIMIT SENSOR	35
1T1	TRANSFORMER	31,37

VOLTAGE SELECTION				
DESCRIPTION	WIRE #1	WIRE #2	WIRE #3	WIRE #4
115V/60HZ/1PH	L1/BLK	N/WHT	1AA/BLK	2AA/WHT
208V/60HZ/1PH	L1/BLK	L2/BLK	1AA/BLK	2AC/BLK
277V/60HZ/1PH	L1/BLK	N/WHT	1AA/BLK	2AA/WHT
230V/60HZ/1PH	L1/BLK	L2/BLK	1AA/BLK	2AC/BLK
220-240/50/1	L1/BLK	N/WHT	1AA/BLK	2AA/WHT

EHRM INFRASTRUCTURE UPGRADES DESIGN
WHITE RIVER JUNCT. VA MED. CENTER – WHITE RIVER JUNCTION VT
PROJECT #: 405-22-700-95 % CD1

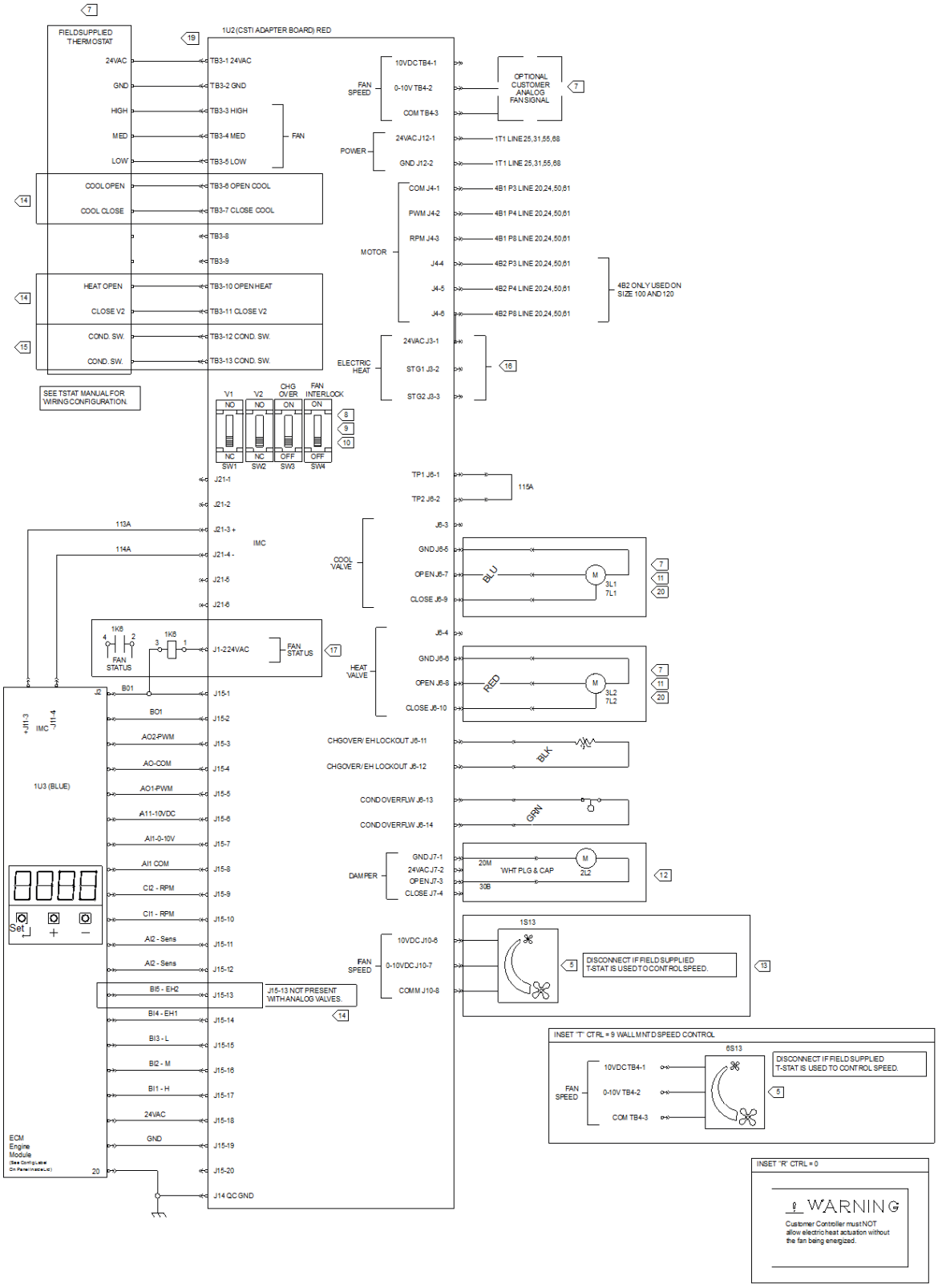

EHRM INFRASTRUCTURE UPGRADES DESIGN
WHITE RIVER JUNCT. VA MED. CENTER – WHITE RIVER JUNCTION VT
PROJECT #: 405-22-700-95 % CD1

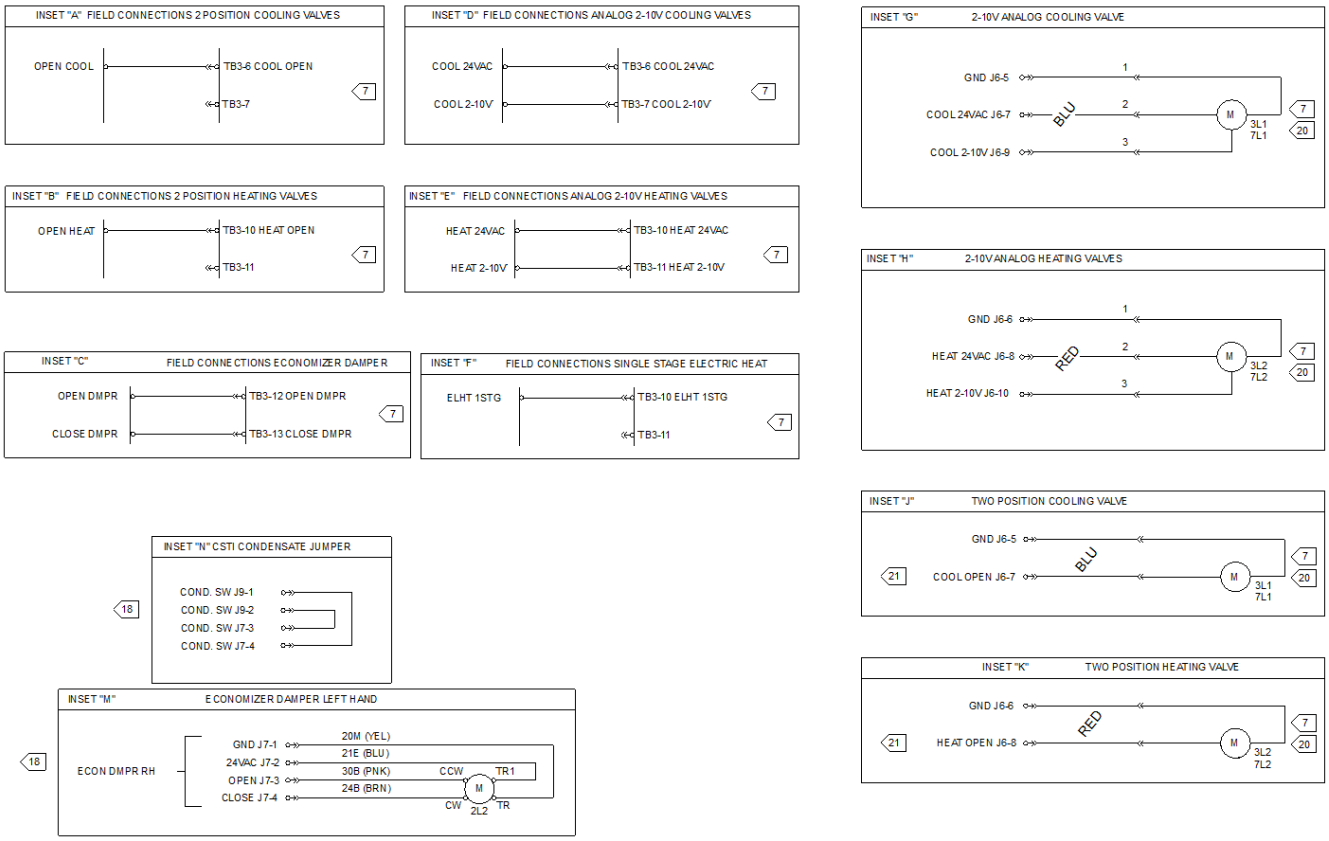

NOTES (SHEET TWO):

1. UNLESS OTHERWISE NOTED. ALL SWITCHES ARE SHOWN AT 25° C (77° F), AT ATMOSPHERIC PRESSURE, AT 50 % RELATIVE HUMIDITY, WITH ALL UTILITIES TURNED OFF, AND AFTER A NORMAL SHUTDOWN HAS OCCURRED.
2. DASHED LINES INDICATE RECOMMENDED FIELD WIRING BY OTHERS. DASHED LINED ENCLOSURES AND/OR DASHED DEVICE OUTLINES INDICATE COMPONENTS PROVIDED BY THE FIELD. PHANTOM LINE ENCLOSURES INDICATE ALTERNATE CIRCUITRY OR AVAILABLE SALES OPTIONS. SOLID LINES INDICATE WIRING BY TRANE.
3. NUMBERS ALONG THE LEFT SIDE OF SCHEMATIC DESIGNATE THE LOCATION OF CONPONENTS BY LINE NUMBER.
4. ALL FIELD WIRING MUST BE IN ACCORDANCE WITH THE NATIONAL ELECTRIC CODE (NEC), STATE AND LOCAL REQUIREMENTS. ALL FIELD WIRING MUST HAVE AN INSULATION VOLTAGE RATING THAT EQUALS OR EXCEEDS UNIT RATED VOLTAGE.
5. VALVE ACTUATOR POWER CONSUMPTION IS 4 WATTS MAXIMUM @24 VAC (DURING VALVE POSITION CHANGE).

7 USE CLASS 2 WIRING.

8 SW1 AND SW2 ARE SHOWN IN THE NC POSITION. SW1 AND OR SW2 ARE IN THE NC POSITION WHEN VALVES ARE NORMALLY CLOSED OR MODULATING. SW1 AND/OR SW2 ARE IN THE NO POSITION WHEN VALVES ARE NORMALLY OPEN. SW1 IS MAIN VALVE (COOLING) AND SW2 IS AUX VALVE (HEATING) FOR FANCOIL AND LOWBOY. SW2 IS MAIN VALVE (HEATING) FOR FF.

9 SW3 IS SHOWN IN THE OFF POSITION. SW3 IS TURNED ON WHEN CHANGE OVER COILS ARE SELECTED.

10 SW4 IS SHOWN IN THE OFF POSITION. SW4 IS TURNED ON WHEN UNIT HAS ELECTRIC HEAT.

11 WIRING SHOWN IS FOR MODULATING VALVES.
SEE INSETS "G" AND "H" FOR 2-10V ANALOG VALVE WIRING. SEE INSETS "J" AND "K" FOR 2 POSITION VALVE WIRING. FIELD SUPPLIED ACTUATOR UTILIZES THE SAME CONNECTION POINTS AS FACTORY WIRING.

12 WIRING SHOWN IS FOR TWO POSITION DAMPER. SEE INSET "M" FOR ECONOMIZER DAMPER WIRING.
SEE INSET "N" FOR CONDENSATE OVERFLOW WIRING.

13 WIRING SHOWN IS FOR UNIT MOUNTED VARIABLE SPEED CONTROL (CTRL =8). SEE INSET "R" FOR UNITS WITH NO SPEED CONTROL (CTRL = 0). SEE INSET "T" FOR WALL MOUNTED VARIABLE SPEED CONTROL WIRING (CTRL = 9).

14 FIELD CONNECTIONS SHOWN ON TB3-6 TB3-7, TB3-10 AND TB3-11 ARE FOR UNITS WITH MODULATING VALVES. SEE INSETS "A" AND "B" FOR TWO POSITION VALVE WIRING. SEE INSETS "D" AND "E" FOR ANALOG VALVES. FIELD SUPPLIED ACTUATOR UTILIZES THE SAME CONNECTION POINTS AS FACTORY WIRING.
SEE INSET "F" FOR SINGLE STAGE ELECTRIC HEAT FIELD WIRING.

15 FIELD CONNECTIONS SHOWN ON TB3-12 AND TB3-13 ARE FOR UNITS WITH CONDENSATE OVERFLOW.
SEE INSET "C" FOR ECONOMIZER DAMPER WIRING.

16 ELECTRIC HEAT WIRING SHOWN ON SHEETS 23114699 THRU 23114714.

17 WIRING SHOWN IS FOR CSTI WITH FAN STATUS (CTYP = N).

18 OPTION NOT AVAILABLE ON LOW VERTICAL (MODL=K,L).

19 24V OUTPUT IS RATED 15VA

20 FIELD SUPPLIED ACTUATOR WIRING UTILIZES THE SAME CONNECTION POINTS AS FACTORY ACTUATOR WIRING.

21 VALVES SHOWN IN NORMALLY CLOSED POSITION, FOR NORMALLY OPEN POSITION, THE VALVE SIGNAL BECOMES CLOSE.

DEVICE PREFIX LOCATION CODE	
AREA	LOCATION
1	CONTROL PANEL
2	CONTROL END
3	PIPING END
4	FAN SECTION
5	COIL SECTION
6	CUSTOMER INSTALLED
7	FIELD SUPPLIED DEVICE

LEGEND		
DEVICE DESIGNATION	DESCRIPTION	LINE NUMBER
1U2	CSTI ADAPTER BOARD	88
1U3	ECM ENGINE BOARD	114
3L1	COOLING/ CHANGEOVER VALVE	87,100,110
7L1	COOLING/ CHANGEOVER VALVE	87,100,110
3L2	HEATING COIL VALVE	94,103,114
7L2	HEATING COIL VALVE	94,103,114
2L2	ECON DAMPER ACTUATOR	119
2L2	DAMPER ACTUATOR	121
1K6	CSTI FAN STATUS RELAY	111,112
3RT1	AUTO CHG TEMP SENSOR	116
3S8	CONDENSATE OVERFLOW	118
1S13	CSTI UNIT MNTD FAN SWITCH	124
6S13	CSTI WALL MNTD FAN SWITCH	124

EHRM INFRASTRUCTURE UPGRADES DESIGN
WHITE RIVER JUNCT. VA MED. CENTER – WHITE RIVER JUNCTION VT
PROJECT #: 405-22-700-95 % CD1

Performance Data
Capacity: Unit capacities are certified under the Industry Room Fan Coil Air Conditioner Certification Program in accordance with AHRI standard 440-97.

Safety: All standard units are UL and CUL approved.

Horizontal Cabinet Basic Construction
The basic unit includes a chassis, coil(s), fan wheel(s), fan casing(s), fan board and motor(s). Units also include a positively sloped (multi-plane), stainless steel main drain pan with closed cell insulation. A thermoplastic auxiliary drain pan is included on fan coils with standard piping packages. The fan board assembly and both drain pans are removable. The fan board assembly includes a quick disconnect motor plug. The chassis is the structural frame constructed of 18 ga. galvanized steel. The unit is acoustically and thermally insulated with closed cell insulation. The bottom panel is fabricated from 16 ga. galvanized steel. All other panels are fabricated from 18 ga. galvanized steel. All panels are made rigid by channel forming. Side panels are removable for piping access. The discharge grille is recessed to resist condensate formation. The hinged access door is flush with the unit.

Bar Grille Outlet
Supply air grilles are supplied on cabinet style units. The grille is constructed of 18 gauge steel construction with black paint finish. Louvers are formed at a 15.00 Deg angle and fixed in one discharge direction.

Unit Finish
All cabinet parts are cleaned, bonderized, phosphatized and painted with one of six decorator colors. Standard finish meets ASTM B117 specifications (salt spray test).

Fan
The galvanized steel fan wheels are centrifugal forward-curved and double-width. Fan wheels and housings are corrosion resistant. Fan housings are constructed of formed sheet metal.

Electronically Commutated Motors (ECM)
All motors are brushless DC (BLDC) electronically commutated motors (ECM) factory programmed and run tested in assembled units. The motor controller is mounted in a control box with a built in integrated user interface and LED tachometer. If adjustments are needed, motor parameters can be adjusted through momentary contact switches accessible without factory service personnel on the motor control board. Motors will soft ramp between speeds to lessen the acoustics due to sudden speed changes. Motors can be operated at three speeds or at variable speed with factory supplied or field supplied controllers. The motor will choose the highest speed if there are simultaneous or conflicting speed requests. All motors have integral overload protection with a maximum ambient operating temperature of 104.0 F and use permanently sealed ball bearings. Motors can operate at plus or minus 10 percent of rated voltage on all speed settings.

Coil
All water coils are burst tested at 450.00 psi (air) and leak tested at 100.00 psi (air under water). Maximum main coil working pressure is 300.00 psi. Maximum entering water temperature is 200.0 F. Tubes and U-bends are 3/8" OD copper. Fins are aluminum and are mechanically bonded to the copper tubes. Coil connections are 5/8" OD copper tubing.

Coil Air Vents - Manual
Manual air vents are rated at 300 psig.

Coil Connections - (RH)
Right hand coil connection with no interconnecting piping is provided.

Installation Note
Unit leveling and drain line pitch: Set unit level by checking the casing. The Trane Company and the industry in general recommends a drain line pitch of 1" (25mm) drop per ten feet.

WARNING: Tighten all unions when piping units. Factory tightens unions, but they may loosen during shipping.

Variable Speed Control

EHRM INFRASTRUCTURE UPGRADES DESIGN
WHITE RIVER JUNCT. VA MED. CENTER – WHITE RIVER JUNCTION VT
PROJECT #: 405-22-700-95 % CD1

The Speed Control incorporates a 0-10VDC signal providing limitless control of the motor RPM between the factory set low and high speeds.

CSTI - Thermostat Interface
The control interface is intended to be used with a field-supplied, low-voltage thermostat or controller. The control box contains a relay board which includes a line voltage to 24-volt transformer; quiet contactors (for electric heat units); and an optional disconnect switch. All end devices are wired to a low voltage terminal block and run tested, so the only a power connection and thermostat connection is needed to commission the unit. Changeover sensors and controls are provided whenever a change over coil is selected. When NO valves are selected, inverting relays are provided for use with standard thermostats.

Disconnect Switch
A unit mounted, non-fused disconnect switch is available as a standard option on all units.

End Pockets
Standard end pockets are provided.

1" MERV 8 Filter
The filter is concealed from sight and easily removable. A 1" MERV 8 filter is provided in the unit. The MERV 8 filters have a rating based on ASHRAE Standard 52.2. The average dust spot efficiency is no less than 35 to 40 percent when tested in accordance with ASHRAE 52.1 atmospheric dust spot method.

EHRM INFRASTRUCTURE UPGRADES DESIGN
WHITE RIVER JUNCT. VA MED. CENTER – WHITE RIVER JUNCTION VT
PROJECT #: 405-22-700-95 % CD1

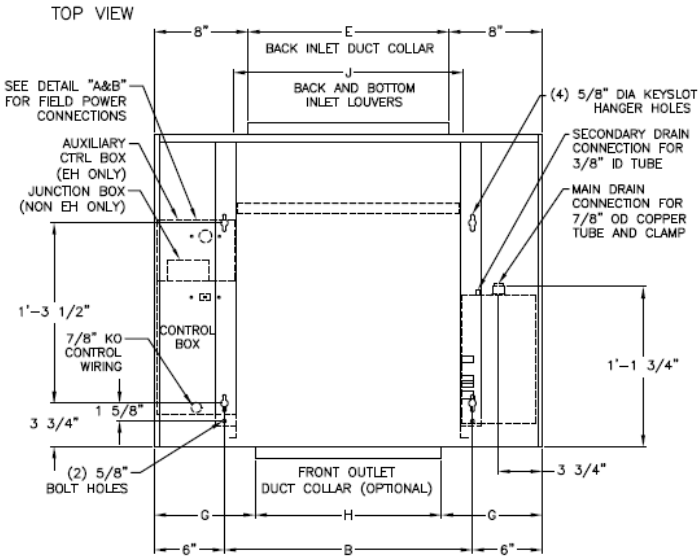

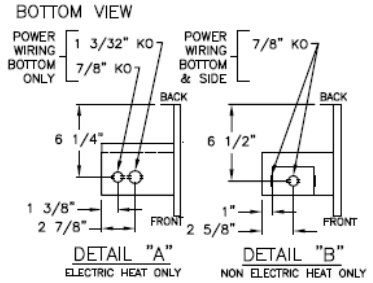

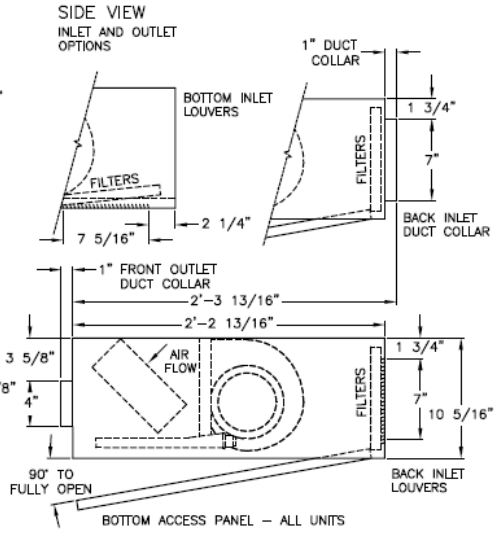

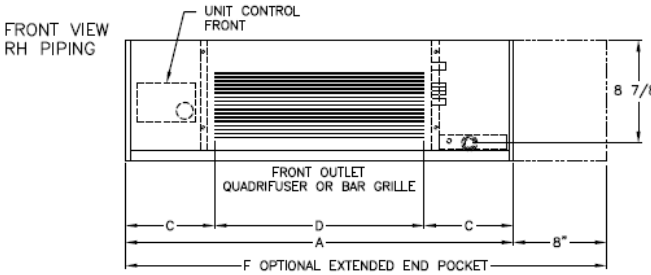

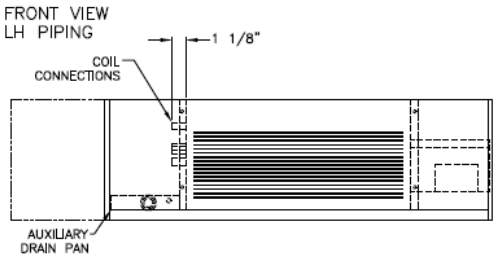

UNIT SIZE	200–300	400	600	800	1000–1200
NO. OF FANS	1	1	2	2	3
NO. OF MOTORS	1	1	1	1	2
A	2'–9 5/16"	3'–2 5/16"	3'–11 3/16"	4'–8 5/16"	6'–3 5/16"
B	1'–9 5/16"	2'–2 5/16"	2'–11 13/16"	3'–8 5/16"	5'–3 5/16"
C	7 5/8"	7 1/8"	8 7/8"	7 1/8"	7 5/8"
D	1'–6"	2'–0"	2'–6"	3'–6"	5'–0"
E	1'–5 1/4"	1'–10 1/4"	2'–7 3/4"	3'–4 1/4"	4'–11 1/4"
F	3'–5 5/16"	3'–10 5/16"	4'–7 3/16"	5'–4 5/16"	6'–11 5/16"
G	8 5/8"	8 1/8"	9 7/8"	8 1/8"	8 5/8"
H	1'–4"	1'–10"	2'–4"	3'–4"	4'–10"
J	1'–7 3/4"	1'–11 3/4"	2'–7 3/4"	3'–3 3/4"	4'–11 3/4"

NOTE:

1. COIL CONNECTIONS ARE ALWAYS ON THE DRAIN PAN SIDE AND OPPOSITE THE CONTROL BOX.
2. COIL CONNECTIONS ARE 5/8" O.D. SWEAT. SEE PAGES XXXXX FOR LOCATIONS.
3. ALL DUCT COLLAR DIMENSIONS ARE TO THE OUTSIDE OF THE COLLAR.
4. SEE PAGES XXXXXX FOR DIMENSIONS FOR OUTSIDE AIR OPENINGS.

EHRM INFRASTRUCTURE UPGRADES DESIGN
WHITE RIVER JUNCT. VA MED. CENTER – WHITE RIVER JUNCTION VT
PROJECT #: 405-22-700-95 % CD1
BOD APPENDIX D- MECHANICAL CUT SHEETS

Table 1. UniTrane® Fan-Coil general data

Unit Size	02	03	04	06	08	10	12
Coil Data							
Face Area—ft² (cm²)	0.8 (743)	0.8 (743)	1.1 (1020)	1.6 (1490)	2.1 (1950)	3.2 (2970)	3.2 (2970)
L x D x H—in. (cm)							
2-Row	15 x 1.7 x 8 (38 x 4 x 20)	15 x 1.7 x 8 (38 x 4 x 20)	20 x 1.7 x 8 (51 x 4 x 20)	29.5 x 1.7 x 8 (75 x 4 x 20)	38 x 1.7 x 8 (97 x 4 x 20)	57 x 1.7 x 8 (145 x 4 x 20)	57 x 1.7 x 8 (145 x 4 x 20)
3-Row	15 x 2.6 x 8 (38 x 7 x 20)	15 x 2.6 x 8 (38 x 7 x 20)	20 x 2.6 x 8 (51 x 7 x 20)	29.5 x 2.6 x 8 (75 x 7 x 20)	38 x 2.6 x 8 (97 x 7 x 20)	57 x 2.6 x 8 (145 x 7 x 20)	57 x 2.6 x 8 (145 x 7 x 20)
4-Row	15 x 3.5 x 8 (38 x 9 x 20)	15 x 3.5 x 8 (38 x 9 x 20)	20 x 3.5 x 8 (51 x 9 x 20)	29.5 x 3.5 x 8 (75 x 9 x 20)	38 x 3.5 x 8 (97 x 9 x 20)	57 x 3.5 x 8 (145 x 9 x 20)	57 x 3.5 x 8 (145 x 9 x 20)
Volume—gal (L)							
1-Row (Heat)	0.06 (0.23)	0.06 (0.23)	0.08 (0.30)	0.11 (0.42)	0.14 (0.53)	0.21 (0.79)	0.21 (0.79)
2-Row	0.12 (0.45)	0.12 (0.45)	0.15 (0.57)	0.22 (0.83)	0.28 (1.06)	0.42 (1.59)	0.42 (1.59)
3-Row	0.18 (0.68)	0.18 (0.68)	0.23 (0.87)	0.33 (1.25)	0.42 (1.59)	0.62 (2.35)	0.62 (2.35)
4-Row	0.24 (0.91)	0.24 (0.91)	0.30 (1.14)	0.44 (1.67)	0.56 (2.12)	0.83 (3.14)	0.83 (3.14)
Fins/ft (cm)							
2-Row	144 (4.7)	144 (4.7)	144 (4.7)	144 (4.7)	144 (4.7)	144 (4.7)	144 (4.7)
3-Row	144 (4.7)	144 (4.7)	144 (4.7)	144 (4.7)	144 (4.7)	144 (4.7)	144 (4.7)
4-Row	144 (4.7)	144 (4.7)	144 (4.7)	144 (4.7)	144 (4.7)	144 (4.7)	144 (4.7)
Reheat Coil Data (1-Row)							
Hot Water or Steam							
Face Area—ft² (cm²)	0.6 (557)	0.6 (557)	0.8 (743)	1.2 (1120)	1.6 (1490)	2.4 (2230)	2.4 (2230)
L x D x H—in. (cm)	15 x 1.5 x 6 (38 x 4 x 15)	15 x 1.5 x 6 (38 x 4 x 15)	20 x 1.5 x 6 (51 x 4 x 15)	29.5 x 1.5 x 6 (75 x 4 x 15)	38 x 1.5 x 6 (97 x 4 x 15)	57 x 1.5 x 6 (145 x 4 x 15)	57 x 1.5 x 6 (145 x 4 x 15)
Volume—gal (L)	0.12 (0.45)	0.12 (0.45)	0.15 (0.57)	0.22 (0.83)	0.28 (1.06)	0.42 (1.59)	0.42 (1.59)
Fins/ft (cm)	48 (1.6)	48 (1.6)	48 (1.6)	48 (1.6)	48 (1.6)	48 (1.6)	48 (1.6)
Fan/Motor Data							
Fan Quantity	1	1	1	2	2	3	3
Size—Dia" x Width" (cm)	6.31 x 4 (16 x 10)	6.31 x 6.5 (16 x 17)	6.31 x 7.5 (16 x 19)	6.31 x 6.5 (16 x 17)	6.31 x 7.5 (16 x 19)	(1) 6.31 x 7.5 (16 x 19)	6.31 x 7.5 (16 x 19)
Size—Dia" x Width" (cm)						(2) 6.31x6.5 (16 x 6.5)	
Motor Quantity	1	1	1	1	1	2	2
Filter Data							
1" (cm) TA and Pl. Media							
Quantity	1	1	1	1	1	1	1
Size—in. (cm)	8-7/8 x 19-1/8 (23 x 49)	8-7/8 x 19-1/8 (23 x 49)	8-7/8 x 24-1/8 (23 x 61)	8-7/8 x 33-5/8 (23 x 85)	8-7/8 x 42-1/8 (23 x 107)	8-7/8 x 61-1/8 (23 x 155)	8-7/8 x 61-1/8 (23 x 155)
1" Fresh Air Filter (only on cabinet styles D, E, and H with bottom return and fresh air opening)							
Quantity	1	1	1	1	1	1	1
Size—in. (cm)	5-1/2 x 19-1/8 (14 x 49)	5-1/2 x 19-1/8 (14 x 49)	5-1/2 x 24-1/8 (14 x 61)	5-1/2 x 33-5/8 (14 x 85)	5-1/2 x 42-1/8 (14 x 107)	5-1/2 x 61-1/8 (14 x 156)	5-1/2 x 61-1/8 (14 x 156)

Fan Speed Switch

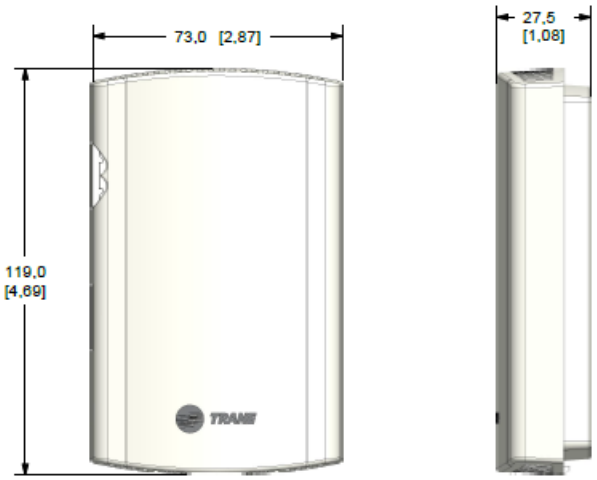

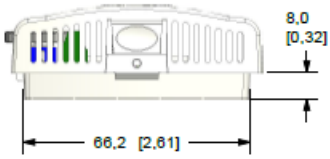

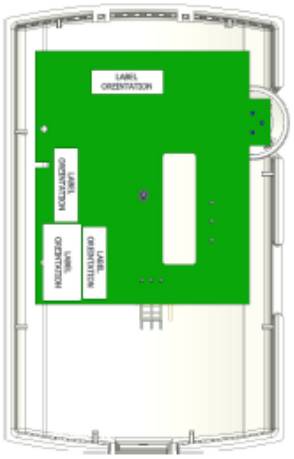

FRONT VIEW
COVER
REMOVED

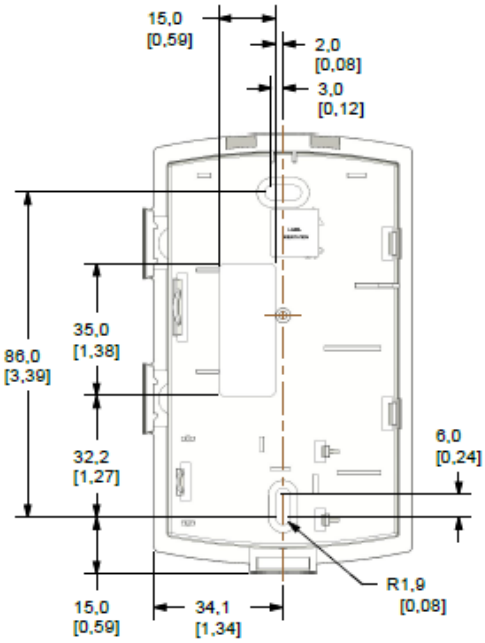

FRONT VIEW
MOUNTING BASE

EHRM INFRASTRUCTURE UPGRADES DESIGN
WHITE RIVER JUNCT. VA MED. CENTER – WHITE RIVER JUNCTION VT
PROJECT #: 405-22-700-95 % CD1
BOD APPENDIX D- MECHANICAL CUT SHEETS

Fan Details

Unit Size	Size 100	**Operating Brake Power**	0.119 hp
Operating Airflow	1200	**Altitude**	381.00 ft
Operating Static Pressure	0.580 in H2O	**Design Temp.**	80.00 F
Operating RPM	1,718 rpm		

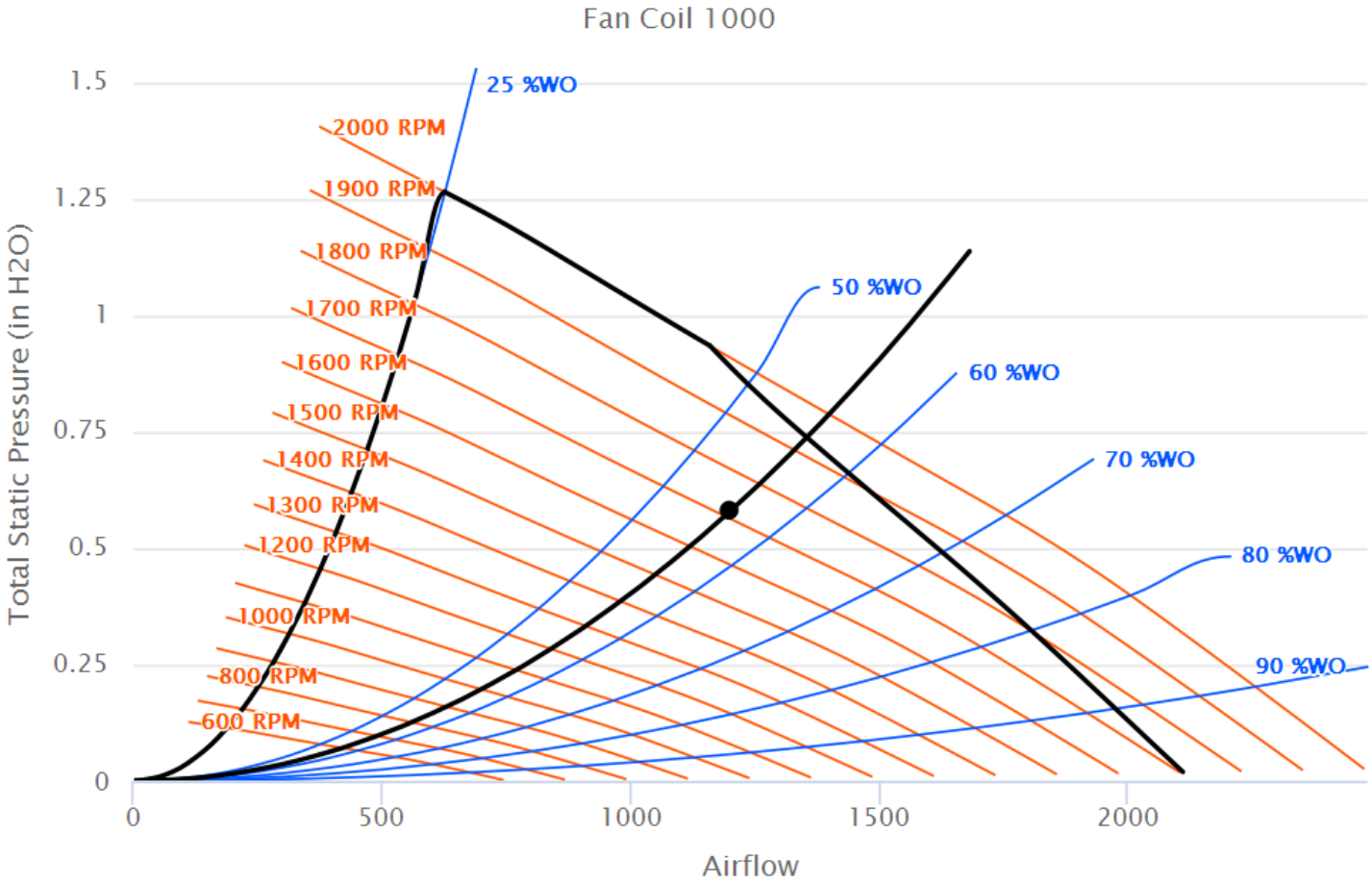

EHRM INFRASTRUCTURE UPGRADES DESIGN
WHITE RIVER JUNCT. VA MED. CENTER – WHITE RIVER JUNCTION VT
PROJECT #: 405-22-700-95 % CD1
BOD APPENDIX D- MECHANICAL CUT SHEETS

FSD60/FSD60LP

Combination Fire and Smoke Damper

1 1/2 Hour UL555 Rated, UL555S Leakage Class 1

RUSKIN
AUTHORITY IN AIR CONTROL

APPLICATION

Ruskin FSD60 Series ultra low leakage combination fire and smoke dampers provide point-of-origin fire and smoke containment. The FSD60 includes high strength one-piece airfoil blades to ensure the lowest resistance to airflow and leakage up to 4000 fpm (20.3 m/s) and 8 in. wg (2 kPa).

Ruskin FSD60LP ultra low leakage, low profile, and low pressure drop combination fire and smoke damper is provided with an integral sleeve/frame design. The FSD60LP has the lowest pressure drop of less than .03 at 1000 FPM (5.1 m/s) of any fire smoke damper.

All FSD60 series dampers may be installed vertically in walls or horizontally in masonry floors and are rated for airflow and leakage in either direction.

STANDARD CONSTRUCTION

Description	FSD60	FSD60LP
Frame	5″ x 16 gauge (127 x 1.6) galvanized, single piece, hat-shaped channel, structurally superior to 13 (2.4) gauge channel frame.	Integral sleeve and frame 20 (1.0) gauge galvanized single piece.
Blades	One-piece airfoil, nominal 6″ (152) wide and 14 (2.0) gauge galvanized steel equivalent strength. Blades are approximately 6″ (152) on center.	Low profile aerodynamic shaped, double skin of 16 (1.6) and 20 (1.0) gauge galvanized steel.
Bearings	Stainless steel sleeve type, pressed into frame.	Stainless steel sleeve type, pressed into frame.
Jamb Seal	Stainless steel, flexible metal compression type.	Stainless steel, flexible metal compression type.
Blade Seal	Silicone edge type for smoke seal to 450°F (232°C) and galvanized steel for flame seal to 1900°F (1038°C) mechanically fastened to the blade edge.	Stainless steel, flexible metal compression type.
Linkage	Concealed in frame.	Not Required

MAXIMUM OPERATIONAL RATINGS

Description	FSD60	FSD60LP
UL555S Leakage Rating	Class I	Class I
UL555 Hourly Rating	1 1/2 Hour	1 1/2 Hour
Maximum Velocity	4000 FPM (20.3 m/s)	2000 FPM (10.2 m/s)
Maximum Pressure	8 in. wg (2 kPa)	4 in. wg (1 kPa)
Temperature	350°F (177°C)	350°F (177°C)

Note:
- Dampers are furnished approximately 1/4″ (6) smaller than given opening dimensions.
- Dimensions shown in parentheses ( ) indicate millimeters.

amca WORLDWIDE CERTIFIED RATINGS — AIR PERFORMANCE — AIR MOVEMENT AND CONTROL ASSOCIATION INTERNATIONAL, INC. www.amca.org

U.S. GREEN BUILDING COUNCIL MEMBER

ISO9001 CERTIFIED

5 YEAR LIMITED WARRANTY

OPTIONS

DTS (Damper Test Switch) test switch for cycle testing.

TS150 for reopenable operation in dynamic smoke management systems.

DSDF/DSDN Duct Smoke Detector (Flow rated or No-Flow). FSD60 only.

SP100 Switch Package to allow remote indication of damper blade position.

MCP control panels for testing or monitoring purposes or smoke management systems.

Factory Sleeves of various lengths and gauges to ensure field compliance with UL installation requirements. FSD60 only.

FAST Angle factory supplied for labor saving angle one-side installation. Other angles of various sizes and gauges also available for one-side or two-side installation.

Models FSD60 and FSD60LP series meets the requirements for combination fire and smoke dampers established by:

- **National Fire Protection Association**
  NFPA Standards 80, 90A, 92A, 92B, 101 and 105
- **ICC International Building Codes**
- **CSFM California State Fire Marshal**
  Listing (#3235-0245:0126)
  Listing (#3235-0245:0129)

UL CLASSIFIED
UL555S Listing R5531

EHRM INFRASTRUCTURE UPGRADES DESIGN
WHITE RIVER JUNCT. VA MED. CENTER – WHITE RIVER JUNCTION VT
PROJECT #: 405-22-700-95 % CD1
BOD APPENDIX D- MECHANICAL CUT SHEETS

ALL STATED SPECIFICATIONS ARE SUBJECT TO CHANGE WITHOUT NOTICE OR OBLIGATION.
© Ruskin July 2020

DAMPER SIZES

Sizes indicated below are for ratings of 2000 FPM (10.2 m/s) and 4 in. w.g. (1 kPa).

	FSD60	FSD60LP
Minimum Size	8"w x 6"h (203 x 152)	6"w x 6"h (152 x 152) (actual size)
Maximum Size	Single Section Vertical – 32"w x 48"h (813 x 1219) Single Section Horizontal – 30"w x 48"h (762 x 1219) Multiple Section Vertical 120"w x 96"h (3048 x 2438) Multiple Section Horizontal Electric Actuator – 120"w x 96"h (3048 x 2438) Pneumatic Actuators – 144"w x 96"h (3658 x 2438)	Single Section Vertical or Horizontal – 36"w x 14"h (914 x 356)
Controlled Closure Device (Heat-Actuated)	**EFL** (Electric Fuse Link) - 165°F (74°C) standard. 212°F (100°C), 250°F (121°C), 350°F (177°C) available. **PFL** (Pneumatic Fuse Link) - 165°F (74°C) standard. 212°F (100°C), 285°F (141°C) available.	

AMCA LICENSED AIR PERFORMANCE DATA

To determine the AMCA Licensed air performance:

Locate the applicable feet per minute face velocity on the bottom of the velocity vs. pressure drop chart below. Move up the chart to the most appropriate size damper line. From the intersection point, move left to determine the pressure drop on the left side of the chart.

For other damper sizes refer to **Air Performance Data For All Fire and Smoke Dampers** spec sheet.

VELOCITY VS. PRESSURE DROP

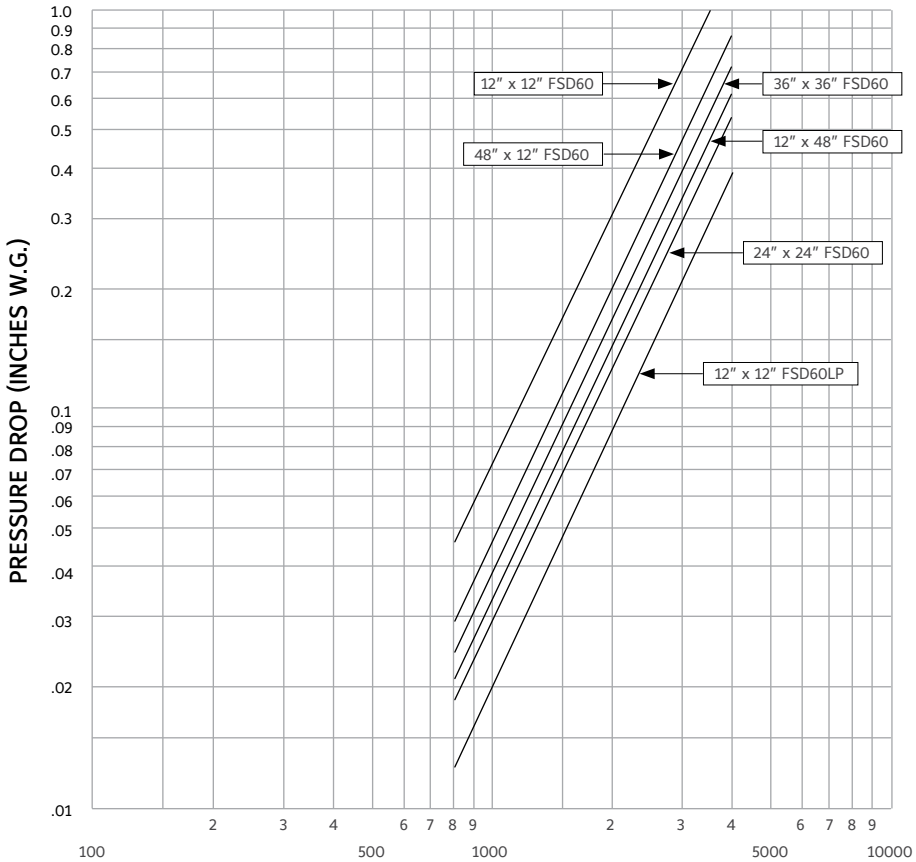

AMCA Fig. 5.3

Ruskin Company certifies that the FSD60 and FSD60LP shown hereon is licensed to bear the AMCA Seal. The ratings shown are based on tests and procedures performed in accordance with AMCA Publication 511 and comply with the requirements of the AMCA Certified Ratings Program. The AMCA Certified Ratings Seal applies to air performance for the FSD60.

EHRM INFRASTRUCTURE UPGRADES DESIGN
WHITE RIVER JUNCT. VA MED. CENTER – WHITE RIVER JUNCTION VT
PROJECT #: 405-22-700-95 % CD1
BOD APPENDIX D- MECHANICAL CUT SHEETS

ALL STATED SPECIFICATIONS ARE SUBJECT TO CHANGE WITHOUT NOTICE OR OBLIGATION.
© Ruskin July 2020

EXTENDED OPERATIONAL RATINGS (FSD60 ONLY)

UL555S Test Standards require all fire and smoke dampers to prove closure and operation against heated air flow. The minimum rantings are 2,000 fpm (10.2 m/s) and 4" w.g. (1 kPa) and minimum of 250°F (121°C).

Safety Factor - UL555S has a built in safety factor of 400 fpm (2.03 m/s) and 0.5" w.g. (0.12 kPa). For example, to achieve a dynamic closure rating of 2,000 fpm and 4 in wg the damper must operate against an actual airflow rate of at least 2,400 fpm (12 m/s) and pressure of at least 4.5" w.g. (1.12 kPa).

All Ruskin fire smoke dampers meet or exceed the minimum UL555S requirements. In addition, Ruskin's FSD60 damper exceeds these minimum requirements in many cases. See the chart below for minimum and extended UL555S listings for the FSD60 dampers.

Model	Size	Static Pressure	Temperature	Installation
		2,000 FPM		
FSD60	120" X 96"	4" w.g.	350°	Vertical
FSD60	144" X 96"	4" w.g.	350°	Horizontal
FSD60LP	36" X14"	4" w.g.	350°	Vertical or Horizontal
		3,000 FPM		
FSD60	64" x 72" 120" x 36" 32" x 96"	4" w.g.	250°	Vertical
FSD60	60" x 72" 120" x 36" 30" x 96"	4" w.g.	250°	Horizontal
FSD60LP	64" x 64" 120" x 32" 32" x 96"	4" w.g.	350°	Vertical
FSD60	60" x 64" 120" x 32" 30" x 96"	4" w.g.	350°	Horizontal
FSD60	120" x 96"	6" w.g.	250°	Vertical
FSD60	144" x 96"	6" w.g.	250°	Horizontal
		4,000 FPM		
FSD60	48" x 48" 96" x 24" 24" x 96"	8" w.g.	250°	Vertical or Horizontal

ACTUATOR REQUIREMENTS

- UL555S requires that all fire smoke dampers have factory mounted actuators in order to bear the UL label.
- Fire smoke dampers larger than single section may require multiple actuators. See "Fire Smoke Damper Multiple Section Detail" spec sheet for details.
- Ruskin's fire smoke dampers are UL555S labeled with either electric or pneumatic actuators mounted internal (in air stream) or external (out of air stream).
- Fire smoke dampers utilizing multiple actuators must have all actuators field wired to a common point for simultaneous closure. All **field** wiring shall be in accordance with applicable codes, ordinances and regulations.

FSD60LP SLEEVE DIMENSIONAL DATA

The drawing shows the standard position of the FSD60LP when installed. The mounting location provides enough space for the actuators, controls (FAST) retaining angles and duct connections. The minimum sleeve length is 20" (508). Consult Ruskin for shorter sleeve lengths.

Note:

1. The entire frame is not required to be installed within the wall or floor. The center line of the closed blade, should be contained within the wall or floor.
2. See basic UL installation instructions for complete installation requirements.

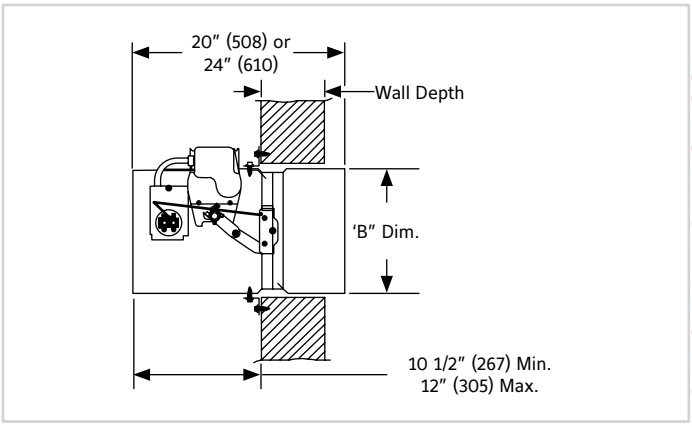

ALL STATED SPECIFICATIONS ARE SUBJECT TO CHANGE WITHOUT NOTICE OR OBLIGATION.
© Ruskin July 2020

EHRM INFRASTRUCTURE UPGRADES DESIGN
WHITE RIVER JUNCT. VA MED. CENTER – WHITE RIVER JUNCTION VT
PROJECT #: 405-22-700-95 % CD1
BOD APPENDIX D- MECHANICAL CUT SHEETS

FSD60 SLEEVE DIMENSIONAL DATA

The 'L' dimension is the distance from the end of the sleeve to the damper. the standard damper location in the sleeve provides enough space for the actuator, controls, mounting angles and duct connection. the standard sleeve length for FSD's is 20" (508) long and the standard 'L' dimension is 10 5/8" (270). The standard 'L' dimension allows the end of the sleeve to be a minimum of 10 5/8" (270) to the wall/floor and up to a maximum of 12 1/2" (318) to the wall/floor.

*The EFL, PFL, SP100 or TS150 location may be located above, below or on the side of the actuator depending upon the dampers height.

Optional 17" (432) long sleeve length available. Due to space limitations for actuators and controls with 17" (432) long sleeves, the damper height ('B' dimension) is restricted to the dimensions shown on the chart below. Consult Ruskin for other sleeve lengths.

7 1/8" (181) 'L' Dim. for Sleeves Shorter than 20" (508) Long				
Without Accessories	With Accessories (TS150, SP100 or DTS)			
Electric or Pneumatic Actuators	Electric Actuators	Pneumatic Actuators		
		331-4827	331-2961	331-3060
Over 10" (250) 'B' Dim.	Over 21" (533) 'B' Dim.	Over 28" (711) 'B' Dim.	Over 32" (813) 'B' Dim.	Over 40" (1016) 'B' Dim.

Note: The 21" (4533) dimension becomes 32" (813) when the MS4120, FSNF, FSAF and GGD series are utilized.

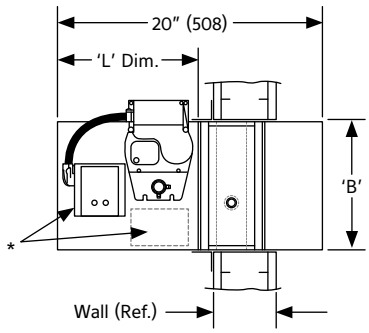

FSD60 SERIES SPACE ENVELOPE

Combination fire smoke dampers are required by the UL listing to have all actuators and accessories factory mounted, wired and/or piped. The Ruskin standard is for the actuator to be located on the right hand side of the damper (onto a factory installed sleeve or side plate) as viewed from the jackshaft face of the unit. Larger units may require multiple actuators which are located on the right, left and maybe internal mount locations. See the "Multiple Section Detail" specification sheet for details. Ruskin's fire smoke dampers are not air flow directional, so the dampers may be rotated 180° or turned over as long as the blades are running horizontally in a position to accommodate installation obstructions.

The adjacent chart indicates an "S" and a "T" dimension for the space envelope that each actuator requires for installation. The "S" dimension is the "side" clearance, the "T" dimension is the "top" clearance required for the various actuators approved for use with Ruskin fire smoke dampers.

Ruskin recommends 6" (152) of additional space beyond the "S" dimension for ease of maintenance.

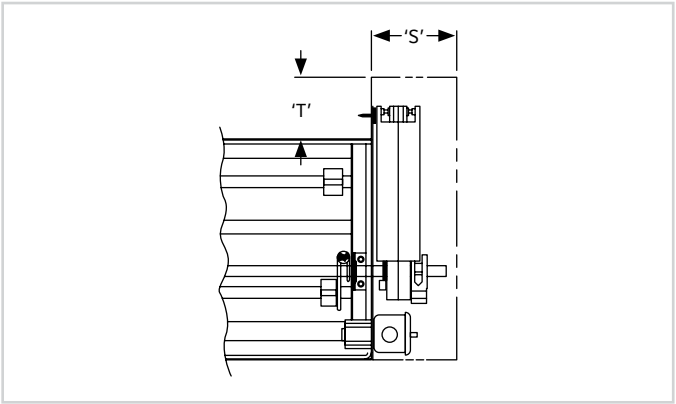

Actuators	S	T
FSLF, FSTF	4" (102)	0" (0)
MS4104, MS4109	4" (102)	6" (152)
FSNF, FSAF, MS4120	5" (127)	5" (127)
331-4827	5" (127)	6" (152)
331-2961	8" (203)	8" (203)
331-3060	9" (229)	11" (279)

Note:

1. The dimensions shown in the chart above are for dampers 14" (356) tall.
2. Dampers shorter than 14" (356) tall, increase the "T" dimension by 1" (25) for every 1" (25) the damper is less than 14" (356).
3. Dampers taller than 14" (356) high reduce the "T" dimension by 1" (25) for every 1" (25) the damper height is greater than 14" (356).

Example

- 12" (305) tall damper with a FSLF actuator, "T" = 2" (52) and "S" = 4" (102).
- 18" (457) tall damper with a FSNF actuator, "T" = 1" (25) and "S" = 5" (127).
- FSAFA and MS4120 Tandem Mount, T stays the same, "S" = 10 1/2".

EHRM INFRASTRUCTURE UPGRADES DESIGN
WHITE RIVER JUNCT. VA MED. CENTER – WHITE RIVER JUNCTION VT
PROJECT #: 405-22-700-95 % CD1
BOD APPENDIX D- MECHANICAL CUT SHEETS

ALL STATED SPECIFICATIONS ARE SUBJECT TO CHANGE WITHOUT NOTICE OR OBLIGATION.
© Ruskin July 2020

FSD60 INTERNAL MOUNT ACTUATOR DIMENSION

Ruskin model FSD60 has been tested for internal mount actuators and accessories. These applications may be preferred where space is limited on the outside of the damper. Internally mounted actuators do not require the damper to have a factory installed sleeve or side plate.

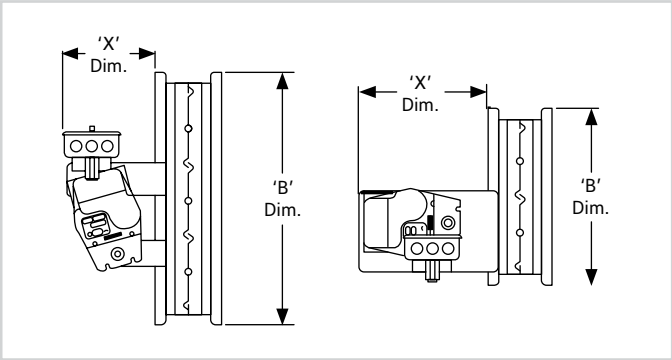

Actuators	B Dim and Above		B Dim and Above	
	B	X	B	X
FSLF, FSTF	10" (254)	10" (254)	18" (457)	7 1/2" (191)
MS4104, MS4109	9" (229)	13 1/2" (343)	18" (457)	7" (178)
FSNF, FSAF, MS4120	12" (305)	12 3/4" (324)	21" (533)	5 1/2" (140)
331-4827	16" (406)	15" (381)	21" (533)	7 1/2" (191)
331-2961	16" (406)	17" (432)	24" (610)	7 1/2" (191)
331-3060	20" (508)	19" (483)	26" (660)	9" (229)

(Model FSD60LP not available with internal mount actuators)

FSD60 LEAKAGE TO ATMOSPHERE / DUCT LEAKAGE TO ATMOSPHERE

When Ruskin's Smoke Dampers are supplied with a factory installed damper sleeve, the sealed sleeve meets the lowest duct leakage requirements set fourth by SMACNA. See Details Below

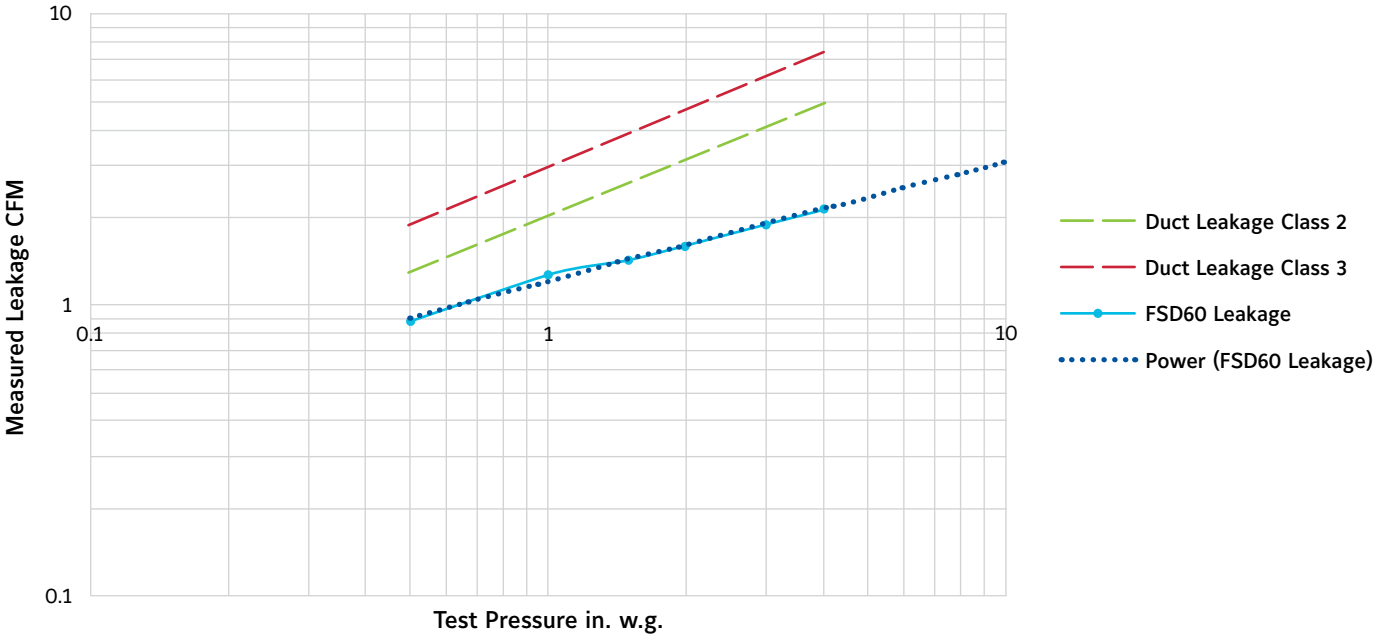

EHRM INFRASTRUCTURE UPGRADES DESIGN
WHITE RIVER JUNCT. VA MED. CENTER – WHITE RIVER JUNCTION VT
PROJECT #: 405-22-700-95 % CD1
BOD APPENDIX D- MECHANICAL CUT SHEETS

ALL STATED SPECIFICATIONS ARE SUBJECT TO CHANGE WITHOUT NOTICE OR OBLIGATION.
© Ruskin July 2020

DIMENSIONAL INFORMATION

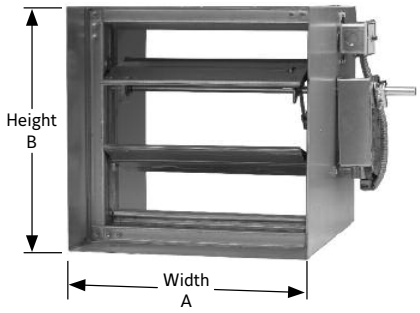

FSD60 Style A

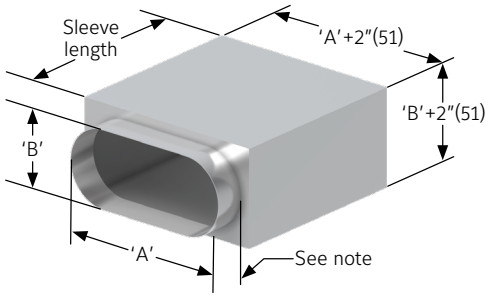

FSD60 Style Lo,Co & Wo & FSD60LP Style Lo & Co

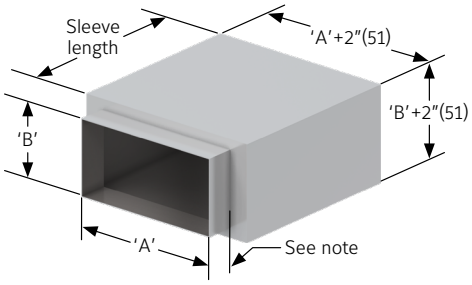

FSD60 Style C and WC & FSD60LP Style C

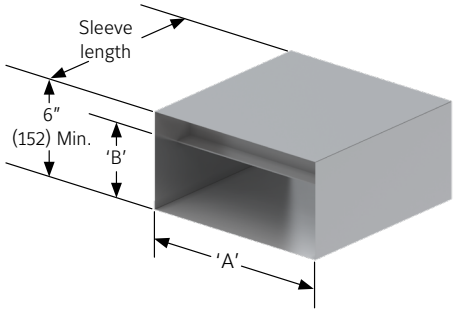

FSD60(LP) Style B

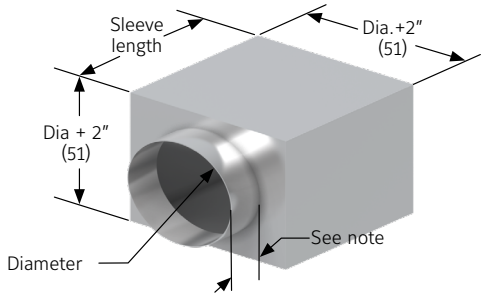

FSD60 Style R, CR and WR & FSD60LP Style R & CR

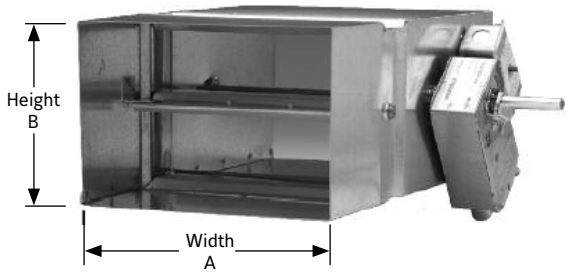

FSD60LP Style A

DUCT TRANSITION CONNECTIONS

FSD60 Series dampers may be supplied with round, oval and rectangular duct connections.

Style	Description
B	Units under 6" (152) tall
R	Round non-sealed (Low pressure)
CR	Round sealed (Medium pressure)
WR	Round welded (High pressure)
C	Rectangular sealed (Low and medium pressure)
WC	Rectangular welded (High pressure)
LO	Oval non-sealed (Low pressure)
CO	Oval sealed (Medium pressure)
WO	Oval welded (High pressure)

The square damper size will be 2" (51) larger in width and height than the round, oval or rectangular duct size ordered.

MINIMUM and MAXIMUM SIZES

Round Transitions
Minimum 4" (102) diameter
Maximum 94" (2388) diameter

Rectangular and Oval Transitions
Minimum 6"w x 4"h (152 x 102)
Maximum 118"w x 94"h (2997 x 2388) in diameter

'B' Style Transitions
Minimum height 4" (102) 'B' style transitions are utilized on units where the damper height is less than 6" (152).

Consult Ruskin for other available styles and sizes.

Note: For low and medium pressure units (Styles R, CR, C and CO) the collar extends 1 1/2" (38) beyond the sleeve length and for high pressure units (Styles WR, WC and WO) the collar extends 2 1/2" (64) beyond the sleeve length.

Approximate damper assembly weight: 17 lbs. per sq. ft. for Style A

ALL STATED SPECIFICATIONS ARE SUBJECT TO CHANGE WITHOUT NOTICE OR OBLIGATION.
© Ruskin July 2020

EHRM INFRASTRUCTURE UPGRADES DESIGN
WHITE RIVER JUNCT. VA MED. CENTER – WHITE RIVER JUNCTION VT
PROJECT #: 405-22-700-95 % CD1
BOD APPENDIX D- MECHANICAL CUT SHEETS

SPECIFICATION

Combination fire smoke dampers meeting or exceeding the following specifications shall be furnished and installed at locations shown on plans or as described in schedules. Combination fire smoke dampers shall be produced in an ISO 9001 certified factory and shall be warranted to be free from defects in material and workmanship for a period of 5 years after date of shipment. Dampers shall meet the requirements of NFPA80, 90A, 92A and 92B and shall have a fire rating of 1 1/2 hours in accordance with the latest edition of UL555 and shall be classified as Leakage Class I Smoke Dampers in accordance with the latest version of UL555S. Dampers shall be AMCA Licensed and the product literature shall bear the AMCA certified rating seal for air performance. AMCA certified testing shall verify pressure drop does not exceed .03" w.g. on a 12" x 12" (305 x 305) damper at a face velocity of 1000 fpm.

Damper frame (when size permits) shall be constructed using the UniFrame Design Concept (UDC) and shall be minimum 16 gauge (1.6) galvanized steel formed into a structural hat channel superior to 13 gauge (2.4) channel frame. Assemblies less than 36" (914) wide x 14" (356) high shall be Low Profile (LP) design to maximize the free area of these smaller dampers. Damper blades shall be single piece airfoil shaped with 14 (2.0) gauge equivalent strength and units less than 36" (914) wide x 14" (356) high low profile aerodynamic shaped, double skin 16 (1.6) and 20 (1.0) gauge galvanized steel. Blade edge seals shall be inflatable silicone mechanically locked into blade edge and units less than 36" (914) wide x 14" (356) high stainless steel, flexible metal compression type. Jamb seals shall be stainless steel compression type. Bearings shall be stainless steel, permanently lubricated sleeve type turning in an extruded hole in the frame for maximum life.

Combination fire smoke dampers and their actuators shall be qualified in accordance with UL555S to an elevated temperature of 250°F (121°C) or 350°F (177°C) depending upon the actuator. Appropriate electric or pneumatic actuators **(specifier select one)** shall be installed by the damper manufacturer at time of damper fabrication. Electric actuators, factory installed on dampers, shall have been tested for prolonged periods of holding (minimum 1 year) with no evidence of reduced spring return performance. Each damper shall be rated for leakage and airflow in either direction through the damper. In addition to the leakage ratings already specified, the dampers shall be AMCA licensed for Air Performance.

Combination fire smoke dampers shall be Ruskin FSD60 and units less than 36" (914) wide x 14" (356) high model FSD60LP.

(Consult www.ruskin.com for electronic version of this "Quick" spec as well as for complete 3-part CSI MasterFormat Specifications)

LINKS TO IMPORTANT DOCUMENTS

Document Title
Limited Warranty Document

RUSKIN®
AUTHORITY IN AIR CONTROL

3900 Doctor Greaves Road
Grandview, MO 64030
Website: www.ruskin.com
Phone: (816) 761-7476

EHRM INFRASTRUCTURE UPGRADES DESIGN
WHITE RIVER JUNCT. VA MED. CENTER – WHITE RIVER JUNCTION VT
PROJECT #: 405-22-700-95 % CD1
BOD APPENDIX D- MECHANICAL CUT SHEETS

ALL STATED SPECIFICATIONS ARE SUBJECT TO CHANGE WITHOUT NOTICE OR OBLIGATION.

© Ruskin July 2020

VERTIV.

LIEBERT® CRV

CABINET DIMENSIONAL DATA
600mm (24in.) MODELS

ACCESS REQUIRED TO SERVICE THE LIEBERT® CRV UNIT WITHIN THE ROW
REAR SERVICE AREA IS S+B OR S+A WHEN B IS NOT AVAILABLE

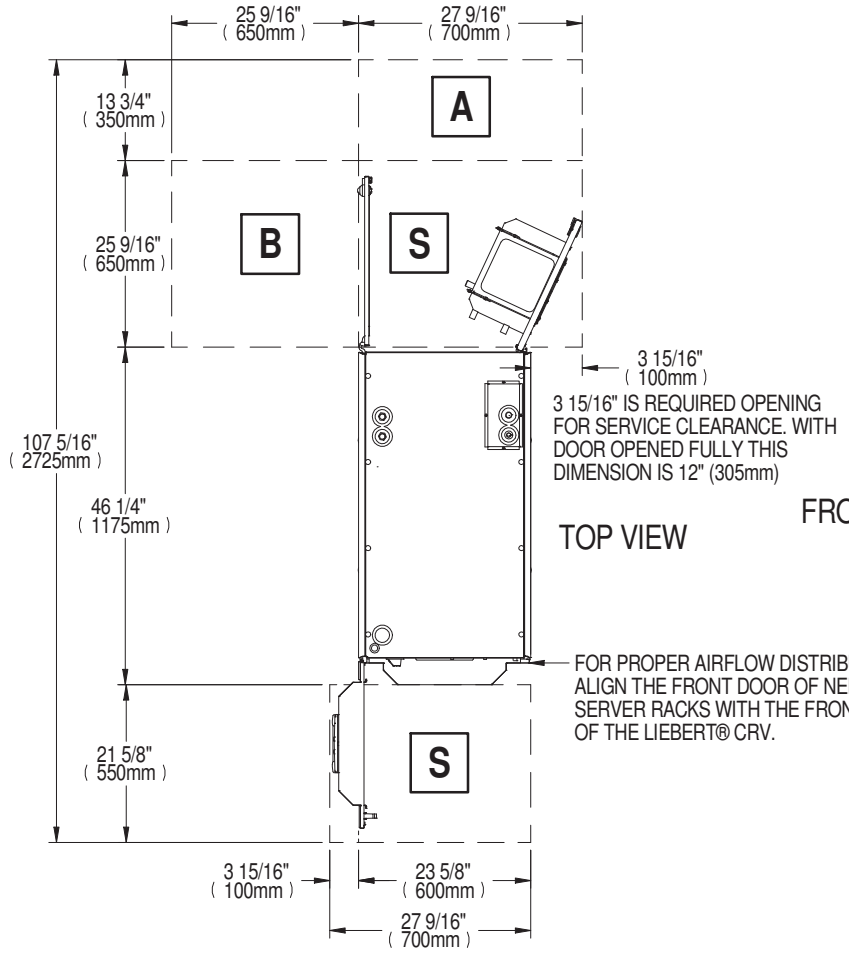

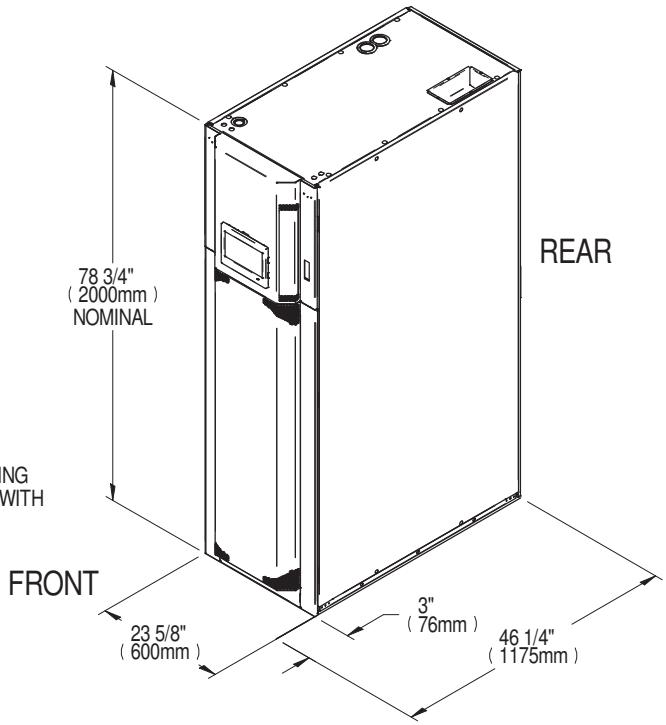

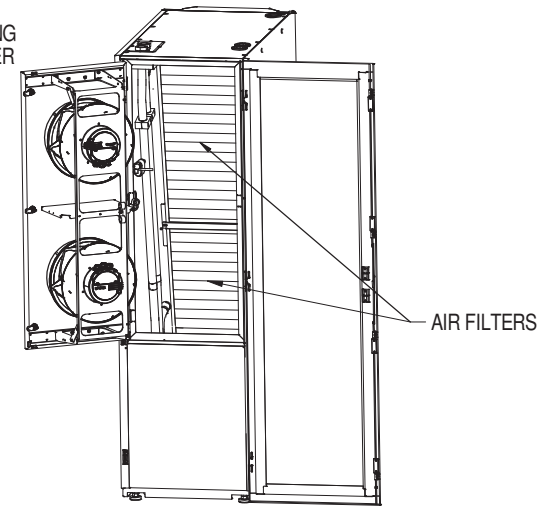

REAR VIEW

ACCESS REQUIRED FOR INSTALLATION OF THE LIEBERT® CRV UNIT WITHIN THE ROW.

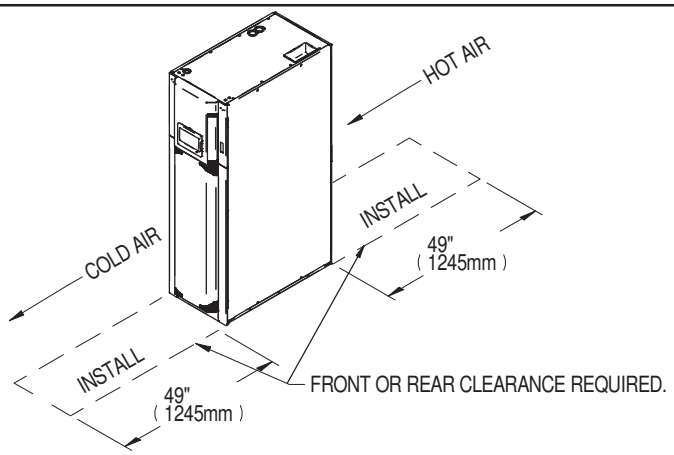

DRY WEIGHT ±5% - Lbs (kg)			
MODEL	AIR COOLED	WATER/GLYCOL	CHILLED WATER
CR020R	739 (335)	772 (350)	N/A
CR035R	805 (365)	849 (385)	
CR040R	N/A	N/A	728 (330)

EHRM INFRASTRUCTURE UPGRADES DESIGN
WHITE RIVER JUNCT. VA MED. CENTER – WHITE RIVER JUNCTION VT
PROJECT #: 405-22-700-95 % CD1
BOD APPENDIX D- MECHANICAL CUT SHEETS

LIEBERT® CRV

CABINET DIMENSIONAL DATA
300mm (12in.) MODELS

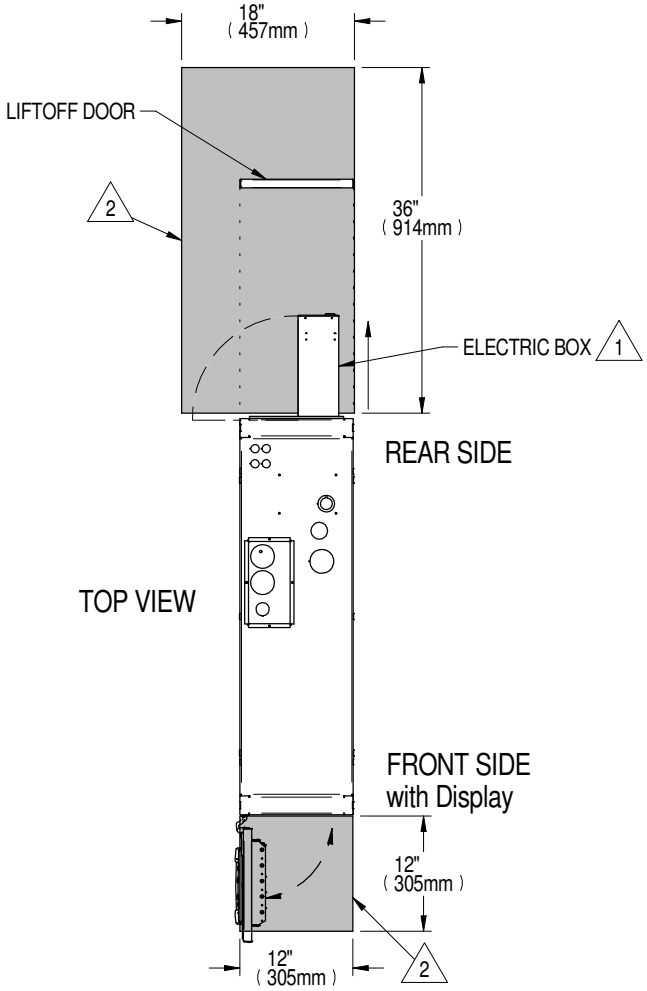

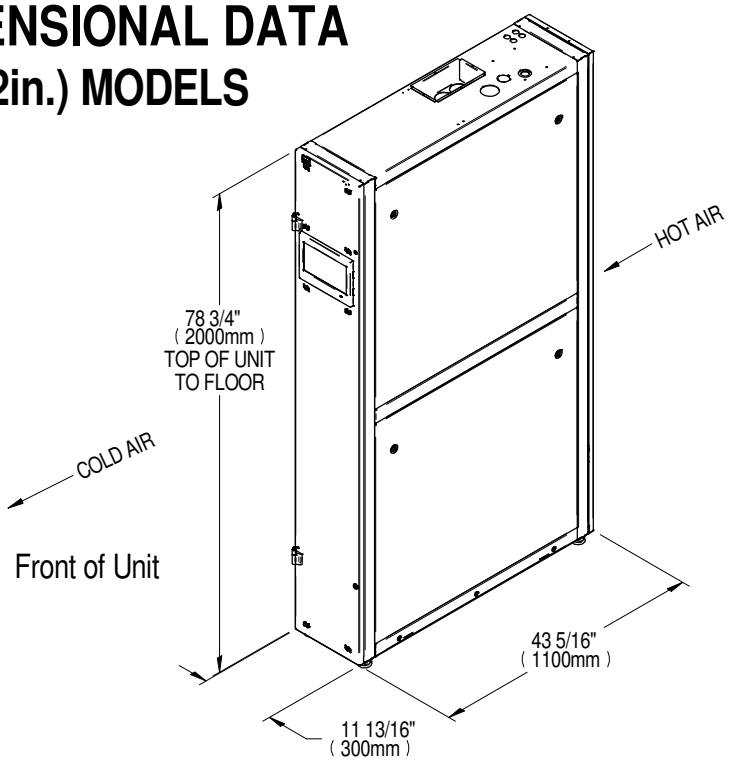

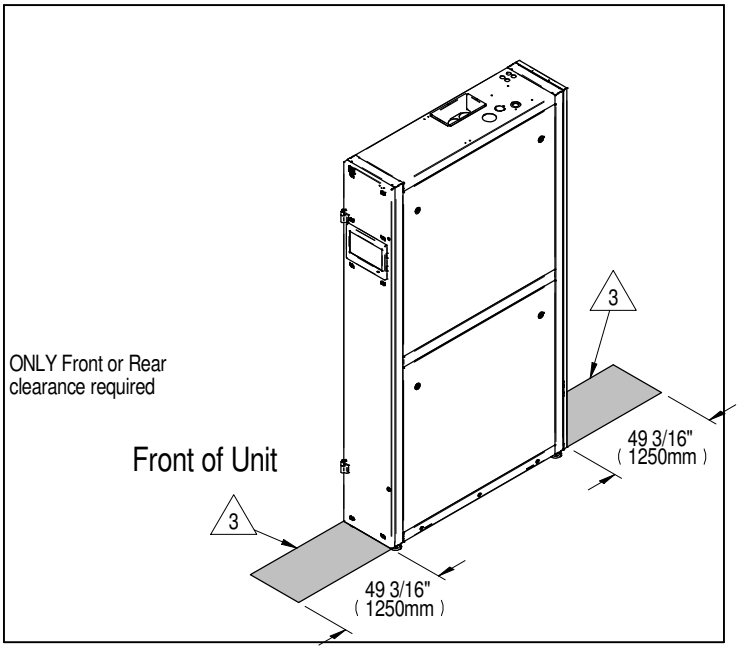

NOTES:

1. ELECTRIC BOX IS IN REAR OF UNIT (SHOWN FULLY EXTENDED). FOR SERVICE ACCESS TO ELECTRIC BOX REMOVE REAR DOOR. SLIDE ELECTRIC BOX REARWARD IN DIRECTION OF ARROW. ELECTRIC BOX DOOR SWINGS OPEN AS SHOWN. REAR EDGE OF UNIT MUST BE FLUSH WITH ADJACENT CABINET WITH REAR DOOR INSTALLED.

2. SHADED AREAS INDICATE ACCESS REQUIRED TO SERVICE THE ELECTRICAL AND MECHANICAL COMPONENTS OF THE UNIT BETWEEN EXISTING RACKS WITHIN THE ROW.

3. SHADED AREAS INDICATE ACCESS REQUIRED TO INSTALL THE UNIT BETWEEN EXISTING RACKS WITHIN THE ROW.

Cooling System	Dry Weight, +/- 5% lbs (kg)
AIR	507 (230)
WTR/GLY	545 (247)
CW	418 (190)

EHRM INFRASTRUCTURE UPGRADES DESIGN
WHITE RIVER JUNCT. VA MED. CENTER – WHITE RIVER JUNCTION VT
PROJECT #: 405-22-700-95 % CD1
BOD APPENDIX D- MECHANICAL CUT SHEETS

LIEBERT® MC

CABINET & ANCHOR DIMENSIONAL DATA

1 FAN (MCS028, MCM040, MCL055)

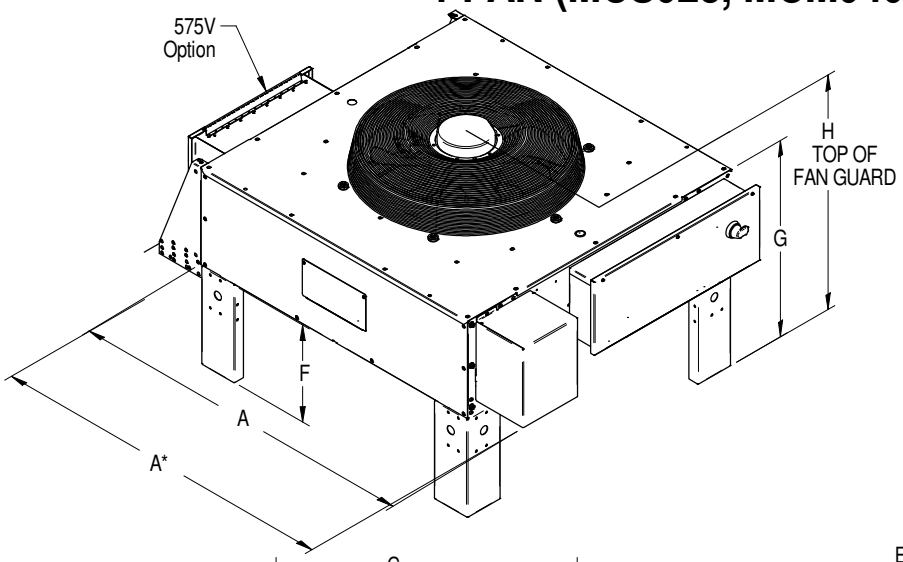

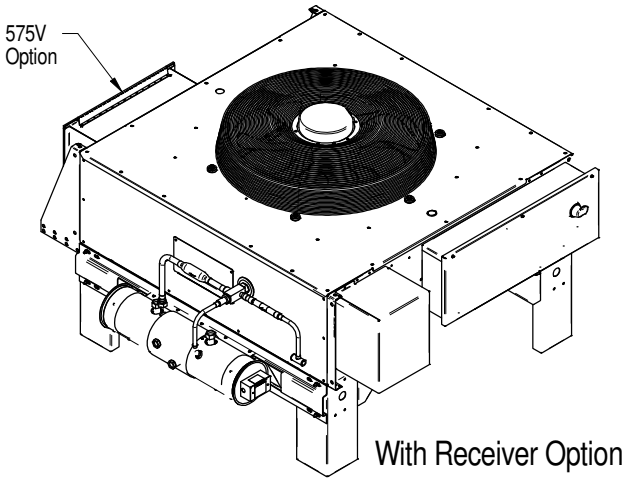

With Receiver Option

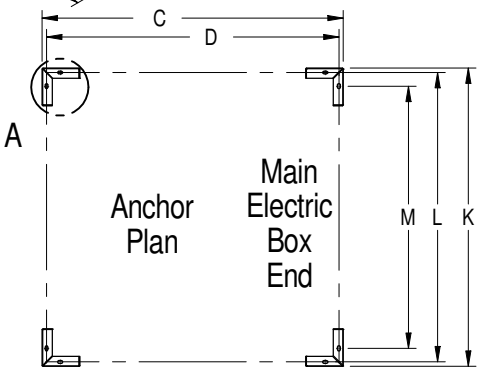

Left Side of Unit

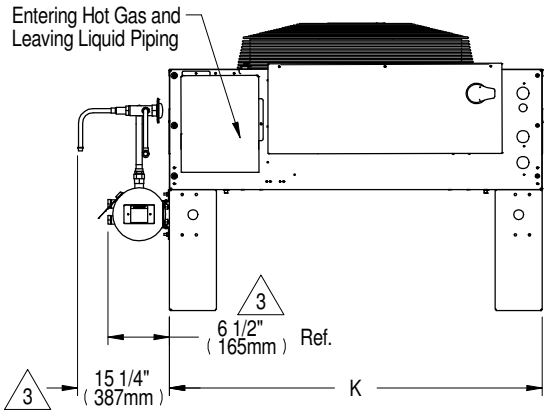

Front View (Liebert® Lee-Temp Shown)

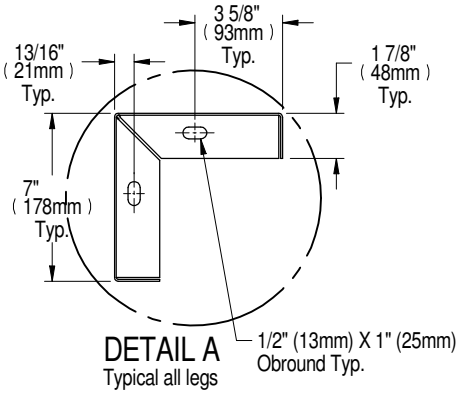

DETAIL A
Typical all legs

MODEL NUMBER	F in. (mm) (LEG HEIGHT DIMENSIONS) 2			
	18 (457)	36 (914)	48 (1219)	60 (1524)
MCS028				
MCM040				
DIM "G"	31-5/8 (803)	49-5/8 (1260)	61-5/8 (1565)	73-5/8 (1870)
DIM "H"	39-5/8 (1006)	57-5/8 (1464)	69-5/8 (1768)	81-5/8 (2073)
MCL055				
DIM "G"	35-7/8 (911)	53-7/8 (1368)	65-7/8 (1673)	77-7/8 (1978)
DIM "H"	43-5/8 (1108)	61-5/8 (1565)	73-5/8 (1870)	85-5/8 (2175)

Note:
1. Vertiv recommends a clearance of 36" (915mm) on each side for proper operation and component access.
2. Cross Bracing required for legs longer than 18" (457.2mm). Quantity varies per model & options selected.
3. For Liebert® PDX w/EEV systems & unheated refrigerant receivers, 6-1/2" (165mm) is 9-1/4" (235mm) and 15-1/4" (387) is not applicable.

MODEL NUMBER	A in (mm)	A* in (mm) (575V ONLY)	C in (mm)	D in (mm)	K in (mm)	L in (mm)	M in (mm)
MCS028	50-5/8 (1287)	58-7/8 (1495)	44-1/8 (1120)	42-1/2 (1080)	42-1/2 (1080)	40-7/8 (1038)	35-7/8 (910)
MCM040	57-3/16 (1453)	65-3/8 (1661)	48 (1219)	46-5/16 (1177)	46 (1168)	44-3/8 (1127)	39-5/16 (999)
MCL055	68 (1727)	77 (1956)	56 (1422)	54-3/8 (1381)	55-1/2 (1410)	53-7/8 (1368)	48-3/4 (1238)

EHRM INFRASTRUCTURE UPGRADES DESIGN
WHITE RIVER JUNCT. VA MED. CENTER – WHITE RIVER JUNCTION VT
PROJECT #: 405-22-700-95 % CD1
BOD APPENDIX D- MECHANICAL CUT SHEETS
Form No.: DPN001040_REV4

Table 6.6 Condenser and Options Net Weights—Medium Condensers

Condenser Model		MCM040	MCM080
Refrigeration Circuits		1	1
Condenser Dry Weight, lb (kg)	18" Leg	231 (105)	441 (200)
	36" Leg	363 (165)	590 (268)
	48" Leg	395 (179)	622 (282)
	60" Leg	426 (193)	653 (296)
Additional Weight for Options, lb (kg)			
Liebert® Lee-Temp Receiver		55 (25)	100 (45)
575V Transformer		60 (27)	70 (32)
Coated Coil		5 (2)	10 (5)
Seismic/Wind Bracing, 18-in. legs		40 (18)	40 (18)
Condenser + Liebert Lee-Temp or+ Coated Coil + 575V Transformer + Seismic/Wind Bracing = Total Weight			
Source: DPN003034, Rev. 6			

Table 6.7 Condenser and Options Net Weights—Large Condensers

Condenser Model		MCL055	MCL110
Refrigeration Circuits		1	1
Condenser Dry Weight, lb (kg)	18" Leg	344 (156)	602 (273)
	36" Leg	486 (220)	766 (347)
	48" Leg	518 (235)	798 (362)
	60" Leg	549 (249)	829 (376)
Additional Weight for Options, lb (kg)			
Liebert® Lee-Temp Receiver		60 (27)	115 (52)
575V Transformer		67 (30)	77 (35)
Coated Coil		8 (4)	16 (7)
Seismic/Wind Bracing, 18-in. legs		40 (18)	40 (18)
Condenser + Liebert Lee-Temp or+ Coated Coil + 575 V Transformer + Seismic/Wind Bracing = Total Weight			
Source: DPN003034, Rev. 6			

EHRM INFRASTRUCTURE UPGRADES DESIGN
WHITE RIVER JUNCT. VA MED. CENTER – WHITE RIVER JUNCTION VT
PROJECT #: 405-22-700-95 % CD1
BOD APPENDIX D- MECHANICAL CUT SHEETS

3 Electrical Power Requirements

NOTICE

Risk of exceeding line-to-ground limit. Can cause equipment damage.

The electrically commutated (EC) motors included in 480-V CR035 and CR040 units are suitable for connection to power supplies with 300 V or less line to ground potential. Excess line-to-ground voltage can cause capacitor failure internal to the motors.

Power supplies such as 480-V wye with solidly grounded neutral have 277 V line to ground and are acceptable.

Power supplies such as 480-V wye with high resistance (or impedance) ground, 480-V delta without ground or with floating ground, 480-V delta with corner ground or 480-V delta with grounded center tap will exceed the 300 V line-to-ground limit.

3.1 Air Cooled Systems Electrical Data

Table 3.1 Electrical Data—Air Cooled, 600 mm (24 in.) with Condensate Pump

Voltage	CR020RA		CR035RA	
	208/3/60	460/3/60	208/3/60	460/3/60
Reheat, with or without Humidifier				
FLA	50.8	24.2	62.0	32.2
WSA	61.4	29.2	75.4	39.1
OPD	80	35	100	50
No Reheat, with Humidifier				
FLA	42.6	20.4	53.8	28.4
WSA	49.1	23.5	63.1	33.4
OPD	70	35	100	50
No Reheat, No Humidifier				
FLA	34.2	16.7	45.4	24.7
WSA	40.7	19.8	54.7	29.7
OPD	60	30	90	45

FLA = Full Load Amps; WSA = Wire Size Amps; OPD = Maximum Overcurrent Protection Device

Table 3.2 Electrical Data—Air Cooled CR019, 300 mm (12 in.) with Condensate Pump

Voltage	208-230 V/3Ph/60 Hz	460 V/3Ph/60 Hz (Wye Connected)
No Reheat, No Humidifier		
FLA	33.4	16.8
WSA	39.9	20
OPD	60	30

FLA = Full Load Amps; WSA = Wire Size Amps; OPD = Maximum Overcurrent Protection Device

EHRM INFRASTRUCTURE UPGRADES DESIGN
WHITE RIVER JUNCT. VA MED. CENTER – WHITE RIVER JUNCTION VT
PROJECT #: 405-22-700-95 % CD1
BOD APPENDIX D- MECHANICAL CUT SHEETS

6.2 Electrical Power Requirements

Table 6.3 below lists the power requirements by model number. Table 6.4 on the facing page lists the additional electrical requirements if your system includes a Liebert® Lee-Temp Receiver.

Table 6.3 Electrical Data, Three-Phase, 60 Hz Condenser, Premium EC Fan Control

Model	Voltage	FLA	WSA	OPD
Small Platform				
MCS028	208/230V	3.0	3.8	15
	380V	1.4	1.8	15
	460V	1.4	1.8	15
	575V	1.2	1.5	15
Medium Platform				
MCM040	208/230V	2.3	2.9	15
	380V	1.4	1.8	15
	460V	1.4	1.8	15
	575V	1.2	1.5	15
MCM080	208/230V	4.6	5.2	15
	380V	2.8	3.2	15
	460V	2.8	3.2	15
	575V	2.4	2.7	15
Large Platform				
MCL055	208/230V	5.7	7.1	15
	380V	2.8	3.5	15
	460V	2.8	3.5	15
	575V	2.3	2.9	15
MCL110	208/230V	11.4	12.8	15
	380V	5.6	6.3	15
	460V	5.6	6.3	15
	575V	4.7	5.3	15

1. FLA = Full Load Amps; WSA = Wire Size Amps; OPD = Maximum Overcurrent Protection Device.

Source: DPN005027 Rev. 0

EHRM INFRASTRUCTURE UPGRADES DESIGN
WHITE RIVER JUNCT. VA MED. CENTER – WHITE RIVER JUNCTION VT
PROJECT #: 405-22-700-95 % CD1
BOD APPENDIX D- MECHANICAL CUT SHEETS

VERTIV. Liebert Rating System (LRS) 3.6.0.10w 4.4.3.18e

Project Name:	**WRJ**	Office Name:	**Vertiv, Seattle Office**
Customer Name:	**Spees DB**	Phone Number:	**+1 206 763 5000**
Sales Rep. Name:	**ADAM LENSEGRAV**		

CRV Model CR019RA~MCM040E1; Air Cooled

Manufacturer:	**Liebert North America**	Altitude:	**0 ft**
Unit Power Supply:	**460/3/60**	ESP:	**0.0 InH2O**
Refrigerant:	**R410A**	Width:	**12 in**
Internal Filter Class:	**Merv 1 Std. - 1/2 inch (12.7mm)**	Depth:	**43.3 in**
Spec.sheet output date:	**05-Jun-25**	Height:	**79 in**
Return Airflow (std. motor):	**2400 ACFM**	Weight:	**507 lb**

Condenser(s)		Compressor(s)		Evaporator(s)	
Manufacturer:	**Liebert North America**	Manufacturer:	**Copeland**	Manufacturer:	**Liebert North America**
Model:	**MCM040E1**	Model:	**ZPD72KCE-60Hz**	Model:	**RTCR019Evapx1**
Condenser Type:	**MCH Condenser**	Compressor Type:	**Digital**	Fin Type:	**Corrugated**
Design Ambient:	**105 °F**	Power Supply:	**460/3/60**	Number of Rows:	**3**
Power Option:	**460/3/60**			Fin Density:	**13 fpi**
				Face Area:	**6.46 ft²**
				Surface Area:	**389 ft²**

Miscellaneous		Cooling Fan(s)	
Humidifier Type:	**No Humidifier**	Model:	**R3G225**
Bypass airflow:	**0 %**	Description:	**CR - DX Cooling**
		Air Supply:	**Front**
		Power Supply:	**460/3/60**
		Quantity of Motors:	**5**

System: [Digital Loading: 100%, SC: 10 °F, SH: 10 °F] [ESP:0]

Ent DB (°F)	Ent WB (°F)	Ent RH (%)	Ent DP (°F)	Return Air Vol (ACFM)	Supply Air Vol (ACFM)	Air Face Vel (ft/min)	Unit Air Vol (SCFM)	Amb DB (°F)	NTCC (kBtu/hr)	NSCC (kBtu/hr)	THR (kBtu/hr)	Cond. Airflow (ACFM)	Lvg DB (°F)	Lvg WB (°F)	Tot Comp Pwr (kW)	Sys Power Input (kW)	Sys SCOP (W/W)	Sys NSenCOP (W/W)	Fan kW (kW)	Airflow Calibration (V)
98	72	28.2	59.6	2400	2273	373	2238	89.2	76.4	71.8	97.7	5955	68.9	62.2	5.73	7.16	2.94	2.94	0.72	0

System

Compressor Power (kW)	Sat. Discharge Temp. (°F)	Sat. Suction Temp. (°F)
5.73	107.8	44.8

System: [Digital Loading: 90%, SC: 10 °F, SH: 10 °F] [ESP:0]

Ent DB (°F)	Ent WB (°F)	Ent RH (%)	Ent DP (°F)	Return Air Vol (ACFM)	Supply Air Vol (ACFM)	Air Face Vel (ft/min)	Unit Air Vol (SCFM)	Amb DB (°F)	NTCC (kBtu/hr)	NSCC (kBtu/hr)	THR (kBtu/hr)	Cond. Airflow (ACFM)	Lvg DB (°F)	Lvg WB (°F)	Tot Comp Pwr (kW)	Sys Power Input (kW)	Sys SCOP (W/W)	Sys NSenCOP (W/W)	Fan kW (kW)	Airflow Calibration (V)
98	72	28.2	59.6	2400	2279	373	2238	89.2	70.5	69.0	89.5	5955	70	63.1	5.08	6.51	3.11	3.11	0.72	0

System

Compressor Power (kW)	Sat. Discharge Temp. (°F)	Sat. Suction Temp. (°F)
5.08	106.3	47.9

System: [Digital Loading: 80%, SC: 10 °F, SH: 10 °F] [ESP:0]

Ent DB (°F)	Ent WB (°F)	Ent RH (%)	Ent DP (°F)	Return Air Vol (ACFM)	Supply Air Vol (ACFM)	Air Face Vel (ft/min)	Unit Air Vol (SCFM)	Amb DB (°F)	NTCC (kBtu/hr)	NSCC (kBtu/hr)	THR (kBtu/hr)	Cond. Airflow (ACFM)	Lvg DB (°F)	Lvg WB (°F)	Tot Comp Pwr (kW)	Sys Power Input (kW)	Sys SCOP (W/W)	Sys NSenCOP (W/W)	Fan kW (kW)	Airflow Calibration (V)

EHRM INFRASTRUCTURE UPGRADES DESIGN
WHITE RIVER JUNCT. VA MED. CENTER – WHITE RIVER JUNCTION VT
PROJECT #: 405-22-700-95 % CD1
BOD APPENDIX D- MECHANICAL CUT SHEETS

98	72	28.2	59.6	2400	2287	373	2238	89.2	64.9	64.9	81.9	5955	71.7	63.8	4.48	5.90	3.22	3.22	0.72	0

System

Compressor Power (kW)	Sat. Discharge Temp. (°F)	Sat. Suction Temp. (°F)
4.48	105	51.5

System: [Digital Loading: 70%, SC: 10 °F, SH: 10 °F] [ESP:0]

Ent DB (°F)	Ent WB (°F)	Ent RH (%)	Ent DP (°F)	Return Air Vol (ACFM)	Supply Air Vol (ACFM)	Air Face Vel (ft/min)	Unit Air Vol (SCFM)	Amb DB (°F)	NTCC (kBtu/hr)	NSCC (kBtu/hr)	THR (kBtu/hr)	Cond. Airflow (ACFM)	Lvg DB (°F)	Lvg WB (°F)	Tot Comp Pwr (kW)	Sys Power Input (kW)	Sys SCOP (W/W)	Sys NSenCOP (W/W)	Fan kW (kW)	Airflow Calibration (V)
98	72	28.2	59.6	2400	2297	373	2238	89.2	59.1	59.1	74.3	5955	74	64.6	3.93	5.35	3.24	3.24	0.72	0

System

Compressor Power (kW)	Sat. Discharge Temp. (°F)	Sat. Suction Temp. (°F)
3.93	103.9	55.4

System: [Digital Loading: 60%, SC: 10 °F, SH: 10 °F] [ESP:0]

Ent DB (°F)	Ent WB (°F)	Ent RH (%)	Ent DP (°F)	Return Air Vol (ACFM)	Supply Air Vol (ACFM)	Air Face Vel (ft/min)	Unit Air Vol (SCFM)	Amb DB (°F)	NTCC (kBtu/hr)	NSCC (kBtu/hr)	THR (kBtu/hr)	Cond. Airflow (ACFM)	Lvg DB (°F)	Lvg WB (°F)	Tot Comp Pwr (kW)	Sys Power Input (kW)	Sys SCOP (W/W)	Sys NSenCOP (W/W)	Fan kW (kW)	Airflow Calibration (V)
98	62.5	10.4	33.2	2400	2307	372	2262	89.2	53.1	53.1	66.6	5955	76.4	54.4	3.40	4.83	3.23	3.23	0.72	0

System

Compressor Power (kW)	Sat. Discharge Temp. (°F)	Sat. Suction Temp. (°F)
3.4	102.6	59.3

System: [Digital Loading: 50%, SC: 10 °F, SH: 10 °F] [ESP:0]

Ent DB (°F)	Ent WB (°F)	Ent RH (%)	Ent DP (°F)	Return Air Vol (ACFM)	Supply Air Vol (ACFM)	Air Face Vel (ft/min)	Unit Air Vol (SCFM)	Amb DB (°F)	NTCC (kBtu/hr)	NSCC (kBtu/hr)	THR (kBtu/hr)	Cond. Airflow (ACFM)	Lvg DB (°F)	Lvg WB (°F)	Tot Comp Pwr (kW)	Sys Power Input (kW)	Sys SCOP (W/W)	Sys NSenCOP (W/W)	Fan kW (kW)	Airflow Calibration (V)
98	62.5	10.4	33.2	2400	2318	372	2262	89.2	46.6	46.6	58.5	5955	79.1	55.4	2.91	4.34	3.15	3.15	0.72	0

System

Compressor Power (kW)	Sat. Discharge Temp. (°F)	Sat. Suction Temp. (°F)
2.91	101.3	63.5

Notes

1. Capacities shown have been reduced by fan motor(s) heat (net).
2. System Power Input includes Compressor(s), Blower Motor(s), Condenser(s), and Control Power.
3. Coil airflow has not been reduced by a bypass.
4. Capacity Tolerance is 5%.
5. ACFM/ACMH is the unit actual air flow rate when measured at the specific return or supply temperature and barometric conditions that define a unique air density.
6. SCFM/SCMH is the unit air flow rate when converted to standard air density of 0.075 lb/ft3 at sea level.
7. NTCC, Net Total Cooling Capacity
8. NSCC, Net Sensible Cooling Capacity

AHRI CERTIFIED®
www.ahridirectory.org
Datacom Cooling
AHRI Standard 1360

Certified in accordance with the AHRI Datacom Cooling Certification Program at AHRI Standard 1360 (I-P) Standard Rating Conditions. Certified units may be found in the AHRI Directory at www.ahridirectory.org.

© 2025 Liebert Corporation. All Rights Reserved

EHRM INFRASTRUCTURE UPGRADES DESIGN
WHITE RIVER JUNCT. VA MED. CENTER – WHITE RIVER JUNCTION VT
PROJECT #: 405-22-700-95 % CD1
BOD APPENDIX D- MECHANICAL CUT SHEETS

VERTIV. Liebert Rating System (LRS) 3.6.0.10w 4.4.3.18e

Project Name:	**WRJ**	Office Name:	**Vertiv, Seattle Office**
Customer Name:	**Spees DB**	Phone Number:	**+1 206 763 5000**
Sales Rep. Name:	**ADAM LENSEGRAV**		

CRV Model CR020RA~MCM040E1; Air Cooled

Manufacturer:	**Liebert North America**	Altitude:	**0 ft**
Unit Power Supply:	**460/3/60**	ESP:	**0.0 InH2O**
Refrigerant:	**R410A**	Width:	**23.6 in**
Internal Filter Class:	**Merv 8 Std. - 4 inch (102 mm)**	Depth:	**46.25 in**
Spec.sheet output date:	**05-Jun-25**	Height:	**78.74 in**
Return Airflow (std. motor):	**2510 ACFM**	Weight:	**739 lb**

Condenser(s)		Compressor(s)		Evaporator(s)	
Manufacturer:	**Liebert North America**	Manufacturer:	**Copeland**	Manufacturer:	**Liebert North America**
Model:	**MCM040E1**	Model:	**ZPD72KCE-60Hz**	Model:	**RTCR020Evapx1**
Condenser Type:	**MCH Condenser**	Compressor Type:	**Digital**	Fin Type:	**Corrugated**
Design Ambient:	**105 °F**	Power Supply:	**460/3/60**	Number of Rows:	**4**
Power Option:	**460/3/60**			Fin Density:	**12 fpi**
				Face Area:	**7.12 ft²**
				Surface Area:	**569.69 ft²**

Miscellaneous		Cooling Fan(s)	
Humidifier Type:	**No Humidifier**	Model:	**EC-310**
Bypass airflow:	**0 %**	Description:	**CR - DX Cooling**
		Air Supply:	**Front**
		Power Supply:	**460/3/60**
		Quantity of Motors:	**2**

System: [Digital Loading: 100%, SC: 10 °F, SH: 10 °F] [ESP:0]

Ent DB (°F)	Ent WB (°F)	Ent RH (%)	Ent DP (°F)	Return Air Vol (ACFM)	Supply Air Vol (ACFM)	Air Face Vel (ft/min)	Unit Air Vol (SCFM)	Amb DB (°F)	NTCC (kBtu/hr)	NSCC (kBtu/hr)	THR (kBtu/hr)	Cond. Airflow (ACFM)	Lvg DB (°F)	Lvg WB (°F)	Tot Comp Pwr (kW)	Sys Power Input (kW)	Sys SCOP (W/W)	Sys NSenCOP (W/W)	Fan kW (kW)	Airflow Calibration (V)
98	72	28.2	59.6	2510	2367	353	2340	89.2	88.4	80.1	110.3	5955	66.9	61.1	5.59	7.26	3.24	3.24	0.72	0

System

Compressor Power (kW)	Sat. Discharge Temp. (°F)	Sat. Suction Temp. (°F)
5.59	111.3	50.4

System: [Digital Loading: 90%, SC: 10 °F, SH: 10 °F] [ESP:0]

Ent DB (°F)	Ent WB (°F)	Ent RH (%)	Ent DP (°F)	Return Air Vol (ACFM)	Supply Air Vol (ACFM)	Air Face Vel (ft/min)	Unit Air Vol (SCFM)	Amb DB (°F)	NTCC (kBtu/hr)	NSCC (kBtu/hr)	THR (kBtu/hr)	Cond. Airflow (ACFM)	Lvg DB (°F)	Lvg WB (°F)	Tot Comp Pwr (kW)	Sys Power Input (kW)	Sys SCOP (W/W)	Sys NSenCOP (W/W)	Fan kW (kW)	Airflow Calibration (V)
98	72	28.2	59.6	2510	2375	353	2340	89.2	80.2	76.8	99.9	5955	68.2	62.2	4.93	6.60	3.41	3.41	0.72	0

System

Compressor Power (kW)	Sat. Discharge Temp. (°F)	Sat. Suction Temp. (°F)
4.93	109.2	52.0

System: [Digital Loading: 80%, SC: 10 °F, SH: 10 °F] [ESP:0]

Ent DB (°F)	Ent WB (°F)	Ent RH (%)	Ent DP (°F)	Return Air Vol (ACFM)	Supply Air Vol (ACFM)	Air Face Vel (ft/min)	Unit Air Vol (SCFM)	Amb DB (°F)	NTCC (kBtu/hr)	NSCC (kBtu/hr)	THR (kBtu/hr)	Cond. Airflow (ACFM)	Lvg DB (°F)	Lvg WB (°F)	Tot Comp Pwr (kW)	Sys Power Input (kW)	Sys SCOP (W/W)	Sys NSenCOP (W/W)	Fan kW (kW)	Airflow Calibration (V)

EHRM INFRASTRUCTURE UPGRADES DESIGN
WHITE RIVER JUNCT. VA MED. CENTER – WHITE RIVER JUNCTION VT
PROJECT #: 405-22-700-95 % CD1
BOD APPENDIX D- MECHANICAL CUT SHEETS

98	72	28.2	59.6	2510	2384	353	2340	89.2	72.3	72.3	90.1	5955	70	63.2	4.32	5.99	3.54	3.54	0.72	0

System

Compressor Power (kW)	Sat. Discharge Temp. (°F)	Sat. Suction Temp. (°F)
4.32	107.2	55.3

System: [Digital Loading: 70%, SC: 10 °F, SH: 10 °F] [ESP:0]

Ent DB (°F)	Ent WB (°F)	Ent RH (%)	Ent DP (°F)	Return Air Vol (ACFM)	Supply Air Vol (ACFM)	Air Face Vel (ft/min)	Unit Air Vol (SCFM)	Amb DB (°F)	NTCC (kBtu/hr)	NSCC (kBtu/hr)	THR (kBtu/hr)	Cond. Airflow (ACFM)	Lvg DB (°F)	Lvg WB (°F)	Tot Comp Pwr (kW)	Sys Power Input (kW)	Sys SCOP (W/W)	Sys NSenCOP (W/W)	Fan kW (kW)	Airflow Calibration (V)
98	72	28.2	59.6	2510	2395	353	2340	89.2	65.7	65.7	81.6	5955	72.5	64.1	3.78	5.45	3.53	3.53	0.72	0

System

Compressor Power (kW)	Sat. Discharge Temp. (°F)	Sat. Suction Temp. (°F)
3.78	105.6	59

System: [Digital Loading: 60%, SC: 10 °F, SH: 10 °F] [ESP:0]

Ent DB (°F)	Ent WB (°F)	Ent RH (%)	Ent DP (°F)	Return Air Vol (ACFM)	Supply Air Vol (ACFM)	Air Face Vel (ft/min)	Unit Air Vol (SCFM)	Amb DB (°F)	NTCC (kBtu/hr)	NSCC (kBtu/hr)	THR (kBtu/hr)	Cond. Airflow (ACFM)	Lvg DB (°F)	Lvg WB (°F)	Tot Comp Pwr (kW)	Sys Power Input (kW)	Sys SCOP (W/W)	Sys NSenCOP (W/W)	Fan kW (kW)	Airflow Calibration (V)
98	72	28.2	59.6	2510	2408	353	2340	89.2	58.6	58.6	72.8	5955	75.3	65	3.29	4.96	3.47	3.47	0.72	0

System

Compressor Power (kW)	Sat. Discharge Temp. (°F)	Sat. Suction Temp. (°F)
3.29	104.1	62.7

System: [Digital Loading: 50%, SC: 10 °F, SH: 10 °F] [ESP:0]

Ent DB (°F)	Ent WB (°F)	Ent RH (%)	Ent DP (°F)	Return Air Vol (ACFM)	Supply Air Vol (ACFM)	Air Face Vel (ft/min)	Unit Air Vol (SCFM)	Amb DB (°F)	NTCC (kBtu/hr)	NSCC (kBtu/hr)	THR (kBtu/hr)	Cond. Airflow (ACFM)	Lvg DB (°F)	Lvg WB (°F)	Tot Comp Pwr (kW)	Sys Power Input (kW)	Sys SCOP (W/W)	Sys NSenCOP (W/W)	Fan kW (kW)	Airflow Calibration (V)
98	72	28.2	59.6	2510	2421	353	2340	89.2	51.0	51.0	63.6	5955	78.2	66	2.81	4.48	3.34	3.34	0.72	0

System

Compressor Power (kW)	Sat. Discharge Temp. (°F)	Sat. Suction Temp. (°F)
2.81	102.5	66.6

Notes

1. Capacities shown have been reduced by fan motor(s) heat (net).
2. System Power Input includes Compressor(s), Blower Motor(s), Condenser(s), and Control Power.
3. Coil airflow has not been reduced by a bypass.
4. Capacity Tolerance is 5%.
5. ACFM/ACMH is the unit actual air flow rate when measured at the specific return or supply temperature and barometric conditions that define a unique air density.
6. SCFM/SCMH is the unit air flow rate when converted to standard air density of 0.075 lb/ft3 at sea level.
7. NTCC, Net Total Cooling Capacity
8. NSCC, Net Sensible Cooling Capacity

AHRI CERTIFIED®
www.ahridirectory.org
Datacom Cooling
AHRI Standard 1360

Certified in accordance with the AHRI Datacom Cooling Certification Program at AHRI Standard 1360 (I-P) Standard Rating Conditions. Certified units may be found in the AHRI Directory at www.ahridirectory.org.

© 2025 Liebert Corporation. All Rights Reserved

EHRM INFRASTRUCTURE UPGRADES DESIGN
WHITE RIVER JUNCT. VA MED. CENTER – WHITE RIVER JUNCTION VT
PROJECT #: 405-22-700-95 % CD1
BOD APPENDIX D- MECHANICAL CUT SHEETS

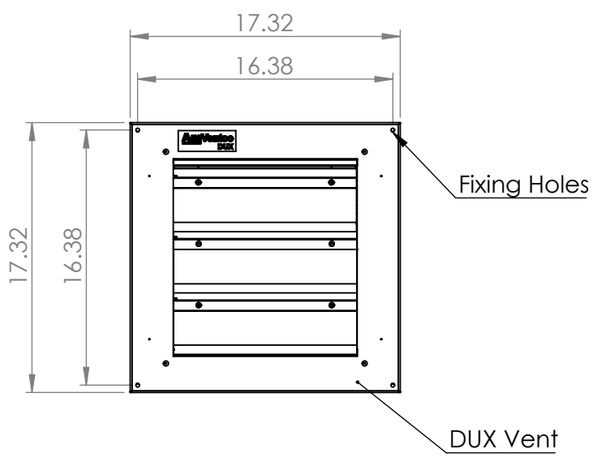

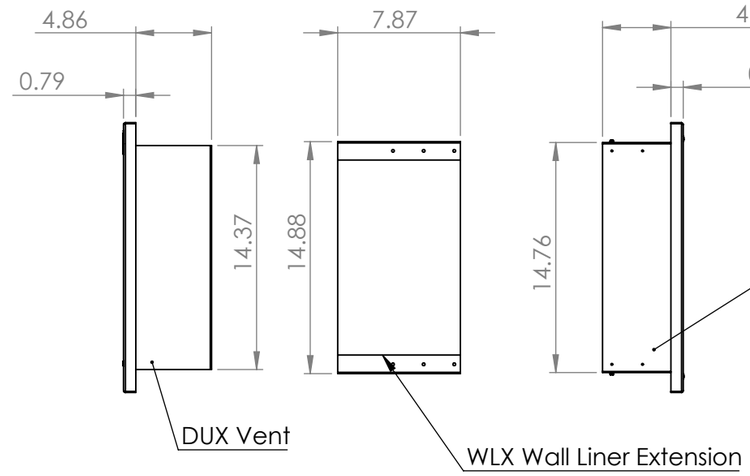

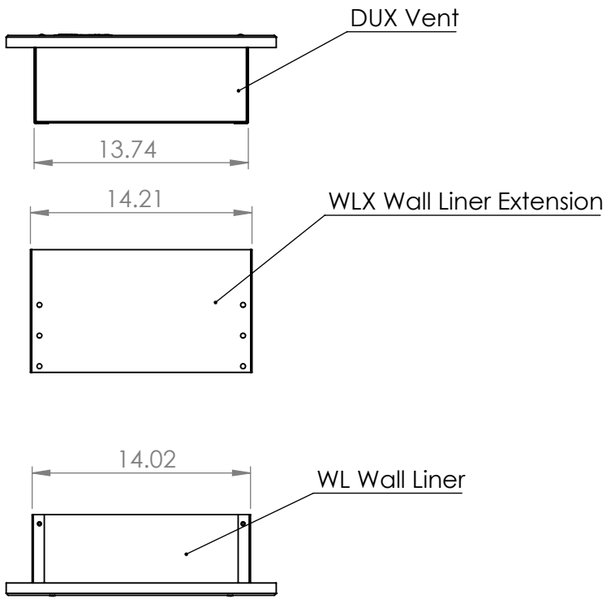

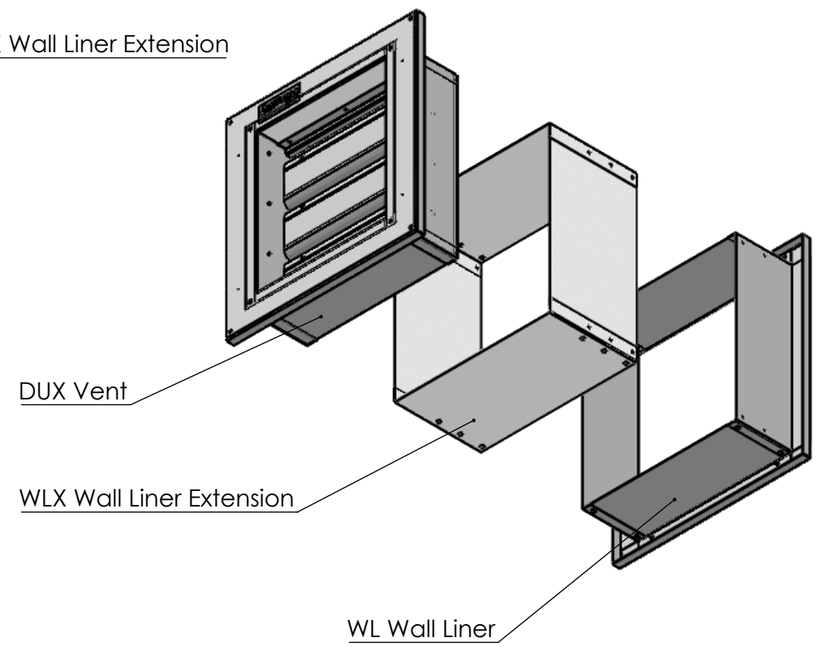

EHRM INFRASTRUCTURE UPGRADES DESIGN
WHITE RIVER JUNCT. VA MED. CENTER – WHITE RIVER JUNCTION VT
PROJECT #: 405-22-700-95 % CD1
BOD APPENDIX D- MECHANICAL CUT SHEETS

UNLESS OTHERWISE SPECIFIED: DIMENSIONS ARE IN INCHES SURFACE FINISH: TOLERANCES: LINEAR: ANGULAR:	FINISH:			DEBURR AND BREAK SHARP EDGES			AmVentco DUX www.amventco.com	AmVentco, Inc 1344 Phillips Highway Jacksonville FL 32207 USA Tel: (904) 339 8360 web: www.amventco.com sales@amventco.com
	NAME	SIGNATURE	DATE				DO NOT SCALE DRAWING	REVISION
DRAWN								
CHK'D								
APPV'D								
Q.A				MATERIAL: Powder Coated Steel			DWG NO. DUX 14	A3
				WEIGHT:			SCALE:1:10	SHEET 1 OF 1

PROPRIETARY AND CONFIDENTIAL

THE INFORMATION CONTAINED IN THIS DRAWING IS THE SOLE PROPERTY OF AFP Air Tech LTD (UK) ANY REPRODUCTION IN PART OR AS A WHOLE WITHOUT THE WRITTEN PERMISSION FROM AFP Air Tech LTD (UK) IS PROHIBITED.

DUX Two Way

DUX TWO WAY

For Chemical Gas Supression Systems

The world's first and only Double Action pressure relief damper (pat App).

Superior to single top pivot solutions, the DUX is a compact, extremely robust and efficient two way pressure relief damper, ideal for chemical gases. The DUX is the world's first 'Double Action' two way pressure relief damper for halo-carbon gases (pat applied) and provides a level of performance not otherwise available for this application. AmVentco's top weighted, offset pivoted, aerofoil style blades have the best available efficiency, reaction time and all out performance. The double pivot design with interlocking adjacent blades offers superior fire protection with low overall leakage and unique pressure relief efficiency.

PRODUCT DETAILS

4 Hour Fire Rated

4 hours to BS EN 1363-1 2012

2 Hours to UL-555

Live Discharge Tested

Built to BRE live discharge tests standards 2008.

Sutable for all chemical gasses.

HFC-125/HFC-227ea/FK-5-1-12

Two Way Venting

Unique Double Pivot System for two way venting and presure relief.

(pat app)

EHRM INFRASTRUCTURE UPGRADES DESIGN
WHITE RIVER JUNCT. VA MED. CENTER – WHITE RIVER JUNCTION VT
PROJECT #: 405-22-700-95 % CD1
BOD APPENDIX D- MECHANICAL CUT SHEETS

www.amventco.com

AmVentco, Inc. 4344 Phillips Hwy. Jacksonville, FL 32207

Phone: (904) 930-0168

Email: sales@amventco.com

Imperial
DUX Two Way

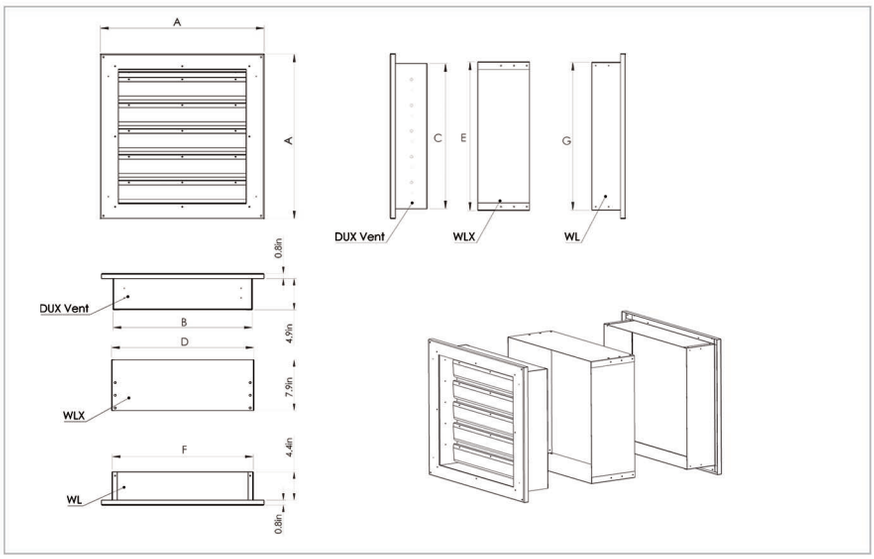

Standard kit fits walls from 4'' to 15'' thick.

DUX Kit includes :

- DUX vent
- WL Wall Liner
- WLX Wall Liner Extension
- Fixing Kit
- Fitting Instructions

Full open pressure 120-160pa (*from static fan test*)

3 year guarantee

TECHNICAL DATA

Product Code	Dim	DUX 300 (14)	DUX 500 (22)	DUX 700 (30)
FVA NEGATIVE		0.83ft2	2.28ft2	4.48ft2
FVA POSITIVE		0.51ft2	1.38ft2	3.31ft2
DUX VENT FLANGE	A A	17.0'' x 17.0''	25.0'' x 25.0''	32.3'' x 32.3''
DUX VENT	B C	13.8'' x 14.4''	21.6'' x 22.3''	29.2'' x 28.8''
WLX	D E	14.2'' x 14.9''	22.0'' x 22.8''	29.5'' x 29.2''
WL	F G	14.0'' x 14.8''	21.9'' x 22.6''	29.5'' x 28.9''
WEIGHT		33 lbs	55 lbs	75 lbs
WALL CUTOUT SIZE	W x H	14 3/8'' x 15''	22 1/8'' x 22 7/8''	29 3/4'' x 29 1/4''

EXTERNAL WALL INSTALLATION

An EXP (Expanded Louver Unit) should be used for installation on exterior walls.

Due to the maximum FVA of a fixed louver being only 50%, the EXP compensates for this by being a larger 'expanded louver' unit. When used in combination with the DUX it works to maintain the same FVA as the DUX and so offers no restriction on performance.

EHRM INFRASTRUCTURE UPGRADES DESIGN
WHITE RIVER JUNCT. VA MED. CENTER – WHITE RIVER JUNCTION VT
PROJECT #: 405-22-700-95 % CD1
BOD APPENDIX D- MECHANICAL CUT SHEETS

www.amventco.com

Amventco, Inc. 4344 Phillips Hwy. Jacksonville, FL 32207

Phone: (904) 930-0168

Email: sales@amventco.com

Metric
DUX Two Way

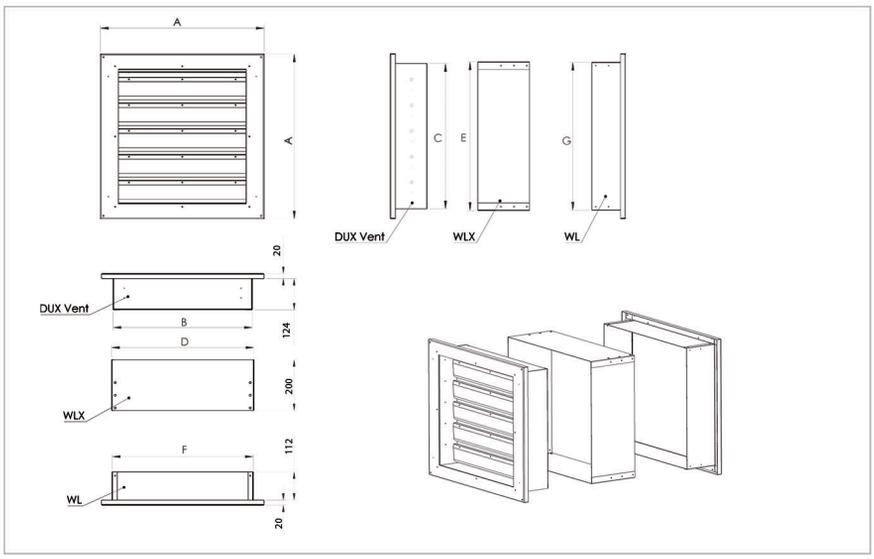

Standard kit fits walls from 100mm to 380mm thick.

DUX Kit includes :

- DUX vent
- WL Wall Liner
- WLX Wall Liner Extension
- Fixing Kit
- Fitting Instructions

Full open pressure 120-160pa (*from static fan test*)

3 year guarantee

TECHNICAL DATA

Product Code	Dim	DUX 300 (14)	DUX 500 (22)	DUX 700 (30)
FVA NEGATIVE		0.076m2	0 .216m2	0 .416m2
FVA POSITIVE		0.047m2	0.128m2	0.308m2
DUX VENT FLANGE	A A	430 x 430mm	630 x 630mm	820 x 820mm
DUX VENT	B C	350 x 365mm	500 x 565mm	740 x 728mm
WLX	D E	361 x 378mm	561 x 578mm	752 x 742mm
WL	F G	356 x 375mm	556 x 575mm	750 x 735mm
WEIGHT		15kg	25kg	33.5kg
WALL CUTOUT SIZE	W x H	365 x 380mm	560 x 580mm	760 x 750mm

EXTERNAL WALL INSTALLATION

An EXP (Expanded Louver Unit) should be used for installation on exterior walls.

Due to the maximum FVA of a fixed louver being only 50%, the EXP compensates for this by being a larger 'expanded louver' unit. When used in combination with the DUX it works to maintain the same FVA as the DUX and so offers no restriction on performance.

EHRM INFRASTRUCTURE UPGRADES DESIGN
WHITE RIVER JUNCT. VA MED. CENTER – WHITE RIVER JUNCTION VT
PROJECT #: 405-22-700-95 % CD1
BOD APPENDIX D- MECHANICAL CUT SHEETS

www.amventco.com

Amventco, Inc. 4344 Phillips Hwy. Jacksonville, FL 32207

Phone: (904) 930-0168

Email: sales@amventco.com

AmVentco

EXP Louver

EXP EXPANDED LOUVER

Weather Protection for DUX Vents

Designed specifically to compliment FVA of DUX Two Way Vents.

The EXP Expanded Louver unit is used with AmVentco's DUX range of pressure relief dampers in halocarbon installations. It has been specifically designed to provide a Free Vent Area (FVA) matching that of DUX while providing the weather protection essential for two-way vents in exterior walls.

The louver blades are assembled into a custom-designed 'Expanded Louver Box' – hence EXP – which increases the effective FVA to match the 85% FVA of the DUX. *(Typically fixed louvers only achieve 50% FVA maximum)*

The EXP 14 & 22 are fitted with a new storm shield which is a carefully designed mesh that prevents storm blown rain and insects entering behind the unit whilst having zero effect on any blast protection.

PRODUCT DETAILS

DUX Weather Protection

Designed for DUX Two Way pressure relief damper weather protection. (for exterior wall use)

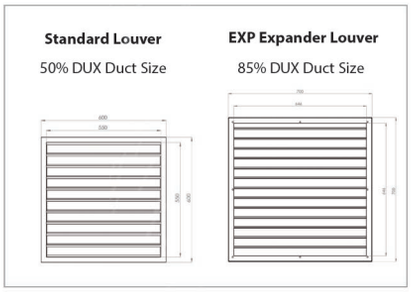

No Vent Area Restriction

'Expander Louver' design matches the FVA of the DUX Two Way for maximum pressure venting efficiency.

Easy Installation

Steel construction. Surface mount easy installation.

Fitted wtih 'Storm shield mesh' for rain ingress and insect protection.

EHRM INFRASTRUCTURE UPGRADES DESIGN
WHITE RIVER JUNCT. VA MED. CENTER – WHITE RIVER JUNCTION VT
PROJECT #: 405-22-700-95 % CD1
BOD APPENDIX D- MECHANICAL CUT SHEETS

www.amventco.com

Amventco, Inc. 4344 Phillips Hwy. Jacksonville, FL 32207

Phone: (904) 930-0168

Email: sales@amventco.com

Imperial
EXP Louver

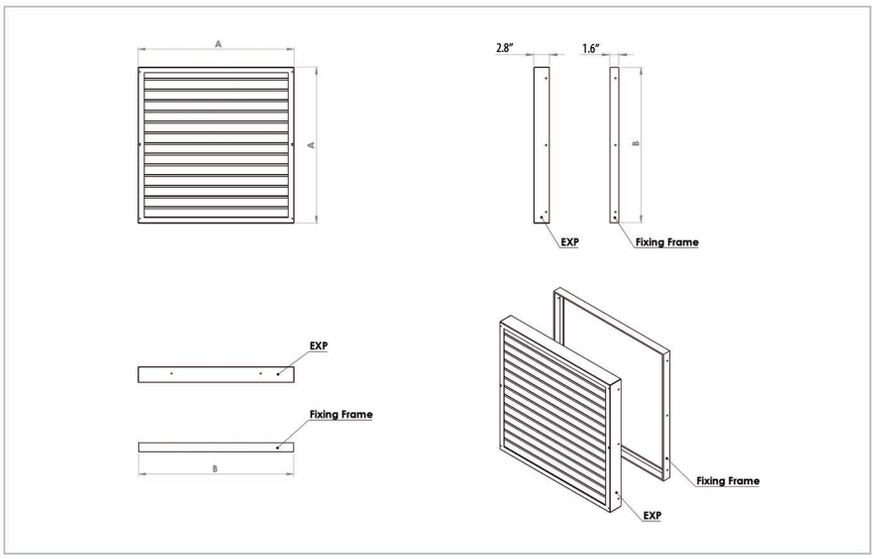

TECHNICAL DATA

Product Code	Dim	EXP 300 (14)	EXP 500 (22)	EXP 700 (30)	
FVA NEGATIVE		0.83 ft2	2.28 ft2	4.47 ft2	
FVA POSITIVE		0.83 ft2	2.28 ft2	4.47 ft2	
EXP	A A	19.8'' x 19.8''	27.5'' x 25.5''	41.34'' x 41.34''	
FIXING FRAME	B B	19.5'' x 19.5''	27.3'' x 27.3''	n/a	
WEIGHT		16 lbs	27 lbs	40 lbs	

EXTERNAL WEATHER PROTECTION

For use with DUX Two Way Vents.

The EXP has been specially designed to complement the superior performance of the DUX Two Way pressure relief damper.

When used in combination with the DUX it works to maintain the same FVA as the DUX and so offers no restriction on performance.

EHRM INFRASTRUCTURE UPGRADES DESIGN
WHITE RIVER JUNCT. VA MED. CENTER – WHITE RIVER JUNCTION VT
PROJECT #: 405-22-700-95 % CD1
BOD APPENDIX D- MECHANICAL CUT SHEETS

www.amventco.com

Amventco, Inc. 4344 Phillips Hwy. Jacksonville, FL 32207

Phone: (904) 930-0168

Email: sales@amventco.com

Metric
EXP Louver

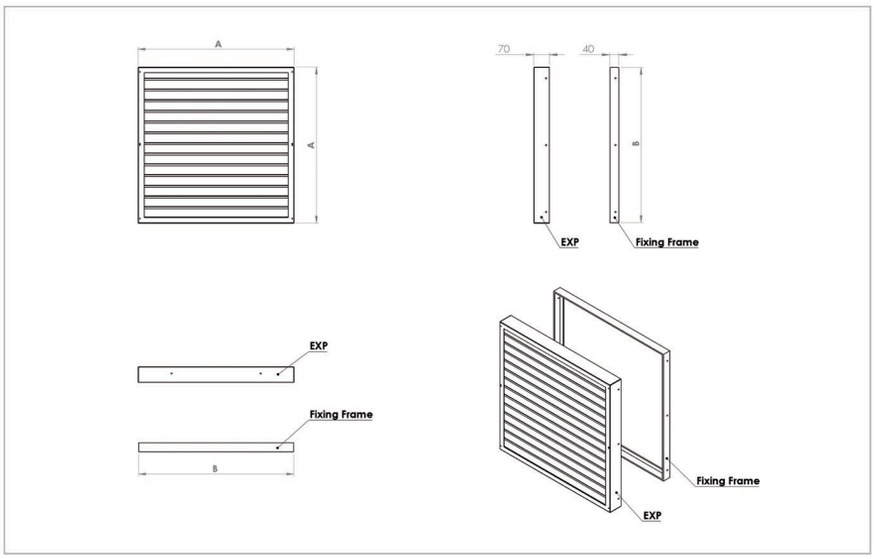

TECHNICAL DATA

Product Code	Dim	EXP 300 (14)	EXP 500 (22)	EXP 700 (30)
FVA NEGATIVE		0.076m2	0.212m2	0.416m2
FVA POSITIVE		0.076m2	0.212m2	0.416m2
EXP	A A	500 x 500mm	700 x 700mm	1050 x 1050mm
FIXING FRAME	B B	495 x 495mm	695 x 695mm	n/a
WEIGHT		7kg	12kg	18kg

EXTERNAL WEATHER PROTECTION

For use with DUX Two Way Vents.

The EXP has been specially designed to complement the superior performance of the DUX Two Way pressure relief damper.

When used in combination with the DUX it works to maintain the same FVA as the DUX and so offers no restriction on performance.

EHRM INFRASTRUCTURE UPGRADES DESIGN
WHITE RIVER JUNCT. VA MED. CENTER – WHITE RIVER JUNCTION VT
PROJECT #: 405-22-700-95 % CD1
BOD APPENDIX D- MECHANICAL CUT SHEETS

www.amventco.com

Amventco, Inc. 4344 Phillips Hwy. Jacksonville, FL 32207

Phone: (904) 930-0168

Email: sales@amventco.com

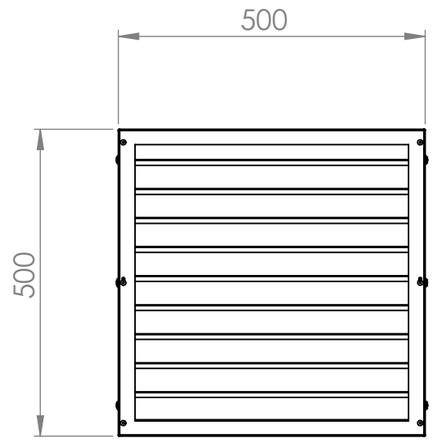

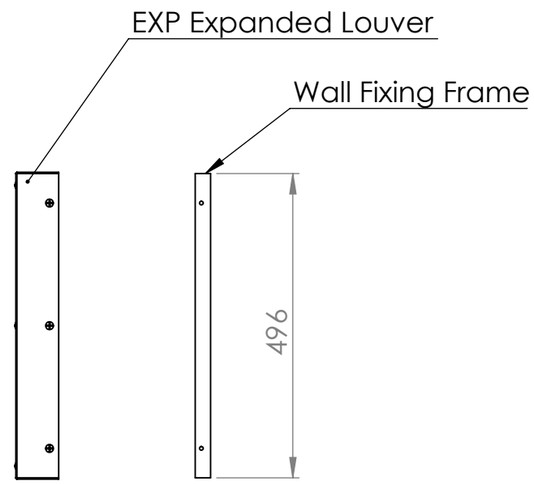

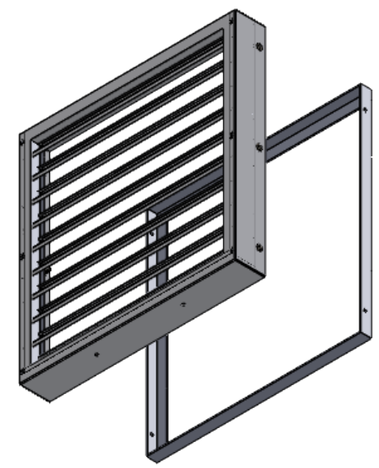

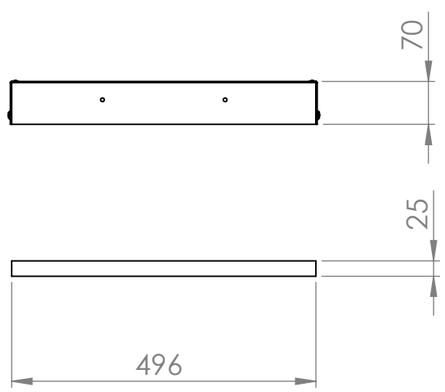

EHRM INFRASTRUCTURE UPGRADES DESIGN
WHITE RIVER JUNCT. VA MED. CENTER – WHITE RIVER JUNCTION VT
PROJECT #: 405-22-700-95 % CD1
BOD APPENDIX D- MECHANICAL CUT SHEETS

UNLESS OTHERWISE SPECIFIED:
DIMENSIONS ARE IN INCHES
SURFACE FINISH:
TOLERANCES:
LINEAR:
ANGULAR:

FINISH:

DEBURR AND BREAK SHARP EDGES

AmVentco EXP
www.amventco.com

AmVentco, Inc
1311 Philips Highway
Jacksonville FL 32207
USA
Tel: (904) 339 8380
web: www.amventco.com
sales@amventco.com

	NAME	SIGNATURE	DATE
DRAWN			
CHK'D			
APPV'D			
Q.A			

DO NOT SCALE DRAWING

REVISION

PROPRIETARY AND CONFIDENTIAL

THE INFORMATION CONTAINED IN THIS DRAWING IS THE SOLE PROPERTY OF AFP Air Tech LTD (UK) ANY REPRODUCTION IN PART OR AS A WHOLE WITHOUT THE WRITTEN PERMISSION FROM AFP Air Tech LTD (UK) IS PROHIBITED.

MATERIAL: Powder Coated Steel

WEIGHT:

DWG NO. EXP 14

A3

SCALE:1:10

SHEET 1 OF 1

ultra pure SYSTEMS

VISTA RO 200GPD

DELIVER EXTREMELY CLEAN WATER TO YOUR CRITICAL PROCESS EQUIPMENT

UltraPure Systems Vista Reverse Osmosis Systems are completely contained in a sleek industrial grade cabinet with single point connections for ease of installation and placement virtually anywhere. Each unit has an integral 4-stage process to remove harmful substances, such as heavy metal ions and total dissolved solids from domestic water sources. This purification process will convert municipal water to a consistently higher purity level, suitable for multiple types of humidifiers and other equipment.

Neatly packed in a sturdy 1/2" welded high density polyethylene plastic cabinet with a hinged door makes this single point connection system ideal for small reverse osmosis applications. With our advanced system controller you can monitor City PPM and RO water quality at a glance via the highly visible blue and red illumination on the front of the cabinet. BLUE indicating proper water quality and RED indicating an alarm condition, such as water quality no longer being within acceptable range. Serving AND protecting your process and equipment investment.

Maintain and optimize your system's performance with our unique Query Code System. As a standard part of every system, this simple, friendly, powerful, no cost mobile application enables customers to manage routine filter maintenance from anywhere, including on-site or remotely.

BENEFITS

- Eliminate down time due to consumed filters (proactive vs. reactive)
- Stay ahead of the curve with automatically generated email notifications
- Predictable data budgeting on annual filter costs
- No binding contracts or licensing fees required

THRM INFRASTRUCTURE UPGRADES DESIGN
WHITE RIVER JUNCT. VA MED. CENTER – WHITE RIVER JUNCTION VT
PROJECT #: 405-22-700-95 % CD1
BOD APPENDIX D- MECHANICAL CUT SHEETS

(800) 729-5192

www.ultrapureusa.com

US Patent # D780, 884 ; D780,885

ultra pure SYSTEMS

VISTA RO 200GPD

System Summary -Vista 200

3 Stage reverse osmosis process. The final purity of the water leaving the reverse osomosis system is depended on incoming water however once water levels exceed 150ppm reverse osmosis membrane should be replaced.
This Systems flow is rated at **200 gpd** +/- 15% based on 77 degree water, 100 psi applied pressure. 500 ppm NaCI softened filtered water.

Feed Pressure	Operating Temperature	Electrical Rating	Amp Max	Dry Weight	Total Weight
35-125 psi	34 - 110° F	120 VAC/60Hz	MFS 15	85lbs	125lbs

Stage 1 : Sediment Filter

Engineered to expanded volume and higher flow rates for commercial applications such as equipment protection and water polishing. Each filter is pretested for maximum pressure and temperature.

Quanity Per Unit	1
Model Number	UPF_4289
Filter Dimensions	3.125" OD x 2.875" ID x 10" L
Rating	5 Micron
Max Operating Pressure	125 PSI
Operating Temperature	40 - 100F

Features and Benefits:

- Protect equipment from hard water
- Large 3.5" W x 10" or 15" lengths
- Capacities of up to 20,000 gallons
- Hefty flow rates up to 2 gal/min
- Two piece bayonet style replacement
- Best cost to performance ratio in the industry

Test Information: Housings and fittings have been tested for performance to NSF Standard 42. Tests included Hyrdo Static Testing at 300 psig and Cycle Testing of 100,000 repetitions from 0 to 150 psig. Filters have been tested and listed under Standard 42 for odor, and chlorine reduction; or particulate reduction; or have been materials certified. All filters should be installed on cold water lines. **Note:** Activated carbon filters are not intended to be used where the water is microbiologically unsafe or with water of unknown quality without adequate disinfection before or after the unit.

Warranty Information: Filters are warrantied to be free from any defects in workmanship or materials. Further, the warranty provided applies, only when used with the product specifications and service life, from the date of install or 5 years from the date of manufacture whichever occurs first, beyond which time or use Ultra Pure Systems is not liable for any use of this product.

THRM INFRASTRUCTURE UPGRADES DESIGN
WHITE RIVER JUNCT. VA MED. CENTER – WHITE RIVER JUNCTION VT
PROJECT #: 405-22-700-95 % CD1
BOD APPENDIX D- MECHANICAL CUT SHEETS

(800) 729-5192
www.ultrapureusa.com

US Patent # D780, 884 ; D780,885

ultra pure SYSTEMS

VISTA RO 200GPD

Stage 2 : Carbon Filters

Engineered to expanded volume and higher flow rates for commercial applications such as equipment protection and water polishing. Each filter is pretested for maximum pressure and temperature.

Quanity Per Unit	**2**
Model Number	**UPF_4290**
Filter Dimensions	**3.125" OD x 2.875" ID x 10" L**
Rating	**10 Micron**
Max Operating Pressure	**125 PSI**
Operating Temperature	**40 - 100F**

Features and Benefits:

- Protect equipment from hard water
- Large 3.5" W x 10" or 15" lengths
- Capacities of up to 20,000 gallons
- Hefty flow rates up to 2 gal/min
- Two piece bayonet style replacement
- Best cost to performance ratio in the industry

Test Information: Housings and fittings have been tested for performance to NSF Standard 42. Tests included Hyrdo Static Testing at 300 psig and Cycle Testing of 100,000 repetitions from 0 to 150 psig. Filters have been tested and listed under Standard 42 for odor, and chlorine reduction; or particulate reduction; or have been materials certified. All filters should be installed on cold water lines. **Note:** Activated carbon filters are not intended to be used where the water is microbiologically unsafe or with water of unknown quality without adequate disinfection before or after the unit.

Warranty Information: Filters are warrantied to be free from any defects in workmanship or materials. Further, the warranty provided applies, only when used with the product specifications and service life, from the date of install or 5 years from the date of manufacture whichever occurs first, beyond which time or use Ultra Pure Systems is not liable for any use of this product.

Stage 3 : Membrane Filter

(2) 100GPD encapsulated RO membrane manufactured within an ISO:9001 semi–automated manufacturing facility and meet all performance and quality standards. Encapsulated high 1:1 ratio which means less waste.

Quanity Per Unit	**2**
Model Number	**UPF_5293**
Filter Dimensions	**.87" x 2.60" x 11.73" L**
pH Range	**4 - 11**
Max Operating Pressure	**125 PSI**
Operating Temperature	**40 - 120F**

Features and Benefits:

- Thin layer composite membrane
- High rejection stability at high TDS input
- Double the recovery over standard RO elements
- 100% dry membrane maximizing shelf life
- Eligible for NSF data transfer
- Industry best 1:1 rejection rate

Test Information: The thin layer composite membrane filters have been tested for performance to NSF Standard 42. Filters and membrane elements are not to be installed on microbiologically unsafe water supplies. TLC Membranes are not certified to sanitize water, remove cysts, bacteria or viruses. Filters and membrane element preformance can be affected by flucuations in warter quality.

ultra pure SYSTEMS

VISTA RO 200GPD

Additional System Components

Optional UV Sterilizer

Optional UV Sterilizer can be added to each system. Water will pass through UV light as a last pass prior to going into water storage tank. UV Sterilizer is sized for system nominal capacity and prewired integral of system. Blue LED light inside cabinet indicates UV light is on. Bulb and Sleeve replacement is recommended every 10,000hrs,

Product Water Storage Tank

RO permeate water storage tank, made of superior materials and meeting the stringent standards of NSF 58. At the heart of the tank is a 100% butyl rubber diaphragm that has been post cured to eliminate any unwanted odors. Combined with a polypropylene liner it keeps system water contained in a sealed water chamber. A double gasketed stainless steel connection assures the integrity of the water treatment system.

Total Volume	14 Gallons
Total Capacity	10 Gallons
Dimensions	15.2" OD x 22.5" T
Connection Size	3/4" Stainless Steel MPT
Weight	24lbs
Max Operating Pressure	125 PSI

Features and Benefits:

- Steel construction
- Exceeds NSF and ANSI standards
- Polypropylene Liner
- Enhanced bottom dome
- Rugged Poly Base
- 100% Butyl Diaphragm

Dual Display PPM Controller

The dual display PPM controller allows for continuous and simultaneous monitoring and of the PPM levels on two different water lines (CITY & RO). The dual display controller also has a large, bright LED display as well as internal alarm that will sound if PPM level rises above user-set alarm levels for both lines. Isolated RO alarm contacts for BMS remote monitoring when RO membrane is exhausted.

Range	0 - 999 ppm
Accuracy	+/- 2%
Dimensions	3.7" x 3.7" x 4.9"
Power Supply	AC 110V
Weight	2lbs 1.1oz
Conversion Factor	NaCl (avg 0.5)

Features and Benefits:

- Simultaneous monitoring and control
- Exceeds NSF standards
- Large, bright LED display
- Internal audible alarm based on user set points
- Dry isolated RO & DI contacts for equipment relay control

FORM INFRASTRUCTURE UPGRADES DESIGN
WHITE RIVER JUNCT. VA MED. CENTER – WHITE RIVER JUNCTION VT
PROJECT #: 405-22-700-95 % CD1
BOD APPENDIX D- MECHANICAL CUT SHEETS

(800) 729-5192

www.ultrapureusa.com

US Patent # D780, 884 ; D780,885

ultra pure SYSTEMS

VISTA RO 200GPD

John Guest LLDPE Tubing

The John Guest PE range of plastic tubing is produced in Linear Low Density Polyethylene for cold and intermittent hot water applications. The tubing provides the benefits of a wide range of temperature and pressure suitability, broad chemical compatibility and is made from non contaminating materials. LLDPE is more robust than traditional low or medium density polyethylene and is recommended for use with cold and intermittent hot water. The tubing is made from FDA compliant materials and is NSF International certified.

Tube Tolerances	1/4"- 1/2" : +0.001/-0.004
Max Temperature	150°F
Tube Dimensions	1/4" OD - .170" ID
Weight	2lbs 1.1oz
Conversion Factor	NaCl (avg 0.5)

Features and Benefits:

- FDA compliant materials
- Broad chemical compatibility
- Made from all non-contaminating materials
- Stronger than standard polyethylene tubing
- NSF International certified.

Internal Tubing Color Key		
Yellow	Incoming City	Black
Blue	Reverse Osmosis	Reject

John Guest "push-fit" Fittings

John Guest fittings are manufactured in gray and black acetal copolymer with RED safety clips attached to each fitting .

Standard Sizes	¼" ⅜"

Features and Benefits:

- Push-fit technology
- Suitable for soft metal or plastic tubes
- Superior flow characteristics
- Quick disconnection without the need for tools

Diaphragm Pump - Standard

Weight	6 lbs
Dimensions	7.28" x 3.68" x 3.50"
Max Inlet Pressure	60psi
Max Water Temperature	170° F

Features and Benefits:

- Increases Pressure 15-20psi
- 3 Chamber Diaphragm Pump
- Self Priming
- NSF Standard 58
- Increased Membrane Efficiency

THRM INFRASTRUCTURE UPGRADE & DESIGN
WHITE RIVER JUNCT. VA MED. CENTER – WHITE RIVER JUNCTION VT
PROJECT #: 405-22-700-95 % CD1
BOD APPENDIX D- MECHANICAL CUT SHEETS

(800) 729-5192

www.ultrapureusa.com

US Patent # D780, 884 ; D780,885

ultra pure SYSTEMS

VISTA RO 200GPD

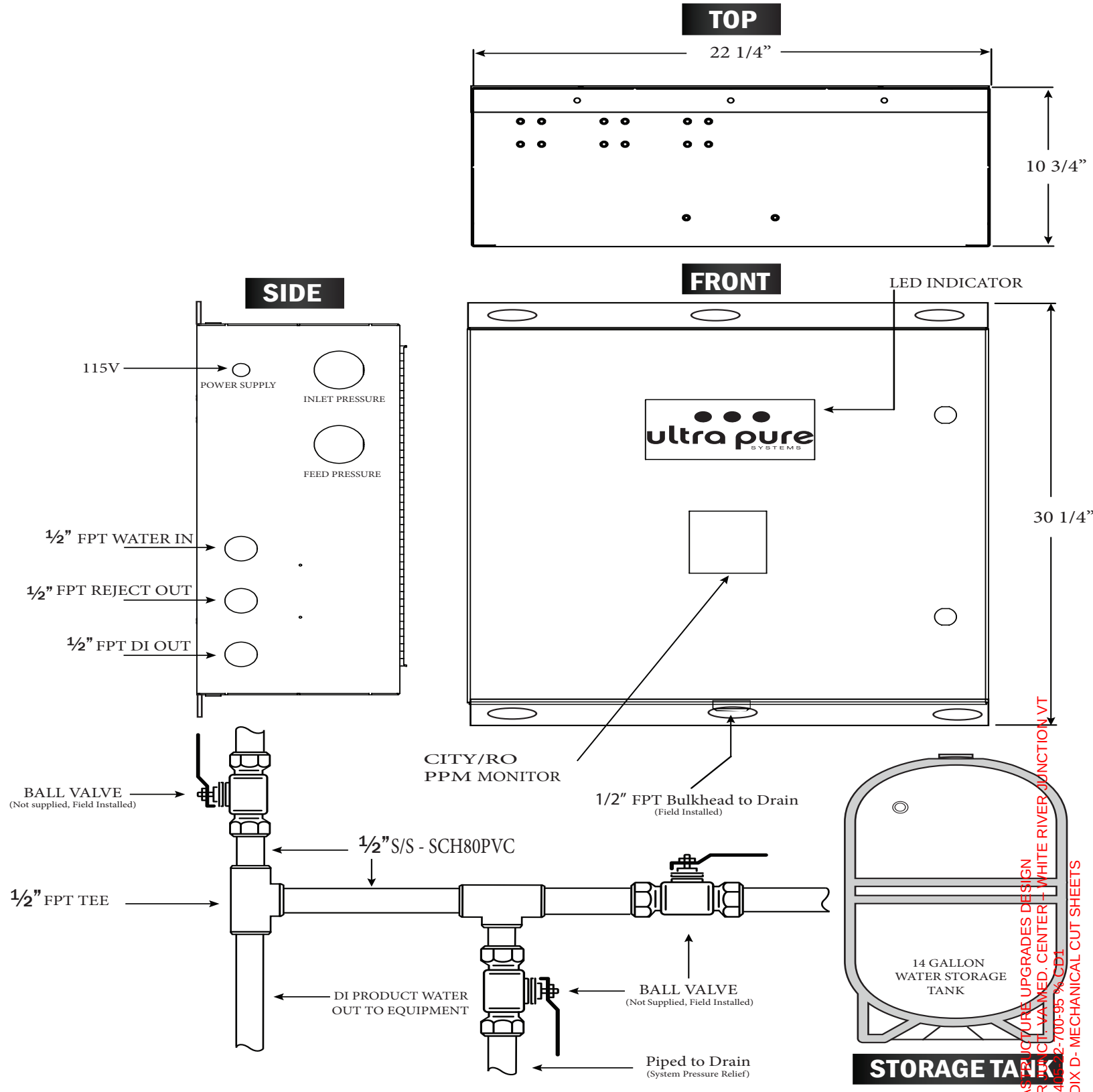

THRM INFRASTRUCTURE UPGRADES DESIGN
WHITE RIVER JUNCTION VT
PROJECT #: 40602-700-95 % CD1
BOD APPENDIX D- MECHANICAL CUT SHEETS

(800) 729-5192

www.ultrapureusa.com

US Patent # D780, 884 ; D780,885

Job Name: SP-A700-VG Cut Sheet
Tag: MK-1
Quantity: 1
Printed Date: June 25, 2025

Model: SP-A700-VG

Direct Drive Bathroom Exhaust Fan

Standard Construction Features: Galvanized steel housing and grille. Centrifugal forward curved wheel. Direct driven motor in the air stream.

Fan Configuration	
Drive type	Direct

Performance	
Requested Volume (CFM)	450
Actual Volume (CFM)	450
Total External SP (in. wg)	0.3
Fan RPM	1,039
Operating Power (bhp)	0.09
Startup Power (bhp)	0.1
FEI	-
Air Stream Temp (F)	86
Start-up Temp (F)	70
Air Density (lbs/ft^3)	0.073
Elevation (ft)	15
Watts (W)	71
Static Efficiency (%)	22
Outlet Velocity (ft/min)	417

Motor	
V/C/P	115/60/1
NEC FLA (Amps)	4.1
Min Circuit Ampacity (MCA)	5.1
Max Overload Production (MOP)	15

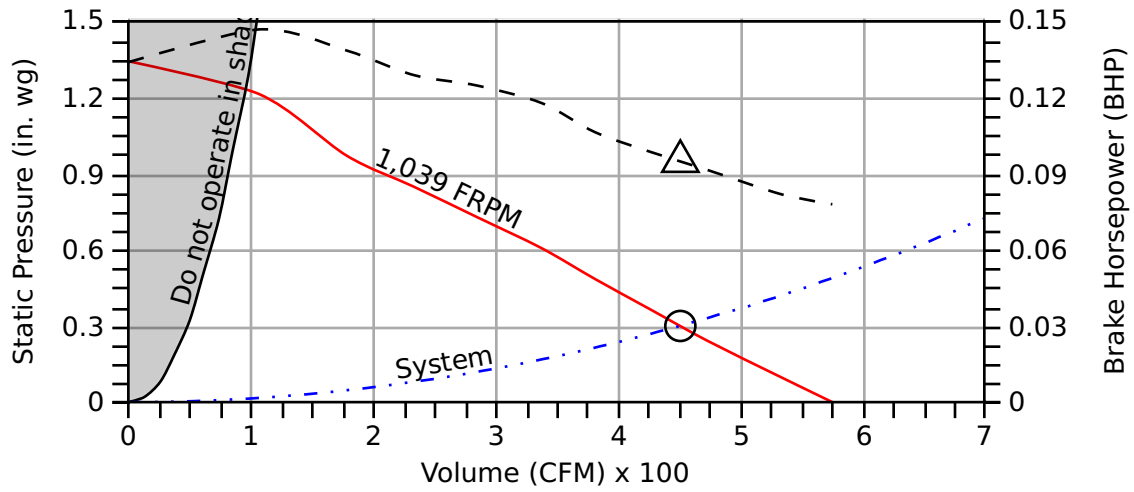

Fan curve
Brake horsepower curve
Operating Point SP
Operating Bhp point
Max system curve
System curve

Static Pressure Calculations	
External SP	0.3 in. wg
Direct Drive RPM Adjustment	0 in. wg
Total External SP	0.3 in. wg

Sound

	Spherical Sones
Inlet	4.0

Greenheck Fan Corporation certifies that the model shown herein is licensed to bear the AMCA Seal. The ratings shown are based on tests and procedures performed in accordance with AMCA Publication 211 and AMCA Publication 311 and comply with the requirements of the AMCA Certified Ratings Program.The AMCA certified ratings seal applies to sound and air performance ratings only.Performance certified is for installation type B: Free inlet, ducted outlet.Power rating does not include transmission losses.Performance ratings include the effects of an inlet grille and backdraft damper.Speed (RPM) shown is nominal. Performance is based on actual speed of test.The sound ratings shown are loudness values in spherical sones at 1.5 m (5 ft) in a spherical free field calculated per ANSI/AMCA 301.Values shown are for Installation Type B: free inlet spherical sone levels.dBA levels are not licensed by AMCA International. The AMCA Certified Ratings Seal for Sound applies to sone ratings only.

Wattage is shown at free air. Wattage is approximate and may vary between motors. Fan shaft input power (bhp) is not certified.
FLA - based on tables 150 or 148 of National Electric Code 2002. Actual motor FLA may vary, for sizing thermal overload, consult factory.
MCA and MOP values shown only account for the motor, not accessories (damper actuator, field supplied VFD, etc.).

EHRM INFRASTRUCTURE UPGRADES DESIGN
WHITE RIVER JUNCT. VA MED. CENTER – WHITE RIVER JUNCTION VT
PROJECT #: 405-22-700-95 % CD1
BOD APPENDIX D- MECHANICAL CUT SHEETS

Dimensions and Weights		
Label	**Value**	**Description**
-	39	Weight w/o accessories (lbs)
A	12	Overall Height (in)
B	24	Overall Width (in)
C	12	Overall Length (in)

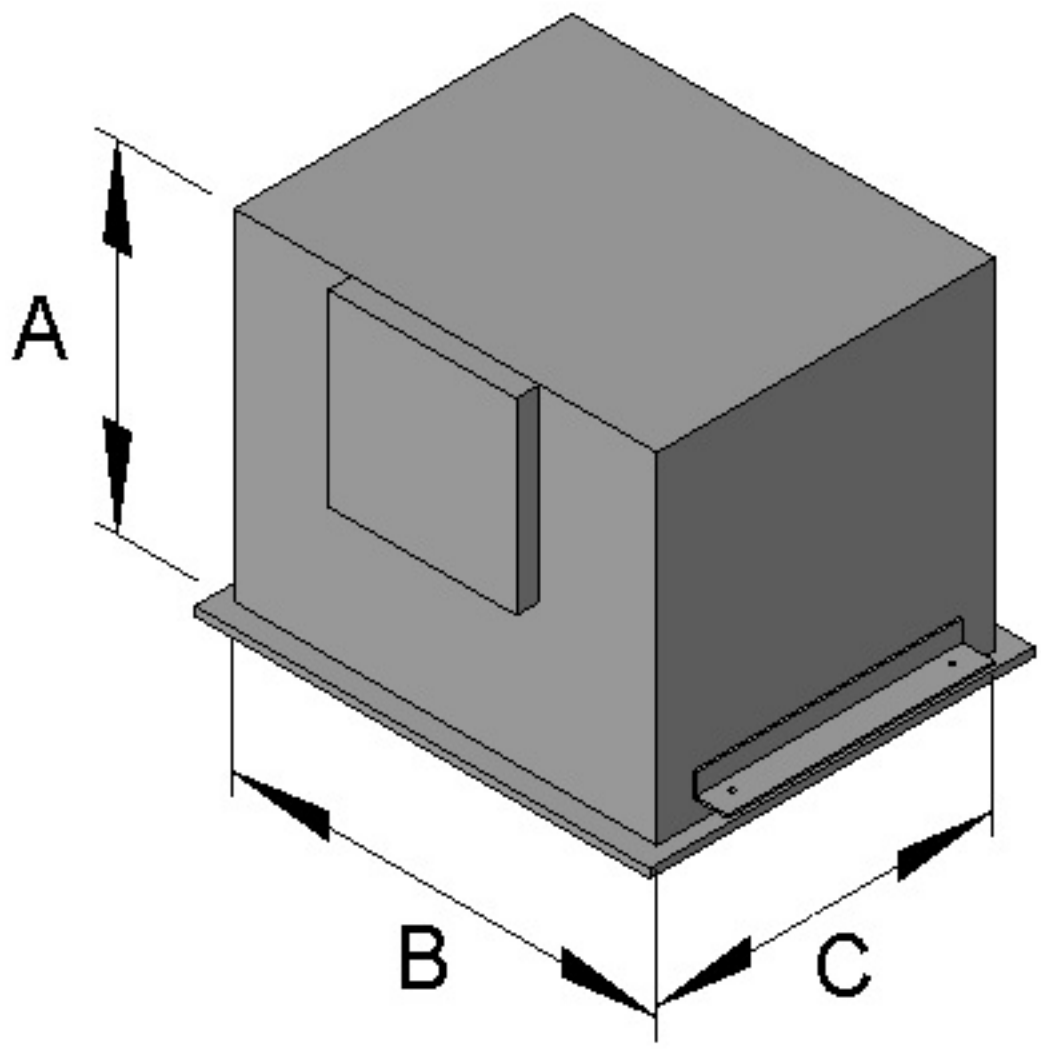

*All dimensions are in inches.

EHRM INFRASTRUCTURE UPGRADES DESIGN
WHITE RIVER JUNCT. VA MED. CENTER – WHITE RIVER JUNCTION VT
PROJECT #: 405-22-700-95 % CD1
BOD APPENDIX D- MECHANICAL CUT SHEETS