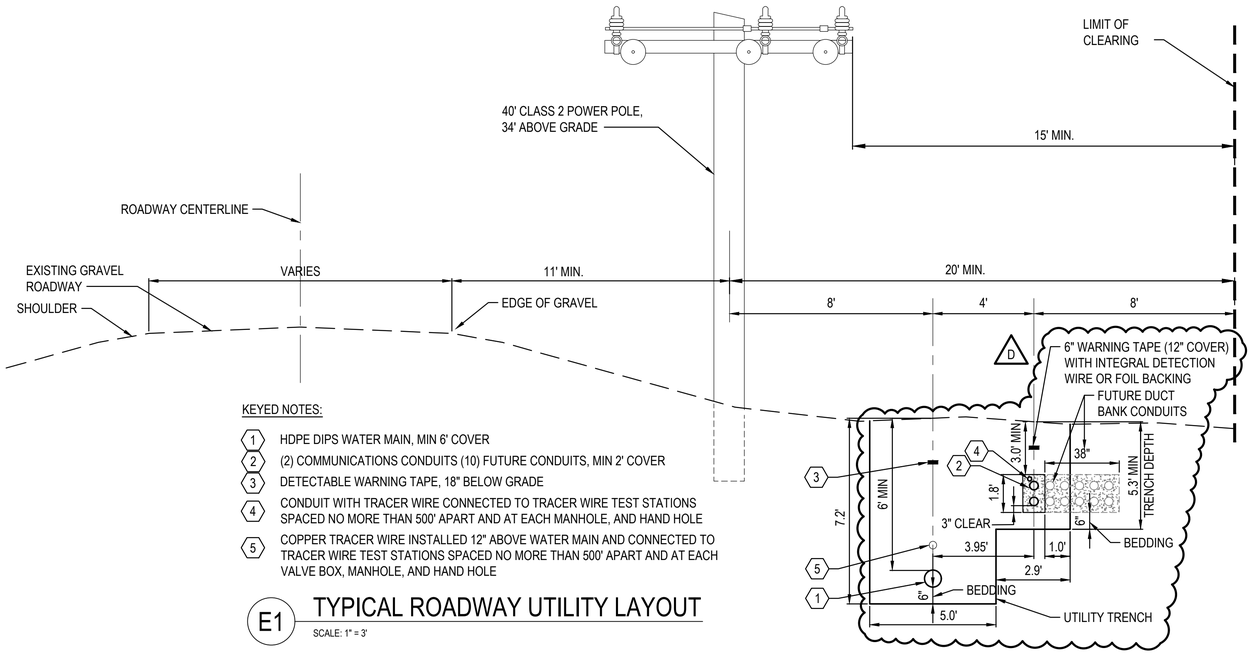

KEYED NOTES:

1. HDPE DIPS WATER MAIN, MIN 6' COVER
2. (2) COMMUNICATIONS CONDUITS (10) FUTURE CONDUITS, MIN 2' COVER
3. DETECTABLE WARNING TAPE, 18" BELOW GRADE
4. CONDUIT WITH TRACER WIRE CONNECTED TO TRACER WIRE TEST STATIONS SPACED NO MORE THAN 500' APART AND AT EACH MANHOLE, AND HAND HOLE
5. COPPER TRACER WIRE INSTALLED 12" ABOVE WATER MAIN AND CONNECTED TO TRACER WIRE TEST STATIONS SPACED NO MORE THAN 500' APART AND AT EACH VALVE BOX, MANHOLE, AND HAND HOLE

E1 TYPICAL ROADWAY UTILITY LAYOUT

SCALE: 1" = 3'

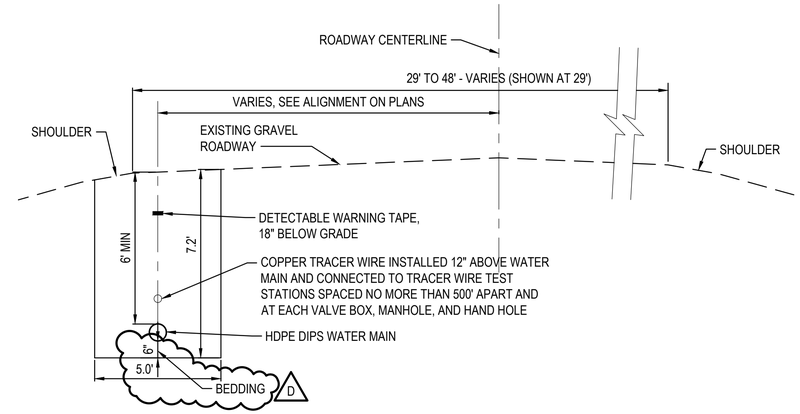

E7 MAIN TANK TRAIL ROADWAY UTILITIES

SCALE: 1" = 3' STA: 300+00 TO 412+00

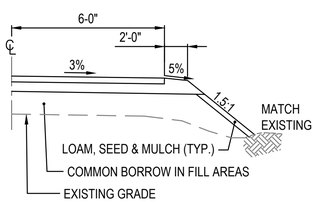

C1 GRAVEL ROAD SECTION AT WETLAND FILL

SCALE: NOT TO SCALE

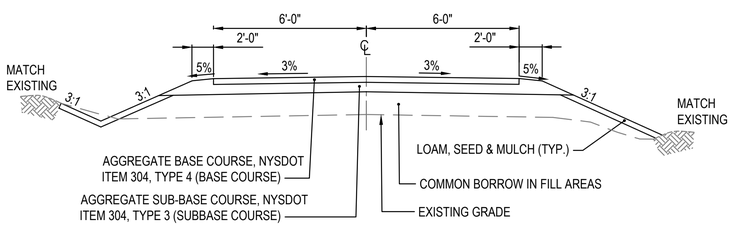

A1 TYPICAL GRAVEL WELL ACCESS ROAD SECTION

SCALE: NOT TO SCALE STA: 600+00 TO 612+72, AND 700+00 TO 712+59

US Army Corps of Engineers®

MARK	DESCRIPTION	DATE
D	REVISED PER RPI	08/03/2026
C	FINAL DB-RFP	05/20/2026
B	PRE-FINAL DB-RFP	02/27/2026
A	DRAFT DB-RFP	01/13/2026

ISSUE DATE: 05/20/2026
SOLICITATION NO.:
CONTRACT NO.:
DRAWING CODE:
SHEET 46 OF 66

DESIGNED BY: LDA
DRAWN BY: DSE
CHECKED BY: HLS
SUBMITTED BY: RJC
SIZE: ANSI D
SCALE: AS SHOWN

U.S. ARMY CORPS OF ENGINEERS
NEW YORK DISTRICT
26 FEDERAL PLAZA
NEW YORK, NY 10278

474 York St
Portland, ME
04101
207.553.7753

FORT DRUM - WELLS FIELD EXPANSION DB-RFP
FORT DRUM, NEW YORK

ROADWAY AND UTILITY
TYPICAL SECTIONS

SHEET ID
C-501