U.S. FISH & WILDLIFE SERVICE

Kirwin NWR
Replacement of Multiple Boat Ramps

VICINITY MAP
NO SCALE

APPROVAL SIGNATURES

REGIONAL ENGINEER	DATE
SAFETY	DATE
CULTURAL RESOURCES	DATE

NOTE TO BIDDERS:
ANY PRINT ACCOMPANYING THIS INVITATION TO BID MAY BE A REDUCED REPRODUCTION OF THE WORKING DRAWINGS. IF LINE BELOW DOES NOT MEASURE SIX INCHES IN LENGTH, THE INDICATED SCALES ARE TO BE ADJUSTED ACCORDINGLY.

UNITED STATES DEPARTMENT OF THE INTERIOR
FISH AND WILDLIFE SERVICE
REGION 6 ENGINEERING – DENVER, COLORADO

Kirwin
National Wildlife Refuge

Philips Kansas

Replacement of Multiple Boat Ramps
Kirwin NWR
Replacement of Multiple Boat Ramps

DESIGNED: KA	DRAWN: KA	CHECKED:	MAW
DATE: 08/06/2022	DRAWING NO. 6R-KS-461-100		SHEET 1 OF 4

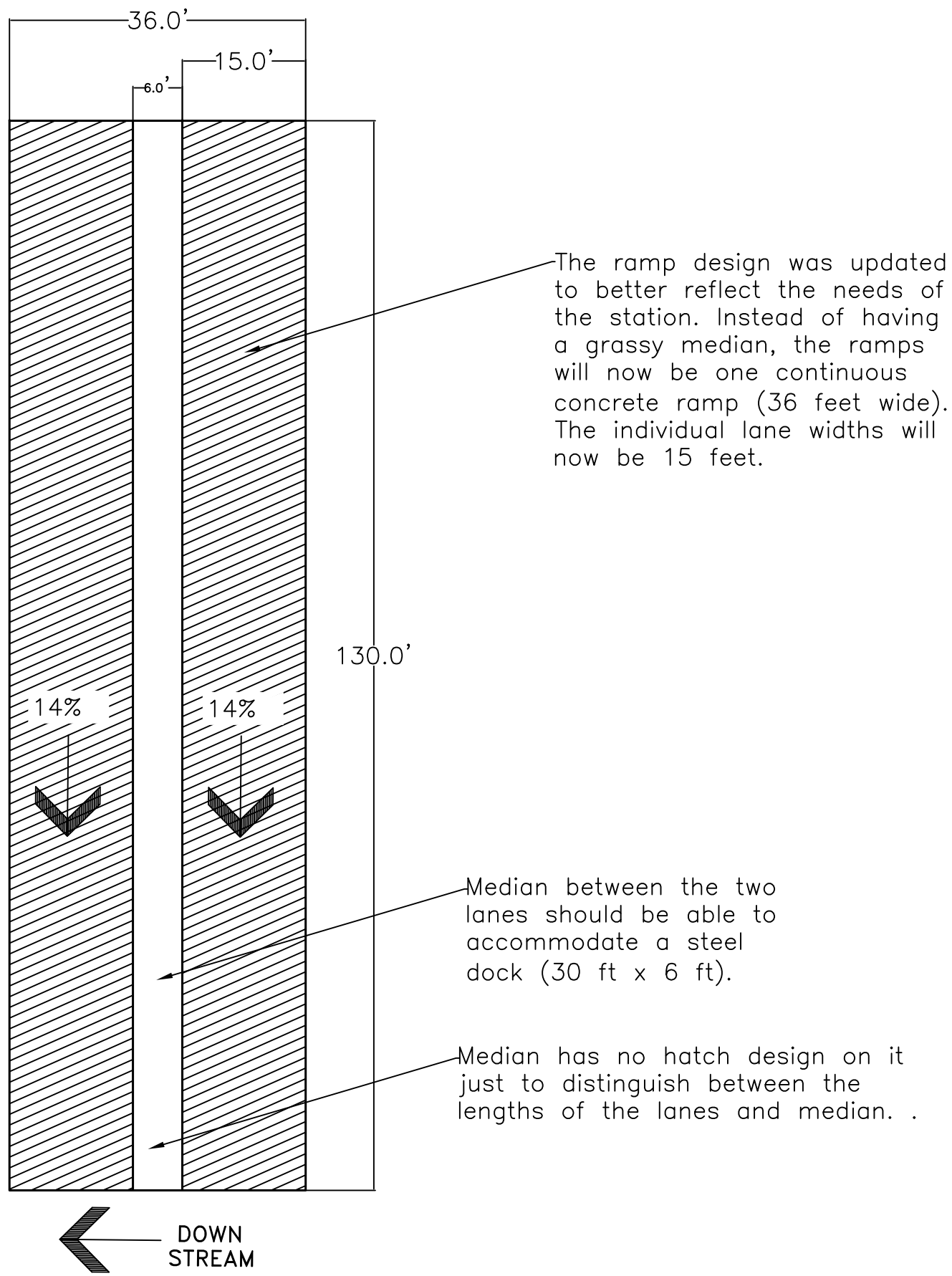

AERIAL OF EXISTING BOAT RAMP

NO SCALE

EXISTING BOAT RAMP

NO SCALE

Kirwin NWR NORTH SHORE Replacement of Multiple Boat Ramps					SUB-SHEET
DESIGNED KA	DRAWN KA	CHECKED MAW	DATE 05/01/2026	DRAWING NO. 6R-KS-461-100	SHEET 2 OF 4

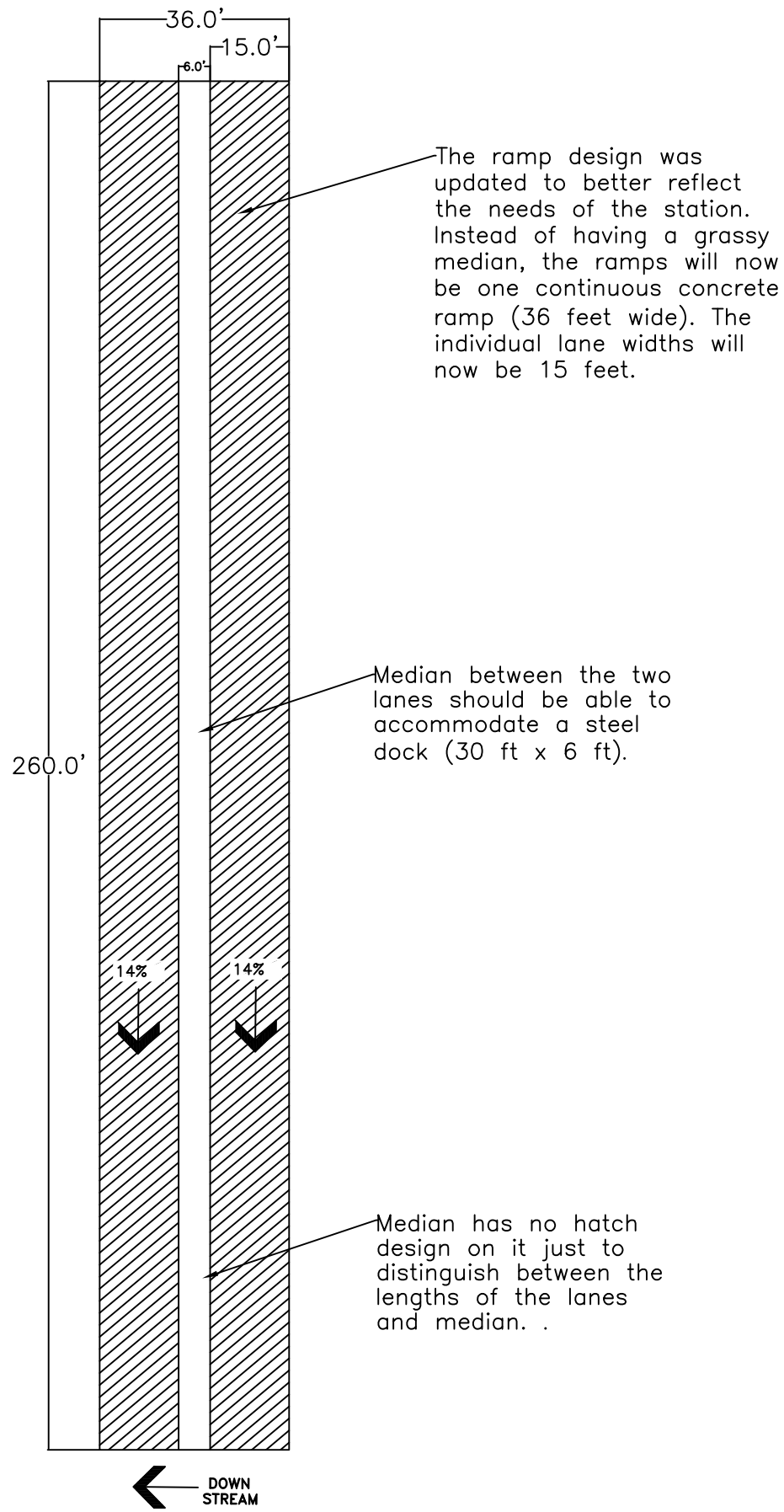

The ramp design was updated to better reflect the needs of the station. Instead of having a grassy median, the ramps will now be one continuous concrete ramp (36 feet wide). The individual lane widths will now be 15 feet.

Median between the two lanes should be able to accommodate a steel dock (30 ft x 6 ft).

Median has no hatch design on it just to distinguish between the lengths of the lanes and median. .

AERIAL OF EXISTING BOAT RAMP
NO SCALE

EXISTING BOAT RAMP
NO SCALE

Kirwin NWR SOUTH SHORE Replacement of Multiple Boat Ramps					SUB-SHEET
DESIGNED KA	DRAWN KA	CHECKED MAW	DATE 05/01/2026	DRAWING NO. 6R-KS-461-100	SHEET 3 OF 4

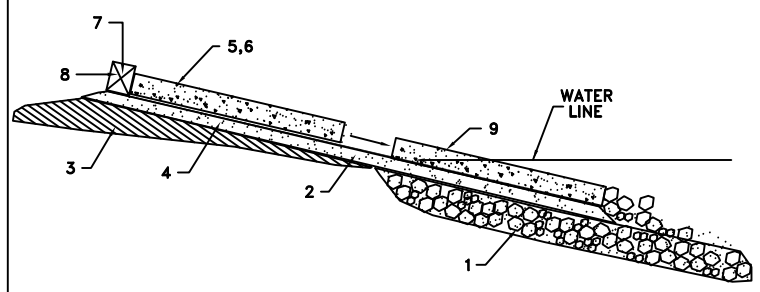

SUGGESTED METHOD FOR PLACEMENT OF CONCRETE BOAT RAMP PAVEMENT UNDER WATER. CONTRACTOR MAY CHOOSE ANY METHOD WHICH OBTAINS SATISFACTORY RESULTS.

1. PLACE RIPRAP STONE IN WATER TO WITHIN SIX (6) INCHES OF THE FINAL SUB-GRADE FOR CONCRETE SLAB. PLACE GRADE STAKES AND STRINGLINE IN WATER TO SET GRADE.
2. PLACE SIX (6) INCHES OF CRUSHED STONE (3/4 INCH) ON TOP OF RIPRAP TO FILL VOIDS. AFTER FILLING VOIDS THERE SHOULD BE A MINIMUM OF TWO (2) INCHES OF CRUSHED STONE ON TOP OF THE RIPRAP. GRANULAR BASE SHOULD THEN BE TO FINAL GRADE.
3. PLACE TEMPORARY FILL ON EXISTING GRADE IN ORDER TO POUR THE FIRST SECTION OF THE RAMP.
4. PLACE TWO (2) INCHES OF CRUSHED STONE (3/4 INCH) ON TOP OF TEMPORARY FILL AND THEN PLACE TWO (2) LAYERS OF SIX (6) MIL POLYETHYLENE ON TOP.
5. PLACE CONCRETE (4000-4500 PSI) FOR THE FIRST SLAB ON THE TEMPORARY FILL. TAKE THREE (3) CYLINDERS FOR TESTING.
6. LET POURED CONCRETE RAMP CURE FOR MINIMUM OF TWO WEEKS. UNLESS 7 DAY TEST EXCEEDS 3200 PSI. THEN RAMP CAN BE PUSHED AFTER 7 DAYS. SECOND CYLINDER WOULD BE TESTED AT 14 DAYS.
7. BEFORE SLAB IS PUSHED BEND EXPOSED REBARS UP. PLACE WOOD TIMBER (4 INCH PLANKS ARE USUALLY SUFFICIENT BUT TIMBER UP TO 12 INCH BY 12 INCH HAS BEEN USED) AGAINST END OF RAMP.
8. USE DOZER TO PUSH RAMP INTO PLACE.
9. CHECK FINAL LOCATION AND GRADE!
10. FORM AND PLACE OUT OF WATER RAMP SECTION.

NOTE:
IF SLAB IS NOT AT PROPER GRADE IT CAN BE REMOVED BY PLACING A CABLE AROUND SLAB AND PULLING IT OUT OF THE WATER WITH A DOZER. GRADE CAN THEN BE CORRECTED.

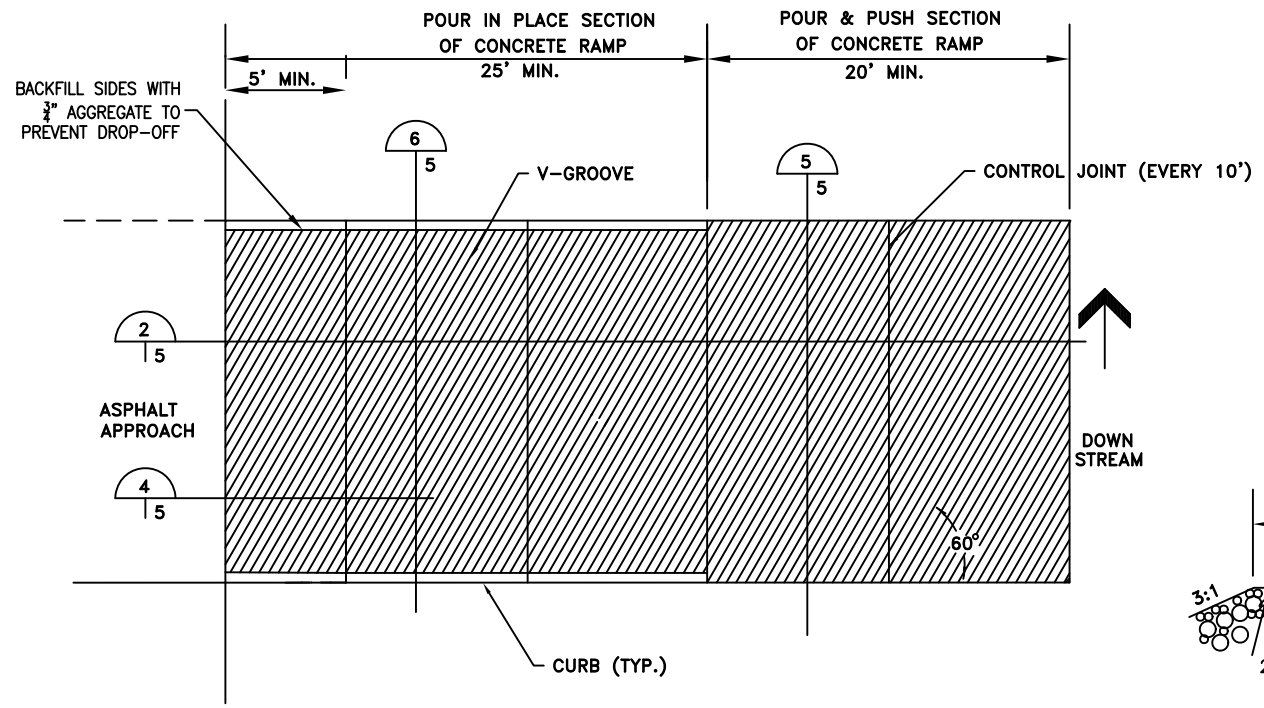

PLAN VIEW

NTS

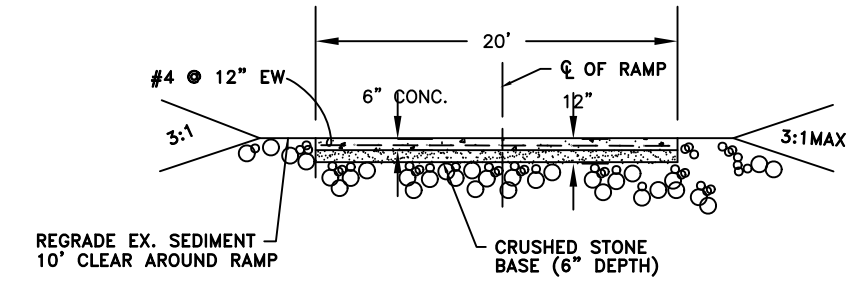

POUR & PUSHED SECTION OF RAMP

NTS

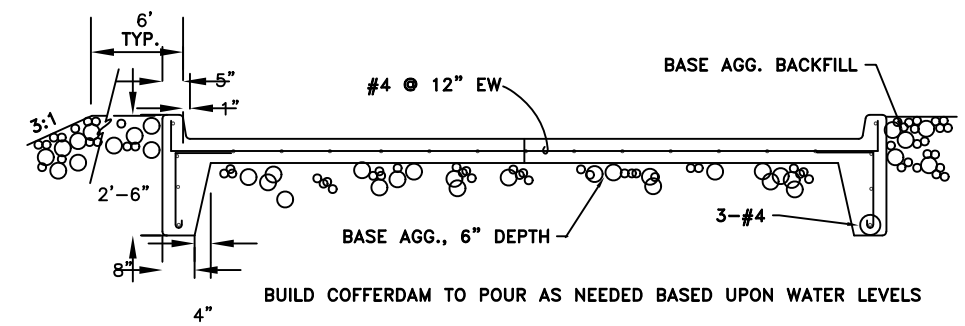

POURED IN PLACE SECTION OF RAMP

NTS

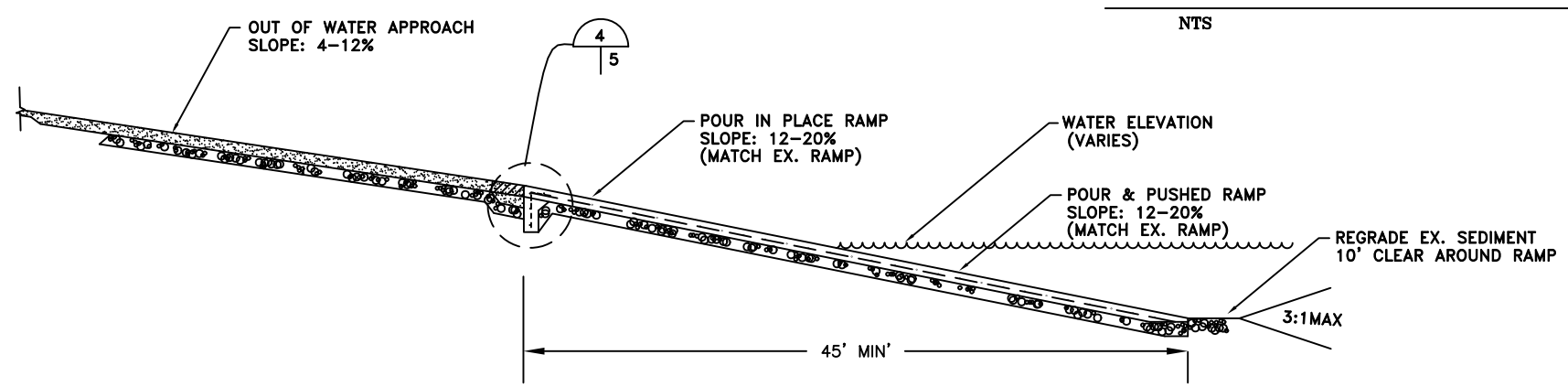

CONCRETE RAMP SECTION

NTS

NOTES:
1. ALL EXPOSED EDGES OF CONCRETE TO BE BEVELED WITH 3/4" CHAMFER STRIP.

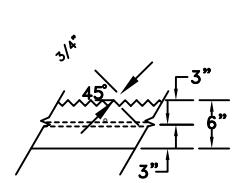

CONCRETE RAMP V-GROOVE DETAIL

NTS

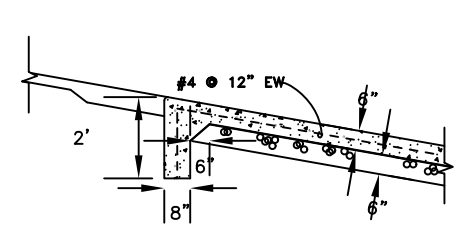

CONCRETE RAMP JOINT DETAIL

NOT TO SCALE

Kirwin NWR					SUB-SHEET
Details					
Replacement of Multiple Boat Ramps					
DESIGNED KA	DRAWN KA	CHECKED MAW	DATE 05/01/2026	DRAWING NO. 6R-KS-461-100	SHEET 4 OF 4