NOSE LANDING GEAR LUBRICATION.

CAUTION

All landing gear component lubrication points shall be inspected for damage, security, and serviceability prior to lubrication. Any damaged grease fittings shall be replaced prior to lubrication. Any grease fittings that cannot be replaced or secured during replacement will be cause for component replacement.

1. Inspect lubrication fittings for damage, security, and serviceability.

NOTE

- Lubrication performed to fulfill phased inspection requirements shall be accomplished with aircraft on fuselage jacks and before landing gear operational checkout. Not applicable to aircraft authorized to be inspected under contingency phase criteria.
- Lubricant shall be forced from flanges of both forward and aft bushings in drag brace fuselage attachment fitting until new grease is evident at both locations.

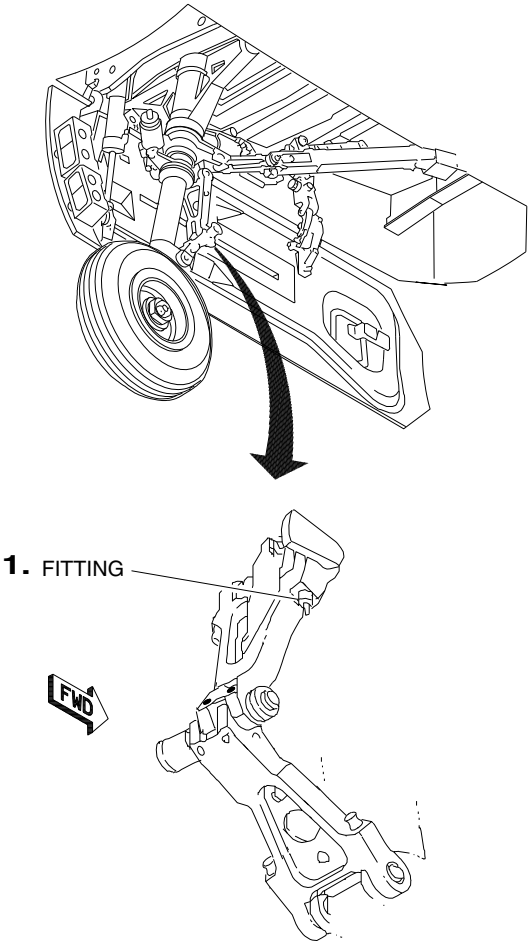

AM–12JG–00–2–7111X40

2. Lubricate drag brace fuselage attachment fitting using grease (MIL-G-21164 or MIL-PRF-23827).

3. Lubricate drag pin assembly fitting using grease (MIL-G-21164 or MIL-PRF-23827).

4. Lubricate two steering collar assembly fittings using grease (MIL-G-21164 or MIL-PRF-23827).

5. Lubricate two steering actuator mounting trunnion fittings using grease (MIL-G-21164 or MIL-PRF-23827).

6. Lubricate two strut housing assembly fittings using grease (MIL-G-21164 or MIL-PRF-23827).

7. Lubricate beam assembly fitting (right side) using grease (MIL-G-21164 or MIL-PRF-23827).

8. Lubricate aft nose landing gear door hinge fitting using grease (MIL-G-21164 or MIL-PRF-23827).

9. Lubricate forward nose landing gear door hinge pin fitting using grease (MIL-G-21164 or MIL-PRF-23827).

10. Lubricate two steering actuator attachment pin fittings using grease (MIL-G-21164 or MIL-PRF-23827).

11. Lubricate steering actuator rod end fitting using grease (MIL-G-21164 or MIL-PRF-23827).

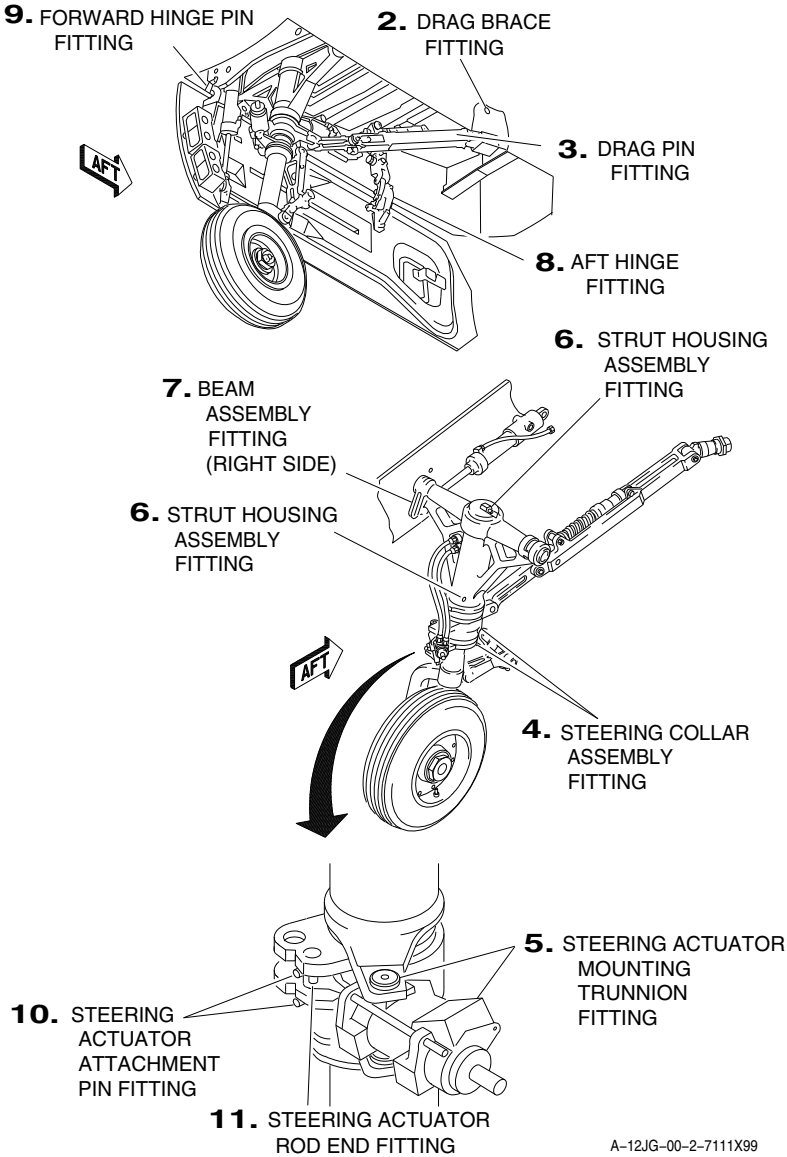

A–12JG–00–2–7111X99

12. Lubricate four upper drag brace fittings using grease (MIL-G-21164 or MIL-PRF-23827).

13. Lubricate downlock toggle pivot fitting using grease (MIL-G-21164 or MIL-PRF-23827).

14. Lubricate four downlock link pivot pin fittings (two left side and two right side) using grease (MIL-G-21164 or MIL-PRF-23827).

15. Lubricate two lower drag brace attachment lugs using grease (MIL-G-21164 or MIL-PRF-23827).

16. Lubricate two lower drag brace fittings using grease (MIL-G-21164 or MIL-PRF-23827).

NOTE

Lubricant shall be forced from beam assembly bushing flange face.

17. Lubricate beam assembly fitting (left side) using grease (MIL-G-21164 or MIL-PRF-23827).

18. Lubricate four upper torque arm fittings using grease (MIL-G-21164 or MIL-PRF-23827).

19. Lubricate four lower torque arm fittings using grease (MIL-G-21164 or MIL-PRF-23827).

20. Lubricate retract actuator piston rod using oil (MIL-PRF-32033).

21. Lubricate downlock actuator spring and piston using oil (MIL-PRF-32033).

22. Lubricate door actuator piston rod using oil (MIL-PRF-32033).

23. Disconnect retract actuator rod end if required to access grease fitting (JG32-39-01).

24. Lubricate retract actuator fitting using grease (MIL-G-21164 or MIL-PRF-23827).

25. Connect retract actuator rod end if disconnected (JG32-39-01).

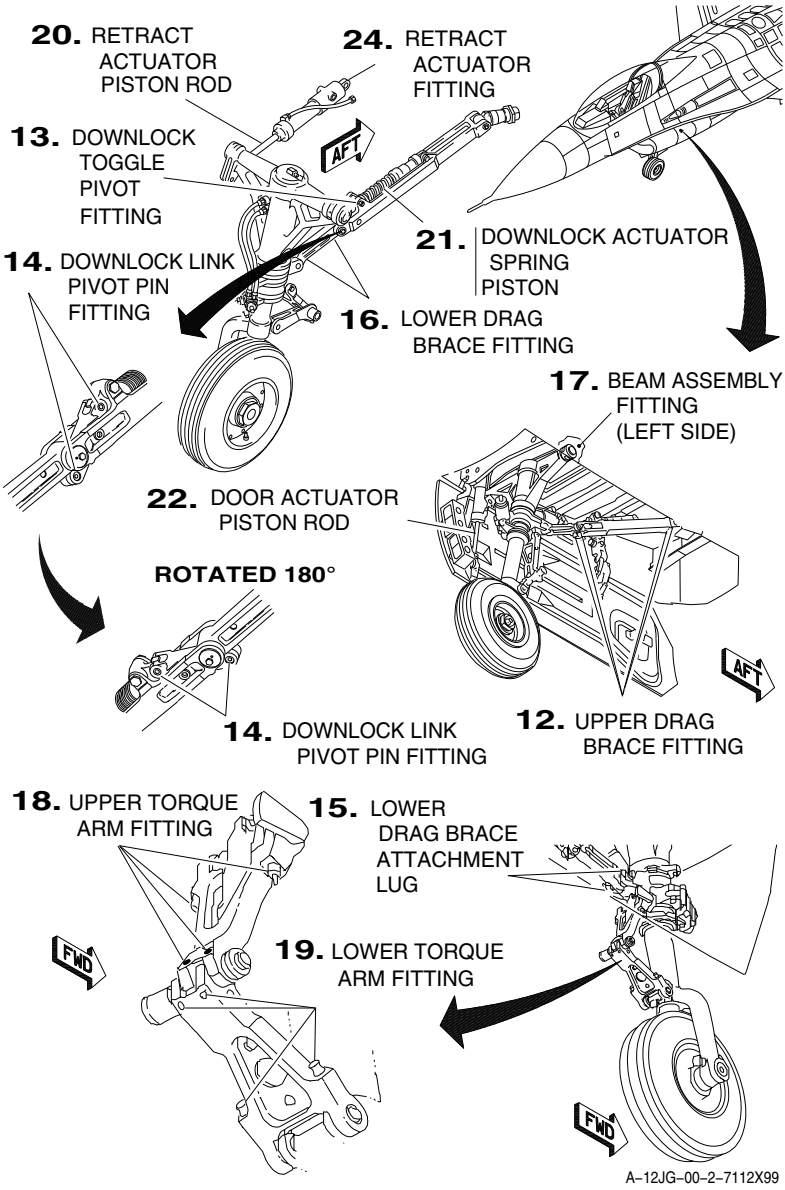

A–12JG–00–2–7112X99

MAIN LANDING GEAR LUBRICATION.

CAUTION

- All landing gear component lube points shall be inspected for damage, security, and serviceability prior to lubrication. Any damage to high-pressure fittings shall be cause for component replacement. Failure to comply may result in damage to landing gear components.
- Inspect all fittings for serviceability prior to lubrication. Inspect all non-pressed low and high-pressure lubrication fitting (part number MS15001-1) for damage, security, and serviceability. Replace if necessary. Inspect the threaded bore for damage prior to installing fitting. Torque fitting 10-20 inch-pounds. Torque exceeding 20 inch-pounds may damage landing gear threaded bore requiring replacement of landing gear components.

1. Inspect lubrication fittings for damage, security, and serviceability.

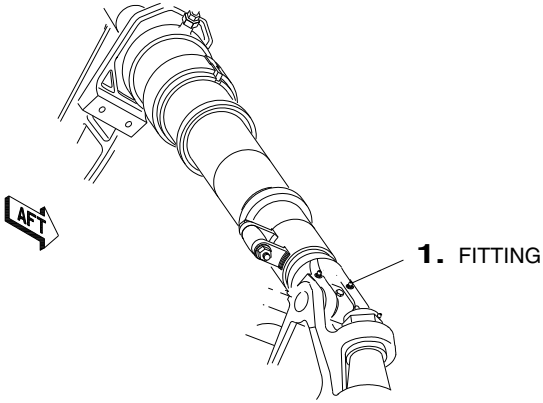

(TYPICAL)

AM–12JG–00–2–7112X40

NOTE

- Lubrication performed to fulfill phased inspection requirements shall be accomplished with aircraft on fuselage jacks (JG07-10-01) and before landing gear operational checkout (JG32-00-01). Not applicable to aircraft authorized to be inspected under contingency phase criteria.
- Lubrication procedures for left and right main landing gears are identical; therefore, only right procedure is given.
- Shock strut fitting is located on shock strut aft surface on right side and located on forward surface on left side.

2. Lubricate fitting at upper end of main landing gear shock strut using grease (MIL-G-21164 or MIL-PRF-23827).

NOTE

Grease shall be forced from flanges of both forward and aft bushings in tension strut attachment pin.

3. Lubricate fitting at upper end of tension strut using grease (MIL-G-21164 or MIL-PRF-23827).
4. Lubricate retract actuator fitting using grease (MIL-G-21164 or MIL-PRF-23827).
5. Lubricate retract actuator rod end fitting using grease (MIL-G-21164 or MIL-PRF-23827).
6. Lubricate two drag pin bulkhead fittings using grease (MIL-G-21164 or MIL-PRF-23827).
7. Lubricate four upper drag brace fittings and drag pin fitting using grease (MIL-G-21164 or MIL-PRF-23827).
8. Lubricate two lower drag brace (upper end) fittings using grease (MIL-G-21164 or MIL-PRF-23827).
9. Lubricate eight tension strut collar fittings using grease (MIL-G-21164 or MIL-PRF-23827).
10. Lubricate four fittings at lower end of tension strut using grease (MIL-G-21164 or MIL-PRF-23827).

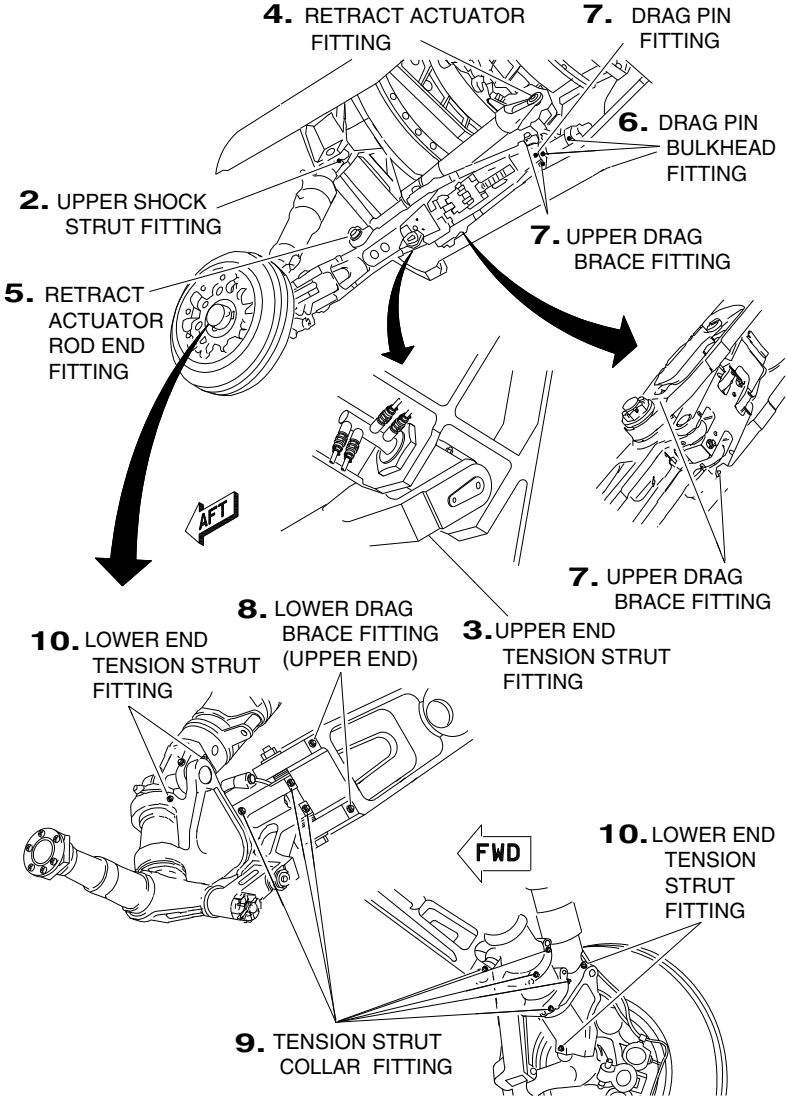

A–12JG–00–2–7121X99

11. Lubricate lower shock strut (outboard fittings only) using grease (MIL-G-21164 or MIL-PRF-23827).

12. Lubricate connecting link assembly and connecting link pin fittings using grease (MIL-G-21164 or MIL-PRF-23827).

13. Lubricate downlock actuator spring and piston using oil (MIL-PRF-32033).

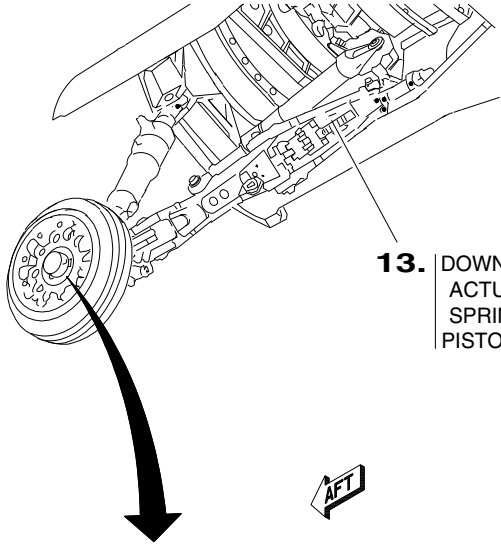

11. LOWER SHOCK STRUT FITTING
(OUTBOARD ONLY)

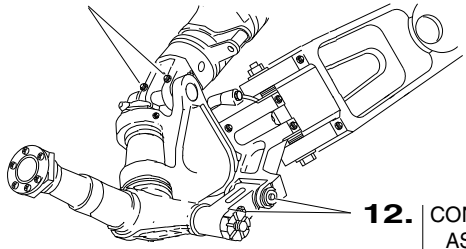

A–12JG–00–2–7122X99

14. Lubricate main landing gear door aft hinge fitting using grease (MIL-G-21164 or MIL-PRF-23827).

15. Lubricate main landing gear door middle hinge fitting using grease (MIL-G-21164 or MIL-PRF-23827).

16. Lubricate main landing gear door actuator support fitting using grease (MIL-G-21164 or MIL-PRF-23827).

17. Lubricate main landing gear door aft beam fitting using grease (MIL-G-21164 or MIL-PRF-23827).

18. Lubricate four main landing gear uplock lower link fittings using grease (MIL-G-21164 or MIL-PRF-23827).

19. Lubricate two main landing gear uplock upper link fittings using grease (MIL-G-21164 or MIL-PRF-23827).

20. Lubricate main landing gear uplock hook assembly fitting using grease (MIL-G-21164 or MIL-PRF-23827).

21. Lubricate four uplock bracket assembly fittings using grease (MIL-G-21164 or MIL-PRF-23827).

22. Lubricate retract actuator piston rod using oil (MIL-PRF-32033).

23. Lubricate door actuator piston rod using oil (MIL-PRF-32033).

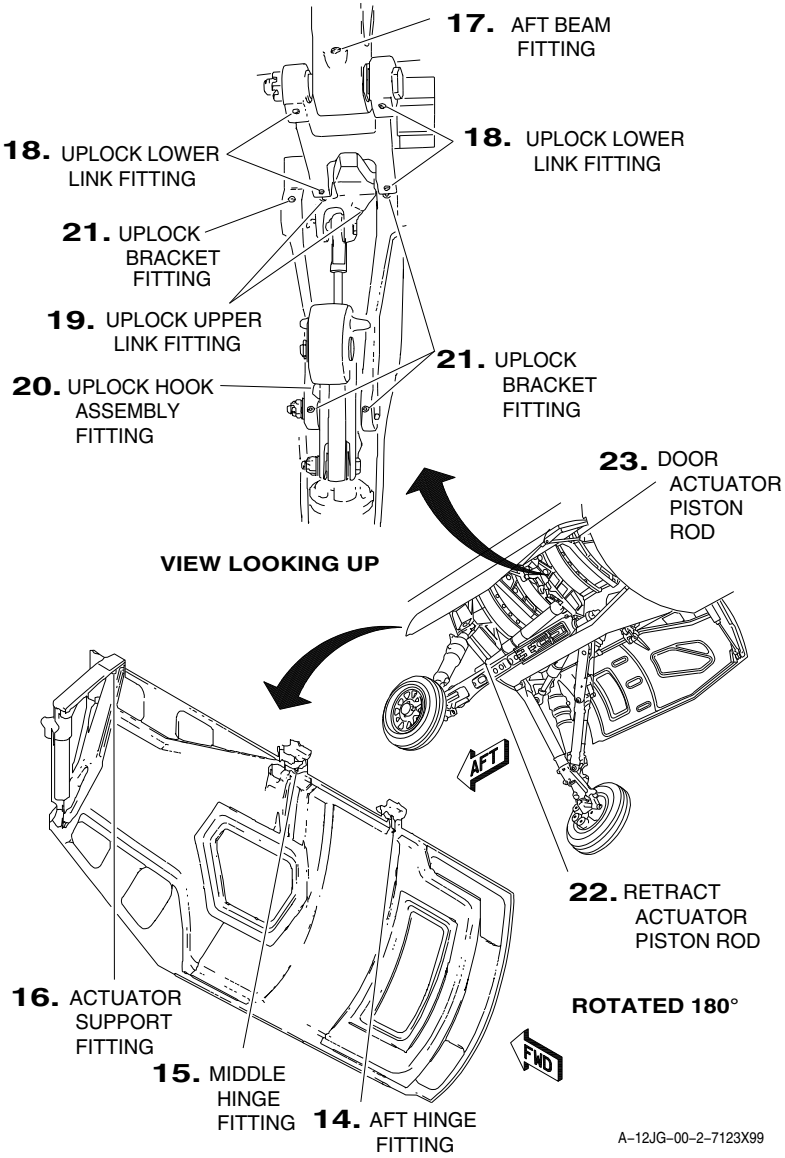
17. AFT BEAM FITTING
18. UPLOCK LOWER LINK FITTING
18. UPLOCK LOWER LINK FITTING
21. UPLOCK BRACKET FITTING
19. UPLOCK UPPER LINK FITTING
20. UPLOCK HOOK ASSEMBLY FITTING
21. UPLOCK BRACKET FITTING
23. DOOR ACTUATOR PISTON ROD
VIEW LOOKING UP
AFT
22. RETRACT ACTUATOR PISTON ROD
16. ACTUATOR SUPPORT FITTING
ROTATED 180°
FWD
15. MIDDLE HINGE FITTING
14. AFT HINGE FITTING
A–12JG–00–2–7123X99

24. Lubricate JFS pump handle piston rod using preservative oil.

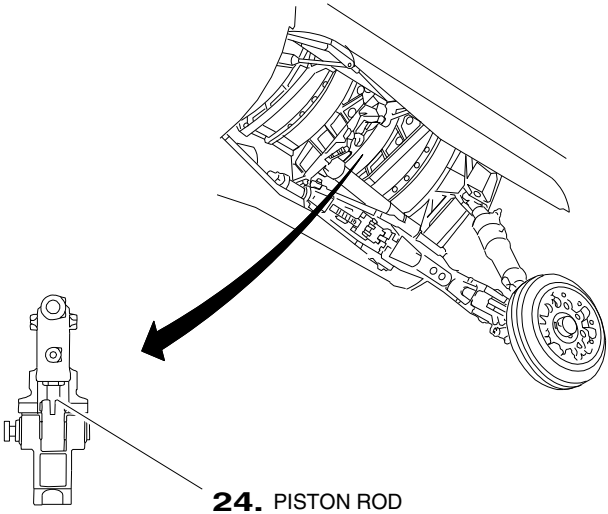

A–12JG–00–2–7124X99

25. Lubricate two shock strut bulkhead fittings using molybdenum disulfide grease or aircraft grease (MIL-G-21164 or MIL-PRF-23827).

26. Lubricate two tension strut bulkhead fittings using molybdenum disulfide grease or aircraft grease (MIL-G-21164 or MIL-PRF-23827).

27. Lubricate six drag brace upper toggle assembly fittings using molybdenum disulfide grease or aircraft grease (MIL-G-21164 or MIL-PRF-23827).

28. Lubricate five drag brace center link assembly fittings using molybdenum disulfide grease or aircraft grease (MIL-G-21164 or MIL-PRF-23827).

29. Lubricate four drag brace assembly fittings using molybdenum disulfide grease or aircraft grease (MIL-G-21164 or MIL-PRF-23827).

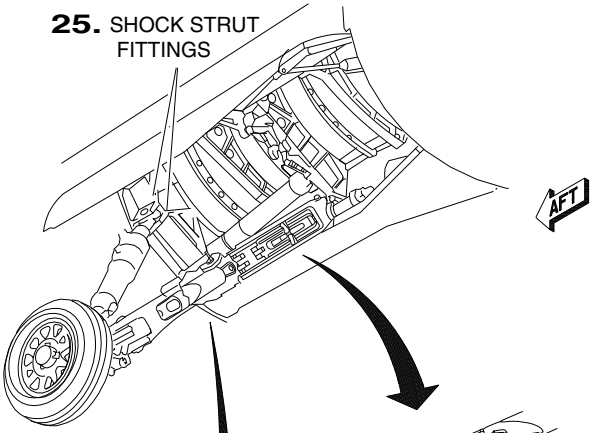

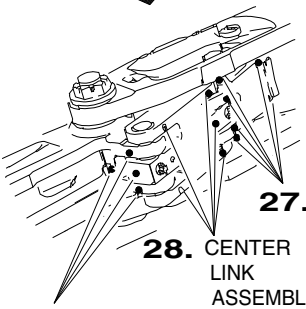

VIEW LOOKING UP

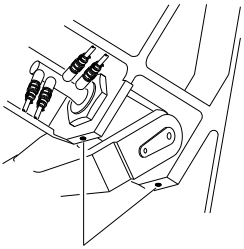

AM–12JG–00–2–7125X40

SPEED BRAKE LUBRICATION.

NOTE

Lubrication procedures for left and right speedbrakes are identical; therefore, only right procedure is given.

1. Lubricate two upper speedbrake door hinge assembly fittings using grease (MIL-G-21164 or MIL-PRF-23827).
2. Lubricate two lower speedbrake door hinge assembly fittings using grease (MIL-G-21164 or MIL-PRF-23827).
3. Lubricate four upper and four lower link assembly fittings using grease (MIL-G-21164 or MIL-PRF-23827).
4. Lubricate two upper seal and link assemblies (3 places each) using oil (MIL-PRF-32033 or MIL-PRF-7808).
5. Lubricate lower fairing assembly (2 places) and speedbrake rod assembly (2 places each end) using oil (MIL-PRF-32033 or MIL-PRF-7808).

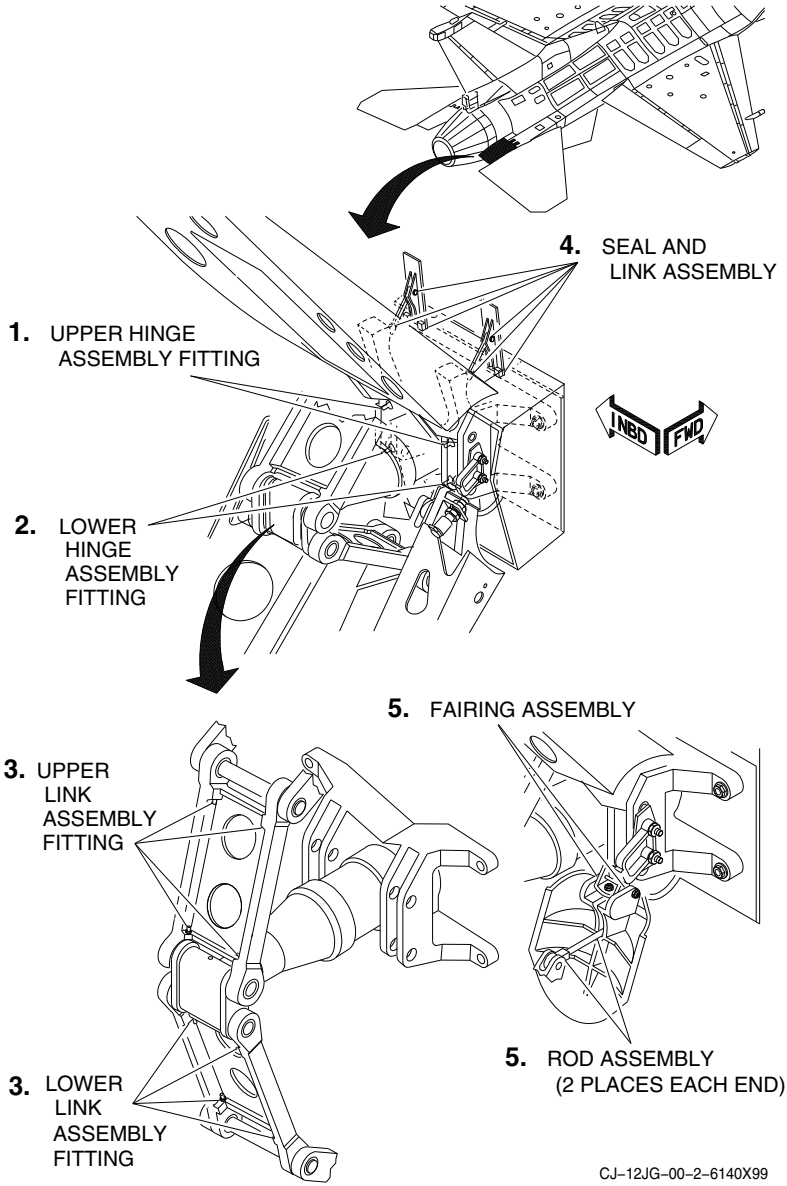
4. SEAL AND LINK ASSEMBLY
1. UPPER HINGE ASSEMBLY FITTING
INBD
FWD
2. LOWER HINGE ASSEMBLY FITTING
5. FAIRING ASSEMBLY
3. UPPER LINK ASSEMBLY FITTING
5. ROD ASSEMBLY (2 PLACES EACH END)
3. LOWER LINK ASSEMBLY FITTING
CJ–12JG–00–2–6140X99