ITEM NO.	PART NUMBER	DESCRIPTION	QTY.
1	LANDING PLATFORM BASE PART–R1	FABRICATION	1
2	PAD–UHMWPE–R1	FENDER PAD–CENTRAL	4
3	PAD–UHMWPE – CENTER–R1	FENDER PAD – CENTER HORIZONTAL	1
4	PAD–UHMWPE – ENDS–R1	PAD–END HORIZONTAL	2
5	McNICHOLS PRODUCTS – F261111C51	MOLDED FIBERGLASS GRATING 60x120	1
6	McNICHOLS PRODUCTS – F261111C51	MOLDED FIBERGLASS GRATING – CUT TO LENGTH	1
7	FENDER–4 INCH – DB100 – DURAMAX–R1	FENDER–4 INCH DURAMAX	1
8	WASHER STRIP–4 INCH FENDER–DURAMAX–R1	FENDER WASHER STRIP – 4 INCH DURAMAX	1
9	NONE	12" CLEAT	2
10	1/2" UNC x 3–1/2" 316 BOLTS W/ NUTS, WASHERS	UHMWPE FENDER HARDWARE	130
11	1/2" UNC SS NUTS AND WASHERS	DURAMAX HADWARE	14

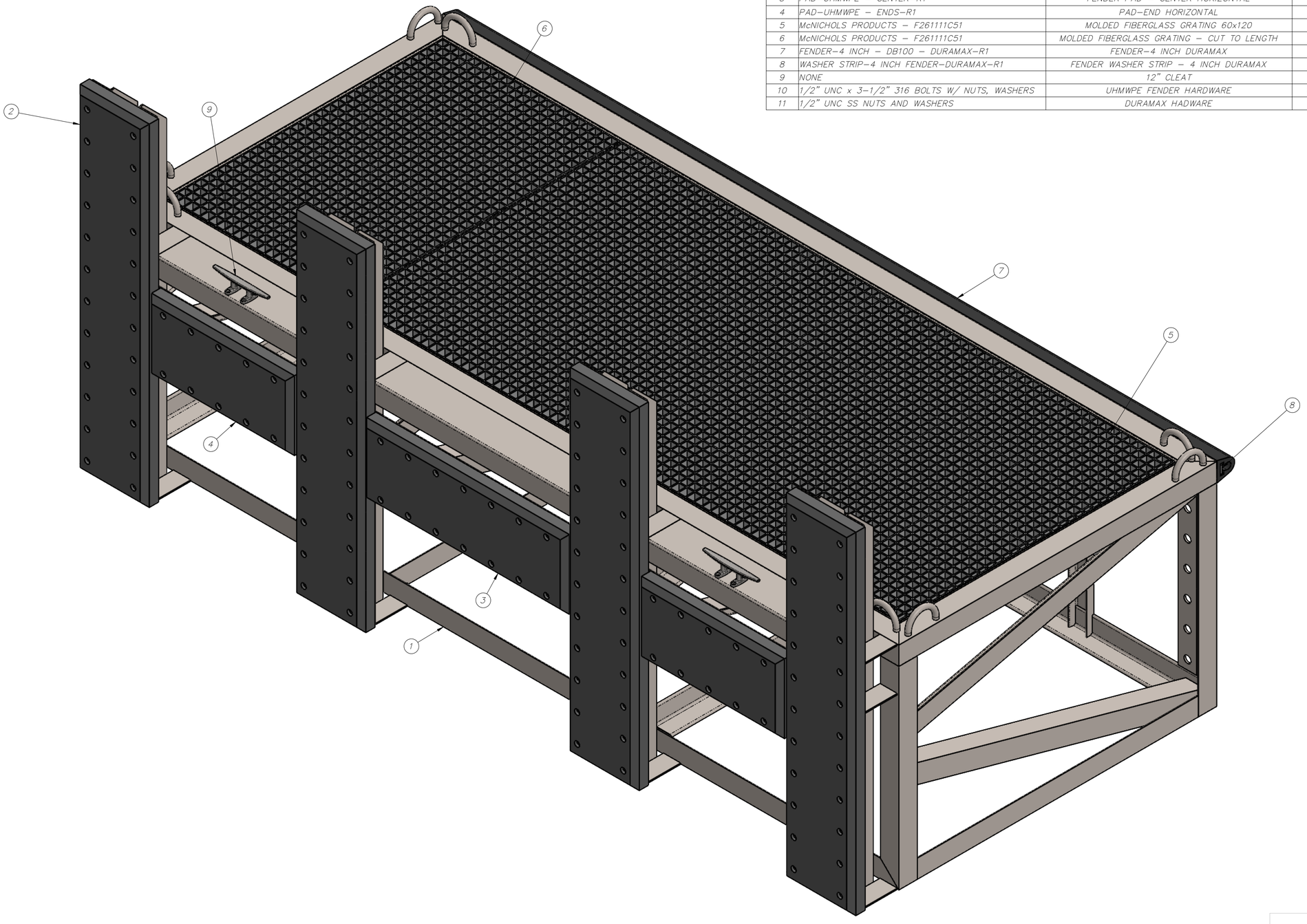

REVISIONS

ZONE	REV.	DESCRIPTION	DATE	APPROVED

GENERAL NOTES

1. ALL MATERIAL IS 316L STAINLESS STEEL
2. FILLER METAL IS ER316L
3. WELDING IS 1/4" FILLET ALL AROUND UNLESS OTHERWISE SHOWN
4. ALL HADWARE IS 316 OR EQUIVALENT
5. SHEET FENDERING IS UHMWPE PER ASTM D6712, BLACK
6. AFT FACE FENDERING IS DURAMAX 4" WITH WASHER BACKING PER MFGR
7. SCOTCH BRIGHT AND POLISH WELD AFFECTED ZONES
8. ASSEMBLY WEIGHT IS 3,717lbs
9. STAINLESS FABRICATION WEIGHT 2,662lbs
10. FASTEN GRATING TO RIM WITH STAINLESS STEEL CLIPS FROM MANUFACTURER (McNICHOLS). TYPE J2 AND TYPE M2 WITH INTEGRAL HARDWARE, 12" ON CENTER NOMINAL AROUND RIM. NO CLIPS REQUIRED IN FIELD OF GRATING

DEES DESIGN & ENGINEERING

UNLESS OTHERWISE SPECIFIED:
DIMENSIONS ARE IN INCHES
TOLERANCES:
FRACTIONAL± 1/16"
ANGLE: MACH± 0.05 BEND ±0.5
TWO PLACE DECIMAL ±0.010
THREE PLACE DECIMAL ±0.005
INTERPRET GEOMETRIC TOLERANCING PER: ANSI Y14.5
MATERIAL
FINISH
DO NOT SCALE DRAWING

	NAME	DATE
DRAWN	B.DEES	7/6/26
CHECKED	B.DEES	7/6/26
ENG APPR.		
MFG APPR.		
Q.A.		

PROPRIETARY AND CONFIDENTIAL
THE INFORMATION CONTAINED IN THIS DRAWING IS THE SOLE PROPERTY OF DDE, LLC. ANY REPRODUCTION IN PART OR AS A WHOLE WITHOUT THE WRITTEN PERMISSION OF DDE, LLC IS PROHIBITED.

Dees Design and Engineering, LLC
www.deesdesigneng ineering.com 510-691-2009

TITLE: MARAD LANDING PLATFORM–R1 ASSEMB AND DETAILS

SIZE D | DWG. NO. 26022 - 10 | REV –

SCALE: 1:16 WEIGHT: 3,717 | SHEET 1 OF 5

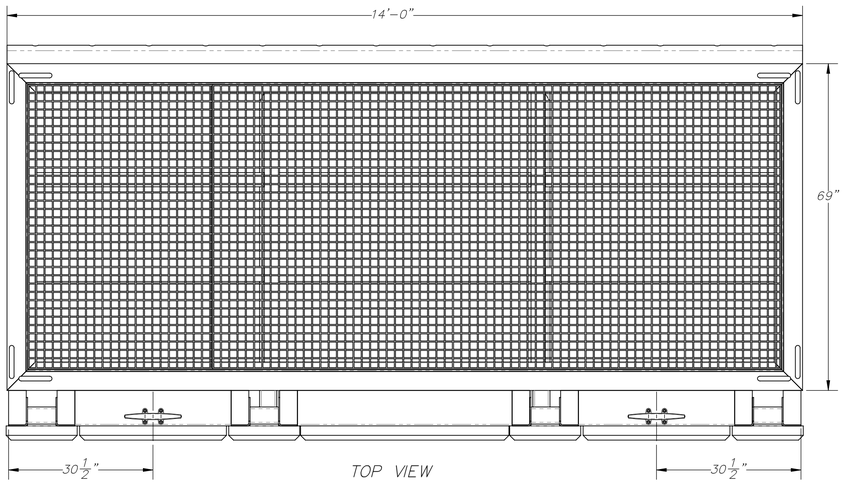

TOP VIEW

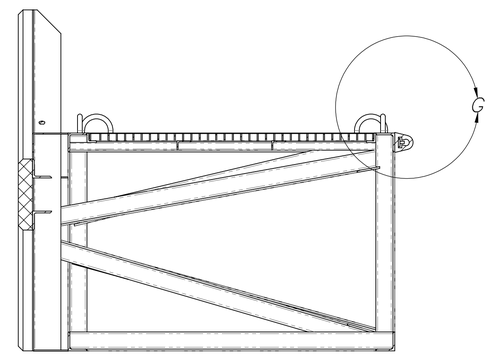

SECTION F-F

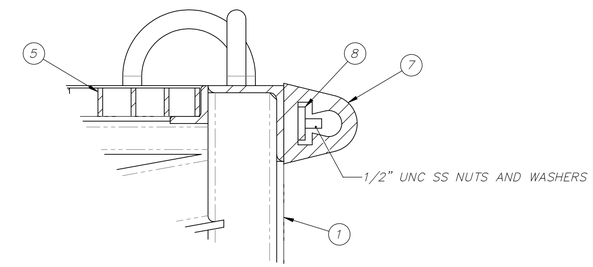

DETAIL G
SCALE 1 : 4

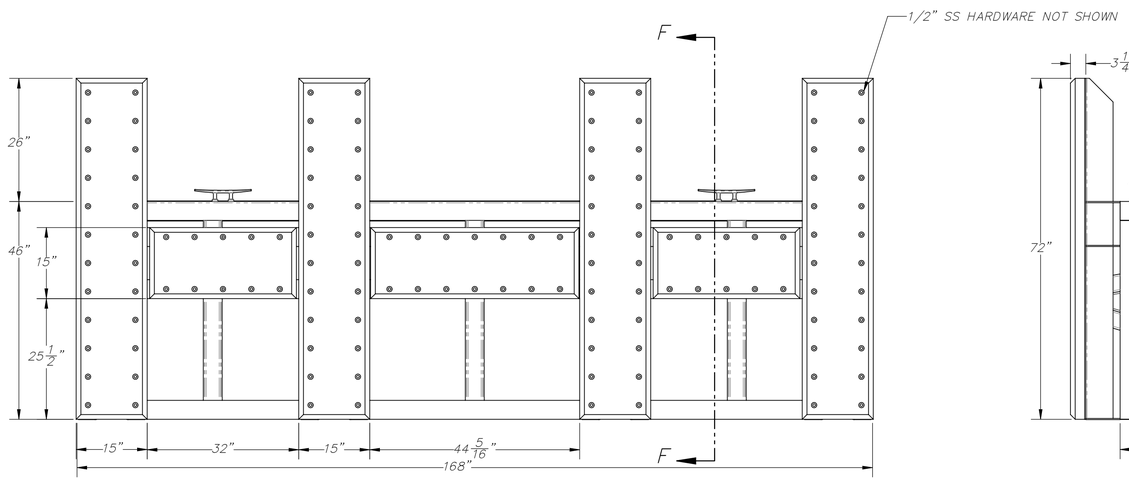

FRONT VIEW

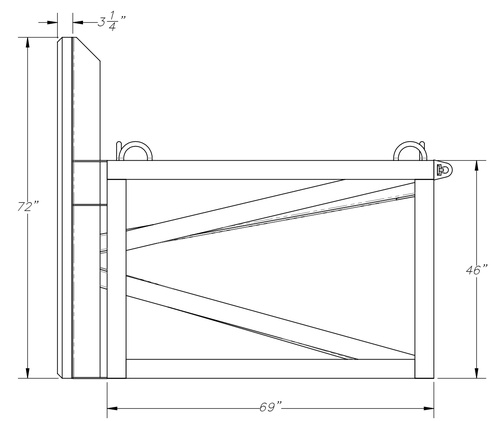

END VIEW

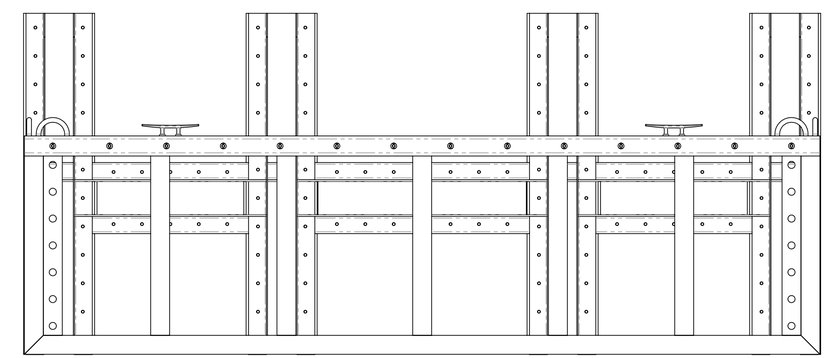

BACK VIEW

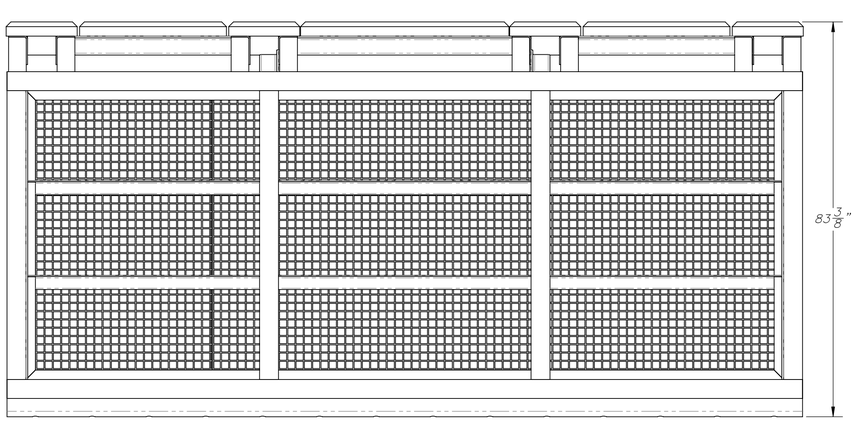

BOTTOM VIEW

SIZE	DWG. NO.	REV
D	26022 – 10	–
SCALE: 1:16 WEIGHT: 3717		SHEET 2 OF 5

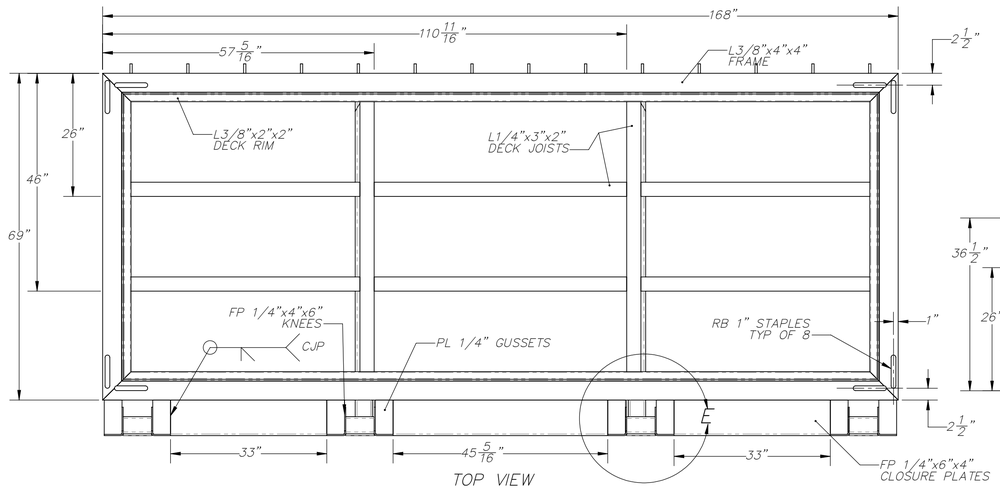

TOP VIEW

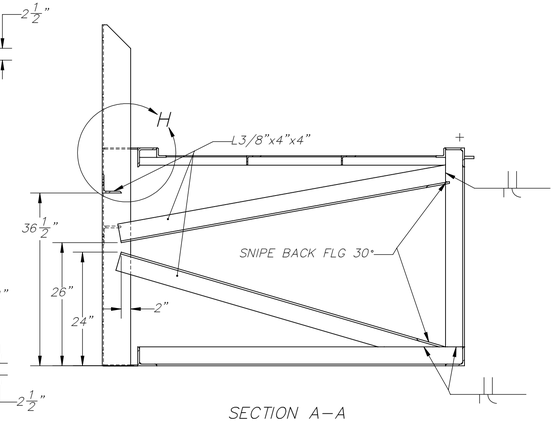

SECTION A–A

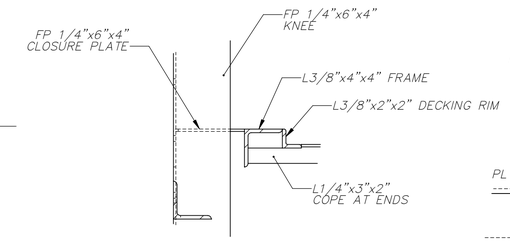

DETAIL H
SCALE 1 : 8

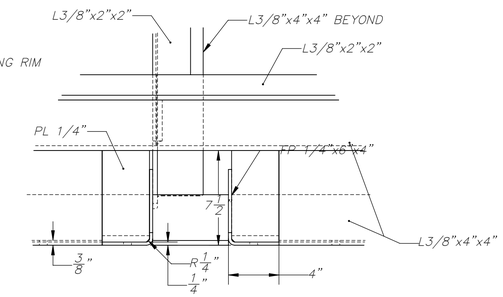

DETAIL E
SCALE 1 : 6

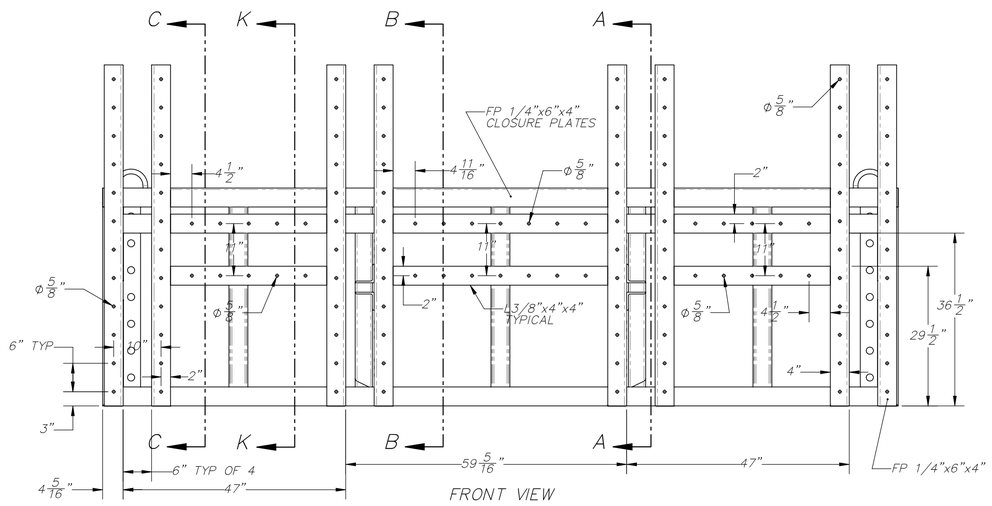

FRONT VIEW

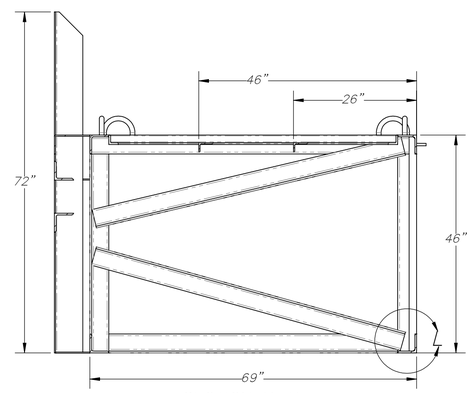

SECTION K–K

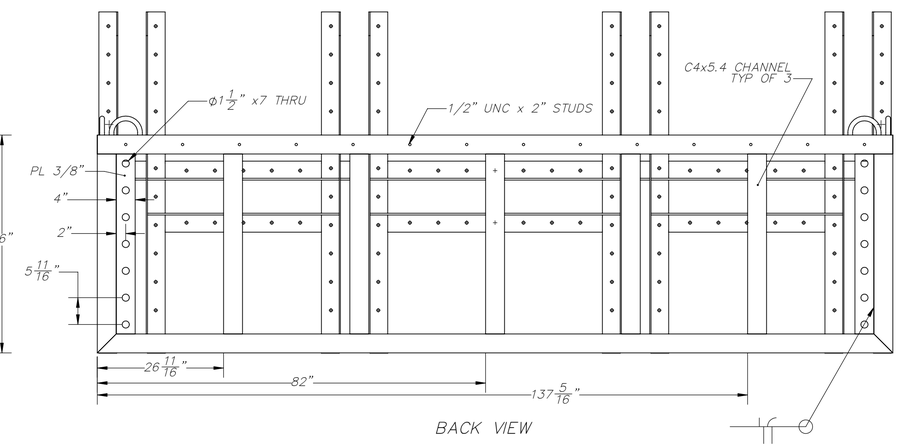

BACK VIEW

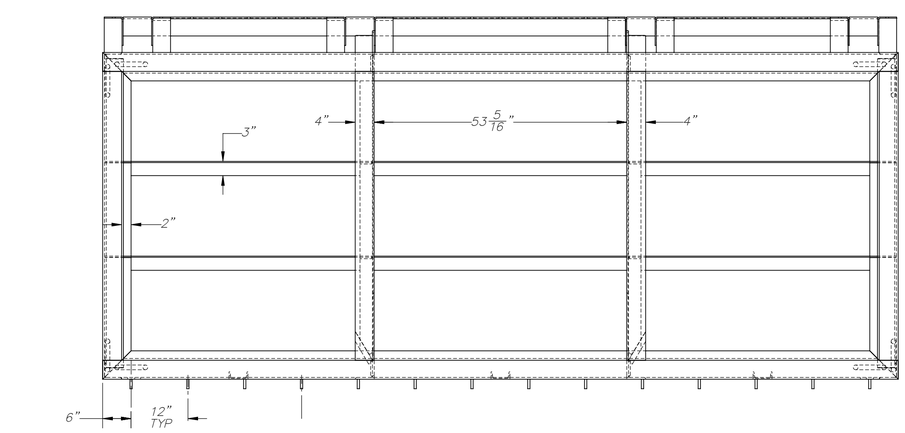

BOTTOM VIEW

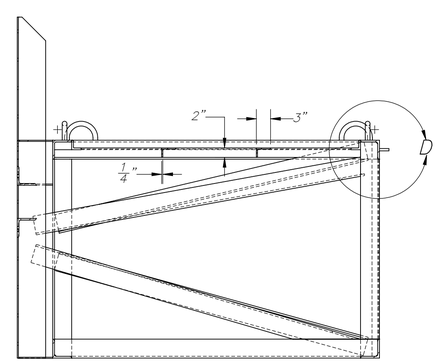

SECTION B–B

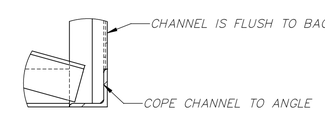

DETAIL L
SCALE 1 : 8

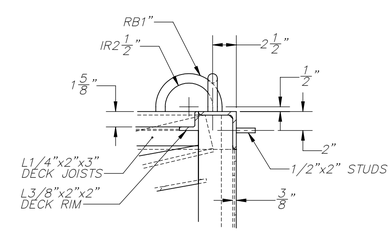

DETAIL D
SCALE 1 : 8

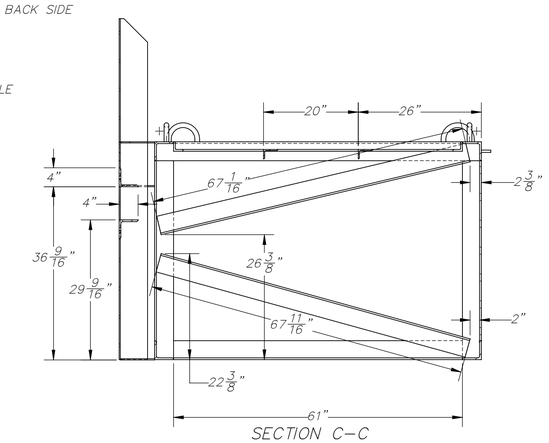

SECTION C–C

SIZE	DWG. NO.	REV
D	26022 – 10	–
SCALE: 1:16 WEIGHT: 2,662		SHEET 3 OF 5

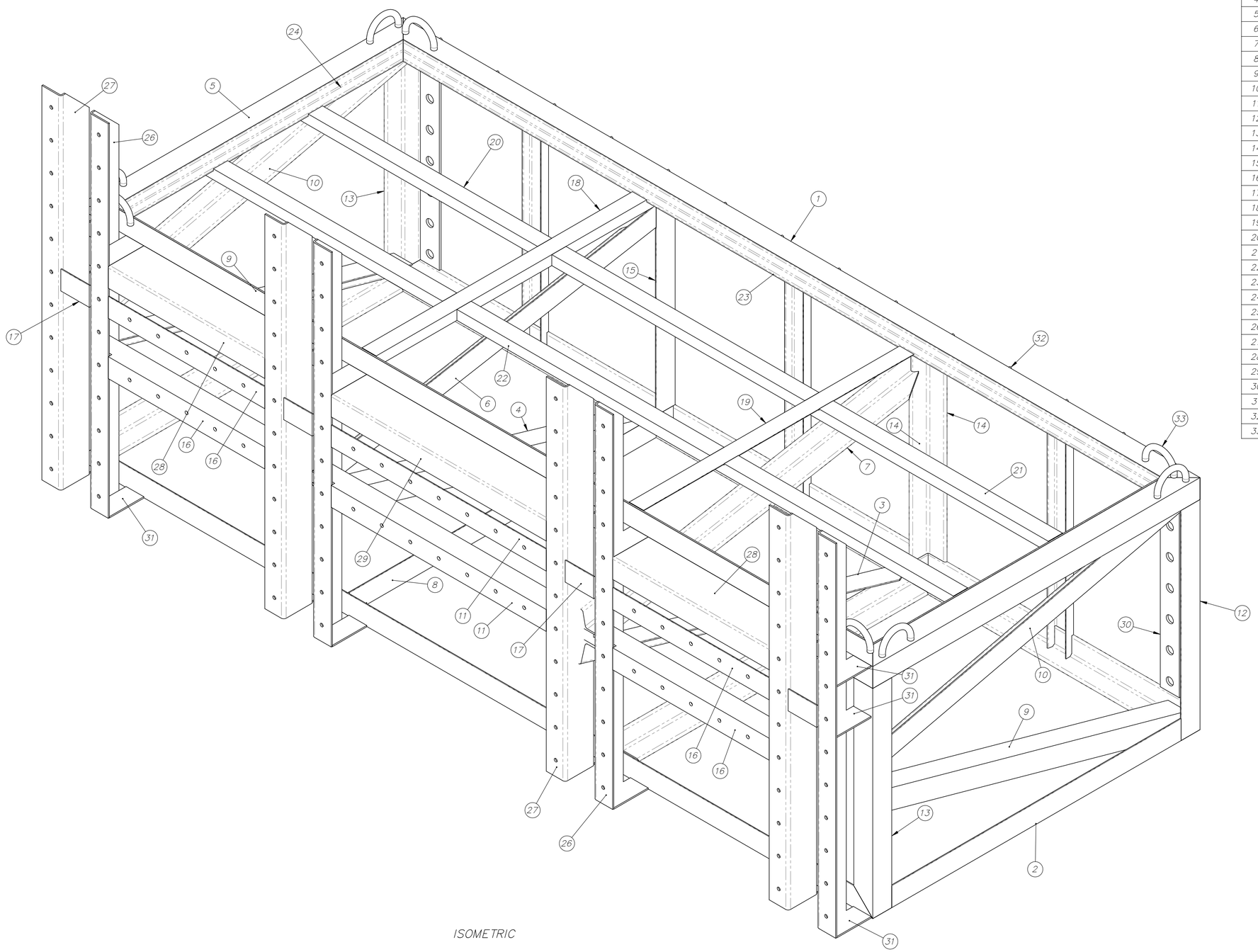

ISOMETRIC

CUT LIST

ITEM NO.	QTY.	DESCRIPTION	LENGTH	ANGLE1	ANGLE2	NOTES
1	4	L4X4X0.375	168"	45°	45°	
2	2	L4X4X0.375	61"	0°	0°	
3	1	L4X4X0.375	71 3/8"	0°	–	SNIPE 1 FLG
4	1	L4X4X0.375	71 3/8"	0°	–	SNIPE 1 FLG
5	2	L4X4X0.375	69"	45°	45°	
6	1	L4X4X0.375	70 1/2"	–	0°	SNIPE 1 FLG
7	1	L4X4X0.375	70 1/2"	–	0°	SNIPE 1 FLG
8	2	L4X4X0.375	68 1/4"	–	–	
9	2	L4X4X0.375	67 11/16"	0°	0°	
10	2	L4X4X0.375	67 1/16"	0°	0°	
11	2	L4X4X0.375	52 13/16"	0°	0°	
12	2	L4X4X0.375	42"	45°	0°	
13	2	L4X4X0.375	42"	0°	45°	
14	1	L4X4X0.375	41 5/8"	–	0°	
15	1	L4X4X0.375	41 5/8"	–	0°	
16	4	L4X4X0.375	40 1/2"	0°	0°	
17	4	L4X4X0.375	6"	0°	0°	
18	1	L3X2X0.25	64 5/8"	–	0°	
19	1	L3X2X0.25	64 5/8"	–	0°	
20	2	L3X2X0.25	56 11/16"	–	0°	
21	2	L3X2X0.25	56 11/16"	0°	–	
22	2	L3X2X0.25	53 5/16"	0°	0°	
23	2	L2X2X0.375	160"	45°	45°	
24	2	L2X2X0.375	61"	45°	45°	
25	3	C4X5.4	45 1/4"	–	–	
26	4	FP 1/4"x6"x4"	72"			PRIMARY KNEE
27	4	FP 1/4"x6"x4" OH	72"			OH: OPPOSIT HAND
28	2	FP 1/4"x6"x4"	33"			CLOSURE PLATE
29	1	FP 1/4"x6"x4"	45–5/16"			CLOSURE PLATE
30	2	PL 1/4" x 4"	38"			W/ HOLES
31	18	PL 1/4" X 3–7/8"	5–7/8"			GUSSETS
32	14	1/2" DIA x 2" SS STUD	2"			
33	8	STAPLE – RB 1" X 4" RAD				

SIZE	DWG. NO.	REV
D	26022 – 10	–
SCALE: 1:16 WEIGHT: 2.662		SHEET 4 OF 5

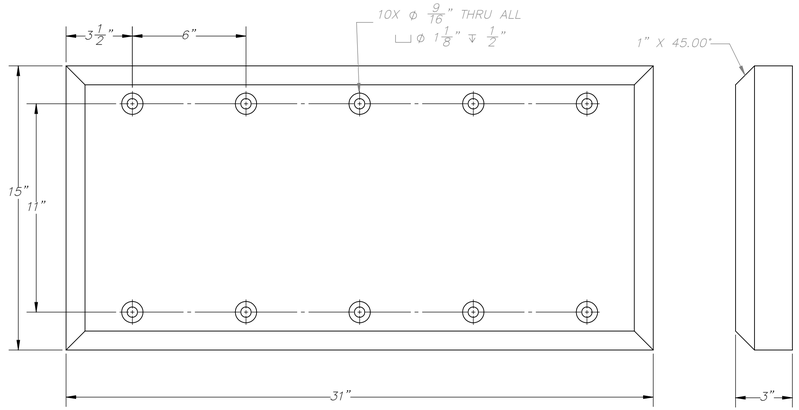

UHMWPE PAD – ENDS
FABRICATE 2EA

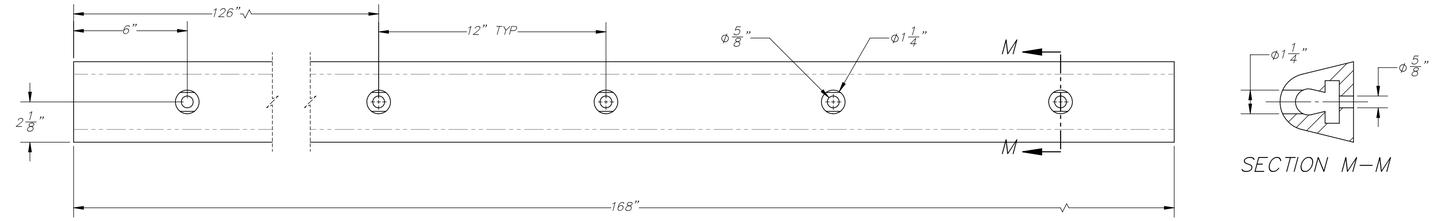

DURAMAX FENDER – FABRICATE 1ea

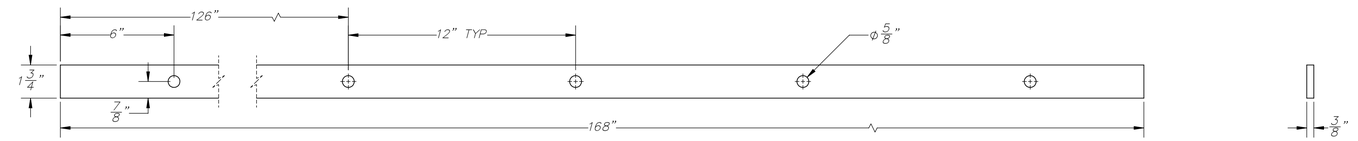

DURAMAX FENDER WASHER PLATE – FABRICATE 1ea

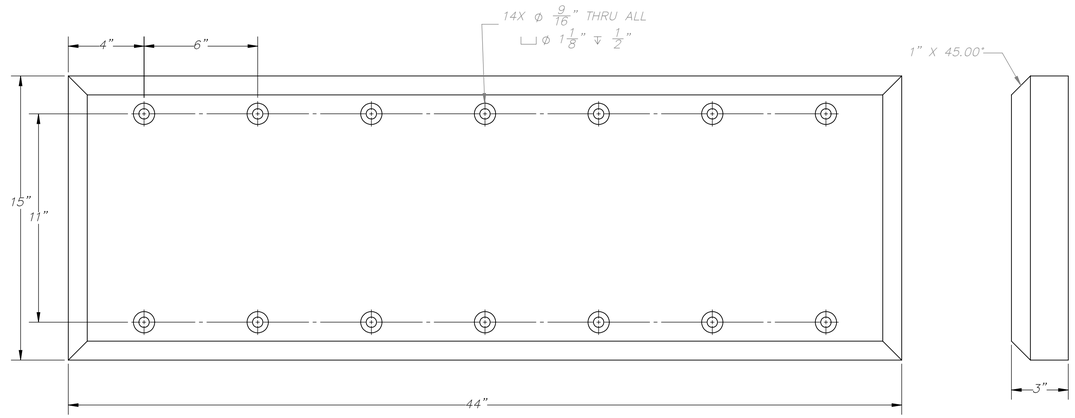

UHMWPE PAD – CENTER
FABRICATE 1ea

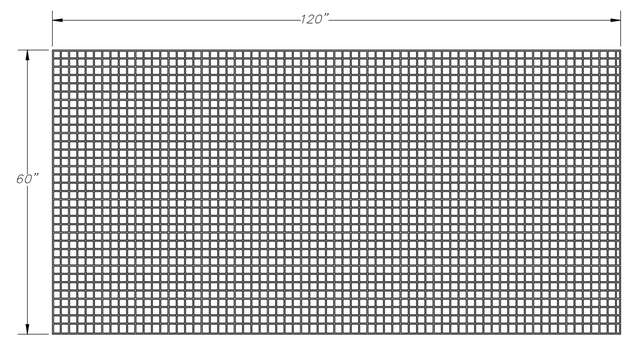

GRATING – LARGE
FABRICATE 1ea
SCALE: 3/4" = 1'

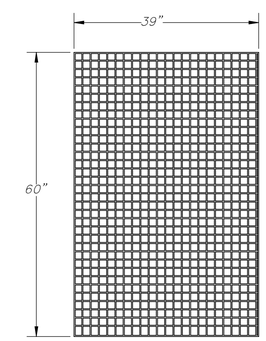

GRATING – SMALL
FABRICATE 1ea
SCALE: 3/4" = 1'

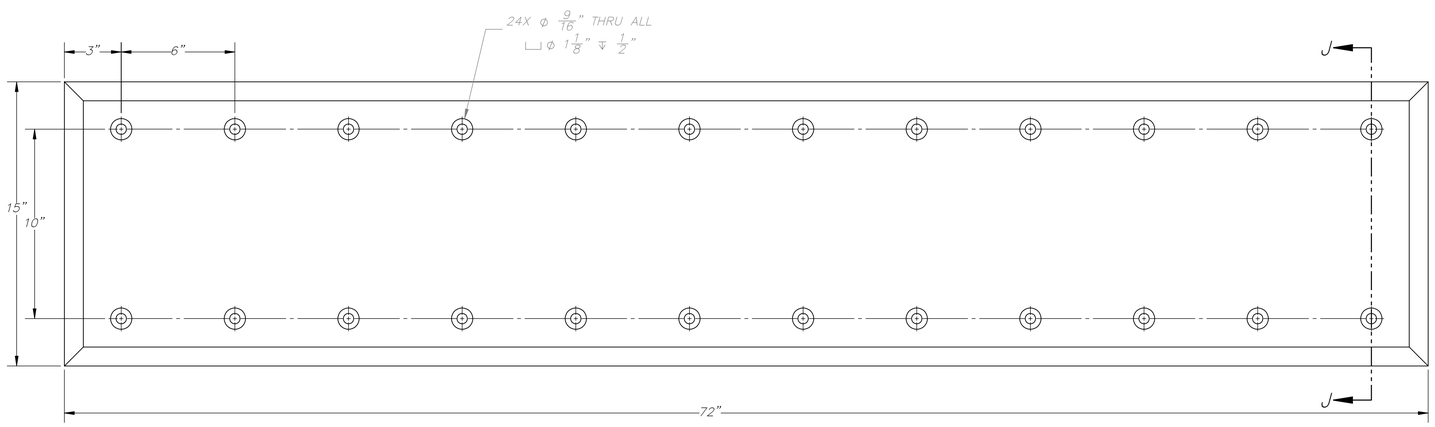

UHMWPE PAD – VERTICAL
FABRICATE 4ea

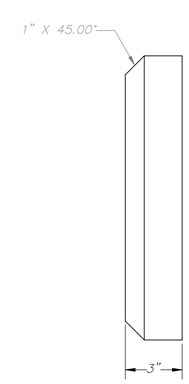

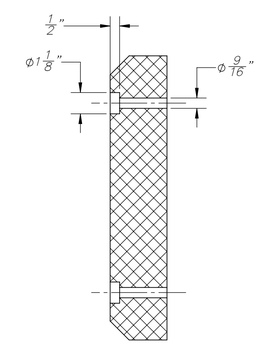

SECTION J–J

SIZE	DWG. NO.	REV
D	26022 – 10	–
SCALE: 1:4	WEIGHT: 3717	SHEET 5 OF 5