PROJECT	SHEET NUMBER
CO ERFO FS SNJUAN 2026-1(1)	A.1

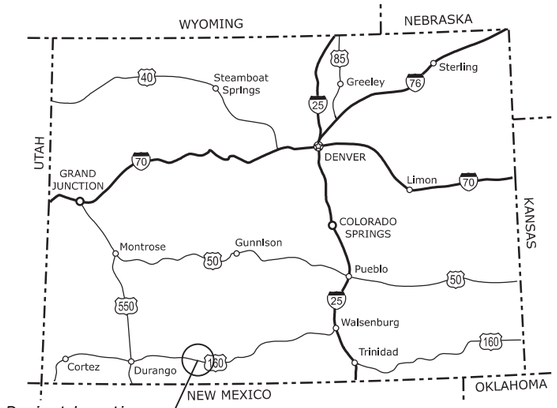

COLORADO KEY MAP

U. S. DEPARTMENT OF TRANSPORTATION
FEDERAL HIGHWAY ADMINISTRATION

PLANS FOR PROPOSED PROJECT

CO ERFO FS SNJUAN 2026-1(1)

FALL CREEK ROAD

SAN JUAN NATIONAL FOREST

SCHEDULE A 0.24 MILES

SHEET INDEX

SHEET	DESCRIPTION
A.	GENERAL INFORMATION
B.	SUMMARY OF QUANTITIES
C.	TYPICAL SECTIONS
D.	PLAN AND PROFILE
H.	EARTHWORK AND GRADING PLANS
I.	RIPRAP
K.	BRIDGE
L.	DRAINAGE
N.	GUARDRAIL AND END TERMINAL
O.	PERMANENT VEGETATION
Q.	PERMANENT TRAFFIC CONTROL
R.	TEMPORARY TRAFFIC CONTROL
T.	ROADSIDE DEVELOPMENT

SEE SHEET A2 FOR COMPLETE INDEX TO SHEETS

TYPE OF CONSTRUCTION:

Roadway reconstruction, box culvert, slope stabilization, guardrail, and bridge repair

SPECIFICATION:

Standard Specifications for Construction of Roads and Bridges on Federal Highway Projects, FP-24

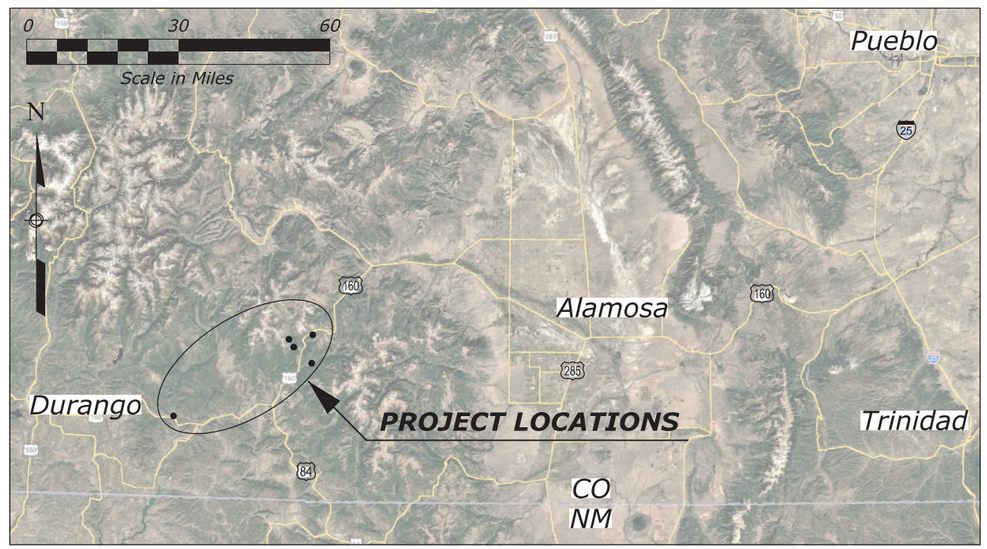

PLANS PREPARED BY

U.S. DEPARTMENT OF TRANSPORTATION
FEDERAL HIGHWAY ADMINISTRATION
CENTRAL FEDERAL LANDS HIGHWAY DIVISION
DENVER,CO

Know what's **below.**
Call before you dig.
www.call811.com

PROJECT MANAGER
J. HENWOOD

APPROVED:

CURTIS R SCOTT Digitally signed by CURTIS R SCOTT
Date: 2026.06.25 16:33:41 -06'00'

Chief of Engineering, Central Federal Lands Highway Division — *DATE*

Approved via Letter — *6/3/2026*

Steven Hattenbach, Forest Supervisor, U.S. Forest Service (USFS), San Juan National Forest — *DATE*

c:\pw_work_cfl\dms13714\TTL.dgn [TITLE SHEET]
8 June 2026 11:06 AM

SHEET INDEX	
SHEET	**DESCRIPTION**
A.	**GENERAL INFORMATION**
A.1	TITLE SHEET
A.2	INDEX TO SHEETS
A.3	101-1 PLAN SYMBOLS AND ABBREVIATIONS
A.4	VICINITY MAP
A.5	SURVEY CONTROL
B.	**SUMMARY OF QUANTITIES**
B.1	SUMMARY OF QUANTITIES
B.2	LOWER PIEDRA CAMPGROUND SUMMARIES
B.3	EAST FORK ROAD SUMMARIES
B.4	HATCHER ROAD SUMMARIES
B.5	FALL CREEK ROAD SUMMARIES
C.	**TYPICAL SECTIONS**
C.1	TYPICAL SECTIONS
D.	**PLAN AND PROFILE SHEETS**
D.1	PLAN & PROFILE - 621 LOWER PIEDRA CAMPGROUND
D.2	PLAN & PROFILE - 667 EAST FORK ROAD
D.3	PLAN & PROFILE - 033 HATCHER ROAD
D.4	PLAN & PROFILE - 039 FALL CREEK
H.	**EARTHWORK AND GRADING PLANS**
H.1	SP204-A, REINFORCED STABILIZED SLOPES (RSS)
H.2	C204-50, EMBANKMENT BENCHING AND FURROW DITCH
I.	**RIPRAP**
I.1	SP251-A, RIPRAP BANK PROTECTION
K.	**BRIDGE PLANS**
K.1-K.4	BRIDGE REPAIR PLANS
L.	**DRAINAGE SHEETS**
L.1	SP601-A, BOX CULVERT HEADWALLS & WINGWALLS
N.	**GUARDRAIL AND END TERMINAL**
N.1	617-20, GUARDRAIL TYPE TANGENT TERMINAL AND GRADING
O.	**PERMANENT VEGETATION**
O.1	C629-50, ROLLED EROSION CONTROL PRODUCT ON SLOPES
Q.	**PERMANENT TRAFFIC CONTROL**
Q.1	633-A, OBJECT MARKERS
R.	**TEMPORARY TRAFFIC CONTROL**
R.1-R.5	635-1,6,7,8,14 TEMPORARY TRAFFIC CONTROL STANDARDS
T.	**ROADSIDE DEVELOPMENT**
T.1	SP647-A, BOX CULVERT INFILL DETAIL

SHEET INDEX

4 June 2026 3:16 PM c:\pw_work_cflhdms13714\Sheet Index.dgn [Sheet Index]

PROJECT	SHEET NUMBER
CO ERFO FS SNJUAN 2026-1(1)	A.3

Δ	total central angle
abut.	abutment
ADT	average daily traffic
AH	ahead
AMEND	amendment
appr.	approach
b.f.	both faces
BK	back
BL	baseline
BM	bench mark
BP	balance point
br.	bridge
brg.	bearing
c.c.	center to center
℄ or CL	centerline
CMP	corrugated metal pipe
conn.	connection
constr. jt.	construction joint
cont.	continuous
CS	point of curve to spiral
CUFT	cubic foot (feet)
CUYD	cubic yard(s)
CW	curve widening
D or dia. or Ø	diameter
DHV	design hourly volume
diag.	diagonal
diaph.	diaphragm
E	east
e	superelevation rate
e.f.	each face
El. 94.066	elevation with number
elev.	elevation
emb.	embankment
EOP	edge of pavement
EQ or eq.	equation
ESAL	equivalent single axle load
ETW	edge of travel way
exc.	excavation
exp. jt.	expansion joint
f.f.	fill face
flg.	flange
ftg.	footing
ga.	gage (gauge)
galv.	galvanized
ID	inside diameter
jt.	joint
K	length/algebraic difference
L	length of curve
lat.	latitude
LNFT	linear foot (feet)
long.	longitude
LPSM	lump sum
Ls	length of spiral
Lt or LT	left
max.	maximum
MGAL	thousand gallon
MGS	Midwest Guardrail System
min.	minimum
mon.	monument
MP	mile post
N	north
NC	normal crown
o.c.	on center
o.f.	other face
o.o.	out to out
OD	outside diameter
OHWM	ordinary high water mark
PC	point of curve to tangent
PCC	point of compound curve
PCS	point of curve to spiral
PI	point of intersection
pl.	plate
POB	point of beginning
POC	point on curve
POE	point of ending
POS	point on spiral
POT	point on tangent
PS	point of tangent to spiral
PSC	point of spiral to curve
PST	point of spiral to tangent
PT	point of tangent to curve
pvmt.	pavement
R	radius
R.	range
R/W	right-of-way
reinf.	reinforcement
Rt or RT	right
S	south
SADT	seasonal average daily traffic
SC	point of spiral to curve
sec.	section
shldr	shoulder
spa.	spacing, spaces or spaced
SQFT	square foot
SQYD	square yard
SRS	point of spiral to reverse spiral
SS	point of spiral to spiral (no curve)
SSD	stopping sight distance
ST	point of spiral to tangent
sta.	station
std.	standard
stgr.	stringer
stiff.	stiffener
STS	point of spiral to tangent spiral
T	tangent length
T.	township
TCE	temporary construction easement
TS	point of tangent to spiral
Ts	tangent distance (spiraled curve)
typ.	typical
V	design speed
VC	vertical curve
vert.	vertical
vph	vehicles per hour
VPI	vertical point of intersection
W	west

National Boundary
State Boundary
County Boundary
City Boundary
Township or Range Line
Section Line
Section Corner (Found, Projected)
¼ Section Line
¼ Section Corner (Found, Projected)
1/16 Section Line
1/16 Section Corner (Found, Projected)
Property Line
Parcel Number
Right-of-Way Line (Existing, Proposed)
Permanent Easement (Existing, Proposed)
Temporary Construction Easement
Federal Agency Boundary
Wilderness Boundary
Indian Reservation Boundary
Existing Roadway (Paved, Gravel)
Railroad
Trail
Check Dam
Fiber Roll
Sandbag
Silt Fence
Intermittent Drainage or Small Creek
Large Creek or River
Lake, Pond or Reservoir
Spring
Treeline; Individual Trees
Material Source; Bore Hole; Test Pit
Coordinate Grid Tick
Spot Elevation
Boulder; Well; Antenna; Grave
Control Point (Terrestrial and GPS); Jump Hub
North Arrow
Riprap

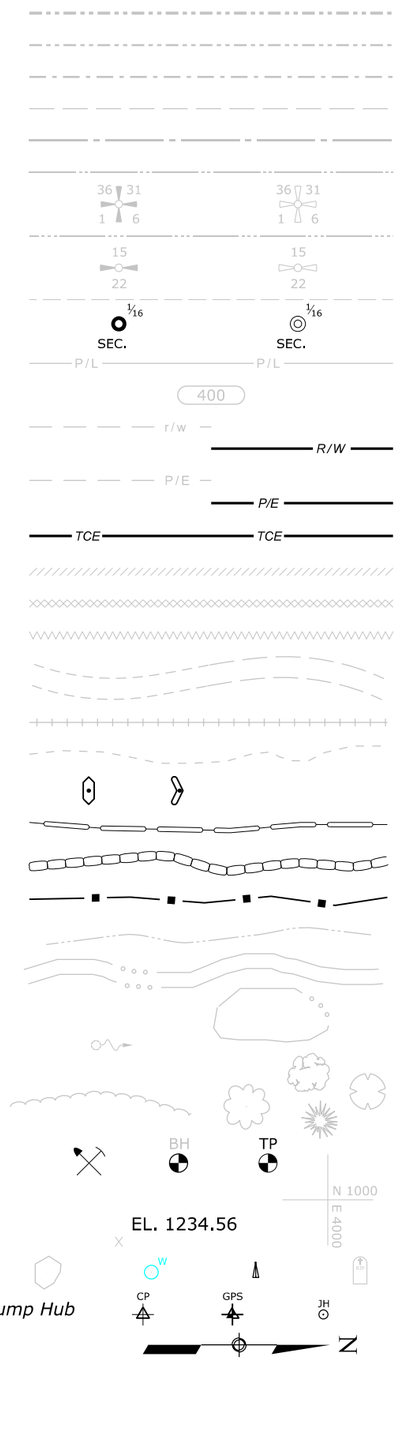

NOTE:

1. Additional symbols may be shown in a legend on the appropriate plan sheet.

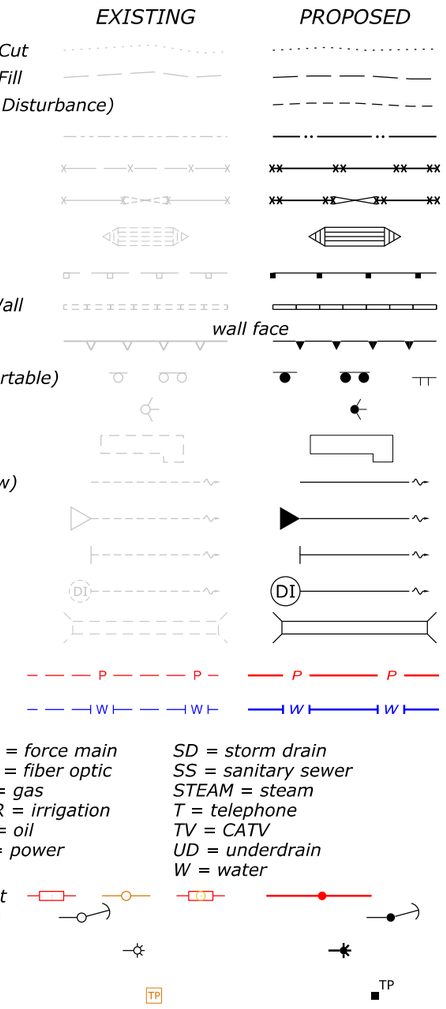

NO SCALE

U.S. DEPARTMENT OF TRANSPORTATION, FHWA
OFFICE OF FEDERAL LANDS HIGHWAY

PLAN SYMBOLS AND ABBREVIATIONS

FLH STANDARD 101-1
SPECIFICATION FP-24
APPROVED FOR USE --/----

c:\pw_work_cfl\dms13714\SYM.dgn [Std 101-1]
3 June 2026 12:03 PM

PROJECT	SHEET NUMBER
CO ERFO FS SNJUAN 2026-1(1)	A.4

LENGTH OF PROJECT			
Schedule	Station to Station	Roadway (ft)	Bridge (ft)
Lower Piedra Campground			
A	8+50 to 13+20	470	
East Fork Road			
A	1+30 to 3+00	170	
Hatcher Road			
A	4+60 to 8+50	390	
A	San Juan River Bridge		127
Fall Creek Road			
A	6+65 to 7+60	95	
A	**TOTALS (ft)**	**1,125**	**127**
A	**TOTAL (mi)**	**0.24**	

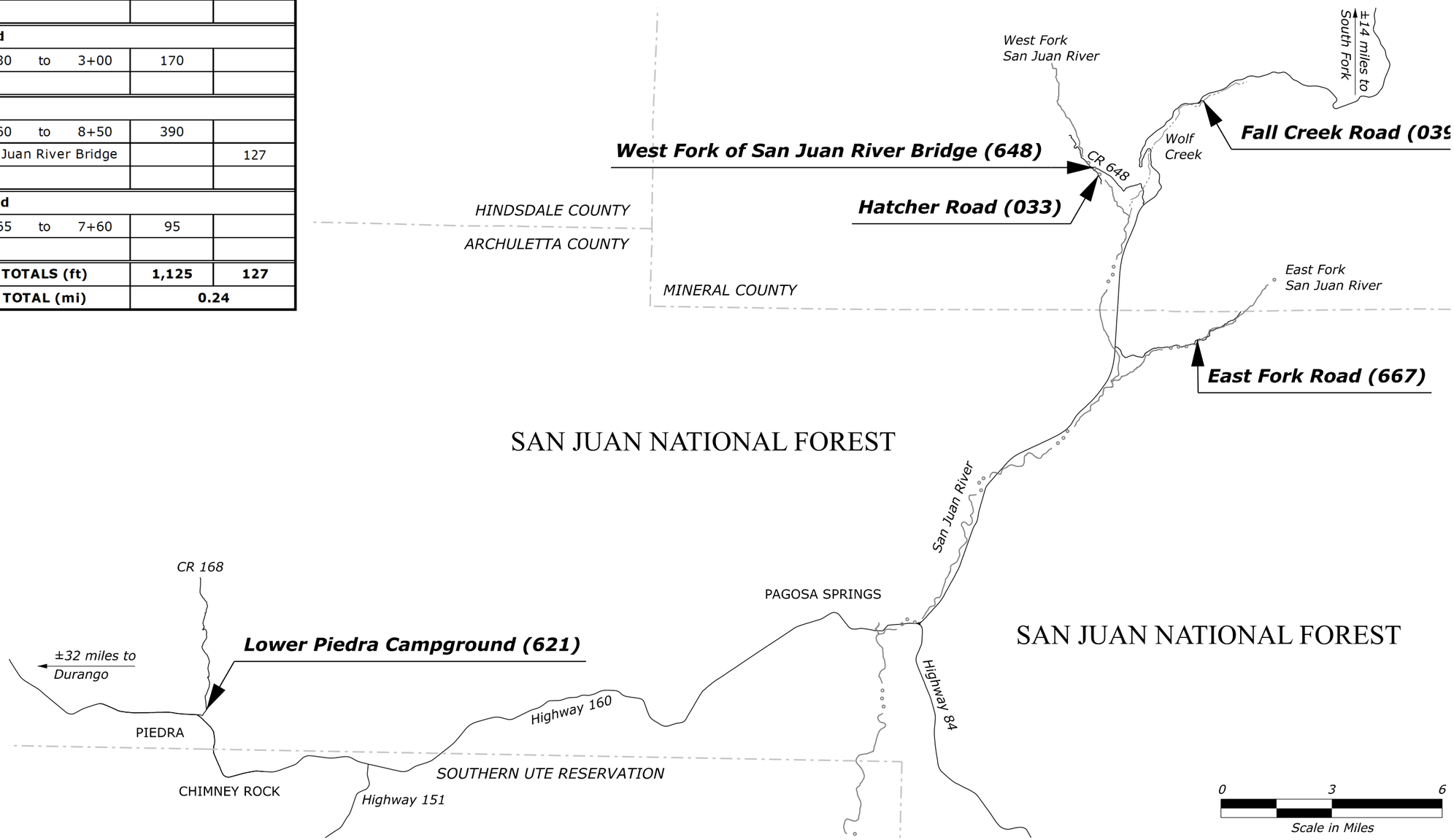

VICINITY MAP

c:\pw_work_cfl\dms13714\STE.dgn {SITE MAP}
9 June 2026 11:34 AM

PROJECT	SHEET NUMBER
CO ERFO FS SNJUAN 2026-1(1)	A.5

Project : CO ERFO FS SNJUAN 2026-1(1) Fall Creek Road

Date Of Field Work : April, 2026
Date Of Final Adjustment : April, 2026

Project Units : International Feet
Datum: NAD83(2011)
Zone: Colorado South (0503)
Geoid: Geoid18 (Conus)
OPUS Epoch Date : 2010
Vertical Datum : Navd88
All elevations are modeled using Geoid18, holding OPUS on 2001, 2003, 2006, & 2010

	STATE PLANE COORDINATES			GEO COORDINATES					
POINT NUMBER	NORTH	EAST	ELEVATION	LATITUDE	LONGITUDE	ELLIPSOID HEIGHT	MAPPING ANGLE	COMBINED FACTOR	DESCRIPTION
2001	1263721.28	2605580.78	7835.16	37° 22' 59.01643"	-106° 51' 27.13885"	7781.86	-0° 49' 57.7"	0.99960413	EAST FORK, FHWA_AC
2002	1263515.34	2605001.00	7825.61	37° 22' 56.89719"	-106° 51' 34.28448"	7772.29	-0° 50' 02.0"	0.99960467	EAST FORK, FHWA AC
2003	1297498.35	2605364.03	9648.61	37° 28' 32.90290"	-106° 51' 35.91688"	9596.43	-0° 50' 03.0"	0.99950607	FALL CREEK, NGS NOAA GSV
2004	1297818.20	2605993.95	9636.38	37° 28' 36.15545"	-106° 51' 28.16084"	9584.24	-0° 49' 58.3"	0.99950656	FALL CREEK, FHWA AC
2005	1297725.09	2606250.65	9639.95	37° 28' 35.27187"	-106° 51' 24.95990"	9587.81	-0° 49' 56.3"	0.99950641	FALL CREEK, FHWA AC
2006	1288231.07	2590288.51	7935.20	37° 26' 59.07671"	-106° 54' 41.17838"	7882.29	-0° 51' 56.7"	0.99959091	WEST FORK, FHWA AC
2007	1288336.07	2590487.98	7932.90	37° 27' 00.14453"	-106° 54' 38.72458"	7879.99	-0° 51' 55.2"	0.99959099	WEST FORK, FHWA AC
2008	1287284.89	2591004.68	7909.75	37° 26' 49.82987"	-106° 54' 32.12094"	7856.80	-0° 51' 51.1"	0.99959243	HATCHER RD, FHWA AC
2009	1286936.68	2591121.55	7933.83	37° 26' 46.40491"	-106° 54' 30.60676"	7880.86	-0° 51' 50.2"	0.99959139	HATCHER RD, FHWA AC
2010	1211188.80	2463729.29	6580.01	37° 13' 55.68305"	-107° 20' 31.52378"	6519.79	-1° 07' 47.6"	0.99968846	LOWER PIEDRA, FHWA AC
2011	1210660.06	2463778.94	6573.86	37° 13' 50.46606"	-107° 20' 30.78099"	6513.61	-1° 07' 47.2"	0.99968902	LOWER PIEDRA, FHWA AC
4101	1287141.50	2591052.96	7921.74	37° 26' 48.41952"	-106° 54' 31.49555"	7868.78	-0° 51' 50.7"	0.99959190	HATCHER RD, 60D NAIL
4102	1286993.63	2591098.20	7929.07	37° 26' 46.96440"	-106° 54' 30.90695"	7876.11	-0° 51' 50.4"	0.99959160	HATCHER RD, 60D NAIL
4201	1263624.91	2605375.76	7833.09	37° 22' 58.03430"	-106° 51' 29.66138"	7779.78	-0° 49' 59.2"	0.99960427	EAST FORK, 60D NAIL
4202	1263569.24	2605143.82	7827.60	37° 22' 57.45059"	-106° 51' 32.52482"	7774.29	-0° 50' 01.0"	0.99960455	EAST FORK, 60D NAIL
4701	1210327.35	2463103.21	6548.18	37° 13' 47.04536"	-107° 20' 39.05342"	6487.87	-1° 07' 52.2"	0.99969043	LOWER PIEDRA, 60D NAIL
4702	1210583.73	2463304.67	6549.06	37° 13' 49.61906"	-107° 20' 36.62547"	6488.85	-1° 07' 50.8"	0.99969025	LOWER PIEDRA, 60D NAIL
4703	1211002.28	2463266.58	6555.09	37° 13' 53.74906"	-107° 20' 37.19862"	6494.84	-1° 07' 51.1"	0.99968975	LOWER PIEDRA, 60D NAIL

EAST FORK AVERAGE = 0.99960441
FALL CREEK AVERAGE = 0.99950635
WEST FORK AVERAGE = 0.99959095
HATCHER RD. AVERAGE = 0.99959183
LOWER PIEDRA AVERAGE = 0.99968958

NOTE: TO PRECISELY CHECK DISTANCES BETWEEN POINTS AS MEASURED ON THE GROUND :
INVERSE THE STATE PLANE COORDINATES AND DIVIDE THE COMPUTED DISTANCE
BY A MEAN COMBINED FACTOR OF THE TWO POINTS.

TO COMPUTE GEODETIC AZIMUTHS USE THE FOLLOWING FORMULA :
GEODETIC AZIMUTH = GRID AZIMUTH + MAPPING ANGLE

NO.	DESCRIPTION REVISIONS (OR CHANGE NOTICES)	DATE	BY
5			
4			
3			
2			
1	*Created*	*4/27/26*	*SS*

SURVEY CONTROL

c:\pw_work_cfl\dms13714\Control_Sheet(DESIGN)_CO_SNJUAN_2026-1(1).dgn [Survey Control]
18 May 2026 3:11 PM

SUMMARY OF QUANTITIES

PROJECT	SHEET NUMBER
CO ERFO FS SNJUAN 2026-1(1)	B.1

AMEND	LINE ITEM NO.	PAY ITEM NUMBER	PAY ITEM DESCRIPTION	UNIT	Sheet and Description					ALLOWANCE	Estimated Quantities	Remarks and/or Determination of Estimated Quantity
					B.2	B.3	B.4	B.5	K.2			
					LOWER PIEDRA CAMPGROUND	EAST FORK ROAD	HATCHER ROAD	FALL CREEK ROAD	WEST FORK OF SAN JUAN RIVER BRIDGE		BID SCHEDULE	
	A0100	15101-0000	MOBILIZATION	LPSM							ALL	
	A0120	15201-0000	CONSTRUCTION SURVEY AND STAKING	LPSM							ALL	
	A0140	15301-0000	CONTRACTOR QUALITY CONTROL	LPSM							ALL	
	A0160	15501-0000	CONSTRUCTION SCHEDULE	LPSM							ALL	
	A0180	15701-0000	SOIL EROSION CONTROL	LPSM							ALL	
	A0200	15720-0000	STORMWATER POLLUTION PREVENTION PLAN	LPSM							ALL	
	A0220	20101-0000	CLEARING AND GRUBBING	ACRE	0.7	0.1	0.5	0.2			1.5	
	A0240	20304-1000	REMOVAL OF STRUCTURES AND OBSTRUCTIONS	LPSM							ALL	
	A0260	20401-0000	ROADWAY EXCAVATION	CUYD	297					33	330	
	A0280	20420-0000	EMBANKMENT CONSTRUCTION	CUYD				1109		91	1200	
	A0300	20420-0000	EMBANKMENT CONSTRUCTION,(REINFORCED SOIL SLOPE)	CUYD			3067			183	3250	
	A0320	25101-0400	PLACED RIPRAP, CLASS 4	CUYD				190		20	210	
	A0340	25101-0600	PLACED RIPRAP, CLASS 6	CUYD	1335	582	2920	102	100	261	5300	
	A0360	27001-0000	GROUT	CUYD					3	1	4	
	A0380	30202-2000	ROADWAY AGGREGATE, METHOD 2	TON	240	30	145	32	20	33	500	
	A0400	57203-0000	REPAIR CONCRETE	LPSM							ALL	
	A0420	60103-0000	CONCRETE, HEADWALL,& WINGWALLS (CONCRETE BOX CULVERT)	EACH				2			2	
	A0440	60220-4760	16 FEET SPAN, 8 FEET RISE PRECAST REINFORCED CONCRETE BOX CULVERT	LNFT				76		4	80	
	A0460	61702-1500	TERMINAL SYSTEM, TYPE MGS TANGENT	EACH					2		2	
	A0480	61707-0000	STRUCTURE TRANSITION RAILING	LNFT					27		27	Contract Quantity,
	A0500	62201-0150	DUMP TRUCK, 7 CUBIC YARD MINIMUM CAPACITY	HOUR							20	
	A0520	62201-0900	WHEEL LOADER, 2 CUBIC YARD MINIMUM RATED CAPACITY	HOUR							20	
	A0540	62201-3150	HYDRAULIC EXCAVATOR, 1.0 CUBIC YARD MINIMUM CAPACITY WITH THUMB ATTACHMENT	HOUR							20	
	A0560	62301-0000	GENERAL LABOR	HOUR							40	
	A0580	62302-1100	SPECIAL LABOR, HIRED SURVEY SERVICES	HOUR							10	
	A0600	62402-0200	PROVIDING AND PLACING TOPSOIL, 3-INCH DEPTH	ACRE	0.2		0.01	0.1			0.31	
	A0620	62510-2000	SEEDING, HYDRAULIC METHOD	ACRE	0.2		0.03	0.1		0.02	0.35	
	A0640	62515-2000	MULCHING, HYDRAULIC METHOD	ACRE	0.2		0.03	0.1		0.02	0.35	
	A0660	62801-0000	TEMPORARY STREAM DIVERSION	LPSM							ALL	
	A0680	62901-1200	ROLLED EROSION CONTROL PRODUCT, TYPE 5.A	SQYD			615			35	650	
	A0700	63308-2000	OBJECT MARKER, TYPE 2	EACH				4			4	
	A0720	63308-3000	OBJECT MARKER, TYPE 3	EACH					4		4	
	A0740	63501-0000	TEMPORARY TRAFFIC CONTROL	LPSM							ALL	
	A0760	63701-0000	FIELD OFFICE	EACH							1	
	A0780	64704-1000	ENVIRONMENTAL DESIGN, STREAMBED MATERIAL	CUYD				40		5	45	

Milestone: 100 SOQ; Date Completed:

c:\pw_work_cfl\dms16341\[mw-summary-quantities202509 (6-9-26).xlsm]Sheet
16-Jun-2026 1:12 PM

PROJECT	SHEET NUMBER
CO ERFO FS SNJUAN 2026-1(1)	B.2

GRADING SUMMARY	
	Pay Item 20401-0000
Station to Station	ROADWAY EXCAVATION
	CUYD
LOWER PIEDRA CAMPGROUND	
8+50 - 12+80	297
TOTALS	**297**

NOTE:
1. Quantities based on prismoidal (surface to surface) volumes.
2. Provide 3 inches of topsoil in cut and fill slope areas.
3. The quantities shown herein are approximations. Payment will be made for the actual quantities of work performed.

SURFACING SUMMARY		
Item Number	*30202-2000*	
Station to Station	*ROADWAY AGGREGATE, METHOD 2*	*Remarks*
	TON	
LOWER PIEDRA CAMPGROUND		
8+50 to 12+80	*240*	
TOTAL	***240***	

Values used for estimating purposes:
Aggregate base 139 lb/ft3

RIPRAP SUMMARY			
Item Number		*25101-0600*	
Station to Station	*Side*	*PLACED RIPRAP, CLASS 6*	*Remarks*
		CUYD	
LOWER PIEDRA CAMPGROUND			
9+00 to 13+20	*Rt*	*1335*	
TOTAL		***1335***	

CLEARING AND GRUBBING SUMMARY		
Item Number	*20101-0000*	
Station to Station	*CLEARING AND GRUBBING*	*Remarks*
	ACRE	
LOWER PIEDRA CAMPGROUND		
9+00 to 13+20	*0.7*	
TOTAL	***0.7***	

TOPSOIL, SEEDING, AND MULCHING SUMMARY				
Item Number	*62402-0200*	*62510-2000*	*62515-2000*	
Station to Station	*PROVIDING AND PLACING TOPSOIL, 3-INCH DEPTH*	*SEEDING, HYDRAULIC METHOD*	*MULCHING, HYDRAULIC METHOD*	*Remarks*
	ACRE	*ACRE*	*ACRE*	
LOWER PIEDRA CAMPGROUND				
9+00 to 13+20	*0.2*	*0.2*	*0.2*	
TOTAL	***0.2***	***0.2***	***0.2***	

LOWER PIEDRA CAMPGROUND SUMMARIES

12 June 2026 1:54 PM c:\pw_work_cflhdms\13716\B_Sheets.dgn [Lower Piedra Campground Summaries]

PROJECT	SHEET NUMBER
CO ERFO FS SNJUAN 2026-1(1)	B.3

RIPRAP SUMMARY			
Item Number		25101-0600	
Station to Station	Side	PLACED RIPRAP, CLASS 6	Remarks
		CUYD	
EAST FORK ROAD			
1+30 to 3+00	Rt	582	
TOTAL		**582**	

SURFACING SUMMARY		
Item Number	30202-2000	
Station to Station	ROADWAY AGGREGATE, METHOD 2	Remarks
	TON	
EAST FORK ROAD		
1+60 to 2+65	30	
TOTAL	**30**	

Values used for estimating purposes:
Aggregate base 139 lb/ft3

CLEARING AND GRUBBING SUMMARY		
Item Number	20101-0000	
Station to Station	CLEARING AND GRUBBING	Remarks
	ACRE	
EAST FORK ROAD		
1+30 to 3+00	0.1	
TOTAL	**0.1**	

EAST FORK ROAD SUMMARIES

c:\pw_work_cfl\dms13716\B_Sheets.dgn [East Fork Road Summaries]
9 June 2026 12:32 PM

PROJECT	SHEET NUMBER
CO ERFO FS SNJUAN 2026-1(1)	B.4

GRADING SUMMARY	
	Pay Item 20420-0000
Station to Station	Embankment Construction (REINFORCED SOIL SLOPE)
	CUYD
HATCHER ROAD	
5+40 - 8+00	3,067
TOTALS	**3,067**

NOTE:

1. Quantities based on prismoidal (surface to surface) volumes.
2. Provide 3 inches of topsoil in cut and fill slope areas.
3. The quantities shown herein are approximations. Payment will be made for the actual quantities of work performed.

RIPRAP SUMMARY			
Item Number		*25101-0600*	
Station to Station	*Side*	*PLACED RIPRAP, CLASS 6*	*Remarks*
		CUYD	
HATCHER ROAD			
4+65 to 8+35	*Rt*	*2920*	
TOTAL		***2920***	

SURFACING SUMMARY		
Item Number	*30202-2000*	
Station to Station	*ROADWAY AGGREGATE, METHOD 2*	*Remarks*
	TON	
HATCHER REPAIR SITE		
5+50 to 8+00	*145*	
TOTAL	***145***	

Values used for estimating purposes:
Aggregate base 139 lb/ft3

CLEARING AND GRUBBING SUMMARY		
Item Number	*20101-0000*	
Station to Station	*CLEARING AND GRUBBING*	*Remarks*
	ACRE	
HATCHER ROAD		
4+65 to 8+35	*0.5*	
TOTAL	***0.5***	

TOPSOIL, SEEDING, AND MULCHING SUMMARY					
Item Number	*62402-0200*	*62510-2000*	*62515-2000*	*62901-1200*	
Station to Station	*PROVIDING AND PLACING TOPSOIL, 3-INCH DEPTH*	*SEEDING, HYDRAULIC METHOD*	*MULCHING, HYDRAULIC METHOD*	*ROLLED EROSION CONTROL PRODUCT, TYPE 5.A*	*Remarks*
	ACRE	*ACRE*	*ACRE*	*SQYD*	
HATCHER ROAD					
4+65 to 8+35	*0.01*	*0.03*	*0.03*	*615*	
TOTAL	***0.01***	***0.03***	***0.03***	***615***	

HATCHER ROAD SUMMARIES

c:\pw_work_cflhdms13716\B_Sheets.dgn [Hatcher Road Summaries]
16 June 2026 12:36 PM

PROJECT	SHEET NUMBER
CO ERFO FS SNJUAN 2026-1(1)	B.5

GRADING SUMMARY	
	Pay Item 20420-0000
Station to Station	Embankment Construction
	CUYD
FALL CREEK ROAD	
6+65 - 7+60	**1,109**
TOTALS	**1,109**

NOTE:

1. Quantities based on prismoidal (surface to surface) volumes.
2. Provide 3 inches of topsoil in cut and fill slope areas.
3. The quantities shown herein are approximations. Payment will be made for the actual quantities of work performed.

SURFACING SUMMARY		
Item Number	*30202-2000*	
Station to Station	*ROADWAY AGGREGATE, METHOD 2*	*Remarks*
	TON	
FALL CREEK ROAD		
6+65 to 7+60	*32*	
TOTAL	***32***	

Values used for estimating purposes:

Aggregate base 139 lb/ft3

CLEARING AND GRUBBING SUMMARY		
Item Number	*20101-0000*	
Station to Station	*CLEARING AND GRUBBING*	*Remarks*
	ACRE	
FALL CREEK ROAD		
6+65 to 7+60	*0.2*	
TOTAL	***0.2***	

TOPSOIL, SEEDING, AND MULCHING SUMMARY				
Item Number	*62402-0200*	*62510-2000*	*62515-2000*	
Station to Station	*PROVIDING AND PLACING TOPSOIL, 3-INCH DEPTH*	*SEEDING, HYDRAULIC METHOD*	*MULCHING, HYDRAULIC METHOD*	*Remarks*
	ACRE	*ACRE*	*ACRE*	
FALL CREEK ROAD				
6+65 to 7+60	*0.1*	*0.1*	*0.1*	
TOTAL	***0.1***	***0.1***	***0.1***	

DRAINAGE SUMMARY								
Item Number		*25101-0400*	*25101-0600*	*60103-0000*	*60220-4760*	*63308-2000*	*64704-1000*	
Station	*Skew*	*PLACED RIPRAP, CLASS 4*	*PLACED RIPRAP, CLASS 6*	*CONCRETE, HEADWALL & WINGWALLS (CONCRETE BOX CULVERT)*	*16 FEET SPAN, 8 FEET RISE PRECAST REINFORCED CONCRETE BOX*	*OBJECT MARKER, TYPE 2*	*ENVIRONMENTAL DESIGN, STREAMBED MATERIAL*	*Remarks*
		CUYD	*CUYD*	*EACH*	*LNFT*	*EACH*	*CUYD*	
FALL CREEK ROAD								
7+11	*0°*	*190*	*102*	*2*	*76*	*4*	*40*	
TOTALS		***190***	***102***	***2***	***76***	***4***	***40***	

FALL CREEK ROAD SUMMARIES

c:\pw_work_cfl\dms13716\B_Sheets.dgn [Fall Creek Road Summaries]
16 June 2026 12:43 PM

PROJECT	SHEET NUMBER
CO ERFO FS SNJUAN 2026-1(1)	C.1

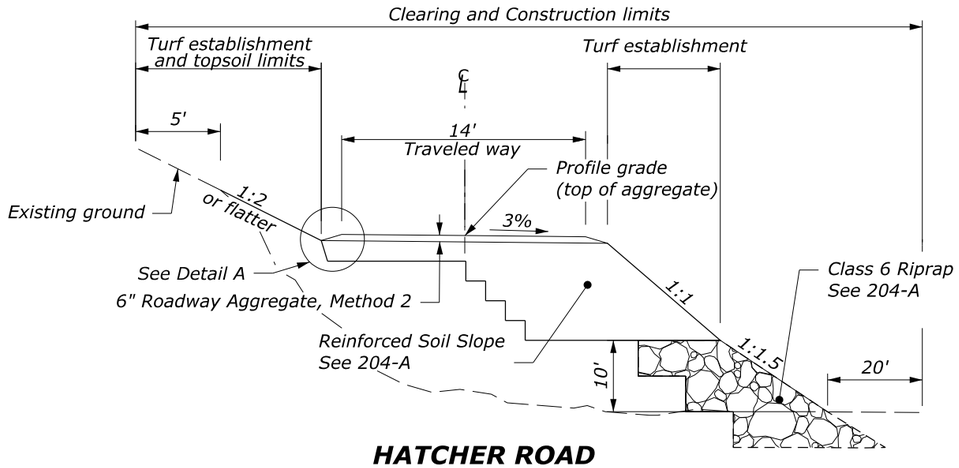

HATCHER ROAD
TYPICAL SECTION
STA 5+65 to 7+85

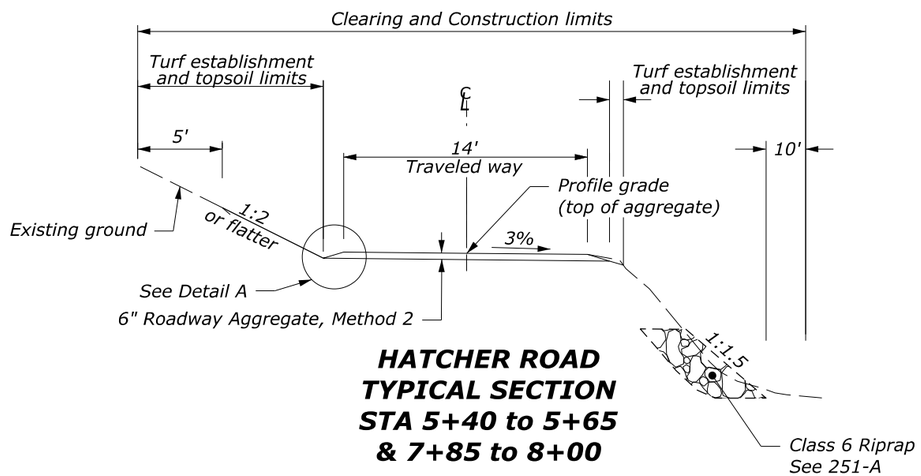

HATCHER ROAD
TYPICAL SECTION
STA 5+40 to 5+65
& 7+85 to 8+00

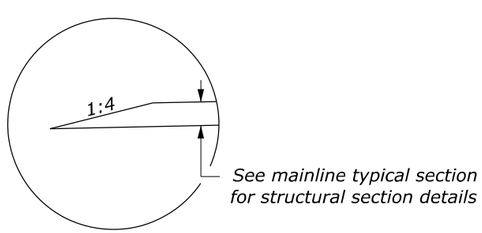

DETAIL A
(applies to both sides of roadway, except at East Fork)

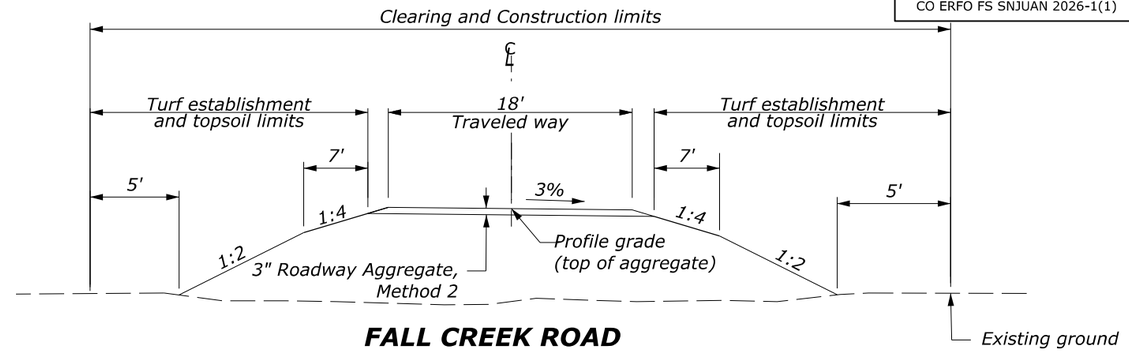

FALL CREEK ROAD
TYPICAL SECTION
STA 6+65 to 7+60

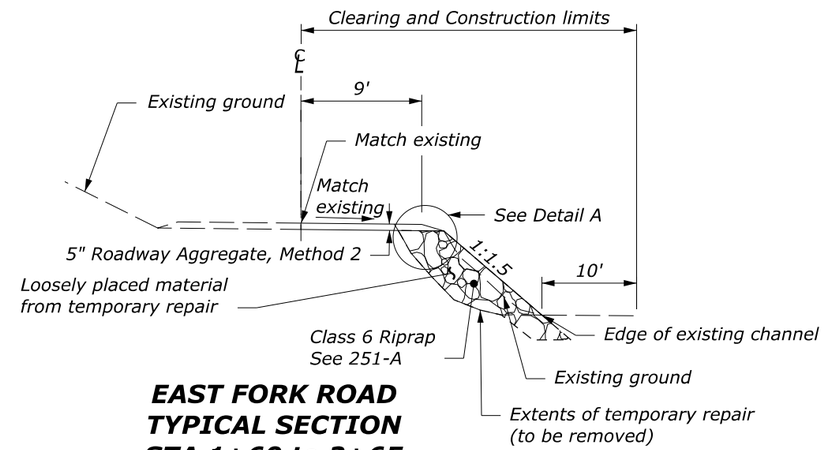

EAST FORK ROAD
TYPICAL SECTION
STA 1+60 to 2+65

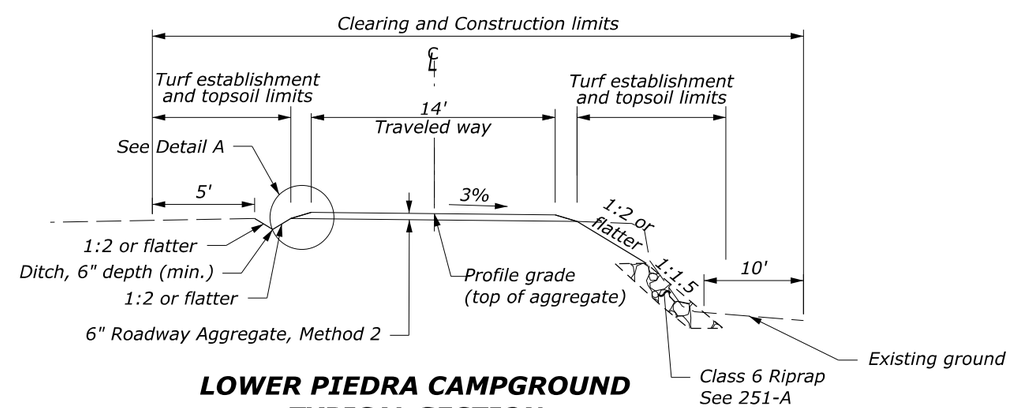

LOWER PIEDRA CAMPGROUND
TYPICAL SECTION
STA 8+50 to 12+80

NO SCALE

TYPICAL SECTIONS

c:\pw_work_cfl\dms13719\TYP_CO ERFO NF SNJUAN 2026-1(1).dgn [Typical Section Mainline - FDR]
16 June 2026 10:27 AM

PROJECT	SHEET NUMBER
CO ERFO FS SNJUAN 2026-1(1)	D.1

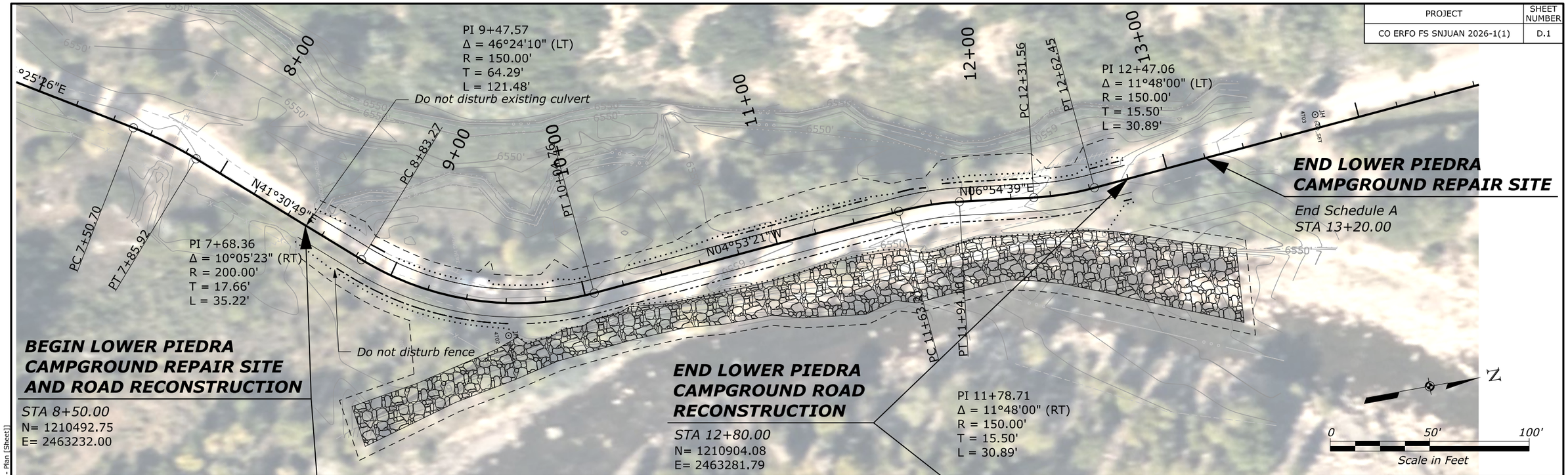

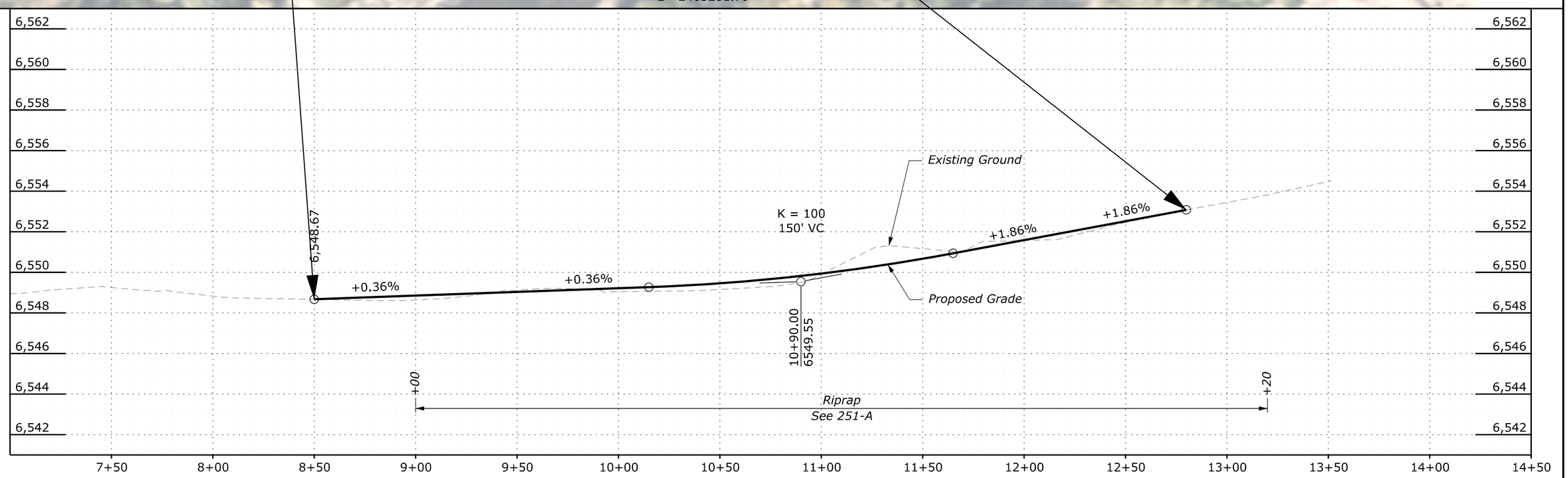

PLAN & PROFILE - 621 LOWER PIEDRA CAMPGROUND

c:\pw_work_cflwdms13718\PLN_Lower Piedra Campground_SNJUAN 2026-1(1).dgn [PNP Lower Piedra - PNP Lower Piedra - Plan [Sheet]]

4 June 2026 3:04 PM

© 2026 Microsoft Corporation © 2026 Maxar ©CNES (2026) Distribution Airbus DS © Mapbox

PROJECT	SHEET NUMBER
CO ERFO FS SNJUAN 2026-1(1)	D.2

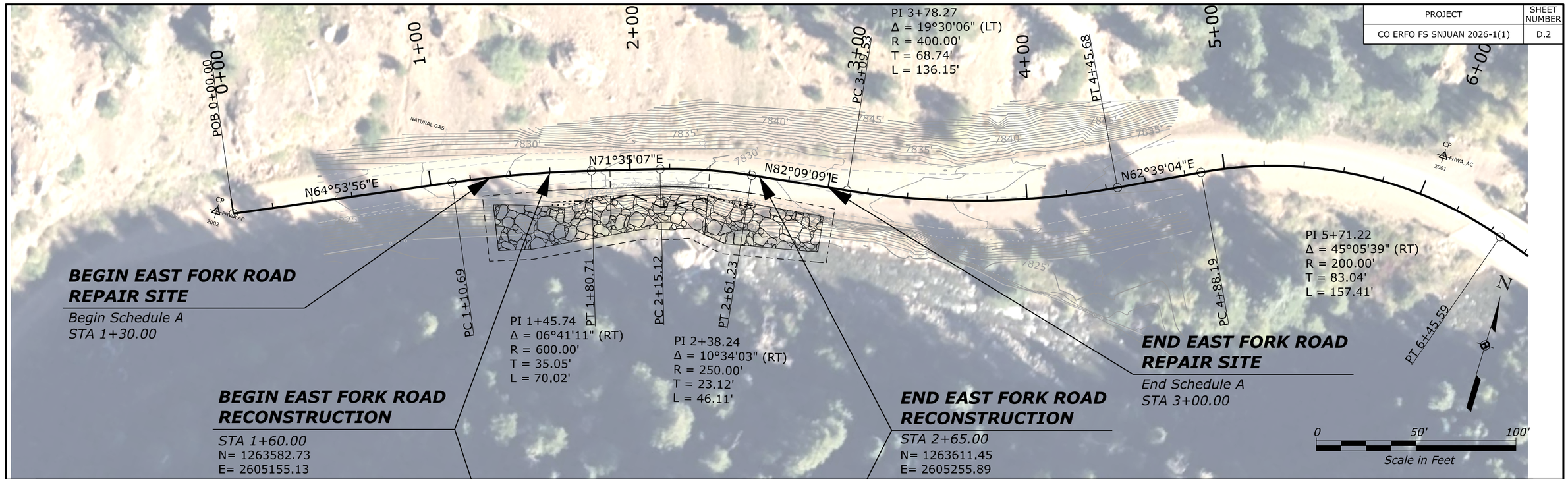

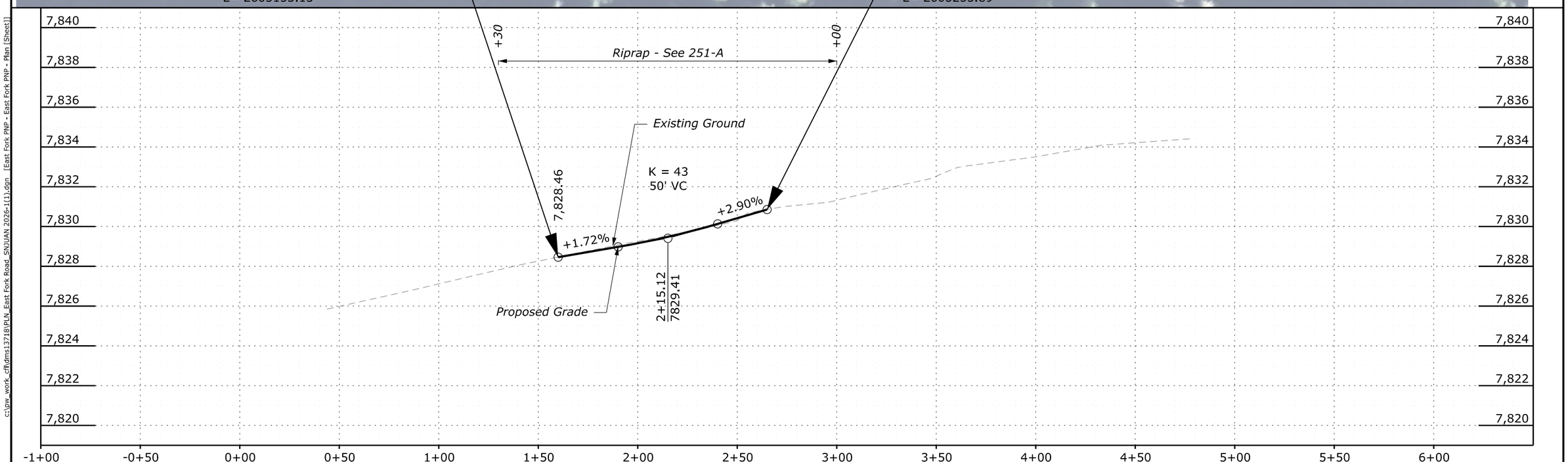

PLAN & PROFILE - 667 EAST FORK ROAD

c:\pw_work_cfl\dms13718\PLN_East Fork Road_SNJUAN 2026-1(1).dgn [East Fork PNP - East Fork PNP - Plan [Sheet]]

9 June 2026 11:49 AM

© 2026 Microsoft Corporation © 2026 Maxar ©CNES (2026) Distribution Airbus DS © Mapbox

PROJECT	SHEET NUMBER
CO ERFO FS SNJUAN 2026-1(1)	D.3

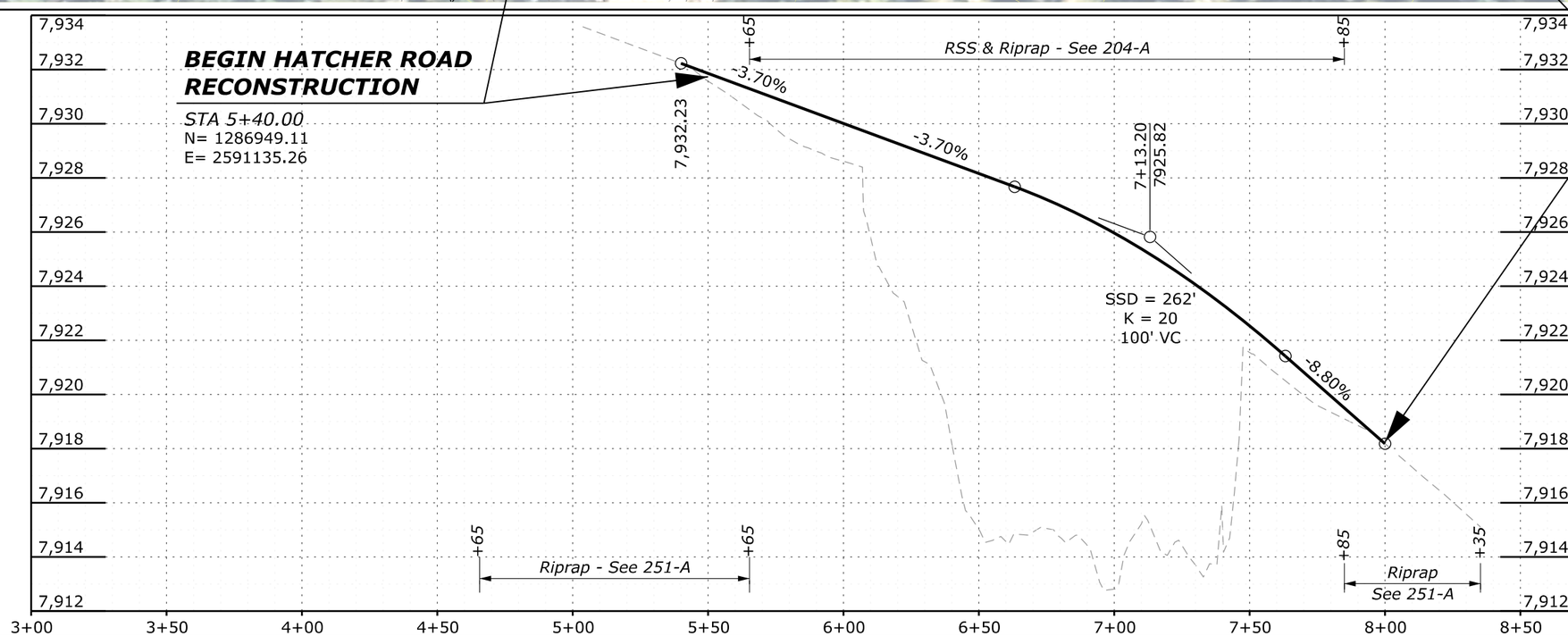

PLAN & PROFILE - 033 HATCHER ROAD

c:\pw_work_cfl\dms13718\PLN_Hatcher Road_SNJUAN 2026-1(1).dgn [Hatcher PNP - Hatcher PNP - Plan (Sheet)]

16 June 2026 10:56 AM

© 2026 Microsoft Corporation © 2026 Maxar ©CNES (2026) Distribution Airbus DS © Mapbox

PROJECT	SHEET NUMBER
CO ERFO FS SNJUAN 2026-1(1)	D.4

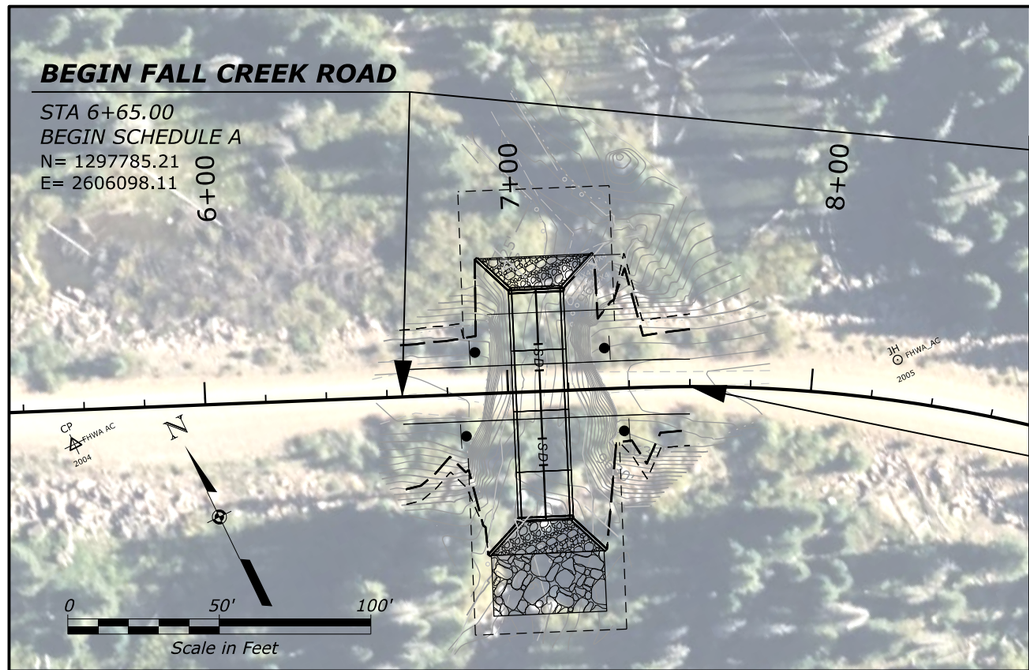

PLAN VIEW

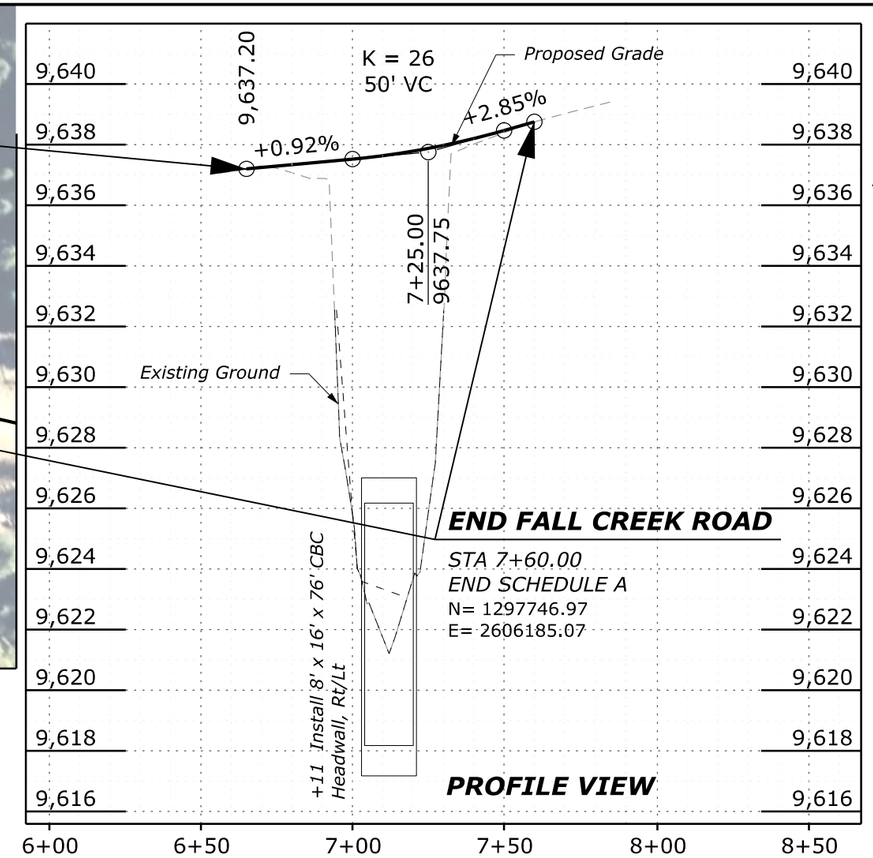

NOTE:

1. Dimensions shown are approximate and may be varied by the CO.
2. See Special 647-A for infill detail.

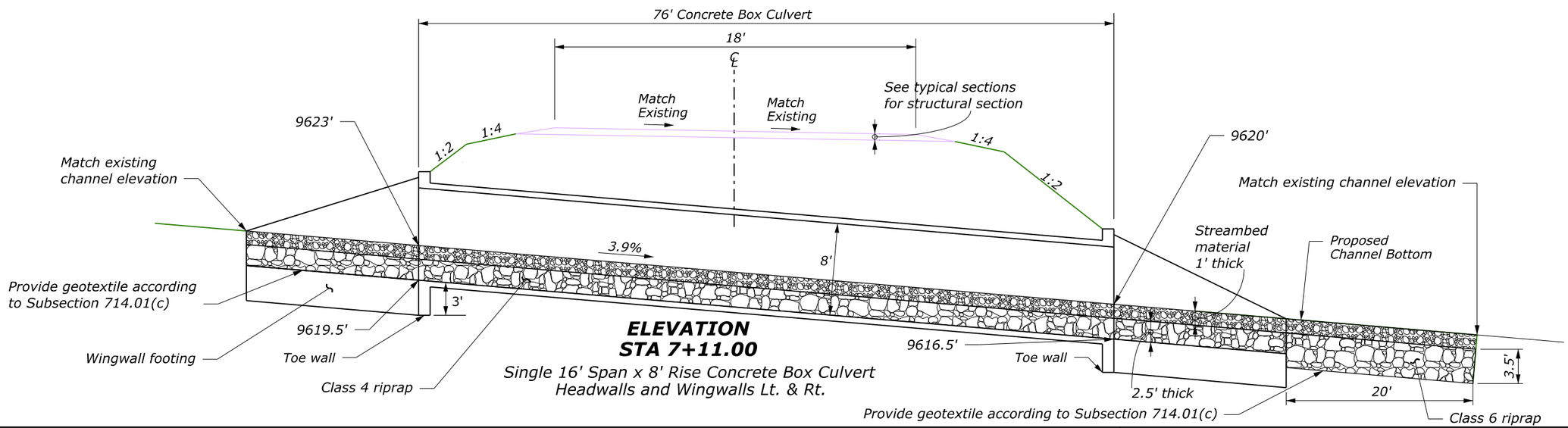

ELEVATION
STA 7+11.00
Single 16' Span x 8' Rise Concrete Box Culvert
Headwalls and Wingwalls Lt. & Rt.

PLAN AND PROFILE - 039 FALL CREEK ROAD

c:\pw_work_cflvdms13718\PLN_Fall Creek Road_SNJUAN 2026-1(1).dgn [PLAN AND PROFILE - 039 Fall Creek Road]

11 June 2026 11:43 AM

© 2026 Microsoft Corporation © 2026 Maxar ©CNES (2026) Distribution Airbus DS © Mapbox

PROJECT	SHEET NUMBER
CO ERFO FS SNJUAN 2026-1(1)	H.1

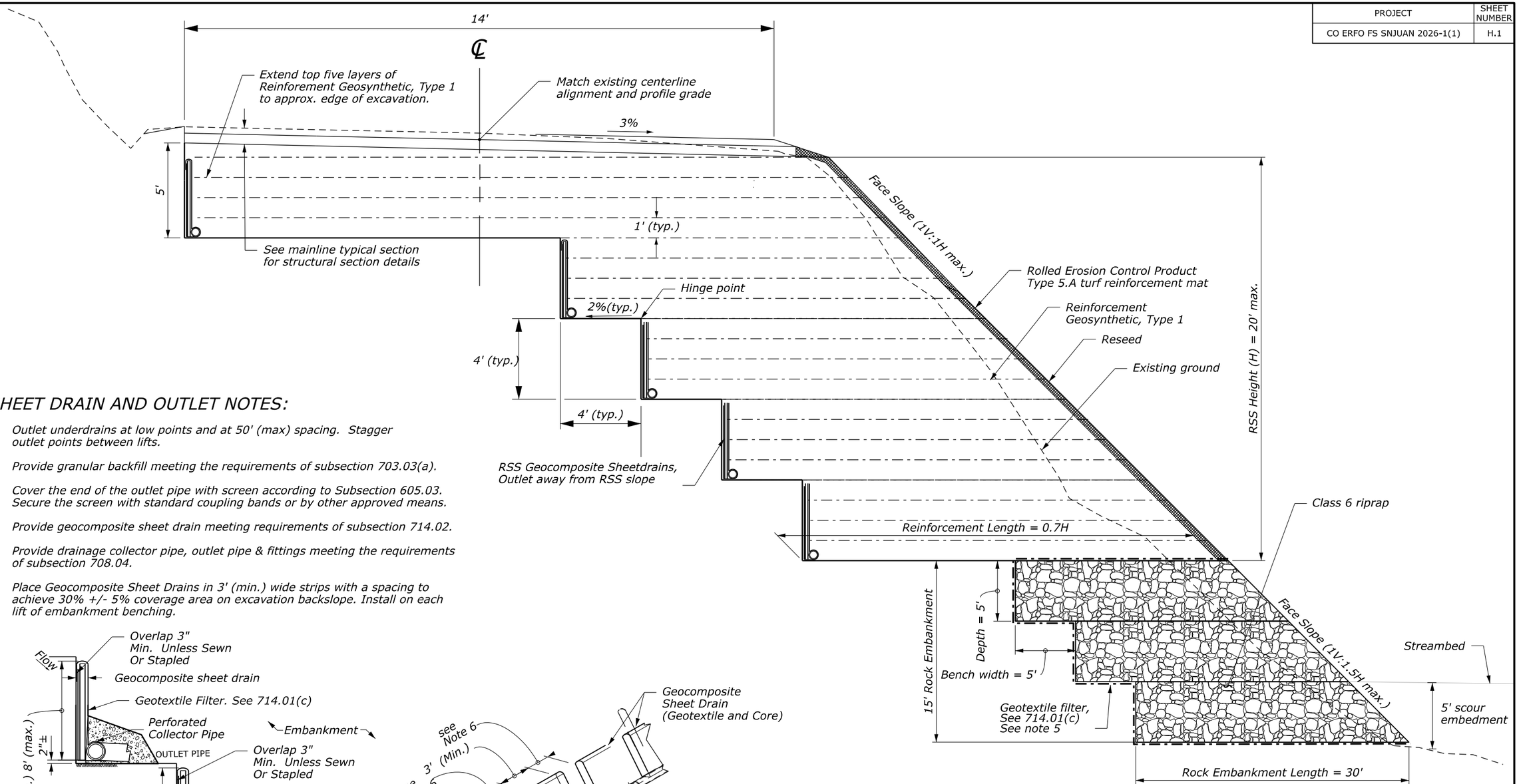

REINFORCED SOIL SLOPE HATCHER ROAD DETAIL

SHEET DRAIN AND OUTLET NOTES:

1. Outlet underdrains at low points and at 50' (max) spacing. Stagger outlet points between lifts.
2. Provide granular backfill meeting the requirements of subsection 703.03(a).
3. Cover the end of the outlet pipe with screen according to Subsection 605.03. Secure the screen with standard coupling bands or by other approved means.
4. Provide geocomposite sheet drain meeting requirements of subsection 714.02.
5. Provide drainage collector pipe, outlet pipe & fittings meeting the requirements of subsection 708.04.
6. Place Geocomposite Sheet Drains in 3' (min.) wide strips with a spacing to achieve 30% +/- 5% coverage area on excavation backslope. Install on each lift of embankment benching.

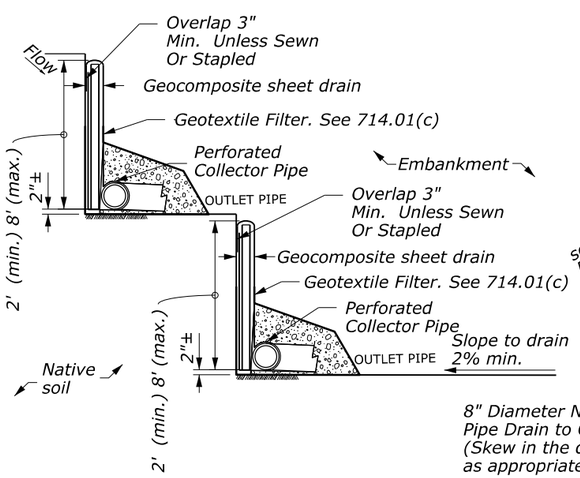

TYPICAL ELEVATION GEOCOMPOSITE SHEET DRAIN

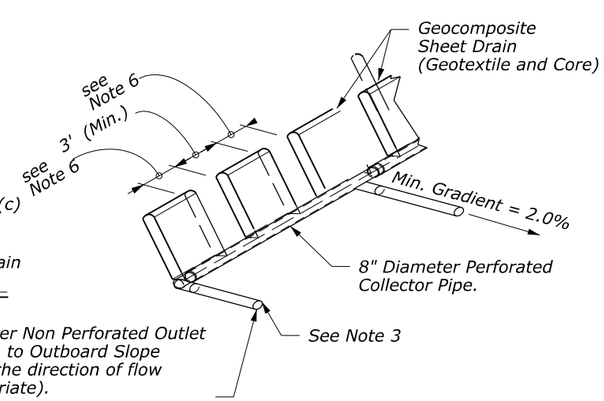

GEOCOMPOSITE SHEET DRAIN OUTLET PIPE DETAIL

RSS NOTES:

1. Perform the work according to Section 261. Remove material unsuitable for use in repair. Limits of repair to be verified by the CO. Construct repair fill slope to match the existing slopes. Construct fill slope to a maximum of 1V:1H.
2. Place Reinforcement Geosynthetic, Type 1 at the bottom of each lift, terminate on both ends. Place Geotextile according to Section 207.
3. Place Rolled Erosion Control Product, Type 5.A turf reinforcment mat on all disturbed soil.
4. Place Class 6 Riprap so that the finished grade is not steeper than 1V:1.5H.
5. Wrap bottom, back and top of rock embankment.

NO SCALE

SPECIAL 204-A

REINFORCED SOIL SLOPES (RSS)

16 June 2026 10:50 AM c:\pw_work_cfl\dms13708\SP204-A.dgn [Reinforced Soil Slopes (RSS)]

PROJECT	SHEET NUMBER
CO ERFO FS SNJUAN 2026-1(1)	H.2

NOTE:

1. *Benching is not required for ground sloped at 1V:3H or flatter.*
2. *Bench into existing slope as necessary to meet 12-foot minimum bench width and 8-foot bench height.*

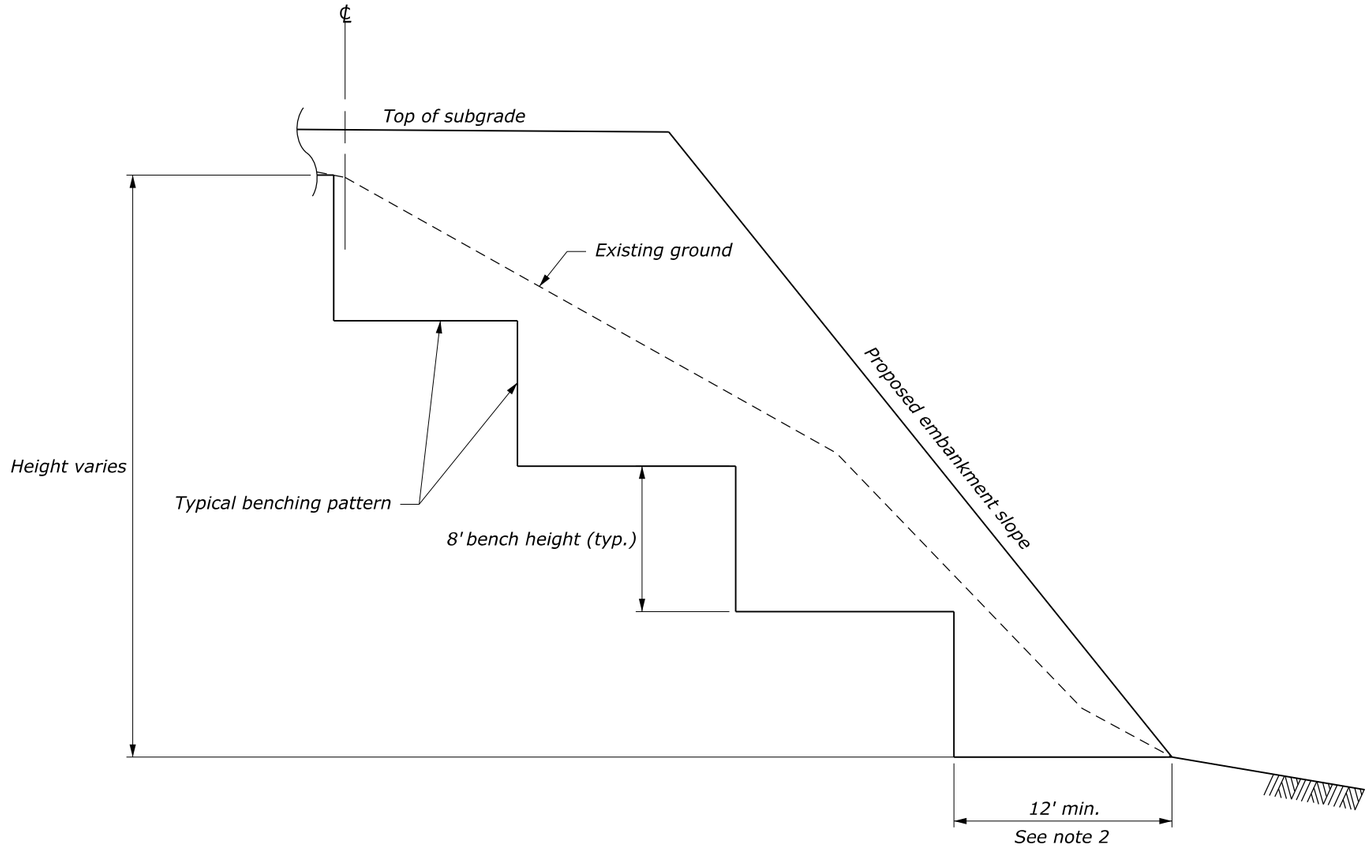

EMBANKMENT BENCHING

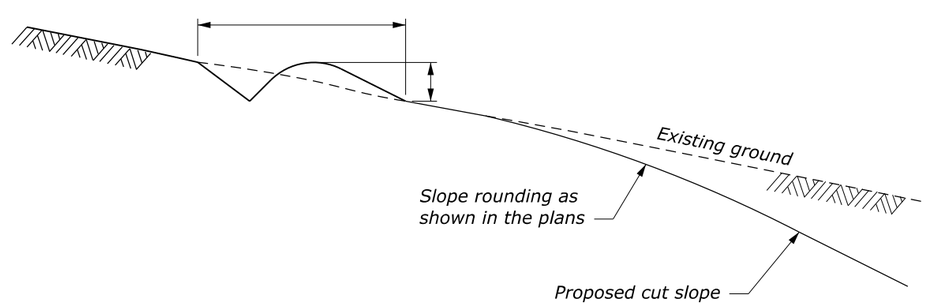

FURROW DITCH

NO SCALE

U.S. DEPARTMENT OF TRANSPORTATION, FHWA OFFICE OF FEDERAL LANDS HIGHWAY	CFLHD DETAIL C204-50
EMBANKMENT BENCHING AND FURROW DITCH	SPECIFICATION FP-24, FP-14
	APPROVED FOR USE 06/2024

27 May 2026 4:55 PM c:\pw_work_cfl\dms13708\C204-50.dgn [Det C204-50]

PROJECT	SHEET NUMBER
CO ERFO FS SNJUAN 2026-1(1)	I.1

Site	Riprap Class	t - Minimum Riprap Thickness (ft)	d - Minimum Embedment (ft)	x - Riprap Key Thickness (ft)	b - Riprap Key Bottom Extent (ft)
667 East Fork Road	6	3.5 (See Note 1)	5	3	9
621 Lower Piedra Road	6	3.5	7	3	9
033 Hatcher Road (See Note 2)	6	3.5	5	3	9

NOTES:

1. *Remove existing temporary repair material and place riprap.*
2. *Applies to Hatcher Road Stations 4+65-5+65 and 7+85-8+85.*

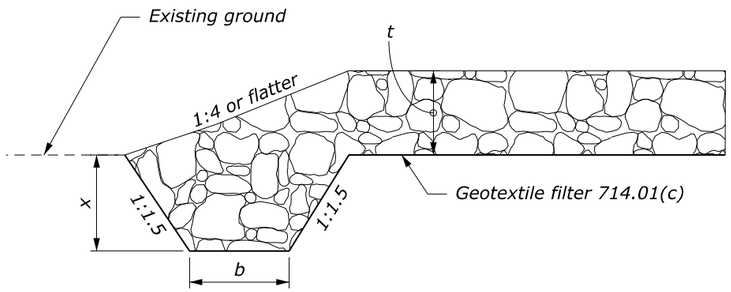

SECTION A-A'

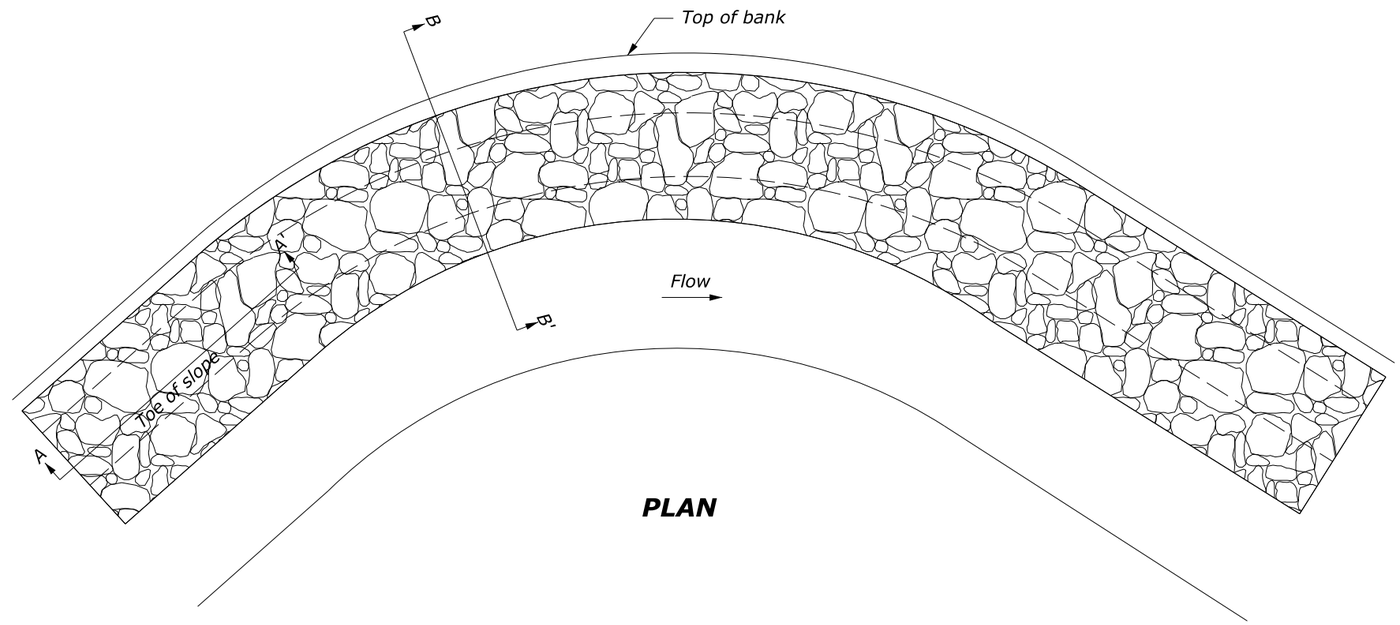

PLAN

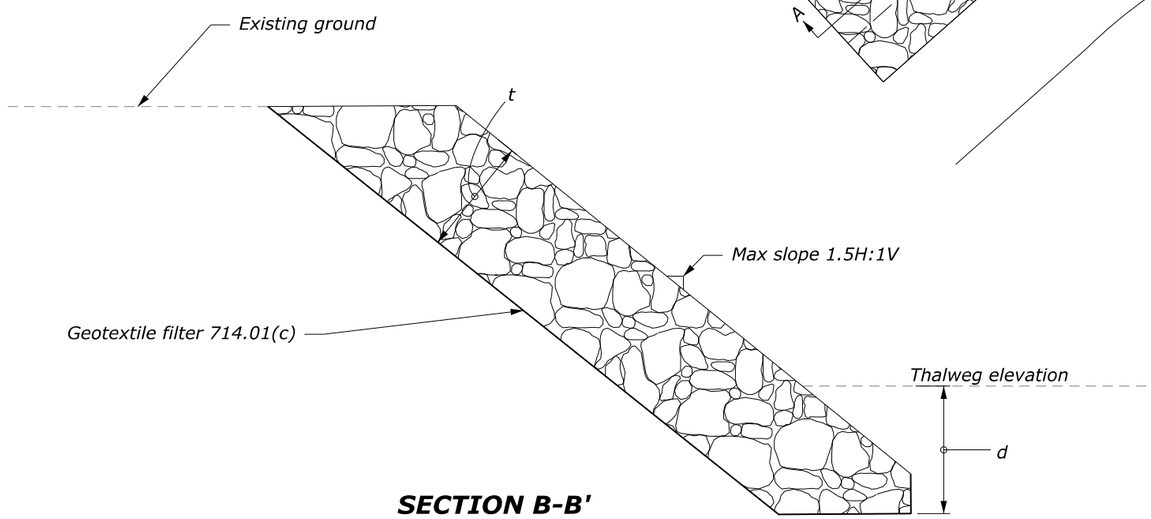

SECTION B-B'

NO SCALE

RIPRAP BANK PROTECTION WITH TERMINAL KEY-INS

SPECIAL 251-A

11 June 2026 11:58 AM c:\pw_work_cfl\dms14750\251-A.dgn [Riprap bank protection with terminal key-ins]

STATE	PROJECT	SHEET NO.
CO	CO ERFO FS SNJUAN 2026-1(1) FALL CREEK ROAD	K.1

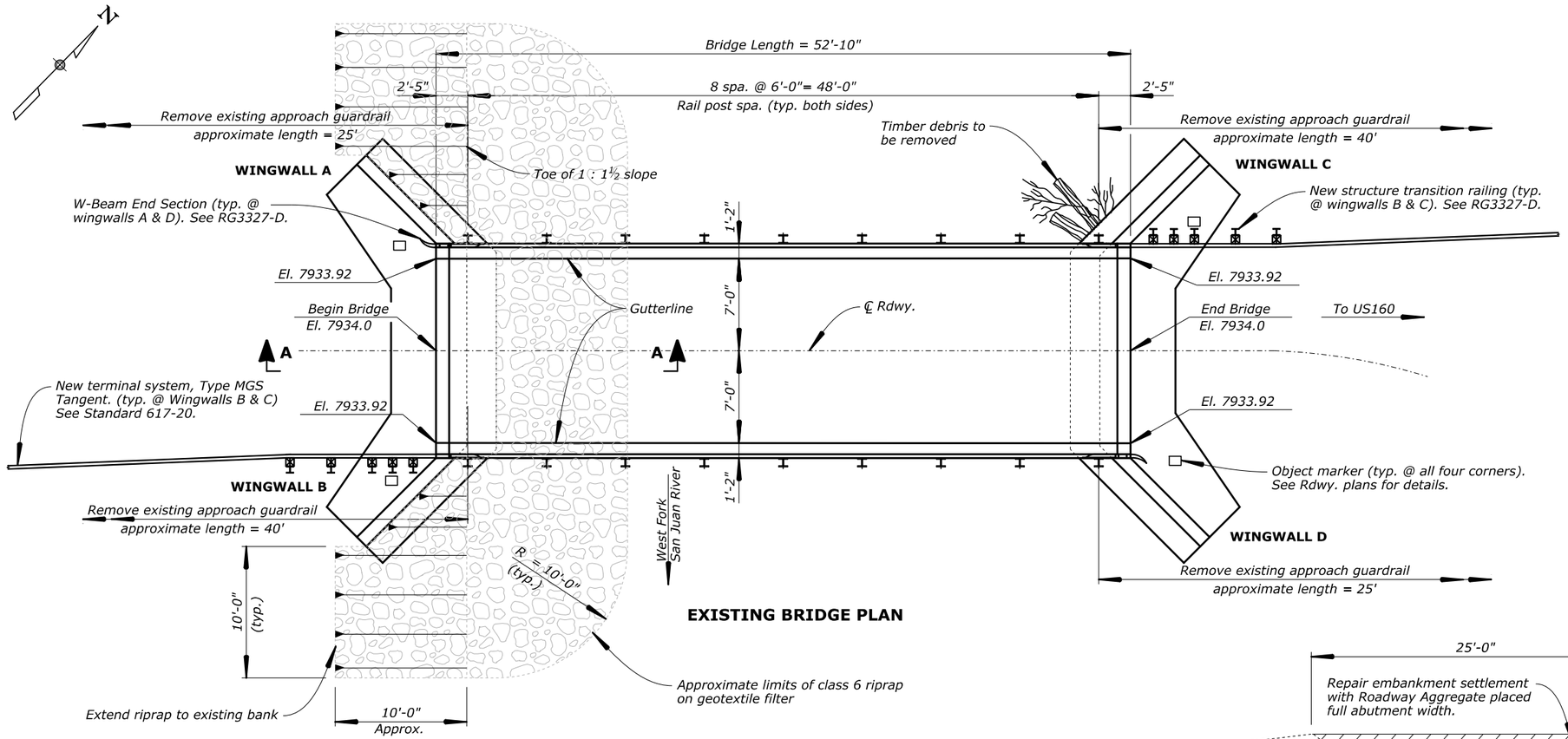

EXISTING BRIDGE PLAN

BRIDGE DRAWING INDEX

Drawing No.	Description
RG3327-A	BRIDGE PLAN & ELEVATION
RG3327-B	GENERAL NOTES & ESTIMATE
RG3327-C	ABUTMENT SCOUR REPAIR
RG3327-D	STRUCTURE TRANSITION RAILING

BRIDGE HYDRAULICS TABLE

	Q(cfs)	V (fps)	WSE (ft,)
Q2	841	6.0	7925.9
Q50	2,910	9.4	7929.9
Q100	3,480	10.2	7930.5
Q200	4,120	11.1	7931.2

Note: Water surface elevations (WSE) and velocities (V) are maximum values in the bridge opening, reported at the upstream bridge face.

Note: Do not cross bridge with vehicular loads until scour repair @ south abutment has been completed.

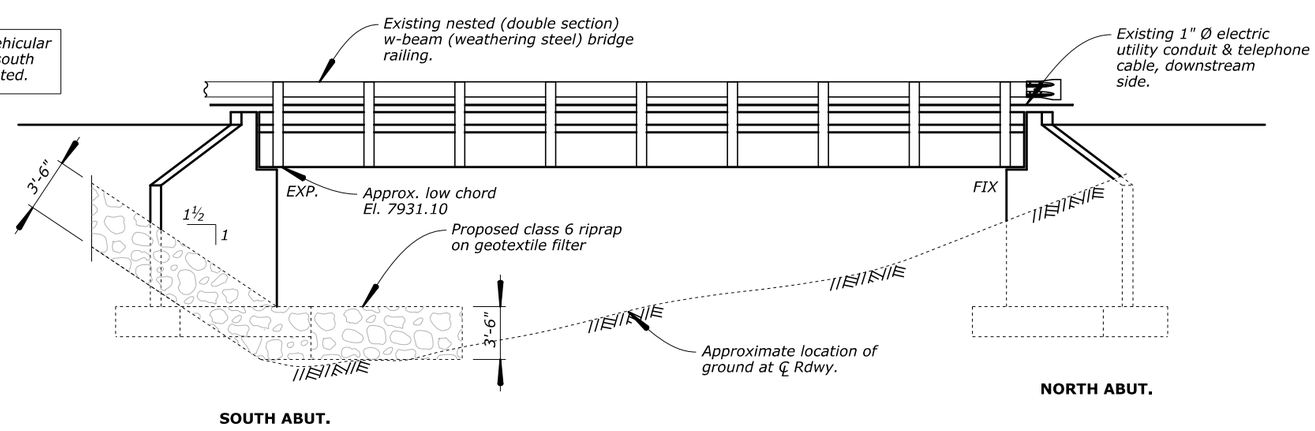

EXISTING BRIDGE ELEVATION

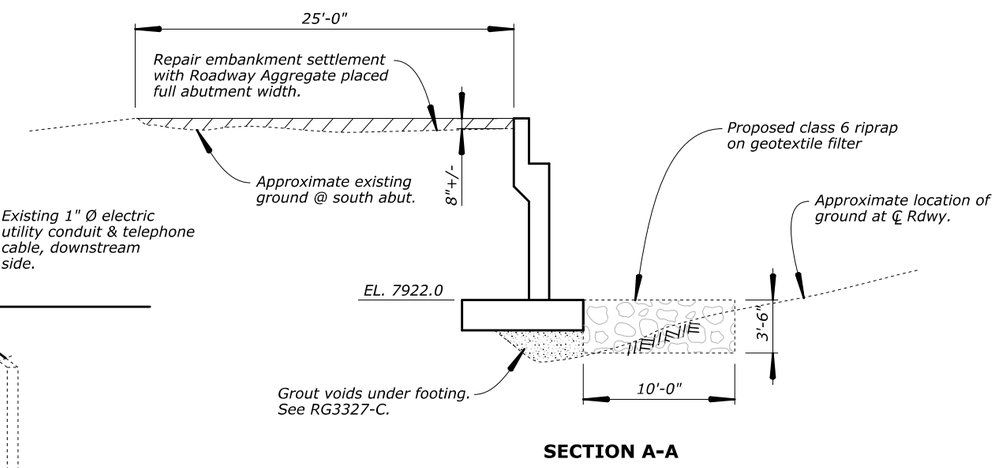

SECTION A-A

STRUCTURE NO.	STRUCTURE NAME	FEATURES INTERSECTED	LOCATION	U.S. DEPARTMENT OF TRANSPORTATION FEDERAL HIGHWAY ADMINISTRATION OFFICE OF FEDERAL LANDS HIGHWAY
	WEST FORK OF SAN JUAN RIVER BRIDGE	WEST FORK OF SAN JUAN RIVER	MINERAL COUNTY, COLORADO SAN JUAN NATIONAL FOREST	

NO.	DATE	BY	REVISIONS	DESIGNED BY	DRAWN BY	CHECKED BY	PROJECT TEAM LEAD	SCALE	BRIDGE PLAN SHEET	DATE	RG / BRP NO.
				K. EIKERMANN	B. ROBINSON	N. BARNETT	KARL EIKERMANN	1"= 10'-0"	1 of 4	JUNE 2026	RG3327-A

BRIDGE PLAN & ELEVATION

N:\CO\ERFO FS SNJUAN 2026-1(1) Fall Creek Rd\Bridge\RG3327\CADD Files\DGN Files\RG3327 pe.dgn

6/2/2026

STATE	PROJECT	SHEET NO.
CO	CO ERFO FS SNJUAN 2026-1(1) FALL CREEK ROAD	K.2

GENERAL NOTES:

SPECIFICATIONS:
DESIGN: AASHTO LRFD Bridge Design Specifications, 9th Edition 2020.
CONSTRUCTION: Federal Highway Administration Standard Specifications for Construction of Roads and Bridges on Federal Highway Projects, FP-24.

EXISTING BRIDGE:
For existing bridge plans, see R-293 "West Fork of San Juan River Bridge" prepared by U.S. Department of Agriculture, Forest Service and dated July 7, 1953.

ESTIMATE

Item No.	Item	Quantity:	Unit:	Notes:
20304-1000	Removal of structures and obstructions	All req'd	LPSM	(3)
25101-0600	Placed riprap, class 6	100	CUYD	(4)
30202-2000	Roadway Aggregate, Method 2	20	TON	
27001-0000	Grout	3	CUYD	
61702-1500	Terminal System, Type MGS Tangent	2	EACH	
61707-0000	Structure Transition Railing	27	LNFT	(1)(2)
62801-0000	Temporary Stream Diversion	All req'd	LPSM	
63308-3000	Object Marker, Type 3	4	EACH	

ESTIMATE NOTES:

(1) Contract Quantity

(2) Includes cost of furnishing and installing posts, blocks, rail elements and installation hardware. Also includes cost of two w-beam end sections.

(3) Includes removal of guardrail (approx. 130' lnft.), and removal of stream debris. Also includes cost of salvaging existing boulders and placing upstream/ downstream of proposed riprap as designated by CO.

(4) Includes cost of geotextile filter. Approximate quantity = 90 square yards.

N:\CO\ERFO FS SNJUAN 2026-1(1) Fall Creek Rd\Bridge\RG3327\CADD Files\DGN Files\RG3327_gn.dgn

6/2/2026

STRUCTURE NO.	STRUCTURE NAME	FEATURES INTERSECTED	LOCATION	U.S. DEPARTMENT OF TRANSPORTATION FEDERAL HIGHWAY ADMINISTRATION OFFICE OF FEDERAL LANDS HIGHWAY
	WEST FORK OF SAN JUAN RIVER BRIDGE	WEST FORK OF SAN JUAN RIVER	MINERAL COUNTY, COLORADO SAN JUAN NATIONAL FOREST	

NO.	DATE	BY	REVISIONS	DESIGNED BY	DRAWN BY	CHECKED BY	PROJECT TEAM LEAD	SCALE	BRIDGE PLAN SHEET	DATE	RG / BRP NO.
				K. EIKERMANN	B. ROBINSON	N. BARNETT	KARL EIKERMANN	NONE	2 of 4	JUNE 2026	RG3327- B

GENERAL NOTES

STATE	PROJECT	SHEET NO.
CO	CO ERFO FS SNJUAN 2026-1(1) FALL CREEK ROAD	K.3

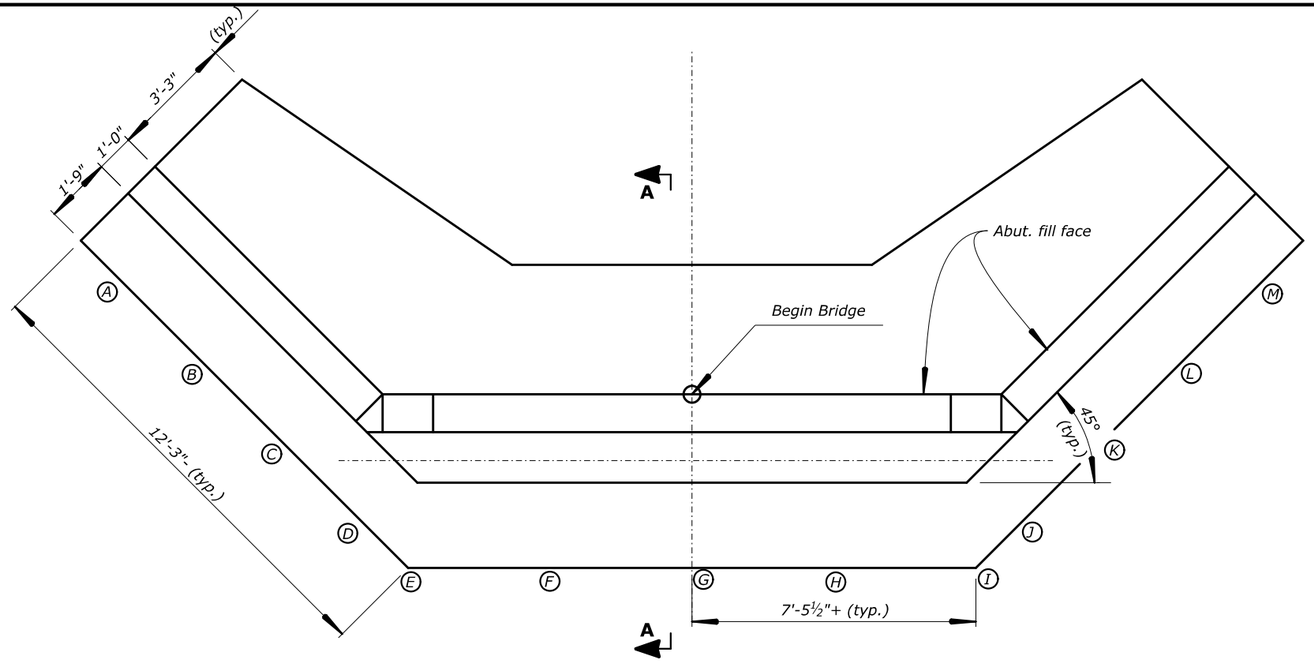

SOUTH ABUTMENT PLAN

GENERAL NOTES:

1. *Divert stream from perimeter as necessary to construct formwork and perform grouting operation.*
2. *Once the vent /fill pipes have been installed pump the grout into the undermined area until grout appears in the top of adjacent vent pipes. Cut or remove the vent /fill pipes flush with face of footing after the pumping operation is complete.*
3. *Adequate venting of the water to be displaced in the undermined area is important. The water must be able to escape when it is displaced by the grout pumped into the cavity. A 4' maximum spacing of the vent/fill pipes is recommended.*
4. *It is important to keep the nozzle buried in the grout during the pumping. This Is to reduce the amount of mixing of the grout and the water to be displaced.*
5. *If possible, clean out unstable material along the bottom of the undermined area prior to filling with grout.*
6. *Excavation of material or removal of debris to allow for proper installation of formwork is subsidiary to the pay item for grout.*
7. *See Special Contract Requirements Section 270 for additional requirements.*

✳CAVITY DIMENSIONS		
Point	"x"	"y"
A	1'	1'
B	3'	1'
C	2'-6"	1'
D	2'-6"	1'
E	3'	2'
F	3'	2'
G	6'	2'-6"
H	4'	2'
I	4'	6"
J	1'-6"	6"
K	1'-6"	6"
L	1'-6"	6"
M	1'-6"	6"

✳*Note: Dimensions are approximate per Critical Findings Inspection Reports performed 10/27/2025 and 4/08/2026 and shall be verified by contractor prior to ordering materials.*

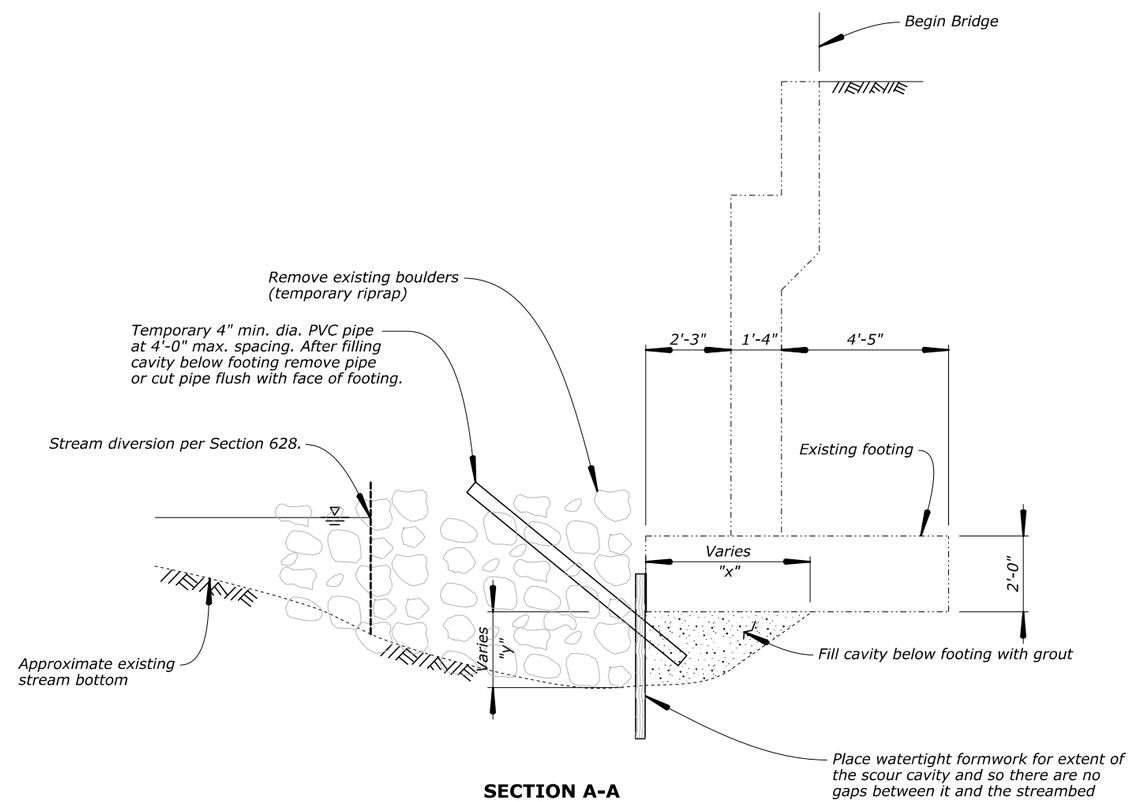

SECTION A-A
(TYPICAL SCOUR REPAIR, SIMILAR AT WINGWALLS)

STRUCTURE NO.	STRUCTURE NAME	FEATURES INTERSECTED	LOCATION	U.S. DEPARTMENT OF TRANSPORTATION FEDERAL HIGHWAY ADMINISTRATION OFFICE OF FEDERAL LANDS HIGHWAY
	WEST FORK OF SAN JUAN RIVER BRIDGE	WEST FORK OF SAN JUAN RIVER	MINERAL COUNTY, COLORADO SAN JUAN NATIONAL FOREST	

NO.	DATE	BY	REVISIONS	DESIGNED BY	DRAWN BY	CHECKED BY	PROJECT TEAM LEAD	SCALE	BRIDGE PLAN SHEET	DATE	RG / BRP NO.
				K. EIKERMANN	B. ROBINSON	N. BARNETT	KARL EIKERMANN	¼"= 1'-0"	3 of 4	JUNE 2026	RG3327-C

ABUTMENT SCOUR REPAIR

N:\CO\ERFO FS SNJUAN 2026-1(1) Fall Creek Rd\Bridge\RG3327\CADD Files\DGN Files\RG3327 abut scour.dgn

6/2/2026

STATE	PROJECT	SHEET NO.
CO	CO ERFO FS SNJUAN 2026-1(1) FALL CREEK ROAD	K.4

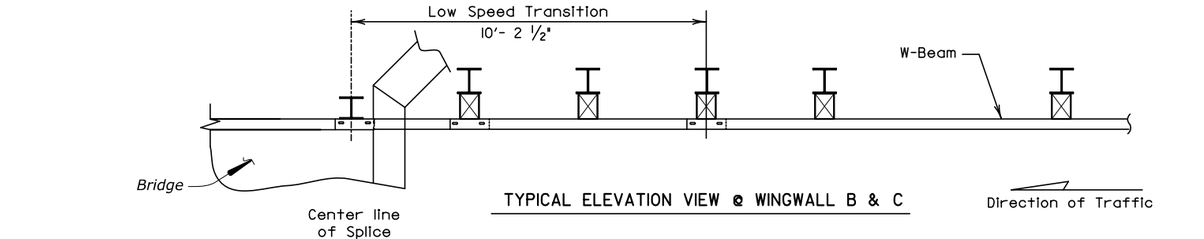

TYPICAL ELEVATION VIEW @ WINGWALL B & C

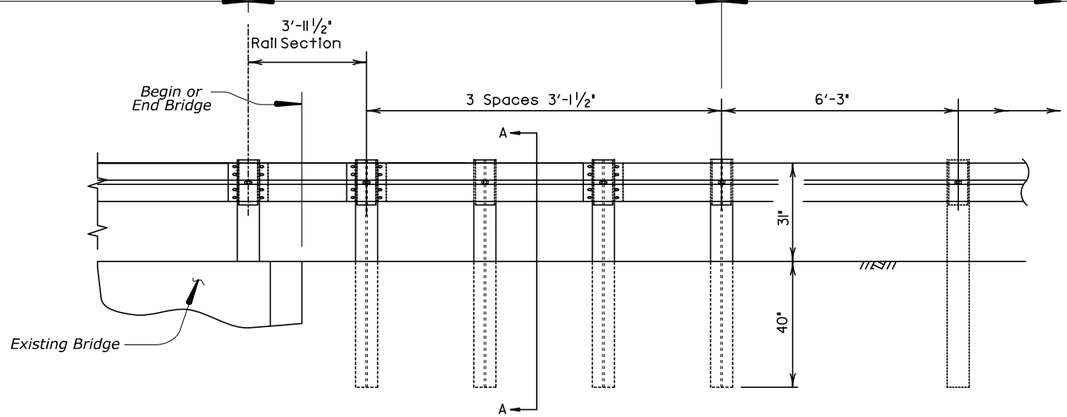

TYPICAL ELEVATION VIEW @ WINGWALL B & C

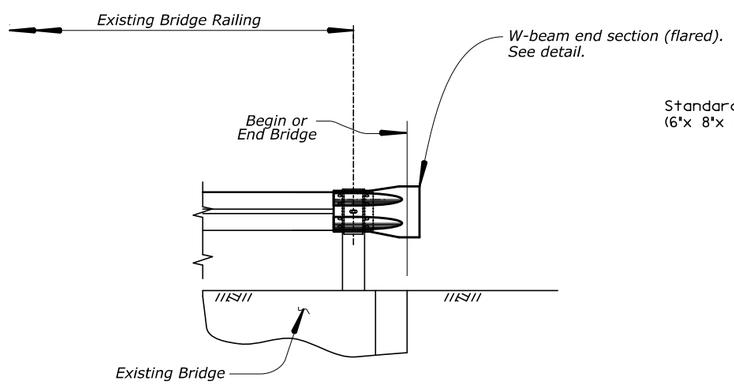

TYPICAL ELEVATION VIEW @ WINGWALL A & D

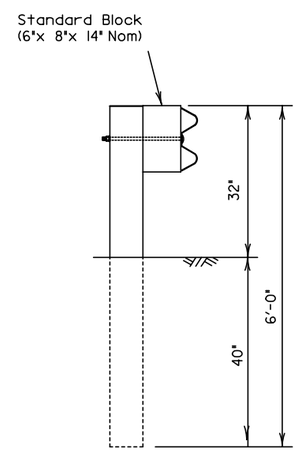

SECTION A-A

GENERAL NOTES

1. *Rail elements shall meet the requirements of AASHTO M180, Type I, Class B.*
2. *Button head "post" bolts shall be of sufficient length to extend through the full thickness of the nut and the washer and not more than 1" beyond it. Button head "splice" bolts are 5/8" x 1 1/4" with 5/8" double recessed nuts.*
3. *Button head bolts shall conform to ASTM A307. Nuts shall conform to ASTM A563. Washers shall conform to ASTM F436, Type 1. All attachment hardware shall be galvanized.*
4. *Material for steel posts shall conform to ASTM A36, and shall be galvanized after fabrication.*
5. *Posts shall not be set in concrete, of any depth.*
6. *Fabricate and construct railing to the horizontal and vertical alignment of the roadway.*

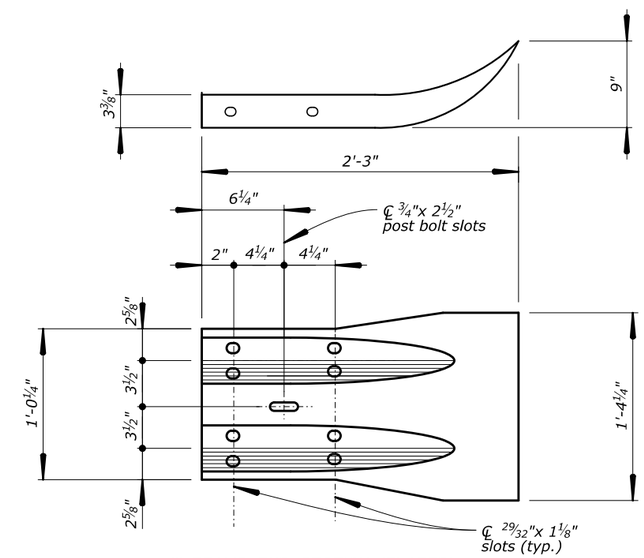

W-BEAMS END SECTION (FLARED)

No Scale
(2 Req'd.)

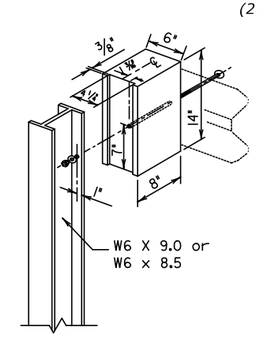

STEEL POST & BLOCK
(Showing Standard Block)

STRUCTURE NO.	STRUCTURE NAME	FEATURES INTERSECTED	LOCATION	U.S. DEPARTMENT OF TRANSPORTATION FEDERAL HIGHWAY ADMINISTRATION OFFICE OF FEDERAL LANDS HIGHWAY
	WEST FORK OF SAN JUAN RIVER BRIDGE	WEST FORK OF SAN JUAN RIVER	MINERAL COUNTY, COLORADO SAN JUAN NATIONAL FOREST	

NO.	DATE	BY	REVISIONS

DESIGNED BY	DRAWN BY	CHECKED BY	PROJECT TEAM LEAD	SCALE	BRIDGE PLAN SHEET	DATE	RG / BRP NO.
K. EIKERMANN	B. ROBINSON	N. BARNETT	KARL EIKERMANN	NONE	4 of 4	JUNE 2026	RG3327- D

STRUCTURE TRANSITION RAILING

N:\CO\ERFO FS SNJUAN 2026-1(1) Fall Creek Rd\Bridge\RG3327\CADD Files\DGN Files\RG3327 rail.dgn

6/2/2026

PROJECT	SHEET NUMBER
CO ERFO FS SNJUAN 2026-1(1)	L.1

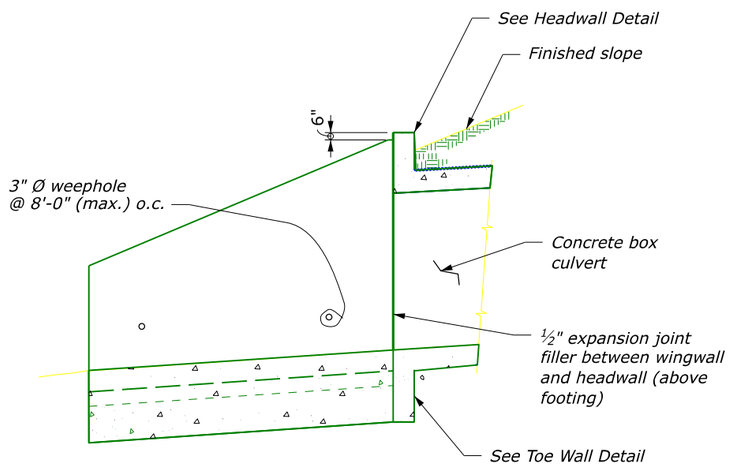

WING ELEVATION

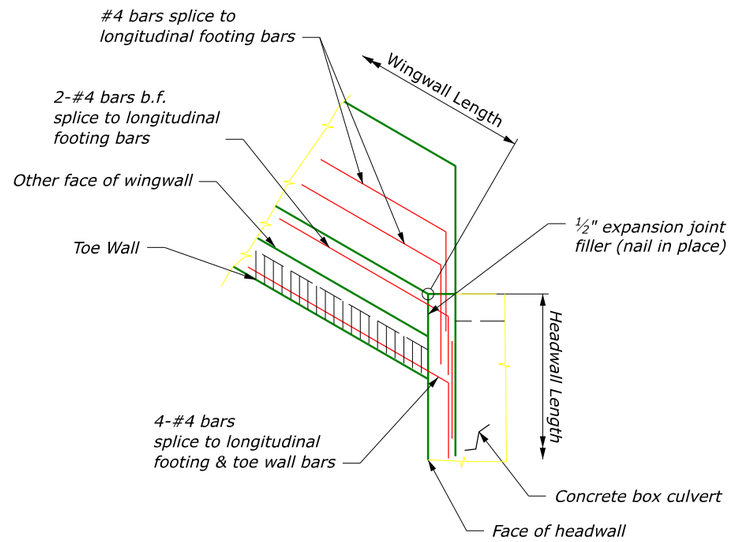

TYPICAL HEADWALL / WINGWALL PLAN DETAIL

See Fall Creek Road Repair Sheet

NOTES:

1. Chamfer all exposed concrete corners ¾".
2. Provide expansion joint material conforming to AASHTO M213. Payment included in the unit cost of 60220 Pay Items.
3. Dimensions, elevations and angles for wingwalls and headwalls are shown on the Fall Creek Road Repair Sheet.
4. Use reinforcing steel meeting the requirements of AASHTO M31 or M322, Grade 60 deformed. Use a minimum concrete covering to the face of any bar of 2", unless shown otherwise on the plans.
5. Concrete will conform to Section 601 in the SCRs, with a minimum 28-day compressive strength f'c = 4000 psi.
6. Design Data:
   AASHTO LRFD Bridge Design Specifications 9th Edition, 2020 . Factored bearing resistance, q =5.0 ksf. Lateral earth pressure equivalent to a fluid unit weight = 35 lbs. per cubic foot. Live load surcharge = equivalent height of soil, heq = 2 feet. For sliding, nominal coefficient of friction between concrete and soil = 0.65.
7. Clean all construction joints thoroughly before concrete is poured.
8. Include geocomposite sheet drains in the cost of 60220 Pay Items.
9. The contractor is responsible for the stability of the structure during construction.
10. Provide backfill material conforming to subsection 704.03. Limits are shown on the wingwall typical section.

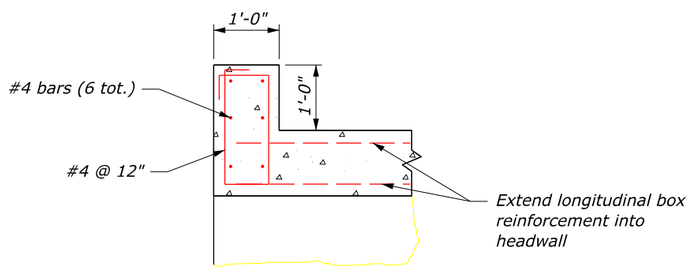

HEADWALL DETAIL

Abbreviations:
f.f. = fill face
o.f. = other face
b.f. = both faces

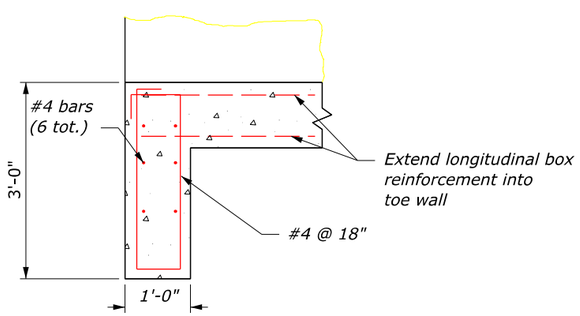

TOE WALL DETAIL

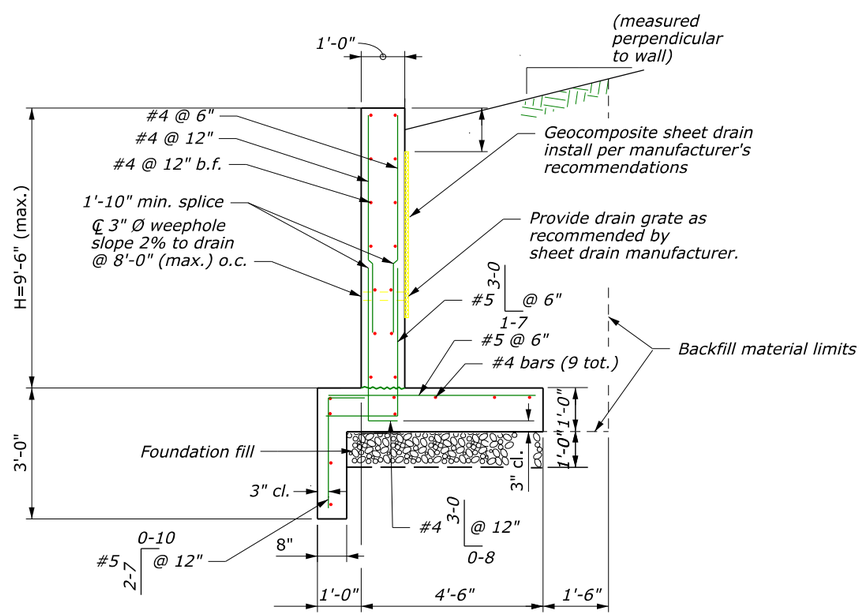

WINGWALL TYPICAL SECTION

SPECIAL
601-A

BOX CULVERT
HEADWALLS AND WINGWALLS

27 May 2026 4:41 PM c:\pw_work_cfl\dms13898\601-A.dgn [BOX CULVERT HEADWALLS AND WINGWALLS]

PROJECT	SHEET NUMBER
CO ERFO FS SNJUAN 2026-1(1)	N.1

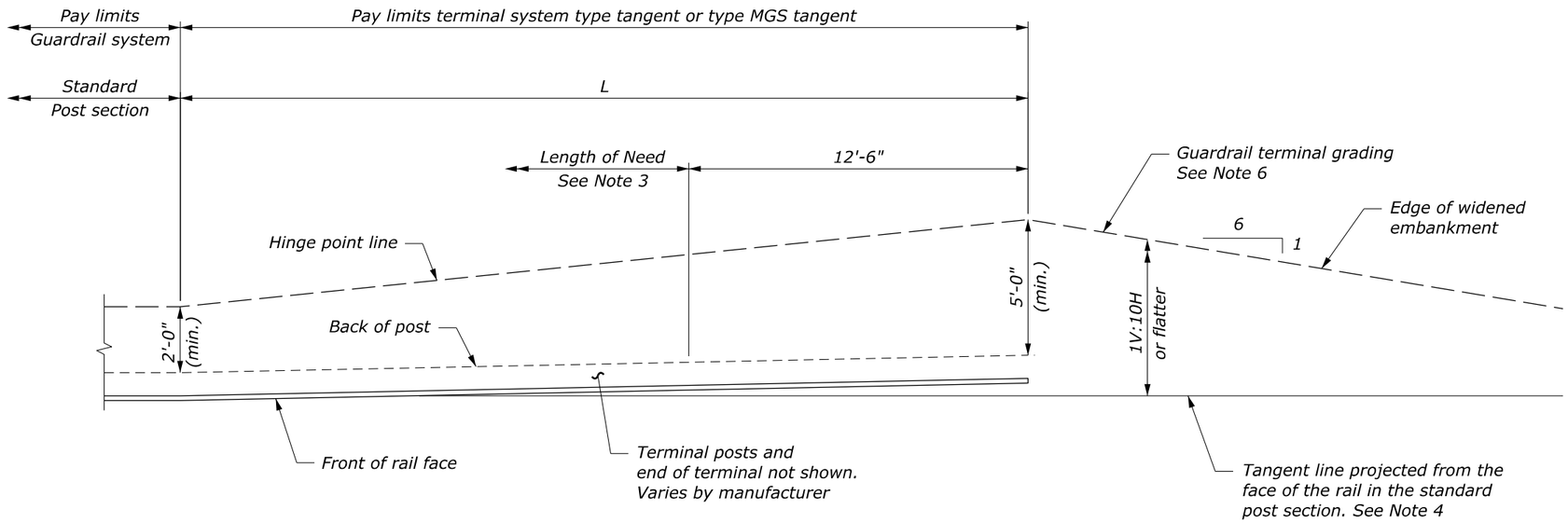

PLAN

PREFERRED GRADING

TEST LEVEL	L (FT)
2 (≤ 45 mph)	25
3 (> 45 mph)	37.5 or 50 (for G4)
	50 (for MGS)

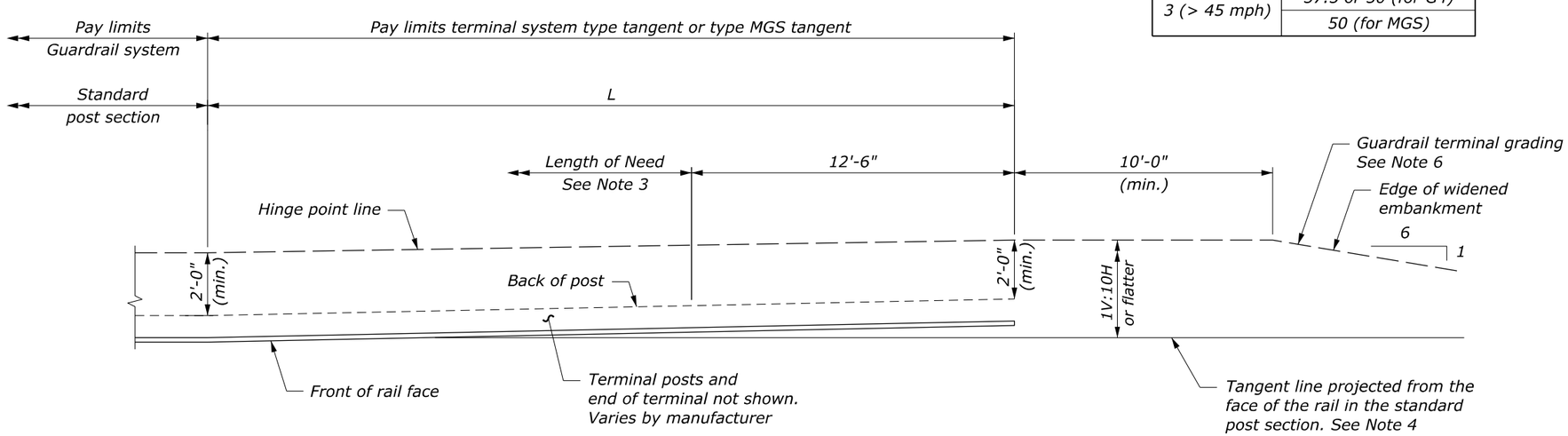

PLAN

ALTERNATIVE GRADING

NOTE:

1. Install tangent terminal according to the manufacturer's recommendations. See manufacturer's drawings for other details.
2. Construct the terminal grading layout as shown in the staking notes or model. If no staking notes or model are provided, use the preferred grading layout or as directed to fit site constraints. If necessary because of site limitations, use the alternative grading layout.
3. For design purposes, the length of need is assumed to begin at post 3. Verify the length of need with the manufacturer for a specific product. Adjust grading as necessary to install the tangent terminal according to the manufacturer's recommendations.
4. Install terminal at a 1:25 taper or flatter to position the end farther from the edge of shoulder, or use a taper according to the manufacturer's recommendations.
5. Install a reflectorized object marker on the end of the terminal.

NO SCALE

U.S. DEPARTMENT OF TRANSPORTATION, FHWA
OFFICE OF FEDERAL LANDS HIGHWAY

MGS AND G4 W-BEAM GUARDRAIL TYPE TANGENT TERMINAL AND GRADING

FLH STANDARD 617-20

SPECIFICATION FP-24

APPROVED FOR USE 8/2025

c:\pw_work_cflhdms14754\Std617-20.dgn [Std 617-20]
27 May 2026 2:36 PM

PROJECT	SHEET NUMBER
CO ERFO FS SNJUAN 2026-1(1)	O.1

NOTE:

1. Install fasteners according to the manufacturer's recommendations.
2. Overlap in the direction of the prevailing wind.

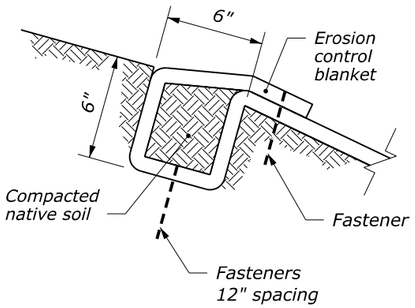

DETAIL A
ANCHOR TRENCH AT TOP OF SLOPE

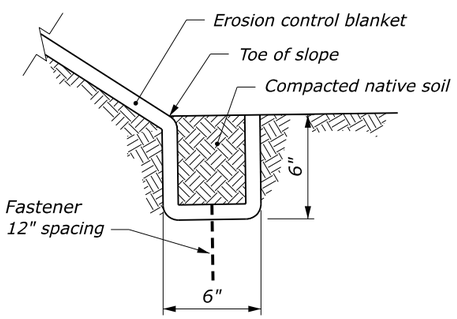

DETAIL B
ANCHOR TRENCH AT TOE OF SLOPE

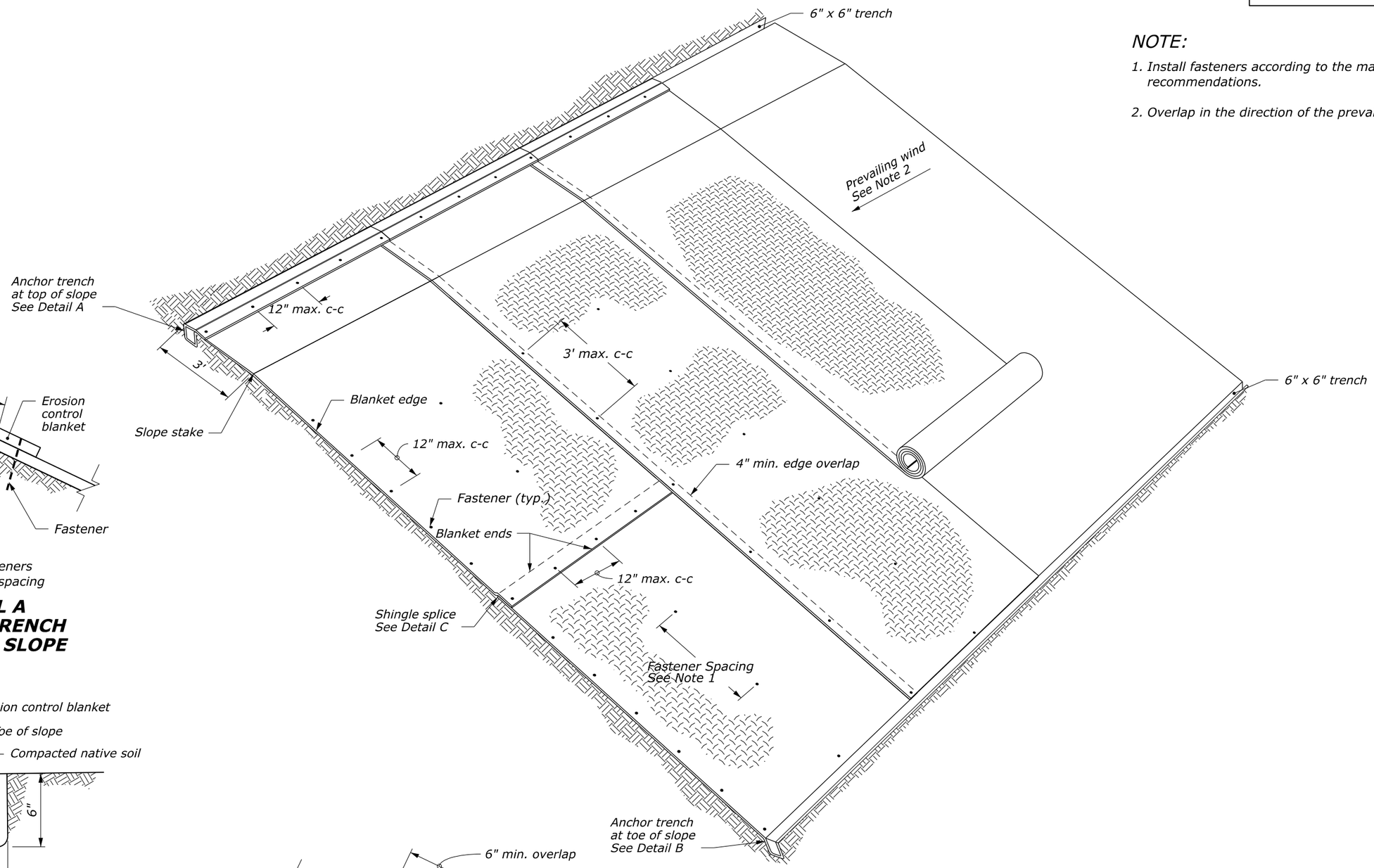

PERSPECTIVE VIEW

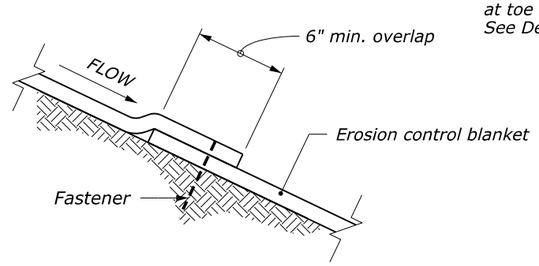

DETAIL C
SHINGLE SPLICE

NO SCALE

U.S. DEPARTMENT OF TRANSPORTATION, FHWA OFFICE OF FEDERAL LANDS HIGHWAY	CFL STANDARD C629-50
ROLLED EROSION CONTROL PRODUCT ON SLOPES	SPECIFICATION FP-24
	APPROVED FOR USE 06/2024

27 May 2026 4:31 PM c:\pw_work_cfl\dms13937\C629-50.dgn [Det C629-50]

PROJECT	SHEET NUMBER
CO ERFO FS SNJUAN 2026-1(1)	Q.1

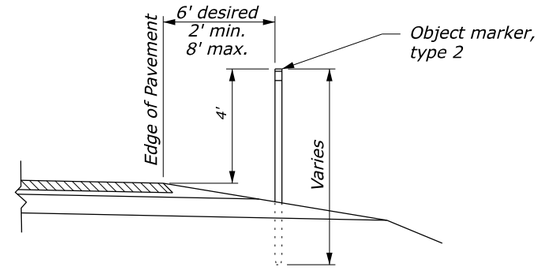

TYPICAL INSTALLATION

NOTE:

1. *Install Type 3 markers 6'-0" (typ.) in front of object towards traffic flow, with the inside edge of the marker in-line with the inside edge of the Obstruction, or as directed.*
2. *Place Type 2 object markers on a section of roadway the same distance from the edge of pavement.*
3. *Install steel or aluminum posts. Apply yellow reflective sheeting conforming to Subsection 718.01.*
4. *State or local standards may be submitted for approval.*

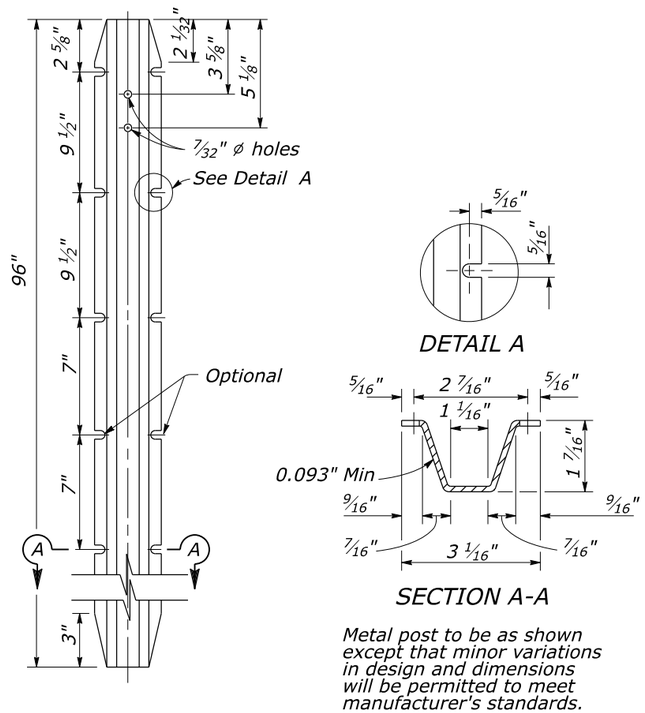

Metal post to be as shown except that minor variations in design and dimensions will be permitted to meet manufacturer's standards.

METAL POST DETAIL

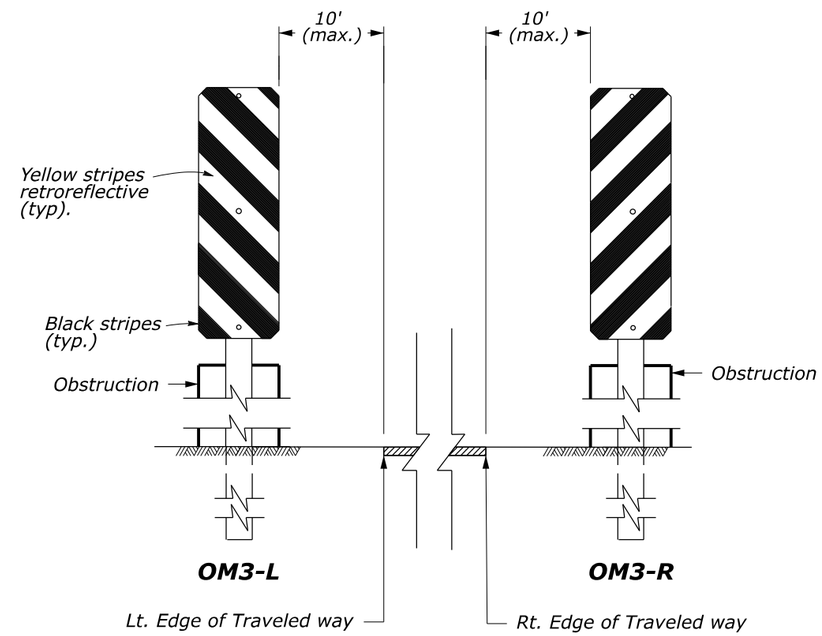

OBJECT MARKER TYPE 3 (OM3)

SPECIAL 633-A

OBJECT MARKERS

c:\pw_work_cfl\dms14755\SP633-A.dgn [OBJECT MARKERS]
4 June 2026 3:25 PM

PROJECT	SHEET NUMBER
CO ERFO FS SNJUAN 2026-1(1)	R.1

SIGN SPACING TABLE			
ROAD TYPE	DISTANCE BETWEEN SIGNS IN FEET		
	A	B	C
Urban and Rural 30 mph and less	100	100	100
Urban and Rural 35 mph to 50 mph	350	350	350
Rural greater than 50 mph	500	500	500
Expressway / Freeway	1000	1500	2640

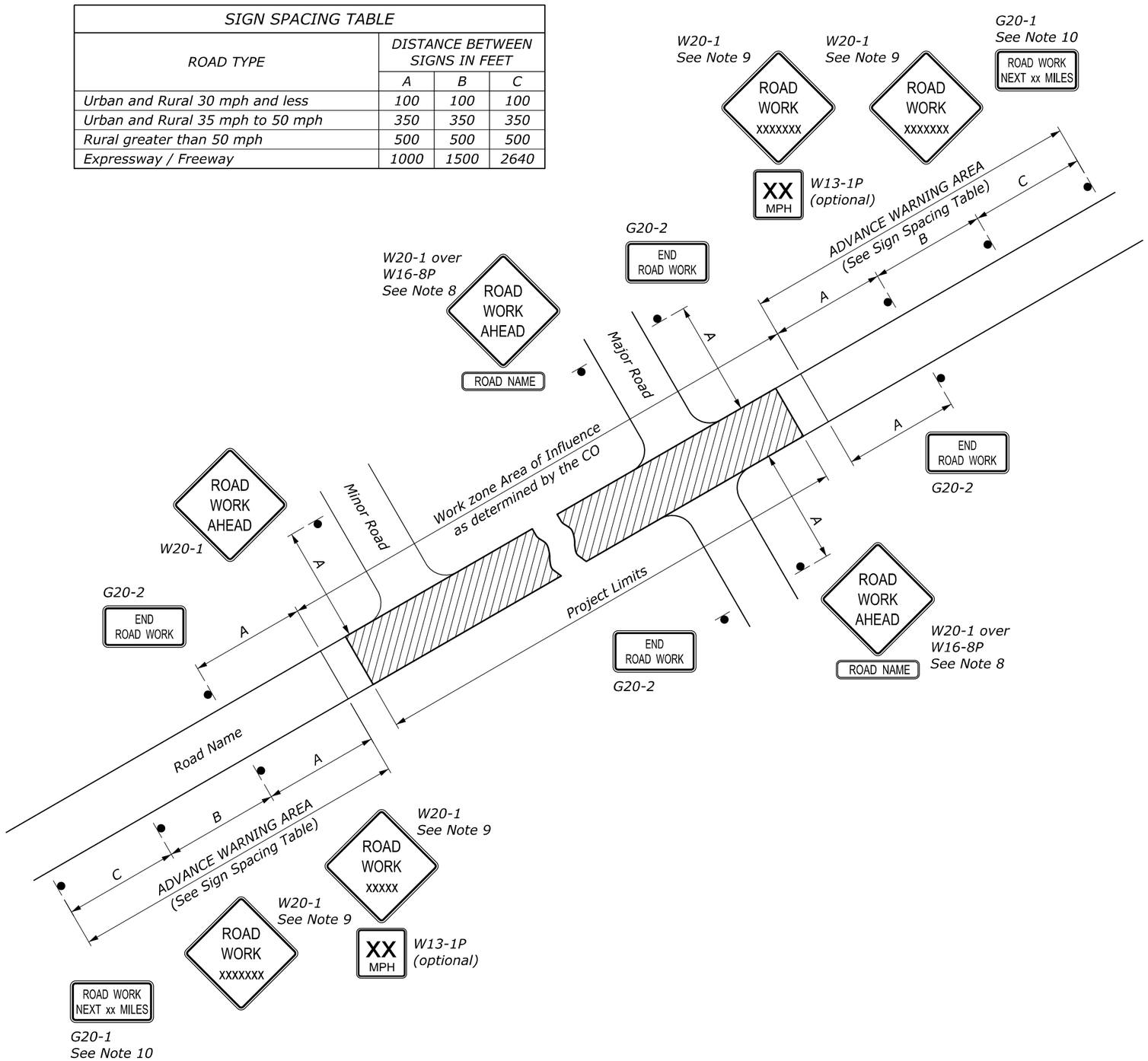

NOTE:

1. Erect all project advance warning signs before starting construction work.
2. Not all details shown on the temporary traffic control sheets may be applicable to this project. The Contractor may add or delete information and details in this traffic control plan as necessary to accommodate actual operations.
3. Where advance warning signs, placed as shown, interfere with permanent signs, locate the warning signs to fit field conditions as approved. Vary messages as required.
4. Install advisory speed plaques under the W20 series warning signs as needed to indicate a maximum recommended speed through the construction area.
5. Ensure all sign supports exposed to traffic are crashworthy.
6. Maintain two-way traffic during all non-work hours except as approved.
7. Do not store traffic control devices along the roadway when not in use. Cover post-mounted signs when not applicable.
8. If W20-1 is placed on a roadway other than that on which the actual construction work occurs, include a supplementary plaque indicating the name of the road on which the construction does occur (applies to major roads only).
9. The message on the W20-1 signs may be ROAD WORK AHEAD or may specify the distance to the work area in feet or in miles. Install an additional W20-1 sign when approach speeds exceed 50 mph. When used, place the two W20-1 signs "B" feet apart according to the Sign Spacing Table.
10. For work zones that are 2 miles or more in length, install G20-1 signs at each end of the project. Show the distance on the G20-1 sign to the nearest whole mile.
11. If signing on a roadway under a jurisdiction other than the client agency, verify that an encroachment permit has been obtained.
12. State standards may be used as an alternative if approved.

NO SCALE

U.S. DEPARTMENT OF TRANSPORTATION, FHWA
OFFICE OF FEDERAL LANDS HIGHWAY

TEMPORARY TRAFFIC CONTROL ADVANCE SIGNING

FLH STANDARD 635-1

SPECIFICATION FP-24, FP-14

APPROVED FOR USE 2/2024

c:\pw_work_cflhdms13707\Std635-1.dgn [Std 635-1]
4 May 2026 9:14 AM

PROJECT	SHEET NUMBER
CO ERFO FS SNJUAN 2026-1(1)	R.2

LENGTH AND SPACING TABLE				
APPROACH SPEED* MPH	BUFFER SPACE LENGTH FEET	CHANNELIZING DEVICE SPACING IN FEET		
		TAPER AREA	BUFFER SPACE	WORK SPACE
20	115	20	40	40
25	155	20	50	50
30	200	20	60	60
35	250	20	70	70
40	305	20	80	80
45	360	20	90	90
50	425	20	100	100
55	495	20	110	110
60	570	20	120	120
65	645	20	130	130
70	730	20	140	140

* Approach speed based on the regulatory posted speed, not the advisory speed.

SIGN SPACING TABLE			
ROAD TYPE	DISTANCE BETWEEN SIGNS IN FEET		
	A	B	C
Urban and Rural 30 mph and less	100	100	100
Urban and Rural 35 mph to 50 mph	350	350	350
Rural greater than 50 mph	500	500	500
Expressway / Freeway	1000	1500	2640

NOTE:

1. Signs are shown for one direction of travel only. Place signs similar to those depicted for the opposite direction of travel.
2. Final location and spacing of devices may be changed to fit field conditions as approved.
3. For pilot car operation, mount the PILOT CAR FOLLOW ME (G20-4) sign at a conspicuous location on the rear of vehicle. Prominently display the name of the Contractor on the pilot car.
4. If closure is completely within the project limits, eliminate the ROAD WORK AHEAD (W20-1) and END ROAD WORK (G20-2) signs.
5. For project specific minimum width, refer to the Special Contract Requirements, Section 156.
6. Do not allow equipment, materials, or vehicles to be parked or stored in the buffer space.

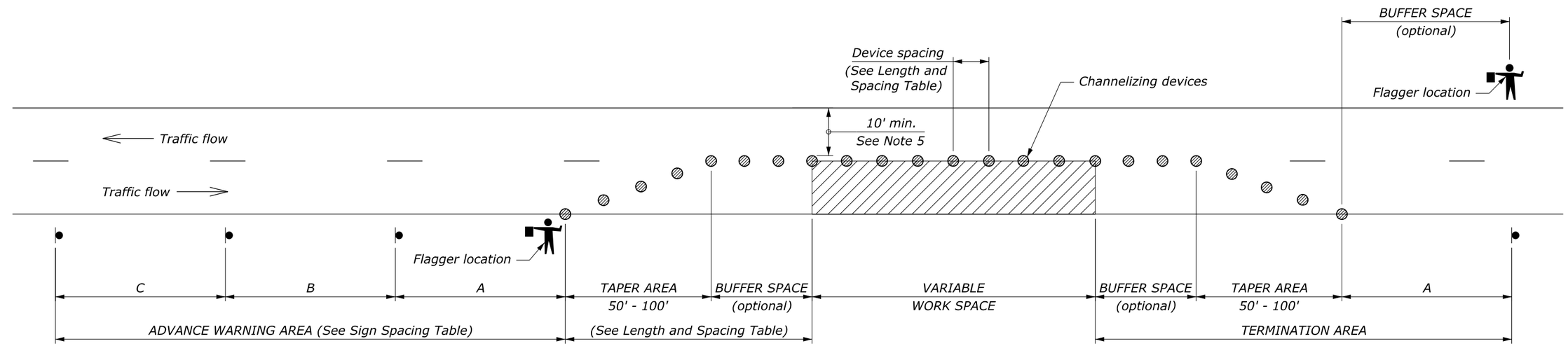

W20-1
See Note 4

W20-4

W13-1P
(optional)

W20-7

W16-2P

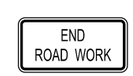

G20-2
See Note 4

NO SCALE

U.S. DEPARTMENT OF TRANSPORTATION, FHWA
OFFICE OF FEDERAL LANDS HIGHWAY

TEMPORARY TRAFFIC CONTROL SINGLE LANE CLOSURE LAYOUT (WITH FLAGGERS)

FLH STANDARD 635-6

SPECIFICATION FP-24, FP-14

APPROVED FOR USE 2/2024

c:\pw_work_cflhdms13707\Std635-6.dgn [Std 635-6]
4 May 2026 9:15 AM

PROJECT	SHEET NUMBER
CO ERFO FS SNJUAN 2026-1(1)	R.3

LENGTH AND SPACING TABLE				
APPROACH SPEED* MPH	BUFFER SPACE LENGTH FEET	CHANNELIZING DEVICE SPACING IN FEET		
		TAPER AREA	BUFFER SPACE	WORK SPACE
20	115	20	40	40
25	155	20	50	50
30	200	20	60	60
35	250	20	70	70
40	305	20	80	80
45	360	20	90	90
50	425	20	100	100
55	495	20	110	110
60	570	20	120	120
65	645	20	130	130
70	730	20	140	140

* Approach speed based on the regulatory posted speed, not the advisory speed.

SIGN SPACING TABLE			
ROAD TYPE	DISTANCE BETWEEN SIGNS IN FEET		
	A	B	C
Urban and Rural 30 mph and less	100	100	100
Urban and Rural 35 mph to 50 mph	350	350	350
Rural greater than 50 mph	500	500	500
Expressway / Freeway	1000	1500	2640

NOTE:

1. Use this layout only if sufficient gaps in oncoming traffic exist for traffic that must yield, and if drivers from both directions are able to see approaching traffic through and beyond the work site.
2. Final location and spacing of devices may be changed to fit field conditions as approved.
3. If closure is completely within the project limits, eliminate the ROAD WORK AHEAD (W20-1) and END ROAD WORK (G20-2) signs.
4. If the surface is paved, install yield lines that comply with the MUTCD.
5. For project specific minimum width, refer to Special Contract Requirements, Section 156.
6. Do not allow equipment, materials, or vehicles to be parked or stored in the buffer space.

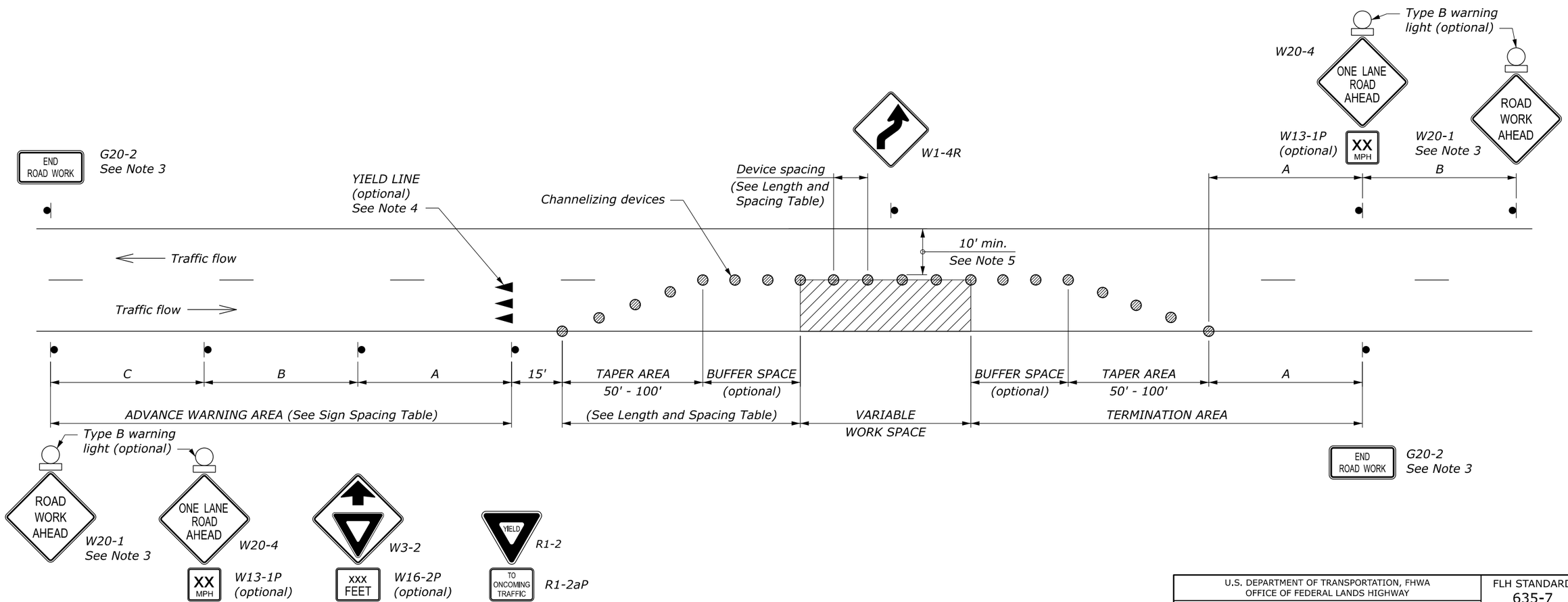

NO SCALE

U.S. DEPARTMENT OF TRANSPORTATION, FHWA
OFFICE OF FEDERAL LANDS HIGHWAY

TEMPORARY TRAFFIC CONTROL SINGLE LANE CLOSURE LAYOUT (WITH YIELD SIGN)

FLH STANDARD 635-7

SPECIFICATION FP-24, FP-14

APPROVED FOR USE 2/2024

c:\pw_work_cfl\dms13707\Std635-7.dgn [Std 635-7]
4 May 2026 9:16 AM

PROJECT	SHEET NUMBER
CO ERFO FS SNJUAN 2026-1(1)	R.4

LENGTH AND SPACING TABLE				
APPROACH SPEED* MPH	BUFFER SPACE LENGTH FEET	CHANNELIZING DEVICE SPACING IN FEET		
		TAPER AREA	BUFFER SPACE	WORK SPACE
20	115	20	40	40
25	155	20	50	50
30	200	20	60	60
35	250	20	70	70
40	305	20	80	80
45	360	20	90	90
50	425	20	100	100
55	495	20	110	110
60	570	20	120	120
65	645	20	130	130
70	730	20	140	140

* Approach speed based on the regulatory posted speed, not the advisory speed.

SIGN SPACING TABLE			
ROAD TYPE	DISTANCE BETWEEN SIGNS IN FEET		
	A	B	C
Urban and Rural 30 mph and less	100	100	100
Urban and Rural 35 mph to 50 mph	350	350	350
Rural greater than 50 mph	500	500	500
Expressway / Freeway	1000	1500	2640

NOTE:

1. Use this layout only if road users from both directions are able to see approaching vehicular traffic through and beyond the work site and have sufficient visibility of approaching vehicles.
2. Signs are shown for one direction of travel only. Place signs similar to those depicted for the opposite direction of travel.
3. Final location and spacing of devices may be changed to fit field conditions as approved.
4. If closure is completely within the project limits, eliminate the ROAD WORK AHEAD (W20-1) and END ROAD WORK (G20-2) signs.
5. For project specific minimum width, refer to Special Contract Requirements, Section 156.
6. If the roadway surface is paved, install stop lines that comply with the MUTCD.
7. Do not allow equipment, materials, or vehicles to be parked or stored in the buffer space.

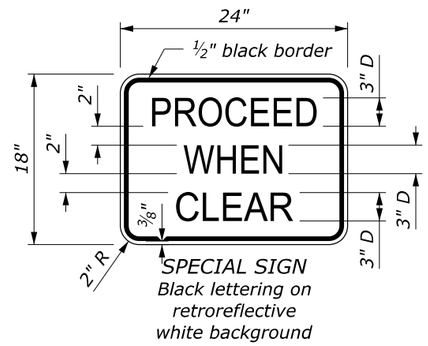

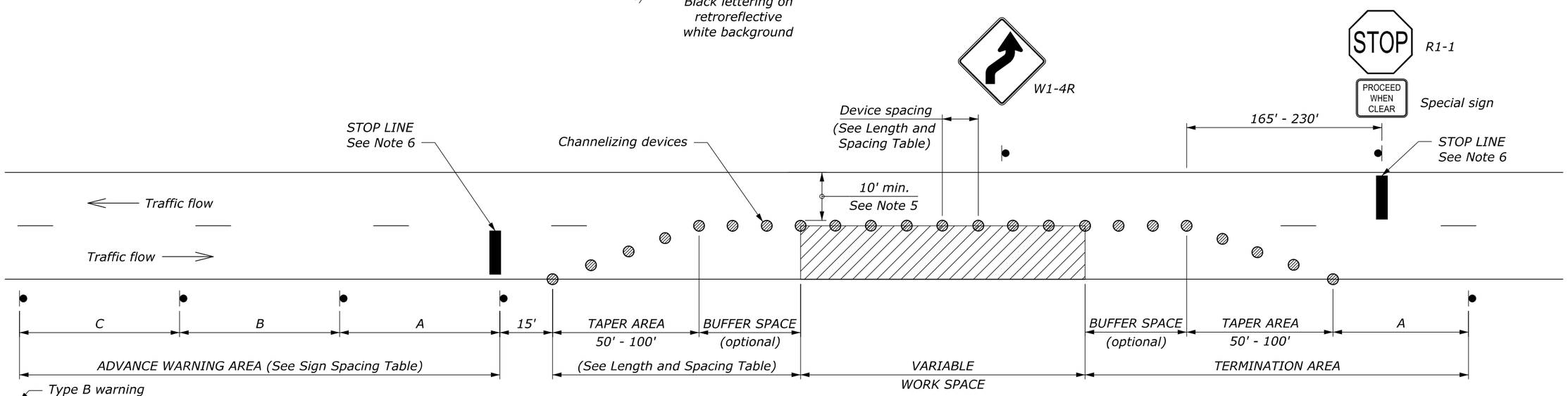

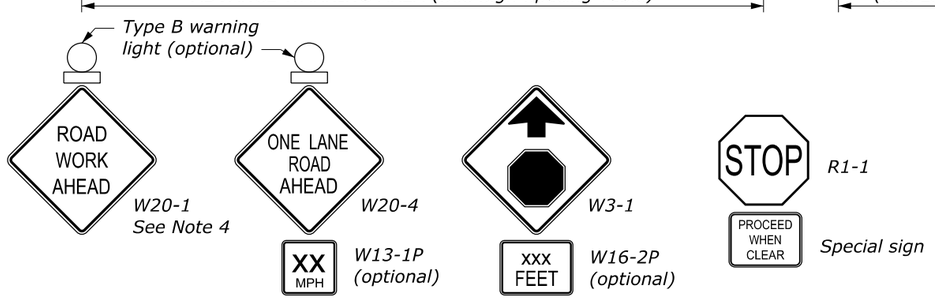

NO SCALE

U.S. DEPARTMENT OF TRANSPORTATION, FHWA
OFFICE OF FEDERAL LANDS HIGHWAY

TEMPORARY TRAFFIC CONTROL SINGLE LANE CLOSURE LAYOUT (WITH STOP SIGNS)

FLH STANDARD 635-8

SPECIFICATION FP-24, FP-14

APPROVED FOR USE 2/2024

c:\pw_work_cflfdms13707\Std635-8.dgn [Std 635-8]
4 May 2026 9:17 AM

PROJECT	SHEET NUMBER
CO ERFO FS SNJUAN 2026-1(1)	R.5

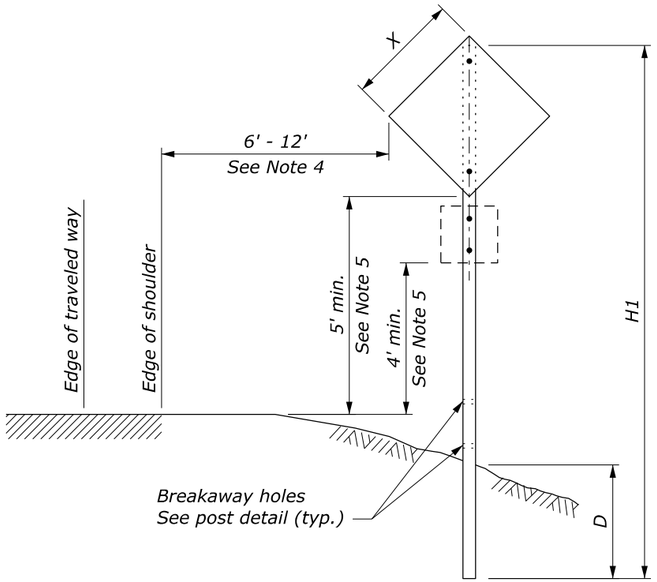

SINGLE POST SIGN

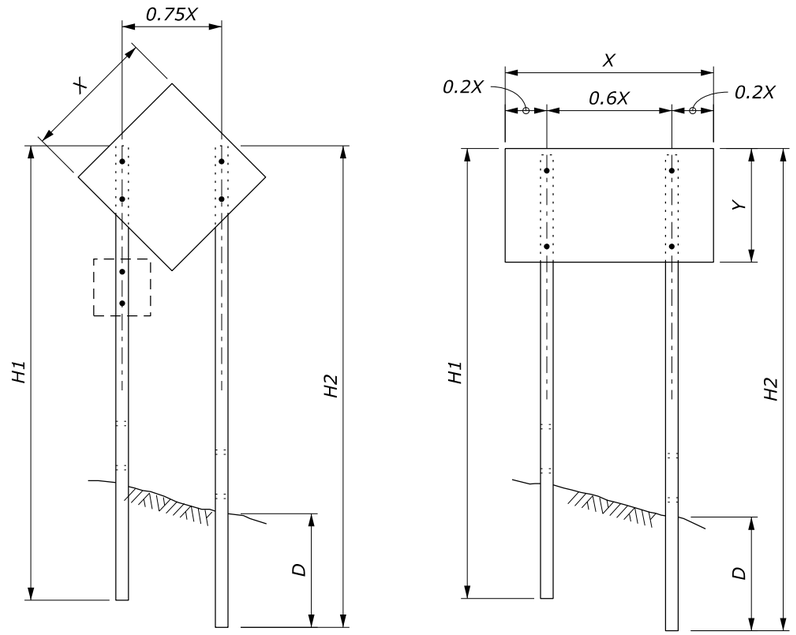

TWO POST SIGN

NOTE:

1. Attach sign panels with a minimum of two ¼" diameter bolts per post.
2. H1 and H2 = Overall post length. Select post lengths to fit field conditions.
3. D = Post embedment depth for average soil conditions.
4. In areas where lateral distance is limited, a minimum lateral offset of 2 ft may be used. In areas with curbs, a minimum lateral distance of 1 ft behind the face of the curb may be used.
5. In pedestrian locations, or in areas with obstructed views, use 7 ft minimum mounting height for main sign and 6 ft minimum mounting height for secondary sign.
6. Use 7 ft minimum spacing between posts for sign posts 6" x 6" or larger.
7. State standards may be used as an alternative if approved.

WOOD POST SELECTION TABLE

WIDTH "X"	AREA (SQFT)	NUMBER OF POSTS	POST SIZE (INCH)	D (INCH)	HOLE SIZE (INCH)
Diamond ≤ 36" Other Shapes ≤ 48"	< 10	1	4 x 4	36	0
		1	4 x 6	48	1.5
Diamond ≤ 48"	10 - 20	1	6 x 6	48	2
Diamond ≤ 48" Other Shapes ≤ 12'	10 - 20	2	4 x 4	36	0
	20 - 50	2	4 x 6	48	1.5
> 13'	50 - 65	2	6 x 6	48	2
12' - 16'	50 - 65	3	4 x 6	48	1.5
> 17'	65 - 95	4	4 x 6	48	1.5
> 30'	65 - 95	3	6 x 6	48	2

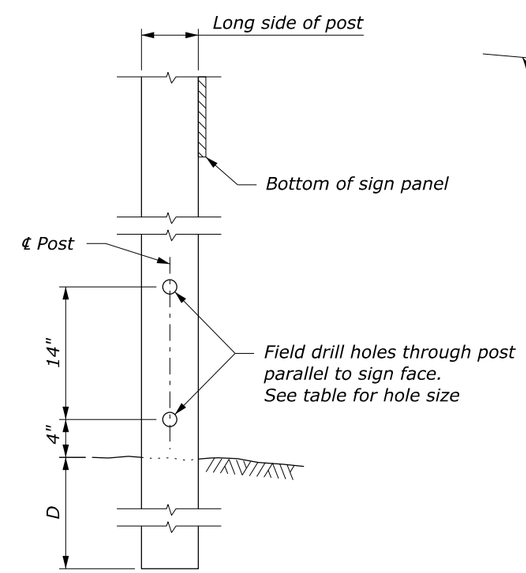

POST DETAIL

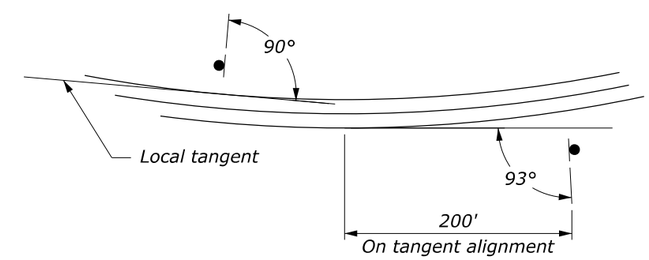

SIGN INSTALLATION ANGLE

NO SCALE

U.S. DEPARTMENT OF TRANSPORTATION, FHWA
OFFICE OF FEDERAL LANDS HIGHWAY

TEMPORARY TRAFFIC CONTROL SIGN INSTALLATION WOOD POSTS

FLH STANDARD 635-14

SPECIFICATION FP-24, FP-14

APPROVED FOR USE 2/2024

c:\pw_work_cfl\dms13707\Std635-14.dgn [Std 635-14]
4 May 2026 9:18 AM

PROJECT	SHEET NUMBER
CO ERFO FS SNJUAN 2026-1(1)	T.1

Note:

1. *See sheet D.4 for Fall Creek plan and profile.*

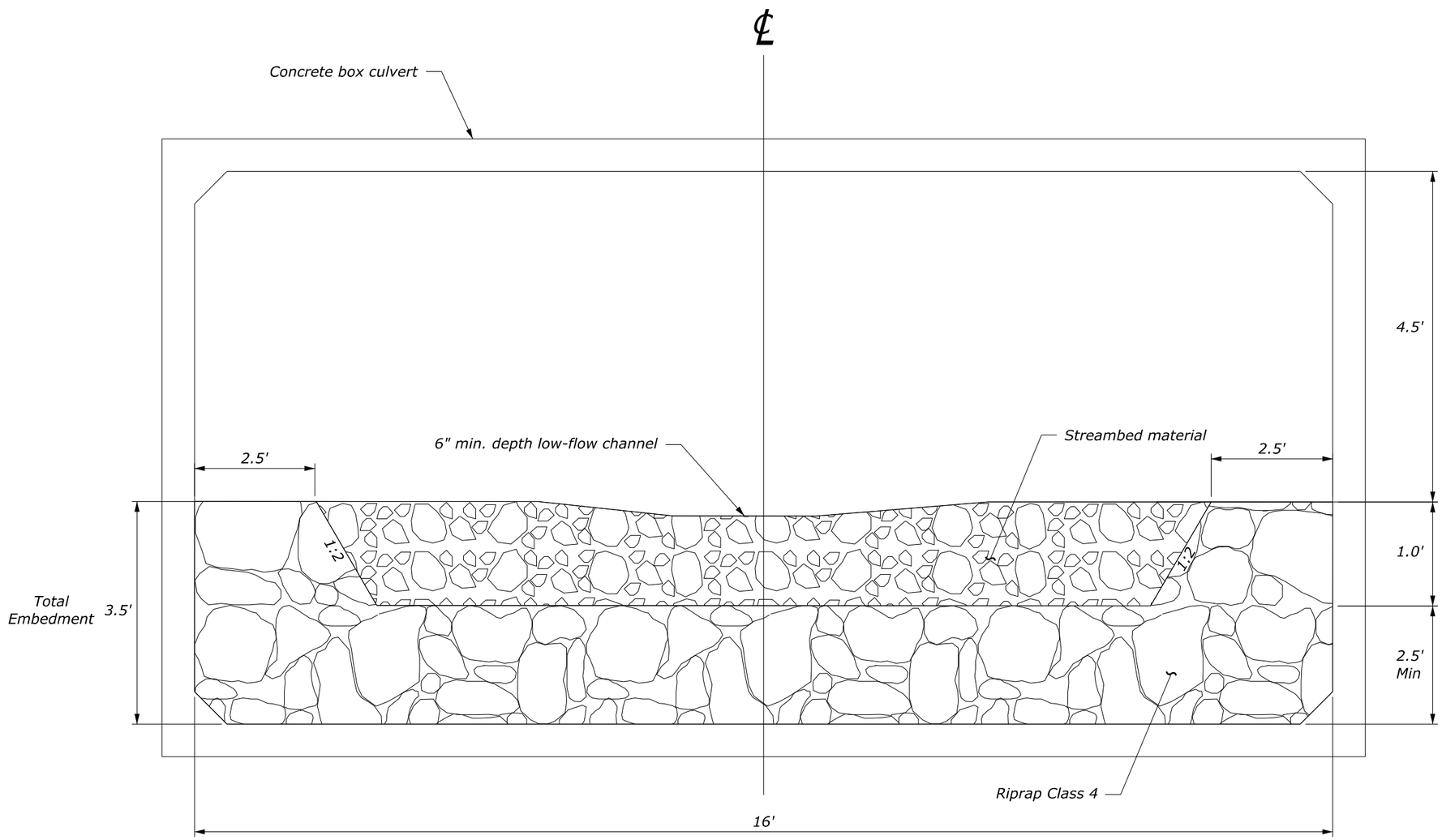

SPECIAL
647-A

BOX CULVERT INFILL DETAIL

9 June 2026 9:42 AM c:\pw_work_cfl\dms13704\Box Culvert Infill Detail.dgn [Box Culvert Infill Detail]