TECHNICAL EXHIBIT #4

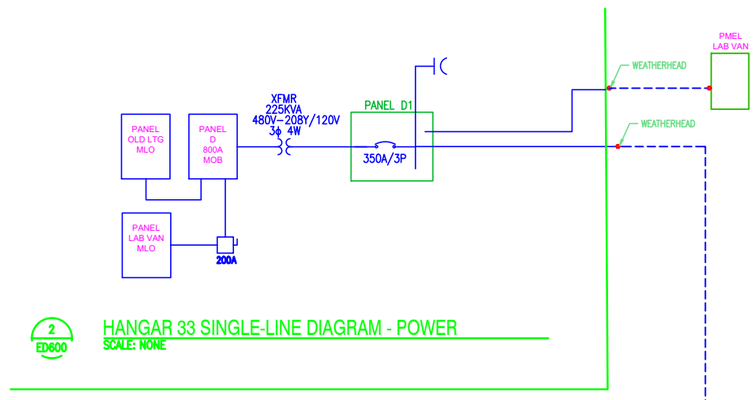

2 ED600 HANGAR 33 SINGLE-LINE DIAGRAM - POWER
SCALE: NONE

HANGAR 32 ELECTRICAL INSPECTION - MCKINSTRY CO

LOCATION	"ID TAG #"	EQUIPMENT DESCRIPTION	RECOMMENDED ACTION	McK REMARKS	NOAA REMARKS FOR ADDITIONAL CLIN WORK
Bldg. 32 NW Corner/Room 112	641	Switchboard 800A Fused – 480V 3PH, 4W	NONE		
Bldg. 32 NW Corner/Room 112	642	Switchboard 800A Fused – 480V, 3PH, 4W	NONE		
Bldg. 32 NW Corner/Room 109	643	PNL-F 400A Main Breaker,480V, 3PH, 4W	NONE	(5)K.O. Seals needed - Very Old, Remove/Replace	Replacing in PMEL Power Project
Bldg. 32 NW Corner/Room 109	644	PNL-F1 Main Lug 100A, 480V, 3PH, 4W	NONE		
Bldg. 32 NW Corner/Room 109	645	45 KVA Transformer 480V?208V	NONE		
Bldg. 32 NW Corner/Room 109	646	Disconnect S-2 , 150A, 208V, 3PH Feeds PNL-F2	NONE	Very Old, Remove/Replace	Remove
Bldg. 32 NW Corner/Room 109	647	PNL-F2 150A Main Breaker, 208V, 3PH, 4W	NONE	"K.O. seals needed, 3",1",3/4", ½" CKT-26,28,30 has 2wires per, wrong size wire for 100A 3-pole"	Repair
Bldg. 32 - NE Corner	648	"PNL-DD Main Lug 120/208V, 3PH, 4W Fed from 75KVA Transformer"	NONE	Panel does not have main breaker or disconnecting means. Needs ½" K.O. seal	Repair as part of new MTS for generator connection
Bldg. 32 - NE Corner	649	Disconnect T-32NL 100A 480V, 3PH, 3W	NONE	"Disconnect is not fused, missing bushing on line side, missing mounting screws to hold to wall. Fed from?"	Repair as part of new MTS for generator connection
Bldg. 32 - NE Corner	650	75 KVA Transformer	NONE		
Bldg. 32 - NE Corner	651	PNL-D 125A 120/208V, 3PH, 4W	NONE	Main lugs used to splice #2 and #6 STR copper conductors. Fed from?	Remove
Bldg. 32 - NE Stair – 2nd Floor	652	PNL-HH 100A 120/208V 3W	Low Grade Fault	"CKT-18 To be monitored – Plan new inspection within 90 days Dan Krigsvold removed hot breaker(#18), Re-terminated wire to ckt-20"	Review for repair
Bldg. 32 - NE Stair – 2nd Floor	653	PNL-GG 100A 120/208V 3W	NONE		
Bldg. 32 - NE Stair – 2nd Floor	654	150A Breaker Feeds Security Fed from Panel D (splice box)	NONE	Very old – Plexiglass cover Remove/Replace - Wrong size wire	Remove
Bldg. 32 – Center - West	655	PNL-K 225A 3PH, 4W	NONE	Old – Remove/Replace Many code violations	Removed in BiB Demo
Bldg. 32 – Center - West	656	75 KVA Transformer T-2 480V?208V	NONE		Removed in BiB Demo
Bldg. 32 – South of Center	657	60A Disconnect 480V, 3PH (Rope Strength Tester)	NONE	"Code Violations – wire size too small (2)#10 wires on each lug of load side"	Repair
Bldg. 32 – South of Center	658	Disconnect 60A 480V, 3PH	NONE	"Code Violations-#12AWG Doubled up w/#6AWG on Line side lugs. Remove/Replace"	Repair
Bldg. 32 – South of Center	659	Disconnect 30A 480V, 3PH	NONE	Code Violations- 250V fuses, Remove/Replace – Very old	Repair
Bldg. 32 – South of Center – West wall	660	"100A PNL, 120/208V, 3PH, 4W (new Sq D PNL fed from 30KVA XFMR)"	NONE		
Bldg. 32 – South of Center – West wall	661	30 KVA Transformer 480V?120/208V	NONE		
Bldg. 32 - SE (Brown Structure)	662	"PNL- AB 125A 120/208V 3PH, 4W, Main Lug (new Sq D QO PNL)"	NONE	Code Violation- needs correct lug (#4-#14AWG) for ground.	Repair

HANGAR 32 ELECTRICAL INSPECTION - MCKINSTRY CO

LOCATION	"ID TAG #"	EQUIPMENT DESCRIPTION	RECOMMENDED ACTION	McK REMARKS	NOAA REMARKS FOR ADDITIONAL CLIN WORK
Bldg. 32 - SE	663	PNL-CB1 100A, 208V, 4W, Main Breaker	NONE		Relocate for proper access
Bldg. 32 - SE	664	Disconnect S-5 125A Fused, 208V, 3PH,	NONE	"Code Violation-Line side lugs not rated for (2)#2AWG, Load side not rated for #6 and #2AWG- Very old – Remove/Replace"	Remove / Replace if needed
Bldg. 32 – SE Stair Room 132C	665	PNL-C 3PH, Sub to P2	NONE	Very old, Remove/Replace	Remove - unclear if this has lighting circuits
Bldg. 32 – SE Stair Room 132C	666	FU-2 (2)100A Fuses 208V	NONE	Very old, Remove/Replace	Remove
Bldg.32	667	Light Panel C Single Phase Bottom Right	NONE	Very old, Remove/De-Energized	Remove - unclear if this has lighting circuits
Bldg.32	668	Panel Top Right (8)Glass Fuses 120/208V	NONE	Very old, Remove/Replace	Remove
Bldg.32	669	PNL-Z 200A, 120/208V, 3PH, 4W, Main Breaker	NONE		
Bldg.32	670	PNL-Y 200A, 120/208V, 3PH, 4W, Main Breaker	NONE		
Bldg.	671	75 KVA Transformer TT1	NONE		
Bldg.32	672	PNL#5 225A, 120/208V	NONE		
Bldg.32	673	75 KVA Transformer #5 480?208V	NONE		
Bldg.32 - South Wall - West	674	"PNL-AA 225A, 120/208V, 3PH, 4W, Main Breaker"	NONE		
Bldg.32 - South Wall - West	675	PNL-A 100A 277/480V, 3PH, 4W, Main Breaker	NONE	"Code Violation- Line side main breaker (2)#4AWG on each lug"	Repair
Bldg.32 - South Wall - West	676	75 KVA Transformer T-1 480?208V	NONE	Top of transformer damaged	
Bldg.32 - South Wall - West	677	"PNL-CB2 400A, 277/480V, 3PH, 4W, Main Breaker"	NONE		
Bldg.32 SW Room 149D	678	PNL-FU-1 (2)150A Fuses 120/208V	NONE	Very old, Remove/Replace	Remove
Bldg.32 SW Room 149D	679	PNL-D	NONE	Very old - Remove – De-Energized	Remove
Bldg.32 SW Room 149D	680	PNL-P2	NONE	Very old - Remove – De-Energized	Remove
Bldg.32 - SW - Stair – 2nd floor	681	PNL-JJ 100A 1PH, 3W, 120/208V, Main Breaker	NONE	Splices in panel	Investigate for repair
Bldg.32-South-2nd floor-Hall/Center	682	PNL-F3 100A 277/480V, 3PH, 4W, Main Lugs	NONE	"Code Violation- 480V PNL w/ 120/208V colors(Blk,Rd,Blu)"	Change marking on panel to conform with code.

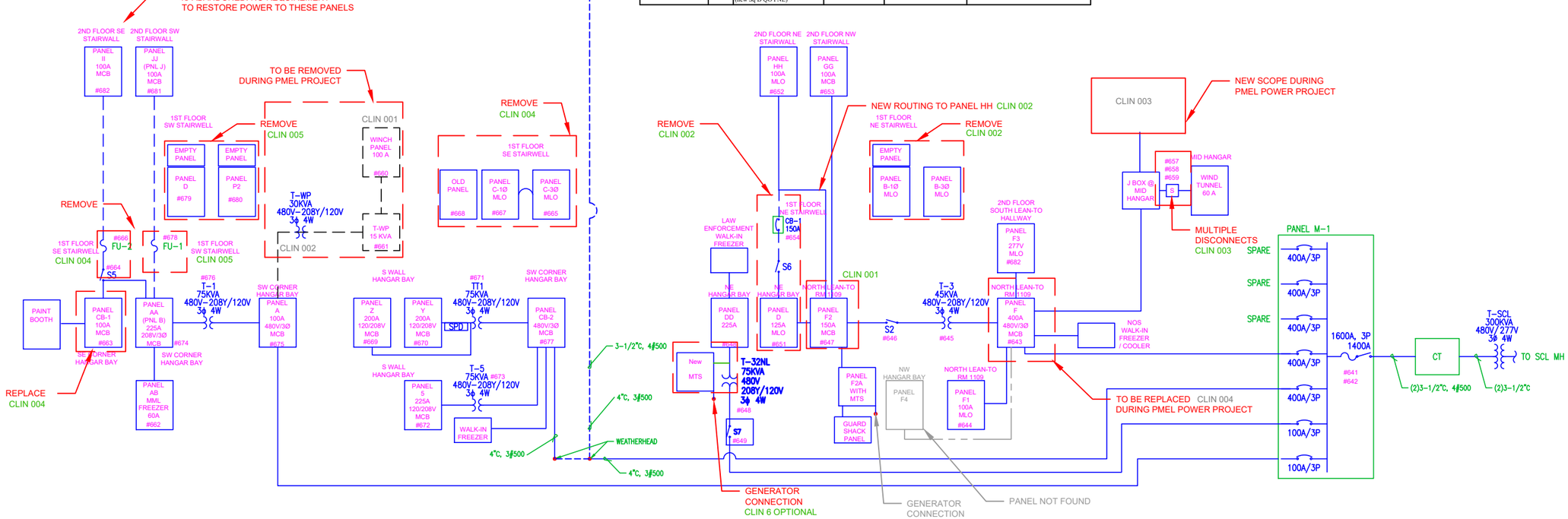

1 ED600 HANGAR 32 SINGLE-LINE DIAGRAM - POWER
SCALE: NONE

SIZE: ARCH D

U.S. DEPT. OF COMMERCE
NATIONAL OCEANIC AND ATMOSPHERIC ADMINISTRATION
WESTERN REGIONAL CENTER
7600 SANDPOINT WAY NE
SEATTLE, WA 98115

ELECTRICAL DIAGRAM

PROJECT: HANGAR 32 ELECTRICAL PLANS

DESCRIPTION:

PROJECT #: WRC-G-22-01
DATE: 12/20/23
DRAWN BY: JV
SHEET NO: E6.01