CUI

ATTENTION

Use this space to indicate categories, limited dissemination controls, special instructions, points of contact, etc., if needed.

Controlled by: USACE
Controlled by: CELRP-CT, CELRP-OPT-M
CUI Category: CTI
Limited Dissemination Control: FED ONLY
POC: Paul Amicucci, (412) 500-6872

ATTENTION

All individuals handling this information are required to protect it from unauthorized disclosure.

Handling, storage, reproduction, and disposition of the attached document(s) must be in accordance with 32 CFR Part 2002 and applicable agency policy.

Access to and dissemination of Controlled Unclassified Information shall be allowed as necessary and permissible to any individual(s), organization(s), or grouping(s) of users, provided such access or dissemination is consistent with or in furtherance of a Lawful Government Purpose and in a manner consistent with applicable law, regulations, and Government-wide policies.

Standard Form 901 (11-18)
Prescribed by GSA/ISOO | 32 CFR 2002

CUI

GATE OPERATING SEQUENCE

The scheme of remote control for the individual tainter gates shall provide for the following operation:

1. Raise - The travel of the gate shall be by increments of 1'-0" from the "Closed" position to an arbitary intermediate position. After passing this intermediate point, the gate shall continue to travel until the control circuit is opened through a limit switch element at the normal "Raised" position of the gate, except that travel may be interrupted at any point by manual operation of the "Stop" switch, or by the functioning of an overload relay.
2. Lower - When lowering the gate from the "Raised" or any partially raised position, it shall travel until the control circuit is opened through a limit switch element at the normal "Closed" position of the gate (unless interrupted by the "Stop" switch or overload relay, as noted above).
3. Extreme Positions - In the event the gate fails to stop at the normal "Raised" or normal "Closed" position, the line contactor shall be opened by an emergency limit switch element at the "Extreme Raised" or "Extreme Low" position, respectively. With the gate in either extreme position and the emergency limit switch open, it shall be necessary to operate the "Backout" switch in addition to the control switch in order to back-out the gate from the extreme position.

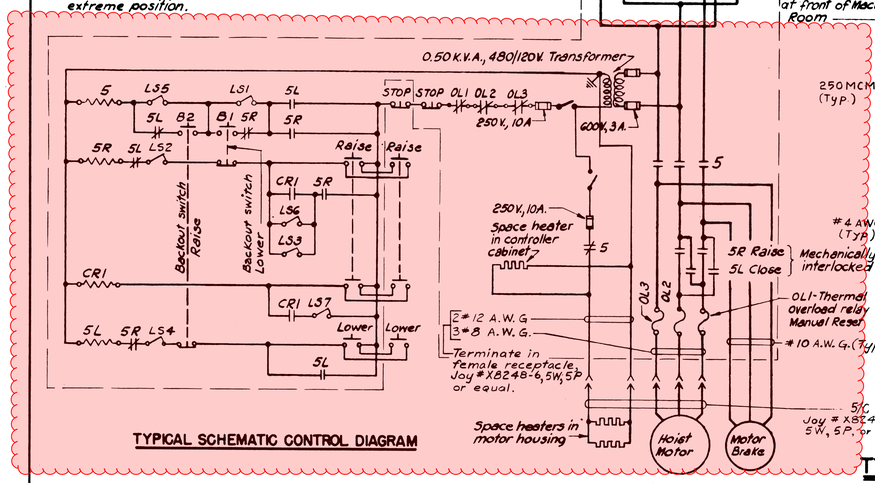

TYPICAL SCHEMATIC CONTROL DIAGRAM

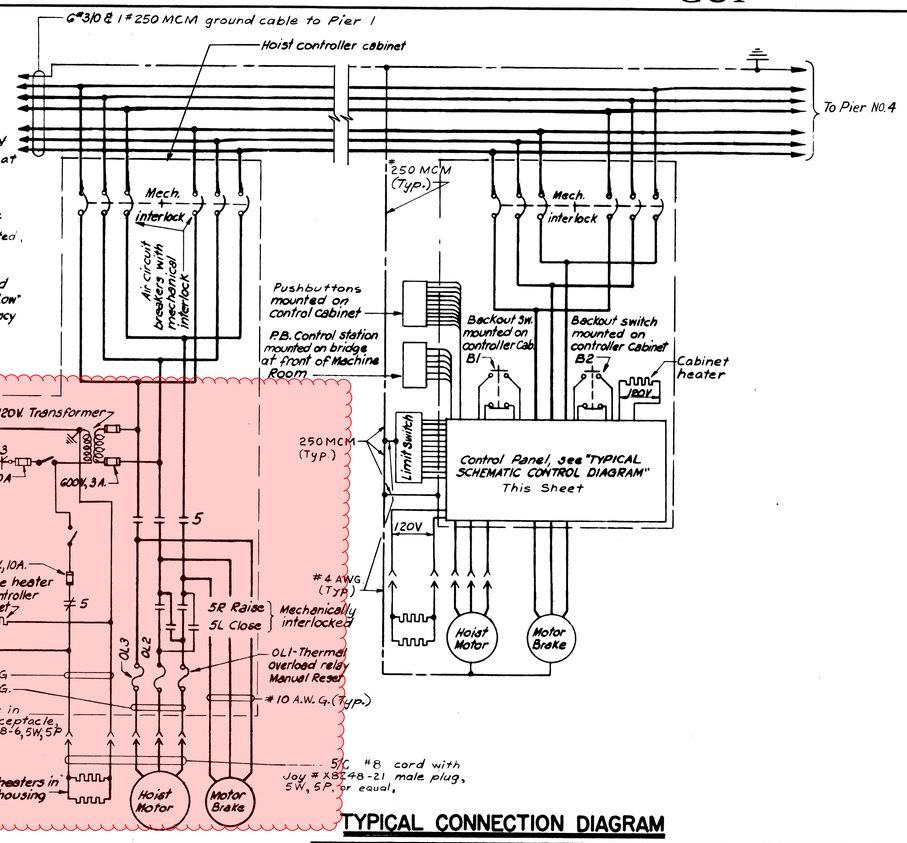

TYPICAL CONNECTION DIAGRAM

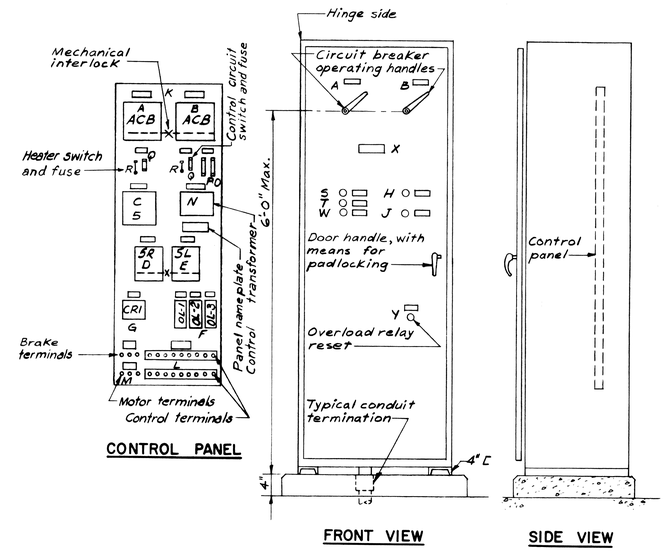

CONTROL PANEL

FRONT VIEW

SIDE VIEW

MOTOR CONTROLLER (25)

2 REQUIRED
PIERS 2 & 3
NEMA 12 CONSTRUCTION

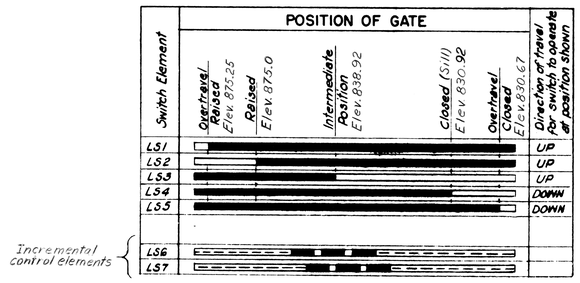

LIMIT SWITCH SEQUENCE OF OPERATION
(NON-OVERFLOW CREST GATES)

EQUIPMENT IN CONTROLLER CABINET AND NAME PLATE SCHEDULE

ITEM NO	DESCRIPTION OF EQUIPMENT	NAME PLATE LINE NO.1	NAME PLATE LINE NO.2	NO. REQ'D.
A	3 Pole, 600 Volt air circuit breaker, externally operated.	Feeder		2
B	3 Pole, 600 Volt air circuit breaker, externally operated.	Feeder		2
C	Size 2, 3 pole, 440 Volt contactor with 110 Volt operating coil and 2 N.C. auxiliary contacts	Line-5		2
D	Size 2, 2 pole, 440 Volt contactor with 110 Volt operating coil, 2 N.O. and 2 N.C. auxiliary contacts	Raise-5R		2
E	Size 2, 2 pole, 440 Volt contactor with 110 Volt operating coil, 2 N.O. and 2 N.C. auxiliary contacts	Close-5L		2
F	3 Element, 440 Volt, inverse time, hand reset, thermal overload relay	Overload	Relay-OL1-OL2-OL3	2
G	2 Pole, 110 Volt contactor with 2 N.O. contacts, size 1	Control	Relay-CR1	2
H	Heavy duty P.B., oiltight, yellow button, mom. contact	Backout - Raise		2
J	Heavy duty P.B., oiltight, yellow button, mom. contact	Backout - Lower		2
K	Ebony asbestos, or steel panel, size to suit			2
L	Control terminal block, 30 amp.			As Req'd.
M	3/8" Cadmium plated brass stud with nuts & washers for motor & brake terminals			12
N	0.50 KVA, 1 Ø, 60 ~ 480/120 V control transformer	Heater & Control	Transformer	2
O	30 Amp. 600 Volt, 2 Pole fused cutout			2
P	3 Amp. 600 Volt cartridge fuse			4
Q	10 Amp. 250 Volt cartridge fuse			4
R	30 Amp. 250 Volt 1 Pole, switch, heavy duty			4
S	Heavy duty P.B., oiltight, black button, mom. contact	Raise Gate		2
T	Heavy duty P.B., oiltight, black button, mom. contact	Lower Gate		2
W	Heavy duty P.B., oiltight, red button, mom. contact	Stop Gate		2
X	Front of controller cabinet, nameplate	Controller	Gate No. (Indicate No.)	2
Y	Front of controller cabinet, reset button	Overload	Reset	2

NOTES

1. All fuses ~~will be~~ are dual element.
2. Payment for motors, brakes, motor controllers and limit switches ~~will be~~ were made under Gate Operating Machinery, Item 25.
3. Payment for all other electrical work on this sheet ~~will be~~ were made under, Power and Lighting System Item 36.

GENERAL NOTES

1. All wiring ~~shall be~~ was installed in galvanized rigid conduit, 3/4" min. size.
2. Minimum conductor size ~~shall be~~ is No. 12 AWG.
3. Conduit ~~shall be~~ is supported at intervals of not more than 6'-0" for size 1-inch and less, and not more than 10'-0" for sizes greater than 1-inch.
4. Typical schematic and connection diagrams applicable to gate Nos. 2 & 3
5. All figures in circles refer to payment item numbers
6. (A) For details "AS BUILT", see Barnes & Brass CO DWG NO. E5 and Dravo DWG NO. 317084.

REVISION	DATE	DESCRIPTION	BY
A	1 JULY 70	DRAWING REVISED "AS BUILT"	

GRAPHIC SCALE
NO SCALE

U. S. ARMY ENGINEER DISTRICT, PITTSBURGH
CORPS OF ENGINEERS
OFFICE OF THE DISTRICT ENGINEER
PITTSBURGH, PENNSYLVANIA

PREPARED BY: A. K. G.
DRAWN BY: DRAGO
CHECKED BY:
SUBMITTED BY: CHIEF, DESIGN BRANCH
APPROVED RECOMMENDED: CHIEF, ENGINEERING DIVISION
APPROVED: COLONEL, CORPS OF ENGINEERS, DISTRICT ENGINEER
DATE: 8 JAN. 1964
APPROVED FOR:
DATE:

MONONGAHELA RIVER
OPEKISKA LOCK AND DAM
DAM
NON-OVERFLOW CREST GATE
WIRING DIAGRAM AND DETAILS

SCALE: NO SCALE
SPEC. NO.:
DRAWING NUMBER 037-LOP-56/1.1
SHEET 1 OF 7

AS BUILT - 30 JUNE 1967

GATE OPERATING SEQUENCE

To Raise Complete Assembly — To raise both gate sections simultaneously, with both gate sections in the normally closed position, the operation of the "Raise" button will cause both gate sections to rise approximately one foot and stop. Above the intermediate level, operation of the "Raise" button will cause both gate sections to rise continuously to the fully raised position.

To Lower Complete Assembly — With both gate sections in either the fully raised or partially raised position, operation of the "Lower" button will cause both gate sections to lower continuously to the normally closed position.

To Raise Movable Crest Unit — To raise the movable crest unit only, with both gate sections in the normally closed position operation of the "Raise Movable Crest Unit" button will cause the movable crest unit to rise continuously for a maximum of 12 feet.

To Lower Movable Crest Unit — With the movable crest unit either fully raised or partially raised operation of the "Lower Movable Crest Unit" button will cause the movable crest unit to lower to a seat position on the bottom gate section.

To Stop — When either the movable crest unit or both gate sections are in motion in either direction, operation of the "Stop" button will cause the gate to stop.

Automatic Stop — When either the movable crest unit or both gate sections are being raised, the gate will stop automatically at the normal upper limits of travel. When lowering both gate sections, the gate will stop automatically at the normally closed position. When lowering the movable crest unit the gate will stop automatically when it is in a seated position on the bottom gate section.

Extreme Positions — In the event that the movable crest unit or both gate sections do not stop at the normal upper limits of travel, the main line contactor will be opened by overtravel limit switches. With the movable crest unit or both gate sections at the overtravel position and the overtravel limit switch open, it will be necessary to operate the "Backout" switch in addition to the control button in order to back-out the gate from the overtravel position.

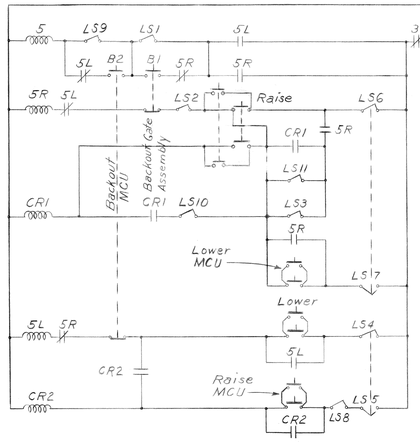

TYPICAL SCHEMATIC CONTROL DIAGRAM

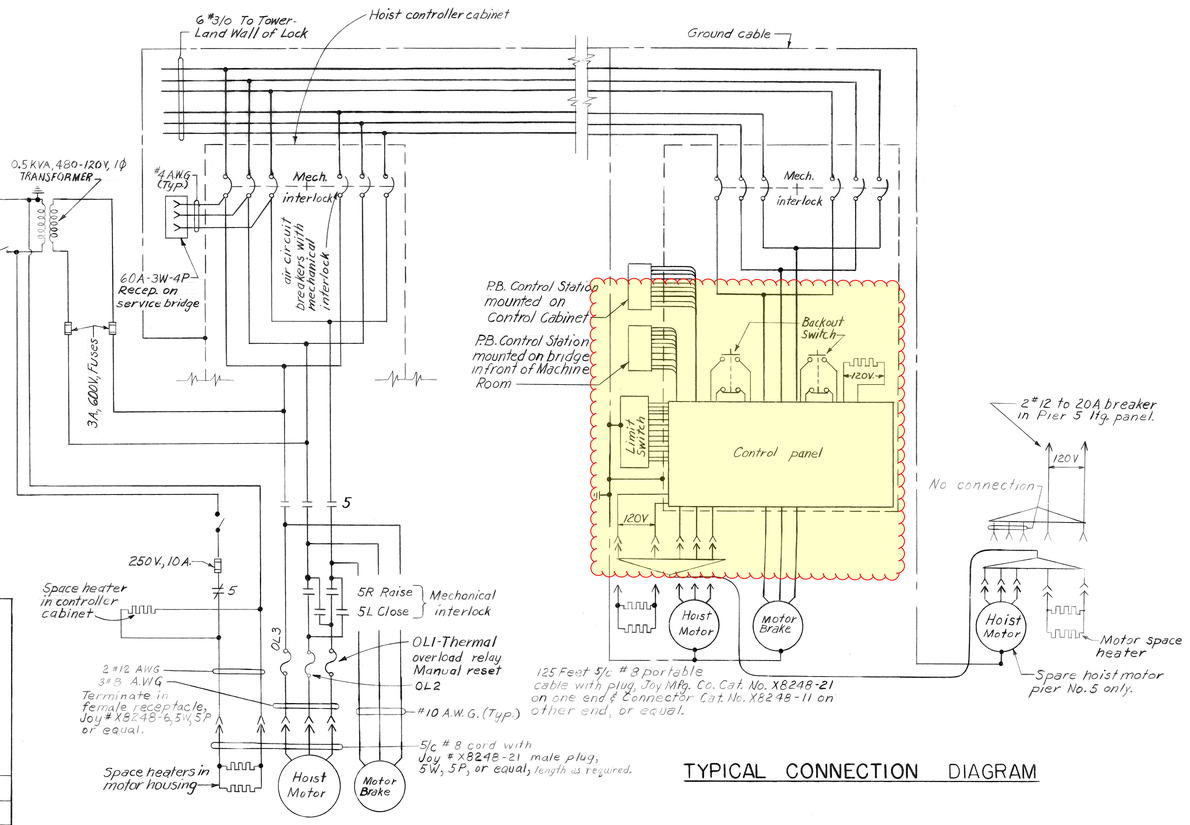

TYPICAL CONNECTION DIAGRAM

TYPICAL SCHEMATIC DIAGRAM

GENERAL NOTE:
Typical schematic and connection diagrams applicable to gate Nos. 1 and 4.

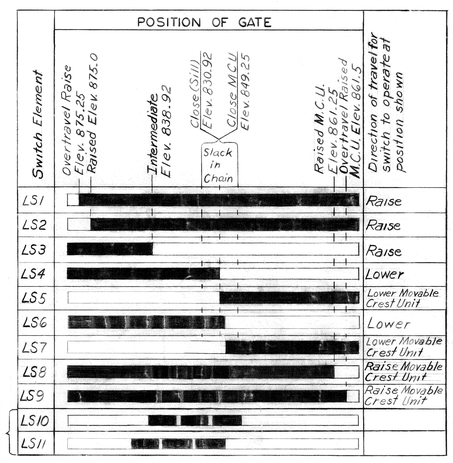

LIMIT SWITCH SEQUENCE OF OPERATION
(MOVABLE CREST GATES)

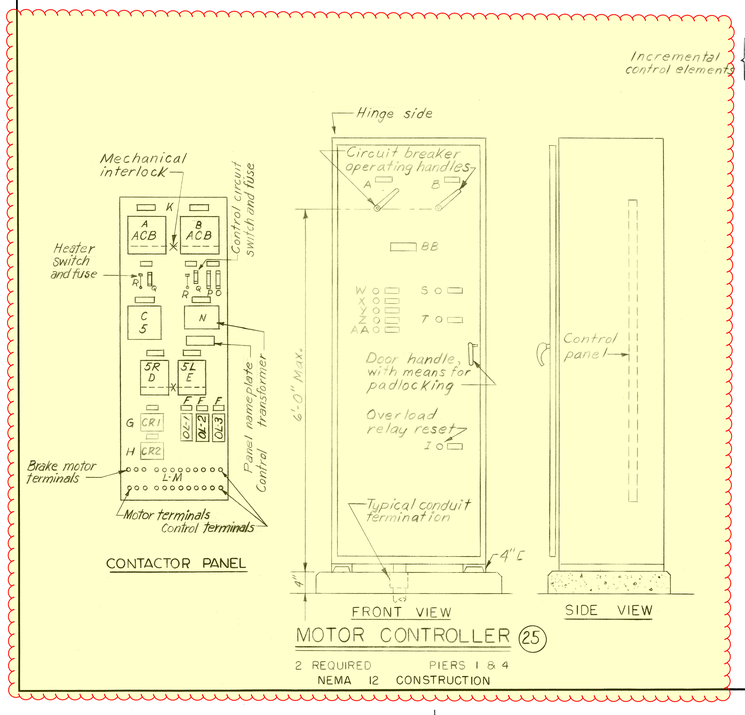

MOTOR CONTROLLER (25)
2 REQUIRED PIERS 1 & 4
NEMA 12 CONSTRUCTION

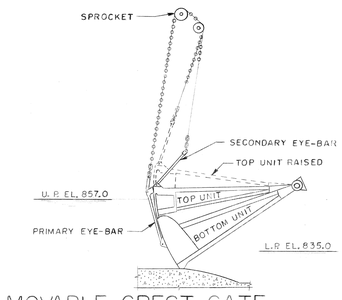

MOVABLE-CREST GATE

NOTES:
(A) For details "AS BUILT", see Barnes & Brass CO DWG NO. E5.

EQUIPMENT IN CONTROLLER CABINET AND NAME PLATE SCHEDULE

ITEM NO	DESCRIPTION OF EQUIPMENT	NAME PLATE LINE NO. 1	NAME PLATE LINE NO. 2	NO. REQ'D.
A	3 pole, 600 volt air circuit breaker, externally operated	Feeder		2
B	3 pole, 600 volt air circuit breaker, externally operated.	Feeder		2
C	Size 2, 3 pole, 440 volt contactor with 110 volt operating coil and one N.C. auxiliary contact	Line - 5		2
D	Size 2, 2 pole, 440 volt contactor with 110 volt operating coil and 3N.O. and 2 N.C. auxiliary contacts.	Raise - 5R		2
E	Size 2, 2 pole, 440 volt contactor with 110 volt operating coil and 2N.O. and 2 N.C. auxiliary contacts.	Close - 5L		2
F	3 element, 440 volt, inverse time, hand reset, thermal overload relay	Overload	Relay - OL1-OL2-OL3	2
G	2 pole, 110 volt contactor with 2 N.O. contacts, Size I	Control	Relay - CR1	2
H	2 pole, 110 volt contactor with 2N.O. contacts, Size I	Control	Relay - CR2	2
I	Front of controller cabinet, reset button	Overload	Reset	2
K	Ebony asbestos or steel panel, size to suit			2
L	Control terminal block 30 amp.			As Req'd.
M	3/8" cadmium plated brass stud with nuts & washers for motor & brake terminals			12
N	0.50 KVA, 1Φ, 60~, 480-120V Control transformer	Heater & Control	Transformer	2
O	30A, 600V, 2 pole fuse cutout			2
P	3A, 600V. cartridge fuse			4
Q	10A, 250V. Cartridge fuse			4
R	30A, 250V, 1 pole, switch, heavy duty			4
S	Pushbutton, heavy duty, oiltight, yellow button, mom. contact	Gate assembly	Top backout	2
T	Pushbutton, heavy duty, oiltight, blue button, mom. contact	Movable crest unit	Top backout	2
W	Pushbutton, heavy duty, oiltight, black button, mom. contact	Raise	Gate assembly	2
X	Pushbutton, heavy duty, oiltight, black button, mom. contact	Lower	Gate assembly	2
Y	Pushbutton, heavy duty, oiltight, black button, mom. contact	Raise	Movable crest unit	2
Z	Pushbutton, heavy duty, oiltight, black button, mom. contact	Lower	Movable crest unit	2
AA	Pushbutton, heavy duty, oiltight, red button, mom. contact	Stop	Gate hoist	2
BB	Front of controller cabinet nameplate	Controller	Gate No. (indicate No.)	2

REVISION	DATE	DESCRIPTION	BY
A	1 JULY 70	DRAWING REVISED "AS BUILT"	[illegible]

GRAPHIC SCALE
NO SCALE

U. S. ARMY ENGINEER DISTRICT, PITTSBURGH
CORPS OF ENGINEERS
OFFICE OF THE DISTRICT ENGINEER
PITTSBURGH, PENNSYLVANIA

PREPARED BY: GREINER
DRAWN BY: DRAGO
CHECKED BY: [illegible]
SUBMITTED BY: [illegible]
CHIEF, DESIGN BRANCH
APPROVAL RECOMMENDED: [illegible]
CHIEF, ENGINEERING DIVISION
APPROVED FOR:
DATE:

MONONGAHELA RIVER, W. VA.
OPEKISKA LOCK AND DAM
DAM
MOVABLE CREST GATE
WIRING DIAGRAM AND DETAILS

APPROVED: [illegible]
COLONEL, CORPS OF ENGINEERS, DISTRICT ENGINEER
DATE: 21 AUG. 1963

SCALE: NO SCALE
SPEC. NO.:
DRAWING NUMBER 037-LOP-56/2.1
SHEET 2 OF 7

AS BUILT - 30 JUNE 1967

CUI

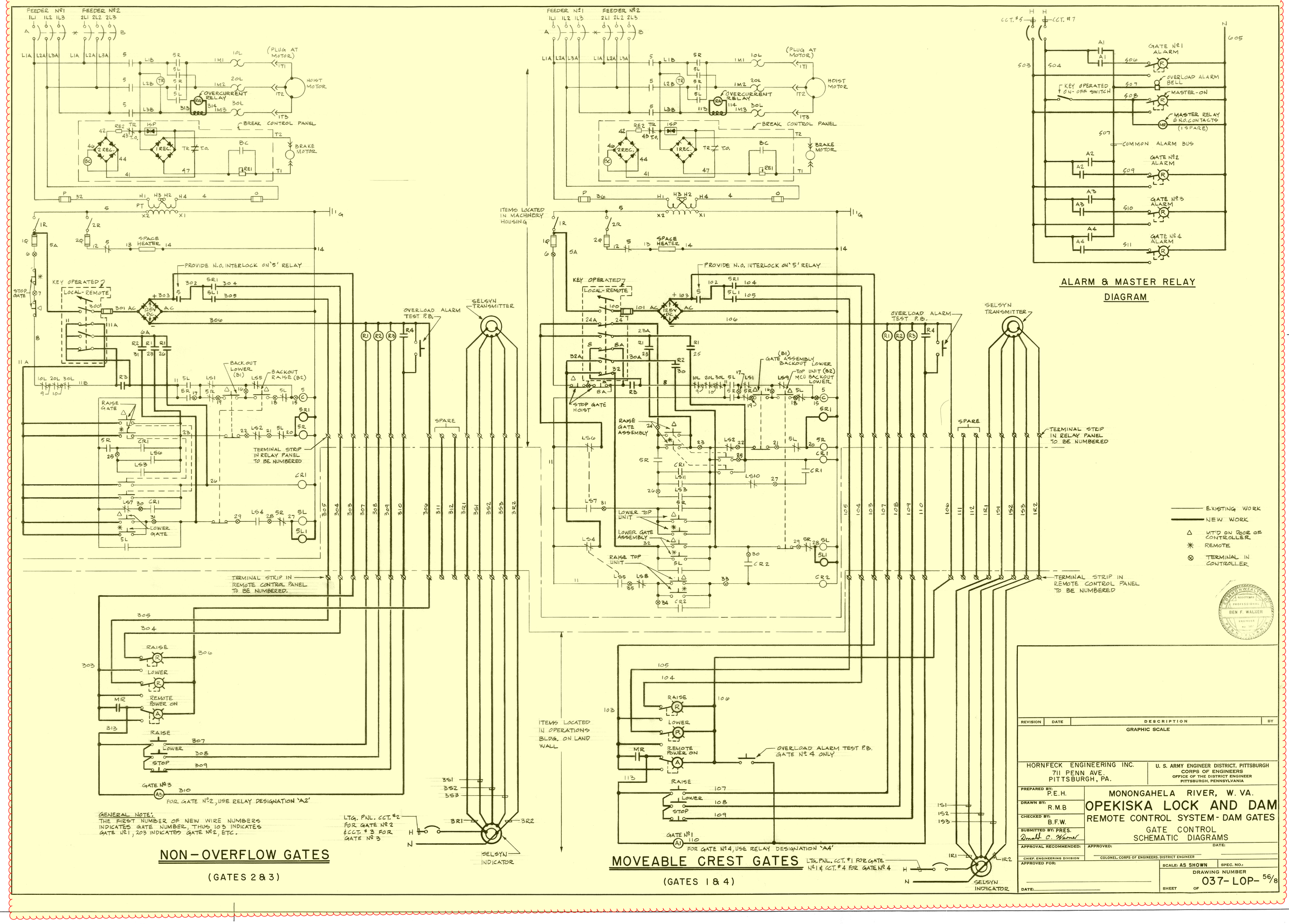

BRUNING 44-512

CUI

CUI

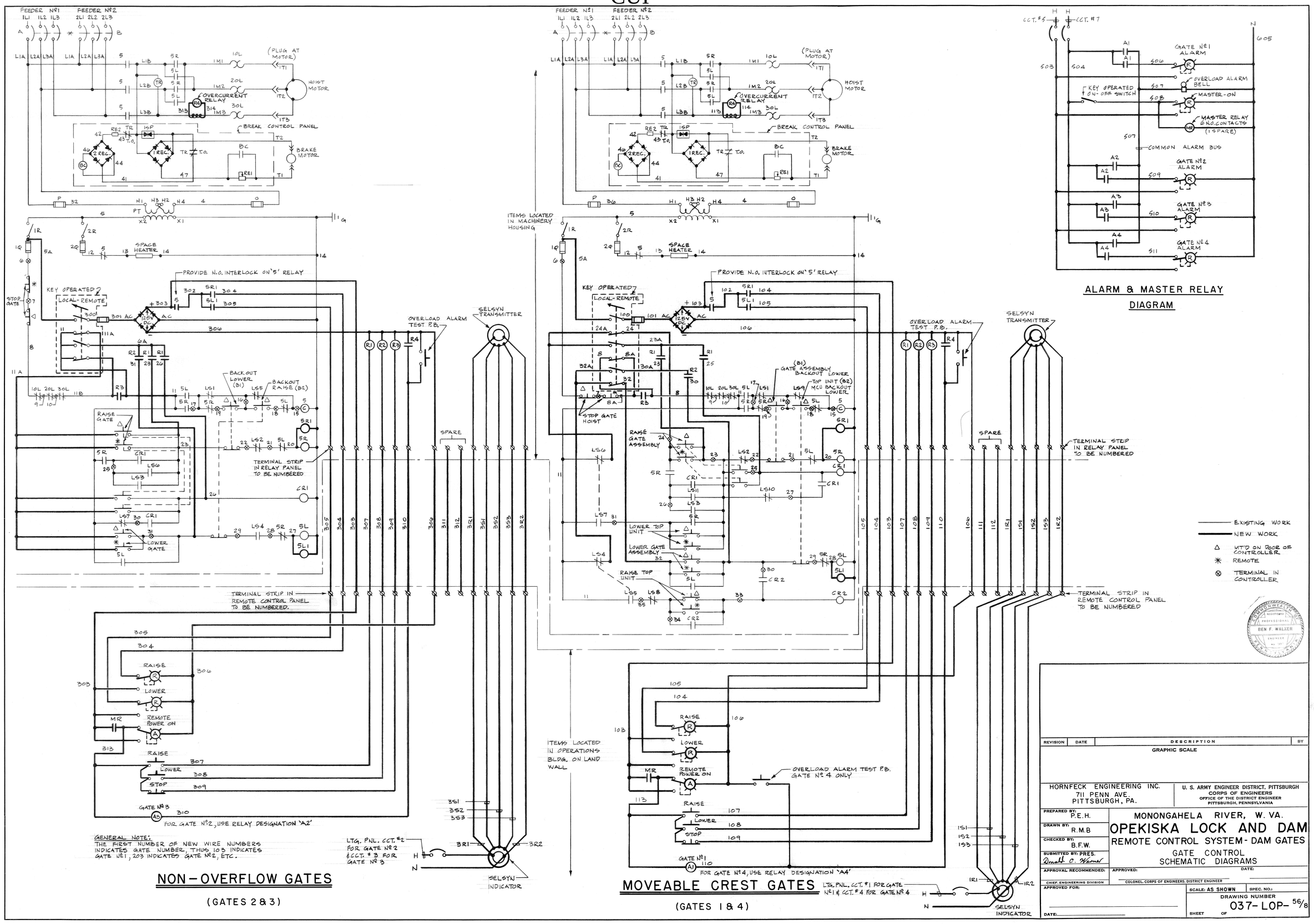

BRUNING 44-512

CUI