CUI

ATTENTION

Use this space to indicate categories, limited dissemination controls, special instructions, points of contact, etc., if needed.

Controlled by: USACE
Controlled by: CELRP-CT, CELRP-OPT-M
CUI Category: CTI
Limited Dissemination Control: FED ONLY
POC: Paul Amicucci, (412) 500-6872

ATTENTION

All individuals handling this information are required to protect it from unauthorized disclosure.

Handling, storage, reproduction, and disposition of the attached document(s) must be in accordance with 32 CFR Part 2002 and applicable agency policy.

Access to and dissemination of Controlled Unclassified Information shall be allowed as necessary and permissible to any individual(s), organization(s), or grouping(s) of users, provided such access or dissemination is consistent with or in furtherance of a Lawful Government Purpose and in a manner consistent with applicable law, regulations, and Government-wide policies.

Standard Form 901 (11-18)
Prescribed by GSA/ISOO | 32 CFR 2002

CUI

CUI

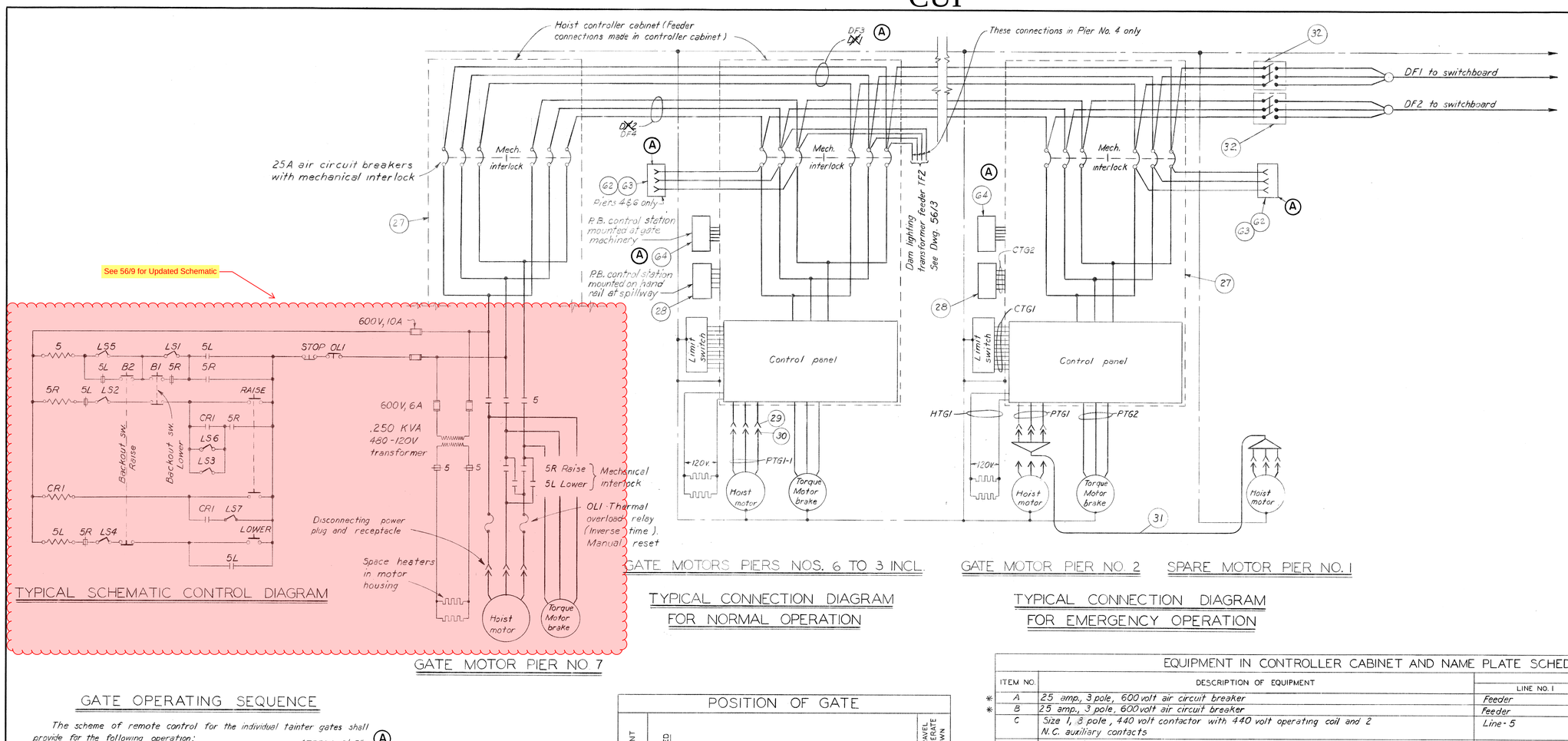

TYPICAL SCHEMATIC CONTROL DIAGRAM

GATE MOTOR PIER NO 7

GATE MOTORS PIERS NOS. 6 TO 3 INCL.

TYPICAL CONNECTION DIAGRAM FOR NORMAL OPERATION

GATE MOTOR PIER NO. 2 SPARE MOTOR PIER NO. 1

TYPICAL CONNECTION DIAGRAM FOR EMERGENCY OPERATION

GATE OPERATING SEQUENCE

The scheme of remote control for the individual tainter gates shall provide for the following operation:

1. Raise - The travel of the gate shall be by increments of ~~2'6"~~ APPROX 0'-8" (A) ~~1'6"~~ from the "Closed" position to an arbitrary intermediate position. After passing this intermediate point, the gate shall continue to travel until the control circuit is opened through a limit switch element at the normal "Raised" position of the gate, except that travel may be interrupted at any point by manual operation of the "Stop" lever on the control switch or by the functioning of an overload relay.

2. Lower - When lowering the gate from the "Raised" or any partially raised position, it shall travel until the control circuit is opened through a limit switch element at the normal "Closed" position of the gate (unless interrupted by the "stop" switch or overload relay as noted above.)

3. Extreme Positions - In the event that the gate fails to stop at the normal "Raised" or the normal "Closed" position, the line contactor shall be opened by an emergency limit switch element at the "Extreme Raised" or the "Extreme Low" position, respectively. With the gate in either extreme position and the emergency limit switch element open, it shall be necessary to operate the "Backout" switch in addition to the control switch in order to back-out the gate from the extreme position.

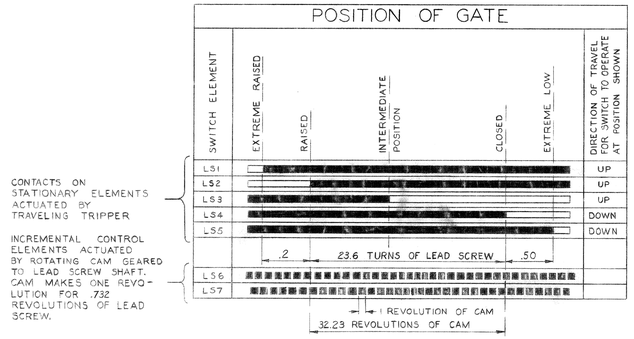

LIMIT SWITCH SEQUENCE OF OPERATION

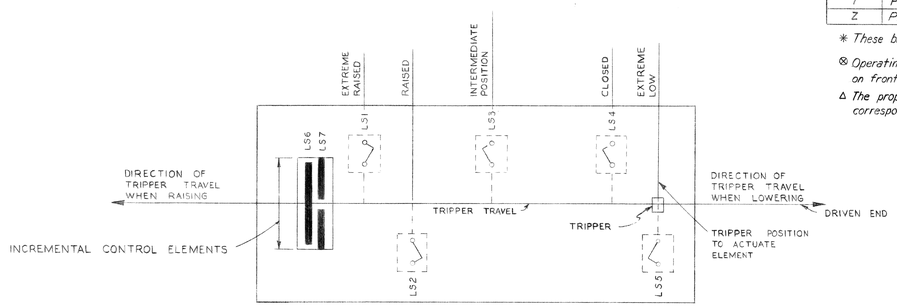

ARRANGEMENT OF LIMIT SWITCH ELEMENTS

EQUIPMENT IN CONTROLLER CABINET AND NAME PLATE SCHEDULE

	ITEM NO.	DESCRIPTION OF EQUIPMENT	NAME PLATE LINE NO. 1	NAME PLATE LINE NO. 2	NO. REQ'D
*	A	25 amp., 3 pole, 600 volt air circuit breaker	Feeder	~~DX1~~ DF3	6
*	B	25 amp., 3 pole, 600 volt air circuit breaker	Feeder	~~DX2~~ DF4 (A)	6
	C	Size 1, 8 pole, 440 volt contactor with 440 volt operating coil and 2 N.C. auxiliary contacts	Line - 5		6
	D	Size 1, 2 pole, 440 volt contactor with 440 volt operating coil and 2 N.O. and 2 N.C. auxiliary contacts	Raise - 5R		6
	E	Size 1, 2 pole, 440 volt contactor with 440 volt operating coil and 2 N.O. and 2 N.C. auxiliary contacts	Lower - 5L		
⊗	F	2 element, 440 volt, inverse time, hand reset, thermal overload relay	Overload	Relay - OL1	6
	G	2 pole, 440 volt contactor with 2 NO. contacts, Size 1	Control	Relay - CR1	6
⊗	H	Heavy duty P.B. sta. for flush mtg. with 1 mom. contact button marked "Raise"	See cabinet N.P. item Y		6
⊗	J	Heavy duty P.B. sta. for flush mtg. with 1 mom. contact button marked "Lower"	See cabinet N.P. item Y		6
	K	Ebony asbestos panel, size to suit			6
	L	Control terminal studs, back connected			As Req'd.
	M	⅜ cadium plated brass stud with nuts & washers for motor & brake terminals			36
	N	.250 KVA, 1φ, 60~, 480-120V dry type transformer	Heater	Transformer	1
	O	30A, 600V, fuse terminal			4
	P	6A, 600V cartridge fuse			2

CABINET NAME PLATE SCHEDULE

ITEM NO.	CABINET LOCATION	NAME PLATE LOCATION	INSCRIPTION LINE NO. 1	INSCRIPTION LINE NO. 2	NO. REQ'D.
X	Piers Nos. 2-7 incl.	Front of controller cabinet	Controller	Gate No. Δ	6
Y	Piers Nos. 2-7 incl.	Front of controller cabinet	Backout	Switch	12
Z	Piers Nos. 2-7 incl.	Front of controller cabinet	Overload	Reset	6

* These breakers to be externally operated

⊗ Operating buttons for these items to be mounted on front of controller cabinet

Δ The proper number shall be shown on the nameplate corresponding to the gate for which the nameplate is to be used

GENERAL NOTES

1. Numbers in circles refer to items listed on Dwg. 29/5

REFERENCE DRAWINGS

29/5 — Cable and Equipment Schedule
56/2 — Tainter Gate Equipment Installation
(A) G5/1 — Schematic Wiring Diagram Tainter Gate Controller

APPROVED BY OFFICE CHIEF OF ENGINEERS, DEPT OF THE ARMY, 20 JULY 1948, ENGINE MORGANTOWN LOCK AND DAM, W. VA.

REVISION	DATE	DESCRIPTION	BY
A	15 AUG 51	ITEMS G2, G3, G4 & REF DWG G5/1 ADDED; CIRS DF1 & DF2 RENUMBERED. GATE OPERATING SEQUENCE: NOTE REVISED.	

GRAPHIC SCALE

DEPARTMENT OF THE ARMY
CORPS OF ENGINEERS
OFFICE OF THE DISTRICT ENGINEER
PITTSBURGH, PENNSYLVANIA

PREPARED BY NASHVILLE DISTRICT
DRAWN BY: C.E.S.
CHECKED BY: W.C.R.
SUPV. BY: W.C.R.
SUBMITTED BY:
CHIEF, DESIGN BRANCH
APPROVAL RECOMMENDED:
CHIEF, ENGINEERING DIVISION
APPROVED: COLONEL, C. E. DISTRICT ENGINEER, PITTSBURGH DISTRICT
DATE: JUNE 1948
APPROVAL RECOMMENDED FOR PITTSBURGH DISTRICT
TECHNICAL ASSISTANT
DATE: JUNE 1948

MONONGAHELA RIVER
MORGANTOWN LOCK AND DAM
DAM
ELECTRICAL
TAINTER GATE WIRING DIAGRAM

SCALE: NONE
SPEC. NO.
DRAWING NUMBER 037-LMO-56/1.1
SHEET 1 OF 3

AS BUILT - 15 AUG 1951

CUI

CUI

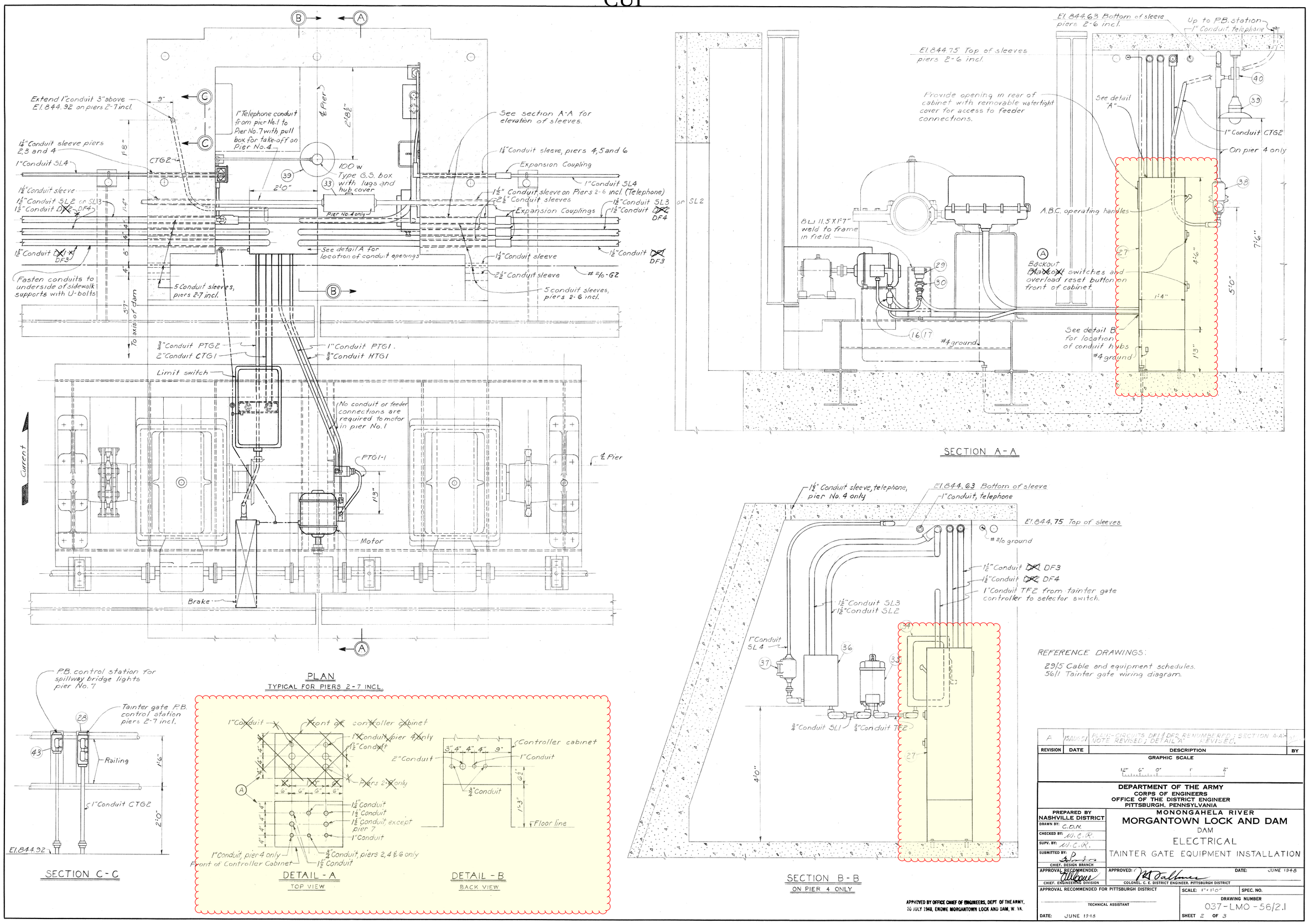

REVISION	DATE	DESCRIPTION	BY
A	15 AUG 51	PLAN: CIRCUITS DF1 & DF2 RENUMBERED; SECTION A-A: NOTE REVISED; DETAIL "A" REVISED.	

GRAPHIC SCALE

DEPARTMENT OF THE ARMY
CORPS OF ENGINEERS
OFFICE OF THE DISTRICT ENGINEER
PITTSBURGH, PENNSYLVANIA

PREPARED BY NASHVILLE DISTRICT
DRAWN BY: C.D.N.
CHECKED BY: W.C.R.
SUPV. BY: W.C.R.
SUBMITTED BY:
CHIEF, DESIGN BRANCH
APPROVAL RECOMMENDED:
CHIEF, ENGINEERING DIVISION

MONONGAHELA RIVER
MORGANTOWN LOCK AND DAM
DAM
ELECTRICAL
TAINTER GATE EQUIPMENT INSTALLATION

APPROVED: DATE: JUNE 1948
COLONEL, C. E. DISTRICT ENGINEER, PITTSBURGH DISTRICT

APPROVAL RECOMMENDED FOR PITTSBURGH DISTRICT
TECHNICAL ASSISTANT
DATE: JUNE 1948

SCALE: 1" = 1'-0"
SPEC. NO.
DRAWING NUMBER 037-LMO-56/2.1
SHEET 2 OF 3

APPROVED BY OFFICE CHIEF OF ENGINEERS, DEPT OF THE ARMY, 20 JULY 1948, ENGWE MORGANTOWN LOCK AND DAM, W. VA.

AS BUILT-15 AUG 1951

CUI

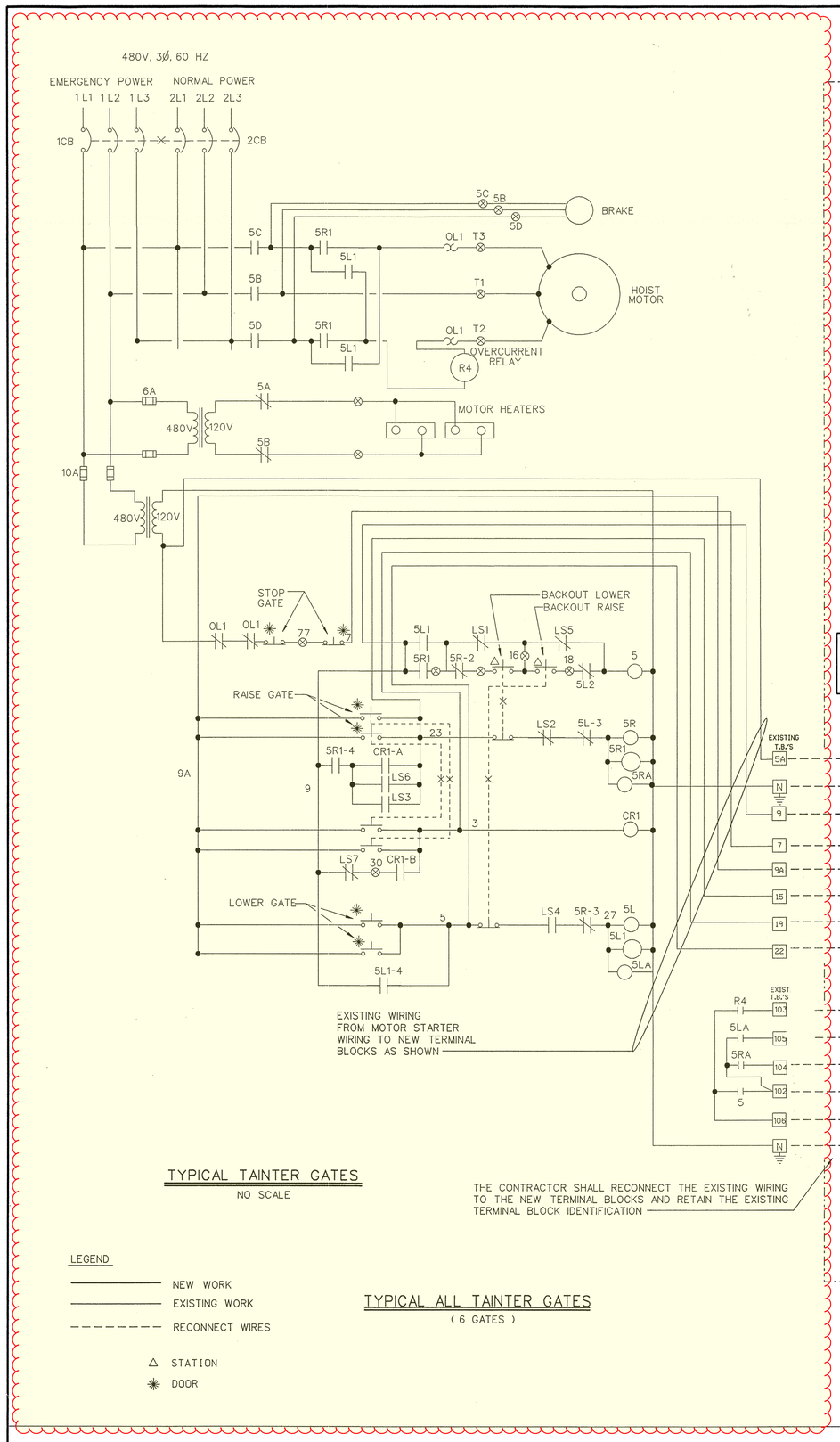

TYPICAL TAINTER GATES

NO SCALE

TYPICAL ALL TAINTER GATES

(6 GATES)

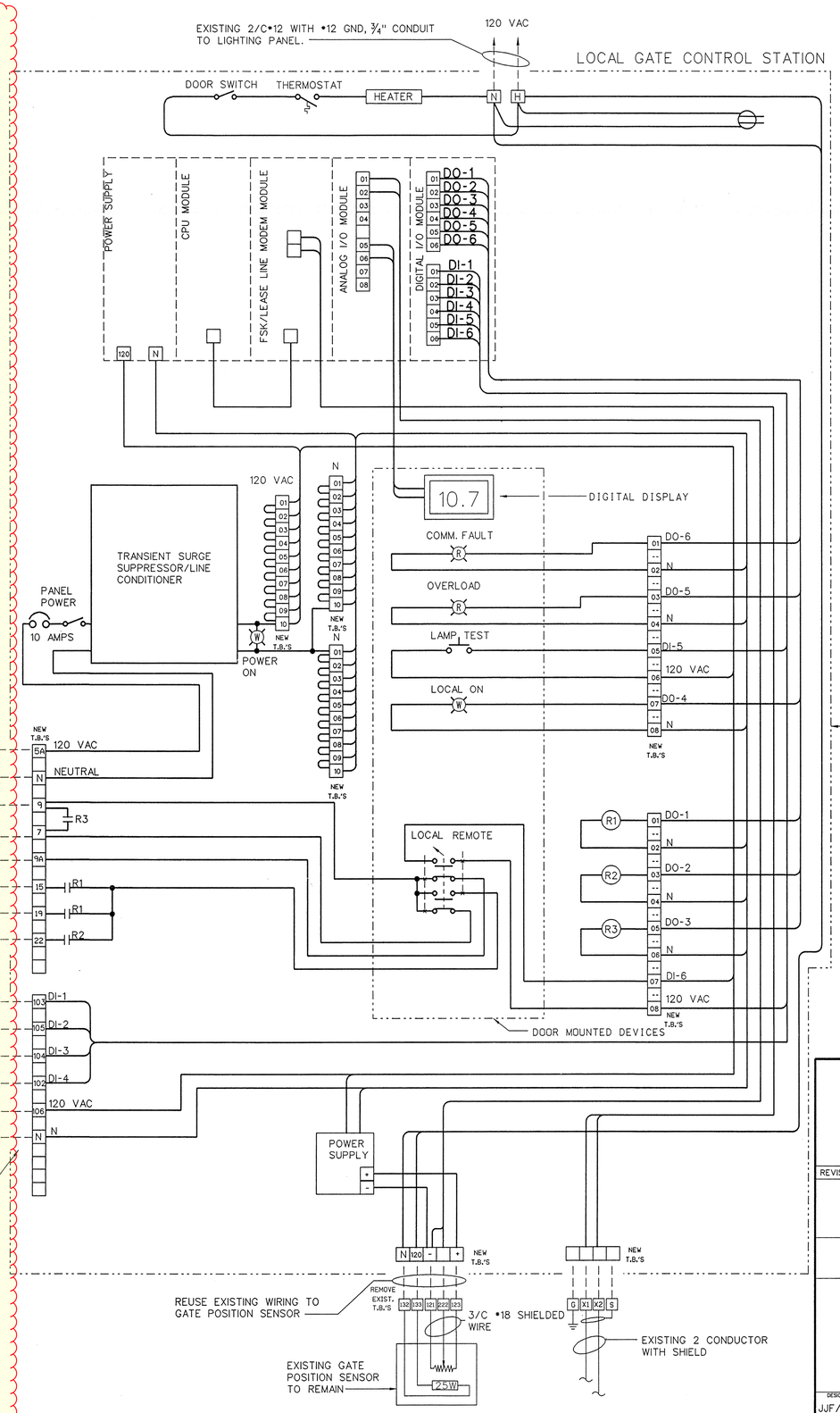

NOTES:

1. CONTRACTOR SHALL FIELD VERIFY THE LOCATION OF THE EXISTING TERMINAL BLOCKS TO INSURE THAT WIRING DESIGNATED TO BE REUSED WILL REACH THE NEW TERMINAL BLOCK LOCATION.
2. EXISTING LOCAL CONTROL PANELS SHALL BE REMOVED.
3. SYSTEM SHALL OPERATE IDENTICAL TO PRESENT SYSTEM.

NEW ENCLOSURE W/EQUIPMENT SUBPANEL FIBERGLASS NEMA 4X, WALL MOUNT TYPE 48"Hx24"Wx12"D

AS-BUILT DRAWING
CERTIFIED AS CORRECT
BY Donald S. Ryan 12-6-01

REVISION	DATE	NAME	DESCRIPTION	DATE	BY

GRAPHIC SCALE

U.S. ARMY ENGINEER DISTRICT, PITTSBURGH
CORPS OF ENGINEERS
OFFICE OF THE DISTRICT ENGINEER
PITTSBURGH, PENNSYLVANIA

MONONGAHELA RIVER
MORGANTOWN LOCK AND DAM
DAM
UPGRADING REMOTE CONTROL SYSTEM-DAM GATES
ELECTRICAL SYSTEM
TAINTER GATES
LOCAL CONTROL PANEL DIAGRAM

DESIGNED:	DRAWN:	CHECKED:	DATE:	SCALE:	DWG NO.
JJF/AJZ	JJF	JJF	9 Jun 1998	AS SHOWN	037-LMO-56/9

SUBMITTED: John E. Hotter, SECTION CHIEF
FILE NO. DACW59
SHEET OF

08-JUN-1998 eneal f:*remote control dam gates*elec*lmo5609.dgn AS•48 PLOT @ 4:1

CABLE NO.	FROM	TO	FOR	NO. COND	MCM OR AWG	CIRCUIT VOLTAGE
MF1	Scource of supply	Switchboard	Switchboard feeder	3-1/c	2/0	460v
EF1	Standby unit	"	Switchboard emergency feeder	3-1/c	2/0	"
POP1	Switchboard	Oil pump motor No. 27/4-1A	Power - oil pump No. 1A	3-1/c	8	"
POP2	"	" " " No. 27/4-1B	" " " No. 1B	3-1/c	8	"
POP3	"	" " " No. 27/4-1C	" " " No. 1C	3-1/c	8	"
COP1	"	Terminal box 200	Control - oil pump Nos. 1A & 1B	7/c	19/22	115v
COP2	"	" " 201	" " " " " "	7/c	19/22	"
COP3	Terminal box 200	Item 23	" " " " " "	7/c	19/22	"
COP4	" " 201	" 23	" " " " " "	7/c	19/22	"
COP5	Item 23	Control Stand	Control - oil pump	7/c	19/22	"
PFP1	Switchboard	Fire pump motor	Power - fire pump	3-1/c	8	460v
PAC1	"	Air comp. motor	" - air comp.	3-1/c	8	"
CAC1	"	" "	Control - air comp.	3-1/c	19/25	"
PR1	"	JB108	Power receptacle	3/c	8	"
PR2	JB108	JB112	" "	3/c	8	"
PR3	"	JB109	" "	3/c	8	"
PR4	Junction boxes	Receptacles	Receptacle taps	3/c	8	"
TF1	Switchboard	Lighting transformer	Transformer feeder	2-1/c	4	"
LF1	Lighting transformer	Lighting cabinet LC1	Lighting cabinet feeder	3-1/c	1/0	115/230v
LF2	Lighting cabinet LC1	" " LC2	" " "	3-1/c	4	"
LL1	Lock lighting contactor	JB7	Lock lighting land wall	3/c & 2/c	8	"
LL2	JB100	JB1	" " " "	3/c & 2/c	10	"
LL3	Lock lighting contactor	JB101	" " river wall	3/c	4	"
LL4	JB101	JB8	" " " "	3/c & 2/c	6	"
PL1	Path lighting contactor	JB27	Path lights	3/c	8	"
PL2	JB102	JB14	" "	3/c	10	"
NL1	Lighting panel LC1	JB28	Nav. signal lights - L.W.	2/c	10	115v
NL2	" " "	JB29	" " & gage house lights - L.W.	3/c	8	115/230v
NL3	JB103	JB31	" " lights - R.W.	2/c	8	115v
NL4	JB104	JB30	" " " "	2/c	8	"
LR1	Lighting cabinet LC1	JB33	Lighting receptacles	3/c & 2/c	8	115/230v
LR2	JB105	JB32	" "	2/c	8	115v
LR3	Junction boxes	Gate recess receptacles		2/c	8	"
CL1	Lighting contactors and LC1	TB200	Indicating lights	7/c	19/22	"
CL2	TB200	TB201	" "	14/c	19/22	"
CL3	TB200	JB34	Valve limit switch	3/c	19/22	"
CL4	TB201	JB35	" " "	3/c	19/22	"
CL5	TB201	JB36	" " "	7/c	19/22	"
CL6	JB36	JB37	" " "	3/c	19/22	"
CL7	JB36	JB38	" " "	3/c	19/22	"
CL8	TB200	Item 23	" " "	14/c	19/22	"
CL9	TB201	" 23	" " "	14/c	19/22	"
CL10	Item 23	Control stands	Indicating lights	7/c	19/22	"
DF1	Switchboard	~~Dam automatic (Pier 7)~~ Item 32, Pier 1 (D)	Dam feeder	3/c	2	460v
DF2	"	~~X X X~~ Item 32, Pier 1 (D)	" "	3/c	2	"
(D) DF3 & DF4	Item 32, Pier 1	Item 27, Pier 7	Dam feeder		2	460v
PTG1	Tainter gate controller (Piers 2-7 incl.)	Power receptacle (Piers 2-7 incl.)	Power for T.G. hoist motor	3-1/c	10	460v
PTG2	" " "	T.G. brake motors "	" " " brake motor	3-1/c	10	"
⊗ PTG1-1	Power receptacle (Piers 2-7 incl.)	T.G. hoist motors "	" " " hoist motor	3/c	10	"
HTG1	Tainter gate controller (Piers 2-7 incl.)	" " " "	" " motor space heaters	2-1/c	12	115v
CTG1	" " " "	T.G. limit switch "	T.G. control	11-1/c	19/25	460v
CTG2	" " " "	P.B. control station "	" "	5-1/c	19/25	"
TF2	" " " Pier 4	Lighting transformer, Pier 4	Spillway lighting	2 & 4-1/c	10	"
SL1	Lighting transformer	Contactor cabinet " "	" "	3-1/c	10	115/230v
SL2	Contactor cabinet	Pier 1	" "	7-1/c	10	"
SL3	" "	" 7	" "	7-1/c	10	"
SL4	Fuse boxes piers 1-7 incl.	Spillway lights & receptacles	Branch circuits	3-1/c	12	115v
G1	Ground mat on left bank	Ground test sta. in oper. bldg. basement	Main grounding system			
(D) G2	Ground test sta. in oper. bldg. basement	Ground test sta. in pier No. 7	" " "			
G3	Ground test sta. in pier No. 7	Ground mat on right bank	" " "			
~~VS1~~	~~LC1 Panelboard~~	~~JB40~~	~~Visual signal light circuit~~	~~2/c~~	~~8~~	X
~~VS2~~	~~JB39~~	~~JB43~~	X X X X	~~3/c~~	~~8~~	X
~~VS3~~	~~JB43~~	~~JB44~~	X X X X	~~2/c~~	~~8~~	X
PL3	Path lighting contactor	JB113	Path lights, river wall	3/c	4	115/230V
PL4	JB113	JB57	" " " "	3/c	8	115/230V

(D) → For visual traffic signal cable identifications, see drawing 29/10

(A)

⊗ Portable power cable

LIST OF EQUIPMENT

ITEM	DESCRIPTION
1	Switchboard, control center type, as per specifications and with equipment as shown on Dwgs. 29/1 & 29/6
2	Transformer 15 K.V.A., 60~, 1Φ, 480-120/240v dry type
3	Lock light standard as per detail 29/3-1, complete with ornamental base, anchor base, light fixture item 4 and Thompson disconnecting and lowering hanger
4	Lock light fixture, Westinghouse Style No. 1120225 or equal
5	Navigation light standard as per detail 29/3-2 complete with split ornamental base, anchor base and 1 light fixture item 8
6	Navigation light standard as per detail 29/3-3 complete with split ornamental base, anchor base and 2 light fixtures item 8
7	Navigation light standard as per detail 29/3-4 complete with split ornamental base, anchor base and 3 light fixtures item 8
(C) △ 8	Navigation light fixture.
9	
10	Path light, Russell & Stoll Co. No. 2303 or equal
11	Junction box JB1 to JB57 as per detail 29/4-1 with 29/4-2 gasket and 29/4-3 cover
12	Junction box JB100 to JB113 Russell & Stoll No. 2161 as per detail 29/4-5
13	Submersible terminal box, TB200 to 201, G&W type X with 2-12 point terminal blocks as per detail 29/4-4
14	Fuse box, Crouse-Hinds Co. No. YAC2302 or equal with 2P, 30A cutout and 1-15A fuse
15	Watertight gland, bronze terminal tube, size to suit, Russell & Stoll Co. or equal
16	3/c No. 12, type "OS" cable and plug, Mines Equip. Co. No. 232M, length to suit
17	3/c No. 12, " " " " socket, " " " No. 232F, " " "
(C) 18	3/c No. 12 " " " and 2 or 3 outlet Mines Equipment Co. portable branches, suitable for use with Item 16, cable length to suit requirements
19	Watertight receptacle housing and receptacle, Crouse-Hinds Co. Nos. ARH0681 and AR5338
20	" " " " " " " Nos. ARH0681 and AR5348
21	Control stand complete with equipment as per detail 29/6-1
22	Watertight receptacle Russell & Stoll Co. No. 3877 or equal without box
23	3-gang type FD box, Russell & Stoll Co. No. 3733 for item 22, watertight
24	Watertight plug, Russell & Stoll Co. No. 3880 or equal
25	Split type cable support, Russell & Stoll Co., size to suit as per detail Dwg. 29/4
26	Weatherproof service box with automatic fuse puller and 2-Straightaway fittings similar and equal to Federal Electric Products Co. Furnish 3-200A, 600V. renewable superlag fuses & 6 spare links
27	Watertight tainter gate controller complete with equipment as per specifications and Dwgs. 56/1 and 56/2
28	Watertight P.B. station with "Raise-Lower-Stop" buttons as per Dwg. 56/1 and 56/2 and provision for lockout on stop position
29	Receptacle condulet and housing, Crouse-Hinds Co. Nos. ARDF33 and AR3337 or equal
30	Plug, Crouse-Hinds Co. No. APJ3373 or equal
31	3/c No. 10 Portable power cable with 1 plug, Crouse-Hinds Co. No. APJ3373 and 1 receptacle, Crouse-Hinds Co. No. APR3353 or equal
32	Watertight safety switch, 3PST, 60A, 600V.
33	Pull box, hot dipped galvanized, T&B No. 10885 complete with cover and gasket, and three 1" conduit openings
34	Watertight safety switch, 3PDT, 30A, 600v
35	Transformer, 3KVA, 60~, 1Φ, 480-120/240v dry outdoor type
36	Air circuit breaker, 25A, 3P, 250V, Westinghouse AB-Deion type and 2P, 250v remote control switch, electrically operated, mechanically held, Automatic Switch Co. No. 9101 or equal in watertight enclosure
37	Fuse box, Crouse-Hinds Co. No. YAC3302 or equal, complete with 2P, 30A cutout and 2-15A fuses
38	Combination fuse box and receptacle, Crouse-Hinds Co. No. ZF55302 complete with hub plates, 2P, 30A cutout, 2-15A fuses, and Crouse-Hinds Co. No. BRD8302 receptacle or equal
39	V-P fixture with shallow dome reflector, Crouse-Hinds Co. No. VDA2957 or equal
40	Single pole switch, Hubbell 2971 with Crouse-Hinds Co. No. DS128 V-P cover in type FD box, or equal
△ 41	Walkway light, Holophane spec. No. 4847-M, Dwg. No. S-3187 or equal
42	Receptacle, Crouse Hinds Co. No. BRD8302 mounted in type FD box
43	Watertight P.B. station with "On-Off" buttons both N.O.
44	V-P fixture with guard Crouse-Hinds Co. No. VJ2289 or equal
45	Combination fuse box, receptacle and switch, Crouse-Hinds Co. No. ZF304 complete with No. DS128 V-P cover, No. BRD8302 receptacle, hub plates, 2P, 30A cutout, 2-15A fuses, and Hubbell No. 2971 single pole switch or equal
(B) → 46	Fuse box, watertight, Russell Stoll Co. No. 1247 complete with fuse block and fuses.
→ 47	3/c #12 Type OS cable and plug, Mines Equipment Co. No. 332M
→ 48	3/c #12 Type OS cable and socket, Mines Equipment Co. No. 332F

△ This item furnished by the Government and installed by the Contractor

(D) → For continuation of list, see Reference Table DWG 29/10

REFERENCE DRAWINGS

29/1 Wiring Diagram-Lighting and Power
29/2 Cable Routing
56/1 Tainter Gate Wiring Diagram
56/2 Tainter Gate Equipment Installation
56/3 Spillway Lighting Layout

REVISION	DATE	DESCRIPTION	BY
D	15 AUG 51	CABLE NO. DF3 & DF4 ADDED; CABLE NO. VS1, VS2 & VS3 VOIDED; CABLE NO. DF1 & DF2 ROUTING REVISED; NOTES ADDED.	[illegible]
C	16 JUL 48	REF NOS. 5, 6, 7, 8, 11, 15 & 18 REVISED. ITEM NO. 9 DELETED.	[illegible]
B	16 JUL 48	REF NOS. 46, 47 & 48 ADDED AND REF NO. 18 REVISED ON EQUIP. SCHED.	[illegible]
A	16 JUL 48	VS1, VS2, VS3, PL3 & PL4 ADDED TO CABLE SCHEDULE	[illegible]

GRAPHIC SCALE

DEPARTMENT OF THE ARMY
CORPS OF ENGINEERS
OFFICE OF THE DISTRICT ENGINEER
PITTSBURGH, PENNSYLVANIA

PREPARED BY NASHVILLE DISTRICT
DRAWN BY: C.E.S.
CHECKED BY: W.C.R.
SUPV. BY: W.C.R.
SUBMITTED BY: [signature]
CHIEF, DESIGN BRANCH
APPROVAL RECOMMENDED: [signature]
CHIEF, ENGINEERING DIVISION

MONONGAHELA RIVER
MORGANTOWN LOCK AND DAM
LOCK
ELECTRICAL
CABLE AND EQUIPMENT SCHEDULE

APPROVED: [signature]
COLONEL, C.E. DISTRICT ENGINEER, PITTSBURGH DISTRICT
DATE: JUNE 1948

APPROVAL RECOMMENDED FOR PITTSBURGH DISTRICT
TECHNICAL ASSISTANT
DATE: JUNE 1948

SCALE:
SPEC. NO.
DRAWING NUMBER 037-LMO-29/5.2
SHEET 5 OF 8

APPROVED BY OFFICE CHIEF OF ENGINEERS, DEPT. OF THE ARMY, 20 JULY 1948, ENGWE MORGANTOWN LOCK AND DAM, W. VA.

AS BUILT-15 AUG 1951