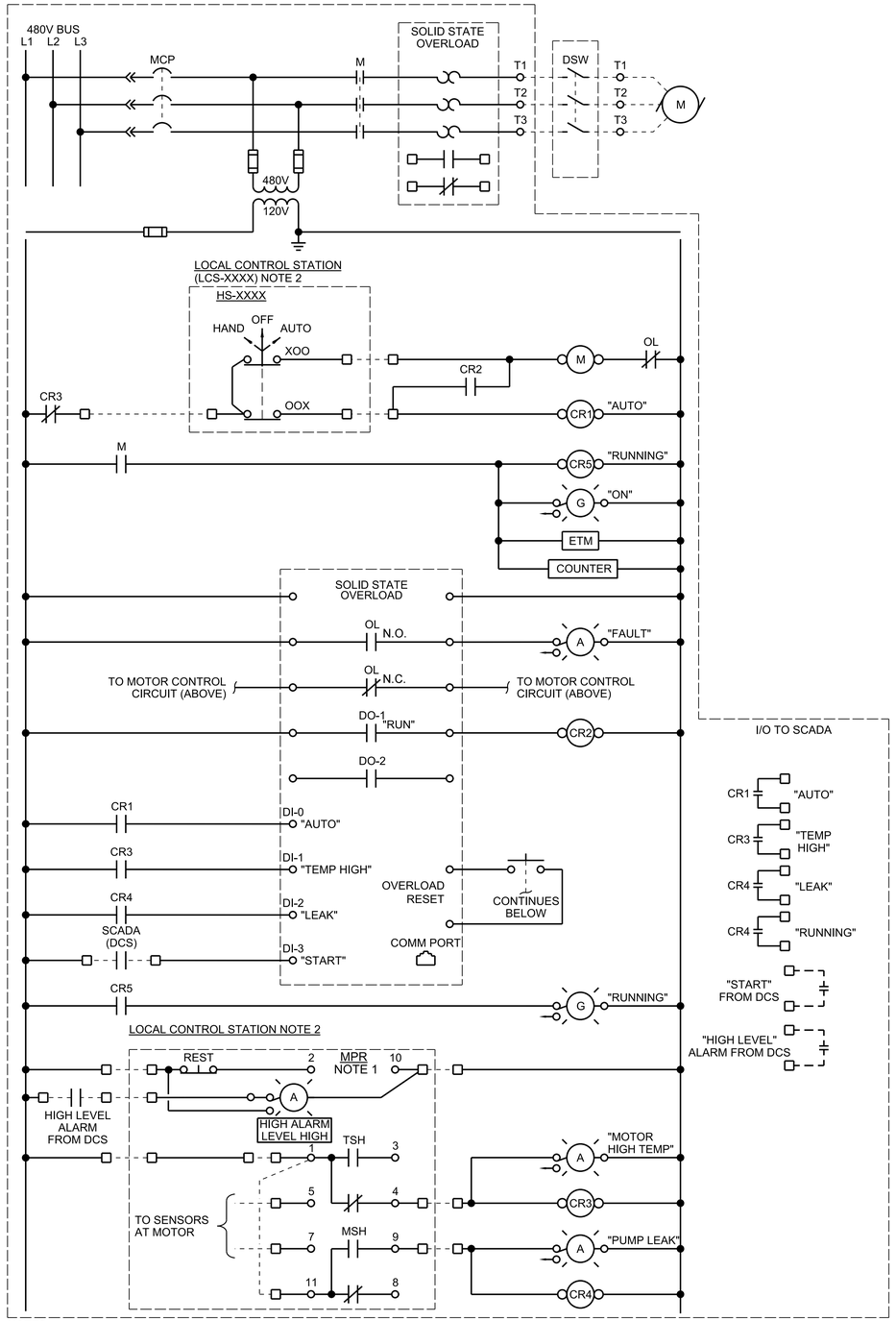

NOTES:

1. FOLLOW THE LOGIC BELOW:
   A. IF DI0 IS TRUE, DO1 IS TO RESPOND TO "START" COMMANDS FROM SCADA,DI3.
   B. IF DI1 IS TRUE, SET "MOTOR HIGH TEMPERATURE" ALARM STATUS AND DISABLE THE "RUN" COMMAND FROM SCADA.
   C. IF DI2 IS TRUE, SET A "PUMP LEAK" ALARM STATUS.
   D. IF DI3 IS TRUE, D01 IS TO ENERGIZE RELAY CR2 TO START PUMP.

C1 MOTOR CONTROL DIAGRAM

PUMP TAG	LCS TAG	EQUIPMENT NAME	TSH TAG	MSH TAG	HS TAG
PMP-1805	LCS-1805	SEPTAGE EQUALIZATION	TSH-1805	MSH-1805	HS-1805
PMP-3211	LCS-3211	WAS PUMP 1	TSH-3211	MSH-3211	HS-3211
PMP-3212	LCS-3212	WAS PUMP 2	TSH-3212	MSH-3212	HS-3212
---	---	---	---	---	---

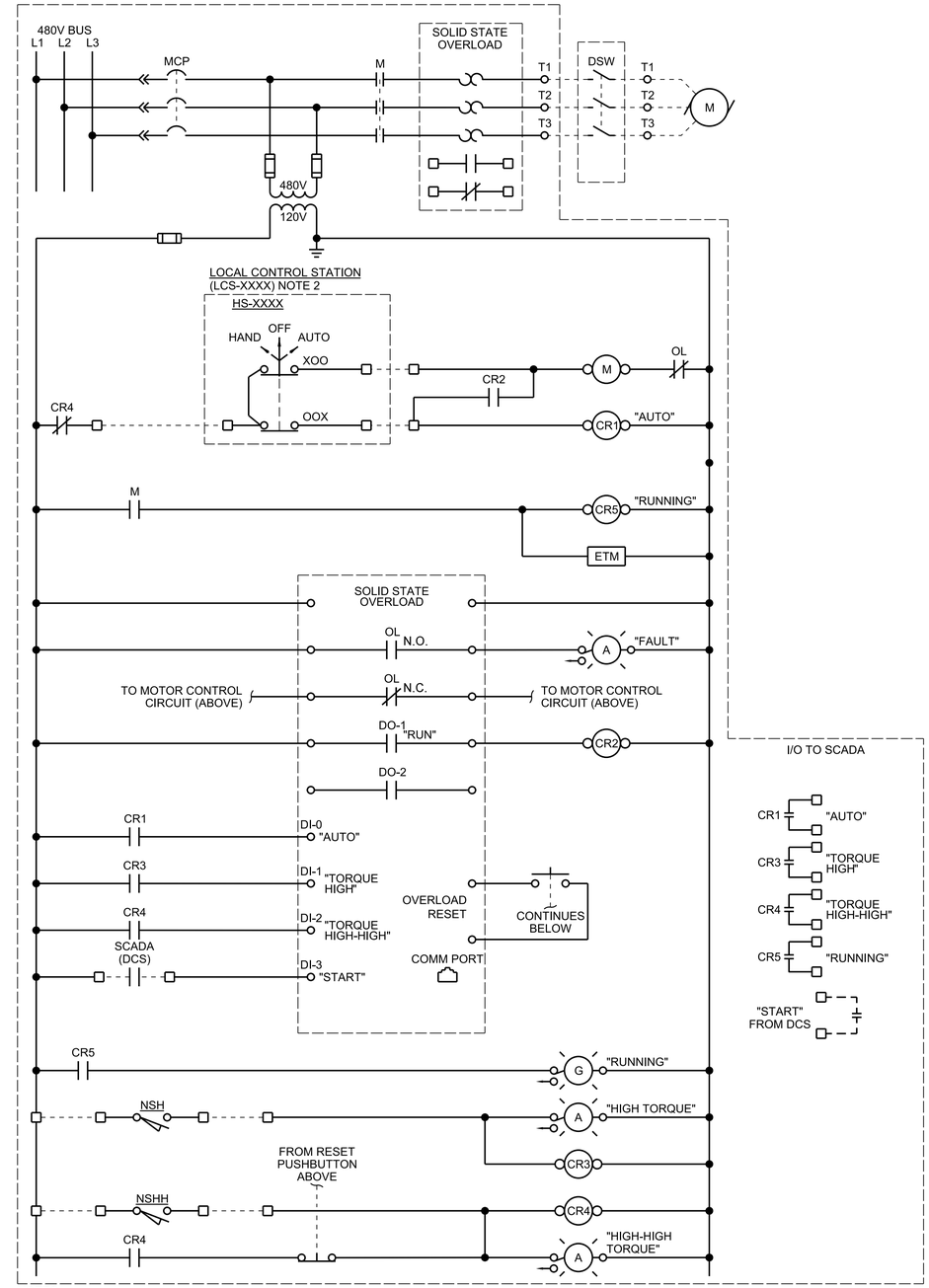

NOTES:

1. FOLLOW THE LOGIC BELOW:
   A. IF DI0 IS TRUE, DO1 IS TO RESPOND TO "START" COMMANDS FROM SCADA, DI3.
   B. IF DI1 IS TRUE, SET "HIGH TORQUE" ALARM STATUS.
   C. IF DI2 IS TRUE, SET A "HIGH-HIGH TORQUE" ALARM STATUS AND DISABLE THE "RUN" COMMAND FROM SCADA.
   D. DI3 IS NOT USED IN THIS CIRCUIT.

C2 MOTOR CONTROL DIAGRAM

MOTOR TAG	LCS TAG	MOTOR NAME	FIELD HS TAG	NSH TAG	NSHH TAG
MXR-2613	LCS-2613	BIOREACTOR 1 ANOXIC MIXER 1	HS-2613	NSH-2613	NSHH-2613
MXR-2614	LCS-2614	BIOREACTOR 1 ANOXIC MIXER 2	HS-2614	NSH-2614	NSHH-2614
MXR-2713	LCS-2713	BIOREACTOR 2 ANOXIC MIXER 1	HS-2713	NSH-2713	NSHH-2713
MXR-2714	LCS-2714	BIOREACTOR 2 ANOXIC MIXER 2	HS-2714	NSH-2714	NSHH-2714
MXR-2813	LCS-2813	BIOREACTOR 3 ANOXIC MIXER 1	HS-2813	NSH-2813	NSHH-2813
MXR-2814	LCS-2814	BIOREACTOR 3 ANOXIC MIXER 2	HS-2814	NSH-2814	NSHH-2814

FULL SIZE DRAWINGS = 22"x34"
BAR MEASURES 1" LONG

0" 1"

GENERAL SHEET NOTES

A. MOTOR CONTROL DIAGRAMS SHOW THE GENERAL FUNCTION OF THE EQUIPMENT. MANUFACTURER SHALL REVIEW AND DEVELOP MOTOR CONTROLS FOR THE EQUIPMENT SUPPLIED THAT PROVIDED THE IDENTIFIED AND SPECIFIED FUNCTIONS. ADDITIONAL COMPONENTS MAY BE REQUIRED THAT ARE NOT REFLECTED IN THIS DRAWING.

B. REFER TO PIPING AND INSTRUMENTATION (P&ID) DIAGRAMS FOR EXTERNAL PANEL DESIGNATIONS.

C. FOR MOTOR CIRCUIT PROTECTOR AND MOTOR CONTACTOR RATINGS, SEE INFORMATION PROVIDED BY THE MANUFACTURER OF THE DRIVEN EQUIPMENT. REFER TO ONE-LINE DIAGRAMS FOR MCC INFORMATION.

SHEET NOTES

1. CONTRACTOR TO MODIFY WIRE TERMINATIONS FOR VENDOR SPECIFIC MOISTURE AND THERMAL OVERLOAD RELAYS.

2. LCS LOCATED REMOTE NEAR DRIVEN EQUIPMENT. SEE JACOBS DETAIL 2624-010 FOR CONROL STATION.

Registered Professional Engineer (Electrical) CERTIFICATE NO. 81240 DAVID BURGER Date Signed 6-19-2025 ARIZONA, U.S.A.
JUNE 19, 2025

A/E FIRM
JACOBS GOVERNMENT SERVICES COMPANY
GREENWOOD VILLAGE, CO

DESIGNED: D BURGER
CADD: J GARIBAY
TECH. REVIEW: J LANDMAN
DATE: 06/2025

SUB SHEET NO. 08E7104

TITLE OF SHEET
SITE ELECTRICAL MOTOR CONTROL DIAGRAMS
GRAND CANYON, SOUTH RIM

DRAWING NO. 113 175376
PMIS/PKG NO. 257282
SHEET 128 OF 401

GRCA-257282

100% COMPLETE CONSTRUCTION DOCUMENTS

PLOT DATE: 6/16/2025 PLOT TIME: 11:41:11 PM SS6V8i D3167666 - South Rim\4 Delivery\43 CAD Design\GRCA\257282\Microstation V8i Drawings\ELEC\08E7104_D3167666.dgn

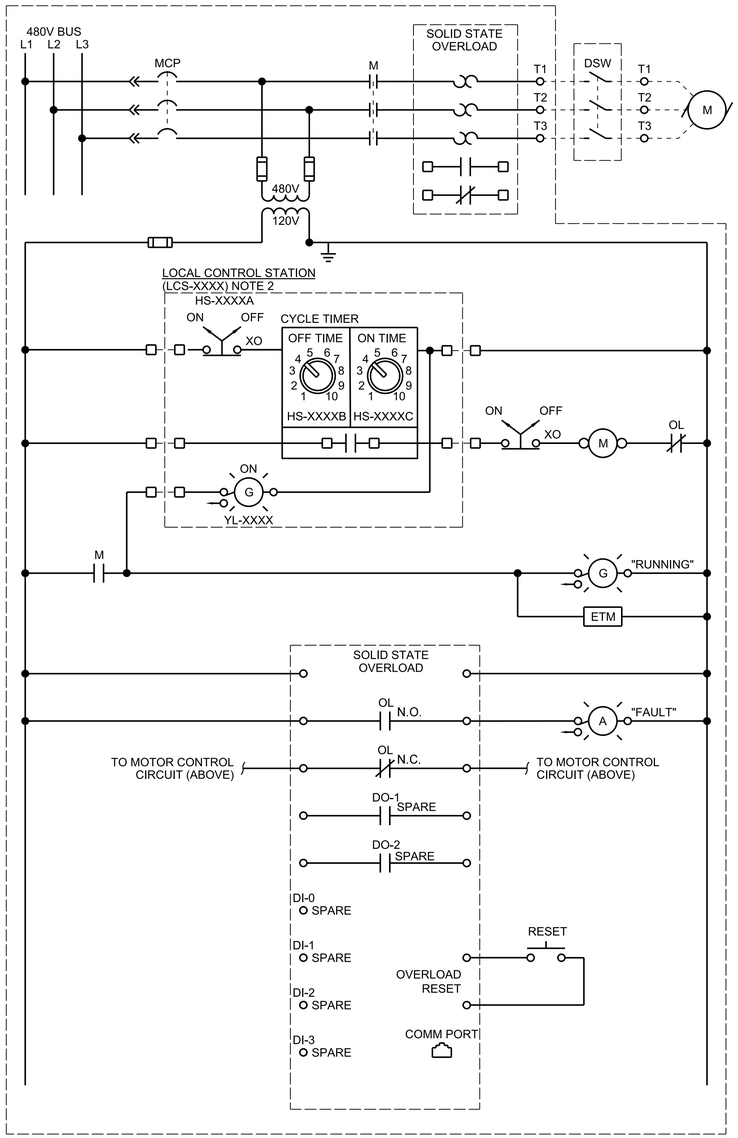

C3 MOTOR CONTROL DIAGRAM

EQUIP TAG	LCS TAG	EQUIPMENT NAME	FIELD HS TAG	FIELD HS TAG	FIELD HS TAG	MCC HS TAG	FIELD YL TAG
FAN-8711	LCS-8711	COMPOST FAN 1	HS-8711A	HS-8711B	HS-8711C	HS-8711C	YL-8712
FAN-8712	LCS-8712	COMPOST FAN 2	HS-8712A	HS-8712B	HS-8712C	HS-8712C	YL-8712
FAN-8713	LCS-8713	COMPOST FAN 3	HS-8713A	HS-8713B	HS-8713C	HS-8713C	YL-8712
FAN-8714	LCS-8714	COMPOST FAN 4	HS-8714A	HS-8714B	HS-8714C	HS-8714C	YL-8712

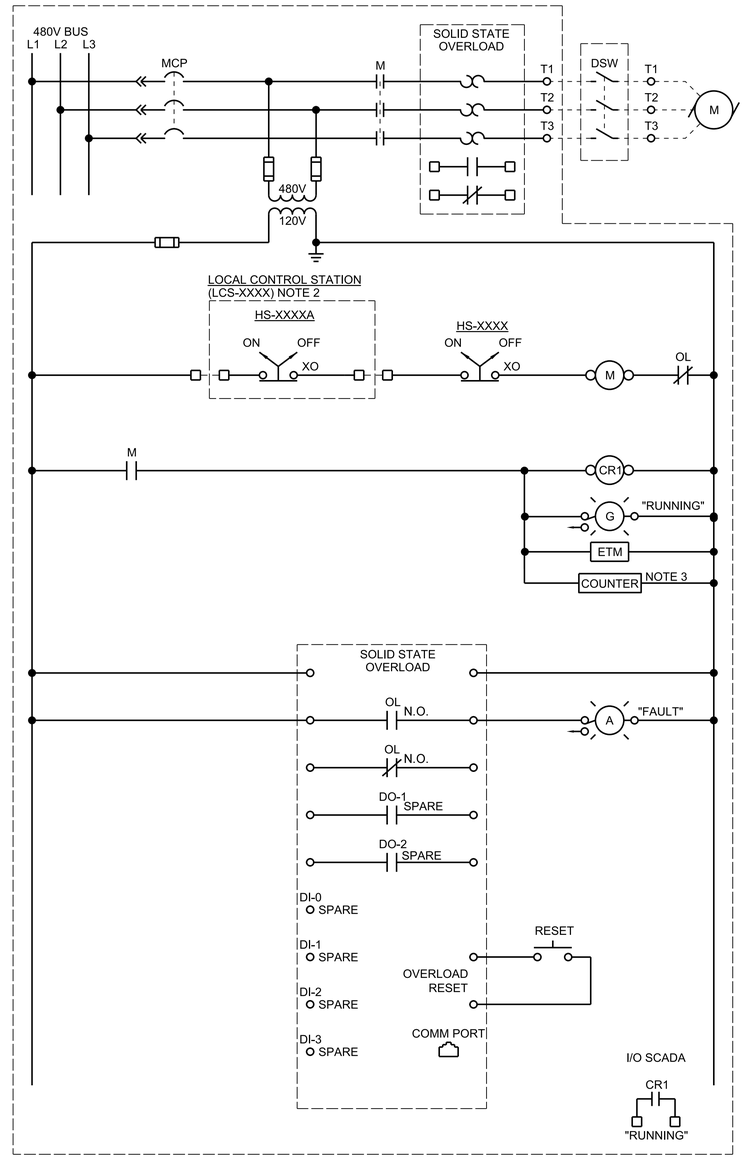

C4 MOTOR CONTROL DIAGRAM

EQUIP TAG	LCS TAG	EQUIPMENT NAME	-	FIELD HS TAG	HS TAG
PMP-8113	LCS-8113	DIGESTER SAMPLE PUMP 1	-	HS-8113A	HS-8113
PMP-8213	LCS-8213	DIGESTER SAMPLE PUMP 2	-	HS-8213A	HS-8213
-	-	-	-	-	-
-	-	-	-	-	-

GENERAL SHEET NOTES

A. MOTOR CONTROL DIAGRAMS SHOW THE GENERAL FUNCTION OF THE EQUIPMENT. MANUFACTURER SHALL REVIEW AND DEVELOP MOTOR CONTROLS FOR THE EQUIPMENT SUPPLIED THAT PROVIDED THE IDENTIFIED AND SPECIFIED FUNCTIONS. ADDITIONAL COMPONENTS MAY BE REQUIRED THAT ARE NOT REFLECTED IN THIS DRAWING.

B. REFER TO PIPING AND INSTRUMENTATION (P&ID) DIAGRAMS FOR EXTERNAL PANEL DESIGNATIONS.

C. FOR MOTOR CIRCUIT PROTECTOR AND MOTOR CONTACTOR RATINGS, SEE INFORMATION PROVIDED BY THE MANUFACTURER OF THE DRIVEN EQUIPMENT. REFER TO ONE-LINE DIAGRAMS FOR MCC INFORMATION.

SHEET NOTES

1. PROVIDED WITH MOTOR CONTROL CENTER. SEE I&C COMMUNICATION NETWORK DRAWINGS FOR DESIGNATION. COORDINATE IP ADDRESS AND SETTINGS WITH CONTRACTING OFFICER AND CONFIGURE PRIOR TO SHIPPING FROM FACTORY.
2. LCS LOCATED REMOTE NEAR DRIVEN EQUIPMENT. SEE JACOBS DETAIL 2624-013 FOR CONTROL STATION.
3. PROVIDE NUMBER OF STARTS COUNTER FOR PUMP ONLY.

GRCA-257282

FULL SIZE DRAWINGS = 22"x34"
BAR MEASURES 1" LONG
0" 1"

Registered Professional Engineer (Electrical) CERTIFICATE NO. 81240 DAVID BURGER Date Signed 6-19-2025 ARIZONA, U.S.A.
JUNE 19, 2025

A/E FIRM
JACOBS GOVERNMENT SERVICES COMPANY
GREENWOOD VILLAGE, CO

DESIGNED: D BURGER
CADD: J GARIBAY
TECH. REVIEW: J LANDMAN
DATE: 06/2025

SUB SHEET NO. 08E7105

TITLE OF SHEET
SITE ELECTRICAL MOTOR CONTROL DIAGRAM
GRAND CANYON, SOUTH RIM

DRAWING NO. 113 175376
PMIS/PKG NO. 257282
SHEET 129 OF 401

100% COMPLETE CONSTRUCTION DOCUMENTS

PLOT DATE: 6/16/2025 PLOT TIME: 11:40:03 PM SS6/V8i D3167666 - South Rim\4 Delivery\43 CAD Design\GRCA\257282\Microstation V8i DrawingsIELEC\08E7105_D3167666.dgn

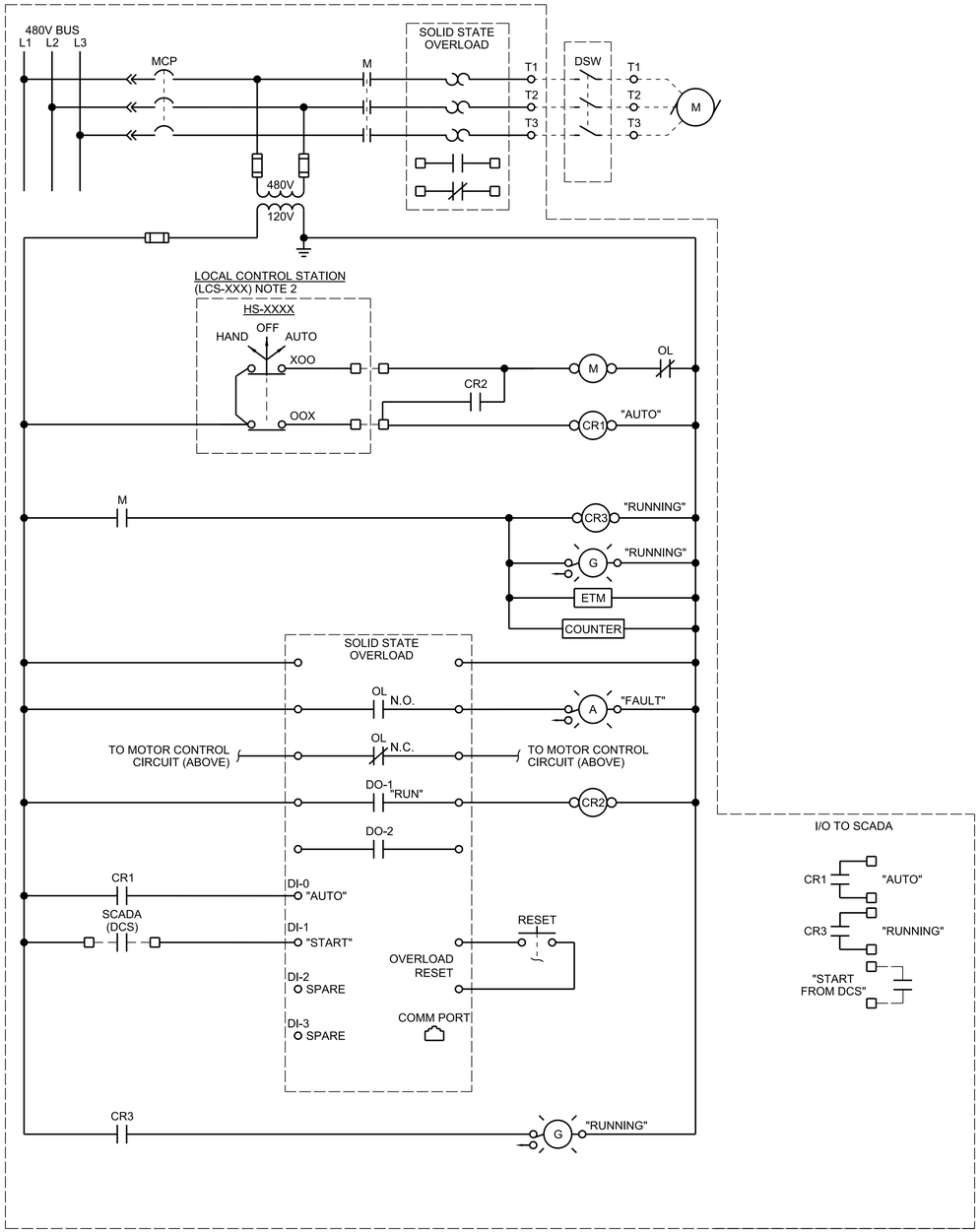

NOTES:

1. FOLLOW THE LOGIC BELOW:
   A. IF DI0 IS TRUE, DO1 IS TO RESPOND TO START COMMAND FROM SCADA, DI1.

C5 MOTOR CONTROL DIAGRAM

PUMP TAG	LCS TAG	EQUIPMENT NAME	-	-	HS TAG
PMP-3213	LCS-2011	GRIT PUMP	-	-	HS-2011
-	-	-	-	-	-
-	-	-	-	-	-
-	-	-	-	-	-

GENERAL SHEET NOTES

A. MOTOR CONTROL DIAGRAMS SHOW THE GENERAL FUNCTION OF THE EQUIPMENT. MANUFACTURER SHALL REVIEW AND DEVELOP MOTOR CONTROLS FOR THE EQUIPMENT SUPPLIED THAT PROVIDED THE IDENTIFIED AND SPECIFIED FUNCTIONS. ADDITIONAL COMPONENTS MAY BE REQUIRED THAT ARE NOT REFLECTED IN THIS DRAWING.

B. REFER TO PIPING AND INSTRUMENTATION (P&ID) DIAGRAMS FOR EXTERNAL PANEL DESIGNATIONS.

C. FOR MOTOR CIRCUIT PROTECTOR AND MOTOR CONTACTOR RATINGS, SEE INFORMATION PROVIDED BY THE MANUFACTURER OF THE DRIVEN EQUIPMENT. REFER TO ONE-LINE DIAGRAMS FOR MCC INFORMATION.

SHEET NOTES

1. CONTROL RELAY CR4 AND PSH CIRCUIT APPLY TO PERMEATE PUMPS ONLY.

2. LCS LOCATED REMOTE NEAR DRIVEN EQUIPMENT. SEE JACOBS DETAIL 2624-010 FOR CONROL STATION.

FULL SIZE DRAWINGS = 22"x34"
BAR MEASURES 1" LONG
0" 1"

Registered Professional Engineer (Electrical) CERTIFICATE NO. 81240 DAVID BURGER Date Signed 6-19-2025 ARIZONA, U.S.A.
JUNE 19, 2025

A/E FIRM
JACOBS GOVERNMENT SERVICES COMPANY
GREENWOOD VILLAGE, CO

DESIGNED: D BURGER
CADD: J GARIBAY
TECH. REVIEW: J LANDMAN
DATE: 06/2025

SUB SHEET NO. 08E7106

TITLE OF SHEET
SITE ELECTRICAL MOTOR CONTROL DIAGRAM
GRAND CANYON, SOUTH RIM

DRAWING NO. 113 / 175376
PMIS/PKG NO. 257282
SHEET 130 OF 401

100% COMPLETE CONSTRUCTION DOCUMENTS

GRCA-257282

PLOT DATE: 6/16/2025 PLOT TIME: 11:41:47 PM SS6/V8i D3167666 - South Rim\4 Delivery\43 CAD Design\GRCA\257282\Microstation V8i Drawings\ELEC\08E7106_D3167666.dgn

SHEET NOTES

1. QUANTITY OF LIGHTING CONTACTOR CONTACTS TO BE DETERMINED BY THE CONTRACTOR BASED ON NUMBER OF CIRCUITS TO THE PANEL AND LIGHTING COVERAGE AS SHOWN ON THE PLAN DRAWINGS. INSTALL CONTACTOR COILS IN PARALLEL AS REQUIRED.
2. BOTH 208V AND 120V LIGHTING CIRCUITS SHALL BE ROUTED THROUGH A SINGLE CONTACTOR ENCLOSURE. QUANTITY AND VOLTAGE AS REQUIRED PER PLAN DRAWINGS.
3. ELECTRICALLY HELD LIGHTING CONTACTOR.
4. FOR LOCATIONS OF CONTROL STATIONS FOR EXTERIOR PROCESS AREA LIGHTING, SEE FACILITY PLAN DRAWINGS.
5. FOR MULTIPLE CONTROL STATIONS FOR LIGHTING. CONFIGURE "ON" SWITCHES IN PARALLEL AND "OFF" SWITCHES IN SERIES AS SHOWN

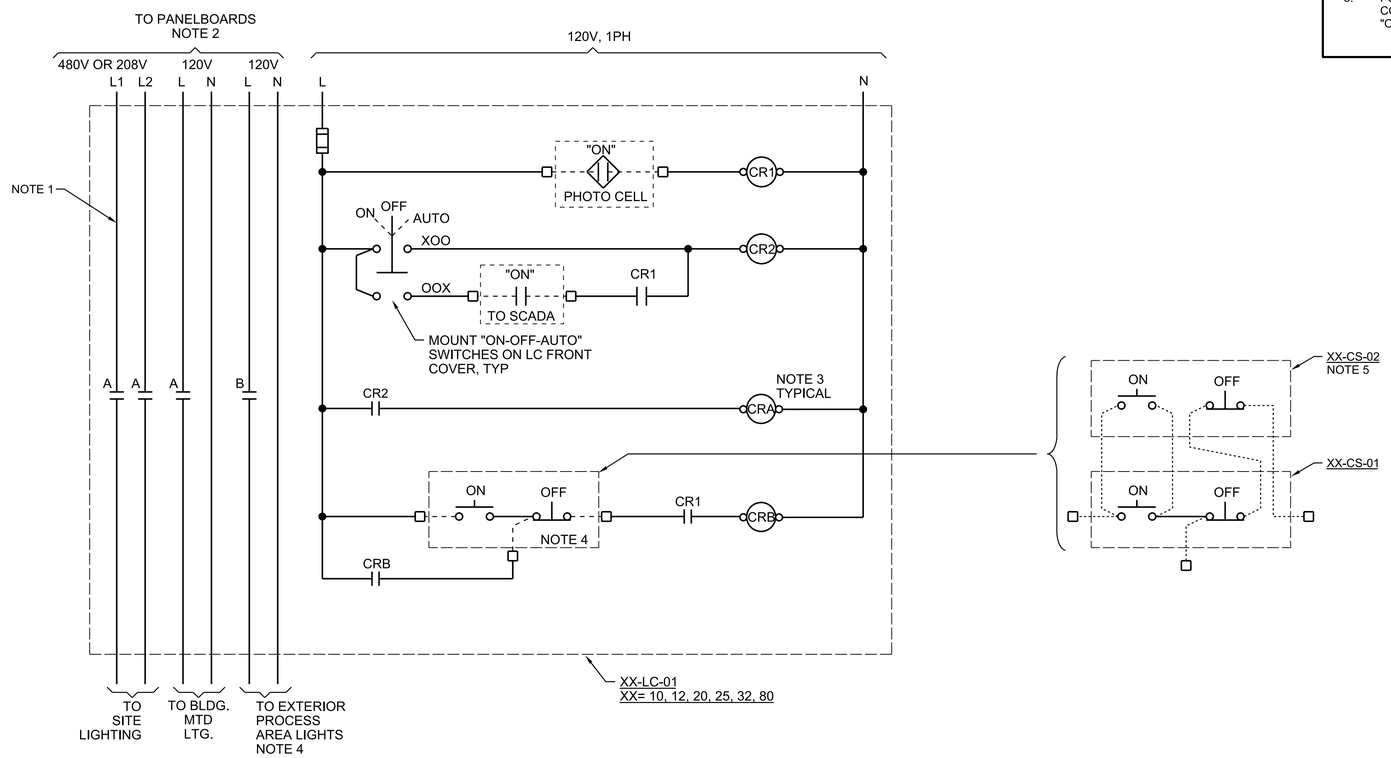

EXTERIOR LIGHTING CONTROL DIAGRAM

NTS

FULL SIZE DRAWINGS = 22"x34"
BAR MEASURES 1" LONG

0" 1"

Registered Professional Engineer (Electrical) CERTIFICATE NO. 81240 DAVID BURGER Date Signed 6-19-2025 ARIZONA, U.S.A.

JUNE 19, 2025

A/E FIRM	DESIGNED:	SUB SHEET NO.	TITLE OF SHEET	DRAWING NO.
JACOBS GOVERNMENT SERVICES COMPANY GREENWOOD VILLAGE, CO	D BURGER CADD: J GARIBAY TECH. REVIEW: J LANDMAN DATE: 06/2025	08E7110	SITE ELECTRICAL EXTERIOR LIGHTING CONTROL DIAGRAM GRAND CANYON, SOUTH RIM	113 175376 PMIS/PKG NO. 257282 SHEET 131 OF 401

PLOT DATE: 6/16/2025 PLOT TIME: 11:41:30 PM SS6\V8i D3167666 - South Rim\4 Delivery\43 CAD Design\GRCA\257282\Microstation V8\ DrawingsIELEC\08E7110_D3167666.dgn

GRCA-257282

100% COMPLETE CONSTRUCTION DOCUMENTS

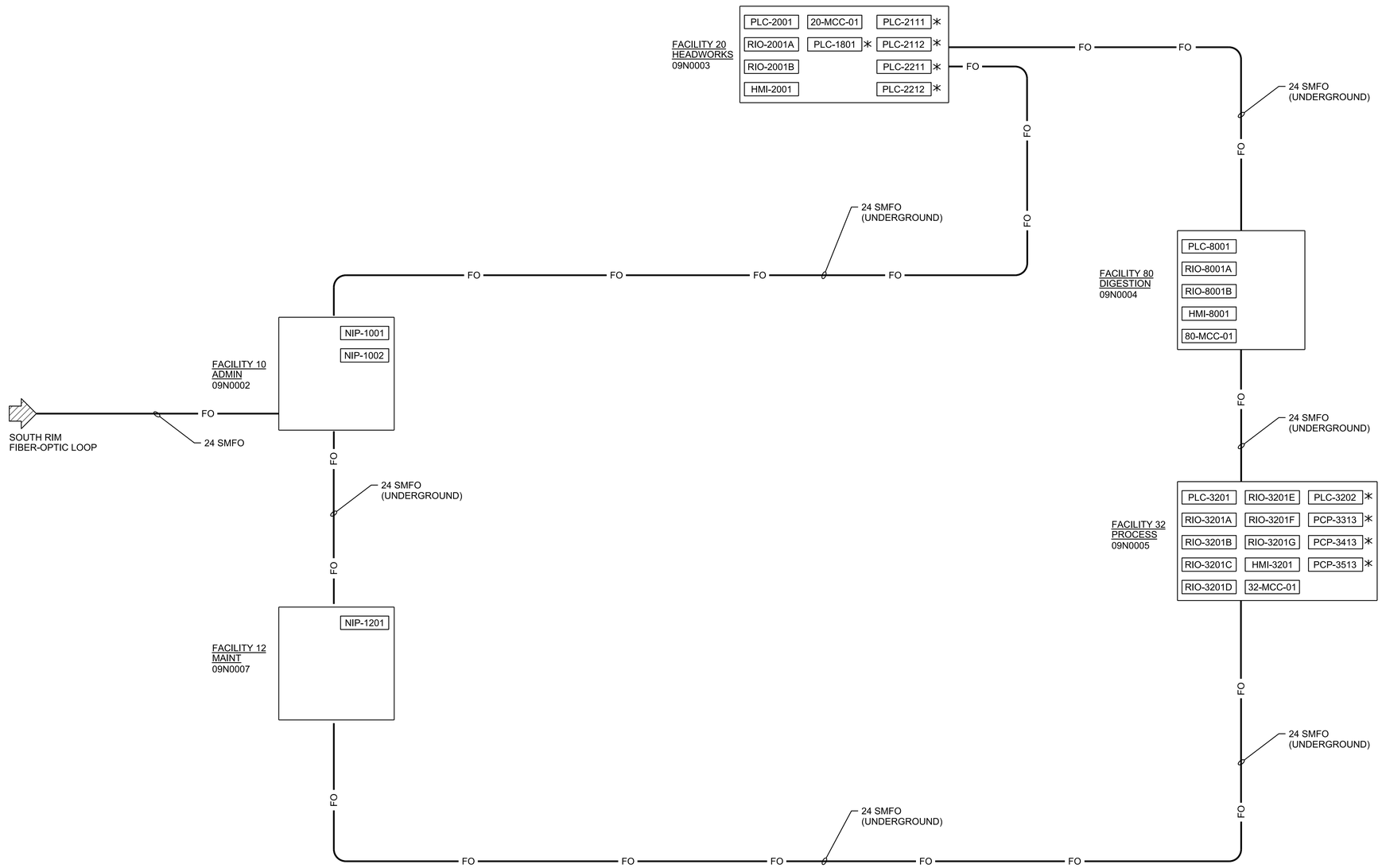

PLC	PLANT PLC
PLC *	VENDOR PLC
RIO	REMOTE I/O PANEL CONNECT TO NEAREST PLANT PLC
NIP	NETWORK INTERFACE PANEL
HMI	HUMAN MACHINE INTERFACE
MCC	MOTOR CONTROL CENTER

FULL SIZE DRAWINGS = 22"x34"
BAR MEASURES 1" LONG

0" 1"

Registered Professional Engineer (Control Systems)
CERTIFICATE NO. 83873
ANDREW WILLIAMS
Date Signed 06-20-2025
ARIZONA, U.S.A.

A/E FIRM
JACOBS GOVERNMENT SERVICES COMPANY
GREENWOOD VILLAGE, CO

DESIGNED: A WILLIAMS
CADD: J BOSS
TECH. REVIEW: A ELLIS
DATE: 06/2025

SUB SHEET NO.
09N0001

TITLE OF SHEET
I&C
COMMUNICATION
FIBER BACKBONE

GRAND CANYON, SOUTH RIM

NO SCALE
DRAWING NO. 113
175376
PMIS/PKG NO. 257282
SHEET 132 OF 401

100% COMPLETE CONSTRUCTION DOCUMENTS

GRCA-257282

PLOT DATE: 6/17/2025 PLOT TIME: 4:14:23 PM SS6/V8I D3167666 - South Rim\4 Delivery\43 CAD Design\GRCA\257282\Microstation V8I Drawings\I&C\09N0001_D3167666.dgn

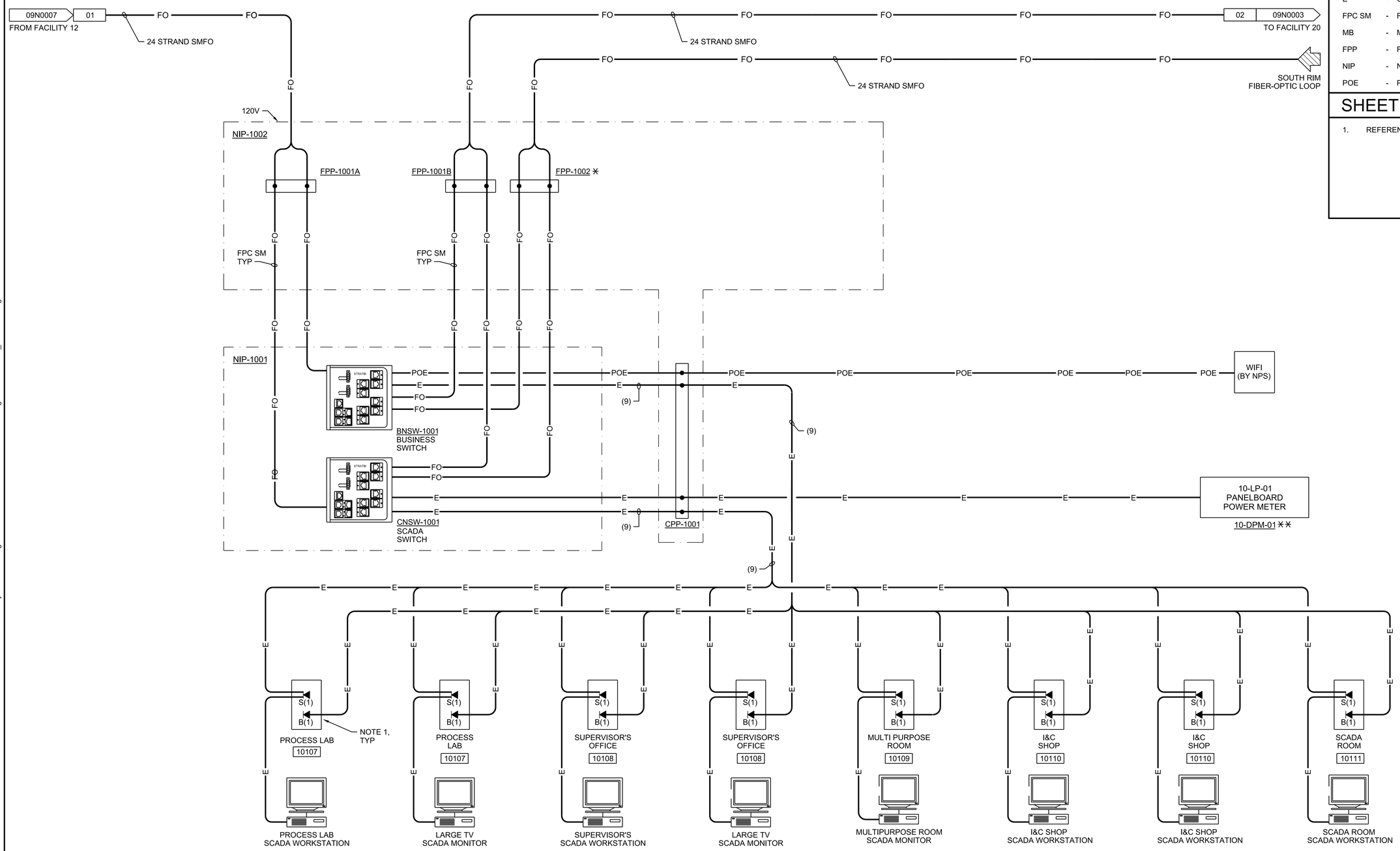

GENERAL SHEET NOTES

24 SMFO	-	24 STRAND SINGLE MODE FIBER OPTIC CABLE
E	-	CAT6E ETHERNET CABLE
FPC SM	-	FIBER PATCH CABLE SINGLE MODE
MB	-	MODBUS TCP
FPP	-	FIBER PATCH PANEL
NIP	-	NETWORK INTERFACE PANEL
POE	-	POWER OVER ETHERNET

SHEET NOTES

1. REFERENCE 01E0002 FOR DETAILS.

FACILITY 10 ADMIN BUILDING

FULL SIZE DRAWINGS = 22"x34"
BAR MEASURES 1" LONG

0" 1"

Registered Professional Engineer (Control Systems)
CERTIFICATE NO.
83873
ANDREW
WILLIAMS
Date Signed 06-30-2025
ARIZONA, U.S.A.

A/E FIRM	DESIGNED:	SUB SHEET NO.	TITLE OF SHEET	DRAWING NO.
JACOBS GOVERNMENT SERVICES COMPANY GREENWOOD VILLAGE, CO	A WILLIAMS CADD: J BOSS TECH. REVIEW: A ELLIS DATE: 06/2025	09N0002	I&C COMMUNICATION NETWORK DIAGRAM GRAND CANYON, SOUTH RIM	113 175376 PMIS/PKG NO. 257282 SHEET 133 OF 401

NO SCALE

100% COMPLETE CONSTRUCTION DOCUMENTS

GRCA-257282

PLOT DATE: 6/17/2025 PLOT TIME: 4:14:19 PM SS6/V8I D3167666 - South Rim\4 Delivery\43 CAD Design\GRCA\257282\Microstation V8I Drawings\I&C\09N0002_D3167666.dgn

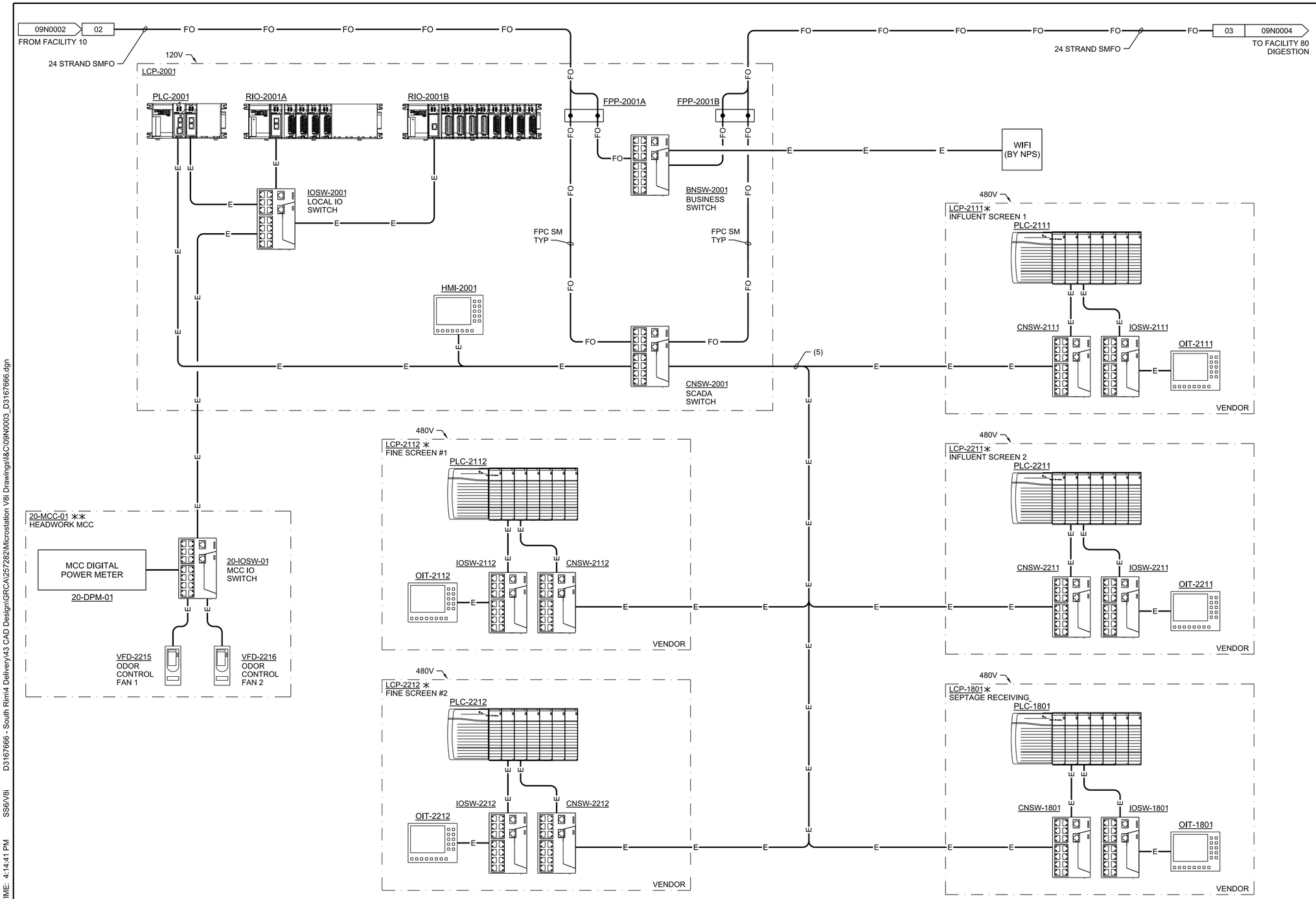

GENERAL SHEET NOTES

24 SMFO	-	24 STRAND SINGLE MODE FIBER OPTIC CABLE
E	-	CAT6E ETHERNET CABLE
FPC SM	-	FIBER PATCH CABLE SINGLE MODE
MB	-	MODBUS TCP
FPP	-	FIBER PATCH PANEL
NIP	-	NETWORK INTERFACE PANEL
POE	-	POWER OVER ETHERNET

GRCA-257282

FACILITY 20 HEADWORKS

FULL SIZE DRAWINGS = 22"x34"
BAR MEASURES 1" LONG

0" 1"

Registered Professional Engineer (Control Systems)
CERTIFICATE NO. 83873
ANDREW WILLIAMS
Date Signed 06-17-2025
ARIZONA, U.S.A.

A/E FIRM	DESIGNED:	SUB SHEET NO.	TITLE OF SHEET	DRAWING NO.
JACOBS GOVERNMENT SERVICES COMPANY GREENWOOD VILLAGE, CO	A WILLIAMS CADD: J BOSS TECH. REVIEW: A ELLIS DATE: 06/2025	09N0003	I&C COMMUNICATION NETWORK DIAGRAM GRAND CANYON, SOUTH RIM	NO SCALE 113 175376 PMIS/PKG NO. 257282 SHEET 134 OF 401

100% COMPLETE CONSTRUCTION DOCUMENTS

PLOT DATE: 6/17/2025 PLOT TIME: 4:14:41 PM SS6/V8i D3167666 - South Rim\4 Delivery\43 CAD Design\GRCA\257282\Microstation V8i Drawings\I&C\09N0003_D3167666.dgn

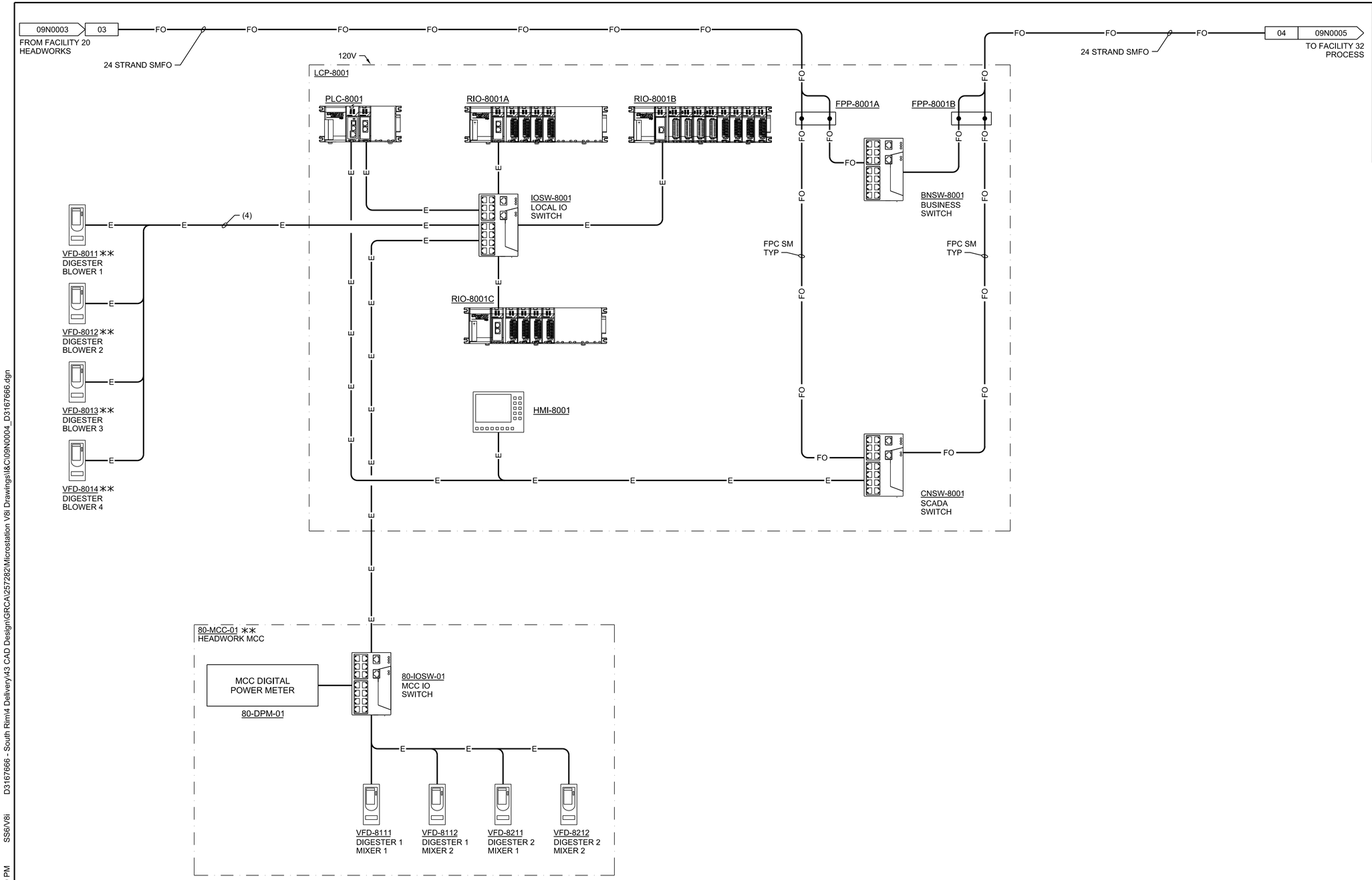

GENERAL SHEET NOTES

24 SMFO	-	24 STRAND SINGLE MODE FIBER OPTIC CABLE
E	-	CAT6E ETHERNET CABLE
FPC SM	-	FIBER PATCH CABLE SINGLE MODE
MB	-	MODBUS TCP
FPP	-	FIBER PATCH PANEL
NIP	-	NETWORK INTERFACE PANEL
POE	-	POWER OVER ETHERNET

FACILITY 80 DIGESTION

FULL SIZE DRAWINGS = 22"x34"
BAR MEASURES 1" LONG
0" 1"

Registered Professional Engineer (Control Systems) CERTIFICATE NO. 83873 ANDREW WILLIAMS Date Signed 06-17-2025 ARIZONA, U.S.A.

A/E FIRM
JACOBS GOVERNMENT SERVICES COMPANY
GREENWOOD VILLAGE, CO

DESIGNED: A WILLIAMS
CADD: J BOSS
TECH. REVIEW: A ELLIS
DATE: 06/2025

SUB SHEET NO. 09N0004

TITLE OF SHEET
I&C COMMUNICATION NETWORK DIAGRAM
GRAND CANYON, SOUTH RIM

NO SCALE
DRAWING NO. 113 / 175376
PMIS/PKG NO. 257282
SHEET 135 OF 401

GRCA-257282

100% COMPLETE CONSTRUCTION DOCUMENTS

PLOT DATE: 06\17\2025 PLOT TIME: 6:40:20 PM SS6/V8i D3167666 - South Rim\4 Delivery\43 CAD Design\GRCA\257282\Microstation V8i Drawings\I&C\09N0004_D3167666.dgn

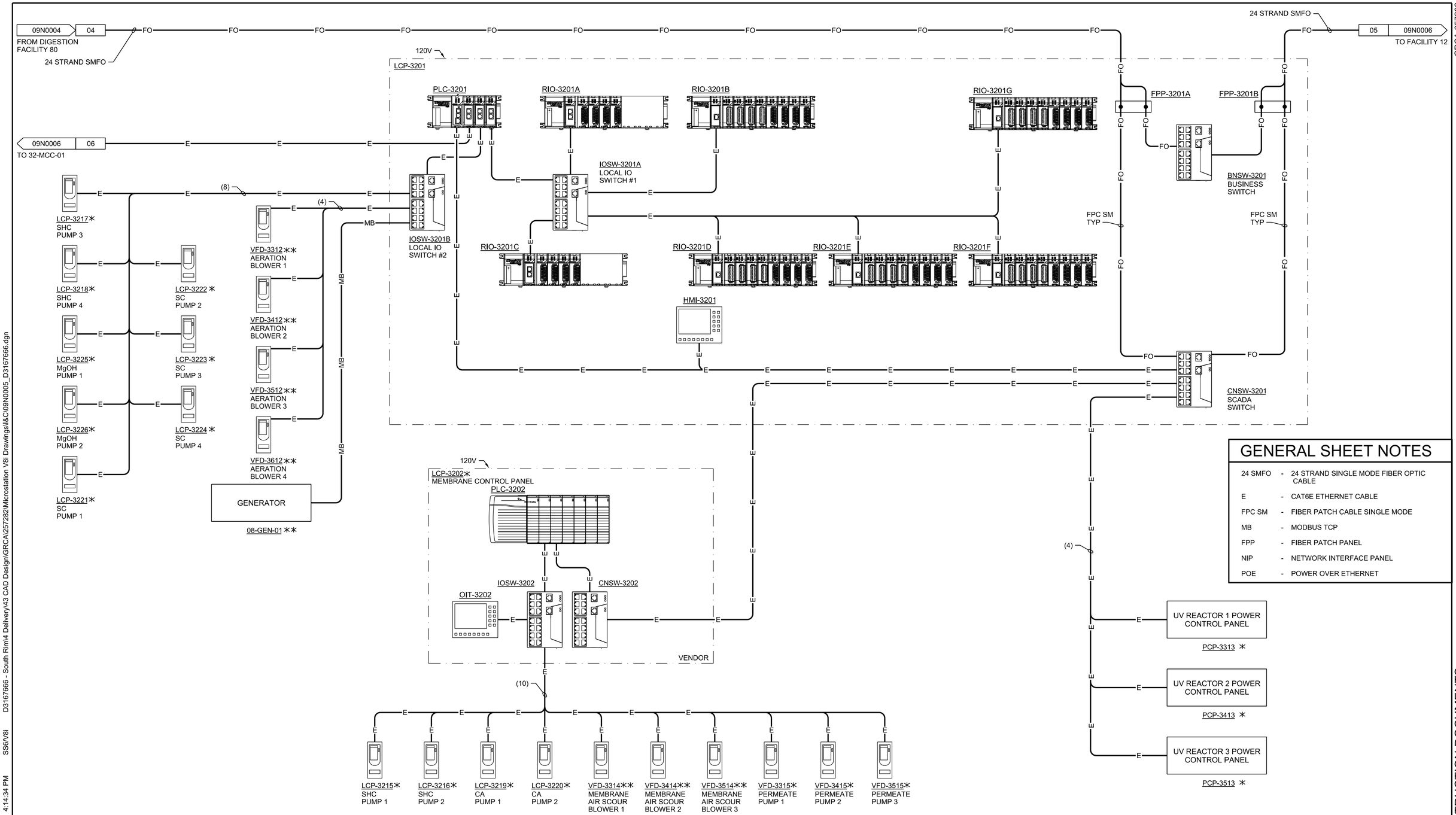

GENERAL SHEET NOTES

24 SMFO	-	24 STRAND SINGLE MODE FIBER OPTIC CABLE
E	-	CAT6E ETHERNET CABLE
FPC SM	-	FIBER PATCH CABLE SINGLE MODE
MB	-	MODBUS TCP
FPP	-	FIBER PATCH PANEL
NIP	-	NETWORK INTERFACE PANEL
POE	-	POWER OVER ETHERNET

FACILITY 32 PROCESS BUILDING

FULL SIZE DRAWINGS = 22"x34"
BAR MEASURES 1" LONG
0" 1"

Registered Professional Engineer (Control Systems)
CERTIFICATE NO. 83873
ANDREW WILLIAMS
Date Signed 06-18-2025
ARIZONA, U.S.A.

A/E FIRM	DESIGNED:	SUB SHEET NO.	TITLE OF SHEET	DRAWING NO.
JACOBS GOVERNMENT SERVICES COMPANY GREENWOOD VILLAGE, CO	A WILLIAMS CADD: J BOSS TECH. REVIEW: A ELLIS DATE: 06/2025	09N0005	I&C COMMUNICATION NETWORK DIAGRAM GRAND CANYON, SOUTH RIM	113 175376 PMIS/PKG NO. 257282 SHEET 136 OF 401

NO SCALE

100% COMPLETE CONSTRUCTION DOCUMENTS

GRCA-257282

PLOT DATE: 6/17/2025 PLOT TIME: 4:14:34 PM SS6/V8i D3167666 - South Rim\4 Delivery\43 CAD Design\GRCA\257282\Microstation V8i Drawings\I&C\09N0005_D3167666.dgn

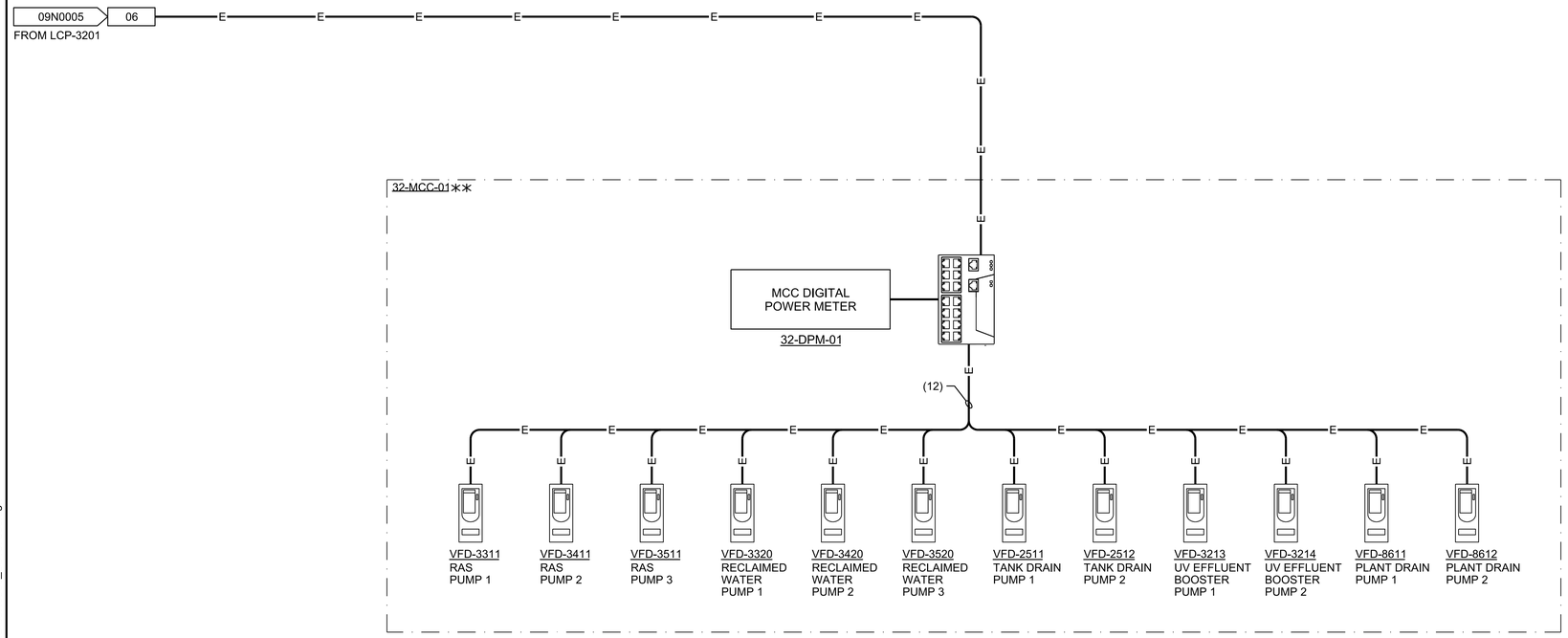

GENERAL SHEET NOTES

24 SMFO	-	24 STRAND SINGLE MODE FIBER OPTIC CABLE
E	-	CAT6E ETHERNET CABLE
FPC SM	-	FIBER PATCH CABLE SINGLE MODE
MB	-	MODBUS TCP
FPP	-	FIBER PATCH PANEL
NIP	-	NETWORK INTERFACE PANEL
POE	-	POWER OVER ETHERNET

GRCA-257282

PLOT DATE: 6/17/2025 PLOT TIME: 4:14:24 PM SS6/V8I D3167666 - South Rim\4 Delivery\43 CAD Design\GRCA\257282\Microstation V8I Drawings\I&C\09N0006_D3167666.dgn

FULL SIZE DRAWINGS = 22"x34"
BAR MEASURES 1" LONG
0" 1"

Registered Professional Engineer (Control Systems)
CERTIFICATE NO.
83873
ANDREW
WILLIAMS
Date Signed 06-20-2025
ARIZONA, U.S.A.

A/E FIRM	DESIGNED:	SUB SHEET NO.	TITLE OF SHEET	DRAWING NO.
JACOBS GOVERNMENT SERVICES COMPANY GREENWOOD VILLAGE, CO	A WILLIAMS CADD: J BOSS TECH. REVIEW: A ELLIS DATE: 06/2025	09N0006	I&C COMMUNICATION NETWORK DIAGRAM GRAND CANYON, SOUTH RIM	NO SCALE 113 175376 PMIS/PKG NO. 257282 SHEET 137 OF 401

100% COMPLETE CONSTRUCTION DOCUMENTS

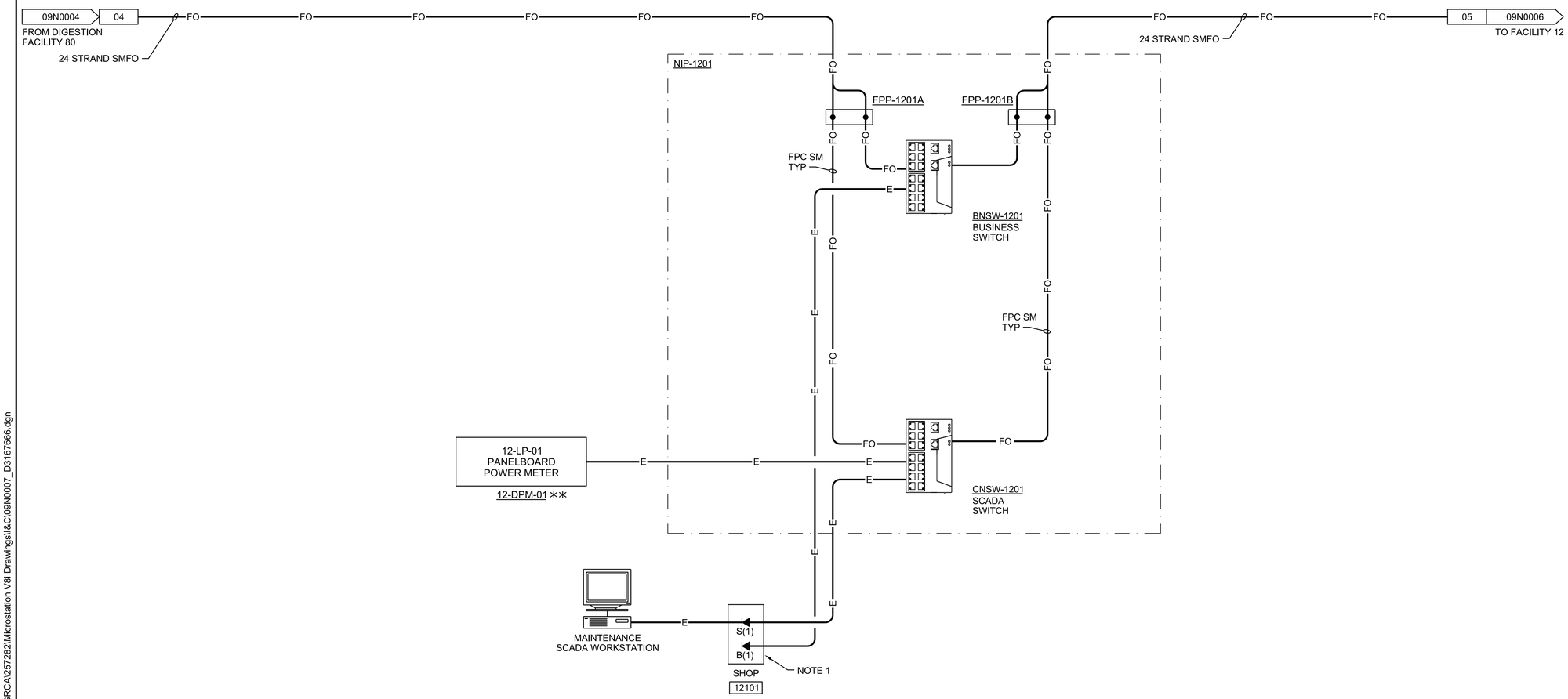

GENERAL SHEET NOTES

24 SMFO	-	24 STRAND SINGLE MODE FIBER OPTIC CABLE
E	-	CAT6E ETHERNET CABLE
FPC SM	-	FIBER PATCH CABLE SINGLE MODE
MB	-	MODBUS TCP
FPP	-	FIBER PATCH PANEL
NIP	-	NETWORK INTERFACE PANEL
POE	-	POWER OVER ETHERNET

SHEET NOTES

1. REFERENCE 01E0002 FOR DETAILS.

FACILITY 12 MAINTENANCE BUILDING

FULL SIZE DRAWINGS = 22"x34"
BAR MEASURES 1" LONG
0" 1"

Registered Professional Engineer (Control Systems)
CERTIFICATE NO. 83873
ANDREW WILLIAMS
Date Signed 06/20/2025
ARIZONA, U.S.A.

A/E FIRM	DESIGNED:	SUB SHEET NO.	TITLE OF SHEET	DRAWING NO.
JACOBS GOVERNMENT SERVICES COMPANY GREENWOOD VILLAGE, CO	A WILLIAMS CADD: J BOSS TECH. REVIEW: A ELLIS DATE: 06/2025	09N0007	I&C COMMUNICATION NETWORK DIAGRAM GRAND CANYON, SOUTH RIM	113 175376 PMIS/PKG NO. 257282 SHEET 138 OF 401

NO SCALE

GRCA-257282

100% COMPLETE CONSTRUCTION DOCUMENTS

PLOT DATE: 6/17/2025 PLOT TIME: 4:14:38 PM SS6\V8i D3167666 - South Rim\4 Delivery\43 CAD Design\GRCA\257282\Microstation V8i Drawings\I&C\09N0007_D3167666.dgn

SHEET NOTES

1. THE PARK ROUTER AND FIREWALL WILL BE INSTALLED AND CONFIGURED BY THE PARK'S IT DEPARTMENT.
2. THE DMZ SWITCH AND FIREWALL AT THE WWTP WILL BE INSTALLED BY THE GENERAL CONTRACTOR. FINAL CONFIGURATION AND COMMUNICATION WITH THE PARK-WIDE NETWORK WILL BE COMPLETED IN COORDINATION WITH THE PARK'S SCADA MASTER PLAN SYSTEM INTEGRATOR.

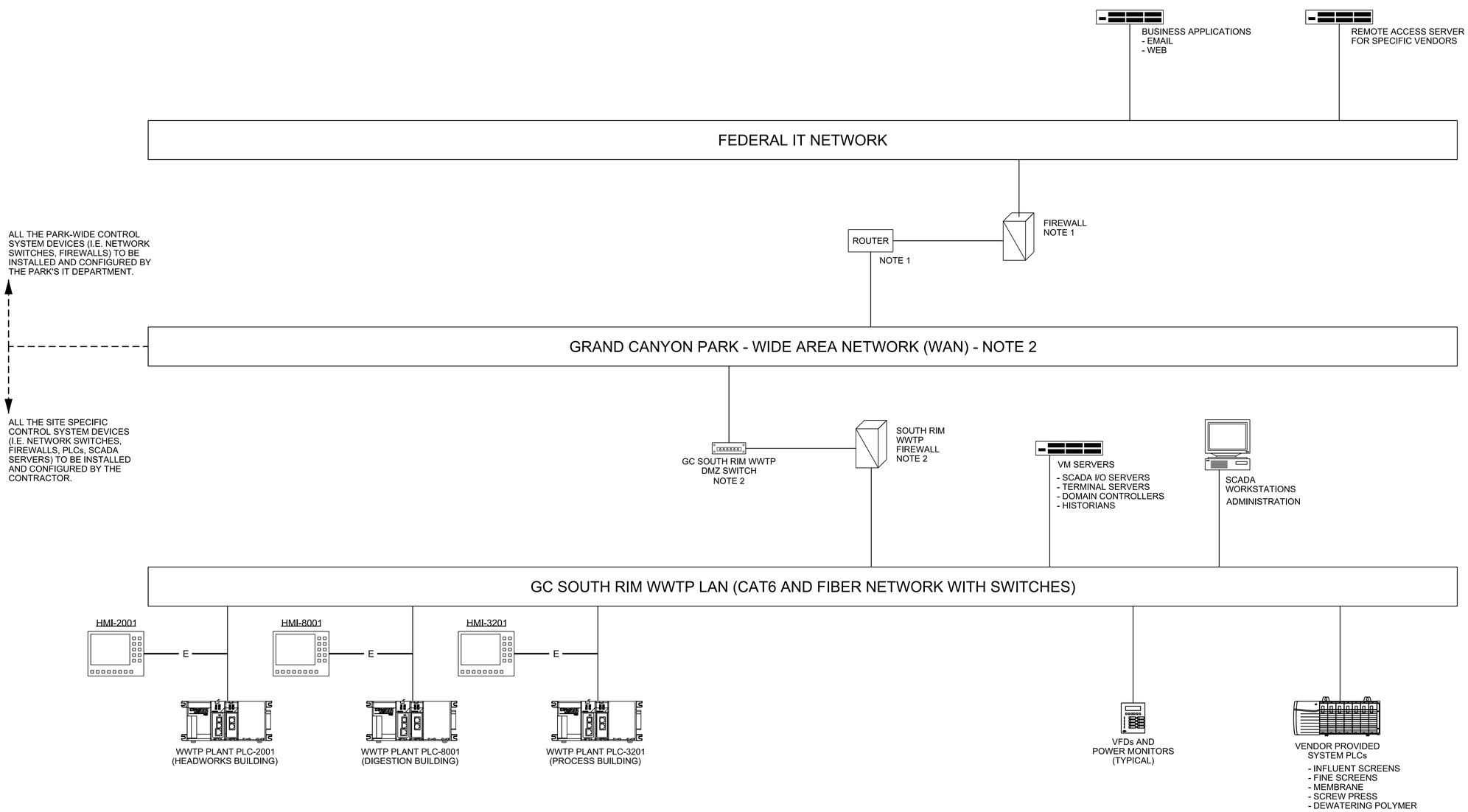

FULL SIZE DRAWINGS = 22"x34"
BAR MEASURES 1" LONG

0" 1"

Registered Professional Engineer (Control Systems)
CERTIFICATE NO. 83873
ANDREW WILLIAMS
Date Signed 06-30-2025
ARIZONA, U.S.A.

A/E FIRM	DESIGNED:	SUB SHEET NO.	TITLE OF SHEET	DRAWING NO.
JACOBS GOVERNMENT SERVICES COMPANY GREENWOOD VILLAGE, CO	A WILLIAMS CADD: J BOSS TECH. REVIEW: A ELLIS DATE: 06/2025	09N0040	I&C NETWORK ARCHITECTURE DRAWING GRAND CANYON, SOUTH RIM	113 175376 PMIS/PKG NO. 257282 SHEET 139 OF 401

NO SCALE

100% COMPLETE CONSTRUCTION DOCUMENTS

GRCA-257282

PLOT DATE: 6/17/2025 PLOT TIME: 4:14:25 PM SS6/V8i D3167666 - South Rim\4 Delivery\43 CAD Design\GRCA\257282\Microstation V8i Drawings\I&C\09N0040_D3167666.dgn

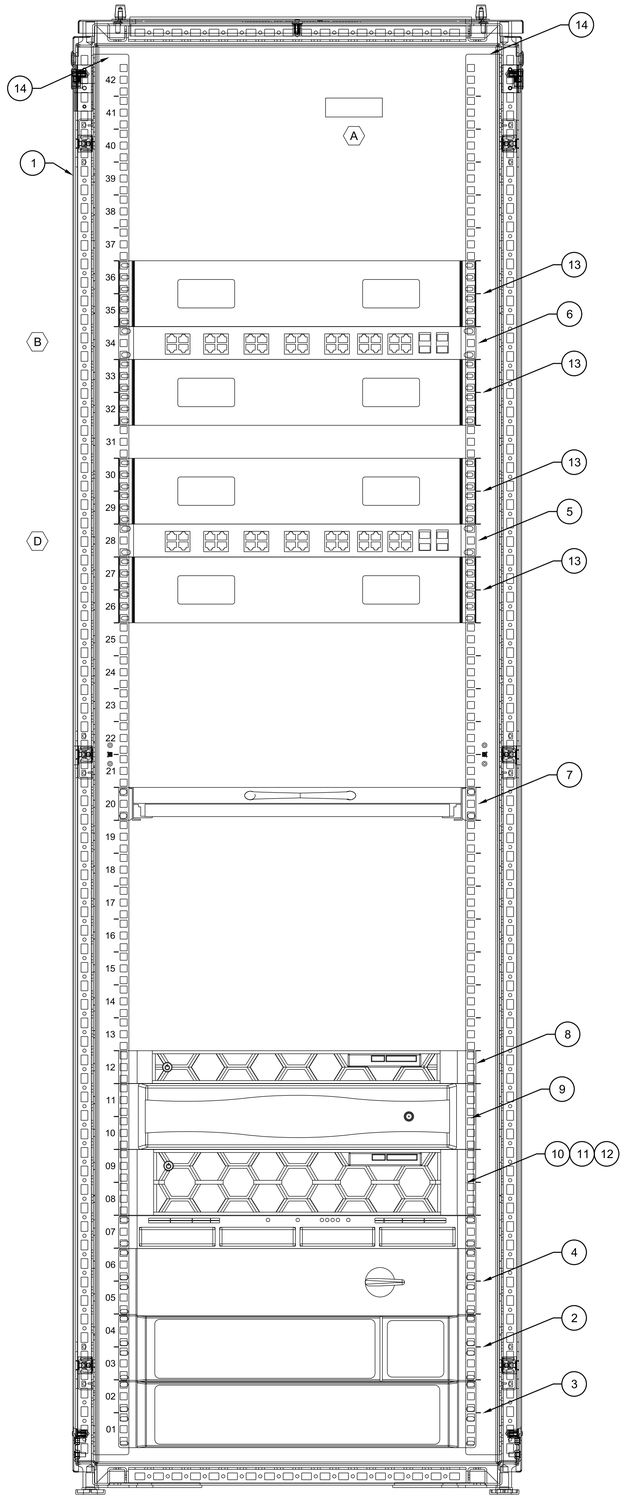

FRONT PANEL ELEVATION - NIP-1001

3"=1'-0"

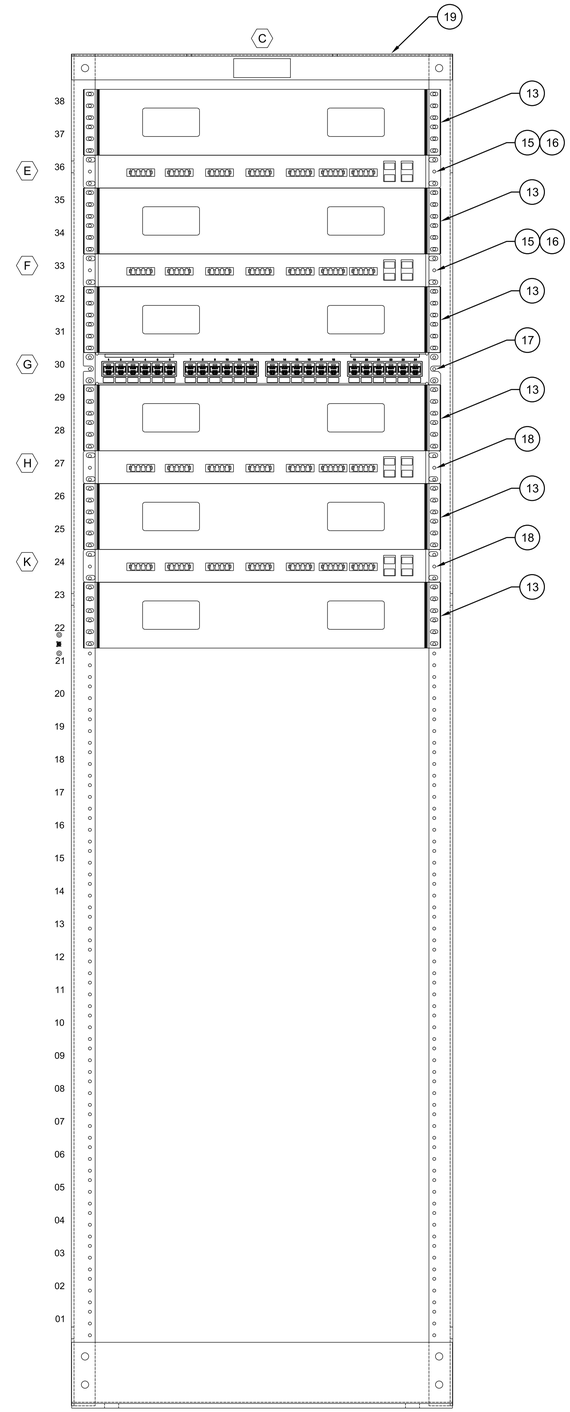

FRONT PANEL ELEVATION - NIP-1002

3"=1'-0"

BILL OF MATERIALS

ITEM	QTY	DESCRIPTION
1	1	RACK ENCLOSURE: 78" X 28" X 40", 42RU
2	1	UPS, 3000W , 120V 2RU
3	1	UPS BATTERY PACK, 2RU
4	1	UPS BYPASS SWITCH, 2RU
5	1	CATALYST IE 9300 W/24 1G PORTS, 4 SFP PORTS, 1RU
6	1	CATALYST IE 9300 W/24 POE PORTS, 4 SFP PORTS, 1RU
7	1	KVM SWITCH, 1RU
8	1	NUTANIX APPLIANCE
9	1	SCADA MANAGEMENT WORKSTATION
10	1	NETWORK ATTACHED STORAGE
11	4	NETWORK ATTACHED STORAGE INTERNAL HARD DRIVE, 10TB
12	2	NETWORK ATTACHED STORAGE EXTERNAL HARD DRIVE, 12TB
13	AR	HORIZONTAL CABLE MANAGER, 2RU
14	AR	VERTICAL CABLE MANAGER, 40RU
15	2	FIBER-OPTIC PATCH PANEL ENCLOSURE
16	4	FIBER-OPTIC PATCH PANEL CASSETTE, 12 LC CONNECTORS
17	1	CAT6E PATCH PANEL, 24 PORT
18	2	FIBER-OPTIC PATCH PANEL ENCLOSURE (FUTURE BY OTHERS)
19	1	2-POST RACK, 72" X 24.25", 38U

NAMEPLATE SCHEDULE

ITEM	LINE 1	LINE 2	LINE 3	NAMEPLATE SIZE	LETTER SIZE	NOTES
A	SOUTH RIM	FACILITY 10	NIP-1001	6"X2"	5/16"	
B	BNSW-1001			3"X1"	5/16"	
C	SOUTH RIM	FACILITY 10	NIP-1002	3"X1"	5/16"	
D	CNSW-1001			3"X1"	5/16"	
E	FPP-1001A			3"X1"	5/16"	
F	FPP-1001B			3"X1"	5/16"	
G	CPP-1001			3"X1"	5/16"	
H	FPP-1002			3"X1"	5/16"	

0 6" 1
3"=1'-0"

FULL SIZE DRAWINGS = 22"x34"
BAR MEASURES 1" LONG

0" 1"

Registered Professional Engineer (Control Systems)
CERTIFICATE NO. 83873
ANDREW WILLIAMS
Date Signed 06-17-2025
ARIZONA, U.S.A.

A/E FIRM
JACOBS GOVERNMENT SERVICES COMPANY
GREENWOOD VILLAGE, CO

DESIGNED: A WILLIAMS
CADD: J BOSS
TECH. REVIEW: A ELLIS
DATE: 06/2025

SUB SHEET NO. 09N0100

TITLE OF SHEET
I&C
ADMINISTRATION BUILDING NETWORK INTERFACE PANELS
GRAND CANYON, SOUTH RIM

DRAWING NO. 113 / 175376
PMIS/PKG NO. 257282
SHEET 140 OF 401

100% COMPLETE CONSTRUCTION DOCUMENTS

GRCA-257282

PLOT DATE: 6/17/2025 PLOT TIME: 4:14:47 PM SS6\V8i D3167666 - South Rim\4 Delivery\43 CAD Design\GRCA\257282\Microstation V8i Drawings\I&C\09N0100_D3167666.dgn

GENERAL SHEET NOTES

NOTE 1: MOUNT OR STRAP COMPUTER TO THE INSIDE OF THE ENCLOSURE. COMPUTER SHOULD BE SITUATED FOR THE HMI TO DVI-D CABLE FROM THE KEYBOARD TO REACH.

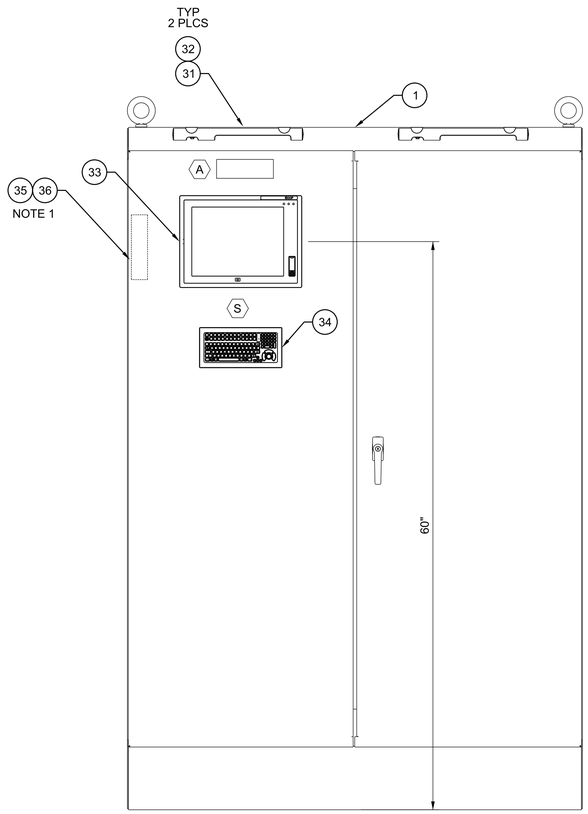

FRONT PANEL ELEVATION

1 1/2"=1'-0"

0 1 PS

1 1/2"=1'-0"

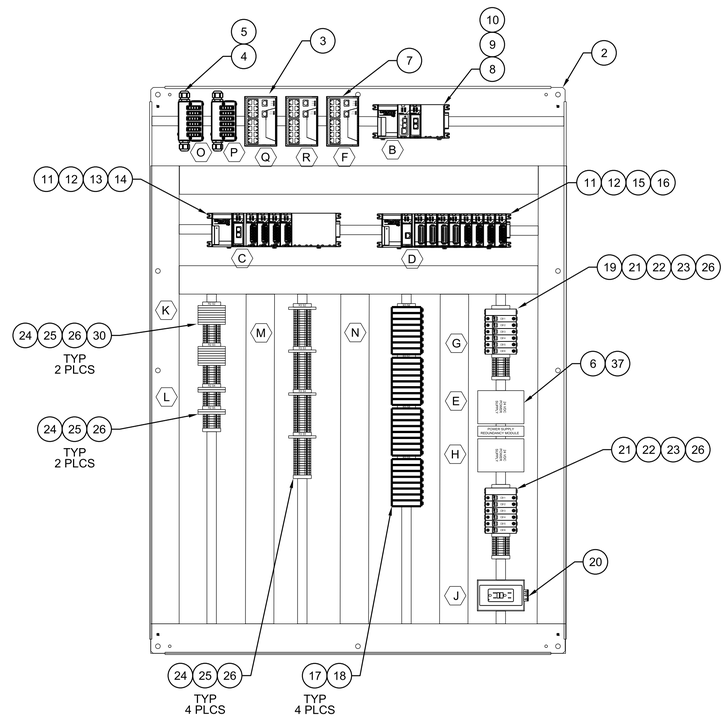

BACK PANEL ELEVATION

1 1/2"=1'-0"

0 1 PS

1 1/2"=1'-0"

BILL OF MATERIALS

ITEM	QTY	DESCRIPTION
1	1	72" X 48" X 18" NEMA 12 ENCLOSURE
2	1	BACKPANEL FOR A724818FSDG
3	2	ETHERNET SWITCH, 18 10/100BASETX PORTS, 2 COMBO PORTS
4	2	FIBER-OPTIC PATCH PANEL, 24 EA. SM LC/LC FIBER ADAPTER
5	6	FIBER-OPTIC PATCH CABLE, 1 METER SINGLETIMODE (OS1)
6	2	20A 24VDC POWER SUPPLY
7	1	ETHERNET SWITCH, UNMANAGED, 16 PORT
8	1	CPU MODULE W/ETHERNET PORT
9	1	REMOTE I/O MASTER ETHERNET MODULE
10	1	4 SLOT I/O BASE
11	2	REMOTE I/O SLAVE ETHERNET MODULE
12	2	9 SLOT I/O BASE
13	2	8 CHANNEL ANALOG INPUT MODULE
14	1	2 CHANNEL ANALOG OUTPUT MODULE
15	3	16 POINT 24VDC DIGITAL INPUT MODULE
16	3	8 POINT RELAY DIGITAL OUTPUT MODULE
17	24	ISOLATION RELAY
18	24	ISOLATION RELAY SOCKET
19	1	SURGE PROTECTOR
20	1	GFCI RECEPTACLE
21	AR	15A 1P CIRCUIT BREAKERS
22	AR	5A 1P CIRCUIT BREAKERS
23	AR	2A 1P CIRCUIT BREAKERS
24	AR	FUSED TERMINAL BLOCK
25	AR	1/4 A FUSES
26	AR	TERMINAL BLOCKS
27	AR	END ANCHORS
28	AR	DINRAIL
29	AR	4" X 3" PANDUIT AND COVER
30	AR	SIGNAL ISOLATOR
31	2	ENCLOSURE LIGHT
32	2	DOOR SWITCH
33	1	23.8" INDUSTRIAL MONITOR
34	1	KEYBOARD
35	1	HDMI TO DVI-D CABLE, 6FT
36	1	PERSONAL COMPUTER
37	1	POWER SUPPLY REDUNANCY MODULE

NAMEPLATE SCHEDULE

ITEM	LINE 1	LINE 2	LINE 3	NAMEPLATE SIZE	LETTER SIZE	NOTES
A	SOUTH RIM	FACILITY 20	LCP-2001	6"X2"	5/16"	
B	PLC-2001			3"X1"	5/16"	
C	RIO-2001A			3"X1"	5/16"	
D	RIO-2001B			3"X1"	5/16"	
E	24VDC	POWER SUPPLY		3"X1"	5/16"	
F	IOSW-2001			3"X1"	5/16"	
G	120 VAC			3"X1"	5/16"	
H	24 VDC			3"X1"	5/16"	
J	RECEPTACLE			3"X1"	5/16"	
K	ANALOG	INPUTS		3"X1"	5/16"	
L	ANALOG	OUTPUTS		3"X1"	5/16"	
M	DIGITAL	INPUTS		3"X1"	5/16"	
N	DIGITAL	OUTPUTS		3"X1"	5/16"	
O	FPP-2001A			3"X1"	5/16"	
P	FPP-2001B			3"X1"	5/16"	
Q	BNSW-2001			3"X1"	5/16"	
R	CNSW-2001			3"X1"	5/16"	
S	HMI-2001			3"X1"	5/16"	

FULL SIZE DRAWINGS = 22"x34"
BAR MEASURES 1" LONG

0" 1"

Registered Professional Engineer (Control Systems)
CERTIFICATE NO.
83873
ANDREW
WILLIAMS
Date Signed 06-10-2025
ARIZONA, U.S.A.

A/E FIRM	DESIGNED:	SUB SHEET NO.	TITLE OF SHEET	DRAWING NO.
JACOBS GOVERNMENT SERVICES COMPANY GREENWOOD VILLAGE, CO	A WILLIAMS CADD: J BOSS TECH. REVIEW: A ELLIS DATE: 06/2025	09N0101	I&C HEADWORKS LCP-2001 CONTROL PANEL LAYOUT GRAND CANYON, SOUTH RIM	113 175376 PMIS/PKG NO. 257282 SHEET 141 OF 401

100% COMPLETE CONSTRUCTION DOCUMENTS

GRCA-257282

PLOT DATE: 6/17/2025 PLOT TIME: 4:14:29 PM SS6\V8i D3167666 - South Rim\4 Delivery\43 CAD Design\GRCA\257282\Microstation V8i Drawings\I&C\09N0101_D3167666.dgn

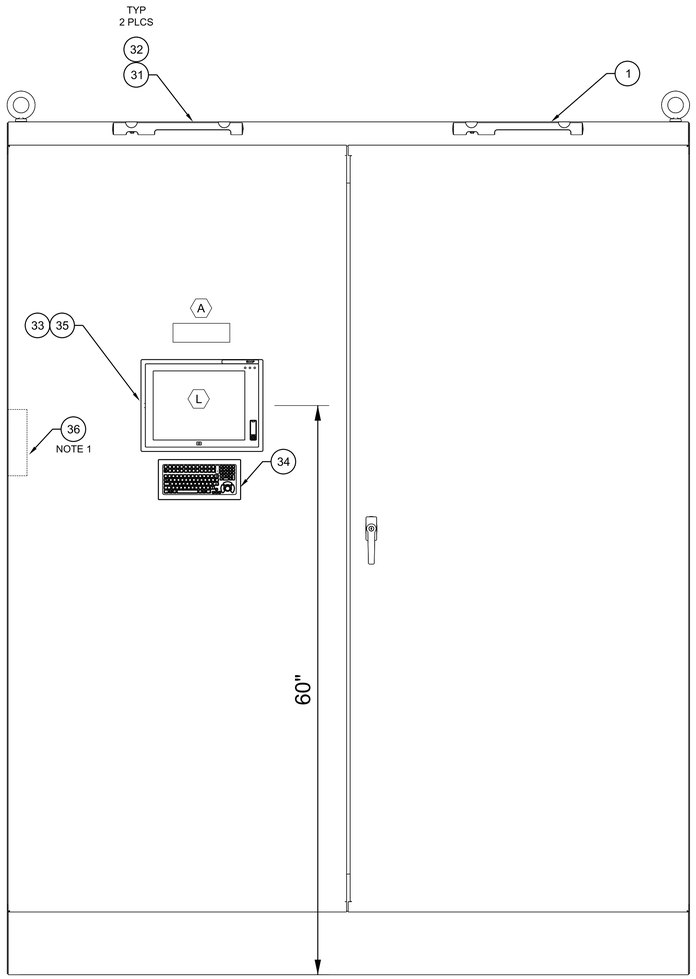

FRONT PANEL ELEVATION

1 1/2"=1'-0"

0 1 2

1 1/2"=1'-0"

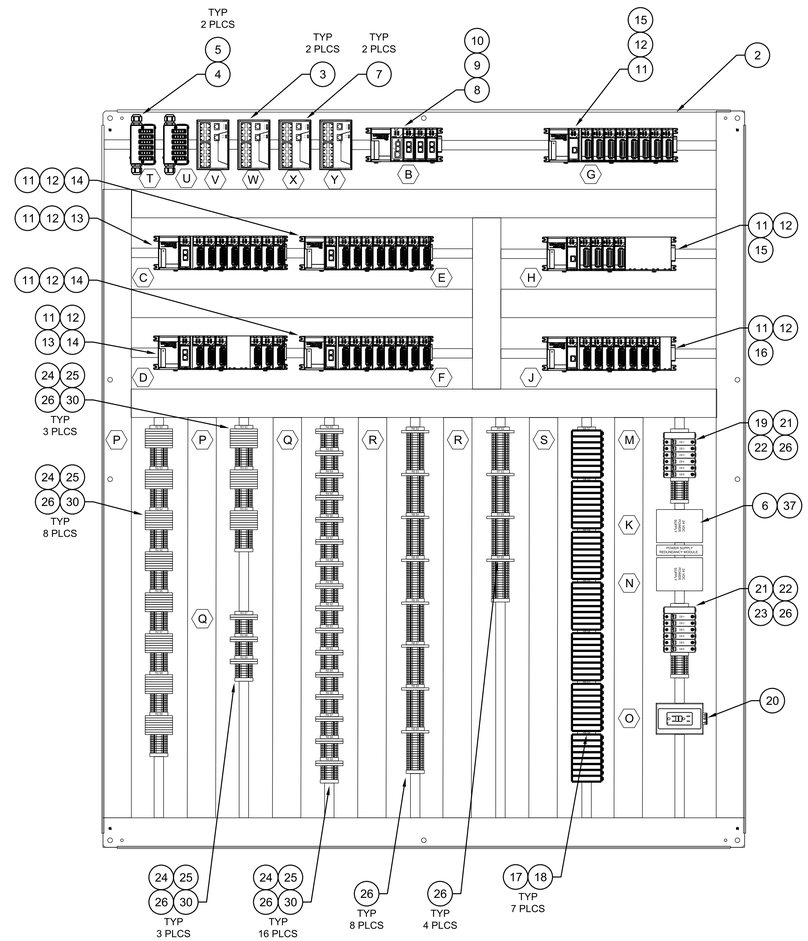

BACK PANEL ELEVATION

1 1/2"=1'-0"

0 1 2

1 1/2"=1'-0"

GENERAL SHEET NOTES

NOTE 1: MOUNT OR STRAP COMPUTER TO THE INSIDE OF THE ENCLOSURE. COMPUTER SHOULD BE SITUATED FOR THE HMI TO DVI-D CABLE FROM THE KEYBOARD TO REACH.

BILL OF MATERIALS

ITEM	QTY	DESCRIPTION
1	1	90" X 72" X 20" NEMA 12 ENCLOSURE
2	1	BACKPANEL FOR A907220FSDG
3	2	ETHERNET SWITCH, 18 10/100BASETX PORTS, 2 COMBO PORTS
4	2	FIBER-OPTIC PATCH PANEL, 24 EA. SM LC/LC FIBER ADAPTER
5	4	FIBER-OPTIC PATCH CABLE, 1 METER SINGLETIMODE (OS1)
6	2	20A 24VDC POWER SUPPLY
7	2	ETHERNET SWITCH, UNMANAGED, 16 PORT
8	1	CPU MODULE W/ETHERNET PORT
9	3	REMOTE I/O MASTER ETHERNET MODULE
10	1	4 SLOT I/O BASE
11	7	REMOTE I/O SLAVE ETHERNET MODULE
12	7	9 SLOT I/O BASE
13	11	8 CHANNEL ANALOG INPUT MODULE
14	19	2 CHANNEL ANALOG OUTPUT MODULE
15	12	16 POINT 24VDC DIGITAL INPUT MODULE
16	7	8 POINT RELAY DIGITAL OUTPUT MODULE
17	56	ISOLATION RELAY
18	56	ISOLATION RELAY SOCKET
19	1	SURGE PROTECTOR
20	1	GFCI RECEPTACLE
21	AR	15A 1P CIRCUIT BREAKERS
22	AR	5A 1P CIRCUIT BREAKERS
23	AR	2A 1P CIRCUIT BREAKERS
24	AR	FUSED TERMINAL BLOCK
25	AR	1/4 A FUSES
26	AR	TERMINAL BLOCKS
27	AR	END ANCHORS
28	AR	DINRAIL
29	AR	4" X 3" PANDUIT AND COVER
30	AR	SIGNAL ISOLATOR
31	2	ENCLOSURE LIGHT
32	2	DOOR SWITCH
33	1	23.8" INDUSTRIAL MONITOR
34	1	KEYBOARD
35	1	HDMI TO DVI-D CABLE, 6FT
36	1	PERSONAL COMPUTER
37	1	POWER SUPPLY REDUNANCY MODULE

NAMEPLATE SCHEDULE

ITEM	LINE 1	LINE 2	LINE 3	NAMEPLATE SIZE	LETTER SIZE	NOTES
A	SOUTH RIM	FACILITY 32	LCP-3201	6"X2"	5/16"	
B	PLC-3201			3"X1"	5/16"	
C	RIO-3201A			3"X1"	5/16"	
D	RIO-3201B			3"X1"	5/16"	
E	RIO-3201C			3"X1"	5/16"	
F	RIO-3201D			3"X1"	5/16"	
G	RIO-3201E			3"X1"	5/16"	
H	RIO-3201F			3"X1"	5/16"	
J	RIO-3201G			3"X1"	5/16"	
K	24VDC	POWER SUPPLY		3"X1"	5/16"	
L	HMI-3201			3"X1"	5/16"	
M	120 VAC			3"X1"	5/16"	
N	24 VDC			3"X1"	5/16"	
O	RECEPTACLE			3"X1"	5/16"	
P	ANALOG	INPUTS		3"X1"	5/16"	
Q	ANALOG	OUTPUTS		3"X1"	5/16"	
R	DIGITAL	INPUTS		3"X1"	5/16"	
S	DIGITAL	OUTPUTS		3"X1"	5/16"	
T	FPP-3201A			3"X1"	5/16"	
U	FPP-3201B			3"X1"	5/16"	
V	BNSW-3201			3"X1"	5/16"	
W	CNSW-3201			3"X1"	5/16"	
X	IOSW-3201A			3"X1"	5/16"	
Y	IOSW-3201B			3"X1"	5/16"	

FULL SIZE DRAWINGS = 22"x34"
BAR MEASURES 1" LONG

0" 1"

Registered Professional Engineer (Control Systems)
CERTIFICATE NO.
83873
ANDREW
WILLIAMS
Date Signed 06-25-2025
ARIZONA, U.S.A.

A/E FIRM	DESIGNED:	SUB SHEET NO.	TITLE OF SHEET	DRAWING NO.
JACOBS GOVERNMENT SERVICES COMPANY GREENWOOD VILLAGE, CO	A WILLIAMS CADD: J BOSS TECH. REVIEW: A ELLIS DATE: 06/2025	09N0102	I&C PROCESS BUILDING LCP-3201 CONTROL PANEL LAYOUT GRAND CANYON, SOUTH RIM	113 175376 PMIS/PKG NO. 257282 SHEET 142 OF 401

100% COMPLETE CONSTRUCTION DOCUMENTS

GRCA-257282

PLOT DATE: 6/17/2025 PLOT TIME: 4:14:23 PM SS6/V8i D3167666 - South Rim\4 Delivery\43 CAD Design\GRCA\257282\Microstation V8i Drawings\I&C\09N0102_D3167666.dgn

GENERAL SHEET NOTES

NOTE 1: MOUNT OR STRAP COMPUTER TO THE INSIDE OF THE ENCLOSURE. COMPUTER SHOULD BE SITUATED FOR THE HMI TO DVI-D CABLE FROM THE KEYBOARD TO REACH.

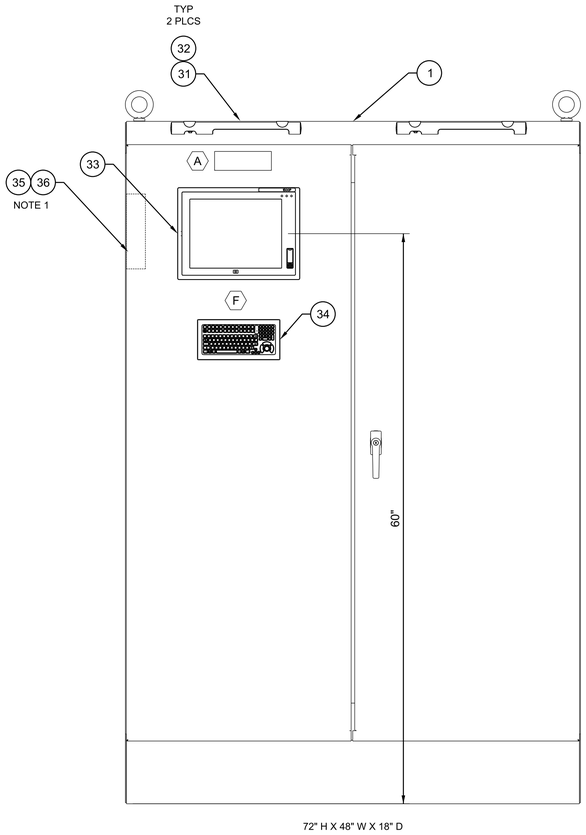

FRONT PANEL ELEVATION

1 1/2"=1'-0"

0 1 2

1 1/2"=1'-0"

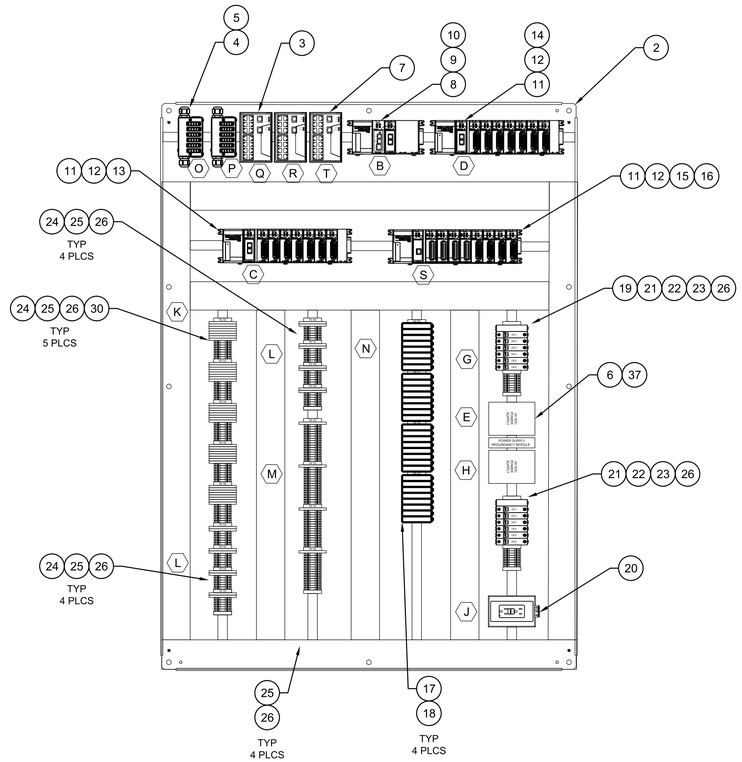

BACK PANEL ELEVATION

1 1/2"=1'-0"

0 1 2

1 1/2"=1'-0"

BILL OF MATERIALS

ITEM	QTY	DESCRIPTION
1	1	72" X 48" X 18" NEMA 12 ENCLOSURE
2	1	BACKPANEL FOR A724818FSDG
3	2	ETHERNET SWITCH, 18 10/100BASETX PORTS, 2 COMBO PORTS
4	2	FIBER-OPTIC PATCH PANEL, 24 EA. SM LC/LC FIBER ADAPTER
5	6	FIBER-OPTIC PATCH CABLE, 1 METER SINGLETIMODE (OS1)
6	2	20A 24VDC POWER SUPPLY
7	1	ETHERNET SWITCH, UNMANAGED, 16 PORT
8	1	CPU MODULE W/ETHERNET PORT
9	2	REMOTE I/O MASTER ETHERNET MODULE
10	1	4 SLOT I/O BASE
11	3	REMOTE I/O SLAVE ETHERNET MODULE
12	3	9 SLOT I/O BASE
13	5	8 CHANNEL ANALOG INPUT MODULE
14	8	2 CHANNEL ANALOG OUTPUT MODULE
15	4	16 POINT 24VDC DIGITAL INPUT MODULE
16	4	8 POINT RELAY DIGITAL OUTPUT MODULE
17	32	ISOLATION RELAY
18	32	ISOLATION RELAY SOCKET
19	1	SURGE PROTECTOR
20	1	GFCI RECEPTACLE
21	AR	15A 1P CIRCUIT BREAKERS
22	AR	5A 1P CIRCUIT BREAKERS
23	AR	2A 1P CIRCUIT BREAKERS
24	AR	FUSED TERMINAL BLOCK
25	AR	1/4 A FUSES
26	AR	TERMINAL BLOCKS
27	AR	END ANCHORS
28	AR	DINRAIL
29	AR	4" X 3" PANDUIT AND COVER
30	AR	SIGNAL ISOLATOR
31	2	ENCLOSURE LIGHT
32	2	DOOR SWITCH
33	1	23.8" INDUSTRIAL MONITOR
34	1	KEYBOARD
35	1	HDMI TO DVI-D CABLE, 6FT
36	1	PERSONAL COMPUTER
37	1	POWER SUPPLY REDUNANCY MODULE

NAMEPLATE SCHEDULE

ITEM	LINE 1	LINE 2	LINE 3	NAMEPLATE SIZE	LETTER SIZE	NOTES
A	SOUTH RIM	FACILITY 80	LCP-8001	6"X2"	5/16"	
B	PLC-8001			3"X1"	5/16"	
C	RIO-8001A			3"X1"	5/16"	
D	RIO-8001B			3"X1"	5/16"	
E	24VDC	POWER SUPPLY		3"X1"	5/16"	
F	HMI-8001			3"X1"	5/16"	
G	120 VAC			3"X1"	5/16"	
H	24 VDC			3"X1"	5/16"	
J	RECEPTACLE			3"X1"	5/16"	
K	ANALOG	INPUTS		3"X1"	5/16"	
L	ANALOG	OUTPUTS		3"X1"	5/16"	
M	DIGITAL	INPUTS		3"X1"	5/16"	
N	DIGITAL	OUTPUTS		3"X1"	5/16"	
O	FPP-8001A			3"X1"	5/16"	
P	FPP-8001B			3"X1"	5/16"	
Q	BNSW-8001			3"X1"	5/16"	
R	CNSW-8001			3"X1"	5/16"	
S	RIO-8001C			3"X1"	5/16"	
T	IOSW-8001			3"X1"	5/16"	

FULL SIZE DRAWINGS = 22"x34"
BAR MEASURES 1" LONG

0" 1"

Registered Professional Engineer (Control Systems)
CERTIFICATE NO.
83873
ANDREW WILLIAMS
Date Signed 06-30-2025
ARIZONA, U.S.A.

A/E FIRM
JACOBS GOVERNMENT SERVICES COMPANY
GREENWOOD VILLAGE, CO

DESIGNED: A WILLIAMS
CADD: J BOSS
TECH. REVIEW: A ELLIS
DATE: 06/2025

SUB SHEET NO. 09N0103

TITLE OF SHEET
I&C
DIGESTER FACILITY
LCP-8001 CONTROL
PANEL LAYOUT
GRAND CANYON, SOUTH RIM

DRAWING NO. 113 175376
PMIS/PKG NO. 257282
SHEET 143 OF 401

100% COMPLETE CONSTRUCTION DOCUMENTS

GRCA-257282

PLOT DATE: 6/17/2025 PLOT TIME: 4:14:28 PM SS6/V8i D3167666 - South Rim\4 Delivery\43 CAD Design\GRCA\257282\Microstation V8i Drawings\I&C\09N0103_D3167666.dgn

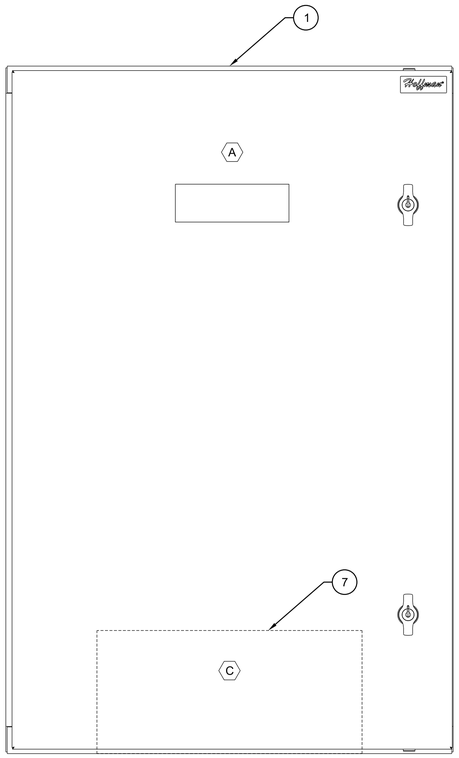

36" H X 24" W X 12" D

FRONT PANEL ELEVATION

3"=1'-0"

0 6" 1

3"=1'-0"

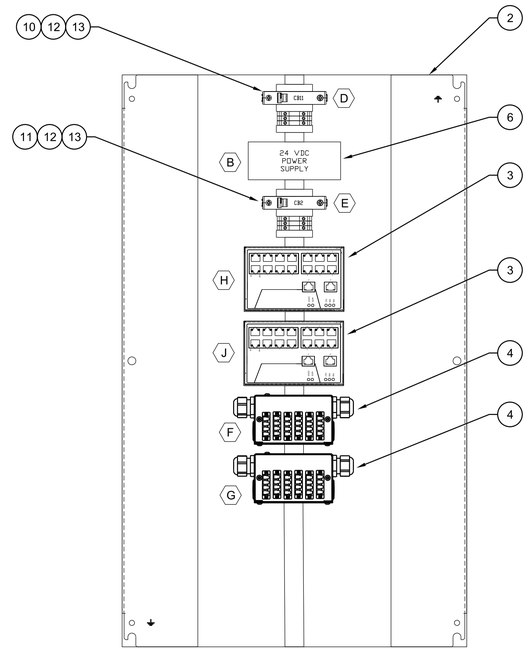

BACK PANEL ELEVATION

3"=1'-0"

0 6" 1

3"=1'-0"

BILL OF MATERIALS

ITEM	QTY	DESCRIPTION
1	1	36" X 24" X 12" NEMA 12 NETWORK ENCLOSURE
2	1	BACKPANEL FOR PTRS362412G4
3	2	ETHERNET SWITCH, 18 10/100BASETX PORTS, 2 COMBO PORTS
4	2	FIBER-OPTIC PATCH PANEL, 24 EA. SM LC/LC FIBER ADAPTER
5	4	FIBER-OPTIC PATCH CABLE, 1 METER SINGLETIMODE (OS1)
6	1	2.5A 24VDC POWER SUPPLY
7	1	700VA UPS TOWER
8	AR	DINRAIL
9	AR	4" X 3" PANDUIT AND COVER
10	1	15A 1P CIRCUIT BREAKERS
11	1	5A 1P CIRCUIT BREAKERS
12	AR	TERMINAL BLOCKS
13	AR	END ANCHORS

NAMEPLATE SCHEDULE

ITEM	LINE 1	LINE 2	LINE 3	NAMEPLATE SIZE	LETTER SIZE	NOTES
A	SOUTH RIM	FACILITY 12	NIP-1201	6"X2"	5/16"	
B	24VDC	POWER SUPPLY		3"X1"	5/16"	
C	UPS			3"X1"	5/16"	
D	120 VAC			3"X1"	5/16"	
E	24 VDC			3"X1"	5/16"	
F	FPP-1201A			3"X1"	5/16"	
G	FPP-1201B			3"X1"	5/16"	
H	BNSW-1201			3"X1"	5/16"	
J	CNSW-1201			3"X1"	5/16"	

FULL SIZE DRAWINGS = 22"x34"
BAR MEASURES 1" LONG

0" 1"

Registered Professional Engineer (Control Systems)
CERTIFICATE NO.
83873
ANDREW
WILLIAMS
Date Signed 06-18-2025
ARIZONA, U.S.A.

A/E FIRM
JACOBS GOVERNMENT SERVICES COMPANY
GREENWOOD VILLAGE, CO

DESIGNED: A WILLIAMS
CADD: J BOSS
TECH. REVIEW: A ELLIS
DATE: 06/2025

SUB SHEET NO. 09N0104

TITLE OF SHEET
I&C
MAINTENANCE BUILDING
NIP-1201 NETWORK
INTERFACE PANEL
GRAND CANYON, SOUTH RIM

DRAWING NO. 113
175376
PMIS/PKG NO. 257282
SHEET 144 OF 401

100% COMPLETE CONSTRUCTION DOCUMENTS

GRCA-257282

PLOT DATE: 6/17/2025 PLOT TIME: 4:14:39 PM SS6/V8I D3167666 - South Rim\4 Delivery\43 CAD Design\GRCA\257282\Microstation V8i Drawings\I&C\09N0104_D3167666.dgn

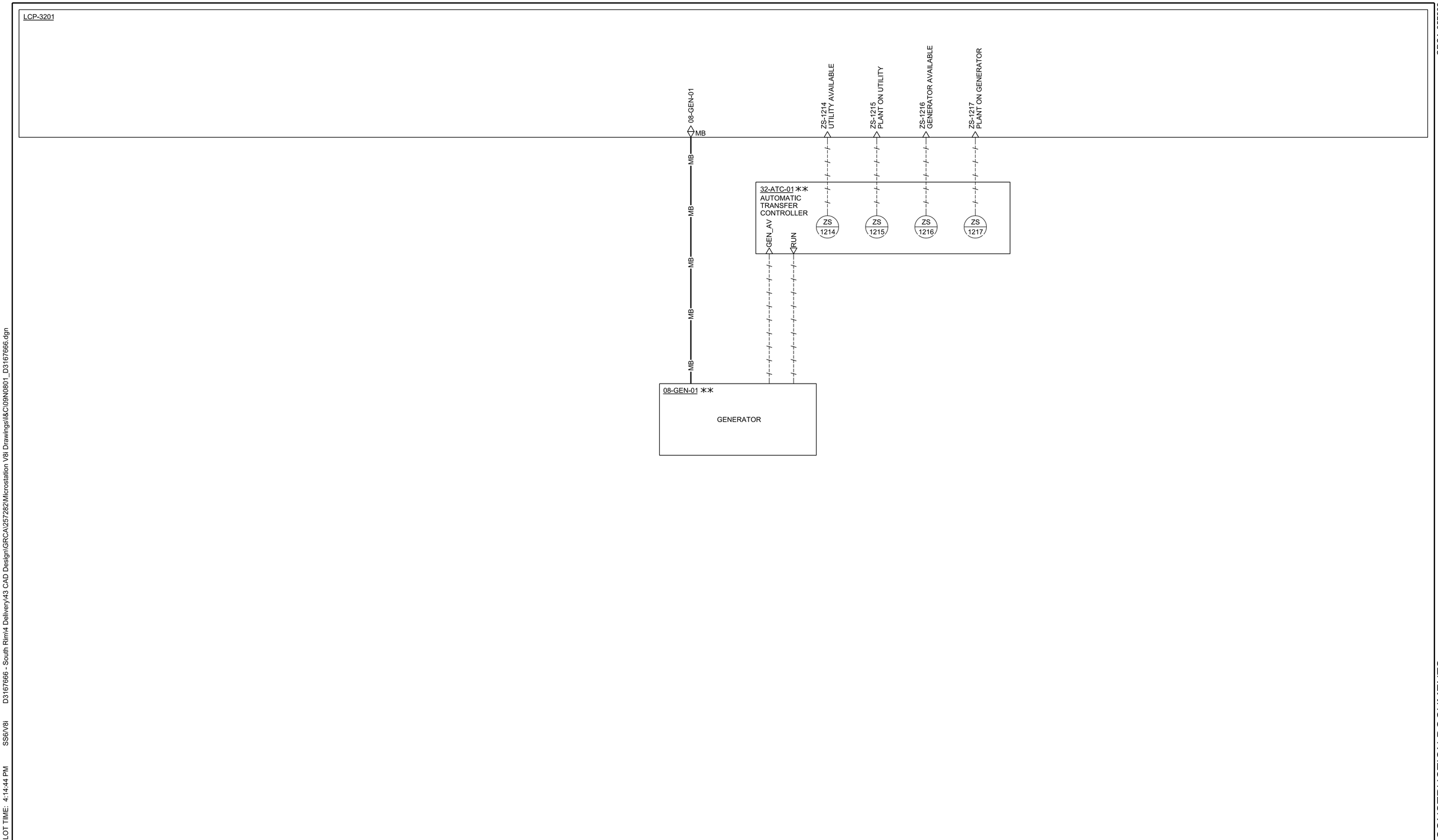

GRCA-257282

PLOT DATE: 6/17/2025 PLOT TIME: 4:14:44 PM SS6/V8I D3167666 - South Rim\4 Delivery\43 CAD Design\GRCA\257282\Microstation V8I Drawings\I&C\09N0801_D3167666.dgn

FULL SIZE DRAWINGS = 22"x34"
BAR MEASURES 1" LONG

0" 1"

Registered Professional Engineer (Control Systems)
CERTIFICATE NO.
83873
ANDREW
WILLIAMS
Date Signed 06-26-2025
ARIZONA, U.S.A.

A/E FIRM	DESIGNED: A WILLIAMS	SUB SHEET NO.	TITLE OF SHEET
JACOBS GOVERNMENT SERVICES COMPANY	CADD: J BOSS	09N0801	I&C GENERATOR P&ID
GREENWOOD VILLAGE, CO	TECH. REVIEW: A ELLIS		GRAND CANYON, SOUTH RIM
	DATE: 06/2025		

NO SCALE

DRAWING NO. 113 / 175376

PMIS/PKG NO. 257282

SHEET 145 OF 401

100% COMPLETE CONSTRUCTION DOCUMENTS

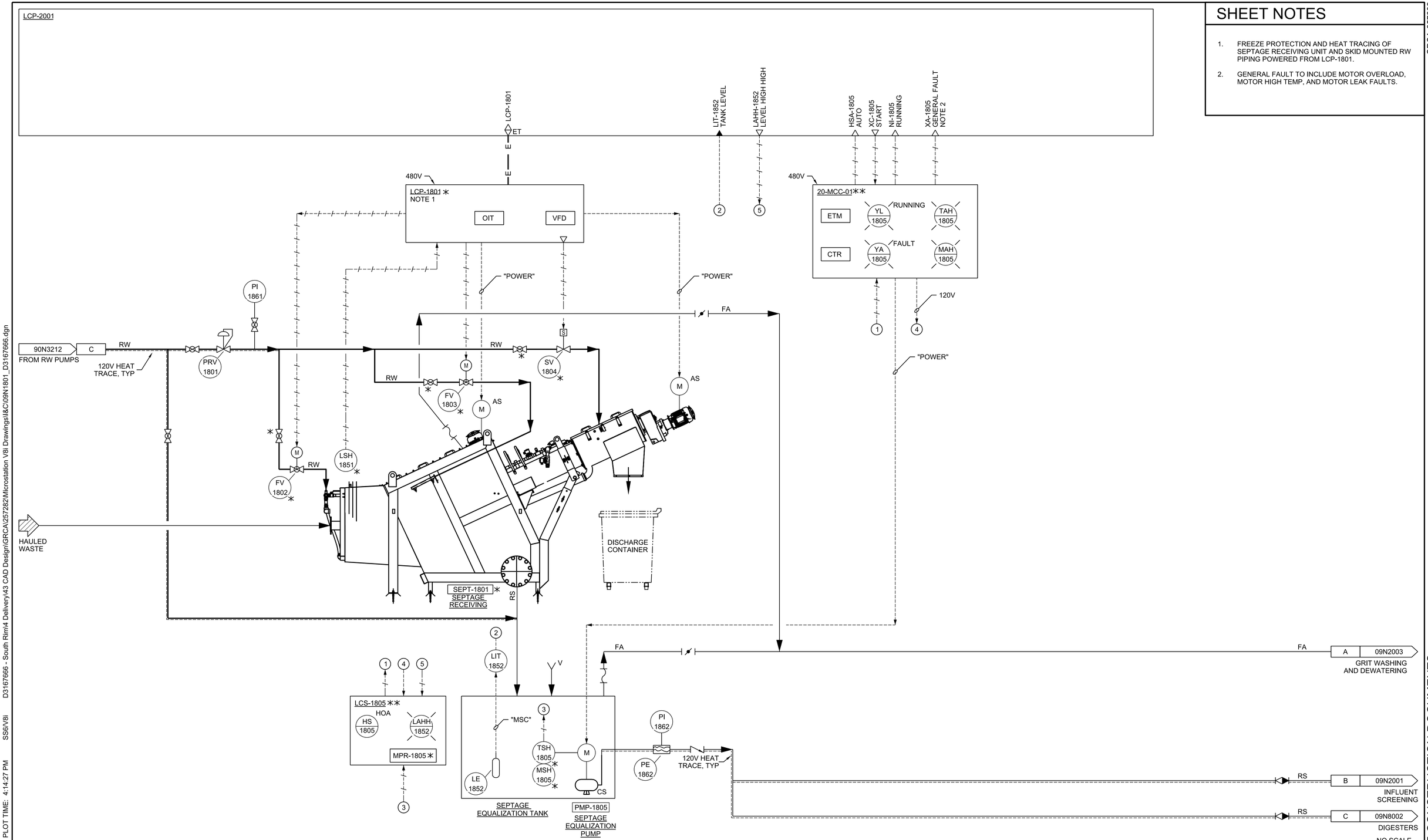

SHEET NOTES

1. FREEZE PROTECTION AND HEAT TRACING OF SEPTAGE RECEIVING UNIT AND SKID MOUNTED RW PIPING POWERED FROM LCP-1801.
2. GENERAL FAULT TO INCLUDE MOTOR OVERLOAD, MOTOR HIGH TEMP, AND MOTOR LEAK FAULTS.

NO SCALE

FULL SIZE DRAWINGS = 22"x34"
BAR MEASURES 1" LONG

0" 1"

Registered Professional Engineer (Control Systems)
CERTIFICATE NO. 83873
ANDREW WILLIAMS
Date Signed 06-30-2025
ARIZONA, U.S.A.

A/E FIRM	DESIGNED:	SUB SHEET NO.	TITLE OF SHEET	DRAWING NO.
JACOBS GOVERNMENT SERVICES COMPANY GREENWOOD VILLAGE, CO	A WILLIAMS CADD: J BOSS TECH. REVIEW: A ELLIS DATE: 06/2025	09N1801	I&C SEPTAGE RECEIVING P&ID GRAND CANYON, SOUTH RIM	113 / 175376 PMIS/PKG NO. 257282 SHEET 146 OF 401

100% COMPLETE CONSTRUCTION DOCUMENTS

GRCA-257282

PLOT DATE: 6/17/2025 PLOT TIME: 4:14:27 PM SS6\V8i D3167666 - South Rim\4 Delivery\43 CAD Design\GRCA\257282\Microstation V8i Drawings\I&C\09N1801_D3167666.dgn

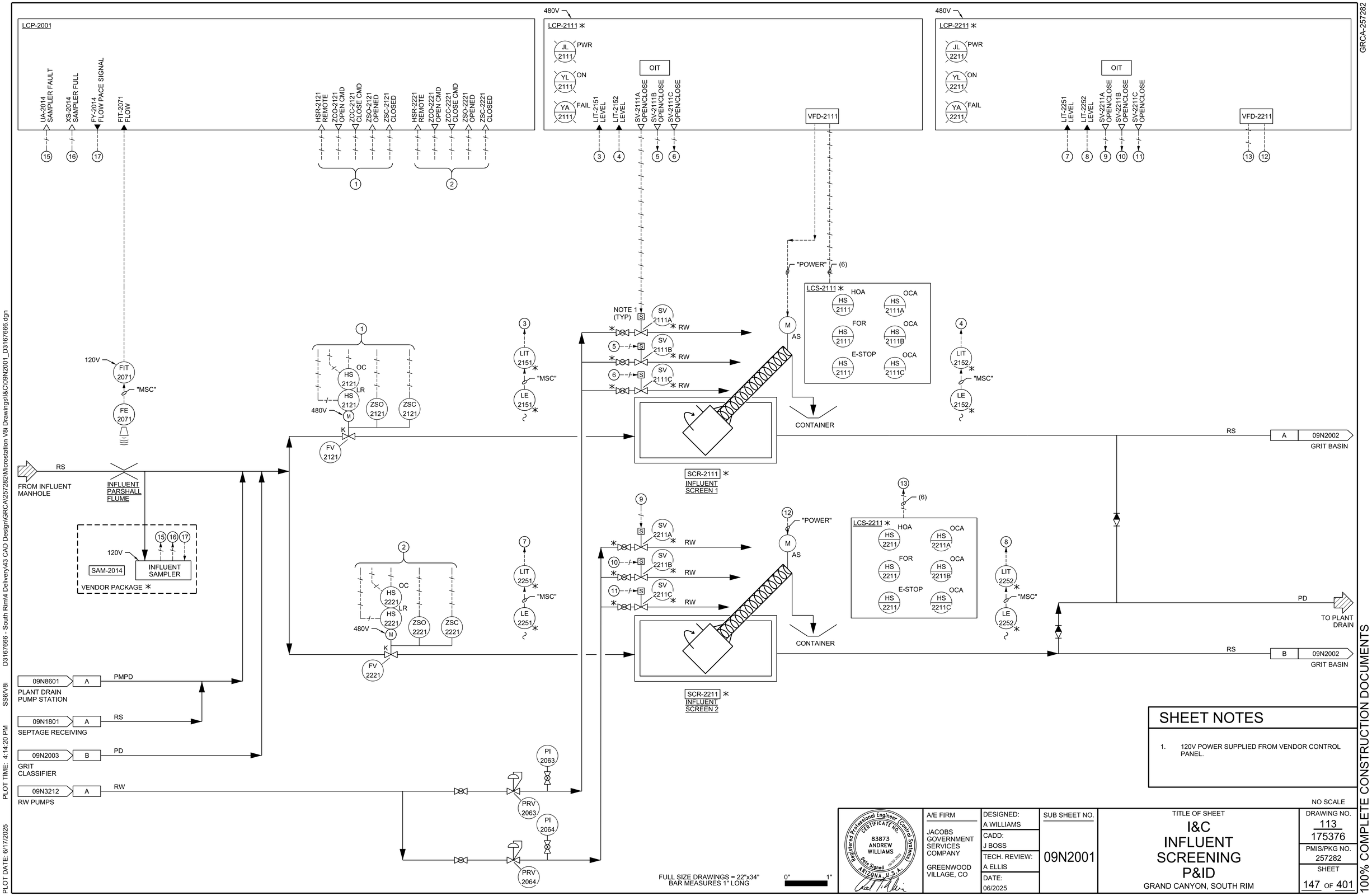

SHEET NOTES

1. 120V POWER SUPPLIED FROM VENDOR CONTROL PANEL.

FULL SIZE DRAWINGS = 22"x34"
BAR MEASURES 1" LONG

0" 1"

NO SCALE

Registered Professional Engineer (Control Systems) CERTIFICATE NO. 83873 ANDREW WILLIAMS Date Signed 06-30-2025 ARIZONA, U.S.A.

A/E FIRM	DESIGNED:	SUB SHEET NO.	TITLE OF SHEET	DRAWING NO.
JACOBS GOVERNMENT SERVICES COMPANY GREENWOOD VILLAGE, CO	A WILLIAMS CADD: J BOSS TECH. REVIEW: A ELLIS DATE: 06/2025	09N2001	I&C INFLUENT SCREENING P&ID GRAND CANYON, SOUTH RIM	113 175376 PMIS/PKG NO. 257282 SHEET 147 OF 401

100% COMPLETE CONSTRUCTION DOCUMENTS

GRCA-257282

PLOT DATE: 6/17/2025 PLOT TIME: 4:14:20 PM SS6/V8i D3167666 - South Rim\4 Delivery\43 CAD Design\GRCA\257282\Microstation V8i Drawings\I&C\09N2001_D3167666.dgn

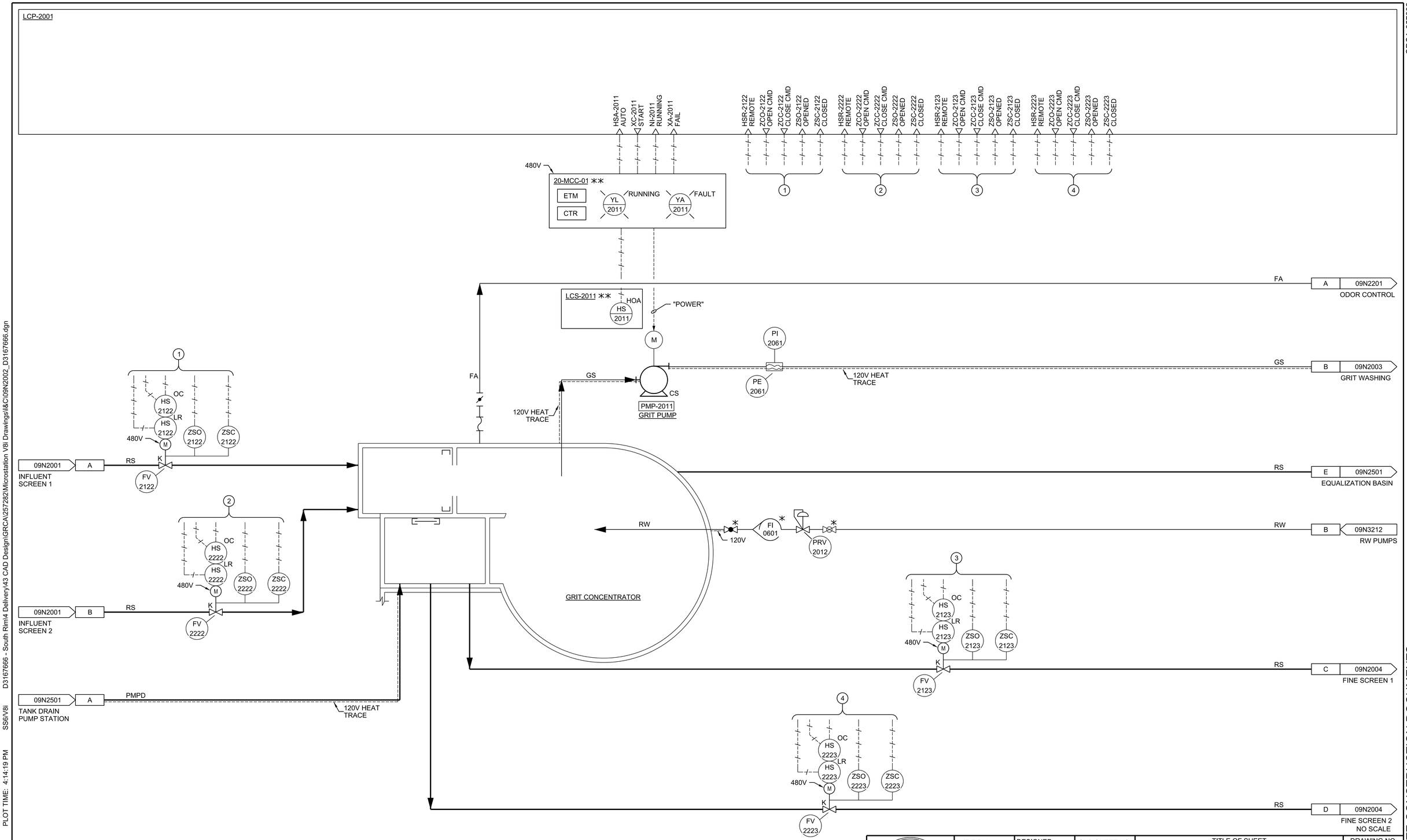

FULL SIZE DRAWINGS = 22"x34"
BAR MEASURES 1" LONG

0" 1"

Registered Professional Engineer (Control Systems) CERTIFICATE NO. 83873 ANDREW WILLIAMS Date Signed 06-20-2025 ARIZONA, U.S.A.

A/E FIRM	DESIGNED:	SUB SHEET NO.	TITLE OF SHEET	DRAWING NO.
JACOBS GOVERNMENT SERVICES COMPANY GREENWOOD VILLAGE, CO	A WILLIAMS CADD: J BOSS TECH. REVIEW: A ELLIS DATE: 06/2025	09N2002	I&C GRIT BASIN P&ID GRAND CANYON, SOUTH RIM	113 175376 PMIS/PKG NO. 257282 SHEET 148 OF 401

GRCA-257282

100% COMPLETE CONSTRUCTION DOCUMENTS

PLOT DATE: 6/17/2025 PLOT TIME: 4:14:19 PM SS6/V8i D3167666 - South Rim\4 Delivery\43 CAD Design\GRCA\257282\Microstation V8i Drawings\I&C\09N2002_D3167666.dgn

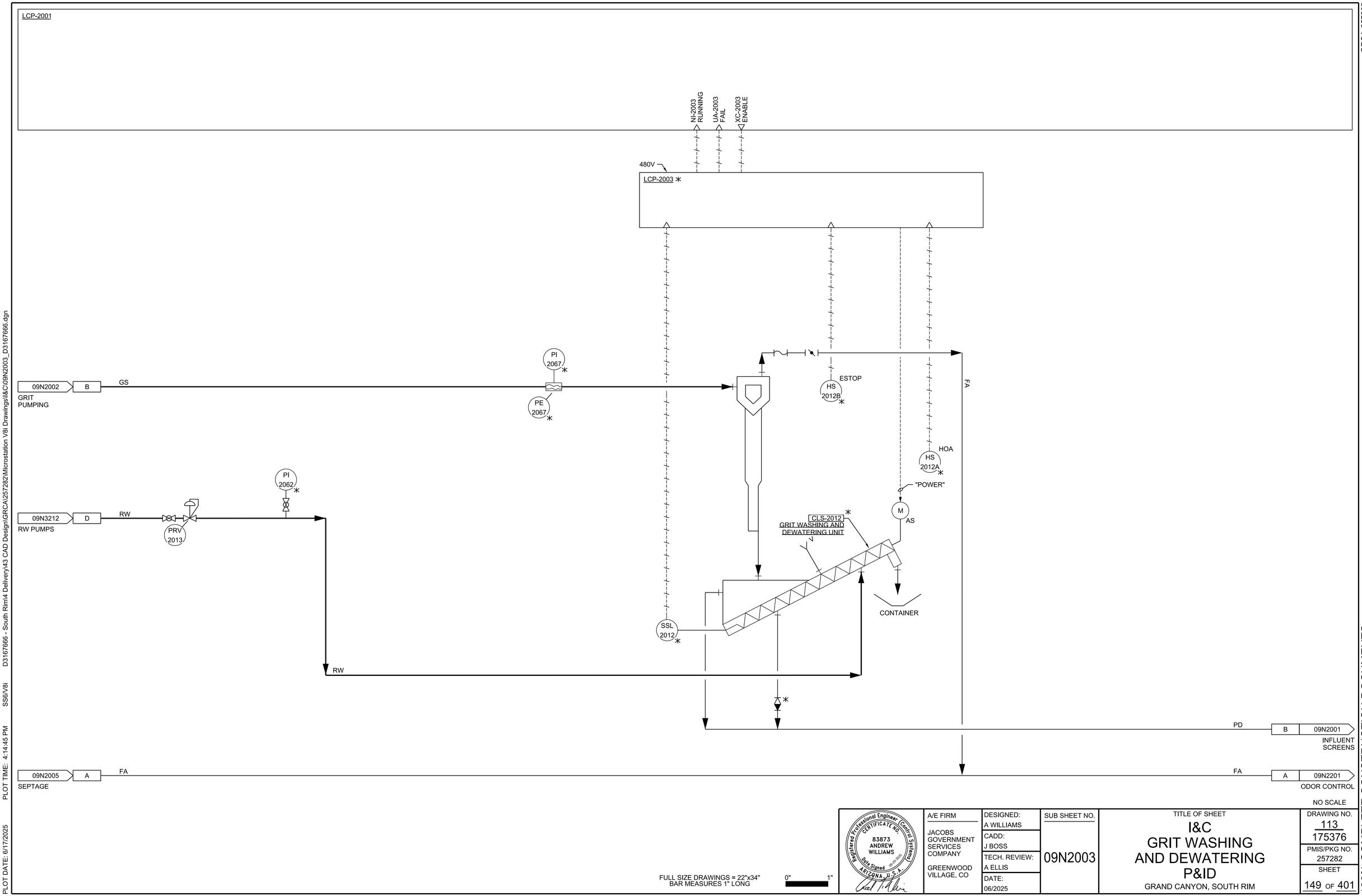

NO SCALE

FULL SIZE DRAWINGS = 22"x34"
BAR MEASURES 1" LONG

0" 1"

Registered Professional Engineer (Control Systems)
CERTIFICATE NO.
83873
ANDREW WILLIAMS
Date Signed 06/30/2025
ARIZONA, U.S.A.

A/E FIRM	DESIGNED:	SUB SHEET NO.	TITLE OF SHEET	DRAWING NO.
JACOBS GOVERNMENT SERVICES COMPANY GREENWOOD VILLAGE, CO	A WILLIAMS CADD: J BOSS TECH. REVIEW: A ELLIS DATE: 06/2025	09N2003	I&C GRIT WASHING AND DEWATERING P&ID GRAND CANYON, SOUTH RIM	113 175376 PMIS/PKG NO. 257282 SHEET 149 OF 401

100% COMPLETE CONSTRUCTION DOCUMENTS

GRCA-257282

PLOT DATE: 6/17/2025 PLOT TIME: 4:14:45 PM SS6/V8i D3167666 - South Rim\4 Delivery\43 CAD Design\GRCA\257282\Microstation V8i Drawings\I&C\09N2003_D3167666.dgn

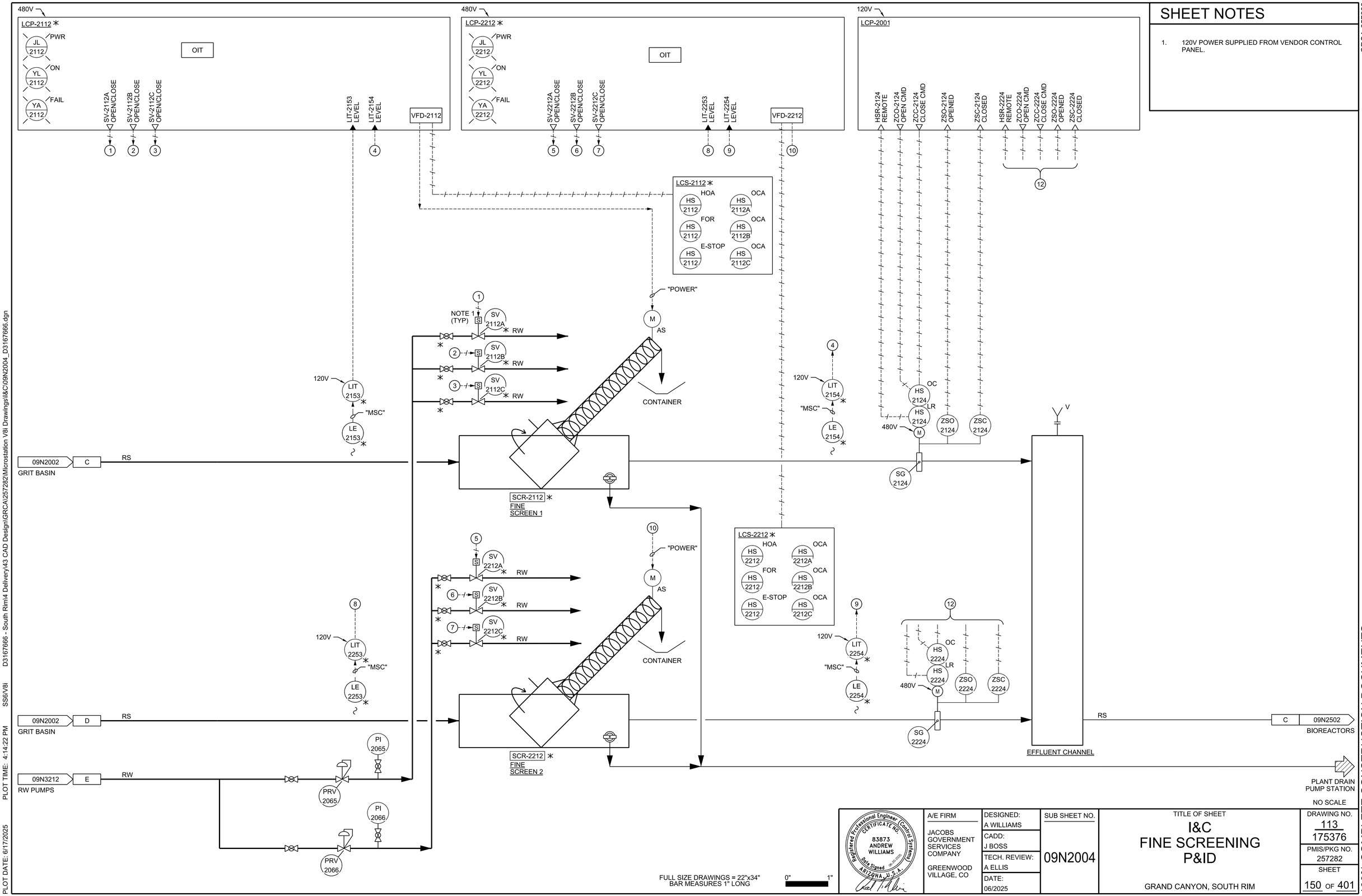

SHEET NOTES

1. 120V POWER SUPPLIED FROM VENDOR CONTROL PANEL.

GRCA-257282

FULL SIZE DRAWINGS = 22"x34"
BAR MEASURES 1" LONG
0" 1"

Registered Professional Engineer (Control Systems) CERTIFICATE NO. 83873 ANDREW WILLIAMS Date Signed 06/16/2025 ARIZONA, U.S.A.

A/E FIRM	DESIGNED:	SUB SHEET NO.	TITLE OF SHEET	DRAWING NO.
JACOBS GOVERNMENT SERVICES COMPANY GREENWOOD VILLAGE, CO	A WILLIAMS CADD: J BOSS TECH. REVIEW: A ELLIS DATE: 06/2025	09N2004	I&C FINE SCREENING P&ID GRAND CANYON, SOUTH RIM	113 175376 PMIS/PKG NO. 257282 SHEET 150 OF 401

NO SCALE

100% COMPLETE CONSTRUCTION DOCUMENTS

PLOT DATE: 6/17/2025 PLOT TIME: 4:14:22 PM SS6/V8I D3167666 - South Rim\4 Delivery\43 CAD Design\GRCA\257282\Microstation V8I Drawings\I&C\09N2004_D3167666.dgn

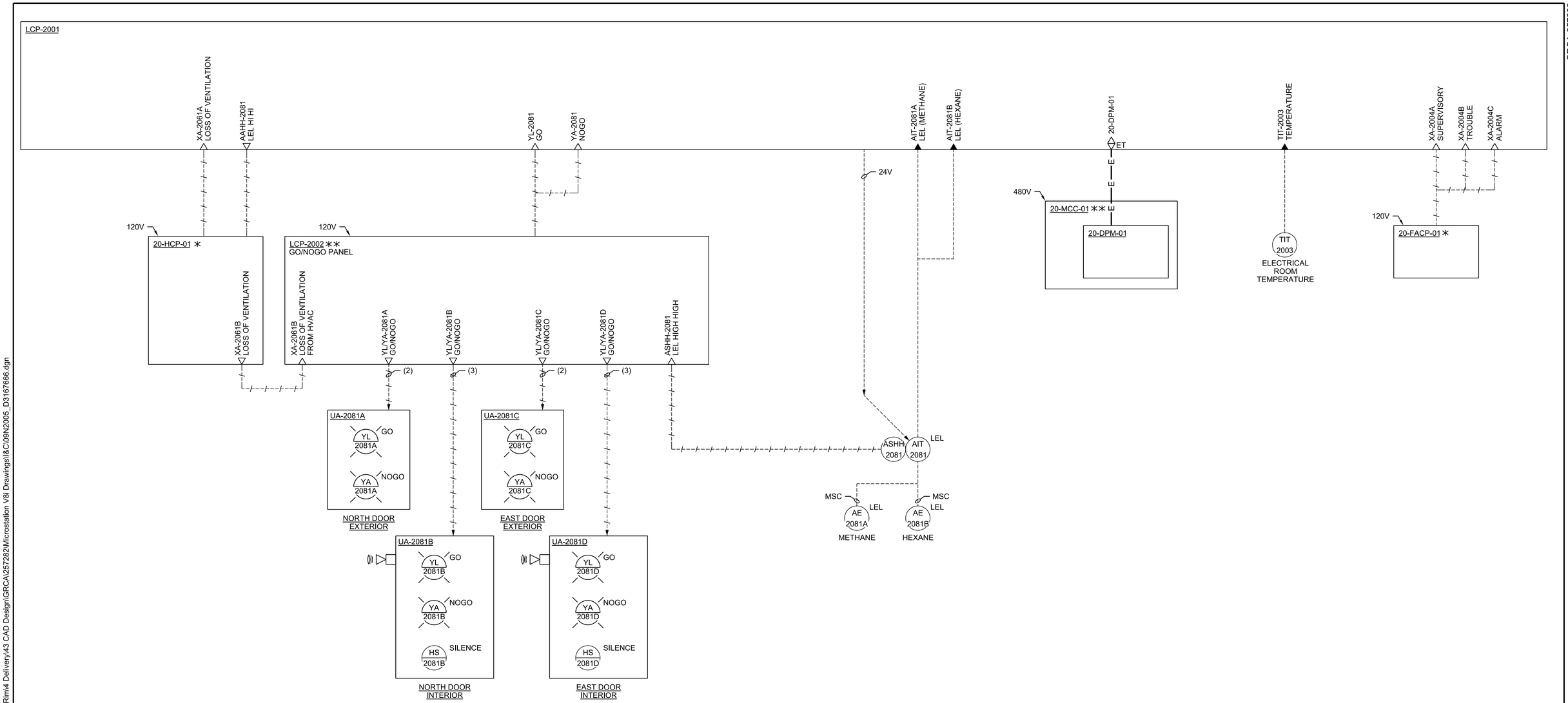

GRCA-257282

PLOT DATE: 6/17/2025 PLOT TIME: 4:14:30 PM SS6/V8i D3167666 - South Rim\4 Delivery\43 CAD Design\GRCA\257282\Microstation V8i Drawings\I&C\09N2005_D3167666.dgn

FULL SIZE DRAWINGS = 22"x34"
BAR MEASURES 1" LONG

0" 1"

Registered Professional Engineer (Control Systems) CERTIFICATE NO. 83873 ANDREW WILLIAMS Date Signed 06-17-2025 ARIZONA, U.S.A.

A/E FIRM	DESIGNED:	SUB SHEET NO.	TITLE OF SHEET	DRAWING NO.
JACOBS GOVERNMENT SERVICES COMPANY GREENWOOD VILLAGE, CO	A WILLIAMS CADD: J BOSS TECH. REVIEW: A ELLIS DATE: 06/2025	09N2005	I&C HEADWORKS UTILITIES P&ID GRAND CANYON, SOUTH RIM	NO SCALE 113 175376 PMIS/PKG NO. 257282 SHEET 151 OF 401

100% COMPLETE CONSTRUCTION DOCUMENTS

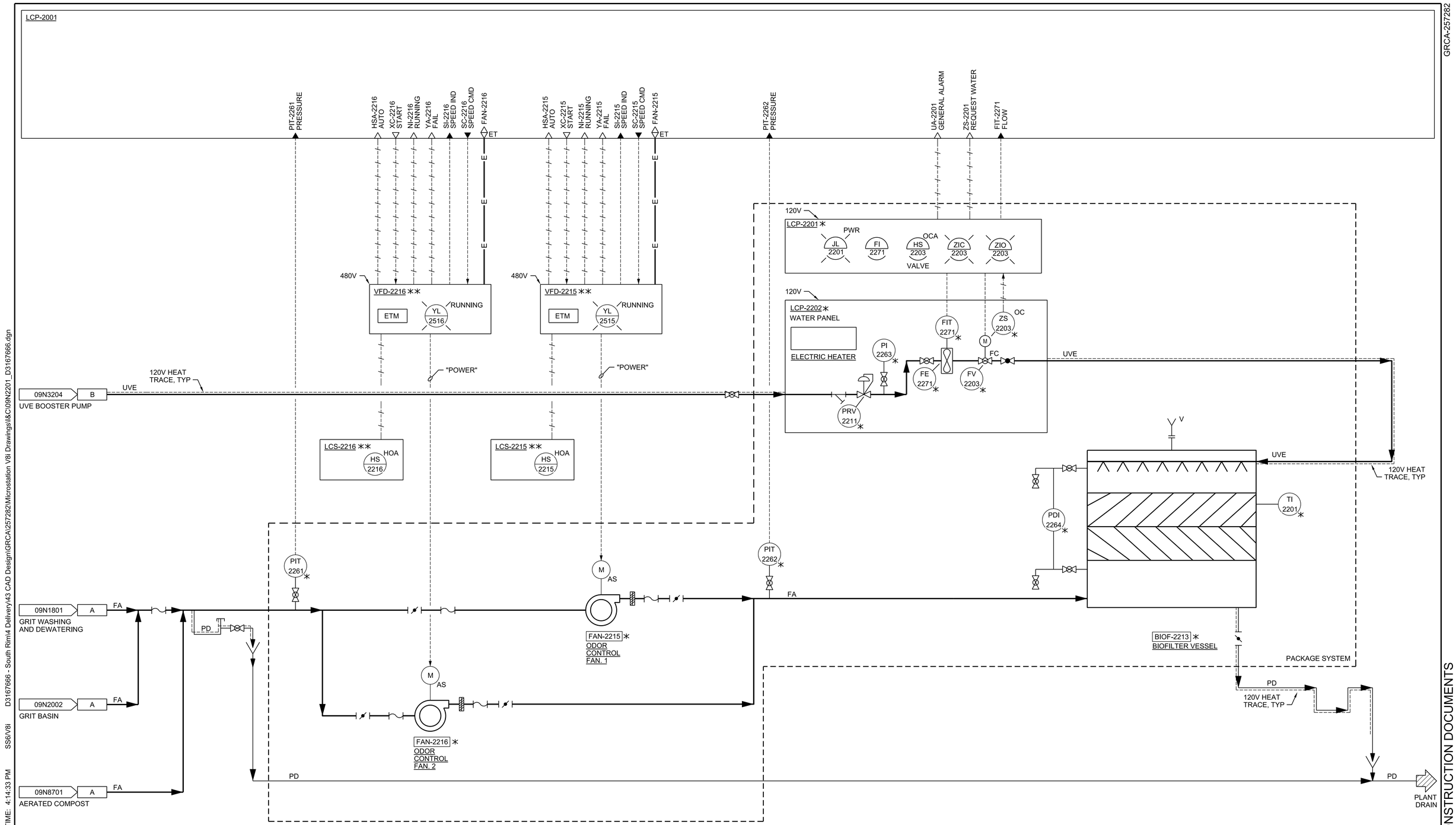

GRCA-257282

100% COMPLETE CONSTRUCTION DOCUMENTS

PLOT DATE: 6/17/2025 PLOT TIME: 4:14:33 PM SS6/V8I D3167666 - South Rim\4 Delivery\43 CAD Design\GRCA\257282\Microstation V8I Drawings\I&C\09N2201_D3167666.dgn

FULL SIZE DRAWINGS = 22"x34"
BAR MEASURES 1" LONG

0" 1"

Registered Professional Engineer - Control Systems
CERTIFICATE NO. 83873
ANDREW WILLIAMS
Date Signed 06/16/2025
ARIZONA, U.S.A.

A/E FIRM	DESIGNED:	SUB SHEET NO.	TITLE OF SHEET	DRAWING NO.
JACOBS GOVERNMENT SERVICES COMPANY GREENWOOD VILLAGE, CO	A WILLIAMS CADD: J BOSS TECH. REVIEW: A ELLIS DATE: 06/2025	09N2201	I&C ODOR CONTROL P&ID GRAND CANYON, SOUTH RIM	113 175376 PMIS/PKG NO. 257282 SHEET 152 OF 401

NO SCALE

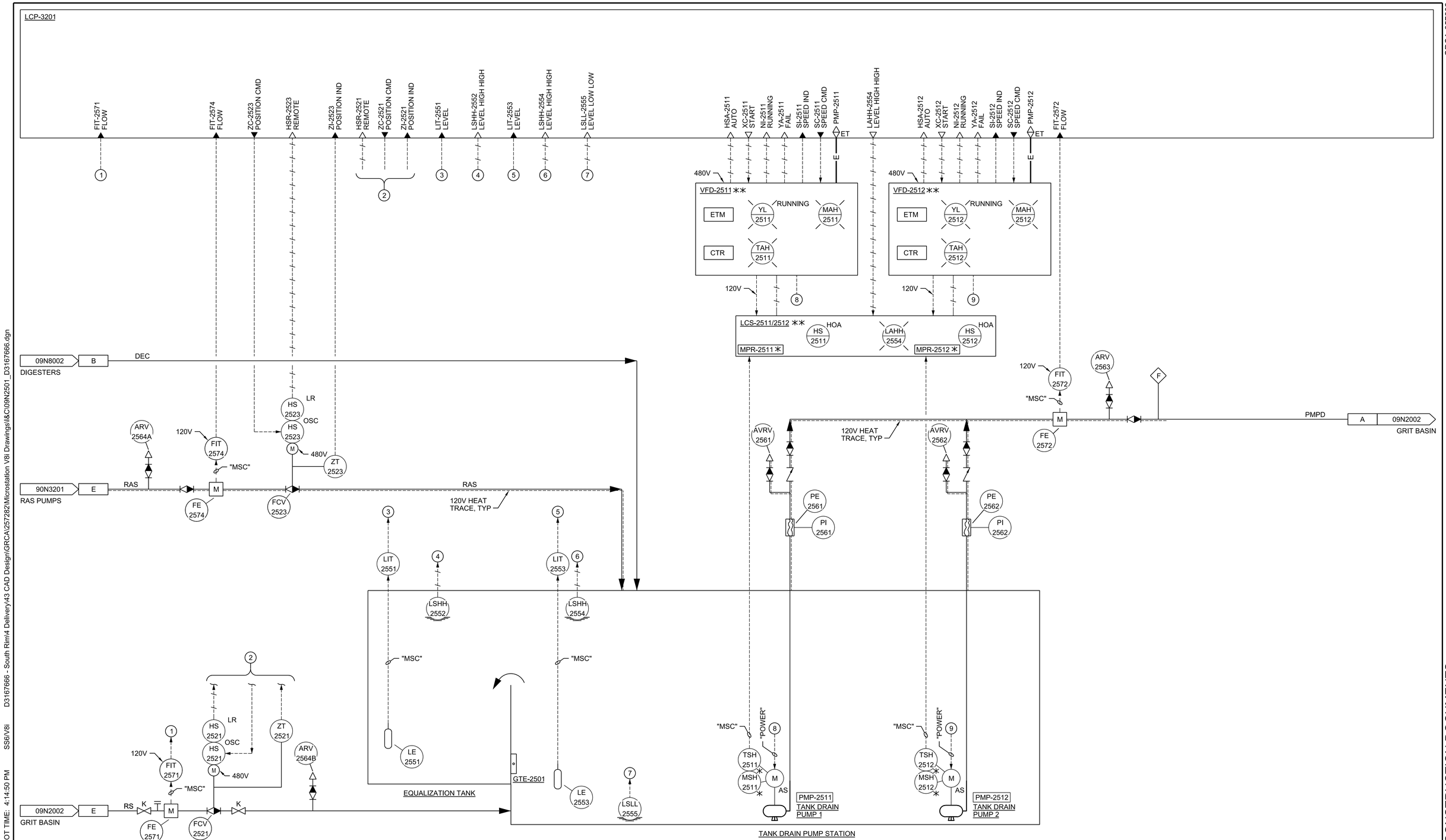

GRCA-257282

100% COMPLETE CONSTRUCTION DOCUMENTS

PLOT DATE: 6/17/2025 PLOT TIME: 4:14:50 PM SS6/V8i D3167666 - South Rim\4 Delivery\43 CAD Design\GRCA\257282\Microstation V8i Drawings\I&C\09N2501_D3167666.dgn

FULL SIZE DRAWINGS = 22"x34"
BAR MEASURES 1" LONG

0" 1"

Registered Professional Engineer (Control Systems)
CERTIFICATE NO. 83873
ANDREW WILLIAMS
Date Signed 06-20-2025
ARIZONA, U.S.A.

A/E FIRM	DESIGNED:	SUB SHEET NO.	TITLE OF SHEET	NO SCALE
JACOBS GOVERNMENT SERVICES COMPANY GREENWOOD VILLAGE, CO	A WILLIAMS CADD: J BOSS TECH. REVIEW: A ELLIS DATE: 06/2025	09N2501	I&C EQUALIZATION BASIN AND TANK DRAIN PUMP STATION P&ID GRAND CANYON, SOUTH RIM	DRAWING NO. 113 175376 PMIS/PKG NO. 257282 SHEET 153 OF 401

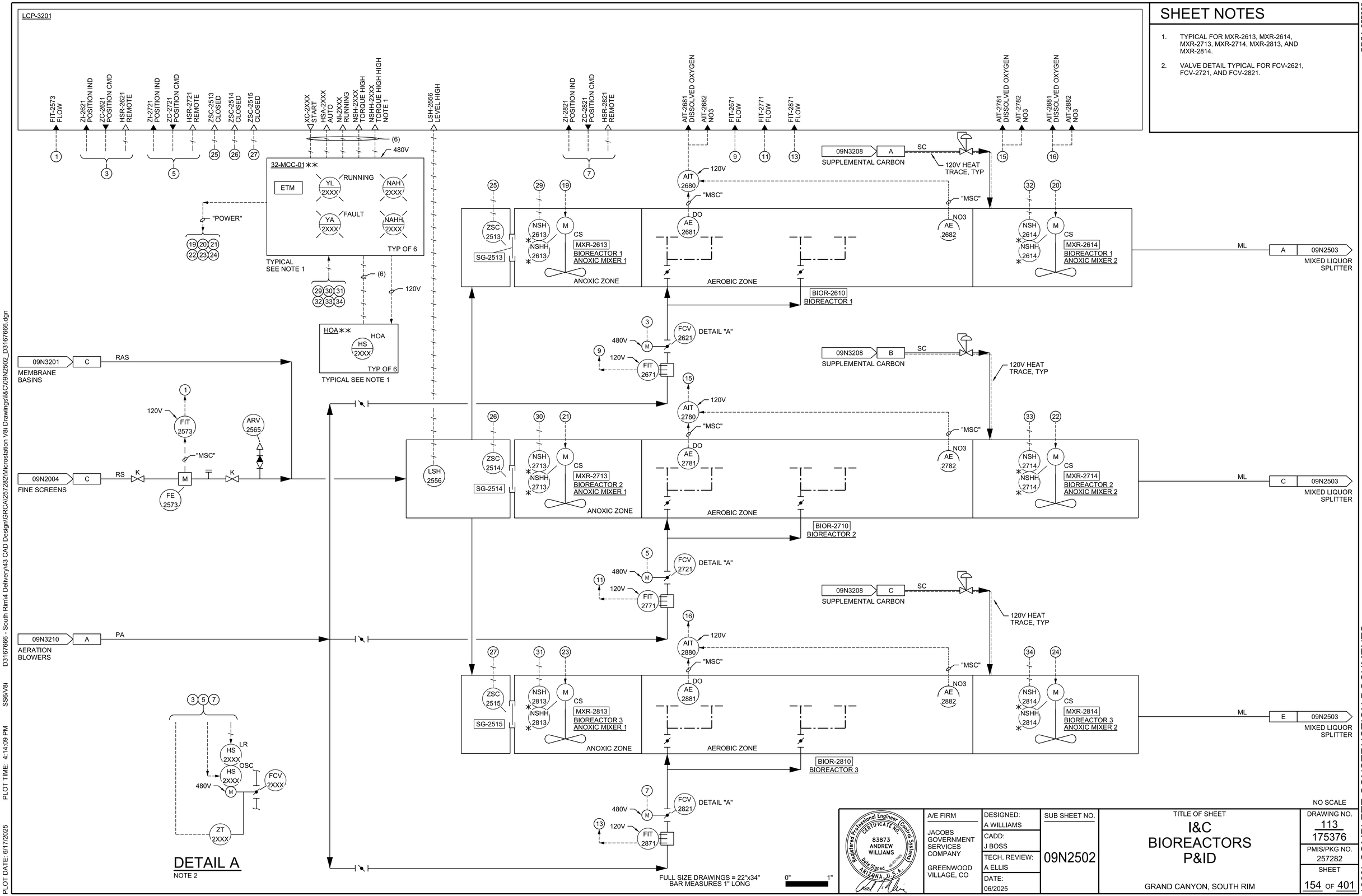

SHEET NOTES

1. TYPICAL FOR MXR-2613, MXR-2614, MXR-2713, MXR-2714, MXR-2813, AND MXR-2814.
2. VALVE DETAIL TYPICAL FOR FCV-2621, FCV-2721, AND FCV-2821.

GRCA-257282

Registered Professional Engineer (Control Systems) CERTIFICATE NO. 83873 ANDREW WILLIAMS Date Signed 06-30-2025 ARIZONA, U.S.A.

A/E FIRM	DESIGNED:	SUB SHEET NO.	TITLE OF SHEET	DRAWING NO.
JACOBS GOVERNMENT SERVICES COMPANY GREENWOOD VILLAGE, CO	A WILLIAMS CADD: J BOSS TECH. REVIEW: A ELLIS DATE: 06/2025	09N2502	I&C BIOREACTORS P&ID GRAND CANYON, SOUTH RIM	113 / 175376 PMIS/PKG NO. 257282 SHEET 154 OF 401

NO SCALE

100% COMPLETE CONSTRUCTION DOCUMENTS

PLOT DATE: 6/17/2025 PLOT TIME: 4:14:09 PM SS6/V8i D3167666 - South Rim\4 Delivery\43 CAD Design\GRCA\257282\Microstation V8i Drawings\I&C\09N2502_D3167666.dgn

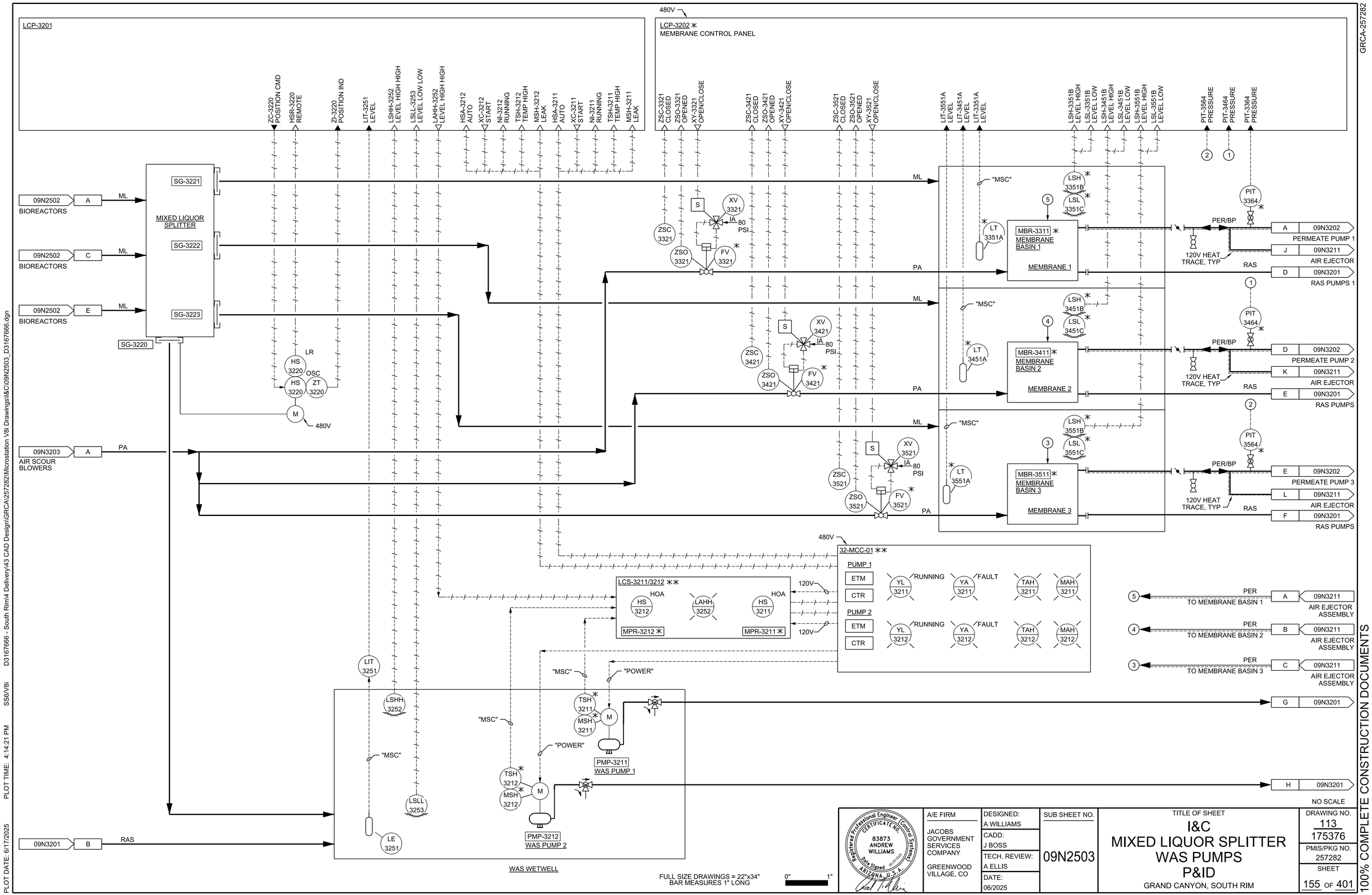
LCP-3201
LCP-3202 ✳
MEMBRANE CONTROL PANEL
480V
ZC-3220 POSITION CMD
HSR-3220 REMOTE
ZI-3220 POSITION IND
LIT-3251 LEVEL
LSHH-3252 LEVEL HIGH HIGH
LSLL-3253 LEVEL LOW LOW
LAHH-3252 LEVEL HIGH HIGH
HSA-3212 AUTO
XC-3212 START
NI-3212 RUNNING
TSH-3212 TEMP HIGH
MSH-3212 LEAK
HSA-3211 AUTO
XC-3211 START
NI-3211 RUNNING
TSH-3211 TEMP HIGH
MSH-3211 LEAK
ZSC-3321 CLOSED
ZSO-3321 OPENED
XY-3321 OPEN/CLOSE
ZSC-3421 CLOSED
ZSO-3421 OPENED
XY-3421 OPEN/CLOSE
ZSC-3521 CLOSED
ZSO-3521 OPENED
XY-3521 OPEN/CLOSE
LIT-3551A LEVEL
LIT-3451A LEVEL
LIT-3351A LEVEL
LSH-3351B LEVEL HIGH
LSL-3351B LEVEL LOW
LSH-3451B LEVEL HIGH
LSL-3451B LEVEL LOW
LSH-3551B LEVEL HIGH
LSL-3551B LEVEL LOW
PIT-3564 PRESSURE
PIT-3464 PRESSURE
PIT-3364 PRESSURE
09N2502 A BIOREACTORS
09N2502 C BIOREACTORS
09N2502 E BIOREACTORS
ML
MIXED LIQUOR SPLITTER
SG-3221
SG-3222
SG-3223
SG-3220
LR
HS 3220
OSC
HS 3220
ZT 3220
M
480V
09N3203 A AIR SCOUR BLOWERS
PA
S
XV 3321
IA
80 PSI
ZSC 3321
ZSO 3321
FV 3321
XV 3421
ZSC 3421
ZSO 3421
FV 3421
XV 3521
ZSC 3521
ZSO 3521
FV 3521
"MSC"
LT 3351A
LT 3451A
LT 3551A
LSH 3351B
LSL 3351C
LSH 3451B
LSL 3451C
LSH 3551B
LSL 3551C
MBR-3311 ✳
MEMBRANE BASIN 1
MEMBRANE 1
MBR-3411 ✳
MEMBRANE BASIN 2
MEMBRANE 2
MBR-3511 ✳
MEMBRANE BASIN 3
MEMBRANE 3
PIT 3364
PIT 3464
PIT 3564
PER/BP
120V HEAT TRACE, TYP
RAS
A 09N3202 PERMEATE PUMP 1
J 09N3211 AIR EJECTOR
D 09N3201 RAS PUMPS 1
D 09N3202 PERMEATE PUMP 2
K 09N3211 AIR EJECTOR
E 09N3201 RAS PUMPS
E 09N3202 PERMEATE PUMP 3
L 09N3211 AIR EJECTOR
F 09N3201 RAS PUMPS
32-MCC-01 ✳✳
PUMP 1
ETM
CTR
PUMP 2
ETM
CTR
YL 3211
YA 3211
TAH 3211
MAH 3211
YL 3212
YA 3212
TAH 3212
MAH 3212
RUNNING
FAULT
LCS-3211/3212 ✳✳
HOA
HS 3212
LAHH 3252
HS 3211
MPR-3212 ✳
MPR-3211 ✳
120V
PER
TO MEMBRANE BASIN 1
TO MEMBRANE BASIN 2
TO MEMBRANE BASIN 3
A 09N3211 AIR EJECTOR ASSEMBLY
B 09N3211 AIR EJECTOR ASSEMBLY
C 09N3211 AIR EJECTOR ASSEMBLY
G 09N3201
H 09N3201
LIT 3251
LSHH 3252
LSLL 3253
LE 3251
"POWER"
TSH 3211
MSH 3211
PMP-3211 WAS PUMP 1
TSH 3212
MSH 3212
PMP-3212 WAS PUMP 2
09N3201 B RAS
WAS WETWELL
NO SCALE
FULL SIZE DRAWINGS = 22"x34"
BAR MEASURES 1" LONG
0" 1"
Registered Professional Engineer (Control Systems)
CERTIFICATE NO. 83873
ANDREW WILLIAMS
Date Signed 06-20-2025
ARIZONA, U.S.A.
A/E FIRM
JACOBS GOVERNMENT SERVICES COMPANY
GREENWOOD VILLAGE, CO
DESIGNED: A WILLIAMS
CADD: J BOSS
TECH. REVIEW: A ELLIS
DATE: 06/2025
SUB SHEET NO.
09N2503
TITLE OF SHEET
I&C
MIXED LIQUOR SPLITTER
WAS PUMPS
P&ID
GRAND CANYON, SOUTH RIM
DRAWING NO. 113
175376
PMIS/PKG NO. 257282
SHEET 155 OF 401
100% COMPLETE CONSTRUCTION DOCUMENTS
GRCA-257282
PLOT DATE: 6/17/2025
PLOT TIME: 4:14:21 PM
SS6/V8I
D3167666 - South Rim\4 Delivery\43 CAD Design\GRCA\257282\Microstation V8i Drawings\I&C\09N2503_D3167666.dgn

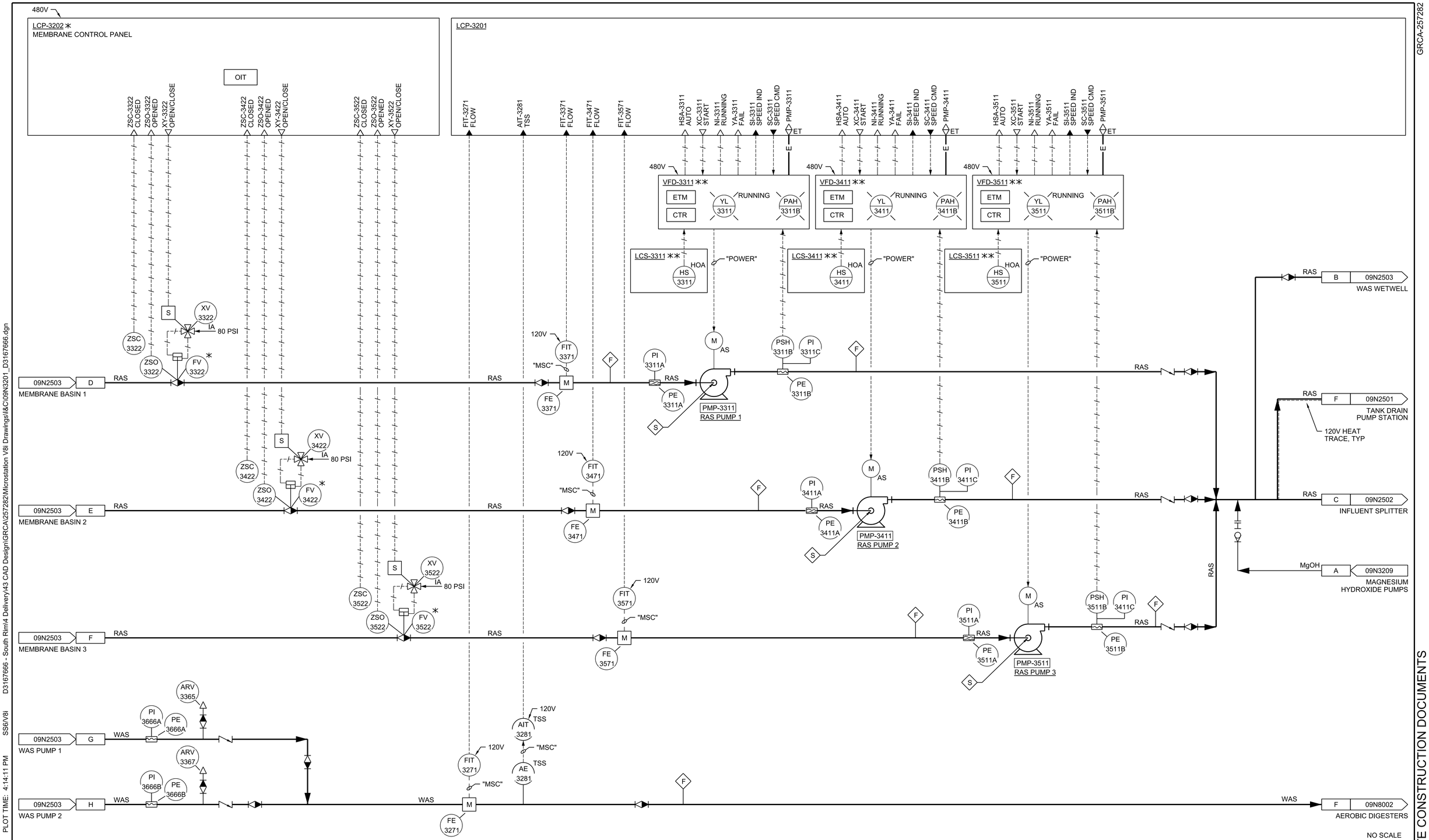

GRCA-257282

100% COMPLETE CONSTRUCTION DOCUMENTS

PLOT DATE: 6/17/2025 PLOT TIME: 4:14:11 PM SS6/V8i D3167666 - South Rim\4 Delivery\43 CAD Design\GRCA\257282\Microstation V8i Drawings\I&C\09N3201_D3167666.dgn

FULL SIZE DRAWINGS = 22"x34"
BAR MEASURES 1" LONG

0" 1"

Registered Professional Engineer - Control Systems
CERTIFICATE NO. 83873
ANDREW WILLIAMS
Date Signed 06-16-2025
ARIZONA, U.S.A.

A/E FIRM	DESIGNED:	SUB SHEET NO.	TITLE OF SHEET	DRAWING NO.
JACOBS GOVERNMENT SERVICES COMPANY GREENWOOD VILLAGE, CO	A WILLIAMS CADD: J BOSS TECH. REVIEW: A ELLIS DATE: 06/2025	09N3201	I&C RAS PUMPS SYSTEM P&ID GRAND CANYON, SOUTH RIM	113 175376 PMIS/PKG NO. 257282 SHEET 156 OF 401

NO SCALE

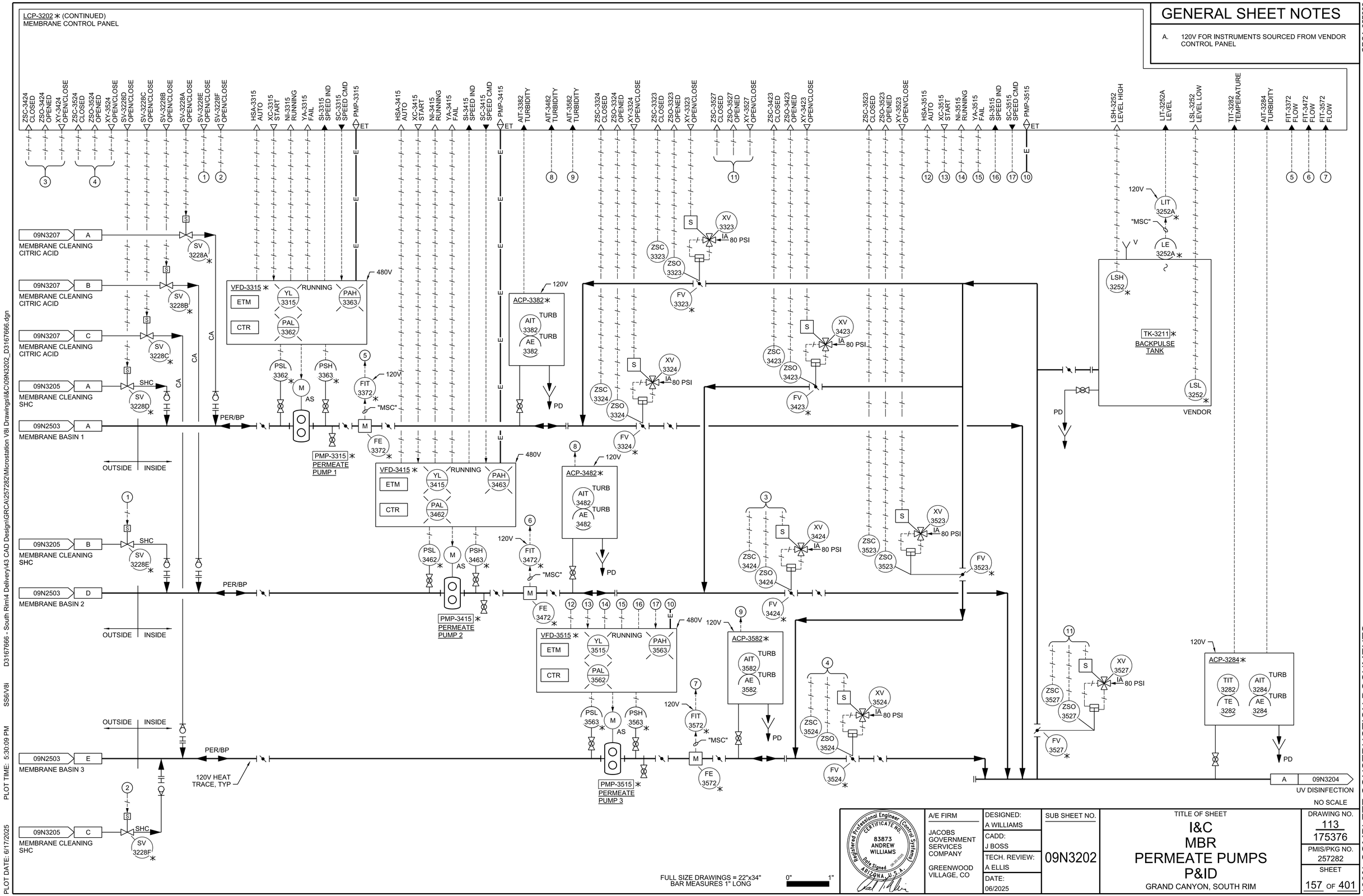

GENERAL SHEET NOTES

A. 120V FOR INSTRUMENTS SOURCED FROM VENDOR CONTROL PANEL

GRCA-257282

100% COMPLETE CONSTRUCTION DOCUMENTS

PLOT DATE: 6/17/2025 PLOT TIME: 5:30:09 PM SS6/V8I D3167666 - South Rim4 Delivery\43 CAD Design\GRCA\257282\Microstation V8I DrawingsI&C\09N3202_D3167666.dgn

NO SCALE

FULL SIZE DRAWINGS = 22"x34"
BAR MEASURES 1" LONG

0" 1"

Registered Professional Engineer (Control Systems) CERTIFICATE NO. 83873 ANDREW WILLIAMS Date Signed 06-20-2025 ARIZONA, U.S.A.

A/E FIRM: JACOBS GOVERNMENT SERVICES COMPANY, GREENWOOD VILLAGE, CO	DESIGNED: A WILLIAMS CADD: J BOSS TECH. REVIEW: A ELLIS DATE: 06/2025	SUB SHEET NO. 09N3202	TITLE OF SHEET: I&C MBR PERMEATE PUMPS P&ID, GRAND CANYON, SOUTH RIM	DRAWING NO. 113 175376 PMIS/PKG NO. 257282 SHEET 157 OF 401

LCP-3202 ∗ (CONTINUED)
MEMBRANE CONTROL PANEL

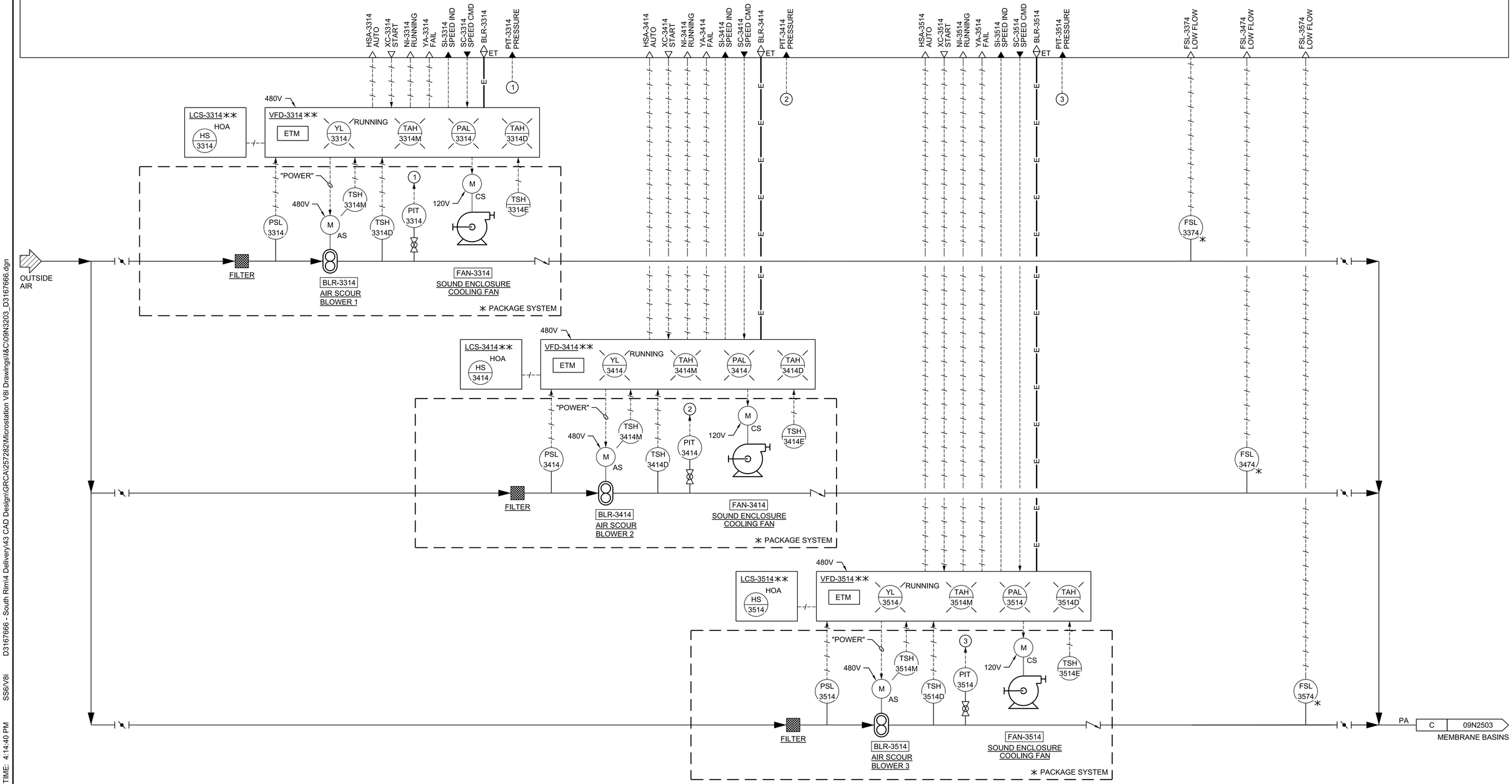

GRCA-257282

100% COMPLETE CONSTRUCTION DOCUMENTS

PLOT DATE: 6/17/2025 PLOT TIME: 4:14:40 PM SS6/V8I D3167666 - South Rim\4 Delivery\43 CAD Design\GRCA\257282\Microstation V8I Drawings\I&C\09N3203_D3167666.dgn

FULL SIZE DRAWINGS = 22"x34"
BAR MEASURES 1" LONG

0" 1"

Registered Professional Engineer (Control Systems)
CERTIFICATE NO. 83873
ANDREW WILLIAMS
Date Signed 06-20-2025
ARIZONA, U.S.A.

A/E FIRM	DESIGNED:	SUB SHEET NO.	TITLE OF SHEET	DRAWING NO.
JACOBS GOVERNMENT SERVICES COMPANY GREENWOOD VILLAGE, CO	A WILLIAMS CADD: J BOSS TECH. REVIEW: A ELLIS DATE: 06/2025	09N3203	I&C MEMBRANE AIR SCOUR BLOWERS P&ID GRAND CANYON, SOUTH RIM	113 / 175376 PMIS/PKG NO. 257282 SHEET 158 OF 401

NO SCALE

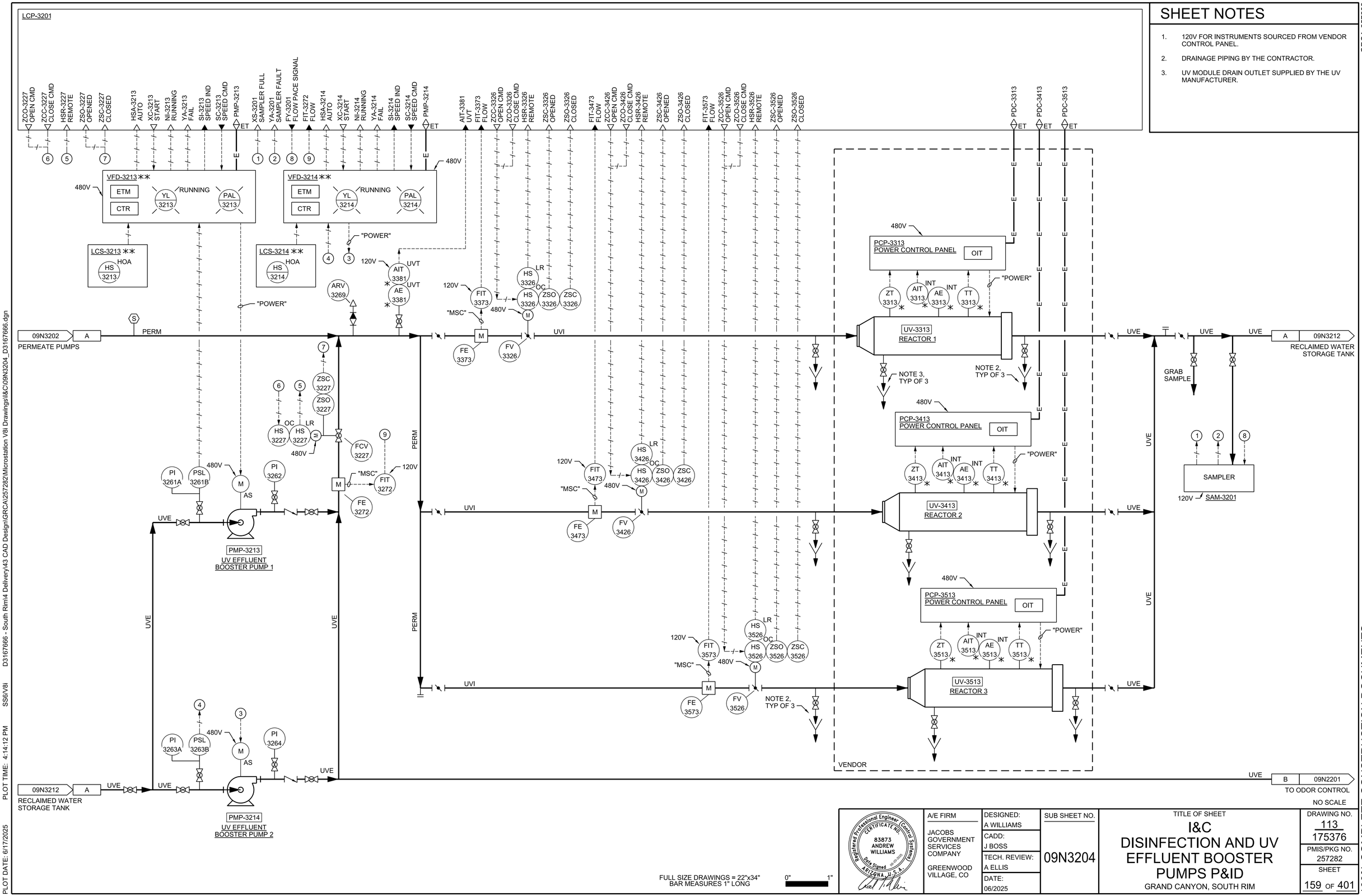

SHEET NOTES

1. 120V FOR INSTRUMENTS SOURCED FROM VENDOR CONTROL PANEL.
2. DRAINAGE PIPING BY THE CONTRACTOR.
3. UV MODULE DRAIN OUTLET SUPPLIED BY THE UV MANUFACTURER.

GRCA-257282

100% COMPLETE CONSTRUCTION DOCUMENTS

PLOT DATE: 6/17/2025 PLOT TIME: 4:14:12 PM SS6/V8i D3167666 - South Rim\4 Delivery\43 CAD Design\GRCA\257282\Microstation V8i Drawings\I&C\09N3204_D3167666.dgn

FULL SIZE DRAWINGS = 22"x34"
BAR MEASURES 1" LONG
0" 1"

Registered Professional Engineer Control Systems
CERTIFICATE NO. 83873
ANDREW WILLIAMS
Date Signed 06/16/2025
ARIZONA, U.S.A.

A/E FIRM	DESIGNED:	SUB SHEET NO.	TITLE OF SHEET	DRAWING NO.
JACOBS GOVERNMENT SERVICES COMPANY GREENWOOD VILLAGE, CO	A WILLIAMS CADD: J BOSS TECH. REVIEW: A ELLIS DATE: 06/2025	09N3204	I&C DISINFECTION AND UV EFFLUENT BOOSTER PUMPS P&ID GRAND CANYON, SOUTH RIM	113 / 175376 PMIS/PKG NO. 257282 SHEET 159 OF 401

NO SCALE

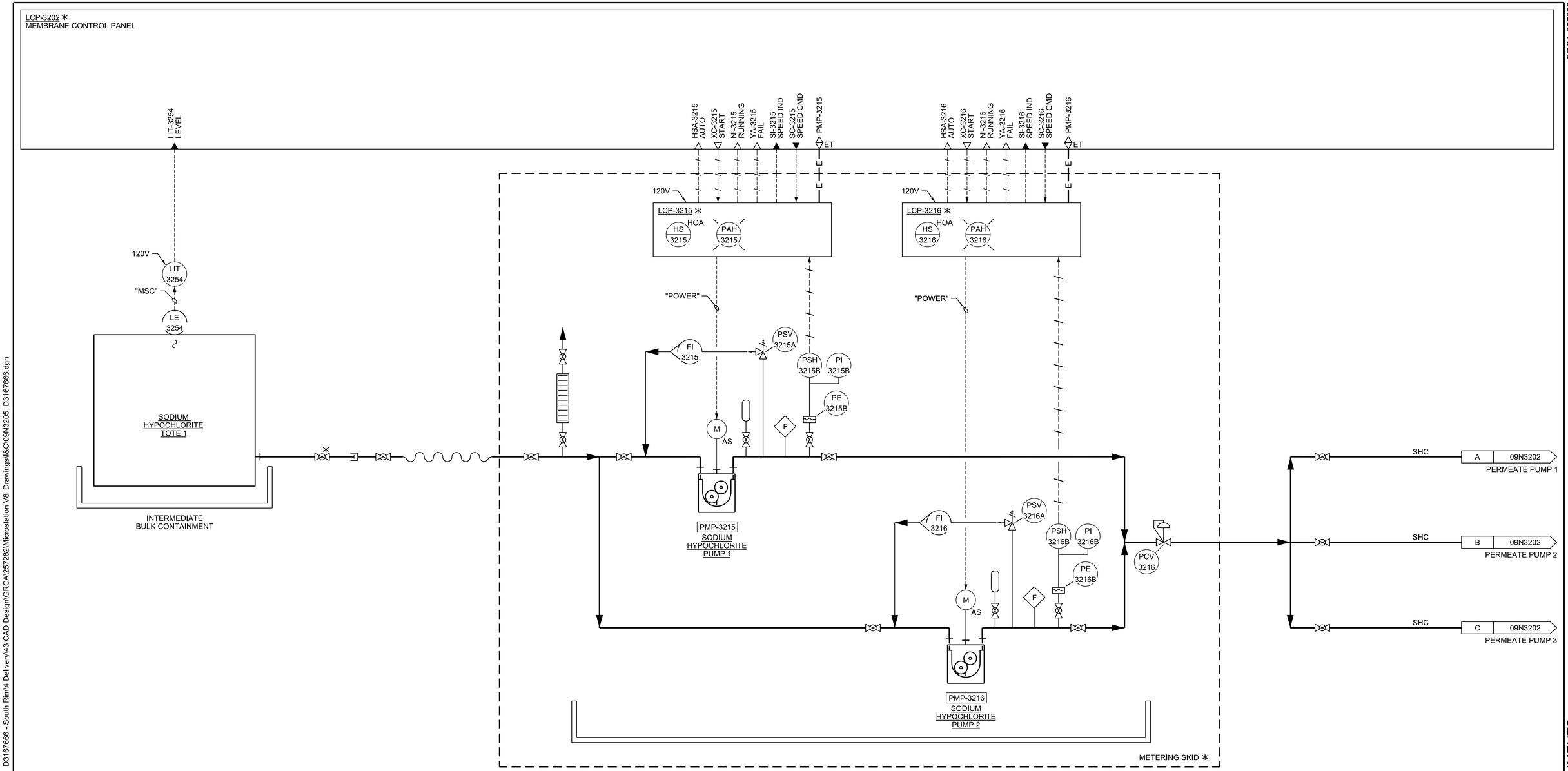

FULL SIZE DRAWINGS = 22"x34"
BAR MEASURES 1" LONG

0" 1"

Registered Professional Engineer (Control Systems)
CERTIFICATE NO. 83873
ANDREW WILLIAMS
Date Signed 06-25-2025
ARIZONA, U.S.A.

A/E FIRM	DESIGNED:	SUB SHEET NO.	TITLE OF SHEET	DRAWING NO.
JACOBS GOVERNMENT SERVICES COMPANY GREENWOOD VILLAGE, CO	A WILLIAMS CADD: J BOSS TECH. REVIEW: A ELLIS DATE: 06/2025	09N3205	I&C MEMBRANE CLEANING SODIUM HYPOCHLORITE PUMPS P&ID GRAND CANYON, SOUTH RIM	113 175376 PMIS/PKG NO. 257282 SHEET 160 OF 401

NO SCALE

100% COMPLETE CONSTRUCTION DOCUMENTS

GRCA-257282

PLOT DATE: 6/17/2025 PLOT TIME: 5:22:48 PM SS6/V8i D3167666 - South Rim\4 Delivery\43 CAD Design\GRCA\257282\Microstation V8i Drawings\I&C\09N3205_D3167666.dgn

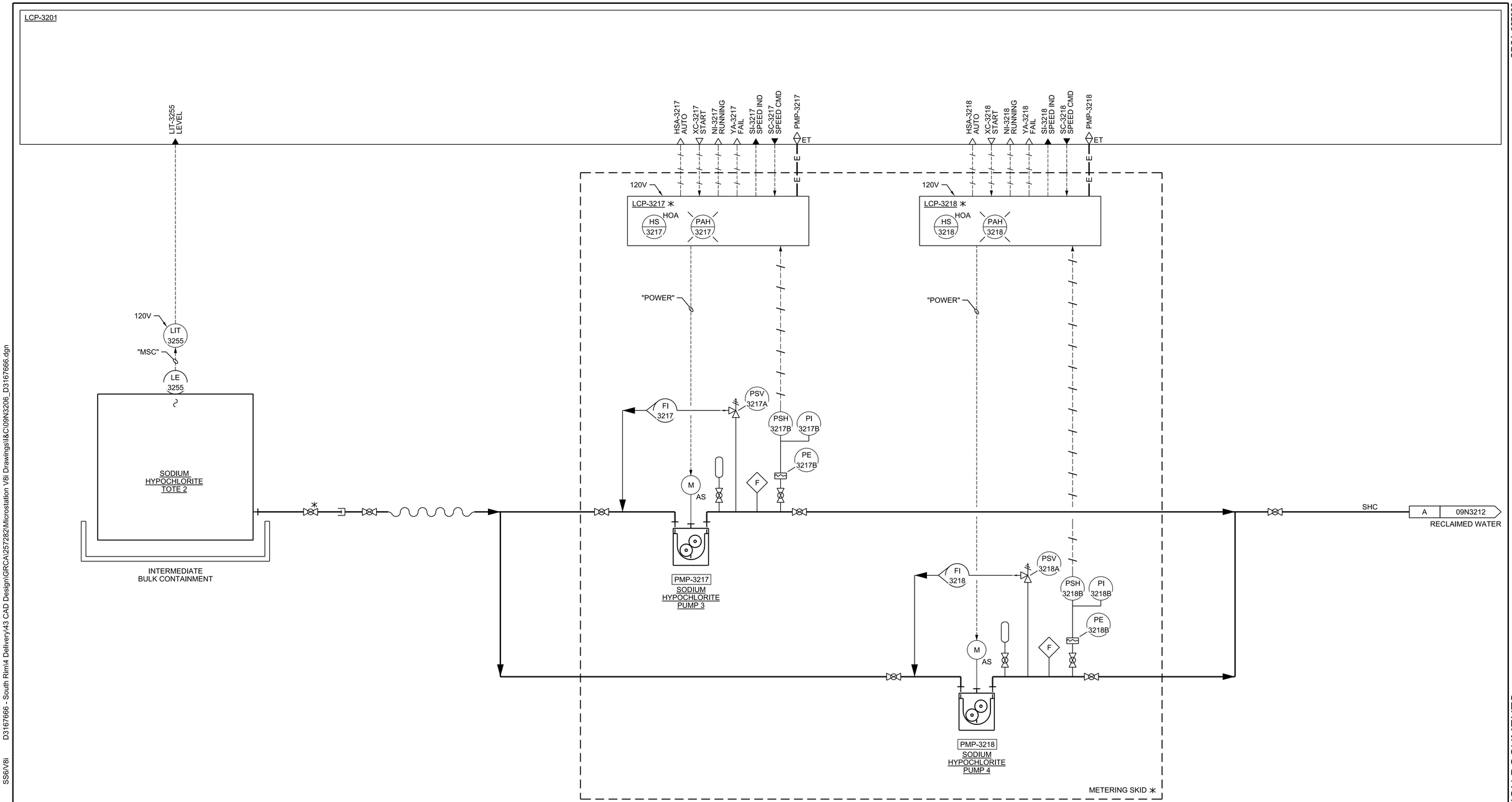

GRCA-257282

100% COMPLETE CONSTRUCTION DOCUMENTS

PLOT DATE: 6/17/2025 PLOT TIME: 4:14:10 PM SS6/V8I D3167666 - South Rim\4 Delivery\43 CAD Design\GRCA\257282\Microstation V8I Drawings\I&C\09N3206_D3167666.dgn

FULL SIZE DRAWINGS = 22"x34"
BAR MEASURES 1" LONG

0" 1"

Registered Professional Engineer (Control Systems)
CERTIFICATE NO. 83873
ANDREW WILLIAMS
Date Signed 06-16-2025
ARIZONA, U.S.A.

A/E FIRM	DESIGNED:	SUB SHEET NO.	TITLE OF SHEET	DRAWING NO.
JACOBS GOVERNMENT SERVICES COMPANY GREENWOOD VILLAGE, CO	A WILLIAMS CADD: J BOSS TECH. REVIEW: A ELLIS DATE: 06/2025	09N3206	I&C SODIUM HYPOCHLORITE PUMPS P&ID GRAND CANYON, SOUTH RIM	NO SCALE 113 / 175376 PMIS/PKG NO. 257282 SHEET 161 OF 401

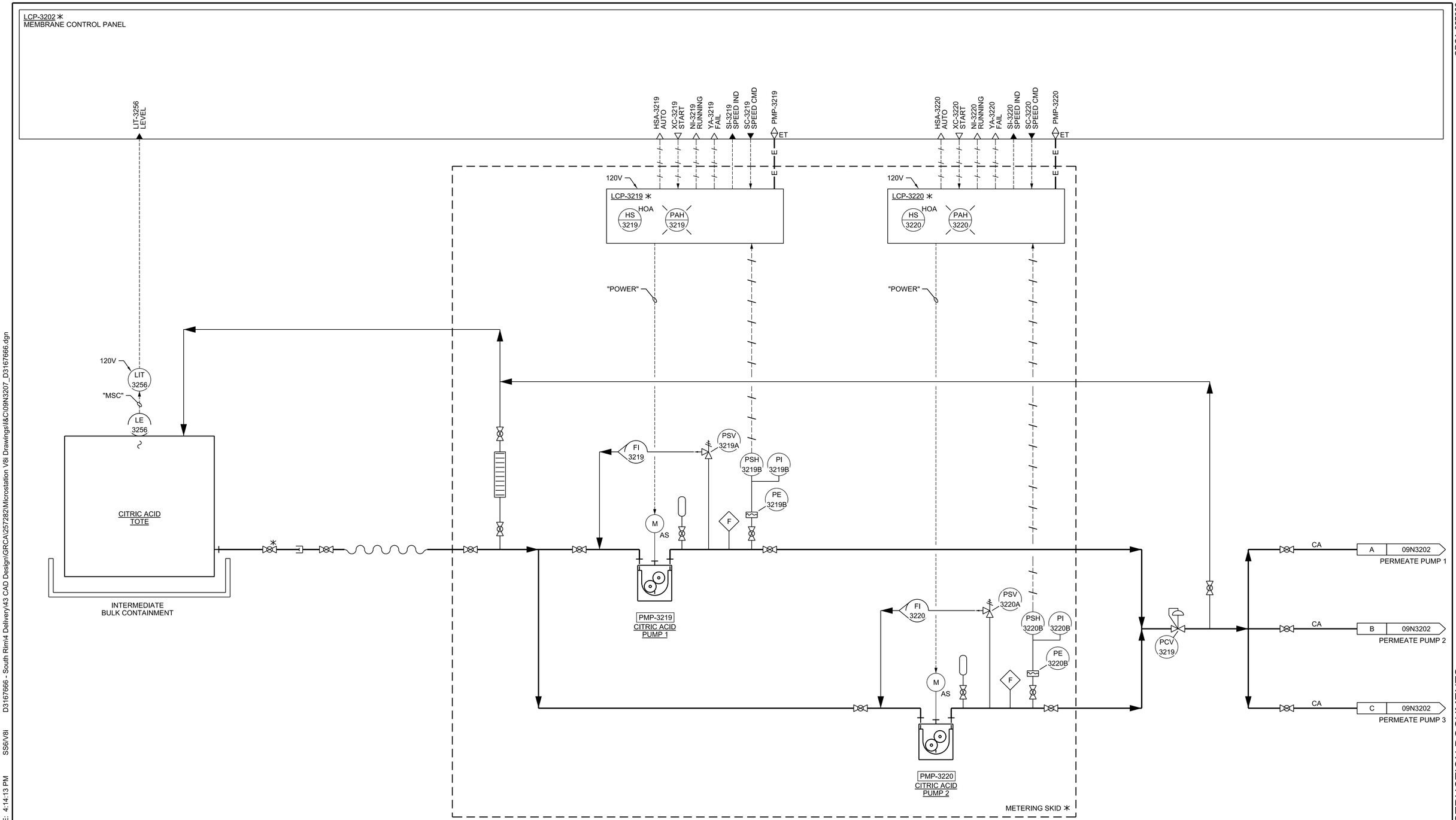

GRCA-257282

100% COMPLETE CONSTRUCTION DOCUMENTS

PLOT DATE: 6/17/2025 PLOT TIME: 4:14:13 PM SS6/V8I D3167666 - South Rim\4 Delivery\43 CAD Design\GRCA\257282\Microstation V8I Drawings\I&C\09N3207_D3167666.dgn

FULL SIZE DRAWINGS = 22"x34"
BAR MEASURES 1" LONG

0" 1"

Registered Professional Engineer (Control Systems)
CERTIFICATE NO. 83873
ANDREW WILLIAMS
Date Signed 06-16-2025
ARIZONA, U.S.A.

A/E FIRM	DESIGNED:	SUB SHEET NO.	TITLE OF SHEET	DRAWING NO.
JACOBS GOVERNMENT SERVICES COMPANY GREENWOOD VILLAGE, CO	A WILLIAMS CADD: J BOSS TECH. REVIEW: A ELLIS DATE: 06/2025	09N3207	I&C MEMBRANE CLEANING CITRIC ACID PUMPS P&ID GRAND CANYON, SOUTH RIM	NO SCALE 113 175376 PMIS/PKG NO. 257282 SHEET 162 OF 401

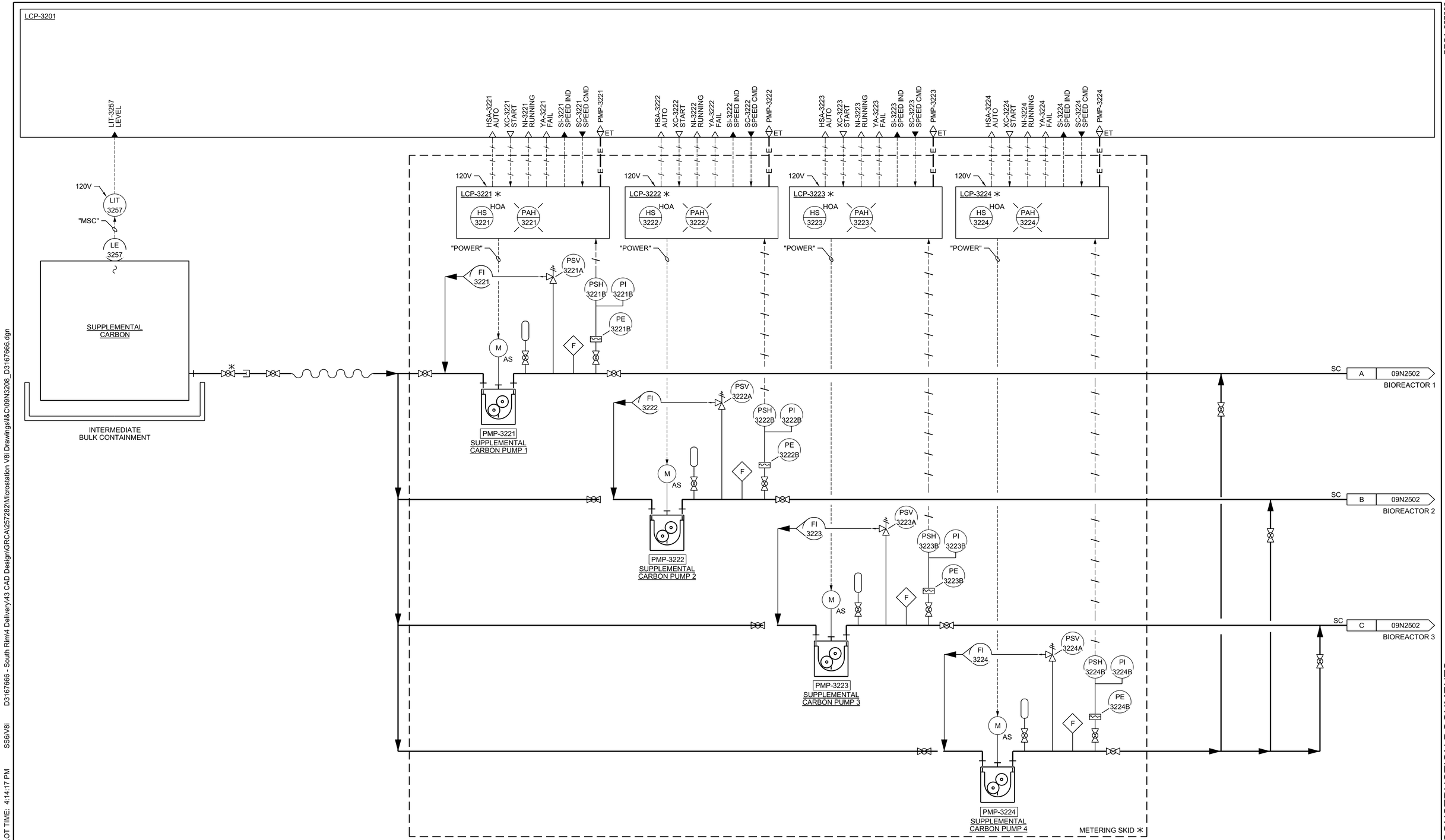

GRCA-257282

100% COMPLETE CONSTRUCTION DOCUMENTS

PLOT DATE: 6/17/2025 PLOT TIME: 4:14:17 PM SS6/V8i D3167666 - South Rim\4 Delivery\43 CAD Design\GRCA\257282\Microstation V8i Drawings\I&C\09N3208_D3167666.dgn

FULL SIZE DRAWINGS = 22"x34"
BAR MEASURES 1" LONG

0" 1"

Registered Professional Engineer (Control Systems) CERTIFICATE NO. 83873 ANDREW WILLIAMS Date Signed 06/20/2025 ARIZONA, U.S.A.

A/E FIRM	DESIGNED:	SUB SHEET NO.	TITLE OF SHEET	NO SCALE
JACOBS GOVERNMENT SERVICES COMPANY GREENWOOD VILLAGE, CO	A WILLIAMS CADD: J BOSS TECH. REVIEW: A ELLIS DATE: 06/2025	09N3208	I&C SUPPLEMENTAL CARBON PUMPS P&ID GRAND CANYON, SOUTH RIM	DRAWING NO. 113 175376 PMIS/PKG NO. 257282 SHEET 163 OF 401

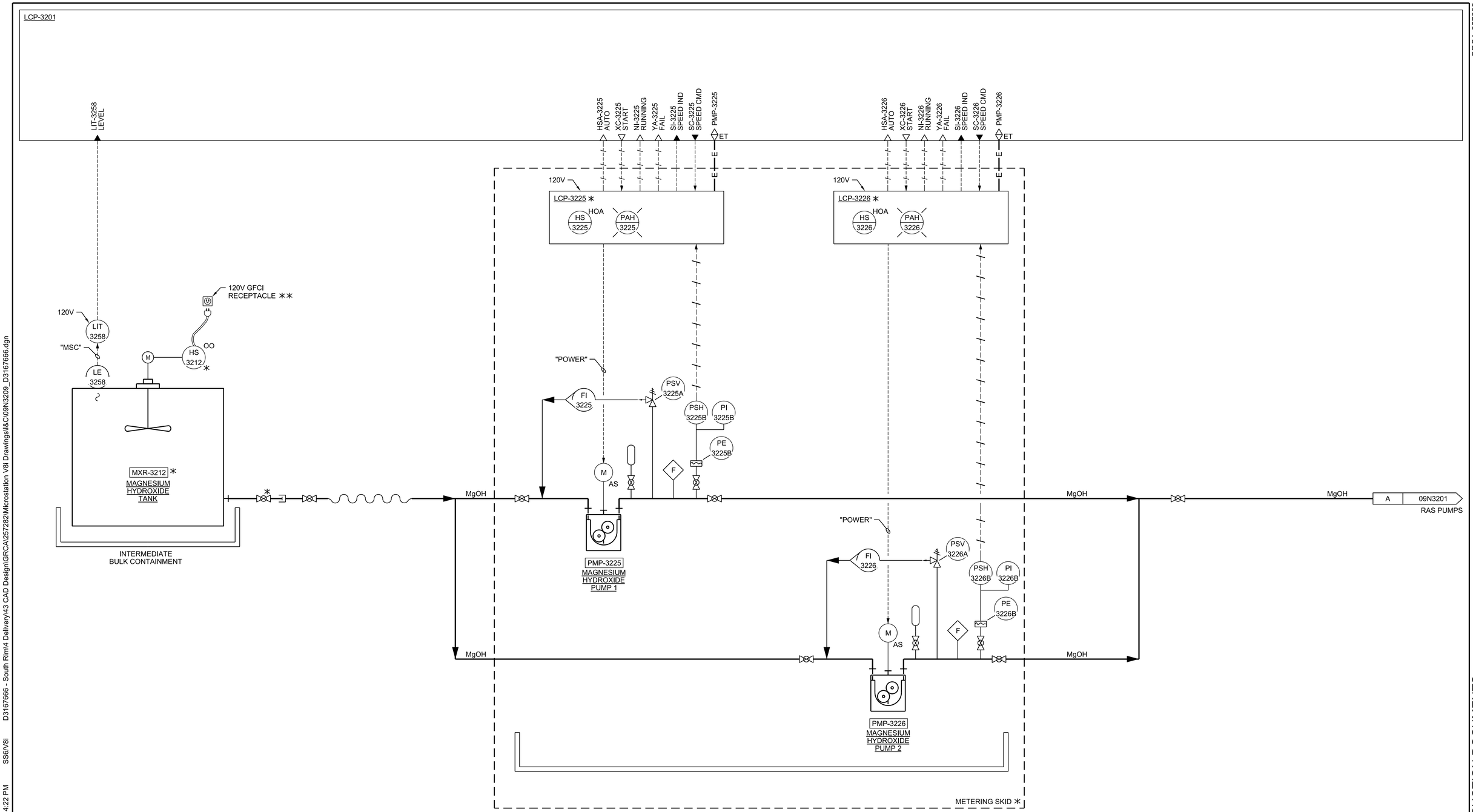

GRCA-257282

100% COMPLETE CONSTRUCTION DOCUMENTS

PLOT DATE: 6/17/2025 PLOT TIME: 4:14:22 PM SS6/V8i D3167666 - South Rim\4 Delivery\43 CAD Design\GRCA\257282\Microstation V8i Drawings\I&C\09N3209_D3167666.dgn

FULL SIZE DRAWINGS = 22"x34"
BAR MEASURES 1" LONG

0" 1"

Registered Professional Engineer - Control Systems
CERTIFICATE NO. 83873
ANDREW WILLIAMS
Date Signed 06-10-2025
ARIZONA, U.S.A.

A/E FIRM	DESIGNED:	SUB SHEET NO.	TITLE OF SHEET	DRAWING NO.
JACOBS GOVERNMENT SERVICES COMPANY GREENWOOD VILLAGE, CO	A WILLIAMS CADD: J BOSS TECH. REVIEW: A ELLIS DATE: 06/2025	09N3209	I&C MAGNESIUM HYDROXIDE PUMPS P&ID GRAND CANYON, SOUTH RIM	NO SCALE 113 / 175376 PMIS/PKG NO. 257282 SHEET 164 OF 401

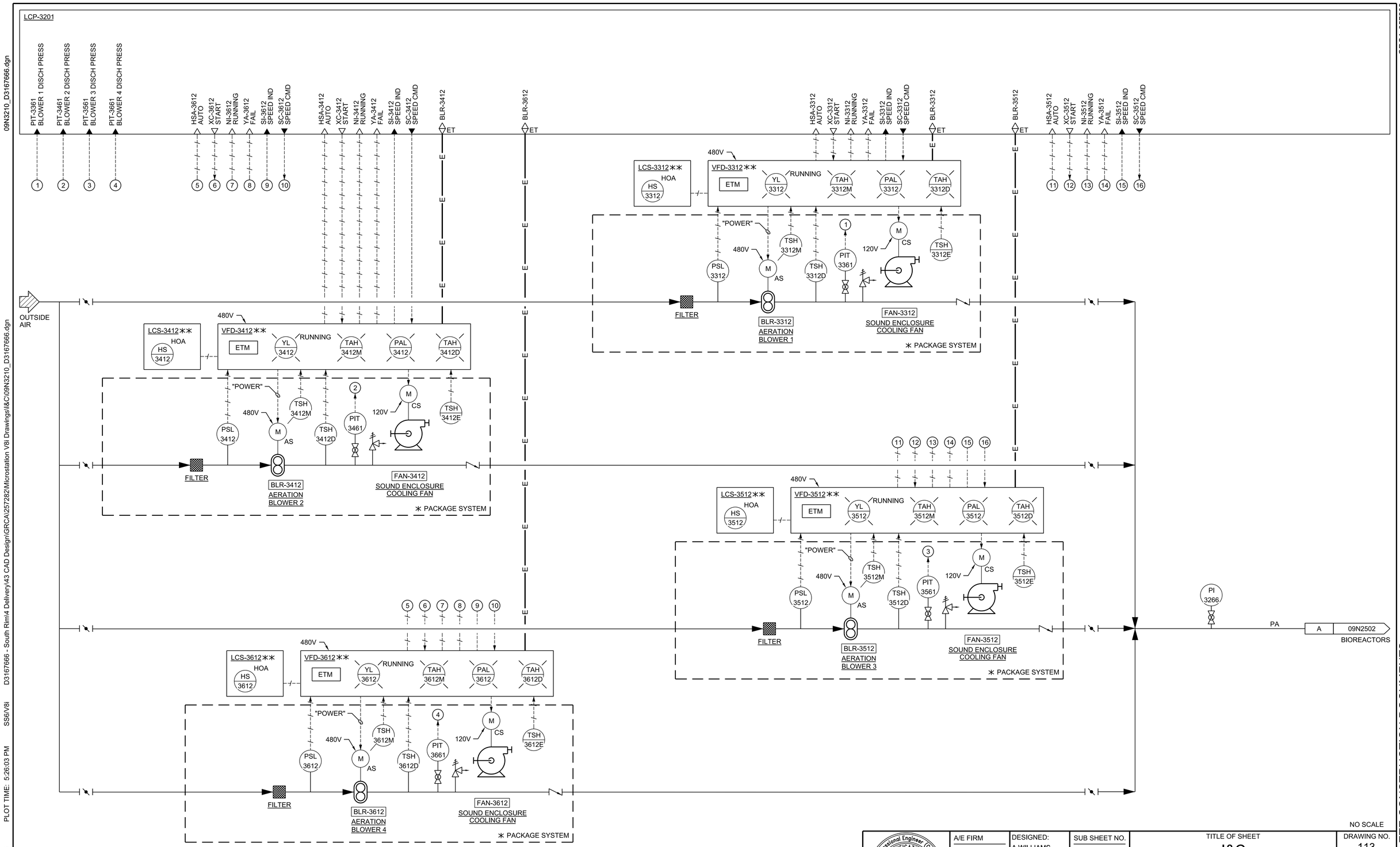

09N3210_D3167666.dgn

D3167666 - South Rim\4 Delivery\43 CAD Design\GRCA\257282\Microstation V8I Drawings\I&C\09N3210_D3167666.dgn

SS6\V8i

PLOT TIME: 5:26:03 PM

PLOT DATE: 6/17/2025

GRCA-257282

100% COMPLETE CONSTRUCTION DOCUMENTS

FULL SIZE DRAWINGS = 22"x34"
BAR MEASURES 1" LONG

0" 1"

Registered Professional Engineer (Control Systems)
CERTIFICATE NO. 83873
ANDREW WILLIAMS
Date Signed 06-30-2025
ARIZONA, U.S.A.

A/E FIRM	DESIGNED:	SUB SHEET NO.	TITLE OF SHEET	DRAWING NO.
JACOBS GOVERNMENT SERVICES COMPANY GREENWOOD VILLAGE, CO	A WILLIAMS CADD: J BOSS TECH. REVIEW: A ELLIS DATE: 06/2025	09N3210	I&C AERATION BLOWERS P&ID GRAND CANYON, SOUTH RIM	113 / 175376 PMIS/PKG NO. 257282 SHEET 165 OF 401

NO SCALE

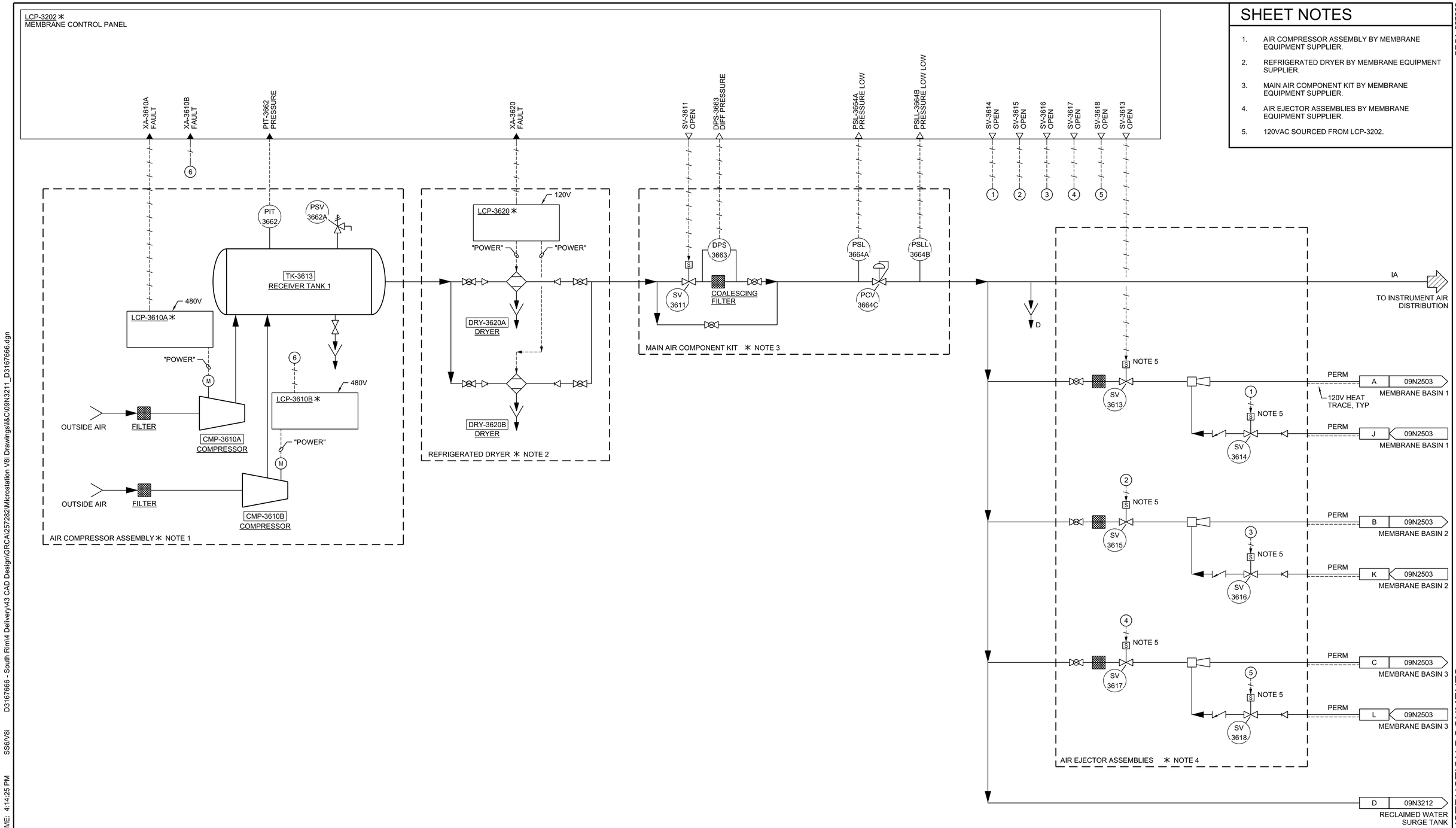

SHEET NOTES

1. AIR COMPRESSOR ASSEMBLY BY MEMBRANE EQUIPMENT SUPPLIER.
2. REFRIGERATED DRYER BY MEMBRANE EQUIPMENT SUPPLIER.
3. MAIN AIR COMPONENT KIT BY MEMBRANE EQUIPMENT SUPPLIER.
4. AIR EJECTOR ASSEMBLIES BY MEMBRANE EQUIPMENT SUPPLIER.
5. 120VAC SOURCED FROM LCP-3202.

GRCA-257282

100% COMPLETE CONSTRUCTION DOCUMENTS

PLOT DATE: 6/17/2025 PLOT TIME: 4:14:25 PM SS6\V8i D3167666 - South Rim\4 Delivery\43 CAD Design\GRCA\257282\Microstation V8i Drawings\I&C\09N3211_D3167666.dgn

FULL SIZE DRAWINGS = 22"x34"
BAR MEASURES 1" LONG
0" 1"

Registered Professional Engineer (Control Systems) CERTIFICATE NO. 83873 ANDREW WILLIAMS Date Signed 06-20-2025 ARIZONA, U.S.A.

A/E FIRM	DESIGNED:	SUB SHEET NO.	TITLE OF SHEET	DRAWING NO.
JACOBS GOVERNMENT SERVICES COMPANY GREENWOOD VILLAGE, CO	A WILLIAMS CADD: J BOSS TECH. REVIEW: A ELLIS DATE: 06/2025	09N3211	I&C MEMBRANE AIR COMPRESSOR P&ID GRAND CANYON, SOUTH RIM	113 175376 PMIS/PKG NO. 257282 SHEET 166 OF 401

NO SCALE

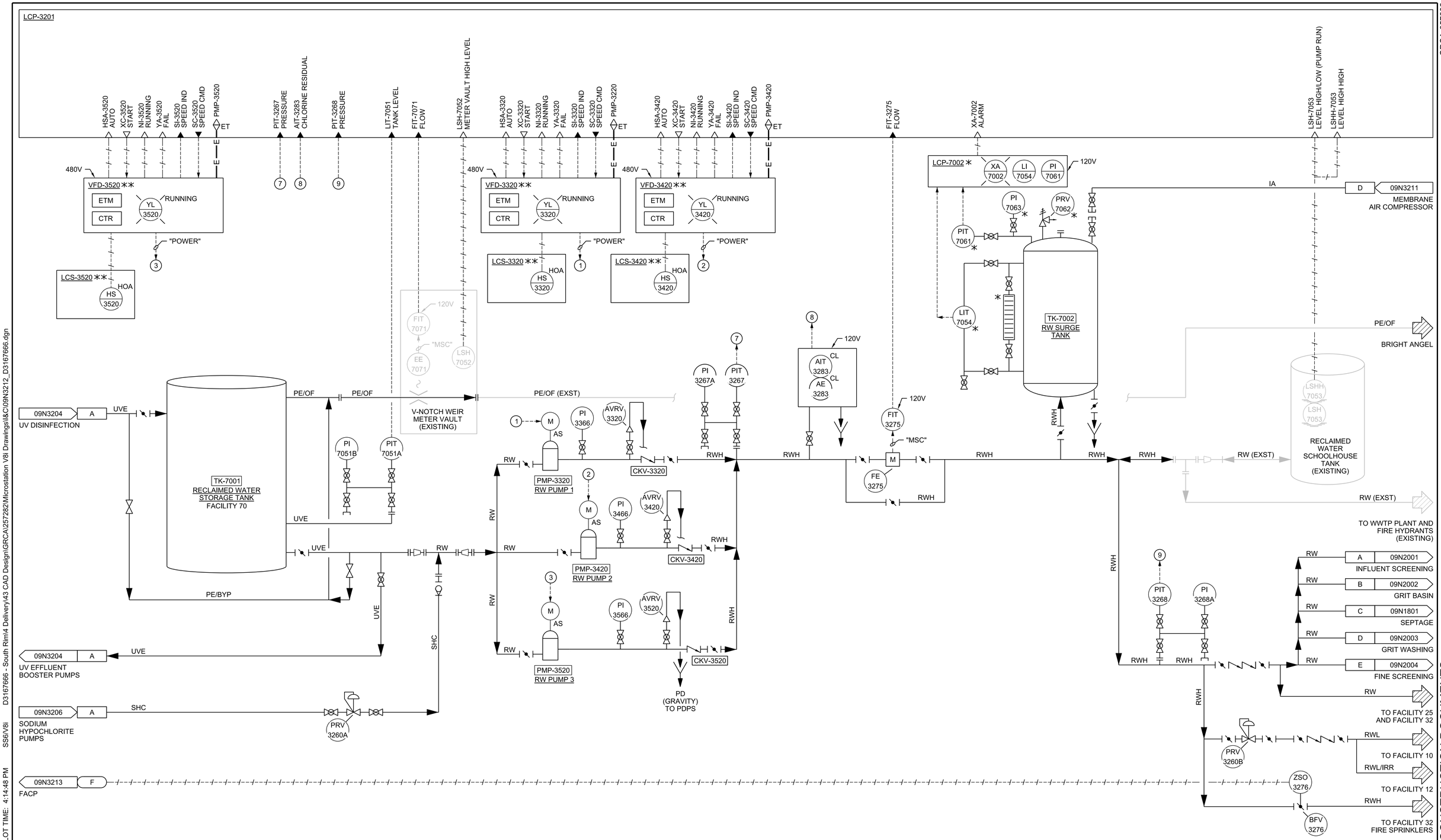

GRCA-257282

100% COMPLETE CONSTRUCTION DOCUMENTS

PLOT DATE: 6/17/2025 PLOT TIME: 4:14:48 PM SS6/V8i D3167666 - South Rim\4 Delivery\43 CAD Design\GRCA\257282\Microstation V8i Drawings\I&C\09N3212_D3167666.dgn

FULL SIZE DRAWINGS = 22"x34"
BAR MEASURES 1" LONG

0" 1"

Registered Professional Engineer (Control Systems) CERTIFICATE NO. 83873 ANDREW WILLIAMS Date Signed 06-17-2025 ARIZONA, U.S.A.

A/E FIRM	DESIGNED:	SUB SHEET NO.	TITLE OF SHEET	DRAWING NO.
JACOBS GOVERNMENT SERVICES COMPANY GREENWOOD VILLAGE, CO	A WILLIAMS CADD: J BOSS TECH. REVIEW: A ELLIS DATE: 06/2025	09N3212	I&C RECLAIMED WATER P&ID GRAND CANYON, SOUTH RIM	113 175376 PMIS/PKG NO. 257282 SHEET 167 OF 401

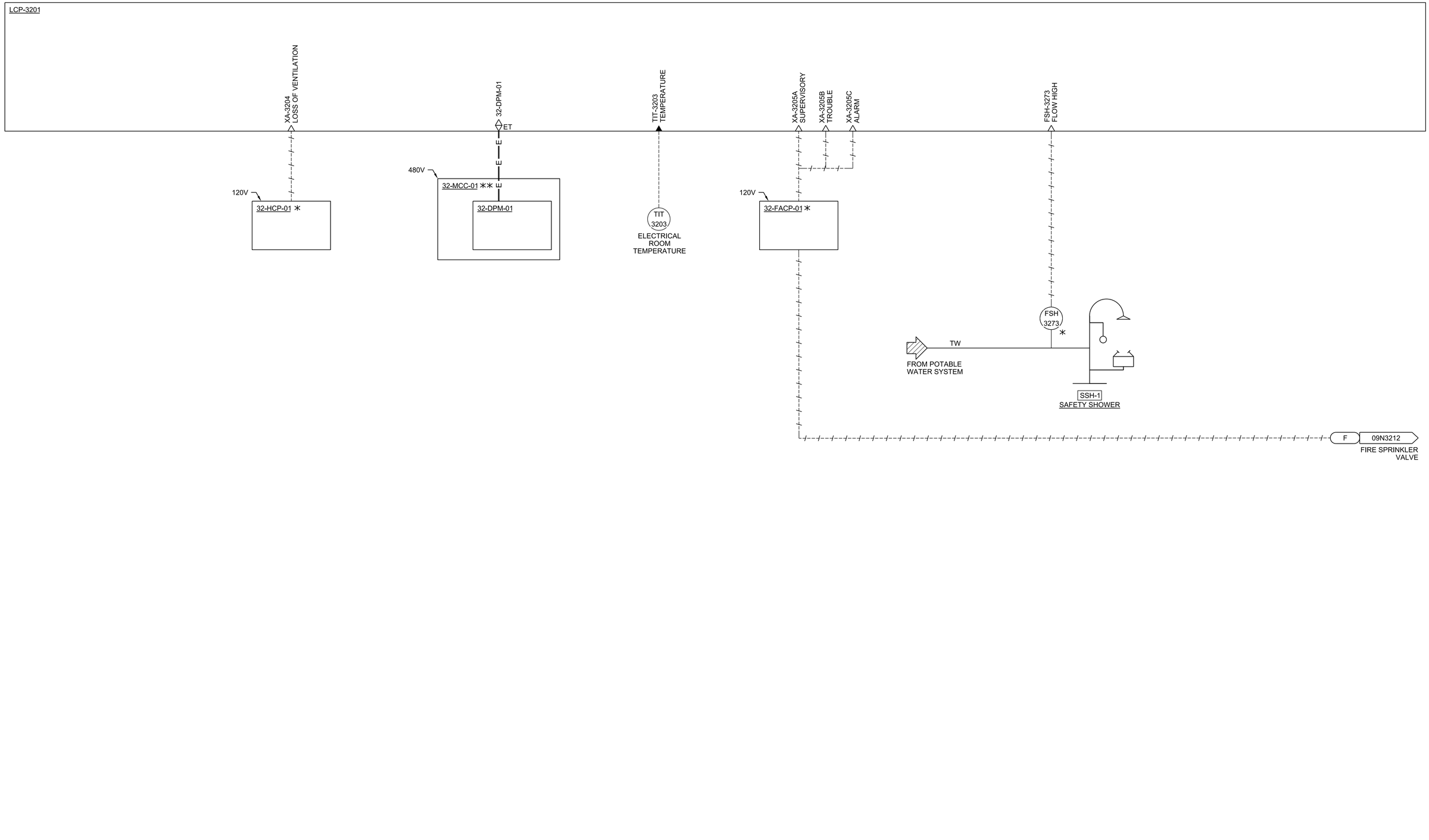

GRCA-257282

PLOT DATE: 6/17/2025 PLOT TIME: 4:14:26 PM SS6/V8I D3167666 - South Rim\4 Delivery\43 CAD Design\GRCA\257282\Microstation V8I Drawings\I&C\09N3213_D3167666.dgn

FULL SIZE DRAWINGS = 22"x34"
BAR MEASURES 1" LONG

0" 1"

Registered Professional Engineer (Control Systems)
CERTIFICATE NO.
83873
ANDREW
WILLIAMS
Date Signed 06-30-2025
ARIZONA, U.S.A.

A/E FIRM JACOBS GOVERNMENT SERVICES COMPANY GREENWOOD VILLAGE, CO	DESIGNED: A WILLIAMS CADD: J BOSS TECH. REVIEW: A ELLIS DATE: 06/2025	SUB SHEET NO. 09N3213	TITLE OF SHEET I&C PROCESS UTILITIES P&ID GRAND CANYON, SOUTH RIM	NO SCALE DRAWING NO. 113 175376 PMIS/PKG NO. 257282 SHEET 168 OF 401

100% COMPLETE CONSTRUCTION DOCUMENTS

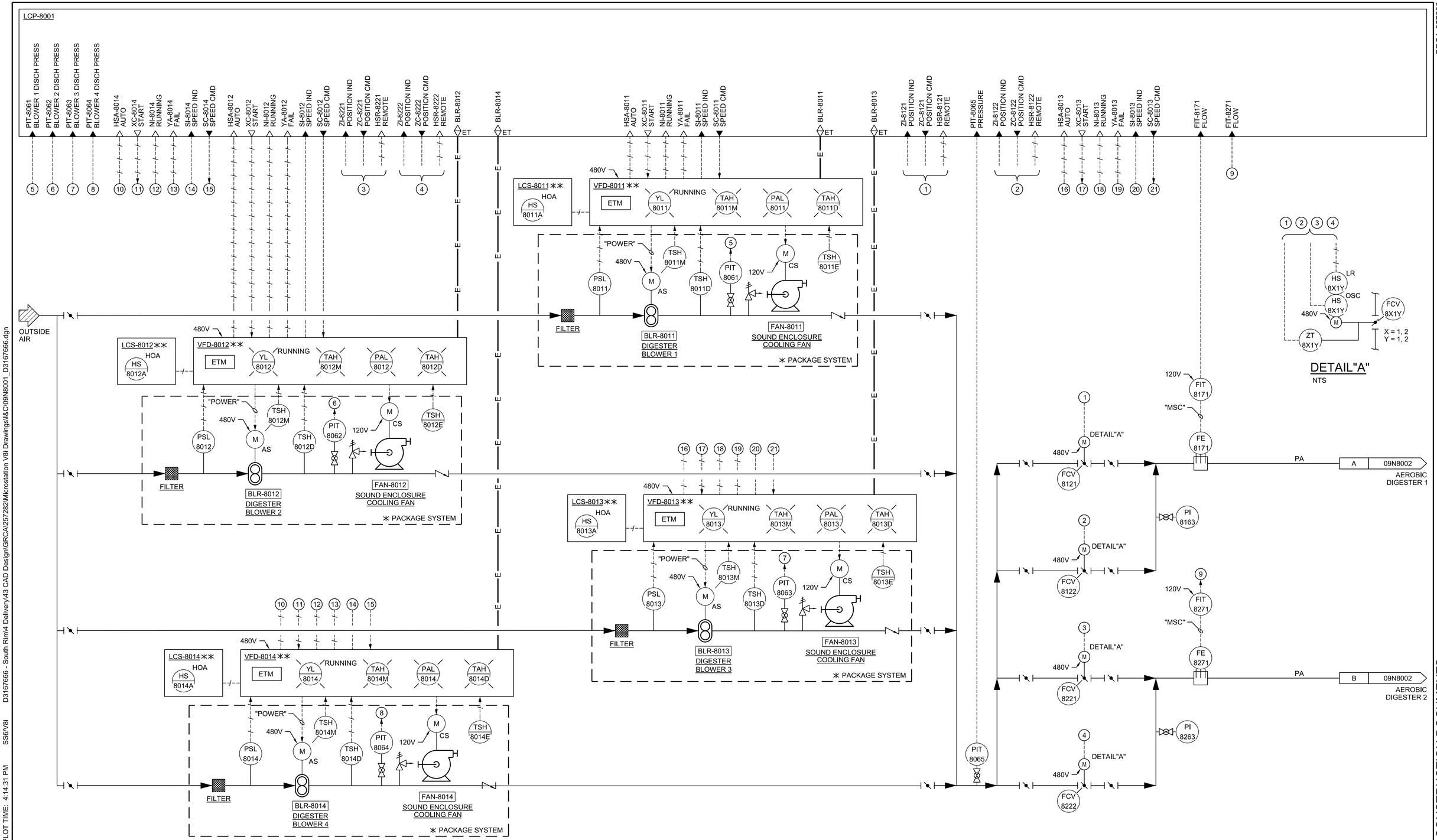

GRCA-257282

PLOT DATE: 6/17/2025 PLOT TIME: 4:14:31 PM SS6/V8I D3167666 - South Rim\4 Delivery\43 CAD Design\GRCA\257282\Microstation V8I Drawings\I&C\09N8001_D3167666.dgn

100% COMPLETE CONSTRUCTION DOCUMENTS

FULL SIZE DRAWINGS = 22"x34"
BAR MEASURES 1" LONG

0" 1"

Registered Professional Engineer (Control Systems) CERTIFICATE NO. 83873 ANDREW WILLIAMS Date Signed 06-26-2025 ARIZONA, U.S.A.

A/E FIRM	DESIGNED:	SUB SHEET NO.	TITLE OF SHEET	DRAWING NO.
JACOBS GOVERNMENT SERVICES COMPANY GREENWOOD VILLAGE, CO	A WILLIAMS CADD: J BOSS TECH. REVIEW: A ELLIS DATE: 06/2025	09N8001	I&C AEROBIC DIGESTER BLOWERS P&ID GRAND CANYON, SOUTH RIM	113 175376 PMIS/PKG NO. 257282 SHEET 169 OF 401

NO SCALE

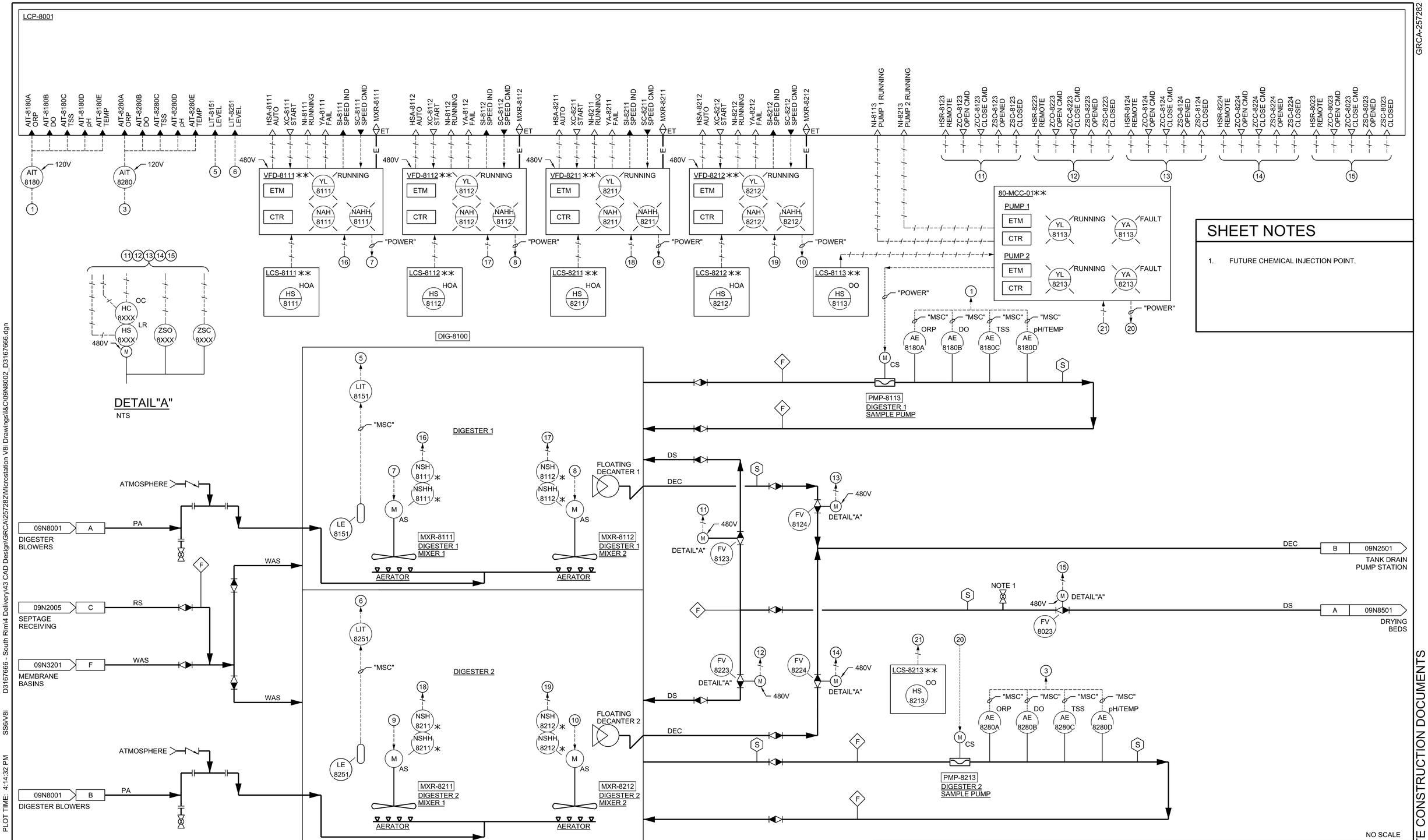

SHEET NOTES

1. FUTURE CHEMICAL INJECTION POINT.

GRCA-257282

100% COMPLETE CONSTRUCTION DOCUMENTS

PLOT DATE: 6/17/2025 PLOT TIME: 4:14:32 PM SS6/V8I D3167666 - South Rim\4 Delivery\43 CAD Design\GRCA\257282\Microstation V8I Drawings\I&C\09N8002_D3167666.dgn

Registered Professional Engineer (Control Systems) CERTIFICATE NO. 83873 ANDREW WILLIAMS Date Signed 06-20-2025 ARIZONA, U.S.A.

A/E FIRM	DESIGNED:	SUB SHEET NO.	TITLE OF SHEET	DRAWING NO.
JACOBS GOVERNMENT SERVICES COMPANY GREENWOOD VILLAGE, CO	A WILLIAMS CADD: J BOSS TECH. REVIEW: A ELLIS DATE: 06/2025	09N8002	I&C DIGESTER SYSTEM P&ID GRAND CANYON, SOUTH RIM	113 175376 PMIS/PKG NO. 257282 SHEET 170 OF 401

NO SCALE

FULL SIZE DRAWINGS = 22"x34"
BAR MEASURES 1" LONG

0" 1"

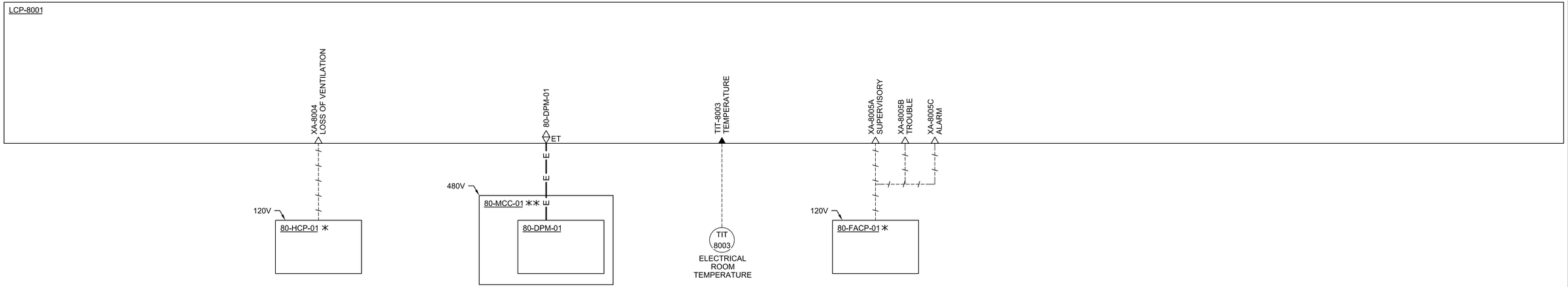

GRCA-257282

PLOT DATE: 6/17/2025 PLOT TIME: 5:22:43 PM SS6/V8I D3167666 - South Rim\4 Delivery\43 CAD Design\GRCA\257282\Microstation V8I Drawings\I&C\09N8003_D3167666.dgn

FULL SIZE DRAWINGS = 22"x34"
BAR MEASURES 1" LONG

0" 1"

Registered Professional Engineer (Control Systems)
CERTIFICATE NO.
83873
ANDREW
WILLIAMS
Date Signed 06-20-2025
ARIZONA, U.S.A.

A/E FIRM JACOBS GOVERNMENT SERVICES COMPANY GREENWOOD VILLAGE, CO	DESIGNED: A WILLIAMS CADD: J BOSS TECH. REVIEW: A ELLIS DATE: 06/2025	SUB SHEET NO. 09N8003	TITLE OF SHEET I&C DIGESTER UTILITIES P&ID GRAND CANYON, SOUTH RIM	NO SCALE DRAWING NO. 113 175376 PMIS/PKG NO. 257282 SHEET 171 OF 401

100% COMPLETE CONSTRUCTION DOCUMENTS

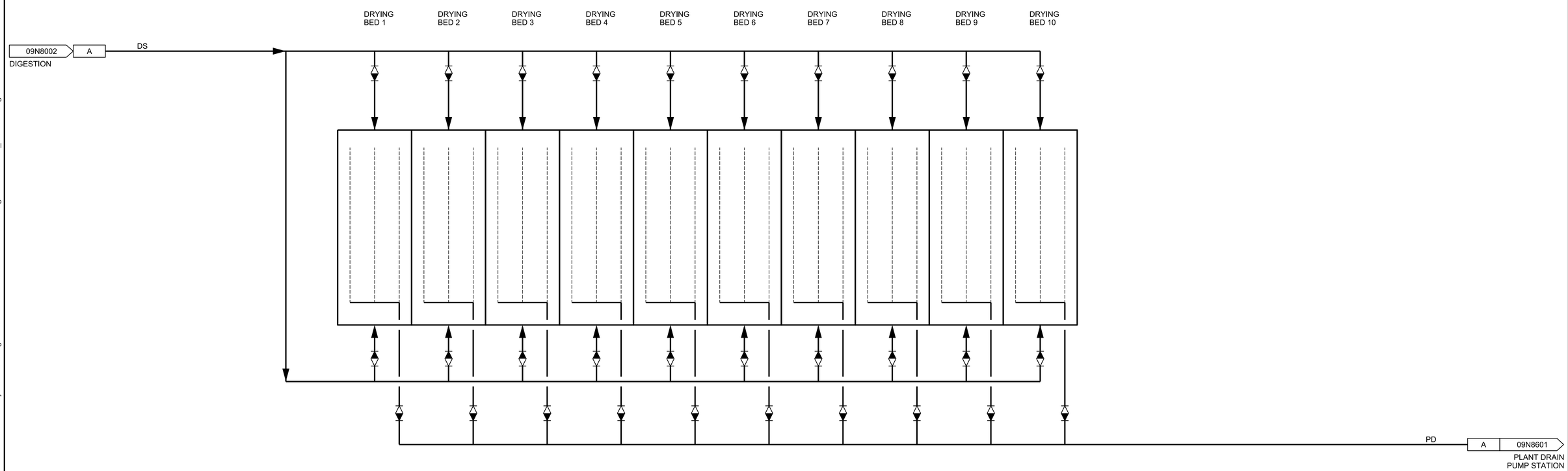

NO SCALE

FULL SIZE DRAWINGS = 22"x34"
BAR MEASURES 1" LONG

0" 1"

Registered Professional Engineer (Control Systems)
CERTIFICATE NO. 83873
ANDREW WILLIAMS
Date Signed 06-20-2025
ARIZONA, U.S.A.

A/E FIRM	DESIGNED:	SUB SHEET NO.	TITLE OF SHEET	DRAWING NO.
JACOBS GOVERNMENT SERVICES COMPANY GREENWOOD VILLAGE, CO	A WILLIAMS CADD: J BOSS TECH. REVIEW: A ELLIS DATE: 06/2025	09N8501	I&C DRYING BED P&ID GRAND CANYON, SOUTH RIM	113 175376 PMIS/PKG NO. 257282 SHEET 172 OF 401

100% COMPLETE CONSTRUCTION DOCUMENTS

GRCA-257282

PLOT DATE: 6/17/2025 PLOT TIME: 4:14:33 PM SS6/V8i D3167666 - South Rim\4 Delivery\43 CAD Design\GRCA\257282\Microstation V8i Drawings\I&C\09N8501_D3167666.dgn

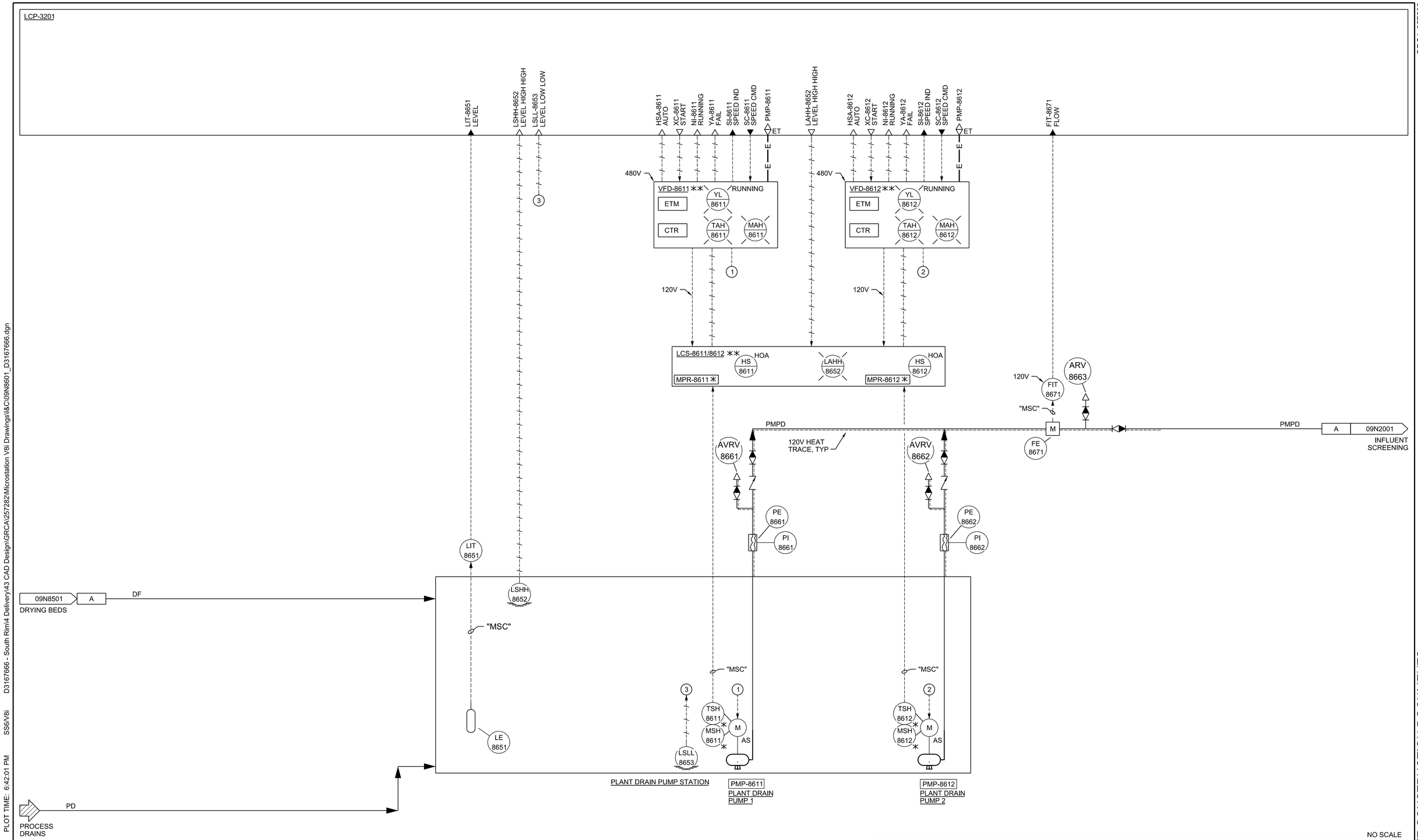

GRCA-257282

PLOT DATE: 06\17\2025 PLOT TIME: 6:42:01 PM SS6/V8i D3167666 - South Rim\4 Delivery\43 CAD Design\GRCA\257282\Microstation V8i Drawings\I&C\09N8601_D3167666.dgn

FULL SIZE DRAWINGS = 22"x34"
BAR MEASURES 1" LONG

0" 1"

Registered Professional Engineer (Control Systems)
CERTIFICATE NO. 83873
ANDREW WILLIAMS
Date Signed 06-18-2025
ARIZONA, U.S.A.

A/E FIRM	DESIGNED:	SUB SHEET NO.	TITLE OF SHEET	DRAWING NO.
JACOBS GOVERNMENT SERVICES COMPANY GREENWOOD VILLAGE, CO	A WILLIAMS CADD: J BOSS TECH. REVIEW: A ELLIS DATE: 06/2025	09N8601	I&C PLANT DRAIN PUMP STATION P&ID GRAND CANYON, SOUTH RIM	113 175376 PMIS/PKG NO. 257282 SHEET 173 OF 401

NO SCALE

100% COMPLETE CONSTRUCTION DOCUMENTS

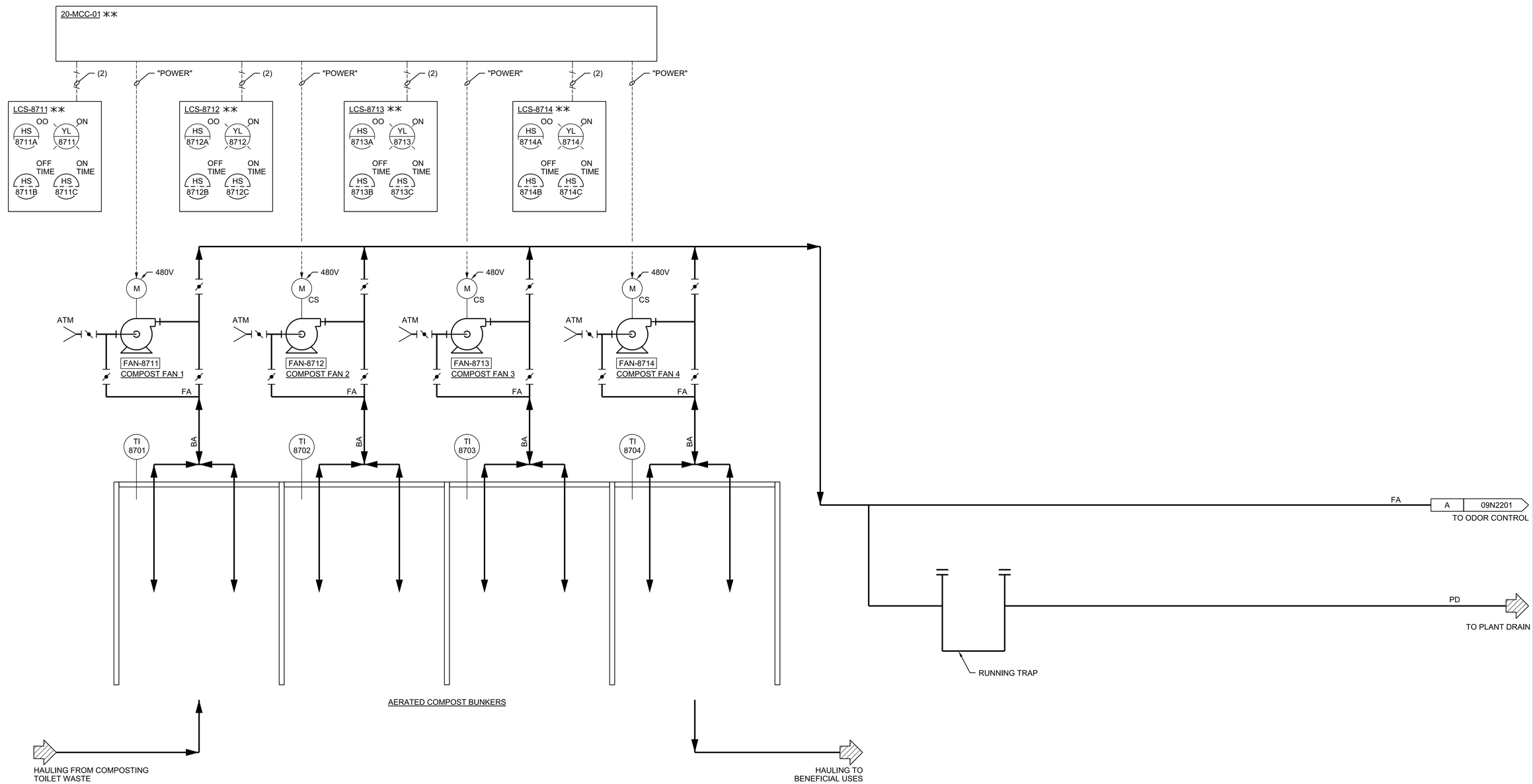

FULL SIZE DRAWINGS = 22"x34"
BAR MEASURES 1" LONG

0" 1"

Registered Professional Engineer (Control Systems)
CERTIFICATE NO. 83873
ANDREW WILLIAMS
Date Signed 06-25-2025
ARIZONA, U.S.A.

A/E FIRM	DESIGNED:	SUB SHEET NO.	TITLE OF SHEET	DRAWING NO.
JACOBS GOVERNMENT SERVICES COMPANY GREENWOOD VILLAGE, CO	A WILLIAMS CADD: J BOSS TECH. REVIEW: A ELLIS DATE: 06/2025	09N8701	I&C AERATED COMPOST P&ID GRAND CANYON, SOUTH RIM	113 / 175376 PMIS/PKG NO. 257282 SHEET 174 OF 401

NO SCALE

100% COMPLETE CONSTRUCTION DOCUMENTS

GRCA-257282

PLOT DATE: 6/17/2025 PLOT TIME: 4:14:09 PM SS6/V8i D3167666 - South Rim\4 Delivery\43 CAD Design\GRCA\257282\Microstation V8i Drawings\I&C\09N8701_D3167666.dgn

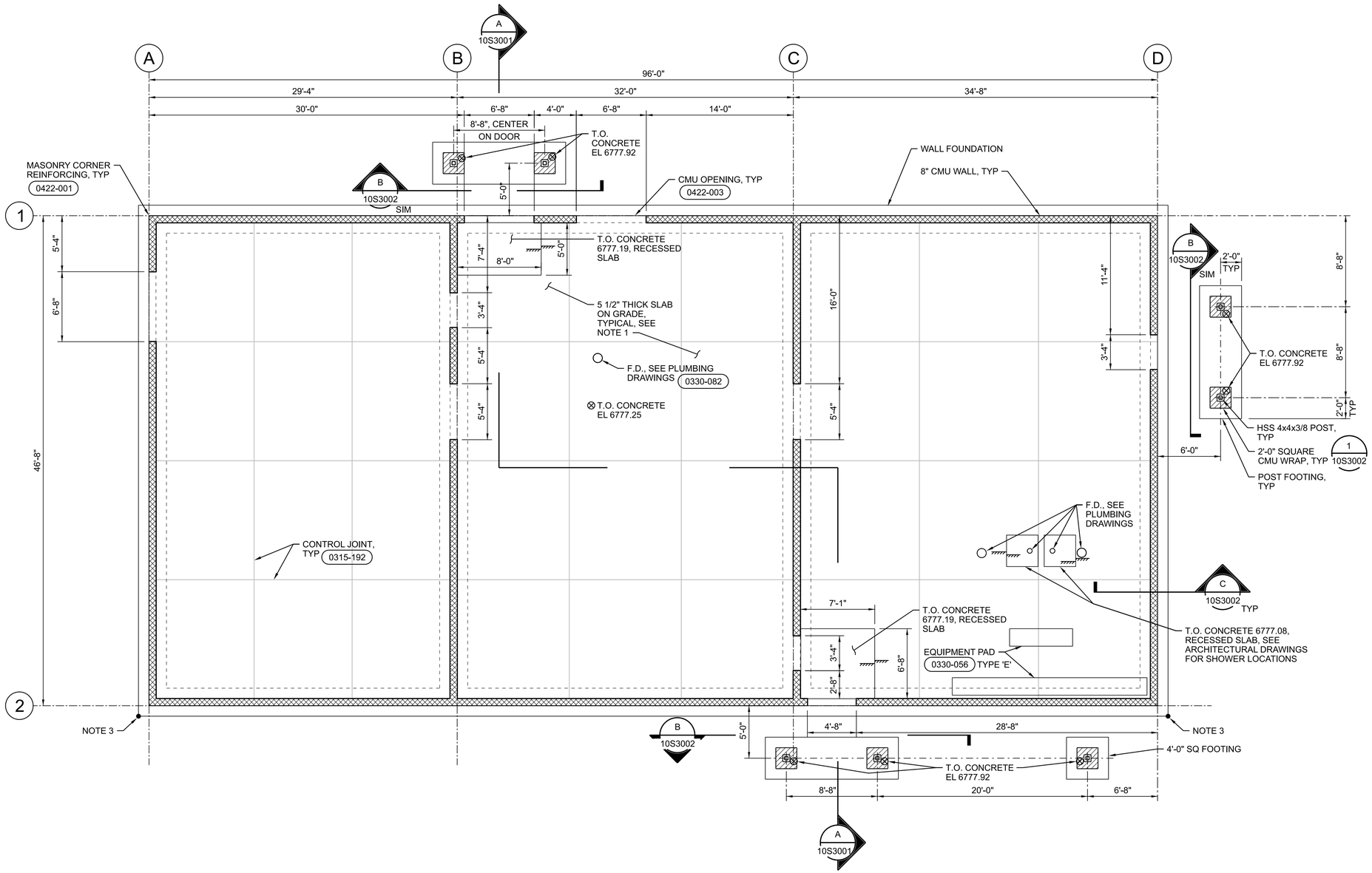

PLAN

3/16"=1'-0"

N

GENERAL SHEET NOTES

A. FOR GENERAL STRUCTURAL NOTES, SEE DRAWINGS 01S0001, 01S0002, AND 01S0003.

B. SEE SPECIFICATION 06 17 53 SHOP-FABRICATED WOOD TRUSSES FOR WOOD CONSTRUCTION CONNECTOR REQUIREMENTS AS NOTED IN DETAILS.

SHEET NOTES

1. REINFORCE SLAB-ON-GRADE WITH #4@12 EW, WITH 1 1/2" CLEAR COVER FROM TOP SURFACE.
2. FOR CMU WALL PIERS AND WALL COLUMNS, SEE DETAILS 0422-005 AND 0422-006.
3. FACILITY LOCATION CONTROL POINT, SEE CIVIL DRAWING 06C2002.

0 4 8 16
3/16"=1'-0"

FULL SIZE DRAWINGS = 22"x34"
BAR MEASURES 1" LONG
0" 1"

Professional Engineer Wayne W. Kohler 81476 WAYNE W. KOHLER Date Signed 6/20/25 ARIZONA U.S.A.

A/E FIRM	DESIGNED:	SUB SHEET NO.	TITLE OF SHEET	DRAWING NO.
JACOBS GOVERNMENT SERVICES COMPANY GREENWOOD VILLAGE, CO	W KOHLER CADD: B CLEGG TECH. REVIEW: A FIRTH DATE: 06/2025	10S1030	ADMINISTRATION BUILDING STRUCTURAL FOUNDATION/FLOOR PLAN GRAND CANYON, SOUTH RIM	113 / 175376 PMIS/PKG NO. 257282 SHEET 175 OF 401

100% COMPLETE CONSTRUCTION DOCUMENTS

GRCA-257282

PLOT DATE: 16-JUN-2025 PLOT TIME: 14:36 SS6/V8I D3167666 - South Rim\4 Delivery\43 CAD Design\GRCA\257282\Microstation V8I Drawings\STRUC\10S1030_D3167666.dgn

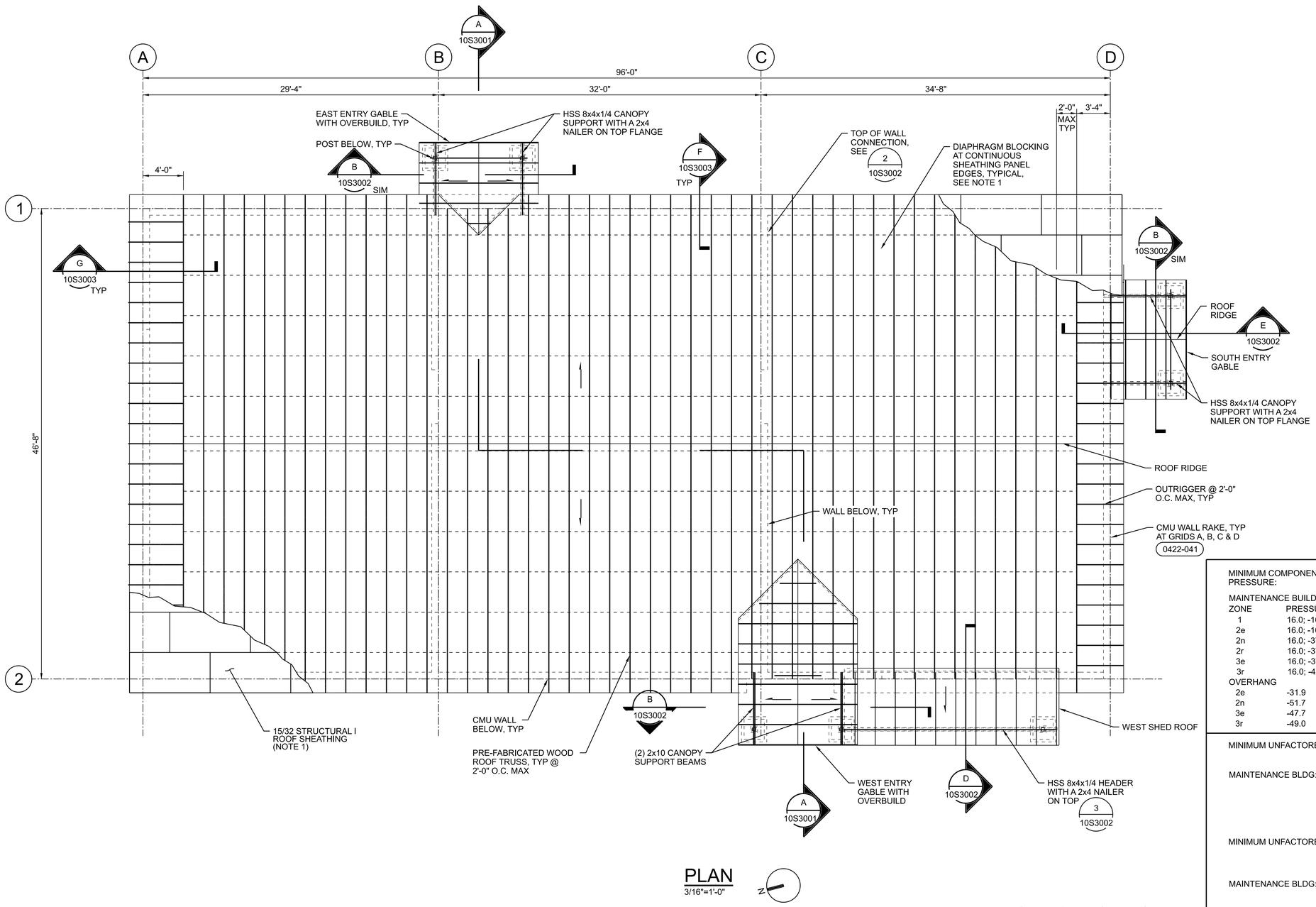

PLAN

3/16"=1'-0"

0 4 8 16

3/16"=1'-0"

GENERAL SHEET NOTES

A. FOR GENERAL STRUCTURAL NOTES, SEE DRAWINGS 01S0001, 01S0002, AND 01S0003.

B. SEE SPECIFICATION 06 17 53 SHOP-FABRICATED WOOD TRUSSES FOR WOOD CONSTRUCTION CONNECTOR REQUIREMENTS AS NOTED IN DETAILS.

SHEET NOTES

1. ROOF SHEATHING PANELS SHALL BE STAGGERED AS SHOWN. SHEATHING CONNECTIONS SHALL CONSIST OF 10d NAILS WITH 6" SPACING AT DIAPHRAGM BOUNDARIES, AT CONTINUOUS PANEL EDGES, AND AT ALL PANEL EDGES. BLOCKING AT CONTINUOUS PANEL EDGES IS REQUIRED.

MINIMUM COMPONENTS AND CLADDING STRENGTH LEVEL WIND DESIGN PRESSURE:

MAINTENANCE BUILDING:

ZONE	PRESSURE (PSF)
1	16.0; -16.0
2e	16.0; -16.0
2n	16.0; -37.3
2r	16.0; -37.3
3e	16.0; -37.3
3r	16.0; -42.2
OVERHANG	
2e	-31.9
2n	-51.7
3e	-47.7
3r	-49.0

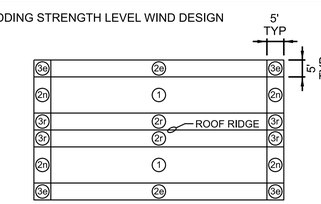

ROOF ZONE

MINIMUM UNFACTORED BALANCED SNOW LOAD DIAGRAM

MAINTENANCE BLDG:

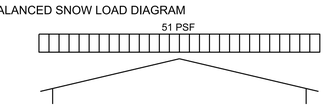

MINIMUM UNFACTORED UNBALANCED SNOW LOAD DIAGRAM

MAINTENANCE BLDG:

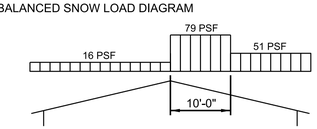

FULL SIZE DRAWINGS = 22"x34"
BAR MEASURES 1" LONG

0" 1"

Wayne W. Kohler 81476 WAYNE W. KOHLER ARIZONA U.S.A.	A/E FIRM: JACOBS GOVERNMENT SERVICES COMPANY, GREENWOOD VILLAGE, CO	DESIGNED: W KOHLER CADD: B CLEGG TECH. REVIEW: A FIRTH DATE: 06/2025	SUB SHEET NO. 10S1040	TITLE OF SHEET: ADMINISTRATION BUILDING STRUCTURAL ROOF PLAN GRAND CANYON, SOUTH RIM

DRAWING NO. 113 175376

PMIS/PKG NO. 257282

SHEET 176 OF 401

100% COMPLETE CONSTRUCTION DOCUMENTS

GRCA-257282

PLOT DATE: 16-JUN-2025 PLOT TIME: 14:34 SS6/V8i D3167666 - South Rim\4 Delivery\43 CAD Design\GRCA\257282\Microstation V8i Drawings\STRUC\10S1040_D3167666.dgn

SHEET NOTES

1. BEDROCK IS LOCATED NEAR THE EXISTING GROUND SURFACE. SEE GEOTECHNICAL REPORT FOR ADDITIONAL INFORMATION.
2. TYPICAL ROOF TRUSS OVERHANG TO BE INTERRUPTED AT EAST AND WEST CANOPIES. SEE SECTION F/10S3003 FOR TYPICAL ROOF OVERHANG DETAIL.

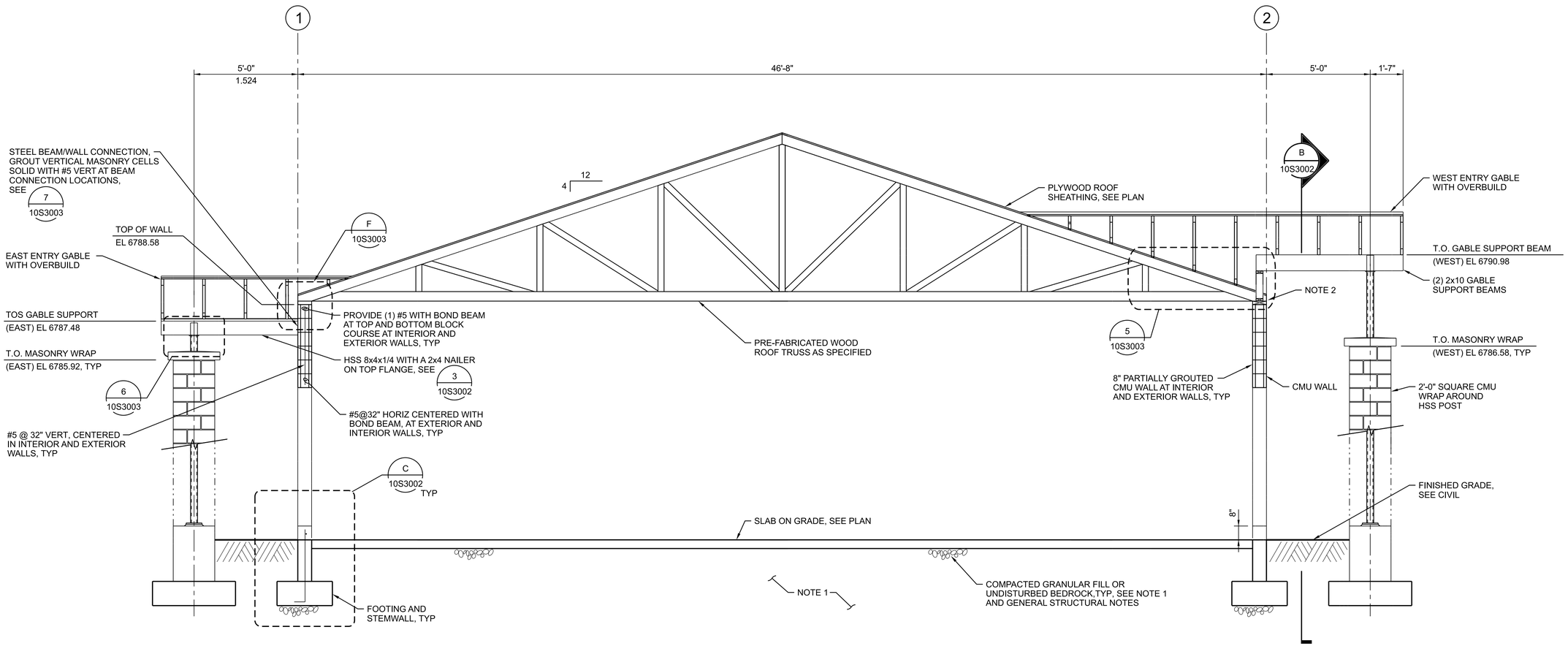

A SECTION
3/8"=1'-0"
10S1030
10S1040

0 2 4 6
3/8"=1'-0"

FULL SIZE DRAWINGS = 22"x34"
BAR MEASURES 1" LONG
0" 1"

Registered Professional Engineer (Civil) CERTIFICATE NO. 81476 WAYNE W. KOHLER Date Signed 6/20/25 ARIZONA U.S.A.

A/E FIRM	DESIGNED:	SUB SHEET NO.	TITLE OF SHEET	DRAWING NO.
JACOBS GOVERNMENT SERVICES COMPANY GREENWOOD VILLAGE, CO	W KOHLER CADD: B CLEGG TECH. REVIEW: A FIRTH DATE: 06/2025	10S3001	ADMINISTRATION BUILDING STRUCTURAL SECTION GRAND CANYON, SOUTH RIM	113 / 175376 PMIS/PKG NO. 257282 SHEET 177 OF 401

100% COMPLETE CONSTRUCTION DOCUMENTS

GRCA-257282

PLOT DATE: 16-JUN-2025 PLOT TIME: 14:34 SS6\V8i D3167666 - South Rim\4 Delivery\43 CAD Design\GRCA\257282\Microstation V8i Drawings\STRUC\10S3001_D3167666.dgn

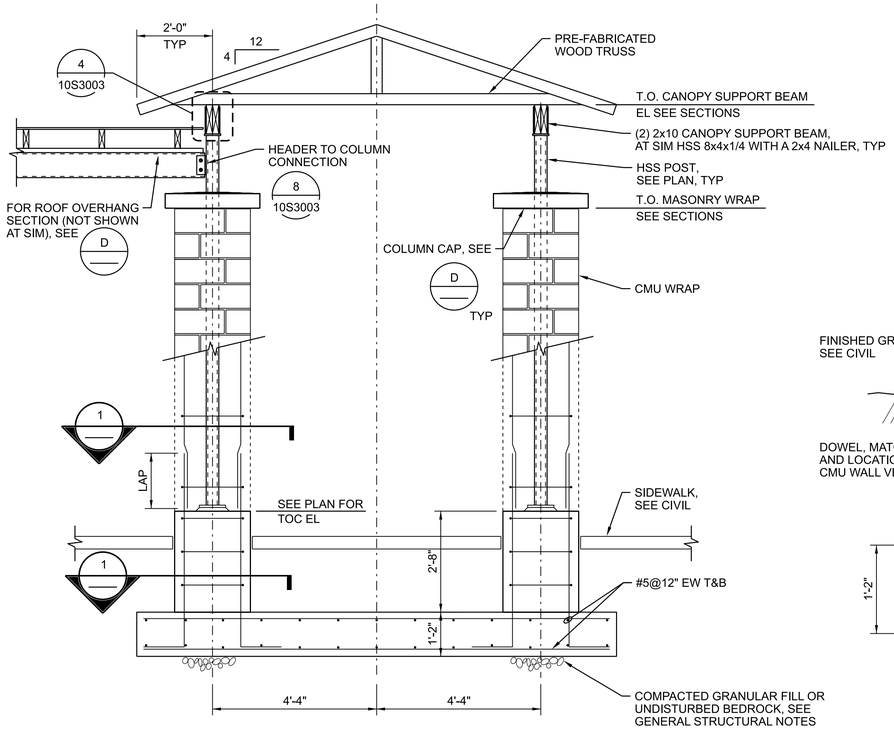

B TYPICAL ENTRY GABLE SECTION

10S1030
10S1040
10S3001

1/2"=1'-0"

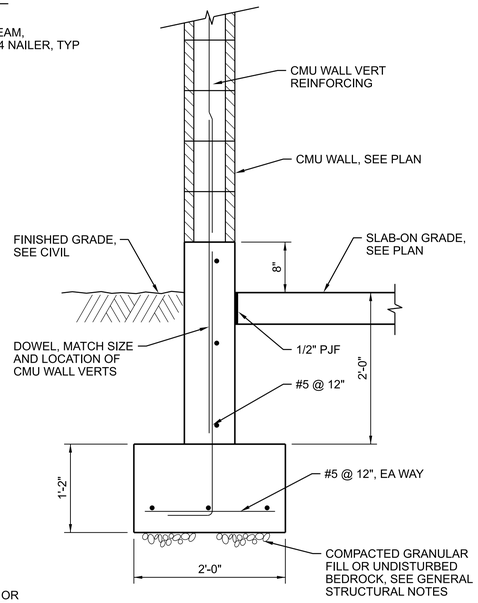

C WALL FOOTING

10S1030
10S3001

1"=1'-0"

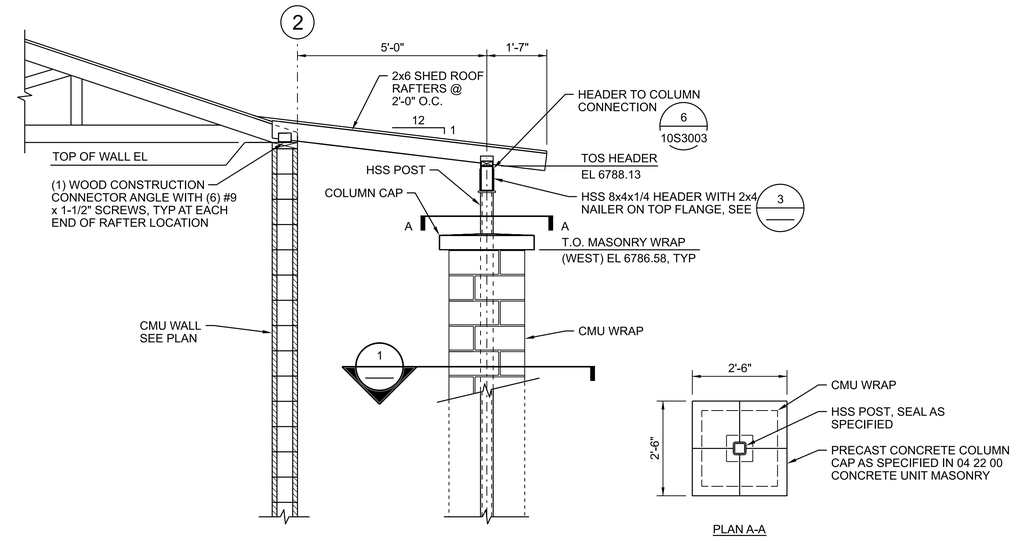

D WEST SHED ROOF SECTION

10S1040

1/2"=1'-0"

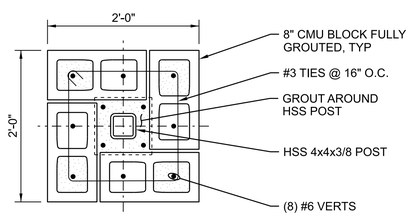

MASONRY SECTION

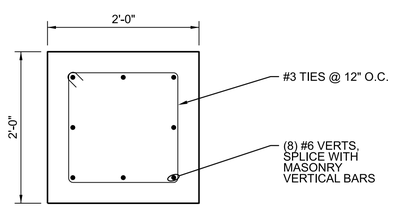

CONCRETE SECTION

1 COLUMN SECTION

10S1030

1"=1'-0"

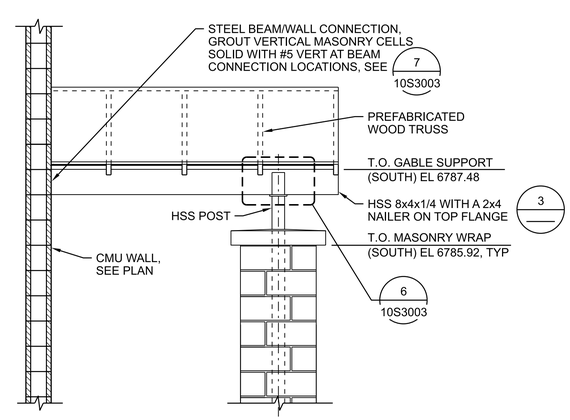

E SOUTH ENTRY GABLE SECTION

10S1040

1"=1'-0"

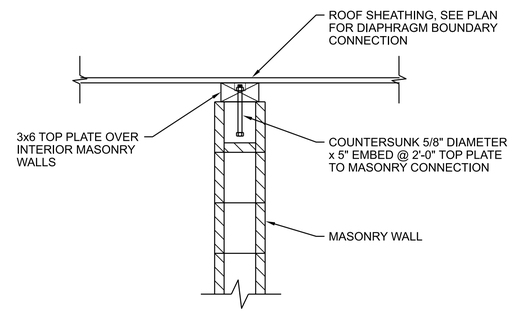

INTERIOR WALL CONNECTION DETAIL

2

10S1040

1"=1'-0"

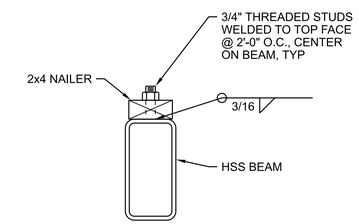

3 WOOD NAILER DETAIL

NTS - NO SCALE

10S3001
10S3003

FULL SIZE DRAWINGS = 22"x34"
BAR MEASURES 1" LONG

0" 1"

Registered Professional Engineer (Structural) CERTIFICATE NO. 8 14 70 WAYNE W. KOHLER ARIZONA U.S.A. Date Signed 8/20/25	A/E FIRM JACOBS GOVERNMENT SERVICES COMPANY GREENWOOD VILLAGE, CO	DESIGNED: W KOHLER CADD: B CLEGG TECH. REVIEW: A FIRTH DATE: 06/2025	SUB SHEET NO. 10S3002	TITLE OF SHEET ADMINISTRATION BUILDING STRUCTURAL SECTIONS GRAND CANYON, SOUTH RIM

DRAWING NO. 113 175376
PMIS/PKG NO. 257282
SHEET 178 OF 401

100% COMPLETE CONSTRUCTION DOCUMENTS

GRCA-257282

PLOT DATE: 16-JUN-2025 PLOT TIME: 14:41 SS6/V8i D3167666 - South Rim\4 Delivery\43 CAD Design\GRCA\257282\Microstation V8i Drawings\STRUC\10S3002_D3167666.dgn

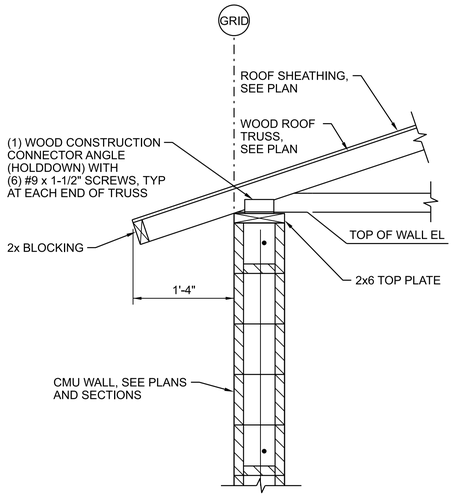

@ TRUSS

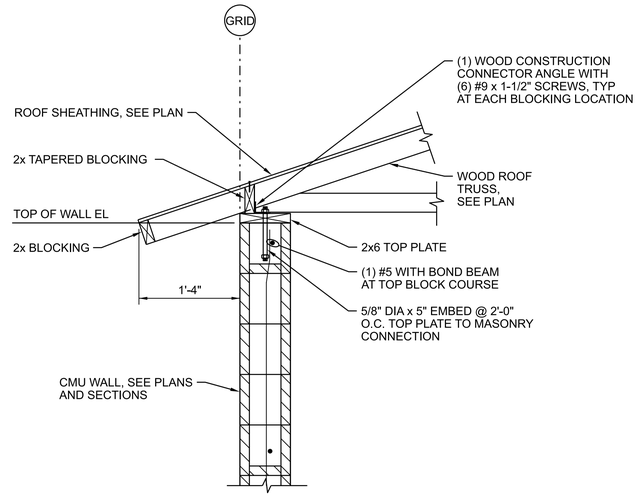

BETWEEN TRUSSES

F WALL TRUSS CONNECTION

1"=1'-0" 0 1 2 3 1"=1'-0"

10S1040

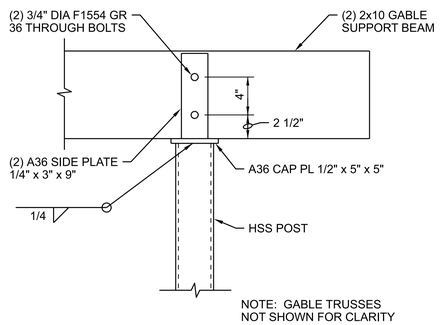

ELEVATION

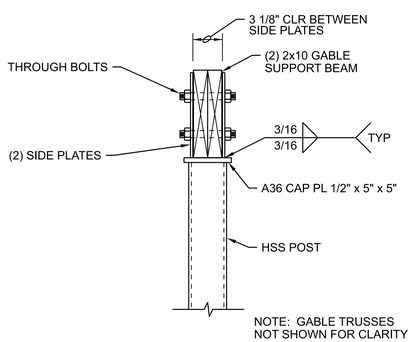

SECTION

4 CONNECTION DETAIL

NTS - NO SCALE

10S3002

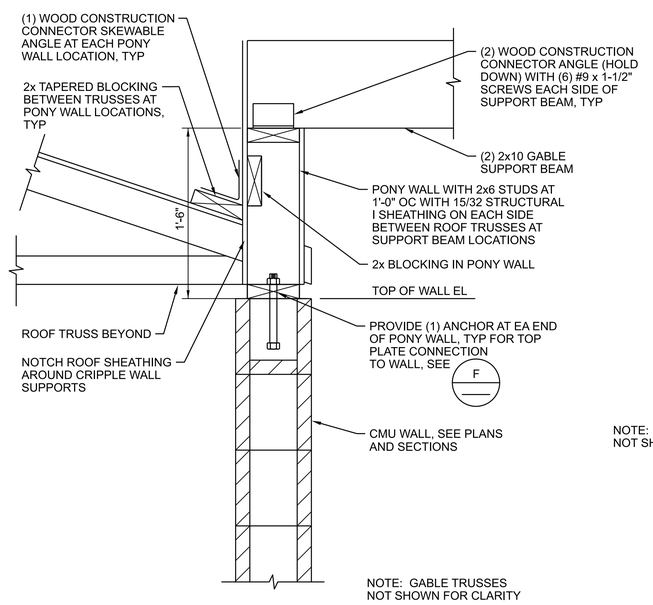

5 SOUTH GABLE SUPPORT BEAM CONNECTION DETAIL (2 LOCATIONS)

NTS NO SCALE

10S3001

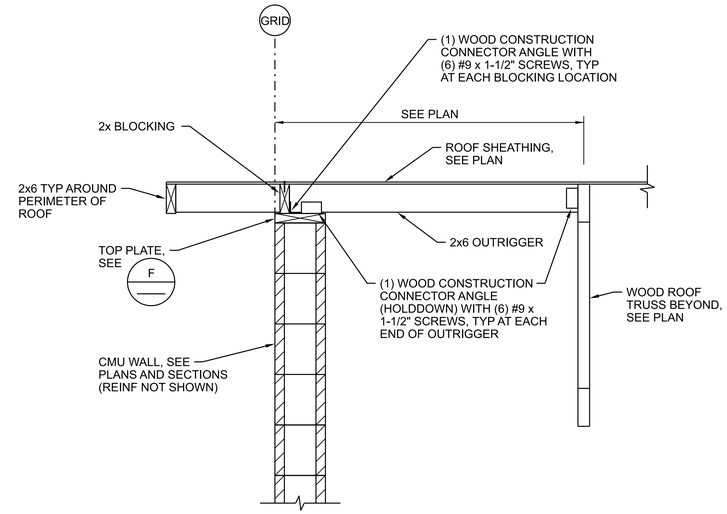

G OVERHANG CONNECTION

1"=1'-0" 0 1 2 3 1"=1'-0"

10S1040

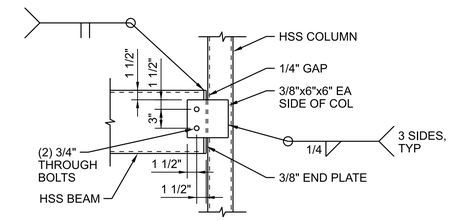

8 CONNECTION DETAIL

1"=1'-0" 0 1 2 3 1"=1'-0"

10S3002

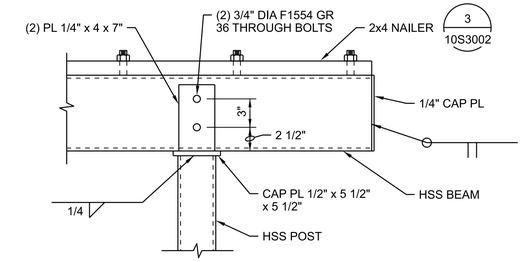

ELEVATION

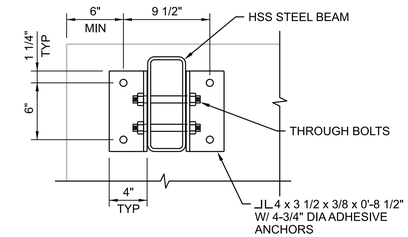

SECTION

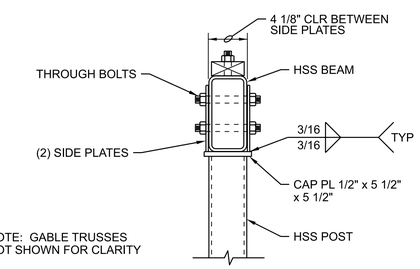

SECTION

6 CONNECTION DETAIL

NTS - NO SCALE

10S3001
10S3002

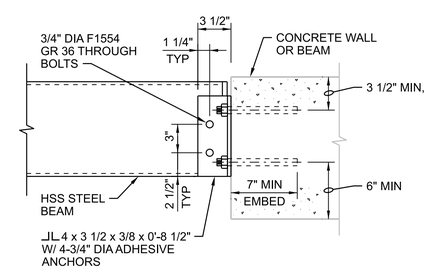

ELEVATION

7 CONNECTION DETAIL

NTS - NO SCALE

10S3001
10S3002

FULL SIZE DRAWINGS = 22"x34"
BAR MEASURES 1" LONG
0" 1"

Registered Professional Engineer (Civil) CERTIFICATE NO. 81476 WAYNE W. KOHLER Date Signed 6/26/25 ARIZONA U.S.A.	A/E FIRM JACOBS GOVERNMENT SERVICES COMPANY GREENWOOD VILLAGE, CO	DESIGNED: W KOHLER CADD: B CLEGG TECH. REVIEW: A FIRTH DATE: 06/2025	SUB SHEET NO. 10S3003	TITLE OF SHEET ADMINISTRATION BUILDING STRUCTURAL SECTIONS GRAND CANYON, SOUTH RIM

DRAWING NO. 113 / 175376
PMIS/PKG NO. 257282
SHEET 179 OF 401

GRCA-257282

100% COMPLETE CONSTRUCTION DOCUMENTS

PLOT DATE: 16-JUN-2025 PLOT TIME: 14:34 SS6/V8I D3167666 - South Rim\4 Delivery\43 CAD Design\GRCA\257282\Microstation V8I Drawings\STRUC\10S3003_D3167666.dgn

GENERAL SHEET NOTES

A. FOR GENERAL ARCHITECTURAL NOTES, MATERIAL SYMBOLS, LEGEND, ABBREVIATIONS AND WALL TYPES, SEE DRAWING 01A0001.

B. FOR BUILDING CODE DATA AND LIFE SAFETY PLAN, SEE DRAWING 01A0010.

C. FURNITURE SHOWN FOR SPACE PLANNING PURPOSE ONLY AND NOT INCLUDED IN CONTRACT DOCUMENTS.

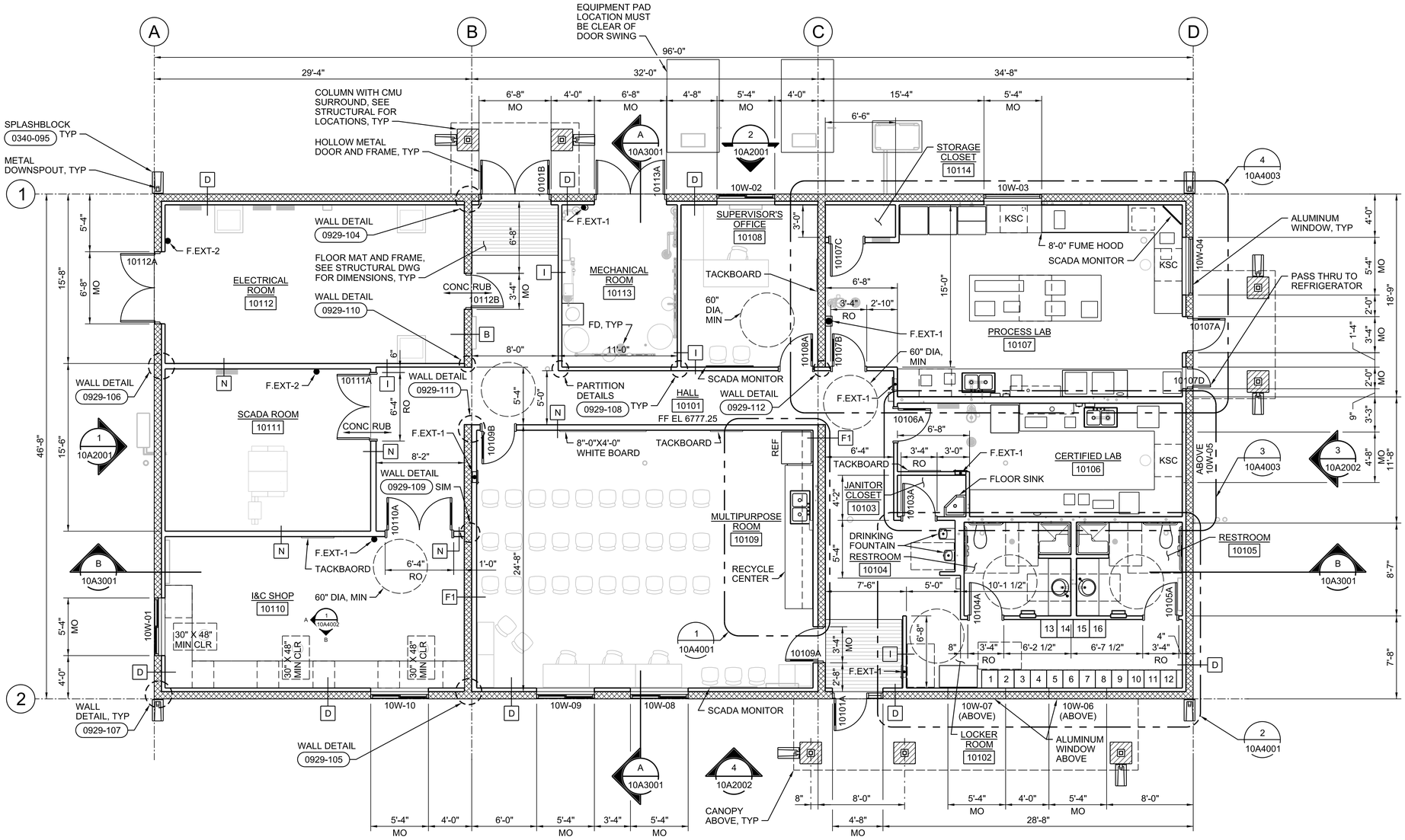

PLAN
3/16"=1'-0"

0 4 8 16
3/16"=1'-0"

FULL SIZE DRAWINGS = 22"x34"
BAR MEASURES 1" LONG

0" 1"

REGISTERED ARCHITECT
CERTIFICATE NO. 80685
MORGAN SHOEMAKER
Date Signed 06-30-25
ARIZONA, U.S.A.
Expires 06-30-2027

A/E FIRM	DESIGNED:	SUB SHEET NO.	TITLE OF SHEET	DRAWING NO.
JACOBS GOVERNMENT SERVICES COMPANY GREENWOOD VILLAGE, CO	M SHOEMAKER CADD: M COLLINS TECH. REVIEW: G KIRSTEN DATE: 06/2025	10A1030	ADMINISTRATION BUILDING ARCHITECTURAL FLOOR PLAN GRAND CANYON, SOUTH RIM	113 175376 PMIS/PKG NO. 257282 SHEET 180 OF 401

100% COMPLETE CONSTRUCTION DOCUMENTS

GRCA-257282

PLOT DATE: 6/16/2025 PLOT TIME: 6:02:40 PM SS6/V8i D3167666 - South Rim\4 Delivery\43 CAD Design\GRCA\257282\Microstation V8i Drawings\ARCH\10A1030_D3167666.dgn

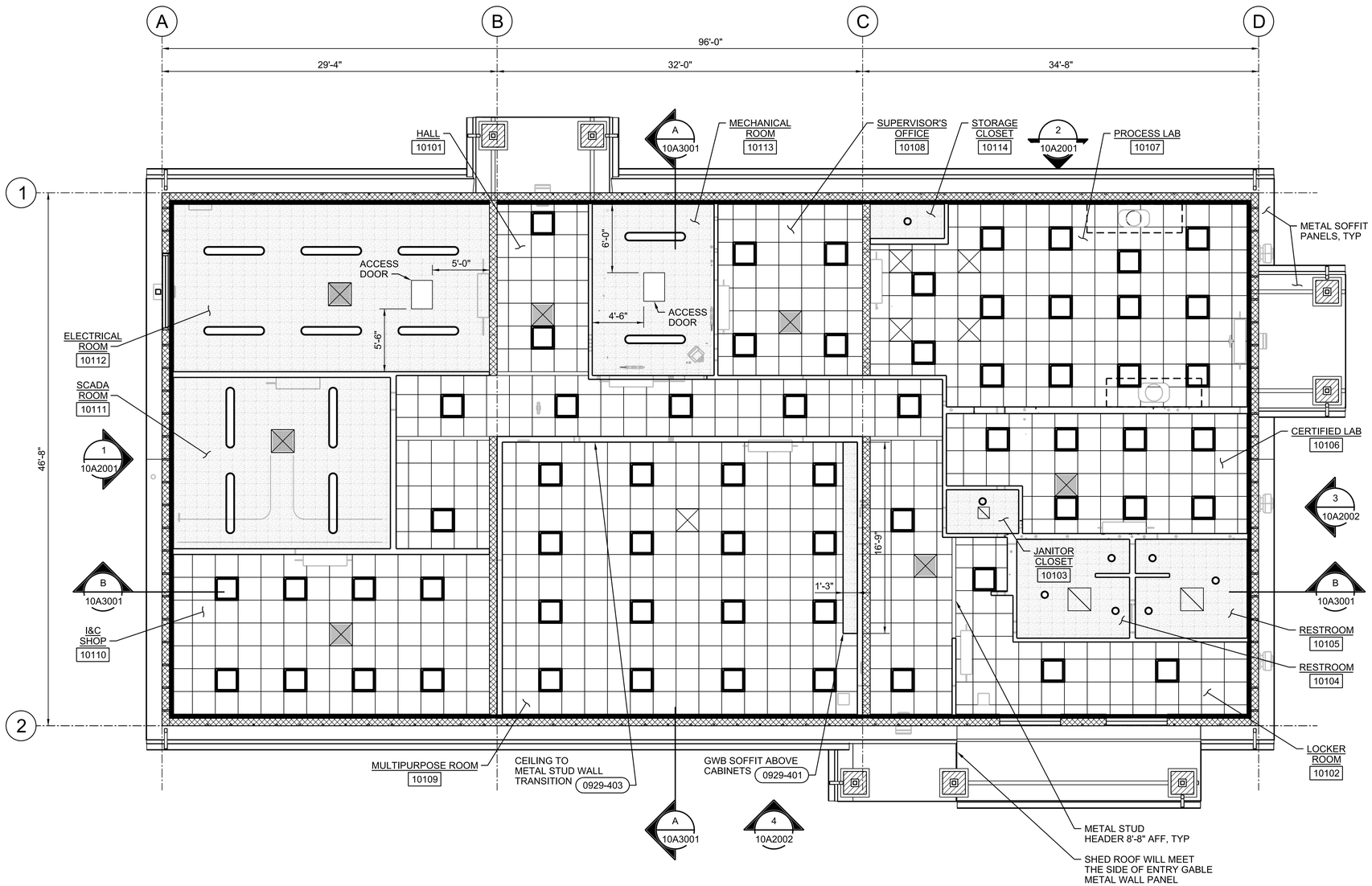

PLAN

3/16"=1'-0"

N

GENERAL SHEET NOTES

A. FOR GENERAL ARCHITECTURAL NOTES, MATERIAL SYMBOLS, LEGEND, ABBREVIATIONS AND WALL TYPES, SEE DRAWING 01A0001.

B. FOR CEILING HEIGHTS, SEE INTERIOR FINISH SCHEDULES.

REFLECTED CEILING PLAN LEGEND

- SUSPENDED 2'X2' ACOUSTICAL TILE CEILING SYSTEM
- GYPSUM BOARD CEILING (SUSPENDED UNLESS NOTED OR DETAILED OTHERWISE)
- INTERIOR METAL FRAMED WALLS WITH GWB/ WRB, EXTEND STUDS TO 6" ABOVE SUSPENDED CEILING AND BRACE TO STRUCTURE
- METAL FRAMED WALLS WITH FINISHES INDICATED ON WALL TYPES, EXTEND WALL TO UNDERSIDE OF ROOF PANEL AND STRUCTURE AND PROVIDE DEFLECTION HEAD TO ALLOW FOR 1" MINIMUM DEFLECTION
- RECESSED LUMINAIRE, SEE ELECTRICAL DRAWINGS
- RECESSED DOWNLIGHT OR SURFACE MOUNTED PENDANT, SEE ELECTRICAL DRAWINGS
- PENDANT OR SURFACE MOUNTED LUMINAIRE, SEE ELECTRICAL DRAWINGS
- EXHAUST FAN, SEE MECHANICAL DRAWINGS
- SUPPLY AIR GRILLE OR CEILING DIFFUSER
- CANOPY/FUME HOOD

0 4 8 16
3/16"=1'-0"

FULL SIZE DRAWINGS = 22"x34"
BAR MEASURES 1" LONG

0" 1"

REGISTERED ARCHITECT
CERTIFICATE NO. 8068
MORGAN SHOEMAKER
Date Signed 06-30-25
ARIZONA, U.S.A.
Expires 06-30-2027

A/E FIRM	DESIGNED:	SUB SHEET NO.	TITLE OF SHEET	DRAWING NO.
JACOBS GOVERNMENT SERVICES COMPANY GREENWOOD VILLAGE, CO	M SHOEMAKER CADD: M COLLINS TECH. REVIEW: G KIRSTEN DATE: 06/2025	10A1039	ADMINISTRATION BUILDING ARCHITECTURAL REFLECTED CEILING PLAN GRAND CANYON, SOUTH RIM	113 175376 PMIS/PKG NO. 257282 SHEET 181 OF 401

100% COMPLETE CONSTRUCTION DOCUMENTS

GRCA-257282

PLOT DATE: 6/16/2025 PLOT TIME: 6:03:13 PM SS6/V8I D3167666 - South Rim\4 Delivery\43 CAD Design\GRCA\257282\Microstation V8I Drawings\ARCH\10A1039_D3167666.dgn

GENERAL SHEET NOTES

A. FOR ARCHITECTURAL GENERAL NOTES, MATERIAL SYMBOLS AND LEGEND, SEE DRAWING 01A0001.

B. FOR CODE DATA AND LIFE SAFETY PLAN, SEE DRAWING 01A0010.

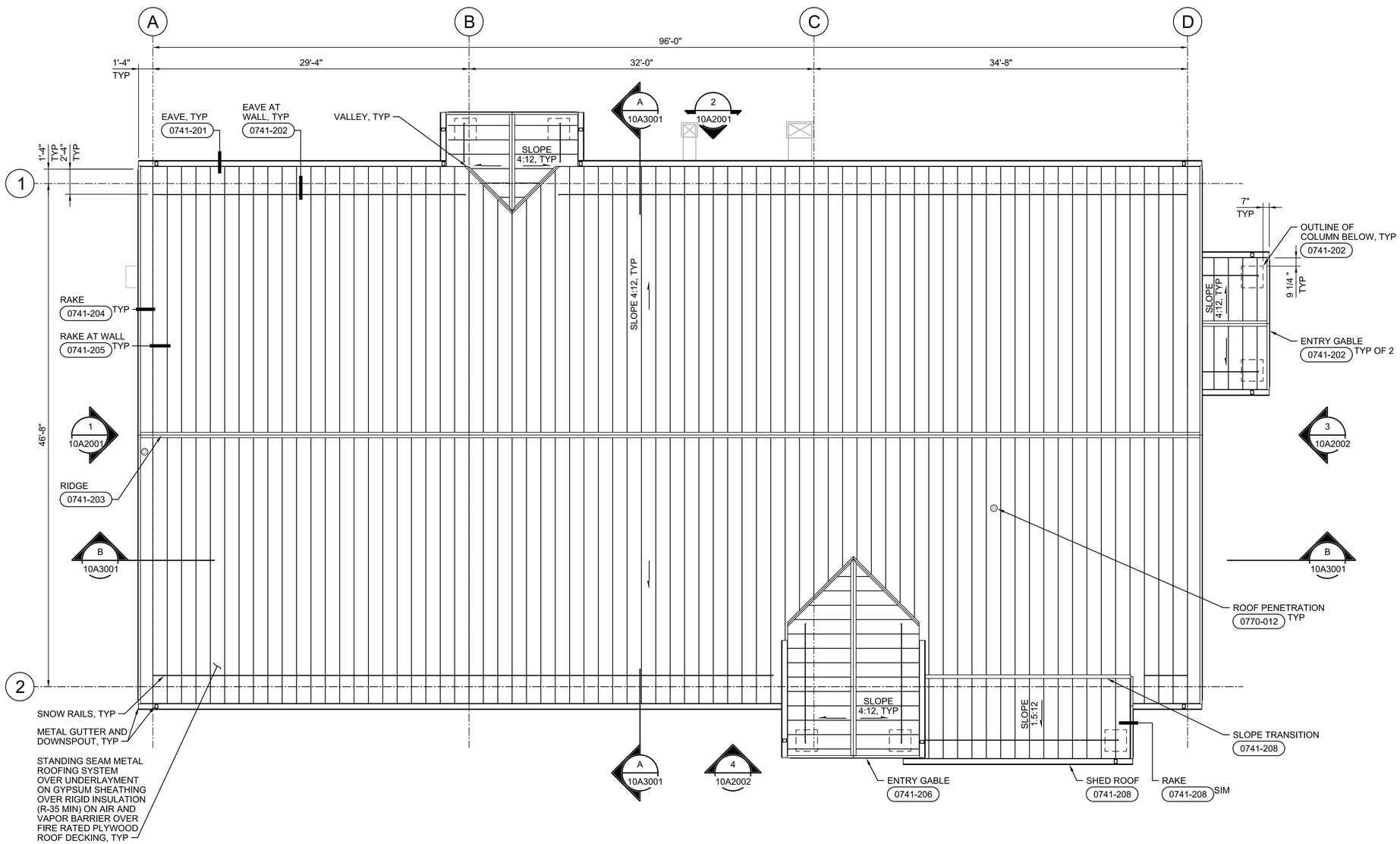

PLAN

3/16"=1'-0"

0 4 8 16

3/16"=1'-0"

FULL SIZE DRAWINGS = 22"x34"
BAR MEASURES 1" LONG

0" 1"

REGISTERED ARCHITECT CERTIFICATE NO. 30087 MORGAN M. SHOEMAKER Date Signed 06/16/25 ARIZONA, U.S.A.

Expires 06-30-2027

A/E FIRM	DESIGNED:	SUB SHEET NO.	TITLE OF SHEET	DRAWING NO.
JACOBS GOVERNMENT SERVICES COMPANY GREENWOOD VILLAGE, CO	M SHOEMAKER CADD: M COLLINS TECH. REVIEW: G KIRSTEN DATE: 06/2025	10A1040	ADMINISTRATION BUILDING ARCHITECTURAL ROOF PLAN GRAND CANYON, SOUTH RIM	113 175376 PMIS/PKG NO. 257282 SHEET 182 OF 401

100% COMPLETE CONSTRUCTION DOCUMENTS

GRCA-257282

PLOT DATE: 6/16/2025 PLOT TIME: 6:02:25 PM SS6/V8i D3167666 - South Rim\4 Delivery\43 CAD Design\GRCA\257282\Microstation V8i Drawings\ARCH\10A1040_D3167666.dgn

GENERAL SHEET NOTES

A. LOCATE MASONRY OPENINGS FOR HVAC DUCT/EQUIPMENT ON THE NEAREST 8" CMU MODULE, TYP.

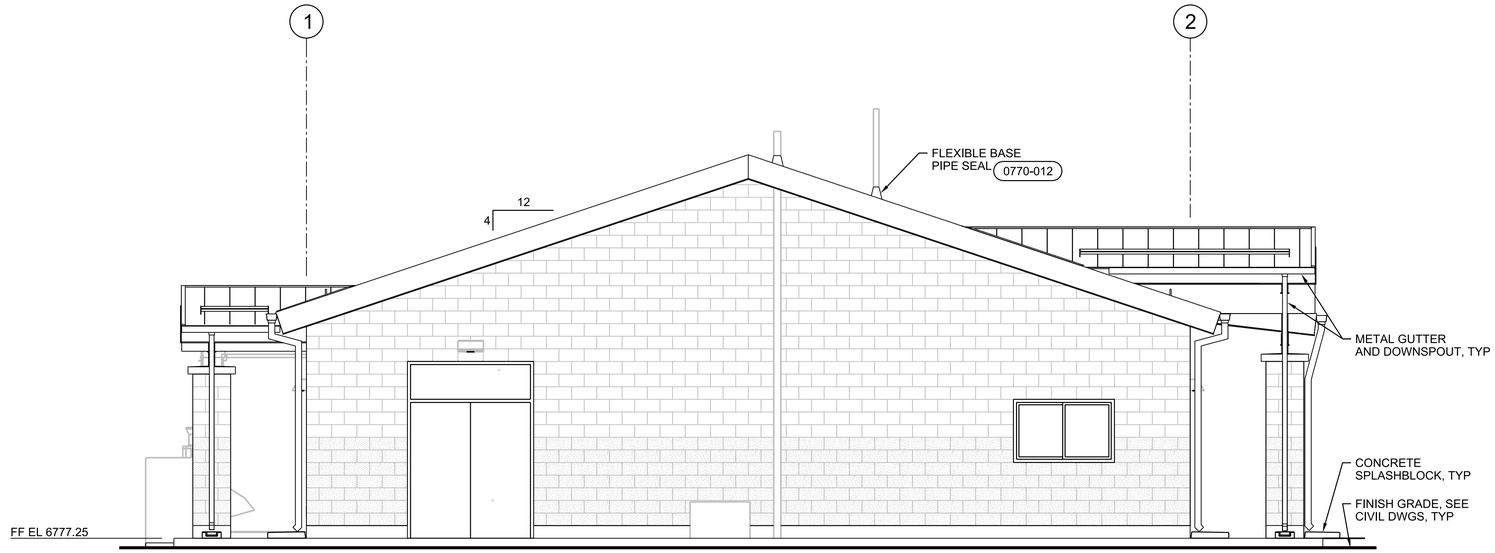

1 NORTH ELEVATION
1/4"=1'-0"
10A1030
10A1039
10A1040

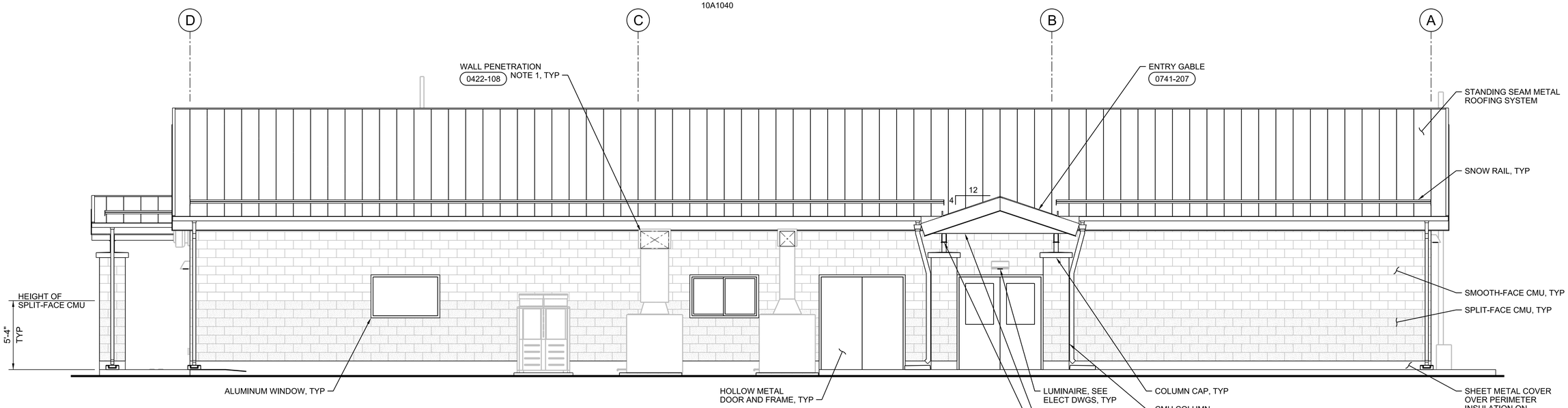

2 EAST ELEVATION
1/4"=1'-0"
10A1030
10A1039
10A1040

0 4 8 12
1/4"=1'-0"

FULL SIZE DRAWINGS = 22"x34"
BAR MEASURES 1" LONG
0" 1"

REGISTERED ARCHITECT
CERTIFICATE NO. 33680
MORGAN J. SHOEMAKER
Date Signed 6/16/25
ARIZONA, U.S.A.
Expires 06-30-2027

A/E FIRM	DESIGNED:	SUB SHEET NO.	TITLE OF SHEET	DRAWING NO.
JACOBS GOVERNMENT SERVICES COMPANY GREENWOOD VILLAGE, CO	M SHOEMAKER CADD: M COLLINS TECH. REVIEW: G KIRSTEN DATE: 06/2025	10A2001	ADMINISTRATION BUILDING ARCHITECTURAL ELEVATIONS GRAND CANYON, SOUTH RIM	113 175376 PMIS/PKG NO. 257282 SHEET 183 OF 401

100% COMPLETE CONSTRUCTION DOCUMENTS

GRCA-257282

PLOT DATE: 6/16/2025 PLOT TIME: 6:02:38 PM SS6/V8i D3167666 - South Rim\4 Delivery\43 CAD Design\GRCA\257282\Microstation V8i Drawings\ARCH\10A2001_D3167666.dgn

GENERAL SHEET NOTES

A. LOCATE MASONRY OPENINGS FOR HVAC DUCT/EQUIPMENT ON THE NEARET 8-INCH CMU MODULE, TYP.

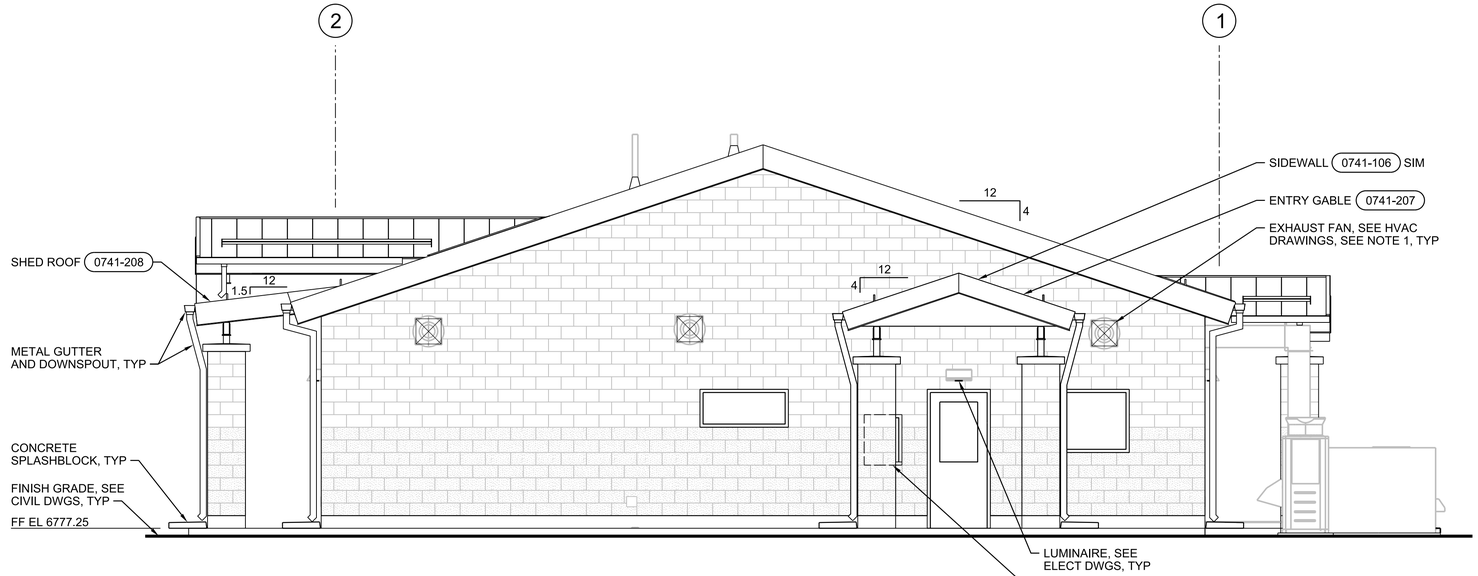

3 SOUTH ELEVATION
1/4"=1'-0"
10A1030
10A1039
10A1040

4 WEST ELEVATION
1/4"=1'-0"
10A1030
10A1039
10A1040

0 4 8 12
1/4"=1'-0"

FULL SIZE DRAWINGS = 22"x34"
BAR MEASURES 1" LONG
0" 1"

REGISTERED ARCHITECT CERTIFICATE NO. 33687 BRIAN MORGAN SHOEMAKER Date Signed 06-30-25 ARIZONA, U.S.A.
Expires 06-30-2027

A/E FIRM	DESIGNED:	SUB SHEET NO.	TITLE OF SHEET	DRAWING NO.
JACOBS GOVERNMENT SERVICES COMPANY GREENWOOD VILLAGE, CO	M SHOEMAKER CADD: M COLLINS TECH. REVIEW: G KIRSTEN DATE: 06/2025	10A2002	ADMINISTRATION BUILDING ARCHITECTURAL ELEVATIONS GRAND CANYON, SOUTH RIM	113 175376 PMIS/PKG NO. 257282 SHEET 184 OF 401

100% COMPLETE CONSTRUCTION DOCUMENTS

GRCA-257282

PLOT DATE: 6/16/2025 PLOT TIME: 6:02:38 PM SS6\V8i D3167666 - South Rim\4 Delivery\43 CAD Design\GRCA\257282\Microstation V8i Drawings\ARCH\10A2002_D3167666.dgn

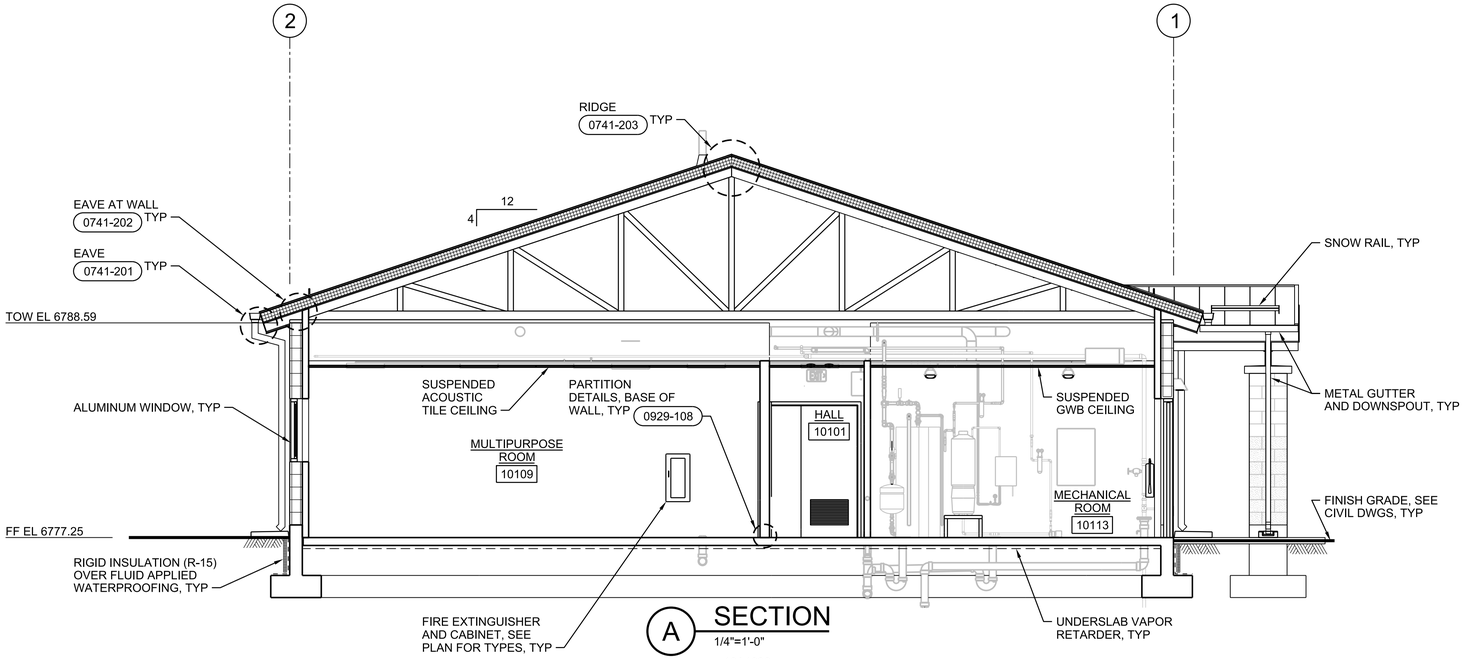

A SECTION
1/4"=1'-0"
10A1030
10A1039
10A1040

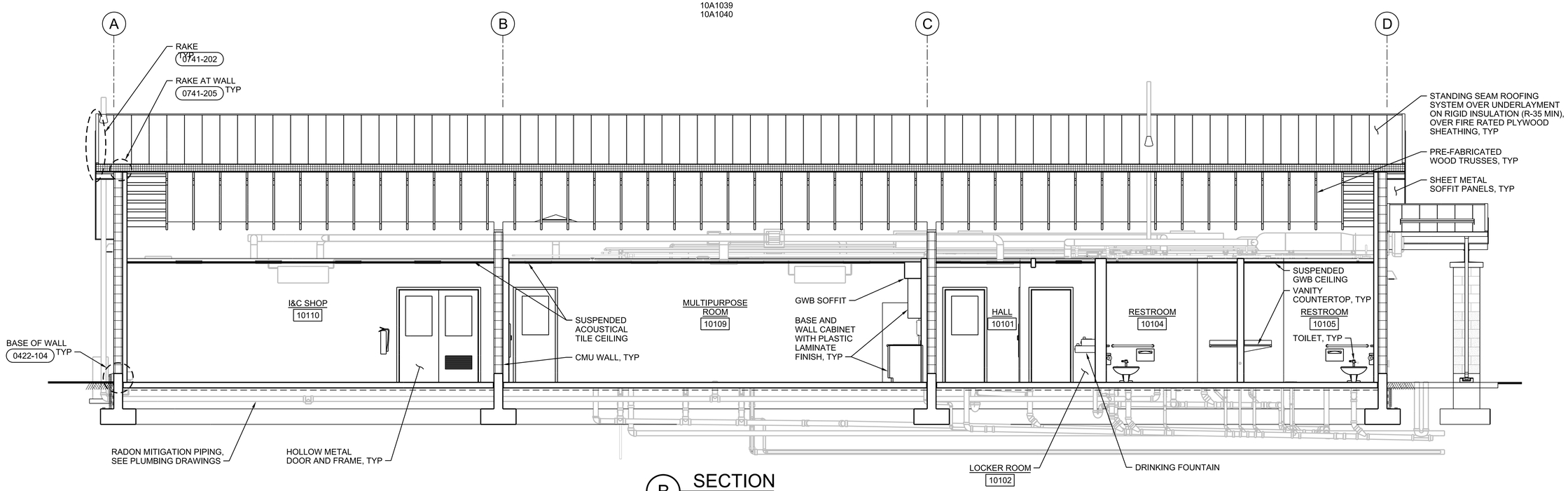

B SECTION
1/4"=1'-0"
10A1030
10A1039
10A1040

0 4 8 12
1/4"=1'-0"

FULL SIZE DRAWINGS = 22"x34"
BAR MEASURES 1" LONG
0" 1"

REGISTERED ARCHITECT
CERTIFICATE NO.
80687
MORGAN SHOEMAKER
Date Signed 6/16/25
ARIZONA, U.S.A.
Expires 06-30-2027

A/E FIRM	DESIGNED:	SUB SHEET NO.	TITLE OF SHEET	DRAWING NO.
JACOBS GOVERNMENT SERVICES COMPANY	M SHOEMAKER	10A3001	ADMINISTRATION BUILDING ARCHITECTURAL SECTIONS	113
	CADD: M COLLINS			175376
GREENWOOD VILLAGE, CO	TECH. REVIEW: G KIRSTEN			PMIS/PKG NO. 257282
	DATE: 06/2025		GRAND CANYON, SOUTH RIM	SHEET 185 OF 401

100% COMPLETE CONSTRUCTION DOCUMENTS

GRCA-257282

PLOT DATE: 6/16/2025 PLOT TIME: 6:02:03 PM SS6/V8i D3167666 - South Rim\4 Delivery\43 CAD Design\GRCA\257282\Microstation V8i Drawings\ARCH\10A3001_D3167666.dgn

GENERAL SHEET NOTES

A. CLEAR (CLR) DIMENSIONS LISTED ARE FROM FACE OF WALL FINISH, TYP UNTIL NOTED OTHERWISE.

B. SEE SPECIFICATION 10 51 00 LOCKERS FOR SIZE.

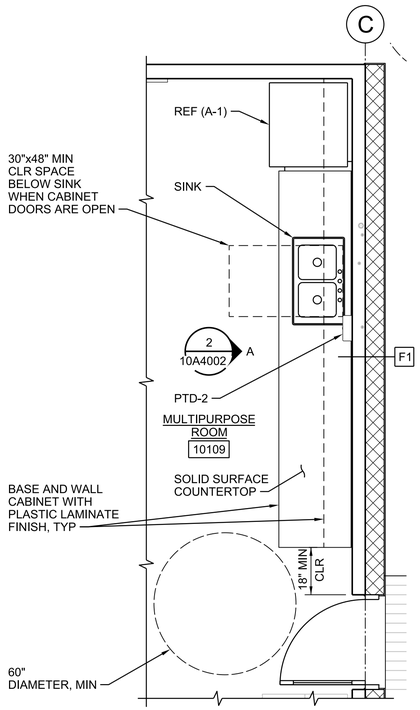

1 ENLARGED PLAN
3/8"=1'-0"
10A1030

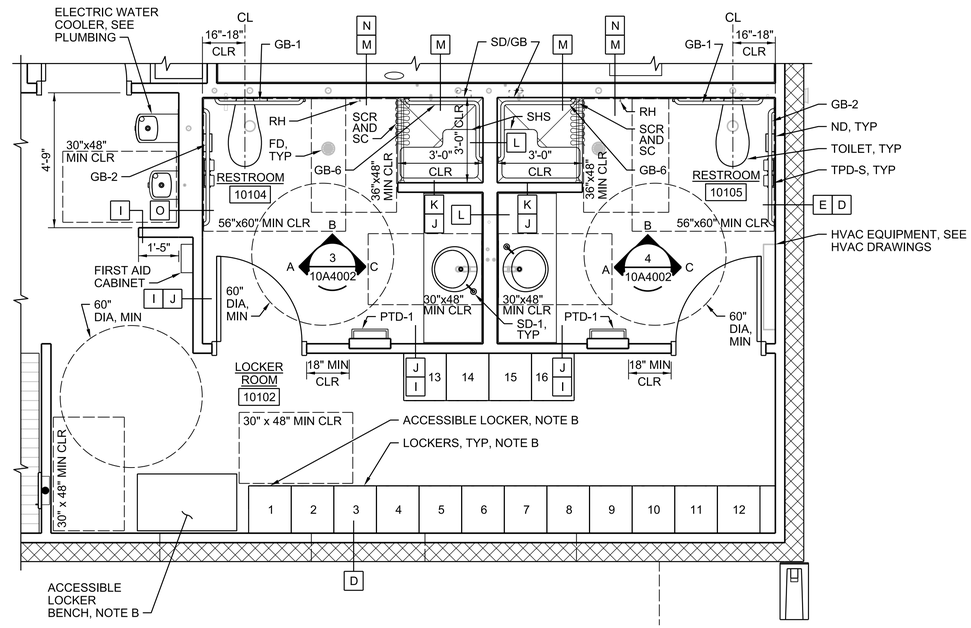

2 ENLARGED PLAN
3/8"=1'-0"
10A1030

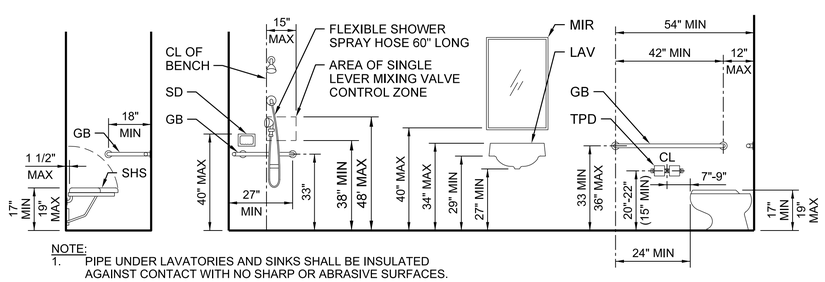

NOTE:
1. PIPE UNDER LAVATORIES AND SINKS SHALL BE INSULATED AGAINST CONTACT WITH NO SHARP OR ABRASIVE SURFACES.

STANDARD ACCESSIBLE FIXTURE MOUNTING LOCATIONS
NTS

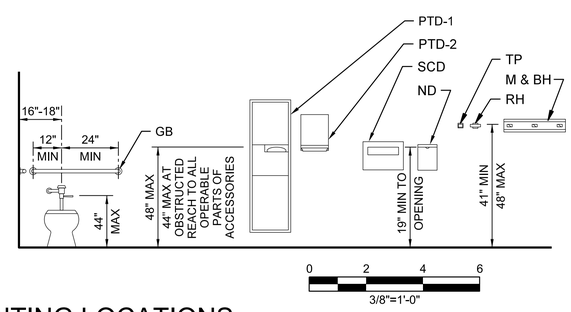

FULL SIZE DRAWINGS = 22"x34"
BAR MEASURES 1" LONG
0" 1"

REGISTERED ARCHITECT CERTIFICATE NO. 33667 ROAR MORGAN SHOEMAKER Date Signed 6-16-25 ARIZONA, U.S.A.
Expires 06-30-2027

A/E FIRM	DESIGNED: M SHOEMAKER	SUB SHEET NO.	TITLE OF SHEET	DRAWING NO.
JACOBS GOVERNMENT SERVICES COMPANY	CADD: M COLLINS	10A4001	ADMINISTRATION BUILDING ARCHITECTURAL ENLARGED PLANS	113 / 175376
GREENWOOD VILLAGE, CO	TECH. REVIEW: G KIRSTEN			PMIS/PKG NO. 257282
	DATE: 06/2025		GRAND CANYON, SOUTH RIM	SHEET 186 OF 401

100% COMPLETE CONSTRUCTION DOCUMENTS

GRCA-257282

PLOT DATE: 6/16/2025 PLOT TIME: 6:04:47 PM SS6\V8i D3167666 - South Rim\4 Delivery\43 CAD Design\GRCA\257282\Microstation V8i Drawings\ARCH\10A4001_D3167666.dgn

GENERAL SHEET NOTES

A. CLEAR DIMENSIONS LISTED ARE FROM FACE OF WALL FINISH, TYP UNTIL NOTED OTHERWISE.

B. SEE SPECIFICATION SECTION 11 31 00, APPLIANCE FOR MULTIPURPOSE ROOM APPLIANCES.

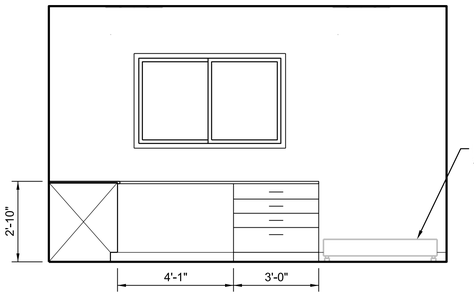

1A ROOM 10110 ELEVATION
3/8"=1'-0"
10A1030

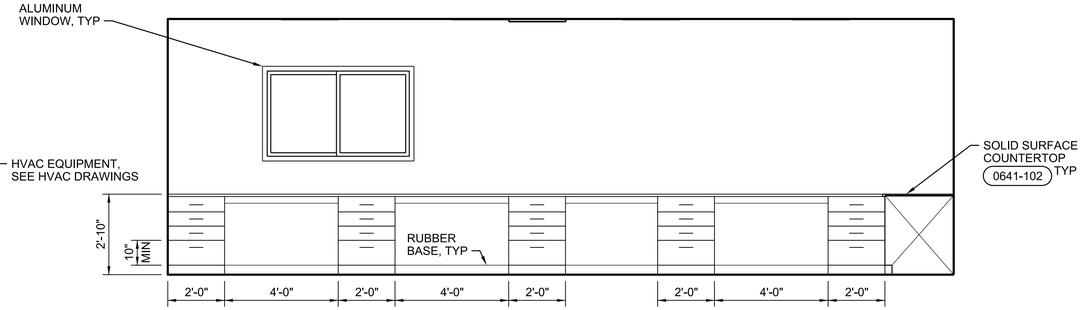

1B ROOM 10110 ELEVATION
3/8"=1'-0"
10A1030

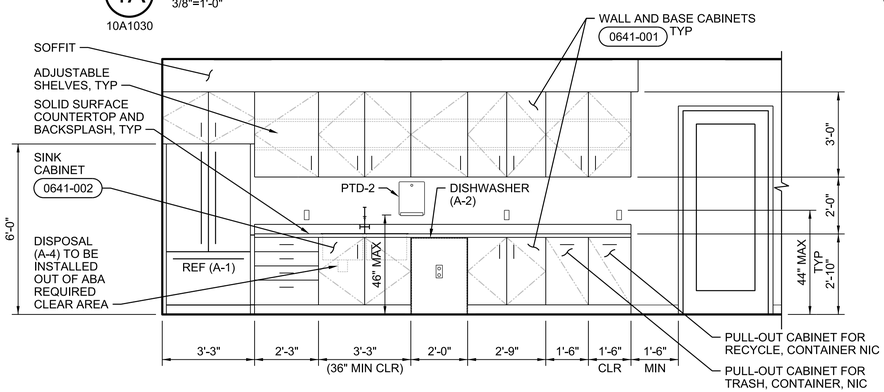

2A ROOM 10109 ELEVATION
3/8"=1'-0"
10A4001

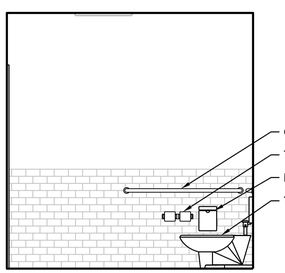

3A ROOM 10104 ELEVATION
3/8"=1'-0"
10A4001

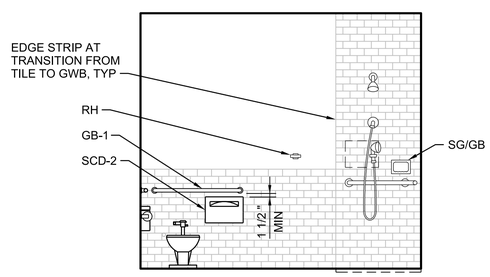

3B ROOM 10104 ELEVATION
3/8"=1'-0"
10A4001

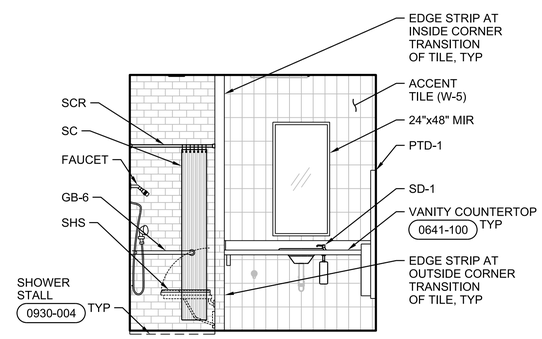

3C ROOM 10104 ELEVATION
3/8"=1'-0"
10A4001

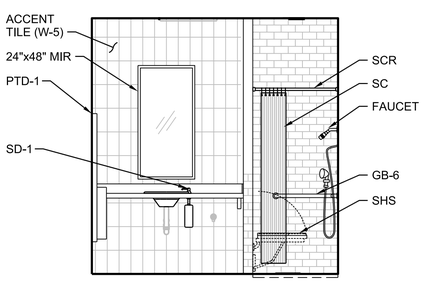

4A ROOM 10104 ELEVATION
3/8"=1'-0"
10A4001

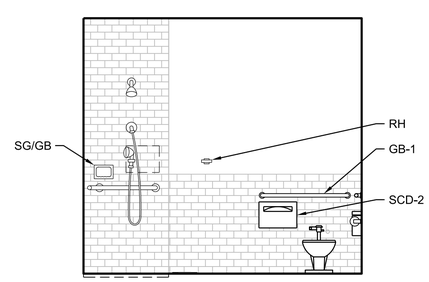

4B ROOM 10105 ELEVATION
3/8"=1'-0"
10A4001

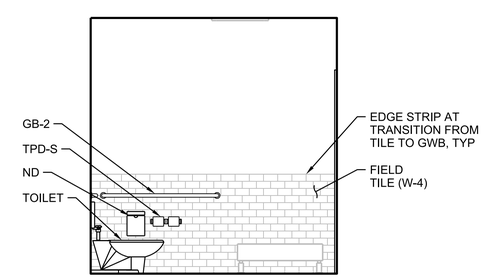

4C ROOM 10105 ELEVATION
3/8"=1'-0"
10A4001

FULL SIZE DRAWINGS = 22"x34"
BAR MEASURES 1" LONG

0 2 4 6
3/8"=1'-0"

0" 1"

REGISTERED ARCHITECT
BRIAN MORGAN SHOEMAKER
U.S. Signed Cert.
ARIZONA, U.S.A.
Expires 06-30-2027

A/E FIRM	DESIGNED: M SHOEMAKER	SUB SHEET NO.	TITLE OF SHEET	DRAWING NO.
JACOBS GOVERNMENT SERVICES COMPANY GREENWOOD VILLAGE, CO	CADD: M COLLINS TECH. REVIEW: G KIRSTEN DATE: 06/2025	10A4002	ADMINISTRATION BUILDING ARCHITECTURAL INTERIOR ELEVATIONS GRAND CANYON, SOUTH RIM	113 175376 PMIS/PKG NO. 257282 SHEET 187 OF 401

100% COMPLETE CONSTRUCTION DOCUMENTS

GRCA-257282

PLOT DATE: 6/16/2025 PLOT TIME: 6:09:01 PM SS6\V8i D3167666 - South Rim\4 Delivery\43 CAD Design\GRCA\257282\Microstation V8i Drawings\ARCH\10A4002_D3167666.dgn

GENERAL SHEET NOTES

A. FOR GENERAL ARCHITECTURAL NOTES, MATERIAL SYMBOLS, LEGEND,ABBREVIATIONS AND WALL TYPES, SEE DRAWING 01A0001.

B. FOR BUILDING CODE DATA AND LIFE SAFETY PLAN, SEE DRAWING 01A0010.

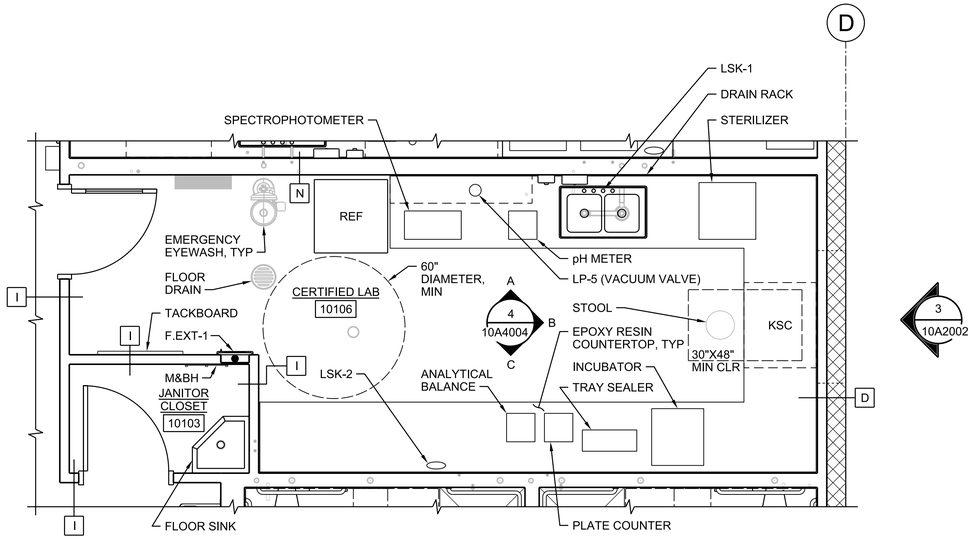

3 ENLARGED PLAN
3/8"=1'-0"
10A1030

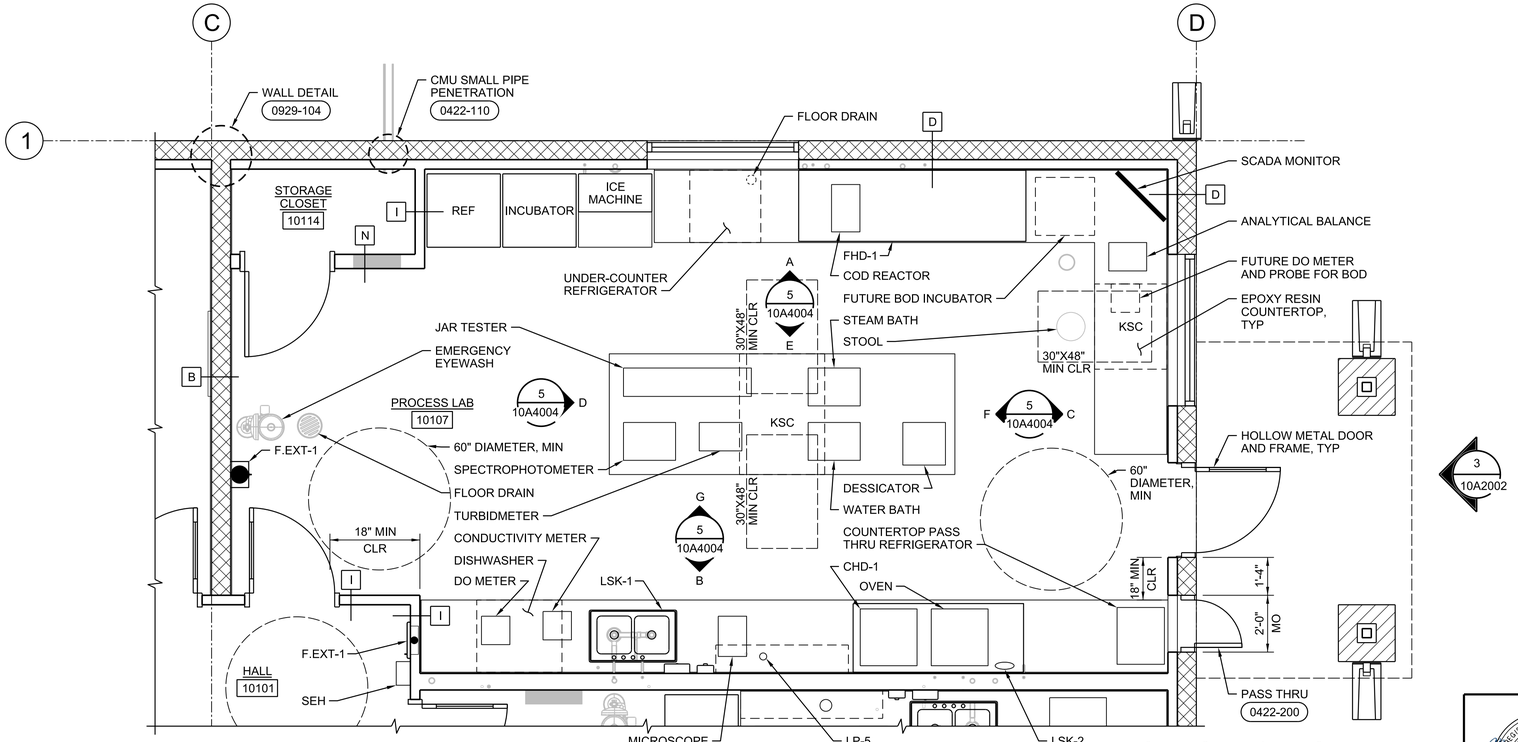

4 ENLARGED PLAN
3/8"=1'-0"
10A1030

0 2 4 6
3/8"=1'-0"

FULL SIZE DRAWINGS = 22"x34"
BAR MEASURES 1" LONG

0" 1"

REGISTERED ARCHITECT
BRADY MORGAN SHOEMAKER
Date Signed 6-16-25
ARIZONA, U.S.A.
Expires 06-30-2027

A/E FIRM	DESIGNED:	SUB SHEET NO.	TITLE OF SHEET	DRAWING NO.
JACOBS GOVERNMENT SERVICES COMPANY GREENWOOD VILLAGE, CO	M SHOEMAKER CADD: M COLLINS TECH. REVIEW: G KIRSTEN DATE: 06/2025	10A4003	ADMINISTRATION BUILDING ARCHITECTURAL ENLARGED PLANS GRAND CANYON, SOUTH RIM	113 175376 PMIS/PKG NO. 257282 SHEET 188 OF 401

100% COMPLETE CONSTRUCTION DOCUMENTS

GRCA-257282

PLOT DATE: 6/16/2025 PLOT TIME: 6:03:58 PM SS6\V8i D3167666 - South Rim\4 Delivery\43 CAD Design\GRCA\257282\Microstation V8i Drawings\ARCH\10A4003_D3167666.dgn

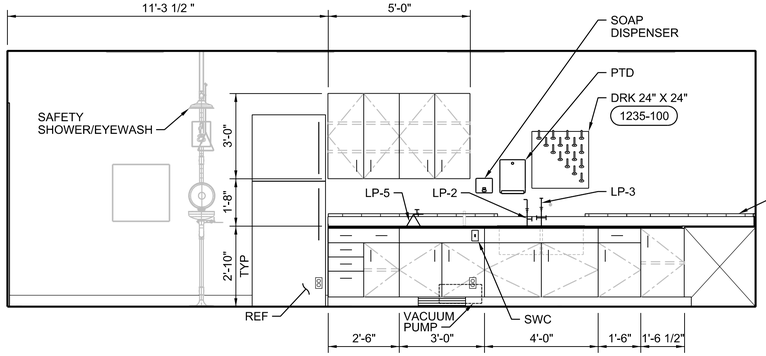

4A ROOM 10106 ELEVATION
3/8"=1'-0"
10A4003

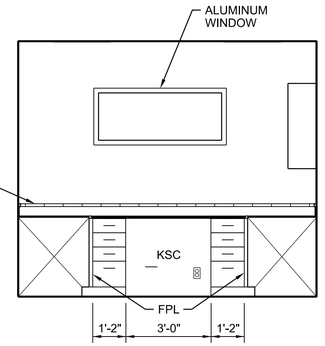

4B ROOM 10106 ELEVATION
3/8"=1'-0"
10A4003

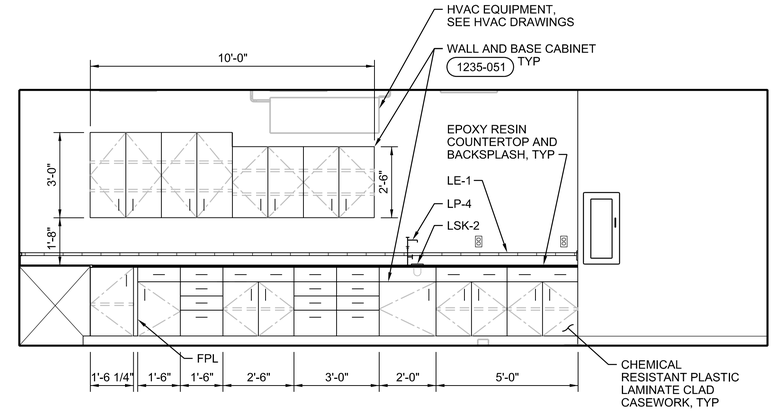

4C ROOM 10106 ELEVATION
3/8"=1'-0"
10A4003

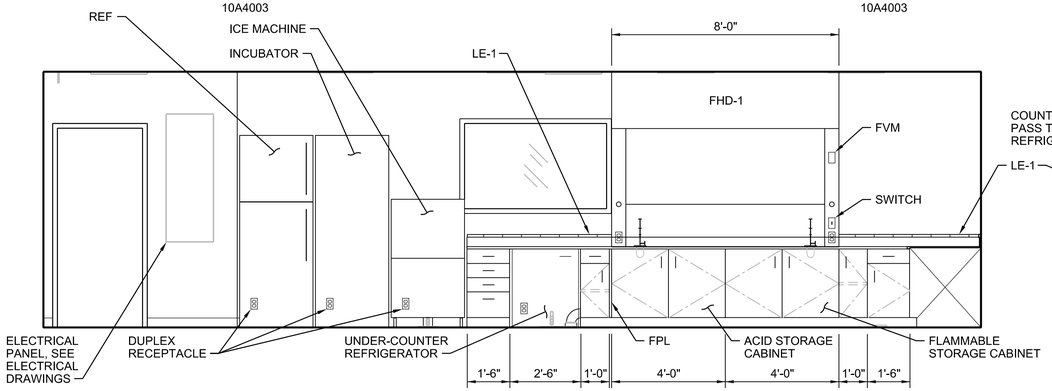

5A ROOM 10107 ELEVATION
3/8"=1'-0"
10A4003

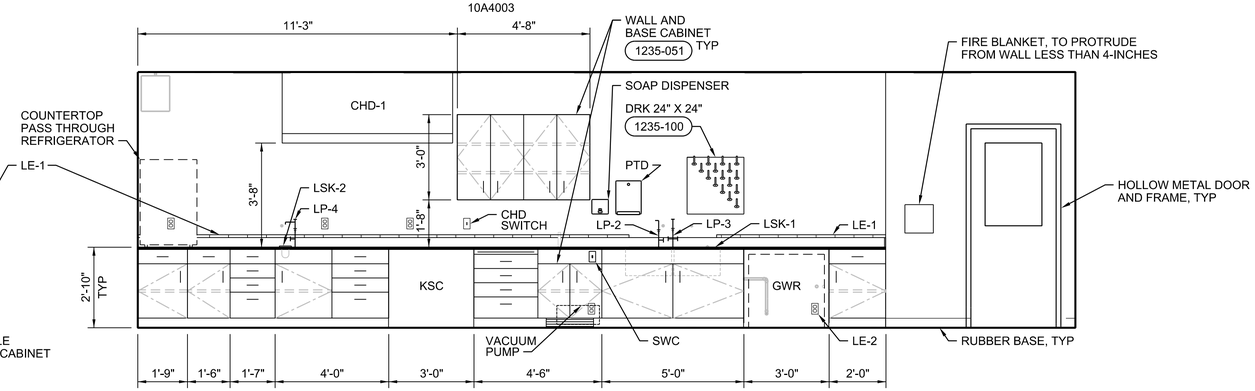

5B ROOM 10107 ELEVATION
3/8"=1'-0"
10A4003

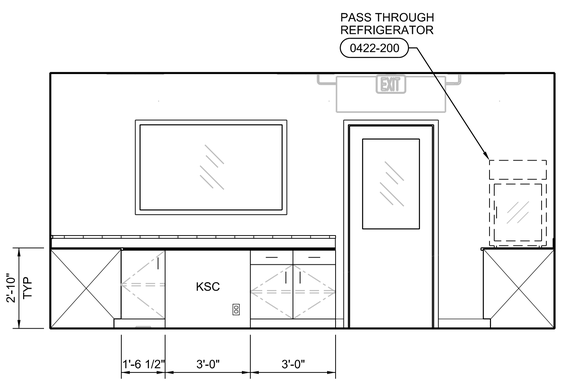

5C ROOM 10107 ELEVATION
3/8"=1'-0"
10A4003

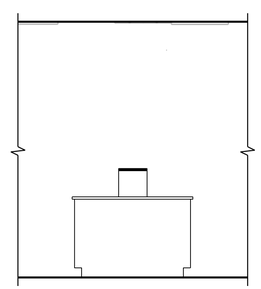

5D ROOM 10107 ELEVATION
3/8"=1'-0"
10A4003

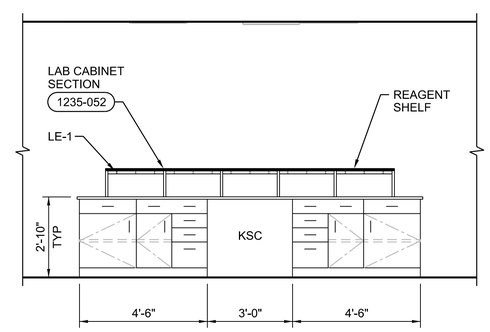

5E ROOM 10107 ELEVATION
3/8"=1'-0"
10A4003

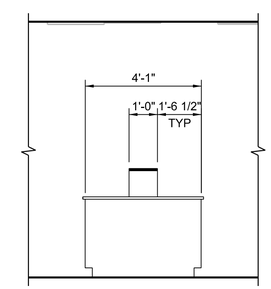

5F ROOM 10107 ELEVATION
3/8"=1'-0"
10A4003

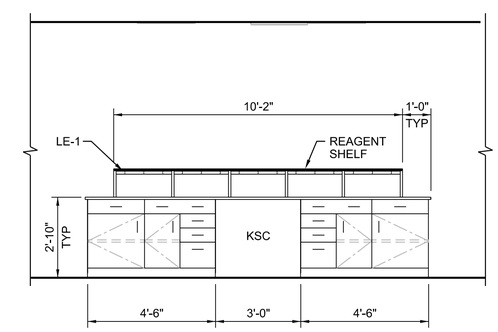

5G ROOM 10107 ELEVATION
3/8"=1'-0"
10A4003

0 2 4 6
3/8"=1'-0"

FULL SIZE DRAWINGS = 22"x34"
BAR MEASURES 1" LONG

0" 1"

REGISTERED ARCHITECT
CERTIFICATE NO. 33680
MORGAN D. SHOEMAKER
Date Signed 06/27/25
ARIZONA, U.S.A.
Expires 06-30-2027

A/E FIRM	DESIGNED:	SUB SHEET NO.	TITLE OF SHEET	DRAWING NO.
JACOBS GOVERNMENT SERVICES COMPANY GREENWOOD VILLAGE, CO	M SHOEMAKER CADD: M COLLINS TECH. REVIEW: G KIRSTEN DATE: 06/2025	10A4004	ADMINISTRATION BUILDING ARCHITECTURAL INTERIOR ELEVATIONS GRAND CANYON, SOUTH RIM	113 175376 PMIS/PKG NO. 257282 SHEET 189 OF 401

GRCA-257282

100% COMPLETE CONSTRUCTION DOCUMENTS

PLOT DATE: 05282025 PLOT TIME: 8:00:15 PM SS6V8i $FILEL$

INTERIOR FINISH SCHEDULE

ABBREVIATIONS:

ACT	ACOUSTICAL TILE	CT	CERAMIC TILE	MTL	METAL
CLR	CLEAR	FCTY	FACTORY	PT	PORCELAIN TILE
CMU	CONCRETE MASONRY UNIT	GWB	GYPSUM WALL BOARD	SRUB	SHEET RUBBER
COL	COLOR	HDPE	HIGH DENSITY POLYETHYLENE	RUB	RUBBER BASE
CONC	CONCRETE	HGT	HEIGHT	SLR	CLEAR SEALER
CPT	CARPET	MATL	MATERIAL	WRB	WATER RESISTANT GWB

NOTES:

NO. 1 NUMBERS IN THE FINISH COLUMN REFER TO PAINT SYSTEMS IN SPECIFICATION SECTION 09 90 00.
NO. 2 CODES IN COL COLUMN REFER TO COLOR LIST ON THIS DRAWING.
NO. 3 WALL SURFACES BEHIND CASEWORK AND OTHER BUILT-IN ITEMS NEED NOT BE PAINTED.
NO. 4 FOR EXTERIOR FINISHES AND COLORS, SEE EXTERIOR FINISH SCHEDULE ON THIS DRAWING.
NO. 5 FOR DOOR AND FRAME FINISHES, SEE DOOR AND HARDWARE SCHEDULE ON DRAWING 10A6002.
NO. 6 FOR WINDOW AND TRIM FINISHES, SEE WINDOW SCHEDULE ON DRAWING 10A6002.

SPACE		FLOOR			BASE AND WAINSCOT					TYPICAL WALL			OTHER WALL			CEILING				MISCELLANEOUS				OTHER REQUIREMENTS
NO.	NAME	SUB FL	FINISH	COL	HGT	MATL	FINISH	COL	WALLS	MATL	FINISH	COL	MATL	FINISH	COL	HGT	MATL	FINISH	COL	ITEM	MATL	FINISH	COL	
10101	HALL	CONC	SRUB	F-1	4"/4'-0"	RUB/ FRP	FCTY/ FCTY	W-3/ W-8	ALL/ E, S, W*	GWB	115	P-1	CMU	109	P-1	9'-0"	ACT	FCTY	WHITE	CARPET WALK-OFF MAT AND FRAME	CPT	FCTY	F-3	WALK OFF MATS TO BE LOCATED AT THE TWO EXTERIOR DOORS; *FRP TO BE LOCATED ON WALL BEHIND AND TO THE SIDES OF THE DRINKING FOUNTAIN
10102	LOCKER ROOM	CONC	SRUB	F-1	4"	RUB	FCTY	W-3	ALL	GWB	115	P-1	---	---	---	9'-0"	ACT	FCTY	WHITE	LOCKER/ ACCESSIBLE LOCKER BENCH	MTL/ HDPE	FCTY	N-5/ N-6	
10103	JANITOR CLOSET	CONC	PT	F-2 & F-4	4"/4'-0"	RUB/ FRP	FCTY/ FCTY	W-3/ W-8	ALL/ S, W	WRB	116	P-1	---	---	---	9'-0"	WRB	116	P-2					
10104	RESTROOM	CONC	PT	F-2 & F-4	3'-6"	CT	FCTY	W-4	ALL	WRB	116	P-1	CT	FCTY	W-5 & W-6	9'-0"	WRB	116	P-2					
10105	RESTROOM	CONC	PT	F-2 & F-4	3'-6"	CT	FCTY	W-4	ALL	WRB	116	P-1	CT	FCTY	W-5 & W-6	9'-0"	WRB	116	P-2					
10106	CERTIFIED LAB	CONC	SRUB	F-1	4"	RUB	FCTY	W-3	ALL	WRB	116	P-1	---	---	---	9'-0"	ACT	FCTY	WHITE	COUNTER/CASEWORK	EPOXY RESIN/ PLAM	FCTY	N-3/ N-4	
10107	PROCESS LAB	CONC	SRUB	F-1	4"	RUB	FCTY	W-3	ALL	WRB	116	P-1	CMU	109	P-1	9'-0"	ACT	FCTY	WHITE	COUNTER/CASEWORK	EPOXY RESIN/ PLAM	FCTY	N-3/ N-4	
10108	SUPERVISOR'S OFFICE	CONC	SRUB	F-1	4"	RUB	FCTY	W-3	ALL	GWB	115	P-1	CMU	109	P-1	9'-0"	ACT	FCTY	WHITE					
10109	MULTIPURPOSE ROOM	CONC	SRUB	F-1	4"	RUB	FCTY	W-3	ALL	GWB	115	P-1	---	---	---	9'-0"	ACT	FCTY	WHITE	COUNTER/CASEWORK	SS/ PLAM	FCTY	N-1/ N-2	
10110	I&C SHOP	CONC	SRUB	F-1	4"	RUB	FCTY	W-3	ALL	GWB	115	P-1	CMU	109	P-1	9'-0"	ACT	FCTY	WHITE					
10111	SCADA ROOM	CONC	SLR	CLR	4"	RUB	FCTY	W-3	ALL	GWB	115	P-1	---	---	---	9'-0"	GWB	115	P-2					
10112	ELECTRICAL ROOM	CONC	SLR	CLR	4"	RUB	FCTY	W-3	ALL	GWB	115	P-1	CMU	109	P-1	9'-0"	GWB	115	P-2					
10113	MECHANICAL ROOM	CONC	SLR	CLR	4"	RUB	FCTY	W-3	ALL	WRB	116	P-1	---	---	---	9'-0"	WRB	116	P-2					
10114	STORAGE CLOSET	CONC	SRUB	F-1	4"	RUB	FCTY	W-3	ALL	GWB	115	P-1	CMU	109	P-1	9'-0"	GWB	115	P-2					

COLOR LIST

NOTES:

NO. 1 COLOR SELECTIONS FOR THIS PROJECT MAY BE NOTED IN DOOR AND HARDWARE SCHEDULE, WINDOW SCHEDULE, INTERIOR FINISH SCHEDULE, EXTERIOR FINISH SCHEDULE, PIPING SCHEDULE AND ON THE DRAWINGS BY THE LETTER-NUMBER COMBINATION IN THE MARK COLUMN OF THIS LIST.
NO. 2 SOME COLOR SELECTIONS MAY BE MADE IN VARIOUS SPECIFICATION SECTIONS.
NO. 3 USE ONLY THE COLORS NOTED OR SCHEDULED. IF A COLOR SELECTION IS NOT MADE, REQUEST ONE FROM THE CONTRACTING OFFICER.
NO. 4 THE LISTED MANUFACTURERS AND COLORS ARE ONLY INCLUDED FOR THE PURPOSES OF ESTABLISHING A COLOR SCHEME GUIDE AND ARE NOT INTENDED TO LIMIT CONTRACTED FROM PORPOSING ALTERNATE MANUFACTURERS AND COLORS FOR REVIEW AND APPROVAL BY CONTRACTING OFFICER. SPECIFICATION SECTIONS ARE LISTED IN PARENTHESIS AFTER MANUFACTURERS.

MARK	MATERIAL	MANUFACTURER	COLOR
FLOORS			
F-1	SHEET RUBBER	NORA FLOORING (SPEC 09 65 00)	PUSH-N-PULL - 7105
F-2	PORCELAIN TILE	DALTILE (SPEC 09 30 00)	PROXY - AS10
F-3	CARPET WALK OFF MAT AND FRAME	AMERICAN FLOOR MATS (SPEC 10 80 00)	BLACK WITH ALUMINUM MILL
F-4	TILE GROUT	AS SPECIFIED (SPEC 09 30 00)	DARK GREY
FURNISHINGS			
N-1	SOLID SURFACE	WILSONART (SPEC 06 41 00)	GREY
N-2	PLASTIC LAMINATE	WILSONART (SPEC 06 41 00)	WALNUT
N-3	EPOXY RESIN	DURCON (SPEC 12 35 53)	BLACK
N-4	PLASTIC LAMINATE	WILSONART (CHEMSURF) (SPEC 13 35 53)	WALNUT
N-5	LOCKERS	ASI STORAGE SOLUTIONS (SPEC 10 51 00)	FOREST GREEN
N-6	ACCESSIBLE LOCKER BENCH	ASI STORAGE SOLUTIONS (SPEC 10 51 00)	WALNUT
OPENINGS			
O-1	ALUMINUM WINDOWS	KAWNEER (SPEC 08 51 13)	FOREST GREEN
O-2	SOLID SURFACING SILL	WILSONART (SPEC 06 41 00)	SOOTHING GREY
O-3	WINDOW ROLLER SHADE CLOTH	MECHOSYSTEM (SPEC 12 24 13)	GREY - 1363
PAINT			
P-1	PAINT	SHERWIN-WILLIAMS (SPEC 09 90 00)	DOVER WHITE - SW6385
P-2	PAINT	SHERWIN-WILLIAMS (SPEC 09 90 00)	HIGH REFLECTIVE WHITE - SW7757
P-3	PAINT	SHERWIN-WILLIAMS (SPEC 09 90 00)	DOVER GRAY - SW6385
MISCELLANEOUS			
M-1	SHEET METAL ROOF AND SOFFIT PANELS	IMETCO (SPEC 07 41 13)	DENALI GREEN
M-2	SHEET METAL GUTTERS AND DOWNSPOUTS	IMETCO (SPEC 07 41 13)	DENALI GREEN
M-3	PERIMETER SHEET METAL COVER	AS SPECIFIED (SPEC 09 30 00)	GREY
WALLS			
W-1	CMU - SMOOTH-FACE	ECHELON (SPEC 04 22 00)	WALNUT CREEK - NW BONE
W-2	CMU - SPLIT-FACE	ECHELON (SPEC 04 22 00)	AUTUMN
W-3	RUBBER BASE	JOHNSONITE/TARKETT (SPEC 09 29 00)	PEPPERCORN
W-4	CERAMIC TILE - FIELD	DALTILE (SPEC 09 30 00)	ARCTIC WHITE - 0190
W-5	CERAMIC TILE - ACCENT	DALTILE (SPEC 09 30 00)	GARDEN SPOT - 0141
W-6	TILE GROUT	AS SPECIFIED (SPEC 09 30 00)	DARK GREY
W-7	CMU MORTAR	AMERIMIX (SPEC 04 22 00)	SOFT IVORY
W-8	FIBERGLASS-REINFORCED PLASTIC (FRP) PANEL WALLS	CRANE COMPOSITES (SPEC 09 77 01)	WHITE

EXTERIOR FINISH SCHEDULE

ITEM / MATERIAL	FINISH	COLOR
SMOOTH-FACE CMU	FACTORY/WATER REPELLENT	W-1 / CLEAR
SPLIT-FACE CMU	FACTORY/WATER REPELLENT	W-2 / CLEAR
SHEET METAL ROOF AND SOFFIT	FACTORY	M-1
SHEET METAL GUTTERS AND DOWNSPOUTS	FACTORY	M-2
LUMINAIRES	FACTORY	DARL BRONZE
PERIMETER SHEET METAL COVER	FACTORY	M-3

FULL SIZE DRAWINGS = 22"x34"
BAR MEASURES 1" LONG
0" 1"

REGISTERED ARCHITECT
CERTIFICATE NO. 80687
MORGAN SHOEMAKER
Date Signed 6/16/25
ARIZONA, U.S.A.
Expires 06-30-2027

A/E FIRM
JACOBS GOVERNMENT SERVICES COMPANY
GREENWOOD VILLAGE, CO

DESIGNED: M SHOEMAKER
CADD: M COLLINS
TECH. REVIEW: G KIRSTEN
DATE: 06/2025

SUB SHEET NO. 10A6001

TITLE OF SHEET
ADMINISTRATION BUILDING ARCHITECTURAL SCHEDULES
GRAND CANYON, SOUTH RIM

NO SCALE

DRAWING NO. 113 / 175376
PMIS/PKG NO. 257282
SHEET 190 OF 401

100% COMPLETE CONSTRUCTION DOCUMENTS

GRCA-257282

PLOT DATE: 6/16/2025 PLOT TIME: 6:01:11 PM SS6/V8i D3167666 - South Rim\4 Delivery\43 CAD Design\GRCA\257282\Microstation V8i Drawings\ARCH\10A6001_D3167666.dgn

WINDOW SCHEDULE

WINDOW TYPE ABBREVIATIONS:
F FIXED
SL SLIDER

OTHER ABBREVIATIONS:
AFF ABOVE FINISH FLOOR (AT GROUND LEVEL)
AL ALUMINUM
FCTY FACTORY
IG-B INSULATING GLASS - BIRD
SG SAFETY GLASS
SS SOLID SURFACING

NOTES:
NO. 1 FOR FRAME TYPES, SEE WINDOW TYPES.
NO. 2 FOR FRAME DETAILS, SEE DESIGN DETAILS.
NO. 3 CODES IN COL COLUMN REFER TO COLOR LIST ON DRAWING 10A6001.

NO.	OPENING											ROLLER SHADE		SILLS			OTHER REQUIREMENTS
	SIZE		WINDOW		FRAME				DETAILS								
	WIDTH	HEIGHT	TYPE	GLASS	MATL	TYPE	FINISH	COLOR	HEAD	JAMB	SILL	Y / N	COLOR	MATL	COLOR	HEIGHT	
10W-01	5'-4"	3'-4"	SL	IG-B	AL	W-2	FCTY	O-1	0851-004	0851-004 SIM	0851-004	Y	O-3	SS	O-2	4'-0" AFF	
10W-02	5'-4"	3'-4"	SL	IG-B	AL	W-2	FCTY	O-1	0851-004	0851-004 SIM	0851-004	Y*	O-3	SS	O-2	4'-0" AFF	*MANUAL SHADE
10W-03	5'-4"	3'-4"	F	IG-B	AL	W-1	FCTY	O-1	0851-002	0851-002 SIM	0851-002	Y	O-3	SS	O-2	4'-0" AFF	
10W-04	5'-4"	3'-4"	F	IG-B	AL	W-1	FCTY	O-1	0851-002	0851-002 SIM	0851-002	Y	O-3	SS	O-2	4'-0" AFF	
10W-05	4'-8"	2'-0"	F	IG-B	AL	W-1	FCTY	O-1	0851-002	0851-002 SIM	0851-002	Y	O-3	SS	O-2	5'-4" AFF	
10W-06	5'-4"	1'-4"	F	IG-B	AL	W-1	FCTY	O-1	0851-002	0851-002 SIM	0851-002	N	---	SS	O-2	6'-8" AFF	
10W-07	5'-4"	1'-4"	F	IG-B	AL	W-1	FCTY	O-1	0851-002	0851-002 SIM	0851-002	N	---	SS	O-2	6'-8" AFF	
10W-08	5'-4"	3'-4"	SL	IG-B	AL	W-2	FCTY	O-1	0851-004	0851-004 SIM	0851-004	Y*	O-3	SS	O-2	4-0" AFF	*MANUAL SHADE
10W-09	5'-4"	3'-4"	SL	IG-B	AL	W-2	FCTY	O-1	0851-004	0851-004 SIM	0851-004	Y*	O-3	SS	O-2	4'-0" AFF	*MANUAL SHADE
10W-10	5'-4"	3'-4"	SL	IG-B	AL	W-2	FCTY	O-1	0851-004	0851-004 SIM	0851-004	Y	O-3	SS	O-2	3'-4" AFF	

WINDOW TYPES

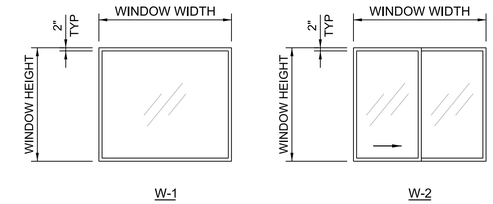

DOOR AND HARDWARE SCHEDULE

ABBREVIATIONS:
EXT EXTERIOR
FCTY FACTORY
IG-C INSULATING GLASS - CLEAR
HM HOLLOW METAL
MATL MATERIAL
TG TEMPERED GLASS

NOTES:
NO. 1 SEE THIS SHEET FOR DOOR AND FRAME TYPES.
NO. 2 FOR DOOR DETAILS, SEE DESIGN DETAILS.
NO. 3 NUMBER CODE IN HARDWARE SET COLUMN REFERS TO HARDWARE SETS IN SPECIFICATION SECTION 08 71 00.
NO. 4 NUMBERS IN FINISH COLUMN REFER TO PAINT SYSTEMS IN SPECIFICATION SECTION 09 90 00.
NO. 5 CODES IN COLOR COLUMN REFER TO COLOR LIST ON DRAWING 10A6001.
NO. 6 FOR GLASS TYPES, SEE SPECIFICATION SECTION 08 80 00.
NO. 7 MAXIMUM EFFORT TO OPEN INTERIOR DOOR IS 5 POUNDS AND 8.5 FOR EXTERIOR DOORS.
NO. 8 VERIFY DOOR HEIGHT WITH APPROVED LAB PASS-THRU REFIGERATOR.

NO.	OPENING														HARDWARE		FIRE PROTECTION RATING	OTHER REQUIREMENTS
	SIZE		DOOR					FRAME				DETAILS						
	WIDTH	HEIGHT	CONSTR	TYPE	GLASS	FINISH	COLOR	MATL	TYPE	FINISH	COLOR	HEAD	JAMB	SILL	SET NO.	KEY SIDE		
10101A	3'-0"	7'-2"	HM	G	IG-C	5	P-3	HM	SS	5	P-3	0811-013/ 0851-002 SIM	0811-013 SIM/ 0851-005	0871-001/ 0851-005	1	EXT	---	
10101B	(2) 3'-2"	7'-2"	HM	G / G	IG-C	5	P-3	HM	DD	5	P-3	0811-013	0811-013 SIM	0871-001	2	EXT	---	
10103A	3'-0"	7'-0"	HM	F	---	5	P-3	HM	SD	5	P-3	0811-032	0811-032	0871-003	3	10101	---	M1: JANITOR
10104A	3'-0"	7'-0"	HM	F	---	5	P-3	HM	SD	5	P-3	0811-032	0811-032	0871-003	9	10102	---	PICTORAL SYMBOL, M1: MEN
10105A	3'-0"	7'-0"	HM	F	---	5	P-3	HM	SD	5	P-3	0811-032	0811-032	0871-003	16	10102	---	PICTORAL SYMBOL, M1: WOMEN
10106A	3'-0"	7'-0"	HM	GLB	TG	5	P-3	HM	SD	5	P-3	0811-032	0811-032	0871-003	8	10101	---	M1: CERTIFIED LABORATORY
10107A	3'-0"	7'-2"	HM	G	IG-C	5	P-3	HM	SD	5	P-3	0811-013	0811-013 SIM	0871-001	13	EXT	---	M1: PROCESS LABORATORY
10107B	3'-0"	7'-0"	HM	G	TG	5	P-3	HM	SD	5	P-3	0811-032	0811-032	0871-003	8	10101	---	M1: PROCESS LABORATORY
10107C	3'-0"	7'-0"	HM	F	---	5	P-3	HM	SD	5	P-3	0811-033	0811-033	0871-003	10	10107	---	M1: STORAGE
10107D	1'-8"	2'-4"	HM	F	---	5	P-3	HM	SD	5	P-3	0422-200	0422-200 SIM	0422-200	19	EXT	---	SILL ROUGH OPENING 2'-8" ABOVE FINISH FLOOR, NOTE 8
10108A	3'-0"	7'-0"	HM	GLB	TG	5	P-3	HM	SD	5	P-3	0811-032	0811-032	0871-003	8	10101	---	M1: SUPERVISOR'S OFFICE
10109A	3'-0"	7'-2"	HM	FG	TG	5	P-3	HM	SD	5	P-3	0811-012	0811-012 SIM	0871-003	17	10101	---	M1: MULTIPURPOSE ROOM
10109B	3'-0"	7'-0"	HM	G	TG	5	P-3	HM	SD	5	P-3	0811-033	0811-033	0871-003	17	10101	---	M1: MULTIPURPOSE ROOM
10110A	(2) 3'-0"	7'-0"	HM	G / GLB	TG	5	P-3	HM	DD	5	P-3	0811-033	0811-033	0871-003	6	10101	---	M1: I & C SHOP
10111A	(2) 3'-0"	7'-0"	HM	F / FLB	---	5	P-3	HM	DD	5	P-3	0811-033	0811-033	0871-004	6	10101	---	M1: SCADA
10112A	(2)3'-2"	7'-0"	HM	F / F	---	5	P-3	HM	DDT	5	P-3	0811-013	0811-013 SIM	0871-001	5	EXT	---	M1: ELECTRICAL ROOM
10112B	3'-0"	7'-2"	HM	FLB	---	5	P-3	HM	SD	5	P-3	0811-014 SIM	0811-014	0871-004	18	10101	---	M1: ELECTRICAL ROOM
10113A	(2) 3'-2"	7'-2"	HM	F / F	---	5	P-3	HM	DD	5	P-3	0811-013	0811-013 SIM	0871-001	4	EXT	---	M1: MECHANICAL ROOM

DOOR TYPES

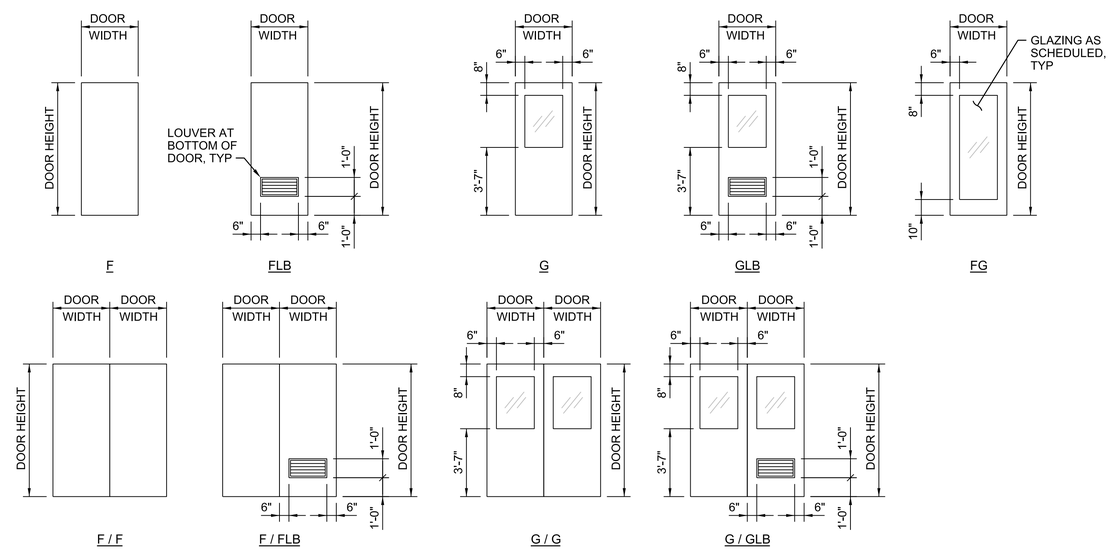

DOOR FRAME TYPES

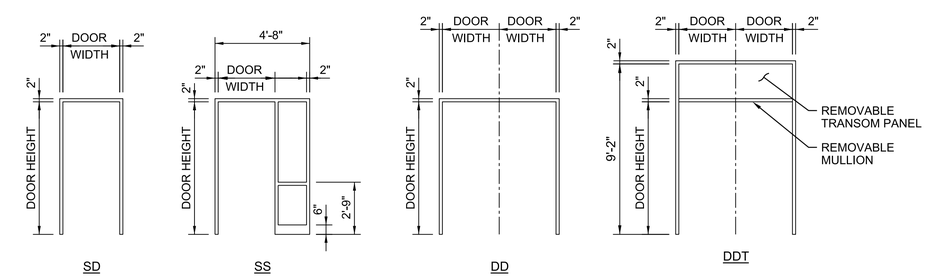

NO SCALE

FULL SIZE DRAWINGS = 22"x34"
BAR MEASURES 1" LONG
0" 1"

REGISTERED ARCHITECT CERTIFICATE NO. 80680 MORGAN SHOEMAKER Date Signed 06/25/25 ARIZONA, U.S.A.
Expires 06-30-2027

A/E FIRM	DESIGNED:	SUB SHEET NO.	TITLE OF SHEET	DRAWING NO.
JACOBS GOVERNMENT SERVICES COMPANY GREENWOOD VILLAGE, CO	M SHOEMAKER CADD: M COLLINS TECH. REVIEW: G KIRSTEN DATE: 06/2025	10A6002	ADMINISTRATION BUILDING ARCHITECTURAL SCHEDULES GRAND CANYON, SOUTH RIM	113 / 175376 PMIS/PKG NO. 257282 SHEET 191 OF 401

100% COMPLETE CONSTRUCTION DOCUMENTS

GRCA-257282

PLOT DATE: 6/16/2025 PLOT TIME: 6:01:19 PM D3167666 - South Rim\4 Delivery\43 CAD Design\GRCA\257282\Microstation V8i DrawingsARCH\10A6002_D3167666.dgn SS6/V8i

GENERAL SHEET NOTES

A. MOUNT INDOOR UNIT ABOVE DOORWAY INSIDE ELECTRICAL ROOM.

B. OUTSIDE AIR (OA) DUCTWORK ROUTED ABOVE CEILING. OUTLETS TO BE CONNECTED TO DIFFUSER/GRILLE IN CEILING.

C. COORDINATE STEEL STANDS DIMENSIONS WITH SELECTED EQUIPMENT.

SHEET NOTES

1. PROVIDE MANUAL ON/OFF SWITCH; CONTROLS INTERLOCK WITH 10-DOAU-02.

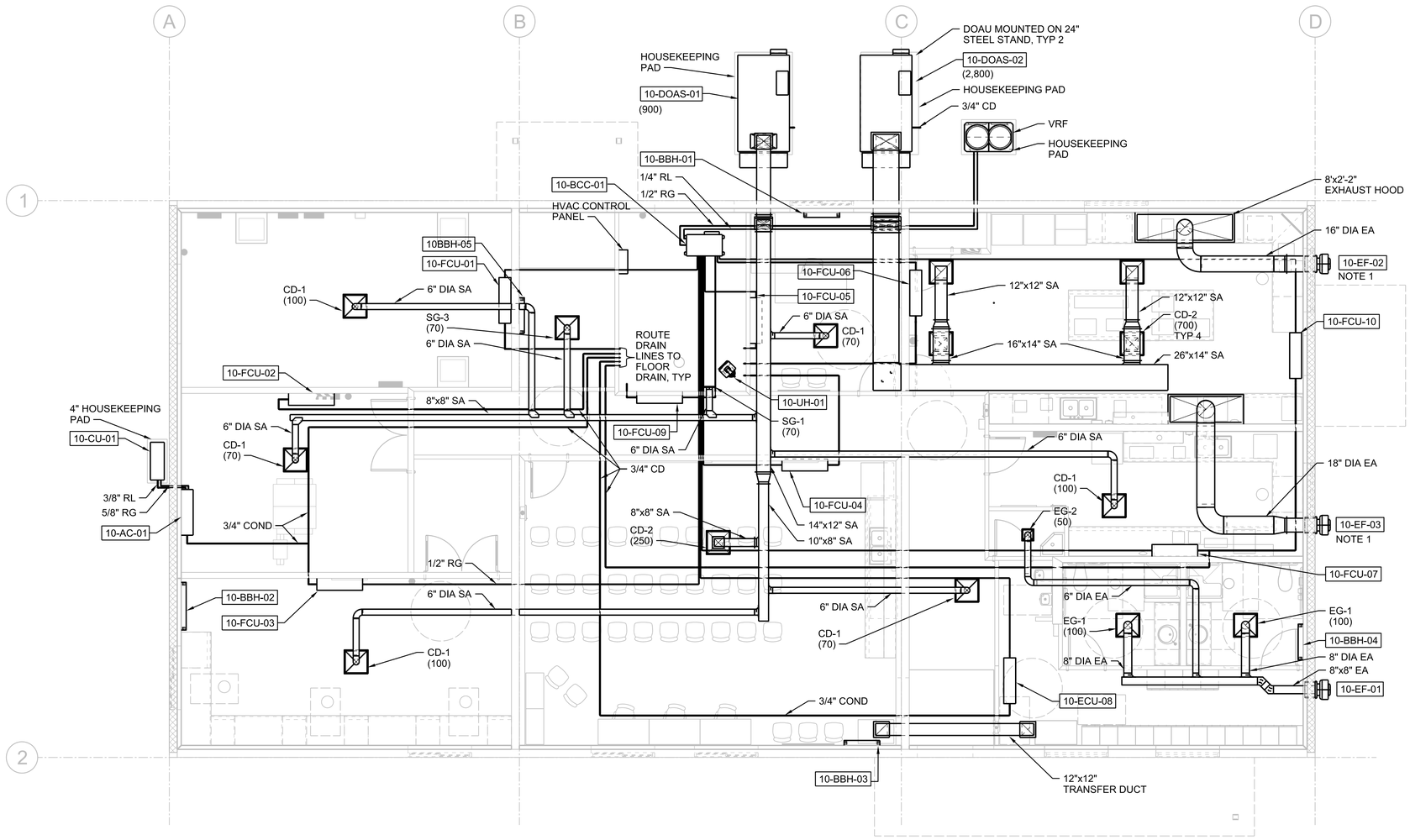

PLAN

3/16"=1'-0"

N

0 4 8 16

3/16"=1'-0"

FULL SIZE DRAWINGS = 22"x34"
BAR MEASURES 1" LONG

0" 1"

Registered Professional Engineer (Mechanical) CERTIFICATE NO. 46267 SCOTT HINTE Date Signed 6-30-25 ARIZONA, U.S.A.

Scott Hinte
Expires 06-30-2026

A/E FIRM	DESIGNED:	SUB SHEET NO.	TITLE OF SHEET	DRAWING NO.
JACOBS GOVERNMENT SERVICES COMPANY GREENWOOD VILLAGE, CO	S HINTE CADD: S HOSTETLER TECH. REVIEW: J SACKINGER DATE: 06/2025	10M1030	ADMINISTRATION BUILDING HVAC FLOOR PLAN GRAND CANYON, SOUTH RIM	113 175376 PMIS/PKG NO. 257282 SHEET 192 OF 401

100% COMPLETE CONSTRUCTION DOCUMENTS

GRCA-257282

PLOT DATE: 6/17/2025 PLOT TIME: 9:11:29 AM SS6\V8i D3167666 - South Rim\4 Delivery\43 CAD Design\GRCA\257282\Microstation V8i Drawings\MECH\10M1030_D3167666.dgn

GENERAL SHEET NOTES

A. REFER TO 07Y2002 FOR CONTINUATION OF 4" SS TO SANITARY LIFT STATION. FOR ADDITIONAL INFORMATION SEE DETAIL 2230-100 AND SPECIFICATION 22 30 00 PLUMBING EQUIPMENT.

B. WC-1, NFWH-1 AND HB-1 UTILIZING RECLAIMED WATER SHALL BE LABELED "CAUTION! NON-POTABLE WATER- DO NOT DRINK". REFER TO DETAIL 1014-002.

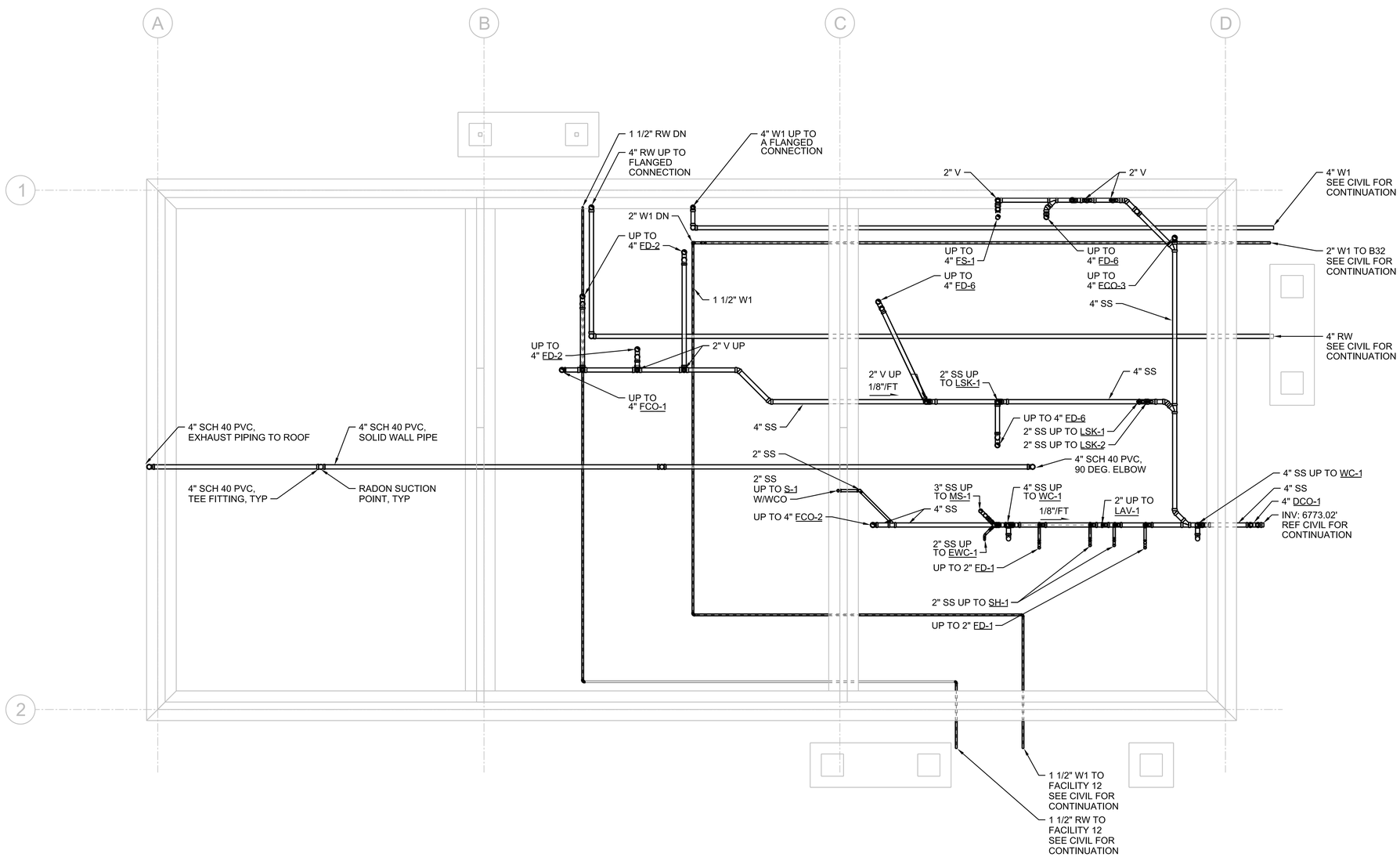

PLAN

3/16"=1'-0"

N

0 4 8 16

3/16"=1'-0"

FULL SIZE DRAWINGS = 22"x34"
BAR MEASURES 1" LONG

0" 1"

Registered Professional Engineer (Mechanical) CERTIFICATE NO. 46267 SCOTT HINTE Date Signed 6-30-25 ARIZONA, U.S.A.

Scott Hinte
Expires 06-30-2026

A/E FIRM	DESIGNED:	SUB SHEET NO.	TITLE OF SHEET	DRAWING NO.
JACOBS GOVERNMENT SERVICES COMPANY GREENWOOD VILLAGE, CO	S HINTE CADD: S HOSTETLER TECH. REVIEW: J SACKINGER DATE: 06/2025	10P1020	ADMINISTRATION BUILDING PLUMBING UNDERFLOOR PLAN GRAND CANYON, SOUTH RIM	113 175376 PMIS/PKG NO. 257282 SHEET 193 OF 401

100% COMPLETE CONSTRUCTION DOCUMENTS

GRCA-257282

PLOT DATE: 6/17/2025 PLOT TIME: 9:14:10 AM SS6/V8i D3167666 - South Rim\4 Delivery\43 CAD Design\GRCA\257282\Microstation V8i Drawings\PLUMB\10P1020_D3167666.dgn

GENERAL SHEET NOTES

A. WC-1, NFWH-1 AND HB-1 UTILIZING RECLAIMED WATER SHALL BE LABELED "CAUTION! NON-POTABLE WATER- DO NOT DRINK". REFER TO DETAIL 1014-002.

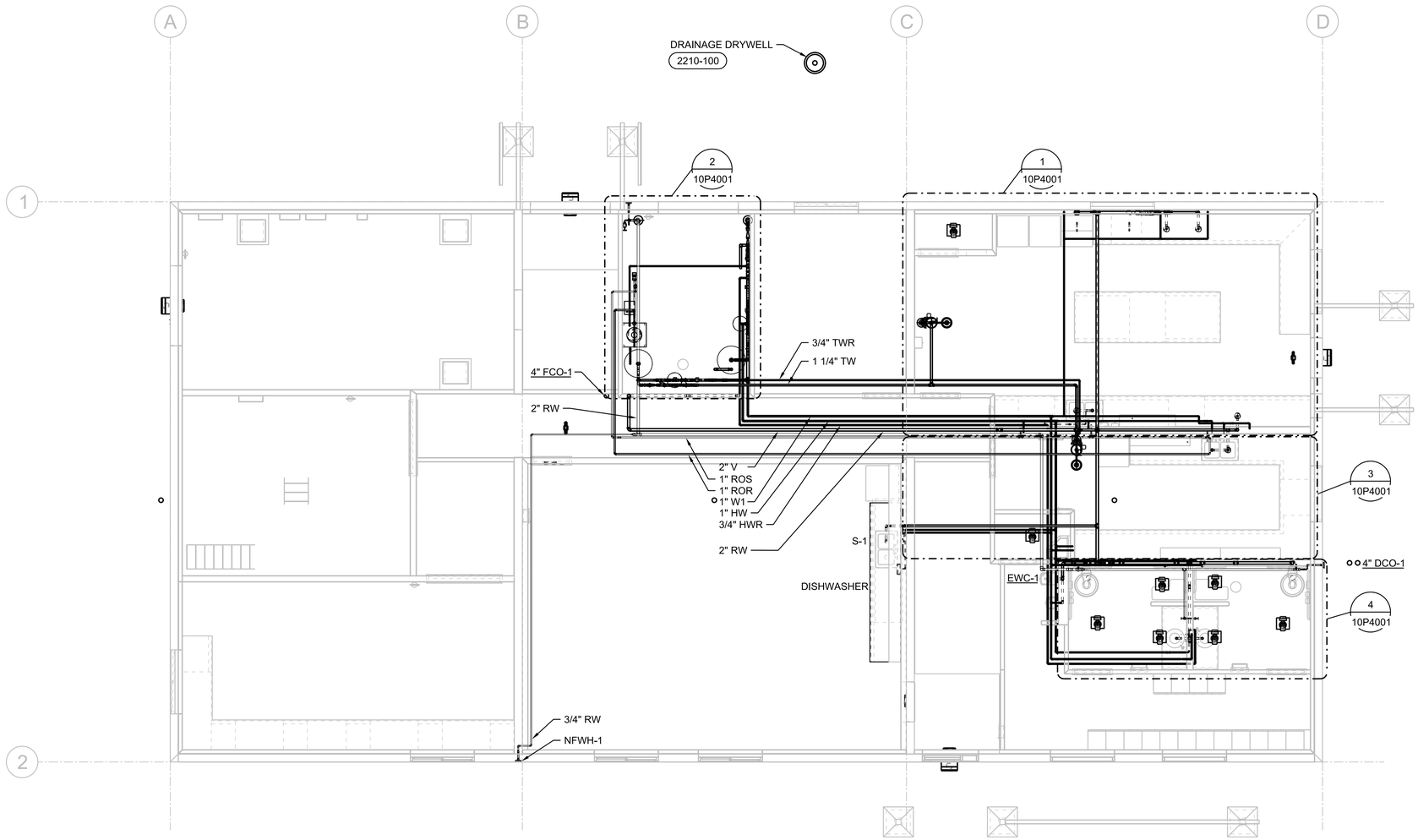

PLAN
3/16"=1'-0"

0 4 8 16
3/16"=1'-0"

FULL SIZE DRAWINGS = 22"x34"
BAR MEASURES 1" LONG
0" 1"

Registered Professional Engineer (Mechanical) CERTIFICATE NO. 46267 SCOTT HINTE Date Signed 06-30-26 ARIZONA, U.S.A.
Scott Hinte
Expires 06-30-2026

A/E FIRM	DESIGNED: S HINTE	SUB SHEET NO.	TITLE OF SHEET	DRAWING NO.
JACOBS GOVERNMENT SERVICES COMPANY GREENWOOD VILLAGE, CO	CADD: S HOSTETLER TECH. REVIEW: J SACKINGER DATE: 06/2025	10P1030	ADMINISTRATION BUILDING PLUMBING FLOOR PLAN GRAND CANYON, SOUTH RIM	113 / 175376 PMIS/PKG NO. 257282 SHEET 194 OF 401

100% COMPLETE CONSTRUCTION DOCUMENTS

GRCA-257282

PLOT DATE: 6/17/2025 PLOT TIME: 9:13:48 AM SS6/V8i D3167666 - South Rim\4 Delivery\43 CAD Design\GRCA\257282\Microstation V8i Drawings\PLUMB\10P1030_D3167666.dgn

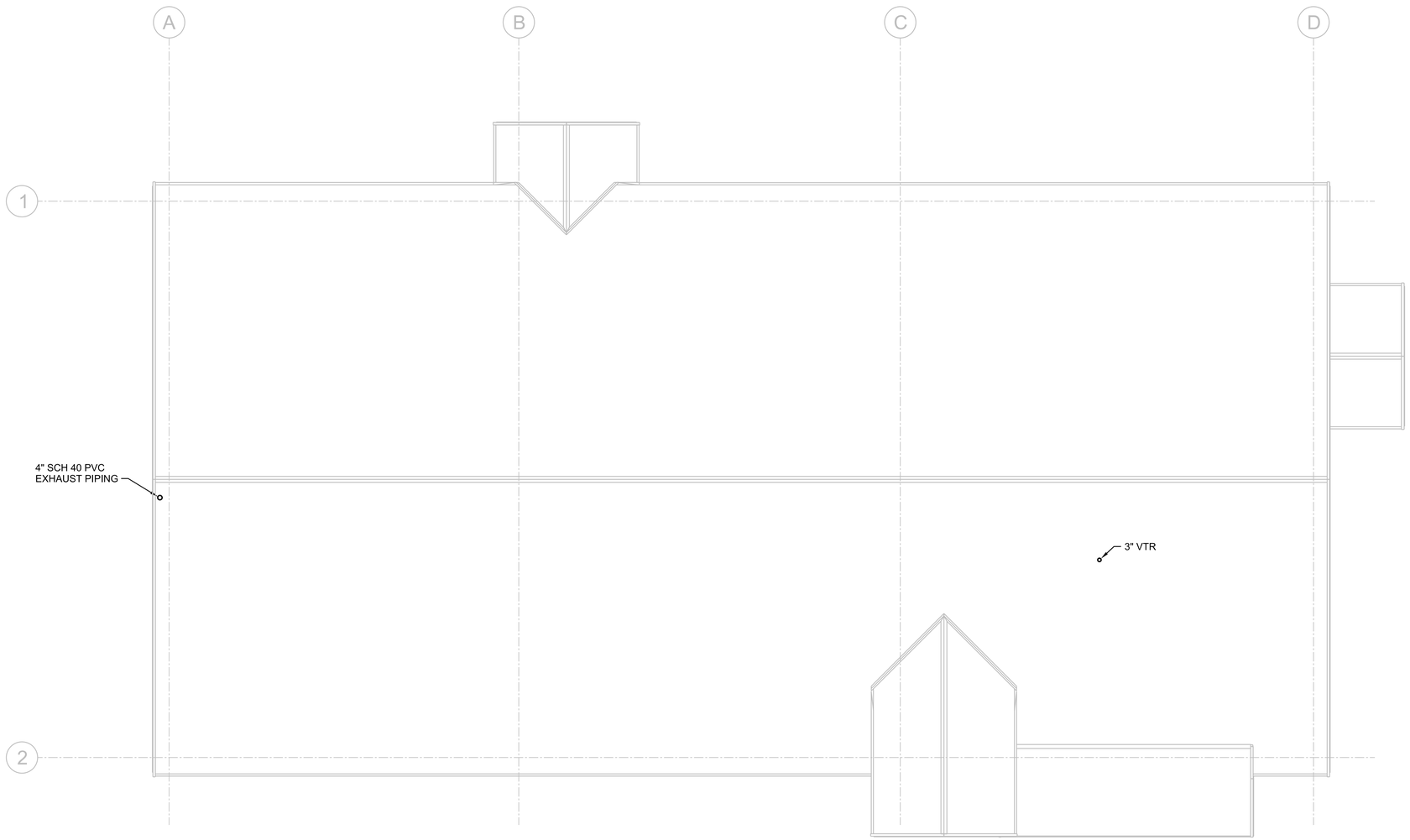

PLAN
3/16"=1'-0"

N

0 4 8 16
3/16"=1'-0"

FULL SIZE DRAWINGS = 22"x34"
BAR MEASURES 1" LONG

0" 1"

Registered Professional Engineer (Mechanical)
CERTIFICATE NO. 46267
SCOTT HINTE
Date Signed 06-30-25
ARIZONA, U.S.A.
Scott Hinte
Expires 06-30-2026

A/E FIRM	DESIGNED:	SUB SHEET NO.	TITLE OF SHEET	DRAWING NO.
JACOBS GOVERNMENT SERVICES COMPANY GREENWOOD VILLAGE, CO	S HINTE CADD: S HOSTETLER TECH. REVIEW: J SACKINGER DATE: 06/2025	10P1040	ADMINISTRATION BUILDING PLUMBING ROOF PLAN GRAND CANYON, SOUTH RIM	113 175376 PMIS/PKG NO. 257282 SHEET 195 OF 401

100% COMPLETE CONSTRUCTION DOCUMENTS

GRCA-257282

PLOT DATE: 6/17/2025 PLOT TIME: 9:13:21 AM SS6/V8I D3167666 - South Rim\4 Delivery\43 CAD Design\GRCA\257282\Microstation V8I Drawings\PLUMB\10P1040_D3167666.dgn

GENERAL SHEET NOTES

A. WC-1, NFWH-1 AND HB-1 UTILIZING RECLAIMED WATER SHALL BE LABELED "CAUTION! NON-POTABLE WATER- DO NOT DRINK". REFER TO DETAIL 1014-002.

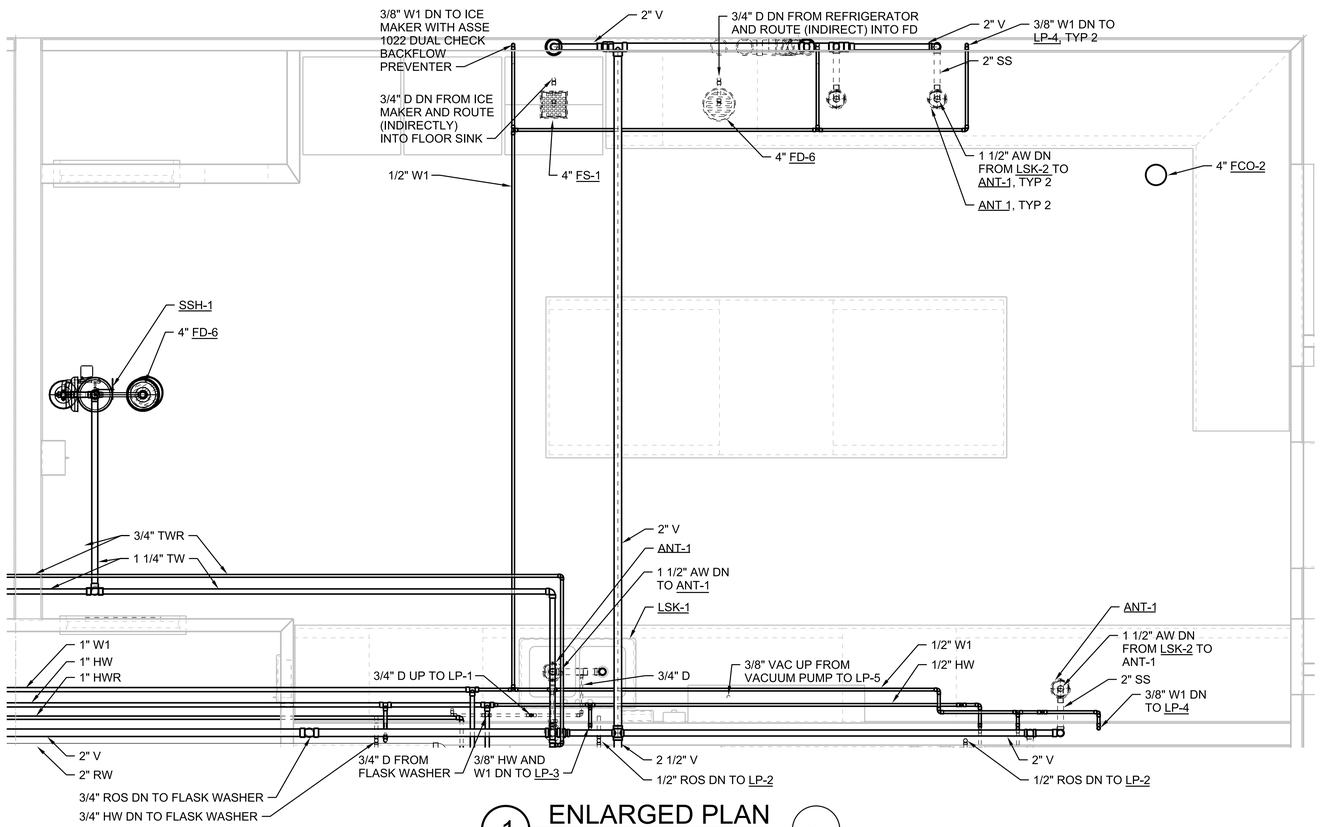

1 ENLARGED PLAN
1/2"=1'-0"
10P1030

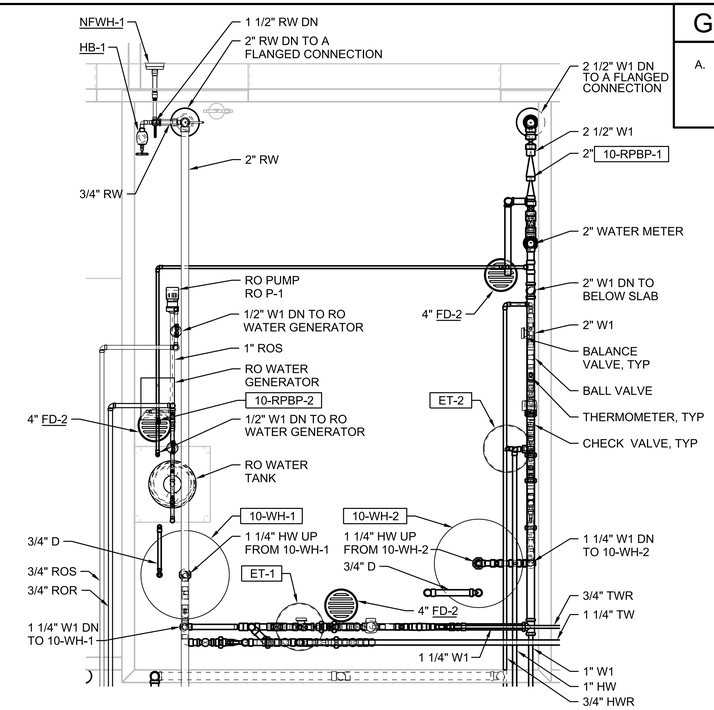

2 ENLARGED PLAN
1/2"=1'-0"
10P1030

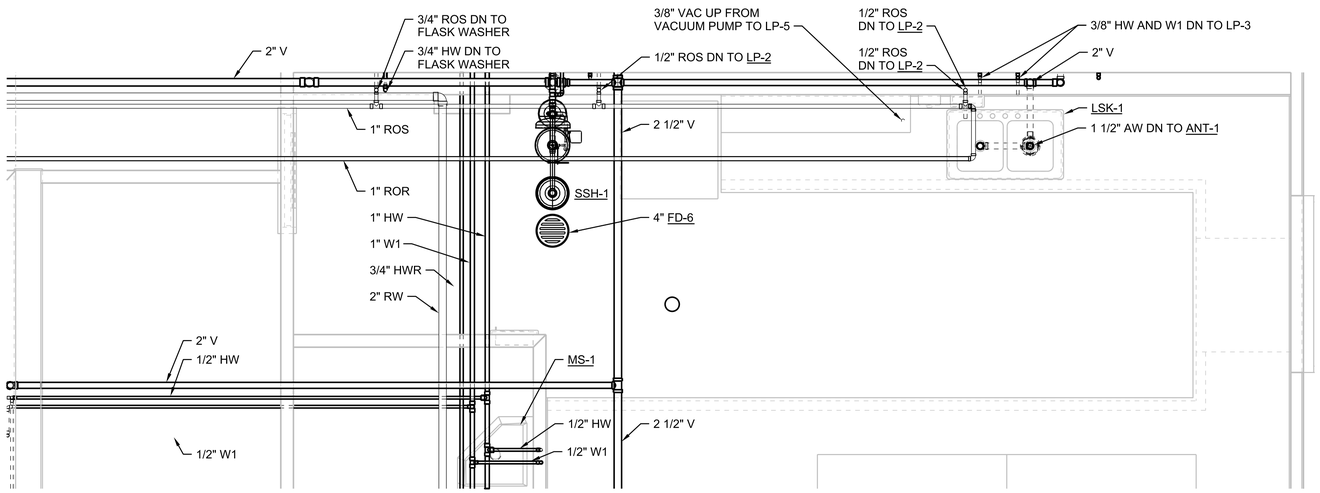

3 ENLARGED PLAN
1/2"=1'-0"
10P1030

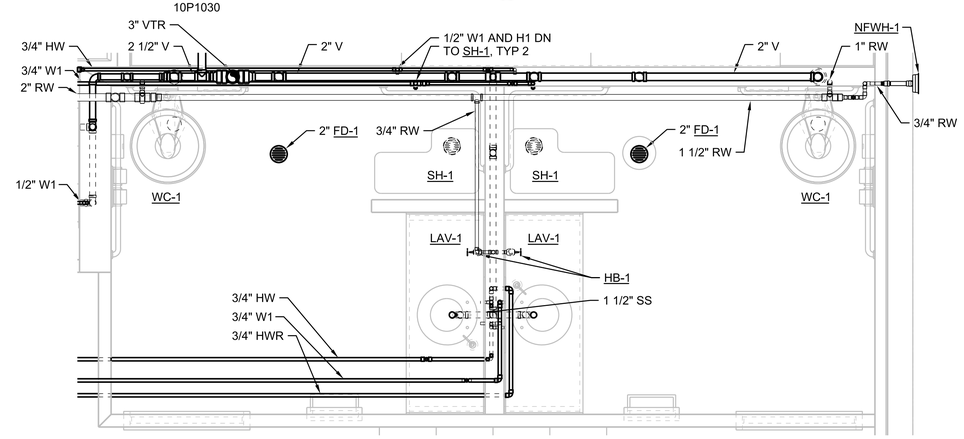

4 ENLARGED PLAN
1/2"=1'-0"
10P1030

0 2 4 6
1/2"=1'-0"

FULL SIZE DRAWINGS = 22"x34"
BAR MEASURES 1" LONG

0" 1"

Registered Professional Engineer (Mechanical) CERTIFICATE NO. 46267 SCOTT HINTE Date Signed 6-30-26 ARIZONA, U.S.A.
Scott Hinte
Expires 06-30-2026

A/E FIRM	DESIGNED:	SUB SHEET NO.	TITLE OF SHEET	DRAWING NO.
JACOBS GOVERNMENT SERVICES COMPANY GREENWOOD VILLAGE, CO	S HINTE CADD: S HOSTETLER TECH. REVIEW: J SACKINGER DATE: 06/2025	10P4001	ADMINISTRATION BUILDING PLUMBING ENLARGED PLANS GRAND CANYON, SOUTH RIM	113 175376 PMIS/PKG NO. 257282 SHEET 196 OF 401

GRCA-257282

100% COMPLETE CONSTRUCTION DOCUMENTS

PLOT DATE: 6/17/2025 PLOT TIME: 9:15:26 AM SS6\V8i D3167666 - South Rim\4 Delivery\43 CAD Design\GRCA\257282\Microstation V8\ Drawings\PLUMB\10P4001_D3167666.dgn

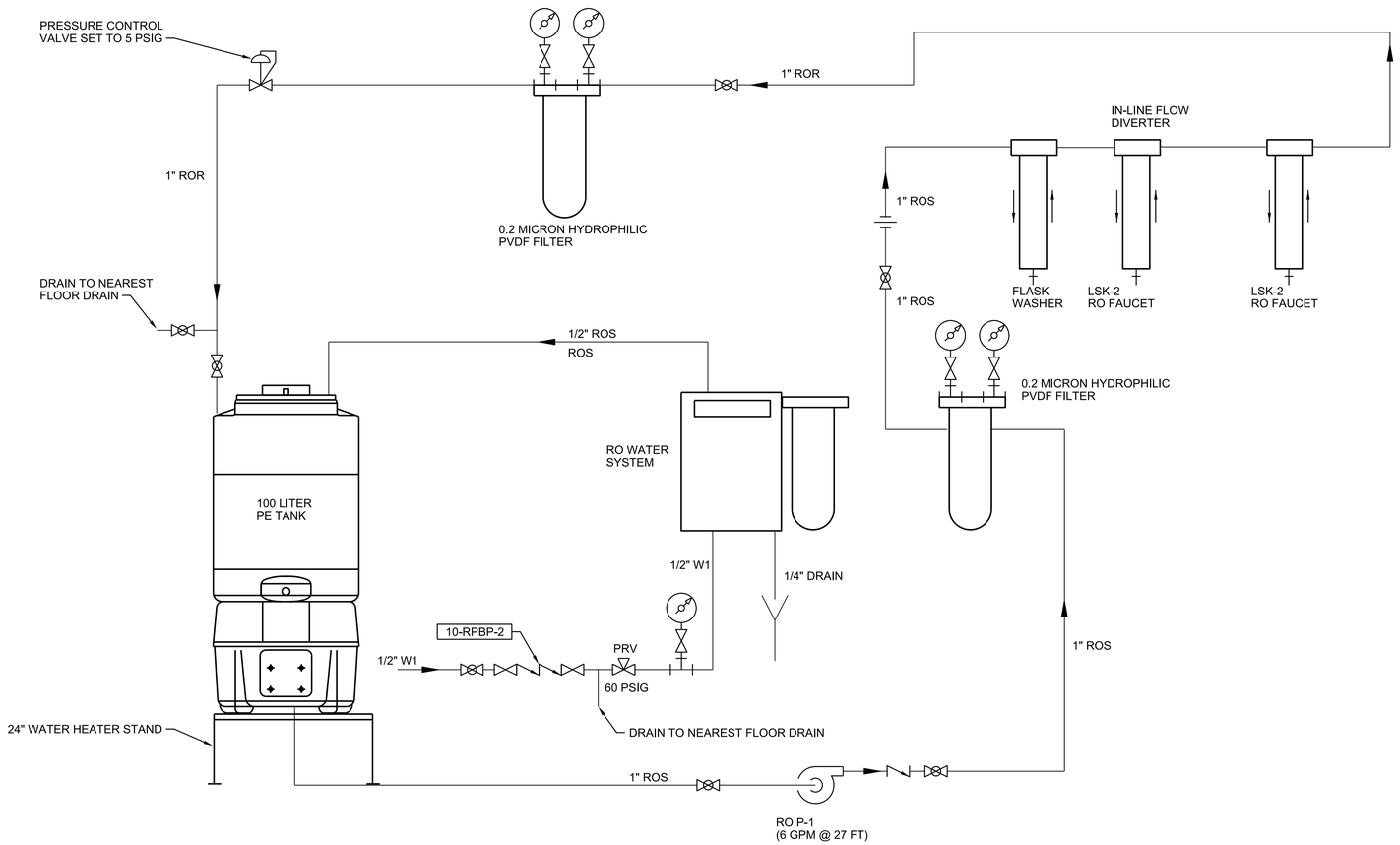

RO WATER SYSTEM

NTS

FULL SIZE DRAWINGS = 22"x34"
BAR MEASURES 1" LONG

0" 1"

Registered Professional Engineer (Mechanical)
CERTIFICATE NO. 46267
SCOTT HINTE
Date Signed 06-30-25
ARIZONA, U.S.A.
Scott Hinte
Expires 06-30-2026

A/E FIRM	DESIGNED:	SUB SHEET NO.	TITLE OF SHEET	NO SCALE
JACOBS GOVERNMENT SERVICES COMPANY GREENWOOD VILLAGE, CO	S HINTE CADD: S HOSTETLER TECH. REVIEW: J SACKINGER DATE: 06/2025	10P6001	ADMINISTRATION BUILDING PLUMBING RO WATER SYSTEM DIAGRAM GRAND CANYON, SOUTH RIM	DRAWING NO. 113 / 175376 PMIS/PKG NO. 257282 SHEET 197 OF 401

100% COMPLETE CONSTRUCTION DOCUMENTS

GRCA-257282

PLOT DATE: 6/17/2025 PLOT TIME: 9:14:02 AM SS6/V8I D3167666 - South Rim\4 Delivery\43 CAD Design\GRCA\257282\Microstation V8I Drawings\PLUMB\10P6001_D3167666.dgn

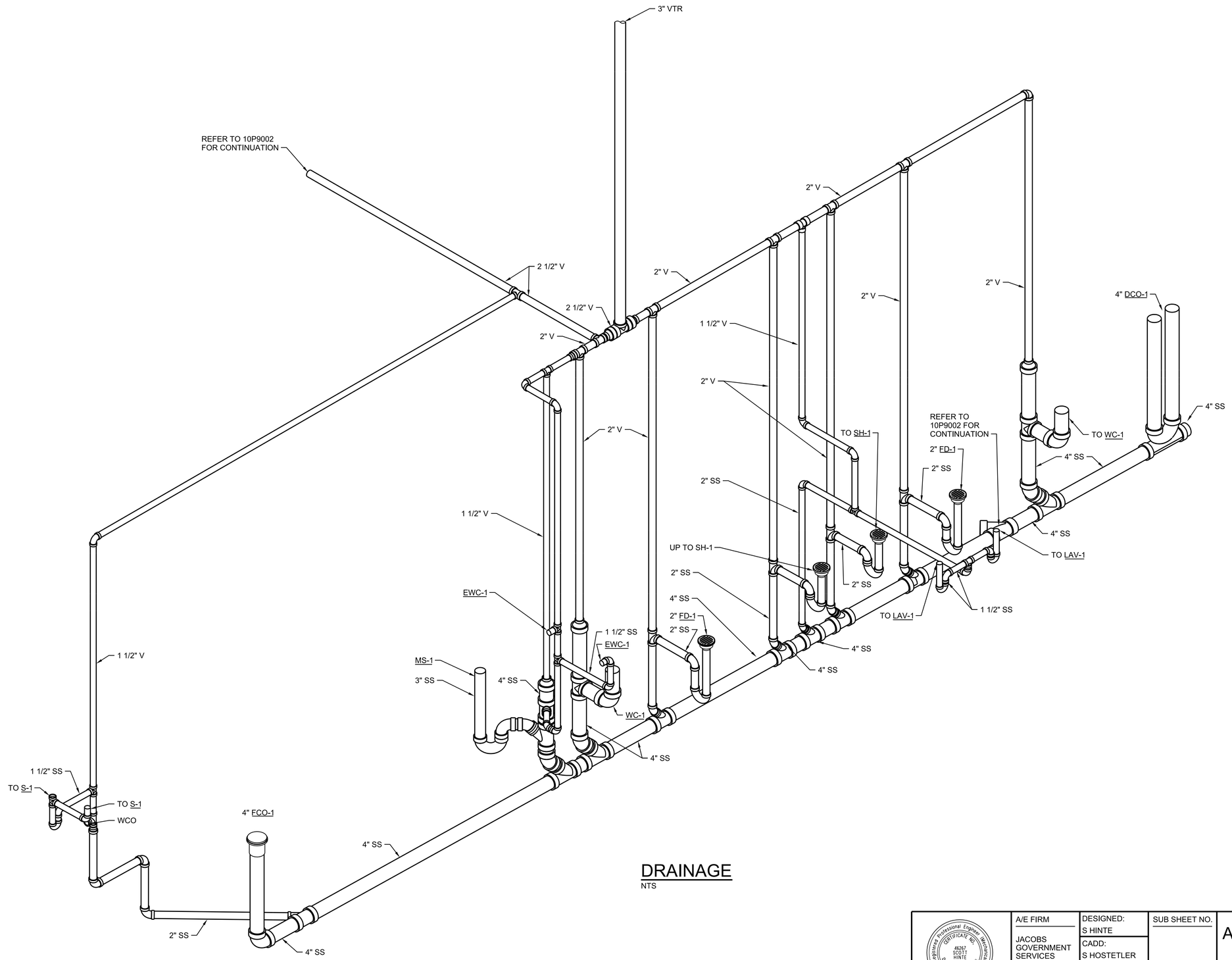

DRAINAGE

NTS

FULL SIZE DRAWINGS = 22"x34"
BAR MEASURES 1" LONG

0" 1"

Registered Professional Engineer (Mechanical)
CERTIFICATE NO. 46267
SCOTT HINTE
Date Signed 6-30-25
ARIZONA, U.S.A.
Scott Hinte
Expires 06-30-2026

A/E FIRM	DESIGNED:	SUB SHEET NO.	TITLE OF SHEET	DRAWING NO.
JACOBS GOVERNMENT SERVICES COMPANY GREENWOOD VILLAGE, CO	S HINTE CADD: S HOSTETLER TECH. REVIEW: J SACKINGER DATE: 06/2025	10P9001	ADMINISTRATION BUILDING PLUMBING ISOMETRIC GRAND CANYON, SOUTH RIM	NO SCALE 113 175376 PMIS/PKG NO. 257282 SHEET 198 OF 401

100% COMPLETE CONSTRUCTION DOCUMENTS

GRCA-257282

PLOT DATE: 6/17/2025 PLOT TIME: 9:13:18 AM SS6IV8i D3167666 - South Rim\4 Delivery\43 CAD Design\GRCA\257282\Microstation V8i Drawings\PLUMB\10P9001_D3167666.dgn

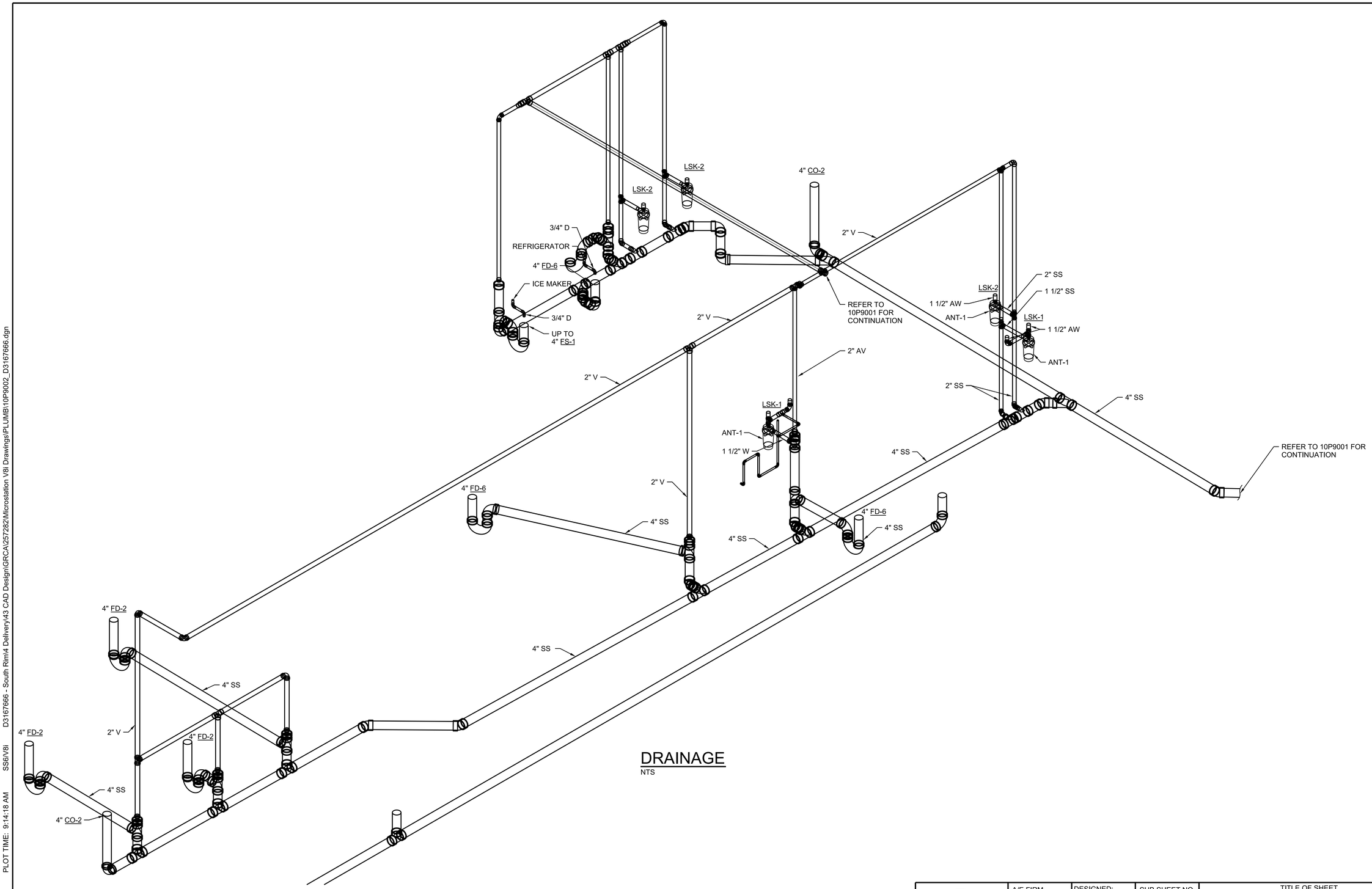

DRAINAGE

NTS

FULL SIZE DRAWINGS = 22"x34"
BAR MEASURES 1" LONG

0" 1"

Registered Professional Engineer (Mechanical)
CERTIFICATE NO. 46267
SCOTT HINTE
Date Signed 6-30-25
ARIZONA, U.S.A.
Scott Hinte
Expires 06-30-2026

A/E FIRM	DESIGNED:	SUB SHEET NO.	TITLE OF SHEET	DRAWING NO.
JACOBS GOVERNMENT SERVICES COMPANY GREENWOOD VILLAGE, CO	S HINTE CADD: S HOSTETLER TECH. REVIEW: J SACKINGER DATE: 06/2025	10P9002	ADMINISTRATION BUILDING PLUMBING ISOMETRIC GRAND CANYON, SOUTH RIM	113 / 175376 PMIS/PKG NO. 257282 SHEET 199 OF 401

NO SCALE

PLOT DATE: 6/17/2025 PLOT TIME: 9:14:18 AM SS6/V8I D3167666 - South Rim\4 Delivery\43 CAD Design\GRCA\257282\Microstation V8I DrawingsPLUMB\10P9002_D3167666.dgn

GRCA-257282

100% COMPLETE CONSTRUCTION DOCUMENTS

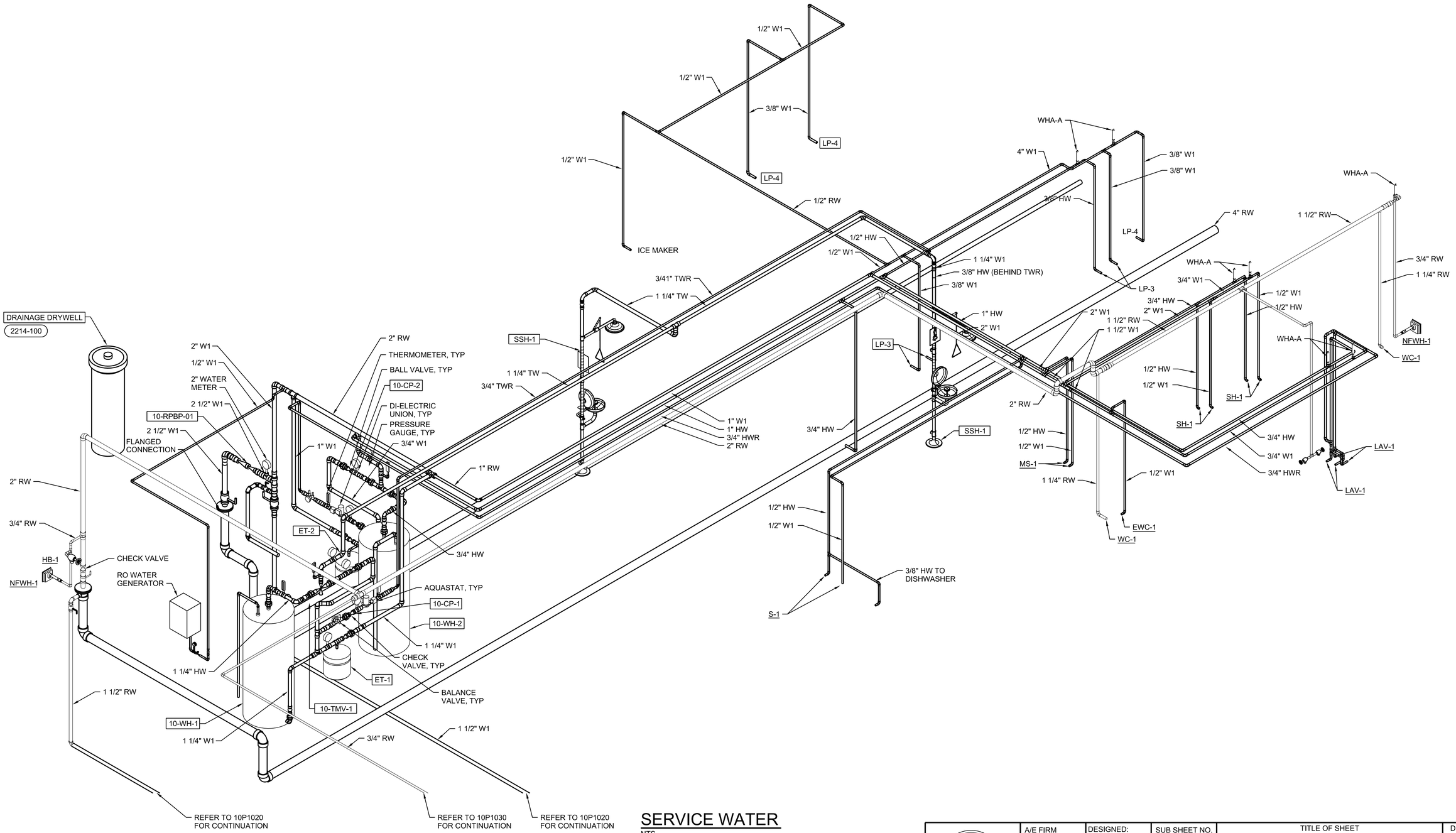

SERVICE WATER

NTS

FULL SIZE DRAWINGS = 22"x34"
BAR MEASURES 1" LONG

0" 1"

Registered Professional Engineer (Mechanical)
CERTIFICATE NO. 46267
SCOTT HINTE
Date Signed 6-30-25
ARIZONA, U.S.A.
Scott Hinte
Expires 06-30-2026

A/E FIRM	DESIGNED:	SUB SHEET NO.	TITLE OF SHEET	NO SCALE
JACOBS GOVERNMENT SERVICES COMPANY GREENWOOD VILLAGE, CO	S HINTE CADD: S HOSTETLER TECH. REVIEW: J SACKINGER DATE: 06/2025	10P9003	ADMINISTRATION BUILDING PLUMBING ISOMETRIC GRAND CANYON, SOUTH RIM	DRAWING NO. 113 175376 PMIS/PKG NO. 257282 SHEET 200 OF 401

100% COMPLETE CONSTRUCTION DOCUMENTS

GRCA-257282

PLOT DATE: 6/17/2025 PLOT TIME: 9:14:15 AM SS6\V8i D3167666 - South Rim\4 Delivery\43 CAD Design\GRCA\257282\Microstation V8i Drawings\PLUMB\10P9003_D3167666.dgn

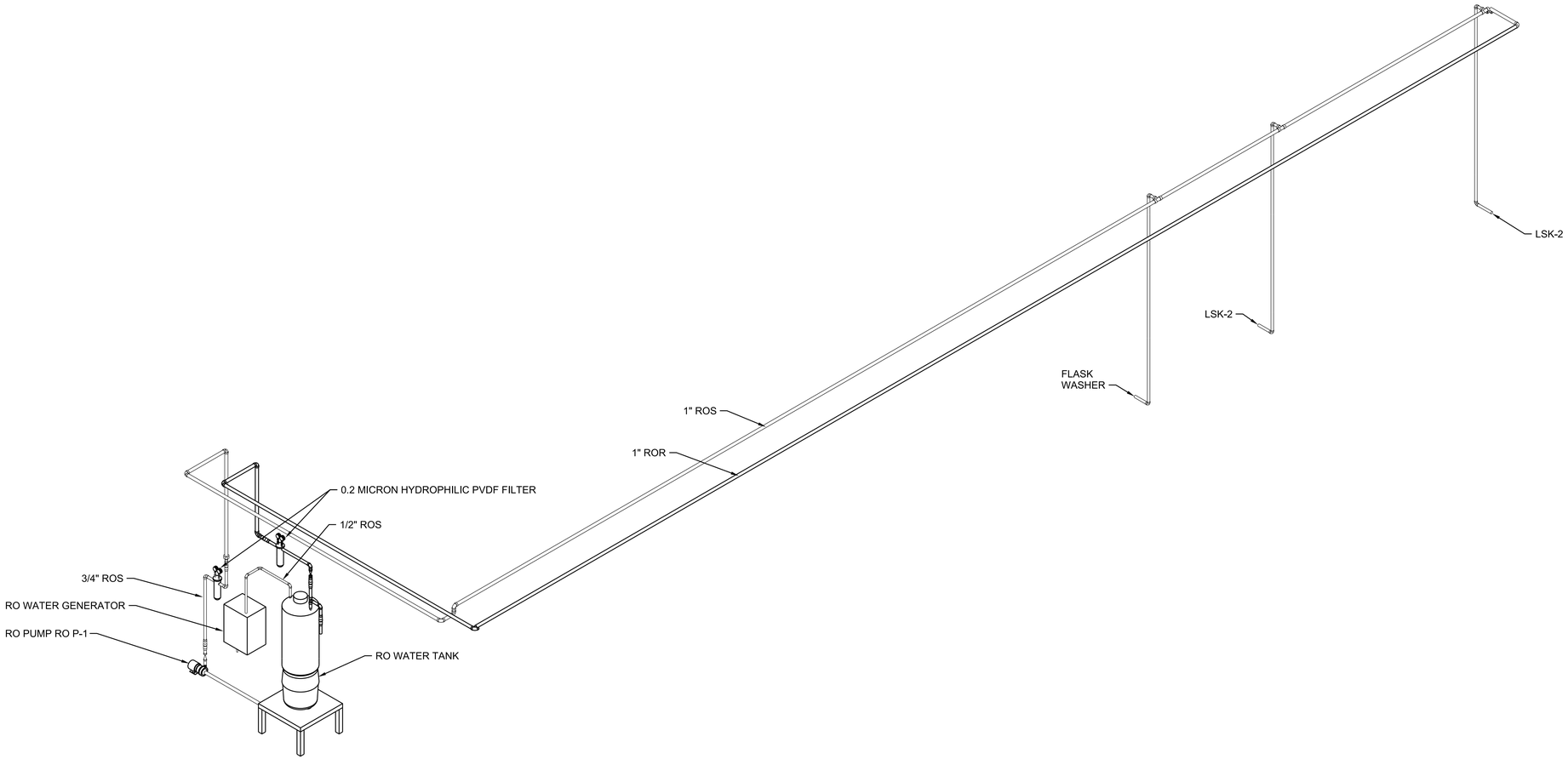

RO WATER SYSTEM

NTS

FULL SIZE DRAWINGS = 22"x34"
BAR MEASURES 1" LONG

0" 1"

Registered Professional Engineer (Mechanical)
CERTIFICATE NO. 46267
SCOTT HINTE
Date Signed 6-09-25
ARIZONA, U.S.A.
Scott Hinte
Expires 06-30-2026

A/E FIRM	DESIGNED:	SUB SHEET NO.	TITLE OF SHEET	DRAWING NO.
JACOBS GOVERNMENT SERVICES COMPANY GREENWOOD VILLAGE, CO	S HINTE CADD: S HOSTETLER TECH. REVIEW: J SACKINGER DATE: 06/2025	10P9004	ADMINISTRATION BUILDING PLUMBING ISOMETRIC GRAND CANYON, SOUTH RIM	NO SCALE 113 175376 PMIS/PKG NO. 257282 SHEET 201 OF 401

100% COMPLETE CONSTRUCTION DOCUMENTS

GRCA-257282

PLOT DATE: 6/17/2025 PLOT TIME: 9:14:56 AM SS6/V8i D3167666 - South Rim\4 Delivery\43 CAD Design\GRCA\257282\Microstation V8i Drawings\PLUMB\10P9004_D3167666.dgn

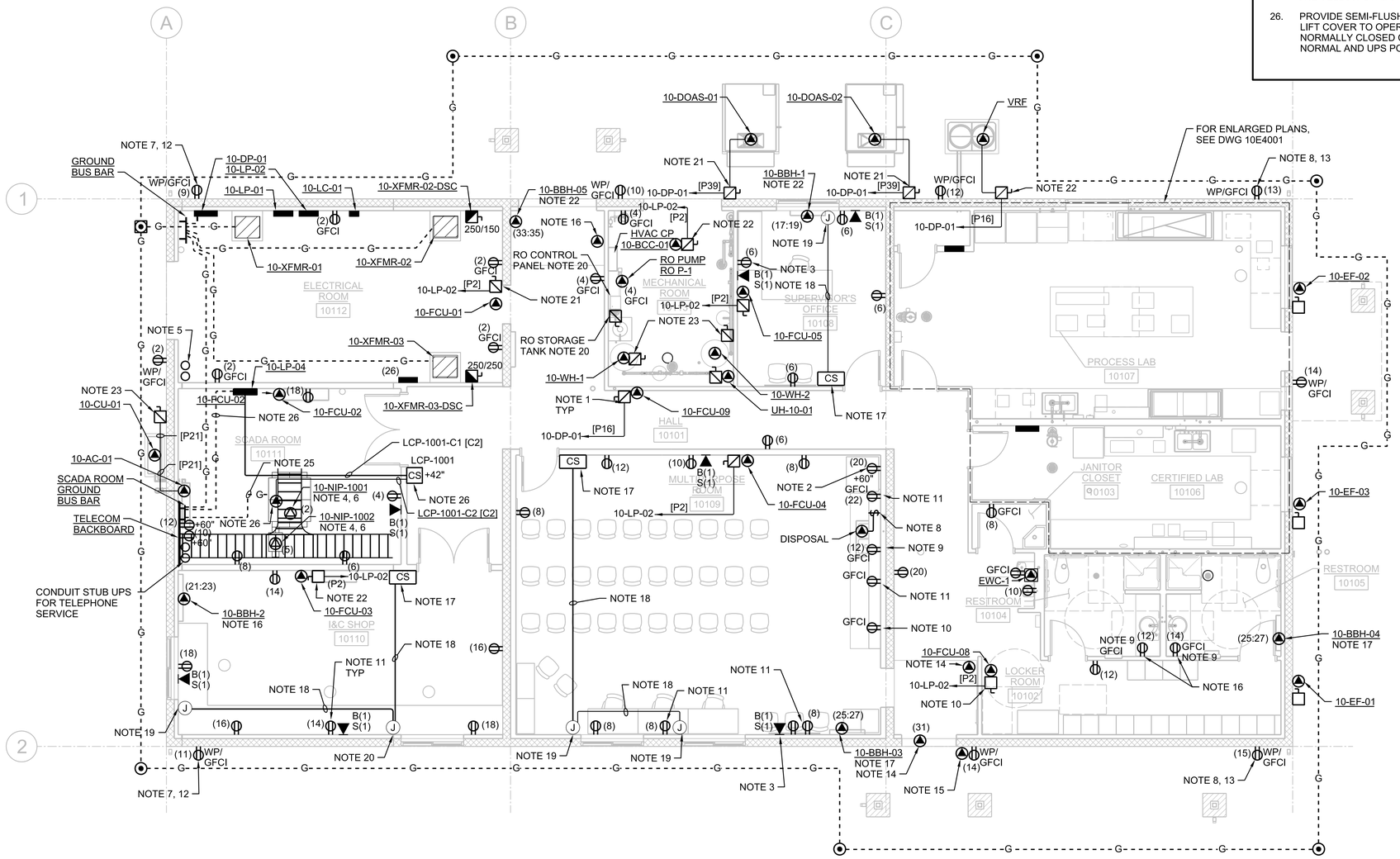

PLAN

3/16"=1'-0"

0 4 8 16

3/16"=1'-0"

SHEET NOTES

24. 60 AMP, FUSE PER EQUIPMENT NAMEPLATE. WIRE TO OUTDOOR CONDENSER FROM ELECTRIC PANEL THEN FROM OUTDOOR UNIT TO INDOOR FAN UNIT. REFER TO MANUFACTURERS INSTALLATION MANUAL.
25. 3/4" CONDUIT WITH #6 AWG GROUND, GREEN WITH ONE YELLOW STRIP.
26. PROVIDE SEMI-FLUSH MOUNT SHUNT TRIP WITH LIFT COVER TO OPERATE AND 2 SETS OF NORMALLY CLOSED CONTACTS TO REMOVE NORMAL AND UPS POWER

GENERAL SHEET NOTES

A. NUMBERS SHOWN IN PARENTHESIS, (N) ADJACENT TO LIGHT AND RECEPTACLES DENOTE CIRCUIT NUMBERS IN FACILITY PANELBOARD 10-LP-01 UNLESS OTHERWISE NOTED. PROVIDE #12 CONDUCTORS FOR 20A OR 15A CIRCUITS LESS THAN 75 FEET. PROVIDE #10 CONDUCTORS FOR CIRCUITS GREATER THAI 75 FEET. REFER TO PANELBOARD SCHEDULES.

B. COMBINE RECEPTACLE AND LIGHTING CIRCUITS IN A SINGLE CONDUIT TO MINIMIZE LENGTH OF CONDUCTORS AND CONDUIT. CIRCUITS COMBINED INTO A SINGLE CONDUIT SHALL BE SIZED FOR NEC DERATING AND CONDUIT FILL REQUIREMENTS.

C. FOR FINAL MOUNTING LOCATIONS OF RECEPTACLES, SEE LAB ELEVATION DRAWINGS ON 10A4003.

D. SIZE DISCONNECTS FOR EQUIPMENT SERVED.

E. GROUND RINGS AND BURIED GROUND CABLES ARE 4/0 BARE COPPER UNLESS NOTED OTHERWISE.

SHEET NOTES

1. LOCATE DISCONNECTS ABOVE CEILING WHERE POSSIBLE, TYPICAL.
2. DEDICATED CIRCUIT FOR REFRIGERATOR.
3. MOUNT DEDICATED RECEPTACLE FROM RACK MOUNTED UPS AND DATA JACK FOR SCADA MONITOR IN RECESSED BOX BEHIND FINAL LOCATION OF SCREEN. COORDINATE WITH ARCHITECTURAL ELEVATIONS.
4. L30R TWIST LOCK RECEPTACLE MOUNTED TO BASKET TRAY ABOVE RACKS.
5. CONDUIT STUB UPS FOR FUTURE PV.
6. PDU'S IN THE RACKS POWERED FROM RACK MOUNTED UPS.
7. RECEPTACLE FOR DOWNSPOUT AND GUTTER HEAT TRACE.
8. INSTALL ABOVE BACKSPLASH.
9. DEDICATED RECEPTACLE FOR GARBAGE DISPOSAL MOUNTED BELOW THE SINK.
10. DEDICATED MICROWAVE RECEPTACLE.
11. MOUNT RECEPTACLES ABOVE COUNTER.
12. FED FROM PANELBOARD 10-LP-02.
13. 120V DEDICATED CIRCUIT FOR ADA ELECTRIC DOOR.
14. PUSH-TO-EXIT DOOR OPENER CONTROL STATION CONNECTION. CONNECTED VIA 3/4" CONDUIT FROM CONTROL PANEL LOCATED IN THE ELECTRICAL ROOM.
15. REFER TO ARCHITECTURAL PLANS AND ELEVATIONS FOR LOCATION AND MOUNTING HEIGHT.
16. PROVIDE NEMA 6-30R RECEPTACLE, 30 AMP SJ CORD, AND ANGLED NEMA 6-30P PLUG FOR BASE-BOARD HEATER.
17. PROVIDE AUTOMATIC BLIND AND BLIND CONTROLS.
18. 3/4" CONDUIT WITH WIRING AS REQUIRED FOR BLIND CONTROLS.
19. PROVIDE JUNCTION BOX AND TERMINATIONS AS REQUIRED BY BLIND MANUFACTURERS INSTALLATION INSTRUCTIONS.
20. INSTALL VENDOR PROVIDED SENSORS BETWEEN REVERSE OSMOSIS (RO) STORAGE TANK AND RO CONTROL PANEL.
21. FUSE PER NAMEPLATE OF EQUIPMENT SERVED.
22. PROVIDE NEMA 6-40R RECEPTACLE AND NEMA 6-40P WITH #8 AWG 2C+G SJ CORD FOR QUIPMENT CONNECTION.
23. 4' x 8' x 3/4" FIRE RETARDENT PLYWOOD WITH 2 COATS OF WHITE PAINT LOCATED 12" ABOVE FLOOR TO BOTTOM.

FULL SIZE DRAWINGS = 22"x34"
BAR MEASURES 1" LONG

0" 1"

Registered Professional Engineer (Electrical) CERTIFICATE NO. 81240 DAVID BURGER Date Signed 6-23-2025 ARIZONA, U.S.A.

JUNE 23, 2025

A/E FIRM	DESIGNED:	SUB SHEET NO.	TITLE OF SHEET	DRAWING NO.
JACOBS GOVERNMENT SERVICES COMPANY GREENWOOD VILLAGE, CO	D BURGER CADD: J GARIBAY TECH. REVIEW: J LANDMAN DATE: 06/2025	10EP1030	ADMINISTRATION BUILDING ELECTRICAL POWER PLAN GRAND CANYON, SOUTH RIM	113 / 175376 PMIS/PKG NO. 257282 SHEET 202 OF 401

100% COMPLETE CONSTRUCTION DOCUMENTS

GRCA-257282

PLOT DATE: 6/24/2025 PLOT TIME: 10:12:28 PM SS6\V8I D3167666 - South Rim\4 Delivery\43 CAD Design\GRCA\257282\Microstation V8I DrawingsIELEC\10EP1030_D3167666.dgn

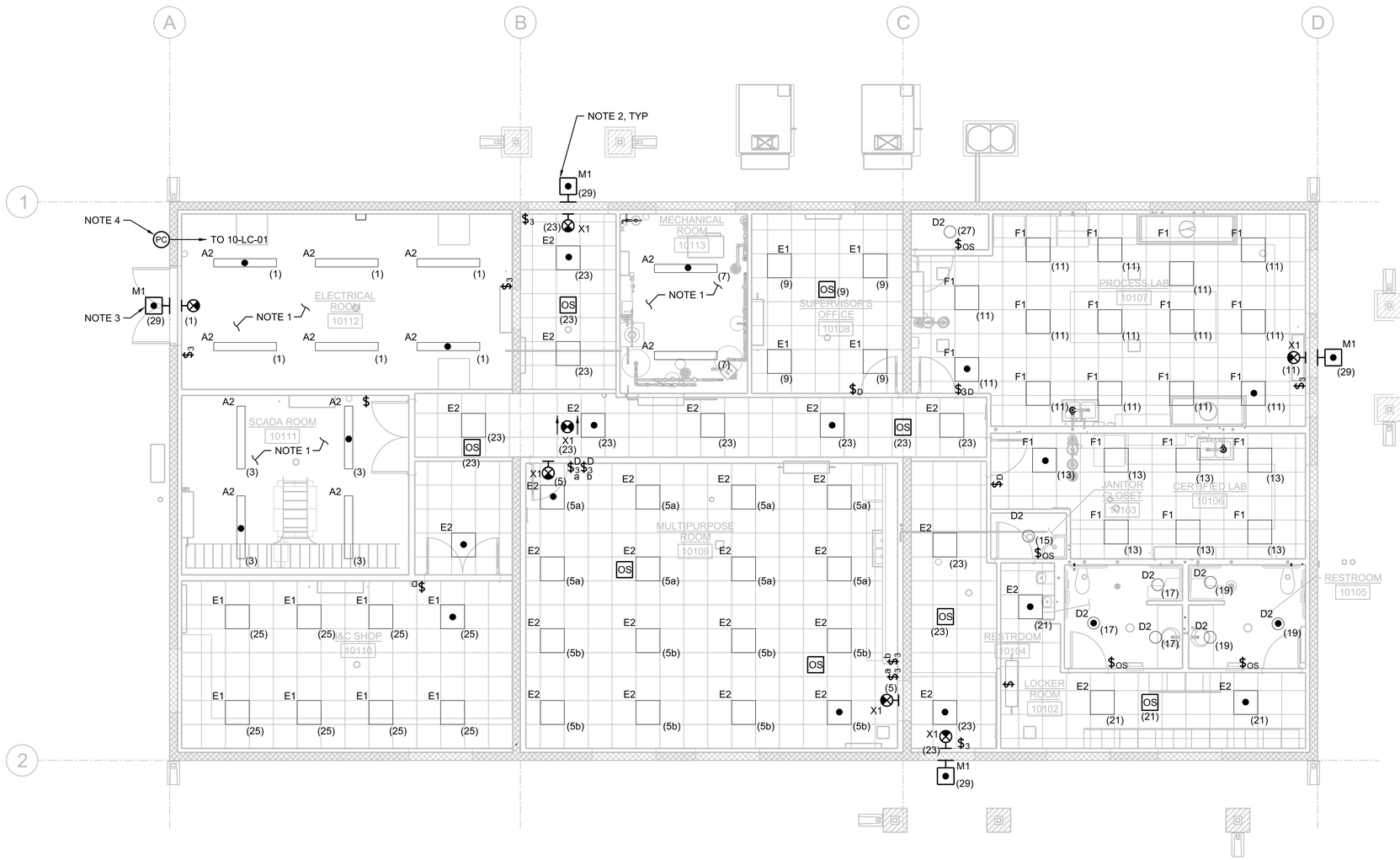

PLAN

3/16"=1'-0"

0 4 8 16

3/16"=1'-0"

N

FULL SIZE DRAWINGS = 22"x34"
BAR MEASURES 1" LONG

0" 1"

Registered Professional Engineer (Electrical) CERTIFICATE NO. 81240 DAVID BURGER Date Signed 6-19-2025 ARIZONA, U.S.A.

JUNE 19, 2025

A/E FIRM
JACOBS GOVERNMENT SERVICES COMPANY
GREENWOOD VILLAGE, CO

DESIGNED: D BURGER
CADD: J GARIBAY
TECH. REVIEW: J LANDMAN
DATE: 06/2025

SUB SHEET NO. 10EL1030

TITLE OF SHEET
ADMINISTRATION BUILDING ELECTRICAL LIGHTING PLAN
GRAND CANYON, SOUTH RIM

DRAWING NO. 113
175376
PMIS/PKG NO. 257282
SHEET 203 OF 401

GENERAL SHEET NOTES

A. NUMBERS SHOWN IN PARENTHESIS, (N), ADJACENT TO LIGHTS AND RECEPTACLES DENOTE CIRCUIT NUMBERS IN FACILITY PANELBOARD 10-LP-01. UNLESS OTHERWISE NOTED. PROVIDE #12 CONDUCTORS FOR 20A OR 15A CIRCUITS LESS THAN 75 FEET. PROVIDE #10 CONDUCTORS FOR CIRCUITS GREATER THAN 75 FEET.

B. COMBINE RECEPTACLE AND LIGHTING CIRCUITS IN A SINGLE CONDUIT TO MINIMIZE LENGTH OF CONDUCTORS AND CONDUIT. CIRCUITS COMBINED INTO A SINGLE CONDUIT SHALL BE SIZED FOR NEC DERATING AND CONDUIT FILL REQUIREMENTS.

C. FOR INFORMATION ON EXTERIOR LIGHTING CONTROLS, SEE DRAWING 08E7110.

D. FOR LUMINAIRE SCHEDULE AND NOTES, SEE DRAWING 08E6001 AND 08E6002.

SHEET NOTES

1. SURFACE MOUNT LUMINAIRES IN THIS ROOM, UNLESS SPECIFIED OTHERWISE.
2. WALL MOUNT EXTERIOR LUMINAIRES AT 8'-0" AFG, UNLESS SPECIFIED OTHERWISE. COORDINATE FINAL LOCATION WITH ARCHITECTURAL DRAWINGS.
3. WALL MOUNT EXTERIOR LUMINAIRE 6" ABOVE REMOVABLE TRANSOM PANEL.
4. MOUNT PHOTOCELL AS HIGH AS POSSIBLE. FIELD ADJUST AND AIM AS REQUIRED BY MANUFACTURER.

GRCA-257282

100% COMPLETE CONSTRUCTION DOCUMENTS

PLOT DATE: 6/18/2025 PLOT TIME: 10:27:16 AM SS6/V8i D3167666 - South Rim\4 Delivery\43 CAD Design\GRCA\257282\Microstation V8i Drawings\ELEC\10EL1030_D3167666.dgn

GENERAL SHEET NOTES

A. BOND ALL METALLIC OBJECTS WITHIN 6'-0" OF ROOF AND DOWN CONDUCTORS.

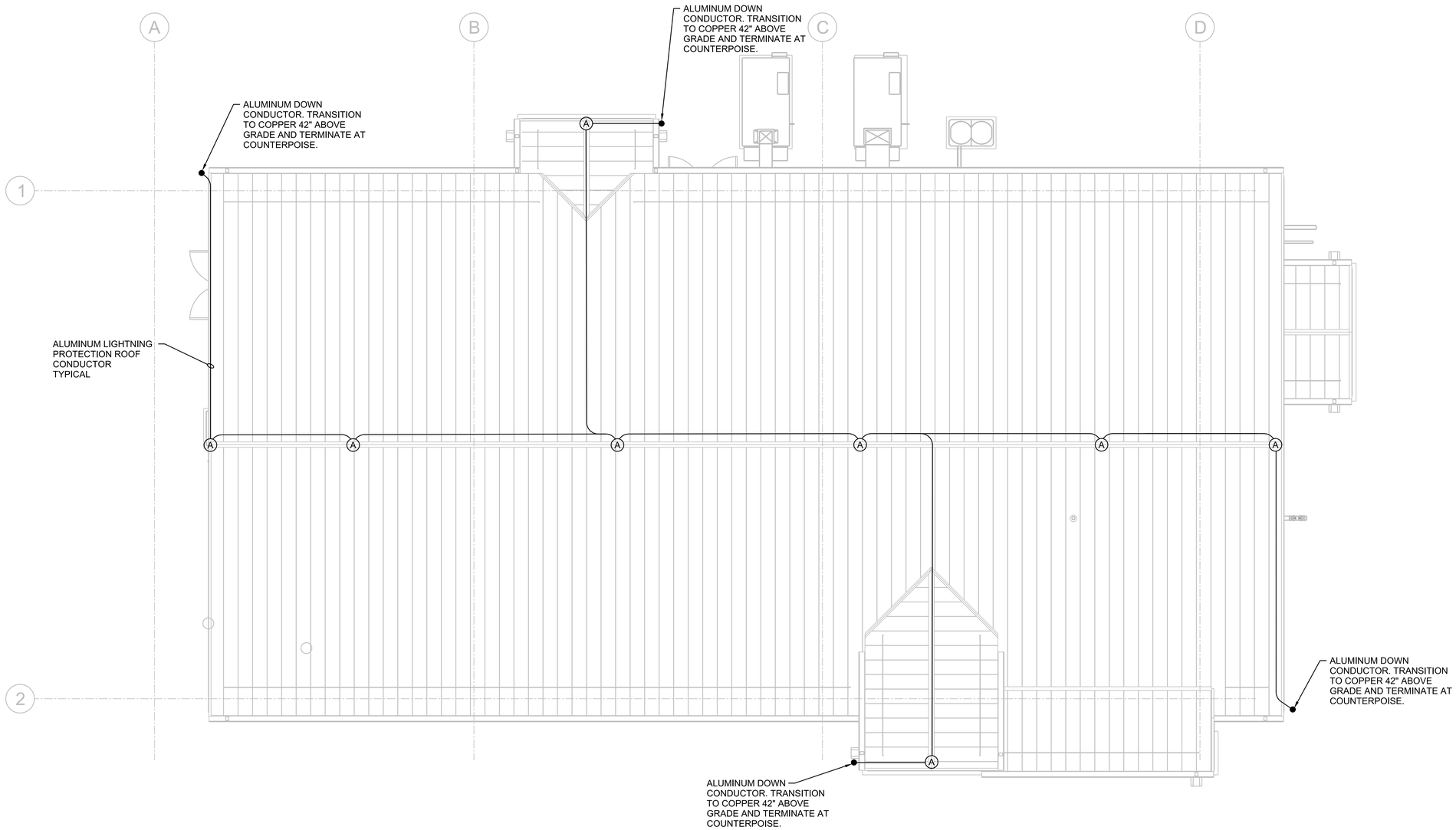

PLAN

3/16"=1'-0"

0 4 8 16

3/16"=1'-0"

FULL SIZE DRAWINGS = 22"x34"
BAR MEASURES 1" LONG

0" 1"

Registered Professional Engineer (Electrical) CERTIFICATE NO. 81240 DAVID BURGER Date Signed 6-19-2025 ARIZONA, U.S.A.

JUNE 19, 2025

A/E FIRM
JACOBS GOVERNMENT SERVICES COMPANY
GREENWOOD VILLAGE, CO

DESIGNED: D BURGER
CADD: J GARIBAY
TECH. REVIEW: J LANDMAN
DATE: 06/2025

SUB SHEET NO. 10E1040

TITLE OF SHEET
ADMINISTRATION BUILDING
ELECTRICAL
ROOF PLAN

GRAND CANYON, SOUTH RIM

DRAWING NO. 113
175376
PMIS/PKG NO. 257282
SHEET 204 OF 401

100% COMPLETE CONSTRUCTION DOCUMENTS

GRCA-257282

PLOT DATE: 6/16/2025 PLOT TIME: 11:40:24 PM SS6/V8I D3167666 - South Rim\4 Delivery\43 CAD Design\GRCA\257282\Microstation V8I Drawings\ELEC\10E1040_D3167666.dgn

GENERAL SHEET NOTES

A. NUMBERS SHOWN IN PARENTHESIS, (N) ADJACENT TO LIGHT AND RECEPTACLES DENOTE CIRCUIT NUMBERS IN FACILITY PANELBOARD 10-LP-03 SECTION 1 AND SECTION 2 UNLESS OTHERWISE NOTED. PROVIDE #12 CONDUCTORS FOR 20A OR 15A CIRCUITS LESS THAN 75 FEET. PROVIDE #10 CONDUCTORS FOR CIRCUITS GREATER THAN 75 FEET. REFER TO PANELBOARD SCHEDULES.

B. COMBINE RECEPTACLE AND LIGHTING CIRCUITS IN A SINGLE CONDUIT TO MINIMIZE LENGTH OF CONDUCTORS AND CONDUIT. CIRCUITS COMBINED INTO A SINGLE CONDUIT SHALL BE SIZED FOR NEC DERATING AND CONDUIT FILL REQUIREMENTS.

C. FOR FINAL MOUNTING LOCATIONS OF RECEPTACLES, SEE LAB ELEVATION DRAWINGS ON 10A4003.

SHEET NOTES

1. SWITCH CONTROLS DUPLEX PLUG UNDER COUNTER DEDICATED TO VPP.
2. RECEPTACLES LOCATED IN KNEE SPACE BELOW COUNTERS.
3. DEDICATED CIRCUIT FOR PASS THROUGH REFRIGERATOR.
4. DEDICATED CIRCUITS FOR ICE MACHINE.
5. DEDICATED CIRCUIT FOR REFRIGERATOR.
6. DEDICATED CIRCUIT FOR DISHWASHER.
7. DEDICATED CIRCUIT FOR UNDER COUNTER REFRIGERATOR.
8. DEDICATED CIRCUIT FOR INCUBATOR.
9. RECEPTACLES LOCATED ABOVE THE COUNTERS.
10. LOCATE DISCONNECTS ABOVE CEILING WHERE POSSIBLE, TYPICAL.
11. MOUNT DEDICATED RECEPTACLE FROM RACK MOUNTED UPS AND DATA JACK FOR SCADA MONITOR IN RECESSED BOX BEHIND FINAL LOCATION OF SCREEN. COORDINATE WITH ARCHITECTURAL ELEVATIONS.
12. CANOPY HOOD SWITCH.
13. 30 AMP FUSED DISCONNECT. FUSE PER EQUIPMENT NAMEPLATE.

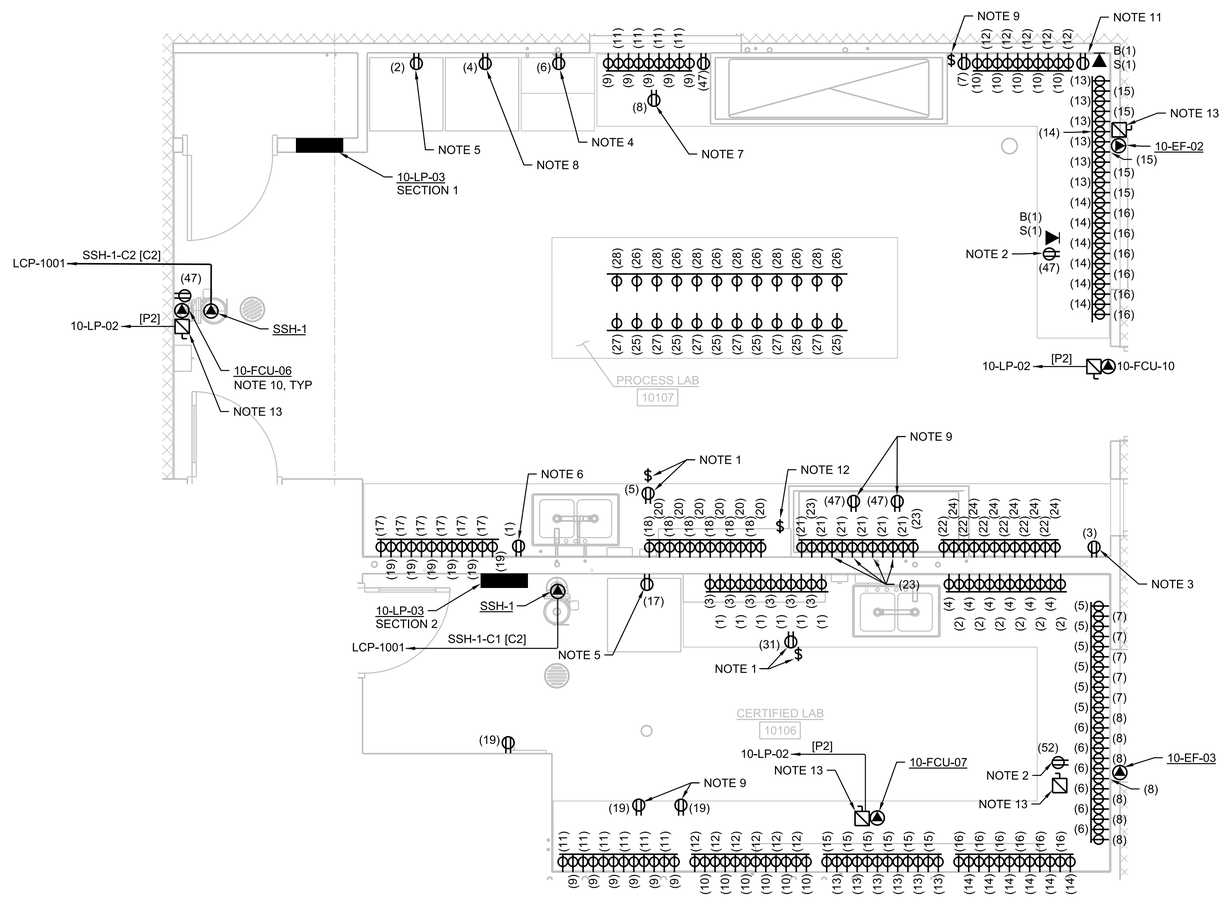

ENLARGED PLAN

3/8"=1'-0"

0 2 4 6

3/8"=1'-0"

FULL SIZE DRAWINGS = 22"x34"
BAR MEASURES 1" LONG

0" 1"

Registered Professional Engineer (Electrical) CERTIFICATE NO. 81240 DAVID BURGER Date Signed 6-19-2025 ARIZONA, U.S.A.

JUNE 19, 2025

A/E FIRM	DESIGNED:	SUB SHEET NO.	TITLE OF SHEET	DRAWING NO.
JACOBS GOVERNMENT SERVICES COMPANY GREENWOOD VILLAGE, CO	D BURGER CADD: J GARIBAY TECH. REVIEW: J LANDMAN DATE: 06/2025	10E4001	ADMINISTRATION BUILDING ELECTRICAL POWER PLAN - ENLARGED GRAND CANYON, SOUTH RIM	113 175376 PMIS/PKG NO. 257282 SHEET 205 OF 401

100% COMPLETE CONSTRUCTION DOCUMENTS

GRCA-257282

PLOT DATE: 6/16/2025 PLOT TIME: 11:39:17 PM SS6/V8i D3167666 - South Rim\4 Delivery\43 CAD Design\GRCA\257282\Microstation V8i DrawingsIELEC\10E4001_D3167666.dgn

PANEL: 10-DP-01

VOLTAGE: 480
PHASE, WIRES: 3, 3
SCR (AMPS): 65,000
SOURCE: 32-SWBD-01

PANEL BUS: 600 AMPS
MAIN: 600 BREAKER
125% OF MAX BUS LOAD: 284 AMPS
TOTAL CONNECTED LOAD: 184.3 KVA
TOTAL DEMAND LOAD: 184.3 KVA
TOTAL DESIGN LOAD: 184.3 KVA

* EFCI
** GFCI
MOUNTING: SURFACE
FEED: BOTTOM

DESCRIPTION	NOTES	DEMAND CODE	KVA	CB	CKT	A	B	C	CKT	CB	KVA	DEMAND CODE	NOTES	DESCRIPTION
DOAS-1 OUTSIDE AIR UNIT 1	HVAC CIRCUIT, UTILIZE HACR BREAKER	GENERAL	17.33	90/3	1	87.8			2	40/3	7.00	GENERAL	HVAC CIRCUIT, UTILIZE HACR BREAKER	DOAS-2 OUTSIDE AIR UNIT 2
		---	17.33		3		87.8		4		7.00	---		
		---	17.33		5			87.8	6		7.00	---		
10-WH-1 WATER HEATER 1		GENERAL	5.00	25/3	7	32.9			8	35/3	4.10	GENERAL		10-WH-2 WATER HEATER 2
		---	5.00		9		32.9		10		4.10	---		
		---	5.00		11			32.9	12		4.10	---		
SANITARY LIFT STATION		GENERAL	3.50	60/3	13	18.1			14	30/3	5.00	GENERAL	HVAC CIRCUIT, UTILIZE HACR BREAKER	VRF CONDENSER UNIT
		---	3.50		15		18.1		16		5.00	---		
		---	3.50		17			18.1	18		5.00	---		
10-UH-01 ELECTRIC HEATER MECHANICAL ROOM	HVAC CIRCUIT, UTILIZE HACR BREAKER	GENERAL	1.30	15/3	19	4.7			20	20/3		GENERAL		SPARE
		---	1.30		21		4.7		22			---		
		---	1.30		23			4.7	24			---		
SPARE		GENERAL		20/3	25	0.0			26	20/3		GENERAL		SPARE
		---			27		0.0		28			---		
		---			29			0.0	30			---		
10-XFRM-01 (75 KVA)		GENERAL		175/3	31	22.5			32	110/3	6.23	GENERAL		10-XFRM-02 (45 KVA)
		---			33		33.0		34		9.13	---		
		---			35			27.2	36		7.54	---		
SPD		GENERAL		30/3	37	52.6			38	175/3	14.56	GENERAL		10-XFRM-03 (75 KVA)
		---			39		50.8		40		14.06	---		
		---			41			49.1	42		13.60	---		
					TOTALS	218.5	227.2	219.7	AMPS					
						60.5	62.9	60.9	KVA					

NOTES
1. PROVIDE DIGITAL POWER QUALITY METER INTEGRAL TO PANEL WITH ETHERNET INTERFACE CARD. REFER TO DRAWING 32E5001 AND SPECIFICATIONS.

PANEL: 10-LP-01

VOLTAGE: 208/120
PHASE, WIRES: 3, 4
SCR (AMPS): 10,000
SOURCE: 10-XFMR-01

PANEL BUS: 250 AMPS
MAIN: 250 BREAKER
125% OF MAX BUS LOAD: 104 AMPS
TOTAL CONNECTED LOAD: 27.1 KVA
TOTAL DEMAND LOAD: 27.1 KVA
TOTAL DESIGN LOAD: 27.1 KVA

MOUNTING: SURFACE
FEED: BOTTOM

DESCRIPTION	NOTES	DEMAND CODE	KVA	CB	CKT	A	B	C	CKT	CB	KVA	DEMAND CODE	NOTES	DESCRIPTION
ELECTRICAL ROOM LIGHTS	2.2 VA/SQ FT @ 406 SQ FT	NEC 22.42(A) LIGHTING	0.89	20/1	1	11.4			2	20/1	0.48	180 VA PER @ 3 RECEPTACLES	NEC 220.14(H)	RECEPTACLES ELECTRICAL ROOM
SCADA ROOM LIGHTS	2.2 VA/SQ FT @ 285 SQ FT	NEC 22.42(A) LIGHTING	0.63	20/1	3		11.2		4	20/1	0.72	180 VA PER @ 4 RECEPTACLES	NEC 220.14(H)	RECEPTACLES MECHANICAL ROOM
MULTIPURPOSE ROOM LIGHTS	2.2 VA/SQ FT @ 741 SQ FT	NEC 22.42(A) LIGHTING	1.63	20/1	5			19.6	6	20/1	0.72	180 VA PER @ 4 RECEPTACLES	NEC 220.14(H)	RECEPTACLES MULTIPURPOSE ROOM
MECHANICAL ROOM LIGHTS	2.2 VA/SQ FT @ 157 SQ FT	NEC 22.42(A) LIGHTING	0.35	20/1	7	8.9			8	20/1	0.72	180 VA PER @ 4 RECEPTACLES	NEC 220.14(H)	RECEPTACLES MULTIPURPOSE ROOM
SUPERVISOR'S OFFICE LIGHTS	2.2 VA/SQ FT @ 185 SQ FT	NEC 22.42(A) LIGHTING	0.41	20/1	9		9.4		10	20/1	0.72	180 VA PER @ 4 RECEPTACLES	NEC 220.14(H)	RECEPTACLES MULTIPURPOSE ROOM
PROCESS LAB LIGHTS	2.2 VA/SQ FT @ 535 SQ FT	NEC 22.42(A) LIGHTING	1.18	20/1	11			15.8	12	20/1	0.72	180 VA PER @ 4 RECEPTACLES	NEC 220.14(H)	RECEPTACLES MULTIPURPOSE ROOM
CERTIFIED LAB LIGHTS	2.2 VA/SQ FT @ 247 SQ FT	NEC 22.42(A) LIGHTING	0.54	20/1	13	7.5			14	20/1	0.36	180 VA PER @ 2 RECEPTACLES	NEC 220.14(H)	RECEPTACLES I&C SHOP
JANITOR CLOSET LIGHTS	2.2 VA/SQ FT @ 24 SQ FT	NEC 22.42(A) LIGHTING	0.05	20/1	15		4.5		16	20/1	0.36	180 VA PER @ 2 RECEPTACLES	NEC 220.14(H)	RECEPTACLES I&C SHOP
RESTROOM 10104 LIGHTS	2.2 VA/SQ FT @ 84 SQ FT	NEC 22.42(A) LIGHTING	0.18	20/1	17			5.8	18	20/1	0.36	400 VA PER @ 2 RECEPTACLES	NEC 220.14(H)	RECEPTACLES I&C SHOP
RESTROOM 10105 LIGHTS AND EXHAUST FAN 10-EF-1	2.2 VA/SQ FT @ 84 SQ FT	NEC 22.42(A) LIGHTING	0.33	20/1	19	6.3			20	20/1	0.40	400 VA PER @ 1 RECEPTACLES	NEC 220.14(H)	REFRIGERATOR RECEPTACLE
LOCKER ROOM LIGHTS	2.2 VA/SQ FT @ 161 SQ FT	NEC 22.42(A) LIGHTING	0.35	20/1	21		12.3		22	20/1				SPARE
HALL LIGHTS	2.2 VA/SQ FT @ 670 SQ FT	NEC 22.42(A) LIGHTING	1.47	20/1	23			7.1	24	20/1				SPARE
I&C SHOP LIGHTS	2.2 VA/SQ FT @ 387 SQ FT	NEC 22.42(A) LIGHTING	0.85	20/1	25	7.1			26	20/1				SPARE
PROCESS LAB CLOSET LIGHTS	2.2 VA/SQ FT @ 20 SQ FT	NEC 22.42(A) LIGHTING	0.04	20/1	27		0.3		28	20/1				SPARE
EXTERIOR LIGHTS	2.2 VA/SQ FT @ 20 SQ FT	NEC 22.42(A) LIGHTING	0.04	20/1	29			0.3	30	20/1				SPARE
MAIN GATE OPERATOR			0.50	20/2	31	4.2			32	-				SPACE
			0.50		33		4.2		34	-				SPACE
SPARE				20/1	35			1.5	36	-				SPACE
SPD			0.00	30/3	37	37.3			38	100/3	4.48			FEEDER TO PANELBOARD 10-LP-04
			0.00		39		38.0		40		4.56			
			0.00		41			19.7	42		2.36			
					TOTALS	82.7	79.9	69.7	AMPS					
						9.9	9.6	8.4	KVA					

PANEL: 10-LP-02

VOLTAGE: 208/120
PHASE, WIRES: 3, 4
SCR (AMPS): 10,000
SOURCE: 10-XFRM-02

PANEL BUS: 150 AMPS
MAIN: MLO
125% OF MAX BUS LOAD: 96 AMPS
TOTAL CONNECTED LOAD: 23.0 KVA
TOTAL DEMAND LOAD: 23.0 KVA
TOTAL DESIGN LOAD: 23.0 KVA

MOUNTING: SURFACE
FEED: BOTTOM

DESCRIPTION	NOTES	DEMAND CODE	KVA	CB	CKT	A	B	C	CKT	CB	KVA	DEMAND CODE	NOTES	DESCRIPTION
10-CU-01	NOTE 1		0.07	20/2	1	2.7			2	20/1	0.25			HVAC CP
			0.07		3		7.8		4	20/1	0.86		NOTE 1	10-EF-2 CERTIFIED LAB
SPARE			0.00	20/1	5			9.8	6	20/1	1.18		NOTE 1	10-EF-3 PROCESS LAB
10-FACP-01	NOTE 2		0.30	20/1	7	2.5			8	20/1	0.18		NEC 220. 14(H)	JANITOR CLOSET
HEAT TRACE RECEPTACLE NORTHEAST	NEC 220.14(H)		1.20	20/1	9		13.3		10	20/1	0.40	400 VA PER @ 1 RECEPTACLES	NEC 220.14(H)	WATER COOLER EWC-1
HEAT TRACE RECEPTACLE SOUTHEAST	NEC 220.14(H)		1.20	20/1	11			13.0	12	20/1	0.36	180 VA PER @ 2 RECEPTACLES	NEC 220.14(H)	RECEPTACLES LOCKER ROOM
HEAT TRACE RECEPTACLE NORTHWEST	NEC 220.14(H)		1.20	20/1	13	13.0			14	20/1	0.18	180 VA PER @ 1 RECEPTACLES	NEC 220.14(H)	RECEPTACLES LOCKER ROOM
HEAT TRACE RECEPTACLE SOUTHWEST	NEC 220.14(H)		1.20	20/1	15		10.0		16	20/1				SPARE
10-BBH-01 BASEBOARD HEATER SUPERVISORS OFFICE	NOTE 1		0.75	20/2	17			6.3	18	20/1				SPARE
			0.75		19	6.3			20	20/1				SPARE
10-BBH-2 BASEBOARD HEATER I&C SHOP	NOTE 1		1.50	20/2	21		22.5		22	20/1	1.20	1200 VA PER @ 1 RECEPTACLES	NEC 220.14(H)	MICROWAVE RECEPTACLE
			1.50		23			15.8	24	20/1	0.40	400 VA PER @ 1 RECEPTACLES	NEC 220.14(H)	GARBAGE DISPOSAL RECEPTACLE
10-BBH-03 BASEBOARD HEATER MULTI PURPOSE ROOM	NOTE 1		0.75	20/2	25	16.3			26	20/1	1.20	1200 VA PER @ 1 RECEPTACLES	NEC 220.14(H)	DISHWASHER RECEPTACLE
			0.75		27		11.3		28	20/2	0.60			10-FCU-01, -03, -04, -05, -06
10-BBH-04 BASEBOARD HEATER RESTROOM	NOTE 1		0.75	20/2	29			11.3	30		0.60			
			0.75		31	11.3			32	20/2	0.60			10-FCU-07, -08, -09, -10
10-BBH-05 BASEBOARD HEATER HALLWAY	NOTE 1		0.75	20/2	33		11.3		34		0.60			
			0.75		35			6.7	36	15/2	0.05			VRF BRANCH CONTROLLER 10-BCC-01
SPACE				-	37				38		0.05			
SPACE				-	39				40	20/1				SPARE
SPACE				-	41				42	20/1				SPARE
SPD				30/3	43	0.0			44	20/1				SPARE
					45		0.0		46	20/1				SPARE
					47			0.0	42	20/1				SPARE
					TOTALS	51.9	76.1	62.8	AMPS					
						6.2	9.1	7.5	KVA					

NOTES
1. HVAC CIRCUIT, UTILIZE HACR BREAKER.
2. PROVIDE RED BREAKER LOCK TO PREVENT ACCIDENTAL POWER INTERRUPTION

FULL SIZE DRAWINGS = 22"x34"
BAR MEASURES 1" LONG
0" 1"

Registered Professional Engineer (Electrical) CERTIFICATE NO. 81240 DAVID BURGER Date Signed 6/23/25 ARIZONA, U.S.A.
JUNE 23, 2025

A/E FIRM: JACOBS GOVERNMENT SERVICES COMPANY, GREENWOOD VILLAGE, CO

DESIGNED: D BURGER
CADD: J GARIBAY
TECH. REVIEW: J LANDMAN
DATE: 06/2025

SUB SHEET NO.: 10E6001

TITLE OF SHEET: ADMINISTRATION BUILDING ELECTRICAL PANELBOARD SCHEDULES
GRAND CANYON, SOUTH RIM

DRAWING NO. 113 175376
PMIS/PKG NO. 257282
SHEET 206 OF 401

100% COMPLETE CONSTRUCTION DOCUMENTS

GRCA-257282

PLOT DATE: 6/16/2025 PLOT TIME: 11:39:24 PM SS6\V8i D3167666 - South Rim\4 Delivery\43 CAD Design\GRCA\257282\Microstation V8\ DrawingsIELEC\10E6001_D3167666.dgn

PANEL: 10-LP-03

VOLTAGE: 208/120
PHASE, WIRES: 3, 4
SCR (AMPS): 10,000
SOURCE: 10-XFRM-03

PANEL BUS: 250 AMPS
MAIN: 250 BREAKER
125% OF MAX BUS LOAD: 152 AMPS
TOTAL CONNECTED LOAD: 42.2 KVA
TOTAL DEMAND LOAD: 42.2 KVA
TOTAL DESIGN LOAD: 42.2 KVA

MOUNTING: FLUSH
FEED: BOTTOM

DESCRIPTION	NOTES	DEMAND CODE	KVA	CB	CKT	A	B	C	CKT	CB	KVA	DEMAND CODE	NOTES	DESCRIPTION
RECEPTACLE PROCESS LAB DISHWASHER (GFCI)		400 VA PER @ 1 RECEPTACLES	0.40	20/1	1	6.7			2	20/1	0.40	400 VA PER @ 1 RECEPTACLES	NEC 220.14(H)	RECEPTACLE PROCESS LAB NE REFRIGERATOR (GFCI)
RECEPTACLE PROCESS LAB WEST REFRIGERATOR (GFCI)		400 VA PER @ 1 RECEPTACLES	0.40	20/1	3		6.7		4	20/1	0.40	400 VA PER @ 1 RECEPTACLES	NEC 220.14(H)	RECEPTACLE PROCESS LAB INCUBATOR (GFCI)
RECEPTACLE PROCESS LAB VPP (WP/GFCI)		400 VA PER @ 1 RECEPTACLES	0.40	20/1	5			5.0	6	20/1	0.20	200 VA PER @ 1 RECEPTACLES	NEC 220.14(H)	RECEPTACLE PROCESS LAB ICE MACHINE (GFCI)
RECEPTACLE PROCESS LAB REFRIGERATOR (GFCI)		400 VA PER @ 1 RECEPTACLES	0.40	20/1	7	6.7			8	20/1	0.40	400 VA PER @ 1 RECEPTACLES	NEC 220.14(H)	RECEPTACLE PROCESS LAB EAST REFRIGERATOR (GFCI)
PROCESS LAB PLUG MOLD EAST 1		180 VA PER @ 6 RECEPTACLES	0.30	20/1	9		11.5		10	20/1	1.08	180 VA PER @ 6 RECEPTACLES	NEC 220.14(H)	PROCESS LAB PLUG MOLD EAST 2
PROCESS LAB PLUG MOLD SOUTHEAST 1		180 VA PER @ 6 RECEPTACLES	1.08	20/1	11			18.0	12	20/1	1.08	180 VA PER @ 6 RECEPTACLES	NEC 220.14(H)	PROCESS LAB PLUG MOLD SOUTHEAST 2
PROCESS LAB PLUG MOLD SOUTHEAST 3		180 VA PER @ 6 RECEPTACLES	1.08	20/1	13	18.0			14	20/1	1.08	180 VA PER @ 6 RECEPTACLES	NEC 220.14(H)	PROCESS LAB PLUG MOLD SOUTHEAST 4
PROCESS LAB PLUG MOLD SOUTH 1		180 VA PER @ 6 RECEPTACLES	1.08	20/1	15		18.0		16	20/1	1.08	180 VA PER @ 6 RECEPTACLES	NEC 220.14(H)	PROCESS LAB PLUG MOLD SOUTH 2
PROCESS LAB PLUG MOLD NORTHWEST 1		180 VA PER @ 6 RECEPTACLES	1.08	20/1	17			18.0	18	20/1	1.08	180 VA PER @ 6 RECEPTACLES	NEC 220.14(H)	PROCESS LAB PLUG MOLD NORTHWEST 2
PROCESS LAB PLUG MOLD WEST 1		180 VA PER @ 6 RECEPTACLES	1.08	20/1	19	18.0			20	20/1	1.08	180 VA PER @ 6 RECEPTACLES	NEC 220.14(H)	PROCESS LAB PLUG MOLD WEST 2
PROCESS LAB PLUG MOLD WEST 3		180 VA PER @ 6 RECEPTACLES	1.08	20/1	21		18.0		22	20/1	1.08	180 VA PER @ 6 RECEPTACLES	NEC 220.14(H)	PROCESS LAB PLUG MOLD WEST 4
PROCESS LAB PLUG MOLD WEST 5		180 VA PER @ 6 RECEPTACLES	1.08	20/1	23			18.0	24	20/1	1.08	180 VA PER @ 6 RECEPTACLES	NEC 220.14(H)	PROCESS LAB PLUG MOLD WEST 6
PROCESS LAB PLUG MOLD CENTER 1		180 VA PER @ 6 RECEPTACLES	1.08	20/1	25	18.0			26	20/1	1.08	180 VA PER @ 6 RECEPTACLES	NEC 220.14(H)	PROCESS LAB PLUG MOLD CENTER 2
PROCESS LAB PLUG MOLD CENTER 3		180 VA PER @ 6 RECEPTACLES	1.08	20/1	27		18.0		28	20/1	1.08	180 VA PER @ 6 RECEPTACLES	NEC 220.14(H)	PROCESS LAB PLUG MOLD CENTER 4
SPARE			0.00	20/1	29			0.0	30	20/1	0.00			SPACE
SPARE			0.00	20/1	31	0.0			32	20/1	0.00			SPACE
SPARE			0.00	20/1	33		0.0		34	20/1	0.00			SPACE
SPARE			0.00	20/1	35			0.0	36	20/1	0.00			SPACE
SPD				30/3	37	54.0			38	125/3	6.48			10-LP-03 SECTION2
					39		45.0		40		5.40			
					41			54.3	42		6.52			
					TOTALS	121.3	117.2	113.3	AMPS					
						14.6	14.1	13.6	KVA					

PANEL: 10-LP-03 SECTION II

VOLTAGE: 208/120
PHASE, WIRES: 3, 4
SCR (AMPS): 10,000
SOURCE: 10-LP-03 SECTION I

PANEL BUS: 125 AMPS
MAIN: 125 BREAKER
125% OF MAX BUS LOAD: 68 AMPS
TOTAL CONNECTED LOAD: 19.5 KVA
TOTAL DEMAND LOAD: 19.5 KVA
TOTAL DESIGN LOAD: 19.5 KVA

MOUNTING: SURFACE
FEED: BOTTOM

DESCRIPTION	NOTES	DEMAND CODE	KVA	CB	CKT	A	B	C	CKT	CB	KVA	DEMAND CODE	NOTES	DESCRIPTION
CERTIFIED LAB PLUG MOLD EAST 1		180 VA PER @ 6 RECEPTACLES	1.08	20/1	1	18.0			2	20/1	1.08	180 VA PER @ 6 RECEPTACLES	NEC 220.14(H)	CERTIFIED LAB PLUG MOLD EAST 2
CERTIFIED LAB PLUG MOLD SOUTHEAST 1		180 VA PER @ 6 RECEPTACLES	1.08	20/1	3		18.0		4	20/1	1.08	180 VA PER @ 6 RECEPTACLES	NEC 220.14(H)	CERTIFIED LAB PLUG MOLD SOUTHEAST 2
CERTIFIED LAB PLUG MOLD SOUTH 1		180 VA PER @ 6 RECEPTACLES	1.08	20/1	5			18.0	6	20/1	1.08	180 VA PER @ 6 RECEPTACLES	NEC 220.14(H)	CERTIFIED LAB PLUG MOLD SOUTH 2
CERTIFIED LAB PLUG MOLD SOUTH 3		180 VA PER @ 6 RECEPTACLES	1.08	20/1	7	18.0			8	20/1	1.08	180 VA PER @ 6 RECEPTACLES	NEC 220.14(H)	CERTIFIED LAB PLUG MOLD SOUTH 4
CERTIFIED LAB PLUG MOLD WEST 1		180 VA PER @ 6 RECEPTACLES	1.08	20/1	9		18.0		10	20/1	1.08	180 VA PER @ 6 RECEPTACLES	NEC 220.14(H)	CERTIFIED LAB PLUG MOLD WEST 2
CERTIFIED LAB PLUG MOLD WEST 3		180 VA PER @ 6 RECEPTACLES	1.08	20/1	11			18.0	12	20/1	1.08	180 VA PER @ 6 RECEPTACLES	NEC 220.14(H)	CERTIFIED LAB PLUG MOLD WEST 4
CERTIFIED LAB PLUG MOLD WEST 5		180 VA PER @ 6 RECEPTACLES	1.08	20/1	13	18.0			14	20/1	1.08	180 VA PER @ 6 RECEPTACLES	NEC 220.14(H)	CERTIFIED LAB PLUG MOLD WEST 6
CERTIFIED LAB PLUG MOLD SOUTHWEST 1		180 VA PER @ 6 RECEPTACLES	1.08	20/1	15		9.0		16	20/1	1.08	180 VA PER @ 6 RECEPTACLES	NEC 220.14(H)	CERTIFIED LAB PLUG MOLD SOUTHWEST 2
CERTIFIED LAB REFRIGERATOR		400 VA PER @ 1 RECEPTACLES	0.40	20/1	17			12.3	18	20/1	0.40	400 VA PER @ 1 RECEPTACLES	NEC 220.14(H)	RECEPTACLE CERTIFIED LAB VPP (WP/GFCI)
CERTIFIED LAB GENERAL RECEPTACLES		180 VA PER @ 6 RECEPTACLES	1.08	20/1	19	0.0			20	20/1				SPARE
SPACE				20/1	21		0.0		22	20/1				SPARE
SPACE				20/1	23			6.0	24	20/1	0.72	180 VA PER @ 4 RECEPTACLES	NEC 220.14(H)	CERTIFIED LAB GENERAL RECEPTACLES
SPACE				20/1	25	0.0			26	20/1				SPARE
SPACE				20/1	27		0.0		28	20/1				SPARE
SPARE				20/1	29			0.0	30	20/1				SPARE
SPARE				20/1	31	0.0			32	20/1				SPARE
SPARE				20/1	33		0.0		34	20/1				SPARE
SPARE				20/1	35			0.0	36	20/1				SPARE
SPD				30/3	37	0.0			38	20/1				SPARE
					39		0.0		40	20/1				SPARE
					41			0.0	42	20/1				SPARE
					TOTALS	54.0	45.0	54.3	AMPS					
						6.5	5.4	6.5	KVA					

PANEL: 10-LP-04

VOLTAGE: 208/120
PHASE, WIRES: 3, 4
SCR (AMPS): 10,000
SOURCE: 10-LP-01

PANEL BUS: 125 AMPS
MAIN: 100 BREAKER
125% OF MAX BUS LOAD: 48 AMPS
TOTAL CONNECTED LOAD: 11.4 KVA
TOTAL DEMAND LOAD: 11.4 KVA
TOTAL DESIGN LOAD: 11.4 KVA

MOUNTING: SURFACE
FEED: BOTTOM

DESCRIPTION	NOTES	DEMAND CODE	KVA	CB	CKT	A	B	C	CKT	CB	KVA	DEMAND CODE	NOTES	DESCRIPTION
10-CU-01/10-AC-01			2.00	30/2	1	25.0			2	30/1	1.00	GENERAL		10-NIP-01
			2.00		3		20.0		4	20/1	0.40	400 VA PER @ 1 RECEPTACLES	NEC 220.14(H)	RECEPTACLE SCADA ROOM
10-NIP-02			1.00	30/1	5			1.7	6	20/1	0.20	200 VA PER @ 1 RECEPTACLES	NEC 220.14(H)	RECEPTACLE SCADA ROOM
SPARE				20/1	7	3.3			8	20/1	0.40	400 VA PER @ 1 RECEPTACLES	NEC 220.14(H)	RECEPTACLE SCADA ROOM
SPARE				20/1	9		9.0		10	20/1	1.08	180 VA PER @ 6 RECEPTACLES	NEC 220.14(H)	RECEPTACLE TELEPHONE BACKBOARD
SPARE				20/1	11			9.0	12	20/1	1.08	180 VA PER @ 6 RECEPTACLES	NEC 220.14(H)	RECEPTACLE TELEPHONE BACKBOARD
SPARE				20/1	13	9.0			14	20/1	1.08	GENERAL		SPARE
SPARE				20/1	15		9.0		16	20/1	1.08	GENERAL		SPARE
SPARE				20/1	17			9.0	18	20/1	1.08	180 VA PER @ 6 RECEPTACLES	NEC 220.14(H)	RECEPTACLE SCADA ROOM
SPD				30/3	19	0.0			20	-	-	-	-	SPACE
					21		0.0		22	-	-	-	-	SPACE
					23			0.0	24	-	-	-	-	SPACE
					TOTALS	37.3	38.0	19.7	AMPS					
						4.5	4.6	2.4	KVA					

NOTES
1. PROVIDE SHUNT TRIP MAIN BREAKER WITH 120 VAC COIL.

FULL SIZE DRAWINGS = 22"x34"
BAR MEASURES 1" LONG
0" 1"

Registered Professional Engineer (Electrical) CERTIFICATE NO. 81240 DAVID BURGER Date Signed 6-23-2025 ARIZONA, U.S.A.
JUNE 23, 2025

A/E FIRM
JACOBS GOVERNMENT SERVICES COMPANY
GREENWOOD VILLAGE, CO

DESIGNED: D BURGER
CADD: J GARIBAY
TECH. REVIEW: J LANDMAN
DATE: 06/2025

SUB SHEET NO. 10E6002

TITLE OF SHEET
ADMINISTRATION BUILDING ELECTRICAL PANELBOARD SCHEDULES
GRAND CANYON, SOUTH RIM

DRAWING NO. 113 / 175376
PMIS/PKG NO. 257282
SHEET 207 OF 401

100% COMPLETE CONSTRUCTION DOCUMENTS

GRCA-257282

PLOT DATE: 6/16/2025 PLOT TIME: 11:39:05 PM SS6/V8I D3167666 - South Rim\4 Delivery\43 CAD Design\GRCA\257282\Microstation V8I DrawingsIELEC\10E6002_D3167666.dgn

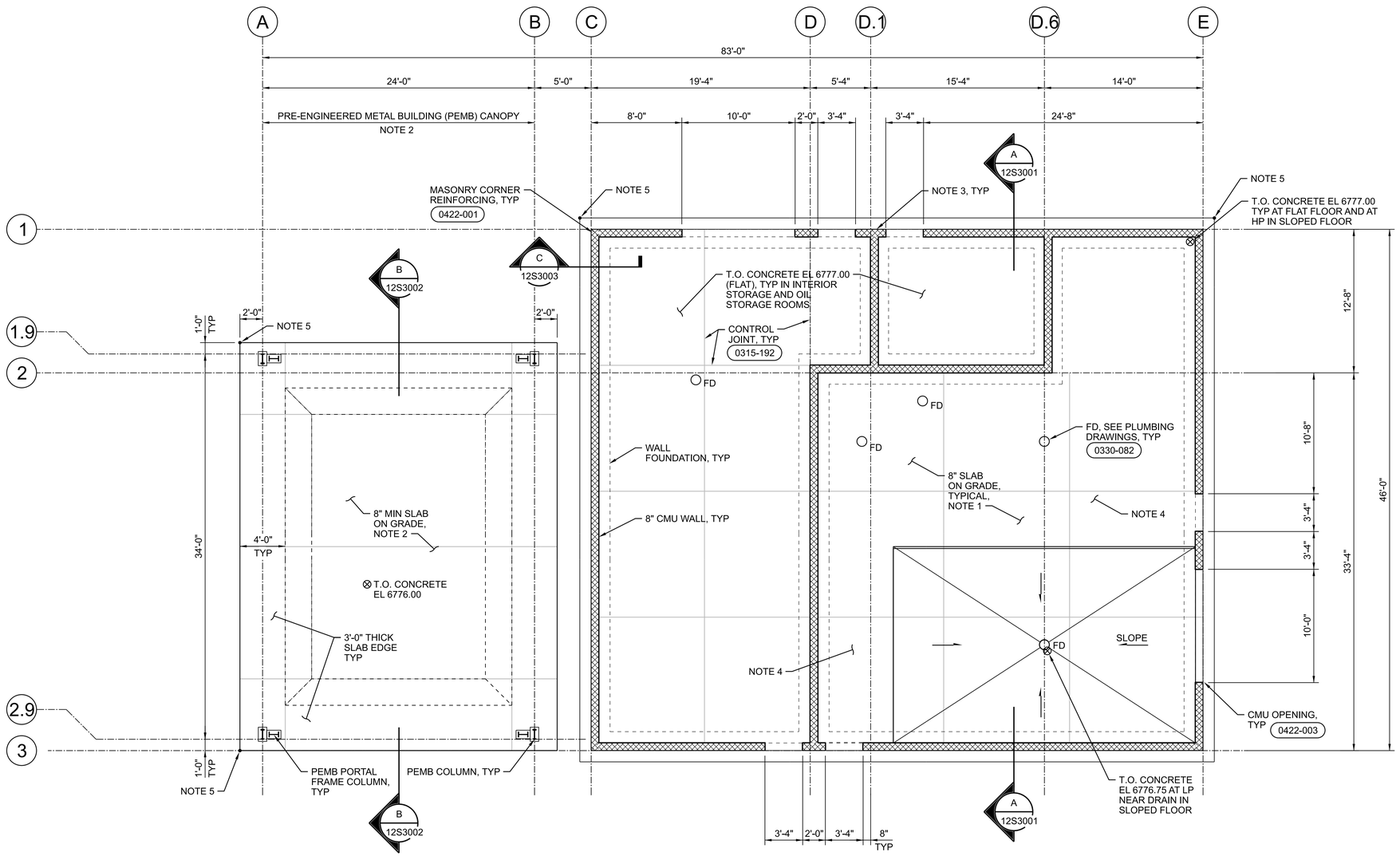

PLAN

3/16"=1'-0"

N

0 4 8 16

3/16"=1'-0"

GENERAL SHEET NOTES

A. FOR GENERAL STRUCTURAL NOTES, SEE DRAWINGS 01S0001, 01S0002, AND 01S0003.

B. SEE SPECIFICATION 06 17 53 SHOP-FABRICATED WOOD TRUSSES FOR WOOD CONSTRUCTION CONNECTOR REQUIREMENTS AS NOTED IN DETAILS.

SHEET NOTES

1. REINFORCE 8" SLAB-ON-GRADE WITH #5@12" EW, WITH 2" CLEAR COVER FROM TOP SURFACE.
2. PEMB FRAMING SHOWN IS PRELIMINARY ONLY. FINAL FRAMING DESIGN PROVIDED BY PEMB DESIGNER.
3. FOR CMU WALL PIERS AND WALL COLUMNS, SEE DETAILS 0422-005 AND 0422-006.
4. PROVIDE FLAT FLOOR SLAB TYPICAL UNLESS SHOWN OTHERWISE.
5. FACILITY LOCATION CONTROL POINT, SEE CIVIL DRAWING 06C2002.

FULL SIZE DRAWINGS = 22"x34"
BAR MEASURES 1" LONG

0" 1"

Registered Professional Engineer (Civil) CERTIFICATE NO. 81476 WAYNE W. KOHLER Date Signed 6/20/25 ARIZONA U.S.A.

A/E FIRM	DESIGNED:	SUB SHEET NO.	TITLE OF SHEET	DRAWING NO.
JACOBS GOVERNMENT SERVICES COMPANY GREENWOOD VILLAGE, CO	W KOHLER CADD: B CLEGG TECH. REVIEW: A FIRTH DATE: 06/2025	12S1030	MAINTENANCE BUILDING STRUCTURAL FOUNDATION/FLOOR PLAN GRAND CANYON, SOUTH RIM	113 175376 PMIS/PKG NO. 257282 SHEET 208 OF 401

100% COMPLETE CONSTRUCTION DOCUMENTS

GRCA-257282

PLOT DATE: 16-JUN-2025 PLOT TIME: 14:34 SS6\V8i D3167666 - South Rim\4 Delivery\43 CAD Design\GRCA\257282\Microstation V8i Drawings\STRUC\12S1030_D3167666.dgn

GENERAL SHEET NOTES

A. FOR GENERAL STRUCTURAL NOTES, SEE DRAWINGS 01S0001, 01S0002, AND 01S0003.

B. SEE SPECIFICATION 06 17 53 SHOP-FABRICATED WOOD TRUSSES FOR WOOD CONSTRUCTION CONNECTOR REQUIREMENTS AS NOTED IN DETAILS.

SHEET NOTES

1. PEMB FRAMING SHOWN IS PRELIMINARY ONLY. FINAL FRAMING DESIGN PROVIDED BY PEMB DESIGNER.
2. ROOF SHEATHING PANELS SHALL BE STAGGERED AS SHOWN. SHEATHING CONNECTIONS SHALL CONSIST OF 10d NAILS WITH 6" SPACING AT DIAPHRAGM BOUNDARIES, AT CONTINUOUS PANEL EDGES, AND ALL PANEL EDGES. BLOCKING AT CONTINUOUS PANEL EDGES IS REQUIRED.
3. ROOF TRUSSES AND PEMB CANOPY SHALL BE DESIGNED FOR SNOW LOADING IN BALANCED AND UNBALANCED CONDITIONS. IN ADDITION, THE PEMB CANOPY SHALL BE DESIGNED FOR AN ADDITIONAL DRIFT LOAD TO EITHER LOADING CONDITION AS SHOWN ON THE ROOF PLAN.

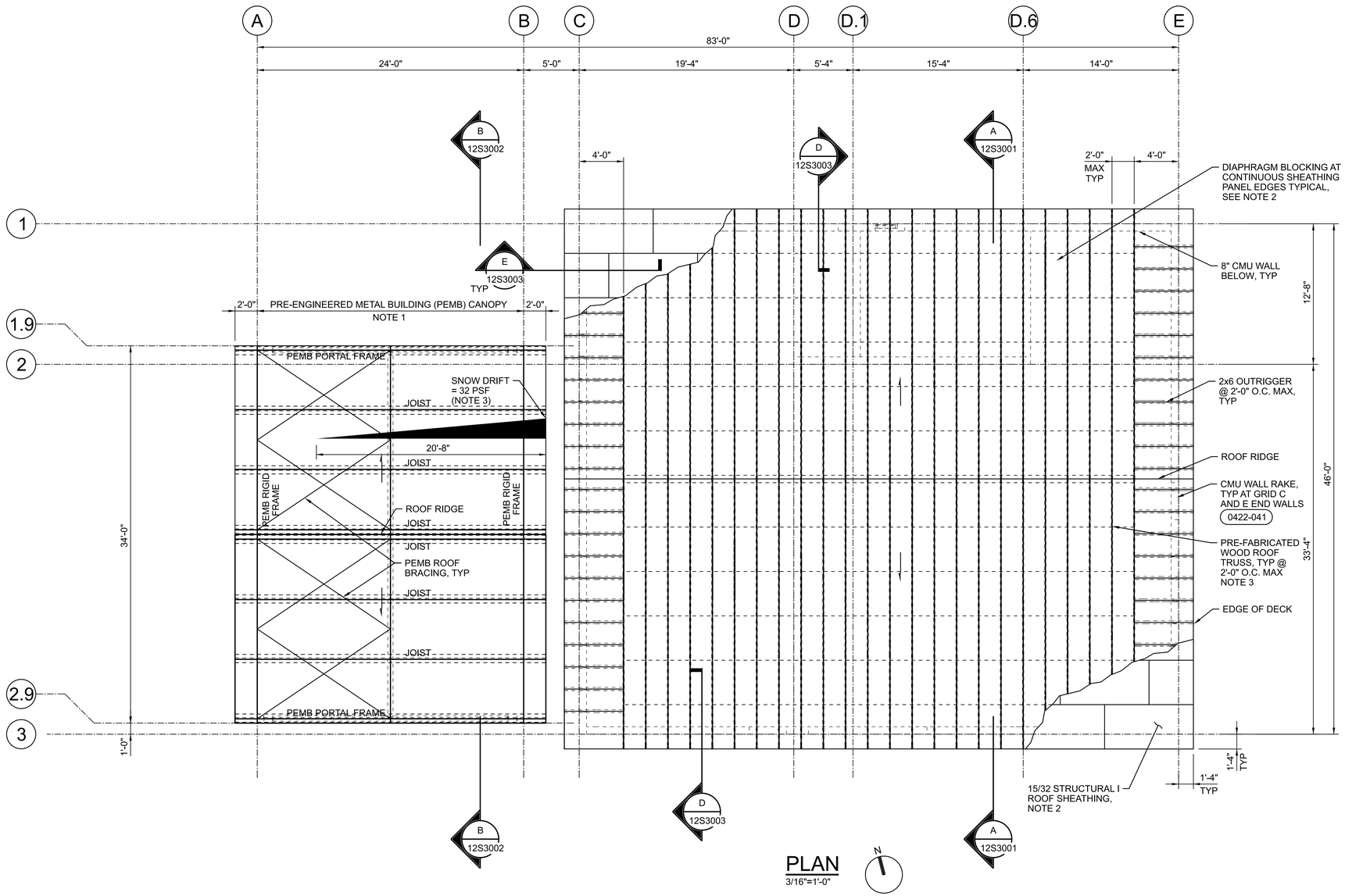

PLAN

3/16"=1'-0"

0 4 8 16

3/16"=1'-0"

MINIMUM COMPONENTS AND CLADDING STRENGTH LEVEL WIND DESIGN PRESSURE:

MAINTENANCE BUILDING:

ZONE	PRESSURE (PSF)
1	16.0; -16.0
2e	16.0; -16.0
2n	16.0; -38.9
2r	16.0; -38.9
3e	16.0; -38.9
3r	16.0; -44.0
OVERHANG	
2e	-33.3
2n	-53.9
3e	-49.8
3r	-51.1

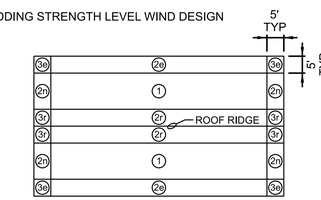

ROOF ZONE

CANOPY:

ZONE	PRESSURE (PSF)
1	20.5; -21.9
2	20.5; -21.9
3	20.5; -21.9

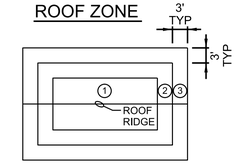

ROOF ZONE

MINIMUM UNFACTORED BALANCED SNOW LOAD DIAGRAM (NOTE 3)

MAINTENANCE BLDG:

CANOPY:

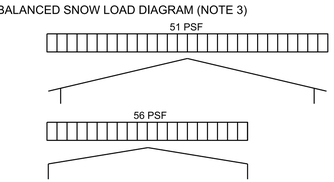

MINIMUM UNFACTORED UNBALANCED SNOW LOAD DIAGRAM (NOTE 3)

MAINTENANCE BLDG:

CANOPY:

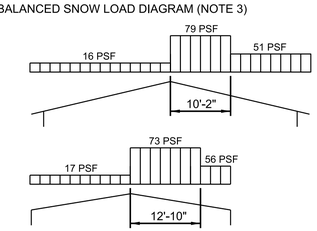

FULL SIZE DRAWINGS = 22"x34"
BAR MEASURES 1" LONG

0" 1"

Registered Professional Engineer (Civil) STATE OF ARIZONA 81476 WAYNE W. KOHLER Date Signed 6/24/25	A/E FIRM: JACOBS GOVERNMENT SERVICES COMPANY, GREENWOOD VILLAGE, CO	DESIGNED: W KOHLER CADD: B CLEGG TECH. REVIEW: A FIRTH DATE: 06/2025	SUB SHEET NO. 12S1040	TITLE OF SHEET: MAINTENANCE BUILDING STRUCTURAL ROOF PLAN GRAND CANYON, SOUTH RIM

DRAWING NO. 113 / 175376
PMIS/PKG NO. 257282
SHEET 209 OF 401

100% COMPLETE CONSTRUCTION DOCUMENTS

GRCA-257282

PLOT DATE: 16-JUN-2025 PLOT TIME: 14:37 SS6/V8I D3167666 - South Rim\4 Delivery\43 CAD Design\GRCA\257282\Microstation V8I Drawings\STRUC\12S1040_D3167666.dgn

SHEET NOTES

1. BEDROCK IS LOCATED NEAR THE EXISTING GROUND SURFACE. SEE GEOTECHNICAL REPORT FOR ADDITIONAL INFORMATION.

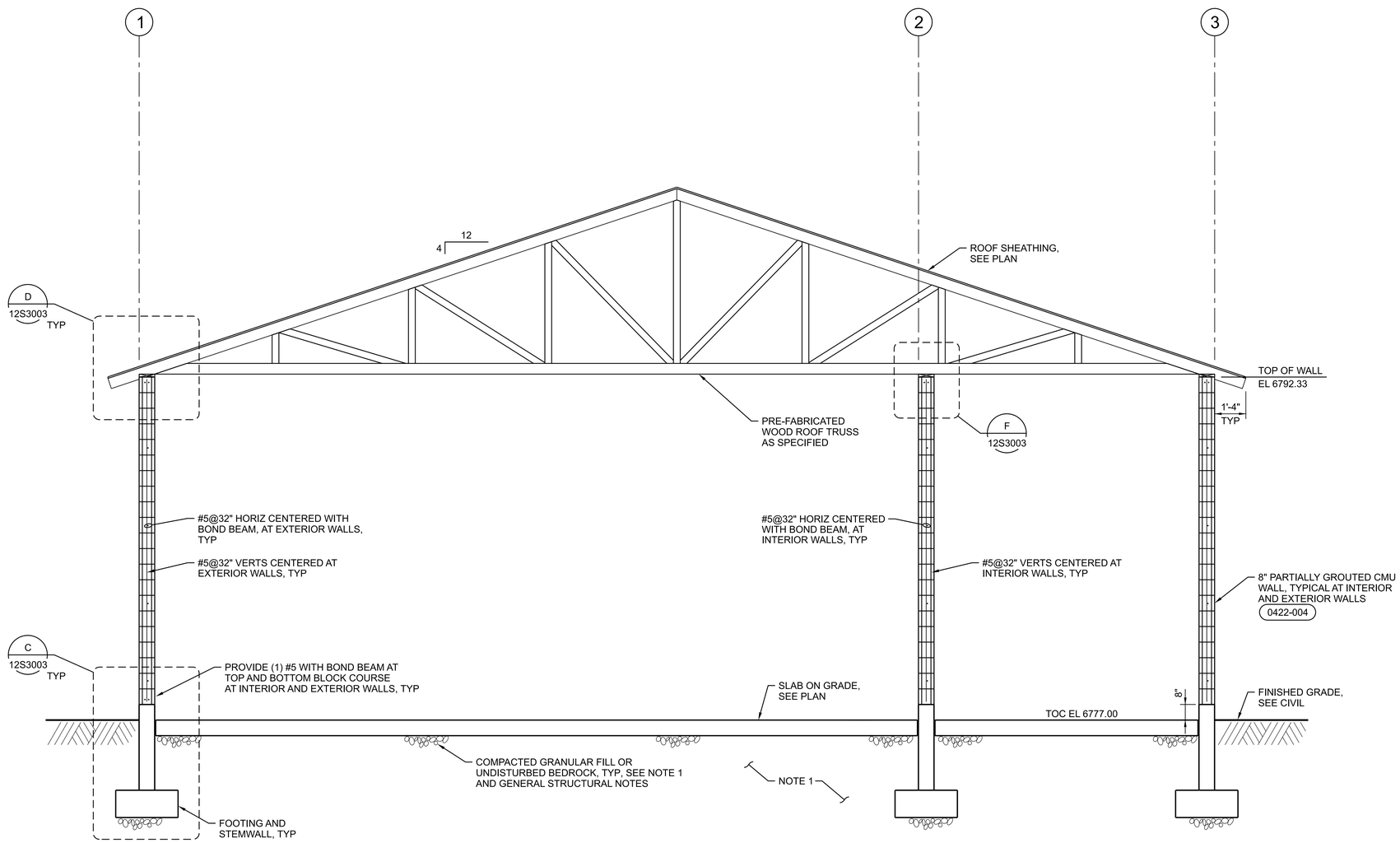

A SECTION
3/8"=1'-0"
12S1030
12S1040

0 2 4 6
3/8"=1'-0"

FULL SIZE DRAWINGS = 22"x34"
BAR MEASURES 1" LONG
0" 1"

Professional Engineer, Wayne W. Kohler, 81476, Registered, Arizona, U.S.A., 12/31/25	A/E FIRM JACOBS GOVERNMENT SERVICES COMPANY GREENWOOD VILLAGE, CO	DESIGNED: W KOHLER CADD: B CLEGG TECH. REVIEW: A FIRTH DATE: 06/2025	SUB SHEET NO. 12S3001	TITLE OF SHEET MAINTENANCE BUILDING STRUCTURAL SECTION GRAND CANYON, SOUTH RIM

DRAWING NO. 113 / 175376
PMIS/PKG NO. 257282
SHEET 210 OF 401

100% COMPLETE CONSTRUCTION DOCUMENTS

GRCA-257282

PLOT DATE: 16-JUN-2025 PLOT TIME: 14:35 SS6/V8I D3167666 - South Rim\4 Delivery\43 CAD Design\GRCA\257282\Microstation V8I Drawings\STRUC\12S3001_D3167666.dgn

SHEET NOTES

1. BEDROCK IS LOCATED NEAR THE EXISTING GROUND SURFACE. SEE GEOTECHNICAL REPORT FOR ADDITIONAL INFORMATION.
2. STRUCTURAL ANCHORAGE TO CONCRETE SHALL BE DESIGNED AND INSTALLED BY CONTRACTOR. CONTRACTOR MUST HAVE AN APPROVED METAL BUILDING CANOPY SUBMITTAL AND ANCHORAGE DESIGN PRIOR TO PLACING CONCRETE FOR THE FOUNDATION. ANCHOR BOLT CALCULATIONS BASED ON STRUCTURE REACTIONS SEALED BY A PROFESSIONAL ENGINEER IN THE STATE OF ARIZONA ARE REQUIRED.

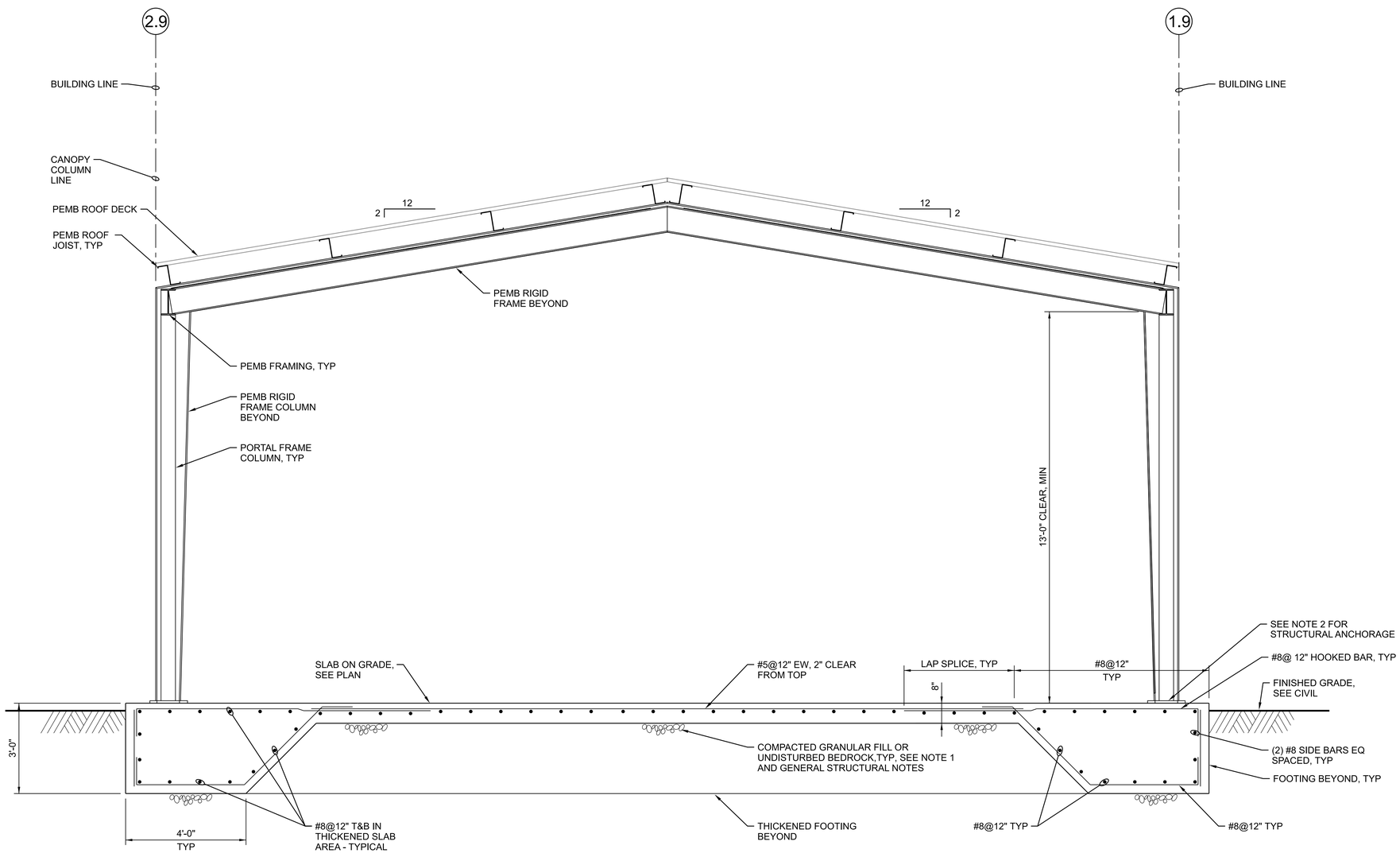

B SECTION
1/2"=1'-0"
12S1030
12S1040

0 2 4 6
1/2"=1'-0"

FULL SIZE DRAWINGS = 22"x34"
BAR MEASURES 1" LONG
0" 1"

Professional Engineer Registered Civil Structural Electrical
81476
WAYNE W. KOHLER
Date Signed 6/20/25
ARIZONA U.S.A.

A/E FIRM	DESIGNED:	SUB SHEET NO.	TITLE OF SHEET	DRAWING NO.
JACOBS GOVERNMENT SERVICES COMPANY GREENWOOD VILLAGE, CO	W KOHLER CADD: B CLEGG TECH. REVIEW: A FIRTH DATE: 06/2025	12S3002	MAINTENANCE BUILDING STRUCTURAL SECTION GRAND CANYON, SOUTH RIM	113 / 175376 PMIS/PKG NO. 257282 SHEET 211 OF 401

100% COMPLETE CONSTRUCTION DOCUMENTS

GRCA-257282

PLOT DATE: 16-JUN-2025 PLOT TIME: 14:37 SS6/V8I D3167666 - South Rim\4 Delivery\43 CAD Design\GRCA\257282\Microstation V8I Drawings\STRUC\12S3002_D3167666.dgn

SHEET NOTES

1. SEE ROOF PLAN FOR ROOF SHEATHING FASTENER PATTERN.

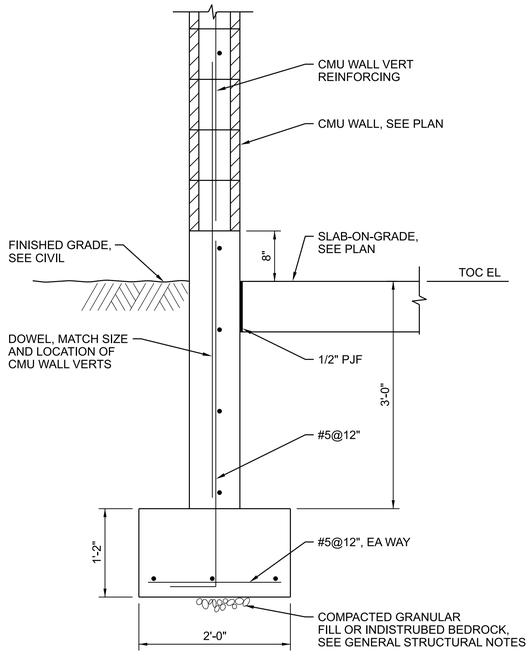

C WALL FOOTING
12S1030
12S3001
1"=1'-0"

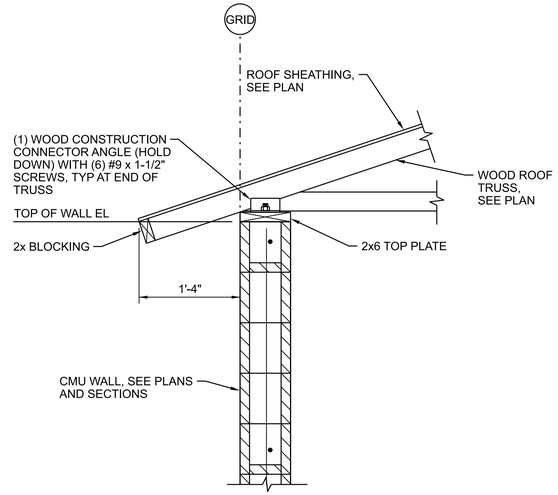

@ TRUSS

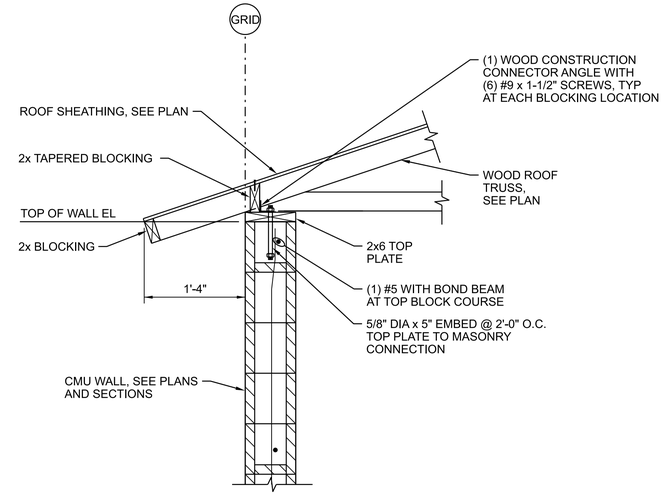

BETWEEN TRUSSES

D WALL TRUSS CONNECTION
12S1040
12S3001
1"=1'-0"

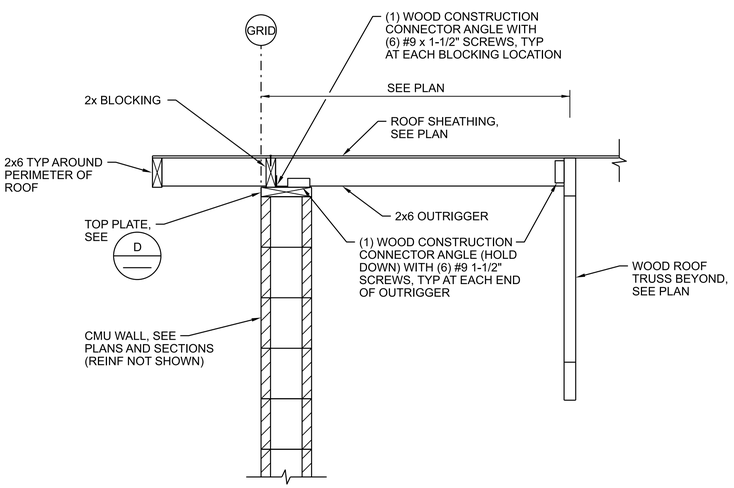

E OVERHANG CONNECTION
12S1040
1"=1'-0"

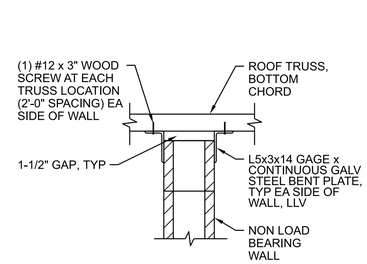

BOTTOM CHORD PERPENDICULAR TO WALL

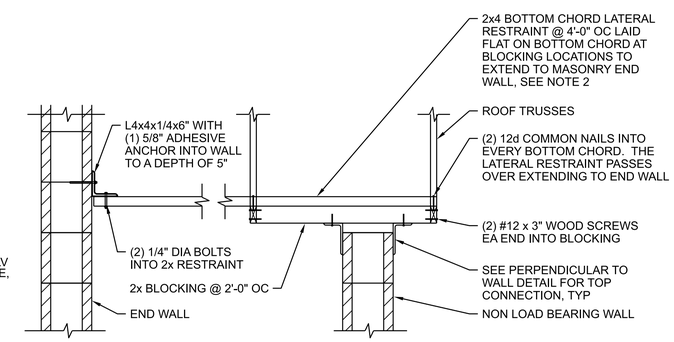

BOTTOM CHORD PARALLEL TO WALL

NOTES:

1. TOP OF INTERIOR WALL ELEVATION IS EQUAL TO 6792.33 AT ALL INTERIOR WALLS.
2. BOTTOM CHORD LATERAL RESTRAINTS CAN BE SPLICED BY OVERLAPPING 2x AT (2) TRUSS LOCATIONS WITH CONNECTIONS AS NOTED IN DETAIL.

F NON LOAD BEARING WALL TOP CONNECTION
12S3001
NTS - NO SCALE

FULL SIZE DRAWINGS = 22"x34"
BAR MEASURES 1" LONG

Wayne W. Kohler — Registered Professional Engineer (Civil) — 81476 — WAYNE W. KOHLER — Date Signed 6/26/25 — ARIZONA U.S.A.	A/E FIRM: JACOBS GOVERNMENT SERVICES COMPANY, GREENWOOD VILLAGE, CO	DESIGNED: W KOHLER; CADD: B CLEGG; TECH. REVIEW: A FIRTH; DATE: 06/2025	SUB SHEET NO. 12S3003	TITLE OF SHEET: MAINTENANCE BUILDING STRUCTURAL SECTIONS — GRAND CANYON, SOUTH RIM

DRAWING NO. 113 175376
PMIS/PKG NO. 257282
SHEET 212 OF 401

GRCA-257282

100% COMPLETE CONSTRUCTION DOCUMENTS

PLOT DATE: 16-JUN-2025 PLOT TIME: 14:35 SS6/V8I D3167666 - South Rim\4 Delivery\43 CAD Design\GRCA\257282\Microstation V8I Drawings\STRUC\12S3003_D3167666.dgn

GENERAL SHEET NOTES

A. FOR GENERAL ARCHITECTURAL NOTES, MATERIAL SYMBOLS, LEGEND, ABBREVIATIONS AND WALL TYPES, SEE DRAWING 01A0001.

B. FOR BUILDING CODE DATA AND LIFE SAFETY PLAN, SEE DRAWING 01A0012.

C. SEE SPECIFICATION 10 80 00, MISCELLANEOUS SPECIALTIES.

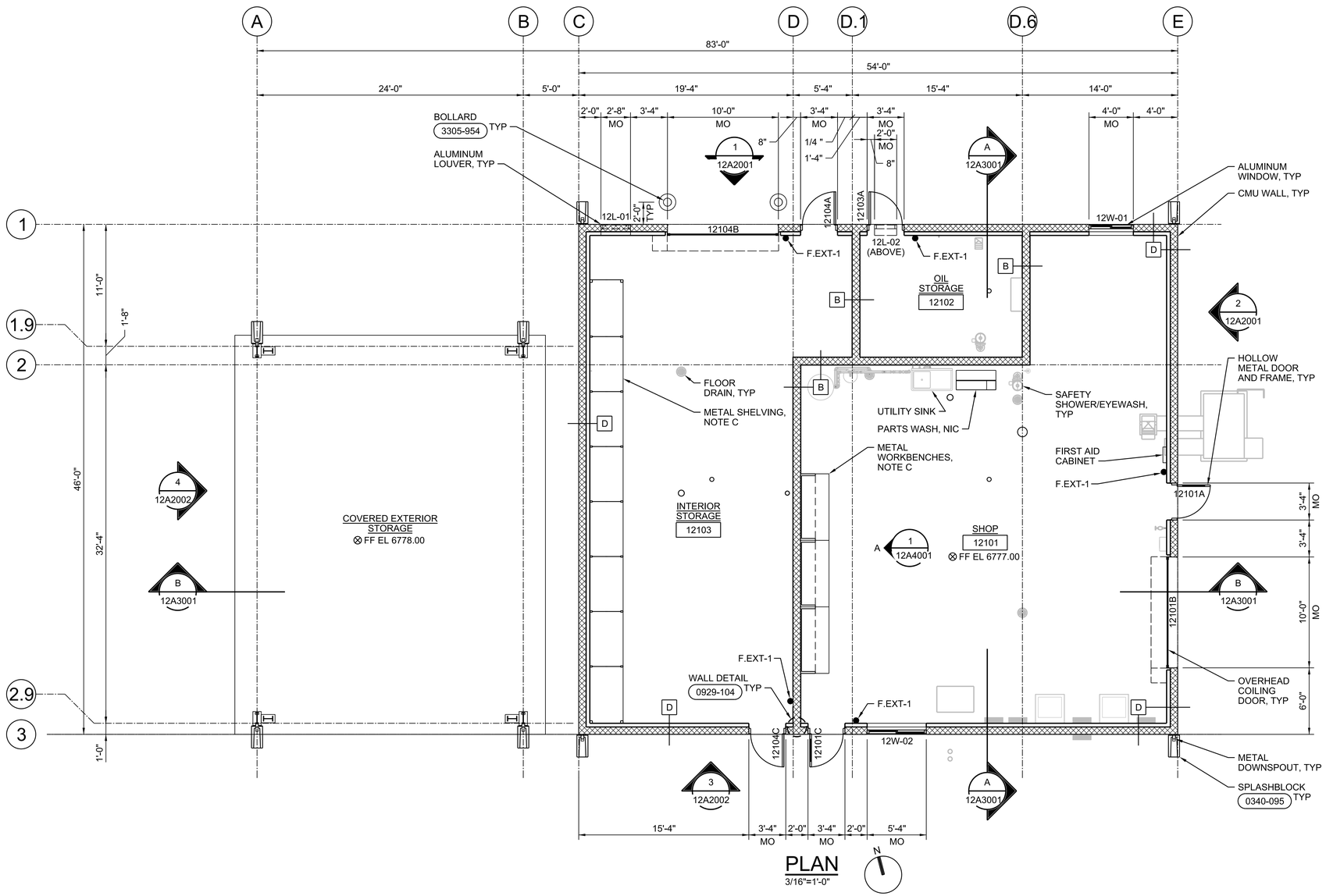

PLAN

3/16"=1'-0"

0 4 8 16

3/16"=1'-0"

FULL SIZE DRAWINGS = 22"x34"
BAR MEASURES 1" LONG

0" 1"

REGISTERED ARCHITECT
CERTIFICATE NO. 80680
MORGAN SHOEMAKER
Date Signed 6/16/25
ARIZONA, U.S.A.
Expires 06-30-2027

A/E FIRM	DESIGNED:	SUB SHEET NO.	TITLE OF SHEET	DRAWING NO.
JACOBS GOVERNMENT SERVICES COMPANY GREENWOOD VILLAGE, CO	M SHOEMAKER CADD: M COLLINS TECH. REVIEW: G KIRSTEN DATE: 06/2025	12A1030	MAINTENANCE BUILDING ARCHITECTURAL FLOOR PLAN GRAND CANYON, SOUTH RIM	113 175376 PMIS/PKG NO. 257282 SHEET 213 OF 401

100% COMPLETE CONSTRUCTION DOCUMENTS

GRCA-257282

PLOT DATE: 6/16/2025 PLOT TIME: 6:02:48 PM SS6/V8i D3167666 - South Rim\4 Delivery\43 CAD Design\GRCA\257282\Microstation V8i Drawings\ARCH\12A1030_D3167666.dgn

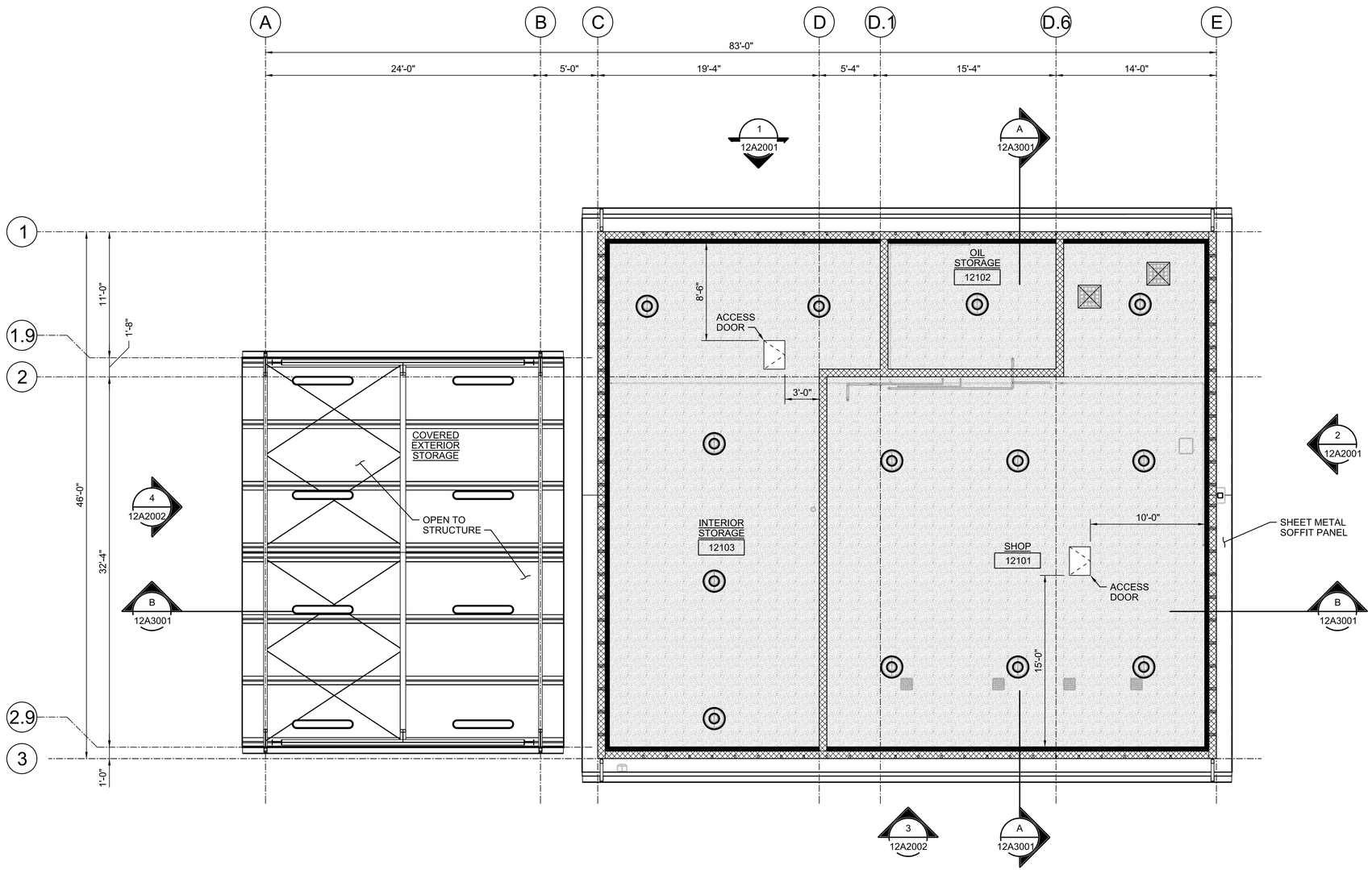

PLAN

3/16"=1'-0"

GENERAL SHEET NOTES

A. FOR GENERAL ARCHITECTURAL NOTES, MATERIAL SYMBOLS, LEGEND AND ABBREVIATIONS, SEE DRAWING 01A0001.

B. FOR CEILING HEIGHTS, SEE INTERIOR FINISH SCHEDULES.

REFLECTED CEILING PLAN LEGEND

- METAL FRAMED WALLS WITH FINISHES INDICATED ON WALL TYPES, EXTEND WALL TO UNDERSIDE OF ROOF PANEL AND STRUCTURE
- GYPSUM BOARD CEILING (SUSPENDED UNLESS NOTED OR DETAILED OTHERWISE)
- PENDANT OR SURFACE MOUNTED LUMINAIRE, SEE ELECTRICAL DRAWINGS
- EXHAUST FAN, SEE MECHANICAL DRAWINGS
- SUPPLY AIR GRILLE OR CEILING DIFFUSER

0 4 8 16
3/16"=1'-0"

FULL SIZE DRAWINGS = 22"x34"
BAR MEASURES 1" LONG

0" 1"

REGISTERED ARCHITECT
CERTIFICATE NO. 80680
MORGAN G SHOEMAKER
Date Signed 06/30/25
ARIZONA, U.S.A.
Expires 06-30-2027

A/E FIRM	DESIGNED:	SUB SHEET NO.	TITLE OF SHEET	DRAWING NO.
JACOBS GOVERNMENT SERVICES COMPANY GREENWOOD VILLAGE, CO	M SHOEMAKER CADD: M COLLINS TECH. REVIEW: G KIRSTEN DATE: 06/2025	12A1039	MAINTENANCE BUILDING ARCHITECTURAL REFLECTED CEILING PLAN GRAND CANYON, SOUTH RIM	113 / 175376 PMIS/PKG NO. 257282 SHEET 214 OF 401

100% COMPLETE CONSTRUCTION DOCUMENTS

GRCA-257282

PLOT DATE: 6/16/2025 PLOT TIME: 6:02:03 PM SS6/V8i D3167666 - South Rim\4 Delivery\43 CAD Design\GRCA\257282\Microstation V8i Drawings\ARCH\12A1039_D3167666.dgn

GENERAL SHEET NOTES

A. FOR GENERAL ARCHITECTURAL NOTES, MATERIAL SYMBOLS, LEGEND AND ABBREVIATIONS, SEE DRAWING 01A0001.

B. FOR BUILDING CODE DATA AND LIFE SAFETY PLAN, SEE DRAWING 01A0012.

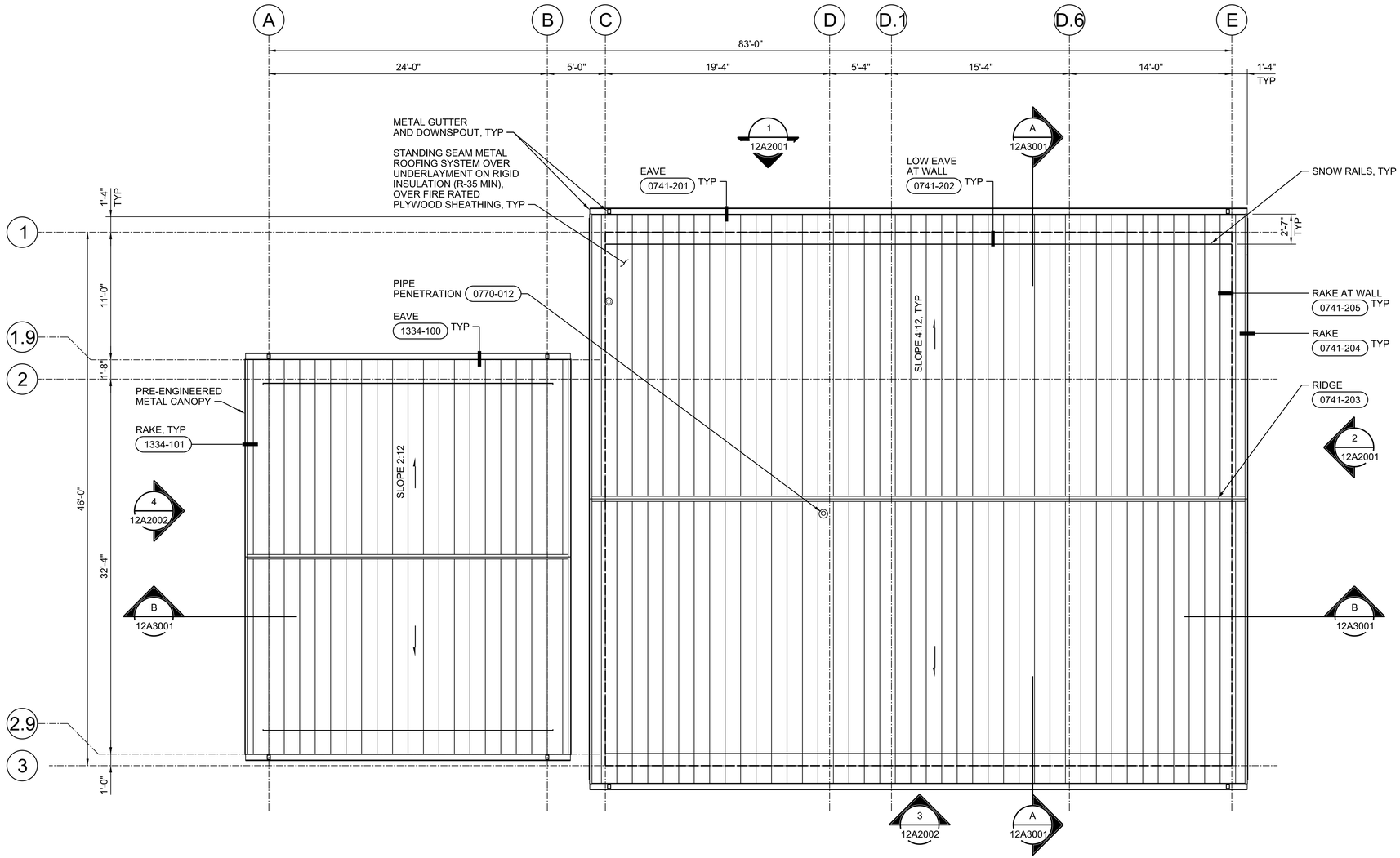

PLAN
3/16"=1'-0"

0 4 8 16
3/16"=1'-0"

FULL SIZE DRAWINGS = 22"x34"
BAR MEASURES 1" LONG

0" 1"

REGISTERED ARCHITECT CERTIFICATE NO. 30087 MORGAN H. SHOEMAKER Date Signed 6/16/25 ARIZONA, U.S.A.
Expires 06-30-2027

A/E FIRM	DESIGNED:	SUB SHEET NO.	TITLE OF SHEET	DRAWING NO.
JACOBS GOVERNMENT SERVICES COMPANY GREENWOOD VILLAGE, CO	M SHOEMAKER CADD: M COLLINS TECH. REVIEW: G KIRSTEN DATE: 06/2025	12A1040	MAINTENANCE BUILDING ARCHITECTURAL ROOF PLAN GRAND CANYON, SOUTH RIM	113 175376 PMIS/PKG NO. 257282 SHEET 215 OF 401

GRCA-257282

100% COMPLETE CONSTRUCTION DOCUMENTS

PLOT DATE: 6/16/2025 PLOT TIME: 6:01:57 PM SS6/V8I D3167666 - South Rim\4 Delivery\43 CAD Design\GRCA\257282\Microstation V8I Drawings\ARCH\12A1040_D3167666.dgn

GENERAL SHEET NOTES

A. LOCATE MASONRY OPENINGS FOR HVAC DUCT/EQUIPMENT ON THE NEAREST 8-INCH CMU MODULE, TYP.

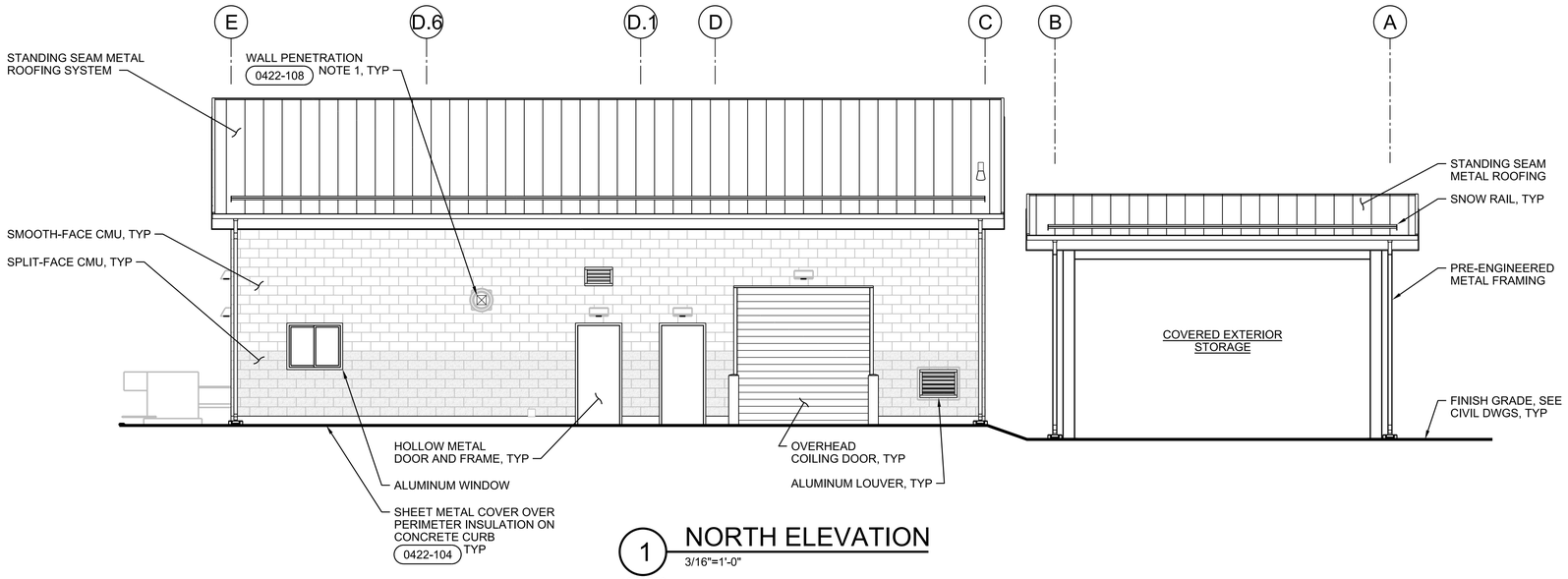

1 NORTH ELEVATION

3/16"=1'-0"

12A1030
12A1039
12A1040

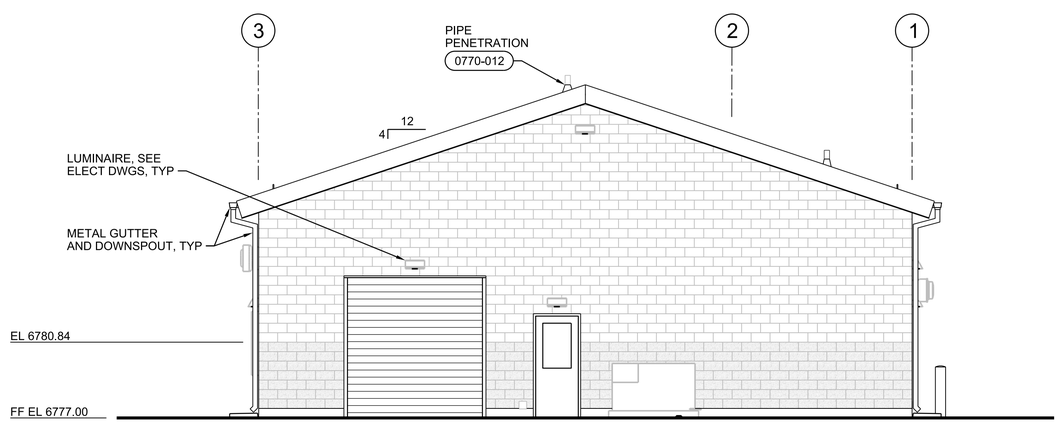

2 EAST ELEVATION

3/16"=1'-0"

12A1030
12A1039
12A1040

0 4 8 16
3/16"=1'-0"

FULL SIZE DRAWINGS = 22"x34"
BAR MEASURES 1" LONG

0" 1"

REGISTERED ARCHITECT
CERTIFICATE NO. 30688
MORGAN SHOEMAKER
Date Signed 06-16-25
ARIZONA, U.S.A.
Expires 06-30-2027

A/E FIRM	DESIGNED:	SUB SHEET NO.	TITLE OF SHEET	DRAWING NO.
JACOBS GOVERNMENT SERVICES COMPANY GREENWOOD VILLAGE, CO	M SHOEMAKER CADD: M COLLINS TECH. REVIEW: G KIRSTEN DATE: 06/2025	12A2001	MAINTENANCE BUILDING ARCHITECTURAL ELEVATIONS GRAND CANYON, SOUTH RIM	113 175376 PMIS/PKG NO. 257282 SHEET 216 OF 401

GRCA-257282

100% COMPLETE CONSTRUCTION DOCUMENTS

PLOT DATE: 6/16/2025 PLOT TIME: 6:02:19 PM SS6/V8I D3167666 - South Rim\4 Delivery\43 CAD Design\GRCA\257282\Microstation V8I Drawings\ARCH\12A2001_D3167666.dgn

GENERAL SHEET NOTES

A. LOCATE MASONRY OPENINGS FOR HVAC DUCT/EQUIPMENT ON THE NEAREST 8-INCH CMU MODULE, TYP.

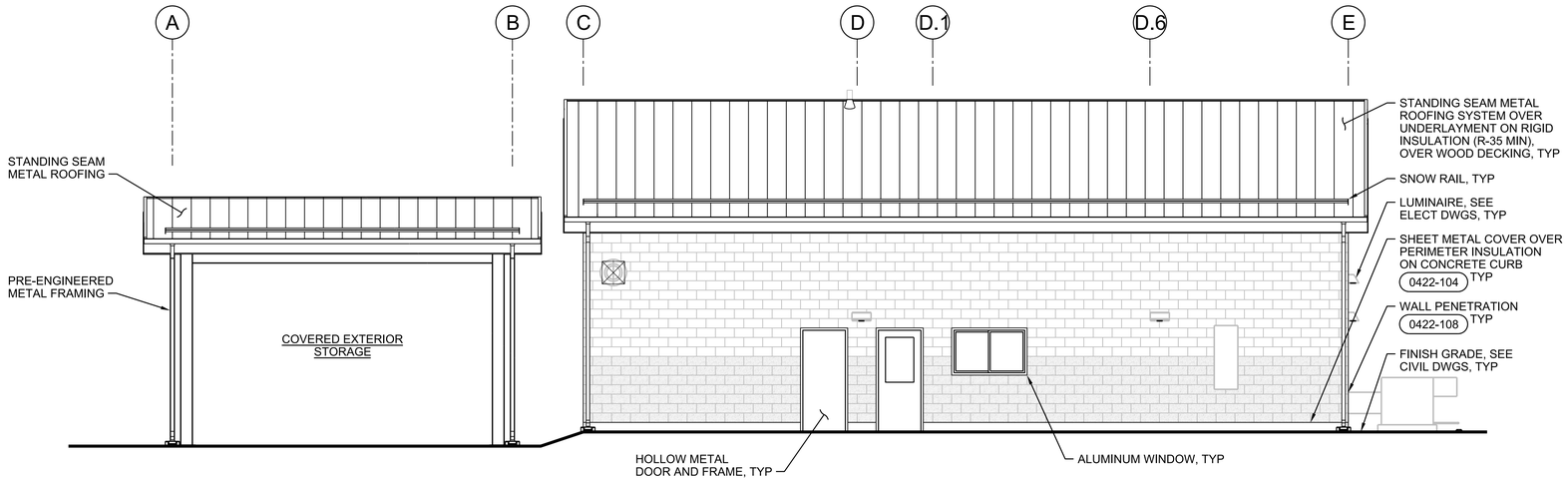

3 SOUTH ELEVATION

3/16"=1'-0"

12A1030
12A1039
12A1040

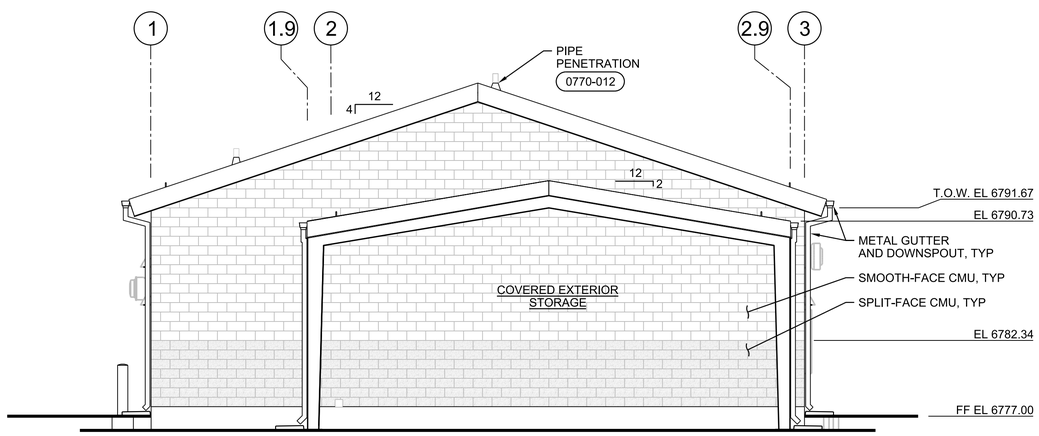

4 WEST ELEVATION

3/16"=1'-0"

12A1030
12A1039
12A1040

0 4 8 16
3/16"=1'-0"

FULL SIZE DRAWINGS = 22"x34"
BAR MEASURES 1" LONG

0" 1"

REGISTERED ARCHITECT
CERTIFICATE NO. 30688
MORGAN SHOEMAKER
Date Signed 06-16-25
ARIZONA, U.S.A.
Expires 06-30-2027

A/E FIRM JACOBS GOVERNMENT SERVICES COMPANY GREENWOOD VILLAGE, CO	DESIGNED: M SHOEMAKER CADD: M COLLINS TECH. REVIEW: G KIRSTEN DATE: 06/2025	SUB SHEET NO. 12A2002	TITLE OF SHEET MAINTENANCE BUILDING ARCHITECTURAL ELEVATIONS GRAND CANYON, SOUTH RIM	DRAWING NO. 113 175376 PMIS/PKG NO. 257282 SHEET 217 OF 401

GRCA-257282

100% COMPLETE CONSTRUCTION DOCUMENTS

PLOT DATE: 6/16/2025 PLOT TIME: 6:02:44 PM SS6/V8I D3167666 - South Rim\4 Delivery\43 CAD Design\GRCA\257282\Microstation V8I Drawings\ARCH\12A2002_D3167666.dgn

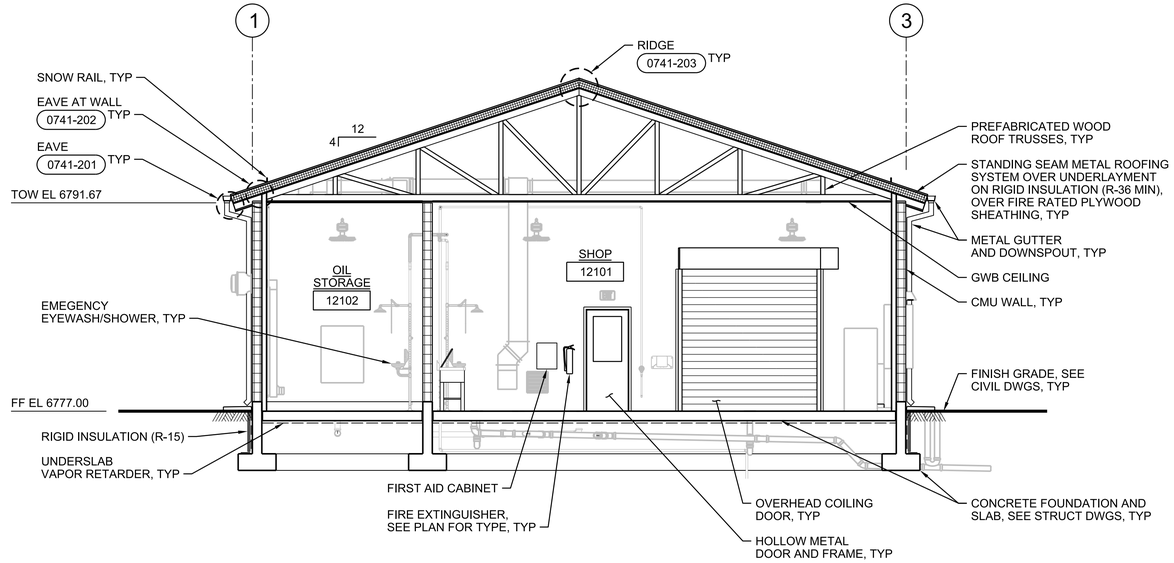

A SECTION

3/16"=1'-0"

12A1030
12A1039
12A1040

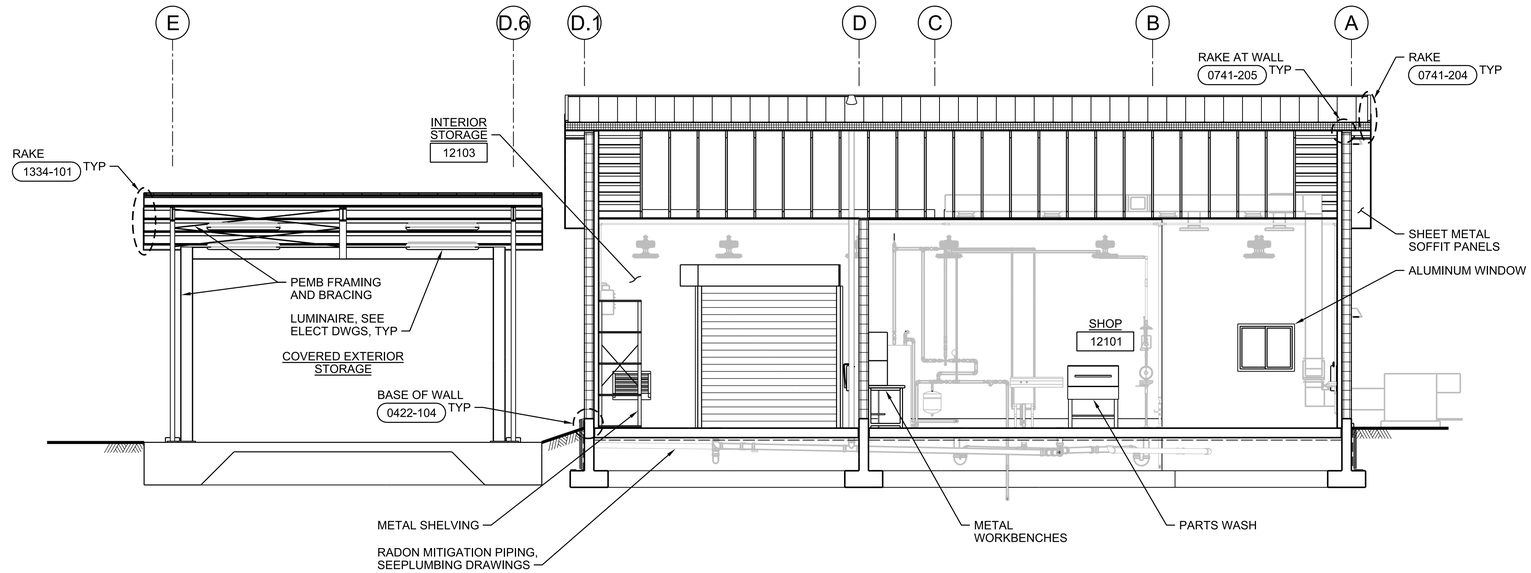

B SECTION

3/16"=1'-0"

12A1030
12A1039
12A1040

0 4 8 16
3/16"=1'-0"

FULL SIZE DRAWINGS = 22"x34"
BAR MEASURES 1" LONG

0" 1"

REGISTERED ARCHITECT
CERTIFICATE NO. 30087
MORGAN M. SHOEMAKER
Date Signed 06/16/25
ARIZONA, U.S.A.
Expires 06-30-2027

A/E FIRM	DESIGNED:	SUB SHEET NO.	TITLE OF SHEET	DRAWING NO.
JACOBS GOVERNMENT SERVICES COMPANY GREENWOOD VILLAGE, CO	M SHOEMAKER CADD: M COLLINS TECH. REVIEW: G KIRSTEN DATE: 06/2025	12A3001	MAINTENANCE BUILDING ARCHITECTURAL SECTIONS GRAND CANYON, SOUTH RIM	113 / 175376 PMIS/PKG NO. 257282 SHEET 218 OF 401

100% COMPLETE CONSTRUCTION DOCUMENTS

GRCA-257282

PLOT DATE: 6/16/2025 PLOT TIME: 6:02:05 PM SS6/V8i D3167666 - South Rim\4 Delivery\43 CAD Design\GRCA\257282\Microstation V8i Drawings\ARCH\12A3001_D3167666.dgn

GENERAL SHEET NOTES

A. FOR GENERAL ARCHITECTURAL NOTES, MATERIAL SYMBOLS, LEGEND, ABBREVIATIONS AND WALL TYPES, SEE DRAWING 01A0001.

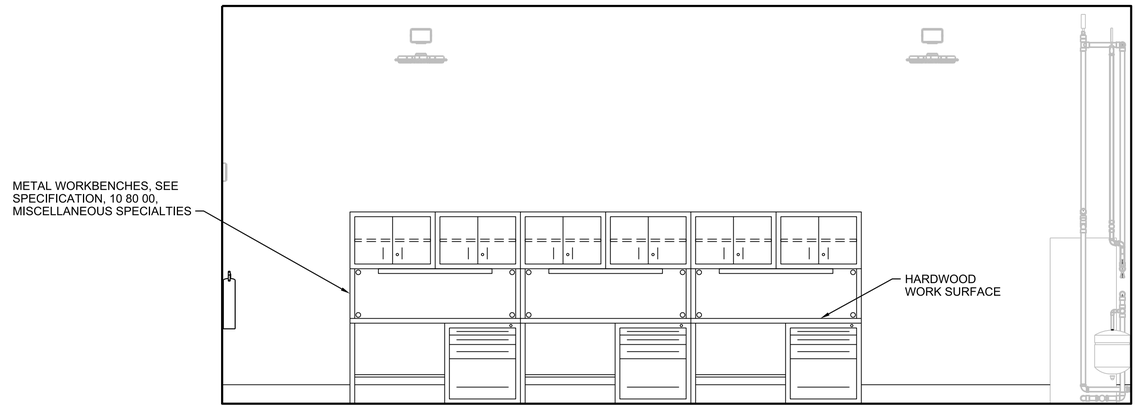

1A ROOM 12101 ELEVATION
3/8"=1'-0"
12A1030

0 2 4 6
3/8"=1'-0"

FULL SIZE DRAWINGS = 22"x34"
BAR MEASURES 1" LONG

0" 1"

REGISTERED ARCHITECT
CERTIFICATE NO. 80680
MORGAN SHOEMAKER
Date Signed 06/16/25
ARIZONA, U.S.A.
Expires 06-30-2027

A/E FIRM
JACOBS GOVERNMENT SERVICES COMPANY
GREENWOOD VILLAGE, CO

DESIGNED: M SHOEMAKER
CADD: M COLLINS
TECH. REVIEW: G KIRSTEN
DATE: 06/2025

SUB SHEET NO. 12A4001

TITLE OF SHEET
MAINTENANCE BUILDING ARCHITECTURAL INTERIOR ELEVATION
GRAND CANYON, SOUTH RIM

DRAWING NO. 113
175376
PMIS/PKG NO. 257282
SHEET 219 OF 401

100% COMPLETE CONSTRUCTION DOCUMENTS

GRCA-257282

PLOT DATE: 6/16/2025 PLOT TIME: 6:02:02 PM SS6/V8I D3167666 - South Rim\4 Delivery\43 CAD Design\GRCA\257282\Microstation V8I Drawings\ARCH\12A4001_D3167666.dgn

INTERIOR FINISH SCHEDULE

ABBREVIATIONS:

ARWB	ABUSE-RESISTANT GWB	FNSH	FINISH	SLR	CLEAR SEALER
CLR	CLEAR	GWB	GYPSUM WALL BOARD		
CMU	CONCRETE MASONRY UNIT	HGT	HEIGHT		
COL	COLOR	MATL	MATERIAL		
CONC	CONCRETE	RUB	RUBBER BASE		

NOTES:
NO. 1 NUMBERS IN THE FINISH COLUMN REFER TO PAINT SYSTEMS IN SPECIFICATION SECTION 09 90 00.
NO. 2 CODES IN COL COLUMN REFER TO COLOR LIST ON THIS DRAWING.
NO. 3 FOR EXTERIOR FINISHES AND COLORS, SEE EXTERIOR FINISH SCHEDULE ON THIS DRAWING.
NO. 4 FOR DOOR AND FRAME FINISHES, SEE DOOR AND HARDWARE SCHEDULE ON THIS DRAWING.
NO. 5 FOR WINDOW AND TRIM FINISHES, SEE WINDOW SCHEDULE ON THIS DRAWING.

SPACE		FLOOR			BASE AND WAINSCOT					TYPICAL WALL			OTHER WALL			CEILING				MISCELLANEOUS				OTHER REQUIREMENTS
NO.	NAME	SUB FL	FINISH	COL	HGT	MATL	FINISH	COL	WALLS	MATL	FINISH	COL	MATL	FINISH	COL	HGT	MATL	FINISH	COL	ITEM	MATL	FINISH	COL	
12101	SHOP	CONC	SLR	CLR	4"	RUB	FCTY	W-3	ALL	ARWB	116	P-1	---	---	---	14'-0"	GWB	115	P-2	---				
12102	OIL STORAGE	CONC	SLR	CLR	4"	RUB	FCTY	W-3	NORTH	CMU	117	P-1	ARWB	116	P-1	14'-0"	GWB	116	P-2	---				
12103	INTERIOR STORAGE	CONC	SLR	CLR	4"	RUB	FCTY	W-3	ALL	ARWB	115	P-1	CMU	109	P-1	14'-0"	GWB	115	P-2	---				

WINDOW SCHEDULE

WINDOW TYPE ABBREVIATIONS:
SL SLIDER

OTHER ABBREVIATIONS:
AFF ABOVE FINISH FLOOR (AT GROUND LEVEL)
AL ALUMINUM
IG-B INSULATING GLASS - BIRD
SG SAFETY GLASS
SS SOLID SURFACING

NOTES:
NO. 1 FOR FRAME TYPES, SEE BUILDING ELEVATIONS.
NO. 2 FOR FRAME DETAILS, SEE DESIGN DETAILS.
NO. 3 CODES IN COL COLUMN REFER TO COLOR LIST ON THIS DRAWING.

NO.	OPENING											BLINDS		SILLS			OTHER REQUIREMENTS
	SIZE		WINDOW		FRAME				DETAILS								
	WIDTH	HEIGHT	TYPE	GLASS	MATL	TYPE	FINISH	COL	HEAD	JAMB	SILL	Y / N	COLOR	MATL	COLOR	HEIGHT	
12W-01	4'-0"	3'-4"	SL	IG-B	AL	W-1	FCTY	O-3	0851-004	0851-004 SIM	0851-004	N	---	SS	O-4	4'-0" AFF	
12W-02	5'-4"	3'-4"	SL	IG-B	AL	W-1	FCTY	O-3	0851-004	0851-004 SIM	0851-004	N	---	SS	O-4	4'-0" AFF	

EXTERIOR FINISH SCHEDULE

ITEM / MATERIAL	FINISH	COLOR
SMOOTH-FACE CMU	FACTORY / WATER REPELLENT	W-1 / CLEAR
SPLIT-FACE CMU	FACTORY / WATER REPELLENT	W-2 / CLEAR
SHEET METAL ROOF AND SOFFIT PANELS	FACTORY	M-1
SHEET METAL GUTTERS AND DOWNSPOUTS	FACTORY	M-2
LUMINAIRES	FACTORY	DARK BRONZE
PEMB SHEET METAL ROOF	FACTORY	M-3
PEMB SHEET METAL GUTTER AND DOWNSPOUT	FACTORY	M-4
PEMB STRUCTURAL FRAME AND COLUMNS	FACTORY	M-5
PERIMETER SHEET METAL COVER	FACTORY	M-6

WINDOW TYPES

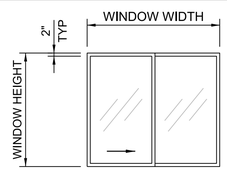

W-1

COLOR LIST

NOTES:
NO. 1 COLOR SELECTIONS FOR THIS PROJECT MAY BE NOTED IN DOOR AND HARDWARE SCHEDULE, WINDOW SCHEDULE, INTERIOR FINISH SCHEDULE, EXTERIOR FINISH SCHEDULE, LOUVER SCHEDULE, PIPING SCHEDULE AND ON THE DRAWINGS BY THE LETTER-NUMBER COMBINATION IN THE MARK COLUMN OF THIS LIST.
NO. 2 SOME COLOR SELECTIONS MAY BE MADE IN VARIOUS SPECIFICATION SECTIONS.
NO. 3 USE ONLY THE COLORS NOTED OR SCHEDULED. IF A COLOR SELECTION IS NOT MADE, REQUEST ONE FROM THE CONTRACTING OFFICER.
NO. 4 THE LISTED MANUFACTURERS AND COLORS ARE ONLY INCLUDED FOR THE PURPOSES OF ESTABLISHING A COLOR SCHEME GUIDE AND ARE NOT INTENDED TO LIMIT THE CONTRACTOR FROM PURPOSING ATLERNATE MANUFACTURERS AND COLORS FOR REVIEW AND APPROVAL BY THE CONTRACTING OFFICER. SPECIFICATION SECTIONS ARE LISTED IN PARENTHESIS AFTER MANUFACTURERS.

MARK	MATERIAL	MANUFACTURER	COLOR
OPENINGS			
O-1	OVERHEAD COILING DOOR	COOKSON (SPEC 08 30 00)	GRAY
O-2	LOUVERS	RUSKIN (SPEC 08 90 00)	LIGHT STONE
O-3	ALUMINUM WINDOWS	KAWNEER (SPEC 08 51 13)	FOREST GREEN
O-4	SOLID SURFACING SILL	WILSONART (SPEC 06 41 00)	SOOTHING GREY
PAINT			
P-1	PAINT	SHERWIN-WILLIAMS (SPEC 09 90 00)	DOVER WHITE - SW6385
P-2	PAINT	SHERWIN-WILLIAMS (SPEC 09 90 00)	HIGH REFLECTIVE WHITE - SW7757
P-3	PAINT	SHERWIN-WILLIAMS (SPEC 09 90 00)	DOVER GRAY - SW6385
MISCELLANEOUS			
M-1	SHEET METAL ROOF AND SOFFIT PANELS	IMETCO (SPEC 07 41 13)	DENALI GREEN
M-2	SHEET METAL GUTTERS AND DOWNSPOUTS	IMETCO (SPEC 07 41 13)	DENALI GREEN
M-3	PEMB SHEET METAL ROOF	AS SPECIFIED IN 13 34 19	GREEN
M-4	PEMB SHEET METAL GUTTER AND DOWNSPOUT	AS SPECIFIED IN 13 34 19	GREEN
M-5	PEMB STRUCTURAL FRAME AND COLUMNS	AS SPECIFIED IN 13 34 19	GREY
M-6	PERIMETER SHEET METAL COVER	AS SPECIFIED (SPEC 07 62 00)	GREY
WALLS			
W-1	CMU - SMOOTH-FACE	ECHELON (SPEC 04 22 00)	WALNUT CREEK - NW BONE
W-2	CMU - SPLIT-FACE	ECHELON (SPEC 04 22 00)	AUTUMN
W-3	RUBBER BASE	JOHNSONITE/TARKETT (SPEC 09 29 00)	PEPPERCORN
W-4	CMU MORTAR	AMERIMIX (SPEC 04 22 00)	SOFT IVORY

LOUVER SCHEDULE

LOUVER TYPE ABBREVIATIONS:
DB DRAINABLE BLADE

OTHER ABBREVIATIONS:
AFF ABOVE FINISH FLOOR (AT GROUND LEVEL)
AL ALUMINUM
FCTY FACTORY

NOTES:
NO. 1 FOR LOUVER DETAILS, SEE DESIGN DETAILS.
NO. 2 CODES IN COL COLUMN REFER TO COLOR LIST ON THIS DRAWING.

NO.	OPENING									SILLS			OTHER REQUIREMENTS
	SIZE		LOUVER				DETAILS						
	WIDTH	HEIGHT	MATL	TYPE	FINISH	COL	HEAD	JAMB	SILL	MATL	COL	HEIGHT	
12L-01	1'-4"	2'-0"	AL	DB	FCTY	O-2	0890-002	0890-002 SIM	0890-002	ARWB	P-1	10'-0" AFF	
12L-02	2'-0"	2'-8"	AL	DB	FCTY	O-2	0890-003	0890-002 SIM	0890-002	ARWB	P-1	2'-0" AFF	

DOOR AND HARDWARE SCHEDULE

ABBREVIATIONS:
COL COLOR
EXT EXTERIOR
FCTY FACTORY
IG-C INSULATING GLASS - CLEAR
HM HOLLOW METAL
MATL MATERIAL

NOTES:
NO. 1 SEE THIS SHEET FOR DOOR AND FRAME TYPES.
NO. 2 FOR DOOR DETAILS, SEE DESIGN DETAILS.
NO. 3 NUMBER CODE IN HARDWARE SET COLUMN REFERS TO HARDWARE SETS IN SPECIFICATION SECTION 08 71 00.
NO. 4 NUMBERS IN FNSH COLUMN REFER TO PAINT SYSTEMS IN SPECIFICATION SECTION 09 90 00.
NO. 5 CODES IN COL COLUMN REFER TO COLOR LIST ON THIS DRAWING.
NO. 6 FOR GLASS TYPES, SEE SPECIFICATION SECTION 08 80 00.

NO.	OPENING														HARDWARE		FIRE PROTECTION RATING	OTHER REQUIREMENTS
	SIZE		DOOR					FRAME				DETAILS						
	WIDTH	HEIGHT	CONSTR	TYPE	GLASS	FINISH	COL	MATL	TYPE	FINISH	COL	HEAD	JAMB	SILL	SET NO.	KEY SIDE		
12101A	3'-0"	7'-2"	HM	G	IG-C	5	P-3	HM	SD	5	P-3	0811-013	0811-013 SIM	0871-001	7	EXT	---	M1: SHOP
12101B	10'-0"	10'-0"	MET	OHCI	---	FCTY	O-1	MET	OHC	FCTY	O-1	0833-007	0833-008	0833-008	20	---	---	
12101C	3'-0"	7'-2"	HM	G	IG-C	5	P-3	HM	SD	5	P-3	0811-013	0811-013 SIM	0871-001	7	EXT	---	M1: SHOP
12102A	3'-0"	7'-2"	HM	F	---	5	P-3	HM	SD	5	P-3	0811-013	0811-013 SIM	0871-001	11	EXT	---	M1: OIL STORAGE
12103A	3'-0"	7'-2"	HM	F	---	5	P-3	HM	SD	5	P-3	0811-013	0811-013 SIM	0871-001	11	EXT	---	M1: STORAGE
12103B	10'-0"	10'-0"	MET	OHCI	---	FCTY	O-1	MET	OHC	FCTY	O-1	0833-007	0833-008	0833-008	20	---	---	
12103C	3'-0"	7'-2"	HM	F	---	5	P-3	HM	SD	5	P-3	0811-013	0811-013 SIM	0871-001	11	EXT	---	M1: STORAGE

DOOR TYPES

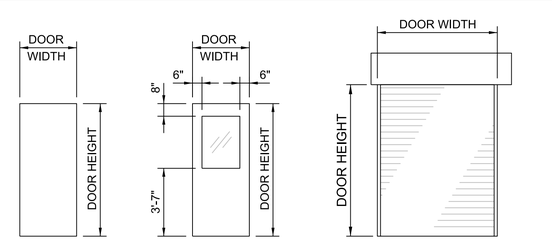

F G OHCI

DOOR FRAME TYPES

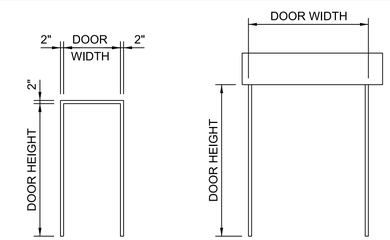

SD OHC

NO SCALE

FULL SIZE DRAWINGS = 22"x34"
BAR MEASURES 1" LONG
0" 1"

REGISTERED ARCHITECT
CERTIFICATE NO. 33080
MORGAN J. SHOEMAKER
Date Signed 6/16/25
ARIZONA, U.S.A.
Expires 06-30-2027

A/E FIRM	DESIGNED:	SUB SHEET NO.	TITLE OF SHEET	DRAWING NO.
JACOBS GOVERNMENT SERVICES COMPANY GREENWOOD VILLAGE, CO	M SHOEMAKER CADD: M COLLINS TECH. REVIEW: G KIRSTEN DATE: 06/2025	12A6001	MAINTENANCE BUILDING ARCHITECTURAL SCHEDULES GRAND CANYON, SOUTH RIM	113 / 175376 PMIS/PKG NO. 257282 SHEET 220 OF 401

GRCA-257282

100% COMPLETE CONSTRUCTION DOCUMENTS

D3167666 - South Rim\4 Delivery\43 CAD Design\GRCA\257282\Microstation V8i DrawingsARCH\12A6001_D3167666.dgn SS6\V8i PLOT TIME: 6:02:56 PM PLOT DATE: 6/16/2025

GENERAL SHEET NOTES

A. PROVIDE HIGH AND LOW (12" AFF) GRILLES INSIDE SPACE. COORDINATE WITH STORAGE LAYOUT AND LOCATION OF DUCT HEATER FOR SPACE.

B. COORDINATE STEEL STAND DIMENSIONS WITH SELECTED EQUIPMENT.

C. MOUNT UNIT HEATERS 8' AFF OR PER MANUFACTURER'S RECOMMENDATION.

SHEET NOTES

1. COORDINATE FINAL DUCTWORK LAYOUT WITH SHOP AND STORAGE EQUIPMENT/RACK LAYOUTS.

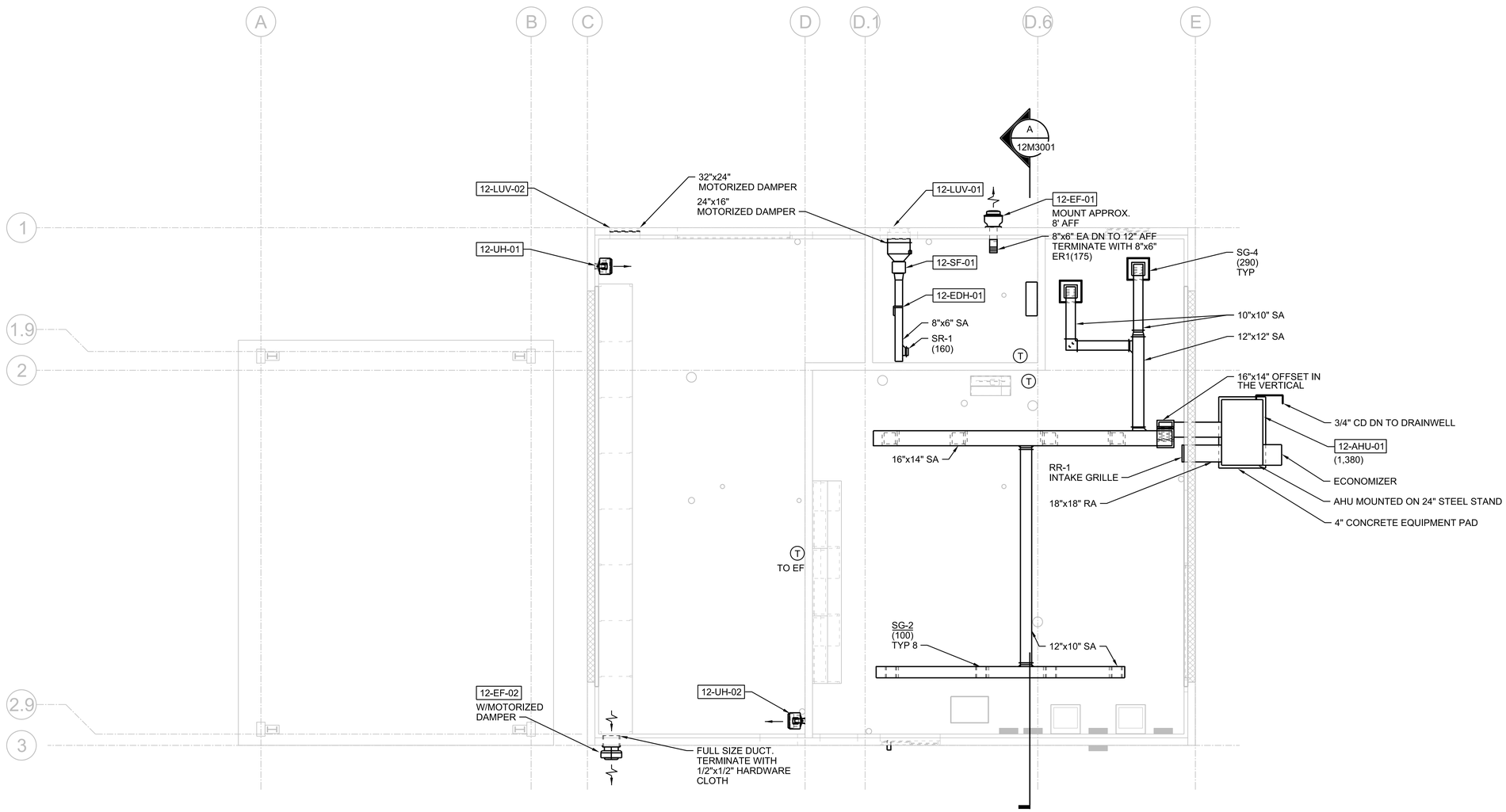

PLAN
3/16"=1'-0"

N

0 4 8 16
3/16"=1'-0"

FULL SIZE DRAWINGS = 22"x34"
BAR MEASURES 1" LONG
0" 1"

Registered Professional Engineer (Mechanical)
CERTIFICATE NO. 46267
SCOTT HINTE
Date Signed 06-30-25
ARIZONA, U.S.A.
Scott Hinte
Expires 06-30-2026

A/E FIRM	DESIGNED:	SUB SHEET NO.	TITLE OF SHEET	DRAWING NO.
JACOBS GOVERNMENT SERVICES COMPANY GREENWOOD VILLAGE, CO	S HINTE CADD: S HOSTETLER TECH. REVIEW: J SACKINGER DATE: 06/2025	12M1030	MAINTENANCE BUILDING HVAC FLOOR PLAN GRAND CANYON, SOUTH RIM	113 / 175376 PMIS/PKG NO. 257282 SHEET 221 OF 401

100% COMPLETE CONSTRUCTION DOCUMENTS

GRCA-257282

PLOT DATE: 6/17/2025 PLOT TIME: 9:11:58 AM SS6/V8i D3167666 - South Rim\4 Delivery\43 CAD Design\GRCA\257282\Microstation V8i Drawings\MECH\12M1030_D3167666.dgn

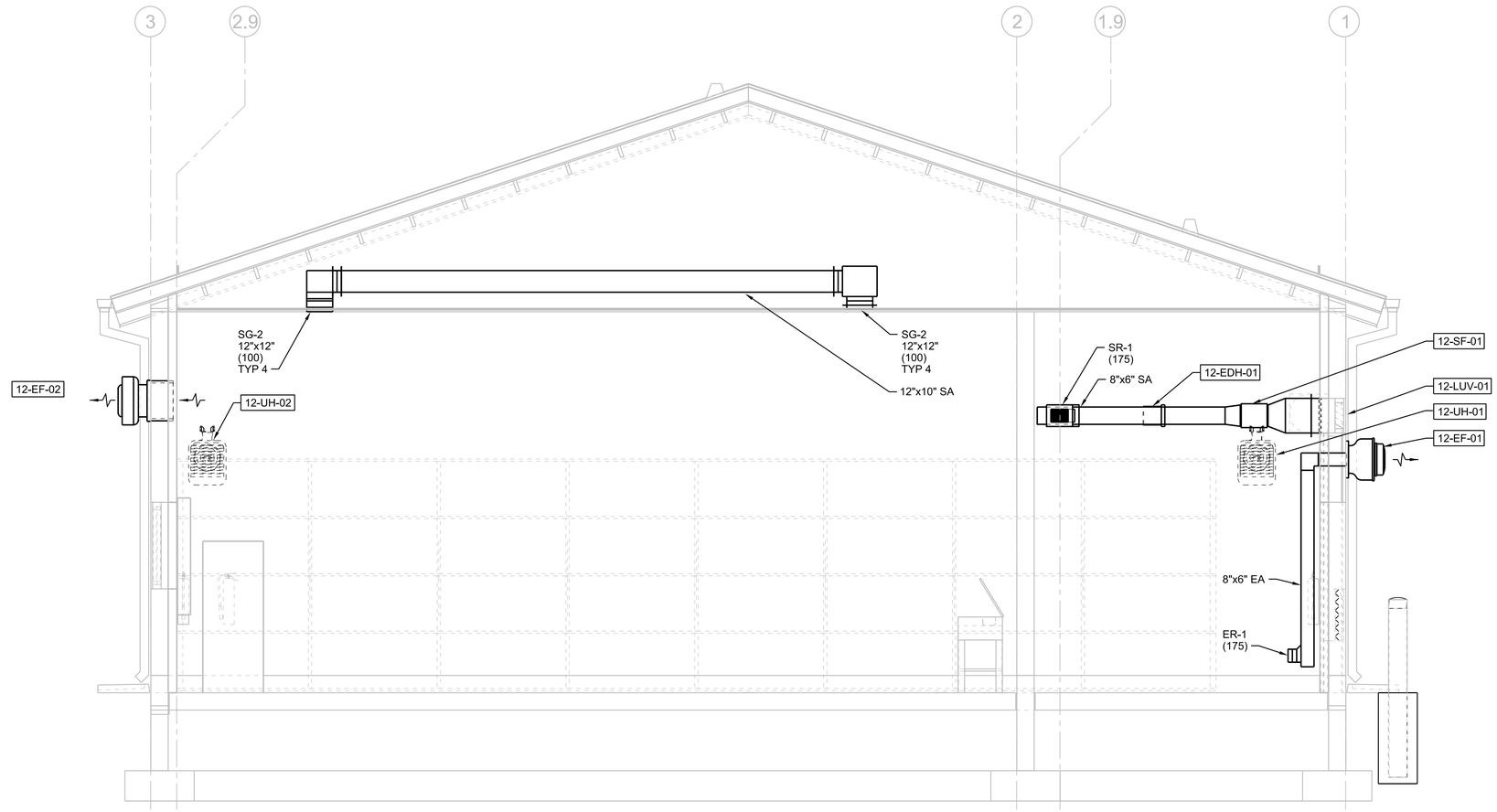

A SECTION
3/8"=1'-0"
12M1030

0 2 4 6
3/8"=1'-0"

FULL SIZE DRAWINGS = 22"x34"
BAR MEASURES 1" LONG
0" 1"

Registered Professional Engineer (Mechanical)
CERTIFICATE NO. 46267
SCOTT HINTE
Date Signed 6-30-25
ARIZONA, U.S.A.
Scott Hinte
Expires 06-30-2026

A/E FIRM	DESIGNED:	SUB SHEET NO.	TITLE OF SHEET	DRAWING NO.
JACOBS GOVERNMENT SERVICES COMPANY GREENWOOD VILLAGE, CO	S HINTE CADD: S HOSTETLER TECH. REVIEW: J SACKINGER DATE: 06/2025	12M3001	MAINTENANCE BUILDING HVAC SECTION GRAND CANYON, SOUTH RIM	113 175376 PMIS/PKG NO. 257282 SHEET 222 OF 401

100% COMPLETE CONSTRUCTION DOCUMENTS

GRCA-257282

PLOT DATE: 6/17/2025 PLOT TIME: 9:11:13 AM SS6\V8i D3167666 - South Rim\4 Delivery\43 CAD Design\GRCA\257282\Microstation V8i Drawings\MECH\12M3001_D3167666.dgn

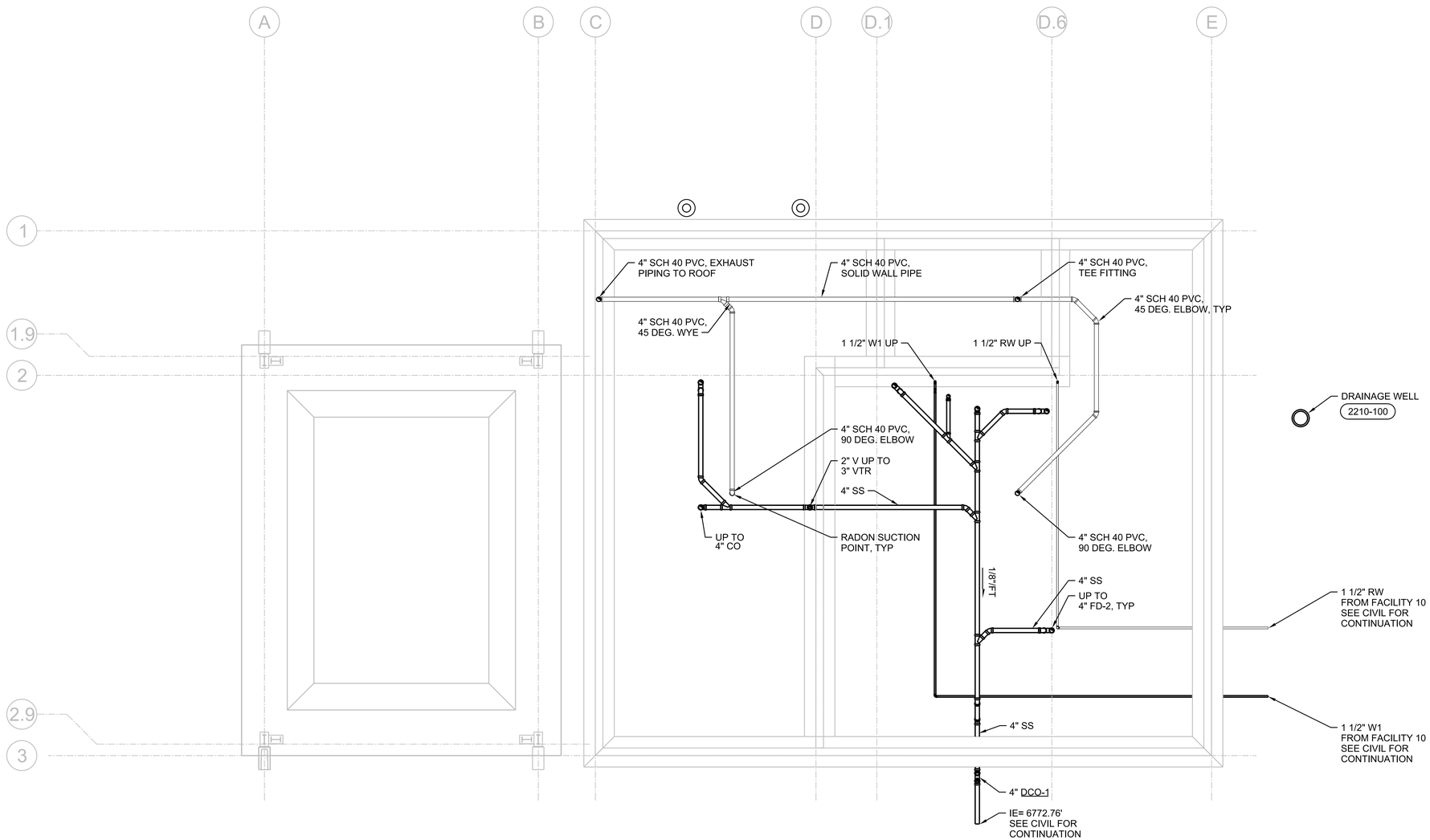

PLAN

3/16"=1'-0"

0 4 8 16

3/16"=1'-0"

FULL SIZE DRAWINGS = 22"x34"
BAR MEASURES 1" LONG

0" 1"

Registered Professional Engineer (Mechanical) CERTIFICATE NO. 46267 SCOTT HINTE Date Signed 6-30-25 ARIZONA, U.S.A.

Scott Hinte
Expires 06-30-2026

A/E FIRM JACOBS GOVERNMENT SERVICES COMPANY GREENWOOD VILLAGE, CO	DESIGNED: S HINTE CADD: S HOSTETLER TECH. REVIEW: J SACKINGER DATE: 06/2025	SUB SHEET NO. 12P1020	TITLE OF SHEET MAINTENANCE BUILDING PLUMBING BELOW GRADE PLAN GRAND CANYON, SOUTH RIM	DRAWING NO. 113 175376 PMIS/PKG NO. 257282 SHEET 223 OF 401

100% COMPLETE CONSTRUCTION DOCUMENTS

PLOT DATE: 6/17/2025 PLOT TIME: 9:13:47 AM SS6\V8i D3167666 - South Rim\4 Delivery\43 CAD Design\GRCA\257282\Microstation V8\ DrawingS\PLUMB\12P1020_D3167666.dgn

GRCA-257282

GENERAL SHEET NOTES

A. NFWH-1 AND HB-1 UTILIZING RECLAIMED WATER SHALL BE LABELED "CAUTION! NON-POTABLE WATER- DO NOT DRINK". REFER TO DETAIL 1014-002.

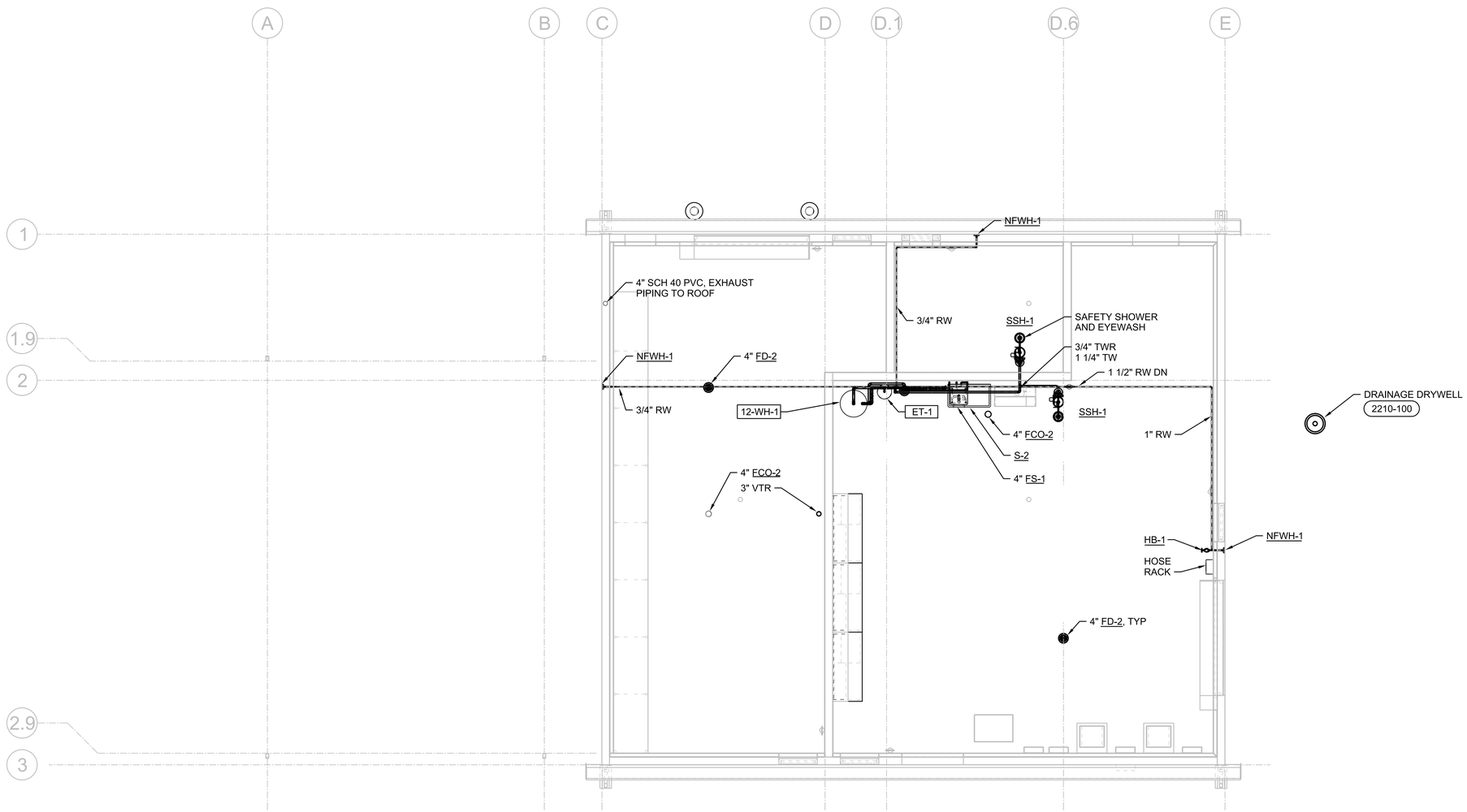

PLAN

3/16"=1'-0"

N

0 4 8 16

3/16"=1'-0"

FULL SIZE DRAWINGS = 22"x34"
BAR MEASURES 1" LONG

0" 1"

Registered Professional Engineer (Mechanical) CERTIFICATE NO. 46267 SCOTT HINTE Date Signed 6-16-25 ARIZONA, U.S.A.

Scott Hinte
Expires 06-30-2026

A/E FIRM	DESIGNED:	SUB SHEET NO.	TITLE OF SHEET	DRAWING NO.
JACOBS GOVERNMENT SERVICES COMPANY GREENWOOD VILLAGE, CO	S HINTE CADD: S HOSTETLER TECH. REVIEW: J SACKINGER DATE: 06/2025	12P1030	MAINTENANCE BUILDING PLUMBING FLOOR PLAN GRAND CANYON, SOUTH RIM	113 / 175376 PMIS/PKG NO. 257282 SHEET 224 OF 401

100% COMPLETE CONSTRUCTION DOCUMENTS

GRCA-257282

PLOT DATE: 6/17/2025 PLOT TIME: 9:14:13 AM SS6/V8i D3167666 - South Rim\4 Delivery\43 CAD Design\GRCA\257282\Microstation V8i DrawingsPLUMB\12P1030_D3167666.dgn

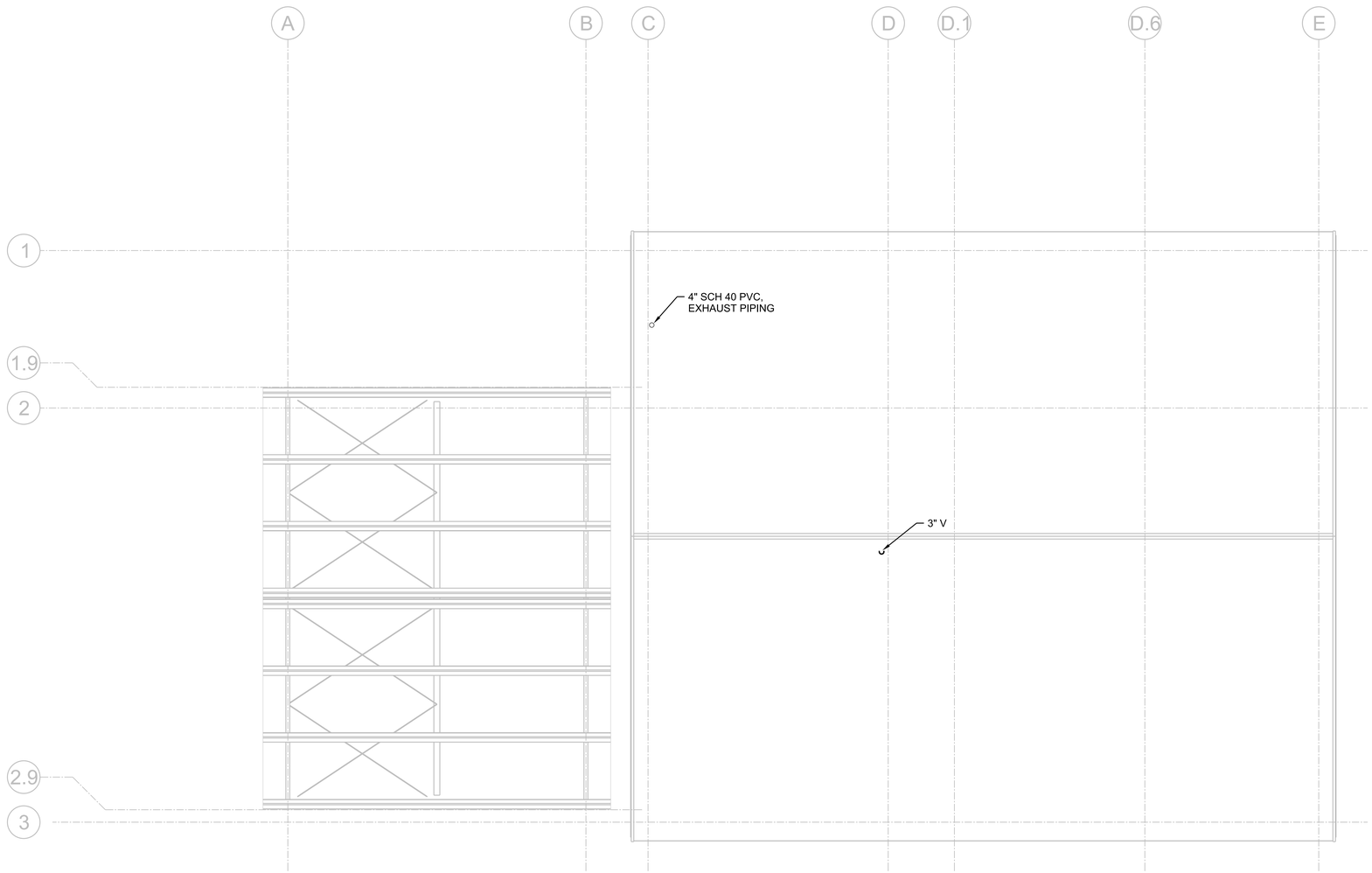

PLAN
3/16"=1'-0"

N

0 4 8 16
3/16"=1'-0"

FULL SIZE DRAWINGS = 22"x34"
BAR MEASURES 1" LONG

0" 1"

Registered Professional Engineer, Mechanical
CERTIFICATE NO. 46267
SCOTT HINTE
Date Signed 06-30-25
ARIZONA, U.S.A.
Scott Hinte
Expires 06-30-2026

A/E FIRM JACOBS GOVERNMENT SERVICES COMPANY GREENWOOD VILLAGE, CO	DESIGNED: S HINTE CADD: S HOSTETLER TECH. REVIEW: J SACKINGER DATE: 06/2025	SUB SHEET NO. 12P1040	TITLE OF SHEET MAINTENANCE BUILDING PLUMBING ROOF PLAN GRAND CANYON, SOUTH RIM

DRAWING NO. 113 / 175376
PMIS/PKG NO. 257282
SHEET 225 OF 401

100% COMPLETE CONSTRUCTION DOCUMENTS

GRCA-257282

PLOT DATE: 6/17/2025 PLOT TIME: 9:14:06 AM SS6/V8I D3167666 - South Rim\4 Delivery\43 CAD Design\GRCA\257282\Microstation V8I DrawingsIPLUMB\12P1040_D3167666.dgn

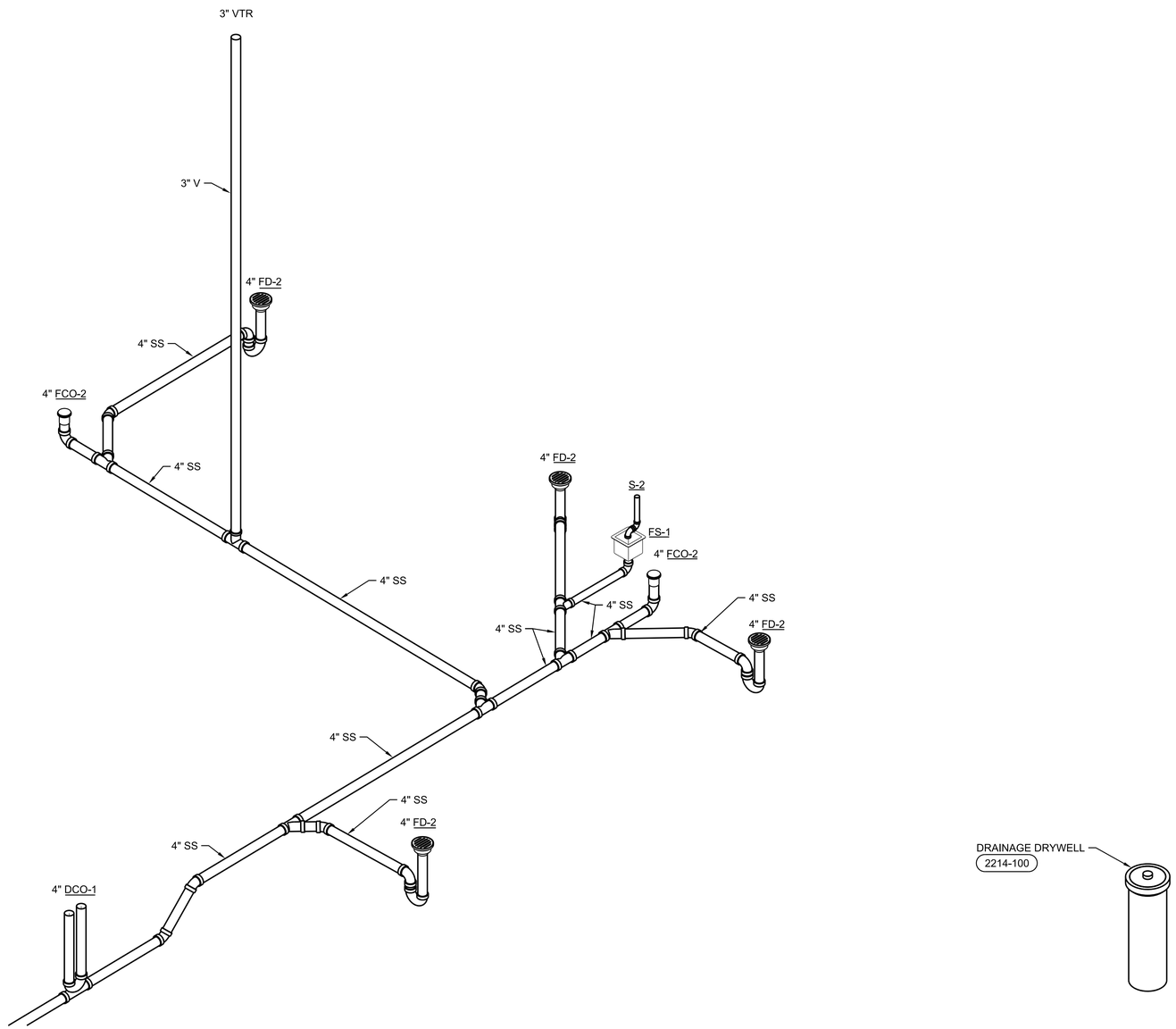

DRAINAGE

NTS

FULL SIZE DRAWINGS = 22"x34"
BAR MEASURES 1" LONG

0" 1"

Registered Professional Engineer (Mechanical)
CERTIFICATE NO. 46267
SCOTT HINTE
Date Signed 6-26-25
ARIZONA, U.S.A.
Scott Hinte
Expires 06-30-2026

A/E FIRM	DESIGNED:	SUB SHEET NO.	TITLE OF SHEET	NO SCALE
JACOBS GOVERNMENT SERVICES COMPANY GREENWOOD VILLAGE, CO	S HINTE CADD: S HOSTETLER TECH. REVIEW: J SACKINGER DATE: 06/2025	12P9001	MAINTENANCE BUILDING PLUMBING ISOMETRIC GRAND CANYON, SOUTH RIM	DRAWING NO. 113 / 175376 PMIS/PKG NO. 257282 SHEET 226 OF 401

100% COMPLETE CONSTRUCTION DOCUMENTS

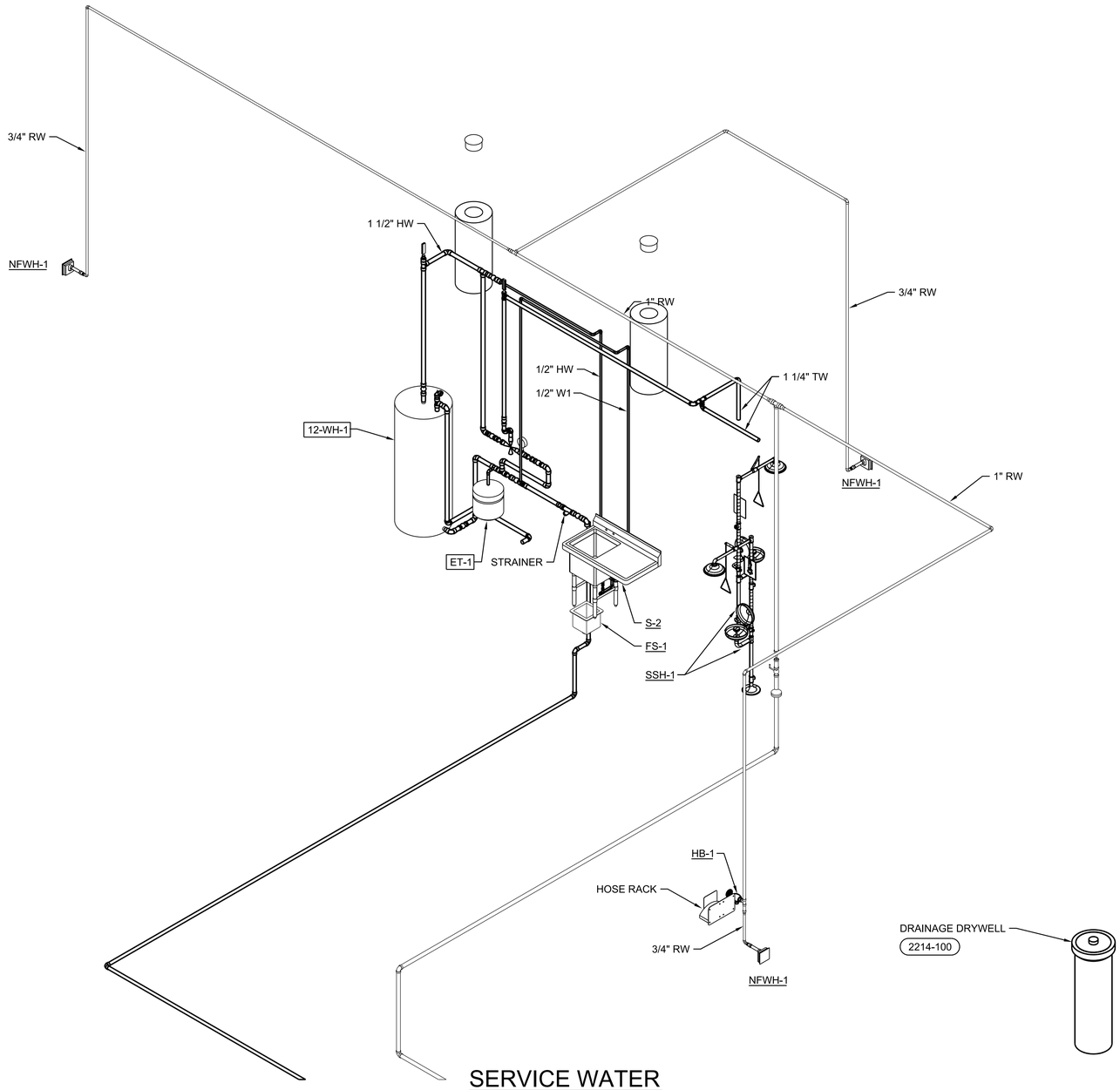

SERVICE WATER

NTS

FULL SIZE DRAWINGS = 22"x34"
BAR MEASURES 1" LONG

0" 1"

Registered Professional Engineer (Mechanical) CERTIFICATE NO. 46267 SCOTT HINTE Date Signed 6-30-25 ARIZONA, U.S.A.

Scott Hinte
Expires 06-30-2026

A/E FIRM	DESIGNED:	SUB SHEET NO.	TITLE OF SHEET	NO SCALE
JACOBS GOVERNMENT SERVICES COMPANY GREENWOOD VILLAGE, CO	S HINTE CADD: S HOSTETLER TECH. REVIEW: J SACKINGER DATE: 06/2025	12P9002	MAINTENANCE BUILDING PLUMBING ISOMETRIC GRAND CANYON, SOUTH RIM	DRAWING NO. 113 175376 PMIS/PKG NO. 257282 SHEET 227 OF 401

100% COMPLETE CONSTRUCTION DOCUMENTS

GRCA-257282

PLOT DATE: 6/17/2025 PLOT TIME: 9:14:13 AM SS6\V8i D3167666 - South Rim\4 Delivery\43 CAD Design\GRCA\257282\Microstation V8i Drawings\PLUMB\12P9002_D3167666.dgn

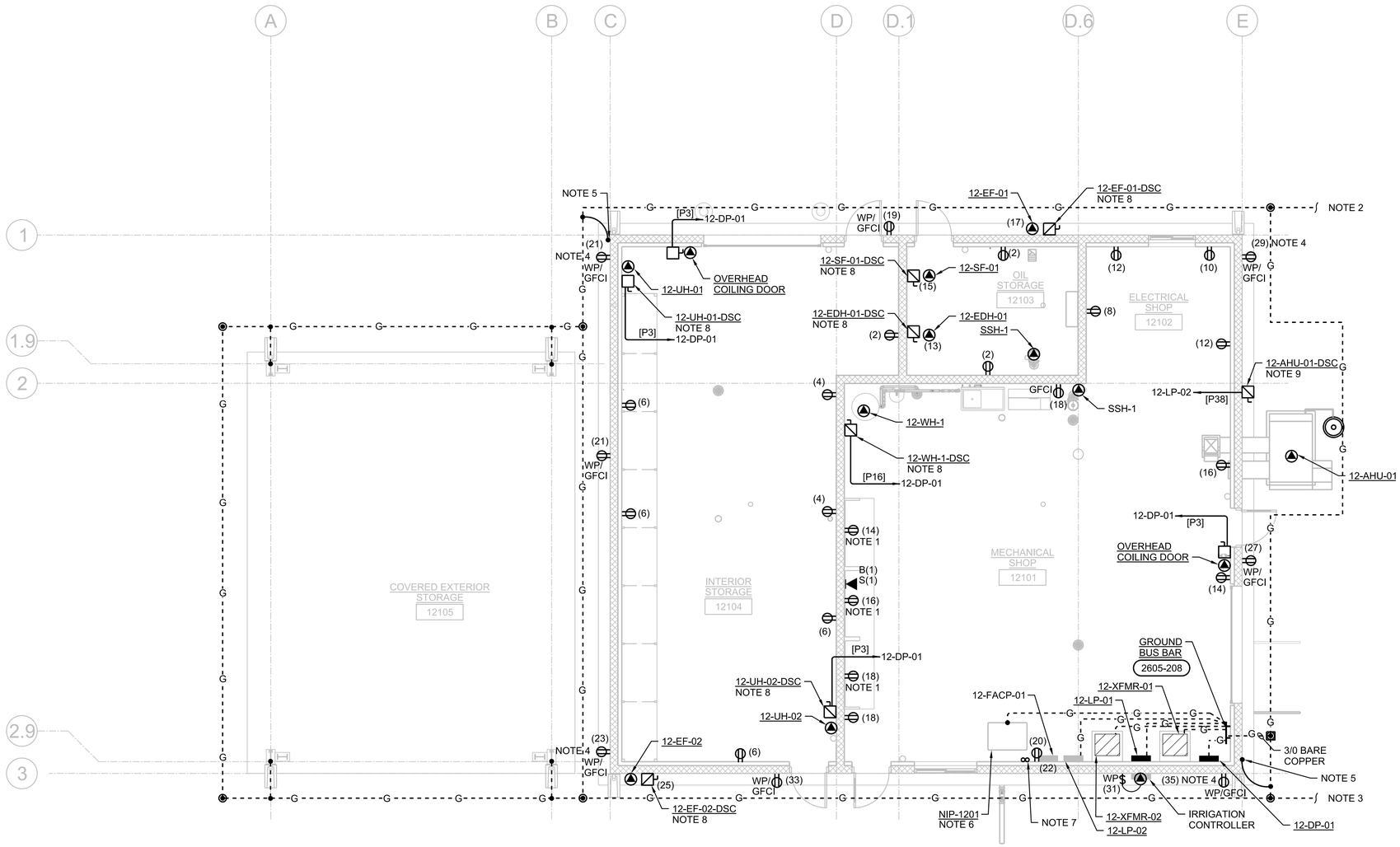

PLAN

3/16"=1'-0"

0 4 8 16

3/16"=1'-0"

N

GENERAL SHEET NOTES

A. NUMBERS SHOWN IN PARENTHESIS, (N), ADJACENT TO LIGHTS AND RECEPTACLES DENOTE CIRCUIT NUMBERS IN FACILITY PANELBOARD 12-LP-01 UNLESS OTHERWISE NOTED. PROVIDE #12 CONDUCTORS FOR 20A OR 15A CIRCUITS LESS THAN 75 FEET. PROVIDE #10 CONDUCTORS FOR CIRCUITS GREATER THAN 75 FEET. REFER TO PANELBOARD SCHEDULES.

B. COMBINE RECEPTACLE AND LIGHTING CIRCUITS IN A SINGLE CONDUIT TO MINIMIZE LENGTH OF CONDUCTORS AND CONDUIT. CIRCUITS COMBINED INTO A SINGLE CONDUIT SHALL BE SIZED FOR NEC DERATING AND CONDUIT FILL REQUIREMENTS.

SHEET NOTES

1. LOCATE 6-INCHES ABOVE COUNTER TOP.
2. CONNECT TO ADMINISTRATION BUILDING GROUND RING. REFER TO DRAWING 10EP1030.
3. CONNECT TO DUCT BANK GROUND WIRE.
4. PROVIDE IN-USE COVER FOR CONNECTION OF HEAT TRACE.
5. LIGHTNING DOWN CONDUCTOR FROM ROOF. BOND TO METALLIC OBJECTS WITHIN 6 FEET OF CONDUCTOR.
6. NETWORK INTERFACE PANEL. REFER TO I&C DRAWING 09N0007.
7. FIBER CABLE PF-10-12-S1 AND PF-12-32-S1, REFER TO DRAWINGS 08E2001 AND 08E2002.
8. 30 AMP, FUSE PER EQUIPMENT NAMEPLATE.
9. 100 AMP, FUSE PER EQUIPMENT NAMEPLATE.

GRCA-257282

FULL SIZE DRAWINGS = 22"x34"
BAR MEASURES 1" LONG

0" 1"

Registered Professional Engineer (Electrical) CERTIFICATE NO. 81240 DAVID BURGER Date Signed 6-19-2025 ARIZONA, U.S.A.

JUNE 19, 2025

A/E FIRM	DESIGNED:	SUB SHEET NO.	TITLE OF SHEET	DRAWING NO.
JACOBS GOVERNMENT SERVICES COMPANY GREENWOOD VILLAGE, CO	D BURGER CADD: J GARIBAY TECH. REVIEW: J LANDMAN DATE: 06/2025	12EP1030	MAINTENANCE BUILDING ELECTRICAL POWER PLAN GRAND CANYON, SOUTH RIM	113 175376 PMIS/PKG NO. 257282 SHEET 228 OF 401

100% COMPLETE CONSTRUCTION DOCUMENTS

PLOT DATE: 6/18/2025 PLOT TIME: 10:16:52 AM SS6/V8i D3167666 - South Rim\4 Delivery\43 CAD Design\GRCA\257282\Microstation V8i Drawings\ELEC\12EP1030_D3167666.dgn

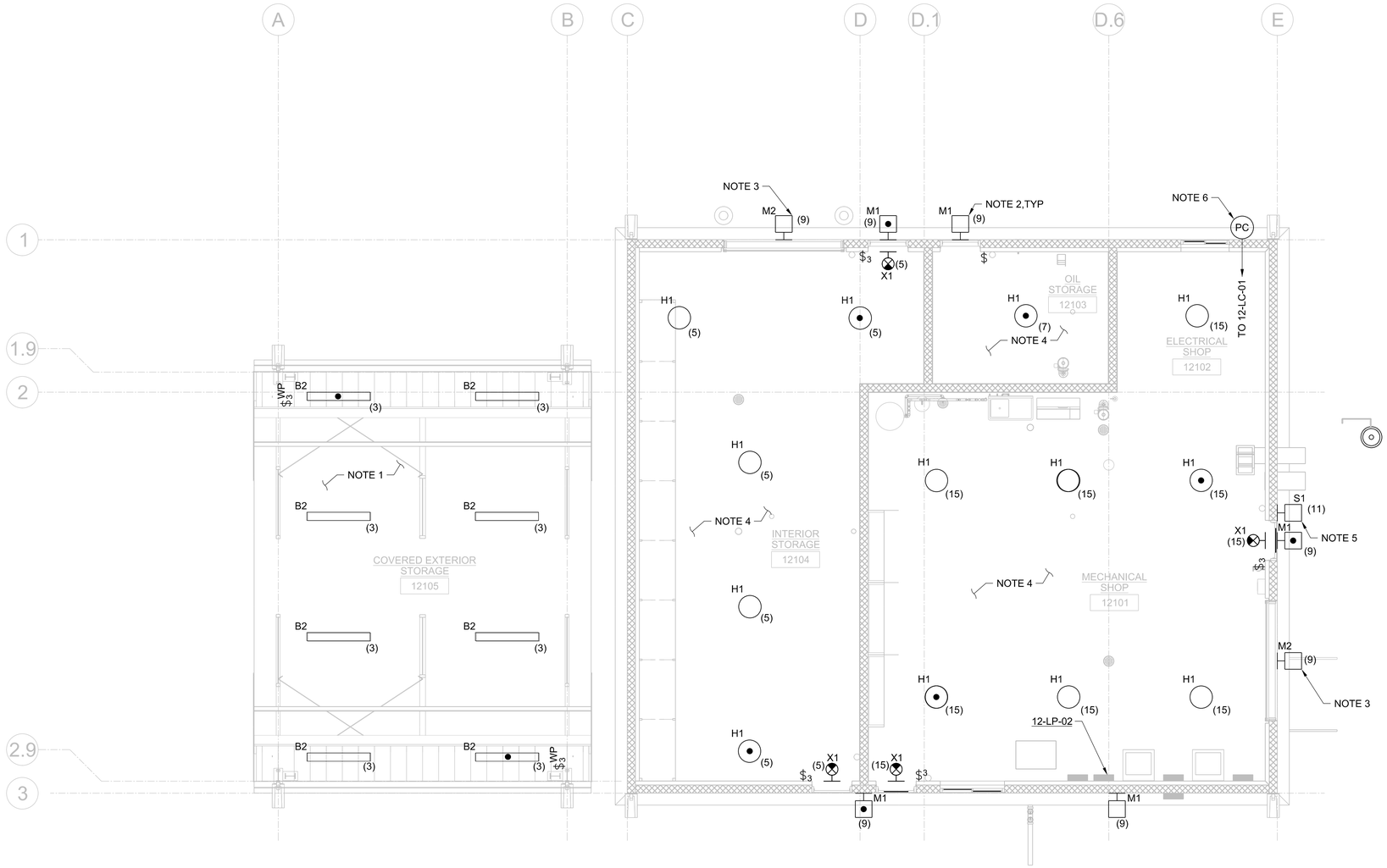

PLAN

3/16"=1'-0"

0 4 8 16

3/16"=1'-0"

N

GENERAL SHEET NOTES

A. NUMBERS SHOWN IN PARENTHESIS, (N), ADJACENT TO LIGHTS AND RECEPTACLES DENOTE CIRCUIT NUMBERS IN FACILITY PANELBOARD 12-LP-01 UNLESS OTHERWISE NOTED. PROVIDE #12 CONDUCTORS FOR 20A OR 15A CIRCUITS LESS THAN 75 FEET. PROVIDE #10 CONDUCTORS FOR CIRCUITS GREATER THAN 75 FEET. REFER TO PANELBOARD SCHEDULES.

B. COMBINE RECEPTACLE AND LIGHTING CIRCUITS IN A SINGLE CONDUIT TO MINIMIZE LENGTH OF CONDUCTORS AND CONDUIT. CIRCUITS COMBINED INTO A SINGLE CONDUIT SHALL BE SIZED FOR NEC DERATING AND CONDUIT FILL REQUIREMENTS.

C. FOR INFORMATION ON EXTERIOR LIGHTING CONTROLS, DRAWING 08E7110.

D. FOR LUMINAIRE SCHEDULE AND NOTES, SEE DRAWING 08E6001 AND 08E6002.

SHEET NOTES

1. SURFACE MOUNT LUMINAIRES TO STRUCTURE ABOVE IN THIS AREA, UNLESS SPECIFIED OTHERWISE.
2. WALL MOUNT EXTERIOR LUMINAIRES AT 9'-0" AFG, UNLESS SPECIFIED OTHERWISE. COORDINATE FINAL LOCATION WITH ARCHITECTURAL DRAWINGS.
3. WALL MOUNT EXTERIOR LUMINAIRE 6" ABOVE ROLL UP DOOR.
4. SUSPEND LUMINAIRES AT 12'-0" AFF IN THIS ROOM, UNLESS SPECIFIED OTHERWISE.
5. WALL MOUNT EXTERIOR LUMINAIRE CENTERED ON THIS WALL 20'-0" AFG. THIS LUMINAIRE SHALL BE USED FOR SITE ROADWAY LIGHTING.
6. MOUNT PHOTOCELL AS HIGH AS POSSIBLE. FIELD ADJUST AND AIM AS REQUIRED BY MANUFACTURER.

GRCA-257282

FULL SIZE DRAWINGS = 22"x34"
BAR MEASURES 1" LONG

0" 1"

Registered Professional Engineer (Electrical) CERTIFICATE NO. 81240 DAVID BURGER Date Signed 6-19-2025 ARIZONA, U.S.A.

JUNE 19, 2025

A/E FIRM JACOBS GOVERNMENT SERVICES COMPANY GREENWOOD VILLAGE, CO	DESIGNED: D BURGER CADD: J GARIBAY TECH. REVIEW: J LANDMAN DATE: 06/2025	SUB SHEET NO. 12EL1030	TITLE OF SHEET MAINTENANCE BUILDING ELECTRICAL LIGHTING PLAN GRAND CANYON, SOUTH RIM	DRAWING NO. 113 175376 PMIS/PKG NO. 257282 SHEET 229 OF 401

100% COMPLETE CONSTRUCTION DOCUMENTS

PLOT DATE: 06\17\2025 PLOT TIME: 9:41:28 AM SS6/V8i $FILEL$

GENERAL SHEET NOTES

A. BOND ALL METALLIC OBJECTS WITHIN 6'-0" OF ROOF AND DOWN CONDUCTORS.

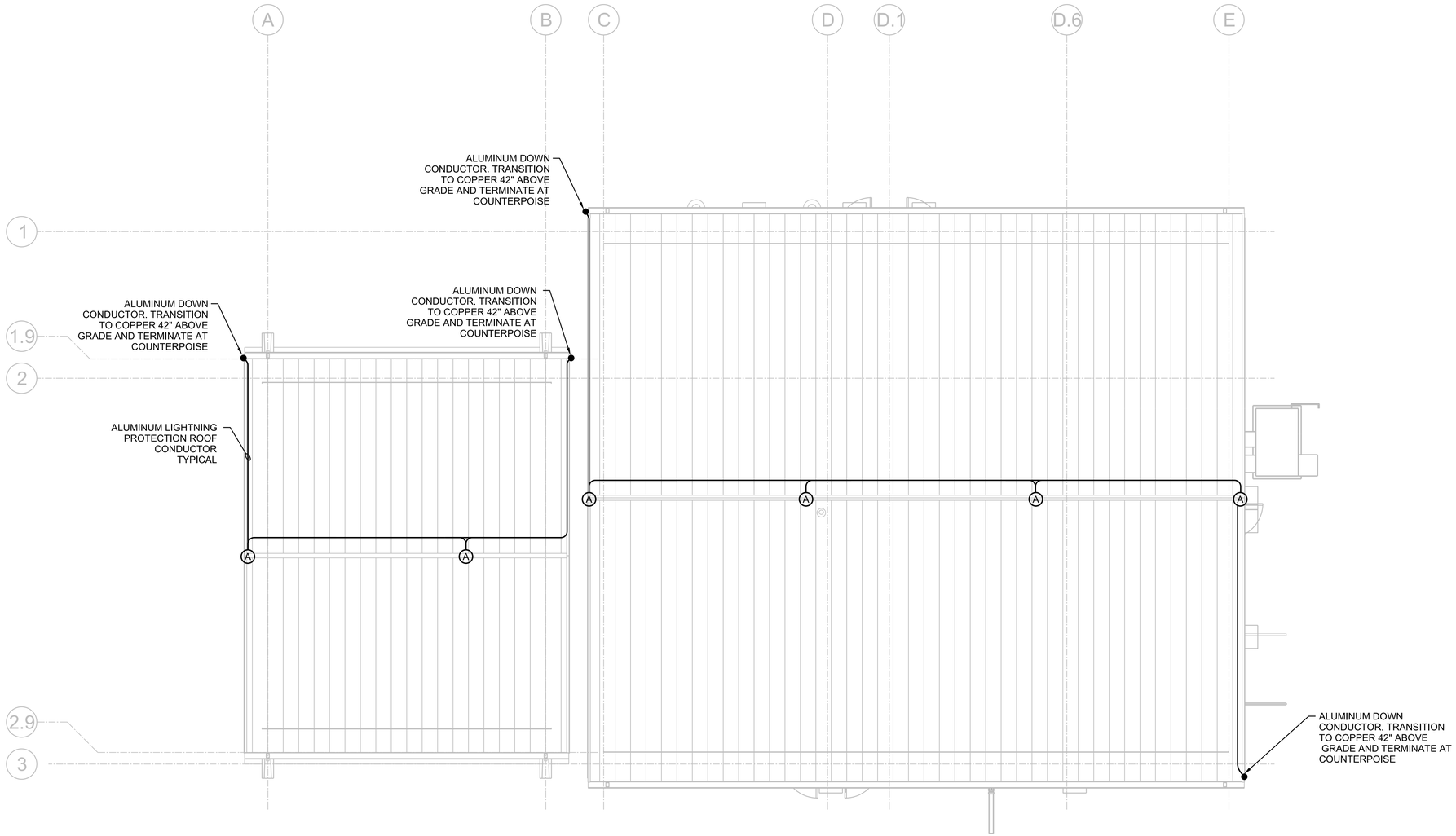

PLAN

3/16"=1'-0"

N

0 4 8 16

3/16"=1'-0"

FULL SIZE DRAWINGS = 22"x34"
BAR MEASURES 1" LONG

0" 1"

Registered Professional Engineer (Electrical) CERTIFICATE NO. 81240 DAVID BURGER Date Signed 6-19-2025 ARIZONA, U.S.A.

JUNE 19, 2025

A/E FIRM	DESIGNED:	SUB SHEET NO.	TITLE OF SHEET	DRAWING NO.
JACOBS GOVERNMENT SERVICES COMPANY GREENWOOD VILLAGE, CO	D BURGER CADD: J GARIBAY TECH. REVIEW: J LANDMAN DATE: 06/2025	12E1040	MAINTENANCE BUILDING ELECTRICAL ROOF PLAN GRAND CANYON, SOUTH RIM	113 175376 PMIS/PKG NO. 257282 SHEET 230 OF 401

100% COMPLETE CONSTRUCTION DOCUMENTS

GRCA-257282

PLOT DATE: 6/16/2025 PLOT TIME: 11:39:12 PM SS6/V8i D3167666 - South Rim4 Delivery43 CAD Design\GRCA\257282\Microstation V8i Drawings\ELEC\12E1040_D3167666.dgn

PANEL: 12-DP-01

VOLTAGE: 480
PHASE, WIRES: 3, 3
SCR (AMPS): 65 000
SOURCE: 32-SWBD-01

PANEL BUS: 400 AMPS
MAIN: 400 BREAKER
125% OF MAX BUS LOAD: 106 AMPS
TOTAL CONNECTED LOAD: 55.7 KVA
TOTAL DEMAND LOAD: 55.7 KVA
TOTAL DESIGN LOAD: 55.7 KVA

* EFCI
** GFCI
MOUNTING: SURFACE
FEED: BOTTOM

DESCRIPTION	NOTES	DEMAND CODE	KVA	CB	CKT	A	B	C	CKT	CB	KVA	DEMAND CODE	NOTES	DESCRIPTION
45 KVA 12-XFMR-01	12-XFMR-01 FEEDS 12-LP-01	GENERAL	5.91	110/3	1	22.5			2	20/3	0.33	GENERAL		ROLLUP DOOR MECHANICAL SHOP
		---	3.64		3		14.3		4		0.33	---		
		---	2.97		5			11.9	6		0.33	---		
12-WH-01 WATER HEATER		GENERAL	4.10	25/3	7	18.8			8	15/3	1.10	GENERAL	HVAC CIRCUIT, UTILIZE HACR BREAKER	12-UH-01 ELECTRIC HEATER STORAGE ROOM
		---	4.10		9		18.8		10		1.10	---		
		---	4.10		11			18.8	12		1.10	---		
45 KVA 12-XFMR-02	12-XFMR-02 FEEDS 12-LP-02	GENERAL	10.43	110/3	13	41.6			14	15/3	1.10	GENERAL	HVAC CIRCUIT, UTILIZE HACR BREAKER	12-UH-02 ELECTRIC HEATER STORAGE ROOM
		---	10.41		15		41.6		16		1.10	---		
		---	1.50		17			9.4	18		1.10	---		
SPARE		GENERAL		20/3	19	1.2			20	20/3	0.33	GENERAL		ROLLUP DOOR INTERIOR STORAGE
		---			21		1.2		22		0.33	---		
		---			23			1.2	24		0.33	---		
SPARE		GENERAL		20/3	25	0.0			26	20/3		GENERAL		SPARE
		---			27		0.0		28			---		
		---			29			0.0	30			---		
SPARE		GENERAL		20/3	31	0.0			32	20/3		GENERAL		SPARE
		---			33		0.0		34			---		
		---			35			0.0	36			---		
SPD		NONE	---	30/3	37	0.0			38	20/3		GENERAL		SPARE
		---	---		39		0.0		40			---		
		---	---		41			0.0	42			---		
					TOTALS	84.1	75.9	41.2	AMPS					
						23.3	21.0	11.4	KVA					

PANEL: 12-LP-01

VOLTAGE: 208/120
PHASE, WIRES: 3, 4
SCR (AMPS): 10,000
SOURCE: 12-XFMR-01

PANEL BUS: 200 AMPS
MAIN: 150 BREAKER
125% OF MAX BUS LOAD: 62 AMPS
TOTAL CONNECTED LOAD: 13.5 KVA
TOTAL DEMAND LOAD: 13.5 KVA
TOTAL DESIGN LOAD: 13.5 KVA

MOUNTING: SURFACE
FEED: BOTTOM

DESCRIPTION	NOTES	DEMAND CODE	KVA	CB	CKT	A	B	C	CKT	CB	KVA	DEMAND CODE	NOTES	DESCRIPTION
SHOP LIGHTS	7 LIGHTS @ 83W EACH	LIGHTING	0.58	20/1	1	10.8			2	20/1	0.72	NEC 220.14(I) RECEPTACLES		RECEPTACLES OIL STORAGE
EXTERIOR STORAGE LIGHTS	8 LIGHTS @ 49W EACH	LIGHTING	0.39	20/1	3		6.3		4	20/1	0.36	NEC 220.14(I) RECEPTACLES		RECEPTACLES INTERIOR STORAGE
INTERIOR STORAGE LIGHTS	5 LIGHTS @ 83W EACH	LIGHTING	0.42	20/1	5			11.0	6	20/1	0.90	NEC 220.14(I) RECEPTACLES		RECEPTACLES INTERIOR STORAGE
OIL STORAGE LIGHTS	1 LIGHTS @ 83W EACH	LIGHTING	0.08	20/1	7	9.7			8	20/1	1.08	NEC 220.14(I) RECEPTACLES		RECEPTACLES ELECTRIC SHOP
EXTERIOR POLE LIGHTS	8 LIGHTS @ 23W EACH	LIGHTING	0.18	20/1	9		7.5		10	20/1	0.72	NEC 220.14(I) RECEPTACLES		RECEPTACLES ELECTRIC SHOP
SITE LIGHT EAST WALL	1 LIGHTS @ 23W EACH	LIGHTING	0.23	20/1	11			6.4	12	20/1	0.54	NEC 220.14(I) RECEPTACLES		RECEPTACLES ELECTRIC SHOP
12-EDH-1 ELECTRIC DUCT HEATER		GENERAL	0.48	20/1	13	4.5			14	20/1	0.06	NEC 220.14(I) RECEPTACLES		RECEPTACLES MECHANICAL SHOP
12-SF-01 SUPPLY FAN		GENERAL	0.25	20/1	15		3.9		16	20/1	0.22	NEC 220.14(I) RECEPTACLES		RECEPTACLES MECHANICAL SHOP
12-EF-01 EXHAUST FAN OIL STORAGE		GENERAL	0.25	20/1	17			3.5	18	20/1	0.17	NEC 220.14(I) RECEPTACLES		RECEPTACLES MECHANICAL SHOP
RECEPTACLES EXTERIOR NORTH		NEC 220.14(I) RECEPTACLES	0.36	20/1	19	15.5			20	20/1	1.50	GENERAL		NETWORK RACK NIP-1201
RECEPTACLES EXTERIOR WEST		NEC 220.14(I) RECEPTACLES	0.36	20/1	21		9.7		22	20/1	0.80	GENERAL		FIRE CONTROL PANEL 12-FACP-01
RECEPTACLES EXTERIOR WEST		NEC 220.14(I) RECEPTACLES	0.36	20/1	23			2.1	24	20/1				SPARE
12-EF-02 EXHAUST FAN INTERIOR STORAGE		GENERAL	0.25	20/1	25	2.1			26	20/1				SPARE
RECEPTACLES EXTERIOR EAST		NEC 220.14(I) RECEPTACLES	0.36	20/1	27		3.0		28	20/1				SPARE
RECEPTACLES EXTERIOR EAST		NEC 220.14(I) RECEPTACLES	0.36	20/1	29			3.0	30	20/1				SPARE
IRRIGATION CONTROLLER		GENERAL	0.80	20/1	31	6.7			32	20/1				SPARE
RECEPTACLES EXTERIOR SOUTH		NEC 220.14(I) RECEPTACLES	0.36	20/1	33		3.0		34	20/1				SPARE
RECEPTACLES EXTERIOR SOUTH		NEC 220.14(I) RECEPTACLES	0.36	20/1	35			3.0	36	20/1				SPARE
SPD				30/3	37	0.0			38	20/1				SPARE
					39		0.0		40	20/1				SPARE
					41			0.0	42	20/1				SPARE
					TOTALS	49.3	33.4	29.0	AMPS					
						5.9	4.0	3.5	KVA					

NOTES
1. HVAC CIRCUIT, UTILIZE HACR BREAKER.
2. PROVIDE RED BREAKER LOCK TO PREVENT ACCIDENTAL LOSS OF POWER.

PANEL: 12-LP-02

VOLTAGE: 208/120
PHASE, WIRES: 3, 4
SCR (AMPS): 10 000
SOURCE: 12-XFMR-02

PANEL BUS: 200 AMPS
MAIN: 150 BREAKER
125% OF MAX BUS LOAD: 109 AMPS
TOTAL CONNECTED LOAD: 22.3 KVA
TOTAL DEMAND LOAD: 22.3 KVA
TOTAL DESIGN LOAD: 22.3 KVA

MOUNTING: SURFACE
FEED: BOTTOM

DESCRIPTION	NOTES	DEMAND CODE	KVA	CB	CKT	A	B	C	CKT	CB	KVA	DEMAND CODE	NOTES	DESCRIPTION
12-AHU-01			8.18	80/2	1	74.4			2	20/2	0.75	LIGHTING	12-LC-01	EAST ROAD LIGHTS
			8.16		3		74.3		4		0.75			
SPARE				20/1	5			6.3	6	20/2	0.75	LIGHTING	12-LC-02	DRYING BED LIGHTS
SPARE				20/1	7	6.3			8		0.75			
SPARE				20/1	9		6.3		10	20/2	0.75	LIGHTING	12-LC-01	PARKING LOT LIGHTS
SPARE				20/1	11			6.3	12		0.75			
SPACE				-	13	6.3			14	20/2	0.75	LIGHTING	12-LC-01	WEST ROAD LIGHTS
SPACE				-	15		6.3		16		0.75			
SPACE				-	17			0.0	18	20/1				SPARE
SPACE				-	19	0.0			20	20/1				SPARE
SPACE				-	21		0.0		22	20/1				SPARE
SPACE				-	23			0.0	24	20/1				SPARE
SPD				30/3	25	0.0			26	-				SPACE
					27		0.0		28	-				SPACE
					29			0.0	30	-				SPACE
					TOTALS	86.9	86.8	12.5	AMPS					
						10.4	10.4	1.5	KVA					

NOTES
1. HVAC CIRCUIT, UTILIZE HACR BREAKER.

FULL SIZE DRAWINGS = 22"x34"
BAR MEASURES 1" LONG
0" 1"

Registered Professional Engineer (Electrical) CERTIFICATE NO. 81240 DAVID BURGER Date Signed 6-19-2025 ARIZONA, U.S.A.
JUNE 19, 2025

A/E FIRM
JACOBS GOVERNMENT SERVICES COMPANY
GREENWOOD VILLAGE, CO

DESIGNED: D BURGER
CADD: J GARIBAY
TECH. REVIEW: J LANDMAN
DATE: 06/2025

SUB SHEET NO. 12E6001

TITLE OF SHEET
MAINTENANCE BUILDING ELECTRICAL PANELBOARD SCHEDULES
GRAND CANYON, SOUTH RIM

DRAWING NO. 113 / 175376
PMIS/PKG NO. 257282
SHEET 231 OF 401

100% COMPLETE CONSTRUCTION DOCUMENTS

GRCA-257282

PLOT DATE: 6/16/2025 PLOT TIME: 11:41:36 PM SS6/V8i D3167666 - South Rim\4 Delivery\43 CAD Design\GRCA\257282\Microstation V8i Drawings\ELEC\12E6001_D3167666.dgn

SHEET NOTES

1. FOR GENERAL STRUCTURAL NOTES SEE DRAWINGS 01S0001, 01S0002 AND 01S0003.

SHEET NOTES

1. BEDROCK IS LOCATED NEAR THE EXISTING GROUND SURFACE. SEE GEOTECHNICAL REPORT FOR ADDITIONAL INFORMATION.
2. COORDINATE LOCATION AND HEIGHT OF CONCRETE EQUIPMENT PEDESTALS WITH PROCESS EQUIPMENT MFR AND PROCESS DRAWINGS.
3. 3'-0" x 3'-0" SINGLE LEAF ALUMINUM SIDEWALK DOOR, SEE SPECIFICATION 05 50 00 METAL FABRICATIONS.
4. FACILITY LOCATION CONTROL POINT, SEE CIVIL DRAWING 06C2001.
5. PIPE PENETRATION, COORDINATE SIZE LOCATION AND PENETRATION DETAILS WITH PROCESS MECHANICAL DRAWINGS.

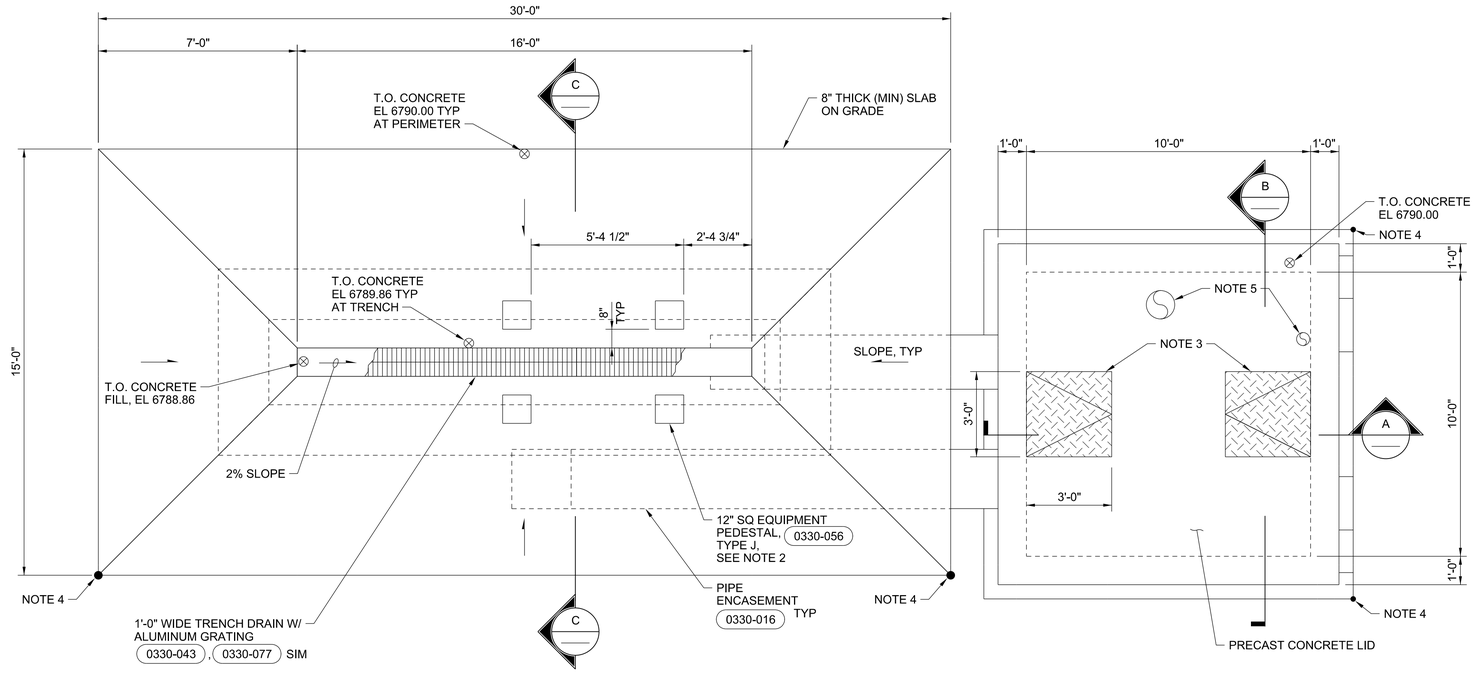

N

PLAN
3/8"=1'-0"

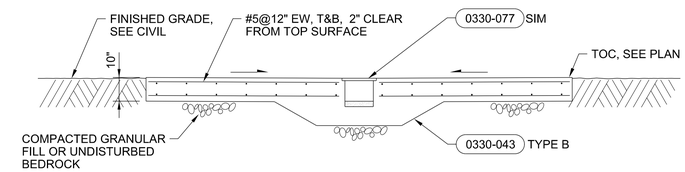

C

SLAB SECTION
3/8"=1'-0"

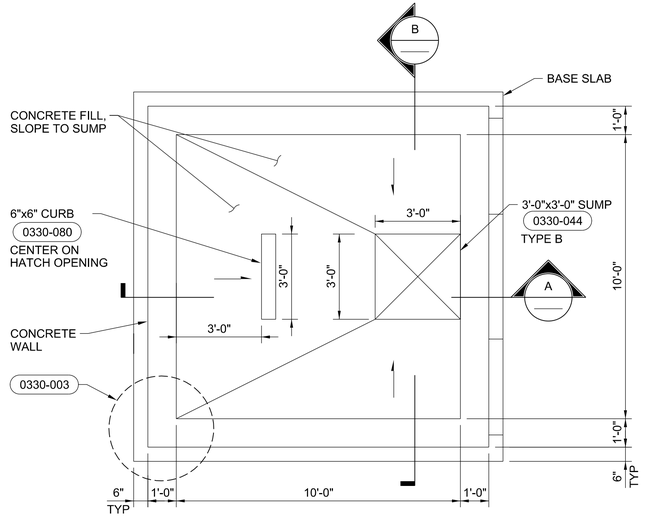

NOTE: COATING NOT SHOWN, SEE SECTION A THIS DRAWING.

N

VAULT LOWER PLAN
3/8"=1'-0"

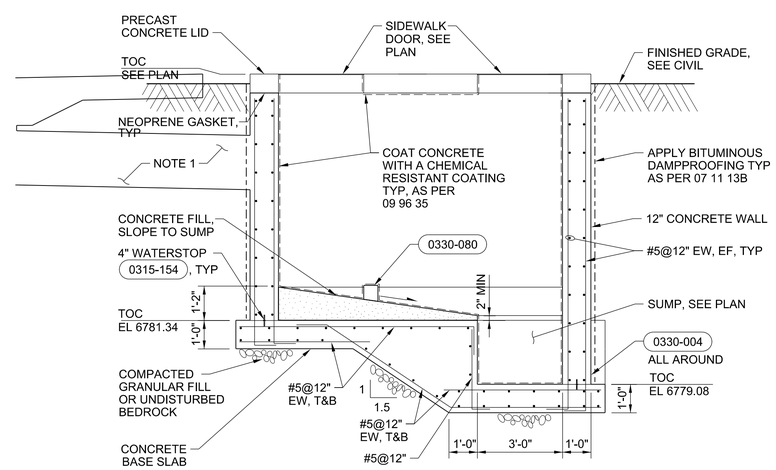

A

SECTION
3/8"=1'-0"

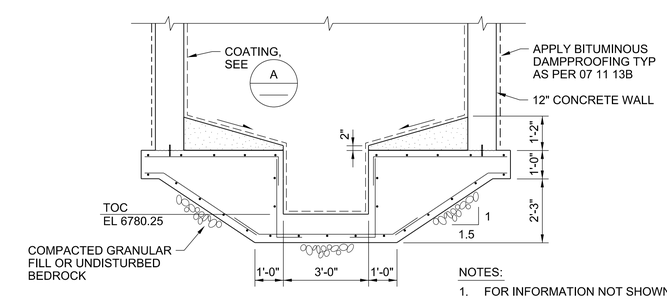

NOTES:
1. FOR INFORMATION NOT SHOWN SEE SECTION A THIS SHEET.

B

SECTION
3/8"=1'-0"

0 2 4 6
3/8"=1'-0"

FULL SIZE DRAWINGS = 22"x34"
BAR MEASURES 1" LONG
0" 1"

Registered Professional Engineer (Civil) CERTIFICATE NO. 81476 WAYNE W. KOHLER ARIZONA U.S.A. Date Signed 8/20/25	A/E FIRM JACOBS GOVERNMENT SERVICES COMPANY GREENWOOD VILLAGE, CO	DESIGNED: W KOHLER CADD: B CLEGG TECH. REVIEW: A FIRTH DATE: 06/2025	SUB SHEET NO. 18S1030	TITLE OF SHEET RECEIVING STATION STRUCTURAL PLAN AND SECTION GRAND CANYON, SOUTH RIM

DRAWING NO. 113 175376
PMIS/PKG NO. 257282
SHEET 232 OF 401

100% COMPLETE CONSTRUCTION DOCUMENTS

GRCA-257282

PLOT DATE: 06\20\2025 PLOT TIME: 9:23:17 AM SS6\V8i D3167666 - South Rim\4 Delivery\43 CAD Design\GRCA\257282\Microstation V8i Drawings\STRUC\18S1030_D3167666.dgn

SHEET NOTES

1. LOCATE LCP-1801 OUTSIDE CLASSIFIED ENVELOPES AROUND HATCHES AND DUCTWORK. SEE AREA CLASSIFICATION AND MATERIALS SELECTION TABLE ON 01G0250. MOUNT PANEL PER 2605-008.
2. PROVIDE 4" DIAMETER, 42" TALL, SCHEDULE 40 STEEL POWDER COATED YELLOW WITH CAP AND 8" SQ BASE PLATE BOLT DOWN BOLLARD.

GENERAL SHEET NOTES

A. ALL DUCT SUPPORTS SHOWN HEREIN ARE GUIDE SUPPORTS UNLESS SPECIFICALLY INDICATED AS ANCHOR SUPPORTS. SEE DETAILS 2331-900 AND 2331-884.

B. FOR CONTINUATION SEE YARD PIPING DRAWINGS.

C. COORDINATE PIPE ROUTING WITH CONNECTIONS TO APPROVED SEPTAGE RECEIVING UNIT.

D. ALL PROCESS PIPING BELOW STRUCTURE TO BE ENCASED, SEE STRUCTURAL DRAWINGS.

E. ALL WALL PIPE PENETRATIONS PER STANDARD DETAIL 4027-600, UNLESS NOTED OTHERWISE.

F. ALL SLAB PENETRATIONS PER STANDARD DETAIL 4027-600, SIM, UNLESS NOTED OTHERWISE.

G. ALL EXPOSED, EXTERIOR RW AND RS TO BE HEAT TRACED AND INSULATED..

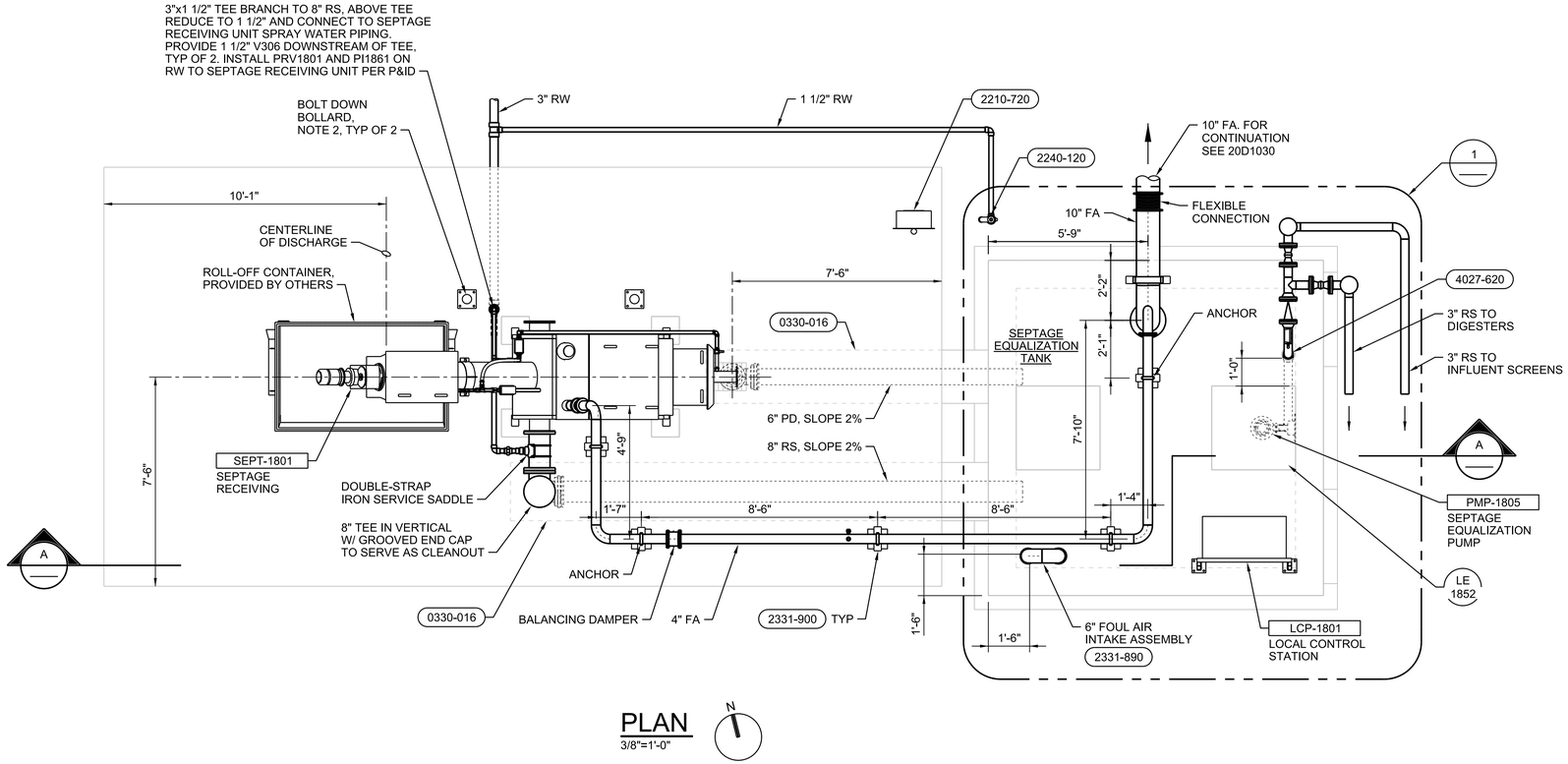

PLAN

3/8"=1'-0"

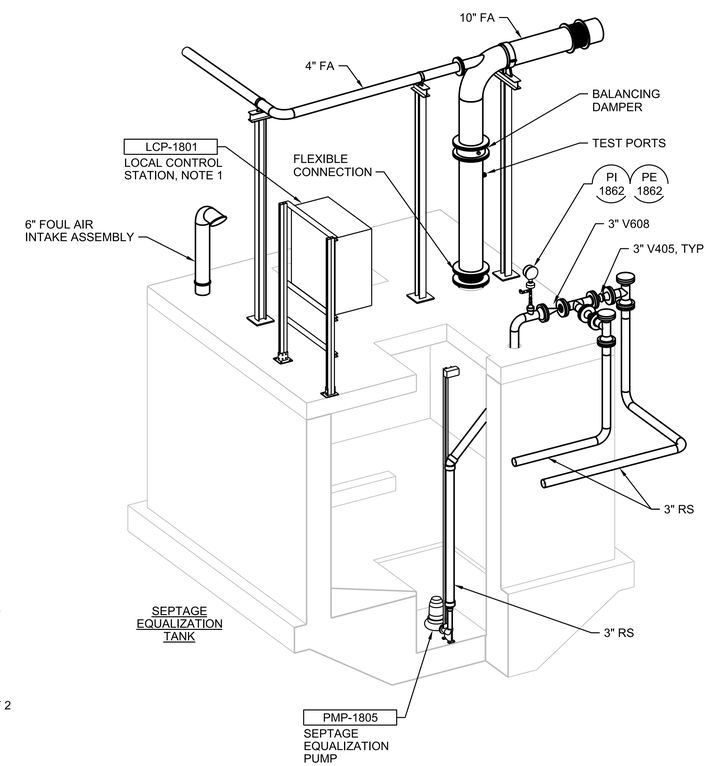

1 DETAIL

NTS

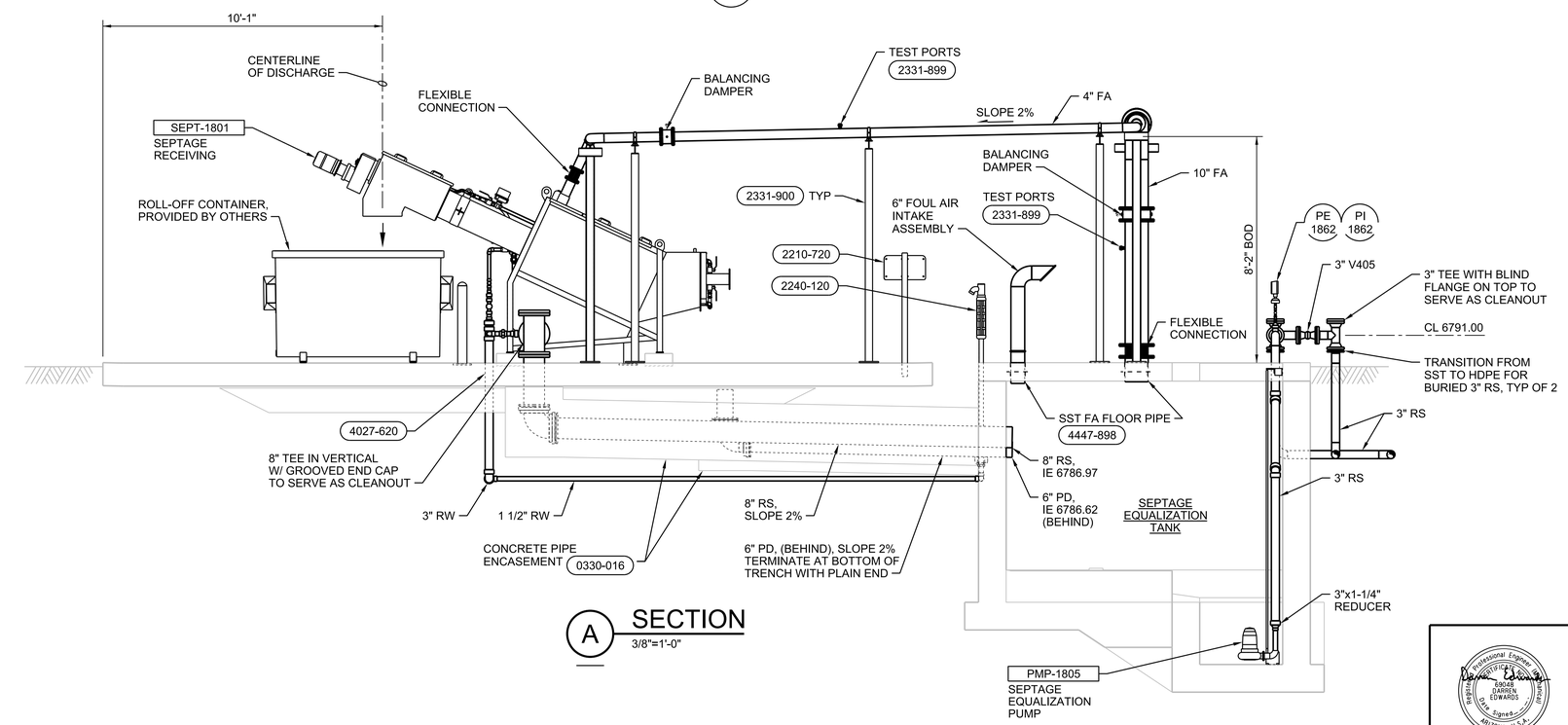

A SECTION

3/8"=1'-0"

0 2 4 6

3/8"=1'-0"

FULL SIZE DRAWINGS = 22"x34"
BAR MEASURES 1" LONG

0" 1"

JUNE 19, 2025

A/E FIRM	DESIGNED: R CAMPBELL	SUB SHEET NO.	TITLE OF SHEET	DRAWING NO.
JACOBS GOVERNMENT SERVICES COMPANY GREENWOOD VILLAGE, CO	CADD: G BROWN TECH. REVIEW: D EDWARDS DATE: 06/2025	18D1030	RECEIVING STATION MECHANICAL PLAN, SECTION AND DETAIL GRAND CANYON, SOUTH RIM	113 175376 PMIS/PKG NO. 257282 SHEET 233 OF 401

100% COMPLETE CONSTRUCTION DOCUMENTS

GRCA-257282

PLOT DATE: 6/17/2025 PLOT TIME: 11:28:06 AM SS6/V8I D3167666 - South Rim\4 Delivery\43 CAD Design\GRCA\257282\Microstation V8I DrawingsPROC\18D1030_D3167666.dgn

GENERAL SHEET NOTES

A. PROVIDE SEALOFFS PRIOR TO TERMINATION TO ALL DEVICES, EQUIPMENT, CONTROL STATIONS, CONTROL PANELS, SENSORS, SWITCHES, AND ELECTRICAL EQUIPMENT IN HAZARD AREAS AND WHEN ENTERING/LEAVING HAZARD AREAS. REFER TO DRAWINGS 01G0250 AND 01G0251 FOR AREA CLASSIFICATIONS.

B. MAINTAIN A MINIMUM OF 24" BETWEEN POWER CONDUITS AND CONTROL (EXCEPT AS SHOWN FOR HANDSTATIONS) AND INSTRUMENTATION CONDUITS EXCEPT AT POINT OF TERMINATION.

C. PLANS ARE DIAGRAMMATIC AND NOT INTENDED TO SHOW SPECIFIC ROUTING, OFFSETS, CONDULETS, PULLBOXES, SUPPORTS OR RACEWAY CONFIGURATION NECESSARY FOR A COMPLETE SYSTEM. CONTRACTOR TO LAYOUT CONDUIT RUNS IN COMPLIANCE WITH THE GENERAL CONSTRAINTS OF THE PROJECT DOCUMENTS.

D. COORDINATE CONDUIT ENCLOSURE ENTRIES WITH MANUFACTURERS INSTALLATION MANUAL PRIOR TO ROUGH-IN OF EQUIPMENT AND INSTRUMENTS.

E. NUMBERS SHOWN IN PARENTHESIS, (N), ADJACENT TO RECEPTACLES DENOTE CIRCUIT NUMBERS IN FACILITY PANELBOARD.

SHEET NOTES

1. CONNECT TO HEADWORKS GROUND RING. REFER TO DRAWING 20EP1030.
2. CONNECT TO DIGESTER FACILITY GROUND RING. REFER TO DRAWING 80EP1030.
3. BOND TO REBAR IN CONCRETE.
4. REFER TO MECHANICAL DRAWING 18D1030 AND PID DRAWING 09N1801 FOR EXTENT OF HEAT TRACE REQUIRED.
5. CONTRACTOR TO COORDINATE THE TOTAL HEAT TRACE CABLE REQUIRED WITH CONTRACTORS CHOSEN SUPPLIER TO ENSURE ADEQUATE FREEZE PROTECTION.
6. PROVIDE INSTRUMENT SUN SHADE.
7. PROVIDE INSTRUMENT SUN SHADE OVER CONTROL STATIONS AND HAND STATIONS. SEE JACOBS DETAIL 2624-010 FOR CONTROL STATION.

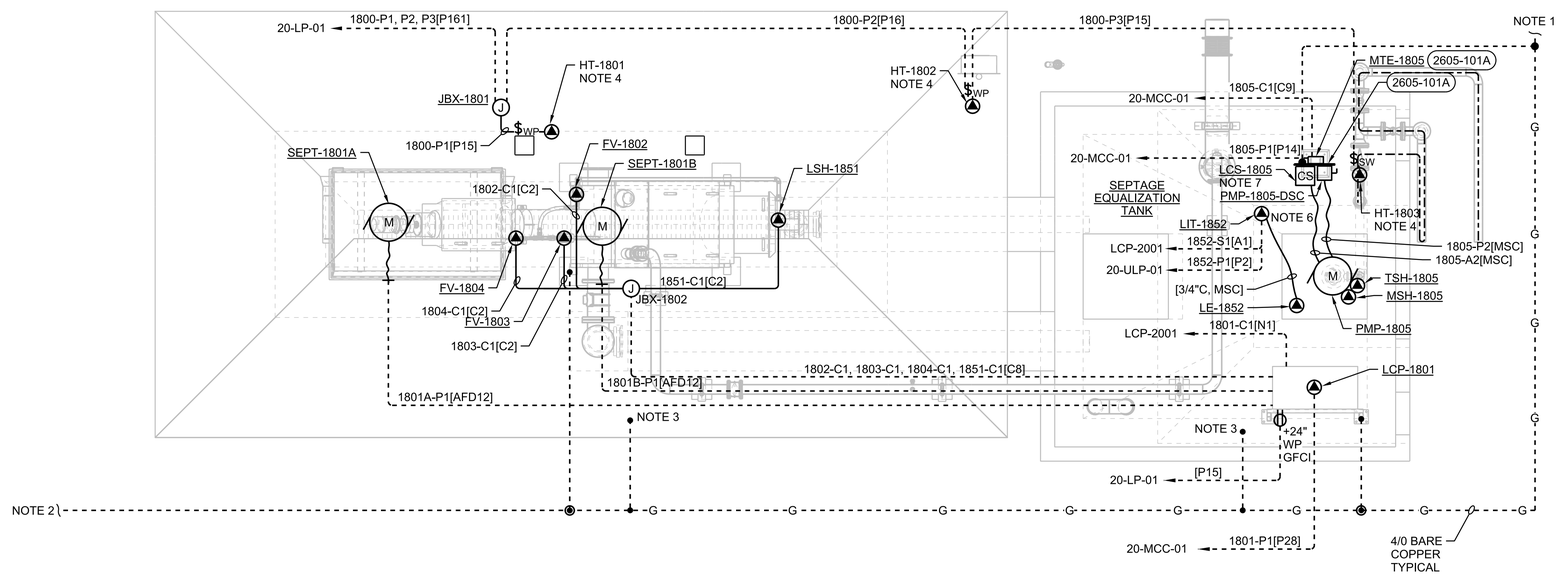

PLAN

3/8"=1'-0"

0 2 4 6

3/8"=1'-0"

FULL SIZE DRAWINGS = 22"x34"
BAR MEASURES 1" LONG

0" 1"

Registered Professional Engineer (Electrical) CERTIFICATE NO. 81240 DAVID BURGER Date Signed 6-19-2025 ARIZONA, U.S.A.

JUNE 19, 2025

A/E FIRM	DESIGNED:	SUB SHEET NO.	TITLE OF SHEET	DRAWING NO.
JACOBS GOVERNMENT SERVICES COMPANY GREENWOOD VILLAGE, CO	D BURGER CADD: J GARIBAY TECH. REVIEW: J LANDMAN DATE: 06/2025	18E1030	RECEIVING STATION ELECTRICAL PLAN GRAND CANYON, SOUTH RIM	113 175376 PMIS/PKG NO. 257282 SHEET 234 OF 401

100% COMPLETE CONSTRUCTION DOCUMENTS

GRCA-257282

PLOT DATE: 6/16/2025 PLOT TIME: 11:37:10 PM SS6/V8i D3167666 - South Rim\4 Delivery\43 CAD Design\GRCA\257282\Microstation V8i DrawingsIELEC\18E1030_D3167666.dgn

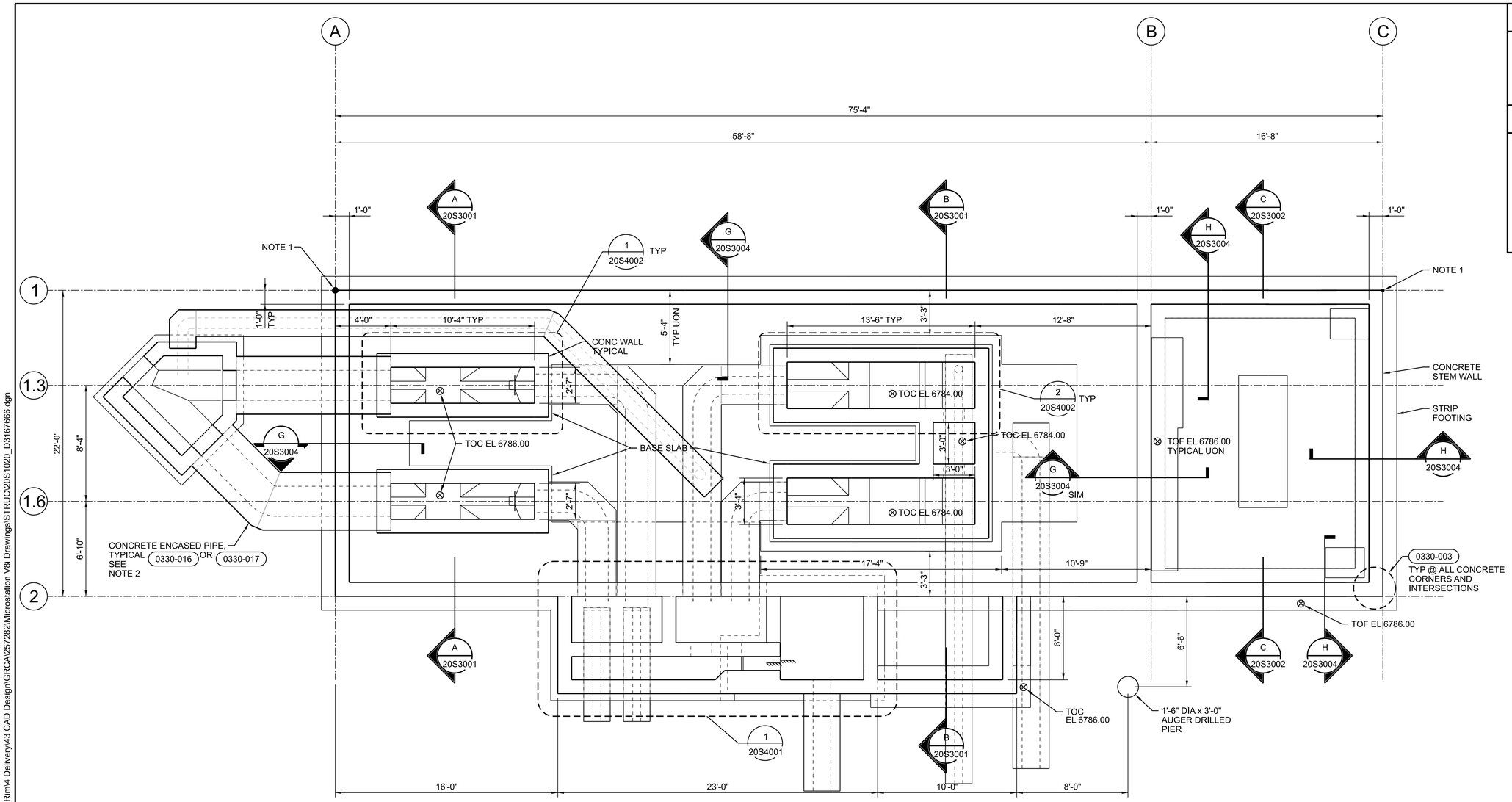

FOUNDATION PLAN

1/4"=1'-0"

GENERAL SHEET NOTES

A. FOR GENERAL STRUCTURAL NOTES, SEE DRAWINGS 01S0001, 01S0002, AND 01S0003.

SHEET NOTES

1. FACILITY LOCATION CONTROL POINT, SEE CIVIL DRAWING 06C2001.
2. EXTEND CONCRETE PIPE ENCASEMENT FIVE FEET BEYOND EDGE OF FOOTING (MINIMUM), SEE PROCESS MECHANICAL DRAWINGS FOR PIPE INFORMATION.

0 4 8 12
1/4"=1'-0"

FULL SIZE DRAWINGS = 22"x34"
BAR MEASURES 1" LONG
0" 1"

Registered Professional Engineer (Structural) Wayne W. Kohler 81476 WAYNE W. KOHLER Date Expires 3/30/26 ARIZONA U.S.A.	A/E FIRM JACOBS GOVERNMENT SERVICES COMPANY GREENWOOD VILLAGE, CO	DESIGNED: W KOHLER CADD: B CLEGG TECH. REVIEW: A FIRTH DATE: 06/2025	SUB SHEET NO. 20S1020	TITLE OF SHEET HEADWORKS STRUCTURAL LOWER LEVEL PLAN GRAND CANYON, SOUTH RIM	DRAWING NO. 113 175376 PMIS/PKG NO. 257282 SHEET 235 OF 401

100% COMPLETE CONSTRUCTION DOCUMENTS

GRCA-257282

PLOT DATE: 16-JUN-2025 PLOT TIME: 14:36 SS6/V8i D3167666 - South Rim\4 Delivery\43 CAD Design\GRCA\257282\Microstation V8i Drawings\STRUC\20S1020_D3167666.dgn

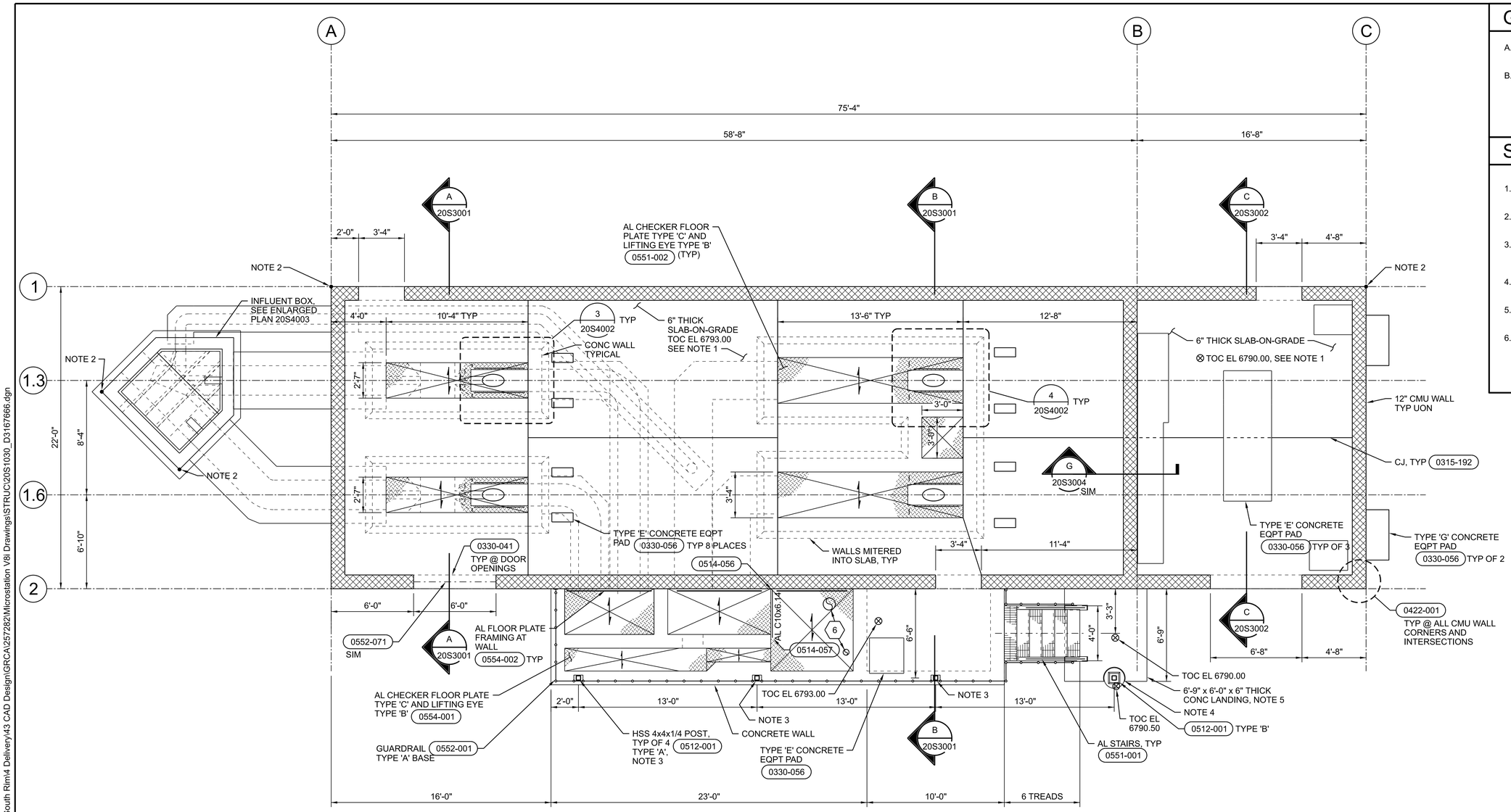

FLOOR PLAN

1/4"=1'-0"

GENERAL SHEET NOTES

A. FOR GENERAL STRUCTURAL NOTES, SEE DRAWINGS 01S0001, 01S0002, AND 01S0003.

B. FOR CMU WALL PIERS AND WALL COLUMNS, SEE DETAILS 0422-005 AND 0422-006.

SHEET NOTES

1. REINFORCE SLAB-ON-GRADE WITH #4@12" EW, T&B WITH 1 1/2" CLEAR COVER FROM TOP SURFACE.
2. FACILITY LOCATION CONTROL POINT. SEE CIVIL DRAWING 06C2001.
3. RAILING TO CLEAR POSTS, ALTERNATIVELY PROVIDE BREAK IN RAILING AT POST WITH 4" MAXIMUM GAP BETWEEN RAILING AND POST.
4. NOTCH CONCRETE SLAB AROUND DRILLED PIER. PROVIDE 1/2" PJF AT SLAB TO PIER INTERFACE.
5. REINFORCE WITH #4@12" OC, 2" CLEAR FROM TOP OF CONCRETE.
6. PIPE PENETRATION. COORDINATE SIZE, LOCATION AND PENETRATION DETAILS WITH PROCESS DRAWINGS.

GRCA-257282

0 4 8 12
1/4"=1'-0"

FULL SIZE DRAWINGS = 22"x34"
BAR MEASURES 1" LONG
0" 1"

Wayne W. Kohler 81476 WAYNE W. KOHLER REGISTERED PROFESSIONAL ENGINEER (CIVIL) ARIZONA U.S.A. DATE SIGNED 6/20/25	A/E FIRM: JACOBS GOVERNMENT SERVICES COMPANY, GREENWOOD VILLAGE, CO	DESIGNED: W KOHLER CADD: B CLEGG TECH. REVIEW: A FIRTH DATE: 06/2025	SUB SHEET NO. 20S1030	TITLE OF SHEET: HEADWORKS STRUCTURAL FLOOR PLAN GRAND CANYON, SOUTH RIM

DRAWING NO. 113 / 175376
PMIS/PKG NO. 257282
SHEET 236 OF 401

100% COMPLETE CONSTRUCTION DOCUMENTS

PLOT DATE: 16-JUN-2025 PLOT TIME: 14:37 SS6/V8i D3167666 - South Rim\4 Delivery\43 CAD Design\GRCA\257282\Microstation V8i Drawings\STRUC\20S1030_D3167666.dgn

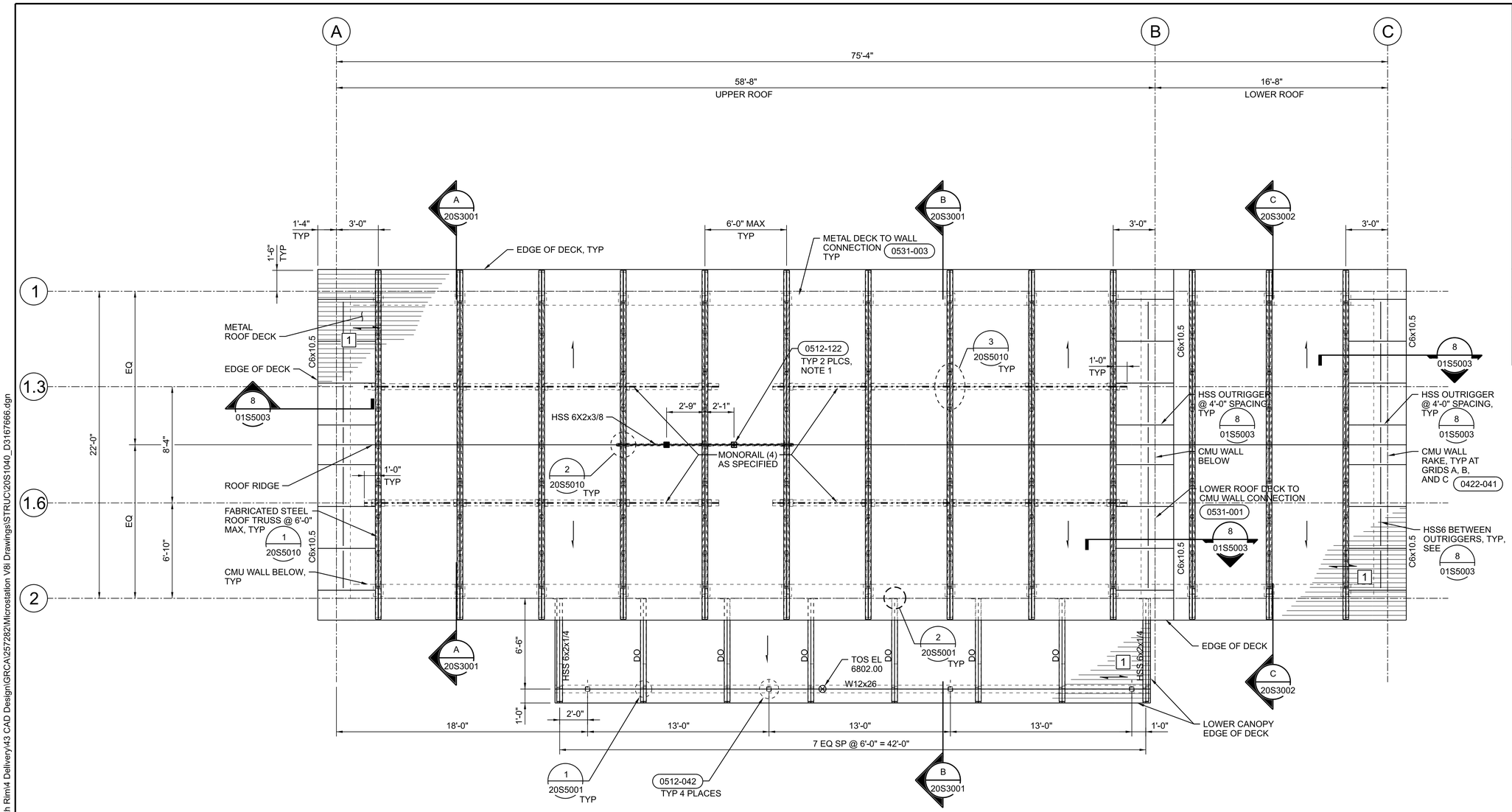

ROOF FRAMING PLAN

1/4"=1'-0"

GENERAL SHEET NOTES

A. FOR GENERAL STRUCTURAL NOTES, SEE DRAWINGS 01S0001, 01S0002, AND 01S0003.

SHEET NOTES

1. COORDINATE LOCATION WITH GRIT WASHING EQUIPMENT, SEE PROCESS DRAWINGS.
2. # DENOTES METAL DECK TYPE, SEE DRAWING 01S0002 FOR METAL DECK SCHEDULE, FASTENER REQUIREMENTS, AND NOTES.

SYMBOLOGY

1 METAL ROOF DECK TYPE, SEE SCHEDULE ON DRAWING 01S0002.

LIFTING EYE, SEE 2/20S5010.

0 4 8 12
1/4"=1'-0"

FULL SIZE DRAWINGS = 22"x34"
BAR MEASURES 1" LONG
0" 1"

Registered Professional Engineer (Civil) CERTIFICATE NO. 8147 6 WAYNE W. KOHLER ARIZONA U.S.A. Date Signed 6/20/25	A/E FIRM: JACOBS GOVERNMENT SERVICES COMPANY, GREENWOOD VILLAGE, CO	DESIGNED: W KOHLER; CADD: B CLEGG; TECH. REVIEW: A FIRTH; DATE: 06/2025	SUB SHEET NO. 20S1040	TITLE OF SHEET: HEADWORKS STRUCTURAL ROOF FRAMING PLAN — GRAND CANYON, SOUTH RIM

DRAWING NO. 113 / 175376
PMIS/PKG NO. 257282
SHEET 237 OF 401

100% COMPLETE CONSTRUCTION DOCUMENTS

GRCA-257282

PLOT DATE: 16-JUN-2025 PLOT TIME: 14:37 SS6/V8i D3167666 - South Rim\4 Delivery\43 CAD Design\GRCA\257282\Microstation V8i Drawings\STRUC\20S1040_D3167666.dgn

SHEET NOTES

1. BEDROCK IS LOCATED NEAR THE EXISTING GROUND SURFACE. SEE GEOTECHNICAL REPORT FOR ADDITIONAL INFORMATION.

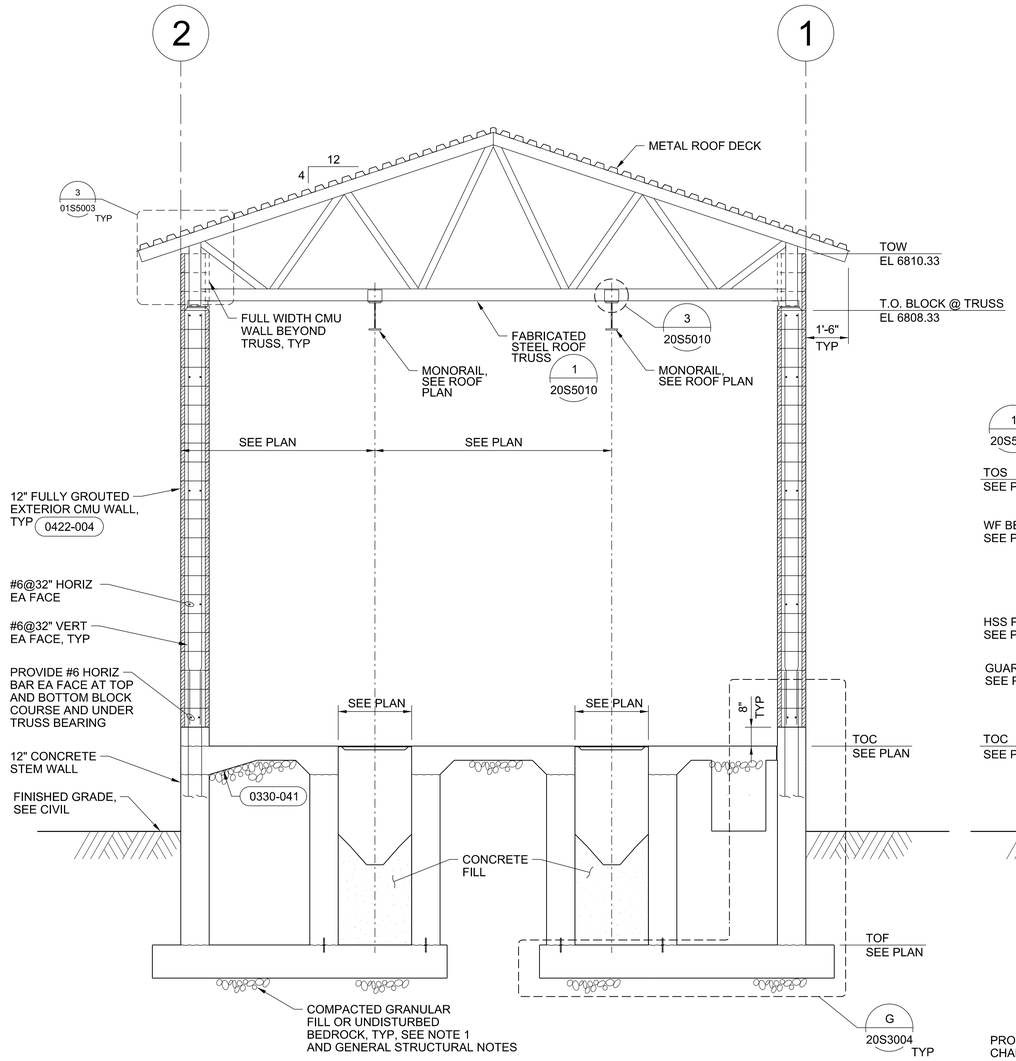

A SECTION
3/8"=1'-0"
20S1020
20S1030
20S1040

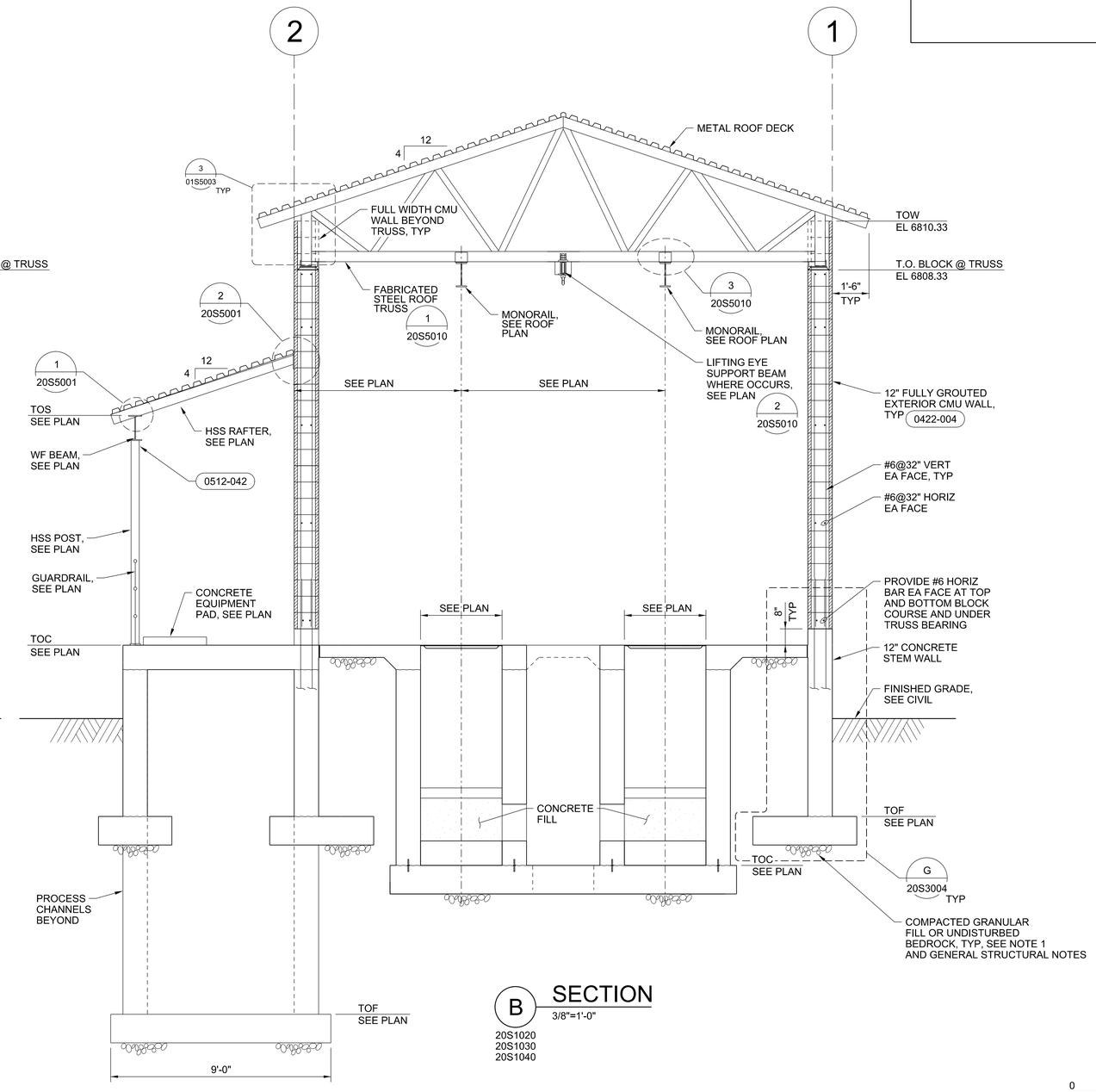

B SECTION
3/8"=1'-0"
20S1020
20S1030
20S1040

0 2 4 6
3/8"=1'-0"

FULL SIZE DRAWINGS = 22"x34"
BAR MEASURES 1" LONG
0" 1"

Wayne W. Kohler — Registered Professional Engineer (Civil) — 81476 — WAYNE W. KOHLER — Date Signed 6/20/25 — ARIZONA U.S.A.	A/E FIRM JACOBS GOVERNMENT SERVICES COMPANY GREENWOOD VILLAGE, CO	DESIGNED: W KOHLER CADD: B CLEGG TECH. REVIEW: A FIRTH DATE: 06/2025	SUB SHEET NO. 20S3001	TITLE OF SHEET HEADWORKS STRUCTURAL SECTIONS GRAND CANYON, SOUTH RIM

DRAWING NO. 113 / 175376
PMIS/PKG NO. 257282
SHEET 238 OF 401

100% COMPLETE CONSTRUCTION DOCUMENTS

GRCA-257282

PLOT DATE: 06\20\2025 PLOT TIME: 7:31:38 AM SS6\V8i D3167666 - South Rim\4 Delivery\43 CAD Design\GRCA\257282\Microstation V8i Drawings\STRUC\20S3001_D3167666.dgn

SHEET NOTES

1. BEDROCK IS LOCATED NEAR THE EXISTING GROUND SURFACE. SEE GEOTECHNICAL REPORT FOR ADDITIONAL INFORMATION.

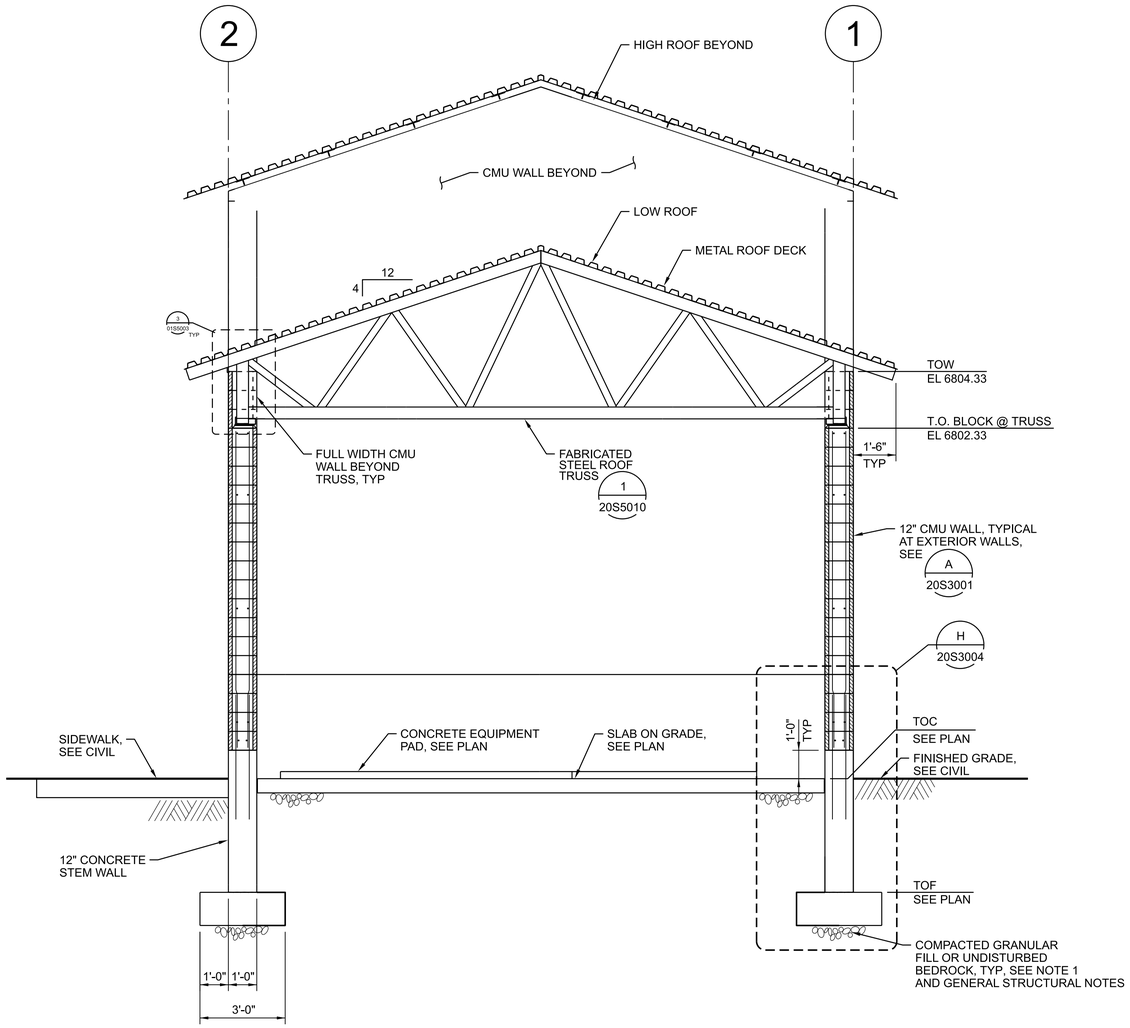

C SECTION
3/8"=1'-0"
20S1020
20S1030
20S1040

0 2 4 6
3/8"=1'-0"

FULL SIZE DRAWINGS = 22"x34"
BAR MEASURES 1" LONG
0" 1"

Registered Professional Engineer (Civil) CERTIFICATE NO. 81476 WAYNE W. KOHLER DATE SIGNED 6/20/25 ARIZONA U.S.A.	A/E FIRM JACOBS GOVERNMENT SERVICES COMPANY GREENWOOD VILLAGE, CO	DESIGNED: W KOHLER CADD: B CLEGG TECH. REVIEW: A FIRTH DATE: 06/2025	SUB SHEET NO. 20S3002	TITLE OF SHEET HEADWORKS STRUCTURAL SECTIONS GRAND CANYON, SOUTH RIM

DRAWING NO. 113 / 175376
PMIS/PKG NO. 257282
SHEET 239 OF 401

100% COMPLETE CONSTRUCTION DOCUMENTS

GRCA-257282

PLOT DATE: 16-JUN-2025 PLOT TIME: 14:36 SS6/V8I D3167666 - South Rim\4 Delivery\43 CAD Design\GRCA\257282\Microstation V8i Drawings\STRUC\20S3002_D3167666.dgn

SHEET NOTES

1. BEDROCK IS LOCATED NEAR THE EXISTING GROUND SURFACE. SEE GEOTECHNICAL REPORT FOR ADDITIONAL INFORMATION.
2. MODIFY CONCRETE FILL AND SLOPING BASED ON RECOMMENDATIONS FROM EQUIPMENT SUPPLIER TO BE PROVIDED IN EQUIPMENT SUBMITTALS FOR REVIEW AND APPROVAL.
3. CONTRACTOR SHALL VERIFY DIMENSION WITH APPROVED EQUIPMENT SUBMITTAL PRIOR TO CONSTRUCTION.

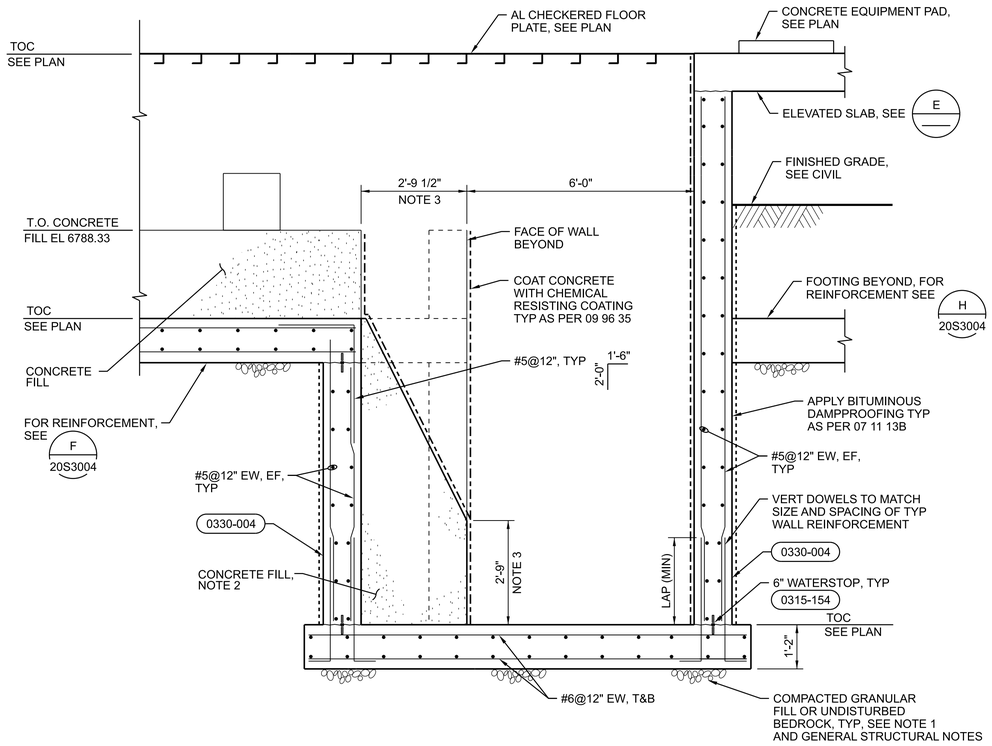

D SECTION
1/2"=1'-0"
20S4001

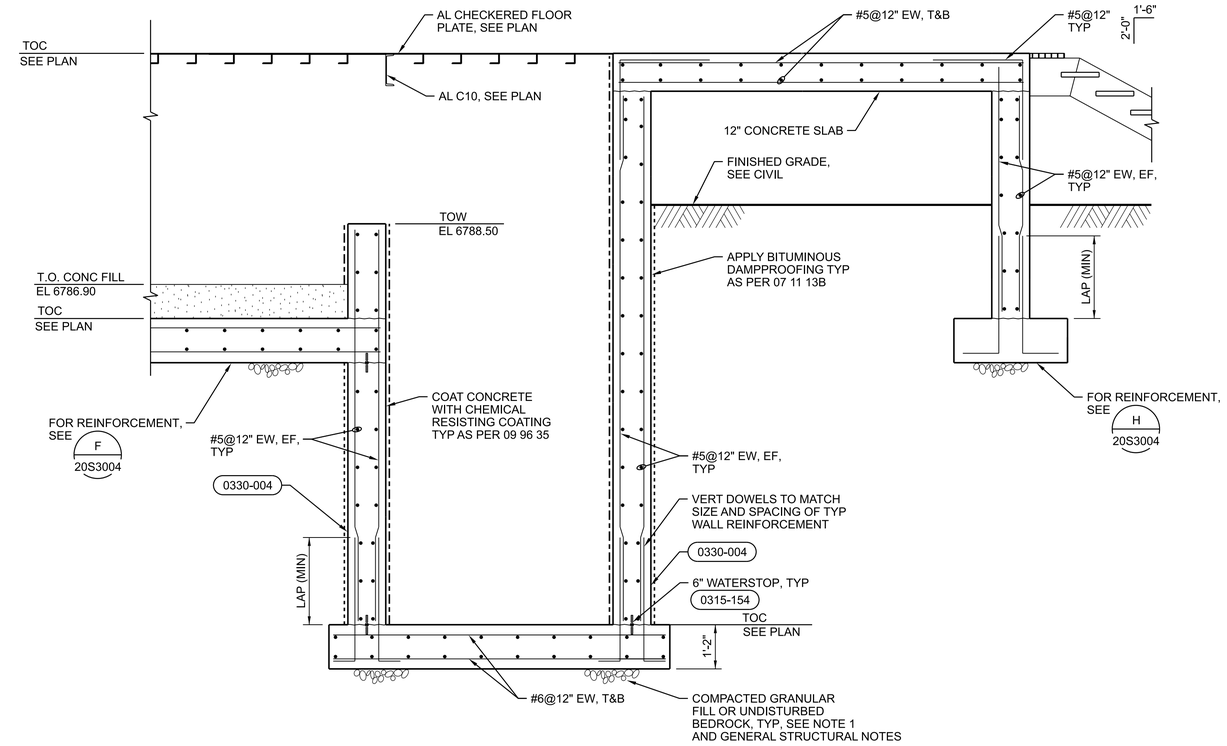

E SECTION
1/2"=1'-0"
20S4001

0 2 4 6
1/2"=1'-0"

FULL SIZE DRAWINGS = 22"x34"
BAR MEASURES 1" LONG
0" 1"

Registered Professional Engineer (Civil) Wayne W. Kohler 81476 WAYNE W. KOHLER Date Signed 6/20/25 ARIZONA U.S.A.	A/E FIRM JACOBS GOVERNMENT SERVICES COMPANY GREENWOOD VILLAGE, CO	DESIGNED: W KOHLER CADD: B CLEGG TECH. REVIEW: A FIRTH DATE: 06/2025	SUB SHEET NO. 20S3003	TITLE OF SHEET HEADWORKS STRUCTURAL SECTIONS GRAND CANYON, SOUTH RIM

DRAWING NO. 113 / 175376
PMIS/PKG NO. 257282
SHEET 240 OF 401

100% COMPLETE CONSTRUCTION DOCUMENTS

GRCA-257282

PLOT DATE: 16-JUN-2025 PLOT TIME: 14:40 SS6/V8I D3167666 - South Rim\4 Delivery\43 CAD Design\GRCA\257282\Microstation V8I Drawings\STRUC\20S3003_D3167666.dgn

SHEET NOTES

1. BEDROCK IS LOCATED NEAR THE EXISTING GROUND SURFACE. SEE GEOTECHNICAL REPORT FOR ADDITIONAL INFORMATION.

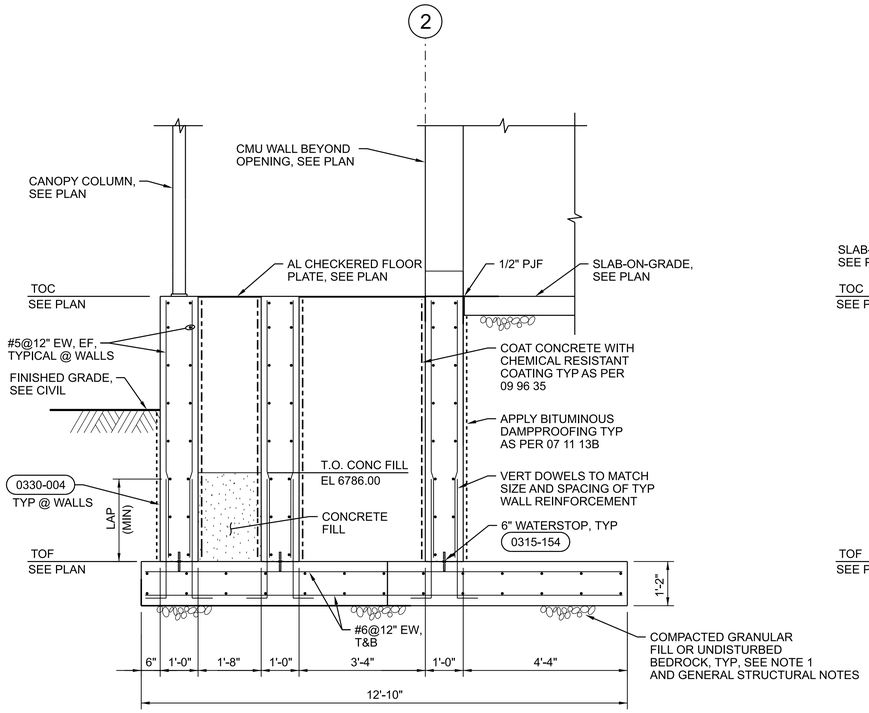

F SECTION
1/2"=1'-0"
20S3003
20S4001

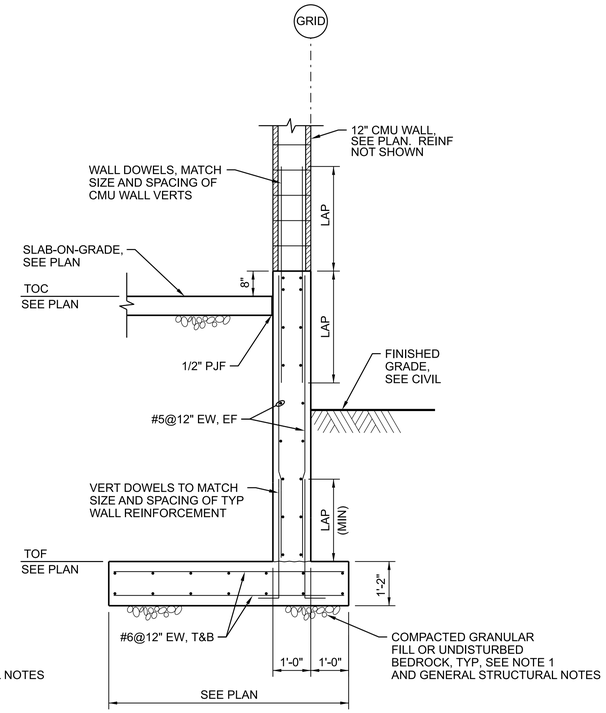

G FOOTING SECTION
1/2"=1'-0"
20S1020
20S1030
20S3001

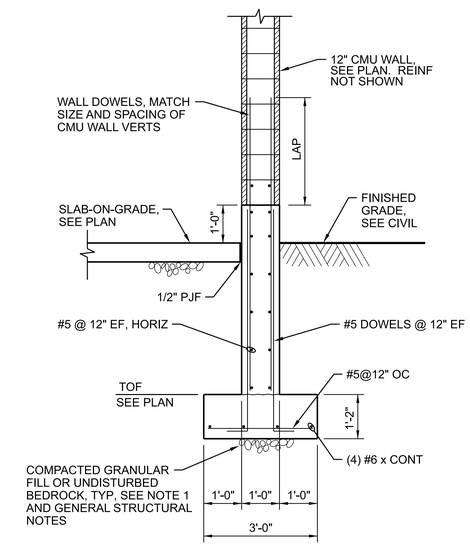

H FOOTING SECTION
1/2"=1'-0"
20S1020
20S1030
20S3002
20S3003

0 2 4 6
1/2"=1'-0"

FULL SIZE DRAWINGS = 22"x34"
BAR MEASURES 1" LONG
0" 1"

Wayne W. Kohler 81476 WAYNE W. KOHLER REGISTERED PROFESSIONAL ENGINEER (CIVIL) ARIZONA U.S.A. DATE SIGNED 6/26/25	A/E FIRM JACOBS GOVERNMENT SERVICES COMPANY GREENWOOD VILLAGE, CO	DESIGNED: W KOHLER CADD: B CLEGG TECH. REVIEW: A FIRTH DATE: 06/2025	SUB SHEET NO. 20S3004	TITLE OF SHEET HEADWORKS STRUCTURAL SECTIONS GRAND CANYON, SOUTH RIM

DRAWING NO. 113 / 175376
PMIS/PKG NO. 257282
SHEET 241 OF 401

100% COMPLETE CONSTRUCTION DOCUMENTS

GRCA-257282

PLOT DATE: 16-JUN-2025 PLOT TIME: 14:37 SS6/V8I D3167666 - South Rim\4 Delivery\43 CAD Design\GRCA\257282\Microstation V8I Drawings\STRUC\20S3004_D3167666.dgn

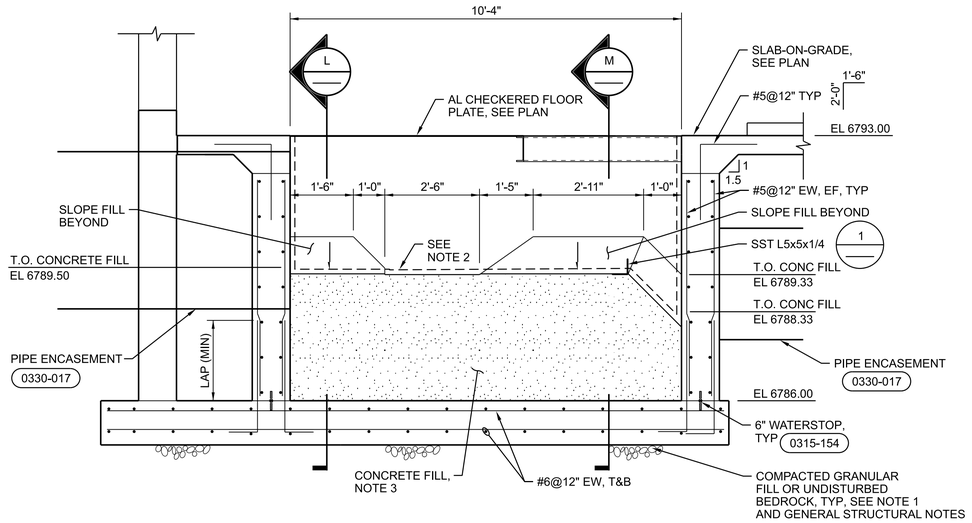

J SECTION
1/2"=1'-0"
20S4002

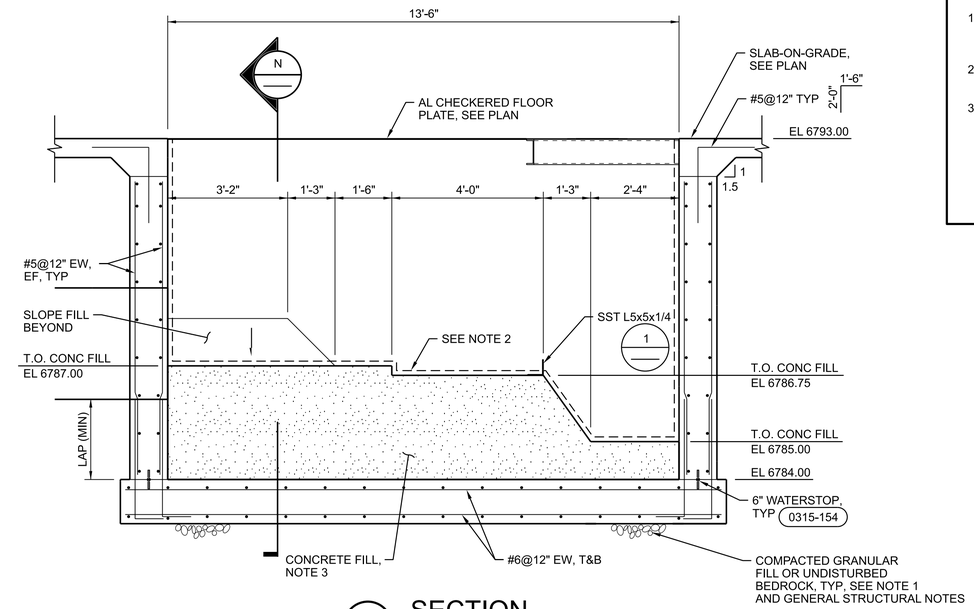

K SECTION
1/2"=1'-0"
20S4002

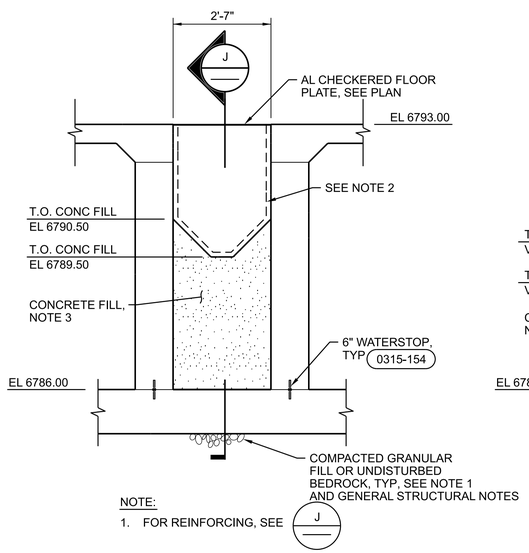

NOTE:
1. FOR REINFORCING, SEE J

L SECTION
1/2"=1'-0"
20S4002

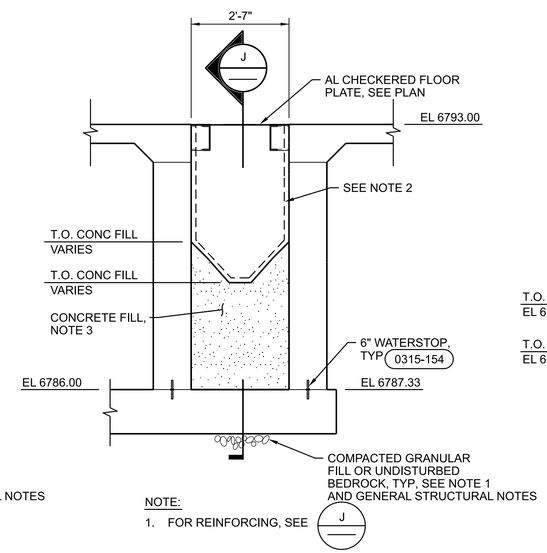

NOTE:
1. FOR REINFORCING, SEE J

M SECTION
1/2"=1'-0"
20S4002

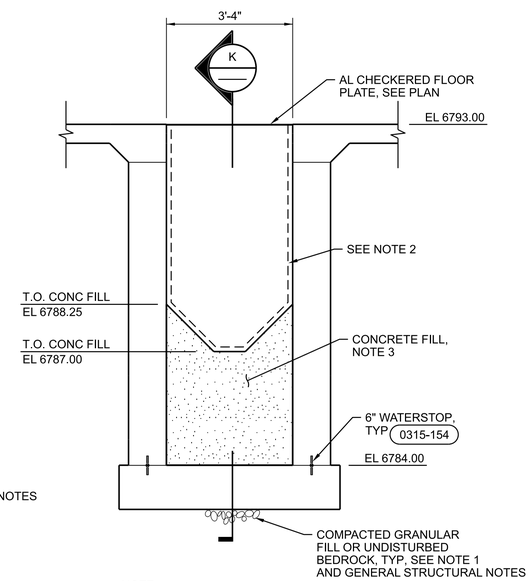

NOTE:
1. FOR REINFORCING, SEE K

N SECTION
1/2"=1'-0"
20S4002

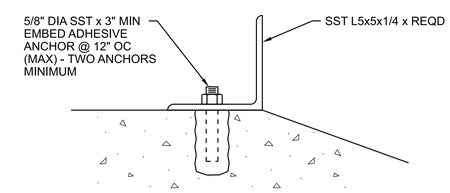

1 ANGLE ATTACHMENT
NTS - NO SCALE
20S4002

SHEET NOTES

1. BEDROCK IS LOCATED NEAR THE EXISTING GROUND SURFACE. SEE GEOTECHNICAL REPORT FOR ADDITIONAL INFORMATION.
2. COAT ALL INTERIOR CONCRETE WITH CHEMICAL RESISTANT COATING, TYP AS PER 09 96 35.
3. MODIFY CONCRETE FILL AND SLOPING BASED ON RECOMMENDATIONS FROM EQUIPMENT SUPPLIER TO BE PROVIDED IN EQUIPMENT SUBMITTALS FOR REVIEW AND APPROVAL.

0 2 4 6
1/2"=1'-0"

FULL SIZE DRAWINGS = 22"x34"
BAR MEASURES 1" LONG
0" 1"

Wayne W. Kohler — Registered Professional Engineer (Civil) — 81476 — WAYNE W. KOHLER — Date Signed 6/20/25 — ARIZONA U.S.A.	A/E FIRM JACOBS GOVERNMENT SERVICES COMPANY GREENWOOD VILLAGE, CO	DESIGNED: W KOHLER CADD: B CLEGG TECH. REVIEW: A FIRTH DATE: 06/2025	SUB SHEET NO. 20S3005	TITLE OF SHEET HEADWORKS STRUCTURAL SECTIONS GRAND CANYON, SOUTH RIM

DRAWING NO. 113 / 175376
PMIS/PKG NO. 257282
SHEET 242 OF 401

GRCA-257282

100% COMPLETE CONSTRUCTION DOCUMENTS

PLOT DATE: 16-JUN-2025 PLOT TIME: 14:41 SS6\V8i D3167666 - South Rim\4 Delivery\43 CAD Design\GRCA\257282\Microstation V8i Drawings\STRUC\20S3005_D3167666.dgn

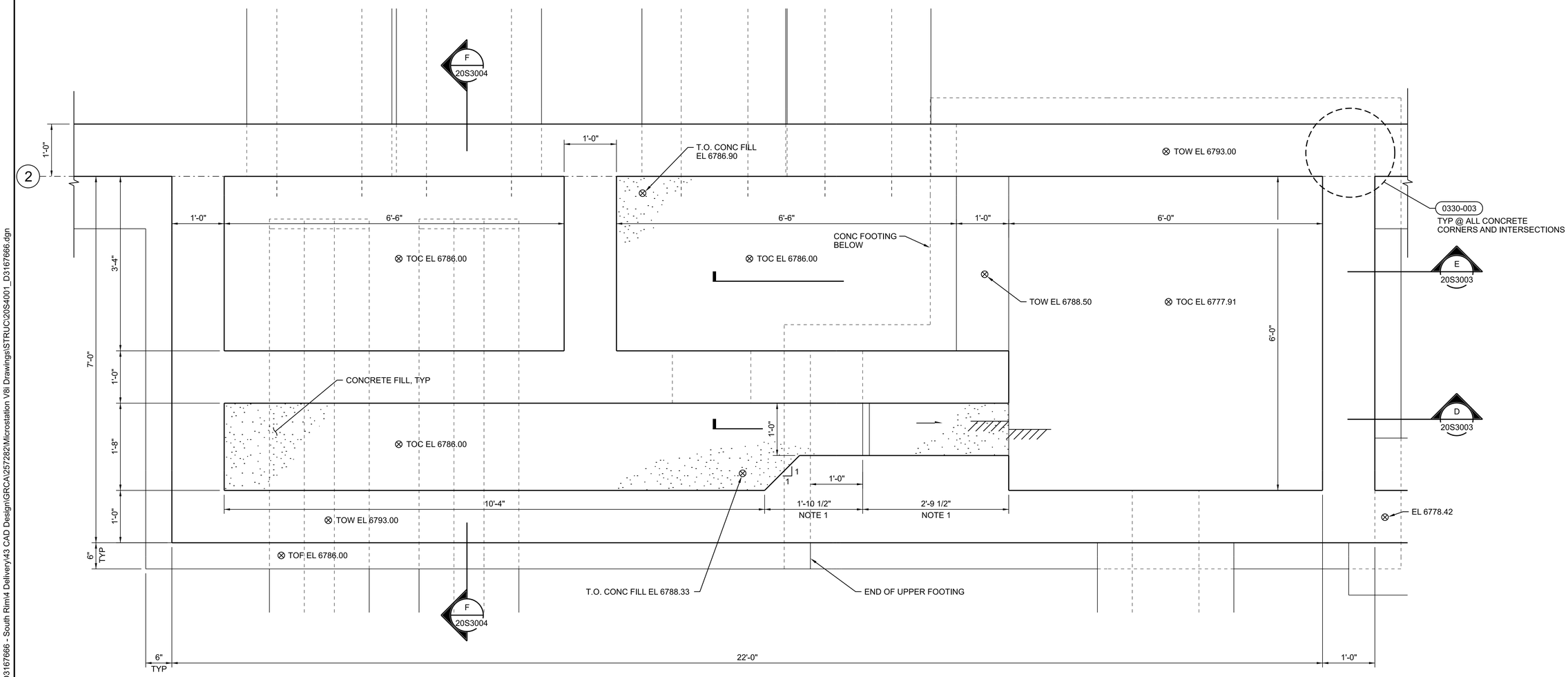

NOTES:

1. CONTRACTOR SHALL VERIFY DIMENSION WITH APPROVED EQUIPMENT SUBMITTAL PRIOR TO CONSTRUCTION.
2. REINFORCE ALL PIPE OPENINGS PER DETAIL (0331-001).

ENLARGED FOUNDATION PLAN

1"=1'-0"

0 1 2 3
1"=1'-0"

FULL SIZE DRAWINGS = 22"x34"
BAR MEASURES 1" LONG
0" 1"

Registered Professional Engineer (Civil) CERTIFICATE NO. 81476 WAYNE W. KOHLER Date Signed 6/20/25 ARIZONA U.S.A.	A/E FIRM JACOBS GOVERNMENT SERVICES COMPANY GREENWOOD VILLAGE, CO	DESIGNED: W KOHLER CADD: B CLEGG TECH. REVIEW: A FIRTH DATE: 06/2025	SUB SHEET NO. 20S4001	TITLE OF SHEET HEADWORKS STRUCTURAL ENLARGED PLAN GRAND CANYON, SOUTH RIM	DRAWING NO. 113 175376 PMIS/PKG NO. 257282 SHEET 243 OF 401

100% COMPLETE CONSTRUCTION DOCUMENTS

GRCA-257282

PLOT DATE: 16-JUN-2025 PLOT TIME: 14:38 SS6/V8I D3167666 - South Rim\4 Delivery\43 CAD Design\GRCA\257282\Microstation V8I Drawings\STRUC\20S4001_D3167666.dgn

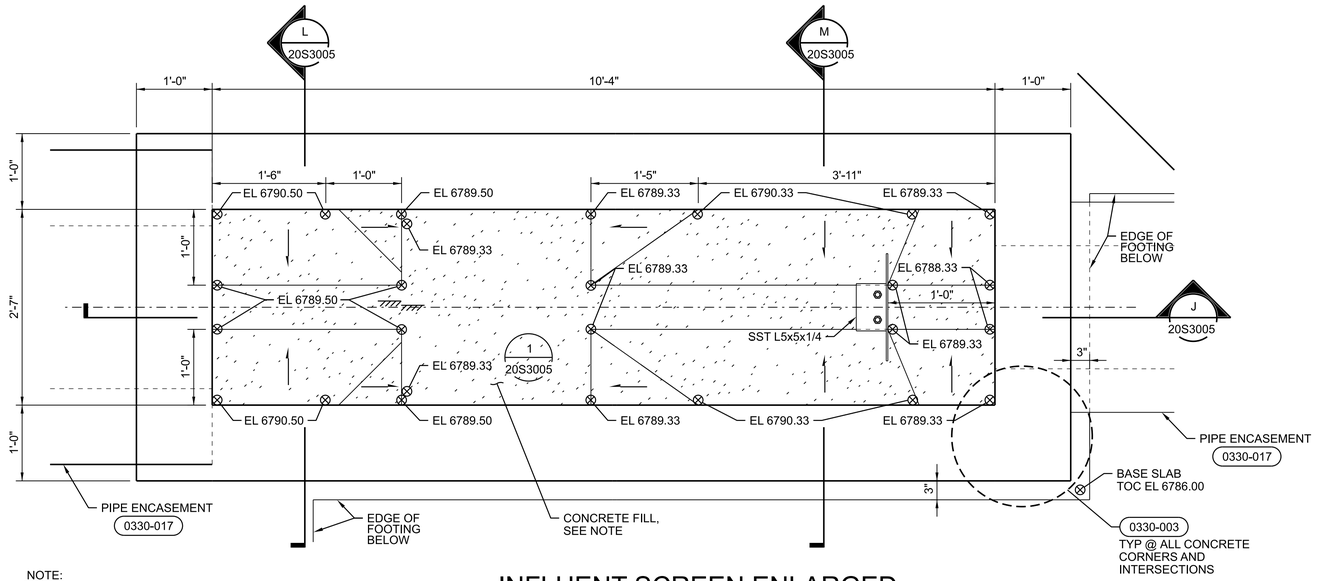

NOTE:

1. MODIFY CONCRETE FILL AND SLOPING BASED ON RECOMMENDATIONS FROM EQUIPMENT SUPPLIER TO BE PROVIDED IN EQUIPMENT SUBMITTALS FOR REVIEW AND APPROVAL.

1 INFLUENT SCREEN ENLARGED CHANNEL PLAN

1"=1'-0"

20S1020

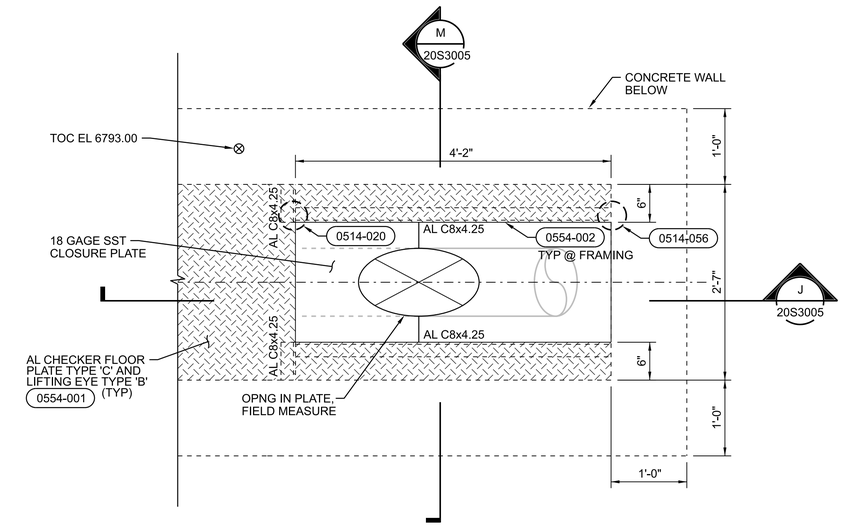

3 INFLUENT SCREEN ENLARGED CHANNEL PLAN

1"=1'-0"

20S1030

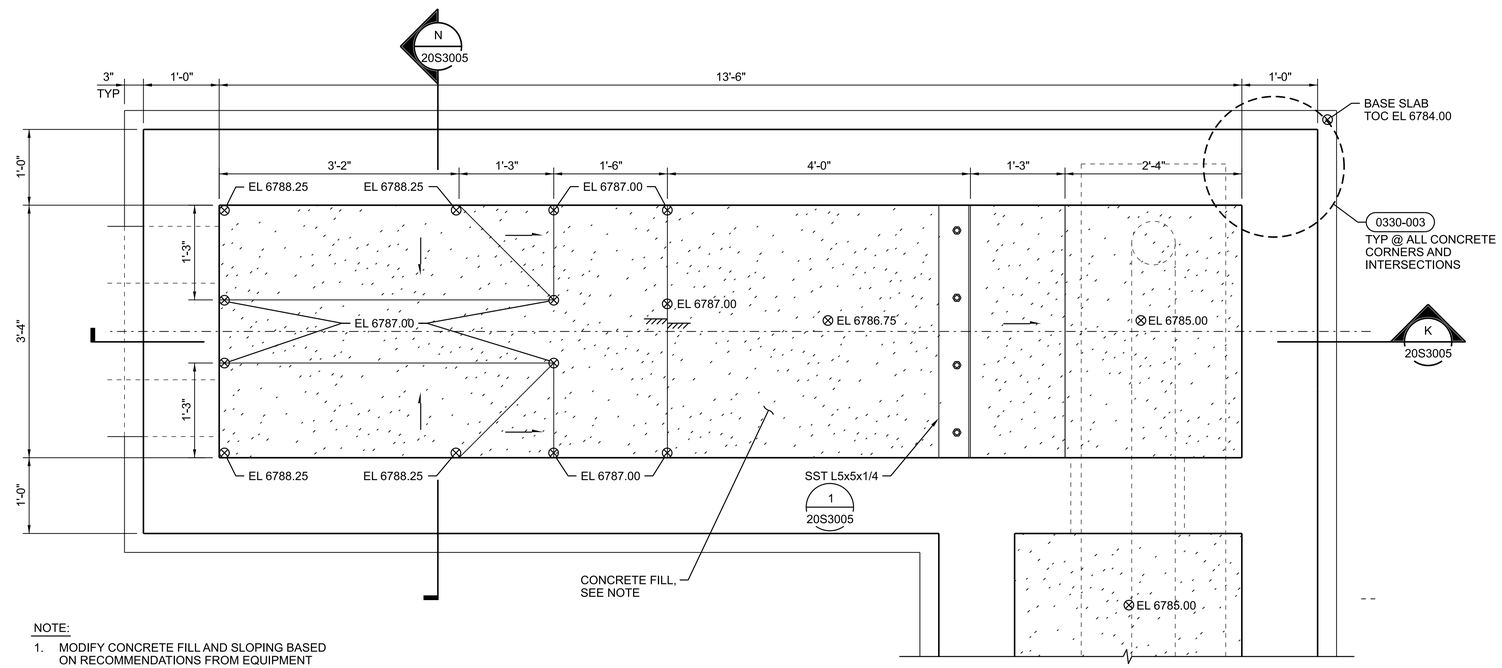

NOTE:

1. MODIFY CONCRETE FILL AND SLOPING BASED ON RECOMMENDATIONS FROM EQUIPMENT SUPPLIER TO BE PROVIDED IN EQUIPMENT SUBMITTALS FOR REVIEW AND APPROVAL.

2 FINE SCREEN ENLARGED CHANNEL PLAN

1"=1'-0"

20S1020

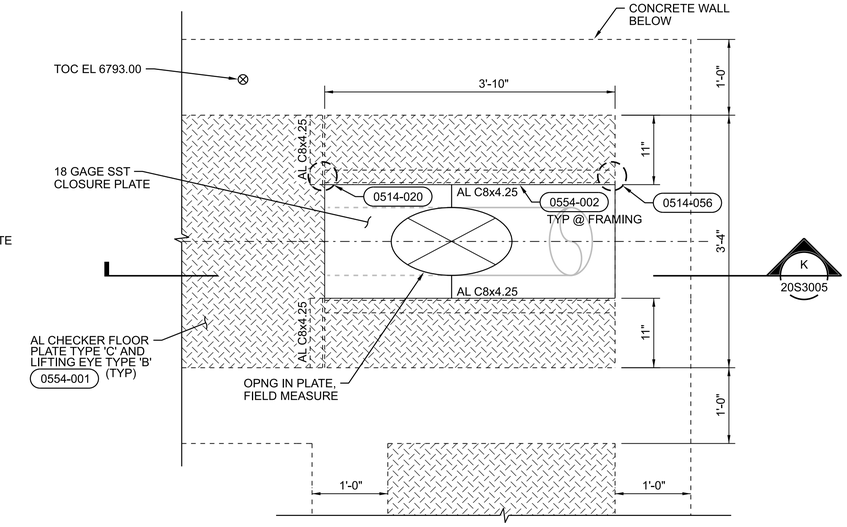

4 FINE SCREEN ENLARGED CHANNEL PLAN

1"=1'-0"

20S1030

0 1 2 3

1"=1'-0"

FULL SIZE DRAWINGS = 22"x34"
BAR MEASURES 1" LONG

0" 1"

Wayne W. Kohler 81476 WAYNE W. KOHLER REGISTERED PROFESSIONAL ENGINEER (CIVIL) ARIZONA U.S.A. 06/24/25	A/E FIRM JACOBS GOVERNMENT SERVICES COMPANY GREENWOOD VILLAGE, CO	DESIGNED: W KOHLER CADD: B CLEGG TECH. REVIEW: A FIRTH DATE: 06/2025	SUB SHEET NO. 20S4002	TITLE OF SHEET HEADWORKS STRUCTURAL ENLARGED PLAN GRAND CANYON, SOUTH RIM

DRAWING NO. 113 175376

PMIS/PKG NO. 257282

SHEET 244 OF 401

100% COMPLETE CONSTRUCTION DOCUMENTS

GRCA-257282

PLOT DATE: 16-JUN-2025 PLOT TIME: 14:37 SS6/V8I D3167666 - South Rim\4 Delivery\43 CAD Design\GRCA\257282\Microstation V8I Drawings\STRUC\20S4002_D3167666.dgn

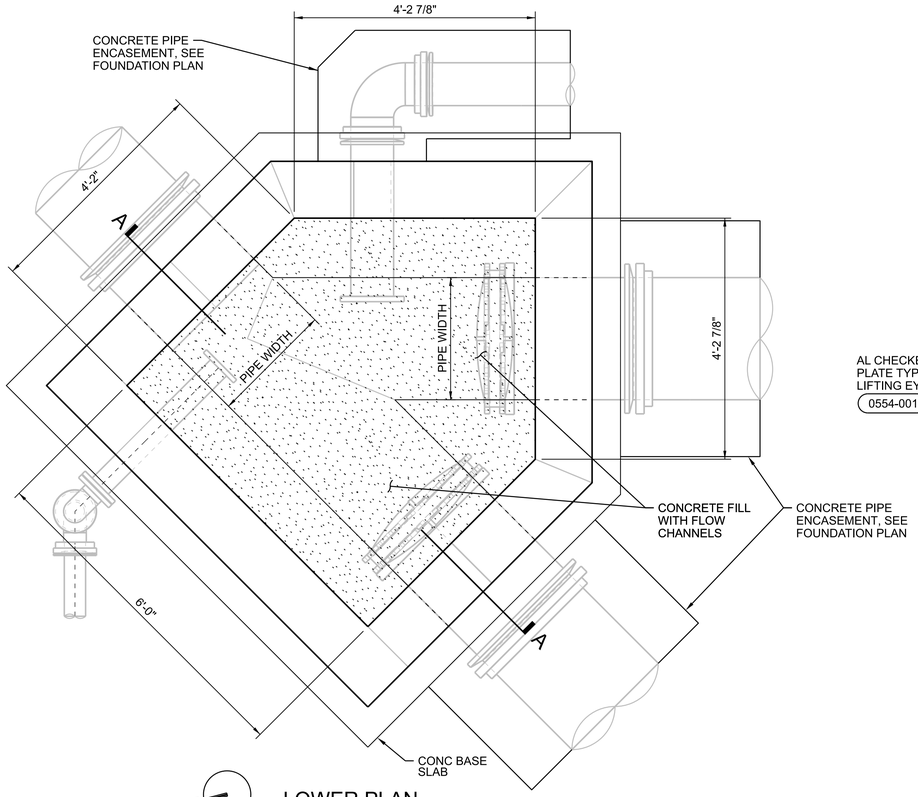

N

LOWER PLAN

3/4" = 1'-0"

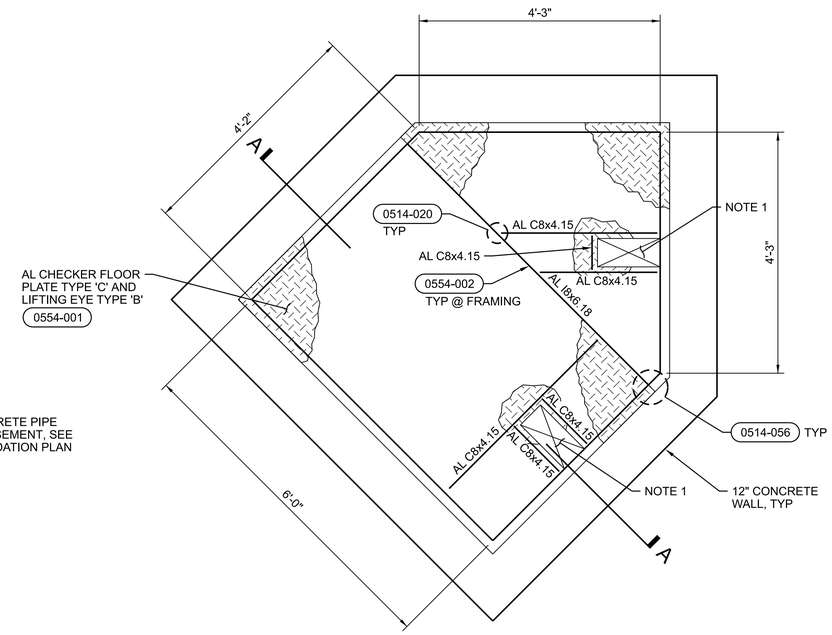

N

UPPER PLAN

3/4" = 1'-0"

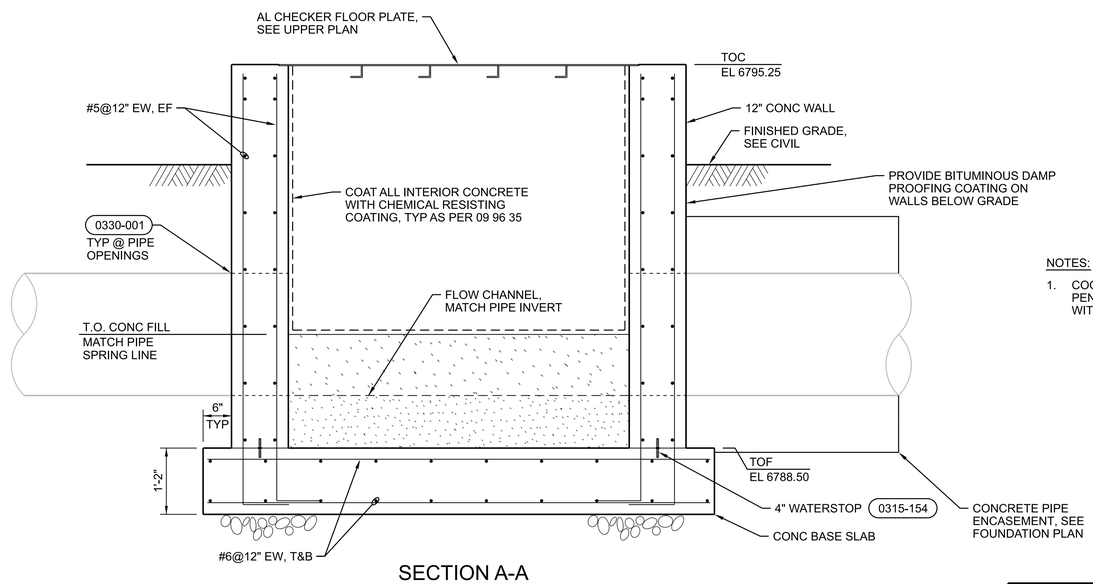

SECTION A-A

NOTES:

1. COORDINATE SIZE AND LOCATION OF PIPE PENETRATIONS THROUGH CONCRETE WALLS WITH PROCESS DRAWINGS.

INFLUENT BOX ENLARGED PLANS & SECTION

1
20S1030

3/4"=1'-0"

FULL SIZE DRAWINGS = 22"x34"
BAR MEASURES 1" LONG

0" 1"

GENERAL SHEET NOTES

A. BEDROCK IS LOCATED NEAR THE EXISTING GROUND SURFACE. SEE GEOTECHNICAL REPORT FOR ADDITIONAL INFORMATION.

SHEET NOTES

1. OPENING FOR VALVE YOKE. FIELD COORDINATE SIZE AND LOCATION WITH VALVE MANUFACTURER. 2" MAX GAP BETWEEN YOKE AND EDGE OF PLATE. FIELD LOCATE FRAMING MEMBERS AT OPENINGS.

0 1 2 3
3/4"=1'-0"

Registered Professional Engineer (Civil) Wayne W. Kohler 81476 ARIZONA U.S.A. Date Signed 6/20/25	A/E FIRM JACOBS GOVERNMENT SERVICES COMPANY GREENWOOD VILLAGE, CO	DESIGNED: W KOHLER CADD: B CLEGG TECH. REVIEW: A FIRTH DATE: 06/2025	SUB SHEET NO. 20S4003	TITLE OF SHEET HEADWORKS STRUCTURAL ENLARGED PLAN AND SECTION GRAND CANYON, SOUTH RIM	DRAWING NO. 113 175376 PMIS/PKG NO. 257282 SHEET 245 OF 401

100% COMPLETE CONSTRUCTION DOCUMENTS

GRCA-257282

PLOT DATE: 16-JUN-2025 PLOT TIME: 14:38 SS6/V8i D3167666 - South Rim\4 Delivery\43 CAD Design\GRCA\257282\Microstation V8i Drawings\STRUC\20S4003_D3167666.dgn

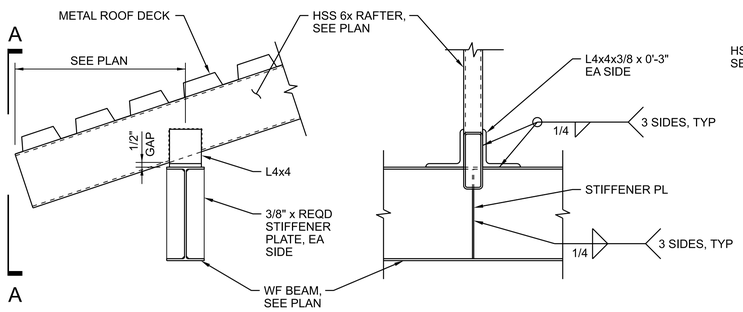

SECTION ELEVATION A-A

1 RAFTER TO BEAM CONNECTION

NTS - NO SCALE

20S1040
20S3001

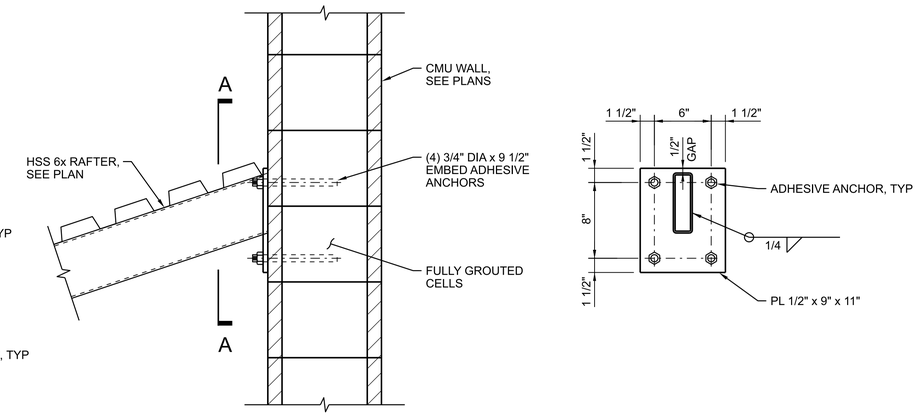

SECTION ELEVATION A-A

2 RAFTER TO WALL CONNECTION

NTS - NO SCALE

20S1040
20S3001

FULL SIZE DRAWINGS = 22"x34"
BAR MEASURES 1" LONG

0" 1"

Wayne W. Kohler 81476 WAYNE W. KOHLER REGISTERED PROFESSIONAL ENGINEER (STRUCTURAL) ARIZONA U.S.A.	A/E FIRM JACOBS GOVERNMENT SERVICES COMPANY GREENWOOD VILLAGE, CO	DESIGNED: W KOHLER CADD: B CLEGG TECH. REVIEW: A FIRTH DATE: 06/2025	SUB SHEET NO. 20S5001	TITLE OF SHEET HEADWORKS STRUCTURAL STEEL DETAILS GRAND CANYON, SOUTH RIM	NO SCALE DRAWING NO. 113 175376 PMIS/PKG NO. 257282 SHEET 246 OF 401

100% COMPLETE CONSTRUCTION DOCUMENTS

GRCA-257282

PLOT DATE: 16-JUN-2025 PLOT TIME: 14:34 SS6/V8I D3167666 - South Rim\4 Delivery\43 CAD Design\GRCA\257282\Microstation V8I Drawings\STRUC\20S5001_D3167666.dgn

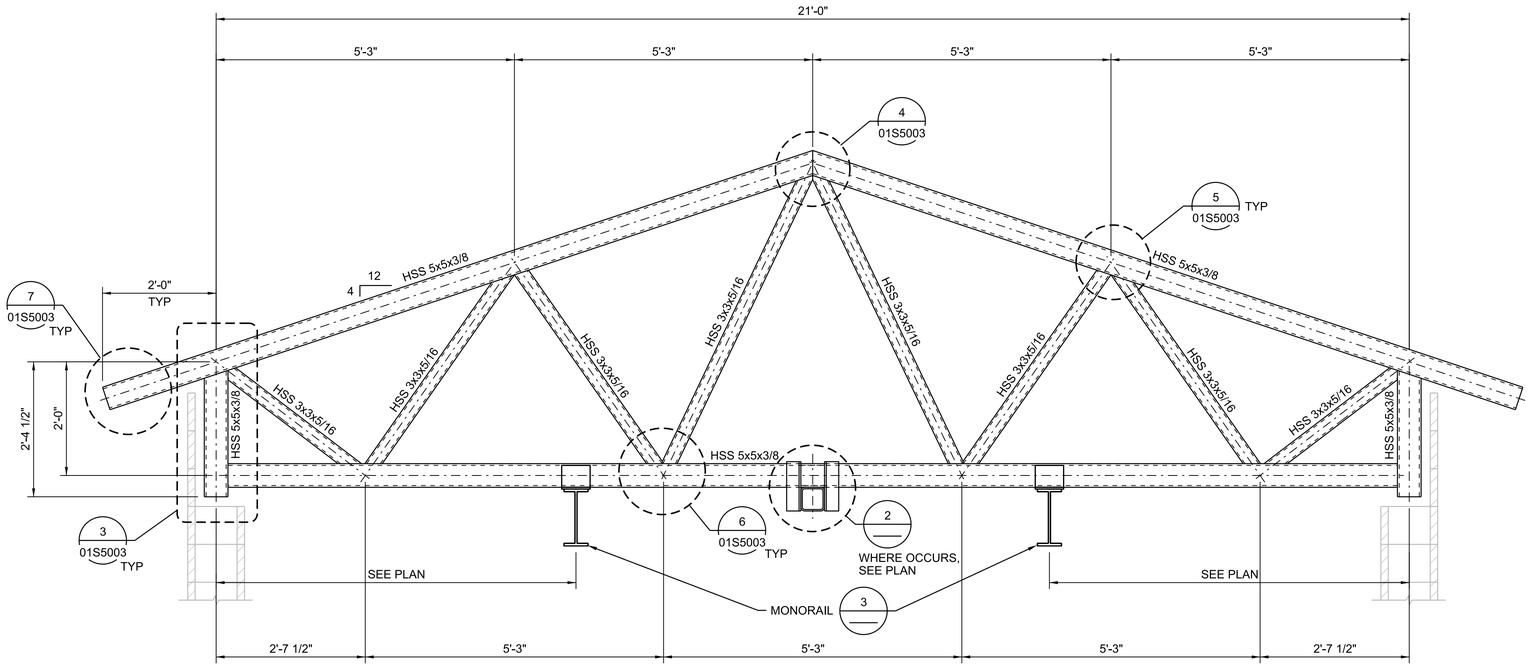

1 ROOF TRUSS

3/4"=1'-0"

20S1040
20S3001
20S3002

0 1 2 3
3/4"=1'-0"

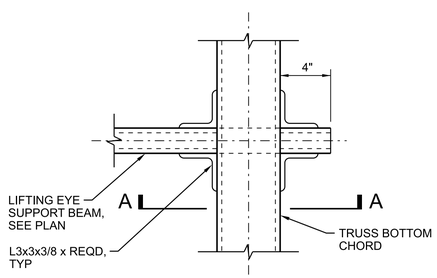

PLAN

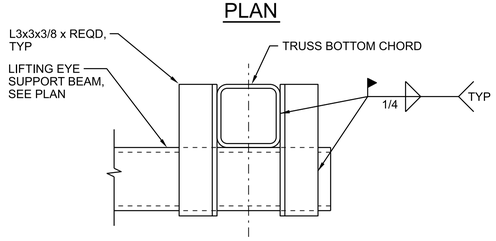

SECTION A-A

2 LIFTING EYE BEAM CONNECTION

NTS - NO SCALE

20S1040
20S3001

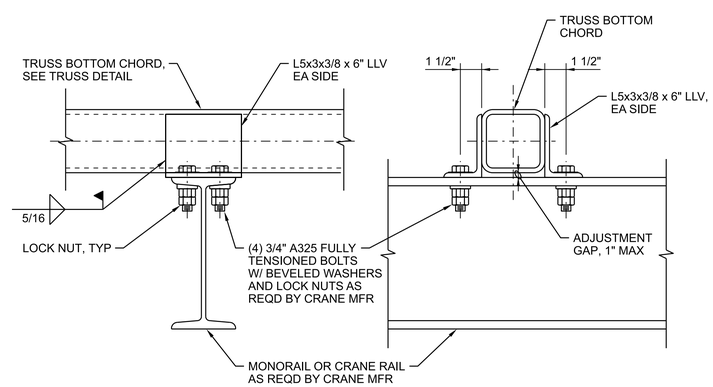

MONORAIL CONNECTION

3 MONORAIL DETAILS

NTS - NO SCALE

20S1040
20S3001

FULL SIZE DRAWINGS = 22"x34"
BAR MEASURES 1" LONG

0" 1"

Registered Professional Engineer 81476 WAYNE W. KOHLER ARIZONA U.S.A. 6/20/25	A/E FIRM JACOBS GOVERNMENT SERVICES COMPANY GREENWOOD VILLAGE, CO	DESIGNED: W KOHLER CADD: B CLEGG TECH. REVIEW: A FIRTH DATE: 06/2025	SUB SHEET NO. 20S5010	TITLE OF SHEET HEADWORKS STRUCTURAL STEEL DETAILS GRAND CANYON, SOUTH RIM

DRAWING NO. 113 175376
PMIS/PKG NO. 257282
SHEET 247 OF 401

100% COMPLETE CONSTRUCTION DOCUMENTS

GRCA-257282

PLOT DATE: 16-JUN-2025 PLOT TIME: 14:39 SS6/V8I D3167666 - South Rim\4 Delivery\43 CAD Design\GRCA\257282\Microstation V8I Drawings\STRUC\20S5010_D3167666.dgn

GENERAL SHEET NOTES

A. FOR GENERAL ARCHITECTURAL NOTES, MATERIAL SYMBOLS, LEGEND,ABBREVIATIONS AND WALL TYPES, SEE DRAWING 01A0001.

B. FOR BUILDING CODE DATA AND LIFE SAFETY PLAN, SEE DRAWING 01A0020.

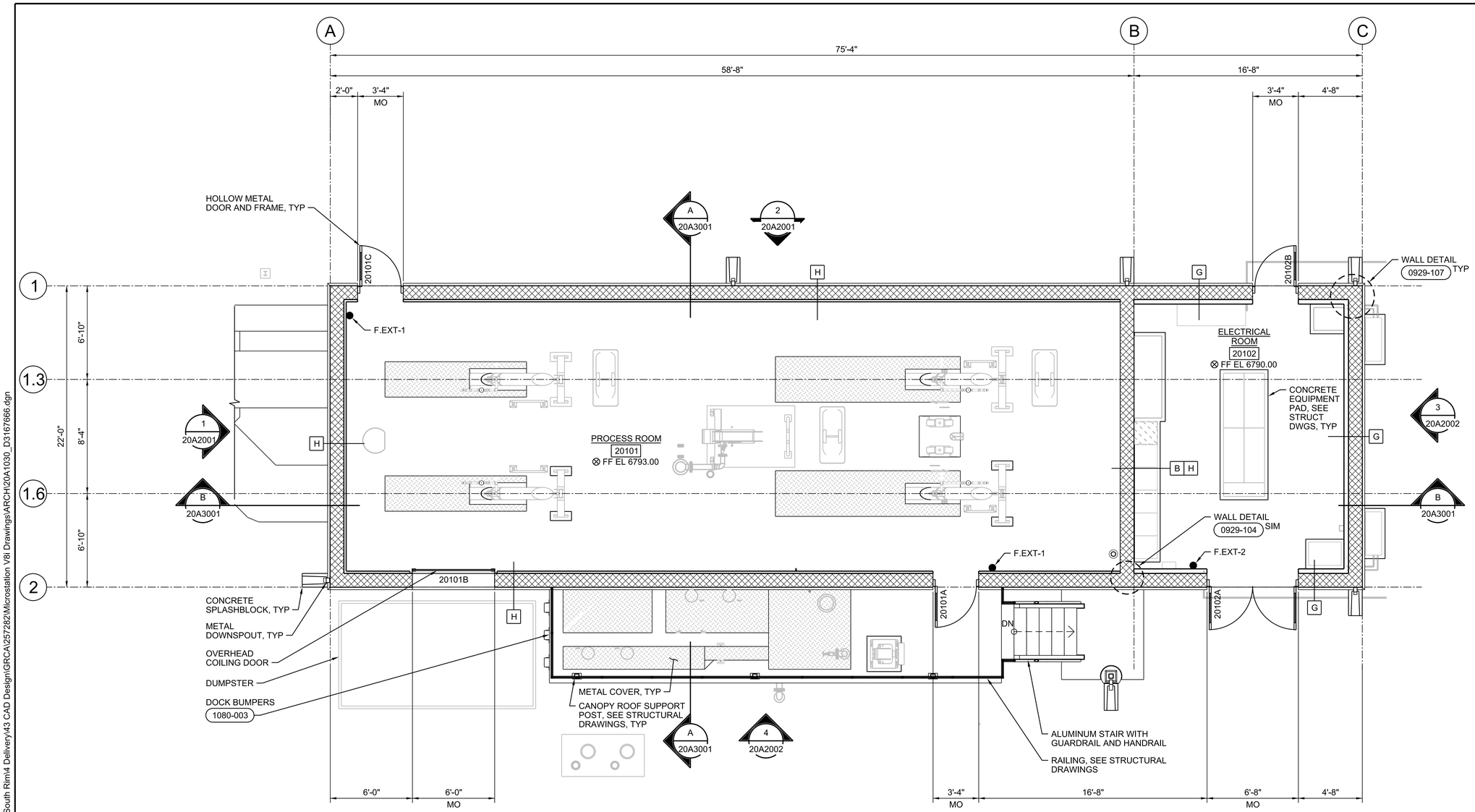

PLAN

1/4"=1'-0"

0 4 8 12

1/4"=1'-0"

FULL SIZE DRAWINGS = 22"x34"
BAR MEASURES 1" LONG

0" 1"

REGISTERED ARCHITECT CERTIFICATE NO. 80680 MORGAN SHOEMAKER DATE Signed 06/06/25 ARIZONA, U.S.A. Expires 06-30-2027

A/E FIRM	DESIGNED:	SUB SHEET NO.	TITLE OF SHEET	DRAWING NO.
JACOBS GOVERNMENT SERVICES COMPANY GREENWOOD VILLAGE, CO	M SHOEMAKER CADD: M COLLINS TECH. REVIEW: G KIRSTEN DATE: 06/2025	20A1030	HEADWORKS ARCHITECTURAL FLOOR PLAN GRAND CANYON, SOUTH RIM	113 175376 PMIS/PKG NO. 257282 SHEET 248 OF 401

100% COMPLETE CONSTRUCTION DOCUMENTS

GRCA-257282

PLOT DATE: 6/16/2025 PLOT TIME: 6:01:54 PM SS6/V8i D3167666 - South Rim\4 Delivery\43 CAD Design\GRCA\257282\Microstation V8i Drawings\ARCH\20A1030_D3167666.dgn

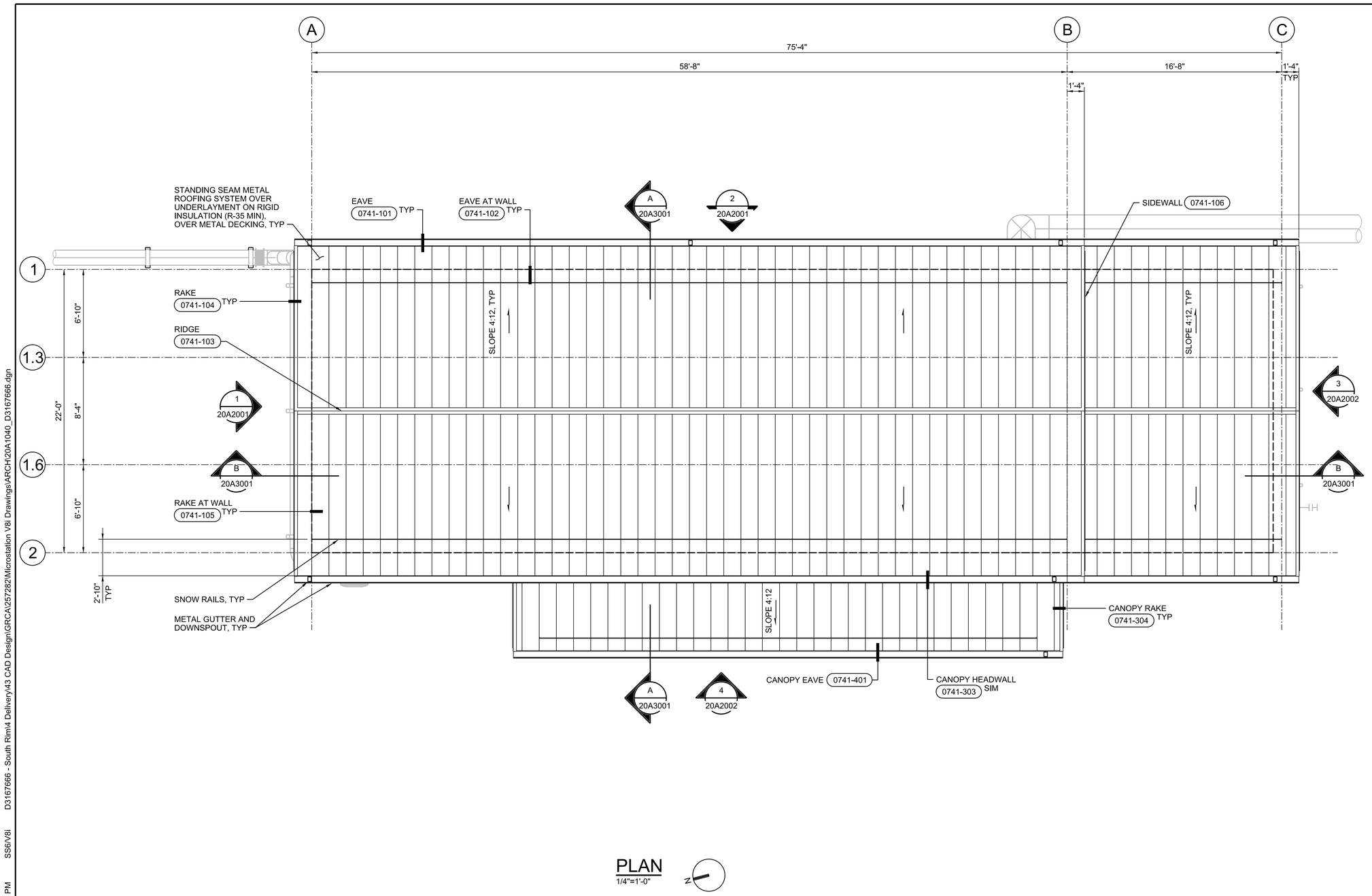

PLAN

1/4"=1'-0"

GENERAL SHEET NOTES

A. SEE GENERAL ARCHITECTURAL NOTES, MATERIAL SYMBOLS LEGEND AND ABBREVIATIONS, SEE DRAWING 01A0001.

B. FOR BUILDING CODE DATA AND LIFE SAFETY PLAN, SEE DRAWING 01A0020.

0 4 8 12
1/4"=1'-0"

FULL SIZE DRAWINGS = 22"x34"
BAR MEASURES 1" LONG

0" 1"

REGISTERED ARCHITECT CERTIFICATE NO. 33437 ROBERT MORGAN SHOEMAKER Date Signed 06-30-25 ARIZONA, U.S.A.

Expires 06-30-2027

A/E FIRM	DESIGNED:	SUB SHEET NO.	TITLE OF SHEET	DRAWING NO.
JACOBS GOVERNMENT SERVICES COMPANY GREENWOOD VILLAGE, CO	M SHOEMAKER CADD: M COLLINS TECH. REVIEW: G KIRSTEN DATE: 06/2025	20A1040	HEADWORKS ARCHITECTURAL ROOF PLAN GRAND CANYON, SOUTH RIM	113 175376 PMIS/PKG NO. 257282 SHEET 249 OF 401

100% COMPLETE CONSTRUCTION DOCUMENTS

GRCA-257282

PLOT DATE: 6/16/2025 PLOT TIME: 6:02:16 PM SS6IV8i D3167666 - South Rim\4 Delivery\43 CAD Design\GRCA\257282\Microstation V8i Drawings\ARCH\20A1040_D3167666.dgn

GENERAL SHEET NOTES

A. LOCATE MASONRY OPENINGS FOR HVAC DUCT/EQUIPMENT ON THE NEAREST 8-INCH CMU MODULE, TYP.

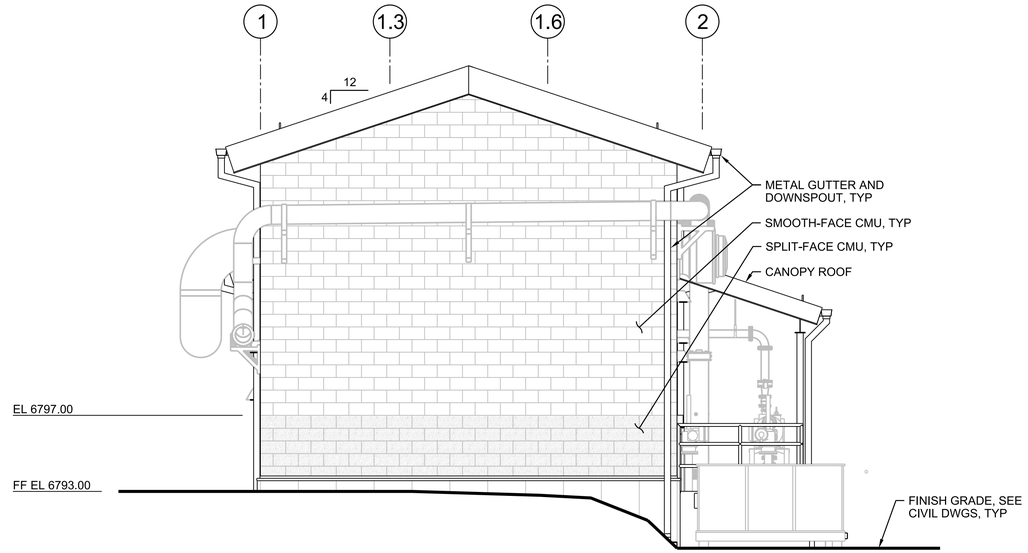

1 NORTH ELEVATION

1/4"=1'-0"

20A1030
20A1040

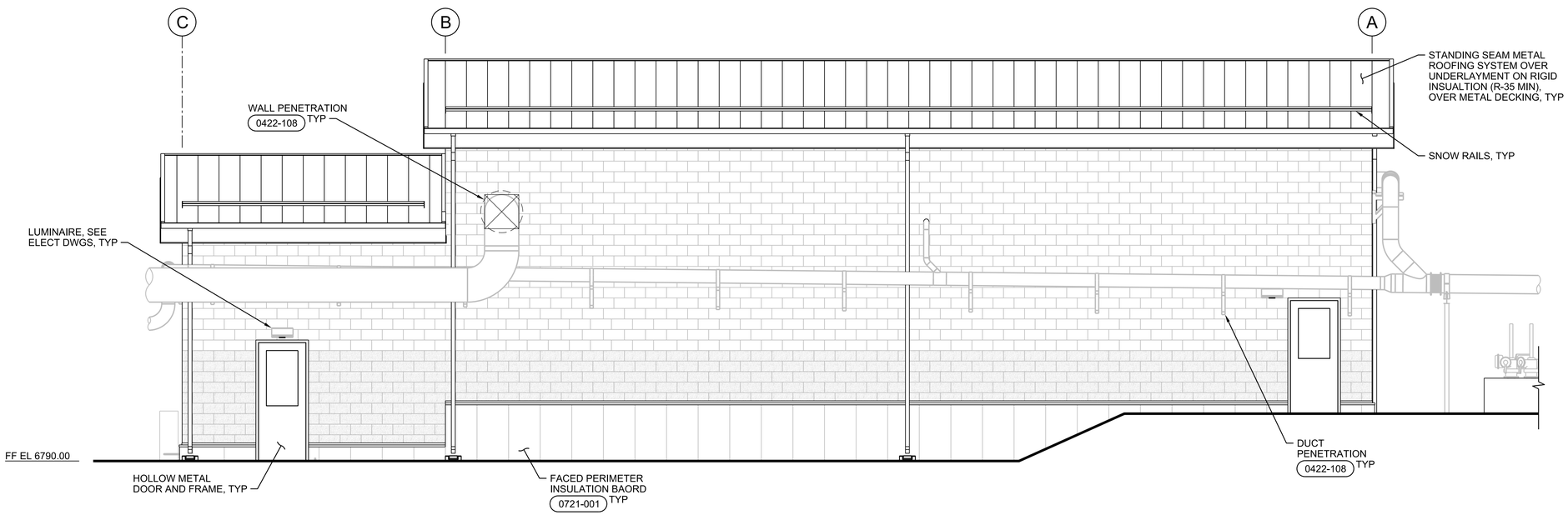

2 EAST ELEVATION

1/4"=1'-0"

20A1030
20A1040

0 4 8 12
1/4"=1'-0"

FULL SIZE DRAWINGS = 22"x34"
BAR MEASURES 1" LONG

0" 1"

REGISTERED ARCHITECT
CERTIFICATE NO.
33680
MORGAN
D. SHOEMAKER
Date Signed 6/16/25
ARIZONA, U.S.A.
Expires 06-30-2027

A/E FIRM	DESIGNED:	SUB SHEET NO.	TITLE OF SHEET	DRAWING NO.
JACOBS GOVERNMENT SERVICES COMPANY GREENWOOD VILLAGE, CO	M SHOEMAKER CADD: M COLLINS TECH. REVIEW: G KIRSTEN DATE: 06/2025	20A2001	HEADWORKS ARCHITECTURAL ELEVATIONS GRAND CANYON, SOUTH RIM	113 175376 PMIS/PKG NO. 257282 SHEET 250 OF 401

100% COMPLETE CONSTRUCTION DOCUMENTS

GRCA-257282

PLOT DATE: 6/16/2025 PLOT TIME: 6:03:31 PM SS6/V8I D3167666 - South Rim\4 Delivery\43 CAD Design\GRCA\257282\Microstation V8I Drawings\ARCH\20A2001_D3167666.dgn

GENERAL SHEET NOTES

A. LOCATE MASONRY OPENINGS FOR HVAC DUCT/EQUIPMENT ON THE NEAREST 8-INCH CMU MODULE, TYP.

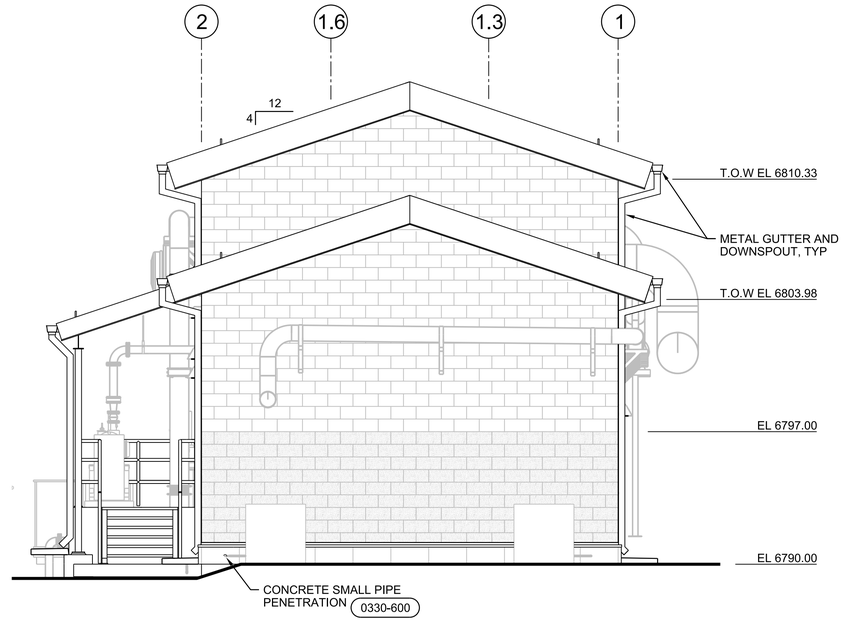

3 SOUTH ELEVATION
1/4"=1'-0"
20A1030
20A1040

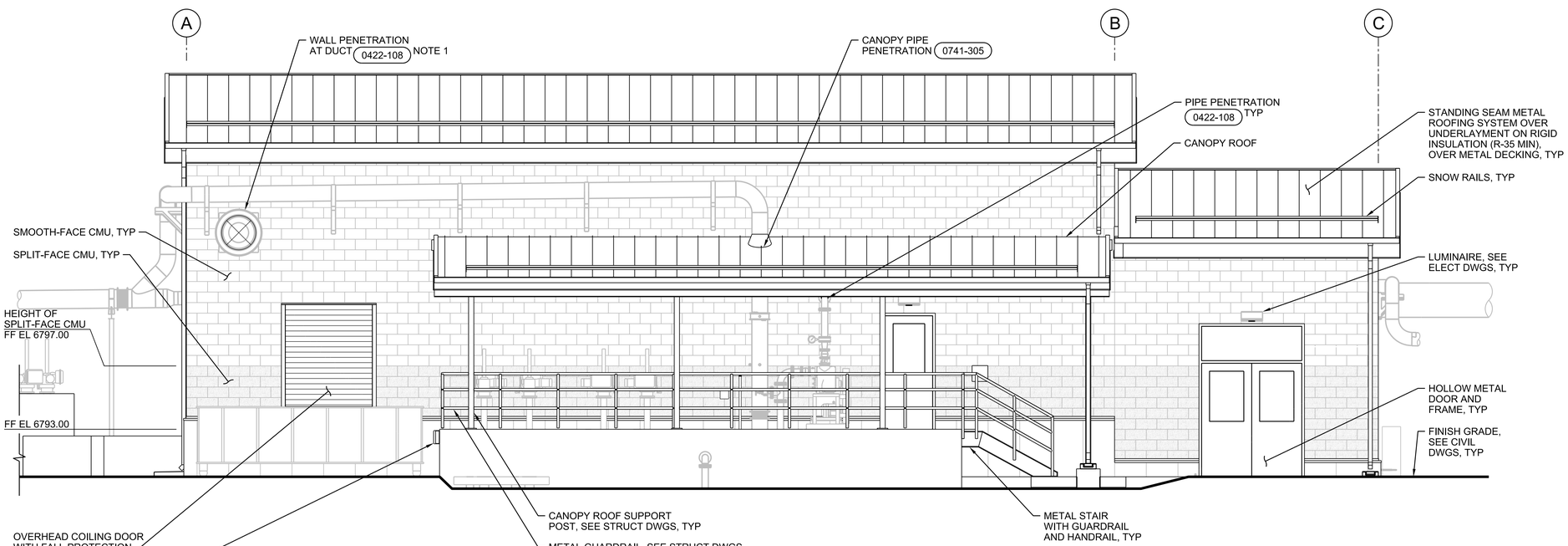

4 WEST ELEVATION
1/4"=1'-0"
20A1030
20A1040

0 4 8 12
1/4"=1'-0"

FULL SIZE DRAWINGS = 22"x34"
BAR MEASURES 1" LONG
0" 1"

REGISTERED ARCHITECT CERTIFICATE NO. 33687 BRIAN MORGAN SHOEMAKER Date Signed 06/16/25 ARIZONA, U.S.A.
Expires 06-30-2027

A/E FIRM	DESIGNED:	SUB SHEET NO.	TITLE OF SHEET	DRAWING NO.
JACOBS GOVERNMENT SERVICES COMPANY GREENWOOD VILLAGE, CO	M SHOEMAKER CADD: M COLLINS TECH. REVIEW: G KIRSTEN DATE: 06/2025	20A2002	HEADWORKS ARCHITECTURAL ELEVATIONS GRAND CANYON, SOUTH RIM	113 175376 PMIS/PKG NO. 257282 SHEET 251 OF 401

GRCA-257282

100% COMPLETE CONSTRUCTION DOCUMENTS

PLOT DATE: 6/16/2025 PLOT TIME: 6:03:38 PM SS6\V8i D3167666 - South Rim\4 Delivery\43 CAD Design\GRCA\257282\Microstation V8i Drawings\ARCH\20A2002_D3167666.dgn

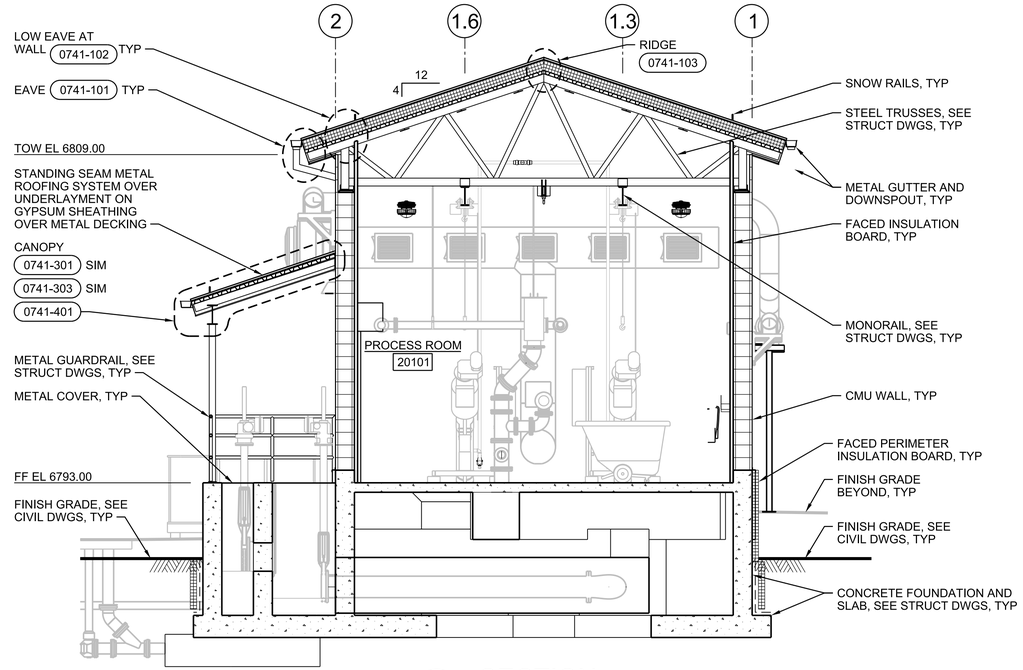

A SECTION

1/4"=1'-0"

20A1030
20A1040

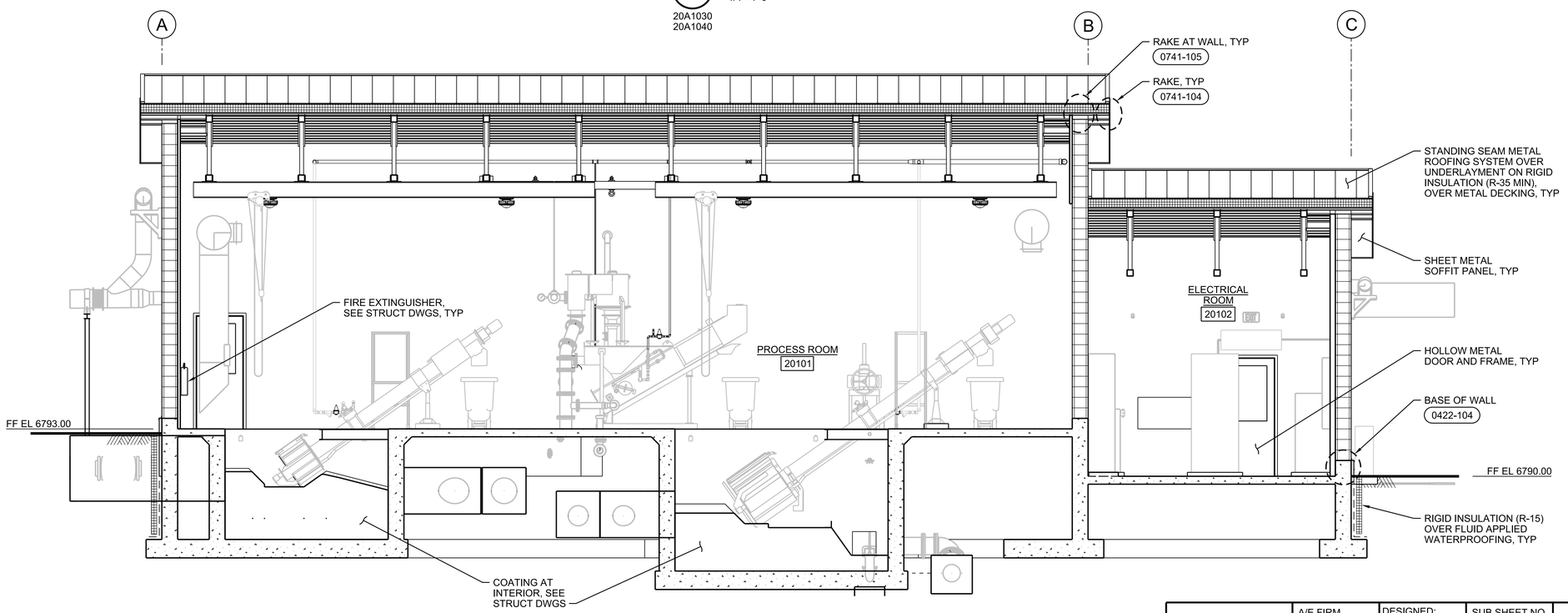

B SECTION

1/4"=1'-0"

20A1030
20A1040

0 4 8 12

1/4"=1'-0"

FULL SIZE DRAWINGS = 22"x34"
BAR MEASURES 1" LONG

0" 1"

REGISTERED ARCHITECT
CERTIFICATE NO. 30687
MORGAN SHOEMAKER
Date Signed 06-16-25
ARIZONA, U.S.A.
Expires 06-30-2027

A/E FIRM	DESIGNED:	SUB SHEET NO.	TITLE OF SHEET	DRAWING NO.
JACOBS GOVERNMENT SERVICES COMPANY GREENWOOD VILLAGE, CO	M SHOEMAKER CADD: M COLLINS TECH. REVIEW: G KIRSTEN DATE: 06/2025	20A3001	HEADWORKS ARCHITECTURAL SECTIONS GRAND CANYON, SOUTH RIM	113 175376 PMIS/PKG NO. 257282 SHEET 252 OF 401

100% COMPLETE CONSTRUCTION DOCUMENTS

GRCA-257282

PLOT DATE: 6/16/2025 PLOT TIME: 6:03:04 PM SS6/V8I D3167666 - South Rim\4 Delivery\43 CAD Design\GRCA\257282\Microstation V8I DrawingsARCH\20A3001_D3167666.dgn

INTERIOR FINISH SCHEDULE

ABBREVIATIONS:

ARWB	ABUSE-RESISTANT GWB	CONC	CONCRETE	FNSH	FINISH	RUB	RUBBER BASE
CLR	CLEAR	EMB	EMBOSSED ALUMINUM	GALV	GALVANIZED	SLR	CLEAR SEALER
CMU	CONCRETE MASONRY UNIT	EXP	EXPOSED STRUCTURE	HGT	HEIGHT		
COL	COLOR	FCTY	FACTORY	MATL	MATERIAL		

NOTES:

NO. 1 NUMBERS IN THE FINISH COLUMN REFER TO PAINT SYSTEMS IN SPECIFICATION SECTION 09 90 00.
NO. 2 CODES IN COL COLUMN REFER TO COLOR LIST ON THIS DRAWING.
NO. 3 FOR EXTERIOR FINISHES AND COLORS, SEE EXTERIOR FINISH SCHEDULE ON THIS DRAWING.
NO. 4 FOR DOOR AND FRAME FINISHES, SEE DOOR AND HARDWARE SCHEDULE ON THIS DRAWING.

SPACE		FLOOR			BASE AND WAINSCOT					TYPICAL WALL			OTHER WALL			CEILING				MISCELLANEOUS				OTHER REQUIREMENTS
NO.	NAME	SUB FL	FINISH	COL	HGT	MATL	FINISH	COL	WALLS	MATL	FINISH	COL	MATL	FINISH	COL	HGT	MATL	FINISH	COL	ITEM	MATL	FINISH	COL	
20101	PROCESS ROOM	CONC	SLR	CLR	4"	RUB	FCTY	W-3	N, E, W	EMB	FCTY	W-4	CMU	117	P-2	VARIES	EXP	10/5	P-2	CLOSURE PLATES	STEEL	GALV	NAT	---
20102	ELECTRICAL ROOM	CONC	SLR	CLR	4"	RUB	FCTY	W-3	ALL	ARWB	116	P-1	CMU	117	P-1	VARIES	EXP	GALV	NAT	---	---	---	---	---

EXTERIOR FINISH SCHEDULE

ITEM / MATERIAL	FINISH	COLOR
SMOOTH-FACE CMU	FACTORY / WATER REPELLENT	W-1 / CLEAR
SPLIT-FACE CMU	FACTORY / WATER REPELLENT	W-2 / CLEAR
SHEET METAL ROOF AND SOFFIT PANELS	FACTORY	M-1
SHEET METAL GUTTER AND DOWNSPOUTS	FACTORY	M-2
LUMINAIRES	FACTORY	DARK BRONZE
STEEL CANOPY COLUMNS AND DUCT/ PIPE SUPPORT	PS-5	P-4

COLOR LIST

NOTES:

NO. 1 COLOR SELECTIONS FOR THIS PROJECT MAY BE NOTED IN DOOR AND HARDWARE SCHEDULE, INTERIOR FINISH SCHEDULE, EXTERIOR FINISH SCHEDULE, PIPING SCHEDULE AND ON THE DRAWINGS BY THE LETTER-NUMBER COMBINATION IN THE MARK COLUMN OF THIS LIST.
NO. 2 SOME COLOR SELECTIONS MAY BE MADE IN VARIOUS SPECIFICATION SECTIONS.
NO. 3 USE ONLY THE COLORS NOTED OR SCHEDULED. IF A COLOR SELECTION IS NOT MADE, REQUEST ONE FROM THE CONTRACTING OFFICER.
NO. 4 THE LISTED MANUFACTURERS AND COLORS ARE ONLY INCLUDED FOR THE PURPOSES OF ESTABLISING A COLOR SCHEME GUIDE AND ARE NOT INTENDED TO LIMIT THE CONTRACTOR FROM PURPOSING ALTERNATE MANUFACTURERS AND COLORS FOR REVIEW AND APPROVAL BY THE CONTRACTING OFFICER. SPECIFICATION SECTIONS ARE LISTED IN PARENTHESIS AFTER MANUFACTURERS.

MARK	MATERIAL	MANUFACTURER	COLOR
OPENINGS			
O-1	OVERHEAD COILING DOOR	COOKSON (SPEC 08 30 00)	GRAY
PAINTS			
P-1	PAINT	SHERWIN-WILLIAMS (SPEC 09 90 00)	DOVER WHITE - SW 6385
P-2	PAINT	SHERWIN-WILLIAMS (SPEC 09 90 00)	HIGH REFLECTIVE WHITE - SW7757
P-3	PAINT	SHERWIN-WILLIAMS (SPEC 09 90 00)	DOVER GRAY - SW6385
P-4	PAINT	SHERWIN-WILLIAMS (SPEC 09 90 00)	SHAMROCK - SW6454
MISCELLANEOUS			
M-1	SHEET METAL ROOF AND SOFFIT PANELS	IMETCO (SPEC 07 41 13)	DENALI GREEN
M-2	SHEET METAL GUTTERS AND DOWNSPOUTS	IMETCO (SPEC 07 41 13)	DENALI GREEN
WALLS			
W-1	CMU - SMOOTH-FACE	ECHELON (SPEC 04 22 00)	WALNUT CREEK - NW BONE
W-2	CMU - SPLIT-FACE	ECHELON (SPEC 04 22 00)	AUTUMN
W-3	RUBBER BASE	JOHNSONITE (SPEC 09 29 00)	PEPPERCORN
W-4	EMBOSSED ALUMINUM	DUPONT (SPEC 07 21 00)	WHITE
W-5	CMU MORTAR	AMERIMIX (SPEC 04 22 00)	SOFT IVORY

DOOR AND HARDWARE SCHEDULE

ABBREVIATIONS:

COL	COLOR
EXT	EXTERIOR
FCTY	FACTORY
IG-C	INSULATING GLASS-CLEAR
HM	HOLLOW METAL
MATL	MATERIAL
MET	METAL

NOTES:

NO. 1 SEE THIS SHEET FOR DOOR AND FRAME TYPES.
NO. 2 FOR DOOR DETAILS, SEE DESIGN DETAILS.
NO. 3 NUMBER CODE IN HARDWARE SET COLUMN REFERS TO HARDWARE SETS IN SPECIFICATION SECTION 08 71 00.
NO. 4 NUMBERS IN FNSH COLUMN REFER TO PAINT SYSTEMS IN SPECIFICATION SECTION 09 90 00.
NO. 5 CODES IN COL COLUMN REFER TO COLOR LIST ON THIS DRAWING.
NO. 6 FOR GLASS TYPES, SEE SPECIFICATION SECTION 08 80 00.

NO.	OPENING														HARDWARE		FIRE PROTECTION RATING	OTHER REQUIREMENTS
	SIZE		DOOR					FRAME				DETAILS						
	WIDTH	HEIGHT	CONSTR	TYPE	GLASS	FINISH	COL	MATL	TYPE	FINISH	COL	HEAD	JAMB	SILL	SET NO.	KEY SIDE		
20101A	3'-0"	7'-2"	HM	G	IG-C	5	P-3	HM	SD	5	P-3	0811-014 SIM	0811-014	0871-001	13	EXT	---	
20101B	6'-0"	8'-0"	MET	OHCI	---	FCTY	O-1	MET	OHC	FCTY	O-1	0833-007	0833-008	0833-008	20	---	---	
20101C	3'-0"	7'-2"	HM	G	IG-C	5	P-3	HM	SD	5	P-3	0811-014 SIM	0811-014	0871-001	7	EXT	---	
20102A	(2) 3'-2"	7'-2"	HM	G / G	IG-C	5	P-3	HM	DDT	5	P-3	0811-013	0811-015	0871-001	2	EXT	---	
20102B	3'-0"	7'-6"	HM	G	IG-C	5	P-3	HM	SD	5	P-3	0811-013	0811-015	0871-001	7	EXT	---	

DOOR TYPES

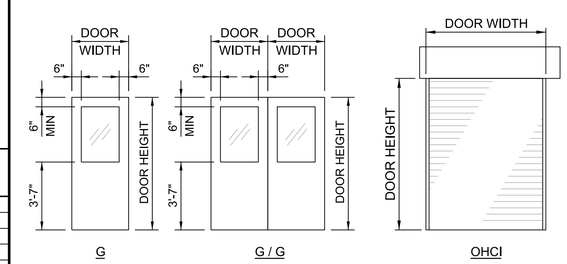

DOOR FRAME TYPES

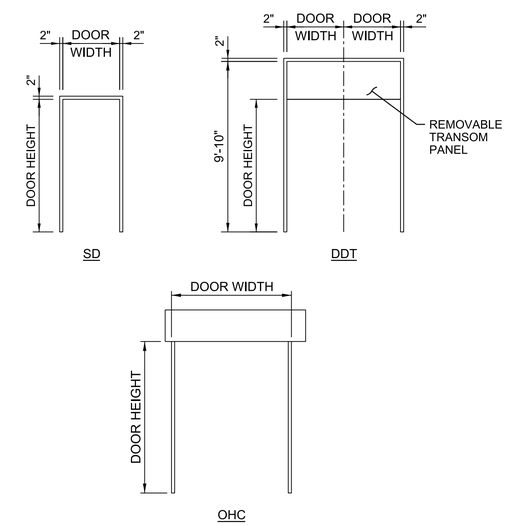

NO SCALE

FULL SIZE DRAWINGS = 22"x34"
BAR MEASURES 1" LONG
0" 1"

REGISTERED ARCHITECT CERTIFICATE NO. 80680 MORGAN SHOEMAKER Date Signed 06/06/25 ARIZONA, U.S.A.
Expires 06-30-2027

A/E FIRM	DESIGNED:	SUB SHEET NO.	TITLE OF SHEET	DRAWING NO.
JACOBS GOVERNMENT SERVICES COMPANY GREENWOOD VILLAGE, CO	M SHOEMAKER CADD: M COLLINS TECH. REVIEW: G KIRSTEN DATE: 06/2025	20A6001	HEADWORKS ARCHITECTURAL SCHEDULES GRAND CANYON, SOUTH RIM	113 / 175376 PMIS/PKG NO. 257282 SHEET 253 OF 401

100% COMPLETE CONSTRUCTION DOCUMENTS

GRCA-257282

PLOT DATE: 6/16/2025 PLOT TIME: 6:02:07 PM SS6/V8i D3167666 - South Rim\4 Delivery\43 CAD Design\GRCA\257282\Microstation V8i Drawings\ARCH\20A6001_D3167666.dgn

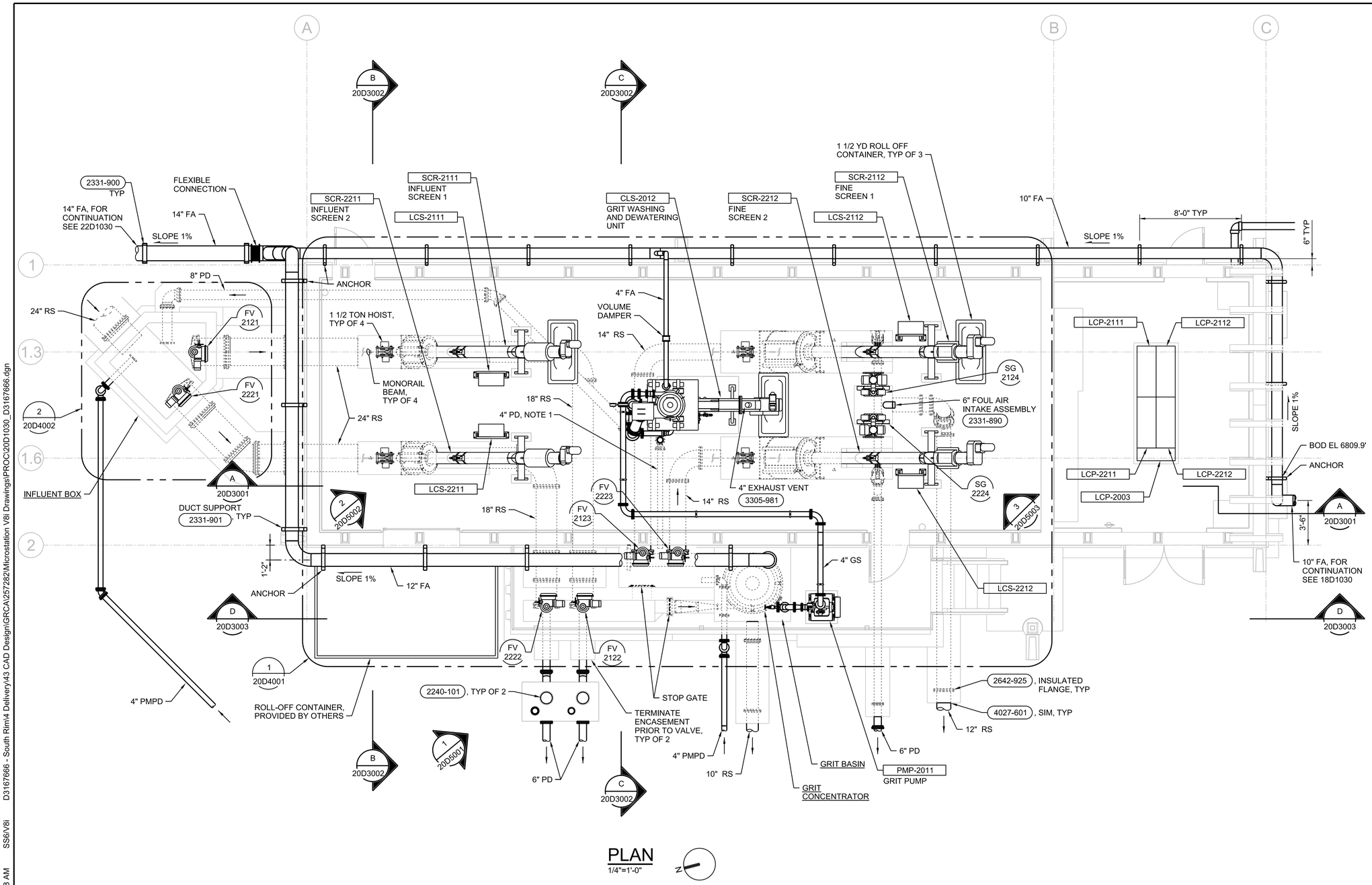

PLAN
1/4"=1'-0"

GENERAL SHEET NOTES

A. ROLL OFF CONTAINERS SHOWN HERE ARE NOT TO BE PROVIDED AS PART OF CONTRACT.

B. KEEP PATH OF MONORAILS CLEAR AND DO NOT OBSTRUCT AREA NEEDED TO TIP INFLUENT AND FINE SCREENS UP OUT OF CHANNEL INTO HORIZONTAL.

C. LCP AND LCS SHOWN FULL LINE HERE ARE TO BE SUPPLIED AS PART OF EQUIPMENT PACKAGE, SEE ASSOCIATED EQUIPMENT SPECIFICATION.

D. UTILIZE GROOVED END COUPLINGS ON PIPING INSIDE GRIT BASIN TO FACILITATE REMOVAL OF PIPING ABOVE GRIT CONCENTRATOR.

E. ALL GS PIPING TO BE GROOVED END EXCEPT AT CONNECTION OF EQUIPMENT.

F. SEE ARCHITECTURAL DRAWINGS FOR CMU WALL PIPE AND DUCT PENETRATIONS.

G. ALL CONCRETE WALL PIPE PENETRATIONS PER 4027-600, UNLESS NOTED OTHERWISE.

H. ALL PROCESS PIPING BELOW STRUCTURE TO BE ENCASED, AS WELL AS 24" RS BETWEEN INFLUENT BOX AND BUILDING, SEE STRUCTURAL DRAWINGS. AT TERMINATION OF ENCASEMENT PROVIDE THRUST COLLAR AND JOINTS PER 4027-601.

I. MOUNT VENDOR LCS PANELS PER 2605-008.

J. ALL EXPOSED, EXTERIOR GS AND PMPD TO BE HEAT TRACED AND INSULATED.

K. ALL DUCT SUPPORTS SHOWN HEREIN ARE GUIDE SUPPORTS UNLESS SPECIFICALLY INDICATED AS ANCHOR SUPPORTS. SEE DETAILS 2331-900 AND 2331-884.

L. FOR CONTINUATION SEE YARD PIPING DRAWINGS.

M. LOCATE ENCASED INSULATING FLANGES 1-FOOT FROM END OF ENCASEMENT, UNLESS NOTED OTHERWISE.

SHEET NOTES

1. 4" PD FROM GRIT WASHING AND DEWATERING UNIT TO GRIT CONCENTRATOR EFFLUENT BOX FOR ORGANICS REMOVAL, IF REQUIRED, SEE SPECIFICATION 44 42 41, GRIT WASHING AND DEWATERING UNIT.

0 4 8 12
1/4"=1'-0"

FULL SIZE DRAWINGS = 22"x34"
BAR MEASURES 1" LONG
0" 1"

Registered Professional Engineer (Civil) CERTIFICATE NO. 69046 DARREN EDWARDS Date Signed 6/19/25 ARIZONA, U.S.A.
JUNE 19, 2025

A/E FIRM	DESIGNED:	SUB SHEET NO.	TITLE OF SHEET	DRAWING NO.
JACOBS GOVERNMENT SERVICES COMPANY GREENWOOD VILLAGE, CO	R CAMPBELL CADD: G BROWN TECH. REVIEW: D EDWARDS DATE: 06/2025	20D1030	HEADWORKS MECHANICAL PLAN GRAND CANYON, SOUTH RIM	113 175376 PMIS/PKG NO. 257282 SHEET 254 OF 401

GRCA-257282

100% COMPLETE CONSTRUCTION DOCUMENTS

PLOT DATE: 6/17/2025 PLOT TIME: 11:28:18 AM SS6/V8i D3167666 - South Rim\4 Delivery\43 CAD Design\GRCA\257282\Microstation V8i Drawings\PROC\20D1030_D3167666.dgn

SHEET NOTES

1. SEE PLUMBING DRAWINGS FOR RW ROUTING AND CONNECTIONS TO EQUIPMENT SPRAY CONNECTIONS, TYPICAL.
2. SEE STRUCTURAL DRAWINGS FOR GROUT FILL AND SLOPING IN CHANNELS, TYPICAL.
3. 90 DEG ELBOW ROLLED 45 DEG DOWN AND 45 DEG ELBOW INTO HORZ TO PASS BELOW BUILDING FOOTING.
4. 4" PD FROM GRIT WASHING AND DEWATERING UNIT TO GRIT CONCENTRATOR EFFLUENT BOX FOR ORGANICS REMOVAL, IF REQUIRED, SEE SPECIFICATION 44 42 41, GRIT WASHING AND DEWATERING UNIT.

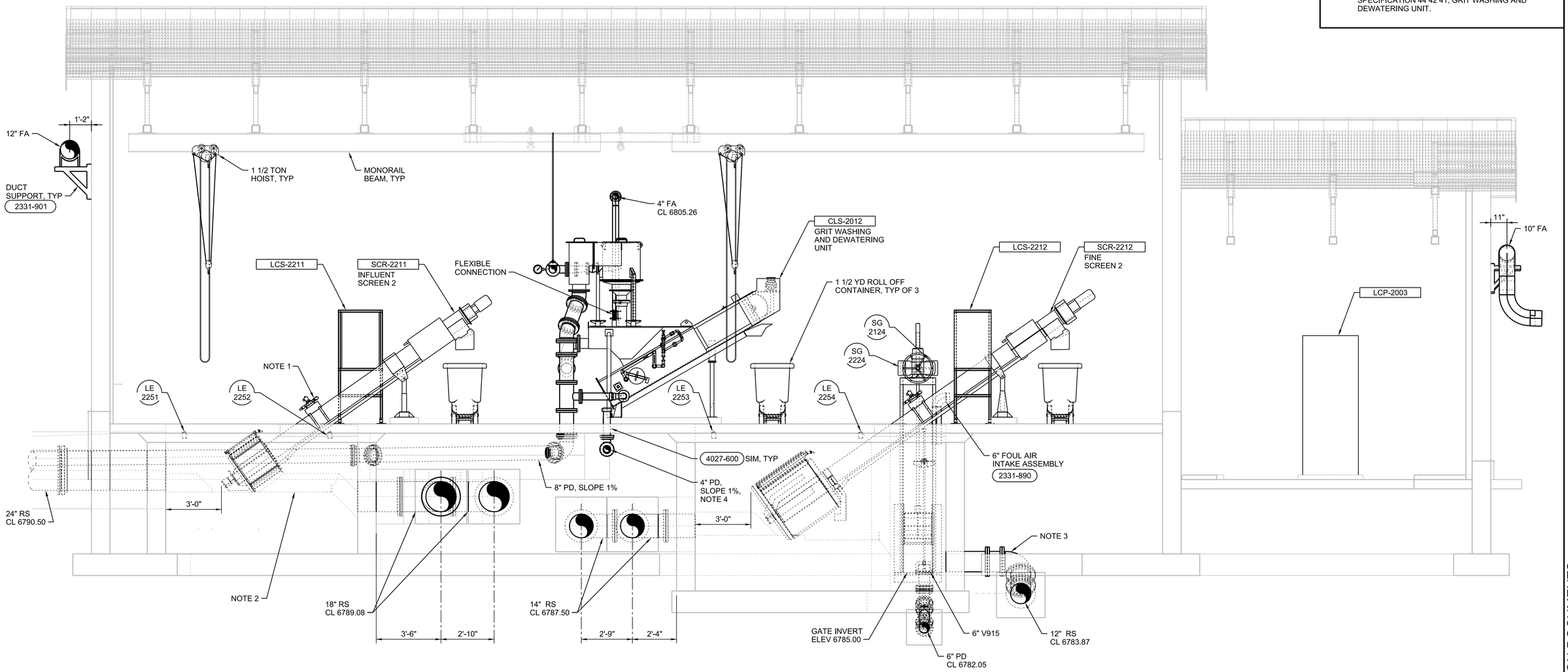

A SECTION
3/8"=1'-0"
20D1030
20D4001

0 2 4 6
3/8"=1'-0"

FULL SIZE DRAWINGS = 22"x34"
BAR MEASURES 1" LONG
0" 1"

Registered Professional Engineer (Civil) CERTIFICATE NO. 50646 OSCAR DARREN EDWARDS Date Signed 6/19/25 ARIZONA, U.S.A.
JUNE 19, 2025

A/E FIRM	DESIGNED:	SUB SHEET NO.	TITLE OF SHEET	DRAWING NO.
JACOBS GOVERNMENT SERVICES COMPANY GREENWOOD VILLAGE, CO	R CAMPBELL CADD: G BROWN TECH. REVIEW: D EDWARDS DATE: 06/2025	20D3001	HEADWORKS MECHANICAL SECTION GRAND CANYON, SOUTH RIM	113 175376 PMIS/PKG NO. 257282 SHEET 255 OF 401

100% COMPLETE CONSTRUCTION DOCUMENTS

GRCA-257282

PLOT DATE: 6/17/2025 PLOT TIME: 11:27:26 AM SS6\V8i D3167666 - South Rim\4 Delivery\43 CAD Design\GRCA\257282\Microstation V8i Drawings\PROC\20D3001_D3167666.dgn

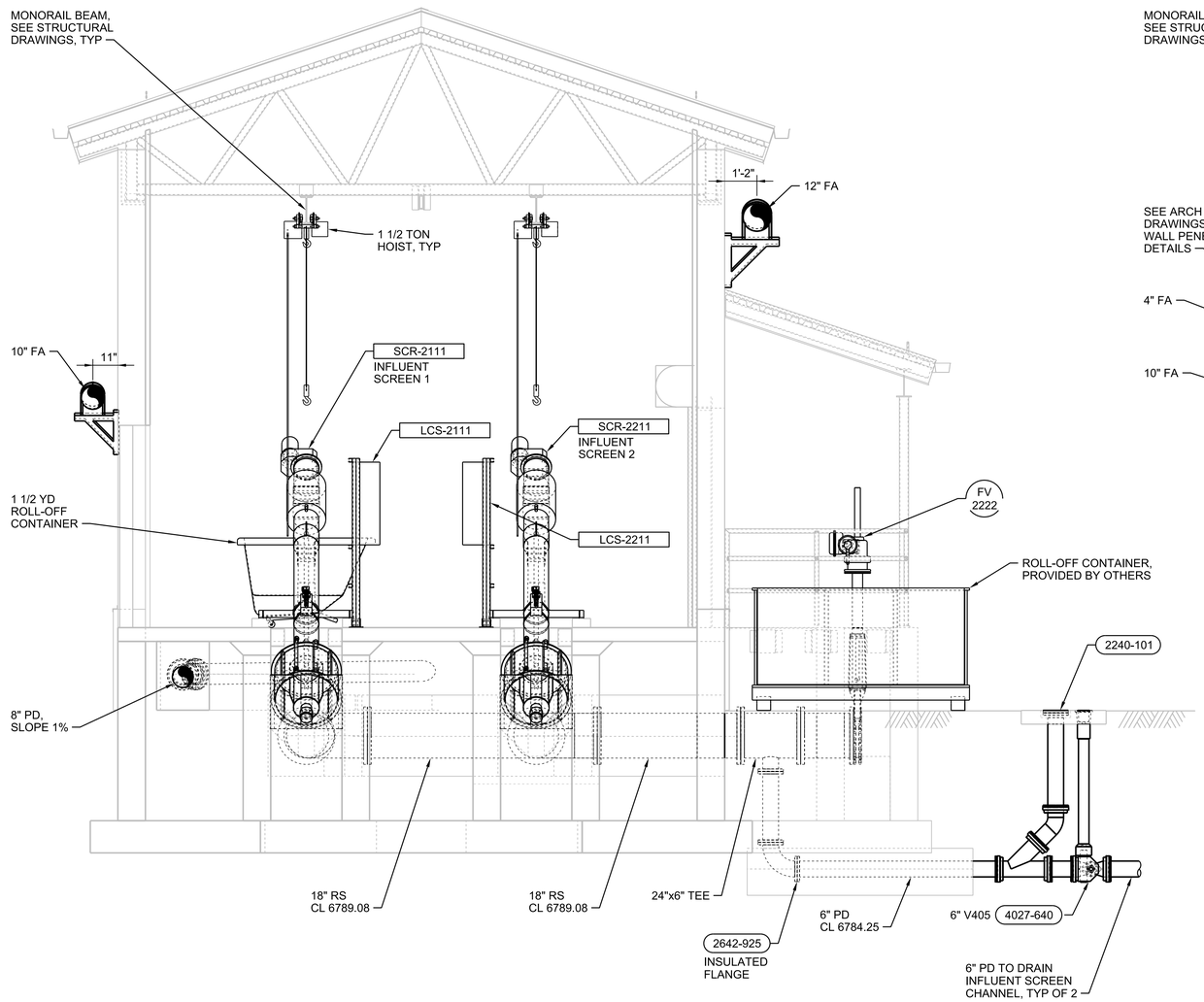

B SECTION
3/8"=1'-0"
20D1030
20D4001

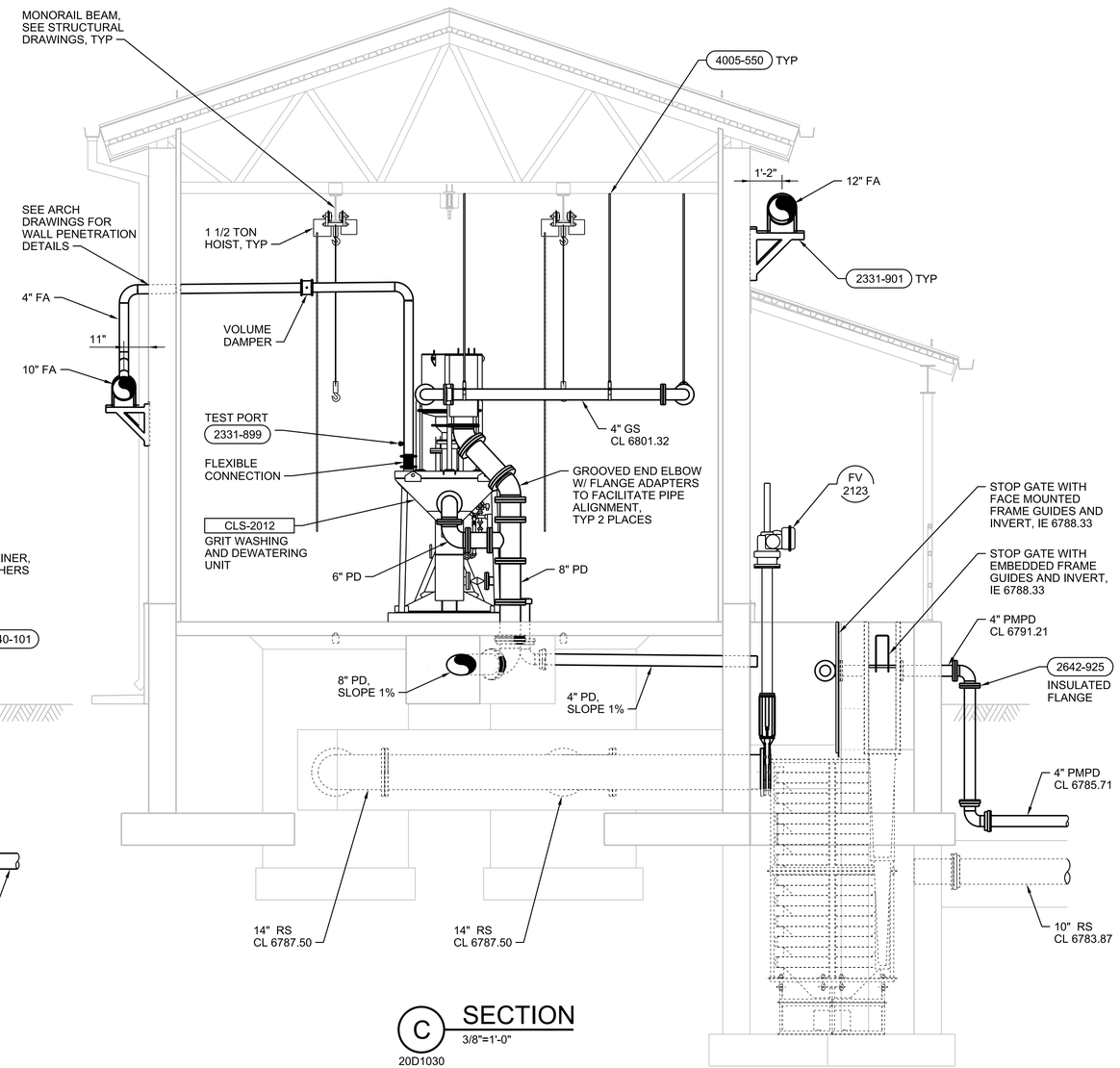

C SECTION
3/8"=1'-0"
20D1030
20D4001

0 2 4 6
3/8"=1'-0"

FULL SIZE DRAWINGS = 22"x34"
BAR MEASURES 1" LONG
0" 1"

Registered Professional Engineer (Civil) 69048 DARREN EDWARDS Date Signed Arizona, U.S.A.
JUNE 19, 2025

A/E FIRM	DESIGNED:	SUB SHEET NO.	TITLE OF SHEET	DRAWING NO.
JACOBS GOVERNMENT SERVICES COMPANY GREENWOOD VILLAGE, CO	R CAMPBELL CADD: G BROWN TECH. REVIEW: D EDWARDS DATE: 06/2025	20D3002	HEADWORKS MECHANICAL SECTIONS GRAND CANYON, SOUTH RIM	113 175376 PMIS/PKG NO. 257282 SHEET 256 OF 401

100% COMPLETE CONSTRUCTION DOCUMENTS

GRCA-257282

PLOT DATE: 6/17/2025 PLOT TIME: 11:27:12 AM SS6/V8i D3167666 - South Rim4 Delivery\43 CAD Design\GRCA\257282\Microstation V8i Drawings\PROC\20D3002_D3167666.dgn