SHEET NOTES

1. ROUTE 1" RW TO BOTTOM OF GRIT CONCENTRATOR AS RECOMMENDED BY SUPPLIER FOR FLUIDIZING WATER, SEE PLUMBING DRAWINGS.

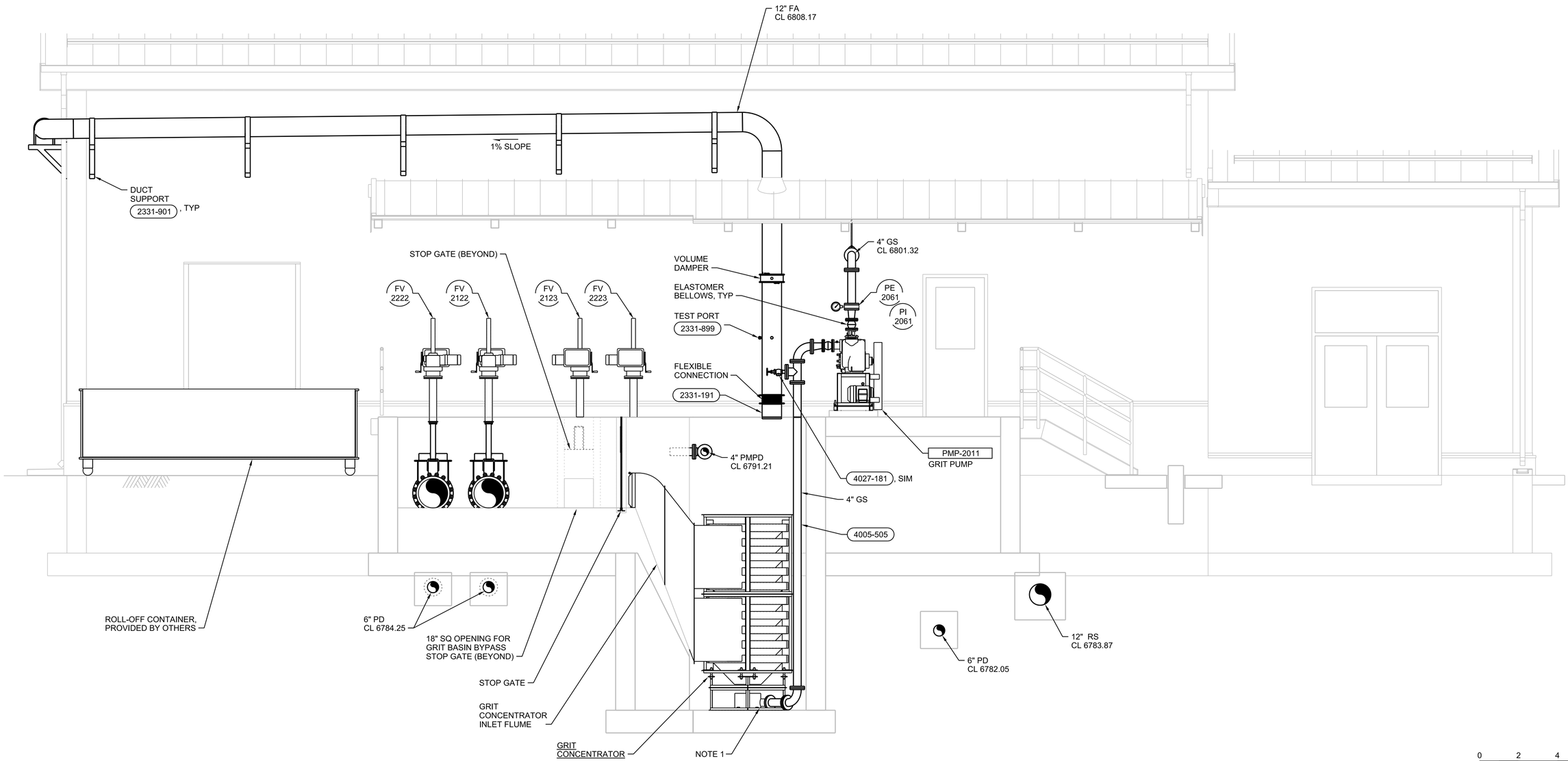

D SECTION
3/8"=1'-0"
20D1030
20D4001

0 2 4 6
3/8"=1'-0"

FULL SIZE DRAWINGS = 22"x34"
BAR MEASURES 1" LONG
0" 1"

Professional Engineer Darren Edwards 20040 DARREN EDWARDS ARIZONA, U.S.A. Expires 6/30/26
JUNE 19, 2025

A/E FIRM	DESIGNED:	SUB SHEET NO.	TITLE OF SHEET	DRAWING NO.
JACOBS GOVERNMENT SERVICES COMPANY GREENWOOD VILLAGE, CO	R CAMPBELL CADD: G BROWN TECH. REVIEW: D EDWARDS DATE: 06/2025	20D3003	HEADWORKS MECHANICAL SECTION GRAND CANYON, SOUTH RIM	113 175376 PMIS/PKG NO. 257282 SHEET 257 OF 401

GRCA-257282

100% COMPLETE CONSTRUCTION DOCUMENTS

PLOT DATE: 6/17/2025 PLOT TIME: 11:27:52 AM SS6\V8i D3167666 - South Rim\4 Delivery\43 CAD Design\GRCA\257282\Microstation V8i Drawings\PROC\20D3003_D3167666.dgn

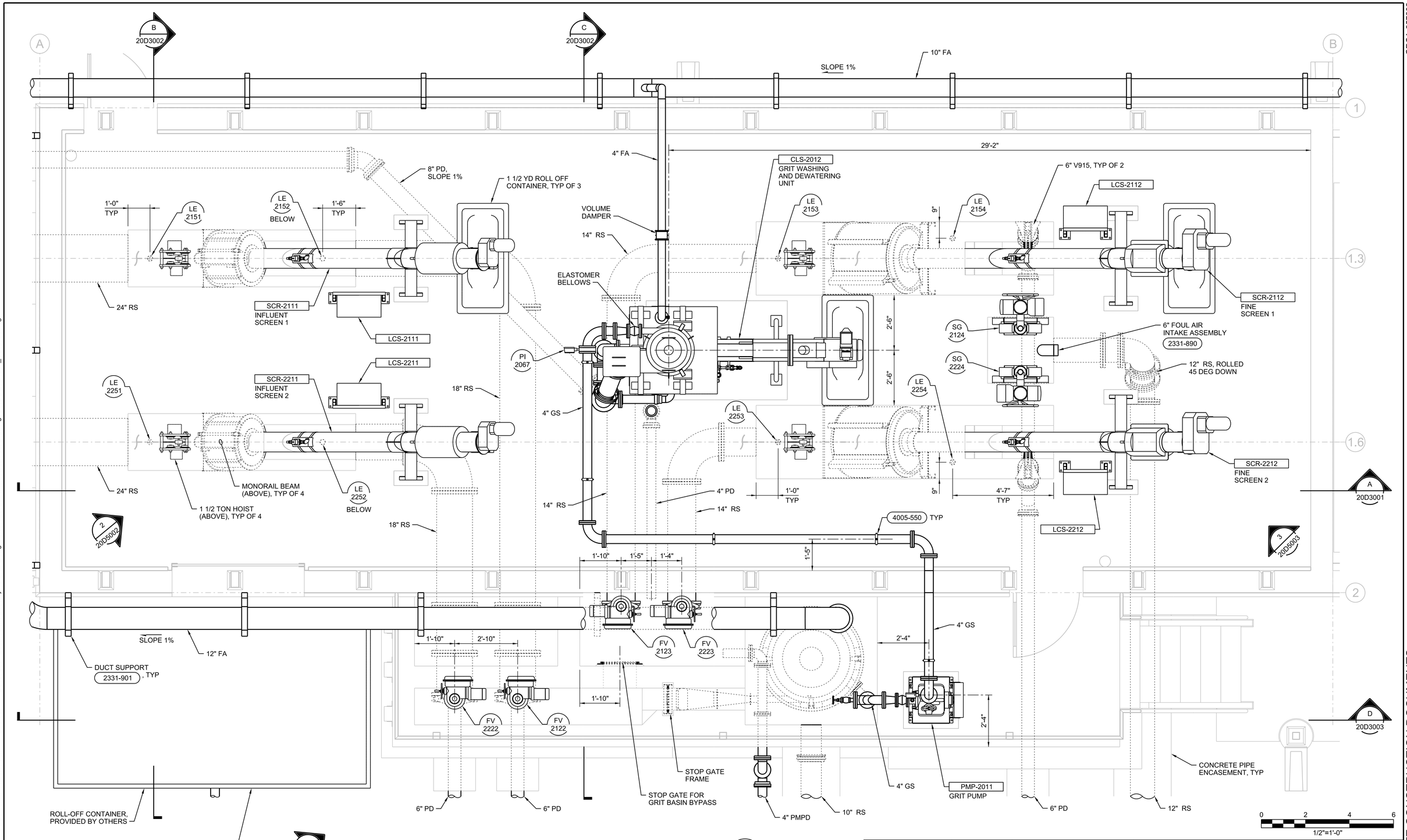

1 ENLARGED PLAN
1/2"=1'-0"
20D1030

FULL SIZE DRAWINGS = 22"x34"
BAR MEASURES 1" LONG
0" 1"

Registered Professional Engineer (Civil)
CERTIFICATE NO. 59045
DARREN EDWARDS
Date Signed
ARIZONA, U.S.A.
JUNE 19, 2025

A/E FIRM	DESIGNED: R CAMPBELL	SUB SHEET NO.	TITLE OF SHEET	DRAWING NO.
JACOBS GOVERNMENT SERVICES COMPANY GREENWOOD VILLAGE, CO	CADD: G BROWN TECH. REVIEW: D EDWARDS DATE: 06/2025	20D4001	HEADWORKS MECHANICAL ENLARGED PLAN GRAND CANYON, SOUTH RIM	113 175376 PMIS/PKG NO. 257282 SHEET 258 OF 401

100% COMPLETE CONSTRUCTION DOCUMENTS

GRCA-257282

PLOT DATE: 6/17/2025 PLOT TIME: 11:28:17 AM SS6/V8i D3167666 - South Rim\4 Delivery\43 CAD Design\GRCA\257282\Microstation V8i Drawings\PROC\20D4001_D3167666.dgn

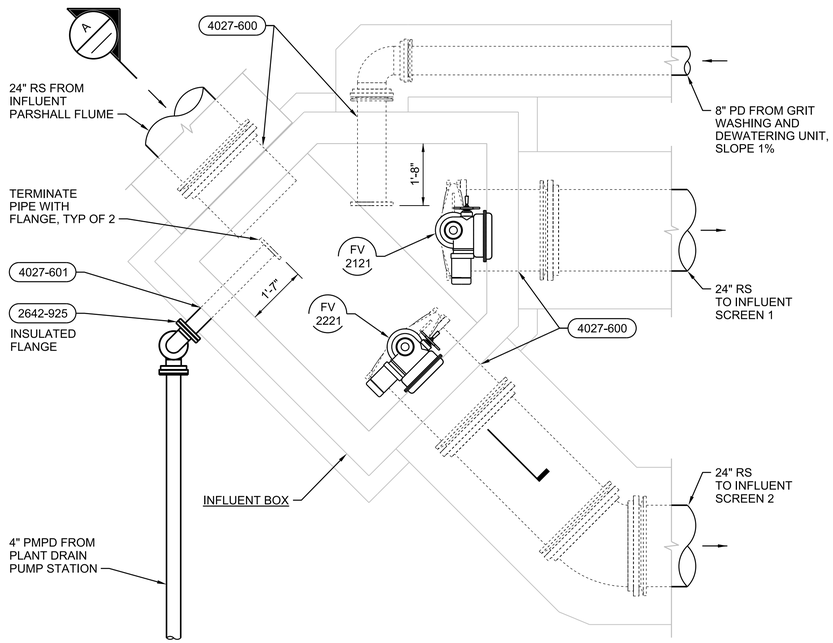

2 ENLARGED PLAN

1/2"=1'-0"

20D1030

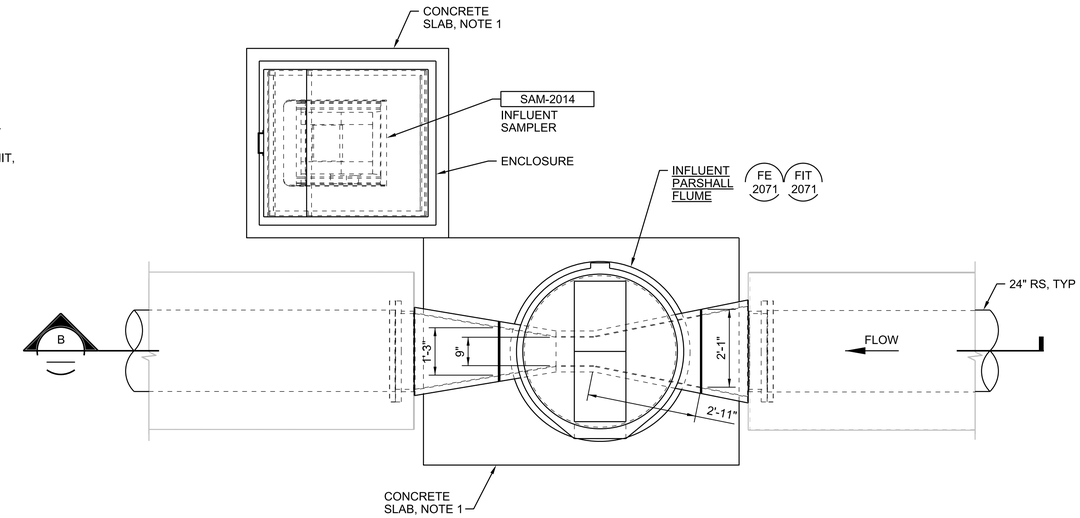

3 PARSHALL FLUME PLAN

1/2"=1'-0"

07Y2001

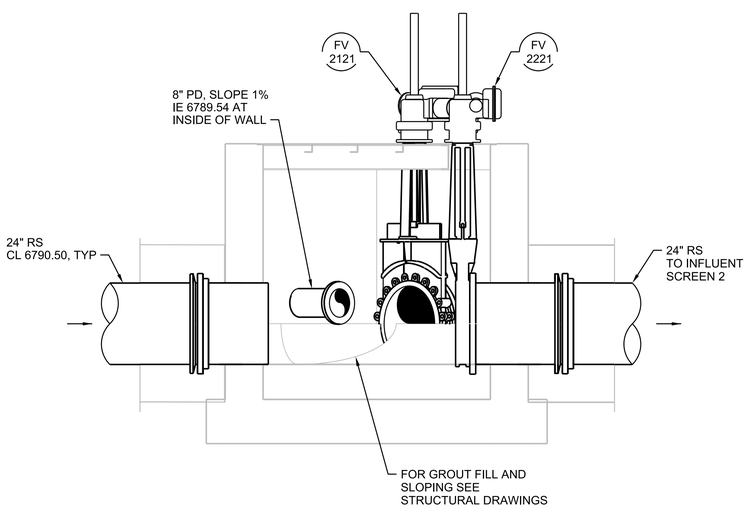

A SECTION

1/2"=1'-0"

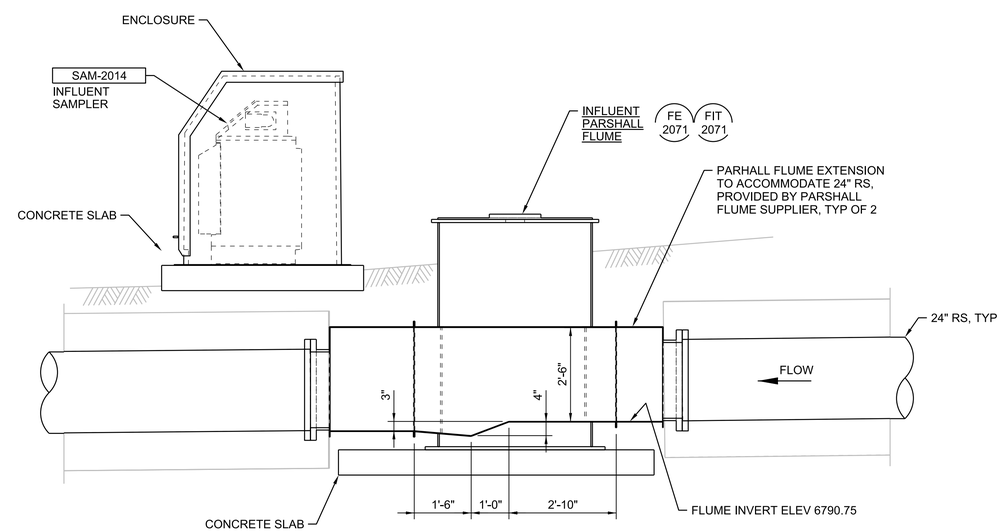

B PARSHALL FLUME SECTION

1/2"=1'-0"

0 2 4 6

1/2"=1'-0"

GENERAL SHEET NOTES

A. INFLUENT SAMPLER ENCLOSURE PER SPECIFICATION 44 42 48.04, AUTOMATIC COMPOSITE SAMPLER.

B. PREFABRICATED FIBERGLASS PARSHALL FLUME FLOW METERING MANHOLE TO BE PROVIDED AS ACCESSORY TO INFLUENT SAMPLER PER SPECIFICATION 44 42 48.04, AUTOMATIC COMPOSITE SAMPLER.

SHEET NOTES

1. SLAB TO BE 1'-0" THICK CONCRETE SLAB. REINFORCING WITH #5 @ 12" EACH WAY, TOP AND BOTTOM. COORDINATE EXTENT OF SLAB REQUIRED WITH ANCHORAGE FOR EQUIPMENT WITH MINIMUM EDGE DISTANCE OF 4".

FULL SIZE DRAWINGS = 22"x34"
BAR MEASURES 1" LONG

0" 1"

Registered Professional Engineer (Civil) CERTIFICATE NO. 59646 DARREN EDWARDS Date Signed ARIZONA, U.S.A.

JUNE 19, 2025

A/E FIRM	DESIGNED:	SUB SHEET NO.	TITLE OF SHEET	DRAWING NO.
JACOBS GOVERNMENT SERVICES COMPANY GREENWOOD VILLAGE, CO	R CAMPBELL CADD: G BROWN TECH. REVIEW: D EDWARDS DATE: 06/2025	20D4002	HEADWORKS MECHANICAL ENLARGED PLANS AND SECTIONS GRAND CANYON, SOUTH RIM	113 175376 PMIS/PKG NO. 257282 SHEET 259 OF 401

100% COMPLETE CONSTRUCTION DOCUMENTS

GRCA-257282

PLOT DATE: 6/17/2025 PLOT TIME: 11:27:51 AM SS6/V8i D3167666 - South Rim\4 Delivery\43 CAD Design\GRCA\257282\Microstation V8i Drawings\PROC\20D4002_D3167666.dgn

GENERAL SHEET NOTES

A. CONCRETE PIPE ENCASEMENTS NOT SHOWN FOR CLARITY.

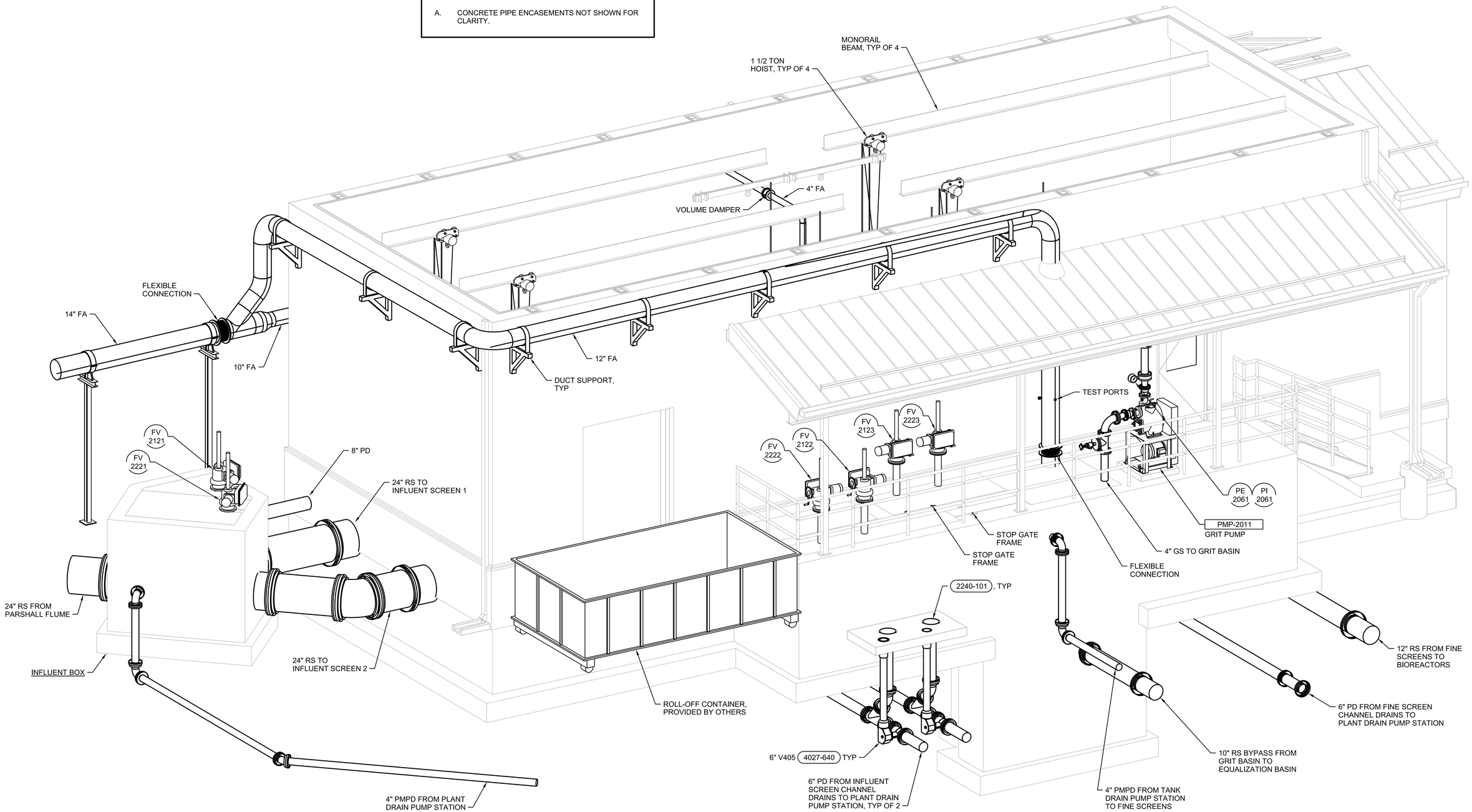

1 DETAIL
NTS
20D1030
20D4001

FULL SIZE DRAWINGS = 22"x34"
BAR MEASURES 1" LONG
0" 1"

JUNE 19, 2025

A/E FIRM	DESIGNED:	SUB SHEET NO.	TITLE OF SHEET	NO SCALE
JACOBS GOVERNMENT SERVICES COMPANY GREENWOOD VILLAGE, CO	R CAMPBELL CADD: G BROWN TECH. REVIEW: D EDWARDS DATE: 06/2025	20D5001	HEADWORKS MECHANICAL ISOMETRIC GRAND CANYON, SOUTH RIM	DRAWING NO. 113 / 175376 PMIS/PKG NO. 257282 SHEET 260 OF 401

GRCA-257282

100% COMPLETE CONSTRUCTION DOCUMENTS

PLOT DATE: 6/17/2025 PLOT TIME: 11:27:47 AM SS6/V8i D3167666 - South Rim\4 Delivery\43 CAD Design\GRCA\257282\Microstation V8i Drawings\PROC\20D5001_D3167666.dgn

GENERAL SHEET NOTES

A. CONCRETE PIPE ENCASEMENTS NOT SHOWN FOR CLARITY.

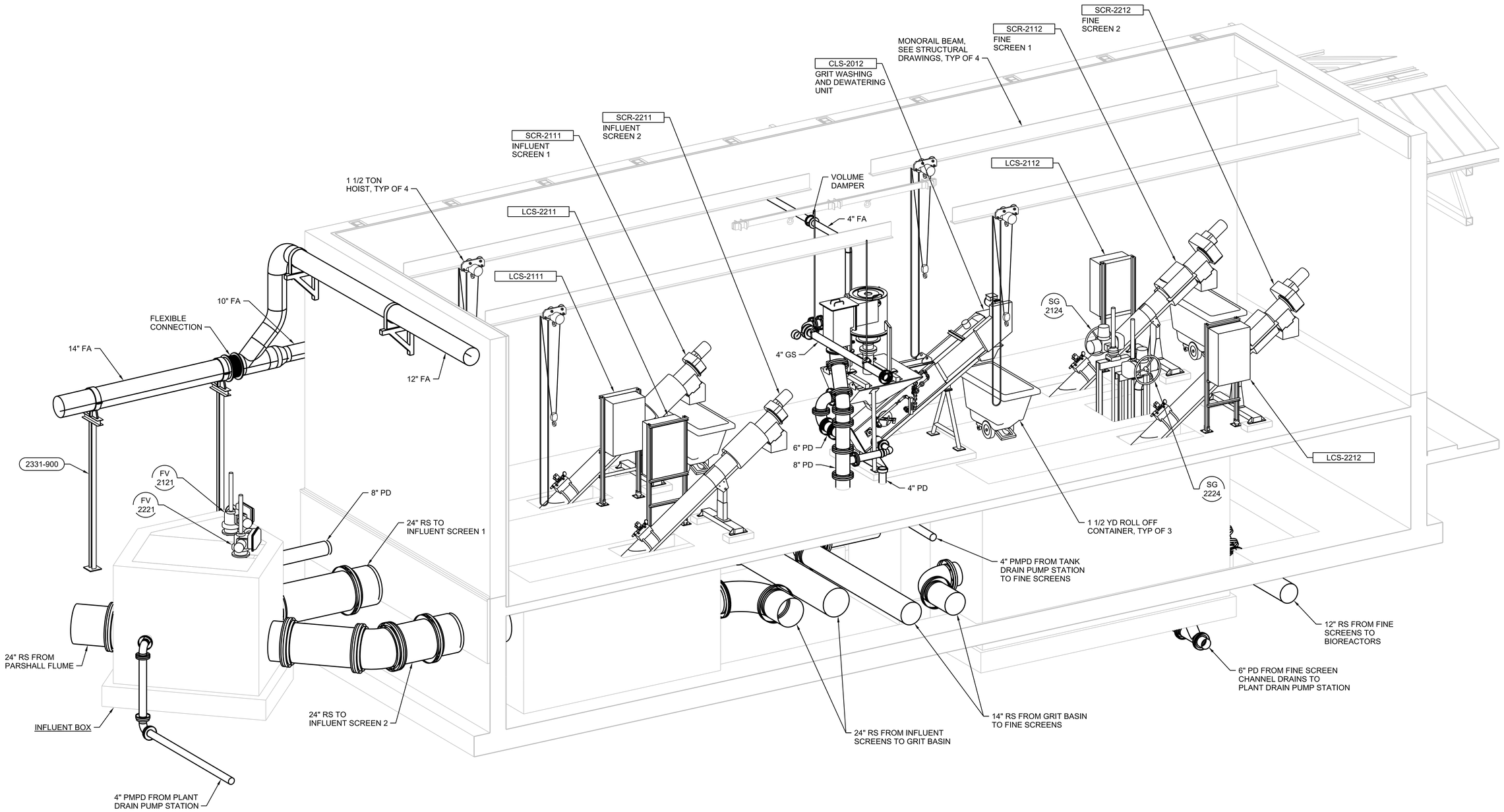

2 DETAIL
NTS
20D1030
20D4001

FULL SIZE DRAWINGS = 22"x34"
BAR MEASURES 1" LONG
0" 1"

NO SCALE

JUNE 19, 2025	A/E FIRM: JACOBS GOVERNMENT SERVICES COMPANY, GREENWOOD VILLAGE, CO	DESIGNED: R CAMPBELL CADD: G BROWN TECH. REVIEW: D EDWARDS DATE: 06/2025	SUB SHEET NO. 20D5002	TITLE OF SHEET: HEADWORKS MECHANICAL ISOMETRIC GRAND CANYON, SOUTH RIM	DRAWING NO. 113 175376 PMIS/PKG NO. 257282 SHEET 261 OF 401

100% COMPLETE CONSTRUCTION DOCUMENTS

GRCA-257282

PLOT DATE: 6/17/2025 PLOT TIME: 11:27:33 AM SS6\V8i D3167666 - South Rim\4 Delivery\43 CAD Design\GRCA\257282\Microstation V8i Drawings\PROC\20D5002_D3167666.dgn
11:27:34 AM SS6\V8i

GENERAL SHEET NOTES

A. CONCRETE PIPE ENCASEMENTS NOT SHOWN FOR CLARITY.

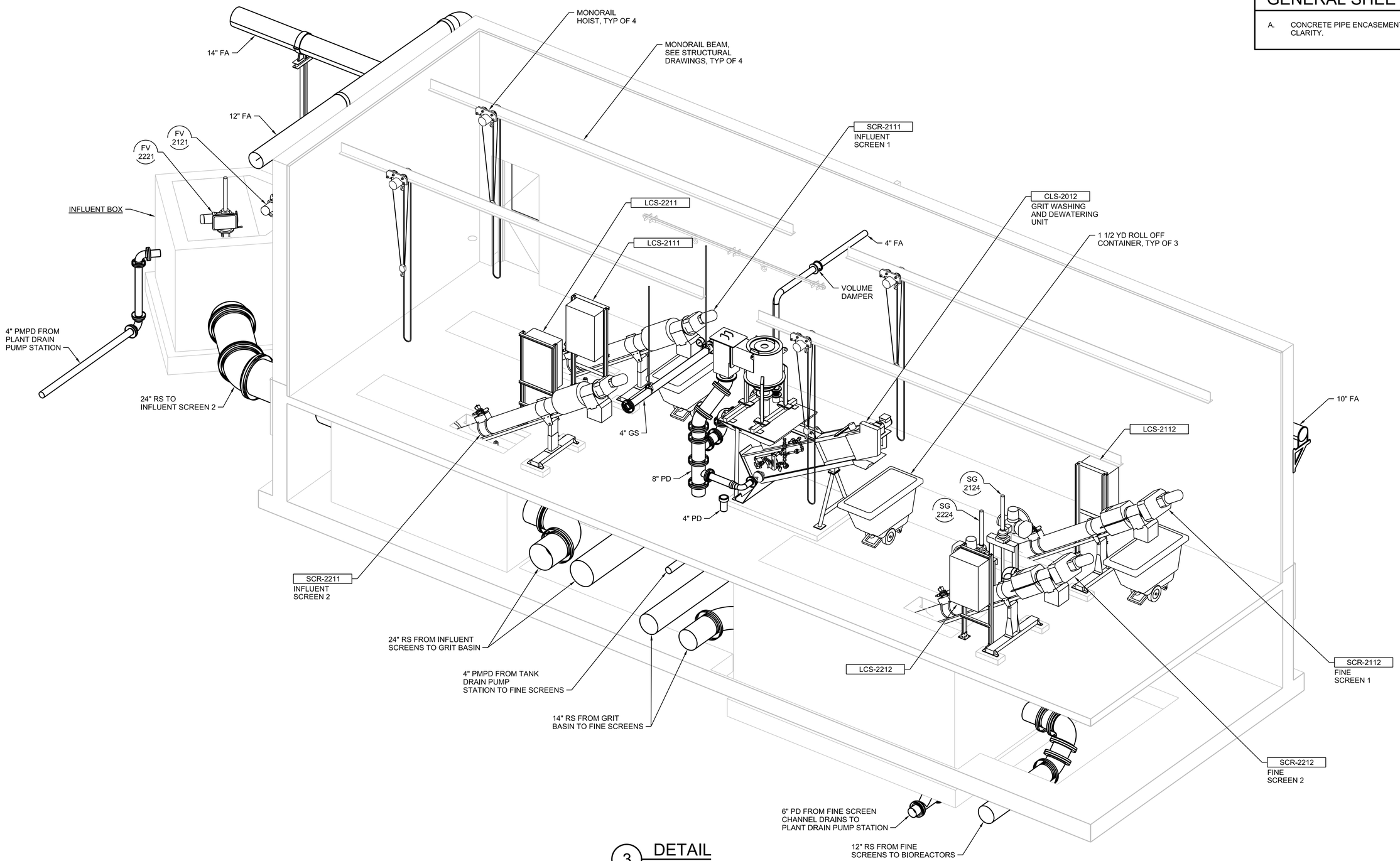

3 DETAIL
NTS
20D1030
20D4001

NO SCALE

FULL SIZE DRAWINGS = 22"x34"
BAR MEASURES 1" LONG
0" 1"

Registered Professional Engineer (Civil) CERTIFICATE NO. 50048 DARREN EDWARDS Date Signed 6-19-25 ARIZONA, U.S.A.
JUNE 19, 2025

A/E FIRM	DESIGNED:	SUB SHEET NO.	TITLE OF SHEET	DRAWING NO.
JACOBS GOVERNMENT SERVICES COMPANY GREENWOOD VILLAGE, CO	R CAMPBELL CADD: G BROWN TECH. REVIEW: D EDWARDS DATE: 06/2025	20D5003	HEADWORKS MECHANICAL ISOMETRIC GRAND CANYON, SOUTH RIM	113 175376 PMIS/PKG NO. 257282 SHEET 262 OF 401

100% COMPLETE CONSTRUCTION DOCUMENTS

GRCA-257282

PLOT DATE: 6/17/2025 PLOT TIME: 11:27:33 AM SS6/V8I D3167666 - South Rim\4 Delivery\43 CAD Design\GRCA\257282\Microstation V8I Drawings\PROC\20D5003_D3167666.dgn

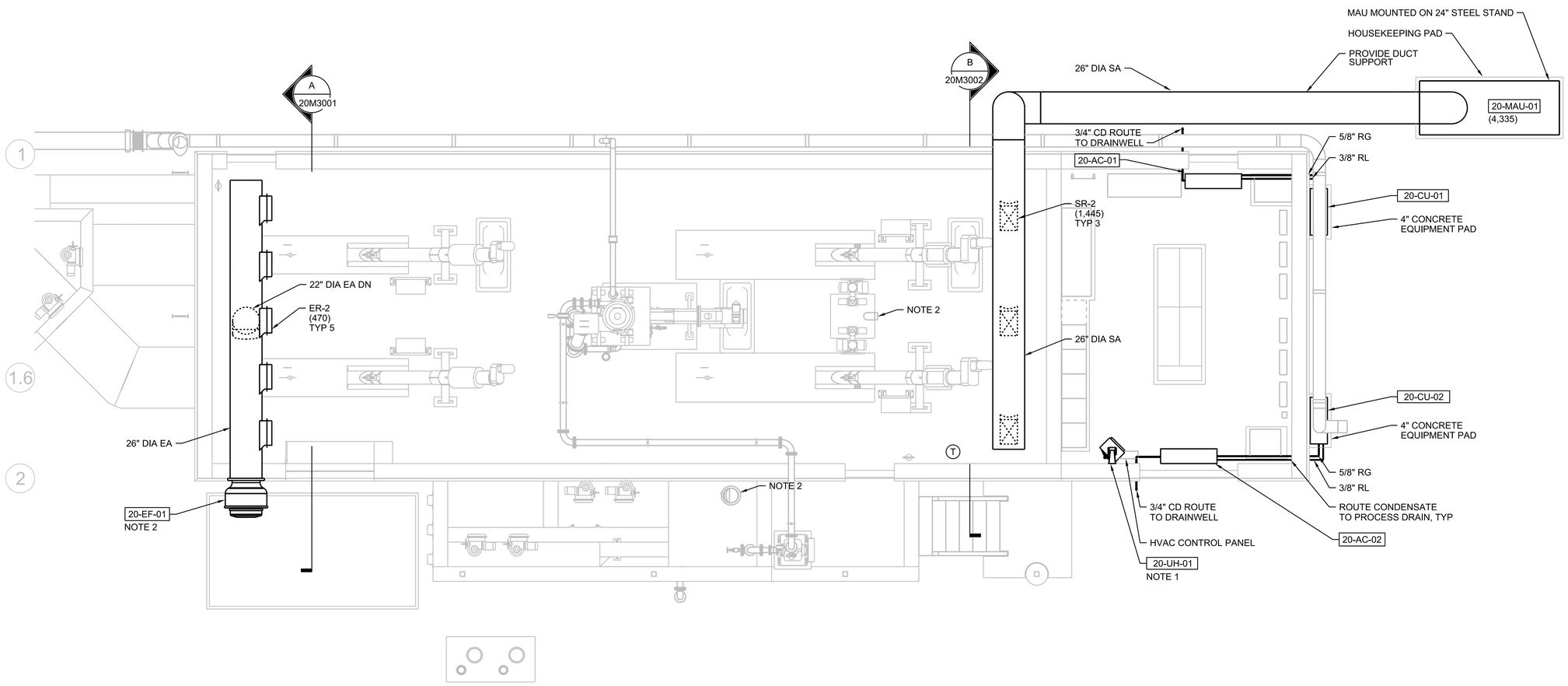

PLAN
1/4"=1'-0"

GENERAL SHEET NOTES

A. BALANCE AIRFLOW INSIDE HEADWORKS TO BE -0.1" WC IN RELATION TO ELECTRICAL ROOM. PROCESS AREA AIRFLOWS TO MATCH NFPA 820 VENTILATION REQUIREMENTS. SEE SHEET 01G0250.

B. COORDINATE STEEL STAND DIMENSIONS WITH SELECTED EQUIPMENT.

C. MOUNT INDOOR UNIT ABOVE DOORWAY INSIDE ELECTRICAL ROOM.

D. MOUNT UNIT HEATERS 8' AFF OR PER MANUFACTURER'S RECOMMENDATION.

SHEET NOTES

1. MOUNT UNIT HEATERS 8' AFF OR PER MANUFACTURER'S RECOMMENDATION.
2. FOUL AIR (FA) TO BE PULLED FROM VARIOUS CONNECTIONS INSIDE THIS FACILITY. SEE SPECIFICATION SECTION 23 05 93 FOR ADDITIONAL DETAILS.
3. BALANCE THE 20-EF-01 EXHAUST FAN TO ACHIEVE A -0.1" STATIC PRESSURE AS MEASURED FROM THE ROOM TO OUTSIDE WITH THE DOORS CLOSED. ODOR CONTROL FANS WILL REMOVE MIN 350 CFM FROM HEADWORKS.

0 4 8 12
1/4"=1'-0"

FULL SIZE DRAWINGS = 22"x34"
BAR MEASURES 1" LONG
0" 1"

Registered Professional Engineer (Mechanical) CERTIFICATE NO. 46267 SCOTT HINTE Date Signed 6-30-25 ARIZONA, U.S.A.
Scott Hinte
Expires 06-30-2026

A/E FIRM	DESIGNED:	SUB SHEET NO.	TITLE OF SHEET	DRAWING NO.
JACOBS GOVERNMENT SERVICES COMPANY GREENWOOD VILLAGE, CO	S HINTE CADD: S HOSTETLER TECH. REVIEW: J SACKINGER DATE: 06/2025	20M1030	HEADWORKS HVAC PLAN GRAND CANYON, SOUTH RIM	113 175376 PMIS/PKG NO. 257282 SHEET 263 OF 401

100% COMPLETE CONSTRUCTION DOCUMENTS

GRCA-257282

PLOT DATE: 6/17/2025 PLOT TIME: 9:11:07 AM SS6/V8i D3167666 - South Rim\4 Delivery\43 CAD Design\GRCA\257282\Microstation V8\ Drawings\MECH\20M1030_D3167666.dgn

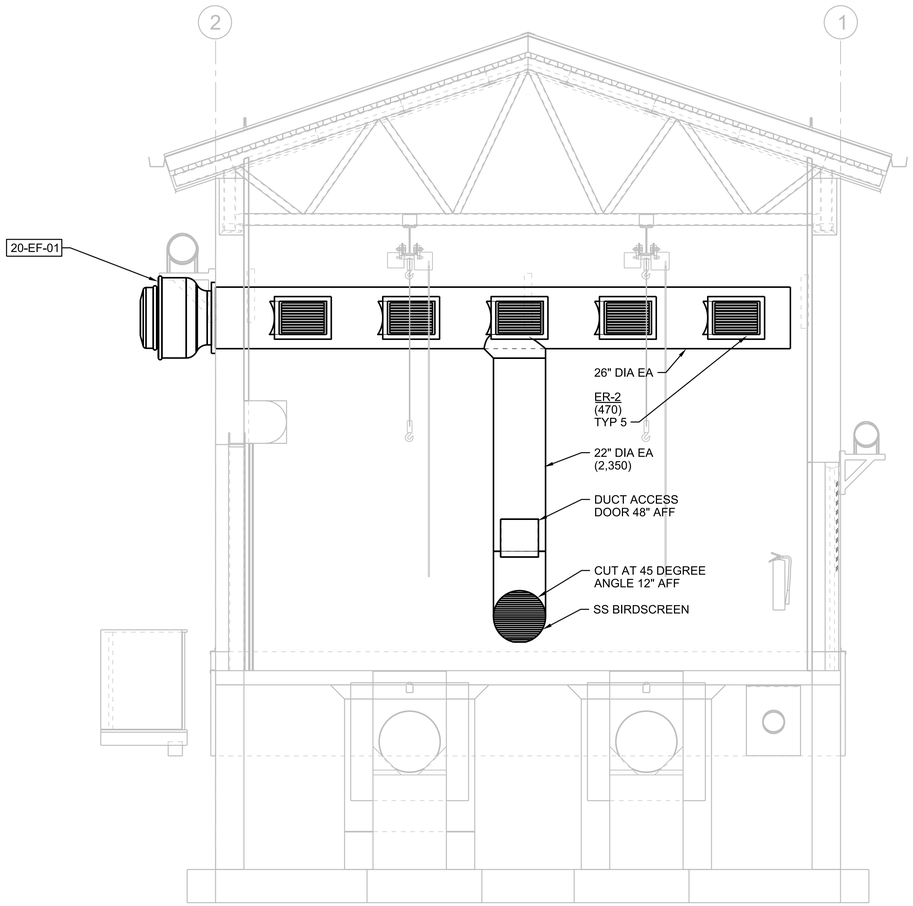

A SECTION
3/8"=1'-0"
20M1030

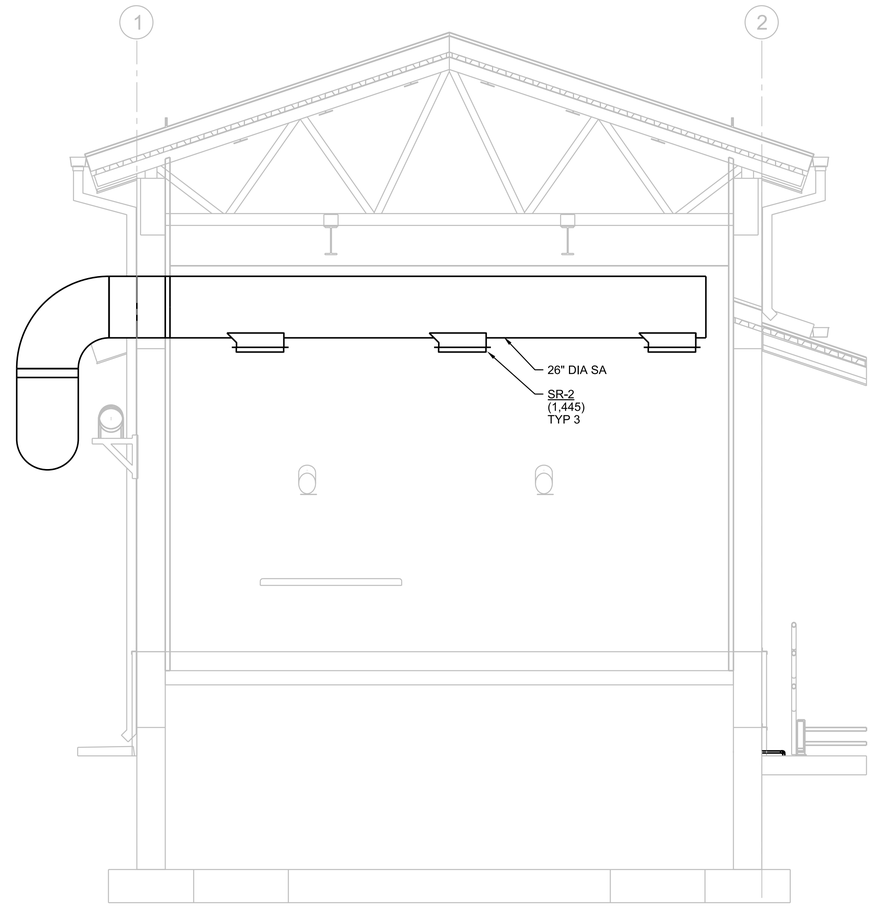

B SECTION
3/8"=1'-0"
20M1030

0 2 4 6
3/8"=1'-0"

FULL SIZE DRAWINGS = 22"x34"
BAR MEASURES 1" LONG
0" 1"

Registered Professional Engineer (Mechanical)
CERTIFICATE NO. 46267
SCOTT HINTE
Date Signed 6-30-25
ARIZONA, U.S.A.
Scott Hinte
Expires 06-30-2026

A/E FIRM	DESIGNED:	SUB SHEET NO.	TITLE OF SHEET	DRAWING NO.
JACOBS GOVERNMENT SERVICES COMPANY GREENWOOD VILLAGE, CO	S HINTE CADD: S HOSTETLER TECH. REVIEW: J SACKINGER DATE: 06/2025	20M3001	HEADWORKS HVAC SECTIONS GRAND CANYON, SOUTH RIM	113 175376 PMIS/PKG NO. 257282 SHEET 264 OF 401

100% COMPLETE CONSTRUCTION DOCUMENTS

GRCA-257282

PLOT DATE: 6/17/2025 PLOT TIME: 9:11:17 AM SS6\V8i D3167666 - South Rim\4 Delivery\43 CAD Design\GRCA\257282\Microstation V8i Drawings\MECH\20M3001_D3167666.dgn

SHEET NOTES

1. 1 1/4" RW DOWN CENTER OF EQUIPMENT/CONES TO 3 ABOVE BOTTOM SLAB, KEEP ALL PIPING BELOW CHECKER PLATE

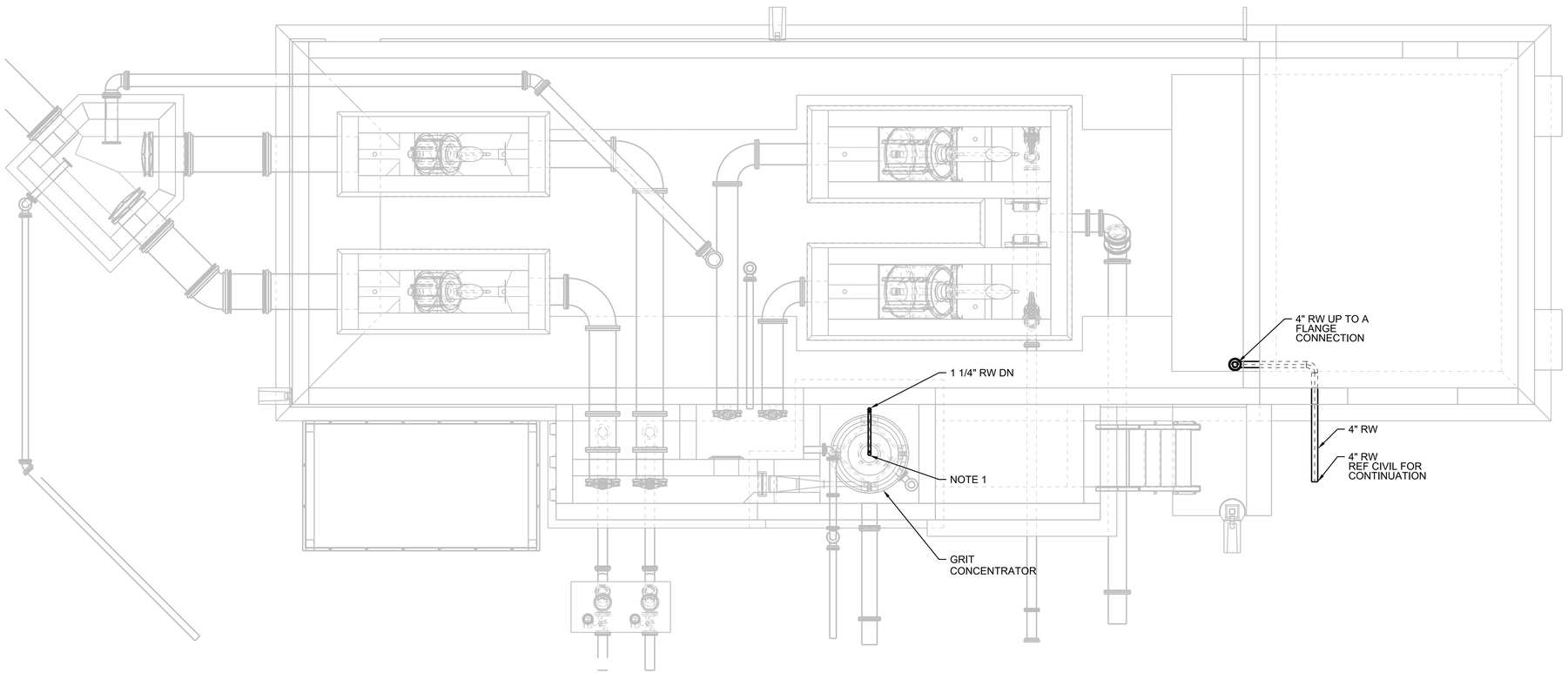

PLAN
1/4"=1'-0"

0 4 8 12
1/4"=1'-0"

FULL SIZE DRAWINGS = 22"x34"
BAR MEASURES 1" LONG
0" 1"

Registered Professional Engineer (Mechanical) CERTIFICATE NO. 46267 SCOTT HINTE Date Signed 6-30-25 ARIZONA, U.S.A.
Scott Hinte
Expires 06-30-2026

A/E FIRM	DESIGNED:	SUB SHEET NO.	TITLE OF SHEET	DRAWING NO.
JACOBS GOVERNMENT SERVICES COMPANY GREENWOOD VILLAGE, CO	S HINTE CADD: S HOSTETLER TECH. REVIEW: J SACKINGER DATE: 06/2025	20P1020	HEADWORKS PLUMBING LOWER LEVEL PLAN GRAND CANYON, SOUTH RIM	113 175376 PMIS/PKG NO. 257282 SHEET 265 OF 401

100% COMPLETE CONSTRUCTION DOCUMENTS

GRCA-257282

PLOT DATE: 6/17/2025 PLOT TIME: 9:14:30 AM SS6/V8i D3167666 - South Rim\4 Delivery\43 CAD Design\GRCA\257282\Microstation V8i Drawings\PLUMB\20P1020_D3167666.dgn

GENERAL SHEET NOTES

A. NFWH-1 AND V230 UTILIZING RECLAIMED WATER SHALL BE LABELED "CAUTION! NON-POTABLE WATER- DO NOT DRINK". REFER TO DETAIL 1014-002.

SHEET NOTES

1. 2" DOWN, PROVIDE UNIONS AND ISOLATION VALVE TO ALLOW FOR TURNING OFF WATER AND DISCONNECTION/REMOVAL OF STICK OF NPW TO SCREEN CAN BE TIPPED UP OUT OF CHANNEL

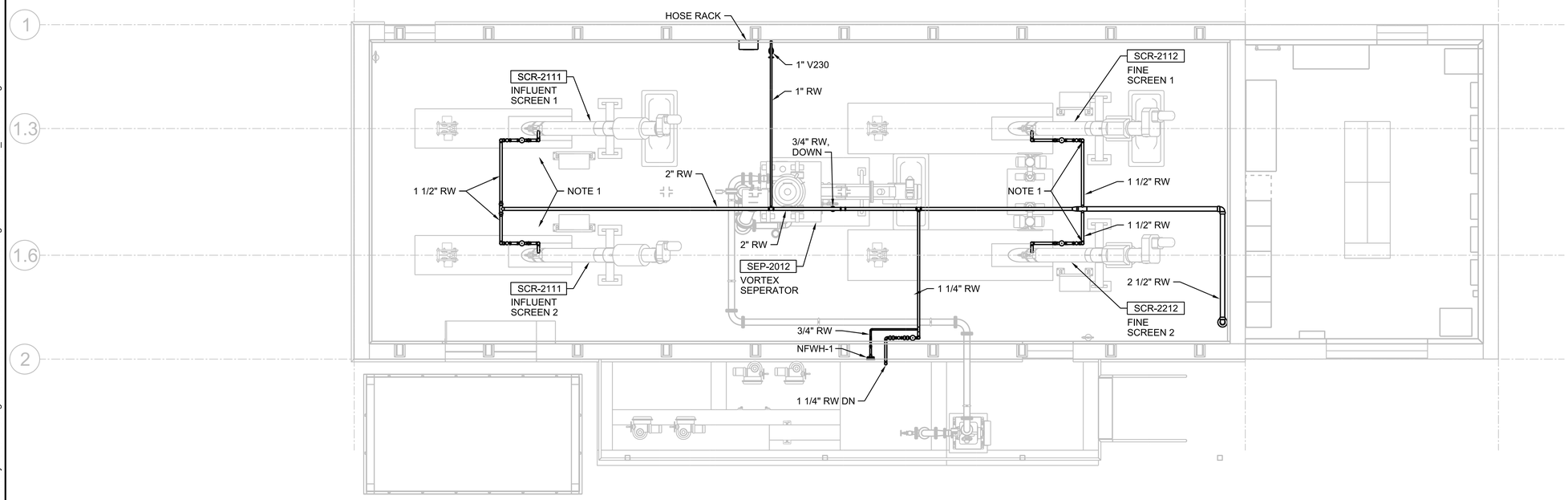

PLAN
1/4"=1'-0"

N

0 4 8 12
1/4"=1'-0"

FULL SIZE DRAWINGS = 22"x34"
BAR MEASURES 1" LONG
0" 1"

Registered Professional Engineer (Mechanical)
CERTIFICATE NO. 46267
SCOTT HINTE
Date Signed 6-30-25
ARIZONA, U.S.A.
Scott Hinte
Expires 06-30-2026

A/E FIRM	DESIGNED:	SUB SHEET NO.	TITLE OF SHEET	DRAWING NO.
JACOBS GOVERNMENT SERVICES COMPANY GREENWOOD VILLAGE, CO	S HINTE CADD: S HOSTETLER TECH. REVIEW: J SACKINGER DATE: 06/2025	20P1030	HEADWORKS PLUMBING PLAN GRAND CANYON, SOUTH RIM	113 175376 PMIS/PKG NO. 257282 SHEET 266 OF 401

GRCA-257282

100% COMPLETE CONSTRUCTION DOCUMENTS

PLOT DATE: 6/17/2025 PLOT TIME: 9:13:48 AM SS6\V8i D3167666 - South Rim\4 Delivery\43 CAD Design\GRCA\257282\Microstation V8i Drawings\PLUMB\20P1030_D3167666.dgn

GENERAL SHEET NOTES

1. SEE P&ID DRAWINGS FOR VALVING AND INSTRUMENTATION NOT IDENTIFIED HERE.

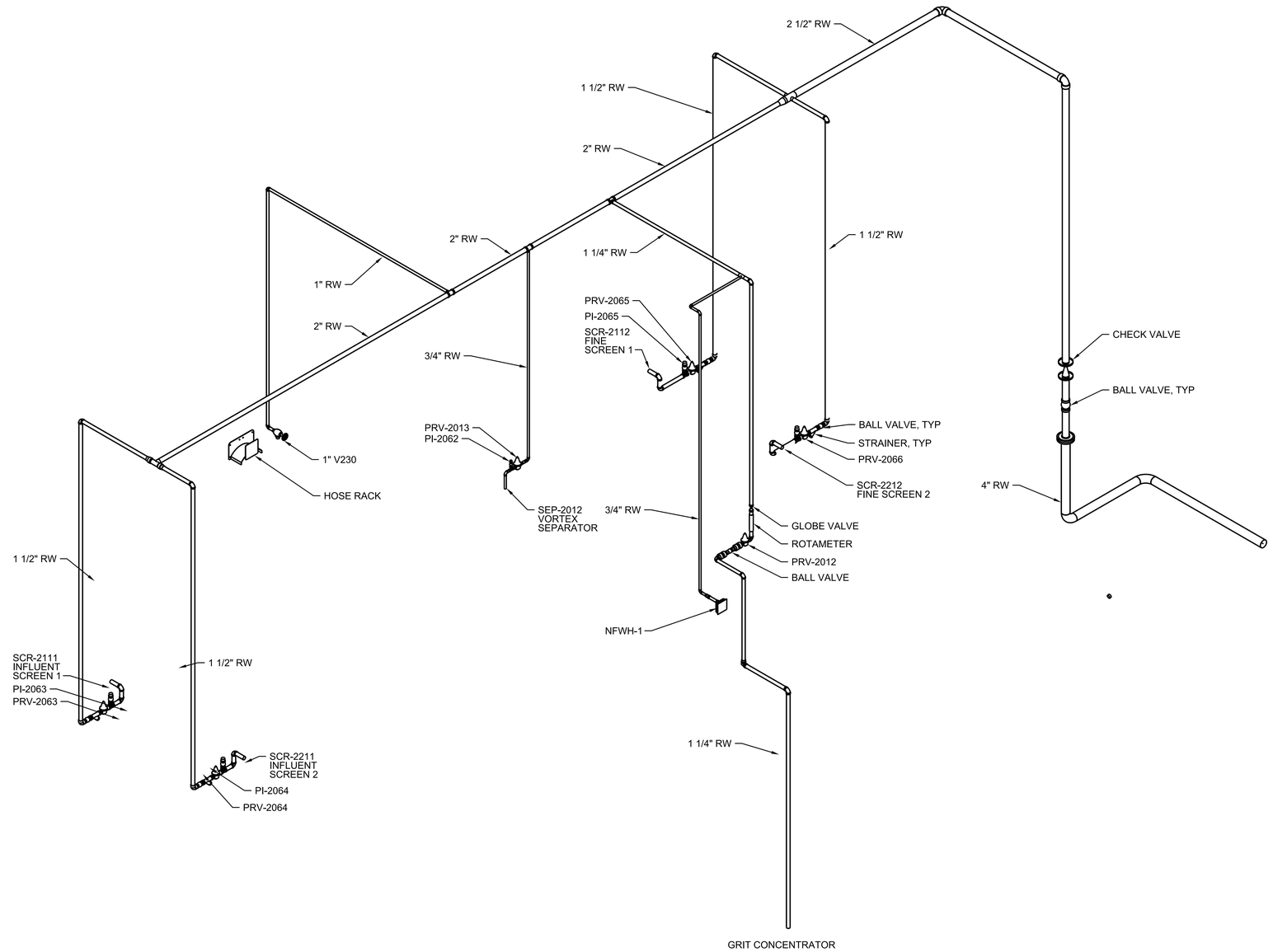

SERVICE WATER

NTS

FULL SIZE DRAWINGS = 22"x34"
BAR MEASURES 1" LONG

0" 1"

Registered Professional Engineer (Mechanical)
CERTIFICATE NO. 46267
SCOTT HINTE
Date Signed 6-18-25
ARIZONA, U.S.A.
Scott Hinte
Expires 06-30-2026

A/E FIRM	DESIGNED:	SUB SHEET NO.	TITLE OF SHEET	NO SCALE
JACOBS GOVERNMENT SERVICES COMPANY	S HINTE	20P9001	HEADWORKS PLUMBING ISOMETRIC	DRAWING NO. 113 175376
	CADD: S HOSTETLER			PMIS/PKG NO. 257282
GREENWOOD VILLAGE, CO	TECH. REVIEW: J SACKINGER		GRAND CANYON, SOUTH RIM	SHEET 267 OF 401
	DATE: 06/2025			

100% COMPLETE CONSTRUCTION DOCUMENTS

GRCA-257282

PLOT DATE: 6/17/2025 PLOT TIME: 9:13:41 AM SS6/V8i D3167666 - South Rim\4 Delivery\43 CAD Design\GRCA\257282\Microstation V8i DrawingsIPLUMB\20P9001_D3167666.dgn

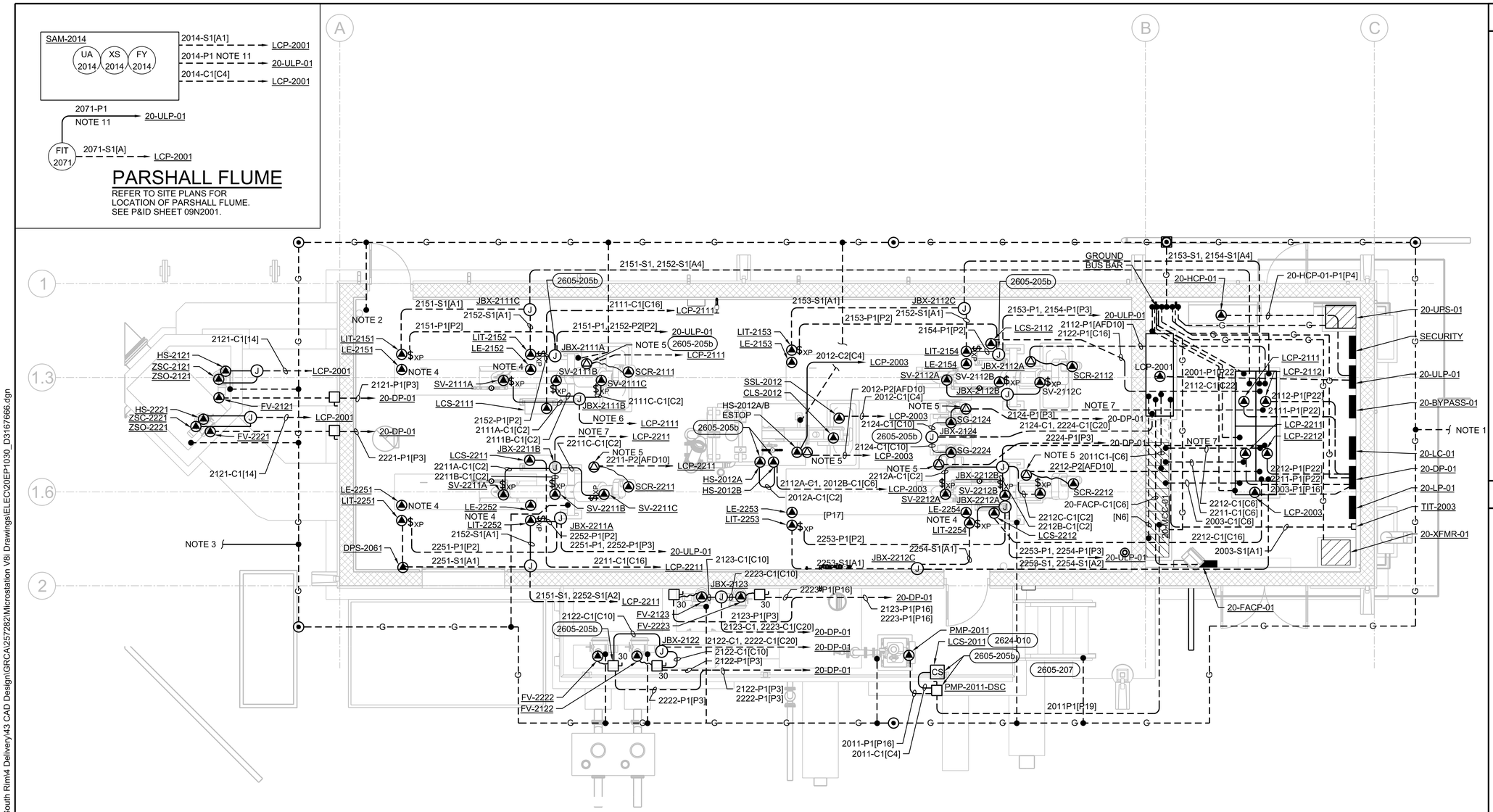

PLAN

1/4"=1'-0"

0 4 8 12

1/4"=1'-0"

GENERAL SHEET NOTES

A. PROVIDE SEALOFFS PRIOR TO TERMINATION TO ALL DEVICES, EQUIPMENT, CONTROL STATIONS, CONTROL PANELS, SENSORS, SWITCHES, AND ELECTRICAL EQUIPMENT IN HAZARD AREAS AND WHEN ENTERING/LEAVING HAZARD AREAS. REFER TO DRAWINGS 01G0250 AND 01G0251 FOR AREA CLASSIFICATION.

B. MAINTAIN A MINIMUM OF 24" BETWEEN POWER CONDUITS AND CONTROL (EXCEPT AS SHOWN FOR HANDSTATIONS) AND INSTRUMENTATION CONDUIT EXCEPT AT POINT OF TERMINATION.

C. PLANS ARE DIAGRAMMATIC AND NOT INTENDED TO SHOW SPECIFIC ROUTING AND RACEWAY CONFIGURATION. CONTRACTOR TO LAYOUT CONDUIT RUNS IN COMPLIANCE WITH THE GENERAL CONSTRAINTS OF THE PROJECT DOCUMENTS.

D. PROVIDE SEALOFFS PRIOR TO TERMINATION TO ALL DEVICES, EQUIPMENT, CONTROL STATIONS, CONTROL PANELS, SENSORS, SWITCHES, AND ELECTRICAL EQUIPMENT IN HAZARD AREAS AND WHEN ENTERING/LEAVING HAZARD AREAS. REFER TO DRAWINGS 01G0250 AND 01G0251 FOR AREA CLASSIFICATIONS.

E. MAINTAIN A MINIMUM OF 24" BETWEEN POWER CONDUITS AND CONTROL (EXCEPT AS SHOWN FOR HANDSTATIONS) AND INSTRUMENTATION CONDUITS EXCEPT AT POINT OF TERMINATION.

F. COORDINATE CONDUIT ENCLOSURE ENTRIES WITH MANUFACTURERS INSTALLATION MANUAL PRIOR TO ROUGH-IN OF EQUIPMENT AND INSTRUMENTS.

G. PLANS ARE DIAGRAMMATIC AND NOT INTENDED TO SHOW SPECIFIC ROUTING, OFFSETS, CONDULETS, PULLBOXES, SUPPORTS OR RACEWAY CONFIGURATION NECESSARY FOR A COMPLETE SYSTEM. CONTRACTOR TO LAYOUT CONDUIT RUNS IN COMPLIANCE WITH THE GENERAL CONSTRAINTS OF THE PROJECT DOCUMENTS

SHEET NOTES

1. CONNECT TO RECEIVING STATION GROUND WIRE. REFER TO DRAWING 18E1030.
2. BOND TO REBAR IN CONCRETE.
3. BOND TO ODOR CONTROL GROUND RING. REFER TO DRAWING 22E1030.
4. PROVIDE 1" CONDUIT FOR VENDOR CABLE FROM SENSOR TO TRANSMITTER. REFER TO VENDOR INSTALLATION MANUAL FOR DEVICE REQUIREMENTS. PROVIDE SEALOFF BETWEEN SENSOR AND TRANSMITTER.
5. PROVIDE INTERLOCKED RECEPTACLE WITH CORD AND PLUG CONNECTION AS INDICATED ON DRAWING 20E5001, NOTE 2. PROVIDE MOUNTING SUPPORT IN ACCORDANCE WITH DETAIL 2605-205b.
6. 2111A-C1, 2111B-C1, 2111C-C1 [C7].
7. 2211A-C1, 2211B-C1, 2211C-C1 [C7].
8. 2112A-C1, 2112B-C1, 2112C-C1 [C7].
9. 2212A-C1, 2212B-C1, 2212C-C1 [C7].
10. REFER TO P&ID DRAWING SHEETS 09N2001, 09N2002, 09N2003 AND 09N2004 FOR CONTROL POINTS OF CONNECTION.
11. REFER TO SHEET 08E2001 FOR CONDUIT AND WIRE.

0 4 8 12

1/4"=1'-0"

FULL SIZE DRAWINGS = 22"x34"
BAR MEASURES 1" LONG

0" 1"

Registered Professional Engineer (Electrical) CERTIFICATE NO. 81240 DAVID BURGER Date Signed 6-19-2025 ARIZONA, U.S.A.

JUNE 19, 2025

A/E FIRM	DESIGNED:	SUB SHEET NO.	TITLE OF SHEET	DRAWING NO.
JACOBS GOVERNMENT SERVICES COMPANY GREENWOOD VILLAGE, CO	D BURGER CADD: J GARIBAY TECH. REVIEW: J LANDMAN DATE: 06/2025	20EP1030	HEADWORKS ELECTRICAL PROCESS PLAN GRAND CANYON, SOUTH RIM	113 175376 PMIS/PKG NO. 257282 SHEET 268 OF 401

100% COMPLETE CONSTRUCTION DOCUMENTS

GRCA-257282

PLOT DATE: 6/17/2025 PLOT TIME: 4:53:21 PM SS6/V8i D3167666 - South Rim\4 Delivery\43 CAD Design\GRCA\257282\Microstation V8i Drawings\ELEC\20EP1030_D3167666.dgn

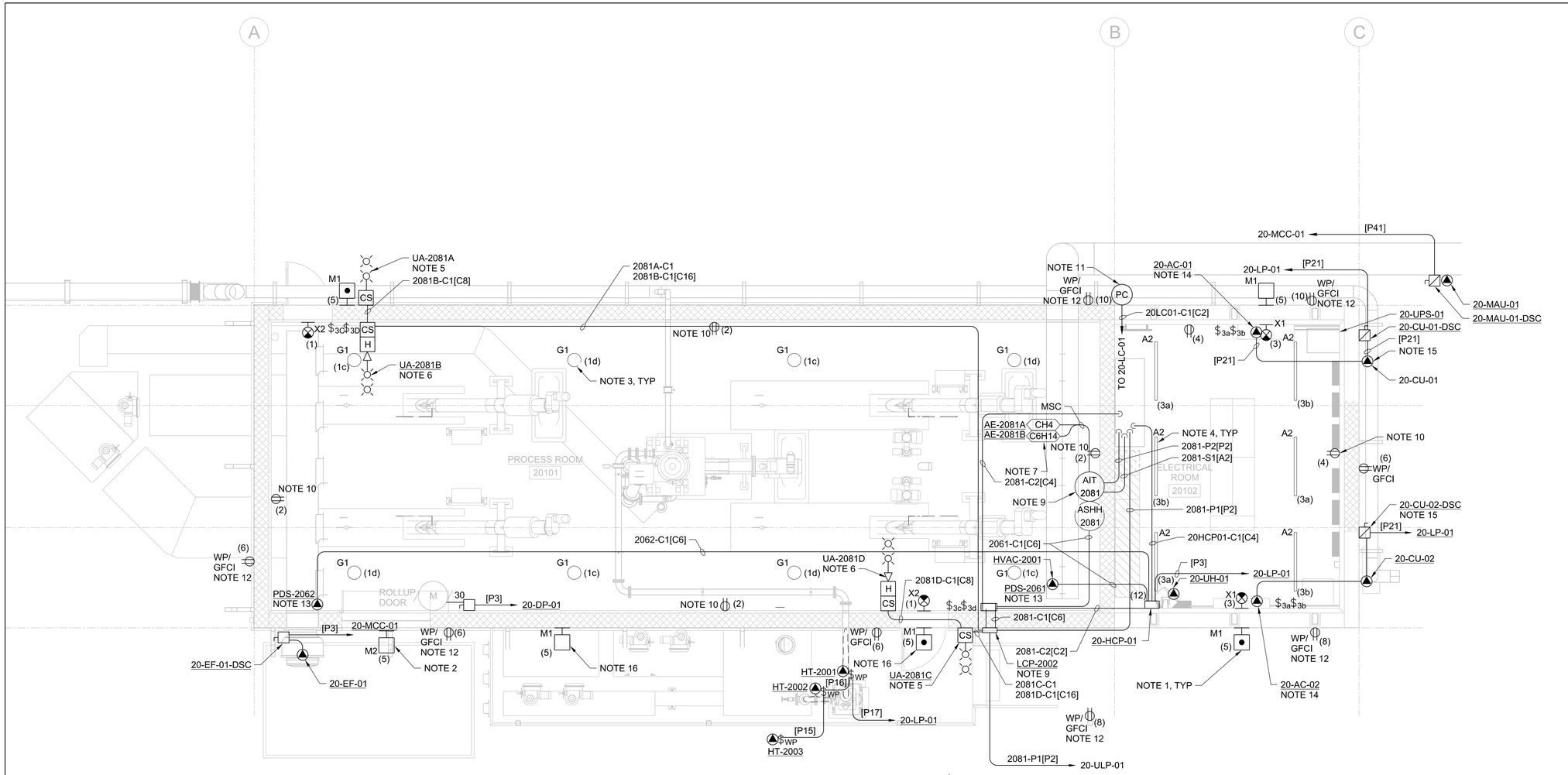

PLAN

1/4"=1'-0"

0 4 8 12

1/4"=1'-0"

N

0 4 8 12

1/4"=1'-0"

FULL SIZE DRAWINGS = 22"x34"
BAR MEASURES 1" LONG

0" 1"

GENERAL SHEET NOTES

A. NUMBERS SHOWN IN PARENTHESIS, (N) ADJACENT TO LIGHT AND RECEPTACLES DENOTE CIRCUIT NUMBERS IN FACILITY PANELBOARDS 20-LP-01. PROVIDE #12 CONDUCTORS FOR 20A OR 15A CIRCUITS LESS THAN 75 FEET. PROVIDE #10 CONDUCTORS FOR CIRCUITS GREATER THAI 75 FEET. REFER TO PANELBOARD SCHEDULES.

B. COMBINE RECEPTACLE AND LIGHTING CIRCUITS IN A SINGLE CONDUIT TO MINIMIZE LENGTH OF CONDUCTORS AND CONDUIT. CIRCUITS COMBINED INTO A SINGLE CONDUIT SHALL BE SIZED FOR NEC DERATING AND CONDUIT FILL REQUIREMENTS.

C. FOR INFORMATION ON EXTERIOR LIGHTING CONTROLS, SEE CONTROL DIAGRAM ON DRAWING 08E7110.

D. FOR LUMINAIRE SCHEDULE AND NOTES, SEE DRAWING 08E6001 AND 08E6002.

E. PROVIDE SEALOFFS PRIOR TO TERMINATION TO ALL DEVICES, EQUIPMENT, CONTROL STATIONS, CONTROL PANELS, SENSORS, SWITCHES, AND ELECTRICAL EQUIPMENT IN HAZARD AREAS AND WHEN ENTERING/LEAVING HAZARD AREAS. REFER TO DRAWINGS 01G0250 AND 01G0251 FOR AREA CLASSIFICATIONS.

F. MAINTAIN A MINIMUM OF 24" BETWEEN POWER CONDUITS AND CONTROL (EXCEPT AS SHOWN FOR HANDSTATIONS) AND INSTRUMENTATION CONDUITS EXCEPT AT POINT OF TERMINATION.

G. COORDINATE CONDUIT ENCLOSURE ENTRIES WITH MANUFACTURER'S INSTALLATION MANUAL PRIOR TO ROUGH-IN OF EQUIPMENT AND INSTRUMENTS.

H. PLANS ARE DIAGRAMMATIC AND NOT INTENDED TO SHOW SPECIFIC ROUTING, OFFSETS, CONDULETS, PULLBOXES, SUPPORTS OR RACEWAYS CONFIGURATION NECESSARY FOR A COMPLETE SYSTEM. CONTRACTOR TO LAYOUT CONDUIT RUNS IN COMPLIANCE WITH THE GENERAL CONSTRAINTS OF THE PROJECT DOCUMENTS.

SHEET NOTES

1. WALL MOUNT EXTERIOR LUMINAIRES AT 9'-0" AFG, UNLESS SPECIFIED OTHERWISE. COORDINATE FINAL LOCATION WITH ARCHITECTURAL DRAWINGS. PROVIDE WITH BATTERY BACKUP FOR EMERGENCY EGRESS.
2. WALL MOUNT EXTERIOR LUMINAIRE 6" ABOVE ROLL UP DOOR OR TRANSOM PANELS.
3. SUSPEND LUMINAIRES AT 21'-0" AFF IN THIS ROOM, UNLESS SPECIFIED OTHERWISE.
4. SUSPEND LUMINAIRES AT 10'-0" AFF IN THIS ROOM, UNLESS SPECIFIED OTHERWISE.
5. PROVIDE VISUAL INDICATING GO/NO-GO CONTROL PANEL AND SIGNAGE. REFER TO JACOBS DETAIL 2624-001. INTEGRATE WITH GAS DETECTION SYSTEM. REFER TO DRAWING 09N2005.
6. PROVIDE CLASS 1 DIVISION 2 AUDIBLE/VISUAL ALARM NOTIFICATION WITH PUSH-TO-TEST CONTROL STATION AND SIGNAGE. REFER TO JACOBS DETAIL 2624-002. INTEGRATE WITH GAS DETECTION SYSTEM. REFER TO DRAWING 09N2005.
7. PROVIDE GAS DETECTORS 18"-24" IN FRONT OF FLOOR LEVEL MECHANICAL EXHAUST DUCT.
8. PROVIDE GAS DETECTION CONTROL AND ALARM PANEL WITH INTEGRAL BACKUP BATTERY, CABLING, DETECTION, AND CONFIGURATION.
9. WIRE, CABLE, AND INSTALLATION ARE MANUFACTURER DEPENDENT. REFER TO INSTALLATION MANUAL PRIOR TO ROUGH-IN.
10. CLASS 1 DIV 2 RECEPTACLE.
11. MOUNT PHOTOCELL AS HIGH AS POSSIBLE. FIELD ADJUST AND AIM AS REQUIRED BY MANUFACTURER.
12. RECEPTACLE FOR DOWNSPOUT HEAT TRACE. PROVIDE IN-USE COVER AND SELF-REGULATING HEAT TRACE WITH PLUG CONNECTION. PROVIDE "IN-USE" COVER.
13. CLASS 1 DIVISION 1 PRESSURE DIFFERENTIAL SWITCH. PROVIDE 1/8" STAINLESS STEEL TUBING WITH NPT CONNECTION TO SWITCH PORTS, OR AS DIRECTED BY MANUFACTURER INSTALLATION MANUAL.

SHEET NOTES

14. PROVIDE NEMA 6-40R RECEPTACLE AND NEMA 6-40P WITH #8 AWG 2C+G SJ CORD FOR EQUIPMENT CONNECTION.
15. 60 AMP, FUSE PER EQUIPMENT NAMEPLATE. WIRE TO OUTDOOR CONDENSER FROM ELECTRIC PANEL THEN FROM OUTDOOR UNIT TO INDOOR FAN UNIT. REFER TO MANUFACTURERS INSTALLATION MANUAL.
16. WALL MOUNT EXTERIOR LUMINAIRE 8'-0" ABOVE PLATFORM.

Registered Professional Engineer (Electrical) CERTIFICATE NO. 81240 DAVID BURGER Date Signed 6-19-2025 ARIZONA, U.S.A.

JUNE 19, 2025

A/E FIRM	DESIGNED:	SUB SHEET NO.	TITLE OF SHEET	DRAWING NO.
JACOBS GOVERNMENT SERVICES COMPANY GREENWOOD VILLAGE, CO	D BURGER CADD: J GARIBAY TECH. REVIEW: J LANDMAN DATE: 06/2025	20EF1030	HEADWORKS ELECTRICAL FACILITY PLAN GRAND CANYON, SOUTH RIM	113 175376 PMIS/PKG NO. 257282 SHEET 269 OF 401

GRCA-257282

100% COMPLETE CONSTRUCTION DOCUMENTS

PLOT DATE: 06\17\2025 PLOT TIME: 10:04:31 AM SS6/V8i $FILEL$

GENERAL SHEET NOTES

A. BOND ALL METALLIC OBJECTS WITHIN 6'-0" OF ROOF AND DOWN CONDUCTORS.

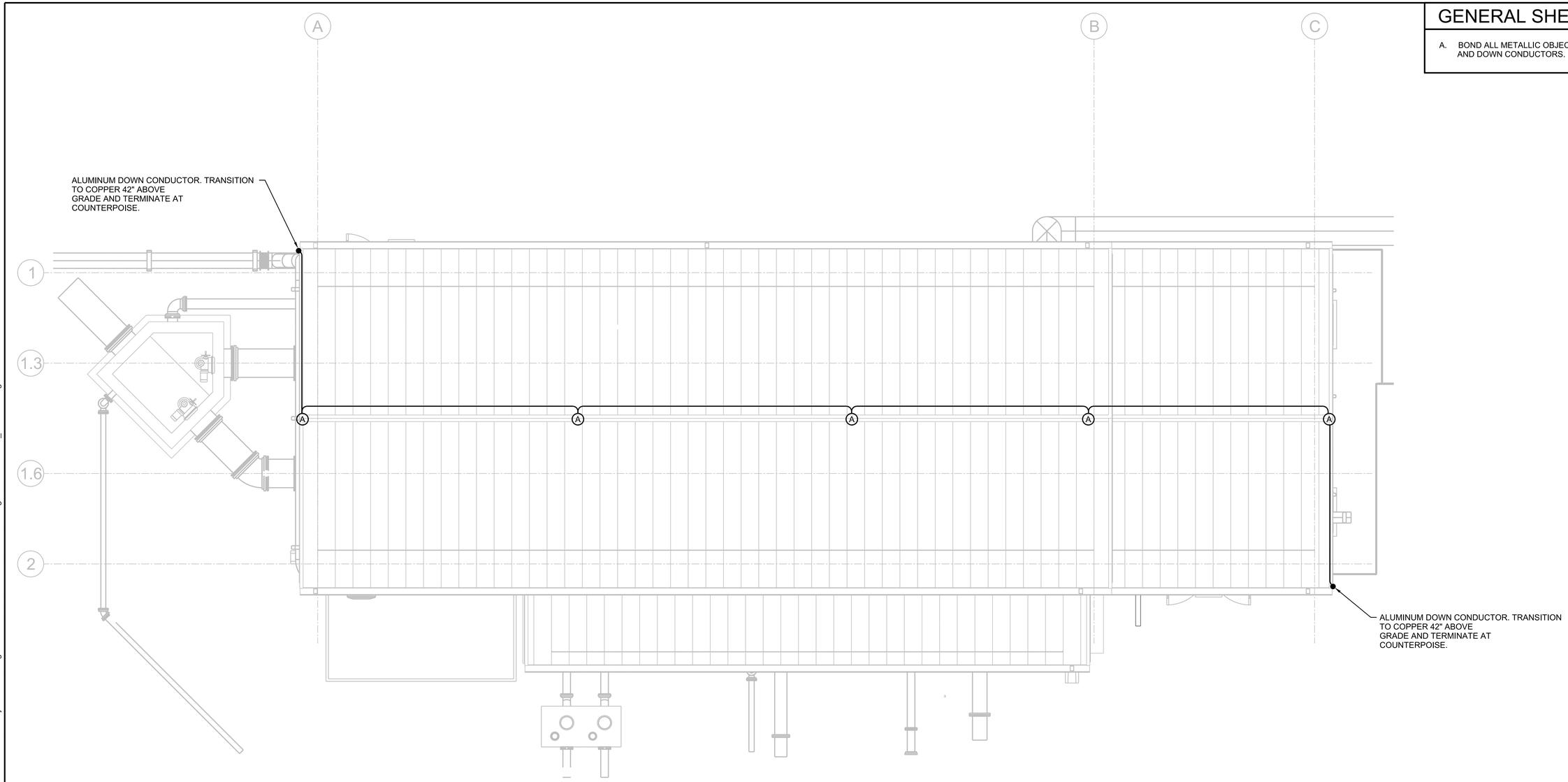

PLAN

1/4"=1'-0"

0 4 8 12

1/4"=1'-0"

N

FULL SIZE DRAWINGS = 22"x34"
BAR MEASURES 1" LONG

0" 1"

Registered Professional Engineer (Electrical) CERTIFICATE NO. 81240 DAVID BURGER Date Signed 6-19-2025 ARIZONA, U.S.A.

JUNE 19, 2025

A/E FIRM	DESIGNED:	SUB SHEET NO.	TITLE OF SHEET	DRAWING NO.
JACOBS GOVERNMENT SERVICES COMPANY GREENWOOD VILLAGE, CO	D BURGER CADD: J GARIBAY TECH. REVIEW: J LANDMAN DATE: 06/2025	20E1040	HEADWORKS ELECTRICAL ROOF PLAN GRAND CANYON, SOUTH RIM	113 175376 PMIS/PKG NO. 257282 SHEET 270 OF 401

100% COMPLETE CONSTRUCTION DOCUMENTS

GRCA-257282

PLOT DATE: 6/16/2025 PLOT TIME: 11:39:23 PM SS6\V8i D3167666 - South Rim\4 Delivery\43 CAD Design\GRCA\257282\Microstation V8i Drawings\ELEC\20E1040_D3167666.dgn

GENERAL NOTES

A. PROVIDE SEALOFFS PRIOR TO TERMINATION TO ALL DEVICES, EQUIPMENT, CONTROL STATIONS, CONTROL PANELS, SENSORS, SWITCHES, AND ELECTRICAL EQUIPMENT IN HAZARD AREAS AND WHEN ENTERING/LEAVING HAZARD AREAS. REFER TO DRAWINGS 01G0250 AND 01G0251 FOR AREA CLASSIFICATIONS.

B. REFER TO P&ID's, BLOCK DIAGRAMS, CONTROL WIRING DIAGRAMS, SPECIFICATIONS, AND VENDOR MANUALS FOR COMPLETE REQUIREMENTS.

SHEET NOTES

1. 1-1/2" CONDUIT WITH 4#4, 1#8 GROUND.
2. PROVIDE 30 AMP INTERLOCKED MOTOR RATED PLUG AND RECEPTACLE LISTED FOR USE IN CLASS 1, DIVISION 2 HAZARD AREA TO SERVE AS LOCAL DISCONNECT. PROVIDE HARD USAGE CORD IN ACCORDANCE WITH NATIONAL ELECTRICAL CODE AND MANUFACTURER REQUIREMENTS AND TERMINATE TO MOTOR AS INDICATED IN EQUIPMENT MANUFACTURERS INSTALLATION MANUAL.
3. PROVIDED BY MCC MANUFACTURER.

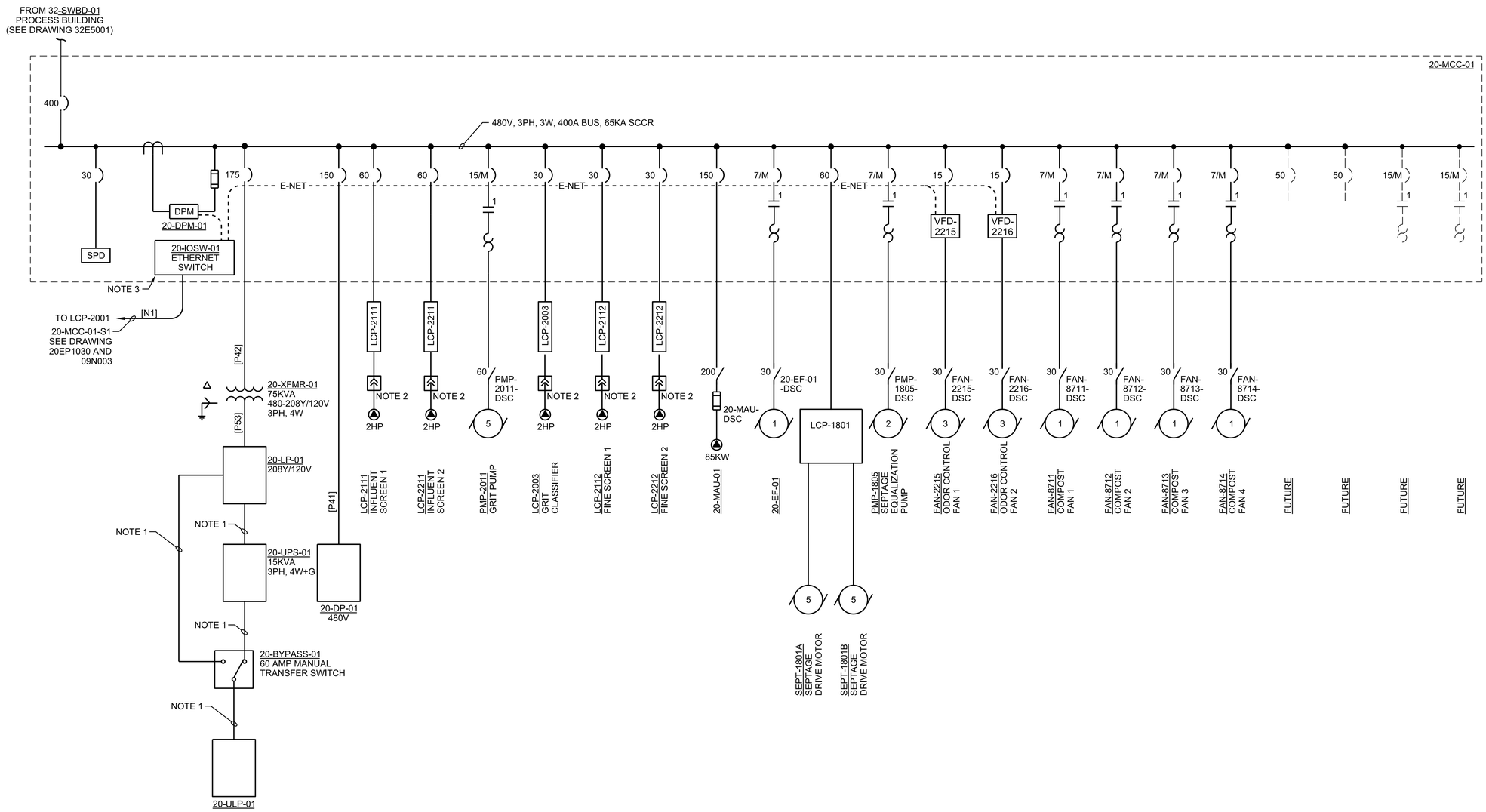

ONE-LINE DIAGRAM

NTS

FULL SIZE DRAWINGS = 22"x34"
BAR MEASURES 1" LONG

0" 1"

Registered Professional Engineer (Electrical) CERTIFICATE NO. 81240 DAVID BURGER Date Signed 6-19-25 ARIZONA, U.S.A.

JUNE 19, 2025

A/E FIRM	DESIGNED:	SUB SHEET NO.	TITLE OF SHEET	DRAWING NO.
JACOBS GOVERNMENT SERVICES COMPANY GREENWOOD VILLAGE, CO	D BURGER CADD: J GARIBAY TECH. REVIEW: J LANDMAN DATE: 06/2025	20E5001	HEADWORKS ELECTRICAL ONE-LINE DIAGRAM 20-MCC-01 GRAND CANYON, SOUTH RIM	113 175376 PMIS/PKG NO. 257282 SHEET 271 OF 401

100% COMPLETE CONSTRUCTION DOCUMENTS

GRCA-257282

PLOT DATE: 6/16/2025 PLOT TIME: 11:36:28 PM SS6\V8i D3167666 - South Rim\4 Delivery\43 CAD Design\GRCA\257282\Microstation V8i Drawings\ELEC\20E5001_D3167666.dgn

PANEL: 20-DP-01

VOLTAGE: 480
PHASE, WIRES: 3, 3
SCR (AMPS): 65 000
SOURCE: 20-MCC-01

PANEL BUS: 150 AMPS
MAIN: 150 BREAKER
125% OF MAX BUS LOAD: 18 AMPS
TOTAL CONNECTED LOAD: 11.7 KVA
TOTAL DEMAND LOAD: 11.7 KVA
TOTAL DESIGN LOAD: 11.7 KVA

* EFCI
** GFCI
MOUNTING: SURFACE
FEED: BOTTOM

DESCRIPTION	NOTES	DEMAND CODE	KVA	CB	CKT	A	B	C	CKT	CB	KVA	DEMAND CODE	NOTES	DESCRIPTION
ROLL-UP DOOR		GENERAL	0.13	20/3	1	1.9			2	20/3	0.40	GENERAL		FV-2121
		---	0.13		3		1.9		4		0.40	---		
		---	0.13		5			1.9	6		0.40	---		
SG-2124		GENERAL	0.40	20/3	7	2.9			8	20/3	0.40	GENERAL		FV-2221
		---	0.40		9		2.9		10		0.40	---		
		---	0.40		11			2.9	12		0.40	---		
SG-2224		GENERAL	0.40	20/3	13	2.9			14	20/3	0.40	GENERAL		FV-2122
		---	0.40		15		2.9		16		0.40	---		
		---	0.40		17			2.9	18		0.40	---		
SPARE		GENERAL		20/3	19	1.4			20	20/3	0.40	GENERAL		FV-2222
		---			21		1.4		22		0.40	---		
		---			23			1.4	24		0.40	---		
SPARE		GENERAL		20/3	25	1.4			26	20/3	0.40	GENERAL		FV-2123
		---			27		1.4		28		0.40	---		
		---			29			1.4	30		0.40	---		
SPARE		GENERAL		20/3	31	1.4			32	20/3	0.40	GENERAL		FV-2223
		---			33		1.4		34		0.40	---		
		---			35			1.4	36		0.40	---		
SPARE		SPARE		20/3	37	2.0			38	20/3	0.56	GENERAL		20-UH-01 ELECTRIC ROOM HEATER
		---			39		2.0		40		0.56	---		
		---			41			2.0	42		0.56	---		
SPARE		SPARE		20/3	43	0.0			44	-	-	---		SPACE
		---			45		0.0		46		-	---		
		---			47			0.0	48		-	---		
SPD		NONE	---	30/3	49	0.0			50	-	-	---		SPACE
		---	---		51		0.0		52		-	---		
		---	---		53			0.0	54		-	---		
					TOTALS	14.1	14.1	14.1	AMPS					
						3.9	3.9	3.9	KVA					

PANEL: 20-ULP-01

VOLTAGE: 208/120
PHASE, WIRES: 3, 4
SCR (AMPS): 10 000
SOURCE: 20-LP-01

PANEL BUS: 125 AMPS
MAIN: 60 BREAKER
125% OF MAX BUS LOAD: 24 AMPS
TOTAL CONNECTED LOAD: 6.3 KVA
TOTAL DEMAND LOAD: 6.3 KVA
TOTAL DESIGN LOAD: 6.3 KVA

MOUNTING: SURFACE
FEED: BOTTOM

DESCRIPTION	NOTES	DEMAND CODE	KVA	CB	CKT	A	B	C	CKT	CB	KVA	DEMAND CODE	NOTES	DESCRIPTION
LCP-2001		GENERAL	1.00	20/1	1	9.0			2	20/1	0.08	GENERAL		LIT-1852 SEPTAGE RECEIVING
HVAC-2001		GENERAL	1.00	20/1	3		9.0		4	20/1	0.08	GENERAL		LIT-2151, LIT-2152
LCP-2002 GAS DETECTION		GENERAL	0.80	20/1	5			7.3	6	20/1	0.08	GENERAL		LIT-2153, LIT-2154
LCP-2201		GENERAL	1.00	20/1	7	9.0			8	20/1	0.08	GENERAL		LIT-2251, LIT-2252
LCP-2202		GENERAL	1.00	20/1	9		9.0		10	20/1	0.08	GENERAL		LIT-2253, LIT-2254
SAM-2014 INFLUENT		GENERAL	1.00	20/1	11			8.3	12	20/1	-			SPARE
FIT-2071 PARSHALL FLUME		GENERAL	0.08	20/1	13	0.7			14	20/1	-			SPARE
SPARE			-	20/1	15		0.0		16	20/1	-			SPARE
SPARE			-	20/1	17			0.0	18	20/1	-			SPARE
SPACE			-	-	19	0.0			20	-	-			SPACE
SPACE			-	-	21		0.0		22	-	-			SPACE
SPACE			-	-	23			0.0	24	-	-			SPACE
SPD				30/3	25	0.0			26	-	-			SPACE
					27		0.0		28	-	-			SPACE
					29			0.0	30	-	-			SPACE
					TOTALS	18.7	18.0	15.7	AMPS					
						2.2	2.2	1.9	KVA					

PANEL: 20-LP-01

VOLTAGE: 208/120
PHASE, WIRES: 3, 4
SCR (AMPS): 10 000
SOURCE: 20XFMR01

PANEL BUS: 200 AMPS
MAIN: 200 BREAKER
125% OF MAX BUS LOAD: 99 AMPS
TOTAL CONNECTED LOAD: 21.5 KVA
TOTAL DEMAND LOAD: 21.5 KVA
TOTAL DESIGN LOAD: 21.5 KVA

MOUNTING: SURFACE
FEED: BOTTOM

DESCRIPTION	NOTES	DEMAND CODE	KVA	CB	CKT	A	B	C	CKT	CB	KVA	DEMAND CODE	NOTES	DESCRIPTION
INTERIOR LIGHTS	8 LIGHTS @ 119W EACH	LIGHTING	0.95	20/1	1	13.9			2	20/1	0.72	NEC 220.14(H)	180 VA PER @ 4 RECEPTACLES	RECEPTACLES HEADWORKS ROOM
INTERIOR LIGHTS	6 LIGHTS @ 42W EACH	LIGHTING	0.25	20/1	3		5.1		4	20/1	0.36	NEC 220.14(H)	180 VA PER @ 2 RECEPTACLES	RECEPTACLES ELECTRICAL ROOM
EXTERIOR LIGHTS	5 LIGHTS @ 15W EACH	LIGHTING	0.08	20/1	5			6.6	6	20/1	0.72	NEC 220.14(H)	180 VA PER @ 4 RECEPTACLES	RECEPTACLES EXTERIOR
20-CU-01/20-AC-01 ELECTRIC RM HVAC		GENERAL	2.60	35/2	7	27.9			8	20/1	0.75	NEC 220.14(H)	750 VA PER @ RECEPTACLE	RECEPTACLES GRIT PUMP HEAT TRACE
			2.60		9		27.9		10	20/1	0.75	NEC 220.14(H)	750 VA PER @ RECEPTACLE	RECEPTACLES UVE HEAT TRACE
20-CU-02/20-AC-02 ELECTRIC RM HVAC		GENERAL	2.60	35/2	11			21.7	12	20/1	0.00			SPARE
			2.60		13	23.2			14	20/1	0.18	NEC 220.14(H)	180 VA PER @ RECEPTACLE	RECEPTACLE ODOR CONTROL
SPARE			0.00	20/1	15		6.3		16	20/1	0.75	GENERAL	750 VA	HT-2201 HEAT TRACE ODOR CONTROL
SPARE			0.00	20/1	17			6.3	18	20/1	0.75	GENERAL	750 VA	HT-2202 HEAT TRACE ODOR CONTROL
SPARE			0.00	20/1	19	1.5			20	20/1	0.18	NEC 220.14(H)	180 VA PER @ RECEPTACLE	RECEPTACLE ODOR CONTROL
SPARE			0.00	20/1	21		6.3		22	20/1	0.75		NOTE 1	HT-2001 HEAT TRACE GRIT PUMP
SPARE			0.00	20/1	23			6.3	24	20/1	0.75		NOTE 1	HT-2002 HEAT TRACE GRIT PUMP
SPARE			-	20/1	25	6.3			26	20/1	0.75		NOTE 1	HT-2003 HEAT TRACE TANK DRAIN DISCHARGE
SPARE			-	20/1	27		0.0		28	-	-			SPACE
RECEPTACLE, SEPTAGE RECEIVING	180 VA PER @ 1 RECEPTACLES	NEC 220.14(H)	0.18	20/1	29			1.5	30	-	-			SPACE
HT-1801 HEAT TRACE	NOTE 1	GENERAL	0.75	20/1	31	6.3			32	-	-			SPACE
HT-1802 HEAT TRACE	NOTE 1	GENERAL	0.75	20/1	33		6.3		34	-	-			SPACE
HT-1803 HEAT TRACE	NOTE 1	GENERAL	0.75	20/1	35			6.3	36	-	-			SPACE
SPD				30/3	37	0.0			38	-	-			SPACE
					39		0.0		40	-	-			SPACE
					41			0.0	42	-	-			SPACE
					TOTALS	79.0	51.8	48.5	AMPS					
						9.5	6.2	5.8	KVA					

FULL SIZE DRAWINGS = 22"x34"
BAR MEASURES 1" LONG
0" 1"

Registered Professional Engineer (Electrical) CERTIFICATE NO. 81240 DAVID BURGER Date Signed 6-19-2025 ARIZONA, U.S.A.
JUNE 19, 2025

A/E FIRM
JACOBS GOVERNMENT SERVICES COMPANY
GREENWOOD VILLAGE, CO

DESIGNED: D BURGER
CADD: J GARIBAY
TECH. REVIEW: J LANDMAN
DATE: 06/2025

SUB SHEET NO. 20E6001

TITLE OF SHEET
HEADWORKS ELECTRICAL PANELBOARD SCHEDULES
GRAND CANYON, SOUTH RIM

DRAWING NO. 113 / 175376
PMIS/PKG NO. 257282
SHEET 272 OF 401

100% COMPLETE CONSTRUCTION DOCUMENTS

GRCA-257282

PLOT DATE: 6/16/2025 PLOT TIME: 11:40:59 PM SS6/V8i D3167666 - South Rim\4 Delivery\43 CAD Design\GRCA\257282\Microstation V8i Drawings\ELEC\20E6001_D3167666.dgn

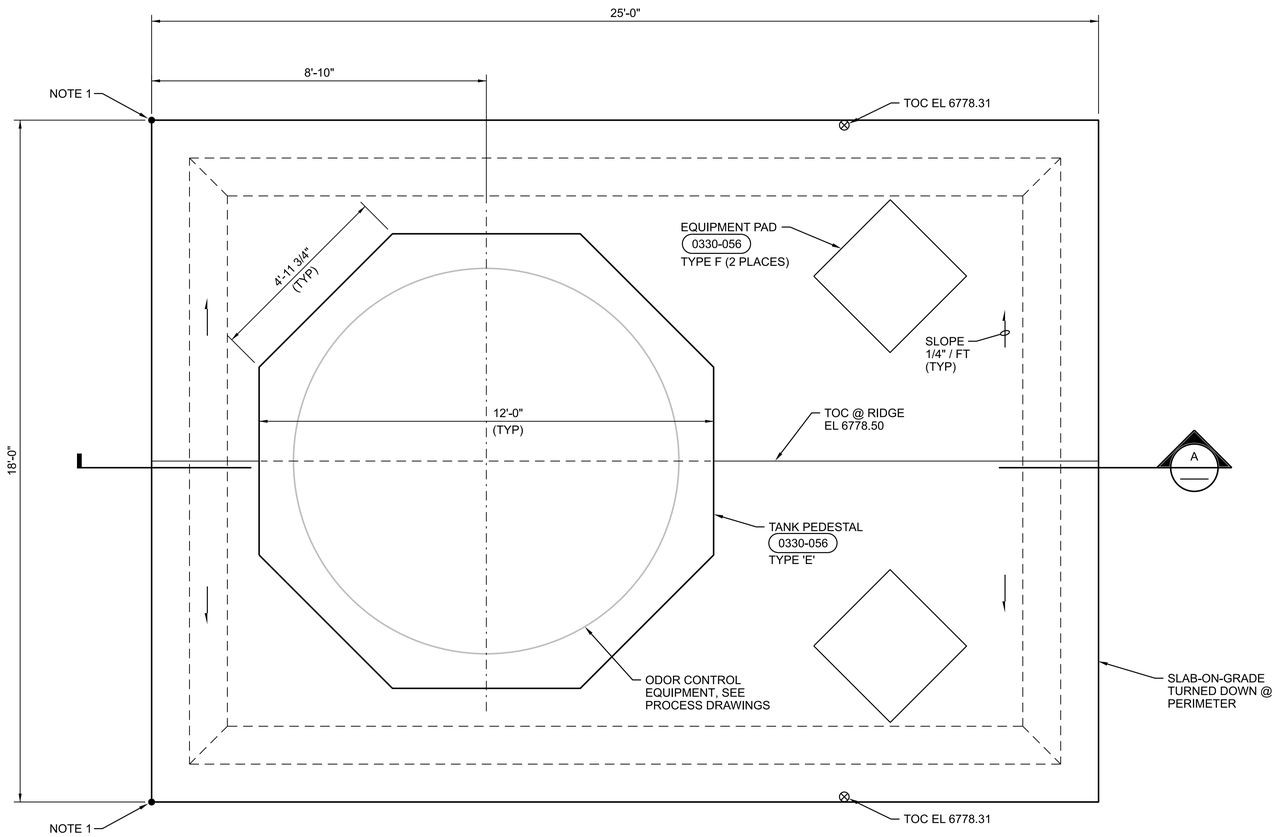

N

PLAN
1/2"=1'-0"

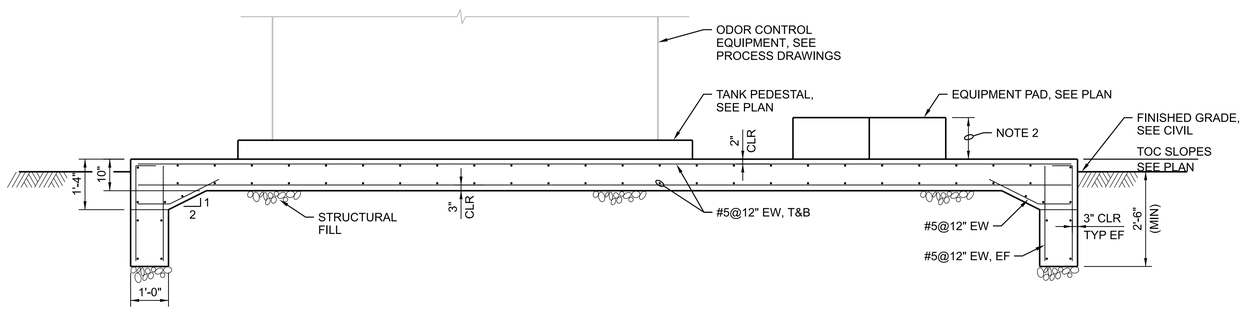

A SECTION
1/2"=1'-0"

0 2 4 6
1/2"=1'-0"

GENERAL NOTES

A. FOR GENERAL STRUCTURAL NOTES, SEE DRAWINGS 01S0001 AND 01S0002.

SHEET NOTES

1. FACILITY LOCATION CONTROL POINT, SEE CIVIL DRAWING 06C2001.
2. COORDINATE EQUIPMENT PAD HEIGHT WITH PROCESS DRAWINGS AND EQUIPMENT MANUFACTURER.

GRCA-257282

100% COMPLETE CONSTRUCTION DOCUMENTS

PLOT DATE: 16-JUN-2025 PLOT TIME: 14:38 SS6/V8i D3167666 - South Rim\4 Delivery\43 CAD Design\GRCA\257282\Microstation V8i Drawings\STRUC\22S1030_D3167666.dgn

FULL SIZE DRAWINGS = 22"x34"
BAR MEASURES 1" LONG
0" 1"

Registered Professional Engineer (Civil) CERTIFICATE NO. 81476 WAYNE W. KOHLER Date Signed 6/20/25 ARIZONA U.S.A.

A/E FIRM: JACOBS GOVERNMENT SERVICES COMPANY, GREENWOOD VILLAGE, CO	DESIGNED: W KOHLER	SUB SHEET NO.	TITLE OF SHEET: ODOR CONTROL STRUCTURAL PLAN AND SECTION
	CADD: B CLEGG	22S1030	GRAND CANYON, SOUTH RIM
	TECH. REVIEW: A FIRTH		
	DATE: 06/2025		

DRAWING NO. 113 / 175376
PMIS/PKG NO. 257282
SHEET 273 OF 401

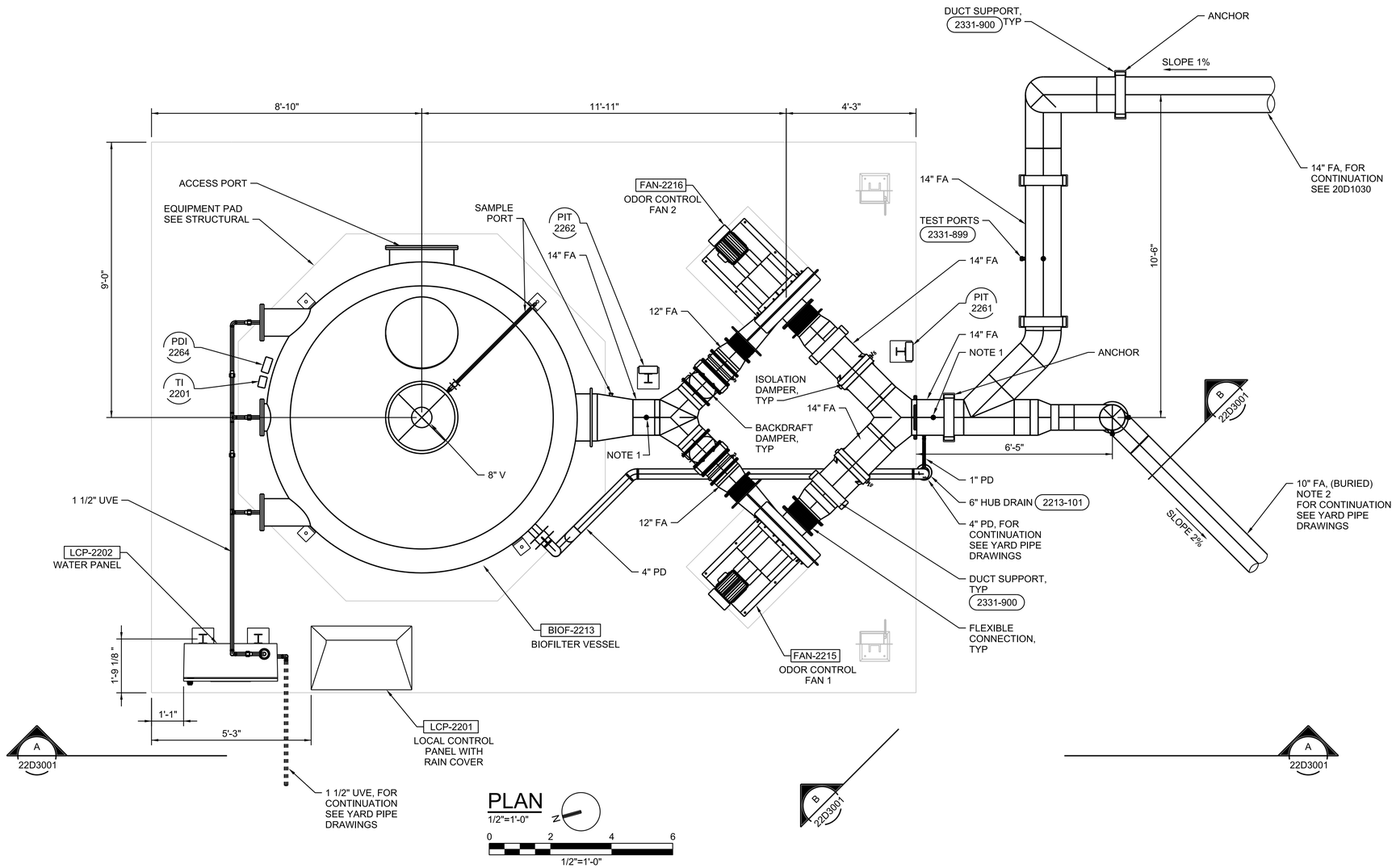

PLAN

1/2"=1'-0"

0 2 4 6

1/2"=1'-0"

GENERAL SHEET NOTES

A. HEAT TRACE AND INSULATE ALL EXPOSED PIPING. SEE 22E1030 FOR HEAT TRACE CIRCUITS.

B. ALL DUCT SUPPORTS SHOWN HEREIN ARE GUIDE SUPPORTS UNLESS SPECIFICALLY INDICATED AS ANCHOR SUPPORTS. SEE DETAILS 2331-900 AND 2331-884.

SHEET NOTES

1. 1" COUPLING FOR PIT INSTRUMENT CONNECTION.
2. FA PIPE FROM COMPOSTING FACILITY.

GRCA-257282

FULL SIZE DRAWINGS = 22"x34"
BAR MEASURES 1" LONG

0" 1"

Registered Professional Engineer (Civil) CERTIFICATE NO. 79157 KENNETH GALARDI Date Signed 6-26-25 ARIZONA, U.S.A. Expires 07-26-2026

A/E FIRM	DESIGNED:	SUB SHEET NO.	TITLE OF SHEET	DRAWING NO.
JACOBS GOVERNMENT SERVICES COMPANY GREENWOOD VILLAGE, CO	L SMOOT CADD: B KISER TECH. REVIEW: K GALARDI DATE: 06/2025	22D1030	ODOR CONTROL MECHANICAL PLAN GRAND CANYON, SOUTH RIM	113 175376 PMIS/PKG NO. 257282 SHEET 274 OF 401

100% COMPLETE CONSTRUCTION DOCUMENTS

PLOT DATE: 6/17/2025 PLOT TIME: 8:27:06 AM SS6IV8i D3167666 - South Rim\4 Delivery\43 CAD Design\GRCA\257282\Microstation V8i Drawings\PROC\22D1030_D3167666.dgn

GENERAL SHEET NOTES

A. HEAT TRACE AND INSULATE ALL EXPOSED PIPING. SEE 22E1030 FOR HEAT TRACE CIRCUITS.

B. COORDINATE ELEVATION WITH FAN MANUFACTURER.

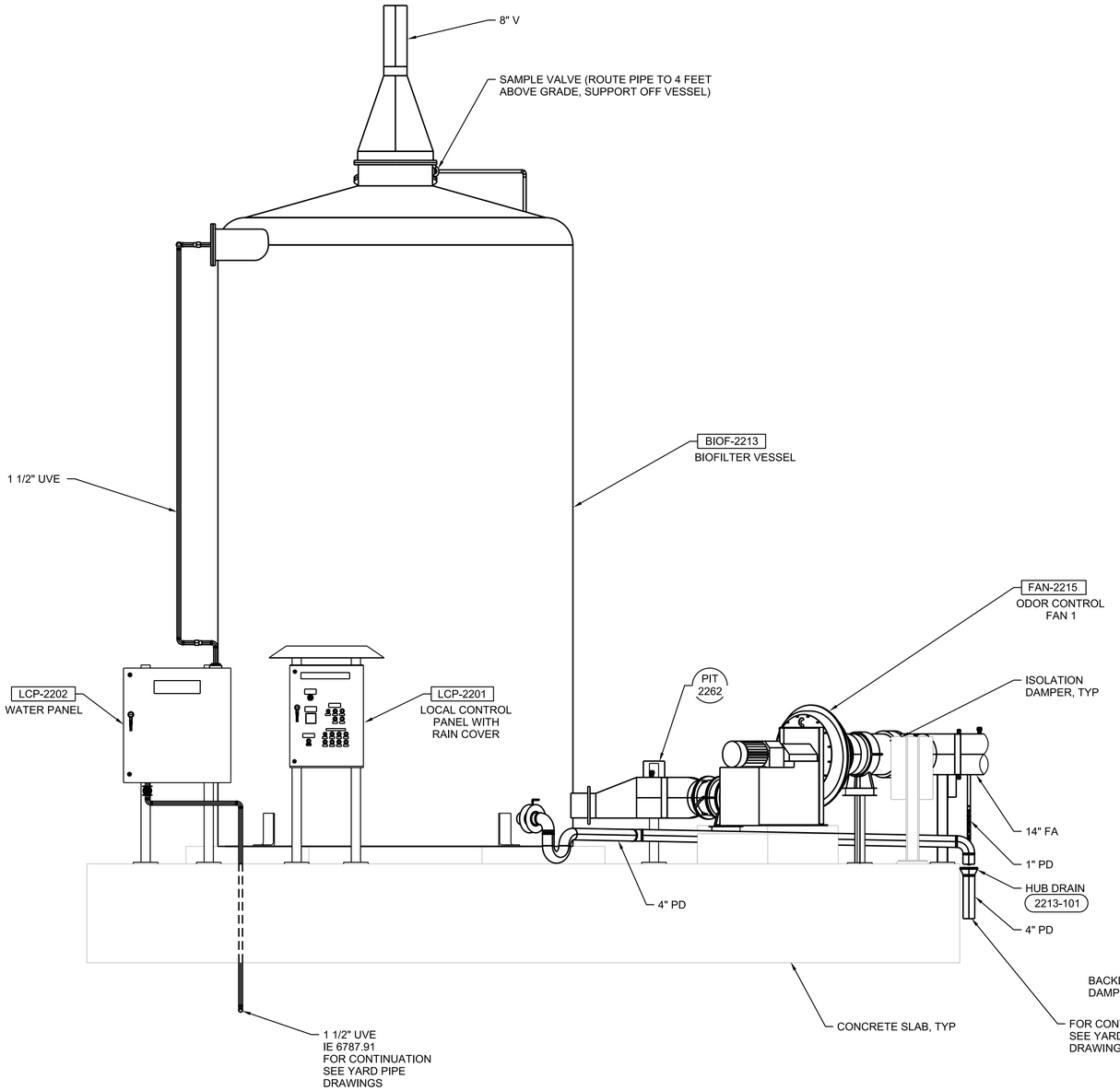

A SECTION
22D1030
1/2"=1'-0"
0 2 4 6
1/2"=1'-0"

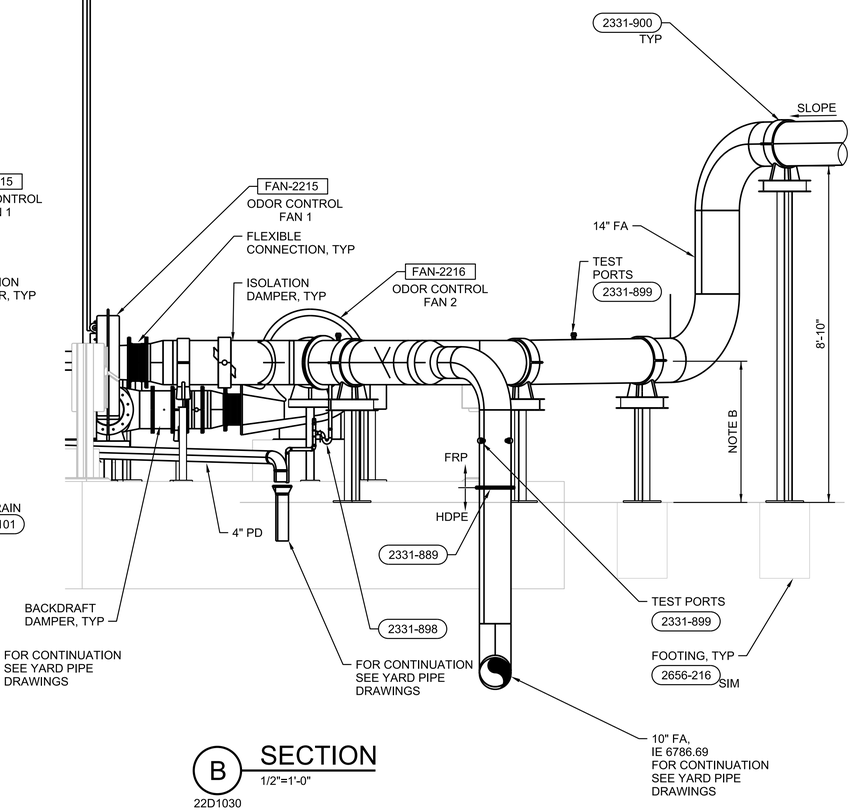

B SECTION
22D1030
1/2"=1'-0"

FULL SIZE DRAWINGS = 22"x34"
BAR MEASURES 1" LONG
0" 1"

Registered Professional Engineer (Civil)
CERTIFICATE NO. 79157
KENNETH GALARDI
Date Signed 6/17/25
ARIZONA, U.S.A.
Expires 07-26-2026

A/E FIRM	DESIGNED:	SUB SHEET NO.	TITLE OF SHEET	DRAWING NO.
JACOBS GOVERNMENT SERVICES COMPANY GREENWOOD VILLAGE, CO	L SMOOT CADD: B KISER TECH. REVIEW: K GALARDI DATE: 06/2025	22D3001	ODOR CONTROL MECHANICAL SECTIONS GRAND CANYON, SOUTH RIM	113 175376 PMIS/PKG NO. 257282 SHEET 275 OF 401

100% COMPLETE CONSTRUCTION DOCUMENTS

GRCA-257282

PLOT DATE: 6/17/2025 PLOT TIME: 8:27:14 AM SS6\V8i D3167666 - South Rim\4 Delivery\43 CAD Design\GRCA\257282\Microstation V8i Drawings\PROC\22D3001_D3167666.dgn

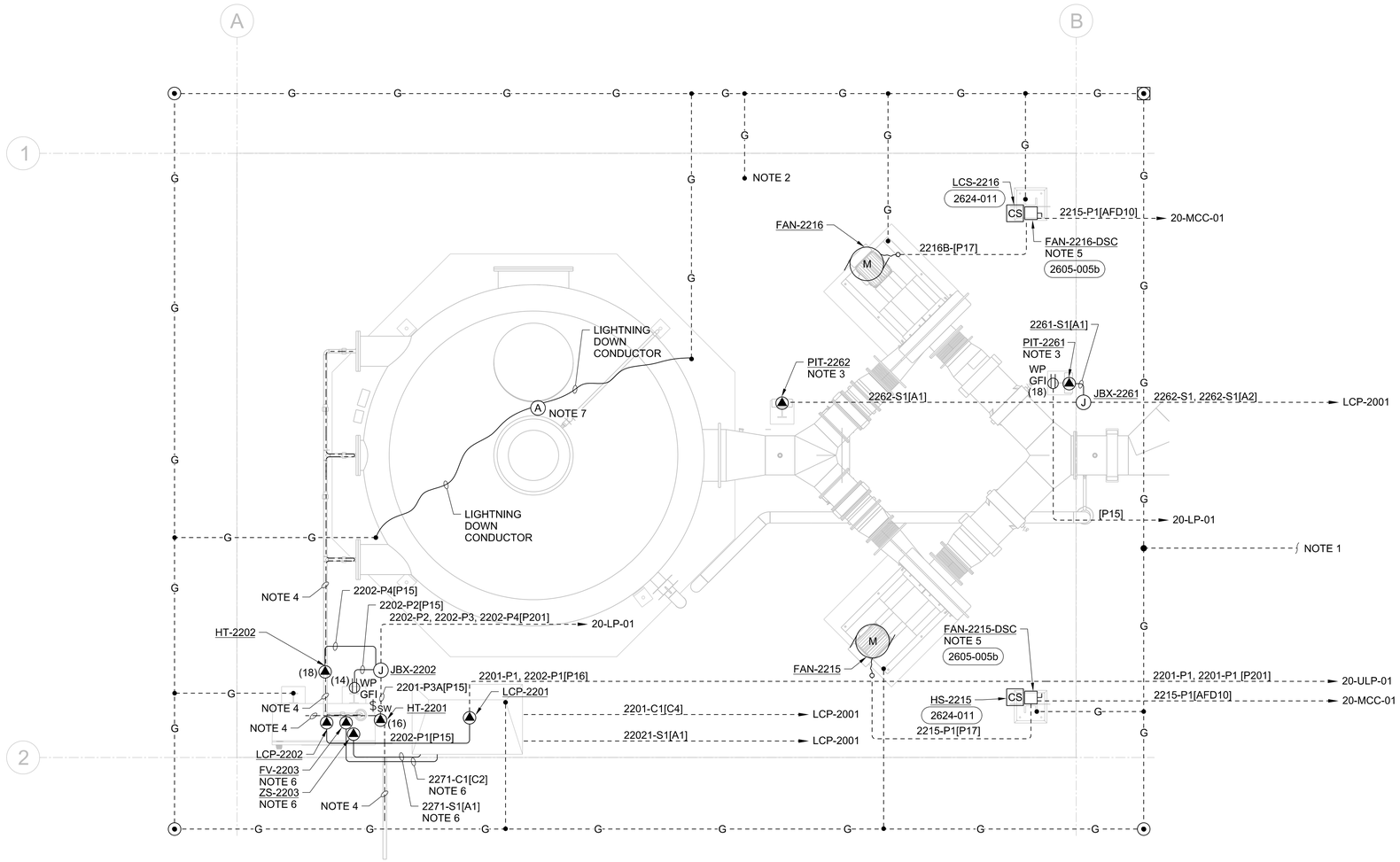

PLAN

1/2" = 1'-0"

GENERAL NOTES

A. PROVIDE SEALOFFS PRIOR TO TERMINATION TO ALL DEVICES, EQUIPMENT, CONTROL STATIONS, CONTROL PANELS, SENSORS, SWITCHES, AND ELECTRICAL EQUIPMENT IN HAZARD AREAS AND WHEN ENTERING/LEAVING HAZARD AREAS. REFER TO DRAWINGS 01G0250 AND 01G0251 FOR AREA CLASSIFICATION.

B. MAINTAIN A MINIMUM OF 24" BETWEEN POWER CONDUITS AND CONTROL (EXEPT AS SHOWN FOR HANDSTATIONS) AND INSTRUMENTATION CONDUITS EXCEPT AT POINT OF TERMINATION.

C. SIZE SAFETY DISCONNECTS FOR EQUIPMENT SERVED.

D. NUMBERS SHOWN IN PARENTHESIS, (N), ADJACENT TO RECEPTACLES AND HEAT TRACE DENOTE CIRCUIT NUMBERS IN FACILITY PANELBOARD.

SHEET NOTES

1. CONNECT TO HEADWORKS GROUND RING. REFER TO DRAWING 20EP1030.
2. BOND TO REBAR IN CONCRETE.
3. COORDINATE INSTALLATION OF SENSOR ELEMENT WITH MECHANICAL CONTRACTOR.
4. REFER TO MECHANICAL DRAWING 22D3001 AND PID DRAWING 09N2201 FOR EXTENT OF HEAT TRACE REQUIRED.
5. PROVIDE AUXILIARY CONTACTS SET TO OPEN VFD CUTOFF CIRCUIT BEFORE OPENING KNIFE BLADES.
6. REFER TO SHEET 09N2201 FOR WIRING BETWEEN LCP-2201 AND LCP-2202.
7. COORDINATE LIGHTNING PROTECTION AIR TERMINAL ATTACHMENT WITH ODOR CONTROL EQUIPMENT EXHAUST STACK.

GRCA-257282

0 2 4 6
1/2"=1'-0"

FULL SIZE DRAWINGS = 22"x34"
BAR MEASURES 1" LONG
0" 1"

Registered Professional Engineer (Electrical) CERTIFICATE NO. 81240 DAVID BURGER Date Signed 6-19-2025 ARIZONA, U.S.A.
JUNE 19, 2025

A/E FIRM	DESIGNED:	SUB SHEET NO.	TITLE OF SHEET	DRAWING NO.
JACOBS GOVERNMENT SERVICES COMPANY GREENWOOD VILLAGE, CO	D BURGER CADD: J GARIBAY TECH. REVIEW: J LANDMAN DATE: 06/2025	22E1030	ODOR CONTROL ELECTRICAL PLAN GRAND CANYON, SOUTH RIM	113 175376 PMIS/PKG NO. 257282 SHEET 276 OF 401

100% COMPLETE CONSTRUCTION DOCUMENTS

PLOT DATE: 06\17\2025 PLOT TIME: 8:53:10 AM SS6/V8i $FILEL$

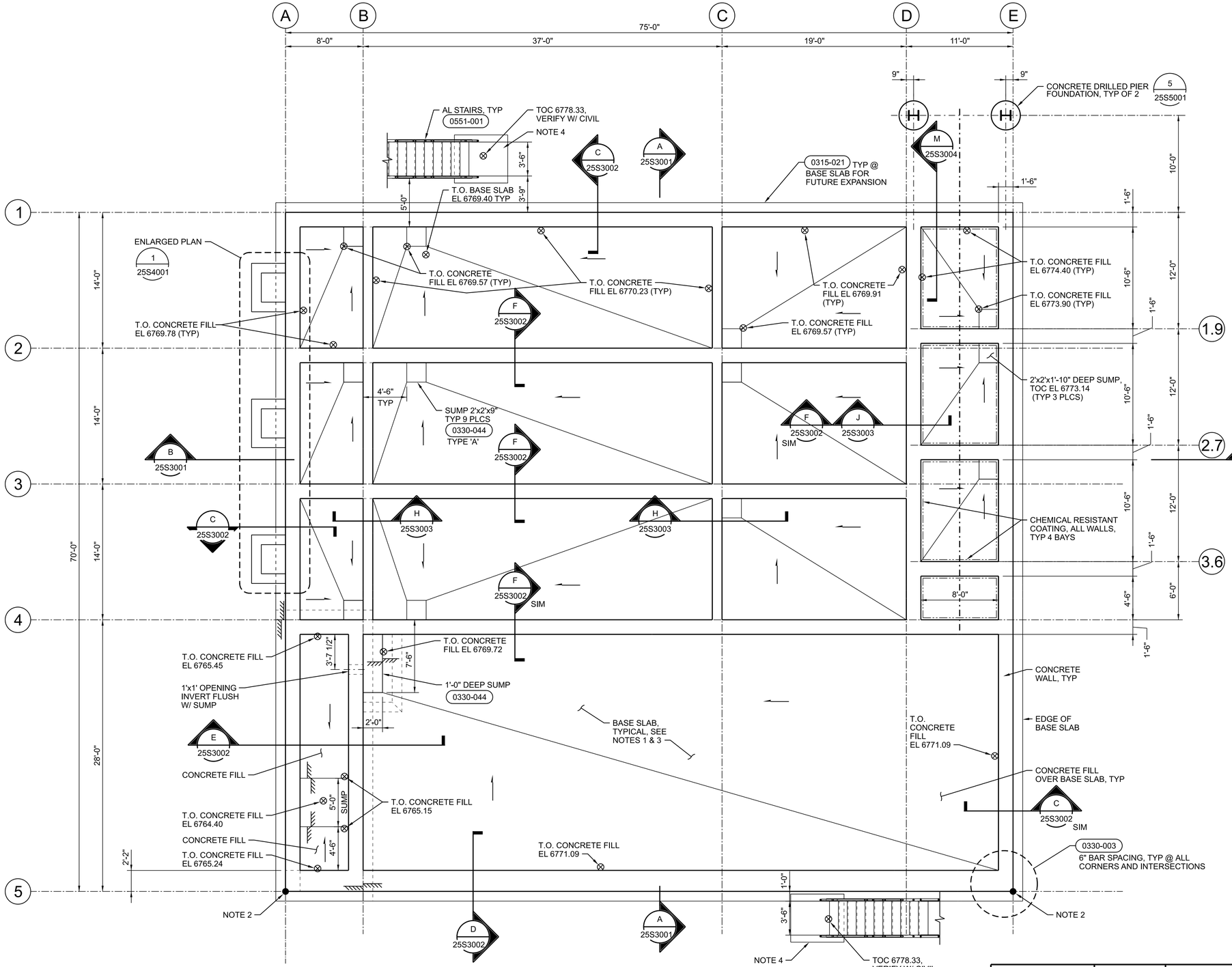

LOWER LEVEL PLAN

3/16"=1'-0"

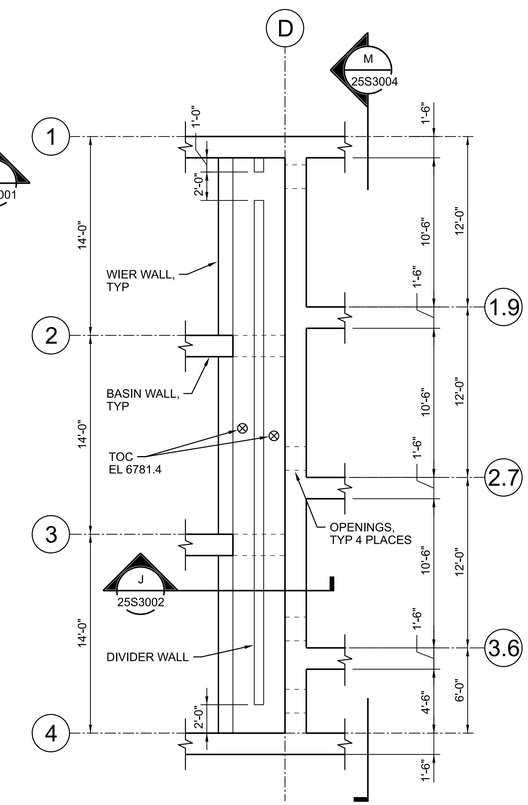

PLAN @ EFFLUENT CHANNELS

3/16"=1'-0"

0 4 8 16
3/16"=1'-0"

GENERAL NOTES

A. FOR GENERAL STRUCTURAL NOTES, SEE DRAWINGS 01S0001 AND 01S0002.

B. FOR WALL CONSTRUCTION JOINT LOCATION, SEE 0315-131, SUBMIT LAYOUT FOR REVIEW.

SHEET NOTES

1. REINFORCE BASE SLAB WITH #8@12" EW, T&B. PROVIDE ADDITIONAL REINFORCEMENT WHERE SHOWN IN SECTIONS.
2. FACILITY LOCATION CONTROL POINT, SEE CIVIL DRAWING 06C2001.
3. CONTRACTOR SHALL SUBMIT BASE SLAB CONSTRUCTION JOINT LAYOUT FOR REVIEW AND APPROVAL.
4. 5'x5'x10" THICK CONCRETE STAIR LANDING, REINFORCE WITH #4@12" EW, T&B.

FULL SIZE DRAWINGS = 22"x34"
BAR MEASURES 1" LONG
0" 1"

Registered Professional Engineer (Civil) Wayne W. Kohler 81476 WAYNE W. KOHLER Date Signed 6/20/25 ARIZONA U.S.A.	A/E FIRM: JACOBS GOVERNMENT SERVICES COMPANY, GREENWOOD VILLAGE, CO	DESIGNED: W KOHLER; CADD: B CLEGG; TECH. REVIEW: A FIRTH; DATE: 06/2025	SUB SHEET NO. 25S1020	TITLE OF SHEET: PROCESS TANKS STRUCTURAL LOWER LEVEL PLAN — GRAND CANYON, SOUTH RIM

DRAWING NO. 113 175376
PMIS/PKG NO. 257282
SHEET 277 OF 401

100% COMPLETE CONSTRUCTION DOCUMENTS

GRCA-257282

PLOT DATE: 16-JUN-2025 PLOT TIME: 14:37 SS6\V8i D3167666 - South Rim\4 Delivery\43 CAD Design\GRCA\257282\Microstation V8i Drawings\STRUC\25S1020_D3167666.dgn

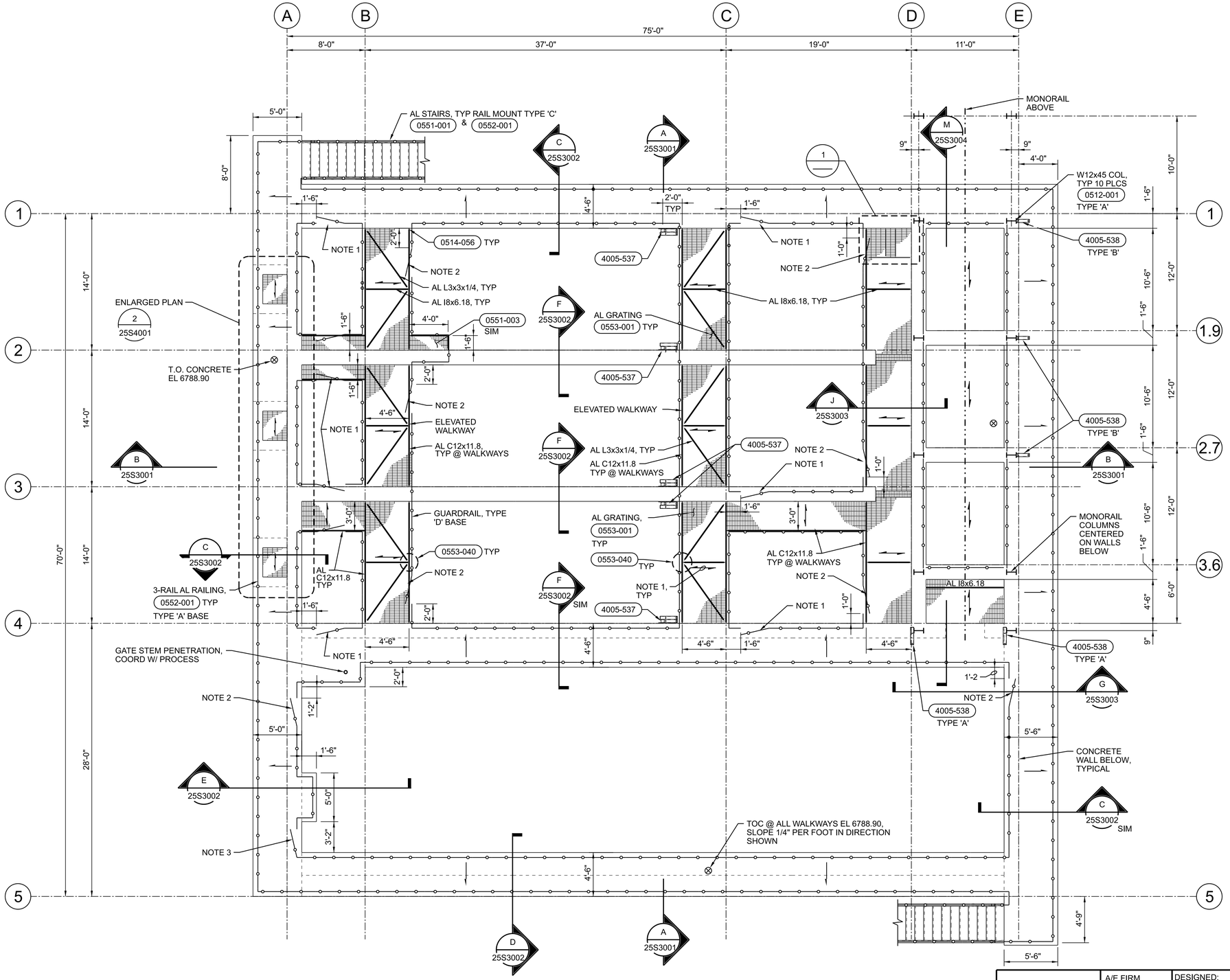

PLAN
3/16"=1'-0"

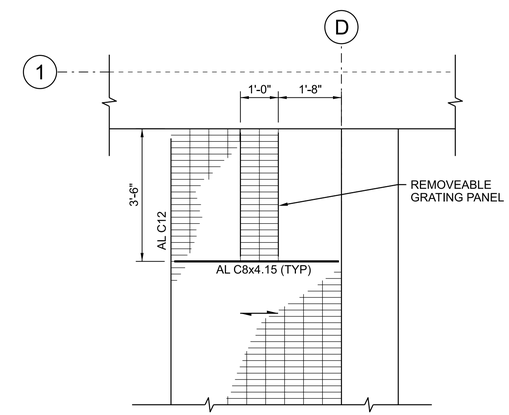

1 ENLARGED PLAN
1"=1'-0"

GENERAL SHEET NOTES

A. FOR GENERAL STRUCTURAL NOTES, SEE DRAWINGS 01S0001, 01S0002, AND 01S0003.

B. FOR WALL CONSTRUCTION JOINT LOCATION, SEE 0315-131. SUBMIT LAYOUT FOR REVIEW.

SHEET NOTES

1. 3'-0" WIDE SELF CLOSING GATE FOR MIXER REMOVAL. CONTRACTOR SHALL COORDINATE FINAL LOCATION WITH MIXER MANUFACTURER PRIOR TO GUARDRAIL SUBMITTAL.
2. 3'-0" WIDE SELF CLOSING GATE FOR PERSONNEL RETRIEVAL. COORDINATE FINAL LOCATION WITH PORTABLE DAVIT CRANE LOCATION AND LADDER ACCESS PRIOR TO GUARDRAIL SUBMITTAL.
3. 3'-0" WIDE SELF CLOSING GATE FOR PUMP REMOVAL. COORDINATE FINAL LOCATION WITH PUMP MANUFACTURER AND DAVIT CRANE PRIOR TO GUARDRAIL SUBMITTAL.

LEGEND

◆ FLUSH-MOUNTED, CAST-IN-PLACE DAVIT CRANE BASE (SIX LOCATIONS).

GRCA-257282

A/E FIRM: JACOBS GOVERNMENT SERVICES COMPANY, GREENWOOD VILLAGE, CO	DESIGNED: W KOHLER CADD: B CLEGG TECH. REVIEW: A FIRTH DATE: 06/2025	SUB SHEET NO. 25S1030	TITLE OF SHEET: PROCESS TANKS STRUCTURAL UPPER LEVEL PLAN GRAND CANYON, SOUTH RIM	DRAWING NO. 113 175376 PMIS/PKG NO. 257282 SHEET 278 OF 401

FULL SIZE DRAWINGS = 22"x34"
BAR MEASURES 1" LONG

100% COMPLETE CONSTRUCTION DOCUMENTS

PLOT DATE: 16-JUN-2025 PLOT TIME: 14:37 SS6/V8i D3167666 - South Rim\4 Delivery\43 CAD Design\GRCA\257282\Microstation V8i Drawings\STRUC\25S1030_D3167666.dgn

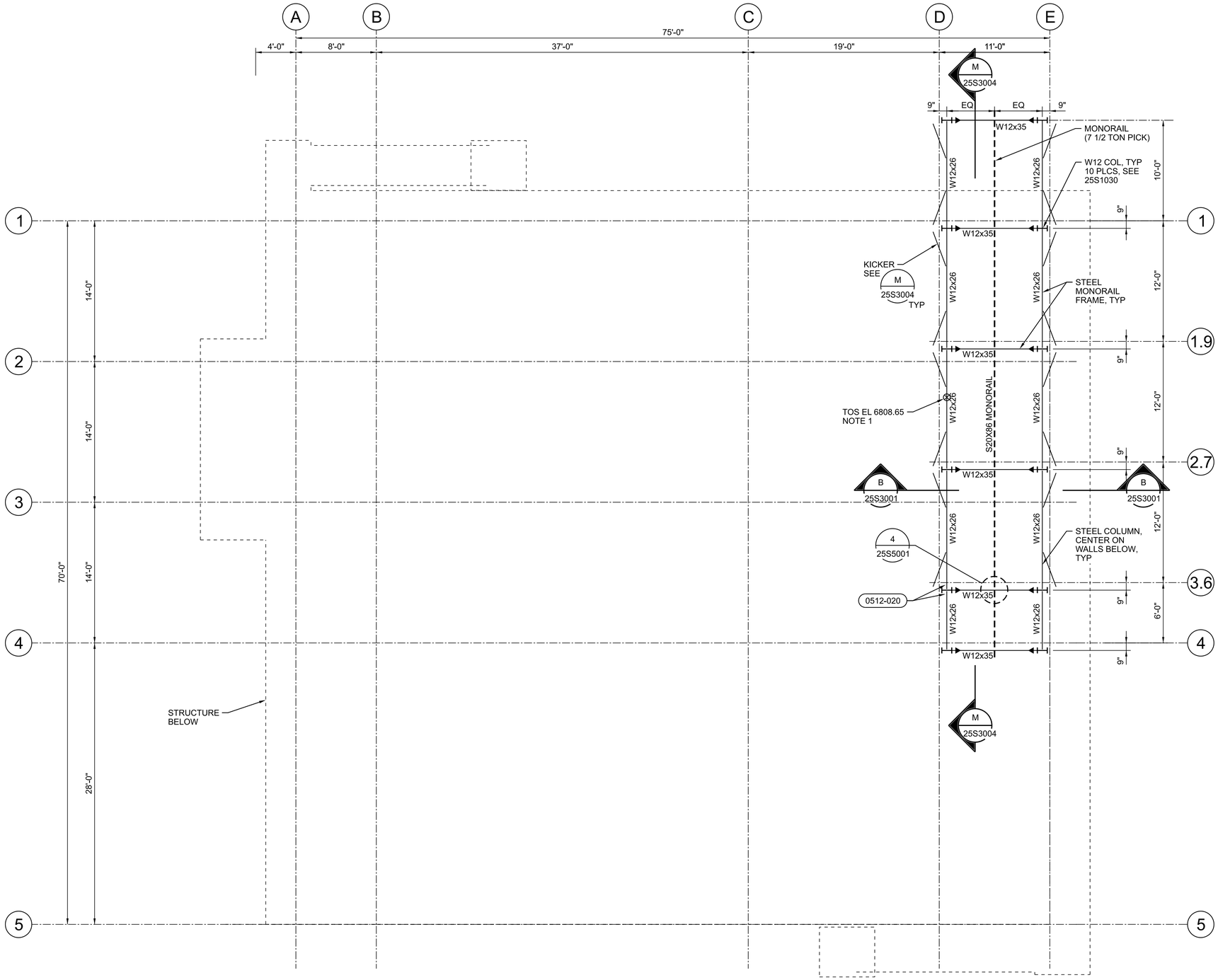

MONORAIL FRAME PLAN

3/16"=1'-0"

N

FULL SIZE DRAWINGS = 22"x34"
BAR MEASURES 1" LONG

0" 1"

GENERAL SHEET NOTES

A. FOR GENERAL STRUCTURAL NOTES, SEE DRAWINGS 01S0001, 01S0002, AND 01S0003.

SHEET NOTES

1. MONORAIL FRAME TOP OF STEEL SHALL BE VERIFIED PRIOR TO FABRICATION. TOP OF STEEL SHALL BE SUCH THAT THE HIGH HOOK ELEVATION OF THE HOIST IS MET. SUBMIT RFI REQUESTING CHANGE TO TOP OF STEEL PRIOR TO FABRICATION.

LEGEND

BEAM TO FLANGE MOMENT CONNECTION — 1 / 25S5001

0 4 8 16
3/16"=1'-0"

Registered Professional Engineer (Structural) 81476 WAYNE W. KOHLER Date Signed 6/20/25 ARIZONA U.S.A.

A/E FIRM	DESIGNED:	SUB SHEET NO.	TITLE OF SHEET	DRAWING NO.
JACOBS GOVERNMENT SERVICES COMPANY GREENWOOD VILLAGE, CO	W KOHLER CADD: B CLEGG TECH. REVIEW: A FIRTH DATE: 06/2025	25S1040	PROCESS TANKS STRUCTURAL MONORAIL FRAME PLAN GRAND CANYON, SOUTH RIM	113 175376 PMIS/PKG NO. 257282 SHEET 279 OF 401

100% COMPLETE CONSTRUCTION DOCUMENTS

GRCA-257282

PLOT DATE: 16-JUN-2025 PLOT TIME: 14:38 SS6\V8i D3167666 - South Rim\4 Delivery\43 CAD Design\GRCA\257282\Microstation V8i Drawings\STRUC\25S1040_D3167666.dgn

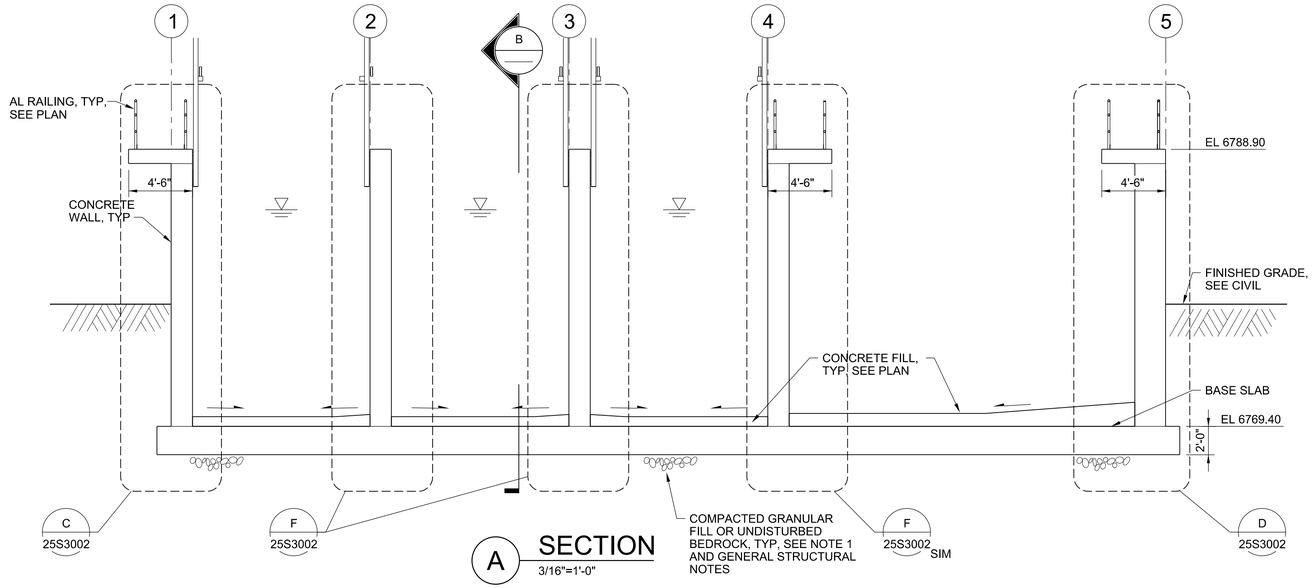

A SECTION
3/16"=1'-0"
25S1020
25S1030

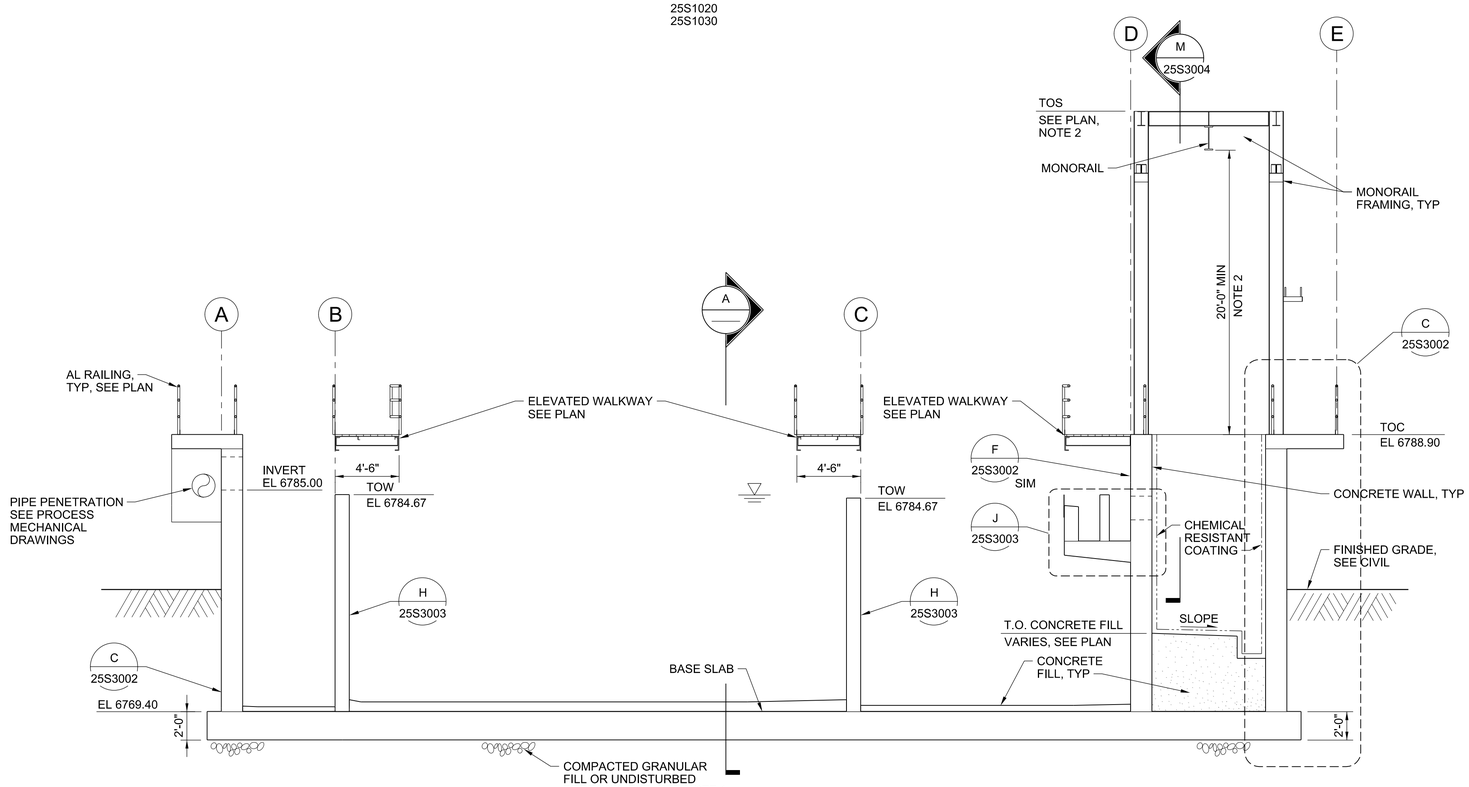

B SECTION
3/16"=1'-0"
25S1020
25S1030
25S1040
25S3003

SHEET NOTES

1. BEDROCK IS LOCATED NEAR THE EXISTING GROUND SURFACE. SEE GEOTECHNICAL REPORT FOR ADDITIONAL INFORMATION.
2. BOTTOM OF MONORAIL SHALL BE VERIFIED PRIOR TO FABRICATION. MONORAIL ELEVATION SHALL BE SUCH THAT THE HIGH HOOK ELEVATION OF THE HOIST IS MET. SUBMIT RFI REQUESTING CHANGE TO MONORAIL ELEVATION PRIOR TO FABRICATION IF REQUIRED.

0 4 8 16
3/16"=1'-0"

FULL SIZE DRAWINGS = 22"x34"
BAR MEASURES 1" LONG
0" 1"

Wayne W. Kohler 81476 WAYNE W. KOHLER REGISTERED PROFESSIONAL ENGINEER ARIZONA U.S.A. 6/20/25	A/E FIRM JACOBS GOVERNMENT SERVICES COMPANY GREENWOOD VILLAGE, CO	DESIGNED: W KOHLER CADD: B CLEGG TECH. REVIEW: A FIRTH DATE: 06/2025	SUB SHEET NO. 25S3001	TITLE OF SHEET PROCESS TANKS STRUCTURAL SECTIONS GRAND CANYON, SOUTH RIM

DRAWING NO. 113
175376
PMIS/PKG NO. 257282
SHEET 280 OF 401

GRCA-257282

100% COMPLETE CONSTRUCTION DOCUMENTS

PLOT DATE: 06/20/2025 PLOT TIME: 7:52:31 AM SS6/V8i D3167666 - South Rim\4 Delivery\43 CAD Design\GRCA\257282\Microstation V8i Drawings\STRUC\25S3001_D3167666.dgn

SHEET NOTES

1. BEDROCK IS LOCATED NEAR THE EXISTING GROUND SURFACE. SEE GEOTECHNICAL REPORT FOR ADDITIONAL INFORMATION.

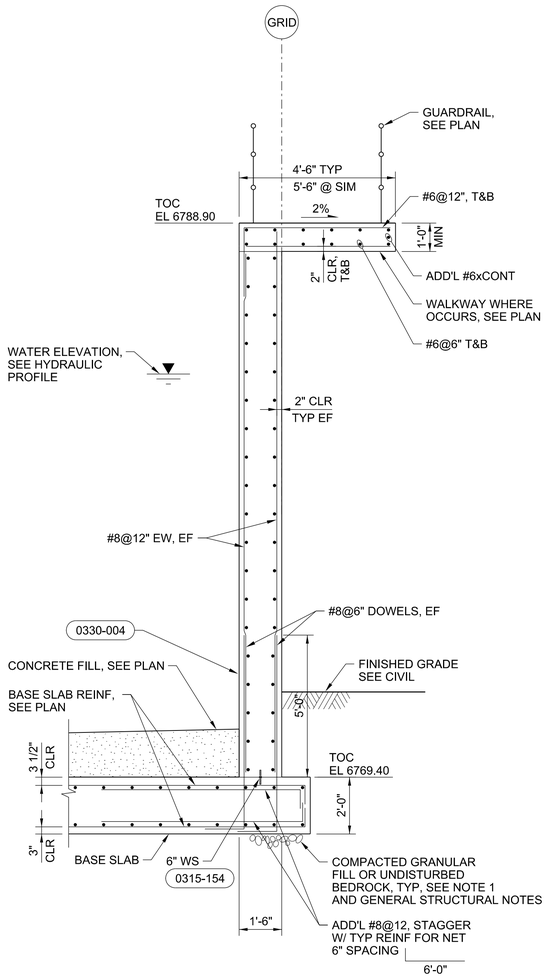

C SECTION
3/8"=1'-0"
25S4001
25S1020
25S1030
25S3001
25S3003
25S3004

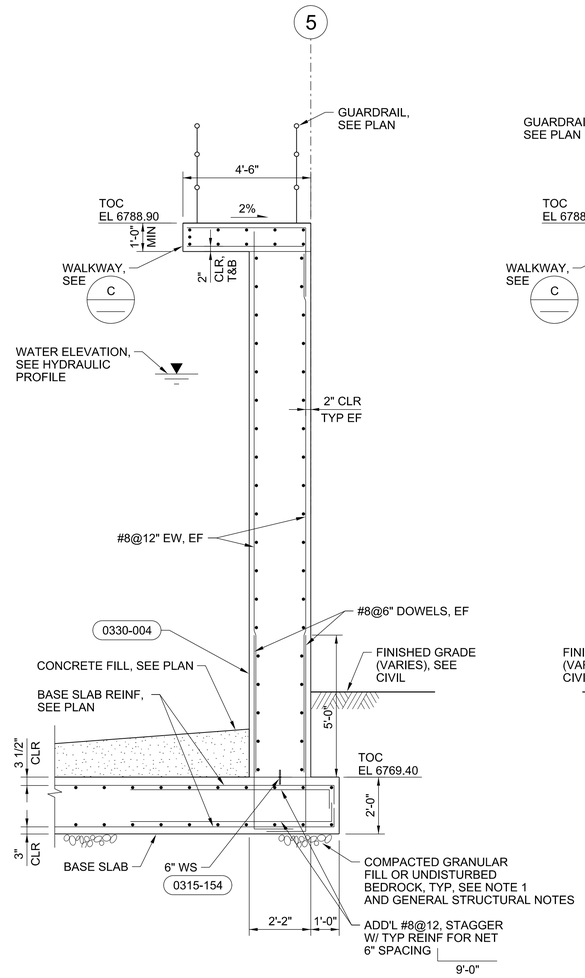

D SECTION
3/8"=1'-0"
25S1020
25S3001

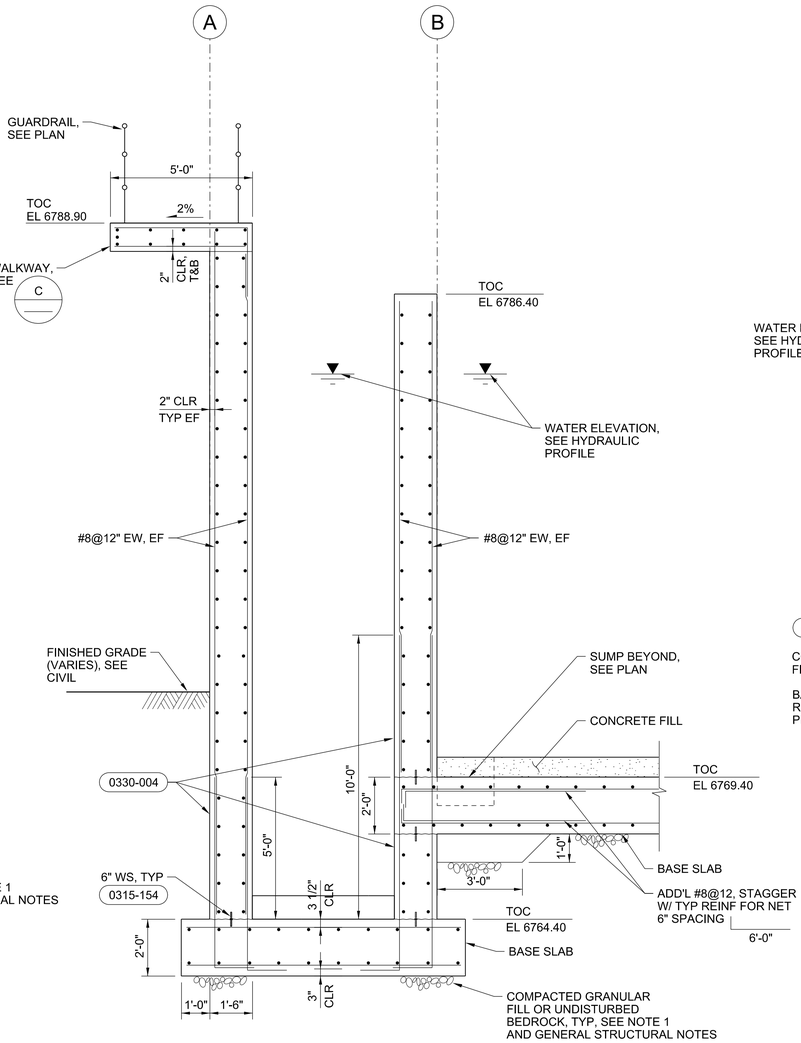

E SECTION
3/8"=1'-0"
25S3001
25S1020
25S1030

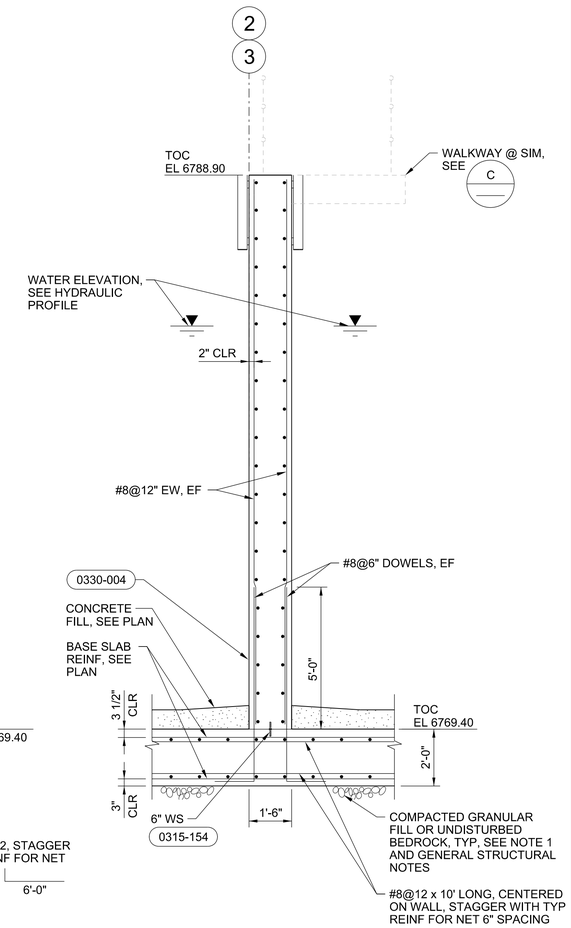

F SECTION
3/8"=1'-0"
25S1020
25S1030
25S3001

0 2 4 6
3/8"=1'-0"

FULL SIZE DRAWINGS = 22"x34"
BAR MEASURES 1" LONG
0" 1"

Wayne W. Kohler — Registered Professional Engineer (Civil) 81476 WAYNE W. KOHLER Date Signed 6/20/25 ARIZONA U.S.A.	A/E FIRM JACOBS GOVERNMENT SERVICES COMPANY GREENWOOD VILLAGE, CO	DESIGNED: W KOHLER CADD: B CLEGG TECH. REVIEW: A FIRTH DATE: 06/2025	SUB SHEET NO. 25S3002	TITLE OF SHEET PROCESS TANKS STRUCTURAL SECTIONS GRAND CANYON, SOUTH RIM

DRAWING NO. 113 / 175376
PMIS/PKG NO. 257282
SHEET 281 OF 401

100% COMPLETE CONSTRUCTION DOCUMENTS

GRCA-257282

PLOT DATE: 06\20\2025 PLOT TIME: 7:57:10 AM SS6\V8i D3167666 - South Rim\4 Delivery\43 CAD Design\GRCA\257282\Microstation V8i Drawings\STRUC\25S3002_D3167666.dgn

SHEET NOTES

1. BEDROCK IS LOCATED NEAR THE EXISTING GROUND SURFACE. SEE GEOTECHNICAL REPORT FOR ADDITIONAL INFORMATION.

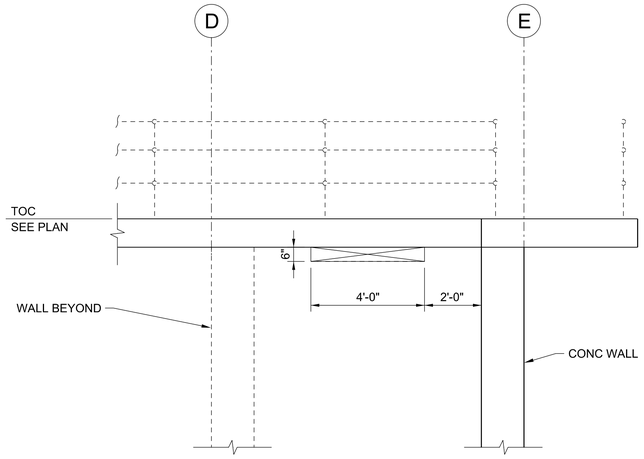

G SECTION
3/8"=1'-0"
25S1030

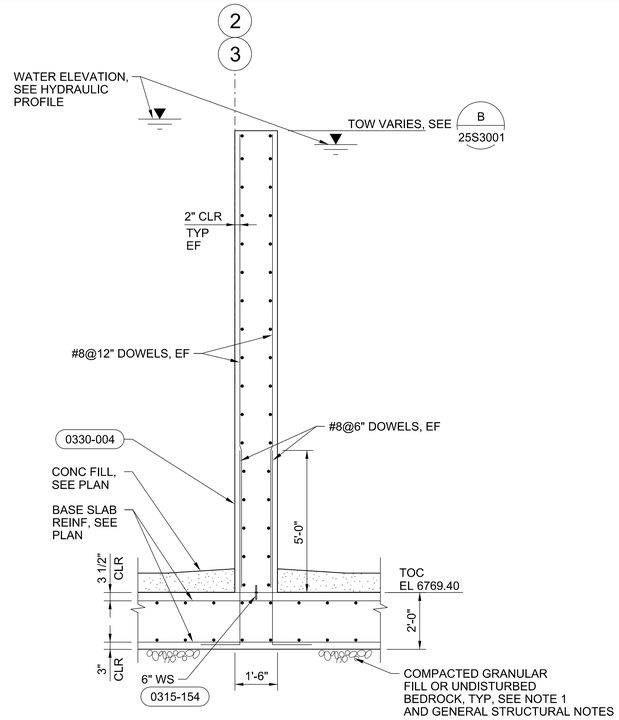

H TYPICAL WALL SECTION
3/8"=1'-0"
25S1020
25S3001

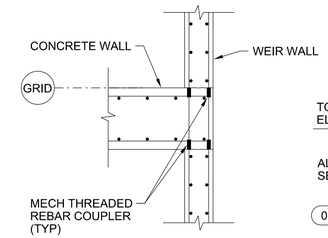

PLAN B-B

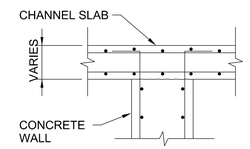

SECTION A-A

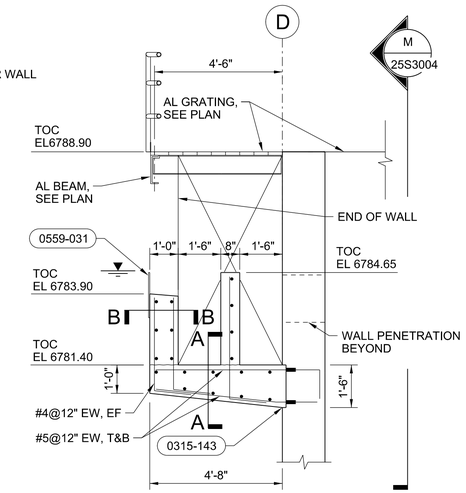

J SECTION
3/8"=1'-0"
25S1020
25S2030
25S3001

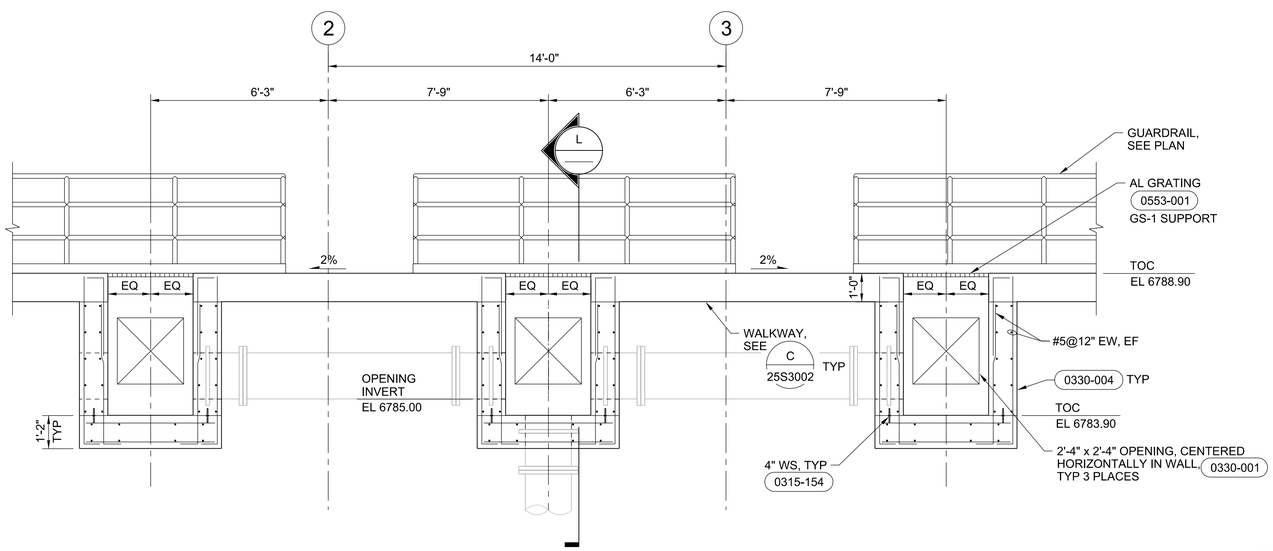

K SECTION
3/8"=1'-0"
25S4001

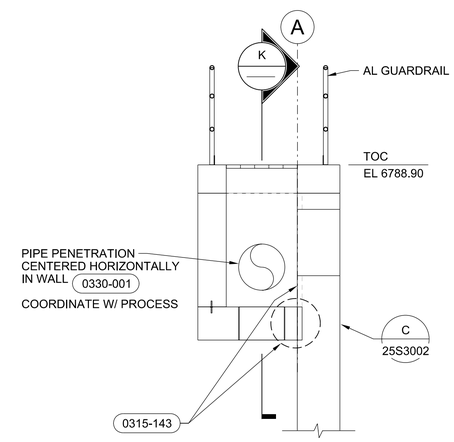

NOTE: FOR REINFORCEMENT AND OTHER INFORMATION NOT SHOWN, SEE K

L SECTION
3/8"=1'-0"
25S4001

0 2 4 6
3/8"=1'-0"

FULL SIZE DRAWINGS = 22"x34"
BAR MEASURES 1" LONG
0" 1"

Registered Professional Engineer (Civil) CERTIFICATE NO. 81476 WAYNE W. KOHLER ARIZONA U.S.A. 6/20/25	A/E FIRM JACOBS GOVERNMENT SERVICES COMPANY GREENWOOD VILLAGE, CO	DESIGNED: W KOHLER CADD: B CLEGG TECH. REVIEW: A FIRTH DATE: 06/2025	SUB SHEET NO. 25S3003	TITLE OF SHEET PROCESS TANKS STRUCTURAL SECTIONS GRAND CANYON, SOUTH RIM

DRAWING NO. 113
175376
PMIS/PKG NO. 257282
SHEET 282 OF 401

100% COMPLETE CONSTRUCTION DOCUMENTS

GRCA-257282

PLOT DATE: 06\20\2025 PLOT TIME: 8:28:36 AM SS6/V8i D3167666 - South Rim\4 Delivery\43 CAD Design\GRCA\257282\Microstation V8i Drawings\STRUC\25S3003_D3167666.dgn

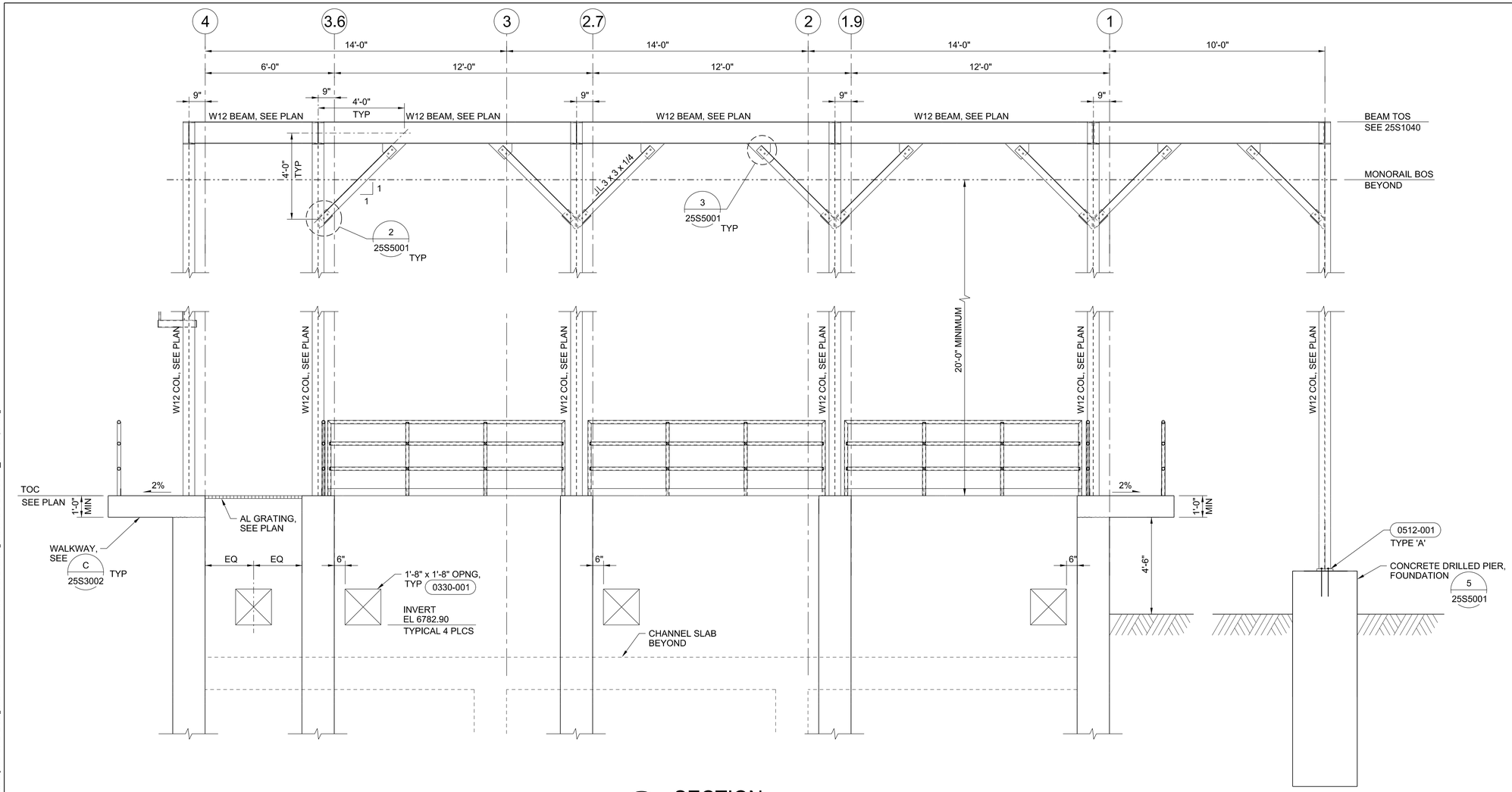

M SECTION
3/8"=1'-0"
25S1030
25S1040

SHEET NOTES

1. BEDROCK IS LOCATED NEAR THE EXISTING GROUND SURFACE. SEE GEOTECHNICAL REPORT FOR ADDITIONAL INFORMATION.

0 2 4 6
3/8"=1'-0"

FULL SIZE DRAWINGS = 22"x34"
BAR MEASURES 1" LONG
0" 1"

Wayne W. Kohler
Registered Professional Engineer (Structural)
R 1476
WAYNE W. KOHLER
ARIZONA U.S.A.
Date Signed 6/20/25

A/E FIRM	DESIGNED:	SUB SHEET NO.	TITLE OF SHEET	DRAWING NO.
JACOBS GOVERNMENT SERVICES COMPANY GREENWOOD VILLAGE, CO	W KOHLER CADD: B CLEGG TECH. REVIEW: A FIRTH DATE: 06/2025	25S3004	PROCESS TANKS STRUCTURAL SECTIONS GRAND CANYON, SOUTH RIM	113 175376 PMIS/PKG NO. 257282 SHEET 283 OF 401

GRCA-257282

100% COMPLETE CONSTRUCTION DOCUMENTS

PLOT DATE: 06/20/2025 PLOT TIME: 8:36:01 AM SS6/V8i D3167666 - South Rim\4 Delivery\43 CAD Design\GRCA\257282\Microstation V8i Drawings\STRUC\25S3004_D3167666.dgn

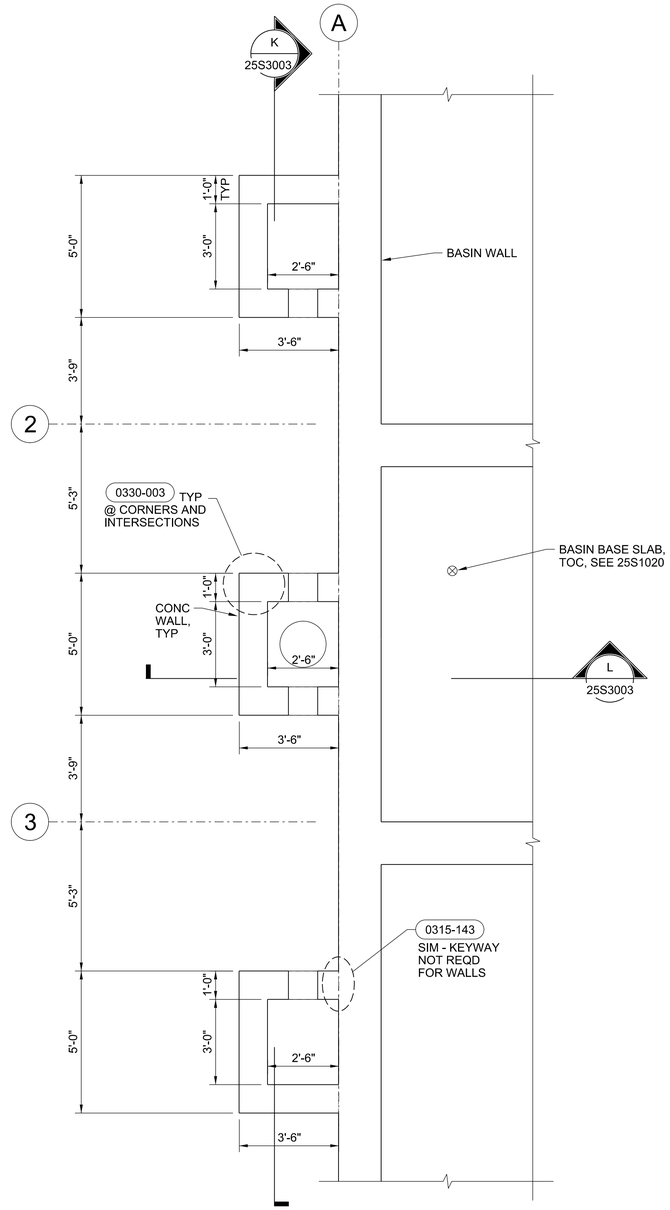

1 ENLARGED LOWER LEVEL PLAN
3/8"=1'-0"
25S1020
25S3001

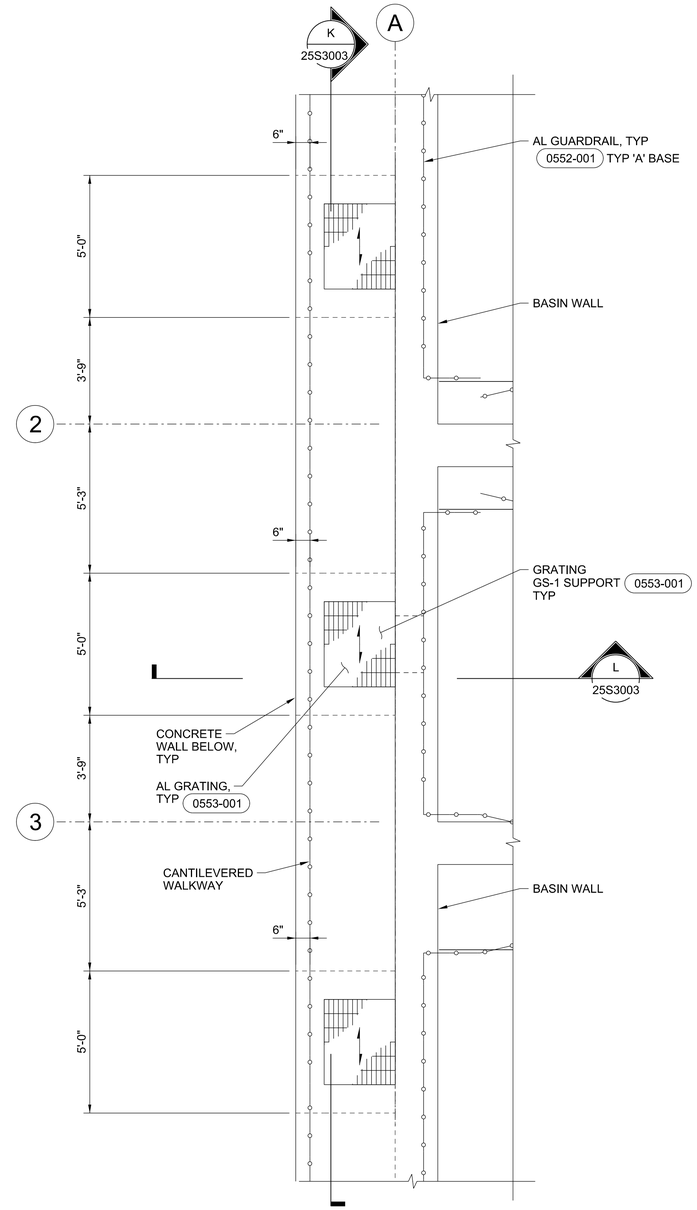

2 ENLARGED UPPER LEVEL PLAN
3/8"=1'-0"
25S1020
25S3001

0 2 4 6
3/8"=1'-0"

FULL SIZE DRAWINGS = 22"x34"
BAR MEASURES 1" LONG
0" 1"

Registered Professional Engineer (Civil) 81476 WAYNE W. KOHLER Date Signed 6/20/25 ARIZONA U.S.A.	A/E FIRM JACOBS GOVERNMENT SERVICES COMPANY GREENWOOD VILLAGE, CO	DESIGNED: W KOHLER CADD: B CLEGG TECH. REVIEW: A FIRTH DATE: 06/2025	SUB SHEET NO. 25S4001	TITLE OF SHEET PROCESS TANKS STRUCTURAL ENLARGED PLANS GRAND CANYON, SOUTH RIM

DRAWING NO. 113 175376
PMIS/PKG NO. 257282
SHEET 284 OF 401

100% COMPLETE CONSTRUCTION DOCUMENTS

GRCA-257282

PLOT DATE: 06\20\2025 PLOT TIME: 8:51:07 AM SS6\V8i D3167666 - South Rim\4 Delivery\43 CAD Design\GRCA\257282\Microstation V8i Drawings\STRUC\25S4001_D3167666.dgn

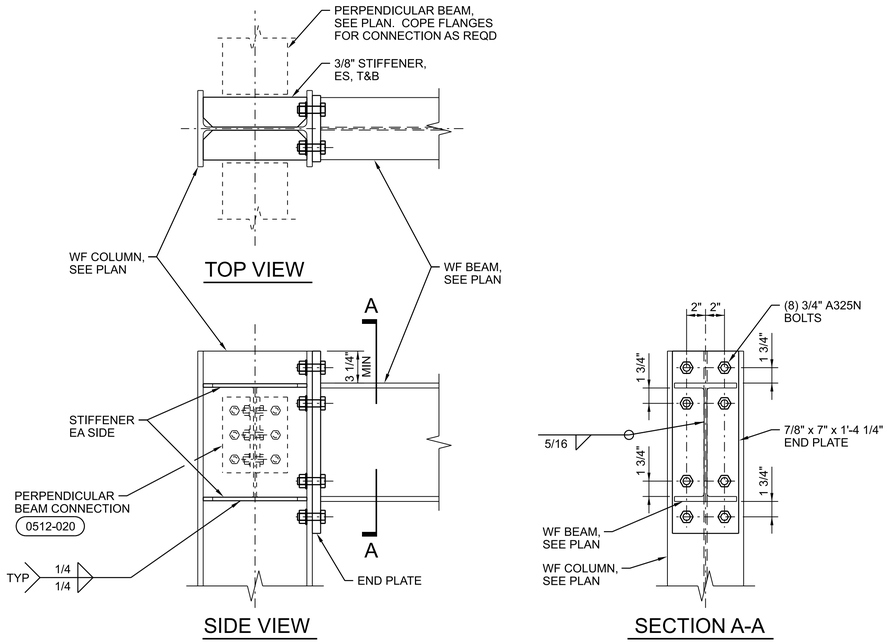

1 MOMENT CONNECTION

25S1040

1"=1'-0"

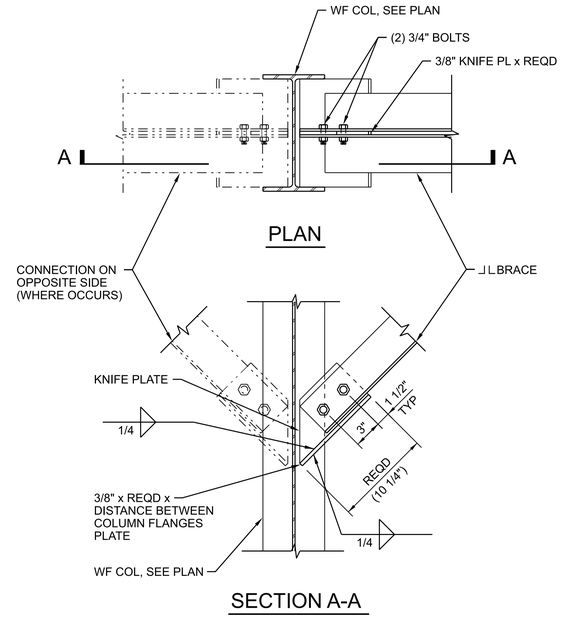

2 KICKER CONNECTION

25S1040
25S3004

3/4"=1'-0"

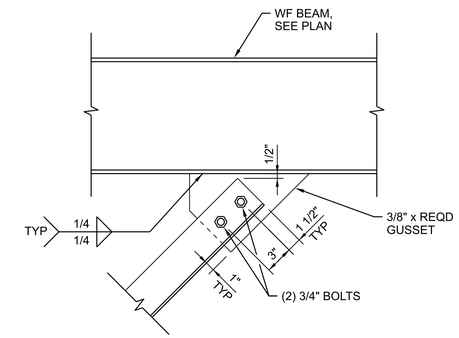

3 KICKER CONNECTION

25S1040
25S3004

3/4"=1'-0"

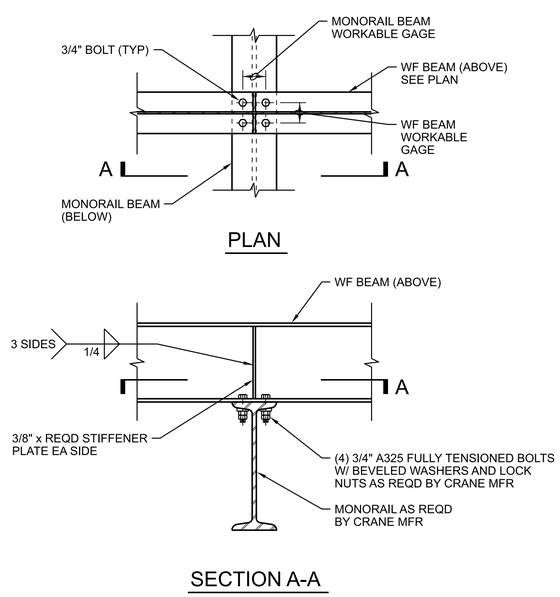

4 MONORAIL CONNECTION

25S1040

1"=1'-0"

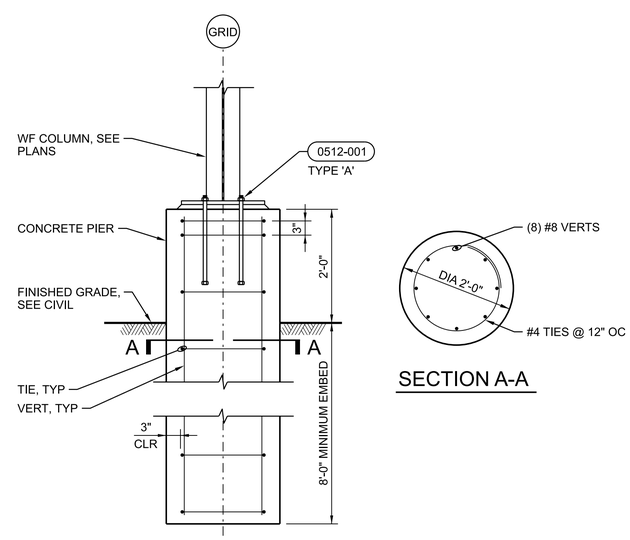

5 DRILLED PIER

25S3004

3/8"=1'-0"

FULL SIZE DRAWINGS = 22"x34"
BAR MEASURES 1" LONG

A/E FIRM: JACOBS GOVERNMENT SERVICES COMPANY, GREENWOOD VILLAGE, CO	DESIGNED: W KOHLER CADD: B CLEGG TECH. REVIEW: A FIRTH DATE: 06/2025	SUB SHEET NO. 25S5001	TITLE OF SHEET: PROCESS TANKS STRUCTURAL DETAILS GRAND CANYON, SOUTH RIM	DRAWING NO. 113 175376 PMIS/PKG NO. 257282 SHEET 285 OF 401

100% COMPLETE CONSTRUCTION DOCUMENTS

GRCA-257282

PLOT DATE: 16-JUN-2025 PLOT TIME: 14:37 SS6/V8I D3167666 - South Rim\4 Delivery\43 CAD Design\GRCA\257282\Microstation V8I Drawings\STRUC\25S5001_D3167666.dgn

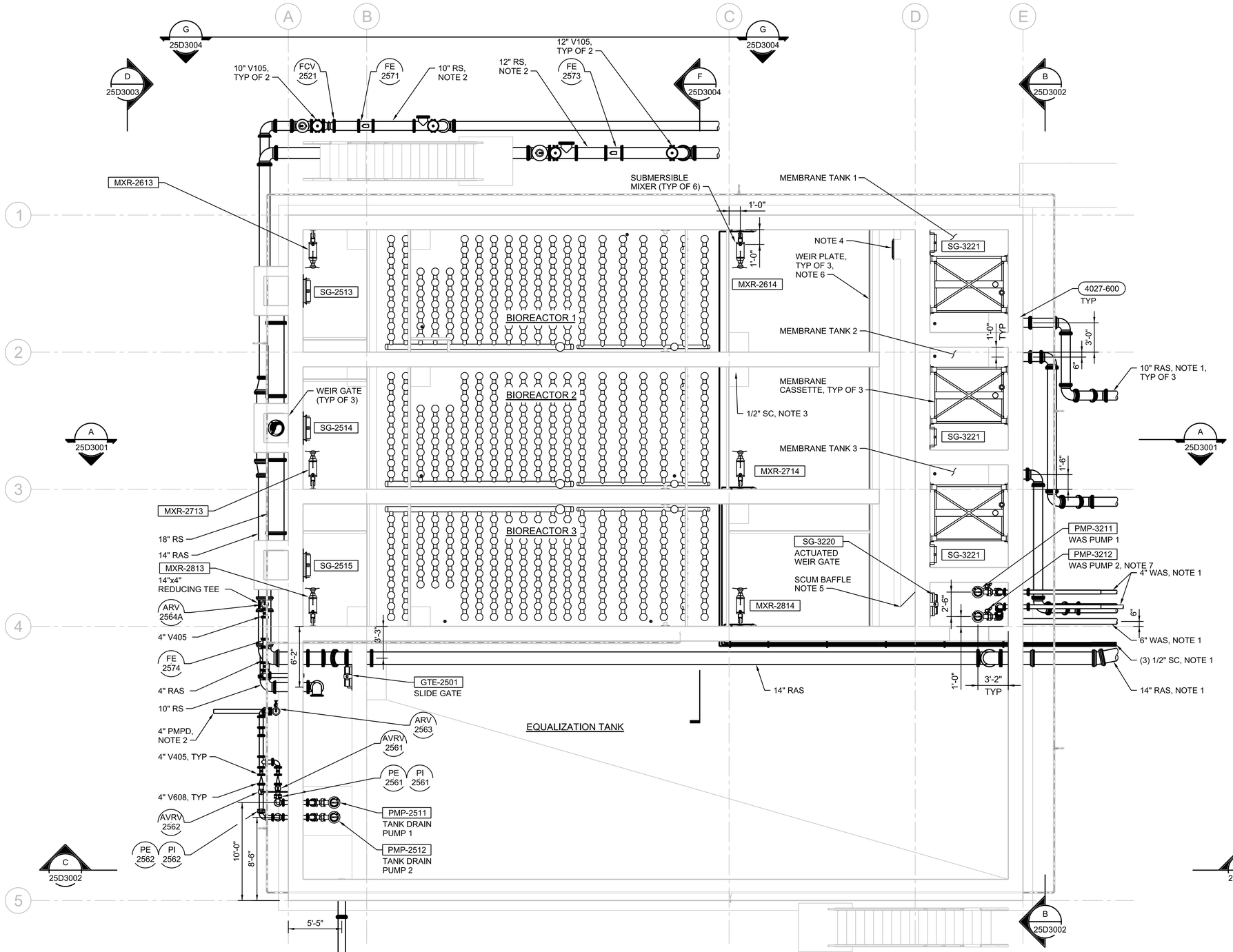

SHEET NOTES

1. FOR CONTINUATION, SEE DRAWING 32D1020.
2. FOR CONTINUATION, SEE DRAWING 07Y2002.
3. HEAT TRACE HORIZONTAL 1/2" SC PIPE TO ELBOW; VERTICAL PIPE TO 5' OFF OF FLOOR OF BIOREACTOR.
4. MANUAL ML EFFLUENT STOP GATE PER 35 20 16.25 FABRICATED SLIDE GATES AND STOP GATES
5. FRP SCUM BAFFLE PER 44 42 28 WIER AND BAFFLE PLATES. BAFFLE TO BE ADJUSTABLE, 12" HIGH WITH BOTTOM OF BAFFLE AT ELEVATION OF 683.15, ORIENTED BETWEEN EDGE OF DIVIDER WALL AND DOWNSTREAM EDGE OF ACTUATED WEIR GATE SG-3220.
6. FRP WIER PLATE PER 44 42 28 WIER AND BAFFLE PLATES. WIER TO BE RECTANGULAR, ADJUSTABLE, 9.5" HIGH WITH TOP OF WIER AT 6784.15, SPANNING FULL WIDTH OF EACH BIOREACTOR.
7. WAS PUMPS ARE PROVIDED WITH MIX-FLUSH VALVES TO MIX WET WELL CONTENTS. SEE SECTION 44 42 56.04, SUBMERSIBLE PUMPS.

PLAN

3/16"=1'-0"

0 4 8 16

3/16"=1'-0"

FULL SIZE DRAWINGS = 22"x34"
BAR MEASURES 1" LONG

0" 1"

Registered Professional Engineer (Civil) CERTIFICATE NO. 80742 CORY J. LANCASTER Date Signed 6-17-2025 ARIZONA, U.S.A.

A/E FIRM
JACOBS GOVERNMENT SERVICES COMPANY
GREENWOOD VILLAGE, CO

DESIGNED: C LANCASTER
CADD: N HUBER
TECH. REVIEW: D BRUNKOW
DATE: 06/2025

SUB SHEET NO. 25D1020

TITLE OF SHEET
PROCESS TANKS MECHANICAL LOWER PLAN

GRAND CANYON, SOUTH RIM

DRAWING NO. 113 / 175376
PMIS/PKG NO. 257282
SHEET 286 OF 401

100% COMPLETE CONSTRUCTION DOCUMENTS

GRCA-257282

PLOT DATE: 6/17/2025 PLOT TIME: 4:03:52 PM SS6/V8I D3167666 - South Rim\4 Delivery\43 CAD Design\GRCA\257282\Microstation V8I Drawings\PROC\25D1020_D3167666.dgn

SHEET NOTES

1. FOR CONTINUATION, SEE DRAWING 32D1030.
2. INSULATE ALL 6" AND 4" PA FROM 10" PA TO DROPLEGS AND MEMBRANE CASSETTE CONNECTIONS.
3. ALL OPEN ZONES OF ALL BIOREACTORS AND MEMBRANE TANKS TO BE COVERED WITH REMOVABLE BIRD NETTING, AFFIXED AT BASE OF RAILING. SEE SPECIFICATION 10 80 00 - MISCELLANEOUS SPECIALTIES.

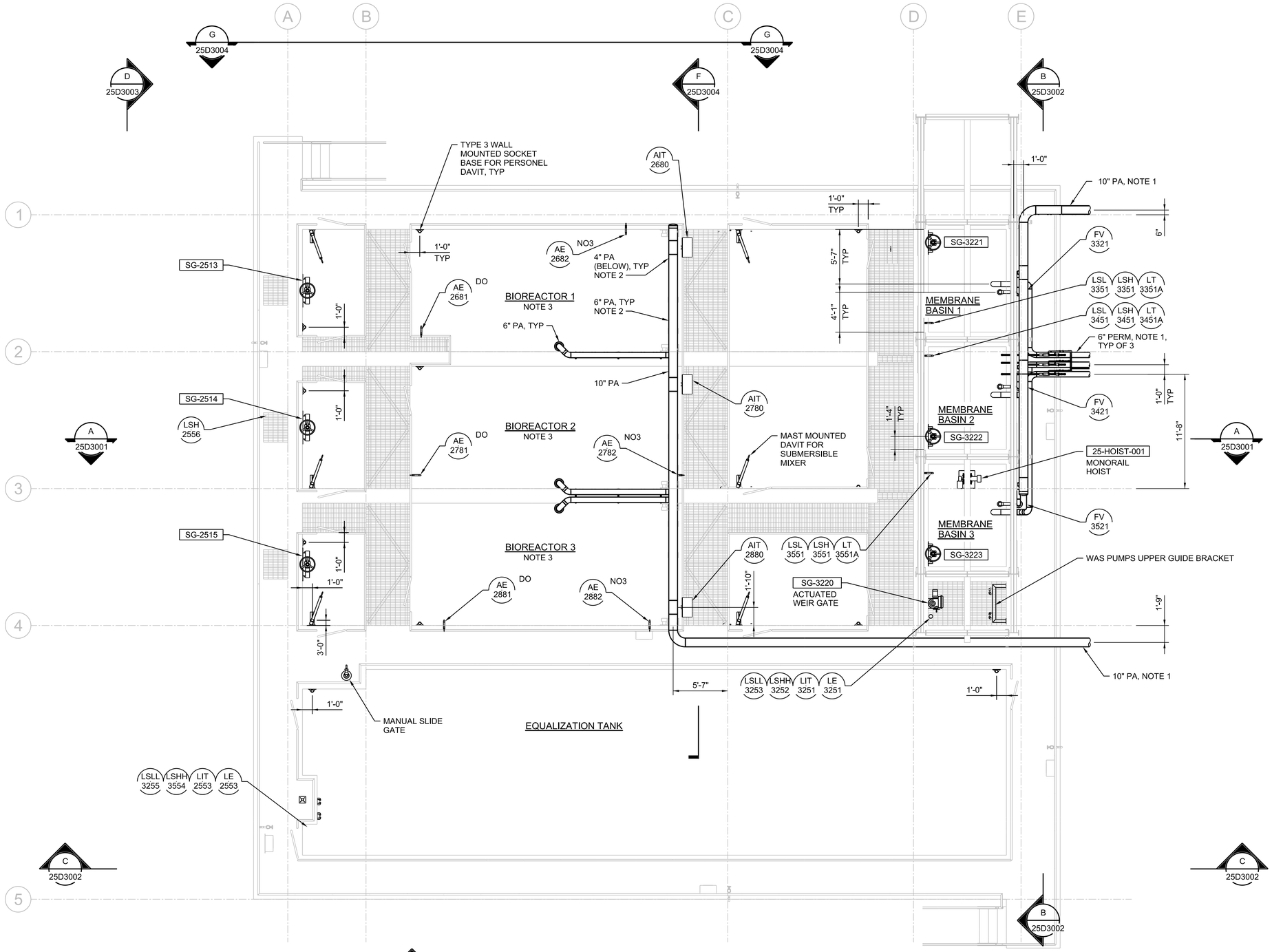

PLAN

3/16"=1'-0"

0 4 8 16

3/16"=1'-0"

N

FULL SIZE DRAWINGS = 22"x34"
BAR MEASURES 1" LONG

0" 1"

Registered Professional Engineer (Civil) CERTIFICATE NO. 80742 CORY D. LANCASTER Date Signed 3/7/2025 ARIZONA, U.S.A.

A/E FIRM
JACOBS GOVERNMENT SERVICES COMPANY
GREENWOOD VILLAGE, CO

DESIGNED: C LANCASTER
CADD: N HUBER
TECH. REVIEW: D BRUNKOW
DATE: 06/2025

SUB SHEET NO. 25D1030

TITLE OF SHEET
PROCESS TANKS MECHANICAL UPPER PLAN
GRAND CANYON, SOUTH RIM

DRAWING NO. 113 / 175376
PMIS/PKG NO. 257282
SHEET 287 OF 401

100% COMPLETE CONSTRUCTION DOCUMENTS

GRCA-257282

PLOT DATE: 6/17/2025 PLOT TIME: 5:20:27 PM SS6/V8i D3167666 - South Rim\4 Delivery\43 CAD Design\GRCA\257282\Microstation V8i DrawingsPROC\25D1030_D3167666.dgn

SHEET NOTES

1. FOR CONTINUATION, SEE YARD PIPING DRAWINGS.
2. HEAT TRACE HORIZONTAL 1/2" SC PIPE TO ELBOW; VERTICAL PIPE TO 5' OFF OF FLOOR OF BIOREACTOR.
3. INSULATE ALL 6" AND 4" PA FROM 10" PA TO TOP OF DECK.
4. MEMBRANE EQUIPMENT SUPPLIER TO LOCATE AIR EJECTOR ON PERMEATE PIPING IN THIS LOCATION. CONTRACTOR TO COORDINATE ROUTING OF COMPRESSED AIR PIPING FROM FACILITY 32 TO AIR EJECTOR.
5. FRP WIER PLATE PER 44 42 28 WIER AND BAFFLE PLATES. WIER TO BE RECTANGULAR, ADJUSTABLE, 9.5" HIGH WITH TOP OF WIER AT 6784.15, SPANNING FULL WIDTH OF EACH BIOREACTOR.

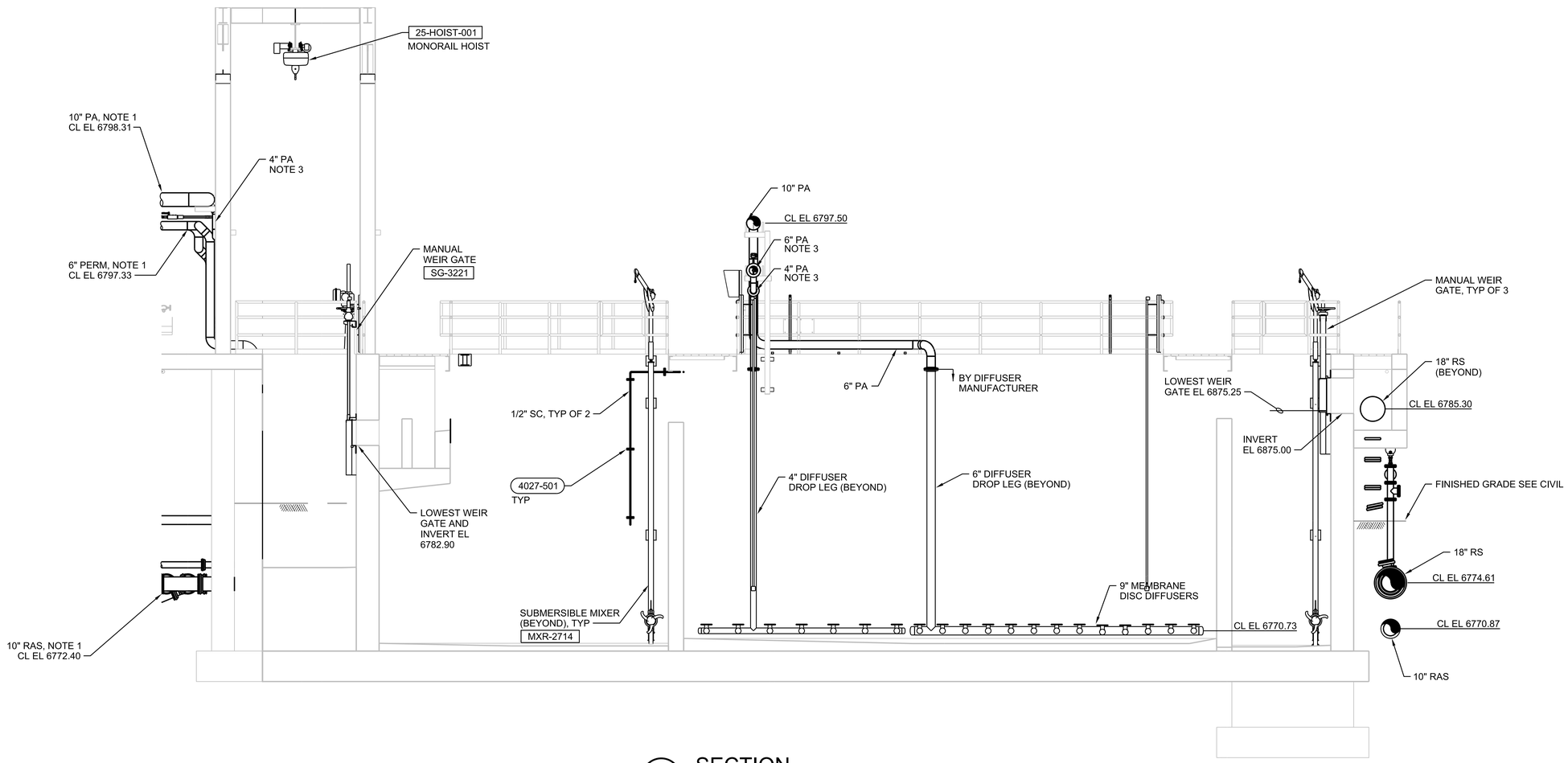

A SECTION
1/4"=1'-0"
25D1020
25D1030

0 4 8 12
1/4"=1'-0"

FULL SIZE DRAWINGS = 22"x34"
BAR MEASURES 1" LONG
0" 1"

Registered Professional Engineer (Civil)
CERTIFICATE NO. 80742
CORY D. LANCASTER
Date Signed 6-17-25
ARIZONA, U.S.A.
Cory Lancaster

A/E FIRM	DESIGNED:	SUB SHEET NO.	TITLE OF SHEET	DRAWING NO.
JACOBS GOVERNMENT SERVICES COMPANY GREENWOOD VILLAGE, CO	C LANCASTER CADD: N HUBER TECH. REVIEW: D BRUNKOW DATE: 06/2025	25D3001	PROCESS TANKS MECHANICAL SECTION GRAND CANYON, SOUTH RIM	113 175376 PMIS/PKG NO. 257282 SHEET 288 OF 401

GRCA-257282

100% COMPLETE CONSTRUCTION DOCUMENTS

PLOT DATE: 6/17/2025 PLOT TIME: 4:03:54 PM SS6IV8i D3167666 - South Rim\4 Delivery\43 CAD Design\GRCA\257282\Microstation V8i DrawingsIPROC\25D3001_D3167666.dgn

SHEET NOTES

1. FOR CONTINUATION, SEE YARD PIPING DRAWINGS.

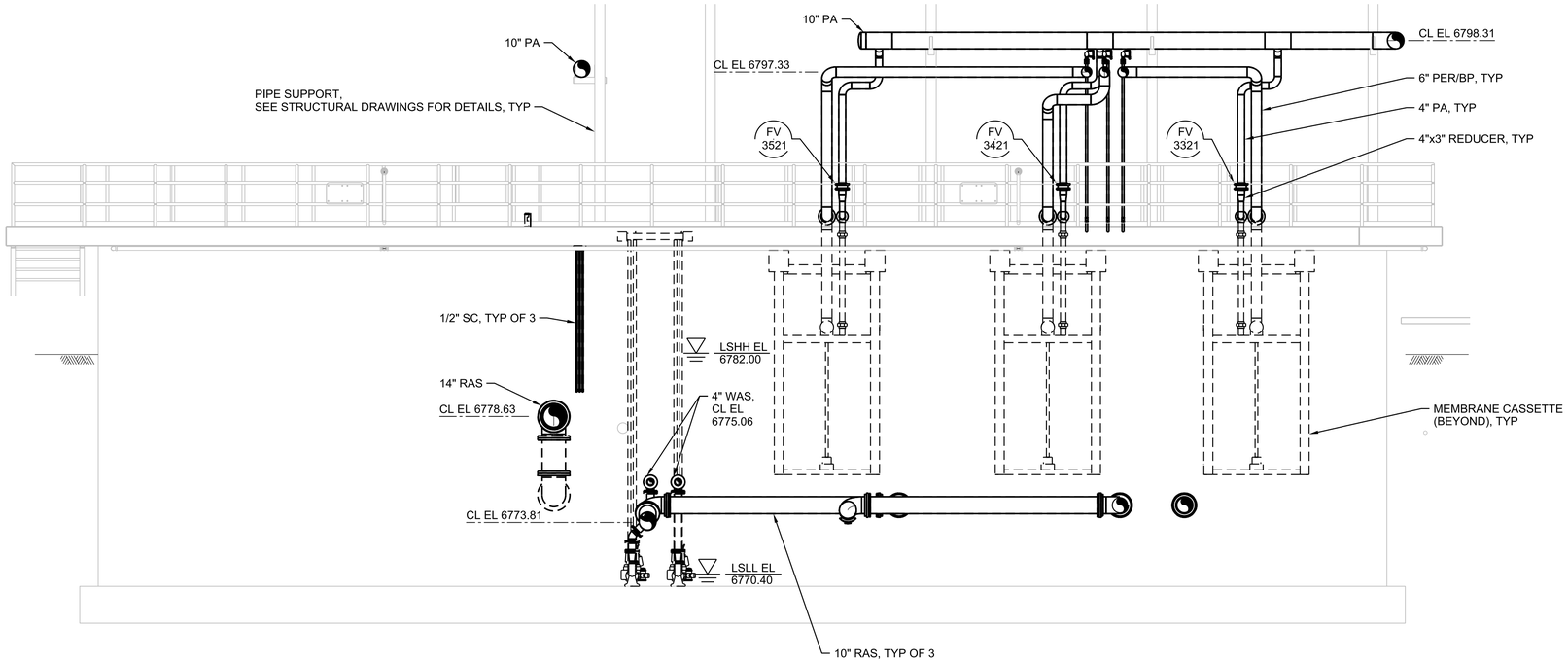

B SECTION
1/4"=1'-0"
25D1020
25D1030
0 4 8 12
1/4"=1'-0"

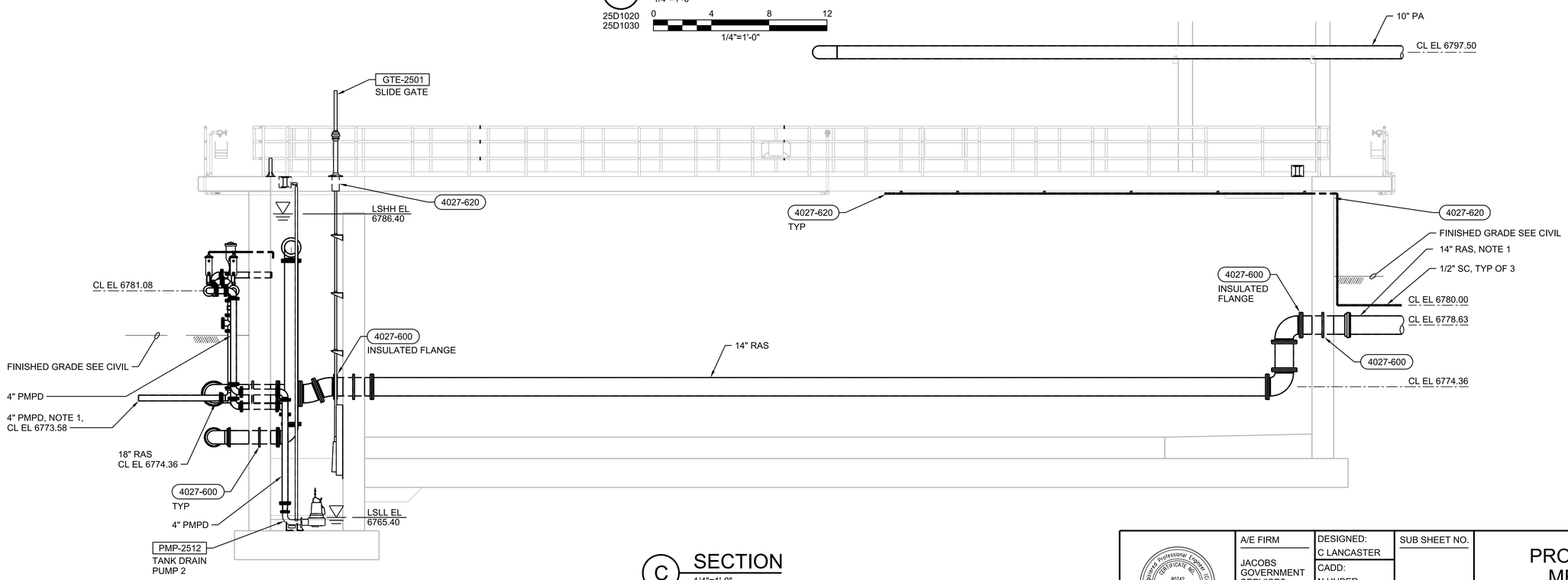

C SECTION
1/4"=1'-0"
25D1020
25D1030
0 4 8 12
1/4"=1'-0"

FULL SIZE DRAWINGS = 22"x34"
BAR MEASURES 1" LONG
0" 1"

Registered Professional Engineer (Civil) CERTIFICATE NO. 80742 CORY LANCASTER Date Signed 6/17/25 ARIZONA, U.S.A.
Cory Lancaster

A/E FIRM	DESIGNED:	SUB SHEET NO.	TITLE OF SHEET	DRAWING NO.
JACOBS GOVERNMENT SERVICES COMPANY GREENWOOD VILLAGE, CO	C LANCASTER CADD: N HUBER TECH. REVIEW: D BRUNKOW DATE: 06/2025	25D3002	PROCESS TANKS MECHANICAL SECTIONS GRAND CANYON, SOUTH RIM	113 175376 PMIS/PKG NO. 257282 SHEET 289 OF 401

GRCA-257282

100% COMPLETE CONSTRUCTION DOCUMENTS

PLOT DATE: 6/17/2025 PLOT TIME: 4:06:09 PM SS6/V8i D3167666 - South Rim\4 Delivery\43 CAD Design\GRCA\257282\Microstation V8i Drawings\PROC\25D3002_D3167666.dgn

SHEET NOTES

1. FOR CONTINUATION, SEE YARD PIPING DRAWINGS.

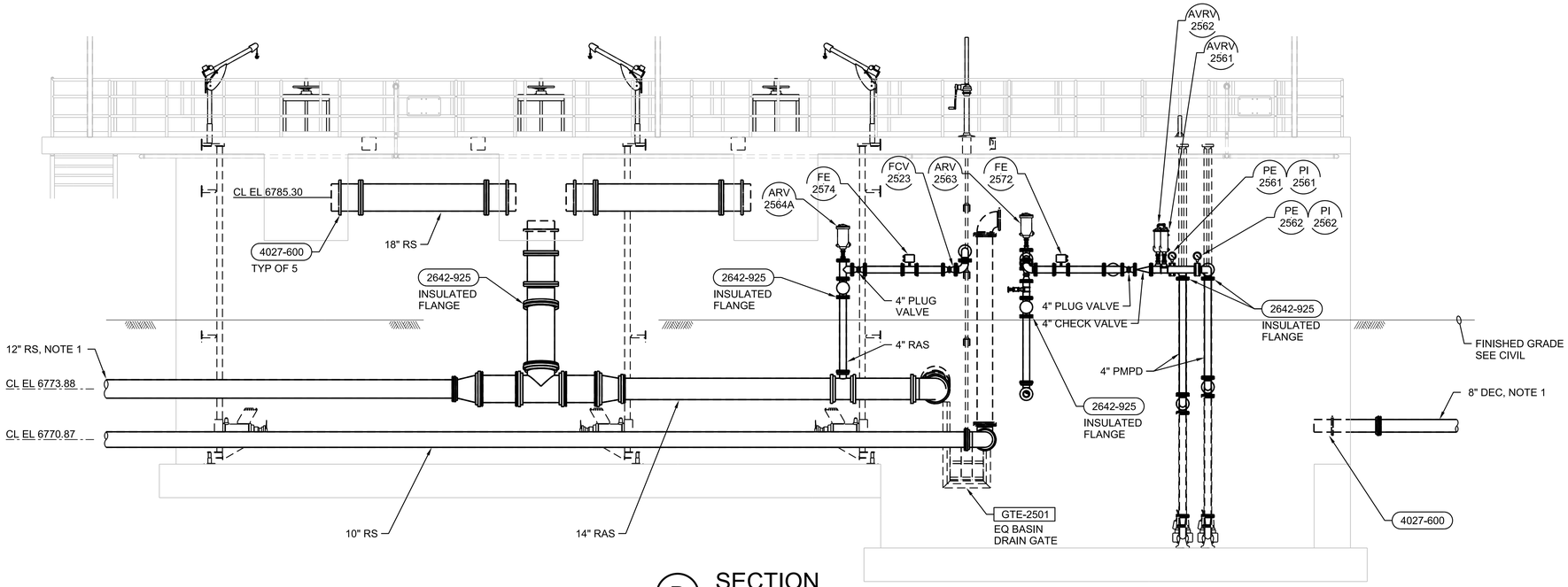

D SECTION
1/4"=1'-0"
25D1020
0 4 8 12
1/4"=1'-0"

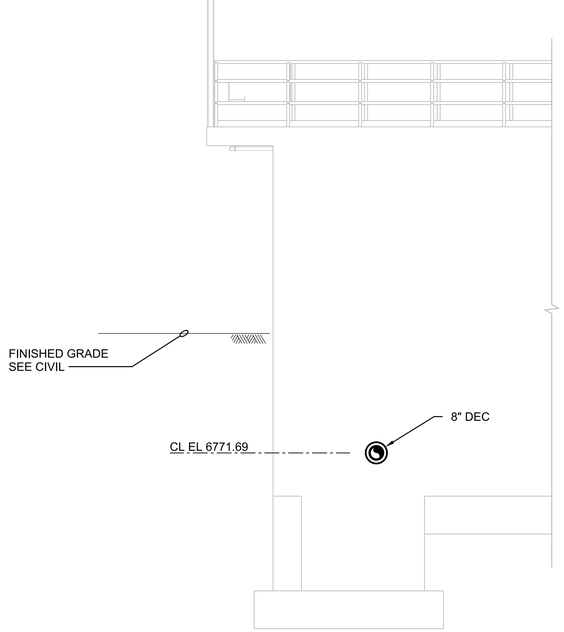

E SECTION
1/4"=1'-0"
25D1020
25D1030
0 4 8 12
1/4"=1'-0"

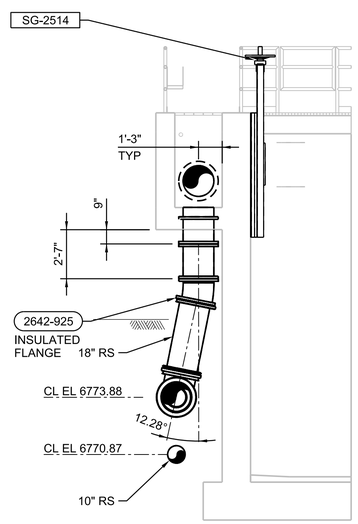

1 DETAIL
1/4"=1'-0"
0 4 8 12
1/4"=1'-0"

FULL SIZE DRAWINGS = 22"x34"
BAR MEASURES 1" LONG
0" 1"

Registered Professional Engineer (Civil) CERTIFICATE NO. 80742 CORY D. LANCASTER Date Signed 6/06/25 ARIZONA, U.S.A.
Cory Lancaster

A/E FIRM	DESIGNED:	SUB SHEET NO.	TITLE OF SHEET	DRAWING NO.
JACOBS GOVERNMENT SERVICES COMPANY GREENWOOD VILLAGE, CO	C LANCASTER CADD: N HUBER TECH. REVIEW: D BRUNKOW DATE: 06/2025	25D3003	PROCESS TANKS MECHANICAL SECTIONS GRAND CANYON, SOUTH RIM	113 175376 PMIS/PKG NO. 257282 SHEET 290 OF 401

GRCA-257282

100% COMPLETE CONSTRUCTION DOCUMENTS

PLOT DATE: 6/17/2025 PLOT TIME: 5:15:25 PM SS6/V8I D3167666 - South Rim\4 Delivery\43 CAD Design\GRCA\257282\Microstation V8I Drawings\PROC\25D3003_D3167666.dgn

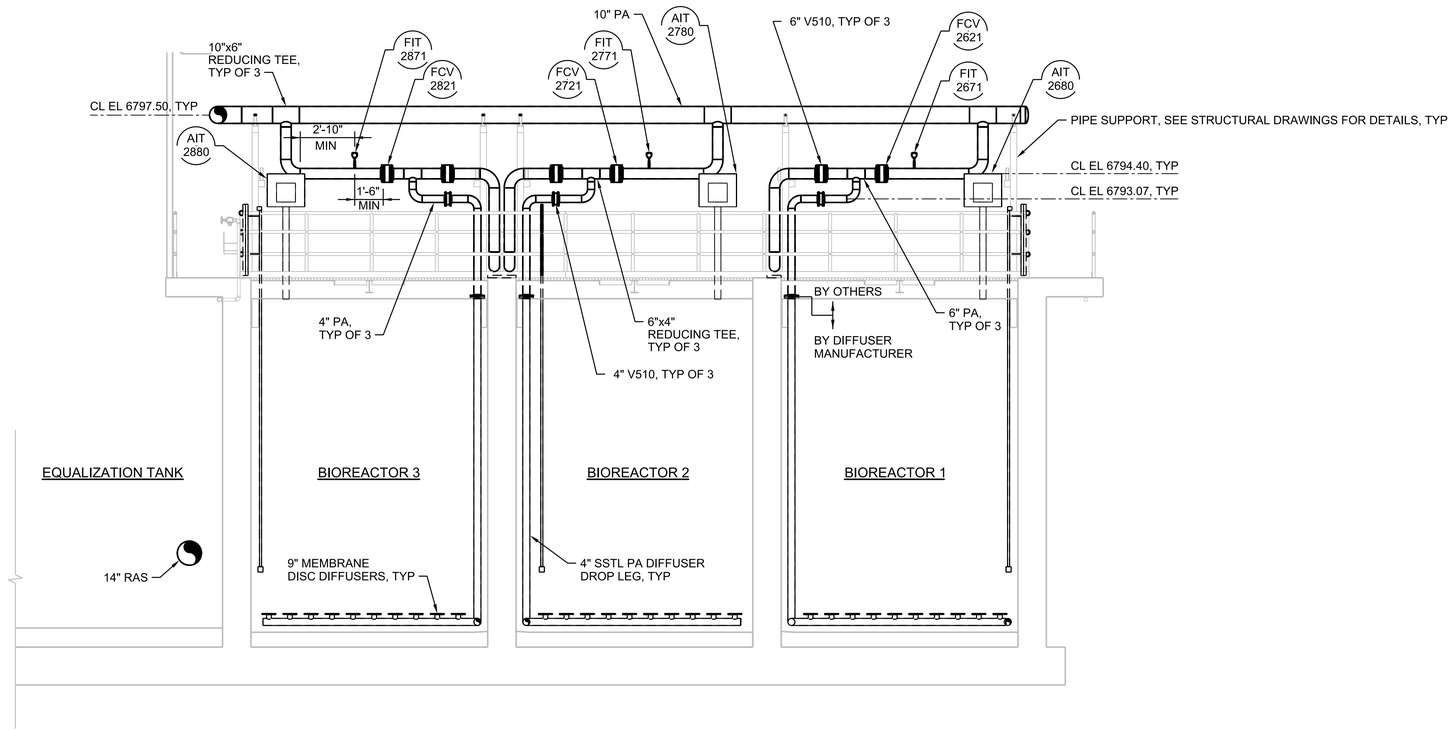

F SECTION
1/4"=1'-0"
25D1020
25D1030
0 4 8 12
1/4"=1'-0"

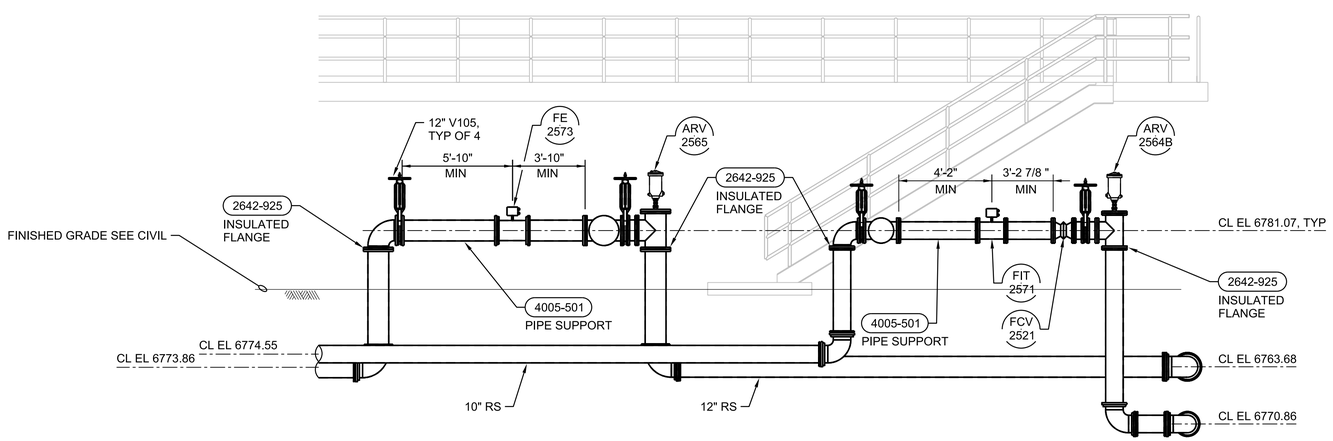

G SECTION
1/4"=1'-0"
25D1020
25D1030
0 4 8 12
1/4"=1'-0"

FULL SIZE DRAWINGS = 22"x34"
BAR MEASURES 1" LONG
0" 1"

Registered Professional Engineer (Civil) CERTIFICATE NO. 80742 CORY D. LANCASTER Date Signed 6/17/25 ARIZONA, U.S.A.
Cory Lancaster

A/E FIRM	DESIGNED:	SUB SHEET NO.	TITLE OF SHEET	DRAWING NO.
JACOBS GOVERNMENT SERVICES COMPANY	C LANCASTER	25D3004	PROCESS TANKS MECHANICAL SECTIONS	113 / 175376
	CADD: N HUBER			PMIS/PKG NO. 257282
GREENWOOD VILLAGE, CO	TECH. REVIEW: D BRUNKOW		GRAND CANYON, SOUTH RIM	SHEET 291 OF 401
	DATE: 06/2025			

100% COMPLETE CONSTRUCTION DOCUMENTS

GRCA-257282

PLOT DATE: 6/17/2025 PLOT TIME: 4:05:55 PM SS6/V8i D3167666 - South Rim\4 Delivery\43 CAD Design\GRCA\257282\Microstation V8i Drawings\PROC\25D3004_D3167666.dgn

GENERAL SHEET NOTES

A. HEAT TRACE ALL ABOVE GROUND RW PIPING.

B. V230 UTILIZING RECLAIMED WATER SHALL BE LABELED "CAUTION! NON-POTABLE WATER- DO NOT DRINK". REFER TO DETAIL 1014-002.

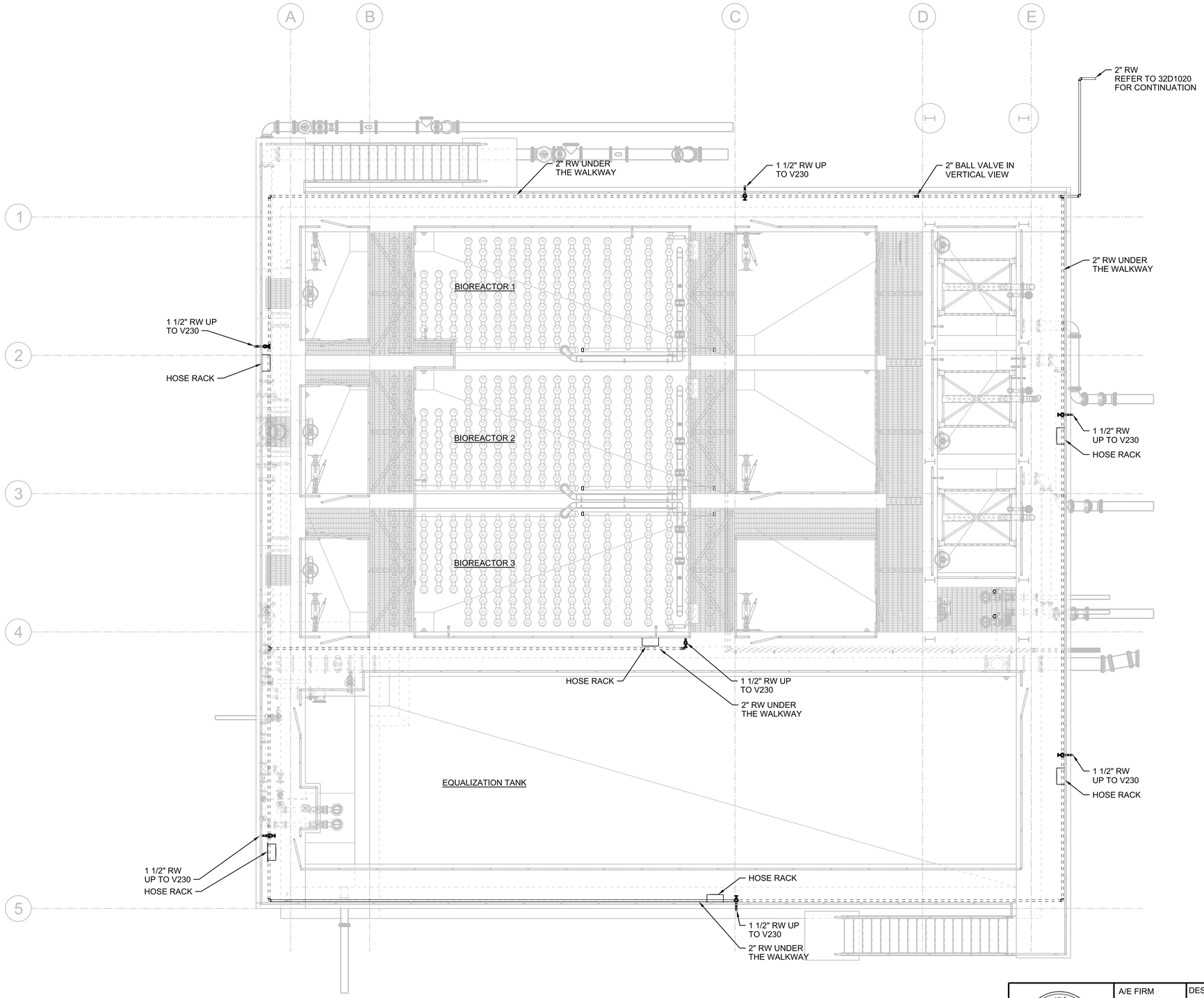

PLAN

3/16"=1'-0"

N

0 4 8 16

3/16"=1'-0"

FULL SIZE DRAWINGS = 22"x34"
BAR MEASURES 1" LONG

0" 1"

Registered Professional Engineer (Mechanical)
CERTIFICATE NO. 46267
SCOTT HINTE
Date Signed 6-06-25
ARIZONA, U.S.A.
Scott Hinte
Expires 06-30-2026

A/E FIRM	DESIGNED:	SUB SHEET NO.	TITLE OF SHEET	DRAWING NO.
JACOBS GOVERNMENT SERVICES COMPANY	S HINTE	25P1030	PROCESS TANKS PLUMBING UPPER PLAN	113 / 175376
	CADD: S HOSTETLER			PMIS/PKG NO. 257282
GREENWOOD VILLAGE, CO	TECH. REVIEW: J SACKINGER		GRAND CANYON, SOUTH RIM	SHEET 292 OF 401
	DATE: 06/2025			

100% COMPLETE CONSTRUCTION DOCUMENTS

GRCA-257282

PLOT DATE: 6/17/2025 PLOT TIME: 9:14:01 AM SS6/V8I D3167666 - South Rim\4 Delivery\43 CAD Design\GRCA\257282\Microstation V8i Drawings\PLUMB\25P1030_D3167666.dgn

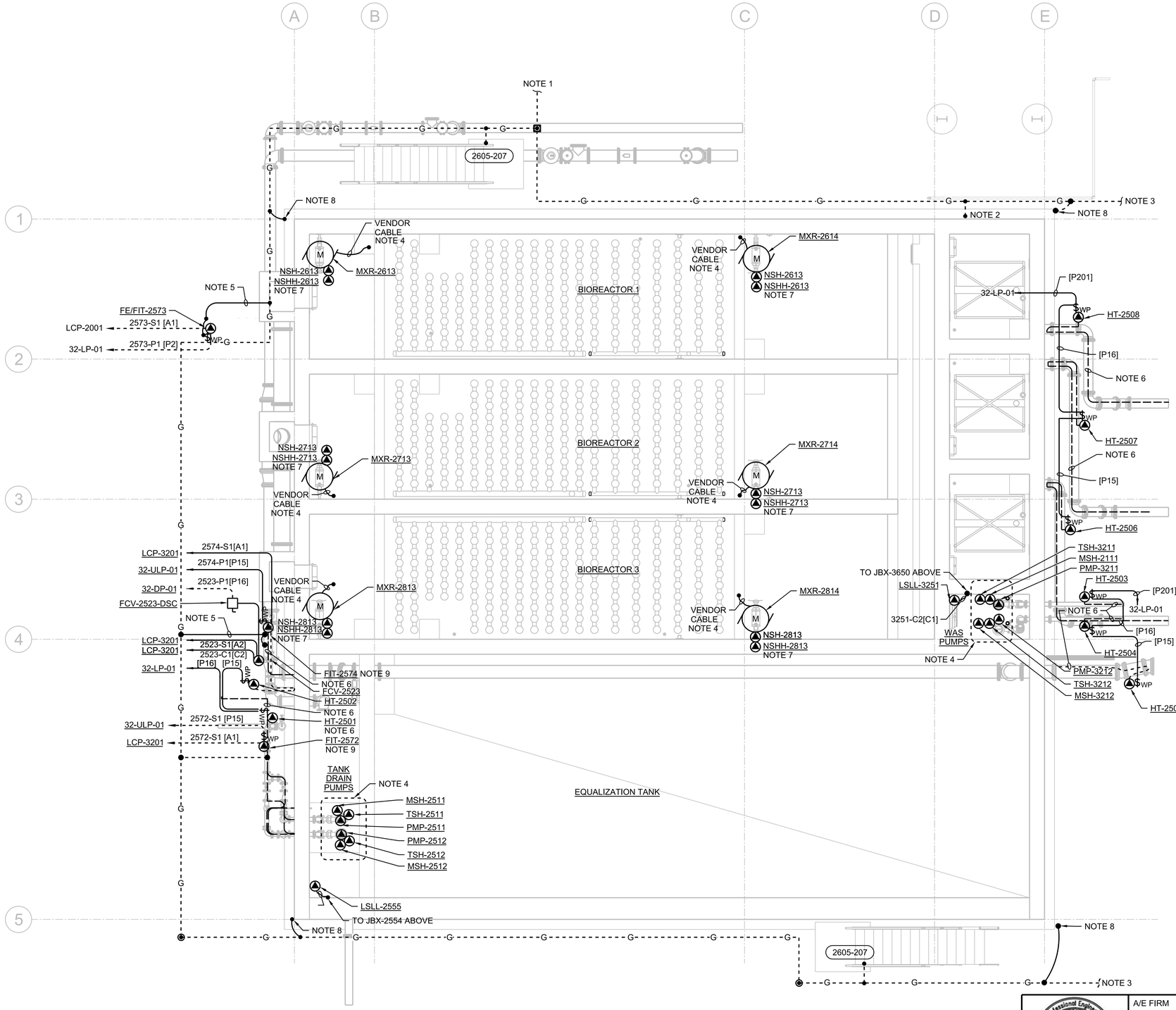

PLAN

3/16"=1'-0"

0 4 8 16

3/16"=1'-0"

FULL SIZE DRAWINGS = 22"x34"
BAR MEASURES 1" LONG

0" 1"

GENERAL SHEET NOTES

A. PROVIDE SEALOFFS PRIOR TO TERMINATION TO ALL DEVICES, EQUIPMENT, CONTROL STATIONS, CONTROL PANELS, SENSORS, SWITCHES, AND ELECTRICAL EQUIPMENT IN HAZARD AREAS AND WHEN ENTERING/LEAVING HAZARD AREAS. REFER TO DRAWINGS 01G0250 AND 01G0251 FOR AREA CLASSIFICATIONS.

B. MAINTAIN A MINIMUM OF 24" BETWEEN POWER CONDUITS AND CONTROL (EXCEPT AS SHOWN FOR HANDSTATIONS) AND INSTRUMENTATION CONDUITS EXCEPT AT POINT OF TERMINATION.

C. PLANS ARE DIAGRAMMATIC AND NOT INTENDED TO SHOW SPECIFIC ROUTING, OFFSETS, CONDULETS, PULLBOXES, SUPPORTS OR RACEWAY CONFIGURATION NECESSARY FOR A COMPLETE SYSTEM. CONTRACTOR TO LAYOUT CONDUIT RUNS IN COMPLIANCE WITH THE GENERAL CONSTRAINTS OF THE PROJECT DOCUMENTS.

D. COORDINATE CONDUIT ENCLOSURE ENTRIES WITH MANUFACTURERS INSTALLATION MANUAL PRIOR TO ROUGH-IN OF EQUIPMENT AND INSTRUMENTS.

E. PROVIDE STEEL STRUT TO SUPPORT SAFETY DISCONNECT SWITCHES TO WALL. DO NOT MOUNT SAFETY DISCONNECT SWITCH DIRECTLY TO WALL.

F. SIZE SAFETY DISCONNECTS FOR EQUIPMENT SERVED.

SHEET NOTES

1. CONNECT TO RECLAIMED WATER TANK GROUND RING. REFER TO DRAWING 70EP1030.
2. BOND TO REBAR IN CONCRETE.
3. CONNECT TO PROCESS BUILDING GROUND RING. REFER TO DRAWING 32EP1030.
4. POWER AND INSTRUMENTATION CABLES PROVIDED BY MANUFACTURER WITH PUMP. COORDINATE TERMINATIONS WITH EQUIPMENT ABOVE AS CALLED OUT ON DRAWING 25EP1030.
5. #6 AWG BARE SOLID COPPER IN 1/2" CONDUIT. TERMINATE TO FLOW METER IN ACCORDANCE WITH MANUFACTURERS INSTALLATION INSTRUCTIONS.
6. CONTRACTOR TO COORDINATE THE TOTAL HEAT TRACE CABLE REQUIRED WITH CONTRACTORS CHOSEN SUPPLIER TO ENSURE ADEQUATE FREEZE PROTECTION.
7. TORQUE CONTACTS INCLUDED WITH MIXER AND MIXER CABLE.
8. LIGHTNING DOWN CONDUCTOR FROM SAFETY RAIL ABOVE. REFER TO SHEET 25EP1020.
9. PROVIDE INSTRUMENT SUN SHADE OVER CONTROL STATIONS AND HAND STATIONS.

Registered Professional Engineer (Electrical) CERTIFICATE NO. 81240 DAVID BURGER Date Signed 6-19-2025 ARIZONA, U.S.A.

JUNE 19, 2025

A/E FIRM
JACOBS GOVERNMENT SERVICES COMPANY
GREENWOOD VILLAGE, CO

DESIGNED: D BURGER
CADD: J GARIBAY
TECH. REVIEW: J LANDMAN
DATE: 06/2025

SUB SHEET NO. 25EP1020

TITLE OF SHEET
PROCESS TANKS ELECTRICAL LOWER PROCESS PLAN

GRAND CANYON, SOUTH RIM

DRAWING NO. 113 / 175376
PMIS/PKG NO. 257282
SHEET 293 OF 401

100% COMPLETE CONSTRUCTION DOCUMENTS

GRCA-257282

PLOT DATE: 6/16/2025 PLOT TIME: 11:38:05 PM SS6/V8i D3167666 - South Rim\4 Delivery\43 CAD Design\GRCA\257282\Microstation V8i Drawings\ELEC\25EP1020_D3167666.dgn

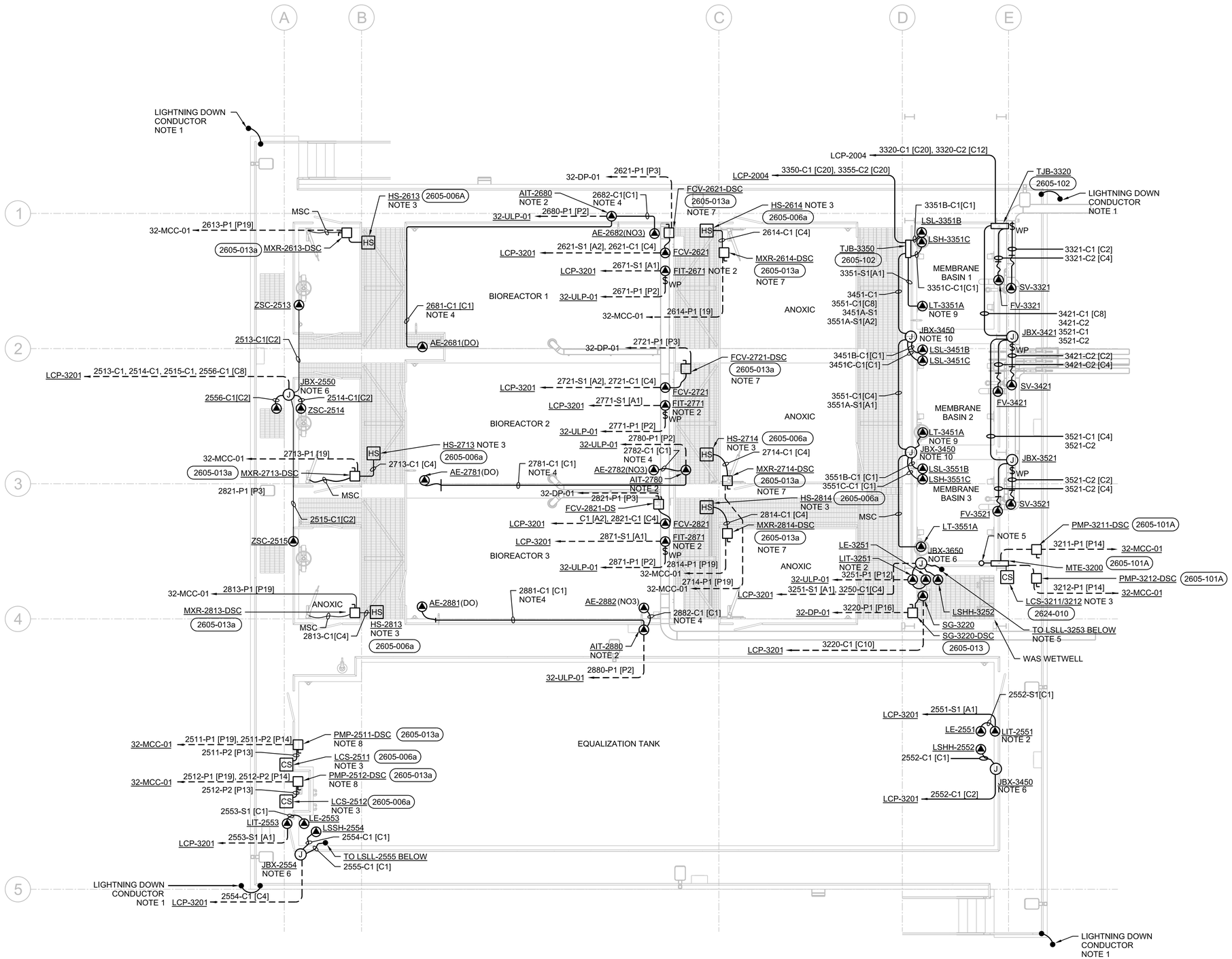

PLAN

3/16"=1'-0"

0 4 8 16

3/16"=1'-0"

FULL SIZE DRAWINGS = 22"x34"
BAR MEASURES 1" LONG

0" 1"

GENERAL SHEET NOTES

A. PROVIDE SEALOFFS PRIOR TO TERMINATION TO ALL DEVICES, EQUIPMENT, CONTROL STATIONS, CONTROL PANELS, SENSORS, SWITCHES, AND ELECTRICAL EQUIPMENT IN HAZARD AREAS AND WHEN ENTERING/LEAVING HAZARD AREAS. REFER TO DRAWINGS 01G0250 AND 01G0251 FOR ARE CLASSIFICATIONS.

B. MAINTAIN A MINIMUM OF 24" BETWEEN POWER CONDUITS AND CONTROL (EXCEPT AS SHOWN FOR HANDSTATIONS) AND INSTRUMENTATION CONDUITS EXCEPT AT POINT OF TERMINATION.

C. PLANS ARE DIAGRAMMATIC AND NOT INTENDED TO SHOW SPECIFIC ROUTING, OFFSETS, CONDULETS, PULLBOXES, SUPPORTS OR RACEWAY CONFIGURATION NECESSARY FOR A COMPLETE SYSTEM. CONTRACTOR TO LAYOUT CONDUIT RUNS IN COMPLIANCE WITH THE GENERAL CONSTRAINTS OF THE PROJECT DOCUMENTS.

D. COORDINATE CONDUIT ENCLOSURE ENTRIES WITH MANUFACTURERS INSTALLATION MANUAL PRIOR TO ROUGH-IN OF EQUIPMENT AND INSTRUMENTS.

E. PROVIDE STEEL TO SUPPORT SAFETY DISCONNECT SWITCHES TO WALL. DO NOT MOUNT SAFETY DISCONNECT SWITCH DIRECTLY TO WALLS.

F. SIZE SAFETY DISCONNECTS FOR EQUIPMENT SERVED.

G. CONTRACTOR TO COORDINATE THE TOTAL HEAT TRACE CABLE REQUIRED WITH CONTRACTORS CHOSEN SUPPLIER TO ENSURE ADEQUATE FREEZE PROTECTION.

SHEET NOTES

1. BOND SAFETY RAIL TO GROUND RING. REFER TO DRAWING 25EP1020.
2. PROVIDE INSTRUMENT SUN SHADE.
3. PROVIDE INSTRUMENT SUN SHADE OVER CONTROL STATIONS AND HAND STATIONS.
4. PROVIDE 1" CONDUIT WITH INSULATED THROAT BUSHINGS AT EACH END FOR VENDOR CABLE FROM SENSOR TO TRANSMITTER. REFER TO VENDOR INSTALLATION MANUAL FOR DEVICE REQUIRMENTS.
5. CORE OR CAST SLEEVE FOR MANUFACTURER SUPPLIED CABLES.
6. HINGE COVERED JUNCTION BOX WITH TERMINAL STRIP TO TRANSITION FROM MANUFACTURER SUPPLIED CABLE TO CONTROL WIRE.
7. MOUNT DISCONNECT 4-INCHES BEHIND HAND RAIL TO MAINTAIN 3'-6" CLEAR WORKING SPACE TO HAND RAIL OPPOSITE THE DISCONNECT.
8. PROVIDE TWO SETS OF AUXILIARY CONTACTS. ONE SET TO OPEN VFD CUTOFF CIRCUIT BEFORE OPENING KNIFE BLADES AND ONE SET TO REMOVE 120 VOLT MOTOR CONDENSATION HEATER CIRCUIT.
9. REFER TO INSTRUMENT DETAILS FOR STILLING WELL.
10. HINGE COVERED JUNCTION BOX WITH TERMINAL STRIP TO TRANSITION FROM MANUFACTURER SUPPLIED CABLE TO INSTRUMENT WIRE. PROVIDE SUFFICIENT SPACE TO INSTALL LEVEL TRANSMITTER BELLOW.

Registered Professional Engineer (Electrical) CERTIFICATE NO. 81240 DAVID BURGER Date Signed 6-19-2025 ARIZONA, U.S.A.

JUNE 19, 2025

A/E FIRM	DESIGNED:	SUB SHEET NO.	TITLE OF SHEET	DRAWING NO.
JACOBS GOVERNMENT SERVICES COMPANY GREENWOOD VILLAGE, CO	D BURGER CADD: J GARIBAY TECH. REVIEW: J LANDMAN DATE: 06/2025	25EP1030	PROCESS TANKS ELECTRICAL UPPER PROCESS PLAN GRAND CANYON, SOUTH RIM	113 / 175376 PMIS/PKG NO. 257282 SHEET 294 OF 401

GRCA-257282

100% COMPLETE CONSTRUCTION DOCUMENTS

PLOT DATE: 6/16/2025 PLOT TIME: 11:38:45 PM SS6/V8i D3167666 - South Rim\4 Delivery\43 CAD Design\GRCA\257282\Microstation V8i DrawingsIELEC\25EP1030_D3167666.dgn

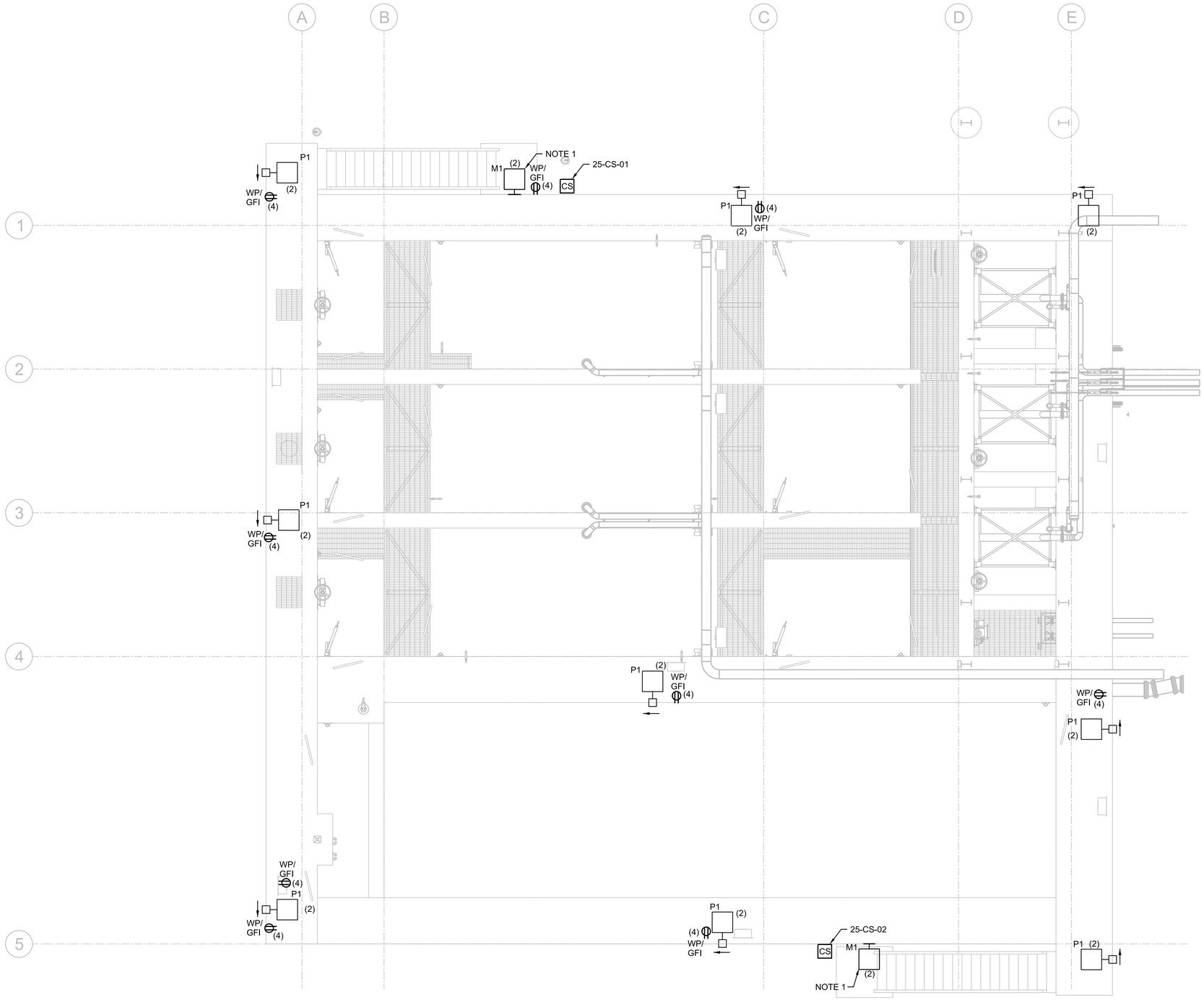

PLAN

3/16"=1'-0"

0 4 8 16

3/16"=1'-0"

N

FULL SIZE DRAWINGS = 22"x34"
BAR MEASURES 1" LONG

0" 1"

GENERAL SHEET NOTES

A. NUMBERS SHOWN IN PARENTHESIS, (N), ADJACENT TO LIGHTS AND RECEPTACLES DENOTE CIRCUIT NUMBERS IN FACILITY PANELBOARD 32-LP-02 UNLESS OTHERWISE NOTED. PROVIDE #12 CONDUCTORS FOR 20A OR 15A CIRCUITS LESS THAN 75 FEET. PROVIDE #10 CONDUCTORS FOR CIRCUITS GREATER THAN 75 FEET. REFER TO PANELBOARD SCHEDULES.

B. COMBINE RECEPTACLE AND LIGHTING CIRCUITS IN A SINGLE CONDUIT TO MINIMIZE LENGTH OF CONDUCTORS AND CONDUIT. CIRCUITS COMBINED INTO A SINGLE CONDUIT SHALL BE SIZED FOR NEC DERATING AND CONDUIT FILL REQUIREMENTS.

C. FOR INFORMATION ON EXTERIOR LIGHTING CONTROLS, SEE DRAWING 08E7110.

D. FOR LUMINAIRE SCHEDULE AND NOTES, SEE DRAWING 08E6001 AND 08E6002.

E. PROVIDE SEALOFFS PRIOR TO TERMINATION TO ALL DEVICES, EQUIPMENT, CONTROL STATIONS, CONTROL PANELS, SENSORS, SWITCHES, AND ELECTRICAL EQUIPMENT IN HAZARD AREAS AND WHEN ENTERING/LEAVING HAZARD AREAS. REFER TO DRAWINGS 01G0250 AND 01G0251 FOR AREA CLASSIFICATIONS.

F. MAINTAIN A MINIMUM OF 24" BETWEEN POWER CONDUITS AND CONTROL (EXCEPT AS SHOWN FOR HANDSTATIONS) AND INSTRUMENTATION CONDUITS EXCEPT AT POINT OF TERMINATION.

G. PLANS ARE DIAGRAMMATIC AND NOT INTENDED TO SHOW SPECIFIC ROUTING, OFFSETS, CONDULETS, PULLBOXES, SUPPORTS OR RACEWAY CONFIGURATION NECESSARY FOR A COMPLETE SYSTEM. CONTRACTOR TO LAYOUT CONDUIT RUNS IN COMPLIANCE WITH THE GENERAL CONSTRAINTS OF THE PROJECT DOCUMENTS.

H. COORDINATE CONDUIT ENCLOSURE ENTRIES WITH MANUFACTURERS INSTALLATION MANUAL PRIOR TO ROUGH-IN OF EQUIPMENT AND INSTRUMENTS.

I. PROVIDE METALLIC STRUT SUPPORTS FOR RECEPTACLES.

SHEET NOTES

1. WALL MOUNT EXTERIOR LUMINAIRES AT 9'-0" AFG, UNLESS SPECIFIED OTHERWISE. COORDINATE FINAL LOCATION WITH ARCHITECTURAL DRAWINGS.

Registered Professional Engineer (Electrical) CERTIFICATE NO. 81240 DAVID BURGER Date Signed 6-19-2025 ARIZONA, U.S.A.

JUNE 19, 2025

A/E FIRM
JACOBS GOVERNMENT SERVICES COMPANY
GREENWOOD VILLAGE, CO

DESIGNED: D BURGER
CADD: J GARIBAY
TECH. REVIEW: J LANDMAN
DATE: 06/2025

SUB SHEET NO. 25EF1030

TITLE OF SHEET
PROCESS TANKS ELECTRICAL UPPER FACILITY PLAN

GRAND CANYON, SOUTH RIM

DRAWING NO. 113 / 175376
PMIS/PKG NO. 257282
SHEET 295 OF 401

100% COMPLETE CONSTRUCTION DOCUMENTS

GRCA-257282

PLOT DATE: 6/16/2025 PLOT TIME: 11:39:10 PM SS6/V8I D3167666 - South Rim\4 Delivery\43 CAD Design\GRCA\257282\Microstation V8i Drawings\ELEC\25EF1030_D3167666.dgn

GENERAL SHEET NOTES

A. FOR GENERAL STRUCTURAL NOTES, SEE DRAWINGS 01S0001, 01S0002, AND 01S0003.

SHEET NOTES

1. FOR COLUMN SCHEDULE SEE DETAIL 2 ON DRAWING 01S5002.
2. ALUMINUM STAIR TREADS AND LANDING SHALL CONSIST OF CLOSED AL FLOOR PLATE WITH ANTI-SLIP SURFACE INSTEAD OF AL GRATING AS SHOWN IN (0551-001).

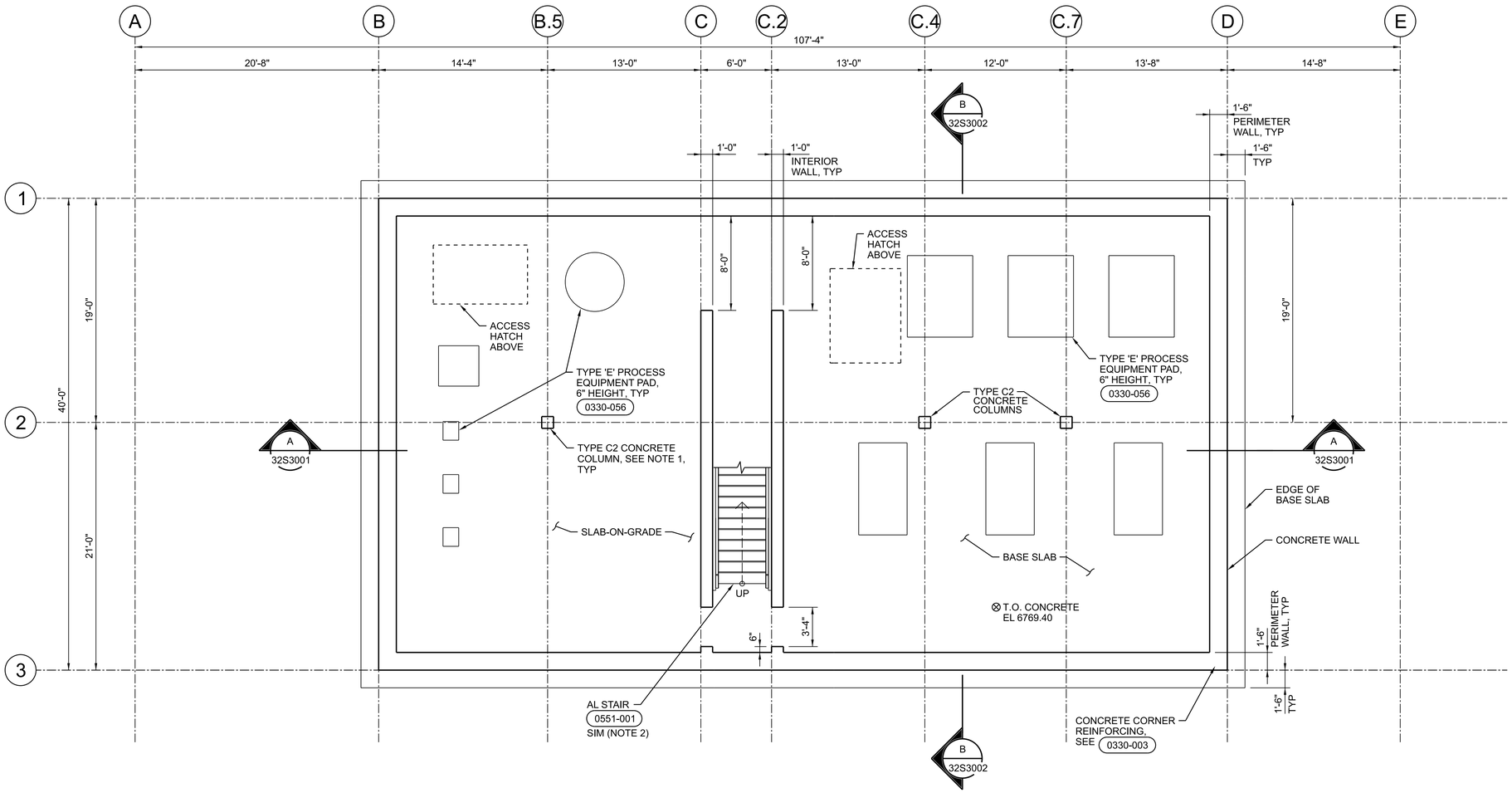

PLAN

3/16"=1'-0"

N

0 4 8 16

3/16"=1'-0"

FULL SIZE DRAWINGS = 22"x34"
BAR MEASURES 1" LONG

0" 1"

Registered Professional Engineer (Structural) Wayne W. Kohler 81476 ARIZONA U.S.A. Date Signed 6/20/25	A/E FIRM JACOBS GOVERNMENT SERVICES COMPANY GREENWOOD VILLAGE, CO	DESIGNED: W KOHLER CADD: B CLEGG TECH. REVIEW: A FIRTH DATE: 06/2025	SUB SHEET NO. 32S1020	TITLE OF SHEET PROCESS BUILDING STRUCTURAL LOWER LEVEL PLAN GRAND CANYON, SOUTH RIM

DRAWING NO. 113 175376
PMIS/PKG NO. 257282
SHEET 296 OF 401

100% COMPLETE CONSTRUCTION DOCUMENTS

GRCA-257282

PLOT DATE: 16-JUN-2025 PLOT TIME: 14:45 SS6/V8i D3167666 - South Rim\4 Delivery\43 CAD Design\GRCA\257282\Microstation V8i Drawings\STRUC\32S1020_D3167666.dgn

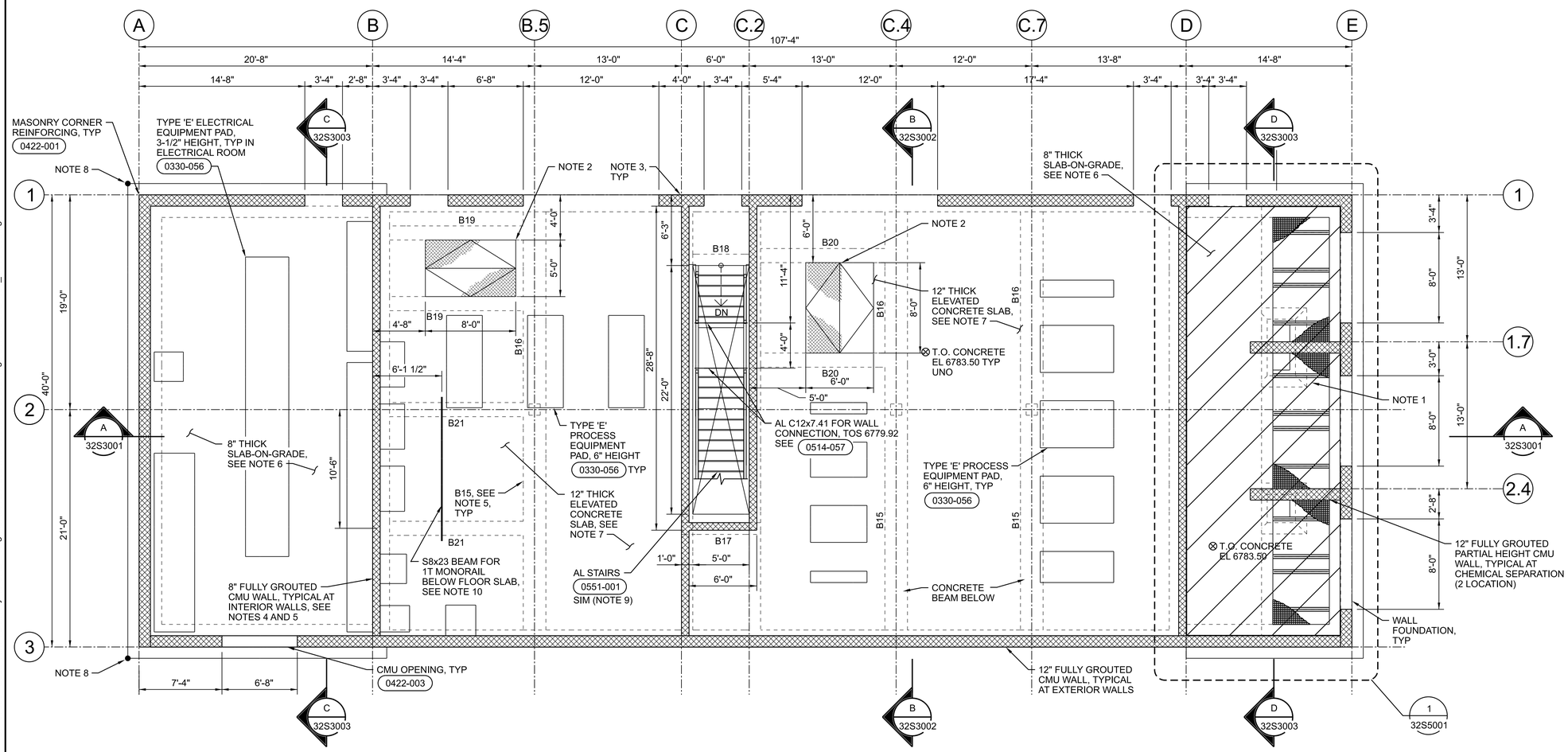

PLAN

3/16"=1'-0"

0 4 8 16

3/16"=1'-0"

GENERAL SHEET NOTES

1. FOR GENERAL STRUCTURAL NOTES, SEE DRAWINGS 01S0001, 01S0002, AND 01S0003.

SHEET NOTES

1. DENOTES AREA TO RECEIVE CHEMICAL RESISTANT COATING PER SPECIFICATION 09 96 35.
2. DOUBLE LEAF ALUMINUM SIDEWALK DOOR - SIZE SHOWN ON PLAN. SEE SPECIFICATION 05 05 50 METAL FABRICATIONS.
3. FOR CMU WALL PIERS AND WALL COLUMNS, SEE DETAILS 0422-005 AND 0422-006.
4. ALL 8" INTERIOR WALLS EXTEND FULL HEIGHT WITH RAKE. SEE DETAIL 0422-041.
5. B## DENOTES CONCRETE BEAM NUMBER. SEE BEAM SCHEDULE ON DRAWING 01S5001.
6. REINFORCE SLAB-ON-GRADE WITH #4 @ 6" EW WITH 1-1/2" CLEAR FROM TOP SURFACE.
7. REINFORCE ELEVATED SLAB WITH #4 @ 6" EW TOP AND BOTTOM WITH 1-1/2" CLEAR TYPICAL.
8. FACILITY LOCATION CONTROL POINT, SEE CIVIL DRAWING 06C2002.
9. ALUMINUM STAIR TREADS AND LANDING SHALL CONSIST OF CLOSED AL FLOOR PLATE WITH ANTI-SLIP SURFACE INSTEAD OF AL GRATING AS SHOWN IN 0551-001.
10. MONORAIL BEAM SHALL BE UNDERHUNG OFF OF CONCRETE BEAMS (B21). EXTEND MONORAIL BEAM LENGTH 1'-0" BEYOND CONCRETE BEAM AT EACH END FOR CONNNECTION DETAIL, SEE 0512-101.

FULL SIZE DRAWINGS = 22"x34"
BAR MEASURES 1" LONG

0" 1"

Wayne W. Kohler — Professional Engineer, Civil, Structural, Fire Protection, Electrical, Mechanical, Plumbing, Site Utilities, Site Lighting — 81476 WAYNE W. KOHLER — Date Signed 6/20/25 — ARIZONA U.S.A.	A/E FIRM: JACOBS GOVERNMENT SERVICES COMPANY, GREENWOOD VILLAGE, CO	DESIGNED: W KOHLER CADD: B CLEGG TECH. REVIEW: A FIRTH DATE: 06/2025	SUB SHEET NO.: 32S1030	TITLE OF SHEET: PROCESS BUILDING STRUCTURAL MAIN LEVEL PLAN GRAND CANYON, SOUTH RIM

DRAWING NO. 113 / 175376
PMIS/PKG NO. 257282
SHEET 297 OF 401

100% COMPLETE CONSTRUCTION DOCUMENTS

GRCA-257282

PLOT DATE: 16-JUN-2025 PLOT TIME: 14:35 SS6/V8i D3167666 - South Rim\4 Delivery\43 CAD Design\GRCA\257282\Microstation V8i Drawings\STRUC\32S1030_D3167666.dgn

SHEET NOTES

1. # DENOTES METAL DECK TYPE. SEE DRAWING 01S0002 FOR METAL DECK SCHEDULE, FASTENER REQUIREMENTS, AND NOTES.

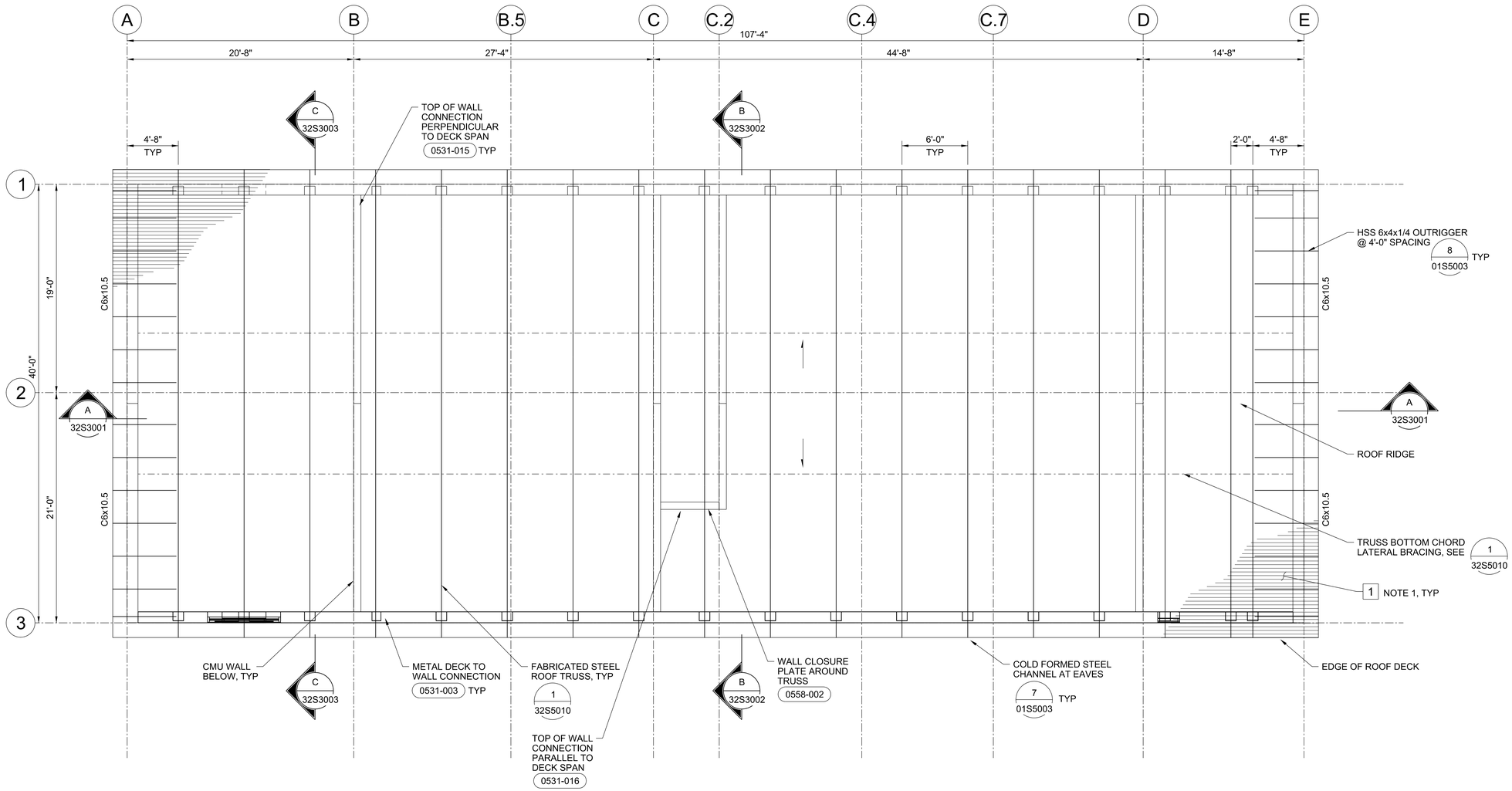

PLAN

3/16"=1'-0"

0 4 8 16

3/16"=1'-0"

FULL SIZE DRAWINGS = 22"x34"
BAR MEASURES 1" LONG

0" 1"

Registered Professional Engineer (Structural) Wayne W. Kohler 81476 ARIZONA U.S.A. Date Signed 6/20/25	A/E FIRM JACOBS GOVERNMENT SERVICES COMPANY GREENWOOD VILLAGE, CO	DESIGNED: W KOHLER CADD: B CLEGG TECH. REVIEW: A FIRTH DATE: 06/2025	SUB SHEET NO. 32S1040	TITLE OF SHEET PROCESS BUILDING STRUCTURAL ROOF FRAMING PLAN GRAND CANYON, SOUTH RIM

DRAWING NO. 113 / 175376
PMIS/PKG NO. 257282
SHEET 298 OF 401

100% COMPLETE CONSTRUCTION DOCUMENTS

GRCA-257282

PLOT DATE: 06\20\2025 PLOT TIME: 8:59:35 AM SS6/V8i D3167666 - South Rim\4 Delivery\43 CAD Design\GRCA\257282\Microstation V8i Drawings\STRUC\32S1040_D3167666.dgn

SHEET NOTES

1. CONTINUOUS WALL FOOTING DEPTH IS 2'-0" BELOW SLAB TOC EL BETWEEN GRIDS A AND B. THIS DEPTH IS 3'-0" BELOW SLAB TOC EL BETWEEN GRIDS D & E.

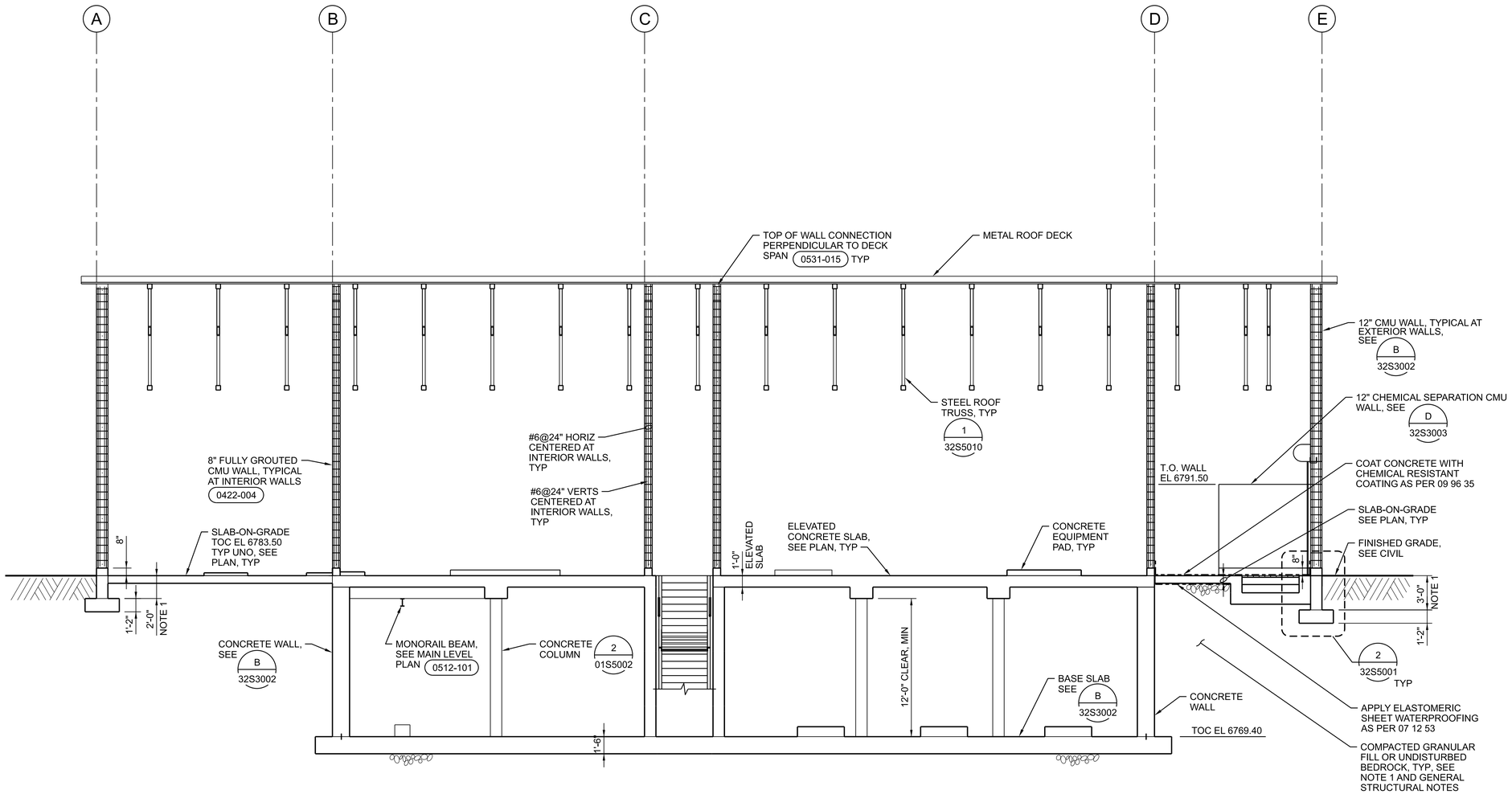

A SECTION
3/16"=1'-0"
32S1020
32S1030
32S1040

0 4 8 16
3/16"=1'-0"

FULL SIZE DRAWINGS = 22"x34"
BAR MEASURES 1" LONG
0" 1"

Registered Professional Engineer (Structural) 81476 WAYNE W. KOHLER Date Signed 6/20/25 ARIZONA U.S.A.

A/E FIRM	DESIGNED:	SUB SHEET NO.	TITLE OF SHEET	DRAWING NO.
JACOBS GOVERNMENT SERVICES COMPANY GREENWOOD VILLAGE, CO	W KOHLER CADD: B CLEGG TECH. REVIEW: A FIRTH DATE: 06/2025	32S3001	PROCESS BUILDING STRUCTURAL SECTION GRAND CANYON, SOUTH RIM	113 / 175376 PMIS/PKG NO. 257282 SHEET 299 OF 401

100% COMPLETE CONSTRUCTION DOCUMENTS

GRCA-257282

PLOT DATE: 16-JUN-2025 PLOT TIME: 14:36 SS6\V8i D3167666 - South Rim\4 Delivery\43 CAD Design\GRCA\257282\Microstation V8i Drawings\STRUC\32S3001_D3167666.dgn

SHEET NOTES

1. FOR COLUMN SCHEDULE AND DETAILING, SEE 01S5002.

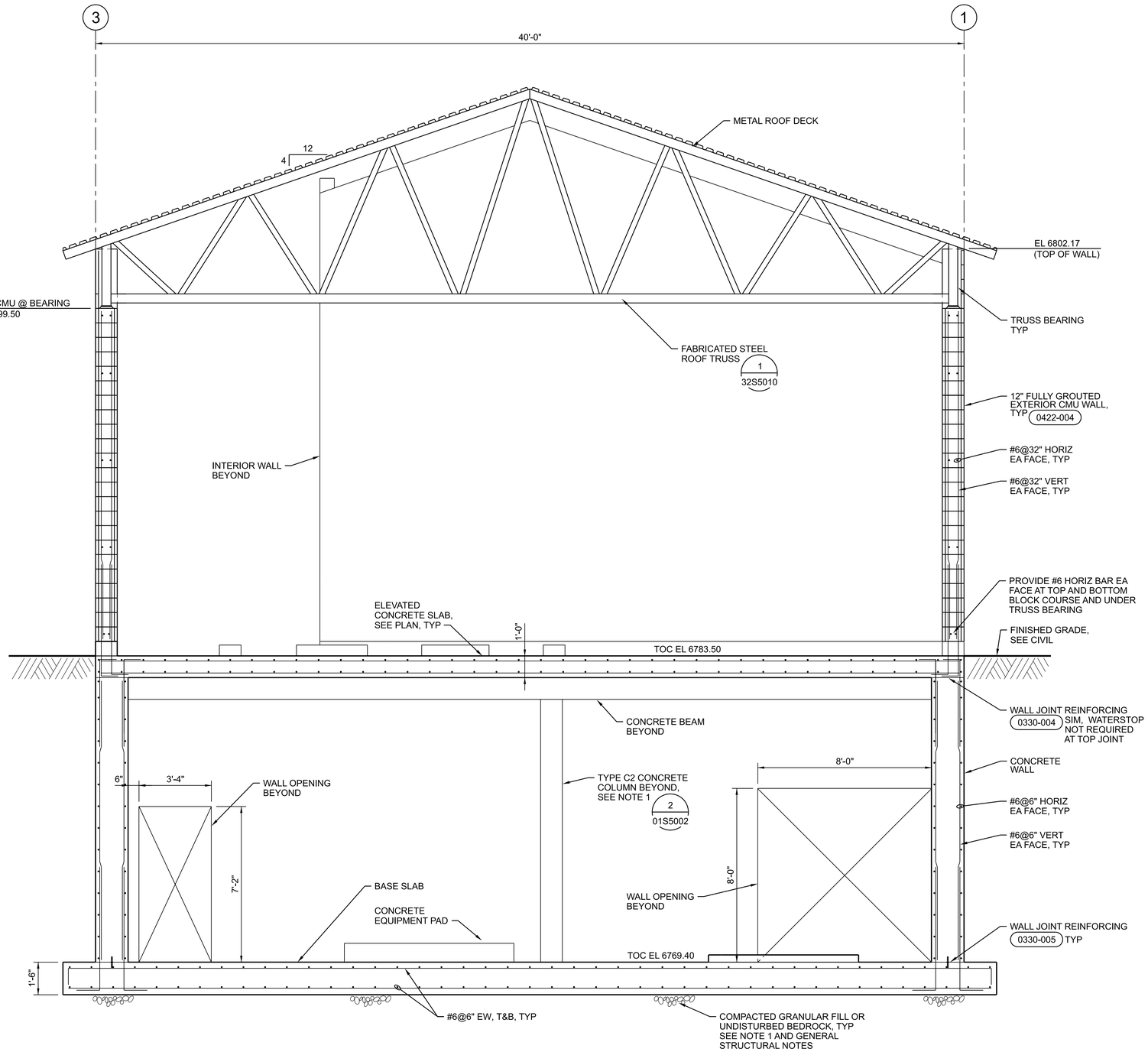

B SECTION
3/8"=1'-0"

32S1020
32S1030
32S1040
32S3001
32S3003

0 2 4 6
3/8"=1'-0"

FULL SIZE DRAWINGS = 22"x34"
BAR MEASURES 1" LONG
0" 1"

Wayne W. Kohler — Registered Professional Engineer (Civil) — 81476 — WAYNE W. KOHLER — Date Signed 6/20/25 — ARIZONA U.S.A.	A/E FIRM JACOBS GOVERNMENT SERVICES COMPANY GREENWOOD VILLAGE, CO	DESIGNED: W KOHLER CADD: B CLEGG TECH. REVIEW: A FIRTH DATE: 06/2025	SUB SHEET NO. 32S3002	TITLE OF SHEET PROCESS BUILDING STRUCTURAL SECTION GRAND CANYON, SOUTH RIM

DRAWING NO. 113
PMIS/PKG NO. 175376
SHEET 300 OF 401

GRCA-257282

100% COMPLETE CONSTRUCTION DOCUMENTS

PLOT DATE: 16-JUN-2025 PLOT TIME: 14:39 SS6/V8I D3167666 - South Rim\4 Delivery\43 CAD Design\GRCA\257282\Microstation V8i Drawings\STRUC\32S3002_D3167666.dgn

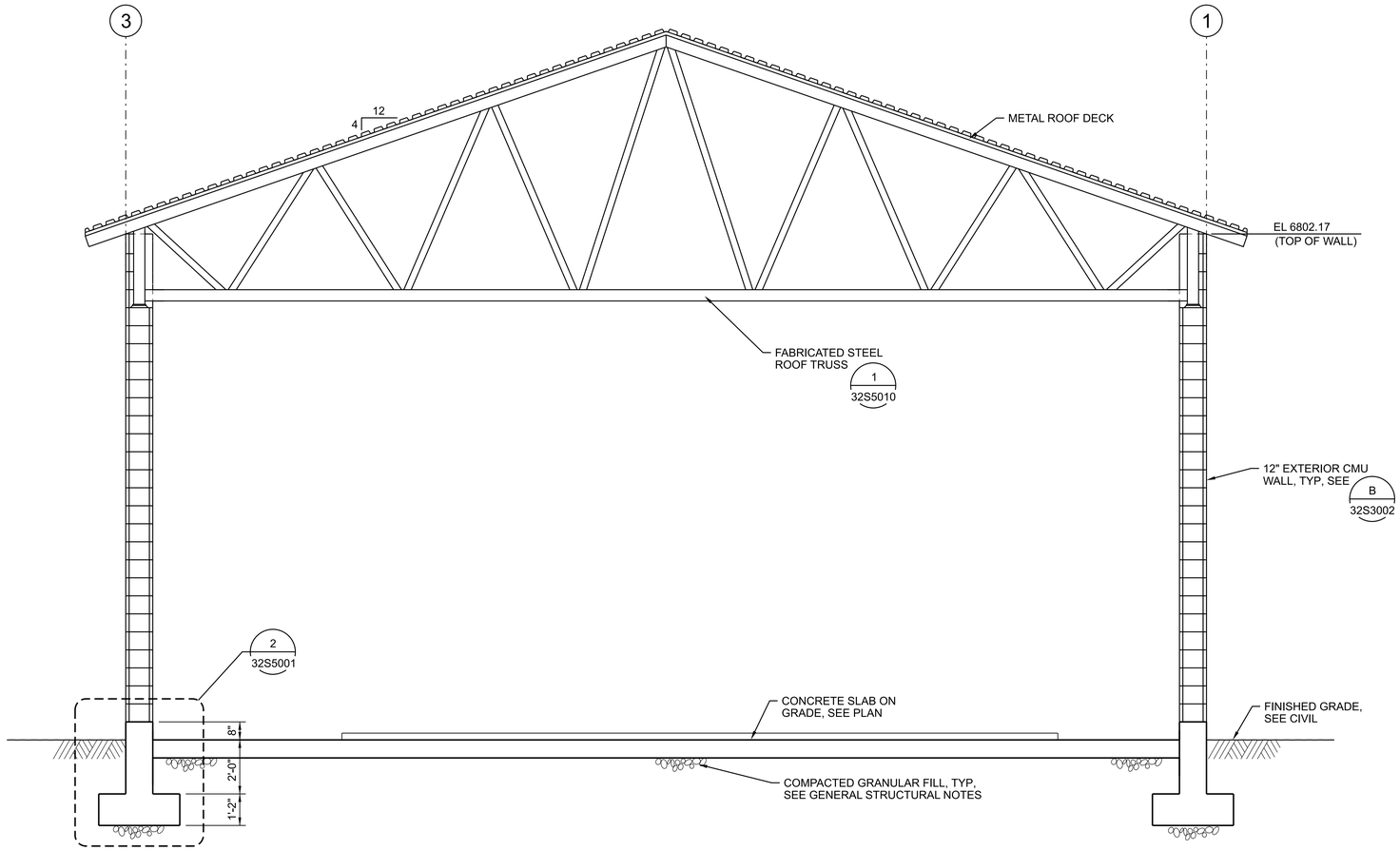

C SECTION
3/8"=1'-0"
32S1030
32S1040

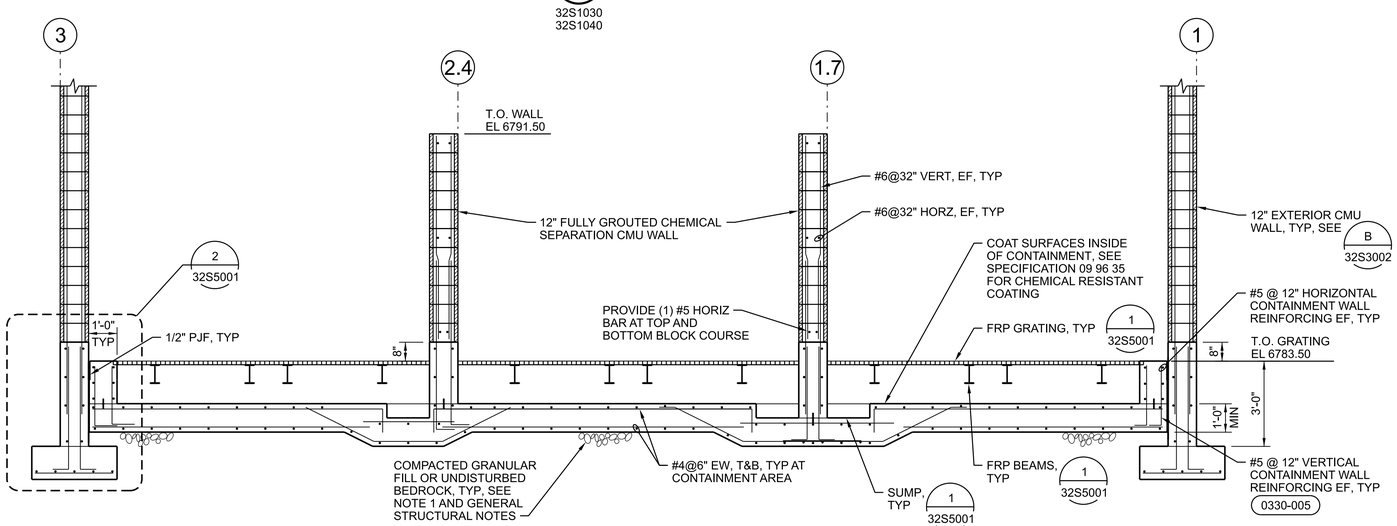

D SECTION
3/8"=1'-0"
32S1030
32S5001
32S3001

FULL SIZE DRAWINGS = 22"x34"
BAR MEASURES 1" LONG

0" 1"

0 2 4 6
3/8"=1'-0"

Wayne W. Kohler 81476 WAYNE W. KOHLER REGISTERED PROFESSIONAL ENGINEER (CIVIL) ARIZONA U.S.A. 6/20/25	A/E FIRM JACOBS GOVERNMENT SERVICES COMPANY GREENWOOD VILLAGE, CO	DESIGNED: W KOHLER CADD: B CLEGG TECH. REVIEW: A FIRTH DATE: 06/2025	SUB SHEET NO. 32S3003	TITLE OF SHEET PROCESS BUILDING STRUCTURAL SECTIONS GRAND CANYON, SOUTH RIM

DRAWING NO. 113 175376
PMIS/PKG NO. 257282
SHEET 301 OF 401

100% COMPLETE CONSTRUCTION DOCUMENTS

GRCA-257282

PLOT DATE: 16-JUN-2025 PLOT TIME: 14:35 SS6/V8i D3167666 - South Rim\4 Delivery\43 CAD Design\GRCA\257282\Microstation V8i Drawings\STRUC\32S3003_D3167666.dgn

SHEET NOTES

1. I-SECTION BEAMS SHALL HAVE THE FOLLOWING MINIMUM SECTION PROPERTIES: $I_X = 56.71\ IN^4$, $S_X = 14.18\ IN^3$, AND $A = 3.0\ IN^2$.
2. VINYL ESTER FRP MATERIAL SHALL HAVE THE FOLLOWING PROPERTIES: E = 4,000,000 PSI, G = 5,000,000 PSI, F_{b_ULT} = 33,000 PSI, AND F_{v_ULT} = 7,000 PSI.

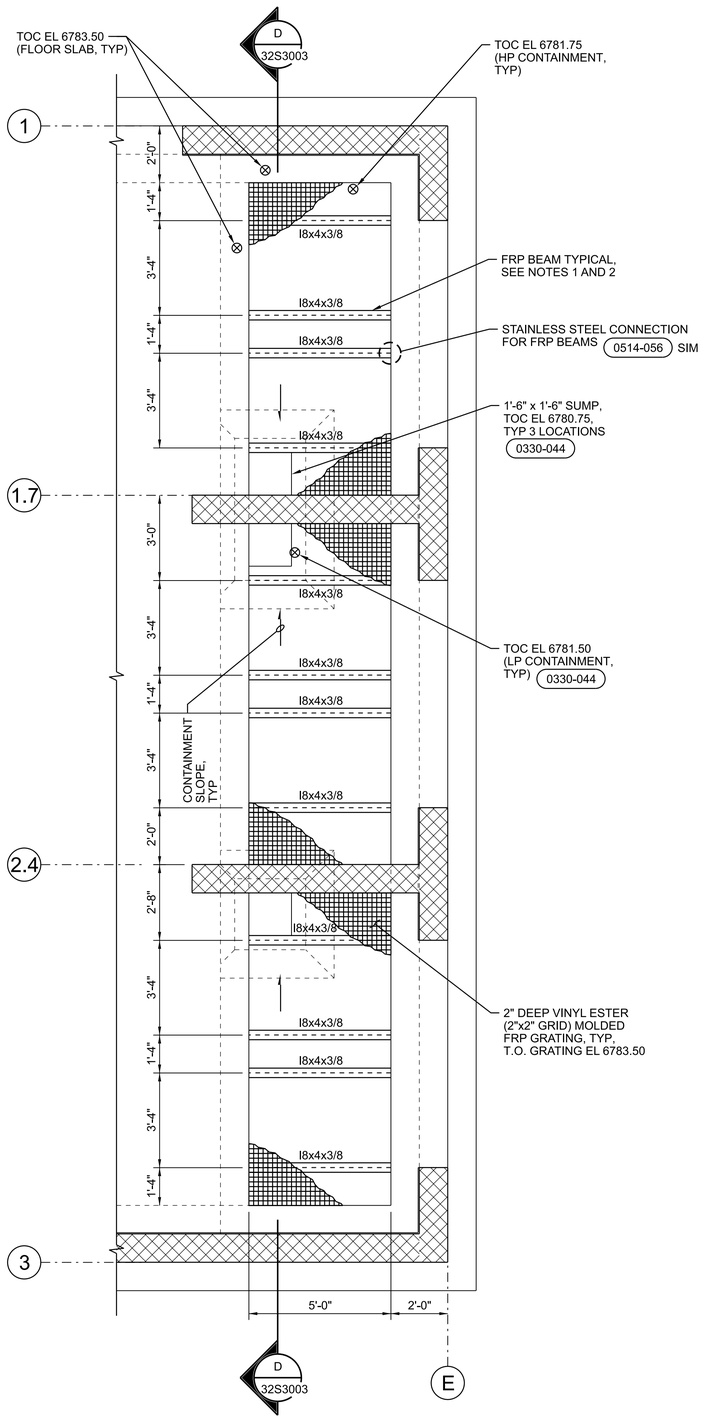

1 CONTAINMENT PLAN
3/8"=1'-0"
32S1030

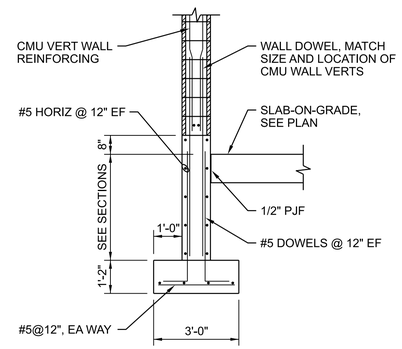

2 WALL FOOTING
3/8"=1'-0"
32S3001
32S3003

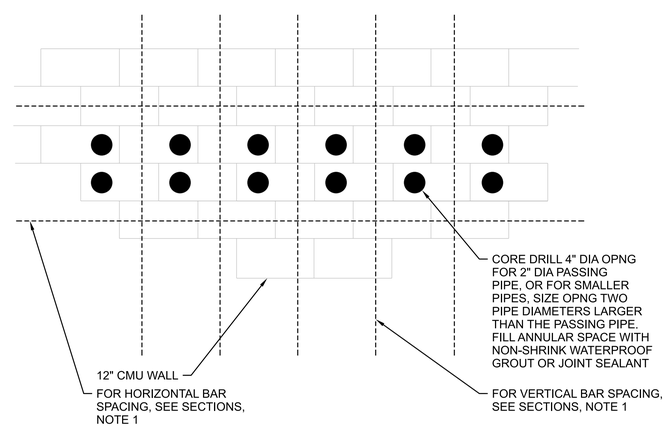

NOTES:
1. LOCATE REBAR BY GPR PRIOR TO LAYING OUT OPENINGS, DO NOT PLACE OPENINGS IN CMU CELLS CONTAINING BARS.

3 CMU BLOCK WALL PIPE PENETRATIONS
NTS

0 2 4 6
3/8"=1'-0"

FULL SIZE DRAWINGS = 22"x34"
BAR MEASURES 1" LONG
0" 1"

Registered Professional Engineer, Wayne W. Kohler, 81476, Arizona, U.S.A.	A/E FIRM: JACOBS GOVERNMENT SERVICES COMPANY, GREENWOOD VILLAGE, CO	DESIGNED: W KOHLER; CADD: B CLEGG; TECH. REVIEW: A FIRTH; DATE: 06/2025	SUB SHEET NO. 32S5001	TITLE OF SHEET: PROCESS BUILDING STRUCTURAL CONCRETE DETAILS — GRAND CANYON, SOUTH RIM

DRAWING NO. 113 175376
PMIS/PKG NO. 257282
SHEET 302 OF 401

100% COMPLETE CONSTRUCTION DOCUMENTS

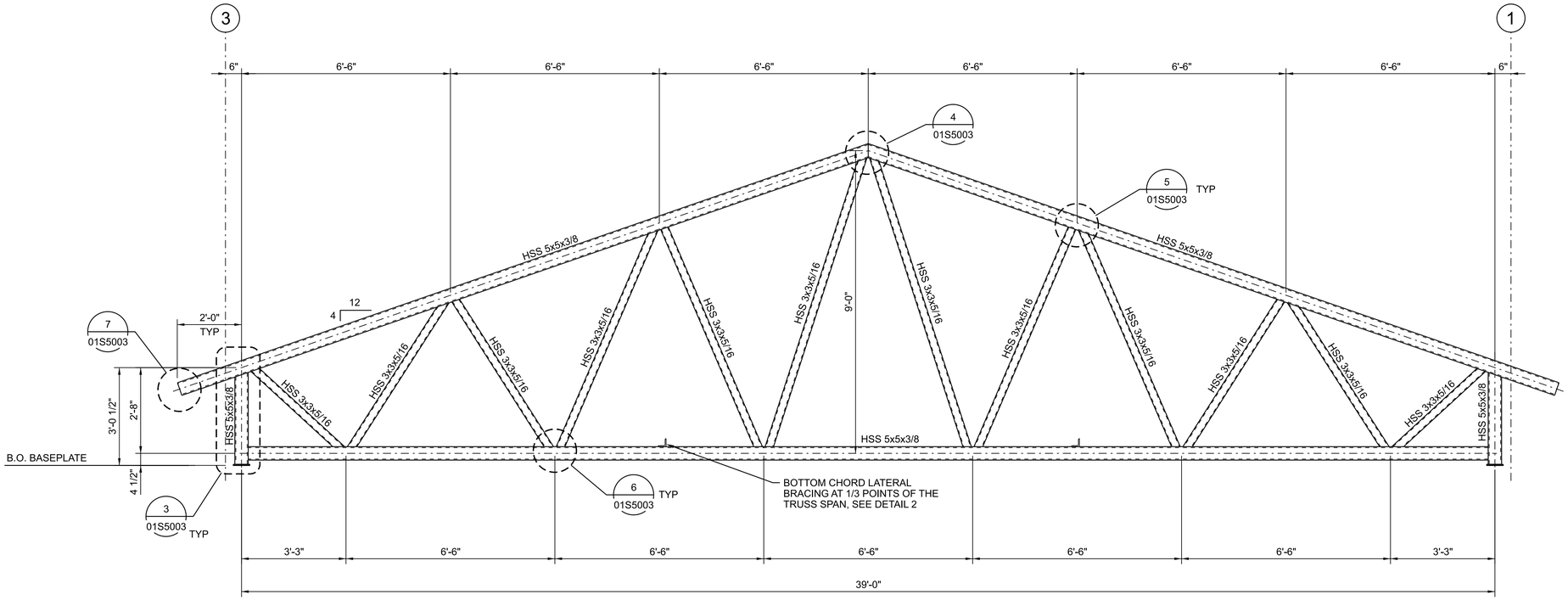

1 ROOF TRUSS

1/2"=1'-0"

32S1040
32S3001
32S3002
32S3003

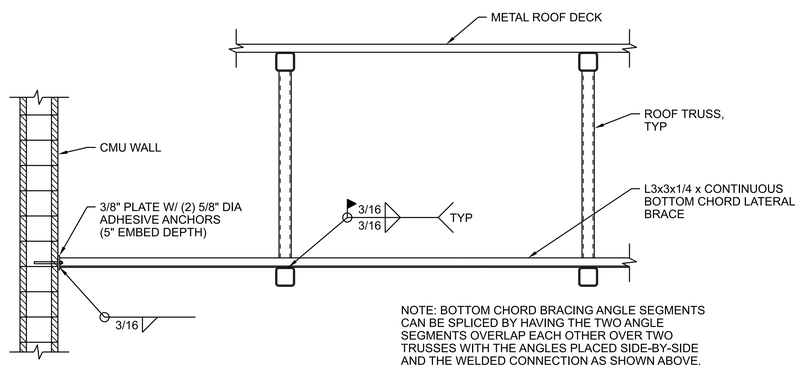

2 TRUSS LATERAL BRACING

1/2"=1'-0"

0 2 4 6
1/2"=1'-0"

FULL SIZE DRAWINGS = 22"x34"
BAR MEASURES 1" LONG
0" 1"

Registered Professional Engineer (Civil)
81476
WAYNE W. KOHLER
ARIZONA U.S.A.
Expires 6/30/26

A/E FIRM	DESIGNED:	SUB SHEET NO.	TITLE OF SHEET	DRAWING NO.
JACOBS GOVERNMENT SERVICES COMPANY GREENWOOD VILLAGE, CO	W KOHLER CADD: B CLEGG TECH. REVIEW: A FIRTH DATE: 06/2025	32S5010	PROCESS BUILDING STRUCTURAL STEEL DETAILS GRAND CANYON, SOUTH RIM	113 175376 PMIS/PKG NO. 257282 SHEET 303 OF 401

100% COMPLETE CONSTRUCTION DOCUMENTS

GRCA-257282

PLOT DATE: 16-JUN-2025 PLOT TIME: 14:38 SS6\V8i D3167666 - South Rim\4 Delivery\43 CAD Design\GRCA\257282\Microstation V8i Drawings\STRUC\32S5010_D3167666.dgn

GENERAL SHEET NOTES

A. FOR GENERAL ARCHITECTURAL NOTES, MATERIAL SYMBOLS, LEGEND, ABBREVIATIONS AND WALL TYPES, SEE DRAWING 01A0001.

B. FOR BUILDING CODE DATA AND LIFE SAFETY PLAN, SEE DRAWING 01A0032.

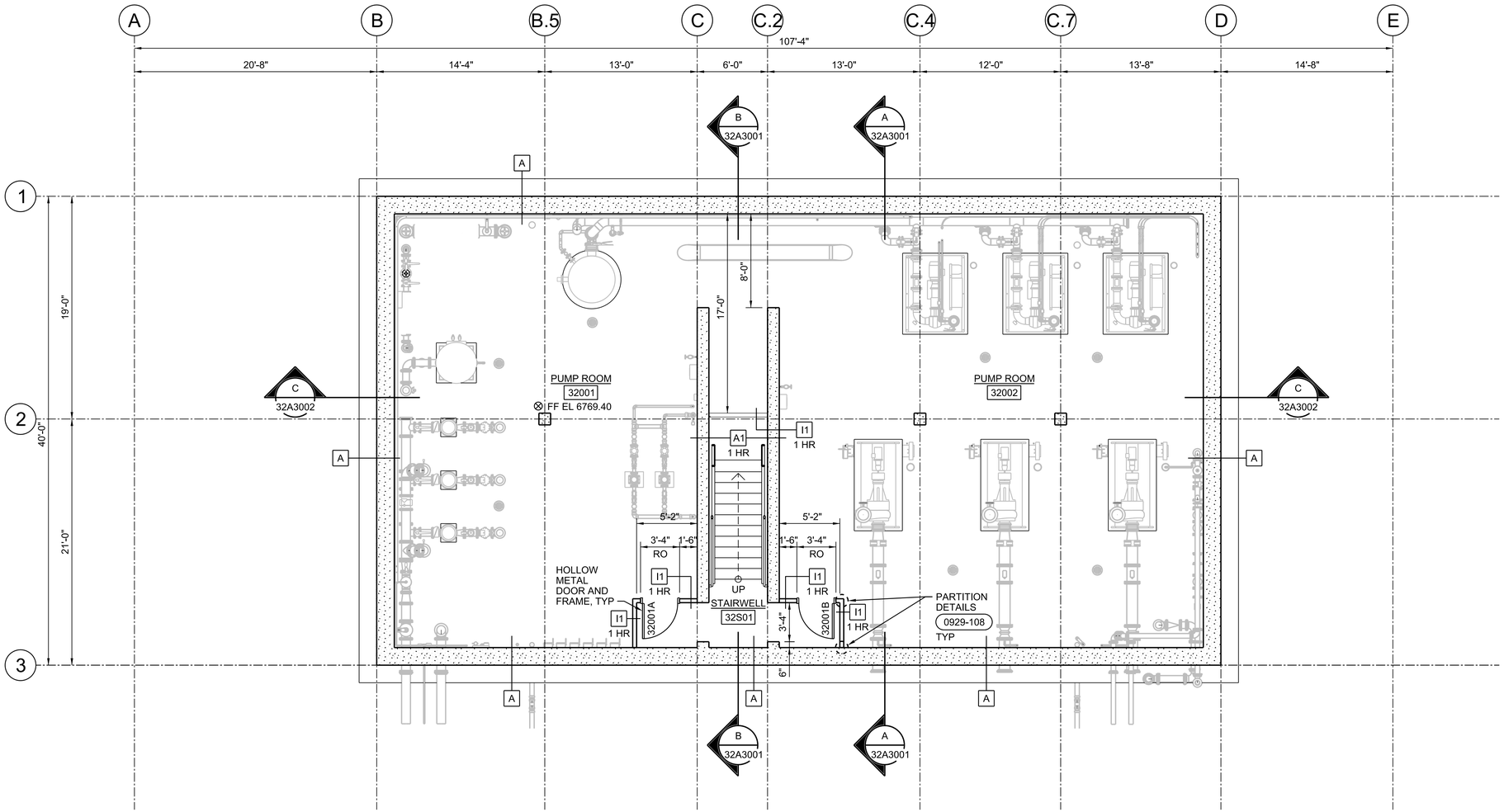

PLAN

3/16"=1'-0"

0 4 8 16

3/16"=1'-0"

FULL SIZE DRAWINGS = 22"x34"
BAR MEASURES 1" LONG

0" 1"

REGISTERED ARCHITECT
CERTIFICATE NO.
86680
MORGAN
G SHOEMAKER
Date Signed 6/16/25
ARIZONA, U.S.A.
Expires 06-30-2027

A/E FIRM	DESIGNED:	SUB SHEET NO.	TITLE OF SHEET	DRAWING NO.
JACOBS GOVERNMENT SERVICES COMPANY GREENWOOD VILLAGE, CO	M SHOEMAKER CADD: M COLLINS TECH. REVIEW: G KIRSTEN DATE: 06/2025	32A1020	PROCESS BUILDING ARCHITECTURAL LOWER LEVEL PLAN GRAND CANYON, SOUTH RIM	113 175376 PMIS/PKG NO. 257282 SHEET 304 OF 401

100% COMPLETE CONSTRUCTION DOCUMENTS

GRCA-257282

PLOT DATE: 6/16/2025 PLOT TIME: 6:03:13 PM SS6/V8i D3167666 - South Rim\4 Delivery\43 CAD Design\GRCA\257282\Microstation V8i Drawings\ARCH\32A1020_D3167666.dgn

GENERAL SHEET NOTES

A. FOR GENERAL ARCHITECTURAL NOTES, MATERIAL SYMBOLS, LEGEND,ABBREVIATIONS AND WALL TYPES, SEE DRAWING 01A0001.

B. FOR BUILDING CODE DATA AND LIFE SAFETY PLAN, SEE DRAWING 01A0032.

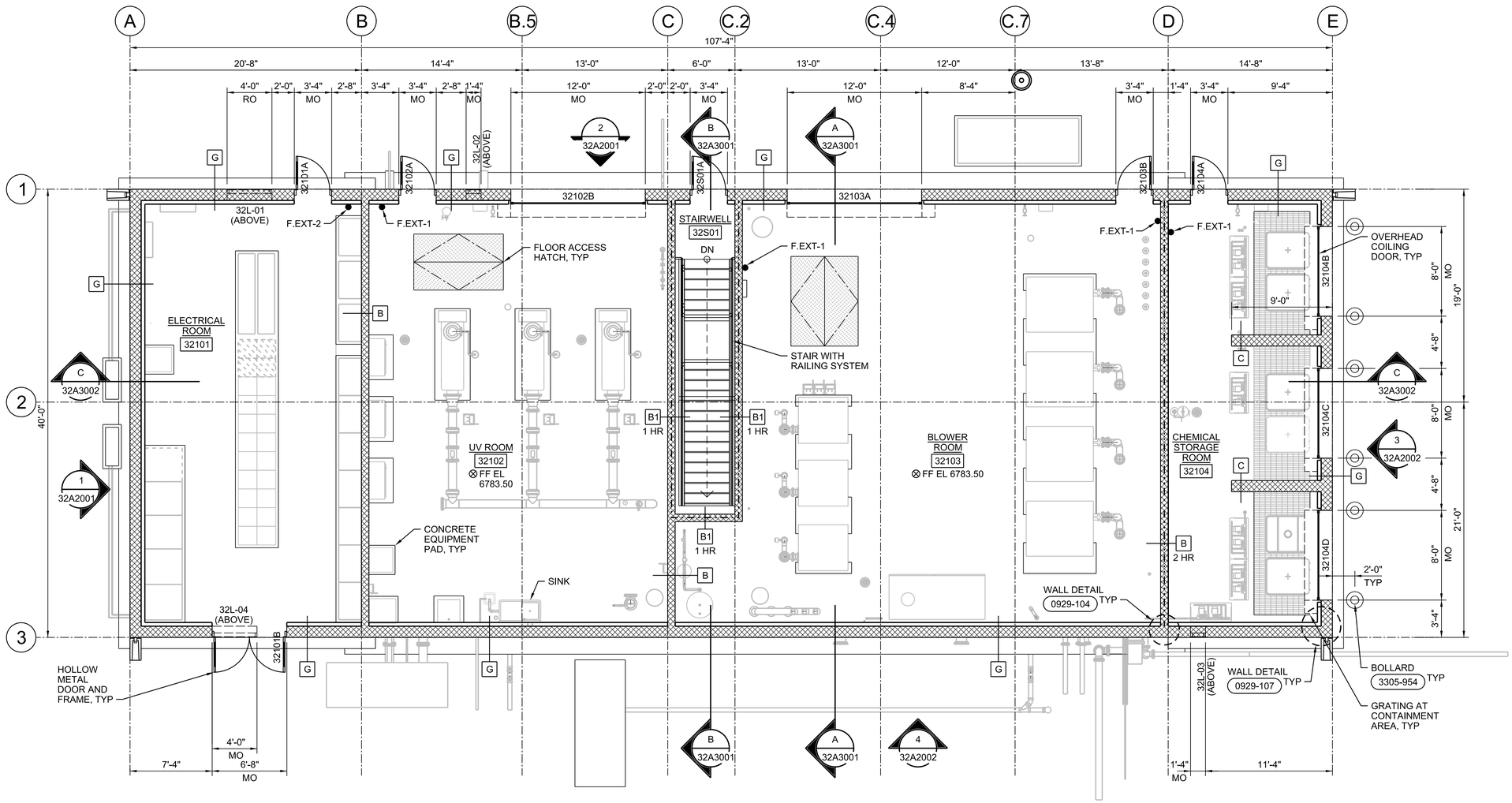

PLAN

3/16"=1'-0"

0 4 8 16

3/16"=1'-0"

FULL SIZE DRAWINGS = 22"x34"
BAR MEASURES 1" LONG

0" 1"

REGISTERED ARCHITECT
CERTIFICATE NO. 80680
MORGAN SHOEMAKER
DATE Signed 06-16-25
ARIZONA, U.S.A.
Expires 06-30-2027

A/E FIRM	DESIGNED:	SUB SHEET NO.	TITLE OF SHEET	DRAWING NO.
JACOBS GOVERNMENT SERVICES COMPANY GREENWOOD VILLAGE, CO	M SHOEMAKER CADD: M COLLINS TECH. REVIEW: G KIRSTEN DATE: 06/2025	32A1030	PROCESS BUILDING ARCHITECTURAL MAIN LEVEL PLAN GRAND CANYON, SOUTH RIM	113 175376 PMIS/PKG NO. 257282 SHEET 305 OF 401

100% COMPLETE CONSTRUCTION DOCUMENTS

GRCA-257282

PLOT DATE: 6/16/2025 PLOT TIME: 6:03:02 PM SS6/V8i D3167666 - South Rim4 Delivery43 CAD Design\GRCA\257282\Microstation V8i Drawings\ARCH\32A1030_D3167666.dgn

GENERAL SHEET NOTES

A. SEE GENERAL ARCHITECTURAL NOTES, MATERIAL SYMBOLS, LEGEND AND ABBREVIATIONS, SEE DRAWING 01A0001.

B. FOR BUILDING CODE DATA AND LIFE SAFETY PLAN, SEE DRAWING 01A0032.

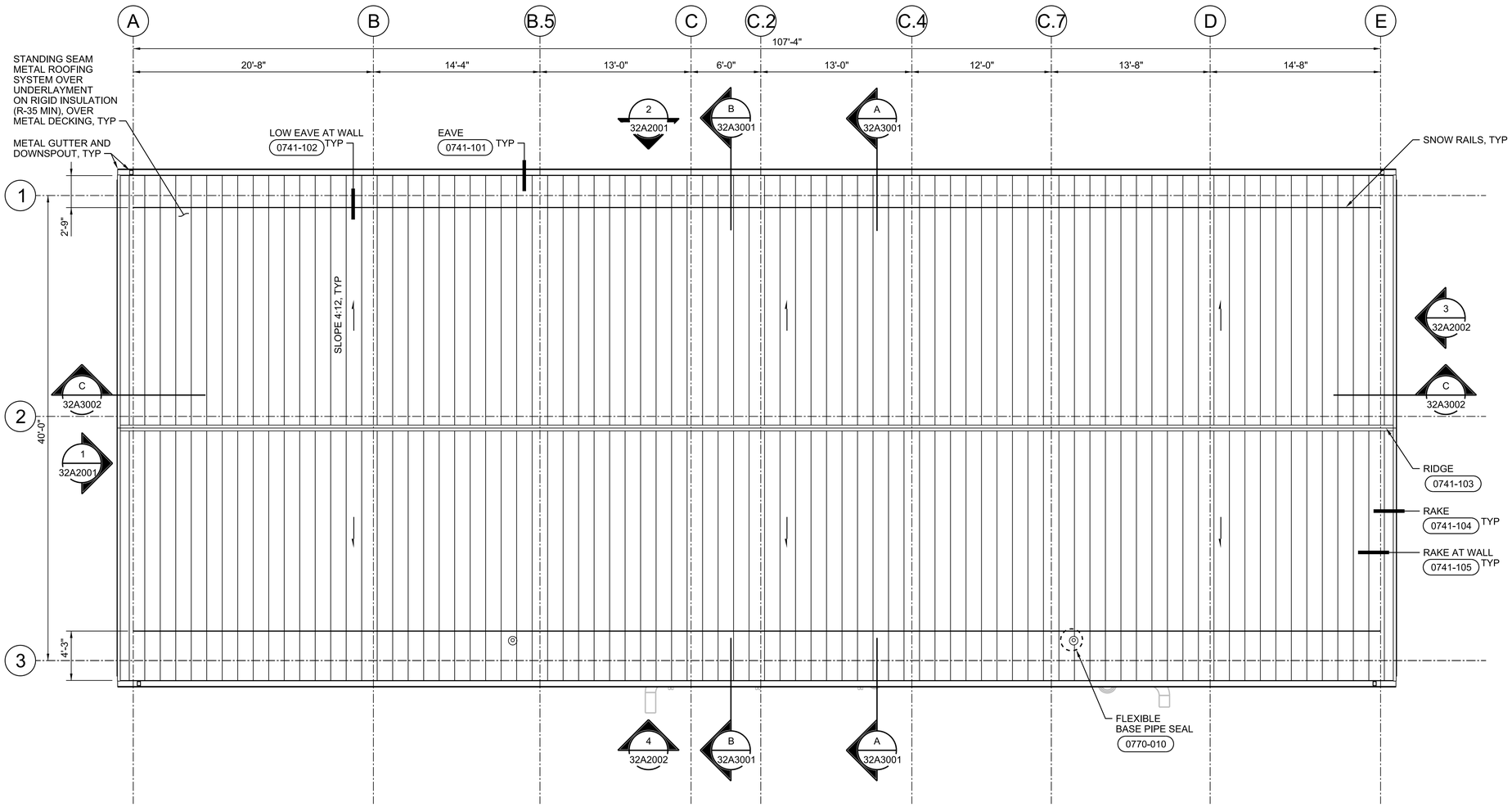

PLAN

3/16"=1'-0"

N

0 4 8 16

3/16"=1'-0"

FULL SIZE DRAWINGS = 22"x34"
BAR MEASURES 1" LONG

0" 1"

REGISTERED ARCHITECT
CERTIFICATE NO. 80680
MORGAN SHOEMAKER
Date Signed 6/16/25
ARIZONA, U.S.A.
Expires 06-30-2027

A/E FIRM	DESIGNED:	SUB SHEET NO.	TITLE OF SHEET	DRAWING NO.
JACOBS GOVERNMENT SERVICES COMPANY GREENWOOD VILLAGE, CO	M SHOEMAKER CADD: M COLLINS TECH. REVIEW: G KIRSTEN DATE: 06/2025	32A1040	PROCESS BUILDING ARCHITECTURAL ROOF PLAN GRAND CANYON, SOUTH RIM	113 175376 PMIS/PKG NO. 257282 SHEET 306 OF 401

100% COMPLETE CONSTRUCTION DOCUMENTS

GRCA-257282

PLOT DATE: 6/16/2025 PLOT TIME: 6:02:08 PM SS6/V8i D3167666 - South Rim4 Delivery\43 CAD Design\GRCA\257282\Microstation V8i Drawings\ARCH\32A1040_D3167666.dgn

GENERAL SHEET NOTES

A. LOCATE MASONRY OPENINGS FOR HVAC DUCT/EQUIPMENT ON THE NEAREST 8-INCH CMU MODULE, TYP.

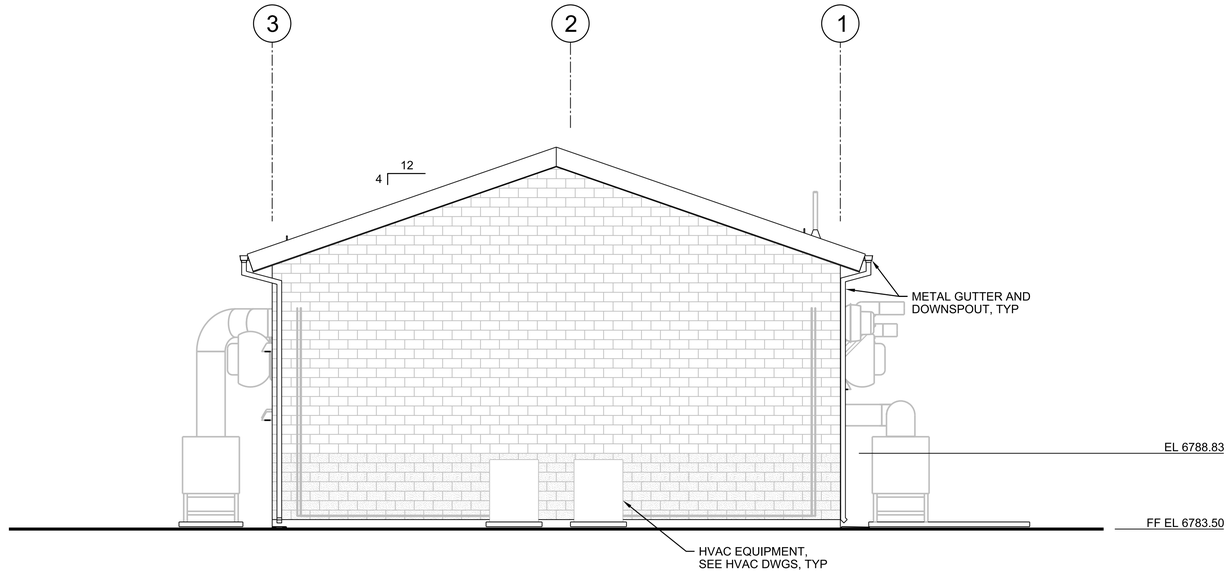

1 NORTH ELEVATION
3/16"=1'-0"
32A1030
32A1040

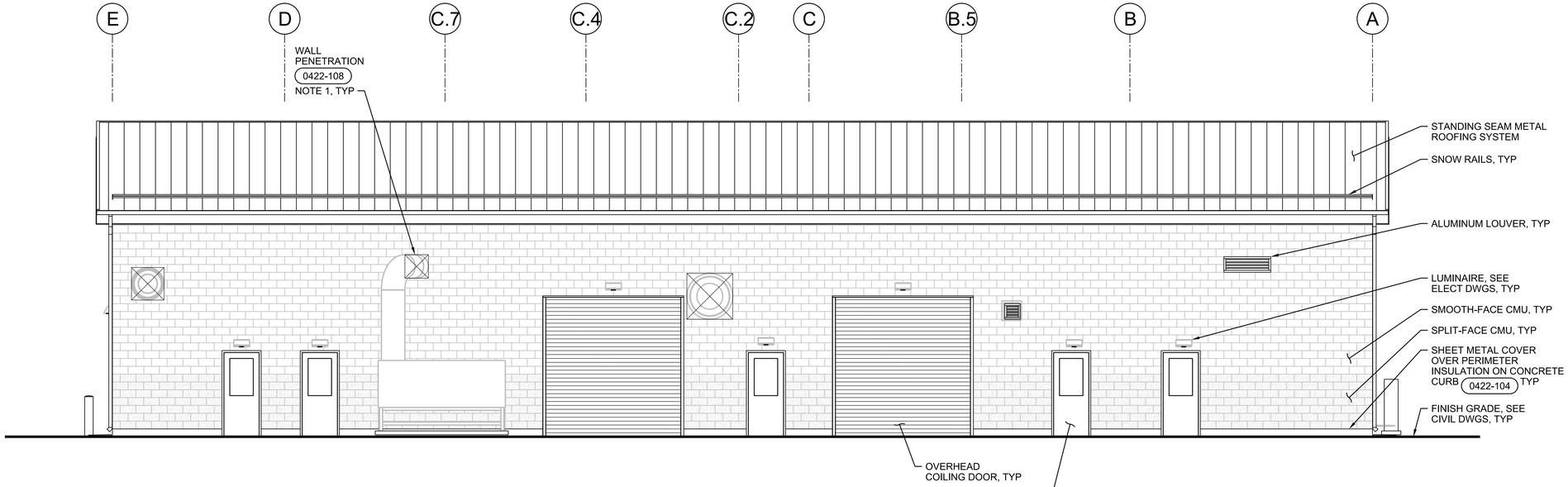

2 EAST ELEVATION
3/16"=1'-0"
32A1030
32A1040

0 4 8 16
3/16"=1'-0"

FULL SIZE DRAWINGS = 22"x34"
BAR MEASURES 1" LONG
0" 1"

REGISTERED ARCHITECT CERTIFICATE
JOSEPH MORGAN SHOEMAKER
U.S.A. Signature
ARIZONA, U.S.A.
Expires 06-30-2027

A/E FIRM	DESIGNED:	SUB SHEET NO.	TITLE OF SHEET	DRAWING NO.
JACOBS GOVERNMENT SERVICES COMPANY GREENWOOD VILLAGE, CO	M SHOEMAKER CADD: M COLLINS TECH. REVIEW: G KIRSTEN DATE: 06/2025	32A2001	PROCESS BUILDING ARCHITECTURAL ELEVATIONS GRAND CANYON, SOUTH RIM	113 175376 PMIS/PKG NO. 257282 SHEET 307 OF 401

GRCA-257282

100% COMPLETE CONSTRUCTION DOCUMENTS

PLOT DATE: 6/16/2025 PLOT TIME: 6:02:21 PM SS6\V8i D3167666 - South Rim\4 Delivery\43 CAD Design\GRCA\257282\Microstation V8i Drawings\ARCH\32A2001_D3167666.dgn

GENERAL SHEET NOTES

A. LOCATE MASONRY OPENINGS FOR HVAC DUCT/EQUIPMENT ON THE NEAREST 8-INCH CMU MODULE, TYP.

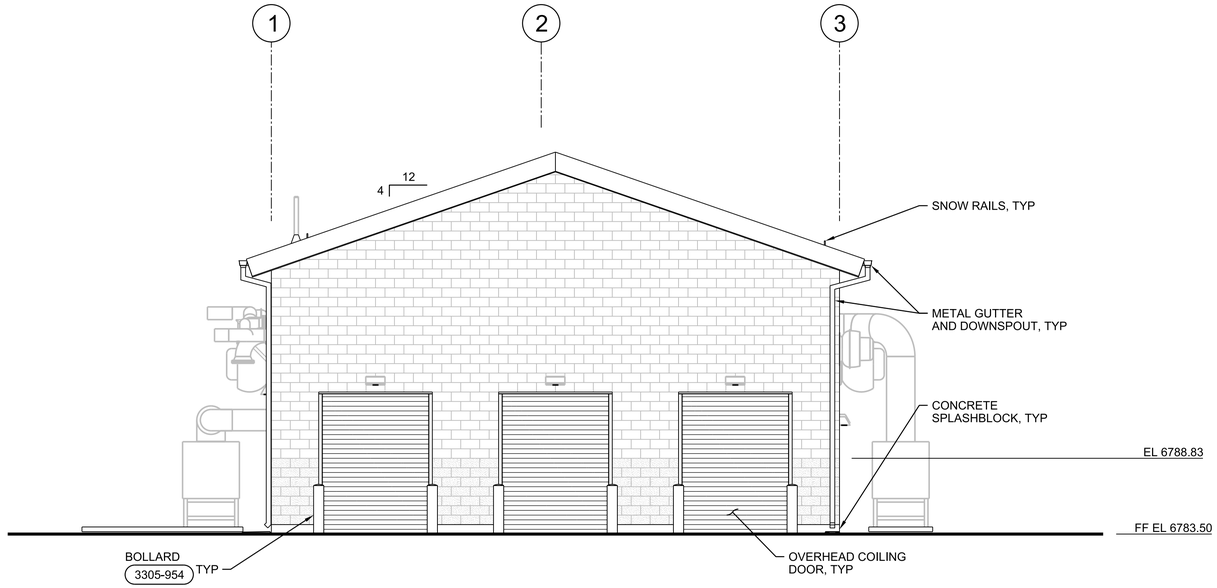

3 SOUTH ELEVATION
3/16"=1'-0"
32A1030
32A1040

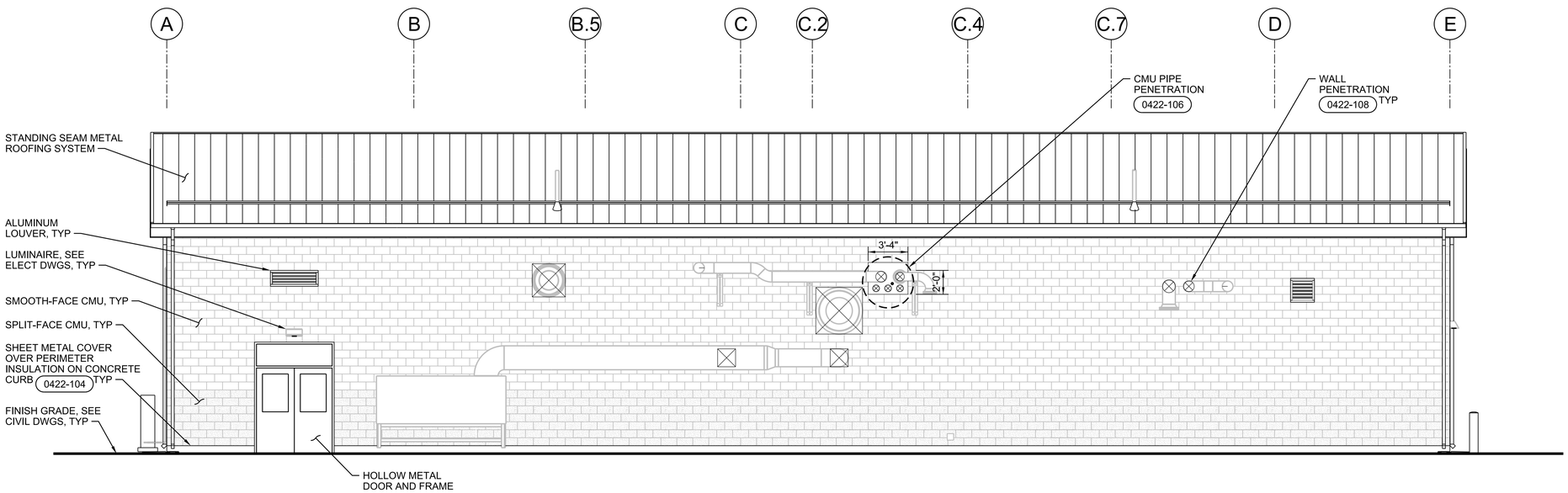

4 WEST ELEVATION
3/16"=1'-0"
32A1030
32A1040

0 4 8 16
3/16"=1'-0"

FULL SIZE DRAWINGS = 22"x34"
BAR MEASURES 1" LONG
0" 1"

REGISTERED ARCHITECT
MORGAN SHOEMAKER
ARIZONA, U.S.A.
Expires 06-30-2027

A/E FIRM	DESIGNED:	SUB SHEET NO.	TITLE OF SHEET	DRAWING NO.
JACOBS GOVERNMENT SERVICES COMPANY GREENWOOD VILLAGE, CO	M SHOEMAKER CADD: M COLLINS TECH. REVIEW: G KIRSTEN DATE: 06/2025	32A2002	PROCESS BUILDING ARCHITECTURAL ELEVATIONS GRAND CANYON, SOUTH RIM	113 175376 PMIS/PKG NO. 257282 SHEET 308 OF 401

100% COMPLETE CONSTRUCTION DOCUMENTS

GRCA-257282

PLOT DATE: 6/16/2025 PLOT TIME: 6:03:53 PM SS6/V8i D3167666 - South Rim4 Delivery43 CAD Design\GRCA\257282\Microstation V8i Drawings\ARCH\32A2002_D3167666.dgn

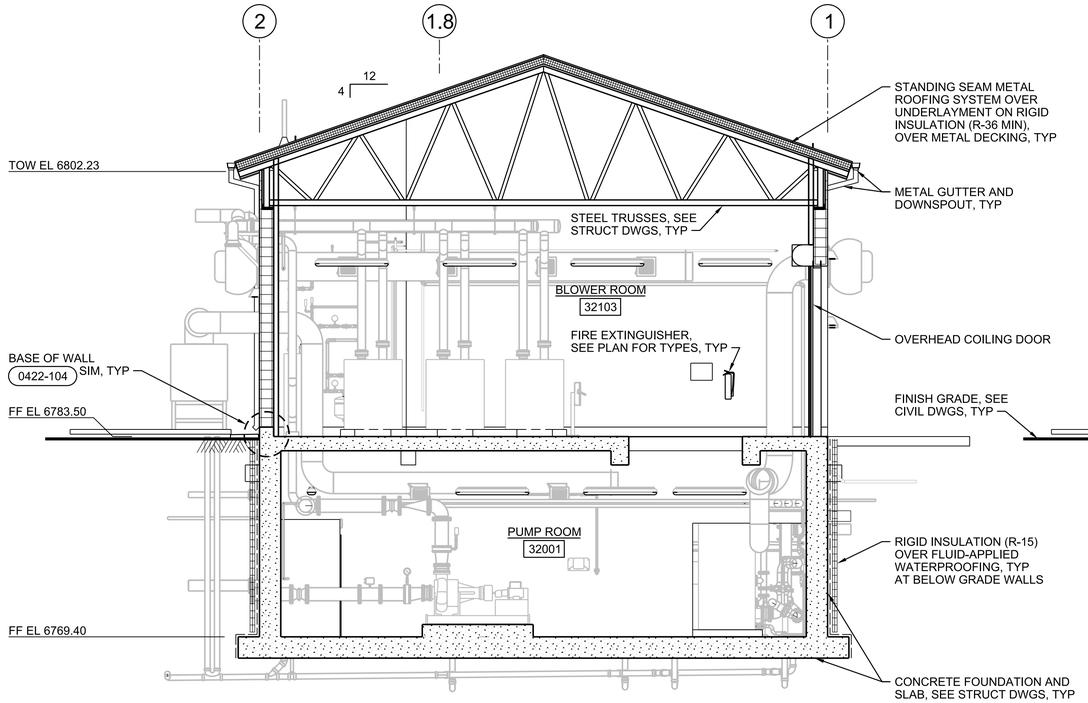

A SECTION
3/16"=1'-0"
32A1020
32A1030
32A1040

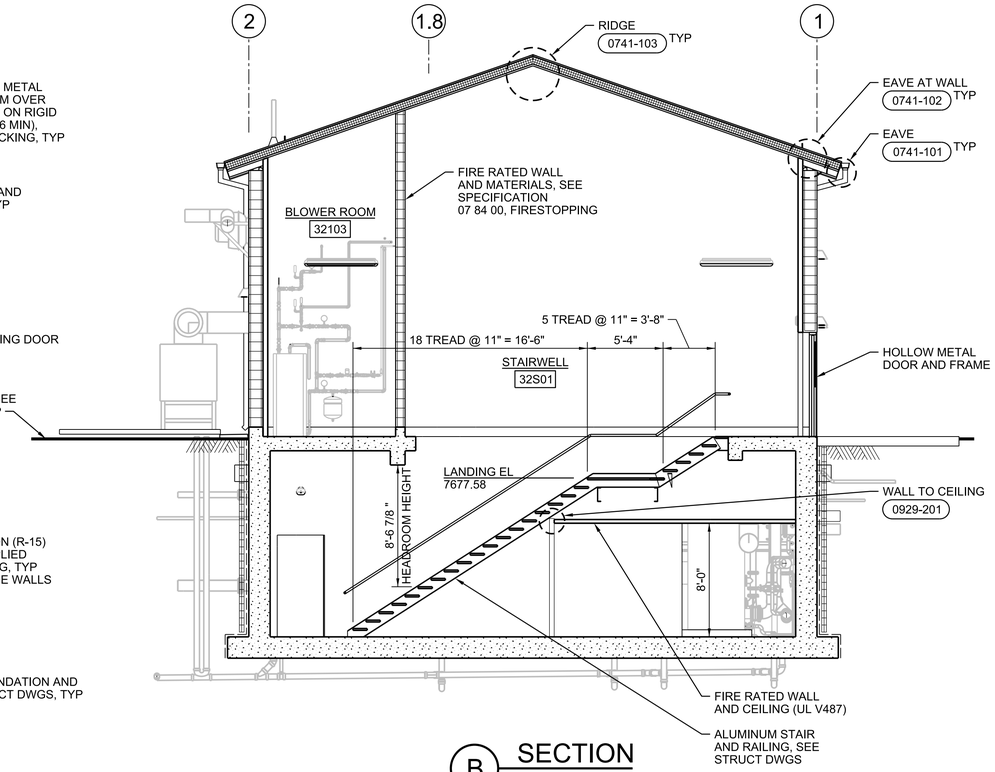

B SECTION
3/16"=1'-0"
32A1020
32A1030
32A1040

0 4 8 16
3/16"=1'-0"

FULL SIZE DRAWINGS = 22"x34"
BAR MEASURES 1" LONG

0" 1"

REGISTERED ARCHITECT
CERTIFICATE NO.
80487
MORGAN
SHOEMAKER
Date Signed 6/16/25
ARIZONA, U.S.A.
Expires 06-30-2027

A/E FIRM	DESIGNED:	SUB SHEET NO.	TITLE OF SHEET	DRAWING NO.
JACOBS GOVERNMENT SERVICES COMPANY GREENWOOD VILLAGE, CO	M SHOEMAKER CADD: M COLLINS TECH. REVIEW: G KIRSTEN DATE: 06/2025	32A3001	PROCESS BUILDING ARCHITECTURAL SECTIONS GRAND CANYON, SOUTH RIM	113 / 175376 PMIS/PKG NO. 257282 SHEET 309 OF 401

100% COMPLETE CONSTRUCTION DOCUMENTS

GRCA-257282

PLOT DATE: 6/16/2025 PLOT TIME: 6:02:30 PM SS6/V8i D3167666 - South Rim\4 Delivery\43 CAD Design\GRCA\257282\Microstation V8i Drawings\ARCH\32A3001_D3167666.dgn

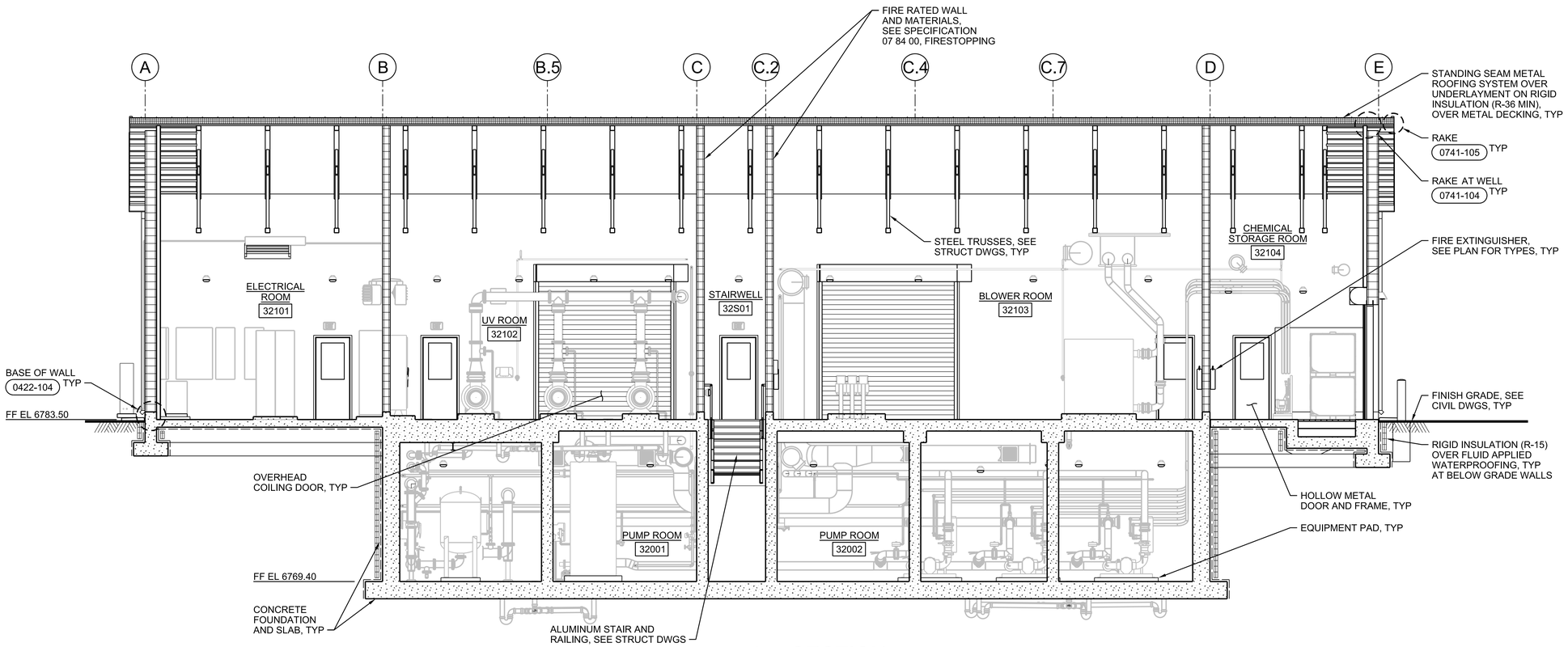

C SECTION
3/16"=1'-0"
32A1020
32A1030
32A1040

0 4 8 16
3/16"=1'-0"

FULL SIZE DRAWINGS = 22"x34"
BAR MEASURES 1" LONG

0" 1"

REGISTERED ARCHITECT CERTIFICATE NO. 80680 MORGAN SHOEMAKER Date Signed 06-30-25 ARIZONA, U.S.A.
Expires 06-30-2027

A/E FIRM	DESIGNED: M SHOEMAKER	SUB SHEET NO.	TITLE OF SHEET	DRAWING NO.
JACOBS GOVERNMENT SERVICES COMPANY GREENWOOD VILLAGE, CO	CADD: M COLLINS TECH. REVIEW: G KIRSTEN DATE: 06/2025	32A3002	PROCESS BUILDING ARCHITECTURAL SECTION GRAND CANYON, SOUTH RIM	113 175376 PMIS/PKG NO. 257282 SHEET 310 OF 401

100% COMPLETE CONSTRUCTION DOCUMENTS

GRCA-257282

PLOT DATE: 6/16/2025 PLOT TIME: 6:03:01 PM SS6/V8i D3167666 - South Rim\4 Delivery\43 CAD Design\GRCA\257282\Microstation V8i Drawings\ARCH\32A3002_D3167666.dgn

INTERIOR FINISH SCHEDULE

ABBREVIATIONS:

ARWB	ABUSE-RESISTANT GWB	CONC	CONCRETE	FNSH	FINISH	MET	METAL	TCTG	TRAFFIC COATING
AS	AS SELECTED	CRC	CHEMICAL-RESISTANT COATINGS	GALV	GALVANIZED	NAT	NATURAL	WRB	WATER RESISTANT GWB
CLR	CLEAR	EXP	EXPOSED STRUCTURE	HGT	HEIGHT	RUB	RUBBER BASE		
CMU	CONCRETE MASONRY UNIT	FCTY	FACTORY	HDNR	CLEAR FLOOR HARDENER	SLR	CLEAR SEALER		
COL	COLOR	FRP	FIBERGLASS REINFORCED PLASTIC	MATL	MATERIAL	SS	SOLID SURFACING		

NOTES:
NO. 1 NUMBERS IN THE FINISH COLUMN REFER TO PAINT SYSTEMS IN SPECIFICATION SECTION 09 90 00.
NO. 2 CODES IN COL COLUMN REFER TO COLOR LIST ON THIS DRAWING.
NO. 3 FOR EXTERIOR FINISHES AND COLORS, SEE EXTERIOR FINISH SCHEDULE ON THIS DRAWING.
NO. 4 FOR DOOR AND FRAME FINISHES, SEE DOOR AND HARDWARE SCHEDULE ON THIS DRAWING.
NO. 5 APPLY CHEMICAL RESISTANT COATING TO FLOOR AND 6" UP WALLS AS PER 09 96 35.

SPACE		FLOOR			BASE AND WAINSCOT					TYPICAL WALL			OTHER WALL			CEILING				MISCELLANEOUS				OTHER REQUIREMENTS
NO.	NAME	SUB FL	FINISH	COL	HGT	MATL	FINISH	COL	WALLS	MATL	FINISH	COL	MATL	FINISH	COL	HGT	MATL	FINISH	COL	ITEM	MATL	FINISH	COL	
32S01	STAIRWELL	CONC	SLR	CLR	4"	RUB	FCTY	W-3	*N, E, S	CONC/ CMU	113/ 109	P-1	ARWB	115	P-1	VARIES	CONC/ EXP	113/10/5	P-2	CLOSURE PLATES	STEEL	GALV	NAT	* AT METAL STUD WALLS
32001	PUMP ROOM	CONC	SLR	CLR	4"	RUB	FCTY	W-3	*S, W	CONC	113	P-1	ARWB	116	P-1	13'-4 3/4"	CONC	113	P-2	---	---	---	---	* AT METAL STUD WALLS
32002	PUMP ROOM	CONC	SLR	CLR	4"	RUB	FCTY	W-3	*S, W	CONC	113	P-1	CMU	109	P-1	VARIES	EXP	10/5	P-2	---	STEEL	GALV	NAT	* AT METAL STUD WALLS
32101	ELECTRICAL ROOM	CONC	SLR	CLR	4"	RUB	FCTY	W-3	ALL	ARWB	116	P-1	CMU	109	P-1	VARIES	EXP	10/5	P-2	CLOSURE PLATES	STEEL	GALV	NAT	
32102	UV ROOM	CONC	SLR	CLR	4"	RUB	FCTY	W-3	ALL	ARWB	116	P-1	CMU	117	P-1	VARIES	EXP	10/5	P-2	CLOSURE PLATES	STEEL	GALV	NAT	
32103	BLOWER ROOM	CONC	SLR	CLR	4"	RUB	FCTY	W-3	ALL	ARWB	116	P-1	CMU	117	P-1	VARIES	EXP	10/5	P-2	CLOSURE PLATES	STEEL	GALV	NAT	
32104	CHEMICAL STORAGE ROOM	CONC	SEE NOTE 5	CLR	4"/ 4'-0"	RUB/ FRP	FCTY/ FCTY	W-3/ W-5	ALL	CMU	117	P-1	ARWB	116	P-1	VARIES	EXP	10/5	P-2	CLOSURE PLATES	STEEL	GALV	NAT	

LOUVER SCHEDULE

LOUVER TYPE ABBREVIATIONS:
DB DRAINABLE BLADE

OTHER ABBREVIATIONS:
AFF ABOVE FINISH FLOOR (AT GROUND LEVEL)
AL ALUMINUM
ARWB ABUSE-RESISTANT WALLBOARD
FCTY FACTORY

NOTES:
NO. 1 FOR LOUVER DETAILS, SEE DESIGN DETAILS.
NO. 2 CODES IN COL COLUMN REFER TO COLOR LIST ON THIS DRAWING.

OPENING										SILLS			OTHER REQUIREMENTS
NO.	SIZE		LOUVER				DETAILS						
	WIDTH	HEIGHT	MATL	TYPE	FINISH	COL	HEAD	JAMB	SILL	MATL	COL	HEIGHT	
32L-01	4'-0"	1'-4"	AL	DB	FCTY	O-2	0890-002	0890-002 SIM	0890-002	ARWB	P-1	14'-0" AFF	
32L-02	1'-4"	1'-4"	AL	DB	FCTY	O-2	0890-002	0890-002 SIM	0890-002	ARWB	P-1	10'-0" AFF	
32L-03	2'-0"	2'-0"	AL	DB	FCTY	O-2	0890-002	0890-002 SIM	0890-002	ARWB	P-1	12'-8" AFF	
32L-04	4'-0"	1'-4"	AL	DB	FCTY	O-2	0890-002	0890-002 SIM	0890-002	ARWB	P-1	14'-0" AFF	

DOOR AND HARDWARE SCHEDULE

ABBREVIATIONS:
COL COLOR
EXT EXTERIOR
FCTY FACTORY
FRG FIRE RESISTIVE GLASS
FNSH FINISH
IG INSULATING GLASS
HM HOLLOW METAL
MATL MATERIAL
MET METAL

NOTES:
NO. 1 SEE THIS SHEET FOR DOOR AND FRAME TYPES.
NO. 2 FOR DOOR DETAILS, SEE DESIGN DETAILS.
NO. 3 NUMBER CODE IN HARDWARE SET COLUMN REFERS TO HARDWARE SETS IN SPECIFICATION SECTION 08 71 00.
NO. 4 NUMBERS IN FNSH COLUMN REFER TO PAINT SYSTEMS IN SPECIFICATION SECTION 09 90 00.
NO. 5 CODES IN COL COLUMN REFER TO COLOR LIST ON THIS DRAWING.
NO. 6 FOR GLASS TYPES, SEE SPECIFICATION SECTION 08 80 00.

OPENING															HARDWARE		FIRE PROTECTION RATING	OTHER REQUIREMENTS
NO.	SIZE		DOOR					FRAME				DETAILS						
	WIDTH	HEIGHT	CONSTR	TYPE	GLASS	FINISH	COL	MATL	TYPE	FINISH	COL	HEAD	JAMB	SILL	SET NO.	KEY SIDE		
32S01A	3'-0"	7'-2"	HM	G	IG-C	5	P-3	HM	SD	5	P-3	0811-013	0811-013 SIM	0871-001	7	EXT	---	
32001A	3'-0"	7'-2"	HM	N	FRG	5	P-3	HM	SD	5	P-3	0811-032	0811-032	0871-002	12	32S01	60 MIN	S-16, M1: EXIT
32001B	3'-0"	7'-2"	HM	N	FRG	5	P-3	HM	SD	5	P-3	0811-032	0811-032	0871-002	12	32S01	60 MIN	S-16, M1: EXIT
32101A	3'-0"	7'-2"	HM	G	IG-C	5	P-3	HM	SD	5	P-3	0811-013	0811-013 SIM	0871-001	7	EXT	---	
32101B	(2) 3'-2"	7'-2"	HM	G	IG-C	5	P-3	HM	DDT	5	P-3	0811-013	0811-013 SIM	0871-001	2	EXT	---	
32102A	3'-0"	7'-2"	HM	G	IG-C	5	P-3	HM	SD	5	P-3	0811-013	0811-013 SIM	0871-001	7	EXT	---	
32102B	12'-0"	12'-0"	MET	OHCI	---	FCTY	O-1	MET	OHC	FCTY	O-1	0833-007	0833-008	0833-008	20	---	---	
32103A	12'-0"	12'-0"	MET	OHCI	---	FCTY	O-1	MET	OHC	FCTY	O-1	0833-007	0833-008	0833-008	20	---	---	
32103B	3'-0"	7'-2"	HM	G	IG-C	5	P-3	HM	SD	5	P-3	0811-013	0811-013 SIM	0871-001	7	EXT	---	
32104A	3'-0"	7'-2"	HM	G	IG-C	5	P-3	HM	SD	5	P-3	0811-013	0811-013 SIM	0871-001	7	EXT	---	
32104B	8'-0"	10'-0"	MET	OHCI	---	FCTY	O-1	MET	OHC	FCTY	O-1	0833-007	0833-008	0833-008	20	---	---	
32104C	8'-0"	10'-0"	MET	OHCI	---	FCTY	O-1	MET	OHC	FCTY	O-1	0833-007	0833-008	0833-008	20	---	---	
32104D	8-0"	10'-0"	MET	OHCI	---	FCTY	O-1	MET	OHC	FCTY	O-1	0833-007	0833-008	0833-008	20	---	---	

EXTERIOR FINISH SCHEDULE

ITEM / MATERIAL	FINISH	COLOR
SMOOTH FACE CMU	FACTORY / WATER REPELLENT	W-1 / CLEAR
SPLIT FACE CMU	FACTORY / WATER REPELLENT	W-2 / CLEAR
SHEET METAL ROOF AND SOFFIT PANELS	FACTORY	M-1
SHEET METAL GUTTERS AND DOWNSPOUTS	FACTORY	M-2
LUMINAIRES	FACTORY	DARK BRONZE
PERIMETER SHEET METAL COVER	FACTORY	M-3

COLOR LIST

NOTES:
NO. 1 COLOR SELECTIONS FOR THIS PROJECT MAY BE NOTED IN DOOR AND HARDWARE SCHEDULE, INTERIOR FINISH SCHEDULE, EXTERIOR FINISH SCHEDULE, LOUVER SCHEDULE, PIPING SCHEDULE AND ON THE DRAWINGS BY THE LETTER-NUMBER COMBINATION IN THE MARK COLUMN OF THIS LIST.
NO. 2 SOME COLOR SELECTIONS MAY BE MADE IN VARIOUS SPECIFICATION SECTIONS.
NO. 3 USE ONLY THE COLORS NOTED OR SCHEDULED. IF A COLOR SELECTION IS NOT MADE, REQUEST ONE FROM THE ARCHITECT.
NO. 4 THE LISTED MANUFACTURERS AND COLORS ARE ONLY INCLUDED FOR THE PURPOSES OF ESTABLISING A COLOR SCHEME GUIDE AND ARE NOT INTENDED TO LIMIT THE CONTRACTOR FROM PURPOSING ALTERNATE MANUFACTURERS AND COLORS FOR REVIEW AND APPROVAL BY THE CONTRACTING OFFICER. SPECIFICATION SECTIONS ARE LISTED IN PARENTHESIS AFTER MANUFACTURERS.

MARK	MATERIAL	MANUFACTURER	COLOR
WALLS			
W-1	CMU - SMOOTH FACE	ECHELON (SPEC 04 22 00)	WALNUT CREEK - NW BONE
W-2	CMU - SPLIT FACE	ECHELON (SPEC 04 22 00)	AUTUMN
W-3	RUBBER BASE	JOHNSONITE/TARKETT (SPEC 09 29 00)	PEPPERCORN
W-4	CMU MORTAR	AMERIMIX (SPEC 04 22 00)	SOFT IVORY
W-5	FIBERGLASS-REINFORCED PLASTIC (FRP) PANEL WALLS	CRANE COMPOSITES (SPEC 0 77 01)	WHITE
OPENINGS			
O-1	OVERHEAD COILING DOOR	COOKSON (SPEC 08 30 00)	DOVER GRAY
O-2	LOUVERS	RUSKIN (SPEC 08 90 00)	LIGHT STONE
PAINT			
P-1	PAINT	SHERWIN-WILLIAMS (SPEC 09 90 00)	DOVER WHITE - SW6385
P-2	PAINT	SHERWIN-WILLIAMS (SPEC 09 90 00)	HIGH REFLECTIVE WHITE
P-3	PAINT	SHERWIN-WILLIAMS (SPEC 09 90 00)	DOVER GRAY - SW6385
MISCELLANOUS			
M-1	SHEET METAL ROOF AND SOFFIT PANELS	IMETCO (SPEC 07 41 13)	DENALI GREEN
M-2	SHEET METAL GUTTERS AND DOWNSPOUTS	IMETCO (SPEC 07 41 13)	DENALI GREEN
M-3	PERIMETER SHEET METAL COVER	AS SPECIFIED (SPEC 07 62 00)	GREY

DOOR TYPES

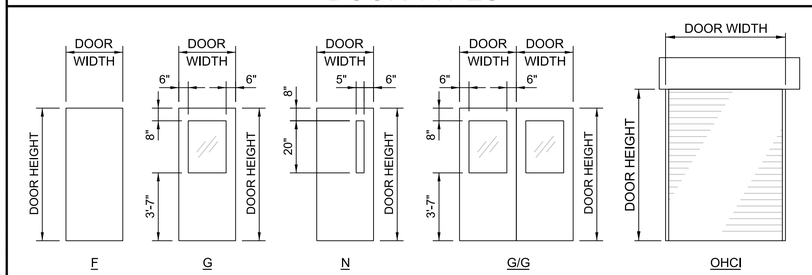

DOOR FRAME TYPES

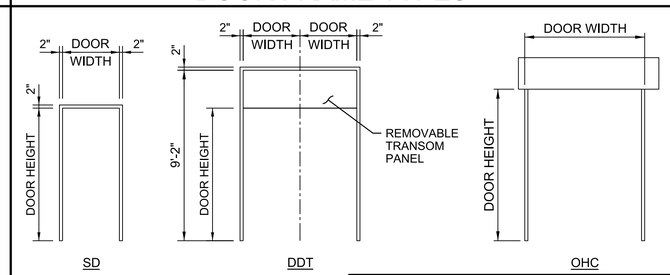

FULL SIZE DRAWINGS = 22"x34"
BAR MEASURES 1" LONG
0" 1"

NO SCALE

REGISTERED ARCHITECT CERTIFICATE NO. 30087 MORGAN D. SHOEMAKER Date Signed 06/30/25 ARIZONA, U.S.A.
Expires 06-30-2027

A/E FIRM	DESIGNED:	SUB SHEET NO.	TITLE OF SHEET	DRAWING NO.
JACOBS GOVERNMENT SERVICES COMPANY GREENWOOD VILLAGE, CO	M SHOEMAKER CADD: M COLLINS TECH. REVIEW: G KIRSTEN DATE: 06/2025	32A6001	PROCESS BUILDING ARCHITECTURAL SCHEDULES GRAND CANYON, SOUTH RIM	113 / 175376 PMIS/PKG NO. 257282 SHEET 311 OF 401

GRCA-257282

100% COMPLETE CONSTRUCTION DOCUMENTS

PLOT DATE: 6/16/2025 PLOT TIME: 6:01:21 PM SS6/V8i D3167666 - South Rim\4 Delivery\43 CAD Design\GRCA\257282\Microstation V8i Drawings\ARCH\32A6001_D3167666.dgn

SHEET NOTES

1. FOR CONTINUATION, SEE DRAWING 25D1020.
2. FOR CONTINUATION, SEE YARD DRAWINGS.
3. SEE 32D5001 FOR INSTRUMENTATION OF PERMEATE PUMPS.
4. SEE 32D3001 FOR INSTRUMENTATION OF UV BOOSTER PUMPS.

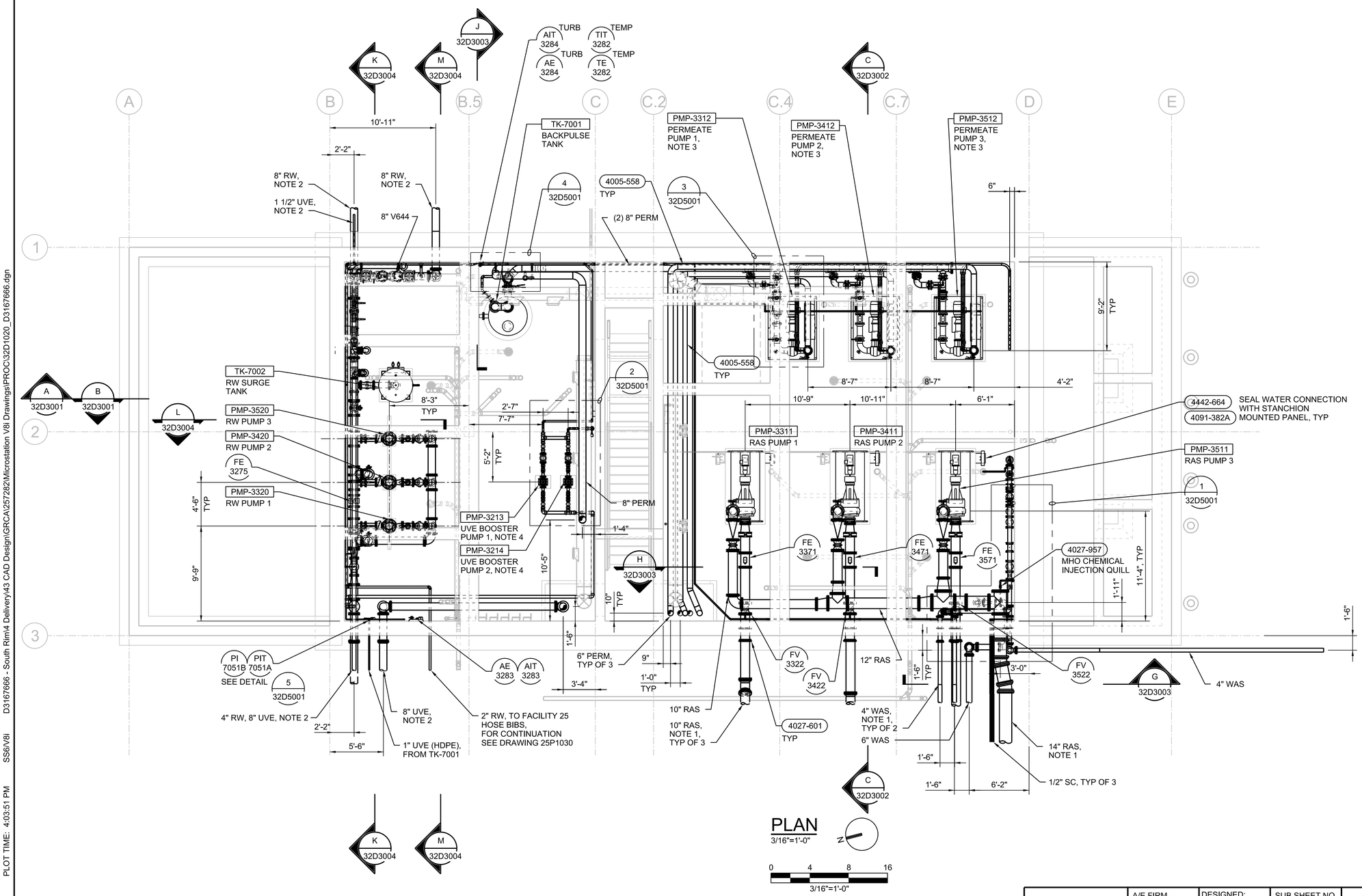

FULL SIZE DRAWINGS = 22"x34"
BAR MEASURES 1" LONG
0" 1"

Registered Professional Engineer (Civil) CERTIFICATE NO. 80742 CORY D. LANCASTER Date Signed 6/17/25 ARIZONA, U.S.A.

A/E FIRM	DESIGNED:	SUB SHEET NO.	TITLE OF SHEET	DRAWING NO.
JACOBS GOVERNMENT SERVICES COMPANY GREENWOOD VILLAGE, CO	C LANCASTER CADD: N HUBER TECH. REVIEW: D BRUNKOW DATE: 06/2025	32D1020	PROCESS BUILDING MECHANICAL LOWER PLAN GRAND CANYON, SOUTH RIM	113 / 175376 PMIS/PKG NO. 257282 SHEET 312 OF 401

GRCA-257282

100% COMPLETE CONSTRUCTION DOCUMENTS

PLOT DATE: 6/17/2025 PLOT TIME: 4:03:51 PM SS6/V8i D3167666 - South Rim\4 Delivery\43 CAD Design\GRCA\257282\Microstation V8i Drawings\PROC\32D1020_D3167666.dgn

SHEET NOTES

1. 2" NPW, FOR CONTINUATION, SEE DRAWING 32P1030.
2. FOR CONTINUATION, SEE DRAWING 25D1030.
3. MAGNESIUM TOTE REQUIRES TOTE MIXER, SO ONLY ONE TOTE, EITHER 275 OR 550 GAL.
4. EITHER STACK OF TWO 275 GAL TOTES OR ONE 550 GAL TOTE.
5. BLIND FLANGE FOR TEMPORARY PERM CONNECTION DURING COMMISSIONING.
6. SEE 32A2002 FOR WALL PENETRATION DETAIL.
7. BLIND FLANGE FOR TEMPORARY UVE CONNECTION DURING COMMISSIONING.

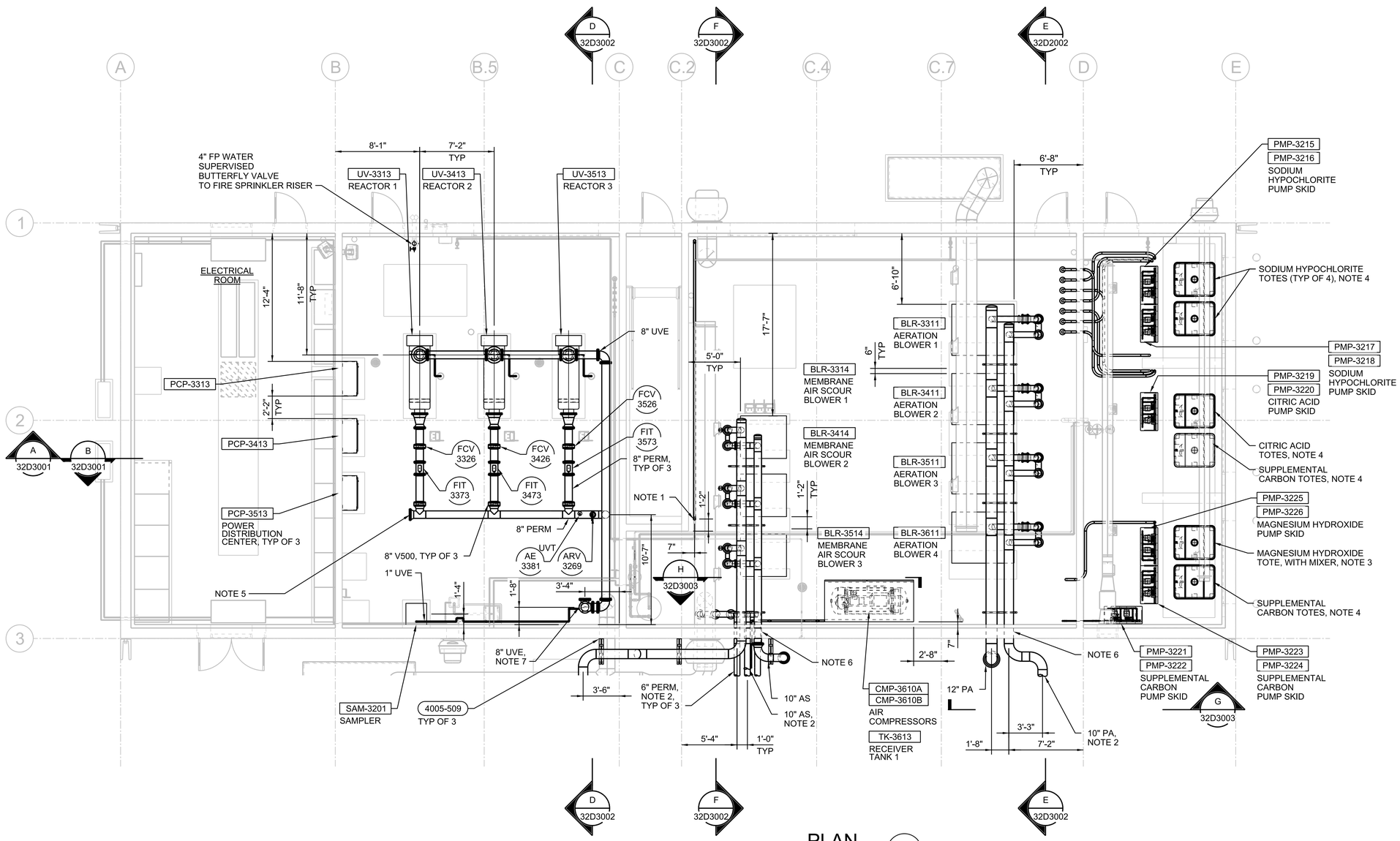

PLAN

3/16"=1'-0"

0 4 8 16

3/16"=1'-0"

FULL SIZE DRAWINGS = 22"x34"
BAR MEASURES 1" LONG

0" 1"

Registered Professional Engineer (Civil) CERTIFICATE NO. 80742 CORY C. LANCASTER Date Signed 6/17/25 ARIZONA, U.S.A.

Cory Lancaster

A/E FIRM	DESIGNED:	SUB SHEET NO.	TITLE OF SHEET	DRAWING NO.
JACOBS GOVERNMENT SERVICES COMPANY GREENWOOD VILLAGE, CO	C LANCASTER CADD: N HUBER TECH. REVIEW: D BRUNKOW DATE: 06/2025	32D1030	PROCESS BUILDING MECHANICAL UPPER PLAN GRAND CANYON, SOUTH RIM	113 175376 PMIS/PKG NO. 257282 SHEET 313 OF 401

100% COMPLETE CONSTRUCTION DOCUMENTS

GRCA-257282

PLOT DATE: 6/17/2025 PLOT TIME: 4:04:57 PM SS6/V8i D3167666 - South Rim4 Delivery43 CAD Design\GRCA\257282\Microstation V8i Drawings\PROC\32D1030_D3167666.dgn

SHEET NOTES

1. FLEXIBLE CONNECTOR, PROVIDED WITH BLOWER.
2. BLIND FLANGE FOR TEMPORARY PERM CONNECTION DURING COMMISSIONING.
3. BLIND FLANGE FOR TEMPORARY RW CONNECTION DURING COMMISSIONING.

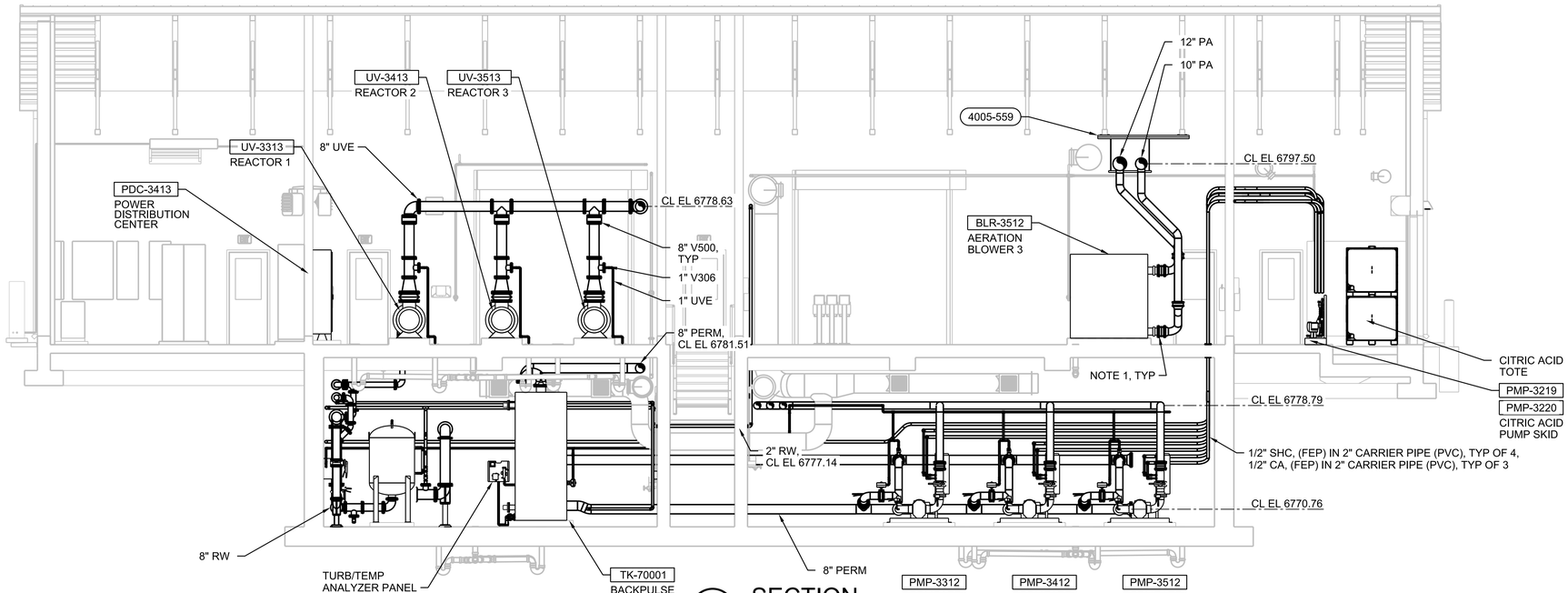

A SECTION
3/16"=1'-0"
32D1020
32D1030
0 4 8 16
3/16"=1'-0"

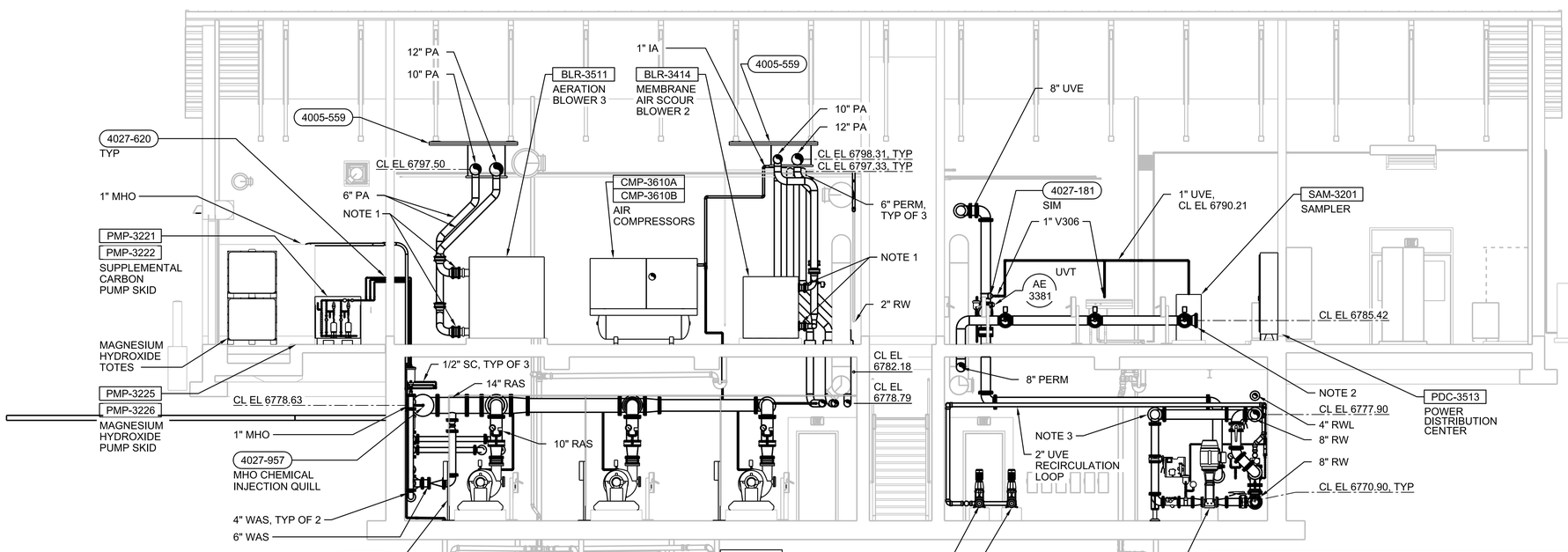

B SECTION
3/16"=1'-0"
32D1020
32D1030
0 4 8 16
3/16"=1'-0"

FULL SIZE DRAWINGS = 22"x34"
BAR MEASURES 1" LONG
0" 1"

Registered Professional Engineer (Civil) CERTIFICATE NO. 80742 CORY J. LANCASTER Date Signed 6/17/25 ARIZONA, U.S.A.

A/E FIRM	DESIGNED: C LANCASTER	SUB SHEET NO.	TITLE OF SHEET	DRAWING NO.
JACOBS GOVERNMENT SERVICES COMPANY GREENWOOD VILLAGE, CO	CADD: N HUBER TECH. REVIEW: D BRUNKOW DATE: 06/2025	32D3001	PROCESS BUILDING MECHANICAL SECTIONS GRAND CANYON, SOUTH RIM	113 175376 PMIS/PKG NO. 257282 SHEET 314 OF 401

100% COMPLETE CONSTRUCTION DOCUMENTS

GRCA-257282

PLOT DATE: 6/17/2025 PLOT TIME: 4:05:19 PM SS6IV8i D3167666 - South Rim\4 Delivery\43 CAD Design\GRCA\257282\Microstation V8i DrawingsIPROC\32D3001_D3167666.dgn

SHEET NOTES

1. SEE ARCHITECTURAL DRAWINGS FOR CMU WALL PIPE AND DUCT PENETRATIONS
2. 1/2" SHC (FEP) IN 2" CARRIER PIPE (PVC)
   1/2" CA (FEP) IN 2" CARRIER PIPE (PVC)
3. 1/2" IA, MEMBRANE EQUIPMENT SYSTEM SUPPLIER IS RESPONSIBLE FOR IA PIPE ROUTING WITHIN PERMEATE PUMP SKIDS.

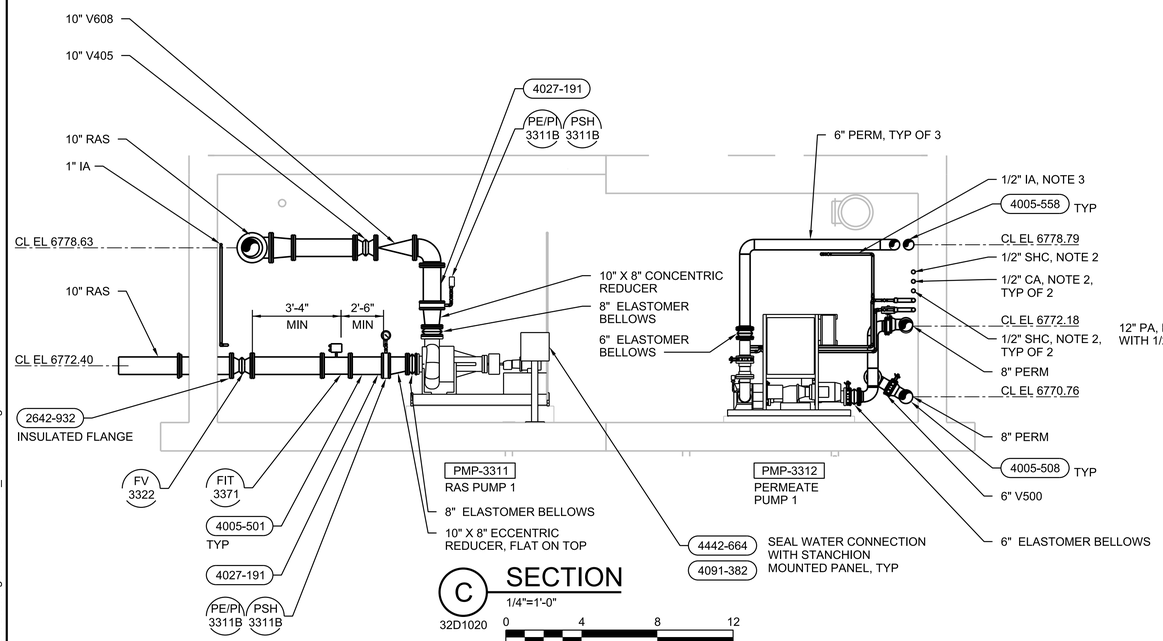

C SECTION
1/4"=1'-0"
32D1020
0 4 8 12
1/4"=1'-0"

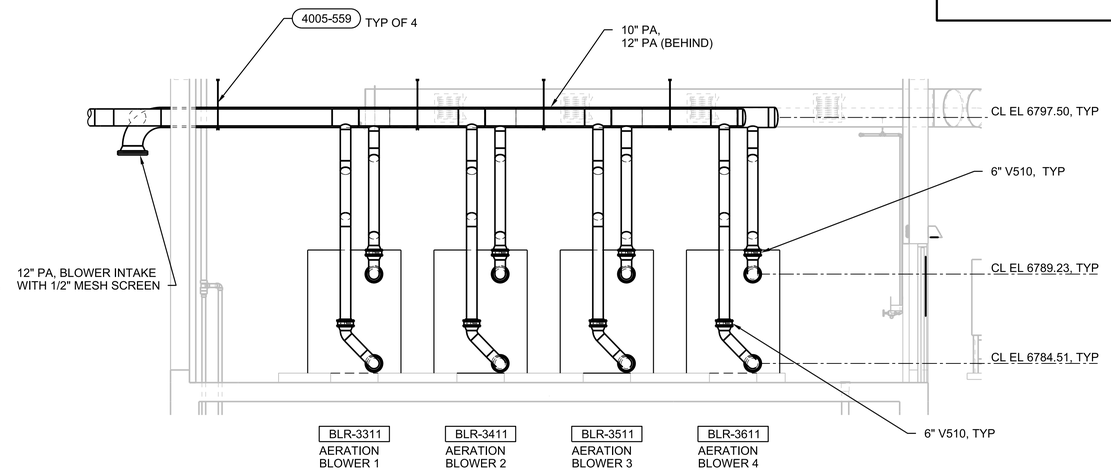

E SECTION
1/4"=1'-0"
32D1030
0 4 8 12
1/4"=1'-0"

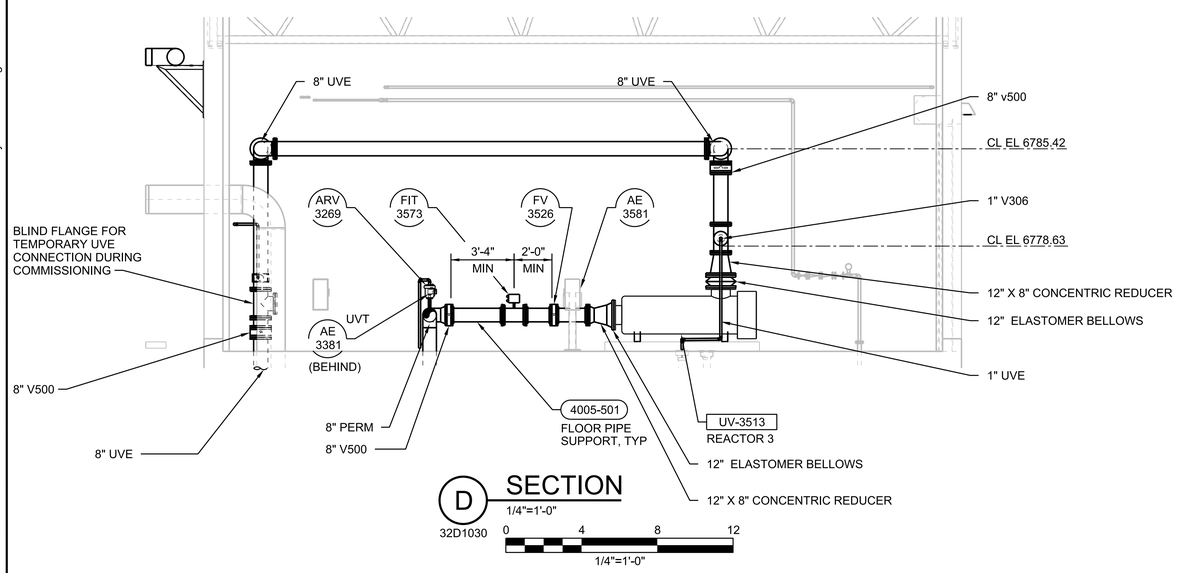

D SECTION
1/4"=1'-0"
32D1030
0 4 8 12
1/4"=1'-0"

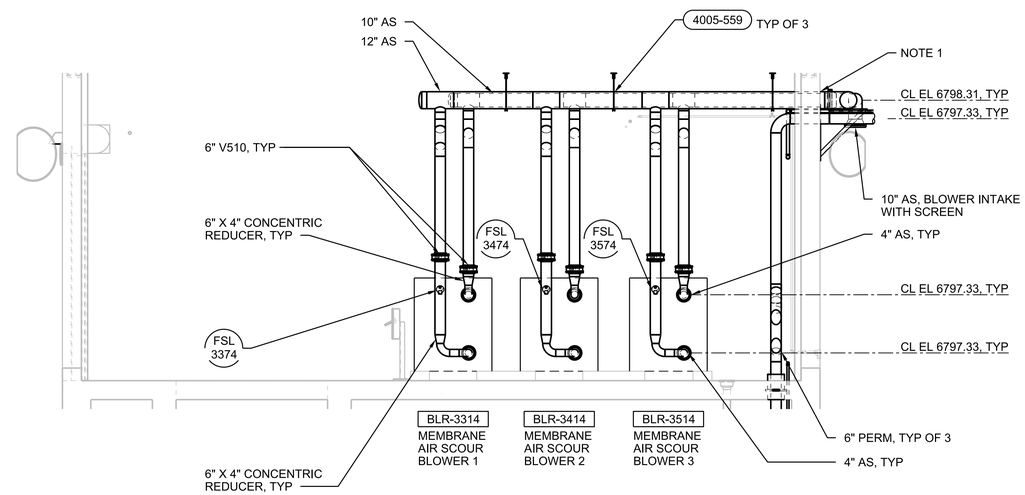

F SECTION
1/4"=1'-0"
32D1030
0 4 8 12
1/4"=1'-0"

FULL SIZE DRAWINGS = 22"x34"
BAR MEASURES 1" LONG
0" 1"

Registered Professional Engineer (Civil) CERTIFICATE NO. 80742 CORY LANCASTER Date Signed 6/17/25 ARIZONA, U.S.A.
Cory Lancaster

A/E FIRM	DESIGNED:	SUB SHEET NO.	TITLE OF SHEET	DRAWING NO.
JACOBS GOVERNMENT SERVICES COMPANY GREENWOOD VILLAGE, CO	C LANCASTER CADD: N HUBER TECH. REVIEW: D BRUNKOW DATE: 06/2025	32D3002	PROCESS BUILDING MECHANICAL SECTIONS GRAND CANYON, SOUTH RIM	113 175376 PMIS/PKG NO. 257282 SHEET 315 OF 401

100% COMPLETE CONSTRUCTION DOCUMENTS

GRCA-257282

PLOT DATE: 6/17/2025 PLOT TIME: 4:09:28 PM SS6/V8I D3167666 - South Rim\4 Delivery\43 CAD Design\GRCA\257282\Microstation V8I Drawings\PROC\32D3002_D3167666.dgn

SHEET NOTES

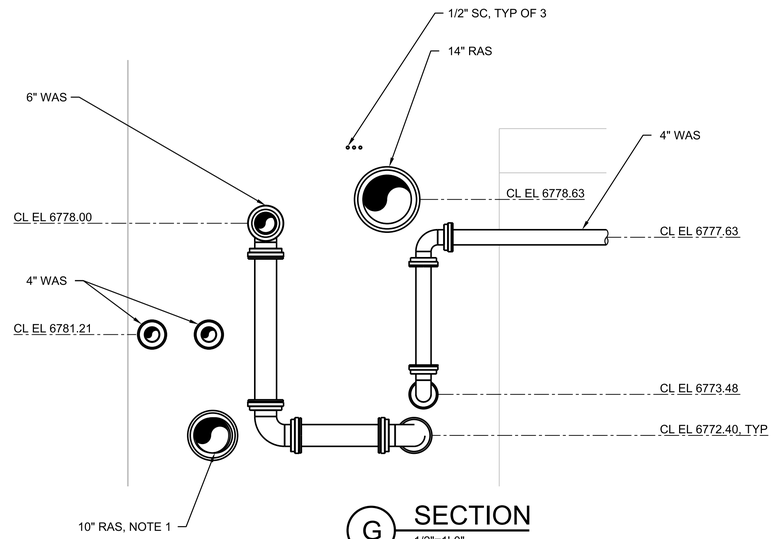

G SECTION
1/2"=1'-0"
32D1020
32D1030
0 2 4 6
1/2"=1'-0"

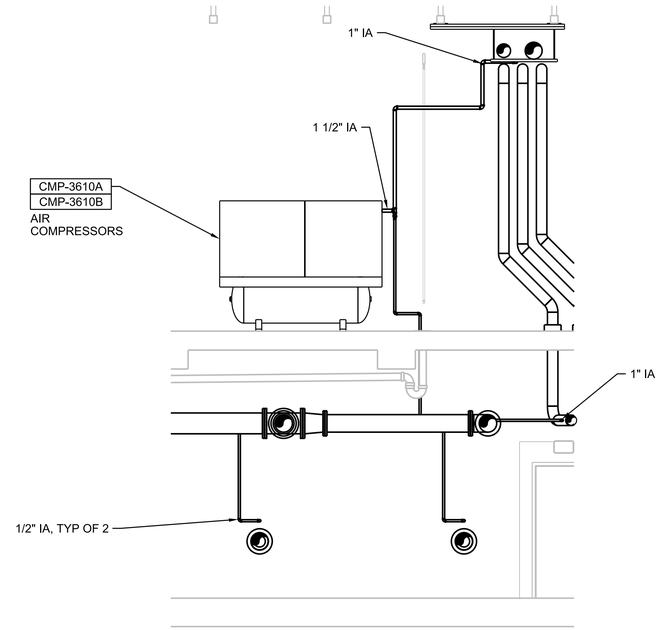

H SECTION
1/4"=1'-0"
32D1020
32D1030
0 4 8 12
1/4"=1'-0"

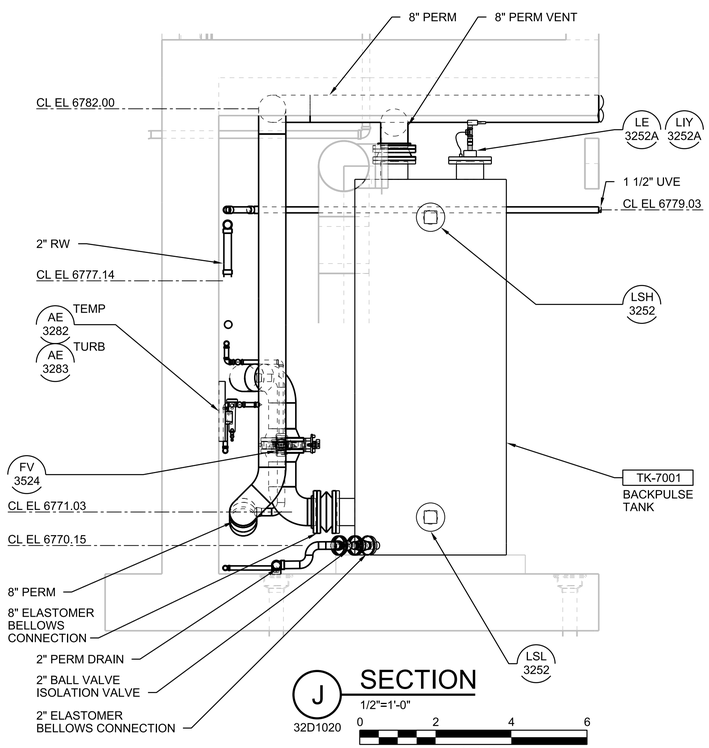

J SECTION
1/2"=1'-0"
32D1020
0 2 4 6
1/2"=1'-0"

FULL SIZE DRAWINGS = 22"x34"
BAR MEASURES 1" LONG
0" 1"

Registered Professional Engineer (Civil)
CERTIFICATE NO. 80742
CORY C. LANCASTER
Date Signed 6/17/25
ARIZONA, U.S.A.
Cory Lancaster

A/E FIRM	DESIGNED:	SUB SHEET NO.	TITLE OF SHEET	DRAWING NO.
JACOBS GOVERNMENT SERVICES COMPANY GREENWOOD VILLAGE, CO	C LANCASTER CADD: N HUBER TECH. REVIEW: D BRUNKOW DATE: 06/2025	32D3003	PROCESS BUILDING MECHANICAL SECTIONS GRAND CANYON, SOUTH RIM	113 / 175376 PMIS/PKG NO. 257282 SHEET 316 OF 401

GRCA-257282

100% COMPLETE CONSTRUCTION DOCUMENTS

PLOT DATE: 6/17/2025 PLOT TIME: 4:06:11 PM SS6\V8i D3167666 - South Rim\4 Delivery\43 CAD Design\GRCA\257282\Microstation V8i Drawings\PROC\32D3003_D3167666.dgn

SHEET NOTES

1. FOR CONTINUATION, SEE DRAWING 25D3002.
2. FOR CONTINUATION, SEE DRAWING 07Y2002.

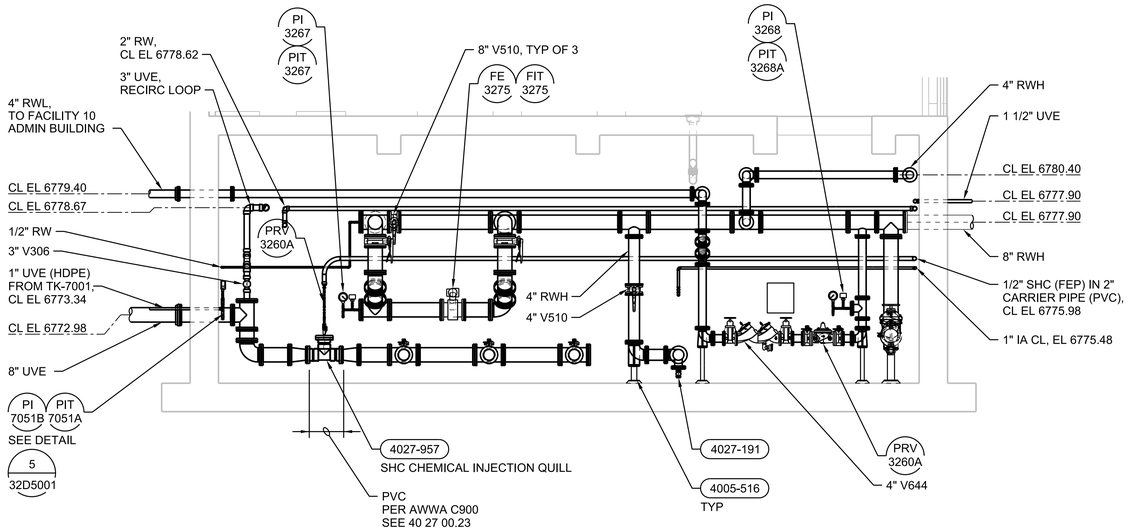

K SECTION
1/4"=1'-0"
32D1020 0 4 8 12
1/4"=1'-0"

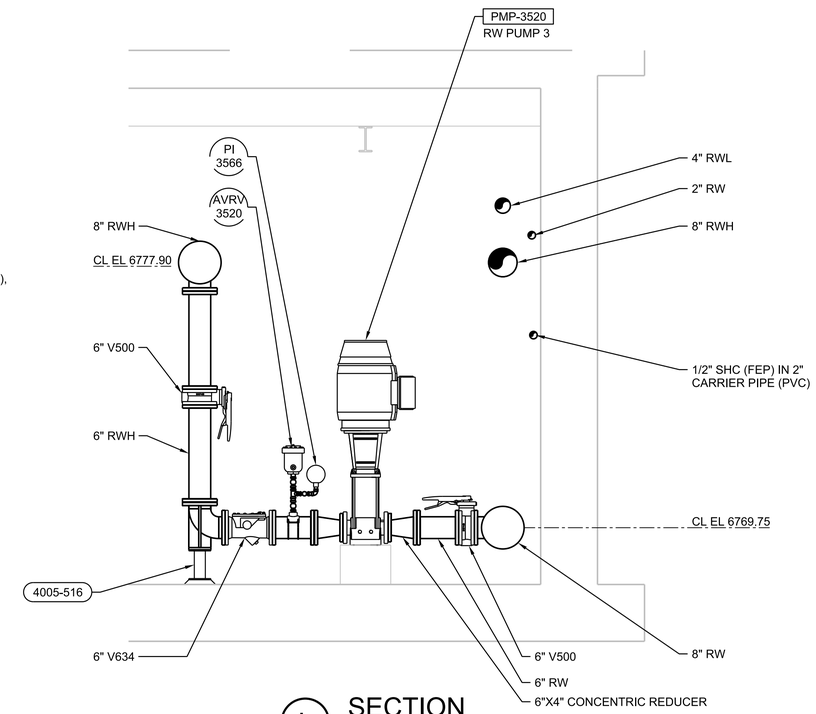

L SECTION
1/2"=1'-0"
32D1020 0 2 4 6
1/2"=1'-0"

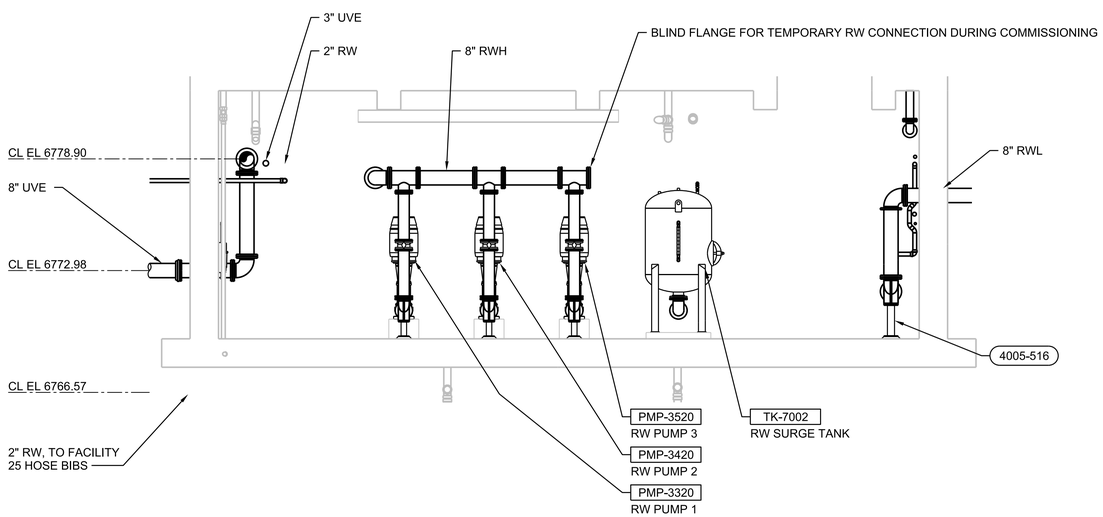

M SECTION
1/4"=1'-0"
32D1020 0 4 8 12
1/4"=1'-0"

FULL SIZE DRAWINGS = 22"x34"
BAR MEASURES 1" LONG
0" 1"

Registered Professional Engineer (Civil) CERTIFICATE NO. 80742 CORY LANCASTER Date Signed 6/17/25 ARIZONA, U.S.A.
Cory Lancaster

A/E FIRM	DESIGNED:	SUB SHEET NO.	TITLE OF SHEET	DRAWING NO.
JACOBS GOVERNMENT SERVICES COMPANY GREENWOOD VILLAGE, CO	C LANCASTER CADD: N HUBER TECH. REVIEW: D BRUNKOW DATE: 06/2025	32D3004	PROCESS BUILDING MECHANICAL SECTIONS GRAND CANYON, SOUTH RIM	113 175376 PMIS/PKG NO. 257282 SHEET 317 OF 401

GRCA-257282

100% COMPLETE CONSTRUCTION DOCUMENTS

PLOT DATE: 6/17/2025 PLOT TIME: 4:07:02 PM SS6/V8i D3167666 - South Rim\4 Delivery\43 CAD Design\GRCA\257282\Microstation V8i Drawings\PROC\32D3004_D3167666.dgn

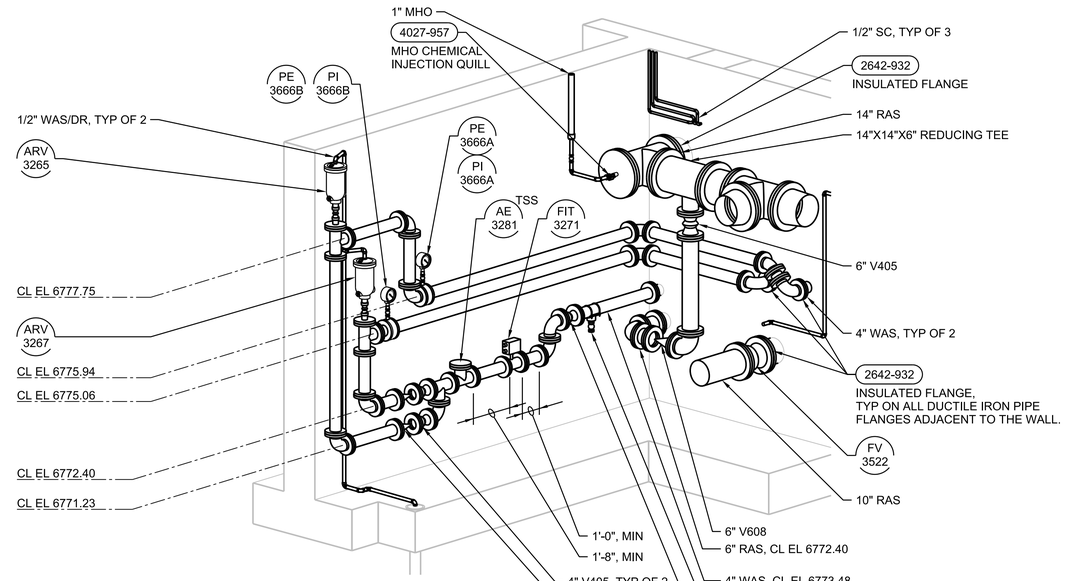

1 DETAIL
NTS
32D1020

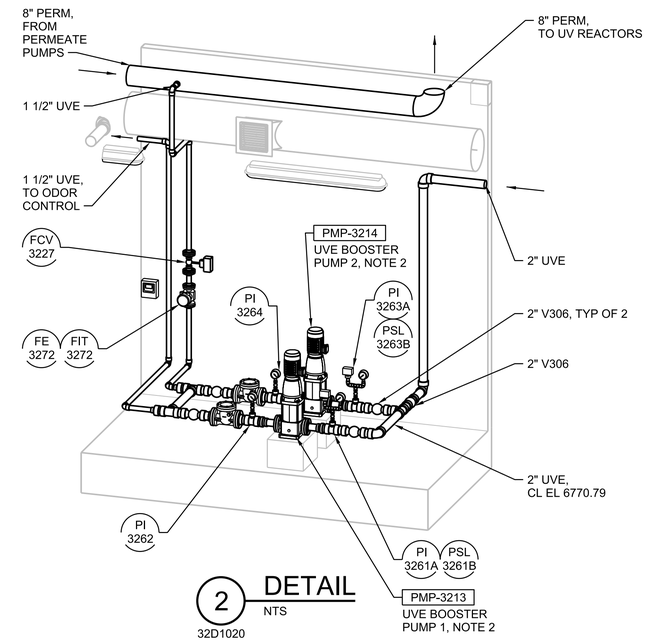

2 DETAIL
NTS
32D1020

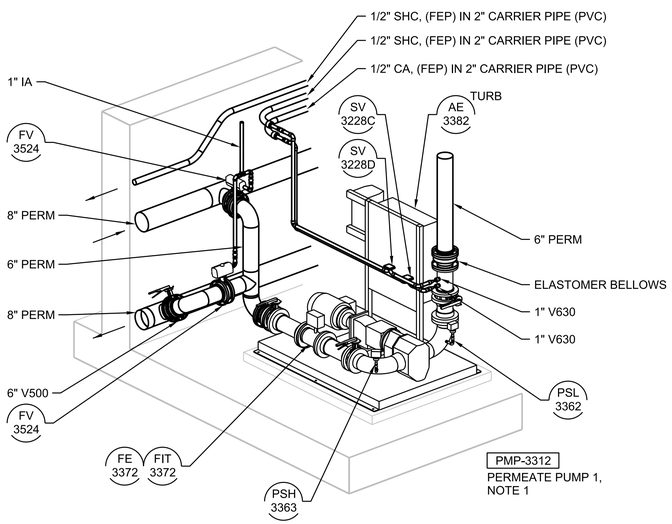

3 DETAIL
NTS
32D1020

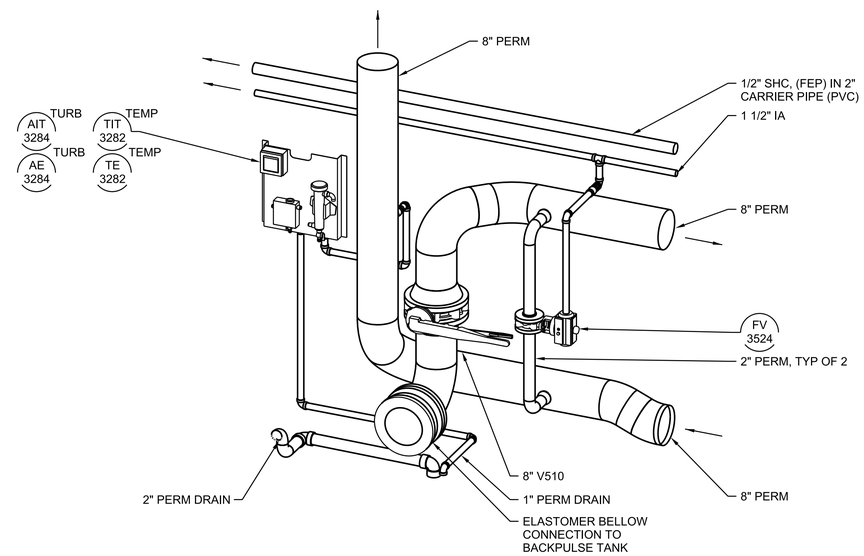

4 DETAIL
NTS
32D1020

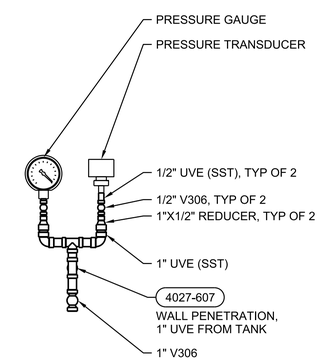

5 DETAIL
NTS
32D1020
32D3004

SHEET NOTES

1. TYPICAL INSTRUMENTATION FOR ALL PERMEATE PUMPS. SEE 09N3202.
2. TYPICAL INSTRUMENTATION FOR BOTH UV BOOSTER PUMPS. SEE 09N3204.

GRCA-257282

FULL SIZE DRAWINGS = 22"x34"
BAR MEASURES 1" LONG
0" 1"

Registered Professional Engineer (Civil) CERTIFICATE NO. 80742 CORY D. LANCASTER Date Signed 6/17/25 ARIZONA, U.S.A.
Cory Lancaster

A/E FIRM	DESIGNED:	SUB SHEET NO.	TITLE OF SHEET	NO SCALE
JACOBS GOVERNMENT SERVICES COMPANY GREENWOOD VILLAGE, CO	C LANCASTER CADD: N HUBER TECH. REVIEW: D BRUNKOW DATE: 06/2025	32D5001	PROCESS BUILDING MECHANICAL DETAILS GRAND CANYON, SOUTH RIM	DRAWING NO. 113 175376 PMIS/PKG NO. 257282 SHEET 318 OF 401

100% COMPLETE CONSTRUCTION DOCUMENTS

PLOT DATE: 6/17/2025 PLOT TIME: 4:11:33 PM SS6/V8i D3167666 - South Rim\4 Delivery\43 CAD Design\GRCA\257282\Microstation V8i Drawings\PROC\32D5001_D3167666.dgn

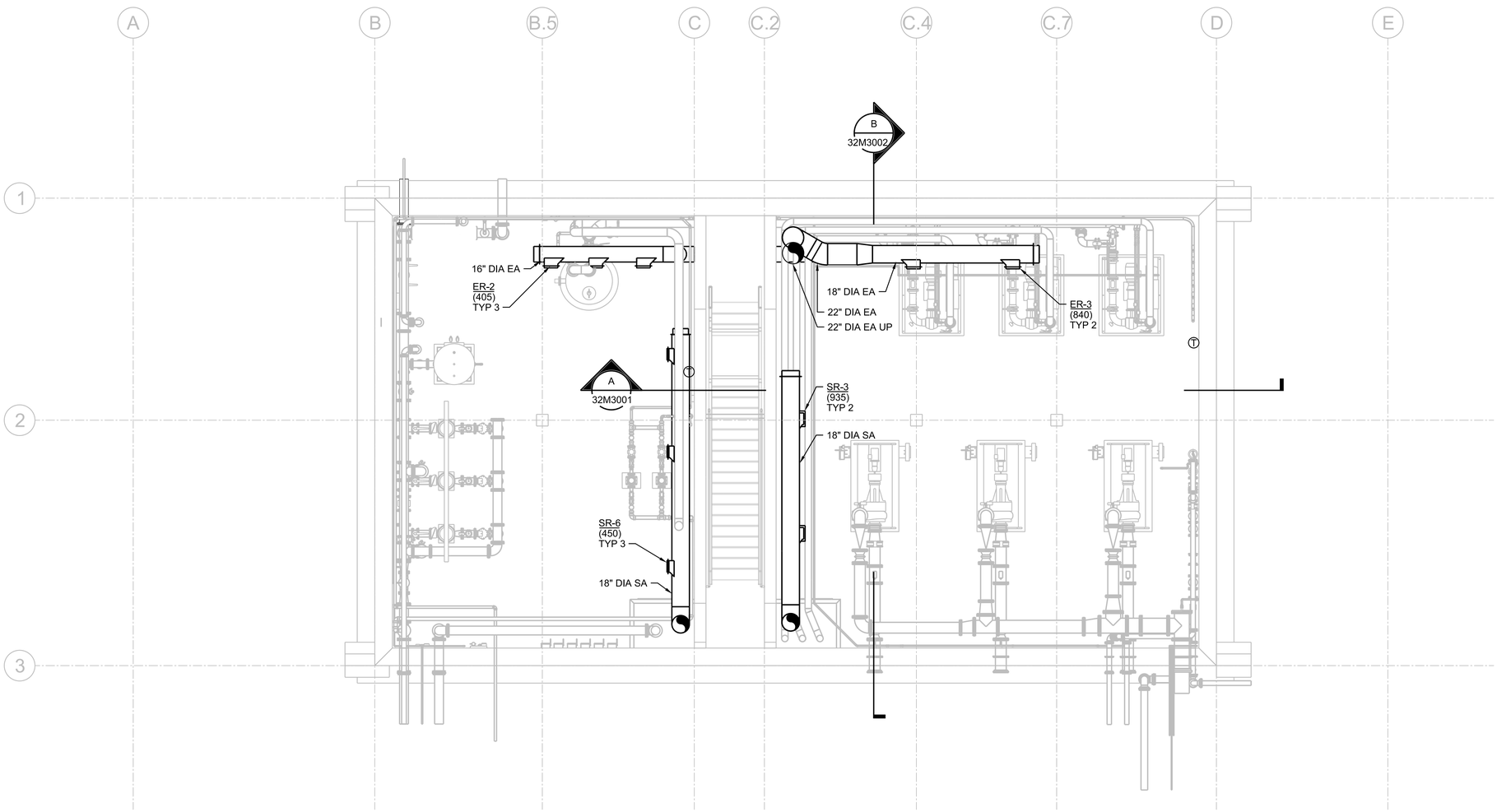

PLAN

3/16"=1'-0"

0 4 8 16

3/16"=1'-0"

FULL SIZE DRAWINGS = 22"x34"
BAR MEASURES 1" LONG

0" 1"

Registered Professional Engineer (Mechanical)
CERTIFICATE NO. 46267
SCOTT HINTE
Date Signed 6-30-25
ARIZONA, U.S.A.
Scott Hinte
Expires 06-30-2026

A/E FIRM	DESIGNED:	SUB SHEET NO.	TITLE OF SHEET	DRAWING NO.
JACOBS GOVERNMENT SERVICES COMPANY GREENWOOD VILLAGE, CO	S HINTE CADD: S HOSTETLER TECH. REVIEW: J SACKINGER DATE: 06/2025	32M1020	PROCESS BUILDING HVAC LOWER LEVEL PLAN GRAND CANYON, SOUTH RIM	113 175376 PMIS/PKG NO. 257282 SHEET 319 OF 401

100% COMPLETE CONSTRUCTION DOCUMENTS

GRCA-257282

PLOT DATE: 6/17/2025 PLOT TIME: 9:10:59 AM SS6/V8i D3167666 - South Rim\4 Delivery\43 CAD Design\GRCA\257282\Microstation V8i Drawings\MECH\32M1020_D3167666.dgn

GENERAL SHEET NOTES

A. EMERGENCY SHUTDOWN SWITCH ($). SEE CHEMICAL ROOMS SEQUENCE OF OPERATIONS FOR DETAIL.

B. COORDINATE STEEL STAND DIMENSIONS WITH SELECTED EQUIPMENT.

C. PROVIDE EMERGENCY VENT STOP SWITCH BY CHEMICAL STORAGE ROOM EXIT DOOR.

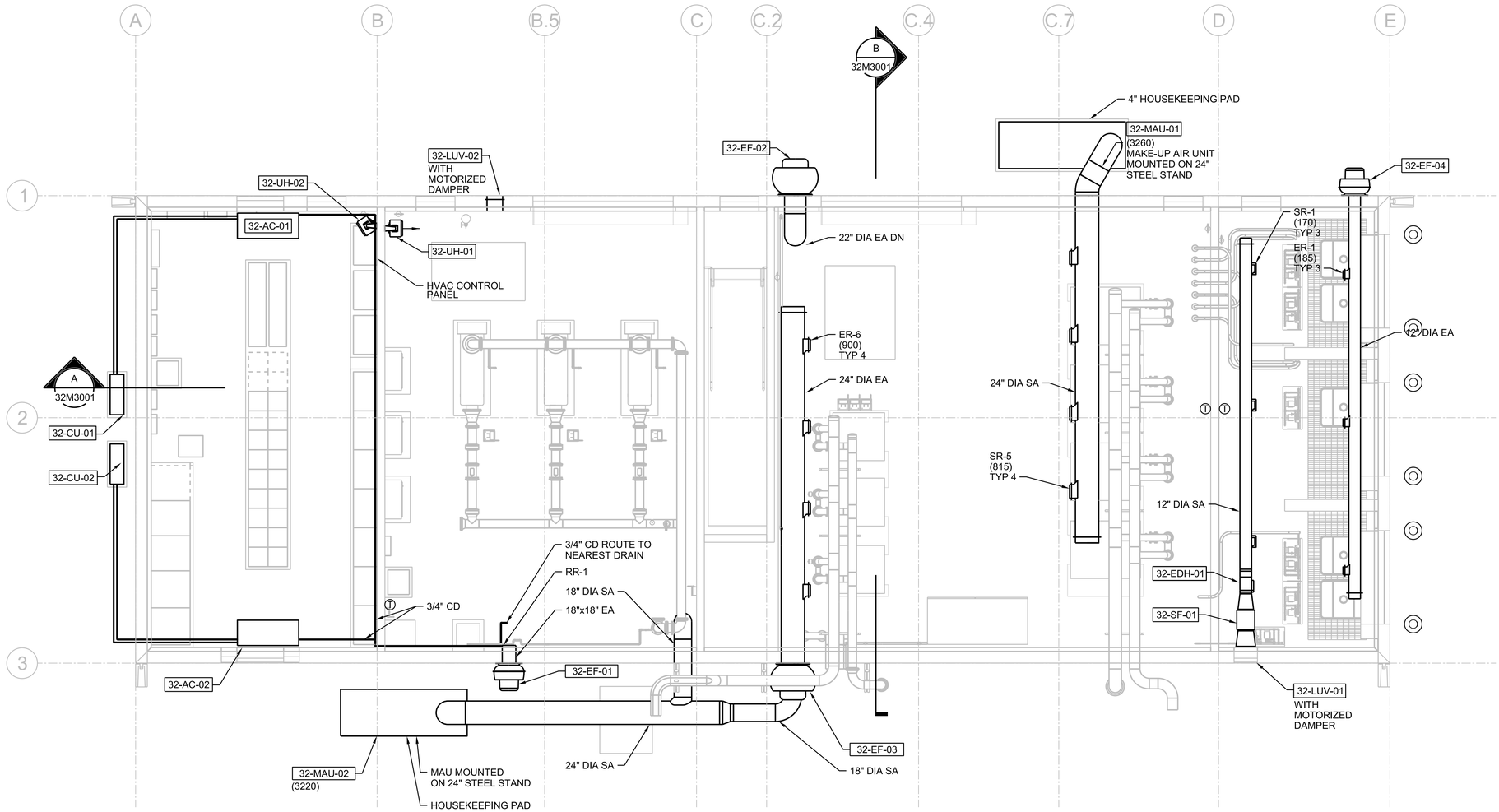

PLAN

3/16"=1'-0"

0 4 8 16

3/16"=1'-0"

FULL SIZE DRAWINGS = 22"x34"
BAR MEASURES 1" LONG

0" 1"

Registered Professional Engineer (Mechanical)
CERTIFICATE NO. 46267
SCOTT HINTE
Date Signed 6-30-25
ARIZONA, U.S.A.
Scott Hinte
Expires 06-30-2026

A/E FIRM	DESIGNED:	SUB SHEET NO.	TITLE OF SHEET	DRAWING NO.
JACOBS GOVERNMENT SERVICES COMPANY GREENWOOD VILLAGE, CO	S HINTE CADD: S HOSTETLER TECH. REVIEW: J SACKINGER DATE: 06/2025	32M1030	PROCESS BUILDING HVAC MAIN LEVEL PLAN GRAND CANYON, SOUTH RIM	113 175376 PMIS/PKG NO. 257282 SHEET 320 OF 401

GRCA-257282

100% COMPLETE CONSTRUCTION DOCUMENTS

PLOT DATE: 6/17/2025 PLOT TIME: 9:11:00 AM SS6/V8i D3167666 - South Rim\4 Delivery\43 CAD Design\GRCA\257282\Microstation V8i Drawings\MECH\32M1030_D3167666.dgn

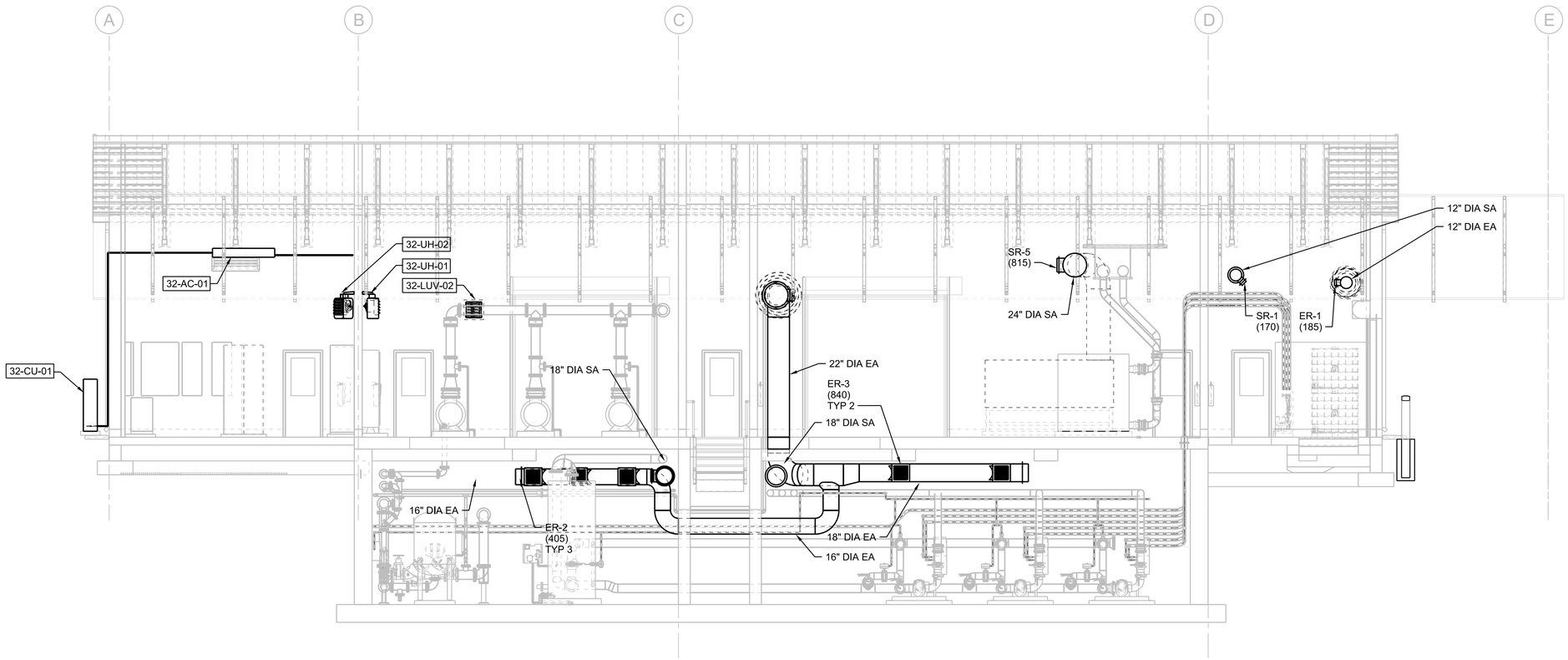

A SECTION
3/16"=1'-0"
32M1020
32M1030

0 4 8 16
3/16"=1'-0"

FULL SIZE DRAWINGS = 22"x34"
BAR MEASURES 1" LONG
0" 1"

Registered Professional Engineer (Mechanical)
CERTIFICATE NO. 46267
SCOTT HINTE
Date Signed 06-30-25
ARIZONA, U.S.A.
Scott Hinte
Expires 06-30-2026

A/E FIRM	DESIGNED:	SUB SHEET NO.	TITLE OF SHEET	DRAWING NO.
JACOBS GOVERNMENT SERVICES COMPANY GREENWOOD VILLAGE, CO	S HINTE CADD: S HOSTETLER TECH. REVIEW: J SACKINGER DATE: 06/2025	32M3001	PROCESS BUILDING HVAC SECTION GRAND CANYON, SOUTH RIM	113 175376 PMIS/PKG NO. 257282 SHEET 321 OF 401

100% COMPLETE CONSTRUCTION DOCUMENTS

PLOT DATE: 6/17/2025 PLOT TIME: 9:11:24 AM SS6/V8I D3167666 - South Rim\4 Delivery\43 CAD Design\GRCA\257282\Microstation V8i Drawings\MECH\32M3001_D3167666.dgn

GRCA-257282

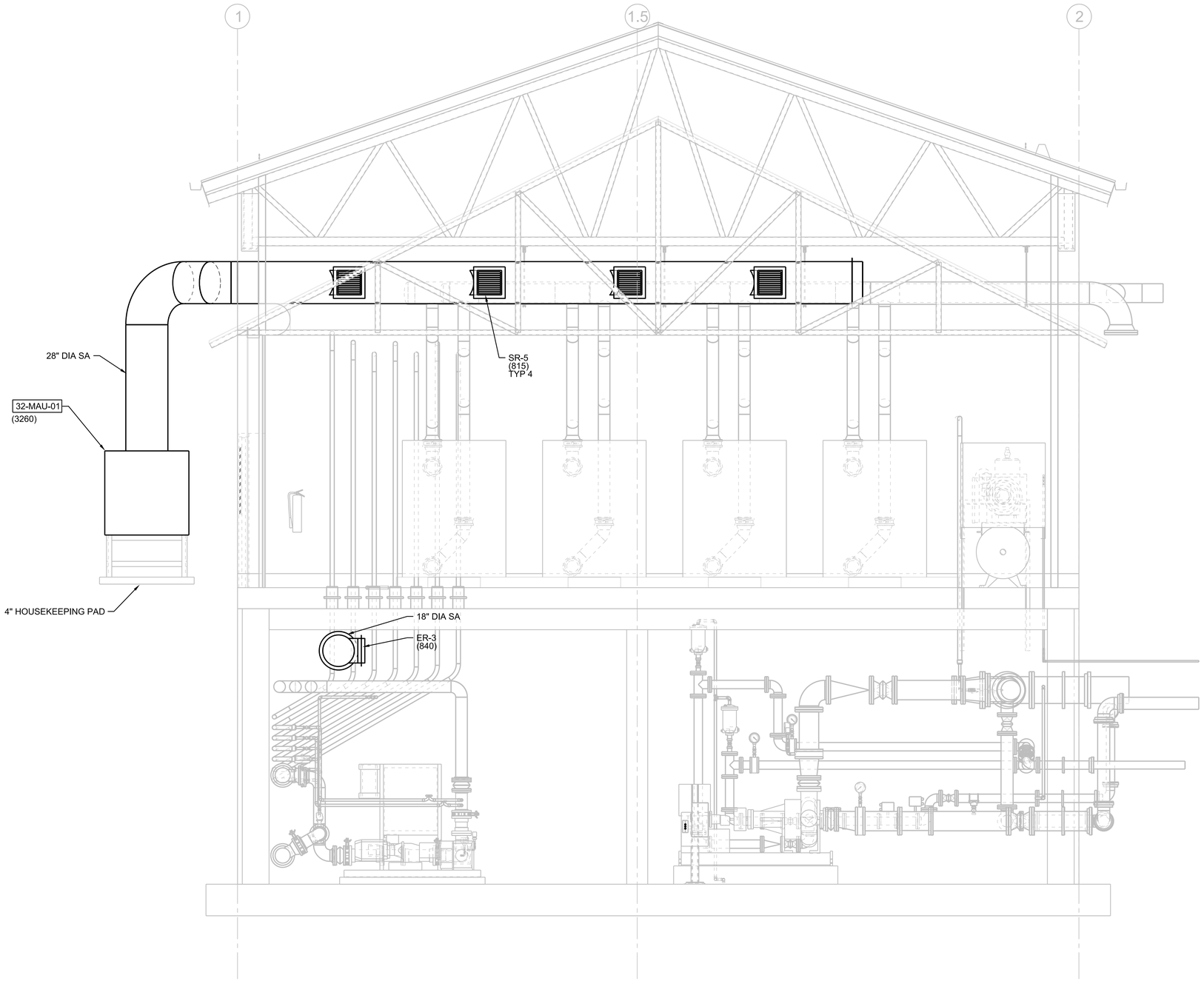

B SECTION
3/8"=1'-0"
32M1020
32M1030

0 2 4 6
3/8"=1'-0"

FULL SIZE DRAWINGS = 22"x34"
BAR MEASURES 1" LONG
0" 1"

Registered Professional Engineer (Mechanical)
CERTIFICATE NO. 46267
SCOTT HINTE
Date Signed 6-09-25
ARIZONA, U.S.A.
Scott Hinte
Expires 06-30-2026

A/E FIRM	DESIGNED:	SUB SHEET NO.	TITLE OF SHEET	DRAWING NO.
JACOBS GOVERNMENT SERVICES COMPANY GREENWOOD VILLAGE, CO	S HINTE CADD: S HOSTETLER TECH. REVIEW: J SACKINGER DATE: 06/2025	32M3002	PROCESS BUILDING HVAC SECTION GRAND CANYON, SOUTH RIM	113 / 175376 PMIS/PKG NO. 257282 SHEET 322 OF 401

100% COMPLETE CONSTRUCTION DOCUMENTS

GRCA-257282

PLOT DATE: 6/17/2025 PLOT TIME: 9:11:07 AM SS6/V8i D3167666 - South Rim\4 Delivery\43 CAD Design\GRCA\257282\Microstation V8i Drawings\MECH\32M3002_D3167666.dgn

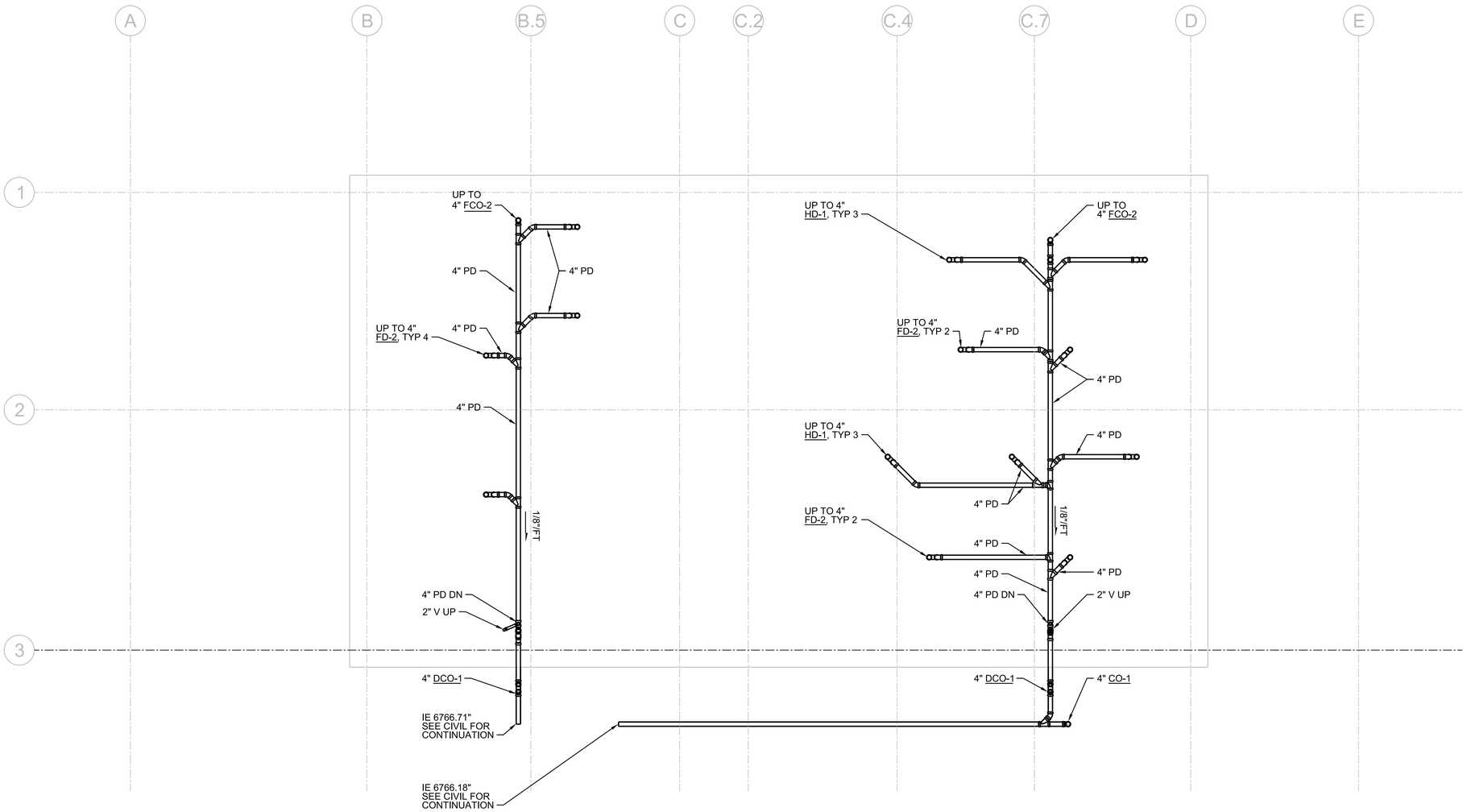

PLAN

3/16"=1'-0"

0 4 8 16

3/16"=1'-0"

FULL SIZE DRAWINGS = 22"x34"
BAR MEASURES 1" LONG

0" 1"

Registered Professional Engineer, Mechanical
CERTIFICATE NO. 46267
SCOTT HINTE
Date Signed 06-30-25
ARIZONA, U.S.A.
Scott Hinte
Expires 06-30-2026

A/E FIRM	DESIGNED:	SUB SHEET NO.	TITLE OF SHEET	DRAWING NO.
JACOBS GOVERNMENT SERVICES COMPANY GREENWOOD VILLAGE, CO	S HINTE CADD: S HOSTETLER TECH. REVIEW: J SACKINGER DATE: 06/2025	32P1010	PROCESS BUILDING PLUMBING BELOW GRADE PLAN GRAND CANYON, SOUTH RIM	113 175376 PMIS/PKG NO. 257282 SHEET 323 OF 401

100% COMPLETE CONSTRUCTION DOCUMENTS

GRCA-257282

PLOT DATE: 6/17/2025 PLOT TIME: 9:14:24 AM SS6/V8I D3167666 - South Rim\4 Delivery\43 CAD Design\GRCA\257282\Microstation V8I DrawingsIPLUMB\32P1010_D3167666.dgn

GENERAL SHEET NOTES

A. NGWH-1 AND V230 UTILIZING RECLAIMED WATER SHALL BE LABELED "CAUTION! NON-POTABLE WATER - DO NOT DRINK". REFER TO DETAIL 1014-002.

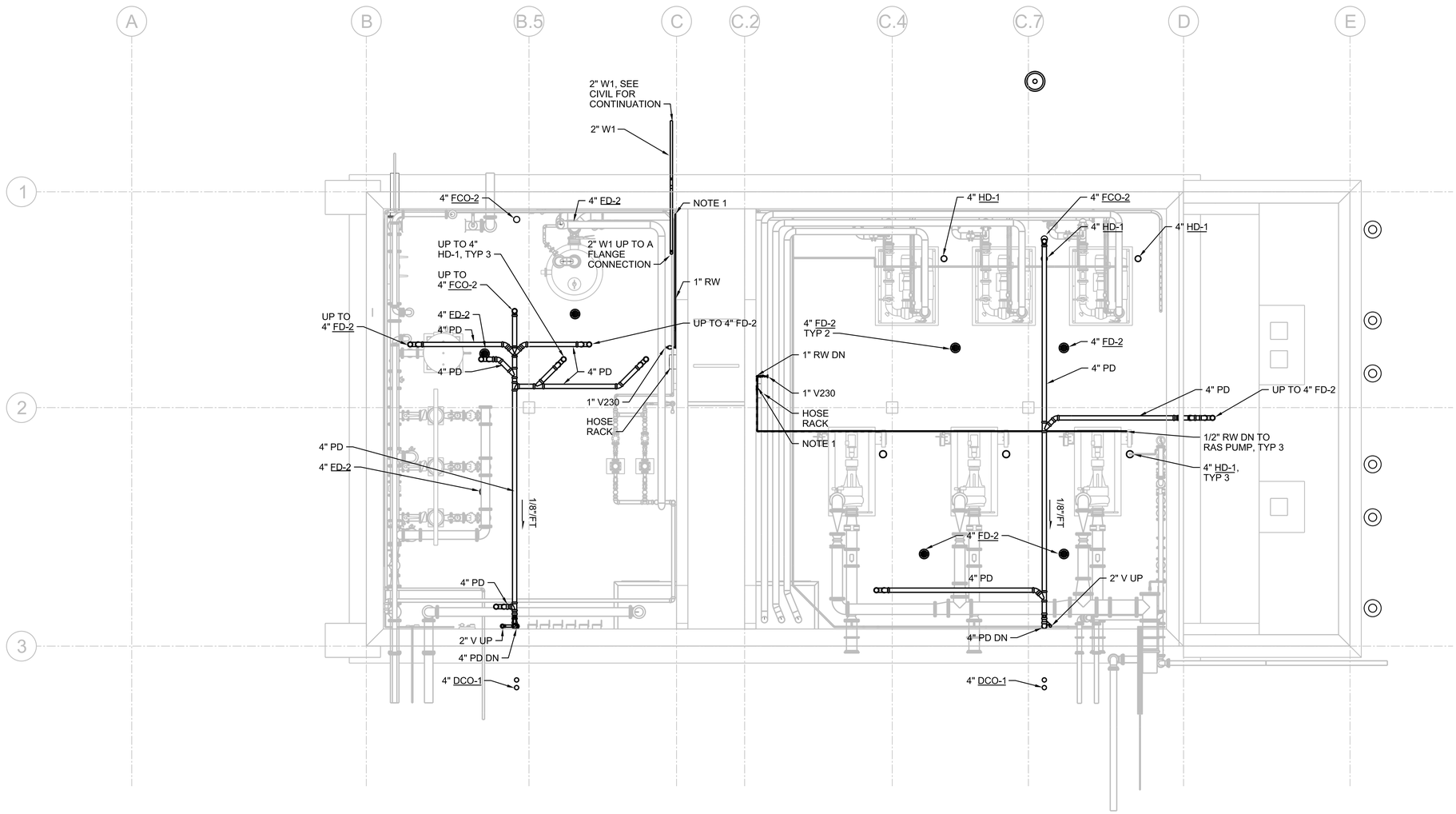

PLAN

3/16"=1'-0"

0 4 8 16

3/16"=1'-0"

FULL SIZE DRAWINGS = 22"x34"
BAR MEASURES 1" LONG

0" 1"

Registered Professional Engineer (Mechanical) CERTIFICATE NO. 46267 SCOTT HINTE Date Signed 6-30-25 ARIZONA, U.S.A.

Scott Hinte

Expires 06-30-2026

A/E FIRM JACOBS GOVERNMENT SERVICES COMPANY GREENWOOD VILLAGE, CO	DESIGNED: S HINTE CADD: S HOSTETLER TECH. REVIEW: J SACKINGER DATE: 06/2025	SUB SHEET NO. 32P1020	TITLE OF SHEET PROCESS BUILDING PLUMBING LOWER LEVEL PLAN GRAND CANYON, SOUTH RIM	DRAWING NO. 113 175376 PMIS/PKG NO. 257282 SHEET 324 OF 401

100% COMPLETE CONSTRUCTION DOCUMENTS

GRCA-257282

PLOT DATE: 6/17/2025 PLOT TIME: 9:14:23 AM SS6/V8i D3167666 - South Rim\4 Delivery\43 CAD Design\GRCA\257282\Microstation V8i Drawings\PLUMB\32P1020_D3167666.dgn

GENERAL SHEET NOTES

A. NGWH-1 AND V230 UTILIZING RECLAIMED WATER SHALL BE LABELED "CAUTION! NON-POTABLE WATER - DO NOT DRINK". REFER TO DETAIL 1014-002.

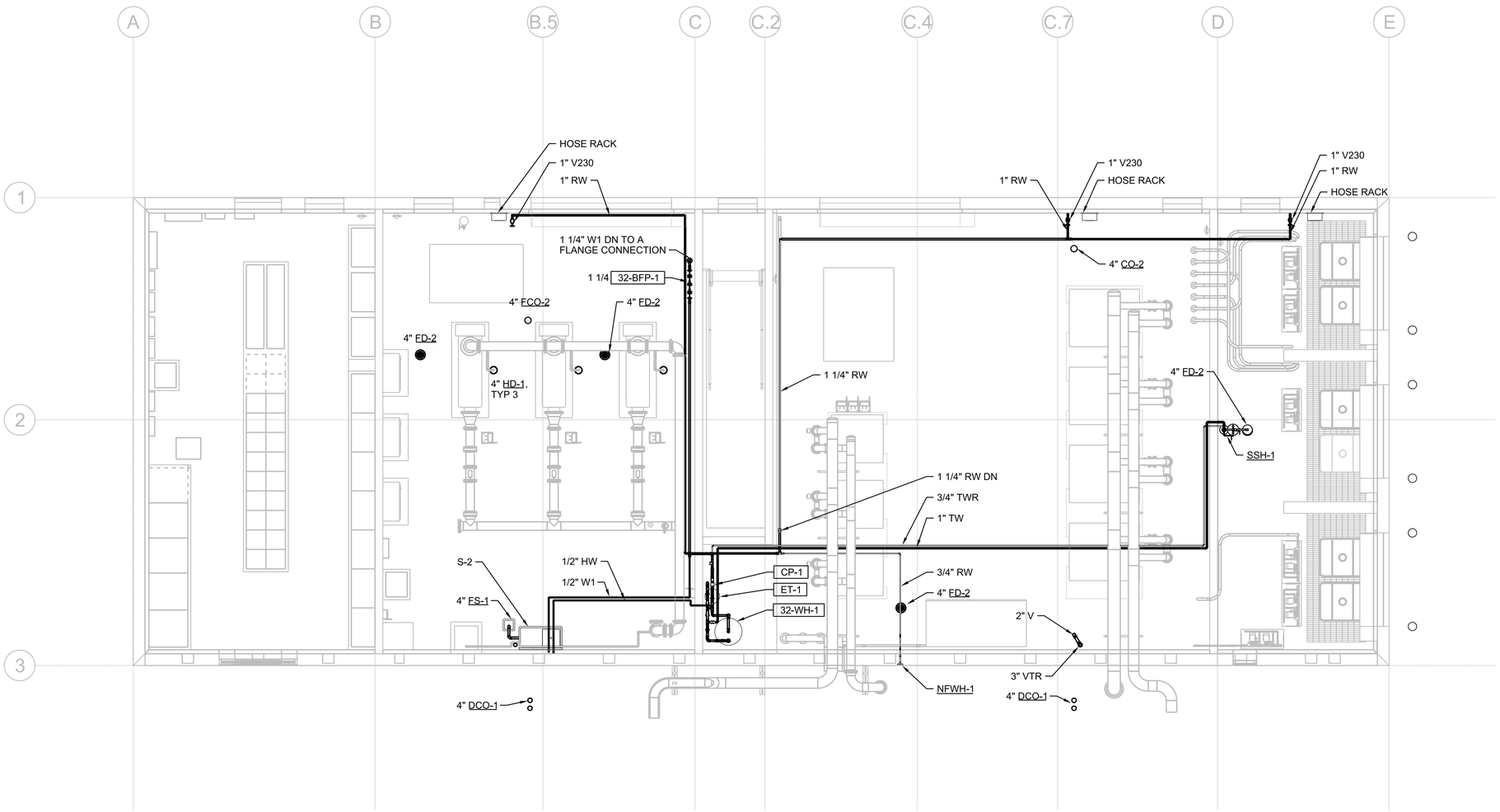

PLAN

3/16"=1'-0"

0 4 8 16

3/16"=1'-0"

FULL SIZE DRAWINGS = 22"x34"
BAR MEASURES 1" LONG

0" 1"

Registered Professional Engineer (Mechanical) CERTIFICATE NO. 46267 SCOTT HINTE Date Signed 6-30-25 ARIZONA, U.S.A.

Scott Hinte

Expires 06-30-2026

A/E FIRM	DESIGNED:	SUB SHEET NO.	TITLE OF SHEET	DRAWING NO.
JACOBS GOVERNMENT SERVICES COMPANY GREENWOOD VILLAGE, CO	S HINTE CADD: S HOSTETLER TECH. REVIEW: J SACKINGER DATE: 06/2025	32P1030	PROCESS BUILDING PLUMBING MAIN LEVEL PLAN GRAND CANYON, SOUTH RIM	113 175376 PMIS/PKG NO. 257282 SHEET 325 OF 401

GRCA-257282

100% COMPLETE CONSTRUCTION DOCUMENTS

PLOT DATE: 6/17/2025 PLOT TIME: 9:14:15 AM SS6/V8i D3167666 - South Rim\4 Delivery\43 CAD Design\GRCA\257282\Microstation V8i Drawings\PLUMB\32P1030_D3167666.dgn

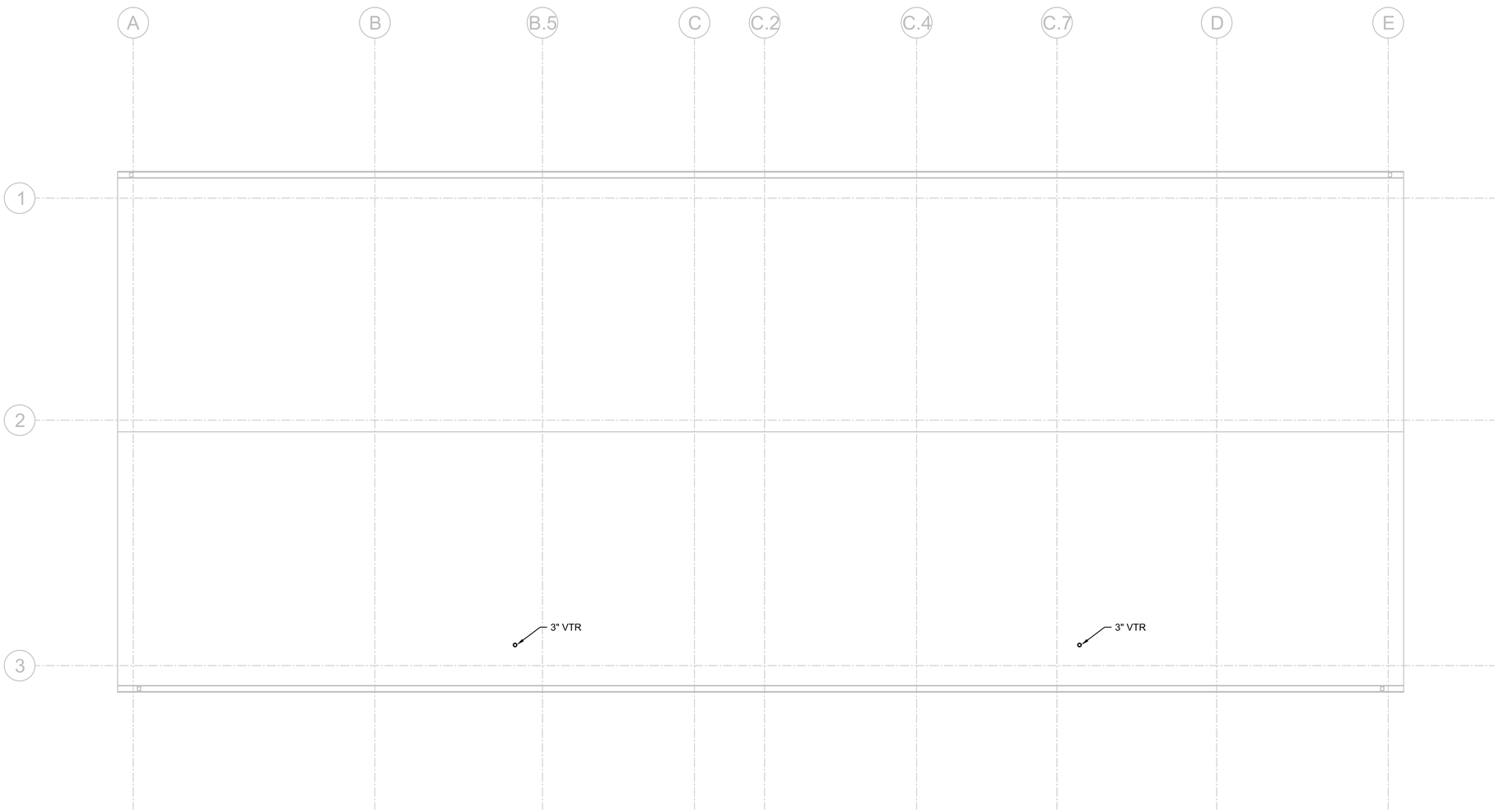

PLAN
3/16"=1'-0"

N

0 4 8 16
3/16"=1'-0"

FULL SIZE DRAWINGS = 22"x34"
BAR MEASURES 1" LONG

0" 1"

Registered Professional Engineer (Mechanical)
CERTIFICATE NO. 46267
SCOTT HINTE
Date Signed 06-30-26
ARIZONA, U.S.A.
Scott Hinte
Expires 06-30-2026

A/E FIRM	DESIGNED:	SUB SHEET NO.	TITLE OF SHEET	DRAWING NO.
JACOBS GOVERNMENT SERVICES COMPANY GREENWOOD VILLAGE, CO	S HINTE CADD: S HOSTETLER TECH. REVIEW: J SACKINGER DATE: 06/2025	32P1040	PROCESS BUILDING PLUMBING ROOF PLAN GRAND CANYON, SOUTH RIM	113 175376 PMIS/PKG NO. 257282 SHEET 326 OF 401

100% COMPLETE CONSTRUCTION DOCUMENTS

GRCA-257282

PLOT DATE: 6/17/2025 PLOT TIME: 9:14:55 AM SS6/V8I D3167666 - South Rim\4 Delivery\43 CAD Design\GRCA\257282\Microstation V8I Drawings\PLUMB\32P1040_D3167666.dgn

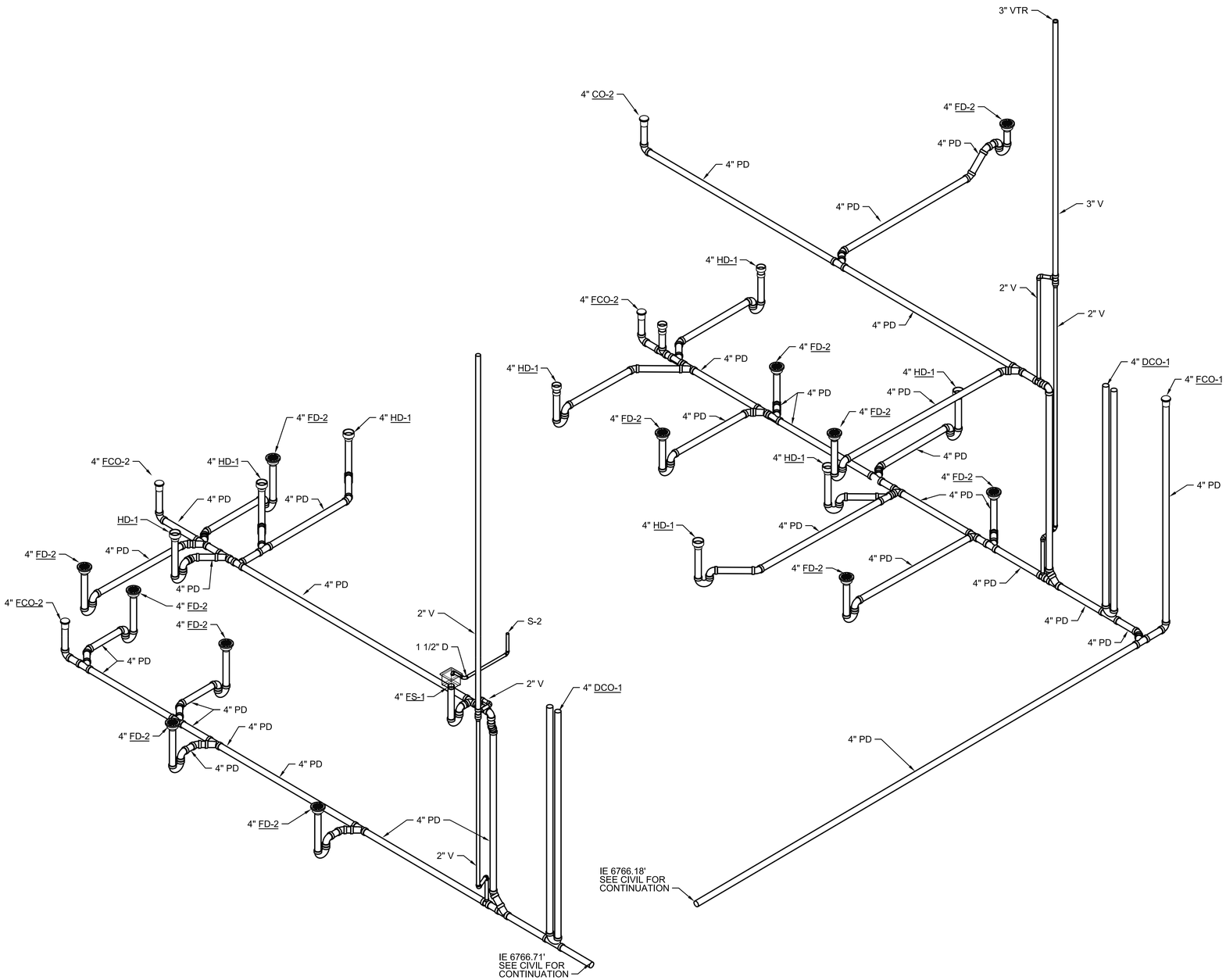

PROCESS WASTE

NTS

FULL SIZE DRAWINGS = 22"x34"
BAR MEASURES 1" LONG

0" 1"

Registered Professional Engineer (Mechanical)
CERTIFICATE NO. 46267
SCOTT HINTE
Date Signed 6-30-25
ARIZONA, U.S.A.
Scott Hinte
Expires 06-30-2026

A/E FIRM	DESIGNED:	SUB SHEET NO.	TITLE OF SHEET	DRAWING NO.
JACOBS GOVERNMENT SERVICES COMPANY GREENWOOD VILLAGE, CO	S HINTE CADD: S HOSTETLER TECH. REVIEW: J SACKINGER DATE: 06/2025	32P9001	PROCESS BUILDING PLUMBING ISOMETRIC GRAND CANYON, SOUTH RIM	113 175376 PMIS/PKG NO. 257282 SHEET 327 OF 401

NO SCALE

100% COMPLETE CONSTRUCTION DOCUMENTS

GRCA-257282

PLOT DATE: 6/17/2025 PLOT TIME: 10:58:40 AM SS6/V8i D3167666 - South Rim\4 Delivery\43 CAD Design\GRCA\257282\Microstation V8i Drawings\PLUMB\32P9001_D3167666.dgn

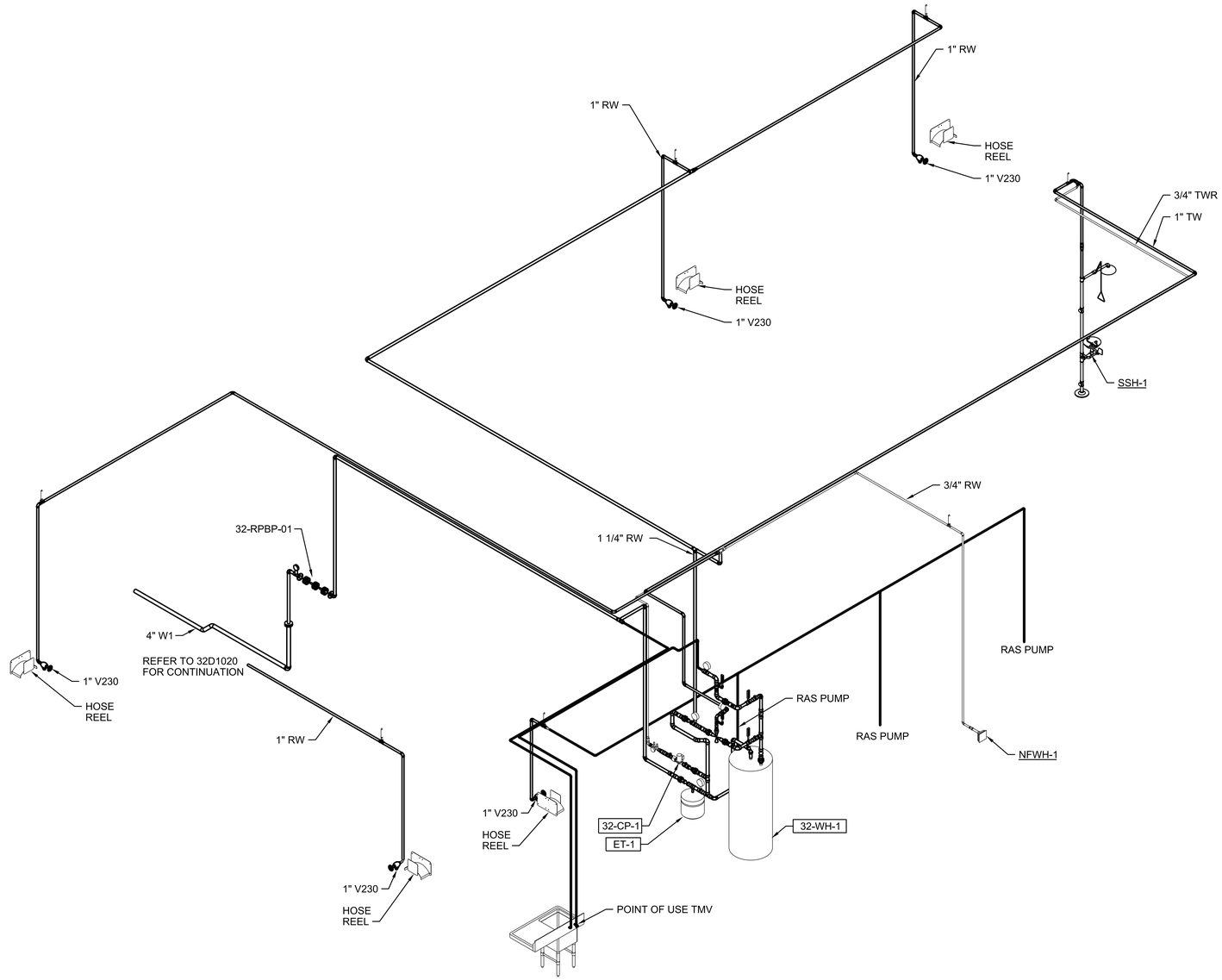

SERVICE WATER

NTS

FULL SIZE DRAWINGS = 22"x34"
BAR MEASURES 1" LONG

0" 1"

Registered Professional Engineer (Mechanical)
CERTIFICATE NO. 46267
SCOTT HINTE
Date Signed 6-30-25
ARIZONA, U.S.A.
Scott Hinte
Expires 06-30-2026

A/E FIRM	DESIGNED:	SUB SHEET NO.	TITLE OF SHEET	NO SCALE
JACOBS GOVERNMENT SERVICES COMPANY GREENWOOD VILLAGE, CO	S HINTE CADD: S HOSTETLER TECH. REVIEW: J SACKINGER DATE: 06/2025	32P9002	PROCESS BUILDING PLUMBING ISOMETRIC GRAND CANYON, SOUTH RIM	DRAWING NO. 113 175376 PMIS/PKG NO. 257282 SHEET 328 OF 401

100% COMPLETE CONSTRUCTION DOCUMENTS

GRCA-257282

PLOT DATE: 6/17/2025 PLOT TIME: 10:58:40 AM SS6\V8i D3167666 - South Rim\4 Delivery\43 CAD Design\GRCA\257282\Microstation V8i Drawings\PLUMB\32P9002_D3167666.dgn

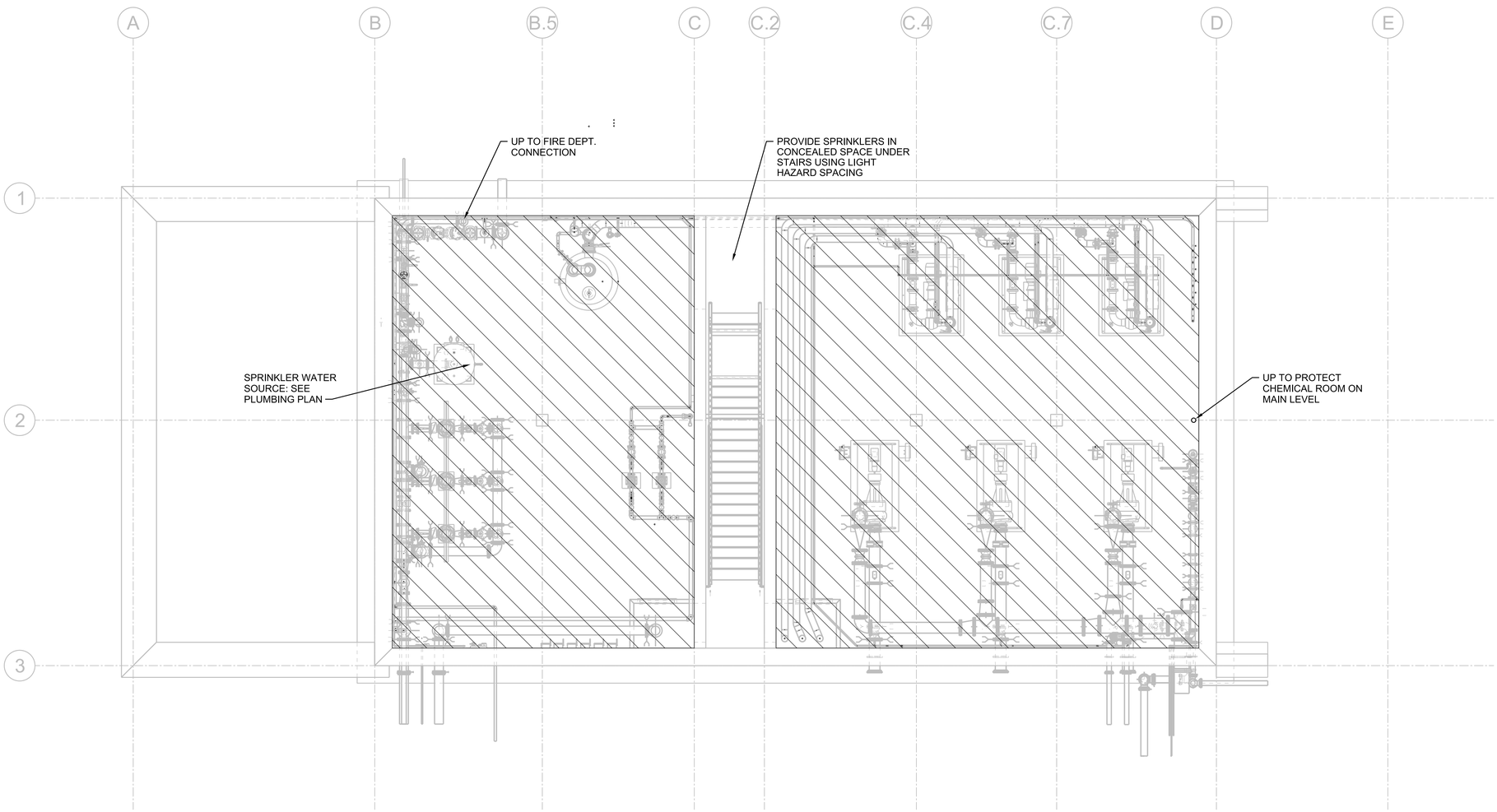

FIRE SPRINKLER PLAN

PLAN
3/16"=1'-0"

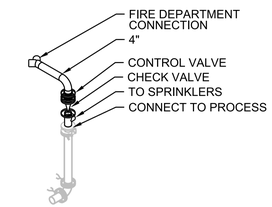

SPRINKLER RISER DETAIL

FIRE SPRINKLER HAZARD CRITERIA

	LIGHT HAZARD	0.10/1500+100 GPM HOSE
	ORDINARY HAZARD GROUP 2	0.20/1500+250 GPM HOSE

1. REMOTE AREA MAY BE REDUCED FOR QR SPRINKLERS AND CEILING HEIGHTS PER NFPA 13.
2. USE INTERMEDIATE TEMPERATURE FIRE SPRINKLERS.

FULL SIZE DRAWINGS = 22"x34"
BAR MEASURES 1" LONG

0" 1"

0 4 8 16
3/16"=1'-0"

Registered Professional Engineer (Fire Protection)
CERTIFICATE NO. 62308
CHRISTOPHER KYLE SMITH
Date Signed 6/24/25
ARIZONA U.S.A.
Expires 6/30/26

A/E FIRM	DESIGNED:	SUB SHEET NO.	TITLE OF SHEET	DRAWING NO.
JACOBS GOVERNMENT SERVICES COMPANY GREENWOOD VILLAGE, CO	M NEWTON CADD: S HOSTETLER TECH. REVIEW: C SMITH DATE: 06/2025	32FP1020	PROCESS BUILDING FIRE PROTECTION LOWER LEVEL PLAN GRAND CANYON, SOUTH RIM	113 175376 PMIS/PKG NO. 257282 SHEET 329 OF 401

100% COMPLETE CONSTRUCTION DOCUMENTS

GRCA-257282

PLOT DATE: 6/23/2025 PLOT TIME: 2:06:52 PM SS6/V8i D3167666 - South Rim\4 Delivery\43 CAD Design\GRCA\257282\Microstation V8i Drawings\MECH\32FP1020_D3167666.dgn

FIRE ALARM NOTES

1. THIS PLAN DEPICTS THE GENERAL LOCATION, TYPE, AND QUANTITY OF FIELD DEVICES, ENCLOSURES, AND PANELS. CONTRACTOR SHALL DETERMINE THE TYPE, FINAL QUANTITY, AND LOCATION OF ALL DEVICES, ENCLOSURES AND PANELS AS REQUIRED IN ORDER TO COMPLY WITH THE CODE AND MEET CLIENT PERFORMANCE REQUIREMENTS. CONTRACTOR SHALL COORDINATE FINAL DEVICE, ENCLOSURE, AND PANEL LOCATIONS WITH OTHER TRADES. CONTRACTOR SHALL COORDINATE 120VAC OR HIGHER POWER REQUIREMENTS OF ALL DEVICES, ENCLOSURES, AND PANELS WITH THE ELECTRICAL CONTRACTOR.
2. WIRING, CONNECTIONS, CONDUIT, AND TEMINATIONS SHALL BE SIZED, PROVIDED, AND INSTALLED PER NATIONAL ELECTRIC CODE REQUIREMENTS.
3. CONDUIT ROUTING TO FIELD DEVICES SHALL BE DETERMINED AND SIZED BY THE CONTRACTOR AND SHALL BE A 3/4" MINIMUM OR GREATER. COORDINATE FINAL CONDUIT ROUTING WITH OTHER TRADES.
4. SPLICES ARE NOT ALLOWED BETWEEN PANELS AND FIELD DEVICES, OR DEVICE TO DEVICE. CONNECTIONS SHALL BE MADE IN THE PANEL. FIELD ENCLOSURES WITH APPROVED TERMINAL STRIPS, OR TERMINATIONS ON THE FIELD DEVICE MADE FOR THAT PURPOSE.
5. SLC WIRING SHALL BE CLASS 'B'.
6. NAC WIRING SHALL BE CLASS 'B'.
7. IDC WIRING SHALL BE CLASS 'B'.
8. T-TAPPING IS NOT ALLOWED ON ANY CIRCUIT.
9. WIRE NUTS OR OTHER SPLICING DEVICES/METHODS SHALL NOT BE ALLOWED.
10. NO CONDUIT OR OTHER PENETRATIONS SHALL BE ALLOWED TO ENTER THE TOP OF ANY FIRE ALARM PANEL, POWER SUPPLY, OR FIELD ENCLOSURE.
11. PANELS IN LSS FIRE ALARM ROOMS SHALL BE MOUNTED NO HIGHER THAN 72' AFF TO THE TOP OF THE PANEL.
12. THE FIRE ALARM SYSTEM IS TO BE DESIGNED AND INSTALLED TO SUPPORT ZERO NETWORK DOWNTIME DURING MODIFICATIONS AND EXPANSIONS.
13. PROVIDE IDENTIFICATION TAGS, AS INDICATED IN THE LEGEND, FOR ALL PANELS, FIELD DEVICES, WIRING, AND CONDUIT.
14. INITIATING, CONTROL AND MONITORING DEVICES SHALL BE LOCATED SO THAT THEY ARE ACCESSIBLE FOR MAINTENANCE AND TESTING.
15. ALL ENCLOSURES, CONDUIT, WIRING AND FIELD DEVICES SHALL MEET THE HAZARD AND OCCUPANCY REQUIREMENTS OF THE SPACE.
16. PROVIDE DETAILED SHOP DRAWINGS AND CALCULATIONS ACCORDING TO THE REQUIREMENTS OF NFPA 72, 2016 EDITION AND NFPA 70, 2017 EDITION.
17. THE FAS DRAWINGS IDENTIFIED AND/OR REFERENCED TO HEREIN, REPRESENT THE MINIMUM ESSENTIAL DOCUMENTATION REQUIRED FOR CONTRACTOR TO PROVIDE THEIR OWN DESIGN FOR SUBMITTAL PURPOSES. EQUIPMENT SPECIFIED AND/OR SHOWN ON THE DRAWINGS REPRESENTS BUT IS NOT LIMITED TO THE MAJOR ITEMS REQUIRED.
18. FAS DEVICE LOCATIONS SHOWN ARE DIAGRAMMATIC IN NATURE ONLY. DEVICES SHALL BE LOCATED TO AVOID OBSTRUCTIONS, INTERFERENCES AND DAMAGE FROM OPERATIONS THE INSTALLER AND THE DESIGNER SHALL COORDINATE FINAL FAS EQUIPMENT AND DEVICE LOCATIONS WITH ALL DISCIPLINES AND TRADES AND IN ACCORDANCE WITH MANUFACTURERS' RECOMMENDED INSTALLATION PRACTICES. THE LOCAL AUTHORITY HAVING JURISDICTION AND APPLICABLE CODES AND STANDARDS.
19. EACH SLC SHALL HAVE A REMAINING CAPACITY OF 20% SPARE ADDRESSES (BOTH DETECTORS AND MODULES) AFTER ACCEPTANCE TESTING.
20. SLC SHALL BE MIN 18 AWG. UNLESS OTHERWISE INDICATED ON DRAWINGS OR AS REQUIRED BY MANUFACTURER OR POWER CALCULATIONS.
21. NAC AND IDC SHALL BE MIN. 14 AWG. UNLESS OTHERWISE INDICATED ON DRAWINGS OR AS REQUIRED BY MANUFACTURER OR POWER CALCULATIONS.
22. WIRE NUTS ARE NOT ALLOWED ON ANY FIRE ALARM WIRING INCLUDING 120VAC.
23. MANUAL STATIONS SHALL BE MOUNTED AT 48" AVOVE FLOOR TO CENTER OF BOX.
24. SPRINKLER SYSTEMS SHALL BE MONITORED FOR FLOW AND TAMPER.
25. THESE DOCUMENTS DEPICT A PERFORMANCE LEVEL ENGINEERING DESIGN LAYOUT TO BE UTILIZED AS A GUIDANCE FOR THE PLANNING OF THE FIRE ALARM AND MASS NOTIFICATION SYSTEM BY THE CONTRACTOR. PROVIDE COMPLETE DOCUMENTS FOR REVIEW AND APPROVAL FROM THE CONTRACTING OFFICER AND THE AUTHORITY HAVING JURISDICTION PRIOR TO INSTALLATION. INCLUDE SHOP DRAWINGS, CALCULATIONS, AND ANY ADDITIONAL EQUIPMENT NECESSARY. INCLUDING INITIATING DEVICES AND NOTIFICATION APPLICANCES, TO PROVIDE A COMPLETE INSTALLATION AND COMPLY WITH LOCAL CODES AND AMENDMENTS. PROVIDE COMPLETE VOLTAGE DROP AND BATTERY CALCULATIONS IN ACCORDANCE WITH NFPA 72, PROVIDE ADDITIONAL CIRCUITS AND/OR BATTERIES WHERE NECESSARY FOR COMPLIANCE WITH NFPA 72 AND THE SPECIFICATIONS.

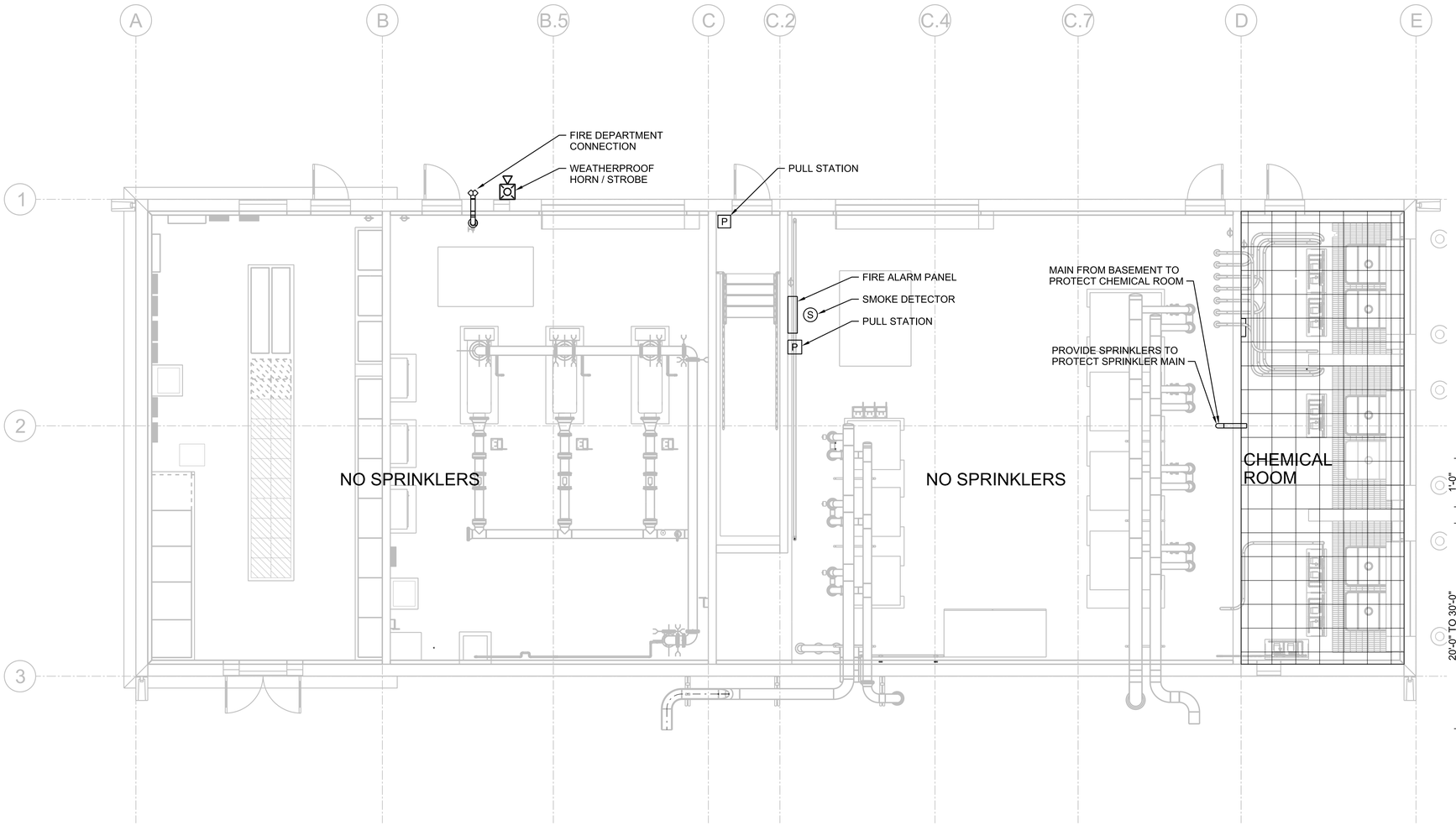

FIRE ALARM AND FIRE SPRINKLER PLAN

SPRINKLER NOTES

1. PROVIDE AUTOMATIC SPRINKLER SYSTEM, PER 2019 NFPA 13.
2. 10 PSI MINIMUM SAFETY FACTOR FOR HYDRAULIC CALCULATIONS.
3. LOCKING CAPS REQUIRED ON ALL HOSE VALVES CONNECTIONS.
4. PROVIDE SCHEDULE 10 AND 40 BLACK STEEL FIRE SPRINKLER PIPE. THREADED FIRE SPRINKLER PIPE MUST BE MINIMUM SCHEDULE 40.
5. SPRINKLER DRAINS MAY DISCHARGE TO EXTERIOR OF BUILDING.
6. THESE DOCUMENTS DEPICT PERFORMANCE LEVEL ENGINEERING DESIGN CRITERIA TO BE UTILIZED AS GUIDANCE FOR THE PLANNING OF THE FIRE SPRINKLER SYSTEM BY THE CONTRACTOR. PROVIDE COMPLETE DOCUMENTS FOR REVIEW AND APPROVAL FROM THE CONTRACTING OFFICER AND THE AUTHORITY HAVING JURISDICTION PRIOR TO INSTALLATION. INCLUDE SHOP DRAWINGS, CALCULATIONS, AND ANY ADDITIONAL EQUIPMENT NECESSARY TO PROVIDE A COMPLETE INSTALLATION AND COMPLY WITH LOCAL CODES AND AMENDMENTS.

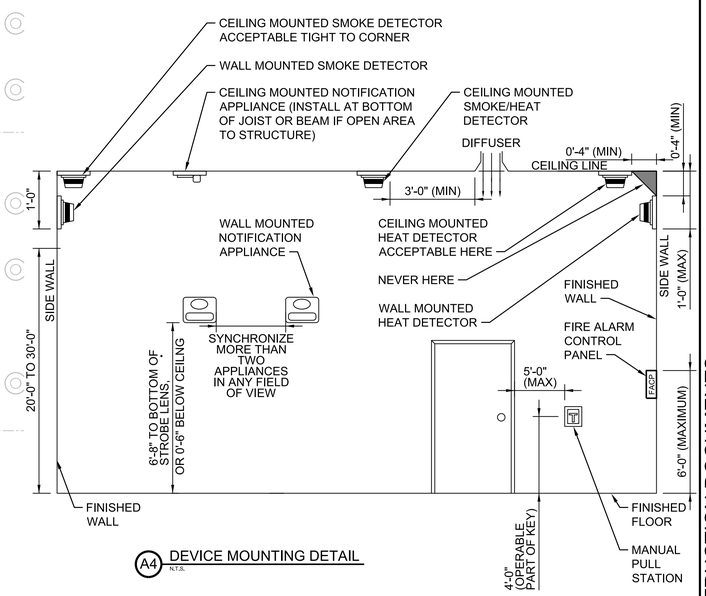

A4 DEVICE MOUNTING DETAIL
N.T.S.

0 4 8 16
3/16"=1'-0"

FIRE SPRINKLER HAZARD CRITERIA

EXTRA HAZARD GROUP 2 — 0.40/ROOM +250 GPM HOSE

1. USE HI TEMPERATURE FIRE SPRINKLERS

PLAN
3/16"=1'-0"

FULL SIZE DRAWINGS = 22"x34"
BAR MEASURES 1" LONG
0" 1"

Registered Professional Engineer (Fire Protection)
CERTIFICATE NO. 62308
CHRISTOPHER KYLE SMITH
Date Signed 6/24/25
ARIZONA U.S.A.
Expires 6/30/26

A/E FIRM	DESIGNED:	SUB SHEET NO.	TITLE OF SHEET	DRAWING NO.
JACOBS GOVERNMENT SERVICES COMPANY GREENWOOD VILLAGE, CO	M NEWTON CADD: S HOSTETLER TECH. REVIEW: C SMITH DATE: 06/2025	32FP1030	PROCESS BUILDING FIRE PROTECTION MAIN LEVEL PLAN GRAND CANYON, SOUTH RIM	113 / 175376 PMIS/PKG NO. 257282 SHEET 330 OF 401

GRCA-257282

100% COMPLETE CONSTRUCTION DOCUMENTS

PLOT DATE: 6/23/2025 PLOT TIME: 2:06:52 PM SS6/V8i D3167666 - South Rim\4 Delivery\43 CAD Design\GRCA\257282\Microstation V8i Drawings\MECH\32FP1030_D3167666.dgn

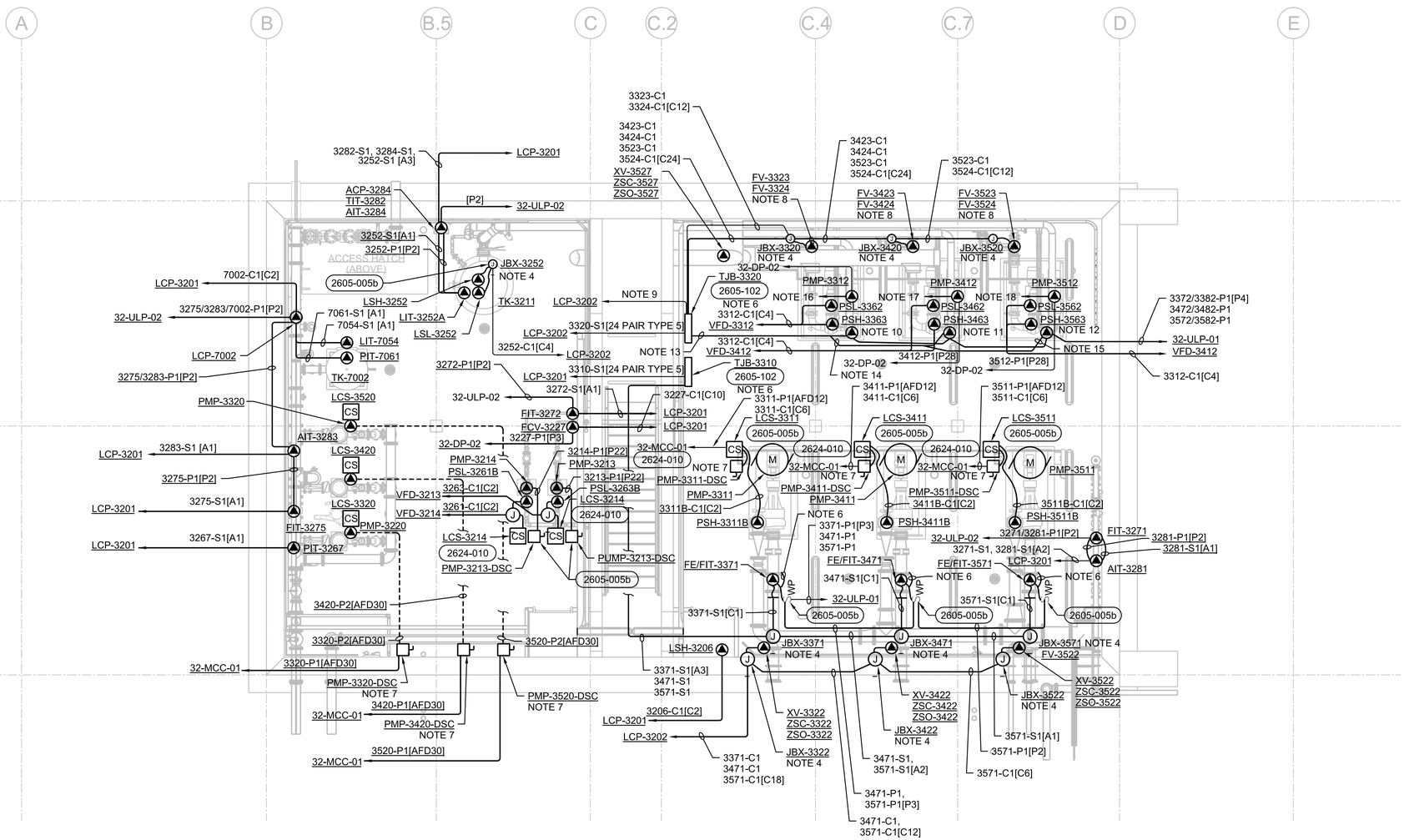

PLAN

3/16"=1'-0"

0 4 8 16

3/16"=1'-0"

GENERAL NOTES

A. PROVIDE SEALOFFS PRIOR TO TERMINATION TO ALL DEVICES, EQUIPMENT, CONTROL STATIONS, CONTROL PANELS, SENSORS, SWITCHES, AND ELECTRICAL EQUIPMENT IN HAZARD AREAS AND WHEN ENTERING/LEAVING HAZARD AREAS. REFER TO DRAWINGS 01G0250 AND 01G0251 FOR ARE CLASSIFICATIONS.

B. MAINTAIN A MINIMUM OF 24" BETWEEN POWER CONDUITS AND CONTROL (EXCEPT AS SHOWN FOR HANDSTATIONS) AND INSTRUMENTATION CONDUITS EXCEPT AT POINT OF TERMINATION.

C. PLANS ARE DIAGRAMMATIC AND NOT INTENDED TO SHOW SPECIFIC ROUTING, OFFSETS, CONDULETS, PULLBOXES, SUPPORTS OR RACEWAY CONFIGURATION NECESSARY FOR A COMPLETE SYSTEM. CONTRACTOR TO LAYOUT CONDUIT RUNS IN COMPLIANCE WITH THE GENERAL CONSTRAINTS OF THE PROJECT DOCUMENTS.

D. COORDINATE CONDUIT ENCLOSURE ENTRIES WITH MANUFACTURERS INSTALLATION MANUAL PRIOR TO ROUGH-IN OF EQUIPMENT AND INSTRUMENTS.

E. PROVIDE STEEL TO SUPPORT SAFETY DISCONNECT SWITCHES TO WALL. DO NOT MOUNT SAFETY DISCONNECT SWITCH DIRECTLY TO WALL.

F. PROVIDE WALL SLEEVES OR CORE INTERIOR WALLS, FLOORS AND CEILING, FOR CONDUIT PENETRATIONS. SEAL ANNULAR SPACE AROUND CONDUIT WITH FIRE CAULK PER AN APPROVED FIRE DETAIL LISTED WITH OSHA APPROVED TESTING LABORATORY.

SHEET NOTES

1. BOND SAFETY RAIL TO GROUND RING
2. BOND TO REBAR IN CONCRETE.
3. CONNECT TO PROCESS BUILDING GROUND RING. REFER TO DRAWING 32EP1030.
4. HINGE COVERED JUNCTION BOX WITH TERMINAL STRIP TO TRANSITION FROM MANUFACTURER SUPPLIED CABLE TO CONTROL WIRE.
5. PROVIDE FLOOR TO STRUCTURAL CEILING METAL STRUT SUPPORTS.
6. INSTALL GROUND BOND IN ACCORDANCE WITH FLOW METER MANUFACTURERS INSTALLATION INSTRUCTIONS.
7. PROVIDE DISCONNECT WITH TWO SETS OF AUXILLIARY CONTACTS. ONE SET SHALL OPEN BEFORE THE KNIFE SWITCH TO TURN OFF THE VARIABLE FREQUENCY DRIVE OUTPUT. THE SECOND AUXILLIARY CONTACT SHALL REMOVE POWER FROM MOTOR CONDENSATION SPACE HEATER.
8. REFER TO P&ID SHEET 09N3202 FOR FLOW VALVE (FV) DISCRETE SIGNALS AND SOLENOID OPERATION.
9. 3320-C1[C25] AND 3320-C2[C25].
10. FIT-3372 AND AIT-3382, SEE P&ID SHEET 09N3202.
11. FIT-3472 AND AIT-3482, SEE P&ID SHEET 09N3202.
12. FIT-3572 AND AIT-3582, SEE P&ID SHEET 09N3202.
13. 3372-S1, 3382-S1, 3472-S1, 3482-S1, 3572-S1, 3582-S1 [A6].
14. 3472-S1, 3482-S1, 3572-S1, 3582-S1 [A4]
15. 3542-S1, 3582-S1 [A2].
16. 3315-S1/S2 [A2], 3315-C1 [C8], 3315-A1 [N1].
17. 3415-S1/S2 [A2], 3415-C1 [C8], 3415-A1 [N1].
18. 3515-S1/S2 [A2], 3515-C1 [C8], 3515-A1 [N1].

FULL SIZE DRAWINGS = 22"x34"
BAR MEASURES 1" LONG

0" 1"

Registered Professional Engineer (Electrical) CERTIFICATE NO. 81240 DAVID BURGER Date Signed 6-19-2025 ARIZONA, U.S.A.

JUNE 19, 2025

A/E FIRM	DESIGNED:	SUB SHEET NO.	TITLE OF SHEET	DRAWING NO.
JACOBS GOVERNMENT SERVICES COMPANY GREENWOOD VILLAGE, CO	D BURGER CADD: J GARIBAY TECH. REVIEW: D BURGER DATE: 06/2025	32EP1020	PROCESS BUILDING ELECTRICAL LOWER LEVEL PROCESS PLAN GRAND CANYON, SOUTH RIM	113 175376 PMIS/PKG NO. 257282 SHEET 331 OF 401

GRCA-257282

100% COMPLETE CONSTRUCTION DOCUMENTS

PLOT DATE: 6/16/2025 PLOT TIME: 11:38:58 PM SS6\V8i D3167666 - South Rim\4 Delivery\43 CAD Design\GRCA\257282\Microstation V8i Drawings\ELEC\32EP1020_D3167666.dgn

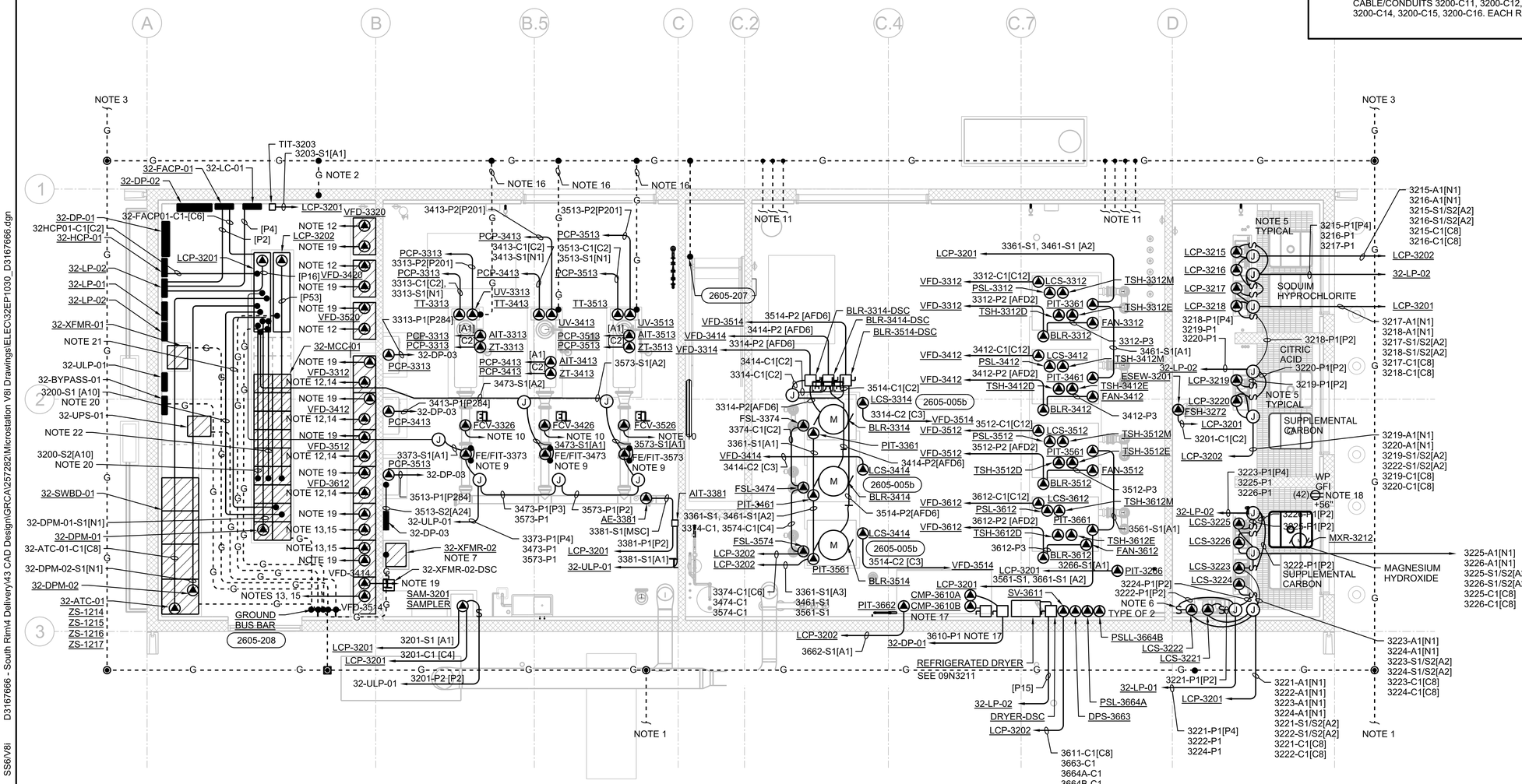

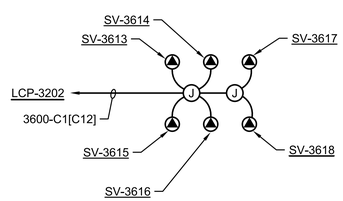

AIR INJECTOR ASSEMBLIES

NOTE: SOLENOID VALVES LOCATED WITH REFRIGERATED DRYER. REFER TO P&ID SHEET 09N3211

PLAN

3/16"=1'-0"

0 4 8 16

3/16"=1'-0"

SHEET NOTES

19. RUN HARDWIRED I/O TO LCP-3201. FOR EACH VFD PROVIDE [A4] FOR SPEED COMMAND AND SPEED FEEDBACK; PROVIDE [CC12] FOR CONTROLS AND ALARMS. LABEL WITH VFD NUMBER AND-S1 FOR ANALOG CABLE, -C1 FOR CONTROL CABLE.
20. HARDWIRED SPEED COMMAND AND SPEED FEEDBACK I/O FOR VFD'S.
21. HARDWIRED CONTROL FOR VFD'S AND STARTERS. CABLE/CONDUITS 3200-C1, 3200-C2, 3200-C3, 3200-C4, 3200-C5, 3200-C6, 3200-C7, 3200-C8, 3200-C9, 3200-C10. EACH RUN [CC25].
22. HARDWIRED CONTROL FOR VFD'S AND STARTERS. CABLE/CONDUITS 3200-C11, 3200-C12, 3200-C13, 3200-C14, 3200-C15, 3200-C16. EACH RUN [CC25].

GENERAL SHEET NOTES

A. PROVIDE SEALOFFS PRIOR TO TERMINATION TO ALL DEVICES, EQUIPMENT, CONTROL STATIONS, CONTROL PANELS, SENSORS, SWITCHES, AND ELECTRICAL EQUIPMENT IN HAZARD AREAS AND WHEN ENTERING/LEAVING HAZARD AREAS. REFER TO DRAWINGS 01G0250 AND 01G0251 FOR AREA CLASSIFICATIONS.

B. MAINTAIN A MINIMUM OF 24" BETWEEN POWER CONDUITS AND CONTROL (EXCEPT AS SHOWN FOR HANDSTATIONS) AND INSTRUMENTATION CONDUITS EXCEPT AT POINT OF TERMINATION.

C. PLANS ARE DIAGRAMMATIC AND NOT INTENDED TO SHOW SPECIFIC ROUTING, OFFSETS, CONDULETS, PULLBOXES, SUPPORTS OR RACEWAY CONFIGURATION NECESSARY FOR A COMPLETE SYSTEM. CONTRACTOR TO LAYOUT CONDUIT RUNS IN COMPLIANCE WITH THE GENERAL CONSTRAINTS OF THE PROJECT DOCUMENTS.

D. COORDINATE CONDUIT ENCLOSURE ENTRIES WITH MANUFACTURERS INSTALLATION MANUAL PRIOR TO ROUGH-IN OF EQUIPMENT AND INSTRUMENTS.

E. PROVIDE STEEL STRUT TO SUPPORT SAFETY DISCONNECT SWITCHES TO WALL. DO NOT MOUNT SAFETY DISCONNECT SWITCH DIRECTLY TO WALL.

F. PROVIDE WALL SLEEVES OR CORE INTERIOR WALLS, FLOORS, AND CEILING, FOR CONDUIT PENETRATIONS. SEAL ANNULAR SPACE AROUND CONDUIT WITH FIRE CAULK PER AN FIRE DETAIL LISTED WITH OSHA APPROVED TESTING LABORATORY.

SHEET NOTES

1. BOND TO PROCESS TANKS GROUND RING. REFER TO DRAWING 25EP1020.
2. BOND TO REBAR IN CONCRETE.
3. CONNECT TO DIGESTER BUILDING GROUND RING. REFER TO DRAWING 80EP1030.
4. INSTALL GROUND BOND IN ACCORDANCE WITH FLOW METER MANUFACTURERS INSTALLATION INSTRUCTIONS. PROVIDE #6 SOLID BARE COPPER TO GROUND RING.
5. NEMA 4X NON-METALLIC DISCONNECT SWITCHES. MOUNT TO BACKSIDE OF SKID.
6. NEMA 4X NON-METALLIC DISCONNECT SWITCHES.
7. GROUNDING TRANSFORMER TO ESTABLISH NEUTRAL FOR 277/480 VOLT UV SYSTEM. PROVIDE 1/0 BARE COPPER GROUND ELECTRODE CONDUCTOR TO GROUND RING.
8. PROVIDE #6 AWG STRANDED COPPER GROUND, GREEN INSTALATION WITH YELLOW STRIPE IN 3/4" CONDUIT WITH GROUNDING BUSINGS AT EACH END.
9. INSTALL GROUND BOND IN ACCORDANCE WITH FLOW METER MANUFACTURERS INSTALLATION INSTRUCTIONS.
10. PROVIDE POWER TO FLOW CONTROL VALVE FROM PANEL 32-DP-03 WITH 3#12, 1#12G IN 3/4" CONDUIT. PROVIDE POSITION COMMAND, FEED BACK, AND HOA SIGNALS FROM VALVE TO UV DISINFECTION CONTROL PANEL LCP-3201 WITH (2) TYPE 3 ANALOG CABLES IN 3/4 CONDUIT AND 4#/14, 1#14G IN SEPARATE 3/4" CONDUIT. REFER TO P&ID DRAWING 09N3204.
11. PROVIDE #2/0 GROUND TO EACH BLOWER ENCLOSURE.
12. TO 32-MCC-01. PROVIDE 2-1/2" CONDUIT WITH 3#4/0, 1#4G.
13. TO 32-MCC-01. PROVIDE 1-1/4" CONDUIT WITH 3#3, 1#8 G.
14. [N1] TO LCP-3201, IOSW-3201. LABEL AS 3x12-S1 WHERE x = 3,4,5,6 CORRESPONDING TO ASSOCIATED BLOWER. SEE DRAWING 09N005.
15. [N1] TO LCP-3202. LABEL AS 3x14-S1 WHERE x = 3,4,5 CORRESPONDING TO ASSOCIATED BLOWER.
16. 2/0 BARE COPPER GROUND IN 1-1/4" CONDUIT.
17. PROVIDE 60 AMP NON-FUSED DISCONNECT FOR EACH COMPRESSOR HEAD. RUN 3/4" CONDUIT WITH 6#12, 1#12 GROUND.
18. RECEPTACLE FOR MAGNESIUM HYDROXIDE MIXER MXR-3212. PROVIDE IN-USE COVER. REFER TO DRAWING 09N3209.

FULL SIZE DRAWINGS = 22"x34"
BAR MEASURES 1" LONG

0" 1"

Registered Professional Engineer (Civil/Fire) CERTIFICATE NO. 81240 DAVID BURGER Date Signed 6-23-25 ARIZONA, U.S.A.

JUNE 23, 2025

A/E FIRM
JACOBS GOVERNMENT SERVICES COMPANY
GREENWOOD VILLAGE, CO

DESIGNED: D BURGER
CADD: J GARIBAY
TECH. REVIEW: J LANDMAN
DATE: 06/2025

SUB SHEET NO. 32EP1030

TITLE OF SHEET
PROCESS BUILDING ELECTRICAL MAIN LEVEL PROCESS PLAN
GRAND CANYON, SOUTH RIM

DRAWING NO. 113 / 175376
PMIS/PKG NO. 257282
SHEET 332 OF 401

100% COMPLETE CONSTRUCTION DOCUMENTS

GRCA-257282

PLOT DATE: 6/24/2025 PLOT TIME: 10:06:47 PM SS6\V8i D3167666 - South Rim\4 Delivery\43 CAD Design\GRCA\257282\Microstation V8i Drawings\ELEC\32EP1030_D3167666.dgn

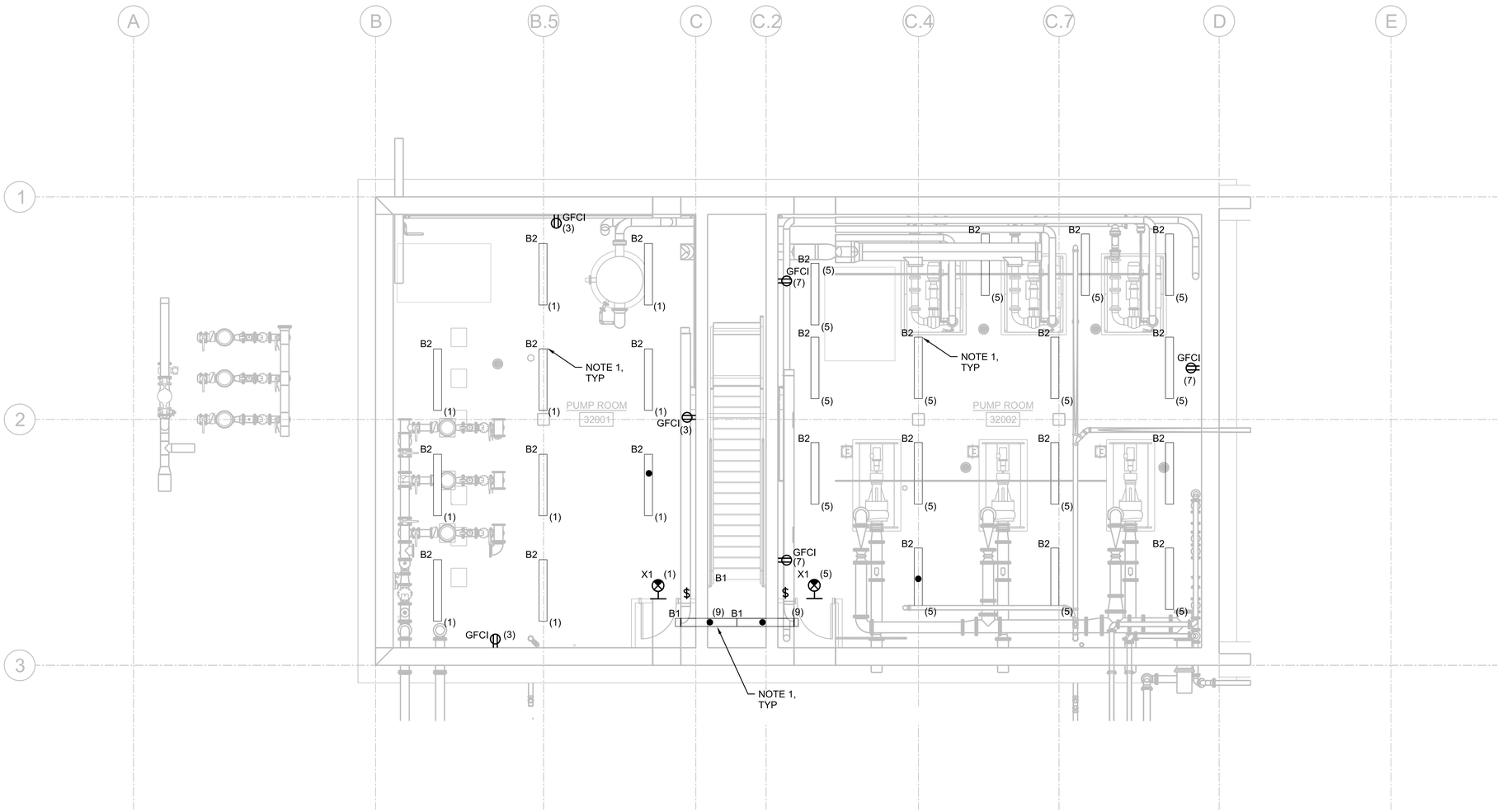

PLAN

3/16"=1'-0"

0 4 8 16

3/16"=1'-0"

GENERAL SHEET NOTES

A. NUMBERS SHOWN IN PARENTHESIS, (N), ADJACENT TO LIGHTS AND RECEPTACLES DENOTE CIRCUIT NUMBERS IN FACILITY PANELBOARD 32-LP-02 UNLESS OTHERWISE NOTED. PROVIDE #12 CONDUCTORS FOR 20A OR 15A CIRCUITS LESS THAN 75 FEET. PROVIDE #10 CONDUCTORS FOR CIRCUITS GREATER THAN 75 FEET. REFER TO PANELBOARD SCHEDULES.

B. COMBINE RECEPTACLE AND LIGHTING CIRCUITS IN A SINGLE CONDUIT TO MINIMIZE LENGTH OF CONDUCTORS AND CONDUIT. CIRCUITS COMBINED INTO A SINGLE CONDUIT SHALL BE SIZED FOR NEC DERATING AND CONDUIT FILL REQUIREMENTS.

C. FOR INFORMATION ON EXTERIOR LIGHTING CONTROLS, SEE DRAWING 08E7110.

D. FOR LUMINAIRE SCHEDULE AND NOTES, SEE DRAWING 08E6001 AND 08E6002.

E. PROVIDE SEALOFFS PRIOR TO TERMINATION TO ALL DEVICES, EQUIPMENT, CONTROL STATIONS, CONTROL PANELS, SENSORS, SWITCHES, AND ELECTRICAL EQUIPMENT IN HAZARD AREAS AND WHEN ENTERING/LEAVING HAZARD AREAS. REFER TO DRAWINGS 01G0250 AND 01G0251 FOR AREA CLASSIFICATIONS.

F. MAINTAIN A MINIMUM OF 24" BETWEEN POWER CONDUITS AND CONTROL (EXCEPT AS SHOWN FOR HANDSTATIONS) AND INSTRUMENTATION CONDUITS EXCEPT AT POINT OF TERMINATION.

G. PLANS ARE DIAGRAMMATIC AND NOT INTENDED TO SHOW SPECIFIC ROUTING, OFFSETS, CONDULETS, PULLBOXES, SUPPORTS OR RACEWAY CONFIGURATION NECESSARY FOR A COMPLETE SYSTEM. CONTRACTOR TO LAYOUT CONDUIT RUNS IN COMPLIANCE WITH THE GENERAL CONSTRAINTS OF THE PROJECT DOCUMENTS.

H. COORDINATE CONDUIT ENCLOSURE ENTRIES WITH MANUFACTURERS INSTALLATION MANUAL PRIOR TO ROUGH-IN OF EQUIPMENT AND INSTRUMENTS.

I. PROVIDE METALLIC STRUT TO SUPPORT SAFETY DISCONNECT SWITCHES, PANELBOARDS, CONTROL PANELS TO WALL. DO NOT MOUNT DIRECTLY TO WALL.

J. PROVIDE WALL SLEEVES OR CORE INTERIOR WALLS, FLOORS, AND CEILING, FOR CONDUIT PENETRATIONS. SEAL ANNULAR SPACE AROUND CONDUIT WITH FIRE CAULK PER AN FIRE DETAIL LISTED WITH OSHA APPROVED TESTING LABORATORY.

SHEET NOTES

1. SUSPEND LUMINAIRES AT 10'-0" AFF IN THIS ROOM. UNLESS SPECIFIED OTHERWISE.

FULL SIZE DRAWINGS = 22"x34"
BAR MEASURES 1" LONG

0" 1"

Registered Professional Engineer (Electrical) CERTIFICATE NO. 81240 DAVID BURGER Date Signed 6-19-2025 ARIZONA, U.S.A.

JUNE 19, 2025

A/E FIRM	DESIGNED: D BURGER	SUB SHEET NO.	TITLE OF SHEET
JACOBS GOVERNMENT SERVICES COMPANY	CADD: J GARIBAY	32EF1020	PROCESS BUILDING ELECTRICAL LOWER LEVEL FACILITY PLAN
GREENWOOD VILLAGE, CO	TECH. REVIEW: J LANDMAN		GRAND CANYON, SOUTH RIM
	DATE: 06/2025		

DRAWING NO. 113 / 175376

PMIS/PKG NO. 257282

SHEET 333 OF 401

100% COMPLETE CONSTRUCTION DOCUMENTS

GRCA-257282

PLOT DATE: 6/16/2025 PLOT TIME: 11:38:26 PM SS6/V8i D3167666 - South Rim\4 Delivery\43 CAD Design\GRCA\257282\Microstation V8i Drawings\ELEC\32EF1020_D3167666.dgn

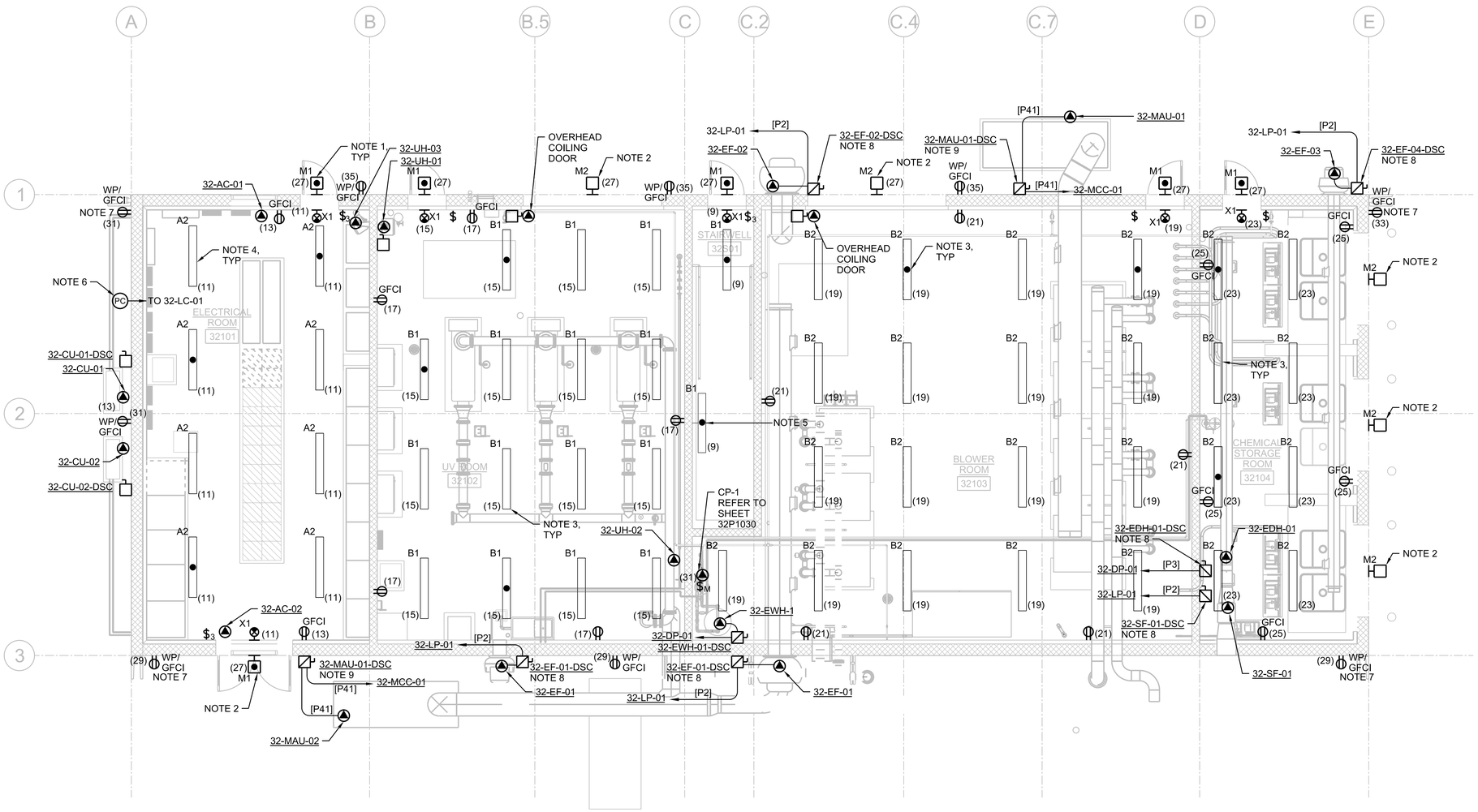

PLAN

3/16"=1'-0"

0 4 8 16

3/16"=1'-0"

GENERAL SHEET NOTES

A. NUMBERS SHOWN IN PARENTHESIS, (N), ADJACENT TO LIGHTS AND RECEPTACLES DENOTE CIRCUIT NUMBERS IN FACILITY PANELBOARDS 32-LP-01. UNLESS OTHERWISE NOTED. PROVIDE #12 CONDUCTORS FOR 20A OR 15A CIRCUITS LESS THAN 75 FEET. PROVIDE #10 CONDUCTORS FOR CIRCUITS GREATER THAN 75 FEET. REFER TO PANELBOARD SCHEDULES.

B. COMBINE RECEPTACLE AND LIGHTING CIRCUITS IN A SINGLE CONDUIT TO MINIMIZE LENGTH OF CONDUCTORS AND CONDUIT. CIRCUITS COMBINED INTO A SINGLE CONDUIT SHALL BE SIZED FOR NEC DERATING AND CONDUIT FILL REQUIREMENTS.

C. FOR INFORMATION ON EXTERIOR LIGHTING CONTROLS, SEE DRAWING 08E7110.

D. FOR LUMINAIRE SCHEDULE AND NOTES, SEE DRAWING 08E6001 AND 08E6002.

SHEET NOTES

1. WALL MOUNT EXTERIOR LUMINAIRES AT 9'-0" AFG, UNLESS SPECIFIED OTHERWISE. COORDINATE FINAL LOCATION WITH ARCHITECTURAL DRAWINGS.
2. WALL MOUNT EXTERIOR LUMINAIRE 6" ABOVE DOOR OPENING.
3. SUSPEND LUMINAIRES AT 12'-0" AFF IN THIS ROOM, UNLESS SPECIFIED OTHERWISE.
4. SUSPEND LUMINAIRES AT 10'-0" AFF IN THIS ROOM, UNLESS SPECIFIED OTHERWISE.
5. WALL MOUNT 8'-0" ABOVE STAIR LANDING.
6. MOUNT PHOTOCELL AS HIGH AS POSSIBLE. FIELD ADJUST AND AIM AS REQUIRED BY MANUFACTURER.
7. RECEPTACLE FOR DOWNSPOUT HEAT TRACE. PROVIDE IN-USE COVER AND SELF-REGULATING HEAT TRACE WITH PLUG CONNECTION.
8. 30 AMP, FUSE AS INDICATED ON EQUIPMENT NAMEPLATE.
9. FUSE PER EQUIPMENT NAMEPLATE.

GRCA-257282

100% COMPLETE CONSTRUCTION DOCUMENTS

PLOT DATE: 6/16/2025 PLOT TIME: 11:39:01 PM SS6/V8i D3167666 - South Rim\4 Delivery\43 CAD Design\GRCA\257282\Microstation V8i Drawings\ELEC\32EF1030_D3167666.dgn

FULL SIZE DRAWINGS = 22"x34"
BAR MEASURES 1" LONG

0" 1"

Registered Professional Engineer (Electrical) CERTIFICATE NO. 81240 DAVID BURGER Date Signed 6-19-2025 ARIZONA, U.S.A.

JUNE 19, 2025

A/E FIRM	DESIGNED:	SUB SHEET NO.	TITLE OF SHEET	DRAWING NO.
JACOBS GOVERNMENT SERVICES COMPANY GREENWOOD VILLAGE, CO	D BURGER CADD: J GARIBAY TECH. REVIEW: J LANDMAN DATE: 06/2025	32EF1030	PROCESS BUILDING ELECTRICAL MAIN LEVEL FACILITY PLAN GRAND CANYON, SOUTH RIM	113 175376 PMIS/PKG NO. 257282 SHEET 334 OF 401

GENERAL SHEET NOTES

A. BOND ALL METALLIC OBJECTS WITHIN 6'-0" OF ROOF AND DOWN CONDUCTORS.

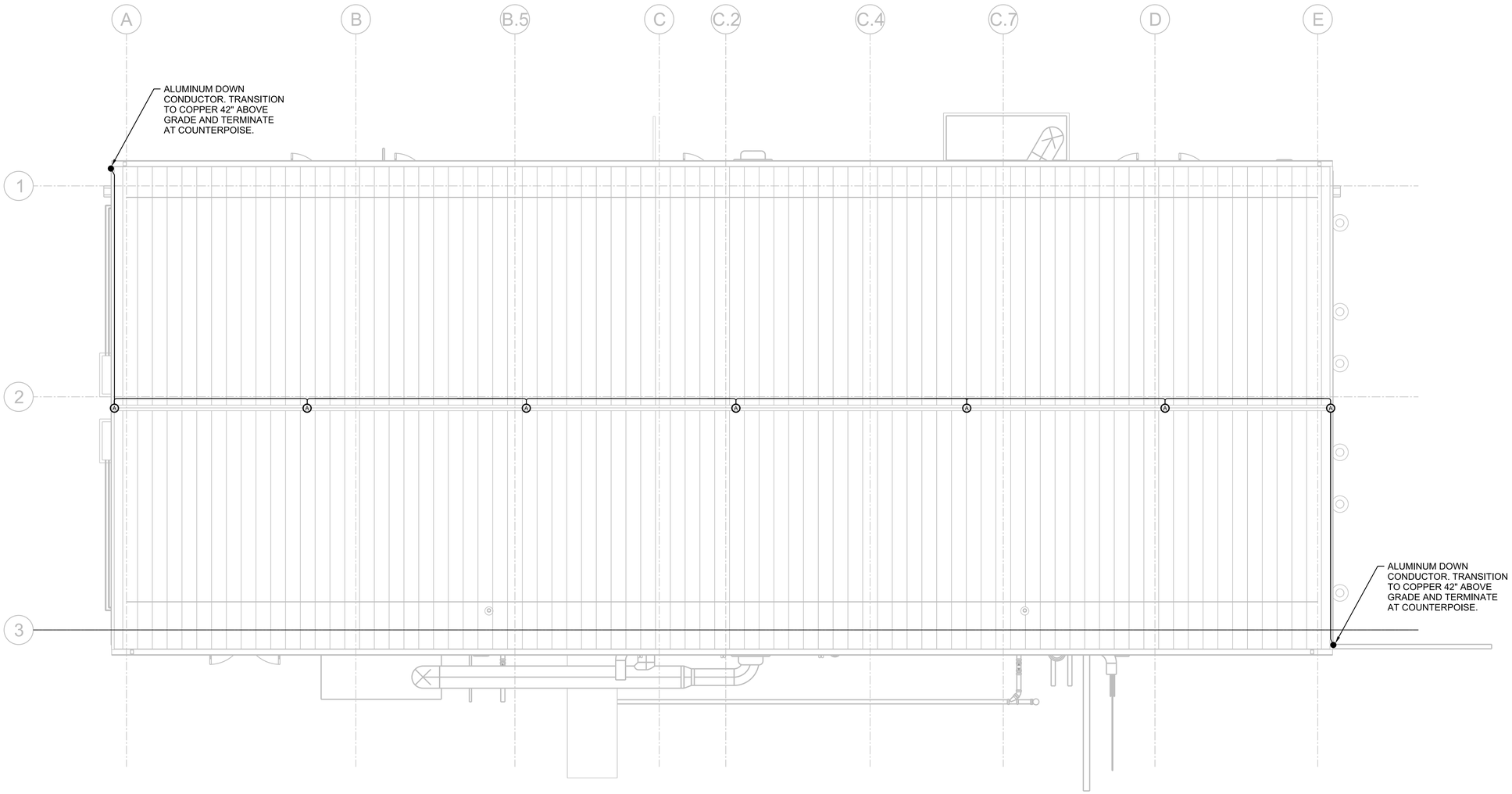

PLAN

3/16"=1'-0"

0 4 8 16

3/16"=1'-0"

FULL SIZE DRAWINGS = 22"x34"
BAR MEASURES 1" LONG

0" 1"

Registered Professional Engineer (Electrical) CERTIFICATE NO. 81240 DAVID BURGER Date Signed 6-19-2025 ARIZONA, U.S.A.

JUNE 19, 2025

A/E FIRM	DESIGNED:	SUB SHEET NO.	TITLE OF SHEET	DRAWING NO.
JACOBS GOVERNMENT SERVICES COMPANY GREENWOOD VILLAGE, CO	D BURGER CADD: J GARIBAY TECH. REVIEW: D BURGER DATE: 06/2025	32E1040	PROCESS BUILDING ELECTRICAL ROOF PLAN GRAND CANYON, SOUTH RIM	113 175376 PMIS/PKG NO. 257282 SHEET 335 OF 401

GRCA-257282

100% COMPLETE CONSTRUCTION DOCUMENTS

PLOT DATE: 6/16/2025 PLOT TIME: 11:39:35 PM SS6\V8i D3167666 - South Rim\4 Delivery\43 CAD Design\GRCA\257282\Microstation V8i Drawings\ELEC\32E1040_D3167666.dgn

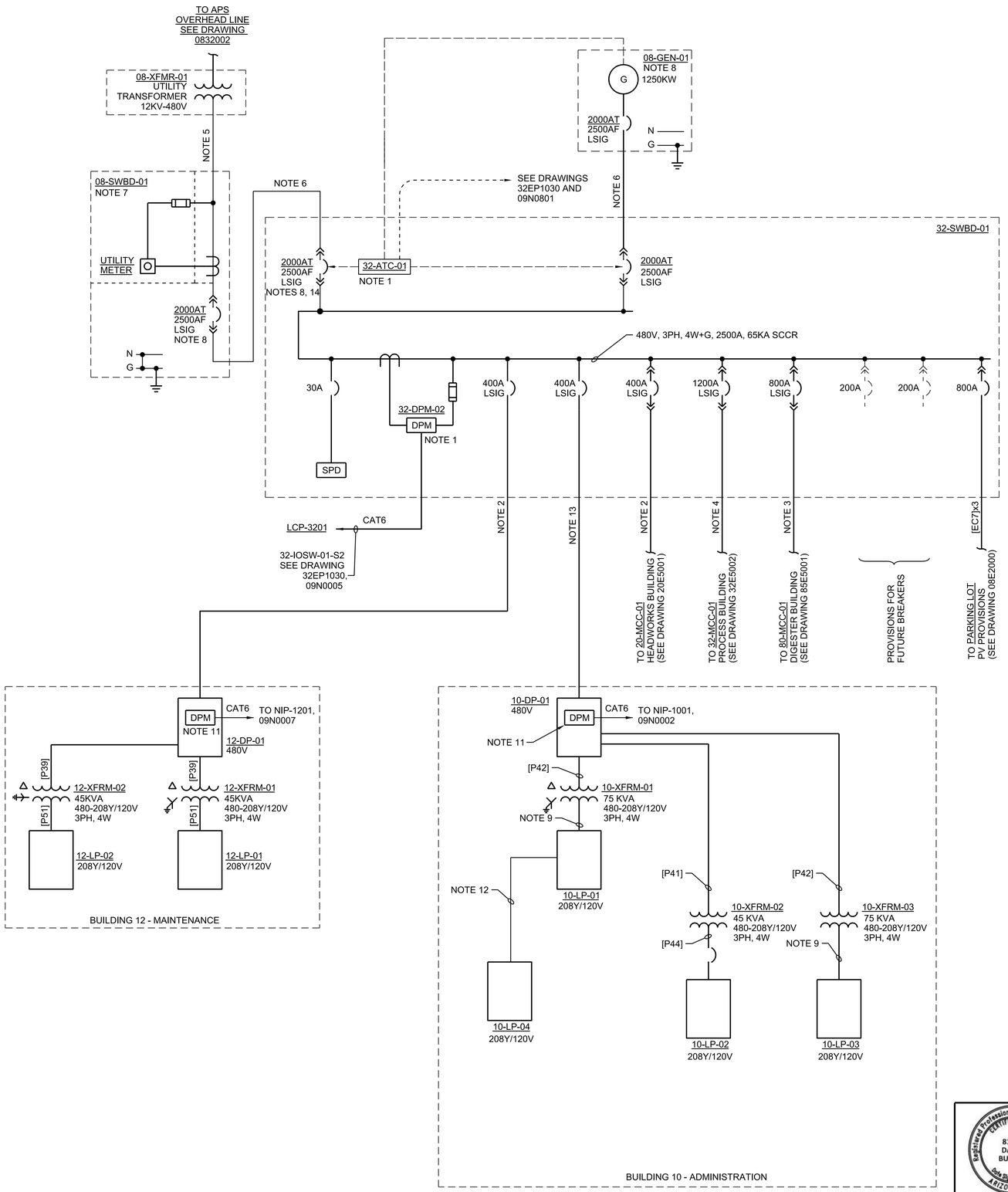

ONE-LINE DIAGRAM

FULL SIZE DRAWINGS = 22"x34"
BAR MEASURES 1" LONG

0" 1"

GENERAL SHEET NOTES

A. CONTRACTOR TO PROVIDE AND INSTALL PRIMARY CONDUITS, TRANSFORMER PAD, SECONDARY CONDUITS, SECONDARY CONDUCTORS AND SWITCHBOARD. UTILITY TO PROVIDE PRIMARY CONDUCTORS AND TRANSFORMER.

B. REFER TO PLAN SHEETS FOR ALL GROUNDING.

SHEET NOTES

1. PROVIDED BY SWITCHBOARD MANUFACTURER.
2. 4"C WITH 4#500KCMIL, 1#3G 1#1/0 G.
3. (2) PARALLEL RUNS 4"C EACH WITH 4#500KCMIL, 1#1/0G.
4. (4) PARALLEL RUNS 4"C EACH WITH 4#500KCMIL, 1#3/0G.
5. (7) PARALLEL RUNS 4"C EACH WITH 4#500KCMIL.
6. (7) PARALLEL RUNS 4"C EACH WITH 4#500KCMIL, 1#3/0G.
7. SUBMITTAL MUST BE APPROVED BY APS PRIOR TO PURCHASE OF METER-BOARD.
8. ARC-FLASH ENERGY REDUCTION SWITCH AND LOCAL INDICATOR REQUIRED AS PER NEC 240.87.
9. 3" CONDUIT WITH 4#250 KCMIL, 1#4 GROUND.
10. #3/0 GROUND ELECTRODE CONDUCTOR TO GROUND RING.
11. DIGITAL POWER METER (DPM) WITH ETHERNET COMMUNICATION INTEGRAL TO PANELBOARD.
12. 1-1/2" CONDUIT WITH 4#4, 1#8 GROUND.
13. (2) PARALLEL RUNS 3-1/2"C EACH WITH 4#350KCMIL, 1#1/0 G.
14. PROVIDE 4-POLE BREAKER IN ACCORDANCE WITH ELECTRIC UTILITY COMPANY REQUIREMENTS.

Registered Professional Engineer (Electrical) CERTIFICATE NO. 81240 DAVID BURGER Date Signed 6-16-2025 ARIZONA, U.S.A.

JUNE 19, 2025

A/E FIRM	DESIGNED:	SUB SHEET NO.	TITLE OF SHEET	DRAWING NO.
JACOBS GOVERNMENT SERVICES COMPANY GREENWOOD VILLAGE, CO	D BURGER CADD: J GARIBAY TECH. REVIEW: J LANDMAN DATE: 06/2025	32E5001	PROCESS BUILDING ELECTRICAL ONE-LINE DIAGRAM 32-SWBD-01 GRAND CANYON, SOUTH RIM	113 / 175376 PMIS/PKG NO. 257282 SHEET 336 OF 401

100% COMPLETE CONSTRUCTION DOCUMENTS

GRCA-257282

PLOT DATE: 6/16/2025 PLOT TIME: 11:38:45 PM SS6/V8i D3167666 - South Rim\4 Delivery\43 CAD Design\GRCA\257282\Microstation V8i Drawings\ELEC\32E5001_D3167666.dgn

SHEET NOTES

1. DISCONNECT INTEGRAL TO BLOWER.
2. PROVIDED BY MCC MANUFACTURER.
3. VFD PROVIDED BY PUMP MANUFACTURER.
4. ZIG-ZAG GROUNDING TRANSFORMER TO ESTABLISH 277 VOLT FOR UV DISINFECTION SYSTEM.
5. FUSE PER EQUIPMENT NAMEPLATE.
6. 1-1/2" CONDUIT WITH 4#4, 1#8 GROUND.

GENERAL NOTES

A. PROVIDE SEALOFFS PRIOR TO TERMINATION TO ALL DEVICES, EQUIPMENT, CONTROL STATIONS, CONTROL PANELS, SENSORS, SWITCHES, AND ELECTRICAL EQUIPMENT IN HAZARD AREAS AND WHEN ENTERING/LEAVING HAZARD AREAS. REFER TO DRAWINGS 01G0250 AND 01G0251 FOR AREA CLASSIFICATIONS.

B. REFER TO P&ID's, BLOCK DIAGRAMS, CONTROL WIRING DIAGRAMS, SPECIFICATIONS, AND VENDOR MANUALS FOR COMPLETE REQUIREMENTS.

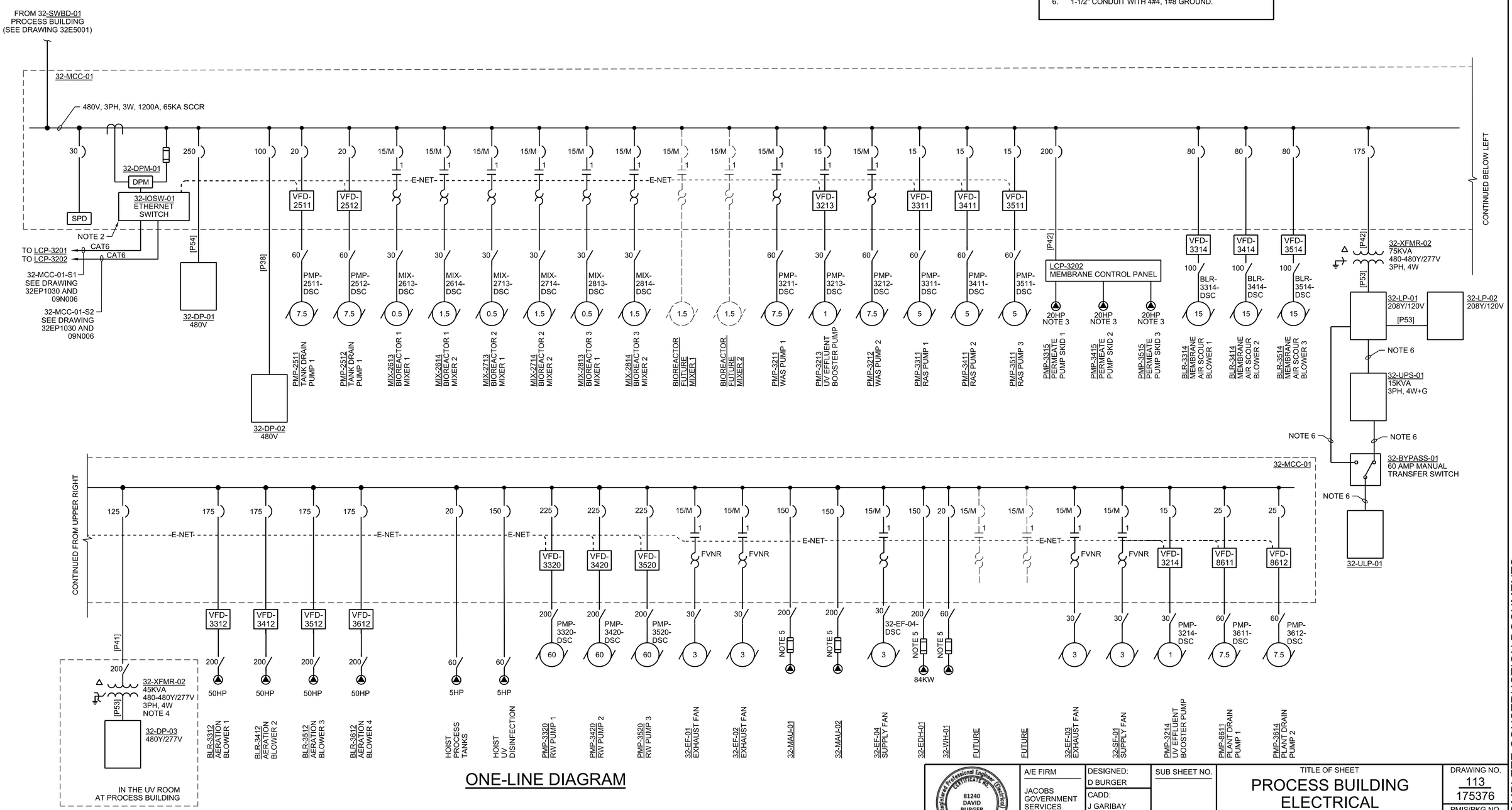

ONE-LINE DIAGRAM

FULL SIZE DRAWINGS = 22"x34"
BAR MEASURES 1" LONG

0" 1"

Registered Professional Engineer (Electrical) CERTIFICATE NO. 81240 DAVID BURGER Date Signed 6-19-2025 ARIZONA, U.S.A.

JUNE 19, 2025

A/E FIRM
JACOBS GOVERNMENT SERVICES COMPANY
GREENWOOD VILLAGE, CO

DESIGNED: D BURGER
CADD: J GARIBAY
TECH. REVIEW: J LANDMAN
DATE: 06/2025

SUB SHEET NO. 32E5002

TITLE OF SHEET
PROCESS BUILDING
ELECTRICAL
ONE-LINE DIAGRAM
32-MCC-01
GRAND CANYON, SOUTH RIM

DRAWING NO. 113 / 175376
PMIS/PKG NO. 257282
SHEET 337 OF 401

100% COMPLETE CONSTRUCTION DOCUMENTS

GRCA-257282

PLOT DATE: 6/16/2025 PLOT TIME: 11:36:46 PM SS6/V8i D3167666 - South Rim\4 Delivery\43 CAD Design\GRCA\257282\Microstation V8i DrawingsIELEC\32E5002_D3167666.dgn

PANEL: 32-DP-01

VOLTAGE: 480
PHASE, WIRES: 3, 3
SCR (AMPS): 65 000
SOURCE: 32-MCC-01

PANEL BUS: 250 AMPS
MAIN: MLO
125% OF MAX BUS LOAD: 83 AMPS
TOTAL CONNECTED LOAD: 54.9 KVA
TOTAL DEMAND LOAD: 54.9 KVA
TOTAL DESIGN LOAD: 54.9 KVA

* EFCI
** GFCI
MOUNTING: SURFACE
FEED: BOTTOM

DESCRIPTION	NOTES	DEMAND CODE	KVA	CB	CKT	A	B	C	CKT	CB	KVA	DEMAND CODE	NOTES	DESCRIPTION
PMP-3312 (PERMEATE PUMP 1) VIA VFD-3312 (20 HP)		GENERAL	7.48	80/3	1	27.0			2	80/3	0.00	GENERAL	NOTE 1	PMP-3512 (PERMEATE PUMP 3) VIA VFD-3512 (20 HP)
		---	7.48		3		27.0		4		0.00	---		
		---	7.48		5			27.0	6		0.00	---		
PMP-3412 (PERMEATE PUMP 2) VIA VFD-3412 (20 HP)		GENERAL	7.48	80/3	7	39.1			8	20/3	3.34	HEATING		32-EDH-01 DUCT HEATER CHEMICAL STORAGE
		---	7.48		9		39.1		10		3.34	---		
		---	7.48		11			39.1	12		3.34	---		
SPARE		---		20/3	13	0.0			14	20/3		---		SPARE
		---			15		0.0		16			---		
		---			17			0.0	18			---		
SPARE		---		20/3	19	0.0			20	20/3		---		SPARE
		---			21		0.0		22			---		
		---			23			0.0	24			---		
SPACE		---		-	25	0.0			26	-		---		SPACE
		---			27		0.0		28			---		
		---			29			0.0	30			---		
SPACE		---		-	31	0.0			32	-		---		SPACE
		---			33		0.0		34			---		
		---			35			0.0	36			---		
SPD		NONE		20/3	37	0.0			38	-		---		SPACE
		---			39		0.0		40			---		
		---			41			0.0	42			---		
					TOTALS	66.1	66.1	66.1	AMPS					
						18.3	18.3	18.3	KVA					

NOTES:
1. LOAD NOT INCLUDED IN ACCORDANCE WITH NEC 220.60.

PANEL: 32-DP-02

VOLTAGE: 480
PHASE, WIRES: 3, 3
SCR (AMPS): 65,000
SOURCE: 32-DP-01

PANEL BUS: 100 AMPS
MAIN: 100 BREAKER
125% OF MAX BUS LOAD: 19 AMPS
TOTAL CONNECTED LOAD: 12.0 KVA
TOTAL DEMAND LOAD: 12.0 KVA
TOTAL DESIGN LOAD: 12.0 KVA

* EFCI
** GFCI
MOUNTING: SURFACE
FEED: BOTTOM

DESCRIPTION	NOTES	DEMAND CODE	KVA	CB	CKT	A	B	C	CKT	CB	KVA	DEMAND CODE	NOTES	DESCRIPTION
FCV-2521		GENERAL	0.50	20/3	1	3.6			2	20/3	0.50	GENERAL		FCV- 2622
		---	0.50		3		3.6		4		0.50	---		
		---	0.50		5			3.6	6		0.50	---		
FCV-2523		GENERAL	0.50	20/3	7	3.6			8	20/3	0.50	GENERAL		FCV- 2722
		---	0.50		9		3.6		10		0.50	---		
		---	0.50		11			3.6	12		0.50	---		
FCV-2621		GENERAL	0.50	20/3	13	3.6			14	20/3	0.50	GENERAL		FCV- 2822
		---	0.50		15		3.6		16		0.50	---		
		---	0.50		17			3.6	18		0.50	---		
FCV-2721		GENERAL	0.50	20/3	19	1.8			20	20/3	0.50	---		FCV-3227 UVE BOOSTER PUMP FLOW
		---	0.50		21		1.8		22		0.50	GENERAL		
		---	0.50		23			1.8	24		0.50	---		
FCV-2821		GENERAL	0.50	20/3	25	1.8			26	20/3		---		SPARE
		---	0.50		27		1.8		28			---		
		---	0.50		29			1.8	30			---		
SPARE		---		20/3	31	0.0			32	20/3		---		SPARE
		---			33		0.0		34			---		
		---			35			0.0	36			---		
SPD		NONE		20/3	37	0.0			38	20/3		---		SPARE
		---			39		0.0		40			---		
		---			41			0.0	42			---		
					TOTALS	14.4	14.4	14.4	AMPS					
						4.0	4.0	4.0	KVA					

PANEL: 32-DP-03

VOLTAGE: 480/277
PHASE, WIRES: 3, 4
SCR (AMPS): 35 000
SOURCE: 32-XFMR-02

PANEL BUS: 100 AMPS
MAIN: 100 BREAKER
125% OF MAX BUS LOAD: 36 AMPS
TOTAL CONNECTED LOAD: 23.6 KVA
TOTAL DEMAND LOAD: 16.9 KVA
TOTAL DESIGN LOAD: 10.3 KVA

* EFCI
** GFCI
MOUNTING: SURFACE
FEED: BOTTOM

DESCRIPTION	NOTES	DEMAND CODE	KVA	CB	CKT	A	B	C	CKT	CB	KVA	DEMAND CODE	NOTES	DESCRIPTION
UV DISINFECTION PANEL PCP-3313		GENERAL	3.33	20/3	1	24.0			2	20/3	3.33	GENERAL		UV DISINFECTION PANEL PCP-3413
		---	3.33		3		24.0		4		3.33	---		
		---	3.33		5			24.0	6		3.33	---		
UV DISINFECTION PANEL PCP-3513	NOTE 1	GENERAL	0.00	20/3	7	1.4			8	20/3	0.40	GENERAL		FCV-3326
		---	0.00		9		1.4		10		0.40	---		
		---	0.00		11			1.4	12		0.40	---		
SPACE		---		-	13	1.4			14	20/3	0.40	GENERAL		FCV-3426
		---			15		1.4		16		0.40	---		
		---			17			1.4	18		0.40	---		
SPACE		---		-	19	1.4			20	20/3	0.40	GENERAL		FCV-3526
		---			21		1.4		22		0.40	---		
		---			23			1.4	24		0.40	---		
SPACE		---		-	25	0.0			26	20/3		---		SPARE
		---			27		0.0		28			---		
		---			29			0.0	30			---		
SPACE		---		-	31	0.0			32	20/3		---		SPARE
		---			33		0.0		34			---		
		---			35			0.0	36			---		
SPD		NONE		30/3	37	0.0			38	20/3		---		SPARE
		---			39		0.0		40			---		
		---			41			0.0	42			---		
					TOTALS	28.4	28.4	28.4	AMPS					
						7.9	7.9	7.9	KVA					

NOTES:
1. STANDBY UNIT. LOAD NOT INCLUDED IN ACCORDANCE WITH NEC 220.60.

PANEL: 32-ULP-01

VOLTAGE: 208/120
PHASE, WIRES: 3, 4
SCR (AMPS): 10,000
SOURCE: 32-LP-01

PANEL BUS: 125 AMPS
MAIN: 100 BREAKER
125% OF MAX BUS LOAD: 24 AMPS
TOTAL CONNECTED LOAD: 6.3 KVA
TOTAL DEMAND LOAD: 6.3 KVA
TOTAL DESIGN LOAD: 6.3 KVA

MOUNTING: SURFACE
FEED: BOTTOM

DESCRIPTION	NOTES	DEMAND CODE	KVA	CB	CKT	A	B	C	CKT	CB	KVA	DEMAND CODE	NOTES	DESCRIPTION
FIT-3373 FLOW UV REACTOR 1		GENERAL	0.20	20/1	1	2.5			2	20/1	0.10	GENERAL		LIT-8651 PLANT DRAIN PUMP STATION
FIT-3473 FLOW UV REACTOR 2		GENERAL	0.20	20/1	3		2.5		4	20/1	0.10	GENERAL		FIT-8671 PLANT DRAIN PUMP STATION
FIT-3573 FLOW UV REACTOR 3		GENERAL	0.20	20/1	5			3.3	6	20/1	0.20	GENERAL		FIT-3371 RAS FLOW PUMP 1
AIT-3381 UVT		GENERAL	0.20	20/1	7	3.3			8	20/1	0.20	GENERAL		FIT-3471 RAS FLOW PUMP 2
FIT-3272 UV BOOSTER PUMP FLOW		GENERAL	0.20	20/1	9		3.3		10	20/1	0.20	GENERAL		FIT 3571 RAS FLOW PUMP 3
FIT-2573 BIOREACTOR INFLUENT FLOW		GENERAL	0.20	20/1	11			3.3	12	20/1	0.20	GENERAL		AIT-3283 RAW WATER CHLORINE
AIT-2680 DO/NO3 BIOREACTOR 1		GENERAL	0.20	20/1	13	3.3			14	20/1	0.20	GENERAL		AIT- 3281 WAS TSS
FIT-2671 AERATION FLOW BIOREACTOR 1		GENERAL	0.20	20/1	15		3.3		16	20/1	0.20	GENERAL		FIT-3271 WAS FLOW
AIT-2780 DO/NO3 BIOREACTOR 2		GENERAL	0.20	20/1	17			3.3	18	20/1	0.20	GENERAL		LCP-7002/AIT-3283/FIT-3275 RW SURGE TANK
FIT-2771 AERATION FLOW BIOREACTOR 2		GENERAL	0.20	20/1	19	3.3			20	20/1	0.20	GENERAL		ACP-3284 (AIT-3282/AIT-3284), LIT-3252
AIT-2880 DO/NO3 BIOREACTOR 3		GENERAL	0.20	20/1	21		5.0		22	20/1	0.40	GENERAL		FIT-3372, AIT-3382 PERMEATE PUMP 1
FIT-2871 AERATION FLOW BIOREACTOR 3		GENERAL	0.20	20/1	23			5.0	24	20/1	0.40	GENERAL		FIT-3472, AIT-3482 PERMEATE PUMP 2
FIT-2574 RAS FLOW TANK DRAIN PUMP STATION		GENERAL	0.20	20/1	25	5.0			26	20/1	0.40	GENERAL		FIT-3572, AIT-3582 PERMEATE PUMP 3
FIT-2571 GRIT FLOW TANK DRAIN PUMP STATION		GENERAL	0.20	20/1	27		1.7		28	20/1		---		SPARE
FIT-2572 FLOW TANK DRAIN PUMP STATION DISCHARGE		GENERAL	0.20	20/1	29			1.7	30	20/1		---		SPARE
SPARE		GENERAL		20/1	31	0.0			32	20/1		---		SPARE
FCV-2522		GENERAL	0.05	20/1	33		0.4		34	20/1		---		SPARE
SAM-3201 SAMPLER UV DISINFECTION		GENERAL	0.25	20/1	35			2.1	36	20/1		---		SPARE
SPD		NONE		30/3	37	0.0			38	20/1		---		SPARE
					39		0.0		40	20/1		---		SPARE
					41			0.0	42	20/1		---		SPARE
					TOTALS	17.5	16.3	18.8	AMPS					
						2.1	2.0	2.3	KVA					

FULL SIZE DRAWINGS = 22"x34"
BAR MEASURES 1" LONG
0" 1"

Registered Professional Engineer (Electrical) CERTIFICATE NO. 81240 DAVID BURGER Date Signed 6-23-25 ARIZONA, U.S.A.
NOT VALID WITHOUT SIGNATURE
JUNE 23, 2025

A/E FIRM
JACOBS GOVERNMENT SERVICES COMPANY
GREENWOOD VILLAGE, CO

DESIGNED: D BURGER
CADD: J GARIBAY
TECH. REVIEW: J LANDMAN
DATE: 06/2025

SUB SHEET NO. 32E6001

TITLE OF SHEET
PROCESS BUILDING ELECTRICAL PANELBOARD SCHEDULES
GRAND CANYON, SOUTH RIM

DRAWING NO. 113 175376
PMIS/PKG NO. 257282
SHEET 338 OF 401

100% COMPLETE CONSTRUCTION DOCUMENTS

GRCA-257282

PLOT DATE: 6/16/2025 PLOT TIME: 11:39:22 PM SS6/V8i D3167666 - South Rim\4 Delivery\43 CAD Design\GRCA\257282\Microstation V8i DrawingsIELEC\32E6001_D3167666.dgn

PANEL: 32-LP-01

VOLTAGE: 208/120
PHASE, WIRES: 3, 4
SCR (AMPS): 10 000
SOURCE: 32-XFMR-01

PANEL BUS: 250 AMPS
MAIN: 250 BREAKER
125% OF MAX BUS LOAD: 109 AMPS
TOTAL CONNECTED LOAD: 29.0 KVA
TOTAL DEMAND LOAD: 29.0 KVA
TOTAL DESIGN LOAD: 29.0 KVA

MOUNTING: SURFACE
FEED: BOTTOM

DESCRIPTION	NOTES	DEMAND CODE	KVA	CB	CKT	A	B	C	CKT	CB	KVA	DEMAND CODE	NOTES	DESCRIPTION
PUMP ROOM 32001 LIGHTS	10 LIGHTS @ 49W EACH	LIGHTING	0.49	20/1	1	6.2			2	20/1	0.25	LIGHTING	11 LIGHTS @ 23W EACH	PROCESS TANKS LIGHTS
PUMP ROOM 32001 RECEPTACLES	180 VA PER @ 4 RECEPTACLES	NEC 220.14(H)	0.72	20/1	3		15.0		4	20/1	1.08	NEC 220.14(H)	180 VA PER @ 6 RECEPTACLES	PROCESS TANKS RECEPTACLES
PUMP ROOM 32002 LIGHTS	11 LIGHTS @ 49W EACH	LIGHTING	0.54	20/1	5			12.8	6	20/1	1.00	GENERAL	NOTE 2	HT-2501 DRAIN PUMP HEAT TRACE
PUMP ROOM 32002 RECEPTACLES	180 VA PER @ 4 RECEPTACLES	NEC 220.14(H)	0.72	20/1	7	14.3			8	20/1	1.00	GENERAL	NOTE 2	HT-2502 DRAIN PUMP HEAT TRACE
STAIRWELL LIGHTS	5 LIGHTS @ 33W EACH	LIGHTING	0.17	20/1	9		9.7		10	20/1	1.00	GENERAL	NOTE 2	HT-2503 WAS HEAT TRACE
ELECTRICAL ROOM LIGHTS	8 LIGHTS @ 42W EACH	LIGHTING	0.34	20/1	11			11.1	12	20/1	1.00	GENERAL	NOTE 2	HT-2504 WAS HEAT TRACE
ELECTRICAL ROOM RECEPTACLES	180 VA PER @ 6 RECEPTACLES	NEC 220.14(H)	1.08	20/1	13	17.3			14	20/1	1.00	GENERAL	NOTE 2	HT-2505 WAS HEAT TRACE
UV ROOM LIGHTS	15 LIGHTS @ 49W EACH	LIGHTING	0.74	20/1	15		14.5		16	20/1	1.00	GENERAL	NOTE 2	HT-2506 RAS HEAT TRACE
UV ROOM RECEPTACLES	180 VA PER @ 6 RECEPTACLES	NEC 220.14(H)	1.08	20/1	17			17.3	18	20/1	1.00	GENERAL	NOTE 2	HT-2507 RAS HEAT TRACE
BLOWER ROOM LIGHTS	17 LIGHTS @ 49W EACH	LIGHTING	0.83	20/1	19	15.3			20	20/1	1.00	GENERAL	NOTE 2	HT-2508 RAS HEAT TRACE
BLOWER ROOM RECEPTACLES	180 VA PER @ 6 RECEPTACLES	NEC 220.14(H)	1.08	20/1	21		13.2		22	20/1	0.50	GENERAL		32-EF-1 EXHAUST FAN UV ROOM
CHEMICAL STORAGE ROOM LIGHTS	12 LIGHTS @ 49W EACH	LIGHTING	0.59	20/1	23			7.0	24	20/1	0.25	GENERAL		32-EF-4 EXHAUST FAN CHEMICAL STORAGE
CHEMICAL STORAGE RECEPTACLES	180 VA PER @ 6 RECEPTACLES	NEC 220.14(H)	1.08	20/1	25	10.3			26	20/1	0.15	GENERAL		32-SF-1 SUPPLY FAN CHEMICAL STORAGE
EXTERIOR LIGHTS	12 LIGHTS @ 12W EACH	LIGHTING	0.24	20/1	27		10.4		28	20/2	1.00	GENERAL		32-EF-2 EXHAUST FAN PROCESS PUMP ROOM
EXTERIOR RECEPTACLES WEST	180 VA PER @ 3 RECEPTACLES	GENERAL	0.54	20/1	29			12.8	30		1.00			
EXTERIOR RECEPTACLES NORTH	180 VA PER @ 2 RECEPTACLES	GENERAL	0.36	20/1	31	11.3			32	20/2	1.00	GENERAL		32-EF-3 EXHAUST FAN PROCESS BLOWER ROOM
EXTERIOR RECEPTACLES SOUTH	180 VA PER @ 1 RECEPTACLES	GENERAL	0.18	20/1	33		9.8		34		1.00			
EXTERIOR RECEPTACLES EAST	180 VA PER @ 3 RECEPTACLES	GENERAL	0.54	20/1	35			4.5	36	20/1		---		SPARE
SPD		NONE		30/3	37	11.9			38	100/3	1.43	GENERAL		32-LP-02
					39		8.3		40		1.00			
					41			8.3	42		1.00			
					TOTALS	86.6	80.9	73.9	AMPS					
						10.4	9.7	8.9	KVA					

NOTES:
1. EXTERNALLY MOUNT A 3-POLE, 30A LIGHTING CONTACTOR NEXT TO 32-LP-02 FOR CIRCUITS 2, AND 27.
2. PROVIDE GFCI CIRCUIT BREAKER.

PANEL: 32-LP-02

VOLTAGE: 208/120
PHASE, WIRES: 3, 4
SCR (AMPS): 10 000
SOURCE: 10-LP-01

PANEL BUS: 125 AMPS
MAIN: 100 BREAKER
125% OF MAX BUS LOAD: 21 AMPS
TOTAL CONNECTED LOAD: 5.6 KVA
TOTAL DEMAND LOAD: 5.6 KVA
TOTAL DESIGN LOAD: 5.6 KVA

MOUNTING: SURFACE
FEED: BOTTOM

DESCRIPTION	NOTES	DEMAND CODE	KVA	CB	CKT	A	B	C	CKT	CB	KVA	DEMAND CODE	NOTES	DESCRIPTION
LCP-3221 SUPPLEMENTAL CARBON PUMP 1		GENERAL	0.25	20/1	1	4.2			2	20/1	0.25	GENERAL		LCP-3219 CITRIC ACID PUMP 1
LCP-3222 SUPPLEMENTAL CARBON PUMP 2		GENERAL	0.25	20/1	3		4.2		4	20/1	0.25	GENERAL		LCP-3220 CITRIC ACID PUMP 2
LCP-3223 SUPPLEMENTAL CARBON PUMP 3		GENERAL	0.25	20/1	5			4.2	6	20/1	0.25	GENERAL		LCP-3215 SODIUM HYPOCHLORITE PUMP 1
LCP-3224 SUPPLEMENTAL CARBON PUMP 4		GENERAL	0.25	20/1	7	4.2			8	20/1	0.25	GENERAL		LCP-3216 SODIUM HYPOCHLORITE PUMP 2
LCP-3225 MAGNESIUM HYDROXIDE PUMP 1		GENERAL	0.25	20/1	9		4.2		10	20/1	0.25	GENERAL		LCP-3217 SODIUM HYPOCHLORITE PUMP 3
LCP-3226 MAGNESIUM HYDROXIDE PUMP 2		GENERAL	0.25	20/1	11			4.2	12	20/1	0.25	GENERAL		LCP-3218 SODIUM HYPOCHLORITE PUMP 4
RECEPTACLE MAGNESIUM HYDROXIDE TOTE MIXER MXR-3212		GENERAL	0.25	20/1	13	3.6			14	20/1	0.18	RECEPTACLES		RECEPTACLE PLANT DRAIN PUMP STATION
SPARE		---		20/1	15		8.3		16	20/1	1.00	GENERAL	NOTE 2	HEAT TRACE 7001-01 RECLAIMED STORAGE TANK
SPARE		---		20/1	17			8.3	18	20/1	1.00	GENERAL	NOTE 2	HEAT TRACE 7001-02 RECLAIMED STORAGE TANK
SPARE		---		20/1	19	1.5			20	20/1	0.18	RECEPTACLES		RECEPTACLE RECLAIMED STORAGE TANK
SPARE		---		20/1	21		0.0		22	-		---		SPACE
SPARE		---		20/1	23			0.0	24	-		---		SPACE
SPD		NONE		30/3	25	0.0			26	-		---		SPACE
					27		0.0		28	-		---		SPACE
					29			0.0	30	-		---		SPACE
					TOTALS	13.4	16.7	16.7	AMPS					
						1.6	2.0	2.0	KVA					

NOTES:
1. PROVIDE GFCI BREAKER.

FULL SIZE DRAWINGS = 22"x34"
BAR MEASURES 1" LONG
0" 1"

Registered Professional Engineer (Electrical) CERTIFICATE NO. 81240 DAVID BURGER Date Signed 6-19-2025 ARIZONA, U.S.A.
JUNE 19, 2025

A/E FIRM
JACOBS GOVERNMENT SERVICES COMPANY
GREENWOOD VILLAGE, CO

DESIGNED: D BURGER
CADD: J GARIBAY
TECH. REVIEW: J LANDMAN
DATE: 06/2025

SUB SHEET NO. 32E6002

TITLE OF SHEET
PROCESS BUILDING ELECTRICAL PANELBOARD SCHEDULES
GRAND CANYON, SOUTH RIM

DRAWING NO. 113 / 175376
PMIS/PKG NO. 257282
SHEET 339 OF 401

100% COMPLETE CONSTRUCTION DOCUMENTS

GRCA-257282

PLOT DATE: 6/16/2025 PLOT TIME: 11:39:06 PM SS6/V8I D3167666 - South Rim\4 Delivery\43 CAD Design\GRCA\257282\Microstation V8I DrawingsIELEC\32E6002_D3167666.dgn

GENERAL SHEET NOTES

A. FOR GENERAL STRUCTURAL NOTES, SEE DRAWINGS 01S0001, 01S0002, AND 01S0003.

B. BEDROCK IS LOCATED NEAR THE EXISTING GROUND SURFACE. SEE GEOTECHNICAL REPORT FOR ADDITIONAL INFORMATION.

SHEET NOTES

1. FACILITY LOCATION CONTROL POINT, SEE CIVIL DRAWING 06C2002.

2. CONCRETE BASE SLAB FOUNDATION DESIGN SHOWN IS BASED ON PRELIMINARY INFORMATION AND MUST BE VERIFIED BY ENGINEER OF RECORD AFTER WELDED METAL TANK DEFERRED SUBMITTAL HAS BEEN REVIEWED AND ACCEPTED. CONTRACTOR SHALL NOT BUILD THE BASE SLAB UNTIL DESIGN HAS BEEN VERIFIED.

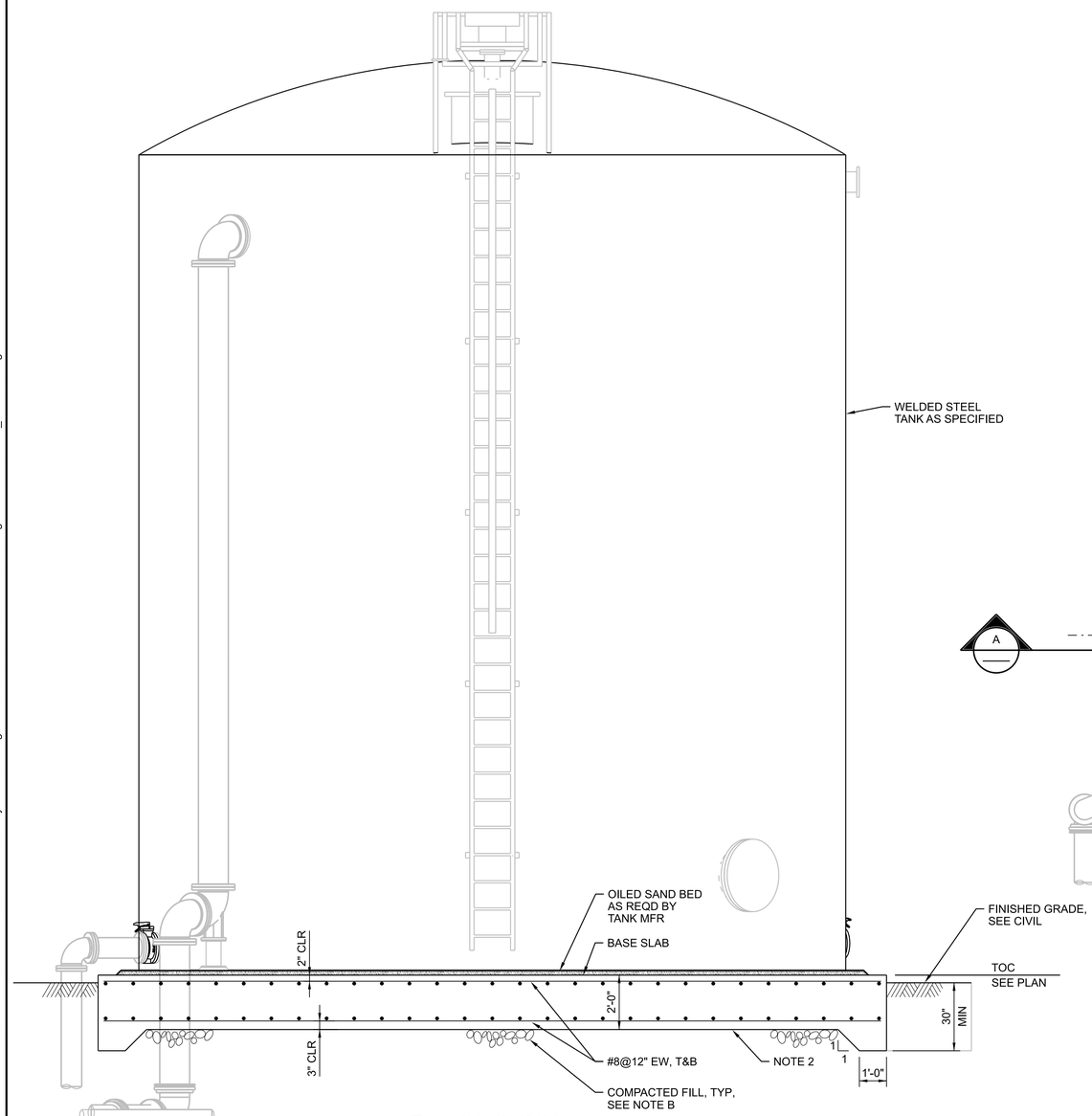

A SECTION
3/8"=1'-0"

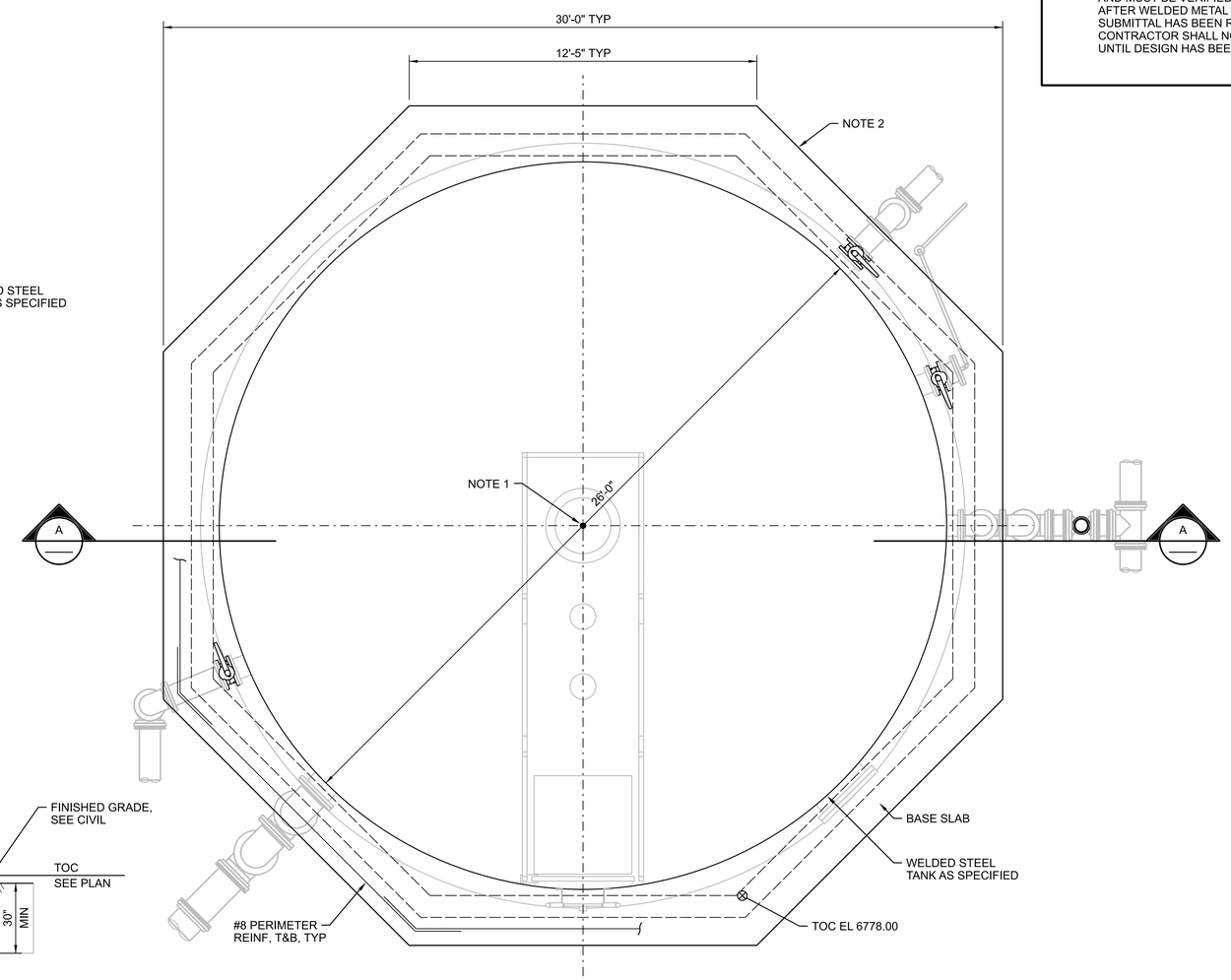

BASE SLAB PLAN
3/8"=1'-0"

0 2 4 6
3/8"=1'-0"

FULL SIZE DRAWINGS = 22"x34"
BAR MEASURES 1" LONG
0" 1"

Wayne W. Kohler
Registered Professional Engineer (Civil)
81476
WAYNE W. KOHLER
Date Signed 6/20/25
ARIZONA U.S.A.

A/E FIRM	DESIGNED:	SUB SHEET NO.	TITLE OF SHEET	DRAWING NO.
JACOBS GOVERNMENT SERVICES COMPANY GREENWOOD VILLAGE, CO	W KOHLER CADD: B CLEGG TECH. REVIEW: A FIRTH DATE: 06/2025	70S1030	RECLAIMED WATER TANK STRUCTURAL PLAN AND SECTION GRAND CANYON, SOUTH RIM	113 175376 PMIS/PKG NO. 257282 SHEET 340 OF 401

100% COMPLETE CONSTRUCTION DOCUMENTS

GRCA-257282

PLOT DATE: 16-JUN-2025 PLOT TIME: 14:38 SS6/V8I D3167666 - South Rim\4 Delivery\43 CAD Design\GRCA\257282\Microstation V8I Drawings\STRUC\70S1030_D3167666.dgn

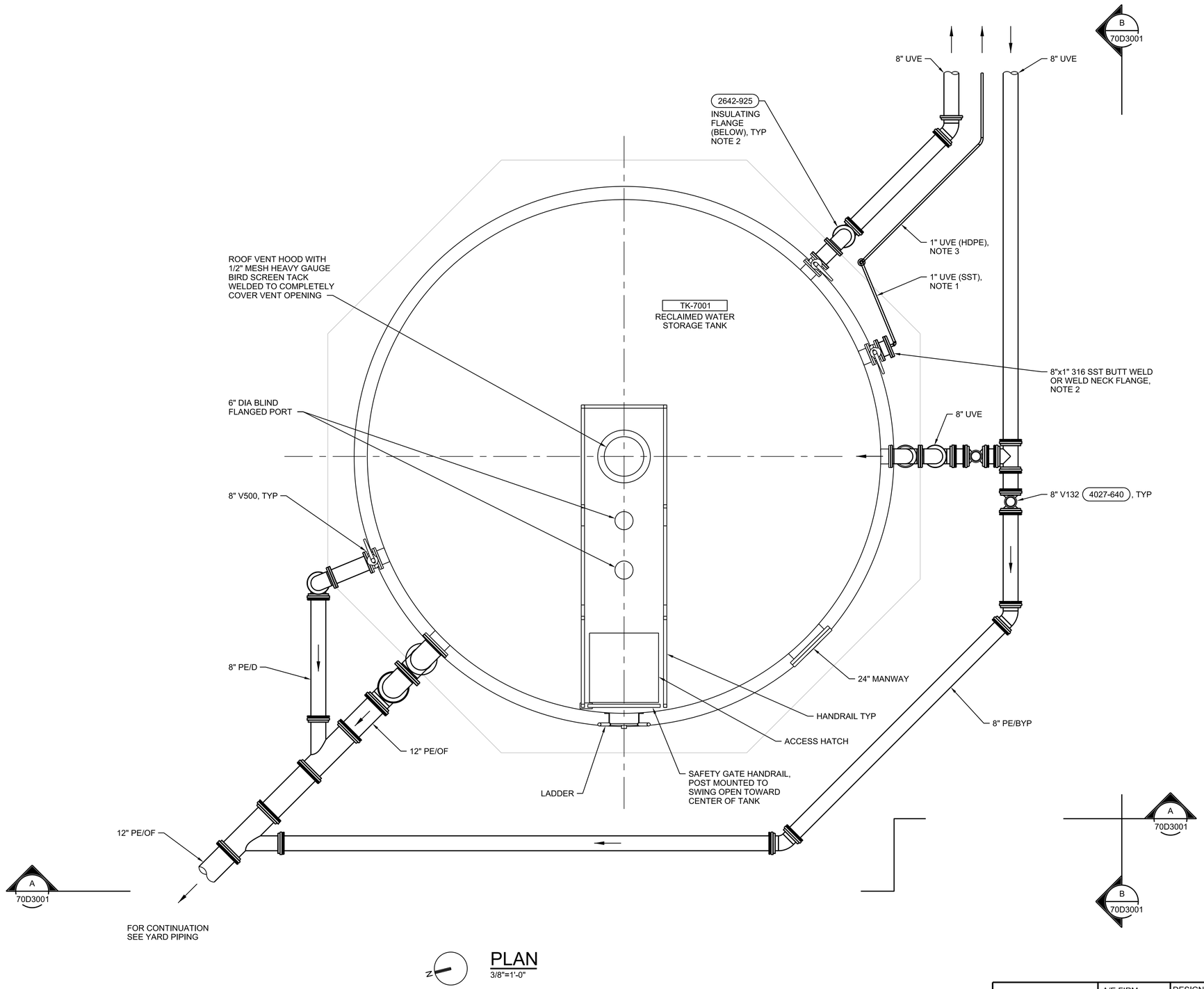

PLAN

3/8"=1'-0"

SHEET NOTES

1. HEAT TRACE AND INSULATE ALL OUTDOOR EXPOSED PIPING UP TO THE TANK WALL, INCLUDING OVERFLOW AND ROOF VENT.
2. ALL BURIED PIPING SHALL BE FITTED WITH INSULATING FLANGE AT FIRST FLANGE ABOVE GRADE OR FOR ISOLATION BETWEEN DISSIMILAR METALS.
3. START AT MINIMUM COVER AND MAINTAIN UNIFORM SLOPE AS REQUIRED FOR CONNECTION TO FACILITY 32 PIT-7051A / PI-7051B.

0 2 4 6
3/8"=1'-0"

FULL SIZE DRAWINGS = 22"x34"
BAR MEASURES 1" LONG
0" 1"

Professional Engineer (Civil) Certificate No. 35648 DARREN D. EDWARDS Date Signed 6/19/25 ARIZONA, U.S.A.
JUNE 19, 2025

A/E FIRM	JACOBS GOVERNMENT SERVICES COMPANY GREENWOOD VILLAGE, CO
DESIGNED:	M CONLAY
CADD:	G BROWN
TECH. REVIEW:	D EDWARDS
DATE:	06/2025
SUB SHEET NO.	70D1030
TITLE OF SHEET	RECLAIMED WATER TANK MECHANICAL PLAN GRAND CANYON, SOUTH RIM
DRAWING NO.	113 175376
PMIS/PKG NO.	257282
SHEET	341 OF 401

GRCA-257282

100% COMPLETE CONSTRUCTION DOCUMENTS

PLOT DATE: 6/17/2025 PLOT TIME: 1:31:18 PM SS6/V8I D3167666 - South Rim\4 Delivery\43 CAD Design\GRCA\257282\Microstation V8i Drawings\PROC\70D1030_D3167666.dgn

SHEET NOTES

1. HEAT TRACE AND INSULATE ALL OUTDOOR EXPOSED PIPING UP TO THE TANK WALL, INCLUDING OVERFLOW AND ROOF VENT.
2. ALL BURIED PIPING SHALL BE FITTED WITH INSULATING FLANGE AT FIRST FLANGE ABOVE GRADE OR FOR ISOLATION BETWEEN DISSIMILAR METALS.
3. START AT MINIMUM COVER AND MAINTAIN UNIFORM SLOPE AS REQUIRED FOR CONNECTION TO FACILITY 32 PIT-7051A / PI-7051B.

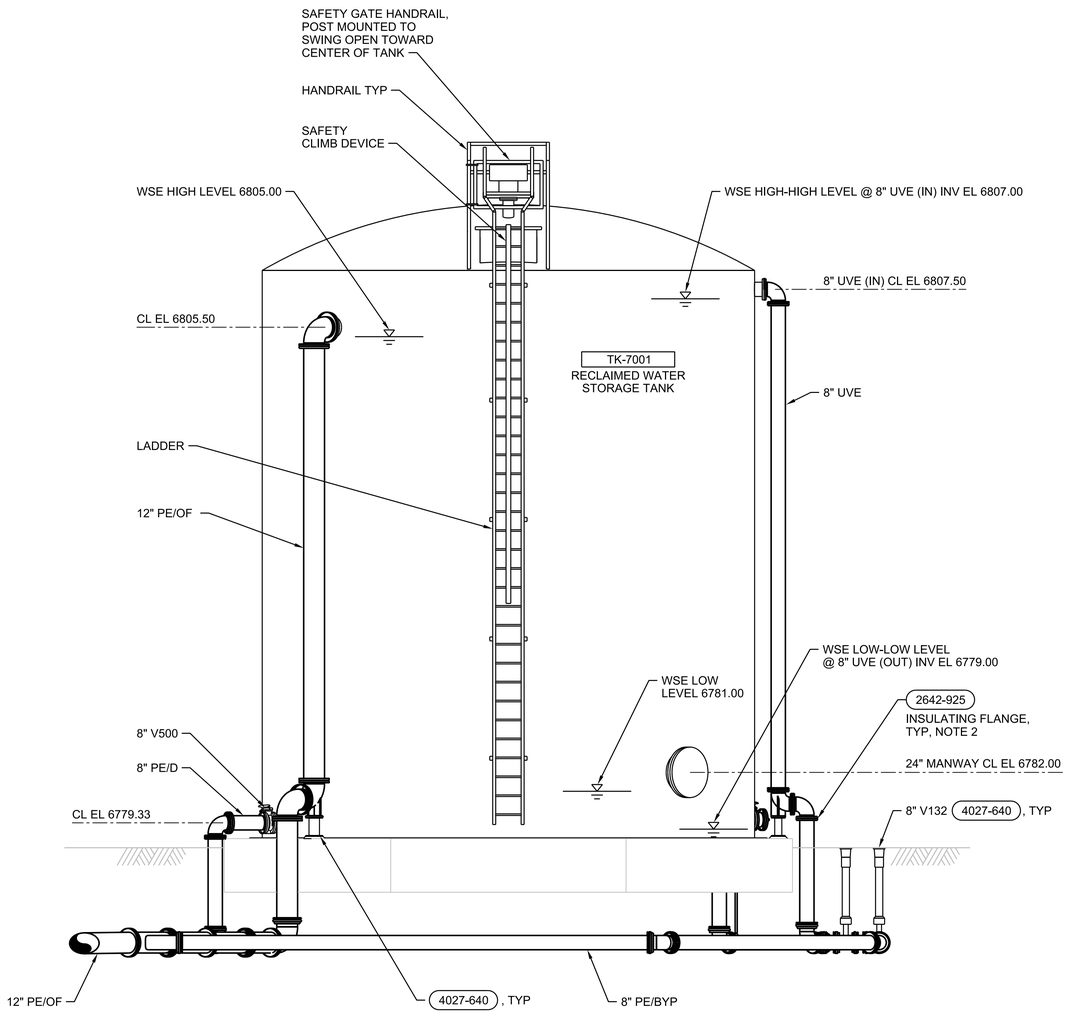

A SECTION
1/4"=1'-0"
70D1030

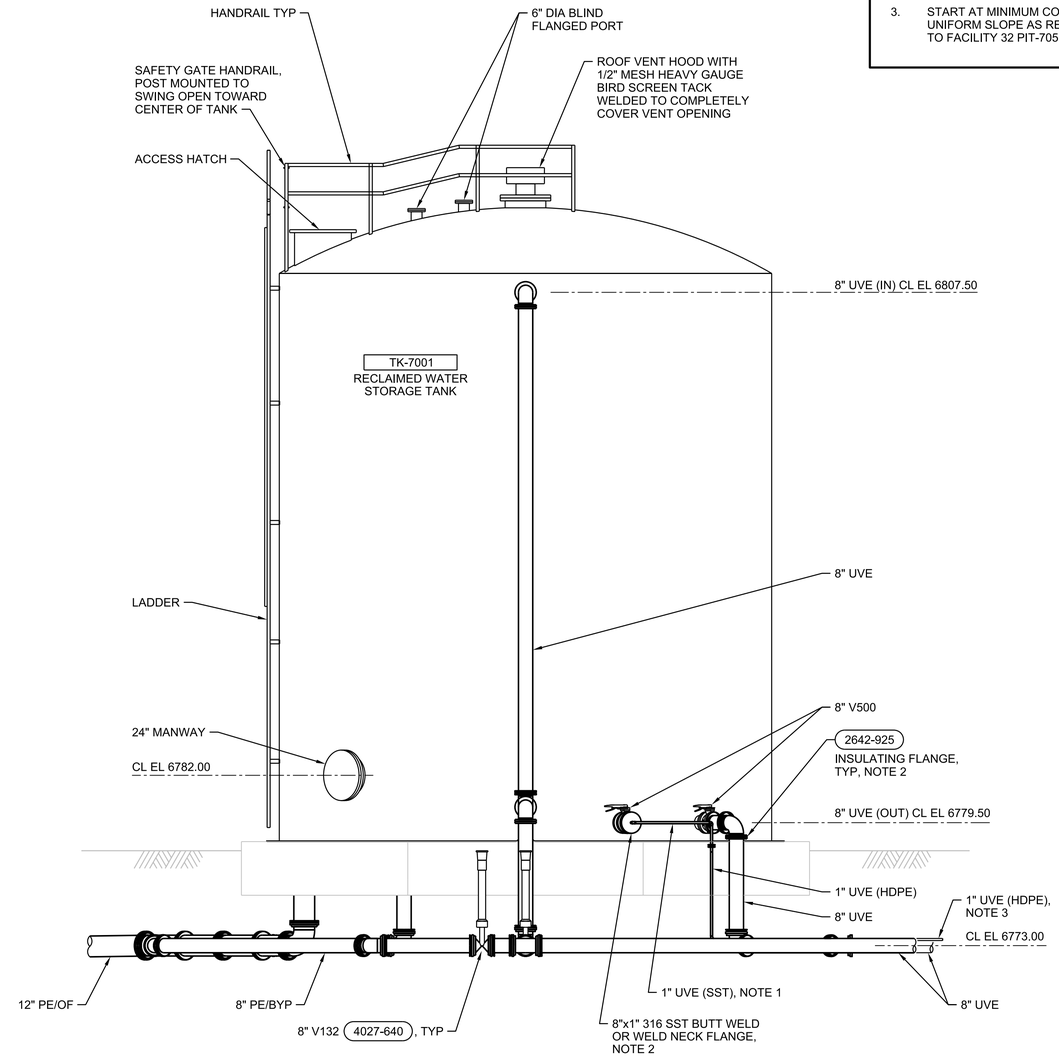

B SECTION
1/4"=1'-0"
70D1030

0 4 8 12
1/4"=1'-0"

FULL SIZE DRAWINGS = 22"x34"
BAR MEASURES 1" LONG
0" 1"

Registered Professional Engineer (CIVIL) 19048 DARREN EDWARDS ARIZONA, U.S.A.
JUNE 19, 2025

A/E FIRM	DESIGNED:	SUB SHEET NO.	TITLE OF SHEET	DRAWING NO.
JACOBS GOVERNMENT SERVICES COMPANY GREENWOOD VILLAGE, CO	M CONLAY CADD: G BROWN TECH. REVIEW: D EDWARDS DATE: 06/2025	70D3001	RECLAIMED WATER TANK MECHANICAL SECTIONS GRAND CANYON, SOUTH RIM	113 / 175376 PMIS/PKG NO. 257282 SHEET 342 OF 401

100% COMPLETE CONSTRUCTION DOCUMENTS

GRCA-257282

PLOT DATE: 6/17/2025 PLOT TIME: 1:31:48 PM SS6\V8i D3167666 - South Rim\4 Delivery\43 CAD Design\GRCA\257282\Microstation V8i Drawings\PROC\70D3001_D3167666.dgn

GENERAL SHEET NOTES

1. MAINTAIN A MINIMUM OF 24" BETWEEN POWER CONDUITS AND CONTROL (EXCEPT AS SHOWN FOR HANDSTATIONS) AND INSTRUMENTATION CONDUITS EXCEPT AT POINT OF TERMINATION.

SHEET NOTES

1. CONNECT TO PROCESS TANKS GROUND RING. REFER TO DRAWING 20EP1030.
2. BOND TO REBAR IN CONCRETE.
3. HEAT TRACE VALVE BODY AND EXPOSED ABOVE GROUND PIPE.

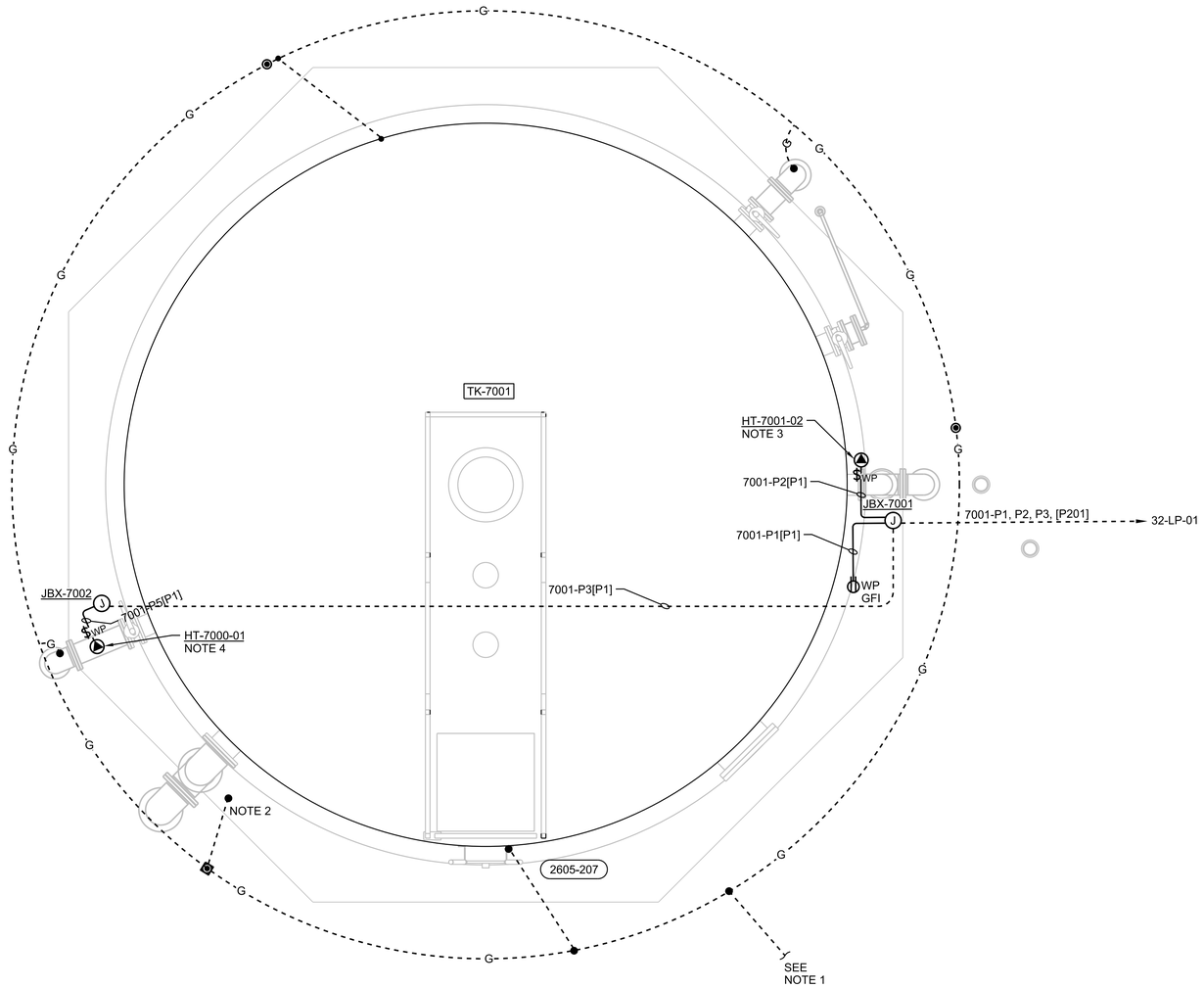

N

PLAN

3/8"=1'-0"

0 2 4 6

3/8"=1'-0"

FULL SIZE DRAWINGS = 22"x34"
BAR MEASURES 1" LONG

0" 1"

Registered Professional Engineer (Electrical) CERTIFICATE NO. 81240 DAVID BURGER Date Signed 6-19-2025 ARIZONA, U.S.A.

JUNE 19, 2025

A/E FIRM
JACOBS GOVERNMENT SERVICES COMPANY
GREENWOOD VILLAGE, CO

DESIGNED: D BURGER
CADD: J GARIBAY
TECH. REVIEW: J LANDMAN
DATE: 06/2025

SUB SHEET NO. 70EP1030

TITLE OF SHEET
RECLAIMED WATER TANK ELECTRICAL PROCESS PLAN
GRAND CANYON, SOUTH RIM

DRAWING NO. 113 175376
PMIS/PKG NO. 257282
SHEET 343 OF 401

100% COMPLETE CONSTRUCTION DOCUMENTS

GRCA-257282

PLOT DATE: 6/16/2025 PLOT TIME: 11:38:49 PM SS6/V8i D3167666 - South Rim\4 Delivery\43 CAD Design\GRCA\257282\Microstation V8i DrawingsIELEC\70EP1030_D3167666.dgn

GENERAL SHEET NOTES

A. FOR GENERAL STRUCTURAL NOTES, SEE DRAWINGS 01S0001, 01S0002 AND 01S0003.

B. FOR REINFORCEMENT AT OPENINGS, SEE DETAILS 0330-001 & 0330-002.

SHEET NOTES

1. 24" THICK CONCRETE BASE SLAB. REINFORCE WITH #8@12" EW, T&B. PROVIDE ADDITIONAL REINFORCEMENT WHERE SHOWN IN SECTIONS.
2. EXTEND CONCRETE PIPE ENCASEMENT FIVE FEET BEYOND EDGE OF FOOTING (MINIMUM). SEE PROCESS MECHANICAL DRAWINGS FOR PIPE INFORMATION.
3. FACILITY LOCATION CONTROL POINT. SEE CIVIL DRAWING 06C2001.

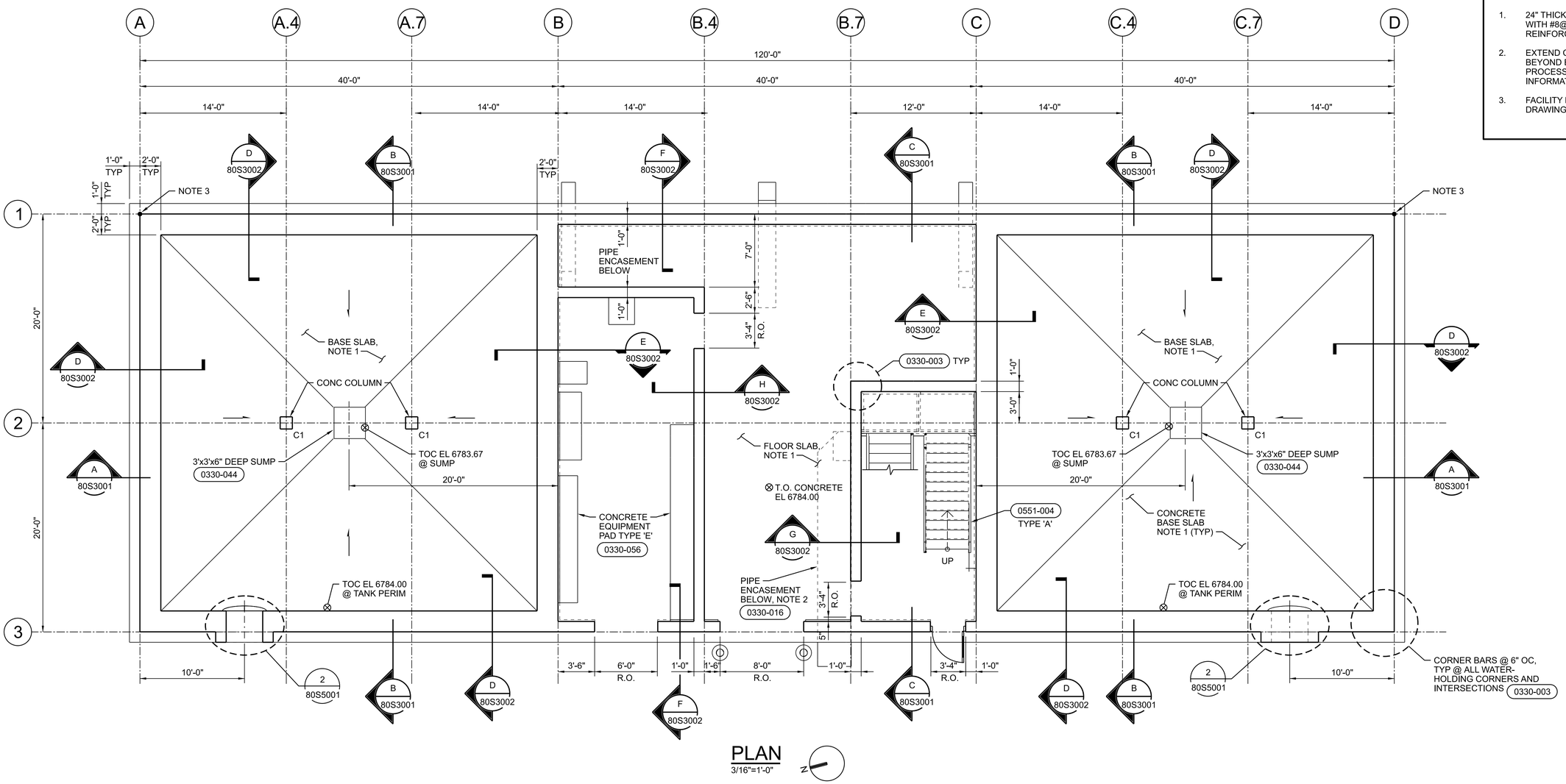

PLAN

3/16"=1'-0"

0 4 8 16

3/16"=1'-0"

FULL SIZE DRAWINGS = 22"x34"
BAR MEASURES 1" LONG

0" 1"

Wayne W. Kohler — Registered Professional Engineer (Structural) 81476 WAYNE W. KOHLER ARIZONA U.S.A. 6/20/25	A/E FIRM: JACOBS GOVERNMENT SERVICES COMPANY; GREENWOOD VILLAGE, CO	DESIGNED: W KOHLER; CADD: B CLEGG; TECH. REVIEW: A FIRTH; DATE: 06/2025	SUB SHEET NO. 80S1030	TITLE OF SHEET: DIGESTER FACILITY STRUCTURAL LOWER LEVEL PLAN; GRAND CANYON, SOUTH RIM

DRAWING NO. 113 175376

PMIS/PKG NO. 257282

SHEET 344 OF 401

100% COMPLETE CONSTRUCTION DOCUMENTS

GRCA-257282

PLOT DATE: 16-JUN-2025 PLOT TIME: 14:35 SS6\V8i D3167666 - South Rim\4 Delivery\43 CAD Design\GRCA\257282\Microstation V8i Drawings\STRUC\80S1030_D3167666.dgn

GENERAL SHEET NOTES

A. FOR GENERAL STRUCTURAL NOTES, SEE DRAWINGS 01S0001, 01S0002 AND 01S0003.

B. FOR REINFORCEMENT AT OPENINGS, SEE DETAILS 0330-001 & 0330-002 .

C. BX = CONCRETE BEAM MARK. SEE DETAILS AND CONCRETE BEAM SCHEDULE ON 01S5001.

SHEET NOTES

1. 8'x6' DOUBLE LEAF ALUMINUM SIDEWALK DOOR. SEE SPECIFICATION 05 05 50 METAL FABRICATIONS.

2. 10" THICK ELEVATED CONCRETE SLAB. REINFORCE WITH:
   #5@6 PERP TO BEAM WALLS,TOP MAT
   #5@12 PARALLEL TO BEAMS/WALLS, TOP MAT.
   #5@12 EW, BOT MAT.
   OUTSIDE BARS SPAN PERP TO BEAMS/WALLS.

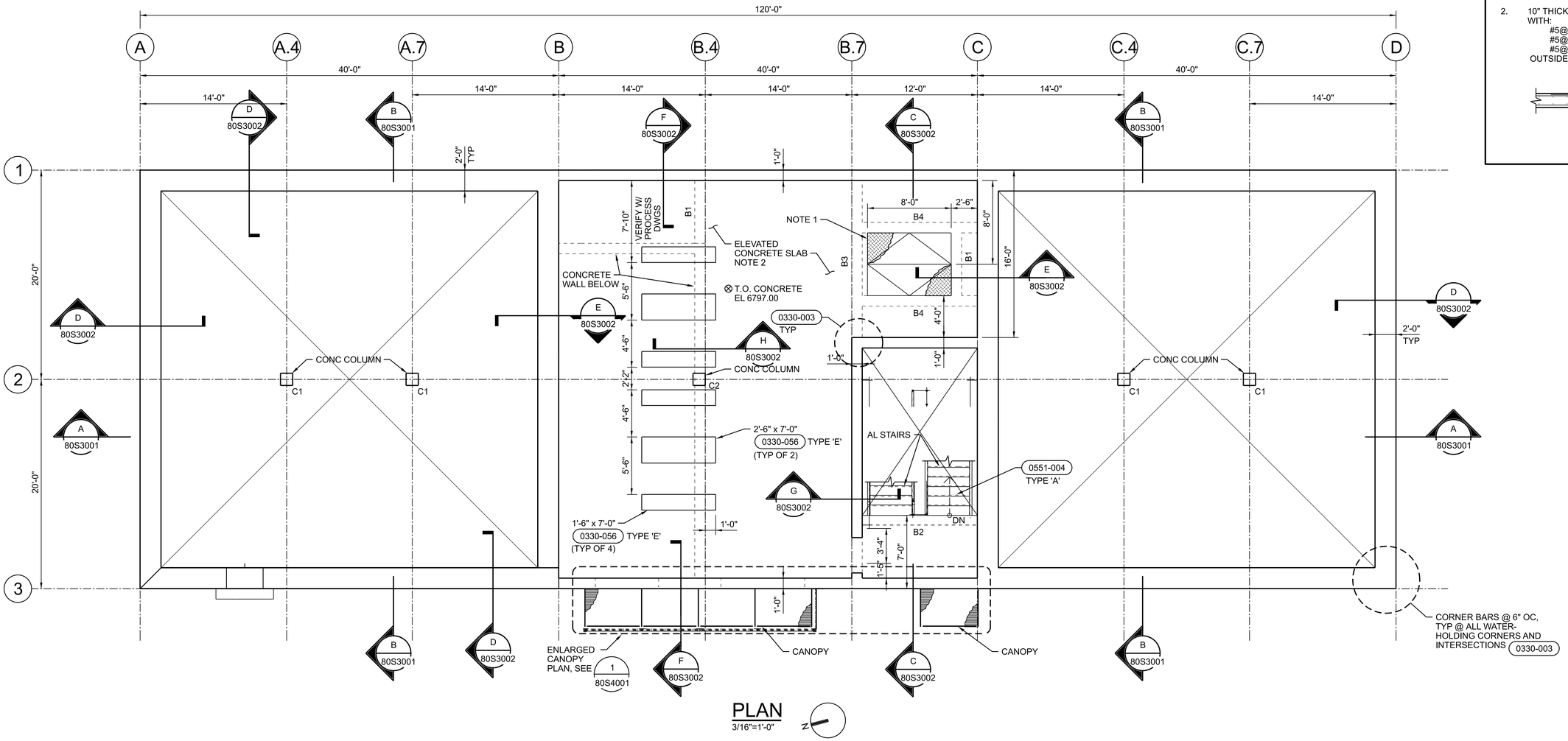

PLAN

3/16"=1'-0"

0 4 8 16

3/16"=1'-0"

FULL SIZE DRAWINGS = 22"x34"
BAR MEASURES 1" LONG

0" 1"

Wayne W. Kohler — Professional Engineer (Structural) 81476 WAYNE W. KOHLER Date Signed 6/20/25 ARIZONA U.S.A.	A/E FIRM: JACOBS GOVERNMENT SERVICES COMPANY, GREENWOOD VILLAGE, CO	DESIGNED: W KOHLER CADD: B CLEGG TECH. REVIEW: A FIRTH DATE: 06/2025	SUB SHEET NO. 80S1040	TITLE OF SHEET: DIGESTER FACILITY STRUCTURAL INTERMEDIATE LEVEL PLAN GRAND CANYON, SOUTH RIM

DRAWING NO. 113 / 175376

PMIS/PKG NO. 257282

SHEET 345 OF 401

100% COMPLETE CONSTRUCTION DOCUMENTS

GRCA-257282

PLOT DATE: 16-JUN-2025 PLOT TIME: 14:38 SS6/V8I D3167666 - South Rim\4 Delivery\43 CAD Design\GRCA\257282\Microstation V8I Drawings\STRUC\80S1040_D3167666.dgn

GENERAL SHEET NOTES

A. FOR GENERAL STRUCTURAL NOTES, SEE DRAWINGS 01S0001, 01S0002, AND 01S0003.

B. FOR REINFORCEMENT AT OPENINGS, SEE DETAILS (0330-001) & (0330-002).

C. [X] = ROOF DECK TYPE, SEE METAL DECK SCHEDULE ON 01S0002.

D. BX = CONCRETE BEAM MARK. SEE DETAILS AND CONCRETE BEAM SCHEDULE ON 01S5001.

SHEET NOTES

1. 3'-0"x3'-0" ALUMINUM SIDEWALK DOOR AS SPECIFIED.
2. CURB PROTECTS EDGE OF INSULATION IN THE ROOF ZONE BETWEEN GRIDS B AND C. VERIFY CURB HEIGHT WITH INSULATION THICKNESS.
3. LOCATION SHOWN FOR THIS OPENING IS APPROXIMATE. OPENING SHALL BE CENTERED OVER DECANT MECHANISM. COORDINATE WITH PROCESS DRAWINGS.
4. 10" THICK ELEVATED CONCRETE SLAB. REINFORCE WITH #5@10" O.C. - OUTSIDE BARS SPAN NORTH / SOUTH.

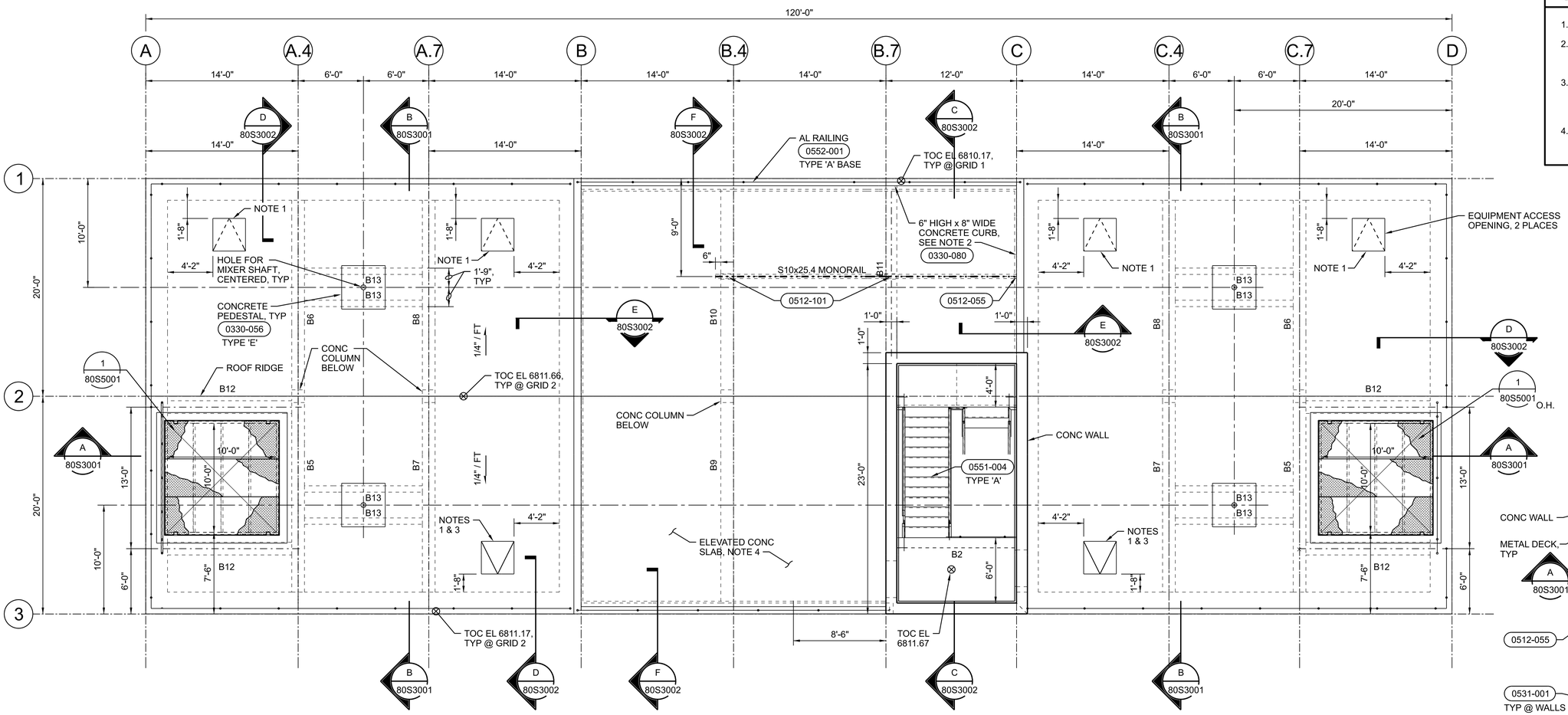

PLAN
3/16"=1'-0"

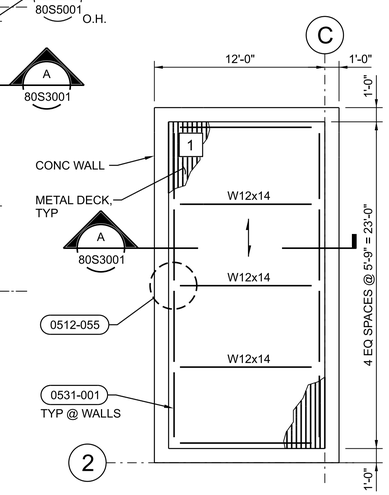

STAIR PENTHOUSE PLAN
3/16"=1'-0"

0 4 8 16
3/16"=1'-0"

FULL SIZE DRAWINGS = 22"x34"
BAR MEASURES 1" LONG
0" 1"

Wayne W. Kohler — 81476 WAYNE W. KOHLER — Registered Professional Engineer (Structural) — ARIZONA U.S.A. — Date Signed 6/20/25	A/E FIRM: JACOBS GOVERNMENT SERVICES COMPANY, GREENWOOD VILLAGE, CO	DESIGNED: W KOHLER; CADD: B CLEGG; TECH. REVIEW: A FIRTH; DATE: 06/2025	SUB SHEET NO. 80S1050	TITLE OF SHEET: DIGESTER FACILITY STRUCTURAL UPPER LEVEL PLAN — GRAND CANYON, SOUTH RIM

DRAWING NO. 113 / 175376
PMIS/PKG NO. 257282
SHEET 346 OF 401

100% COMPLETE CONSTRUCTION DOCUMENTS

GRCA-257282

PLOT DATE: 16-JUN-2025 PLOT TIME: 14:36 SS6\V8i D3167666 - South Rim\4 Delivery\43 CAD Design\GRCA\257282\Microstation V8i Drawings\STRUC\80S1050_D3167666.dgn

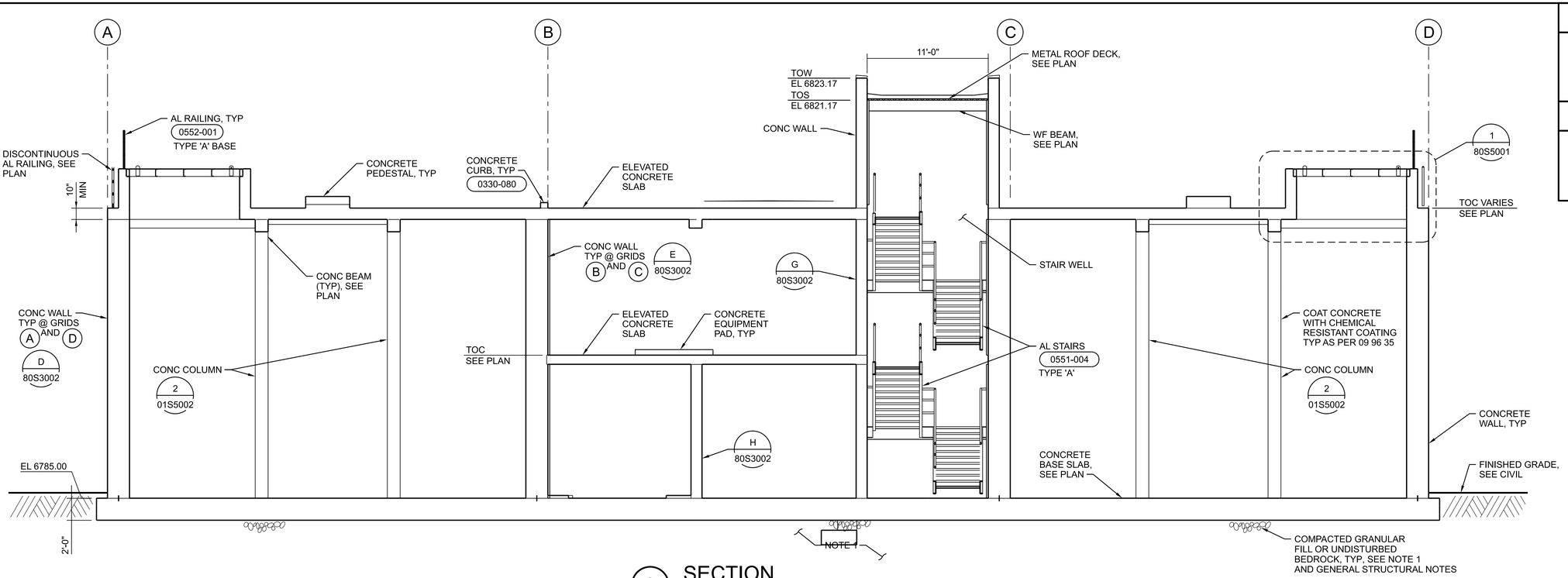

A SECTION
3/16"=1'-0"
80S1030
80S1040
80S1050

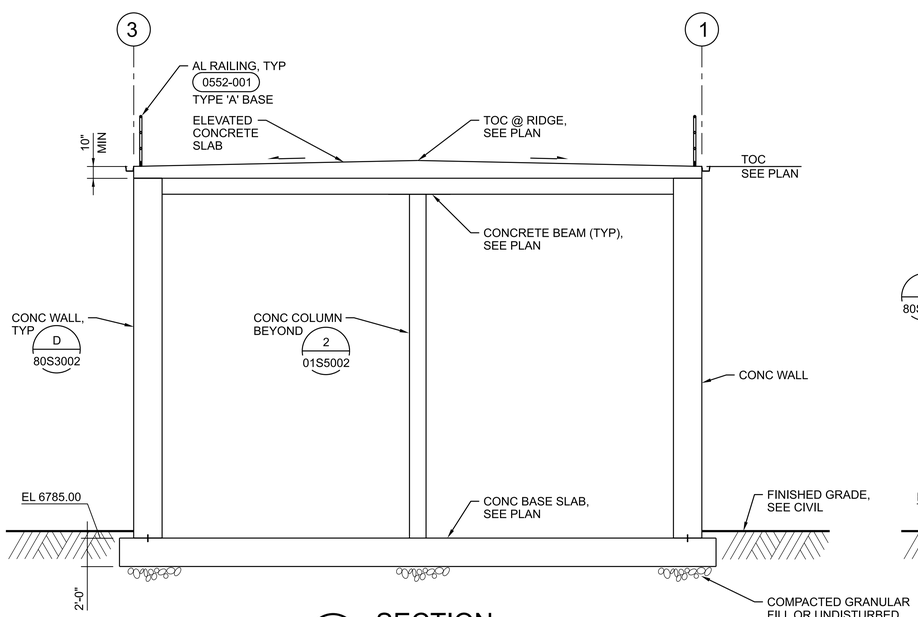

B SECTION
3/16"=1'-0"
80S1030
80S1040
80S1050

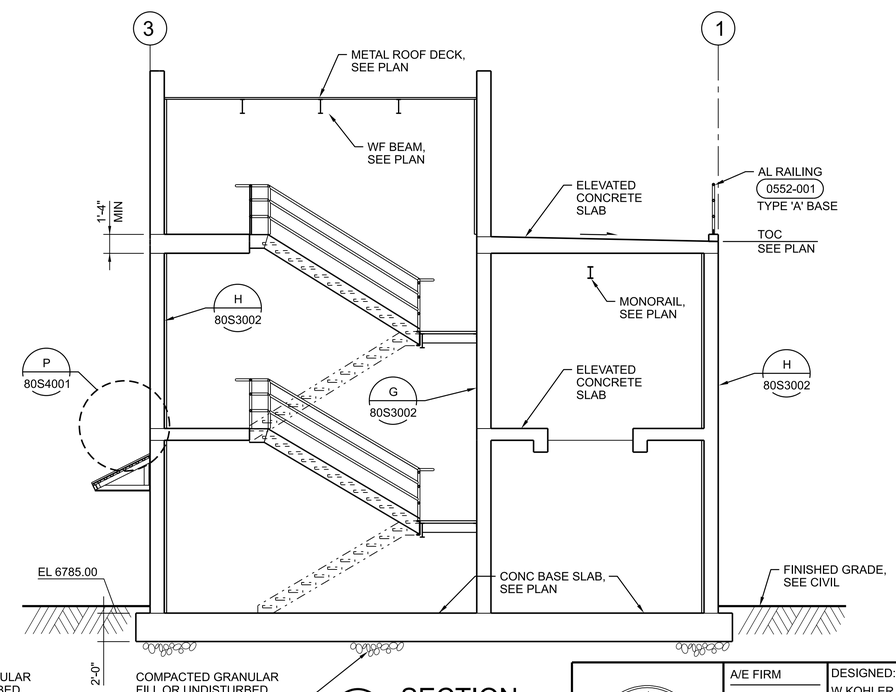

C SECTION
3/16"=1'-0"
80S1030
80S1040
80S1050

FULL SIZE DRAWINGS = 22"x34"
BAR MEASURES 1" LONG

0" 1"

0 4 8 16
3/16"=1'-0"

GENERAL SHEET NOTES

A. FOR GENERAL STRUCTURAL NOTES, SEE DRAWINGS 01S0001, 01S0002, AND 01S0003.

SHEET NOTES

1. BEDROCK IS LOCATED NEAR THE EXISTING GROUND SURFACE. SEE GEOTECHNICAL REPORT FOR ADDITIONAL INFORMATION.

GRCA-257282

Professional Engineer Wayne W. Kohler 81476 WAYNE W. KOHLER Date Signed 6/20/25 ARIZONA U.S.A.	A/E FIRM: JACOBS GOVERNMENT SERVICES COMPANY, GREENWOOD VILLAGE, CO	DESIGNED: W KOHLER CADD: B CLEGG TECH. REVIEW: A FIRTH DATE: 06/2025	SUB SHEET NO. 80S3001	TITLE OF SHEET: DIGESTER FACILITY STRUCTURAL SECTIONS GRAND CANYON, SOUTH RIM

DRAWING NO. 113 / 175376
PMIS/PKG NO. 257282
SHEET 347 OF 401

100% COMPLETE CONSTRUCTION DOCUMENTS

PLOT DATE: 16-JUN-2025 PLOT TIME: 14:35 SS6/V8I D3167666 - South Rim\4 Delivery\43 CAD Design\GRCA\257282\Microstation V8I Drawings\STRUC\80S3001_D3167666.dgn

SHEET NOTES

1. BEDROCK IS LOCATED NEAR THE EXISTING GROUND SURFACE. SEE GEOTECHNICAL REPORT FOR ADDITIONAL INFORMATION.

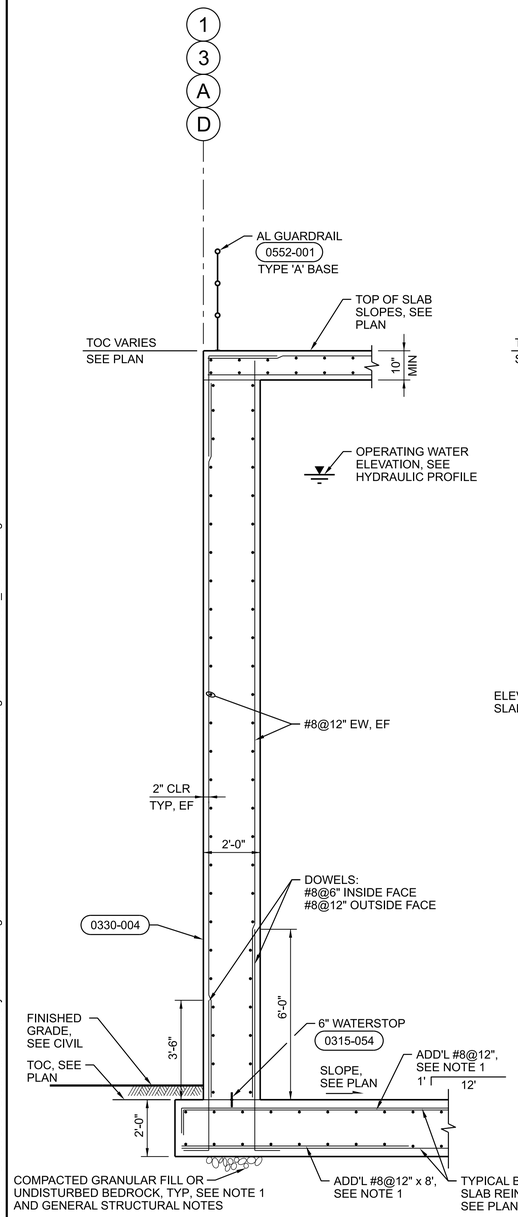

NOTES:

1. STAGGER ADD'L REINFORCING W/ TYPICAL REINFORCING FOR NET 6" SPACING.

D WALL SECTION
3/8"=1'-0"
80S1030
80S1040
80S1050

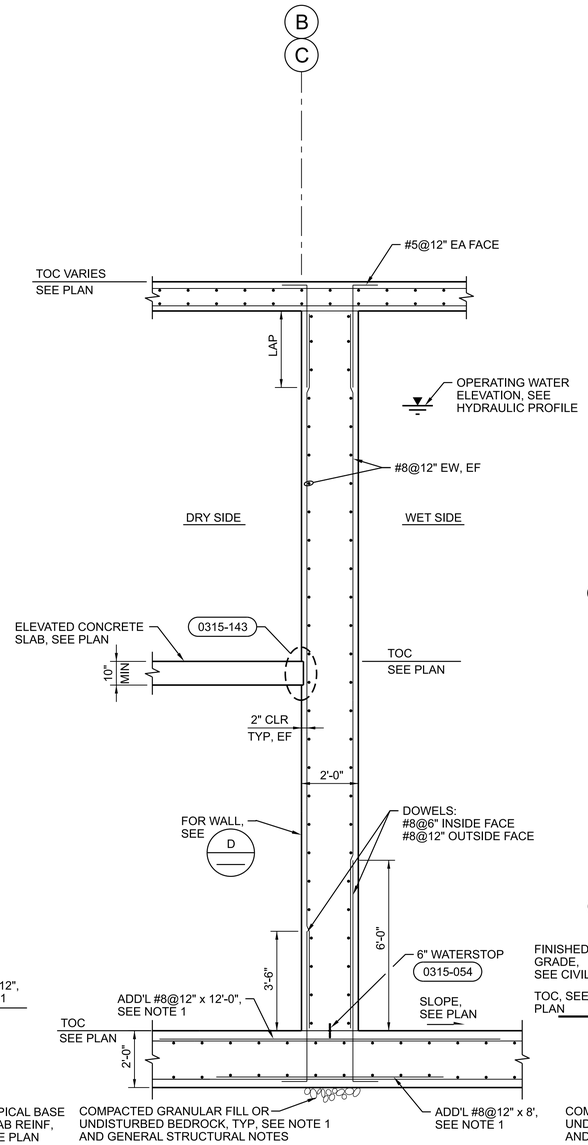

NOTES:

1. STAGGER ADD'L REINFORCING W/ TYPICAL REINFORCING FOR NET 6" SPACING. CENTER ADDL REINFORCING ON WALL.

E WALL SECTION
3/8"=1'-0"
80S1030
80S1040
80S1050

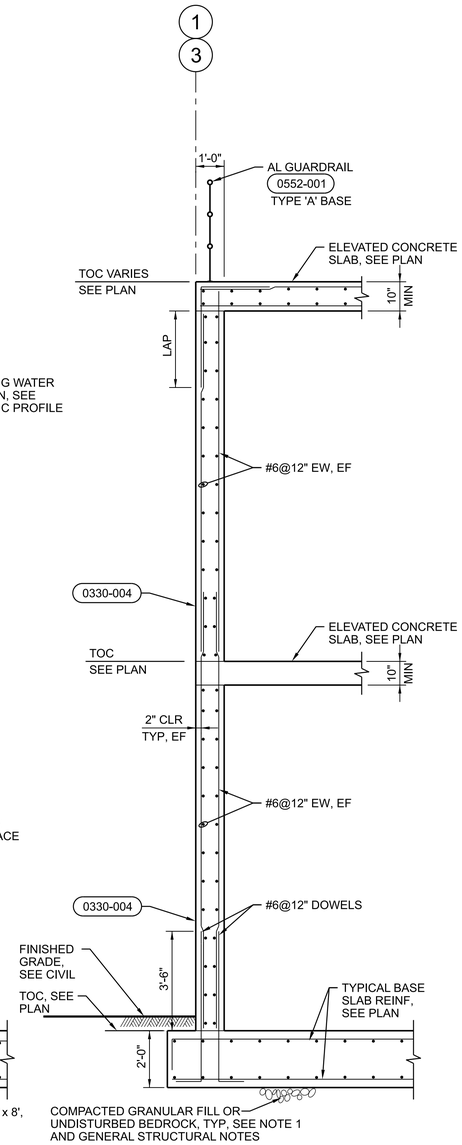

F WALL SECTION
3/8"=1'-0"
80S1030
80S1040
80S1050

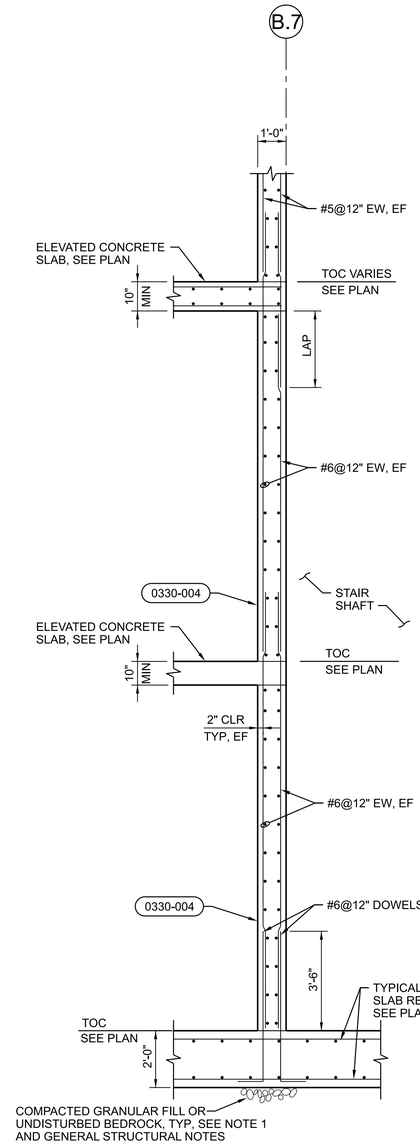

NOTES:

1. STAGGER ADD'L REINFORCING W/ TYPICAL REINFORCING FOR NET 6" SPACING.

G WALL SECTION @ STAIR SHAFT
3/8"=1'-0"
80S1030
80S1040
80S3001

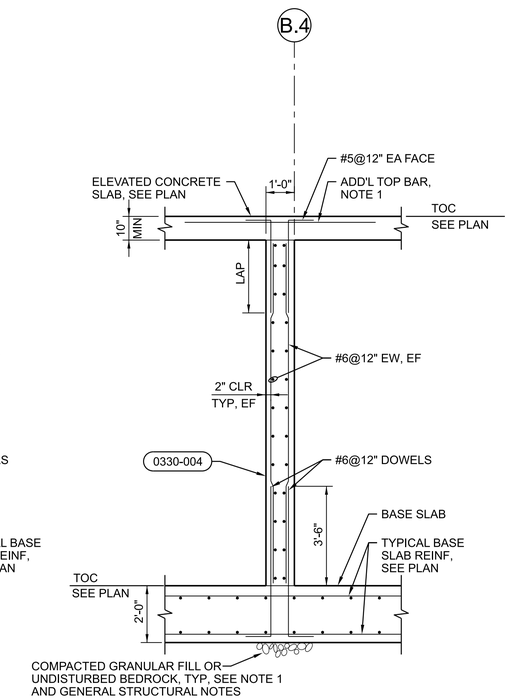

NOTES:

1. ADD'L TOP BAR SHALL BE 10'-0". CENTER ON WALL. 12" SPACING STAGGERED WITH TYPICAL REINF FOR NET 6" SPACING. MATCH SIZE OF SLAB TYPICAL BARS.

H WALL SECTION
3/8"=1'-0"
80S1030
80S1040
80S3001

0 2 4 6
3/8"=1'-0"

FULL SIZE DRAWINGS = 22"x34"
BAR MEASURES 1" LONG
0" 1"

A/E FIRM: JACOBS GOVERNMENT SERVICES COMPANY, GREENWOOD VILLAGE, CO	DESIGNED: W KOHLER CADD: B CLEGG TECH. REVIEW: A FIRTH DATE: 06/2025	SUB SHEET NO. 80S3002	TITLE OF SHEET: DIGESTER FACILITY STRUCTURAL SECTIONS GRAND CANYON, SOUTH RIM

DRAWING NO. 113 / 175376
PMIS/PKG NO. 257282
SHEET 348 OF 401

GRCA-257282

100% COMPLETE CONSTRUCTION DOCUMENTS

PLOT DATE: 16-JUN-2025 PLOT TIME: 14:36 SS6/V8i D3167666 - South Rim\4 Delivery\43 CAD Design\GRCA\257282\Microstation V8i Drawings\STRUC\80S3002_D3167666.dgn

GENERAL SHEET NOTES

1. X = ROOF DECK TYPE, SEE METAL DECK SCHEDULE ON 01S0002.

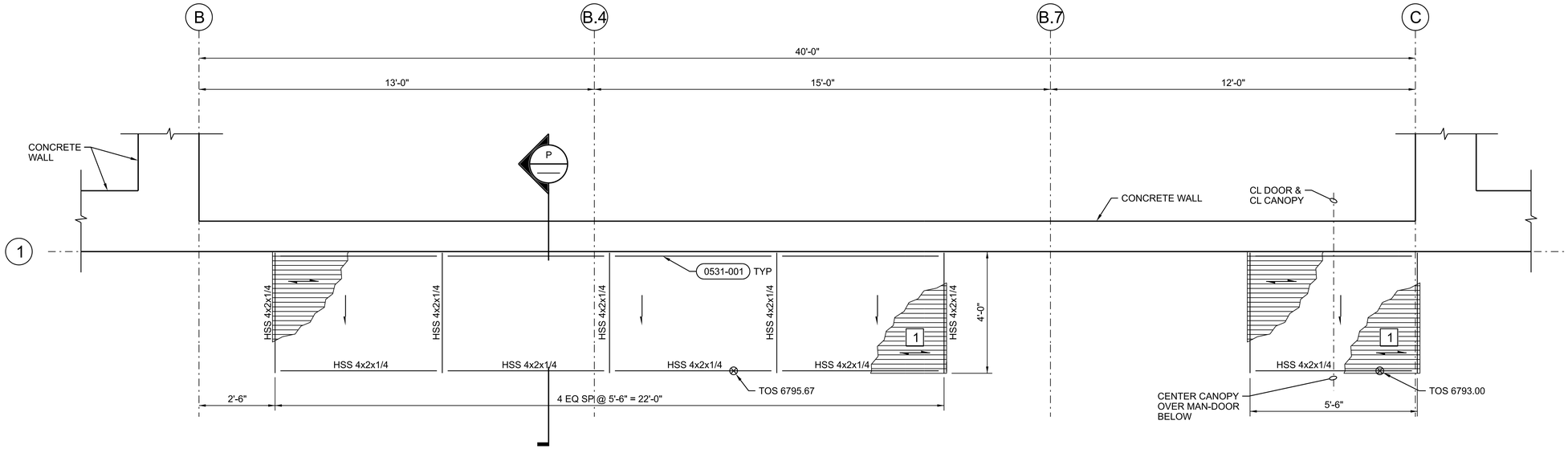

1 CANOPY ENLARGED PLAN
1/2" = 1'-0"
80S1040

0 2 4 6
1/2"=1'-0"

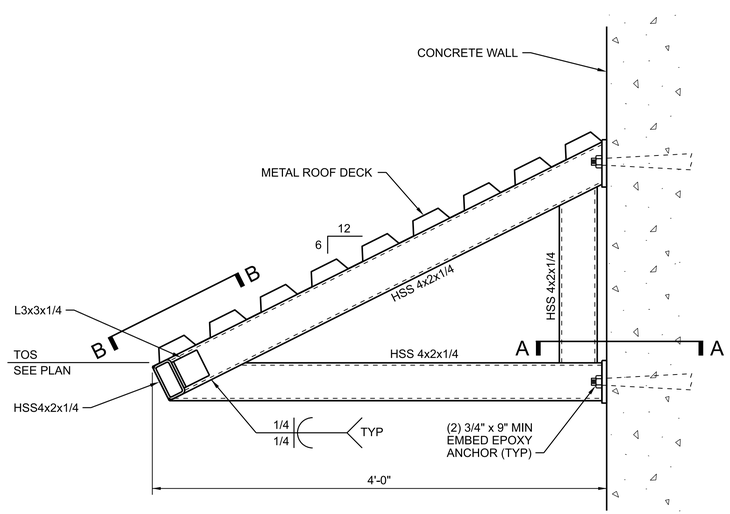

SECTION

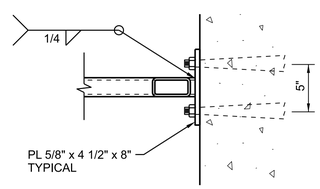

SECTION A-A

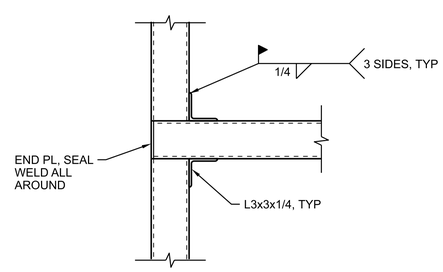

PLAN B-B

P CANOPY SECTION
3/4"=1'-0"

0 1 2 3
3/4"=1'-0"

FULL SIZE DRAWINGS = 22"x34"
BAR MEASURES 1" LONG
0" 1"

Wayne W. Kohler 81476 WAYNE W. KOHLER REGISTERED PROFESSIONAL ENGINEER ARIZONA U.S.A.	A/E FIRM JACOBS GOVERNMENT SERVICES COMPANY GREENWOOD VILLAGE, CO	DESIGNED: W KOHLER CADD: B CLEGG TECH. REVIEW: A FIRTH DATE: 06/2025	SUB SHEET NO. 80S4001	TITLE OF SHEET DIGESTER FACILITY STRUCTURAL ENLARGED PLAN AND SECTIONS GRAND CANYON, SOUTH RIM

DRAWING NO. 113 175376
PMIS/PKG NO. 257282
SHEET 349 OF 401

100% COMPLETE CONSTRUCTION DOCUMENTS

GRCA-257282

PLOT DATE: 16-JUN-2025 PLOT TIME: 14:35 SS6/V8I D3167666 - South Rim\4 Delivery\43 CAD Design\GRCA\257282\Microstation V8I Drawings\STRUC\80S4001_D3167666.dgn

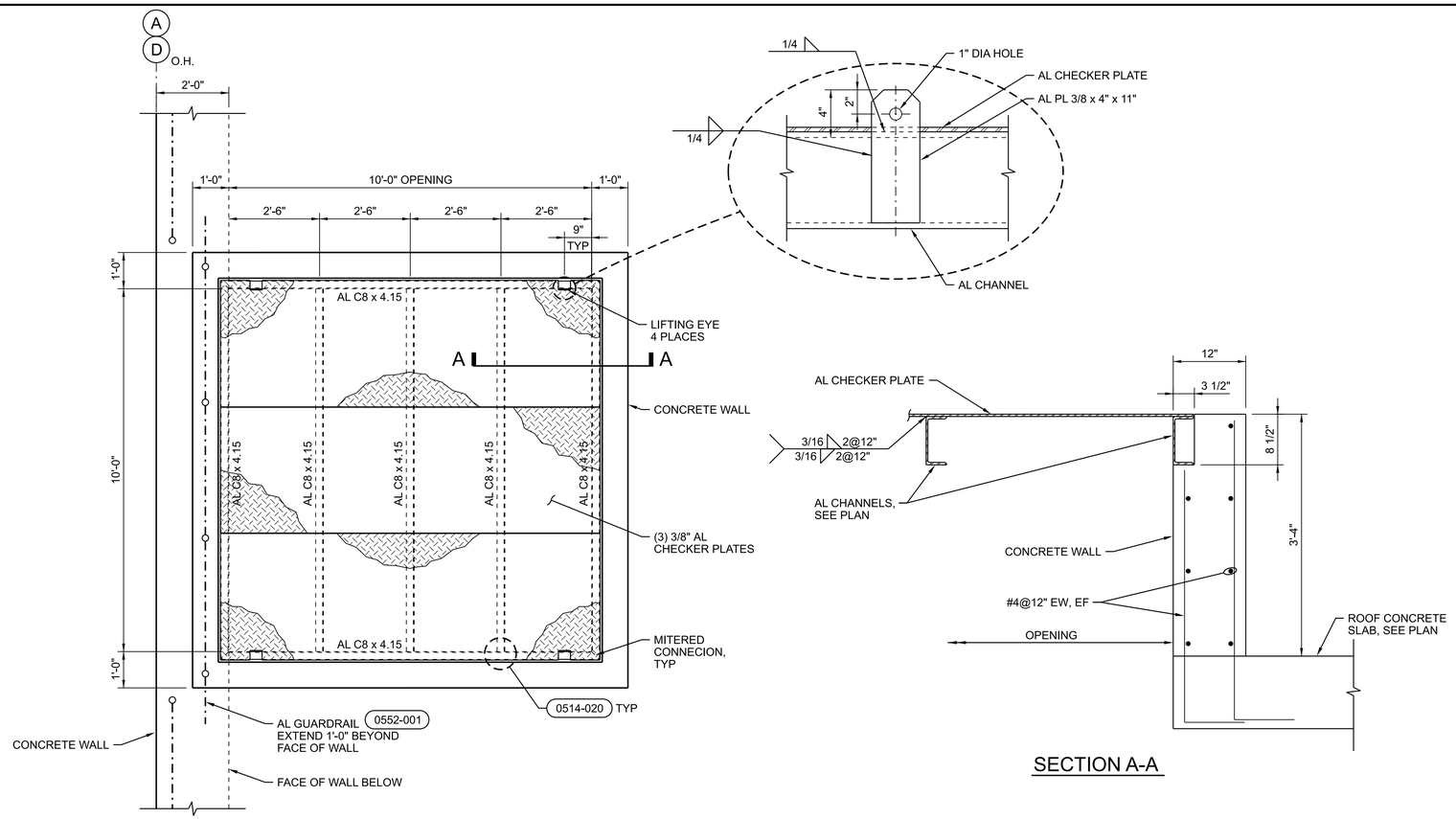

1 REMOVEABLE COVER

80S1050

1"=1'-0"

0 1 2 3

1"=1'-0"

SECTION A-A

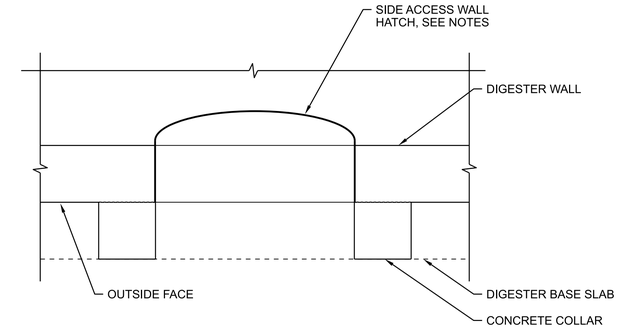

PLAN A-A

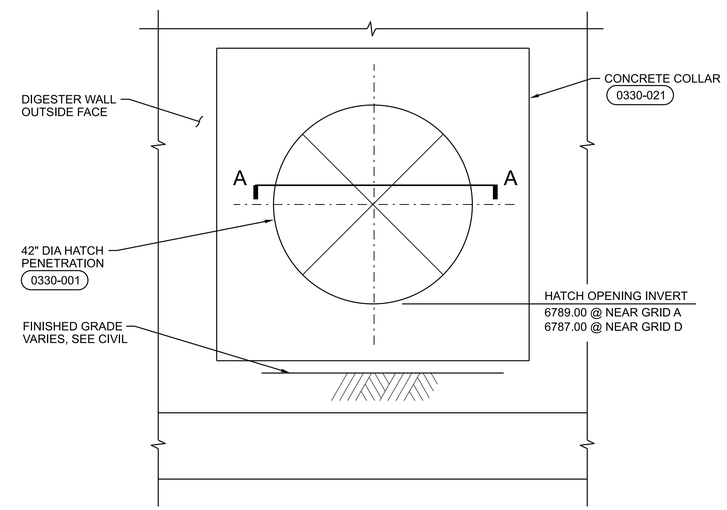

ELEVATION

NOTE:

1. SIDE ACCESS WALL HATCH, SEE SPECIFICATION 05 50 00, METAL FABRICATIONS.

2 ACCESS HATCH

3/4"=1'-0"

0 1 2 3

3/4"=1'-0"

FULL SIZE DRAWINGS = 22"x34"
BAR MEASURES 1" LONG

0" 1"

Registered Professional Engineer (Structural) 81476 WAYNE W. KOHLER ARIZONA U.S.A. Date Signed 6/20/25	A/E FIRM JACOBS GOVERNMENT SERVICES COMPANY GREENWOOD VILLAGE, CO	DESIGNED: W KOHLER CADD: B CLEGG TECH. REVIEW: A FIRTH DATE: 06/2025	SUB SHEET NO. 80S5001	TITLE OF SHEET DIGESTER FACILITY STRUCTURAL DETAILS GRAND CANYON, SOUTH RIM

DRAWING NO. 113 175376
PMIS/PKG NO. 257282
SHEET 350 OF 401

100% COMPLETE CONSTRUCTION DOCUMENTS

GRCA-257282

PLOT DATE: 16-JUN-2025 PLOT TIME: 14:35 SS6/V8i D3167666 - South Rim\4 Delivery\43 CAD Design\GRCA\257282\Microstation V8i Drawings\STRUC\80S5001_D3167666.dgn

GENERAL SHEET NOTES

A. FOR GENERAL ARCHITECTURAL NOTES, MATERIAL SYMBOLS, LEGEND, ABBREVIATIONS AND WALL TYPES, SEE DRAWING 01A0001.

B. FOR BUILDING CODE DATA AND LIFE SAFETY PLAN, SEE DRAWING 01A0080.

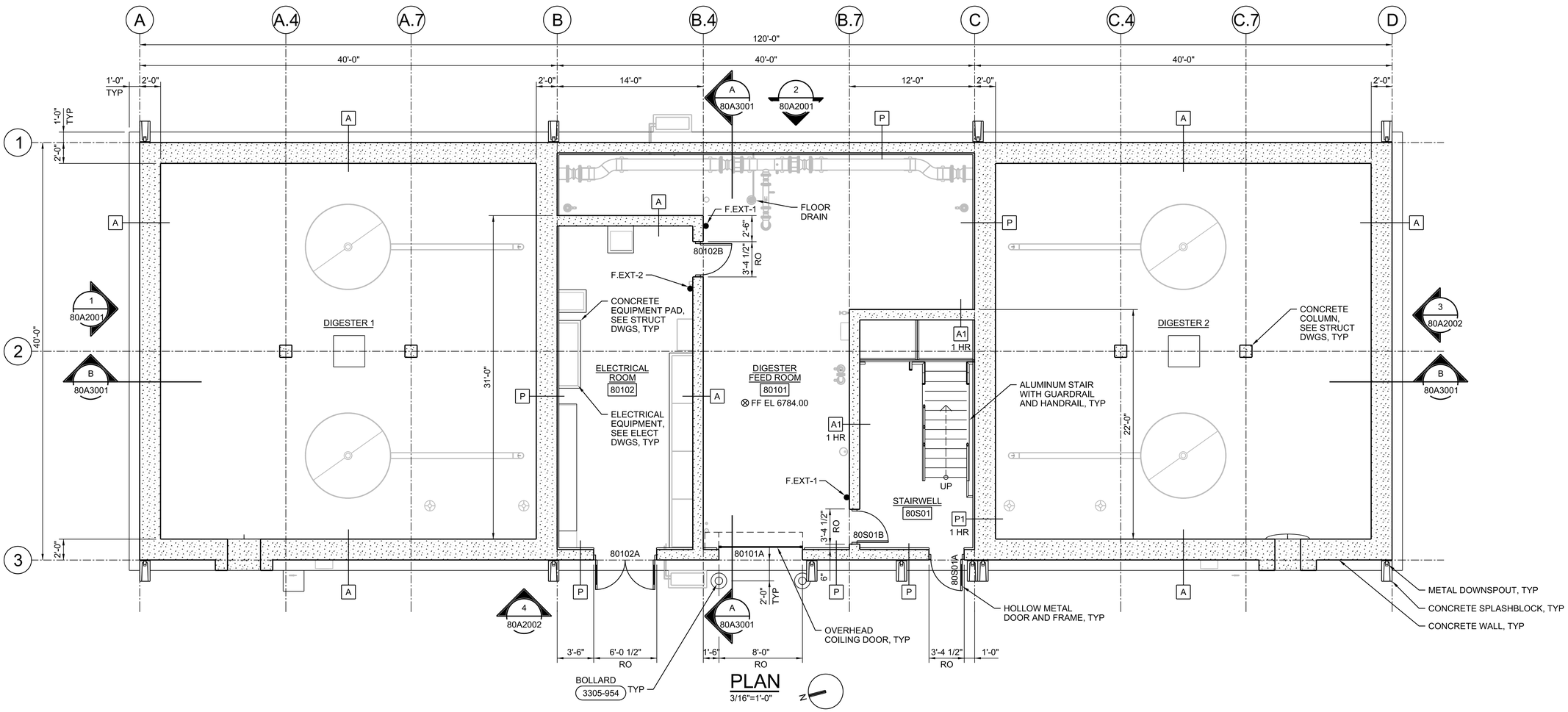

PLAN

3/16"=1'-0"

0 4 8 16

3/16"=1'-0"

FULL SIZE DRAWINGS = 22"x34"
BAR MEASURES 1" LONG

0" 1"

REGISTERED ARCHITECT
MORGAN SHOEMAKER
Date Signed 06/16/25
ARIZONA, U.S.A.
Expires 06-30-2027

A/E FIRM	DESIGNED:	SUB SHEET NO.	TITLE OF SHEET	DRAWING NO.
JACOBS GOVERNMENT SERVICES COMPANY GREENWOOD VILLAGE, CO	M SHOEMAKER CADD: M COLLINS TECH. REVIEW: G KIRSTEN DATE: 06/2025	80A1030	DIGESTER FACILITY ARCHITECTURAL LOWER LEVEL PLAN GRAND CANYON, SOUTH RIM	113 175376 PMIS/PKG NO. 257282 SHEET 351 OF 401

GRCA-257282

100% COMPLETE CONSTRUCTION DOCUMENTS

PLOT DATE: 6/16/2025 PLOT TIME: 6:03:13 PM SS6/V8i D3167666 - South Rim\4 Delivery\43 CAD Design\GRCA\257282\Microstation V8i Drawings\ARCH\80A1030_D3167666.dgn

GENERAL SHEET NOTES

A. FOR GENERAL ARCHITECTURAL NOTES, MATERIAL SYMBOLS, LEGEND, ABBREVIATIONS AND WALL TYPES, SEE DRAWING 01A0001.

B. FOR BUILDING CODE DATA AND LIFE SAFETY PLAN, SEE DRAWING 01A0080.

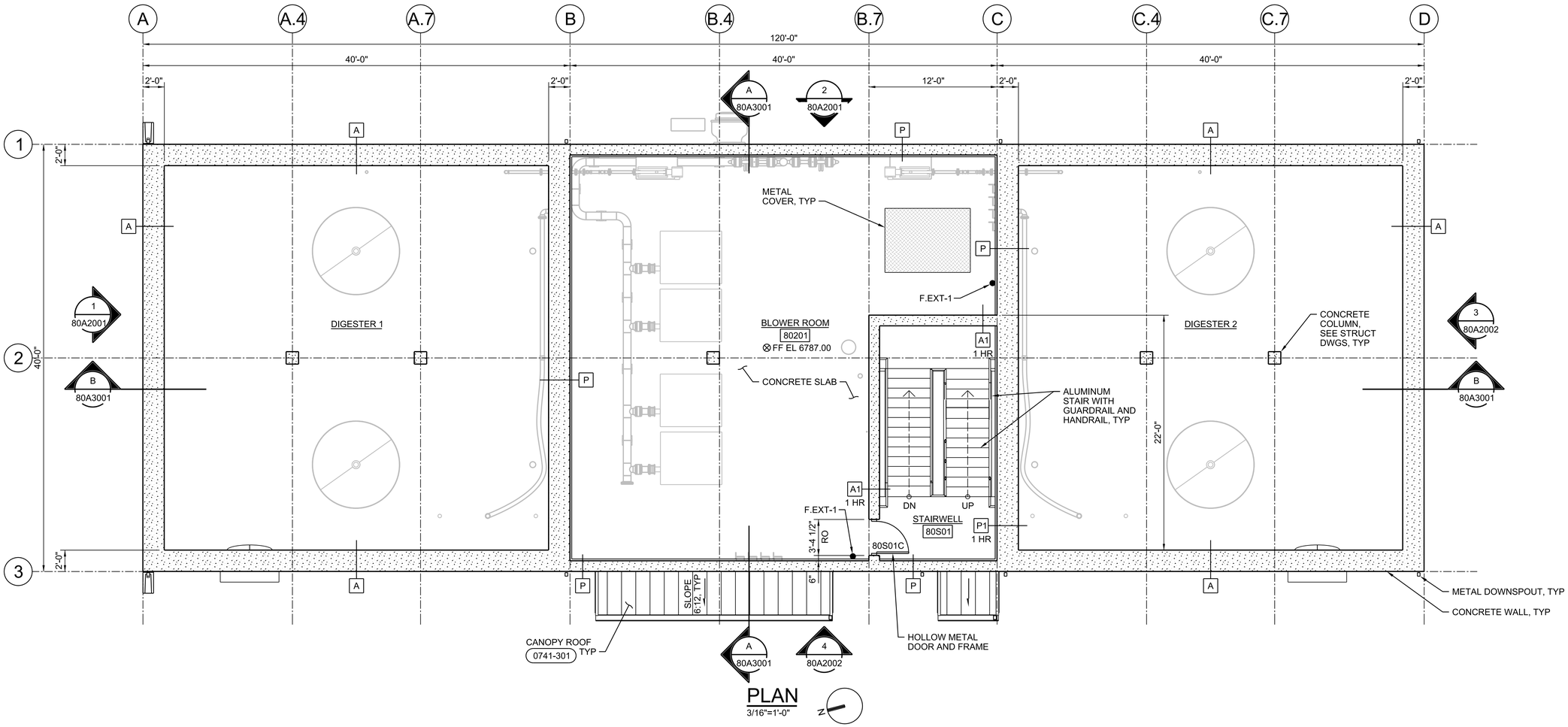

PLAN

3/16"=1'-0"

FULL SIZE DRAWINGS = 22"x34"
BAR MEASURES 1" LONG

0" 1"

REGISTERED ARCHITECT
CERTIFICATE NO. 80680
MORGAN SHOEMAKER
Date Signed 6/16/25
ARIZONA, U.S.A.
Expires 06-30-2027

A/E FIRM	DESIGNED:	SUB SHEET NO.	TITLE OF SHEET	DRAWING NO.
JACOBS GOVERNMENT SERVICES COMPANY GREENWOOD VILLAGE, CO	M SHOEMAKER CADD: M COLLINS TECH. REVIEW: G KIRSTEN DATE: 06/2025	80A1040	DIGESTER FACILITY ARCHITECTURAL UPPER LEVEL PLAN GRAND CANYON, SOUTH RIM	113 175376 PMIS/PKG NO. 257282 SHEET 352 OF 401

100% COMPLETE CONSTRUCTION DOCUMENTS

GRCA-257282

PLOT DATE: 6/16/2025 PLOT TIME: 6:01:58 PM SS6/V8i D3167666 - South Rim\4 Delivery\43 CAD Design\GRCA\257282\Microstation V8i Drawings\ARCH\80A1040_D3167666.dgn

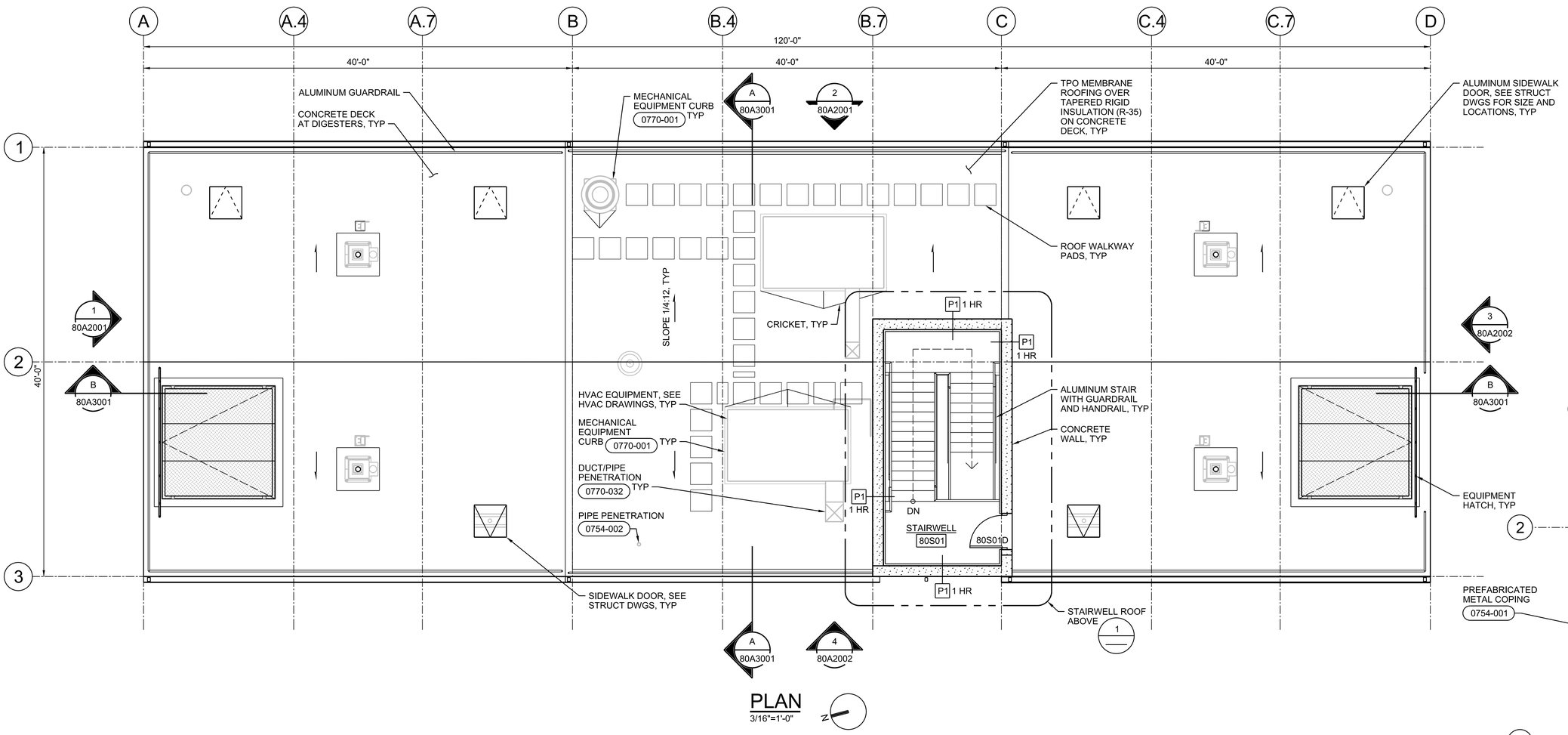

PLAN
3/16"=1'-0"

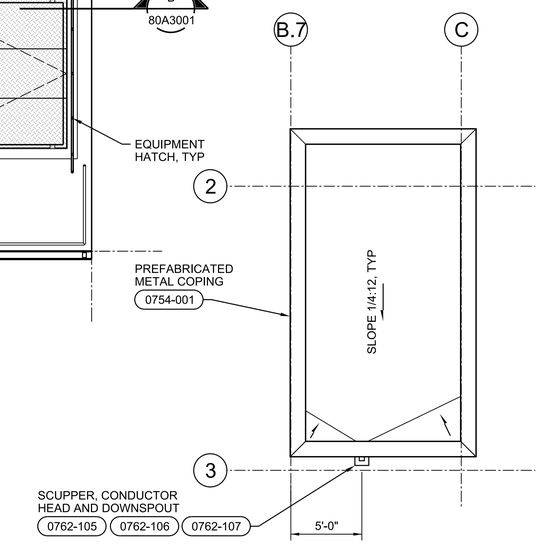

1 STAIRWELL ROOF
3/16"=1'-0"

0 4 8 16
3/16"=1'-0"

FULL SIZE DRAWINGS = 22"x34"
BAR MEASURES 1" LONG

0" 1"

REGISTERED ARCHITECT CERTIFICATE NO. 80680 MORGAN D. SHOEMAKER State Signature ARIZONA, U.S.A.
Expires 06-30-2027

A/E FIRM JACOBS GOVERNMENT SERVICES COMPANY GREENWOOD VILLAGE, CO	DESIGNED: M SHOEMAKER CADD: M COLLINS TECH. REVIEW: G KIRSTEN DATE: 06/2025	SUB SHEET NO. 80A1050	TITLE OF SHEET DIGESTER FACILITY ARCHITECTURAL ROOF PLAN GRAND CANYON, SOUTH RIM

DRAWING NO. 113 / 175376
PMIS/PKG NO. 257282
SHEET 353 OF 401

100% COMPLETE CONSTRUCTION DOCUMENTS

GRCA-257282

PLOT DATE: 6/16/2025 PLOT TIME: 6:02:42 PM SS6/V8i D3167666 - South Rim\4 Delivery\43 CAD Design\GRCA\257282\Microstation V8i Drawings\ARCH\80A1050_D3167666.dgn

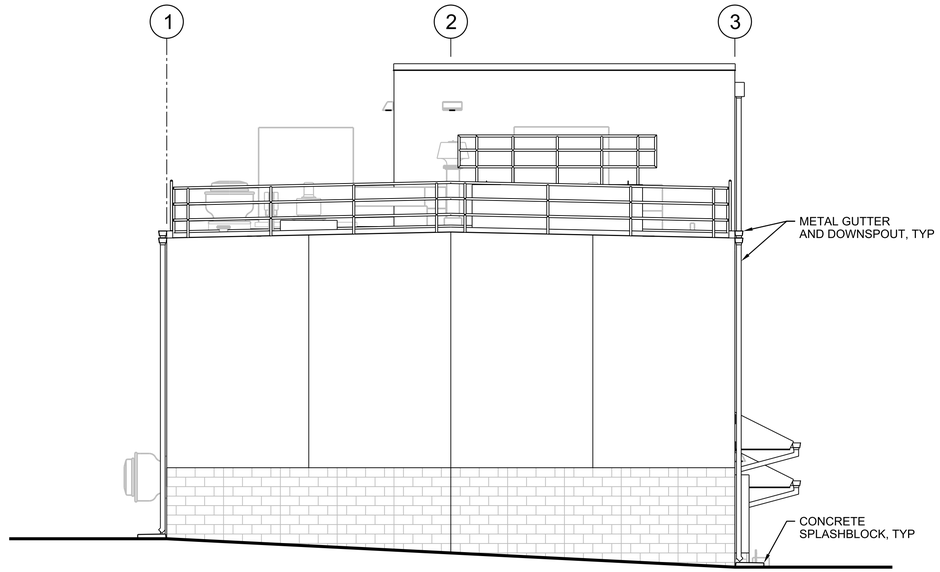

1 NORTH ELEVATION

3/16"=1'-0"

80A1030
80A1040
80A1050

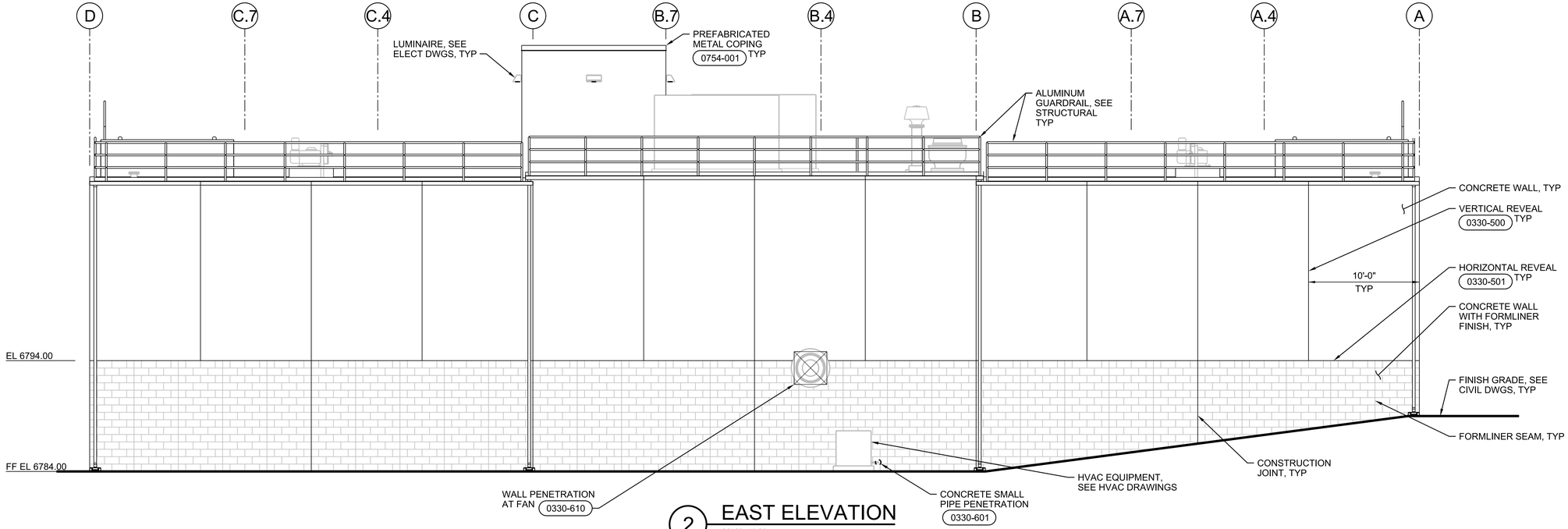

2 EAST ELEVATION

3/16"=1'-0"

80A1030
80A1040
80A1050

0 4 8 16

3/16"=1'-0"

FULL SIZE DRAWINGS = 22"x34"
BAR MEASURES 1" LONG

0" 1"

REGISTERED ARCHITECT
CERTIFICATE NO.
80681
MORGAN
D. SHOEMAKER
Date Signed 06-30-25
ARIZONA, U.S.A.
Expires 06-30-2027

A/E FIRM	DESIGNED:	SUB SHEET NO.	TITLE OF SHEET	DRAWING NO.
JACOBS GOVERNMENT SERVICES COMPANY GREENWOOD VILLAGE, CO	M SHOEMAKER CADD: M COLLINS TECH. REVIEW: G KIRSTEN DATE: 06/2025	80A2001	DIGESTER FACILITY ARCHITECTURAL ELEVATIONS GRAND CANYON, SOUTH RIM	113 175376 PMIS/PKG NO. 257282 SHEET 354 OF 401

GRCA-257282

100% COMPLETE CONSTRUCTION DOCUMENTS

PLOT DATE: 6/16/2025 PLOT TIME: 6:03:01 PM SS6/V8i D3167666 - South Rim\4 Delivery\43 CAD Design\GRCA\257282\Microstation V8i Drawings\ARCH\80A2001_D3167666.dgn

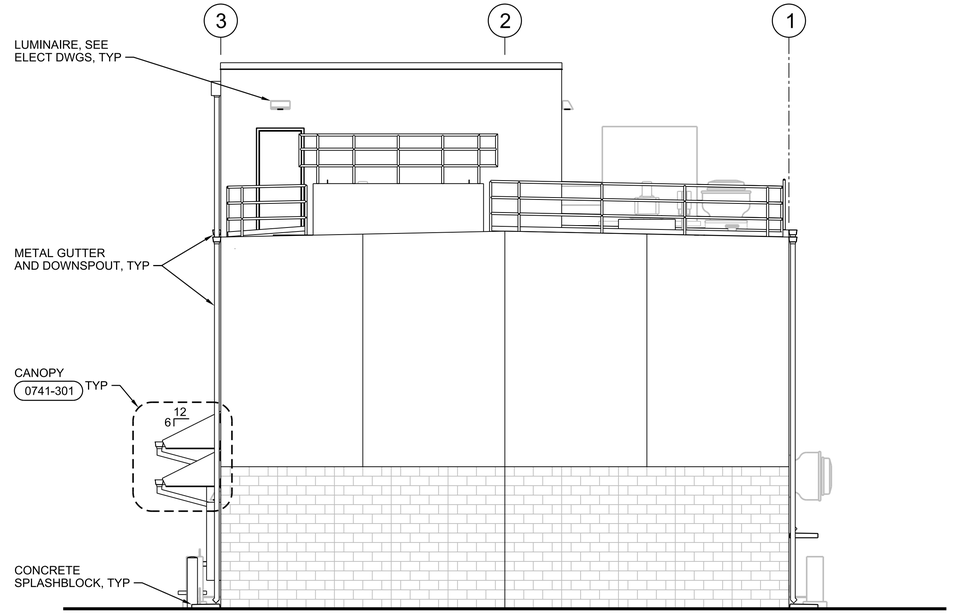

3 SOUTH ELEVATION

3/16"=1'-0"

80A1030
80A1040
80A1050

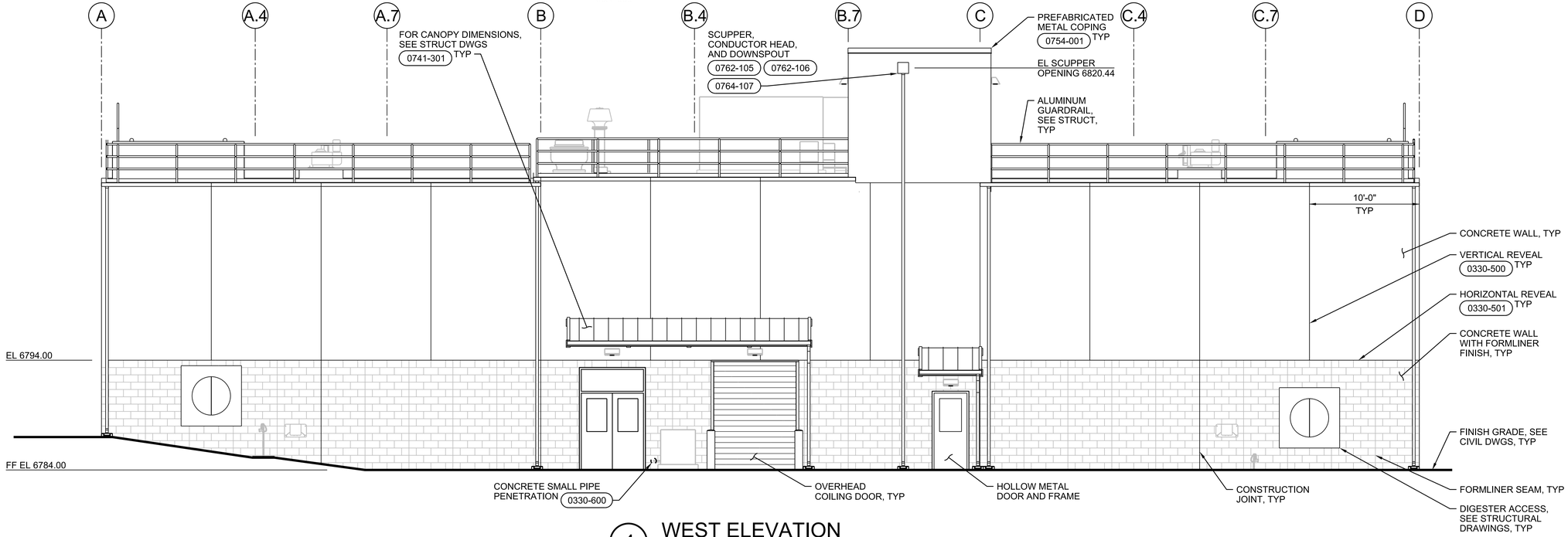

4 WEST ELEVATION

3/16"=1'-0"

80A1030
80A1040
80A1050

0 4 8 16

3/16"=1'-0"

FULL SIZE DRAWINGS = 22"x34"
BAR MEASURES 1" LONG

0" 1"

REGISTERED ARCHITECT
CERTIFICATE NO. 30083
MORGAN M. SHOEMAKER
Date Signed 06/16/25
ARIZONA, U.S.A.
Expires 06-30-2027

A/E FIRM	DESIGNED:	SUB SHEET NO.	TITLE OF SHEET	DRAWING NO.
JACOBS GOVERNMENT SERVICES COMPANY GREENWOOD VILLAGE, CO	M SHOEMAKER CADD: M COLLINS TECH. REVIEW: G KIRSTEN DATE: 06/2025	80A2002	DIGESTER FACILITY ARCHITECTURAL ELEVATIONS GRAND CANYON, SOUTH RIM	113 / 175376 PMIS/PKG NO. 257282 SHEET 355 OF 401

100% COMPLETE CONSTRUCTION DOCUMENTS

GRCA-257282

PLOT DATE: 6/16/2025 PLOT TIME: 6:02:13 PM SS6/V8I D3167666 - South Rim\4 Delivery\43 CAD Design\GRCA\257282\Microstation V8i Drawings\ARCH\80A2002_D3167666.dgn

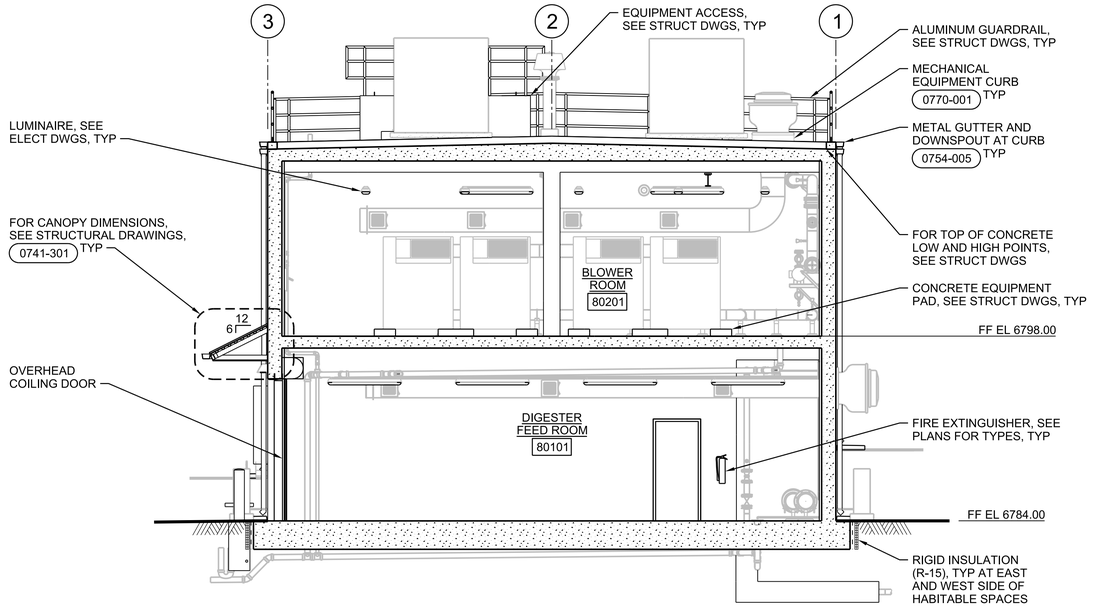

A SECTION
3/16"=1'-0"
80A1030
80A1040
80A1050

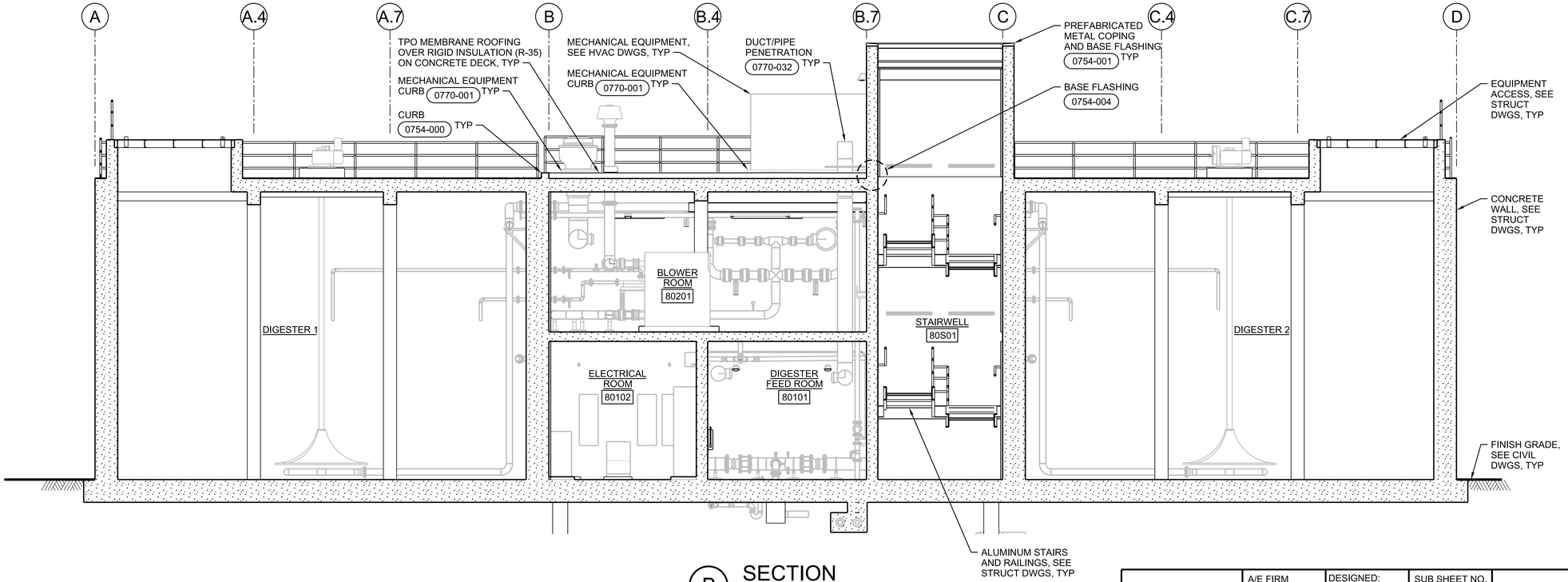

B SECTION
3/16"=1'-0"
80A1030
80A1040
80A1050

0 4 8 16
3/16"=1'-0"

FULL SIZE DRAWINGS = 22"x34"
BAR MEASURES 1" LONG
0" 1"

REGISTERED ARCHITECT
CERTIFICATE NO. 30680
MORGAN SHOEMAKER
Date Signed 06-30-25
ARIZONA, U.S.A.
Expires 06-30-2027

A/E FIRM	DESIGNED:	SUB SHEET NO.	TITLE OF SHEET	DRAWING NO.
JACOBS GOVERNMENT SERVICES COMPANY GREENWOOD VILLAGE, CO	M SHOEMAKER CADD: M COLLINS TECH. REVIEW: G KIRSTEN DATE: 06/2025	80A3001	DIGESTER FACILITY ARCHITECTURAL SECTIONS GRAND CANYON, SOUTH RIM	113 175376 PMIS/PKG NO. 257282 SHEET 356 OF 401

100% COMPLETE CONSTRUCTION DOCUMENTS

GRCA-257282

PLOT DATE: 6/16/2025 PLOT TIME: 6:02:21 PM SS6/V8i D3167666 - South Rim\4 Delivery\43 CAD Design\GRCA\257282\Microstation V8i Drawings\ARCH\80A3001_D3167666.dgn

INTERIOR FINISH SCHEDULE

ABBREVIATIONS:

ARWB	ABUSE-RESISTANT GWB	COL	COLOR	FIB	FACED INSUALTION BOARD	HGT	HEIGHT
AS	AS SELECTED	CONC	CONCRETE	FRP	FIBERGLASS REINFORCED PLASTIC	MATL	MATERIAL
CLR	CLEAR	EXP	EXPOSED STRUCTURE	FNSH	FINISH	MET	METAL
CMU	CONCRETE MASONRY UNIT	FCTY	FACTORY	GWB	GYPSUM WALL BOARD	SLR	CLEAR SEALER

NOTES:

NO. 1 NUMBERS IN THE FINISH COLUMN REFER TO PAINT SYSTEMS IN SPECIFICATION SECTION 09 90 00.
NO. 2 CODES IN COL COLUMN REFER TO COLOR LIST ON THIS DRAWING.
NO. 3 FOR EXTERIOR FINISHES AND COLORS, SEE EXTERIOR FINISH SCHEDULE ON THIS DRAWING.
NO. 4 FOR DOOR AND FRAME FINISHES, SEE DOOR AND HARDWARE SCHEDULE ON THIS DRAWING.

SPACE		FLOOR			BASE AND WAINSCOT					TYPICAL WALL			OTHER WALL			CEILING				MISCELLANEOUS				OTHER REQUIREMENTS
NO.	NAME	SUB FL	FINISH	COL	HGT	MATL	FINISH	COL	WALLS	MATL	FINISH	COL	MATL	FINISH	COL	HGT	MATL	FINISH	COL	ITEM	MATL	FINISH	COL	
80S01	STAIRWELL	CONC	SLR	CLR	---	---	---	---	---	CONC	113	P-1	FIB	FCTY	W-1	35'-2"	CONC	113	P-2					
80101	DIGESTER FEED ROOM	CONC	SLR	CLR	---	---	---	---	---	CONC	117	P-1	FIB	FCTY	W-1	12'-2"	CONC	117	P-2					
80102	ELECTRICAL ROOM	CONC	SLR	CLR	---	---	---	---	---	CONC	113	P-1	FIB	FCTY	W-1	12'-2"	CONC	113	P-2					
80201	BLOWER ROOM	CONC	SLR	CLR	---	---	---	---	---	CONC	113	P-1	FIB	FCTY	W-1	12'-4"	CONC	113	P-2					

EXTERIOR FINISH SCHEDULE

ITEM / MATERIAL	FINISH	COLOR
CONCRETE ROOF DECK	PEDESTRIAN TRAFFIC COATING	GREY
CONCRETE WALLS	SEALER	CLEAR
SHEET METAL SCUPPERS, CONDUCTOR HEADS, GUTTERS AND DOWNSPOUTS	FACTORY	M-1
LUMINAIRES	FACTORY	DARK BRONZE
PREFABRICATED METAL COPING	FACTORY	M-2
SHEET METAL ROOF	FACTORY	M-3
CANOPY FRAME	PS-5	P-4

COLOR LIST

NOTES:

NO. 1 COLOR SELECTIONS FOR THIS PROJECT MAY BE NOTED IN DOOR AND HARDWARE SCHEDULE, INTERIOR FINISH SCHEDULE, EXTERIOR FINISH SCHEDULE, PIPING SCHEDULE AND ON THE DRAWINGS BY THE LETTER-NUMBER COMBINATION IN THE MARK COLUMN OF THIS LIST.
NO. 2 SOME COLOR SELECTIONS MAY BE MADE IN VARIOUS SPECIFICATION SECTIONS.
NO. 3 USE ONLY THE COLORS NOTED OR SCHEDULED. IF A COLOR SELECTION IS NOT MADE, REQUEST ONE FROM THE ARCHITECT.
NO. 4 THE LISTED MANUFACTURERS AND COLORS ARE ONLY INCLUDED FOR THE PURPOSES OF ESTABLISING A COLOR SCHEME GUIDE AND ARE NOT INTENDED TO LIMIT THE CONTRACTOR FROM PORPOSING ALTERNATE MANUFACTURERS AND COLORS FOR REVIEW AND APPROVAL BY THE CONTRACTING OFFICER. . SPECIFICATION SECTIONS ARE LISTED IN PARENTHESIS AFTER MANUFACTURERS.

MARK	MATERIAL	MANUFACTURER	COLOR
PAINT			
P-1	PAINT	SHERWIN-WILLIAMS (SPEC 09 90 00)	DOVER WHITE - SW6385
P-2	PAINT	SHERWIN-WILLIAMS (SPEC 09 90 00)	HIGH REFLECTIVE WHITE
P-3	PAINT	SHERWIN-WILLIAMS (SPEC 09 90 00)	DOVER GRAY - SW6385
P-4	PAINT	SHERWIN-WILLIAMS (SPEC 09 90 00)	SHAMROCK - SW6454
MISCELLANEOUS			
M-1	SHEET METAL SUPPER, CONDUCTOR HEADS, GUTTERS AND DOWNSPOUTS	IMETCO (SPEC 07 41 13)	DENALI GREEN
M-2	PREFABRICATED METAL COPING	JOHNS MANVILLE (SPEC 07 62 00)	FOREST GREEN
M-3	SHEET METAL ROOF	IMETCO (SPEC 07 41 13)	DENALI GREEN
OPENINGS			
O-1	OVERHEAD COILING DOOR	COOKSON (SPEC 08 30 00)	GRAY
WALLS			
W-1	FACED INSULATION BOARD	DUPONT (SPEC 07 21 00)	WHITE

DOOR AND HARDWARE SCHEDULE

ABBREVIATIONS:

COL	COLOR	TG	TEMPERED GLASS
EXT	EXTERIOR		
FCTY	FACTORY		
FRG	FIRE RATED GLASS		
IG-C	INSULATING GLASS-CLEAR		
HM	HOLLOW METAL		
MATL	MATERIAL		
MET	METAL		

NOTES:

NO. 1 SEE THIS SHEET FOR DOOR AND FRAME TYPES.
NO. 2 FOR DOOR DETAILS, SEE DESIGN DETAILS.
NO. 3 NUMBER CODE IN HARDWARE SET COLUMN REFERS TO HARDWARE SETS IN SPECIFICATION SECTION 08 71 00.
NO. 4 NUMBERS IN FNSH COLUMN REFER TO PAINT SYSTEMS IN SPECIFICATION SECTION 09 90 00.
NO. 5 CODES IN COL COLUMN REFER TO COLOR LIST ON THIS DRAWING.
NO. 6 FOR GLASS TYPES, SEE SPECIFICATION SECTION 08 80 00.

OPENING															HARDWARE		FIRE PROTECTION RATING	OTHER REQUIREMENTS
NO.	SIZE		DOOR					FRAME				DETAILS						
	WIDTH	HEIGHT	CONSTR	TYPE	GLASS	FINISH	COL	MATL	TYPE	FINISH	COL	HEAD	JAMB	SILL	SET NO.	KEY SIDE		
80S01A	3'-0"	7'-2"	HM	G	IG-C	5	P-3	HM	SD	5	P-3	0811-001	0811-002	0871-001	7	EXT	---	
80S01B	3'-0"	7'-2"	HM	N	FRG	5	P-3	HM	SD	5	P-3	0811-001	0811-002	0871-002	12	---	45 MIN	S-16, M-1: STAIRWELL
80S01C	3'-0"	7'-2"	HM	N	FRG	5	P-3	HM	SD	5	P-3	0811-001	0811-002	0871-001	12	EXT	45 MIN	S-16, M-1: STAIRWELL
80S01D	3'-0"	7'-2"	HM	G	IG-C	5	P-3	HM	SD	5	P-3	0811-001	0811-002	0871-010	14	EXT	45 MIN	S-20
80101A	8'-0"	10'-0"	MET	OHCI	---	FCTY	O-1	MET	OHC	FCTY	O-1	0833-003	0833-004	0833-004	20	---	---	
80102A	(2) 2'-10"	7'-2"	HM	G/G	IG-C	5	P-3	HM	DDT	5	P-3	0811-001	0811-002	0871-001	5	EXT	---	
80102B	3'-0"	7'-2"	HM	G	TG	5	P-3	HM	SD	5	P-3	0811-001	0811-002	0871-002	15	---	---	M1: ELECTRICAL ROOM

DOOR TYPES

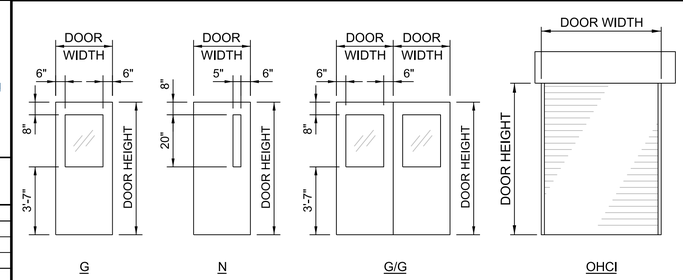

DOOR FRAME TYPES

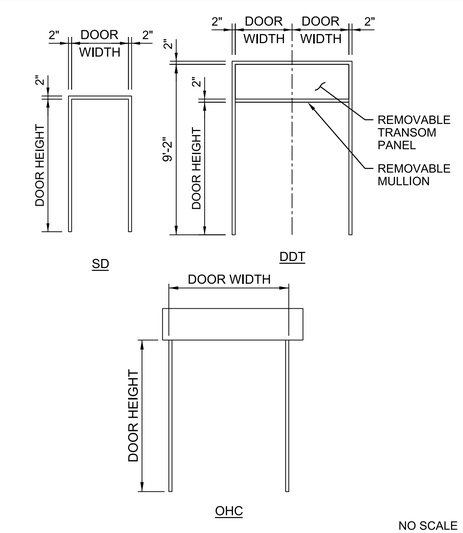

NO SCALE

FULL SIZE DRAWINGS = 22"x34"
BAR MEASURES 1" LONG
0" 1"

REGISTERED ARCHITECT CERTIFICATE NO. 33671 ROAD MORGAN SHOEMAKER Date Signed 6/16/25 ARIZONA, U.S.A.
Expires 06-30-2027

A/E FIRM	DESIGNED:	SUB SHEET NO.	TITLE OF SHEET	DRAWING NO.
JACOBS GOVERNMENT SERVICES COMPANY GREENWOOD VILLAGE, CO	M SHOEMAKER CADD: M COLLINS TECH. REVIEW: G KIRSTEN DATE: 06/2025	80A6001	DIGESTER FACILITY ARCHITECTURAL SCHEDULES GRAND CANYON, SOUTH RIM	113 175376 PMIS/PKG NO. 257282 SHEET 357 OF 401

100% COMPLETE CONSTRUCTION DOCUMENTS

GRCA-257282

PLOT DATE: 6/16/2025 PLOT TIME: 6:03:15 PM SS6\V8i D3167666 - South Rim4 Delivery\43 CAD Design\GRCA\257282\Microstation V8i Drawings\ARCH80A6001_D3167666.dgn

SHEET NOTES

1. LOCATION OF FUTURE POLYMER ADDITION TOTE AND DOSING PUMP.
2. FOR CONTINUATION SEE YARD PIPING DRAWINGS.

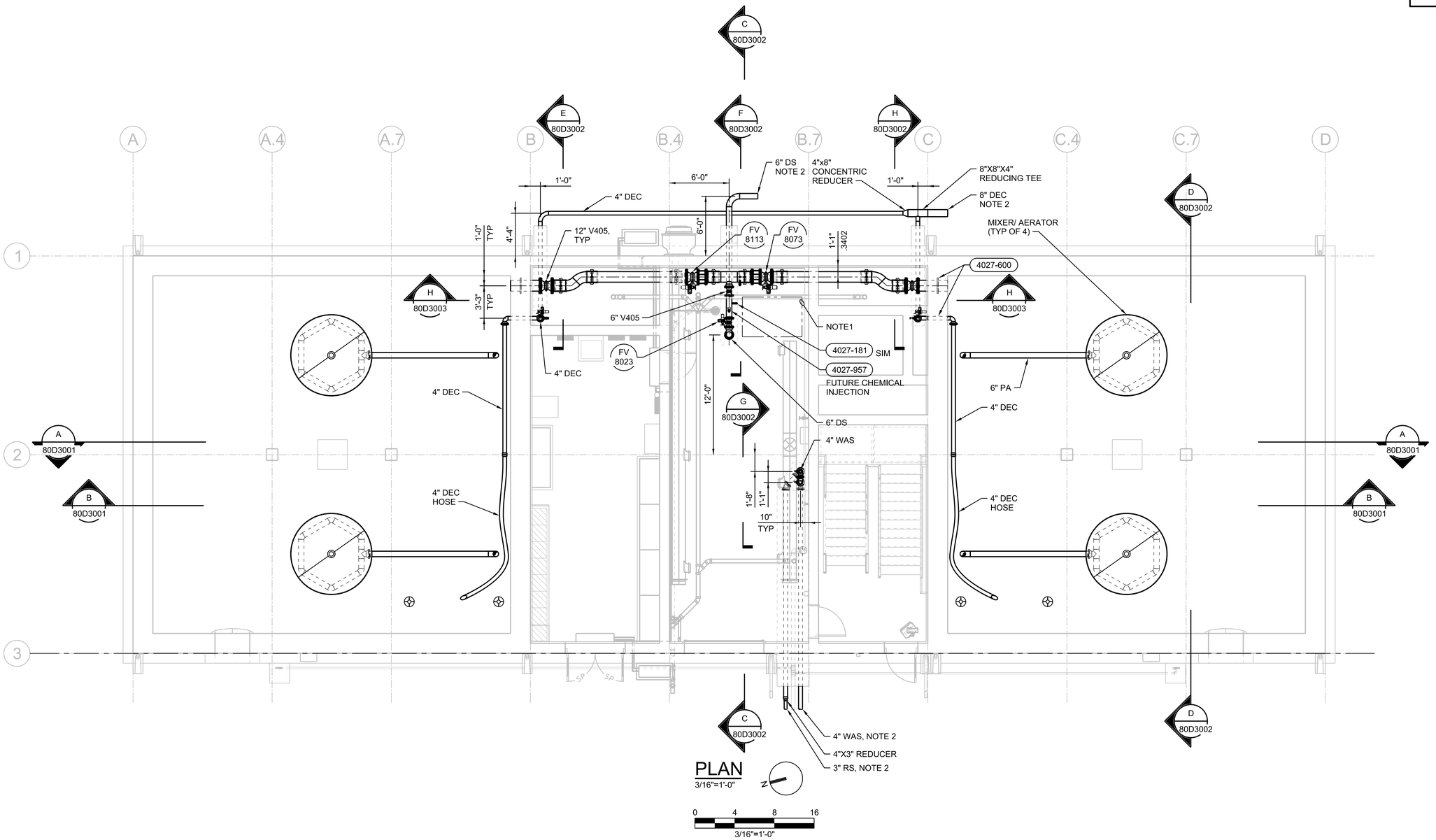

PLAN
3/16"=1'-0"

0 4 8 16
3/16"=1'-0"

FULL SIZE DRAWINGS = 22"x34"
BAR MEASURES 1" LONG
0" 1"

Registered Professional Engineer (Civil) CERTIFICATE NO. 80742 CORY LANCASTER Date Signed 6/6/25 ARIZONA, U.S.A.
Cory Lancaster

A/E FIRM	DESIGNED:	SUB SHEET NO.	TITLE OF SHEET	DRAWING NO.
JACOBS GOVERNMENT SERVICES COMPANY GREENWOOD VILLAGE, CO	C LANCASTER CADD: N HUBER TECH. REVIEW: D BRUNKOW DATE: 06/2025	80D1030	DIGESTER FACILITY MECHANICAL LOWER LEVEL PLAN GRAND CANYON, SOUTH RIM	113 175376 PMIS/PKG NO. 257282 SHEET 358 OF 401

100% COMPLETE CONSTRUCTION DOCUMENTS

GRCA-257282

PLOT DATE: 6/17/2025 PLOT TIME: 1:31:38 PM SS6/V8i D3167666 - South Rim\4 Delivery\43 CAD Design\GRCA\257282\Microstation V8i Drawings\PROC\80D1030_D3167666.dgn

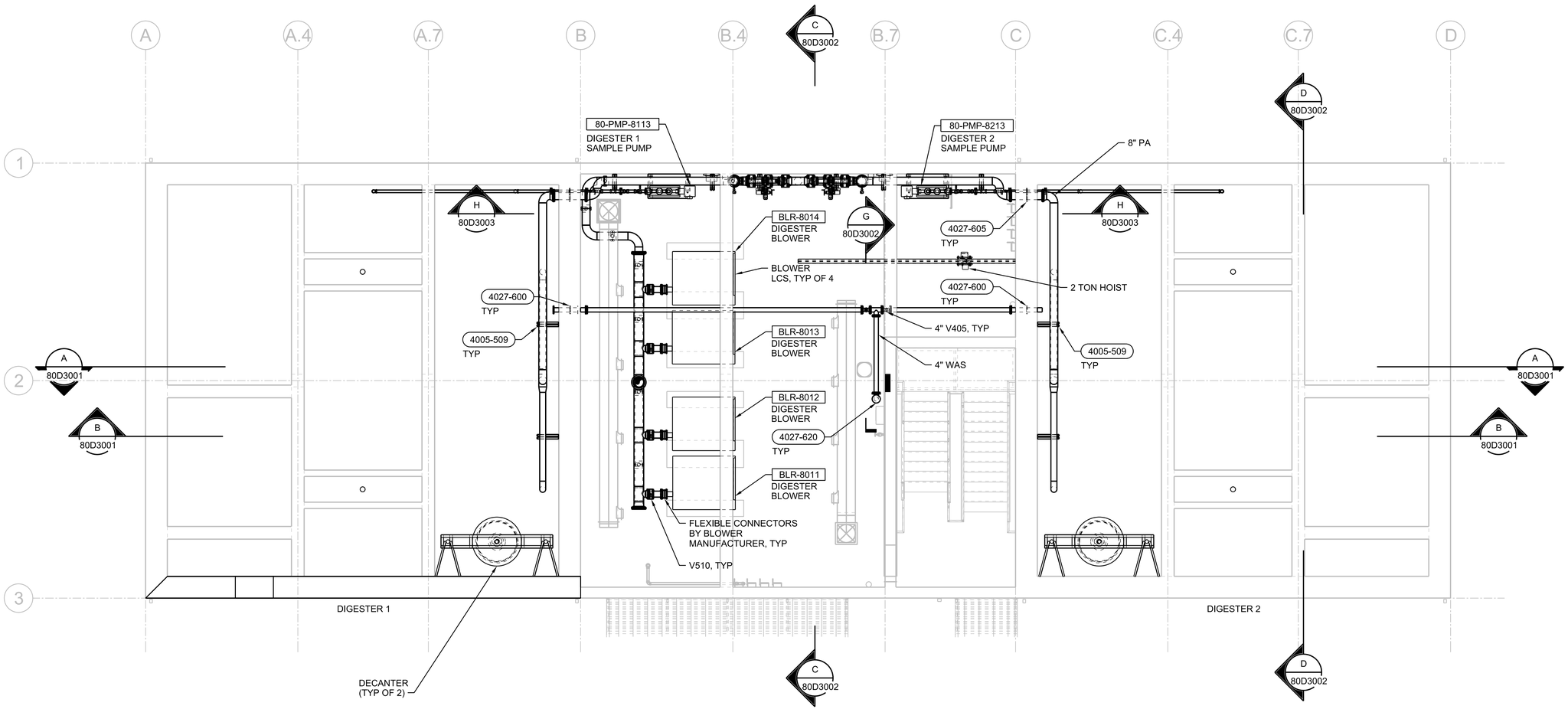

PLAN

3/16"=1'-0"

0 4 8 16

3/16"=1'-0"

FULL SIZE DRAWINGS = 22"x34"
BAR MEASURES 1" LONG

0" 1"

Registered Professional Engineer (Civil)
CERTIFICATE NO. 80742
CORY LANCASTER
Date Signed 6/17/25
ARIZONA, U.S.A.

Cory Lancaster

A/E FIRM	DESIGNED:	SUB SHEET NO.	TITLE OF SHEET	DRAWING NO.
JACOBS GOVERNMENT SERVICES COMPANY GREENWOOD VILLAGE, CO	C LANCASTER CADD: N HUBER TECH. REVIEW: D BRUNKOW DATE: 06/2025	80D1040	DIGESTER FACILITY MECHANICAL UPPER LEVEL PLAN GRAND CANYON, SOUTH RIM	113 175376 PMIS/PKG NO. 257282 SHEET 359 OF 401

100% COMPLETE CONSTRUCTION DOCUMENTS

GRCA-257282

PLOT DATE: 6/17/2025 PLOT TIME: 1:31:27 PM SS6/V8i D3167666 - South Rim\4 Delivery\43 CAD Design\GRCA\257282\Microstation V8i Drawings\PROC\80D1040_D3167666.dgn

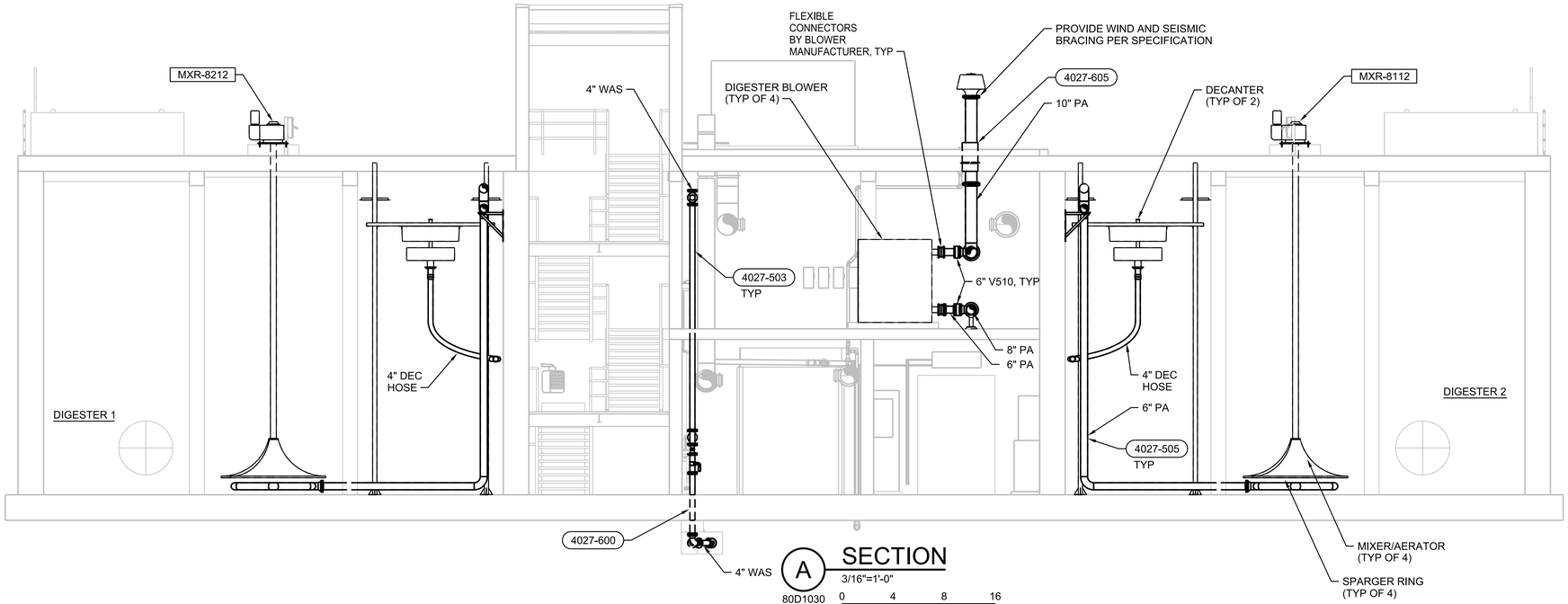

A SECTION
3/16"=1'-0"
80D1030
80D1040
0 4 8 16
3/16"=1'-0"

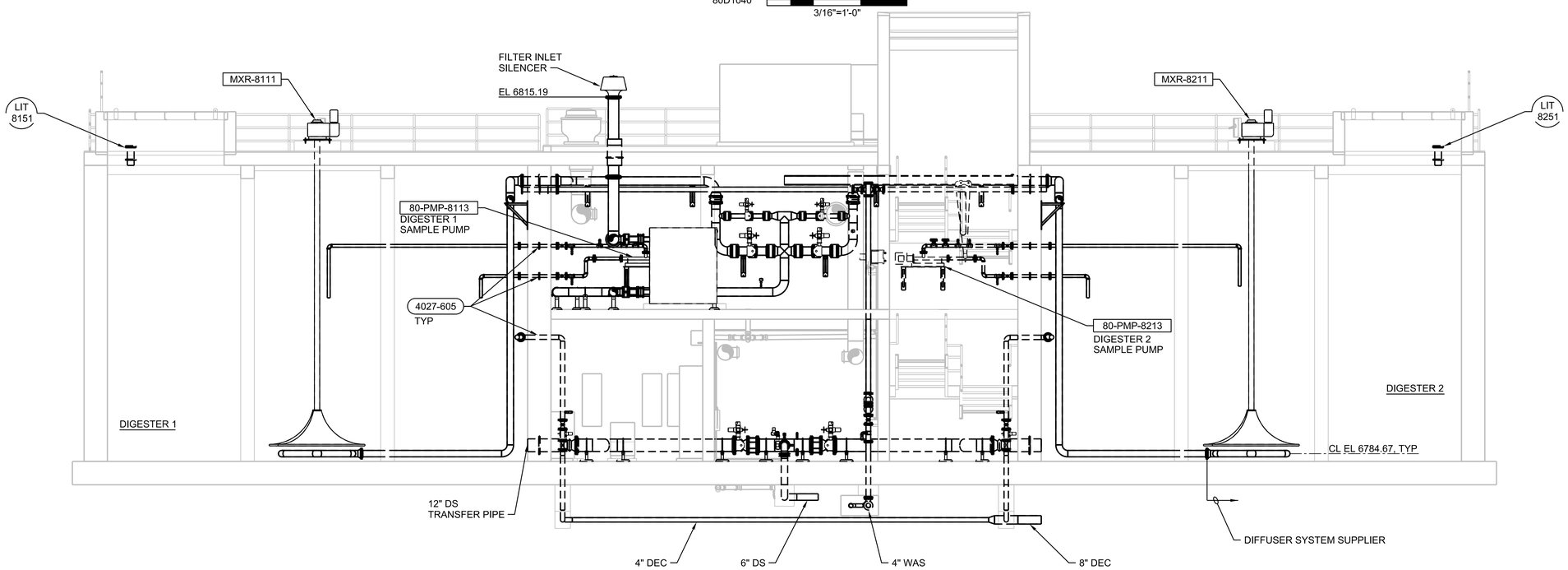

B SECTION
3/16"=1'-0"
80D1030
80D1040
0 4 8 16
3/16"=1'-0"

FULL SIZE DRAWINGS = 22"x34"
BAR MEASURES 1" LONG
0" 1"

Registered Professional Engineer (Civil)
CERTIFICATE NO. 80742
CORY C. LANCASTER
Date Signed 6/17/25
ARIZONA, U.S.A.
Cory Lancaster

A/E FIRM	DESIGNED:	SUB SHEET NO.	TITLE OF SHEET	DRAWING NO.
JACOBS GOVERNMENT SERVICES COMPANY GREENWOOD VILLAGE, CO	C LANCASTER CADD: N HUBER TECH. REVIEW: D BRUNKOW DATE: 06/2025	80D3001	DIGESTER FACILITIY MECHANICAL SECTIONS GRAND CANYON, SOUTH RIM	113 175376 PMIS/PKG NO. 257282 SHEET 360 OF 401

100% COMPLETE CONSTRUCTION DOCUMENTS

GRCA-257282

PLOT DATE: 6/17/2025 PLOT TIME: 1:32:41 PM SS6\V8i D3167666 - South Rim\4 Delivery\43 CAD Design\GRCA\257282\Microstation V8i Drawings\PROC\80D3001_D3167666.dgn

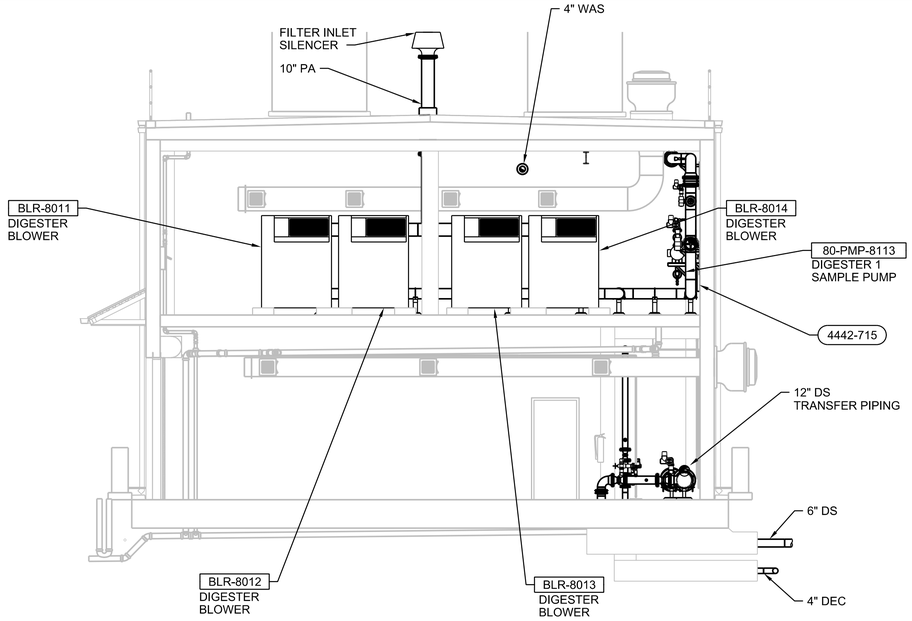

C SECTION
3/16"=1'-0"
80D1030
80D1040
0 4 8 16
3/16"=1'-0"

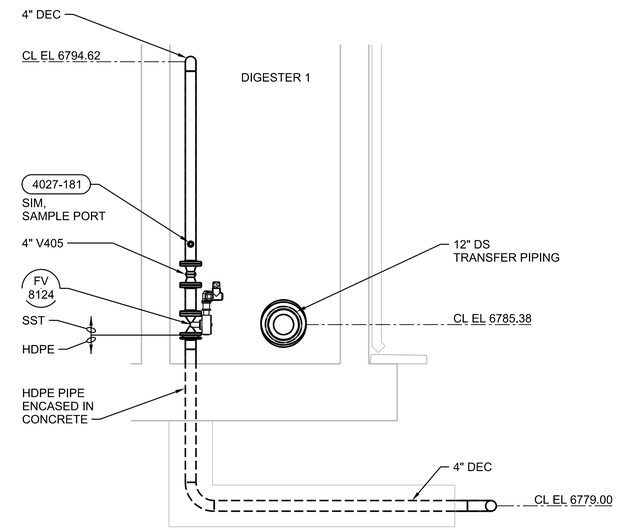

E SECTION
3/8"=1'-0"
80D1030
0 2 4 6
3/8"=1'-0"

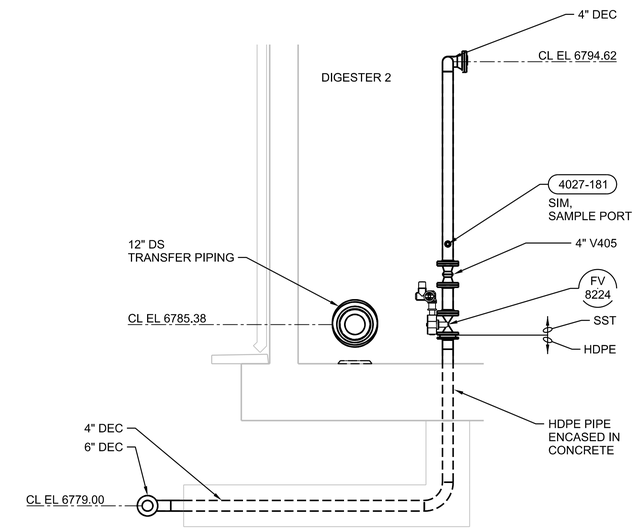

H SECTION
3/8"=1'-0"
80D1030
0 2 4 6
3/8"=1'-0"

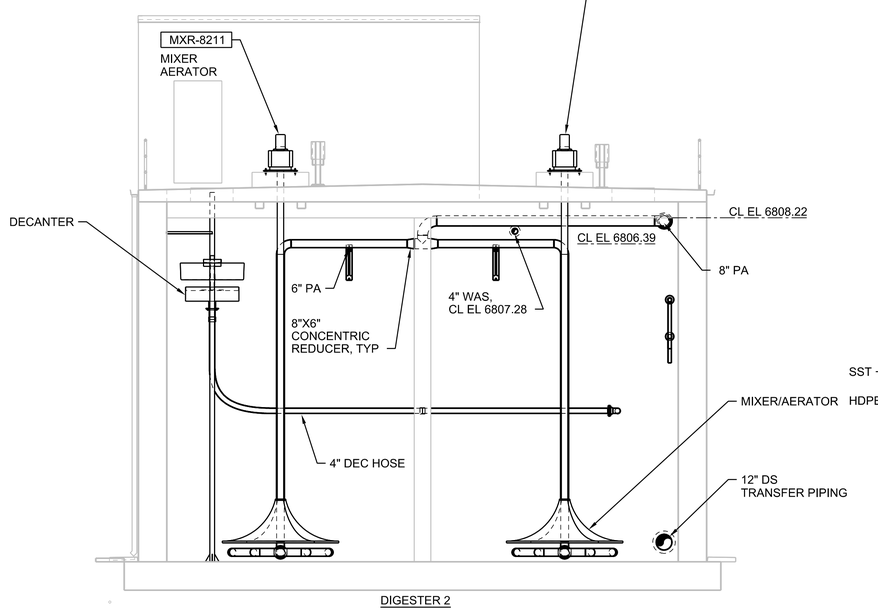

D SECTION
3/16"=1'-0"
80D1030
80D1040
0 4 8 16
3/16"=1'-0"

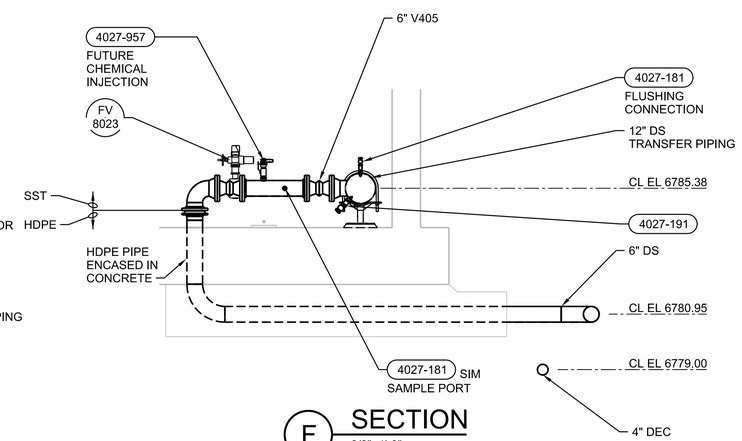

F SECTION
3/8"=1'-0"
80D1030
0 2 4 6
3/8"=1'-0"

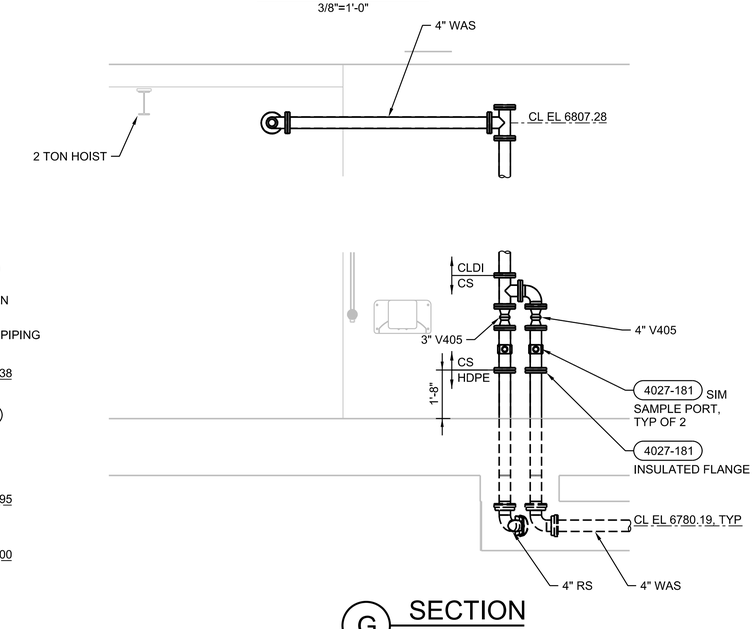

G SECTION
3/8"=1'-0"
80D1030
0 2 4 6
3/8"=1'-0"

FULL SIZE DRAWINGS = 22"x34"
BAR MEASURES 1" LONG
0" 1"

Registered Professional Engineer (Civil) CERTIFICATE NO. 80742 CORY D. LANCASTER Date Signed 6/16/25 ARIZONA, U.S.A.

A/E FIRM	DESIGNED:	SUB SHEET NO.	TITLE OF SHEET	DRAWING NO.
JACOBS GOVERNMENT SERVICES COMPANY GREENWOOD VILLAGE, CO	C LANCASTER CADD: N HUBER TECH. REVIEW: D BRUNKOW DATE: 06/2025	80D3002	DIGESTER FACILITY MECHANICAL SECTIONS GRAND CANYON, SOUTH RIM	113 / 175376 PMIS/PKG NO. 257282 SHEET 361 OF 401

GRCA-257282

100% COMPLETE CONSTRUCTION DOCUMENTS

PLOT DATE: 06\17\2025 PLOT TIME: 4:43:20 PM SS6\V8i $FILEL$

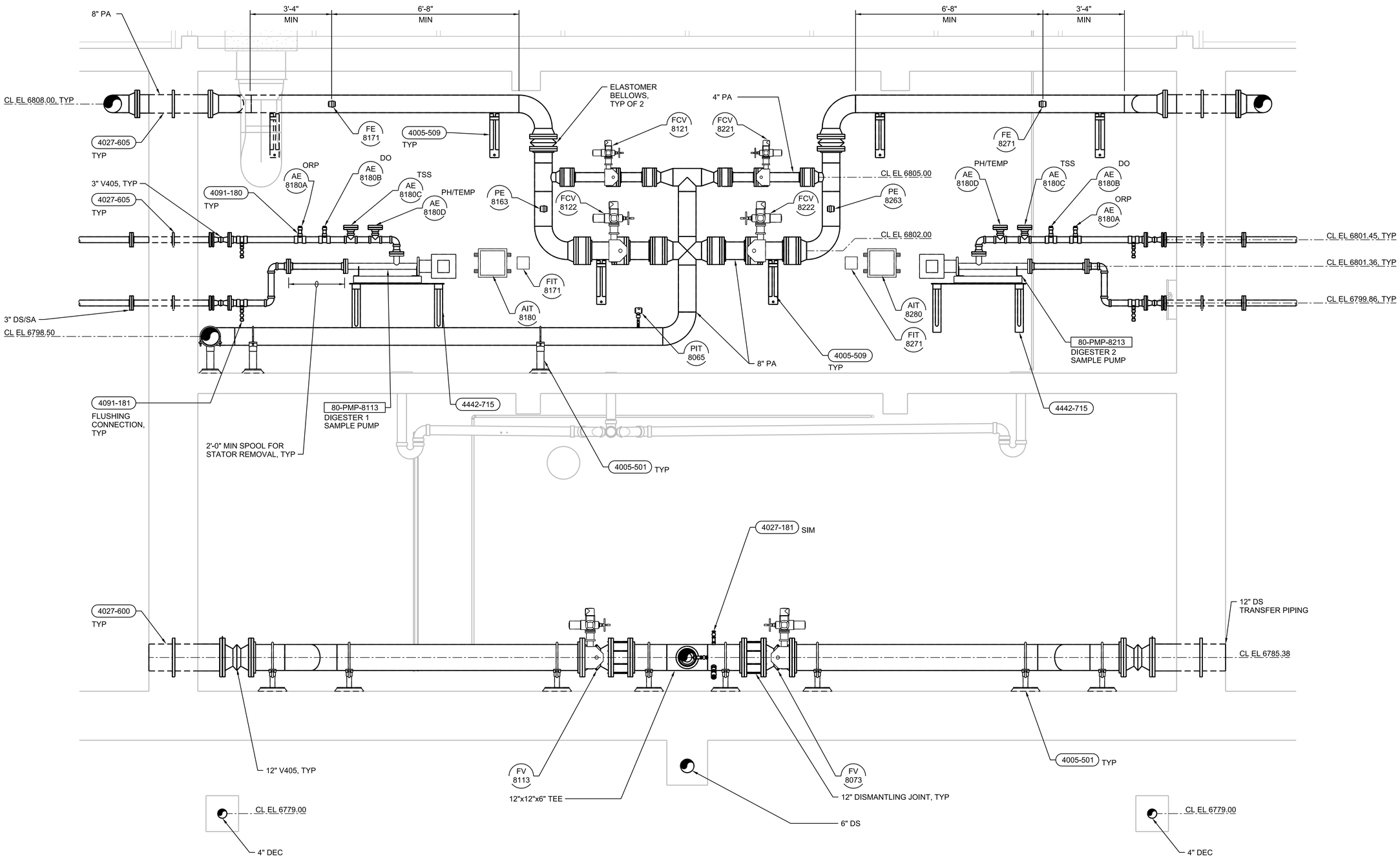

H SECTION

80D1040

1/2"=1'-0"

0 2 4 6

1/2"=1'-0"

FULL SIZE DRAWINGS = 22"x34"
BAR MEASURES 1" LONG

0" 1"

Registered Professional Engineer (Civil) CERTIFICATE NO. 80742 CORY LANCASTER Date Signed 6-18-2025 ARIZONA, U.S.A.

Cory Lancaster

A/E FIRM	DESIGNED:	SUB SHEET NO.	TITLE OF SHEET	DRAWING NO.
JACOBS GOVERNMENT SERVICES COMPANY GREENWOOD VILLAGE, CO	C LANCASTER CADD: N HUBER TECH. REVIEW: D BRUNKOW DATE: 06/2025	80D3003	DIGESTER FACILITY MECHANICAL SECTION GRAND CANYON, SOUTH RIM	113 175376 PMIS/PKG NO. 257282 SHEET 362 OF 401

100% COMPLETE CONSTRUCTION DOCUMENTS

GRCA-257282

PLOT DATE: 6/17/2025 PLOT TIME: 1:31:45 PM SS6/V8i D3167666 - South Rim\4 Delivery\43 CAD Design\GRCA\257282\Microstation V8i Drawings\PROC\80D3003_D3167666.dgn

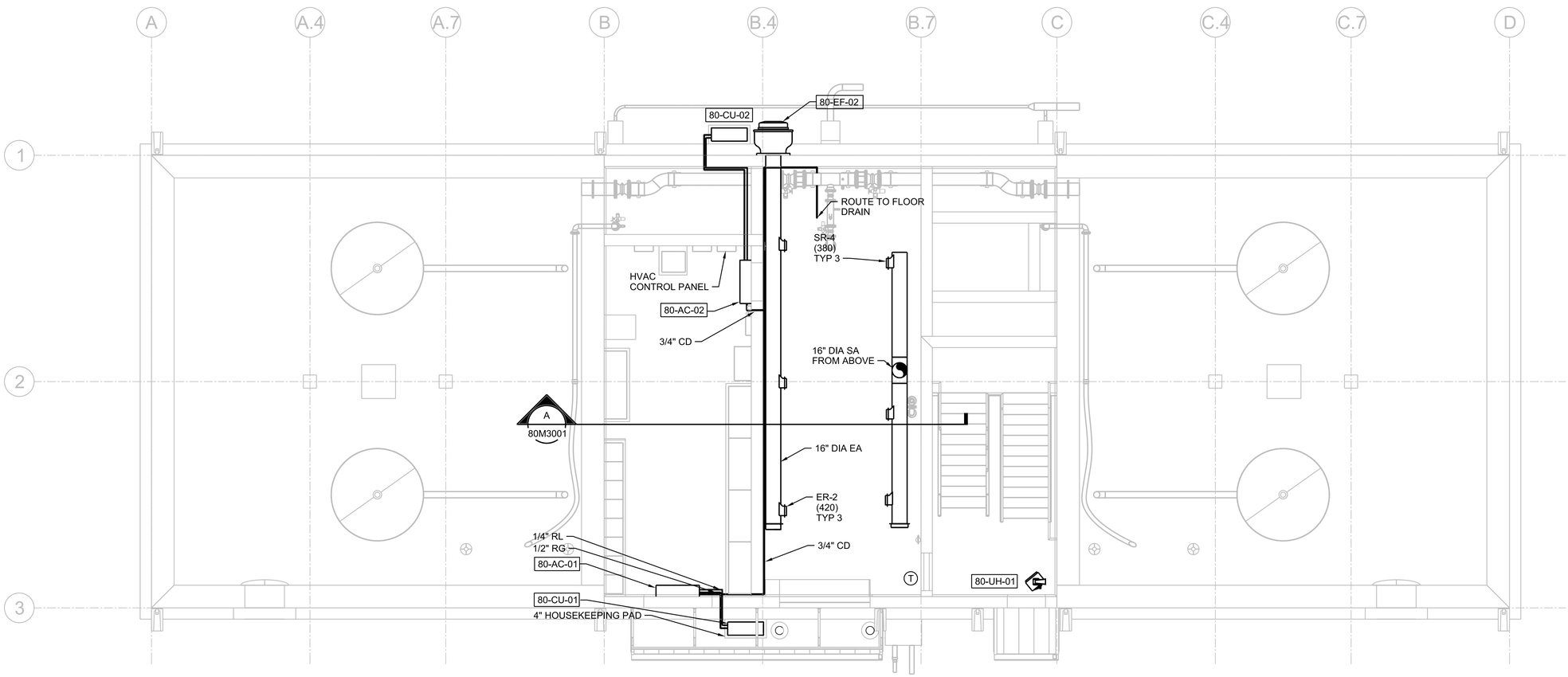

PLAN

3/16"=1'-0"

0 4 8 16

3/16"=1'-0"

FULL SIZE DRAWINGS = 22"x34"
BAR MEASURES 1" LONG

0" 1"

Registered Professional Engineer, Mechanical
CERTIFICATE NO. 46267
SCOTT HINTE
Date Signed 06-30-25
ARIZONA, U.S.A.
Expires 06-30-2026

A/E FIRM	DESIGNED:	SUB SHEET NO.	TITLE OF SHEET	DRAWING NO.
JACOBS GOVERNMENT SERVICES COMPANY GREENWOOD VILLAGE, CO	S HINTE CADD: S HOSTETLER TECH. REVIEW: J SACKINGER DATE: 06/2025	80M1030	DIGESTER FACILITY HVAC LOWER LEVEL PLAN GRAND CANYON, SOUTH RIM	113 / 175376 PMIS/PKG NO. 257282 SHEET 363 OF 401

100% COMPLETE CONSTRUCTION DOCUMENTS

GRCA-257282

PLOT DATE: 6/17/2025 PLOT TIME: 9:10:46 AM SS6/V8i D3167666 - South Rim\4 Delivery\43 CAD Design\GRCA\257282\Microstation V8i Drawings\MECH\80M1030_D3167666.dgn

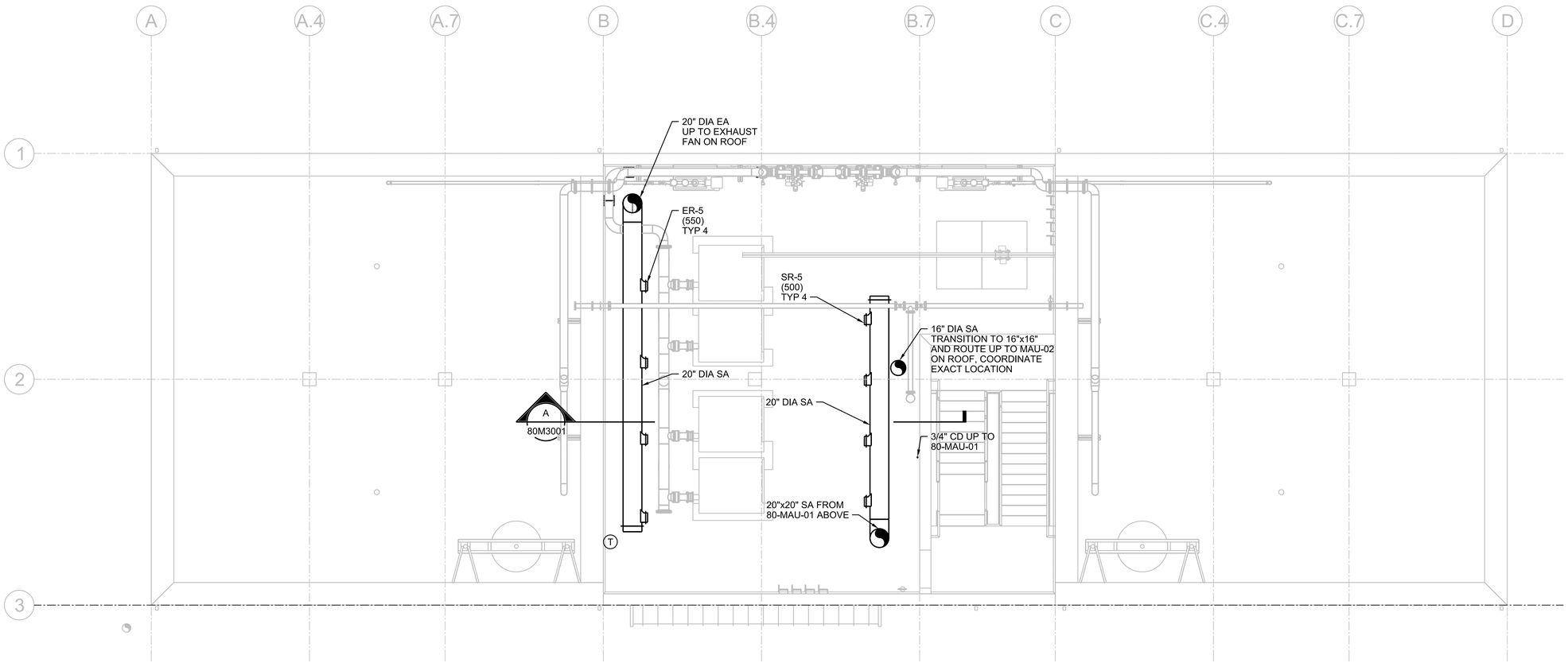

PLAN

3/16"=1'-0"

N

0 4 8 16

3/16"=1'-0"

FULL SIZE DRAWINGS = 22"x34"
BAR MEASURES 1" LONG

0" 1"

Registered Professional Engineer, Mechanical
CERTIFICATE NO. 46267
SCOTT HINTE
Date Signed 06-30-25
ARIZONA, U.S.A.
Expires 06-30-2026

A/E FIRM JACOBS GOVERNMENT SERVICES COMPANY GREENWOOD VILLAGE, CO	DESIGNED: S HINTE CADD: S HOSTETLER TECH. REVIEW: J SACKINGER DATE: 06/2025	SUB SHEET NO. 80M1040	TITLE OF SHEET DIGESTER FACILITY HVAC UPPER LEVEL PLAN GRAND CANYON, SOUTH RIM	DRAWING NO. 113 175376 PMIS/PKG NO. 257282 SHEET 364 OF 401

100% COMPLETE CONSTRUCTION DOCUMENTS

GRCA-257282

PLOT DATE: 6/17/2025 PLOT TIME: 9:11:05 AM SS6/V8i D3167666 - South Rim\4 Delivery\43 CAD Design\GRCA\257282\Microstation V8i Drawings\MECH\80M1040_D3167666.dgn

GENERAL SHEET NOTES

A. COORDINATE ROOF CURBS DIMENSIONS WITH SELECTED EQUIPMENT.

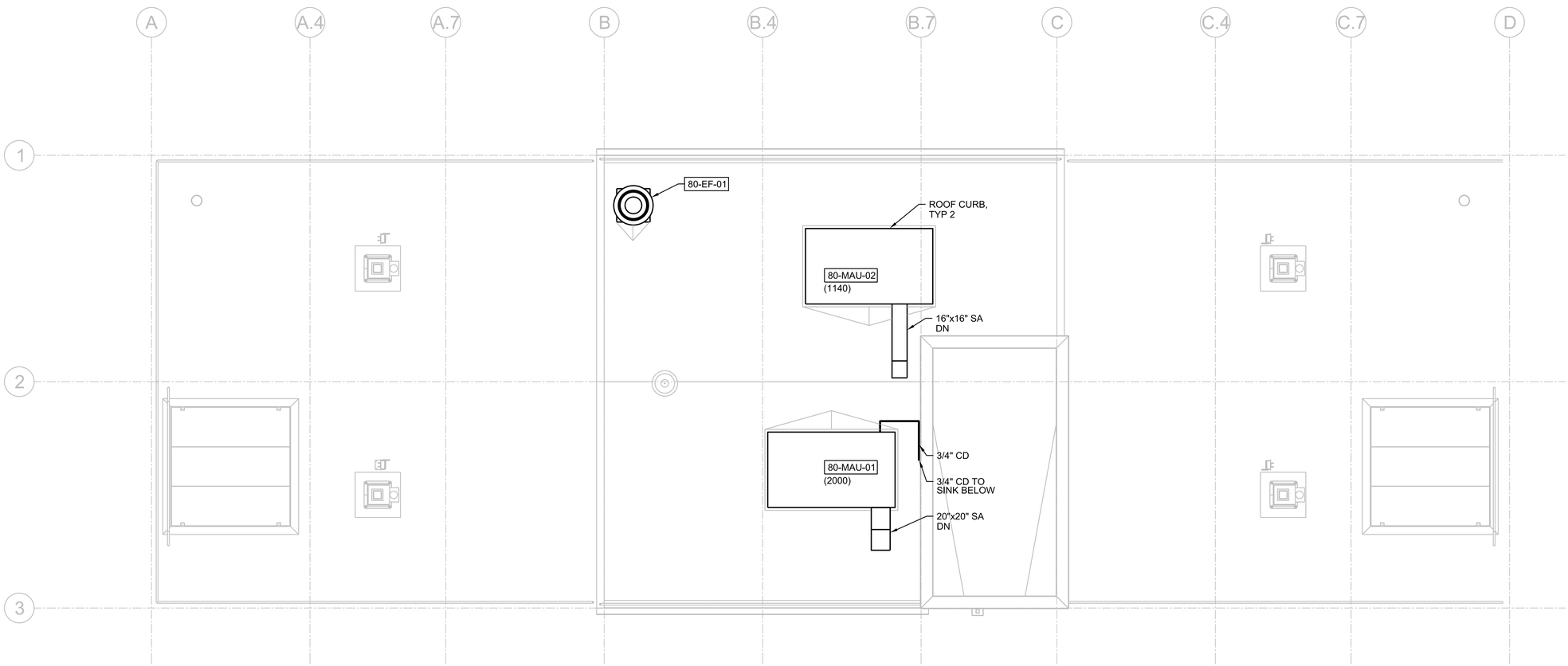

PLAN

3/16"=1'-0"

N

0 4 8 16

3/16"=1'-0"

FULL SIZE DRAWINGS = 22"x34"
BAR MEASURES 1" LONG

0" 1"

Registered Professional Engineer, Mechanical
CERTIFICATE NO. 46267
SCOTT HINTE
Date Signed 06-30-25
ARIZONA, U.S.A.
Expires 06-30-2026

A/E FIRM JACOBS GOVERNMENT SERVICES COMPANY GREENWOOD VILLAGE, CO	DESIGNED: S HINTE CADD: S HOSTETLER TECH. REVIEW: J SACKINGER DATE: 06/2025	SUB SHEET NO. 80M1050	TITLE OF SHEET DIGESTER FACILITY HVAC ROOF PLAN GRAND CANYON, SOUTH RIM	DRAWING NO. 113 / 175376 PMIS/PKG NO. 257282 SHEET 365 OF 401

100% COMPLETE CONSTRUCTION DOCUMENTS

GRCA-257282

PLOT DATE: 6/17/2025 PLOT TIME: 9:11:20 AM SS6/V8i D3167666 - South Rim\4 Delivery\43 CAD Design\GRCA\257282\Microstation V8i Drawings\MECH\80M1050_D3167666.dgn

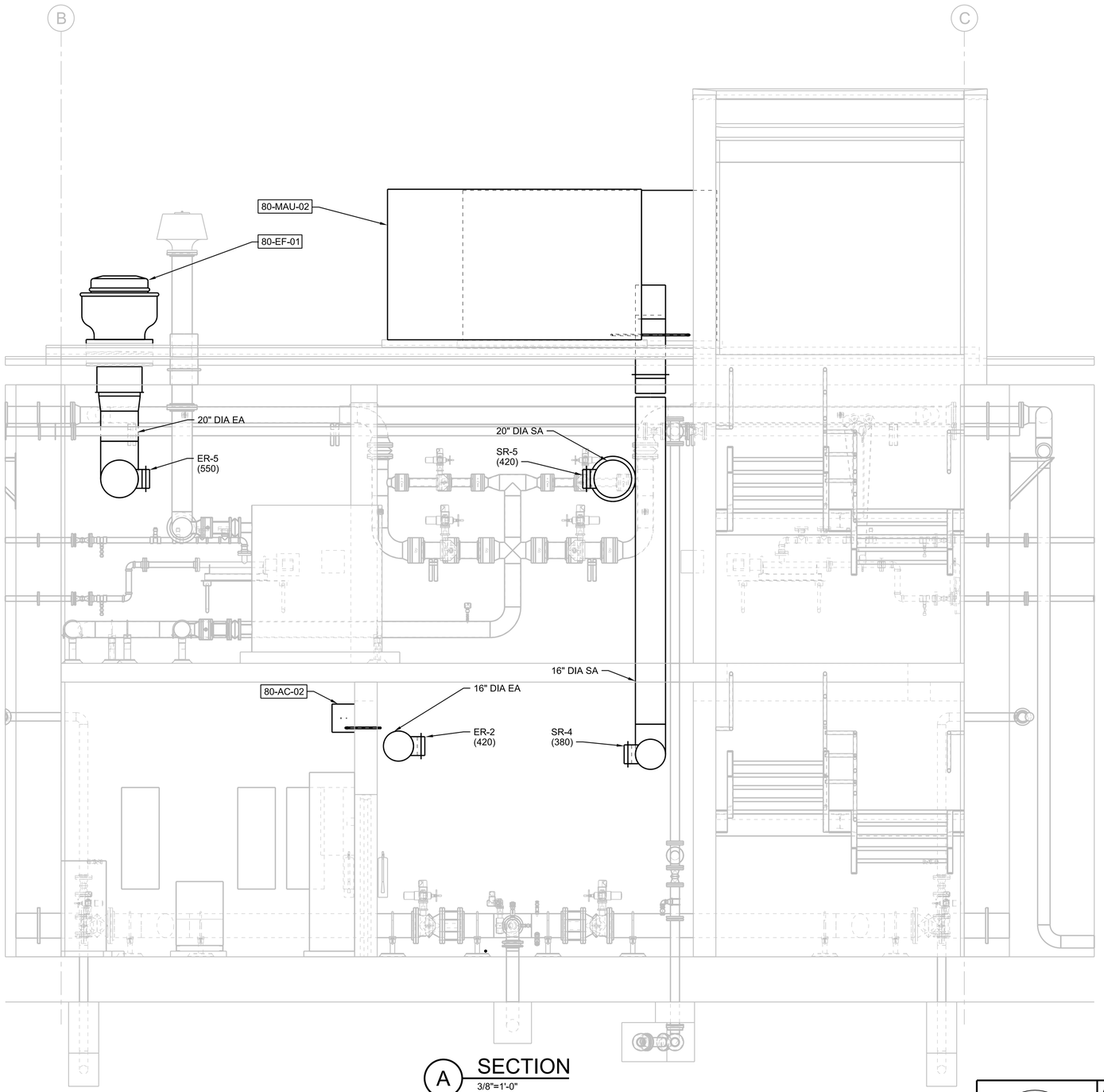

A SECTION
3/8"=1'-0"
80M1030
80M1040

0 2 4 6
3/8"=1'-0"

FULL SIZE DRAWINGS = 22"x34"
BAR MEASURES 1" LONG
0" 1"

Registered Professional Engineer (Mechanical)
CERTIFICATE NO. 46267
SCOTT HINTE
Date Signed 06-30-25
ARIZONA, U.S.A.
Scott Hinte
Expires 06-30-2026

A/E FIRM	DESIGNED:	SUB SHEET NO.	TITLE OF SHEET	DRAWING NO.
JACOBS GOVERNMENT SERVICES COMPANY GREENWOOD VILLAGE, CO	S HINTE CADD: S HOSTETLER TECH. REVIEW: J SACKINGER DATE: 06/2025	80M3001	DIGESTER FACILITY HVAC SECTION GRAND CANYON, SOUTH RIM	113 / 175376 PMIS/PKG NO. 257282 SHEET 366 OF 401

PLOT DATE: 6/17/2025 PLOT TIME: 9:11:09 AM SS6/V8i D3167666 - South Rim\4 Delivery\43 CAD Design\GRCA\257282\Microstation V8i Drawings\MECH\80M3001_D3167666.dgn

GRCA-257282

100% COMPLETE CONSTRUCTION DOCUMENTS

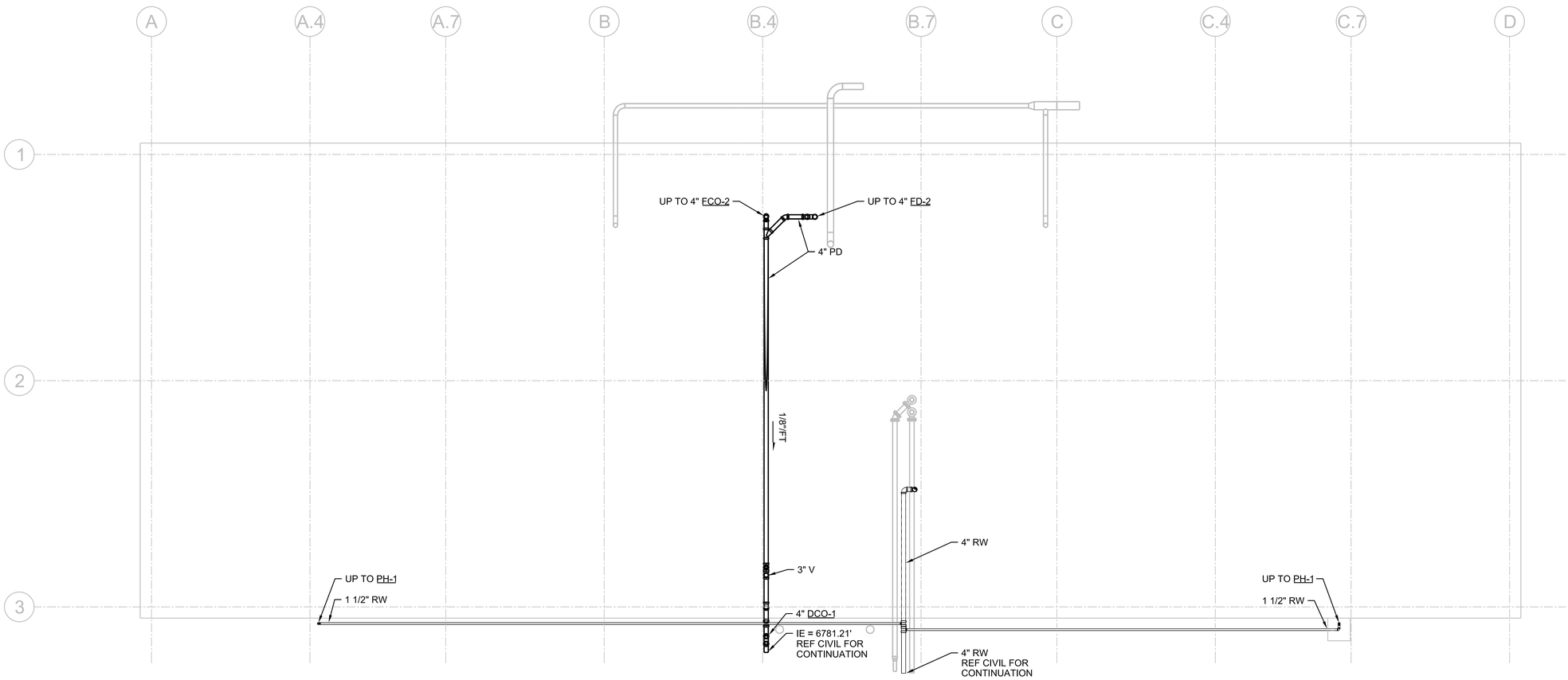

PLAN
3/16"=1'-0"

0 4 8 16
3/16"=1'-0"

FULL SIZE DRAWINGS = 22"x34"
BAR MEASURES 1" LONG
0" 1"

Registered Professional Engineer (Mechanical)
CERTIFICATE NO. 46267
SCOTT HINTE
Date Signed 06-30-25
ARIZONA, U.S.A.
Expires 06-30-2026

A/E FIRM	DESIGNED:	SUB SHEET NO.	TITLE OF SHEET	DRAWING NO.
JACOBS GOVERNMENT SERVICES COMPANY GREENWOOD VILLAGE, CO	S HINTE CADD: S HOSTETLER TECH. REVIEW: J SACKINGER DATE: 06/2025	80P1020	DIGESTER FACILITY PLUMBING UNDER FLOOR PLAN GRAND CANYON, SOUTH RIM	113 / 175376 PMIS/PKG NO. 257282 SHEET 367 OF 401

100% COMPLETE CONSTRUCTION DOCUMENTS

GRCA-257282

PLOT DATE: 6/17/2025 PLOT TIME: 10:58:56 AM SS6/V8I D3167666 - South Rim\4 Delivery\43 CAD Design\GRCA\257282\Microstation V8I DrawingsIPLUMB\80P1020_D3167666.dgn

GENERAL SHEET NOTES

A. NFWH-1, PH-1 AND V230 UTILIZING RECLAIMED WATER SHALL BE LABELED "CAUTION! NON-POTABLE WATER - DO NOT DRINK". REFER TO DETAIL 1014-002.

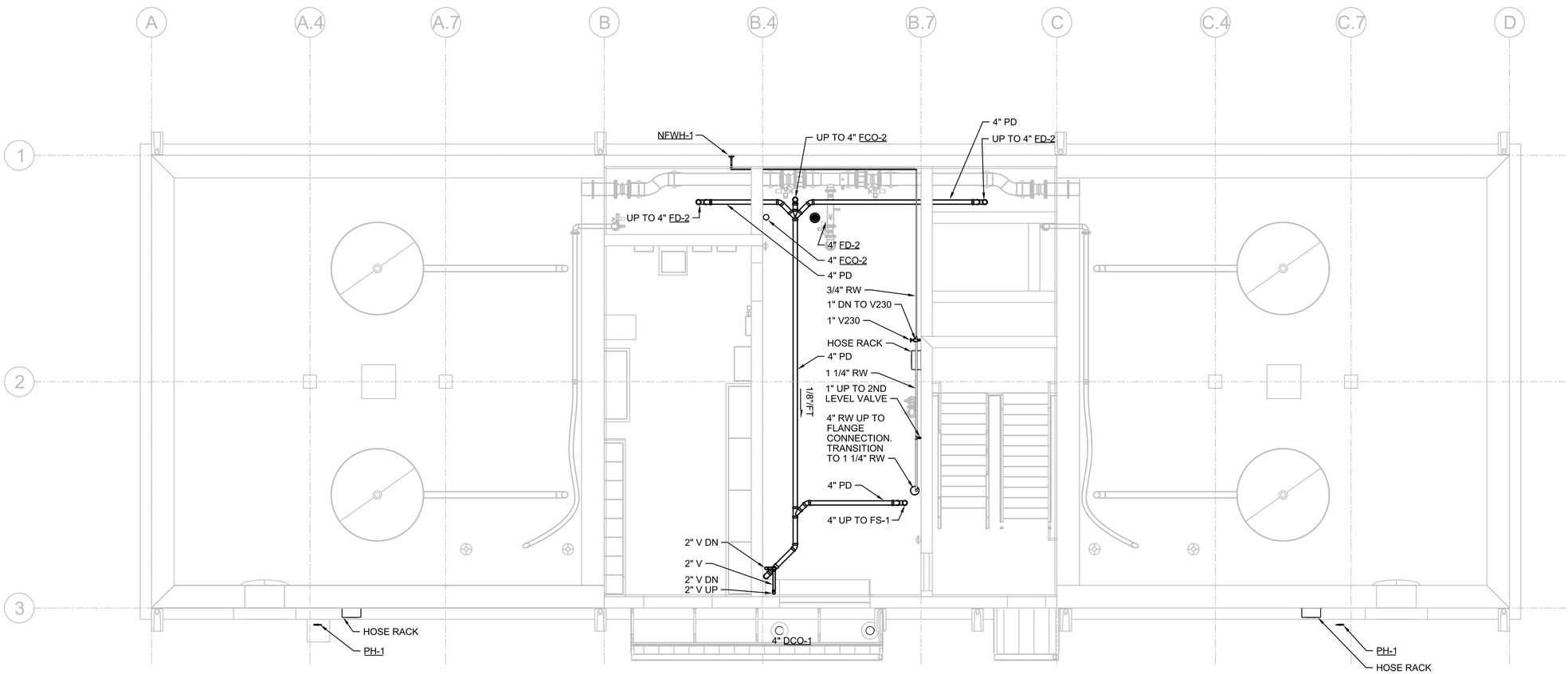

PLAN
3/16"=1'-0"

N

0 4 8 16
3/16"=1'-0"

FULL SIZE DRAWINGS = 22"x34"
BAR MEASURES 1" LONG

0" 1"

Registered Professional Engineer, Mechanical
CERTIFICATE NO. 46267
SCOTT HINTE
Date Signed 06-30-25
ARIZONA, U.S.A.
Scott Hinte
Expires 06-30-2026

A/E FIRM	DESIGNED:	SUB SHEET NO.	TITLE OF SHEET	DRAWING NO.
JACOBS GOVERNMENT SERVICES COMPANY GREENWOOD VILLAGE, CO	S HINTE CADD: S HOSTETLER TECH. REVIEW: J SACKINGER DATE: 06/2025	80P1030	DIGESTER FACILITY PLUMBING LOWER LEVEL PLAN GRAND CANYON, SOUTH RIM	113 175376 PMIS/PKG NO. 257282 SHEET 368 OF 401

100% COMPLETE CONSTRUCTION DOCUMENTS

GRCA-257282

PLOT DATE: 6/17/2025 PLOT TIME: 10:58:46 AM SS6/V8i D3167666 - South Rim\4 Delivery\43 CAD Design\GRCA\257282\Microstation V8i Drawings\PLUMB\80P1030_D3167666.dgn

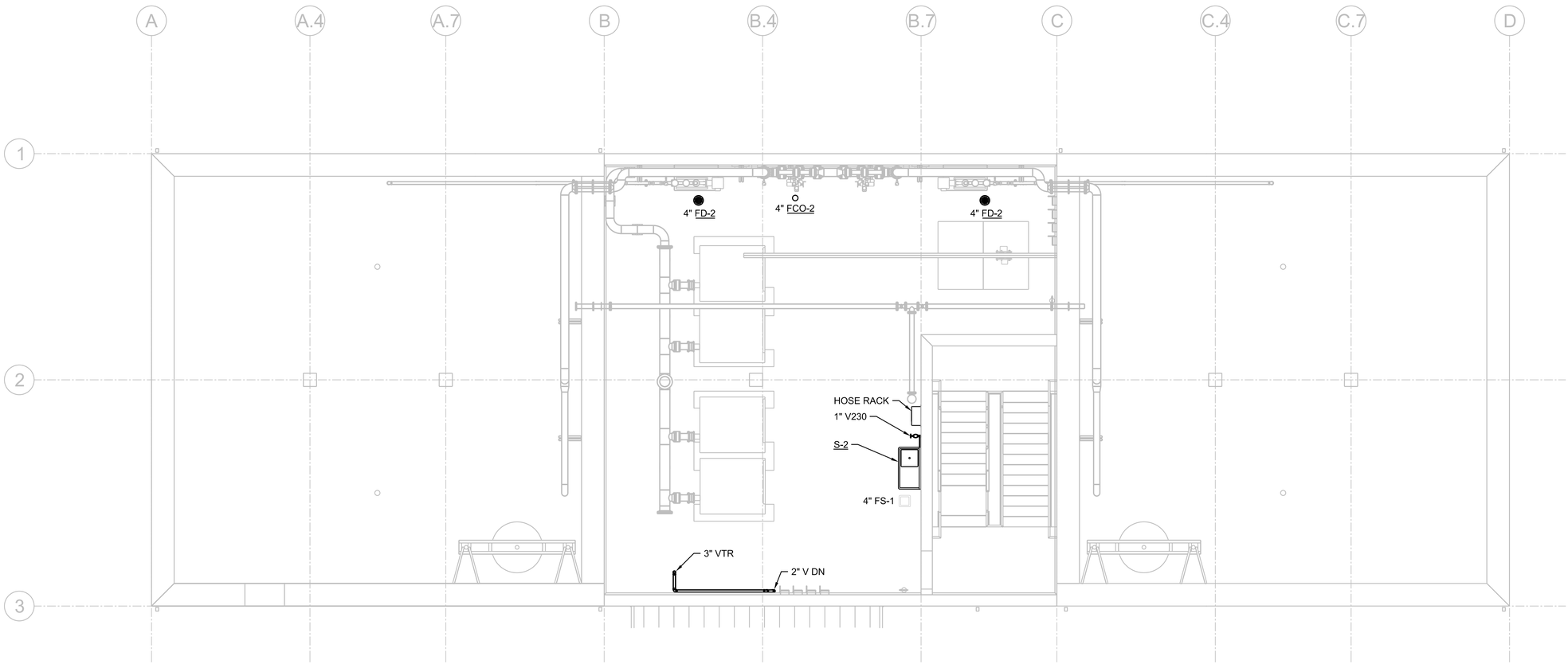

PLAN

3/16"=1'-0"

N

0 4 8 16

3/16"=1'-0"

FULL SIZE DRAWINGS = 22"x34"
BAR MEASURES 1" LONG

0" 1"

Registered Professional Engineer - Mechanical
CERTIFICATE NO. 46267
SCOTT HINTE
Date Signed 4-24-25
ARIZONA, U.S.A.
Expires 06-30-2026

A/E FIRM
JACOBS GOVERNMENT SERVICES COMPANY
GREENWOOD VILLAGE, CO

DESIGNED: S HINTE
CADD: S HOSTETLER
TECH. REVIEW: J SACKINGER
DATE: 06/2025

SUB SHEET NO.
80P1040

TITLE OF SHEET
DIGESTER FACILITY PLUMBING UPPER LEVEL PLAN

GRAND CANYON, SOUTH RIM

DRAWING NO. 113 / 175376
PMIS/PKG NO. 257282
SHEET 369 OF 401

100% COMPLETE CONSTRUCTION DOCUMENTS

GRCA-257282

PLOT DATE: 6/17/2025 PLOT TIME: 9:13:53 AM SS6/V8i D3167666 - South Rim\4 Delivery\43 CAD Design\GRCA\257282\Microstation V8i Drawings\PLUMB\80P1040_D3167666.dgn

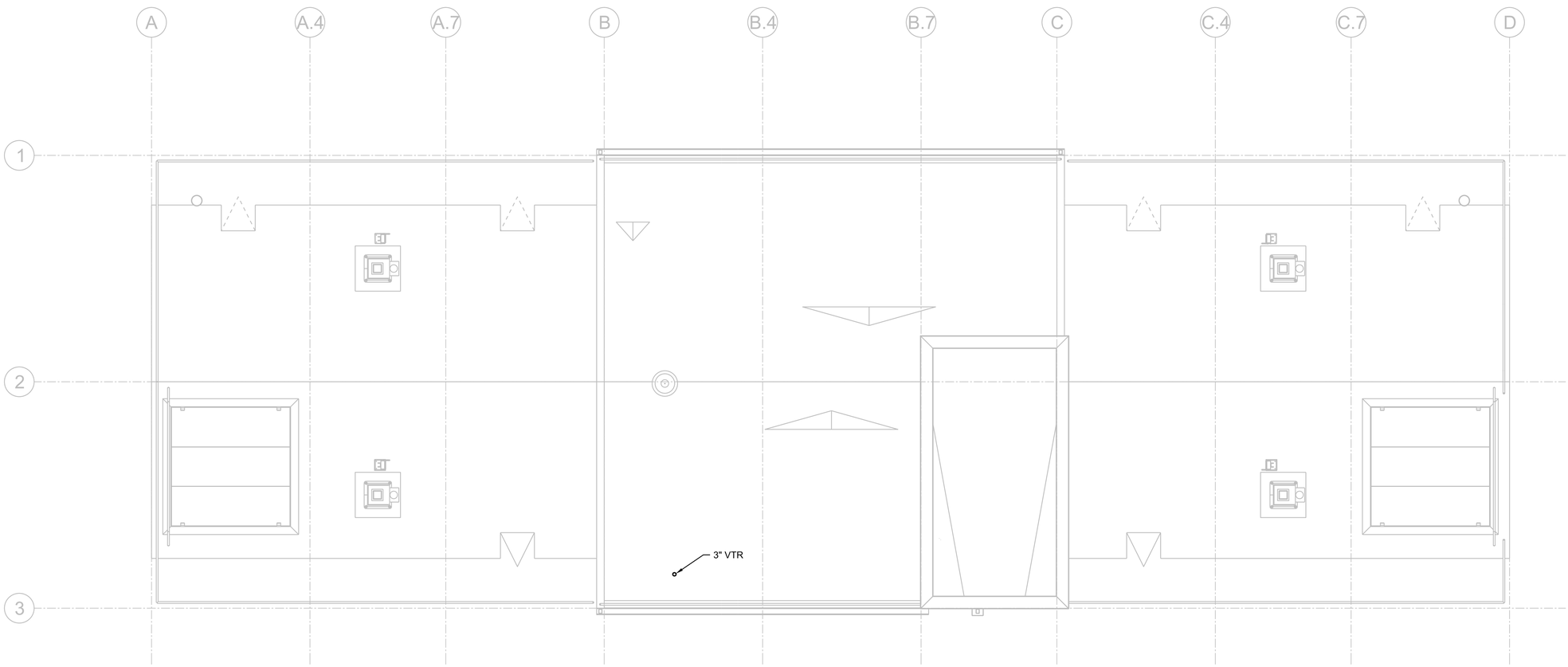

PLAN
3/16"=1'-0"

FULL SIZE DRAWINGS = 22"x34"
BAR MEASURES 1" LONG

0" 1"

0 4 8 16
3/16"=1'-0"

Registered Professional Engineer - Mechanical
CERTIFICATE NO. 46267
SCOTT HINTE
Date Signed 12-5-24
ARIZONA, U.S.A.
Expires 06-30-2026

A/E FIRM
JACOBS GOVERNMENT SERVICES COMPANY
GREENWOOD VILLAGE, CO

DESIGNED: S HINTE
CADD: S HOSTETLER
TECH. REVIEW: J SACKINGER
DATE: 06/2025

SUB SHEET NO.
80P1050

TITLE OF SHEET
DIGESTER FACILITY
PLUMBING
ROOF PLAN

GRAND CANYON, SOUTH RIM

DRAWING NO. 113 / 175376
PMIS/PKG NO. 257282
SHEET 370 OF 401

100% COMPLETE CONSTRUCTION DOCUMENTS

GRCA-257282

PLOT DATE: 6/17/2025 PLOT TIME: 9:13:49 AM SS6/V8i D3167666 - South Rim\4 Delivery\43 CAD Design\GRCA\257282\Microstation V8i Drawings\PLUMB\80P1050_D3167666.dgn

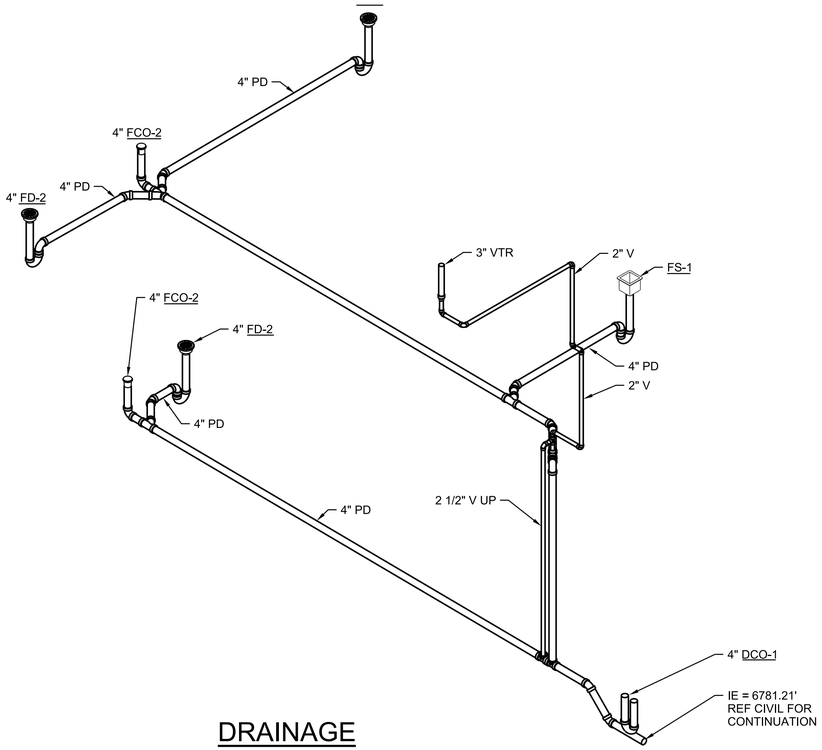

DRAINAGE

NTS

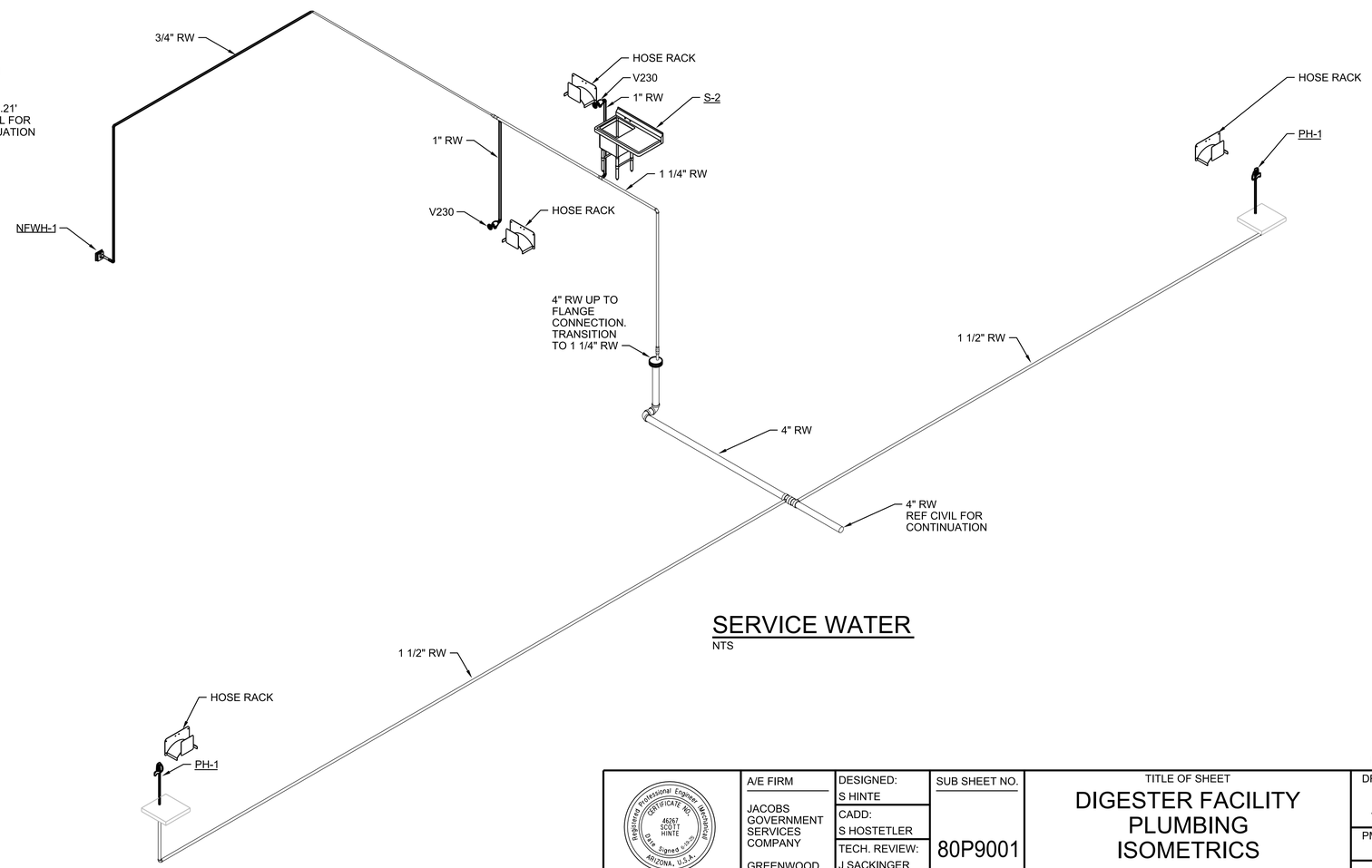

SERVICE WATER

NTS

FULL SIZE DRAWINGS = 22"x34"
BAR MEASURES 1" LONG

0" 1"

Registered Professional Engineer (Mechanical)
CERTIFICATE NO. 46267
SCOTT HINTE
Date Signed 06-30-26
ARIZONA, U.S.A.
Scott Hinte
Expires 06-30-2026

A/E FIRM	DESIGNED:	SUB SHEET NO.	TITLE OF SHEET	NO SCALE
JACOBS GOVERNMENT SERVICES COMPANY GREENWOOD VILLAGE, CO	S HINTE CADD: S HOSTETLER TECH. REVIEW: J SACKINGER DATE: 06/2025	80P9001	DIGESTER FACILITY PLUMBING ISOMETRICS GRAND CANYON, SOUTH RIM	DRAWING NO. 113 175376 PMIS/PKG NO. 257282 SHEET 371 OF 401

100% COMPLETE CONSTRUCTION DOCUMENTS

GRCA-257282

PLOT DATE: 6/17/2025 PLOT TIME: 10:59:16 AM SS6/V8I D3167666 - South Rim\4 Delivery\43 CAD Design\GRCA\257282\Microstation V8i DrawingsPLUMB\80P9001_D3167666.dgn

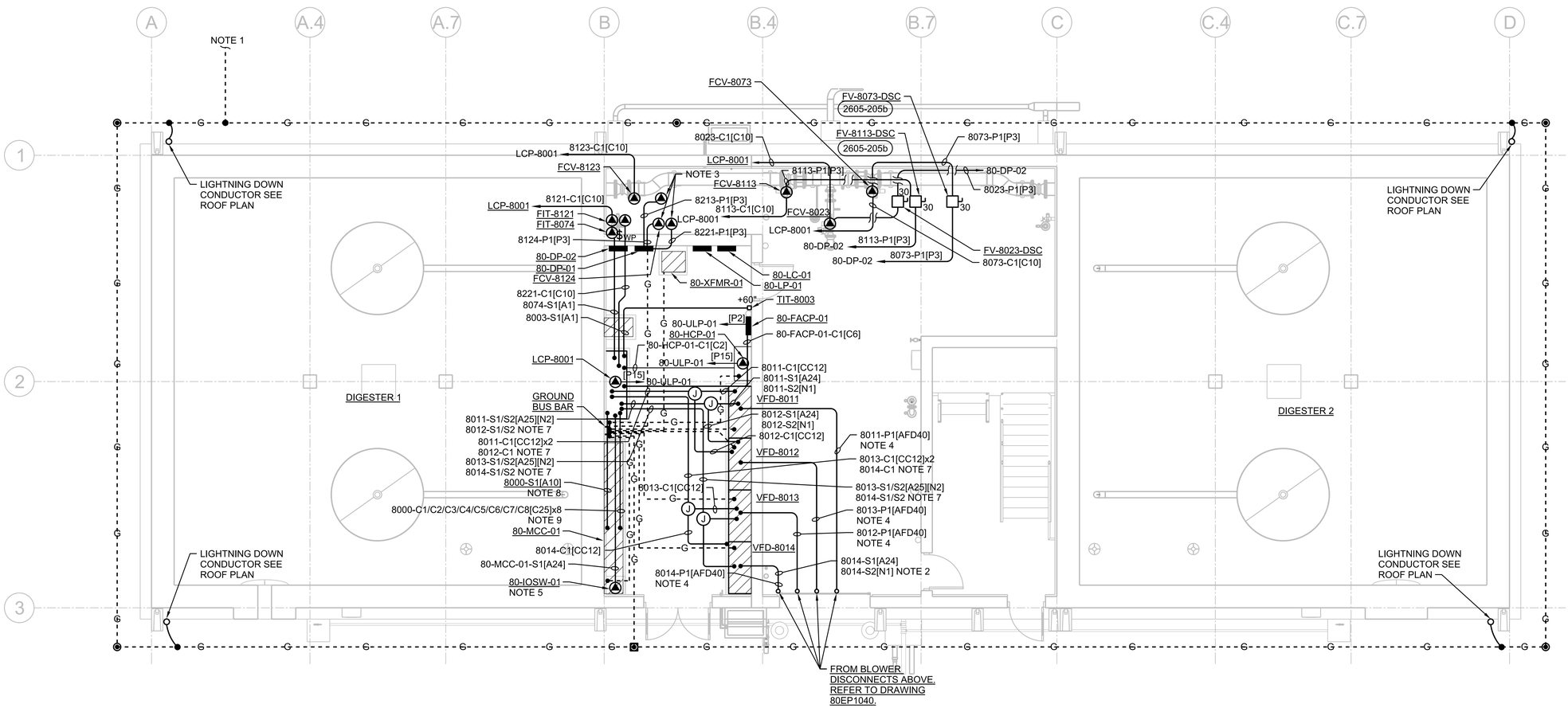

PLAN

3/16"=1'-0"

0 4 8 16

3/16"=1'-0"

GENERAL NOTES

A. PROVIDE SEALOFFS PRIOR TO TERMINATION TO ALL DEVICES, EQUIPMENT, CONTROL STATIONS, CONTROL PANELS, SENSORS, SWITCHES, AND ELECTRICAL EQUIPMENT IN HAZARD AREAS AND WHEN ENTERING/LEAVING HAZARD AREAS. REFER TO DRAWINGS 01G0250 AND 01G0251 FOR AREA CLASSIFICATIONS.

B. MAINTAIN A MINIMUM OF 24" BETWEEN POWER CONDUITS AND CONTROL (EXCEPT AS SHOWN FOR HANDSTATIONS) AND INSTRUMENTATION CONDUITS EXCEPT AT POINT OF TERMINATION.

C. PLANS ARE DIAGRAMMATIC AND NOT INTENDED TO SHOW SPECIFIC ROUTING AND RACEWAY CONFIGURATION. CONTRACTOR TO LAYOUT CONDUITS RUNS IN COMPLIANCE WITH THE GENERAL CONSTRAINTS OF THE PROJECT DOCUMENTS.

D. DO NOT DAISY CHAIN GROUND CABLES. EACH CABLE SHALL RUN INDEPENDENTLY FROM ALL OTHERS TO GROUND BAR.

E. COORDINATE CONDUIT ENCLOSURE ENTRIES WITH MANUFACTURERS INSTALLATION MANUAL PRIOR TO ROUGH-IN OF EQUIPMENT AND INSTRUMENTS.

F. PROVIDE STEEL STRUT TO SUPPORT SAFETY DISCONNECT SWITCHES TO WALL. DO NOT MOUNT SAFETY DISCONNECT SWITCH DIRECTLY TO WALL.

G. PROVIDE WALL SLEEVES OR CORE INTERIOR WALLS, FLOORS, AND CEILING, FOR CONDUIT PENETRATIONS SEAL ANNULAR SPACE AROUND CONDUIT WITH FIRE CAULK PER AN FIRE DETAIL LISTED WITH OSHA APPROVED TESTING LABORATORY.

SHEET NOTES

1. CONNECT TO RECEIVING STATION GROUND WIRE. REFER TO DRAWING 18EP1030.
2. BOND TO REPAIR IN CONCRETE.
3. PROVIDE 30 AMP, 600 VOLT, NEMA 3R, LOCKING, 3-WIRE PLUS GROUND RECEPTACLE WITH CORD AND PLUG CONNECTION TO VALVE TO SERVE AS LOCAL SAFETY DISCONNECT. PROVIDE TYPE S EXTRA-HARD-USAGE CABLE TO VALVE TERMINATION. PROVIDE SUPPORT MOUNT IN ACCORDANCE WITH DETAIL 2605-205b.
4. REFER TO DRAWING 80EP1040, SHEET NOTE 3.

GRCA-257282

100% COMPLETE CONSTRUCTION DOCUMENTS

PLOT DATE: 6/18/2025 PLOT TIME: 10:35:25 AM SS6/V8i D3167666 - South Rim\4 Delivery\43 CAD Design\GRCA\257282\Microstation V8i Drawings\ELEC\80EP1030_D3167666.dgn

FULL SIZE DRAWINGS = 22"x34"
BAR MEASURES 1" LONG

0" 1"

Registered Professional Engineer (Electrical) CERTIFICATE NO. 81240 DAVID BURGER Date Signed 6-19-2025 ARIZONA, U.S.A.

JUNE 19, 2025

A/E FIRM	DESIGNED:	SUB SHEET NO.	TITLE OF SHEET	DRAWING NO.
JACOBS GOVERNMENT SERVICES COMPANY GREENWOOD VILLAGE, CO	D BURGER CADD: J GARIBAY TECH. REVIEW: J LANDMAN DATE: 06/2025	80EP1030	DIGESTER FACILITY ELECTRICAL LOWER LEVEL PROCESS PLAN GRAND CANYON, SOUTH RIM	113 175376 PMIS/PKG NO. 257282 SHEET 372 OF 401

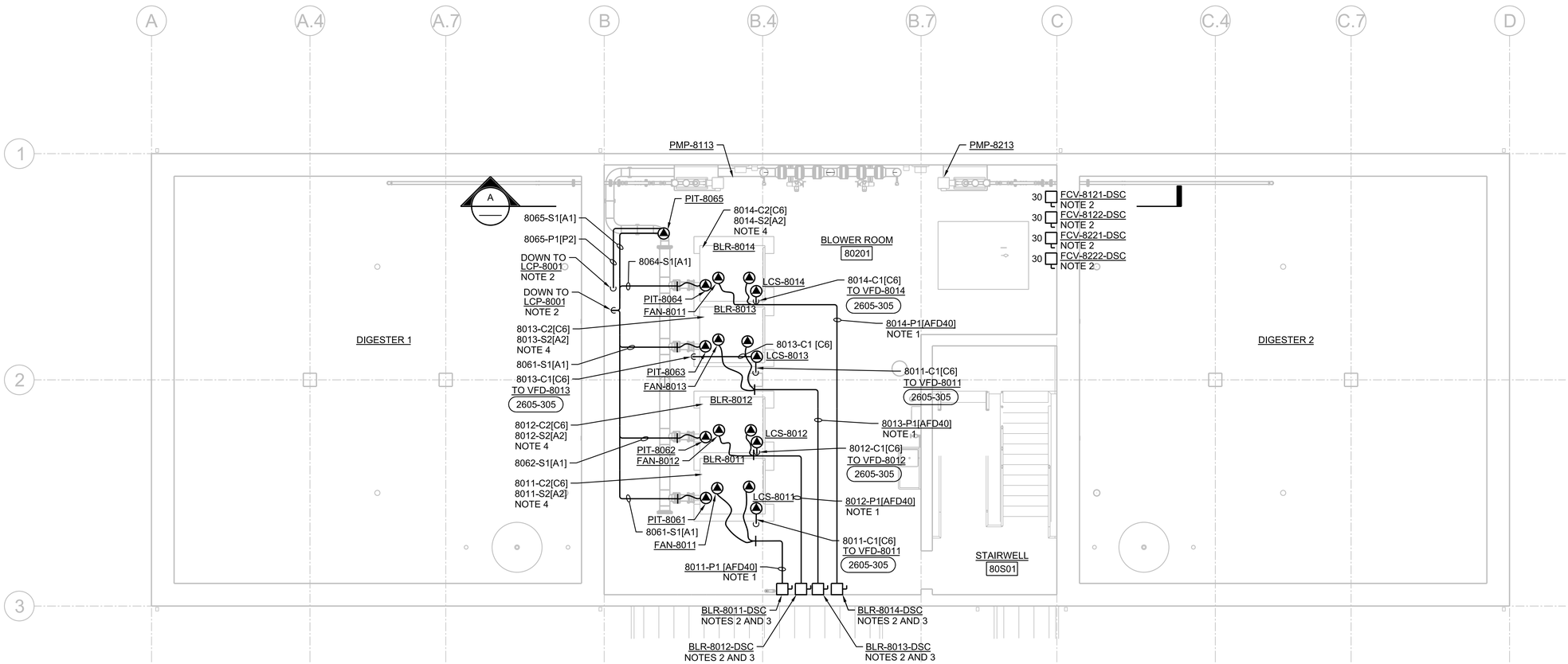

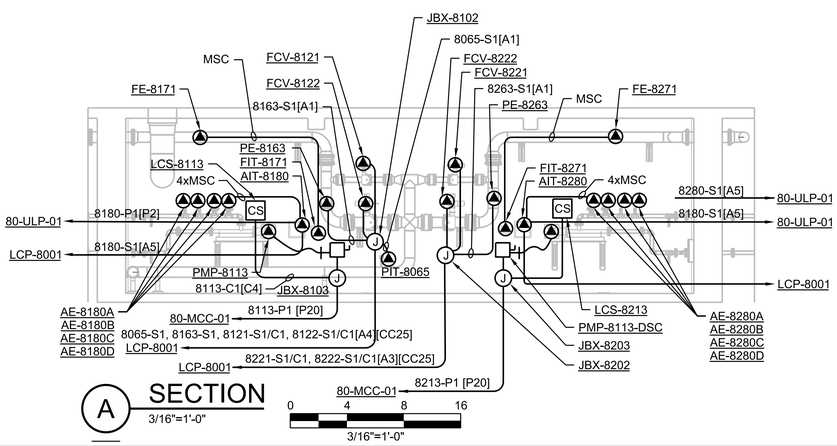

A SECTION
3/16"=1'-0"

PLAN
3/16"=1'-0"
0 4 8 16
3/16"=1'-0"

GENERAL NOTES

A. PROVIDE SEALOFFS PRIOR TO TERMINATION TO ALL DEVICES, EQUIPMENT, CONTROL STATIONS, CONTROL PANELS, SENSORS, SWITCHES, AND ELECTRICAL EQUIPMENT IN HAZARD AREAS AND WHEN ENTERING/LEAVING HAZARD AREAS. REFER TO DRAWINGS 01G0250 AND 01G0251 FOR AREA CLASSIFICATIONS.

B. MAINTAIN A MINIMUM OF 24" BETWEEN POWER CONDUITS AND CONTROL (EXCEPT AS SHOWN FOR HANDSTATIONS) AND INSTRUMENTATION CONDUITS EXCEPT AT POINT OF TERMINATION.

C. PLANS ARE DIAGRAMMATIC AND NOT INTENDED TO SHOW SPECIFIC ROUTING AND RACEWAY CONFIGURATION. CONTRACTOR TO LAYOUT CONDUIT RUNS IN COMPLIANCE WITH THE GENERAL CONSTRAINTS OF THE PROJECT DOCUMENTS.

D. COORDINATE CONDUIT ENCLOSURE ENTRIES WITH MANUFACTURERS INSTALLATION MANUAL PRIOR TO ROUGH-IN OF EQUIPMENT AND INSTRUMENTS.

E. PROVIDE STEEL STRUT TO SUPPORT SAFETY DISCONNECT SWITCHES TO WALL. DO NOT MOUNT SAFETY DISCONNECT SWITCH DIRECTLY TO WALL.

F. PROVIDE WALL SLEEVES OR CORE INTERIOR WALLS, FLOORS, AND CEILING, FOR CONDUIT PENETRATIONS SEAL ANNULAR SPACE AROUND CONDUIT WITH FIRE CAULK PER AN FIRE DERAIL LISTED WITH OSHA APPROVED TESTING LABORATORY.

SHEET NOTES

1. ROUTE OVERHEAD FROM DISCONNECT TO BLOWER. AT BLOWER, PROVIDE FLOOR TO CEILING STRUT SUPPORT FOR CONDUIT IN ACCORDANCE WITH DETAIL 2605-318.

2. MAINTAIN A MINIMUM OF 24" CENTERLINE SPACING BETWEEN CORE DRILLS FOR CONDUITS. LOCATE CORE DRILLS A MINIMUM OF 8 INCHES FROM WALL/FLOOR JOINT TO EDGE OF CORE.

3. PROVIDE SLEEVE OR CORE IN ACCORDANCE WITH SHEET NOTE 2. CONTINUE CONDUIT AND TYPE 8 VFD CABLE [P40] TO ASSOCIATED VFD. PROVIDE 2#14 AWG FROM DISCONNECT AUXILIARY CONTACT TO VFD TO SHUT OFF IGBT'S PRIOR TO SAFETY SWITCH OPENING.VFD CABLE [AFD41] TO ASSOCIATED VFD. PROVIDE 2 AUXILLIARY CONTACTS IN DISCONNECT. PROVIDE 2#14 AWG FROM DISCONNECT AUXILLIARY CONTACT TO VFD TO SHUT OF IGBT'S PRIOR TO SAFETY DISCONNECT OPENING. PROVIDE 2#14 AWG FOR BLOWER ENCLOSURE COOLING FAN TO DISCONNECT FAN POWER.

4. PROVIDE 1-1/4" CONDUIT WITH 6#14, 1#14G CONTROL WIRES AND 2 PAIR #16 TWISTED SHIELDED INSTRUMENT WIRE FOR PSL-801x, TSH-801xD, TSH-801xM AND TSH-801xE. x = 1, 2, 3,4 REFER TO P&ID SHEET 09N8001. TERMINATE PER VENDOR INSTALLATION MANUAL

FULL SIZE DRAWINGS = 22"x34"
BAR MEASURES 1" LONG
0" 1"

Registered Professional Engineer (Electrical) CERTIFICATE NO. 81240 DAVID BURGER Date Signed 6-19-2025 ARIZONA, U.S.A.
JUNE 19, 2025

A/E FIRM	DESIGNED:	SUB SHEET NO.	TITLE OF SHEET	DRAWING NO.
JACOBS GOVERNMENT SERVICES COMPANY GREENWOOD VILLAGE, CO	D BURGER CADD: J GARIBAY TECH. REVIEW: J LANDMAN DATE: 06/2025	80EP1040	DIGESTER FACILITY ELECTRICAL UPPER LEVEL PROCESS PLAN GRAND CANYON, SOUTH RIM	113 / 175376 PMIS/PKG NO. 257282 SHEET 373 OF 401

100% COMPLETE CONSTRUCTION DOCUMENTS

GRCA-257282

PLOT DATE: 6/16/2025 PLOT TIME: 11:38:45 PM SS6/V8i D3167666 - South Rim\4 Delivery\43 CAD Design\GRCA\257282\Microstation V8i DrawingsIELEC\80EP1040_D3167666.dgn

GENERAL SHEET NOTES

A. PROVIDE SEAL-OFFS PRIOR TO TERMINATION TO ALL DEVICES, EQUIPMENT, CONTROL STATIONS, CONTROL PANELS, SENSORS, SWITCHES, AND ELECTRICAL EQUIPMENT IN HAZARD AREAS AND WHEN ENTERNING/LEAVING HAZARD AREAS. REFER TO DRAWINGS 01G0250 AND 01G0251 FOR AREA CLASSIFICATIONS.

B. MAINTAIN A MINIMUM OF 24" BETWEEN POWER CONDUITS AND CONTROL (EXCEPT AS SHOWN FOR HANDSTATIONS) AND INSTRUMENTATION CONDUITS EXCEPT AT POINT OF TERMINATION.

C. PLANS ARE DIAGRAMMATIC AND NOT INTENDED TO SHOW SPECIFIC ROUTING, OFFSETS, CONDULETS, PULLBOXES, SUPPORTS OR RACEWAY CONFIGURATION NECESSARY FOR A COMPLETE SYSTEM. CONTRACTOR TO LAYOUT CONDUIT RUNS IN COMPLIANCE WITH THE GENERAL CONSTRAINTS OF THE PROJECT DOCUMENTS.

D. COORDINATE CONDUIT ENCLOSURE ENTRIES WITH MANUFACTURERS INSTALLATION MANUAL PRIOR TO ROUGH-IN OF EQUIPMENT AND INSTRUMENTS.

E. DO NOT MOUNT SAFETY DISCONNECTS TO EQUIPMENT.

F. PROVIDE WALL SLEEVES OR CORE INTERIOR WALLS, FLOORS, AND CEILING, FOR CONDUIT PENETRATIONS. SEAL ANNULAR SPACE AROUND CONDUIT WITH FIRE CAULK PER AN FIRE DETAIL LISTED WITH OSHA APPROVED TESTING LABORATORY.

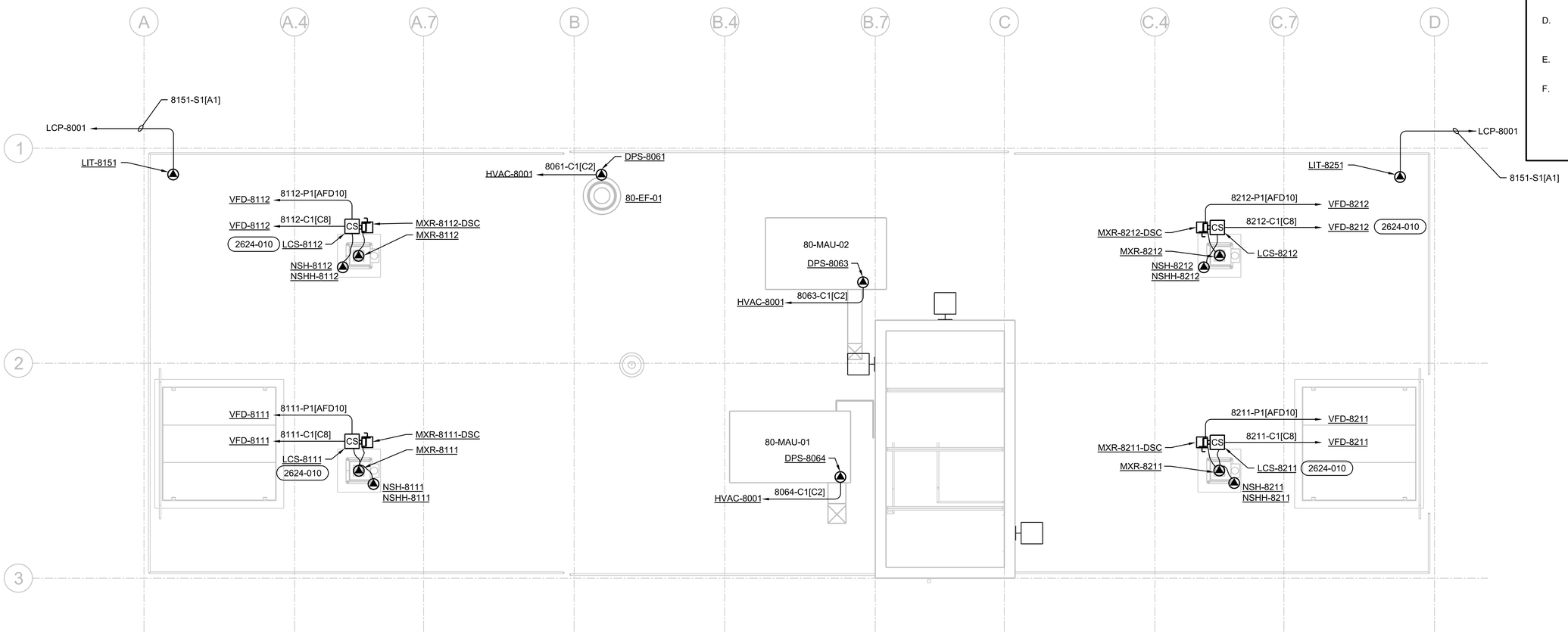

PLAN

3/16"=1'-0"

0 4 8 16

3/16"=1'-0"

FULL SIZE DRAWINGS = 22"x34"
BAR MEASURES 1" LONG

0" 1"

Registered Professional Engineer (Electrical) CERTIFICATE NO. 81240 DAVID BURGER Date Signed 6-19-2025 ARIZONA, U.S.A.

JUNE 19, 2025

A/E FIRM	DESIGNED:	SUB SHEET NO.	TITLE OF SHEET	DRAWING NO.
JACOBS GOVERNMENT SERVICES COMPANY GREENWOOD VILLAGE, CO	D BURGER CADD: J GARIBAY TECH. REVIEW: J LANDMAN DATE: 06/2025	80EP1050	DIGESTER FACILITY ELECTRICAL ROOF PLAN PROCESS PLAN GRAND CANYON, SOUTH RIM	113 175376 PMIS/PKG NO. 257282 SHEET 374 OF 401

100% COMPLETE CONSTRUCTION DOCUMENTS

GRCA-257282

PLOT DATE: 6/16/2025 PLOT TIME: 11:38:34 PM SS6/V8i D3167666 - South Rim\4 Delivery\43 CAD Design\GRCA\257282\Microstation V8i DrawingsIELEC\80EP1050_D3167666.dgn

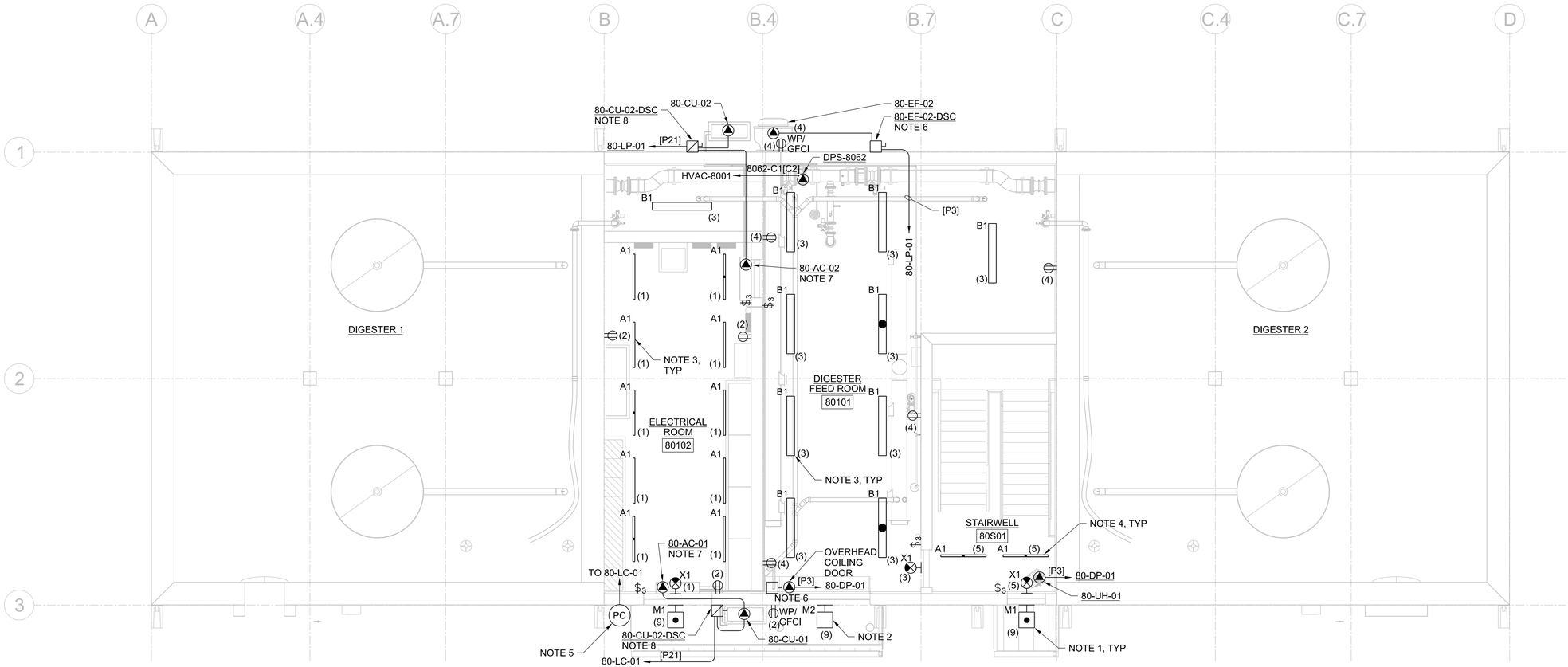

PLAN

3/16"=1'-0"

0 4 8 16

3/16"=1'-0"

GENERAL SHEET NOTES

A. NUMBERS SHOWN IN PARENTHESIS, (N), ADJACENT TO LIGHTS AND RECEPTACLES DENOTE CIRCUIT NUMBERS IN FACILITY PANELBOARD 80-LP-01 UNLESS OTHERWISE NOTED.. PROVIDE #12 CONDUCTORS FOR 20A OR 15A CIRCUITS LESS THAN 75 FEET. PROVIDE #10 CONDUCTORS FOR CIRCUITS GREATER THAN 75 FEET. REFER TO PANELBOARD SCHEDULES.

B. COMBINE RECEPTACLE AND LIGHTING CIRCUITS IN A SINGLE CONDUIT TO MINIMIZE LENGTH OF CONDUCTORS AND CONDUIT. CIRCUITS COMBINED INTO A SINGLE CONDUIT SHALL BE SIZED FOR NEC DERATING AND CONDUIT FILL REQUIREMENTS.

C. FOR INFORMATION ON EXTERIOR LIGHTING CONTROLS, SEE CONTROL DIAGRAM 08E7110.

D. FOR LUMINAIRE SCHEDULE AND NOTES, SEE DRAWING 08E6001 AND 08E6002.

SHEET NOTES

1. WALL MOUNT EXTERIOR LUMINAIRES AT 9'-0" AFG, UNLESS SPECIFIED OTHERWISE. COORDINATE FINAL LOCATION WITH ARCHITECTURAL DRAWINGS.
2. WALL MOUNT EXTERIOR LUMINAIRE 6" ABOVE ROLL UP DOOR.
3. SUSPEND LUMINAIRES AT 9'-6" AFF IN THIS ROOM UNLESS SPECIFIED OTHERWISE.
4. SUSPEND LUMINAIRES AT 8'-0" ABOVE STAIR LANDINGS, UNLESS SPECIFIED OTHERWISE. THERE SHALL BE TWO TYPE A1 LUMINAIRES AT EACH STAIR LANDING.
5. MOUNT PHOTOCELL AS HIGH AS POSSIBLE. FIELD ADJUST AND AIM AS REQUIRED BY MANUFACTURER.
6. 30 AMP NON-FUSED DISCONNECT.
7. PROVIDE NEMA 6-40R RECEPTACLE AND NEMA 6-40P WITH #8 AWG 2C+G SJ CORD FOR EQUIPMENT CONNECTION.
8. 60 AMP, FUSE PER EQUIPMENT NAMEPLATE. WIRE TO OUTDOOR CONDENSER FROM ELECTRIC PANEL THEN FROM OUTDOOR UNIT TO INDOOR FAN UNIT. REFER TO MANUFACTURERS INSTALLATION MANUAL.

FULL SIZE DRAWINGS = 22"x34"
BAR MEASURES 1" LONG

0" 1"

Registered Professional Engineer (Electrical) CERTIFICATE NO. 81240 DAVID BURGER Date Signed 6-19-2025 ARIZONA, U.S.A.

JUNE 19, 2025

A/E FIRM	DESIGNED:	SUB SHEET NO.	TITLE OF SHEET	DRAWING NO.
JACOBS GOVERNMENT SERVICES COMPANY GREENWOOD VILLAGE, CO	D BURGER CADD: J GARIBAY TECH. REVIEW: J LANDMAN DATE: 06/2025	80EF1030	DIGESTER FACILITY ELECTRICAL LOWER LEVEL FACILITY PLAN GRAND CANYON, SOUTH RIM	113 175376 PMIS/PKG NO. 257282 SHEET 375 OF 401

GRCA-257282

100% COMPLETE CONSTRUCTION DOCUMENTS

PLOT DATE: 06\17\2025 PLOT TIME: 9:24:43 AM SS6\V8i $FILEL$

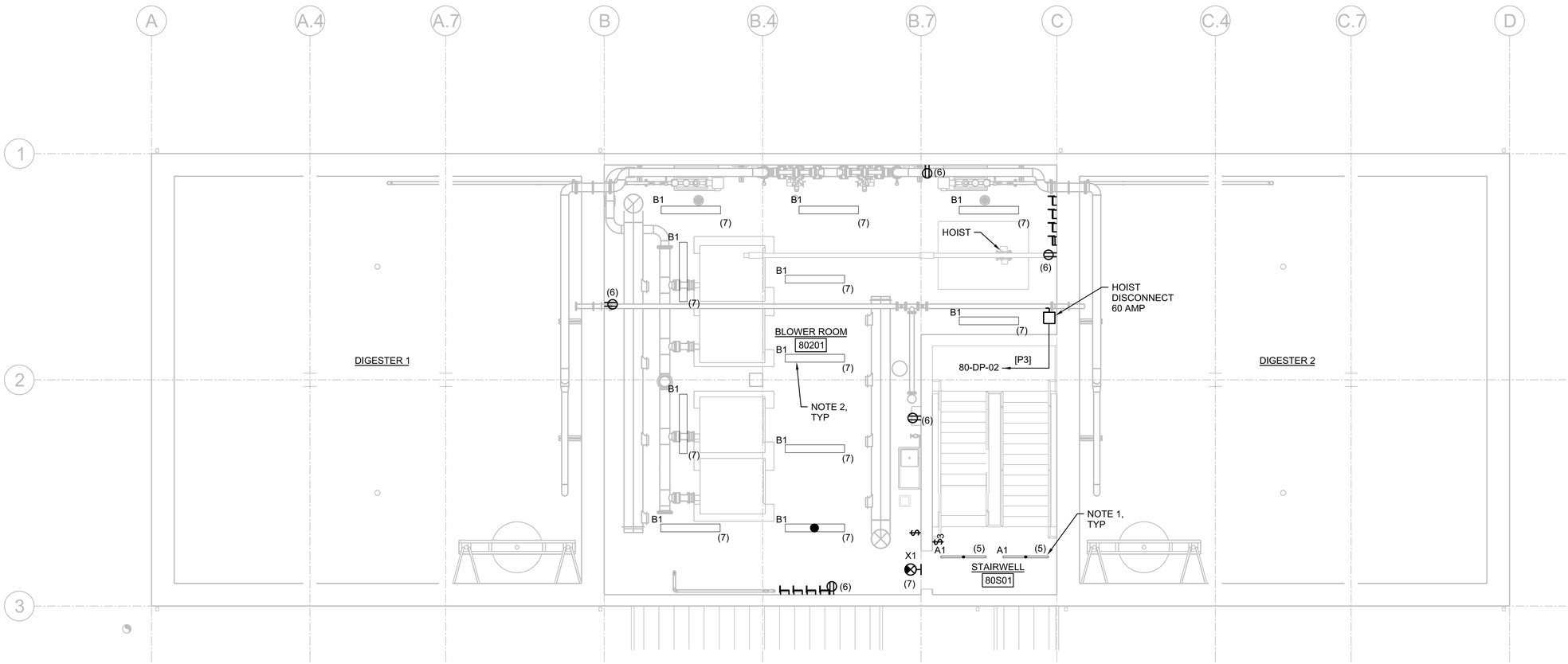

PLAN

3/16"=1'-0"

0 4 8 16

3/16"=1'-0"

GENERAL SHEET NOTES

A. NUMBERS SHOWN IN PARENTHESIS, (N), ADJACENT TO LIGHTS AND RECEPTACLES DENOTE CIRCUIT NUMBERS IN FACILITY PANELBOARD 80-LP-01 UNLESS OTHERWISE NOTED. PROVIDE #12 CONDUCTORS FOR 20A OR 15A CIRCUITS LESS THAN 75 FEET. PROVIDE #10 CONDUCTORS FOR CIRCUITS GREATER THAN 75 FEET. REFER TO PANELBOARD SCHEDULES.

B. COMBINE RECEPTACLE AND LIGHTING CIRCUITS IN A SINGLE CONDUIT TO MINIMIZE LENGTH OF CONDUCTORS AND CONDUIT. CIRCUITS COMBINED INTO A SINGLE CONDUIT SHALL BE SIZED FOR NEC DERATING AND CONDUIT FILL REQUIREMENTS.

C. FOR INFORMATION ON EXTERIOR LIGHTING CONTROLS, SEE DRAWING 08E7110.

D. FOR LUMINAIRE SCHEDULE AND NOTES, SEE DRAWING 08E6001 AND 08E6002.

SHEET NOTES

1. SUSPEND LUMINAIRES 8'-0" ABOVE STAIR LANDINGS, UNLESS SPECIFIED OTHERWISE. THERE SHALL BE TWO TYPE A1 LUMINAIRES AT EACH STAIR LANDING.

2. SUSPEND LUMINAIRES AT 10'-0" AFF IN THIS ROOM UNLESS SPECIFIED OTHERWISE.

GRCA-257282

PLOT DATE: 6/16/2025 PLOT TIME: 11:38:35 PM SS6/V8i D3167666 - South Rim\4 Delivery\43 CAD Design\GRCA\257282\Microstation V8i Drawings\ELEC\80EF1040_D3167666.dgn

FULL SIZE DRAWINGS = 22"x34"
BAR MEASURES 1" LONG

0" 1"

Registered Professional Engineer (Electrical) CERTIFICATE NO. 81240 DAVID BURGER Date Signed 6-19-2025 ARIZONA, U.S.A.

JUNE 19, 2025

A/E FIRM
JACOBS GOVERNMENT SERVICES COMPANY
GREENWOOD VILLAGE, CO

DESIGNED: D BURGER
CADD: J GARIBAY
TECH. REVIEW: J LANDMAN
DATE: 06/2025

SUB SHEET NO. 80EF1040

TITLE OF SHEET
DIGESTER FACILITY ELECTRICAL UPPER LEVEL FACILITY PLAN
GRAND CANYON, SOUTH RIM

DRAWING NO. 113 / 175376
PMIS/PKG NO. 257282
SHEET 376 OF 401

100% COMPLETE CONSTRUCTION DOCUMENTS

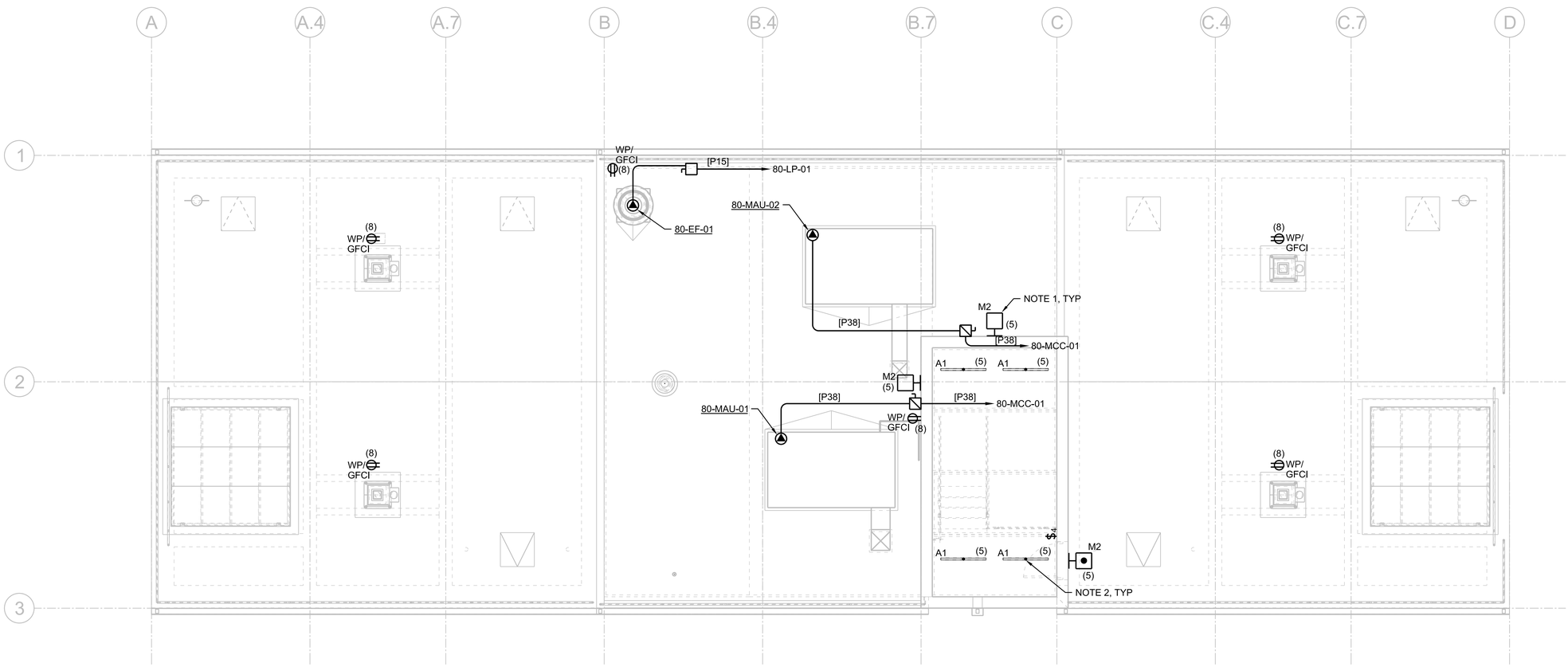

PLAN

3/16"=1'-0"

0 4 8 16

3/16"=1'-0"

GENERAL SHEET NOTES

A. NUMBERS SHOWN IN PARENTHESIS, (N), ADJACENT TO LIGHTS AND RECEPTACLES DENOTE CIRCUIT NUMBERS IN FACILITY PANELBOARD 80-LP-01 UNLESS OTHERWISE NOTED. PROVIDE #12 CONDUCTORS FOR 20A OR 15A CIRCUITS LESS THAN 75 FEET. PROVIDE #10 CONDUCTORS FOR CIRCUITS GREATER THAN 75 FEET. REFER TO PANELBOARD SCHEDULES.

B. COMBINE RECEPTACLE AND LIGHTING CIRCUITS IN A SINGLE CONDUIT TO MINIMIZE LENGTH OF CONDUCTORS AND CONDUIT. CIRCUITS COMBINED INTO A SINGLE CONDUIT SHALL BE SIZED FOR NEC DERATING AND CONDUIT FILL REQUIREMENTS.

C. FOR INFORMATION ON EXTERIOR LIGHTING CONTROLS, SEE DRAWING 08E7110.

D. FOR LUMINAIRE SCHEDULE AND NOTES, SEE DRAWING 08E6001 AND 08E6002.

SHEET NOTES

1. WALL MOUNT EXTERIOR LUMINAIRES AT 9'-0" AFG, UNLESS SPECIFIED OTHERWISE. COORDINATE FINAL LOCATION WITH ARCHITECTURAL DRAWINGS.

2. SUSPEND LUMINAIRES 8'-0" ABOVE STAIR LANDINGS, UNLESS SPECIFIED OTHERWISE.

GRCA-257282

PLOT DATE: 6/18/2025 PLOT TIME: 9:53:10 AM SS6\V8i D3167666 - South Rim\4 Delivery\43 CAD Design\GRCA\257282\Microstation V8i Drawings\ELEC\80EF1050_D3167666.dgn

100% COMPLETE CONSTRUCTION DOCUMENTS

FULL SIZE DRAWINGS = 22"x34"
BAR MEASURES 1" LONG

0" 1"

Registered Professional Engineer (Electrical) CERTIFICATE NO. 81240 DAVID BURGER Date Signed 6-19-2025 ARIZONA, U.S.A.

JUNE 19, 2025

A/E FIRM	DESIGNED:	SUB SHEET NO.	TITLE OF SHEET	DRAWING NO.
JACOBS GOVERNMENT SERVICES COMPANY GREENWOOD VILLAGE, CO	D BURGER CADD: J GARIBAY TECH. REVIEW: J LANDMAN DATE: 06/2025	80EF1050	DIGESTER FACILITY ELECTRICAL ROOF LEVEL FACILITY PLAN GRAND CANYON, SOUTH RIM	113 175376 PMIS/PKG NO. 257282 SHEET 377 OF 401

GENERAL SHEET NOTES

A. PROVIDE SEALOFFS PRIOR TO TERMINATION TO ALL DEVICES, EQUIPMENT, CONTROL STATIONS, CONTROL PANELS, SENSORS, SWITCHES, AND ELECTRICAL EQUIPMENT IN HAZARD AREAS AND WHEN ENTERING/LEAVING HAZARD AREAS. REFER TO DRAWINGS 01G0250 AND 01G0251 FOR AREA CLASSIFICATIONS.

B. MAINTAIN A MINIMUM OF 24" BETWEEN POWER CONDUITS AND CONTROL (EXCEPT AS SHOWN FOR HANDSTATIONS) AND INSTRUMENTATION CONDUITS EXCEPT AT POINT OF TERMINATION.

C. REFER TO PLAN VIEW DRAWING FOR CONDUIT AND CABLE CALLOUTS NOT SPECIFICALLY SHOWN ON THIS SHEET.

D. REFER TO CONTROL DIAGRAMS AND SPECIFICATIONS FOR HARDWIRED I/O.

SHEET NOTES

1. PROVIDED BY SWITCHBOARD MANUFACTURER
2. 1-1/2" CONDUIT WITH 4#4, 1#8 GROUND.

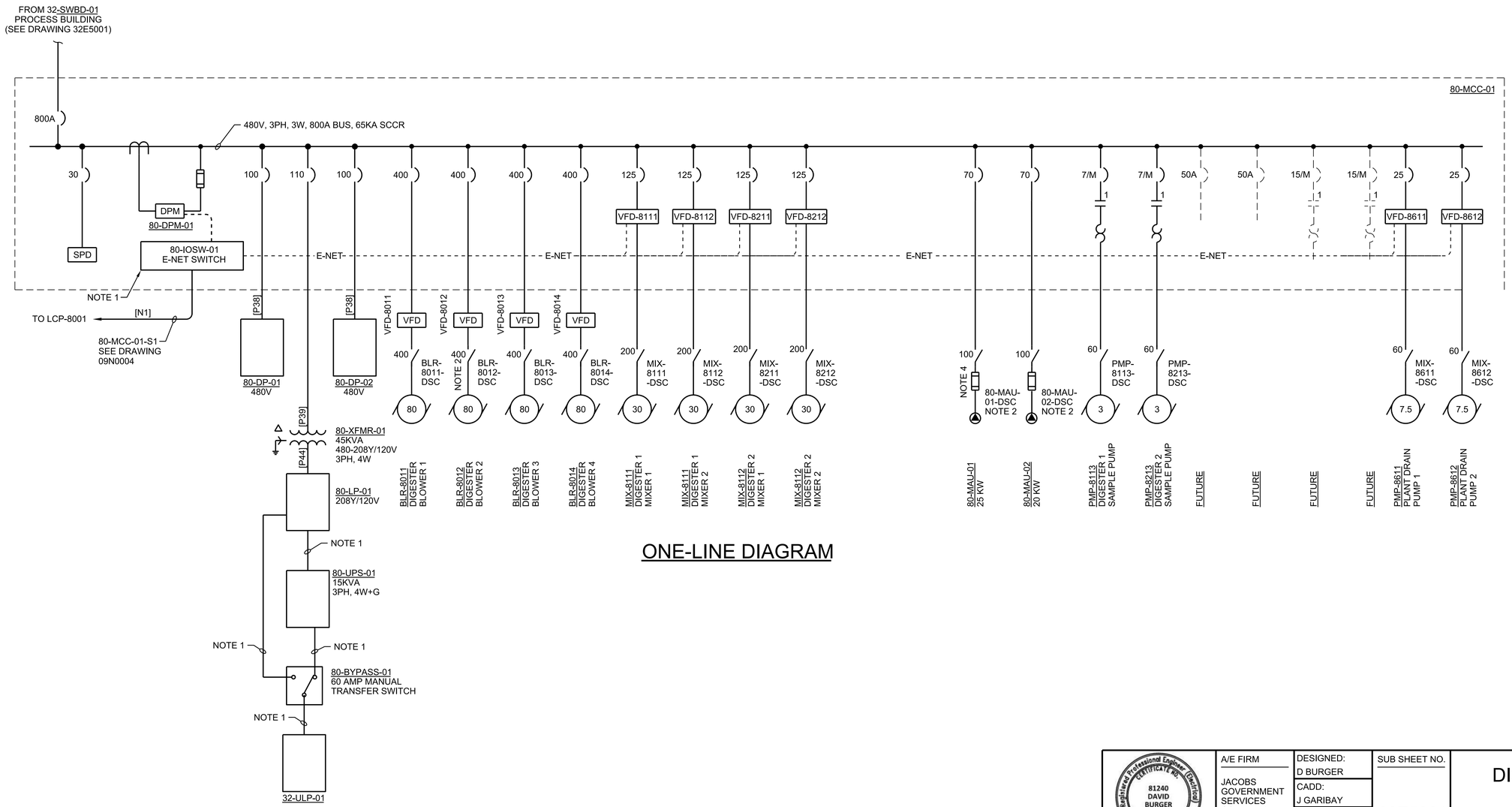

ONE-LINE DIAGRAM

FULL SIZE DRAWINGS = 22"x34"
BAR MEASURES 1" LONG

0" 1"

Registered Professional Engineer (Electrical) CERTIFICATE NO. 81240 DAVID BURGER Date Signed 6-19-2025 ARIZONA, U.S.A.

JUNE 19, 2025

A/E FIRM	DESIGNED:	SUB SHEET NO.	TITLE OF SHEET	DRAWING NO.
JACOBS GOVERNMENT SERVICES COMPANY GREENWOOD VILLAGE, CO	D BURGER CADD: J GARIBAY TECH. REVIEW: J LANDMAN DATE: 06/2025	80E5001	DIGESTER FACILITY ELECTRICAL ONE-LINE DIAGRAM 80-MCC-01 GRAND CANYON, SOUTH RIM	113 / 175376 PMIS/PKG NO. 257282 SHEET 378 OF 401

100% COMPLETE CONSTRUCTION DOCUMENTS

GRCA-257282

PLOT DATE: 6/16/2025 PLOT TIME: 11:36:22 PM SS6/V8I D3167666 - South Rim\4 Delivery\43 CAD Design\GRCA\257282\Microstation V8I Drawings\ELEC\80E5001_D3167666.dgn

PANEL: 80-DP-01

VOLTAGE: 480
PHASE, WIRES: 3, 3
SCR (AMPS): 65,000
SOURCE: 30-MCC-01

PANEL BUS: 125 AMPS
MAIN: 100 BREAKER
125% OF MAX BUS LOAD: 19 AMPS
TOTAL CONNECTED LOAD: 13.2 KVA
TOTAL DEMAND LOAD: 13.2 KVA
TOTAL DESIGN LOAD: 13.2 KVA

* EFCI
** GFCI
MOUNTING: SURFACE
FEED: BOTTOM

DESCRIPTION	NOTES	DEMAND CODE	KVA	CB	CKT	A	B	C	CKT	CB	KVA	DEMAND CODE	NOTES	DESCRIPTION
FCV-8111		GENERAL	0.40	20/3	1	2.9			2	20/3	0.40	GENERAL		FV-8123 DIGESTER 1 RETURN
		---	0.40		3		2.9		4		0.40	---		
		---	0.40		5			2.9	6		0.40	---		
FCV-8112		GENERAL	0.40	20/3	7	2.9			8	20/3	0.40	GENERAL		FV-8124 DECANTER 1 DISCHARGE
		---	0.40		9		2.9		10		0.40	---		
		---	0.40		11			2.9	12		0.40	---		
FCV-8121 AIR VALVE DIGESTER 1		GENERAL	0.40	20/3	13	2.9			14	20/3	0.40	GENERAL		FV-8223 DIGESTER 2 RETURN
		---	0.40		15		2.9		16		0.40	---		
		---	0.40		17			2.9	18		0.40	---		
FCV-8122 AIR VALVE DIGESTER 1		GENERAL	0.40	20/3	19	2.9			20	20/3	0.40	GENERAL		FV-8224 DECANTER 2 DISCHARGE
		---	0.40		21		2.9		22		0.40	---		
		---	0.40		23			2.9	24		0.40	---		
FCV-8221 AIR VALVE DIGESTER 2		GENERAL	0.40	20/3	25	1.4			26	20/3		---		SPARE
		---	0.40		27		1.4		28			---		
		---	0.40		29			1.4	30			---		
FCV-8222 AIR VALVE DIGESTER 2		GENERAL	0.40	20/3	31				32	20/3		---		SPARE
		---	0.40		33				34			---		
		---	0.40		35				36			---		
SPD		NONE		20/3	37				38	20/3		---		SPARE
		---			39				40			---		
		---			41				42			---		
					TOTALS	14.4	14.4	14.4	AMPS					
						4.0	4.0	4.0	KVA					

PANEL: 80-DP-02

VOLTAGE: 480
PHASE, WIRES: 3, 3
SCR (AMPS): 65,000
SOURCE: 30-MCC-01

PANEL BUS: 125 AMPS
MAIN: 100 BREAKER
125% OF MAX BUS LOAD: 15 AMPS
TOTAL CONNECTED LOAD: 10.8 KVA
TOTAL DEMAND LOAD: 10.8 KVA
TOTAL DESIGN LOAD: 10.8 KVA

* EFCI
** GFCI
MOUNTING: SURFACE
FEED: BOTTOM

DESCRIPTION	NOTES	DEMAND CODE	KVA	CB	CKT	A	B	C	CKT	CB	KVA	DEMAND CODE	NOTES	DESCRIPTION
SPARE		---		20/3	1	1.4			2	20/3	0.40	GENERAL		FV-8023 DISCHARGE TO DRYING BEDS
		---			3		1.4		4		0.40	---		
		---			5			1.4	6		0.40	---		
SPARE		GENERAL	0.40	20/3	7	2.9			8	20/3	0.40	GENERAL		HOIST, BLOWER ROOM
		---	0.40		9		2.9		10		0.40	---		
		---	0.40		11			2.9	12		0.40	---		
SPARE		GENERAL	0.40	20/3	13	2.9			14	20/3	0.40	GENERAL		FV-8113
		---	0.40		15		2.9		16		0.40	---		
		---	0.40		17			2.9	18		0.40	---		
SPARE		GENERAL	0.40	20/3	19	2.9			20	20/3	0.40	GENERAL		FV8073
		---	0.40		21		2.9		22		0.40	---		
		---	0.40		23			2.9	24		0.40	---		
SPARE		GENERAL	0.40	20/3	25	1.4			26	-		---		SPACE
		---	0.40		27		1.4		28			---		
		---	0.40		29			1.4	30			---		
SPARE		GENERAL	0.40	20/3	31				32	-		---		SPACE
		---	0.40		33				34			---		
		---	0.40		35				36			---		
SPD		NONE		20/3	37				38	-		---		SPACE
		---			39				40			---		
		---			41				42			---		
					TOTALS	11.6	11.6	11.6	AMPS					
						3.2	3.2	3.2	KVA					

PANEL: 80-LP-01

VOLTAGE: 208/120
PHASE, WIRES: 3, 4
SCR (AMPS): 10,000
SOURCE: 80-XFMR-01

PANEL BUS: 125 AMPS
MAIN: 100 BREAKER
125% OF MAX BUS LOAD: 22 AMPS
TOTAL CONNECTED LOAD: 4.8 KVA
TOTAL DEMAND LOAD: 4.8 KVA
TOTAL DESIGN LOAD: 4.8 KVA

MOUNTING: SURFACE
FEED: BOTTOM

DESCRIPTION	NOTES	DEMAND CODE	KVA	CB	CKT	A	B	C	CKT	CB	KVA	DEMAND CODE	NOTES	DESCRIPTION
ELECTRICAL ROOM LIGHTS	11 LIGHTS @ 42W EACH	LIGHTING	0.46	20/1	1	9.9			2	20/1	0.72	180 VA PER @ 4 RECEPTACLES		RECEPTACLES ELECTRICAL ROOM
DIGESTER FEED ROOM LIGHTS	11 LIGHTS @ 49W EACH	LIGHTING	0.54	20/1	3		12.0		4	20/1	0.90	180 VA PER @ 5 RECEPTACLES		RECEPTACLES DIGESTER FEED ROOM
STAIRWELL / ROOF LIGHTS	11 LIGHTS @ 33W EACH	LIGHTING	0.37	20/1	5			10.6	6	20/1	0.90	180 VA PER @ 5 RECEPTACLES		RECEPTACLES BLOWER ROOM
BLOWER ROOM LIGHTS	17 LIGHTS @ 33W EACH	LIGHTING	0.56	20/1	7	7.7			8	20/1	0.36	180 VA PER @ 5 RECEPTACLES		RECEPTACLES ROOF
SPARE				20/1	9		0.0		10	20/1				SPARE
SPARE				20/1	11			0.0	12	20/1				SPARE
SPARE				20/1	13	0.0			14	20/1				SPARE
SPARE				20/1	15		0.0		16	20/1				SPARE
SPARE				20/1	17			0.0	18	20/1				SPARE
SPARE				20/1	19	0.0			20	20/1				SPARE
SPARE				20/1	21		0.0		22	20/1				SPARE
SPARE				20/1	23			0.0	24	20/1				SPARE
SPD				30/3	25	0.0			26	20/1				SPARE
					27		0.0		28	20/1				SPARE
					29			0.0	30	20/1				SPARE
					TOTALS	17.5	12.0	10.6	AMPS					
						2.1	1.4	1.3	KVA					

NOTES
1. CONNECT CIRCUITS 7 AND 9 TO A 2-POLE, 30A LIGHTING CONTACTOR MOUNTED ADJACENT TO 80-LP-01.

PANEL: 80-ULP-01

VOLTAGE: 208/120
PHASE, WIRES: 3, 4
SCR (AMPS): 10,000
SOURCE: 80-LP-01

PANEL BUS: 125 AMPS
MAIN: 100 BREAKER
125% OF MAX BUS LOAD: 18 AMPS
TOTAL CONNECTED LOAD: 3.4 KVA
TOTAL DEMAND LOAD: 3.4 KVA
TOTAL DESIGN LOAD: 3.4 KVA

MOUNTING: SURFACE
FEED: BOTTOM

DESCRIPTION	NOTES	DEMAND CODE	KVA	CB	CKT	A	B	C	CKT	CB	KVA	DEMAND CODE	NOTES	DESCRIPTION
AIT-8180 DIGESTER 1		GENERAL	0.10	20/1	1	1.7			2	20/1	0.10	GENERAL		FIT-8171 AIR FLOW DIGESTER 1
AIT-8280 DIGESTER 2		GENERAL	0.10	20/1	3		1.7		4	20/1	0.10	GENERAL		FIT-8271 AIR FLOW DIGESTER 2
SPARE		---		20/1	5			12.5	6	20/1	1.50	GENERAL		HVAC CONTROL PANEL 80-HCP-01
SPARE		---		20/1	7	12.5			8	20/1	1.50	GENERAL	NOTE 2	FIRE ALARM PANEL 80-FACP-01
SPARE		---		20/1	9		0.0		10	20/1		---		SPARE
SPARE		---		20/1	11			0.0	12	20/1		---		SPARE
SPD		---		20/3	13	0.0			14	20/1		---		SPARE
					15		0.0		16	20/1		---		SPARE
					17			0.0	18	20/1		---		SPARE
					TOTALS	14.2	1.7	12.5	AMPS					
						1.7	0.2	1.5	KVA					

NOTES
1. CONNECT CIRCUITS 7 AND 9 TO A 2-POLE, 30A LIGHTING CONTACTOR MOUNTED ADJACENT TO 80-LP-01.
2. PROVIDE RED BREAKER LOCK TO PREVENT ACCIDENTAL POWER INTERRUPTION

FULL SIZE DRAWINGS = 22"x34"
BAR MEASURES 1" LONG
0" 1"

Registered Professional Engineer (Electrical) CERTIFICATE NO. 81240 DAVID BURGER Date Signed 6-23-2025 ARIZONA, U.S.A.
JUNE 23, 2025

A/E FIRM
JACOBS GOVERNMENT SERVICES COMPANY
GREENWOOD VILLAGE, CO

DESIGNED: D BURGER
CADD: J GARIBAY
TECH. REVIEW: J LANDMAN
DATE: 06/2025

SUB SHEET NO. 80E6001

TITLE OF SHEET
DIGESTER FACILITY ELECTRICAL PANELBOARD SCHEDULES
GRAND CANYON, SOUTH RIM

DRAWING NO. 113 / 175376
PMIS/PKG NO. 257282
SHEET 379 OF 401

100% COMPLETE CONSTRUCTION DOCUMENTS

GRCA-257282

PLOT DATE: 6/16/2025 PLOT TIME: 11:39:27 PM SS6/V8i D3167666 - South Rim\4 Delivery\43 CAD Design\GRCA\257282\Microstation V8i Drawings\ELEC\80E6001_D3167666.dgn

GENERAL SHEET NOTES

A. FOR GENERAL STRUCTURAL NOTES, SEE DRAWINGS 01S0001, 01S0002 AND 01S0003.

SHEET NOTES

1. FACILITY LOCATION CONTROL POINT, SEE 06C2003 AND 06C2004.

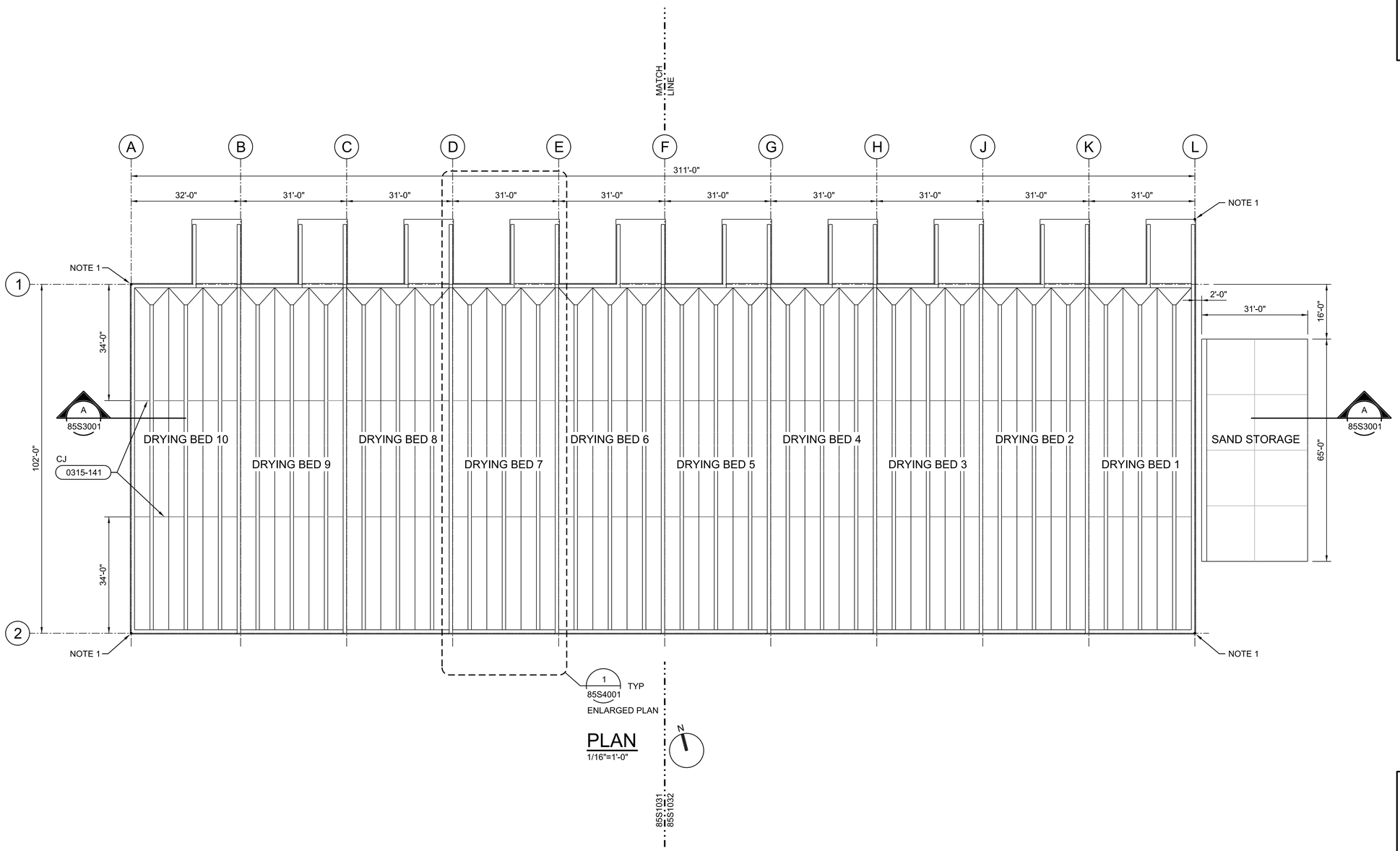

PLAN
1/16"=1'-0"

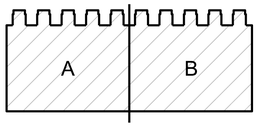

KEYPLAN

0 16 32 48
1/16"=1'-0"

FULL SIZE DRAWINGS = 22"x34"
BAR MEASURES 1" LONG
0" 1"

Professional Engineer Wayne W. Kohler 81476 WAYNE W. KOHLER Registered Professional Engineer ARIZONA U.S.A. Date Signed 6/20/25	A/E FIRM JACOBS GOVERNMENT SERVICES COMPANY GREENWOOD VILLAGE, CO	DESIGNED: W KOHLER CADD: B CLEGG TECH. REVIEW: A FIRTH DATE: 06/2025	SUB SHEET NO. 85S1030	TITLE OF SHEET DRYING BEDS STRUCTURAL PLAN OVERALL GRAND CANYON, SOUTH RIM

DRAWING NO. 113 / 175376
PMIS/PKG NO. 257282
SHEET 380 OF 401

100% COMPLETE CONSTRUCTION DOCUMENTS

GRCA-257282

PLOT DATE: 6/18/2025 PLOT TIME: 8:52:32 AM SS6/V8I D3167666 - South Rim\4 Delivery\43 CAD Design\GRCA\257282\Microstation V8I Drawings\STRUC\85S1030_D3167666.dgn

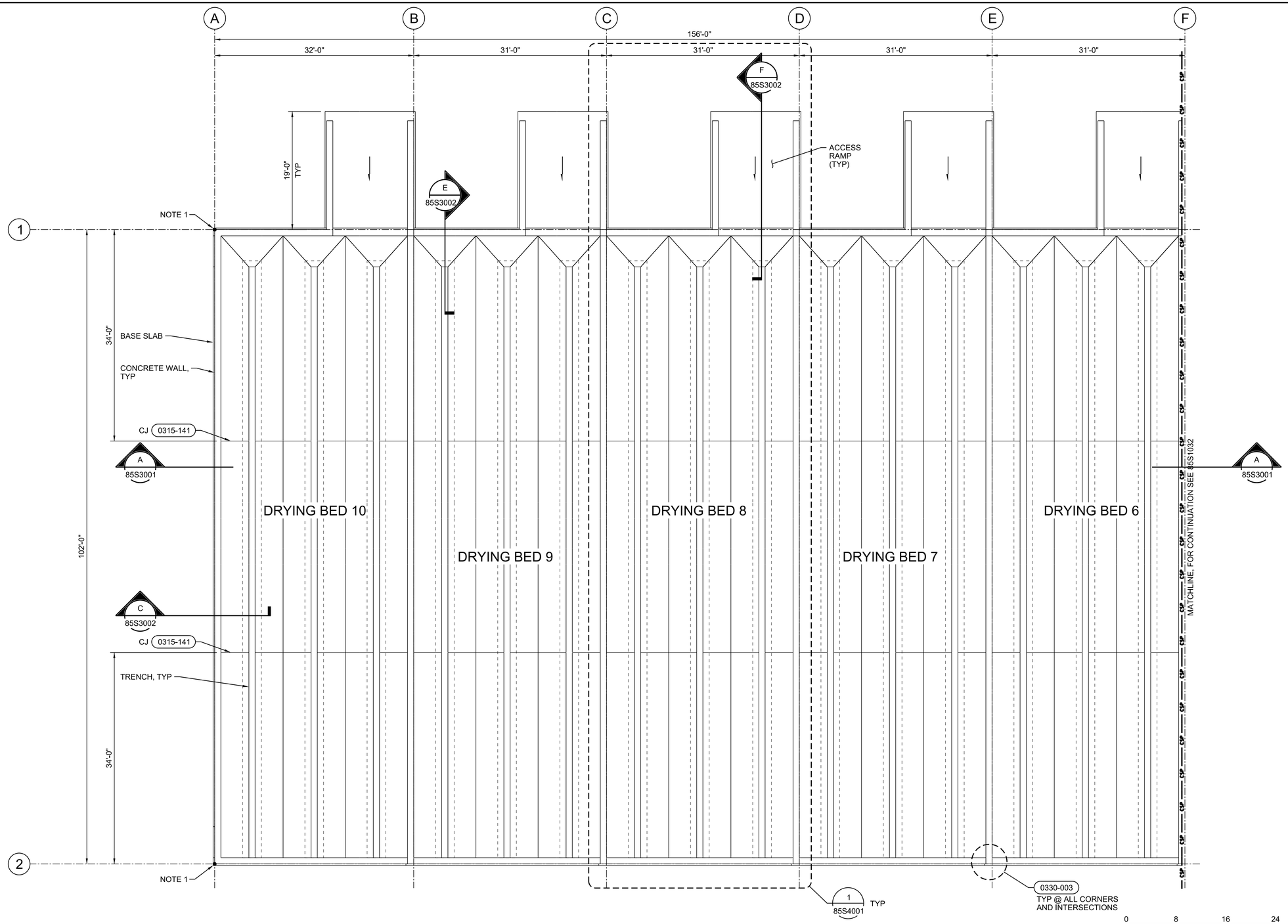

PLAN
1/8"=1'-0"

N

FULL SIZE DRAWINGS = 22"x34"
BAR MEASURES 1" LONG
0" 1"

GENERAL SHEET NOTES

A. FOR GENERAL STRUCTURAL NOTES, SEE DRAWINGS 01S0001, 01S0002 AND 01S0003.

SHEET NOTES

1. FACILITY LOCATION CONTROL POINT, SEE 06C2003 AND 06C2004.

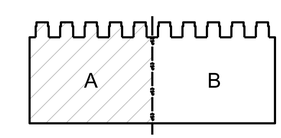

KEYPLAN

Registered Professional Engineer 81476 WAYNE W. KOHLER ARIZONA U.S.A. 6/20/25	A/E FIRM JACOBS GOVERNMENT SERVICES COMPANY GREENWOOD VILLAGE, CO	DESIGNED: W KOHLER CADD: B CLEGG TECH. REVIEW: A FIRTH DATE: 06/2025	SUB SHEET NO. 85S1031	TITLE OF SHEET DRYING BEDS STRUCTURAL PLAN AREA A GRAND CANYON, SOUTH RIM

DRAWING NO. 113 / 175376
PMIS/PKG NO. 257282
SHEET 381 OF 401

100% COMPLETE CONSTRUCTION DOCUMENTS

GRCA-257282

PLOT DATE: 6/18/2025 PLOT TIME: 8:52:31 AM SS6\V8i D3167666 - South Rim\4 Delivery\43 CAD Design\GRCA\257282\Microstation V8i Drawings\STRUC\85S1031_D3167666.dgn

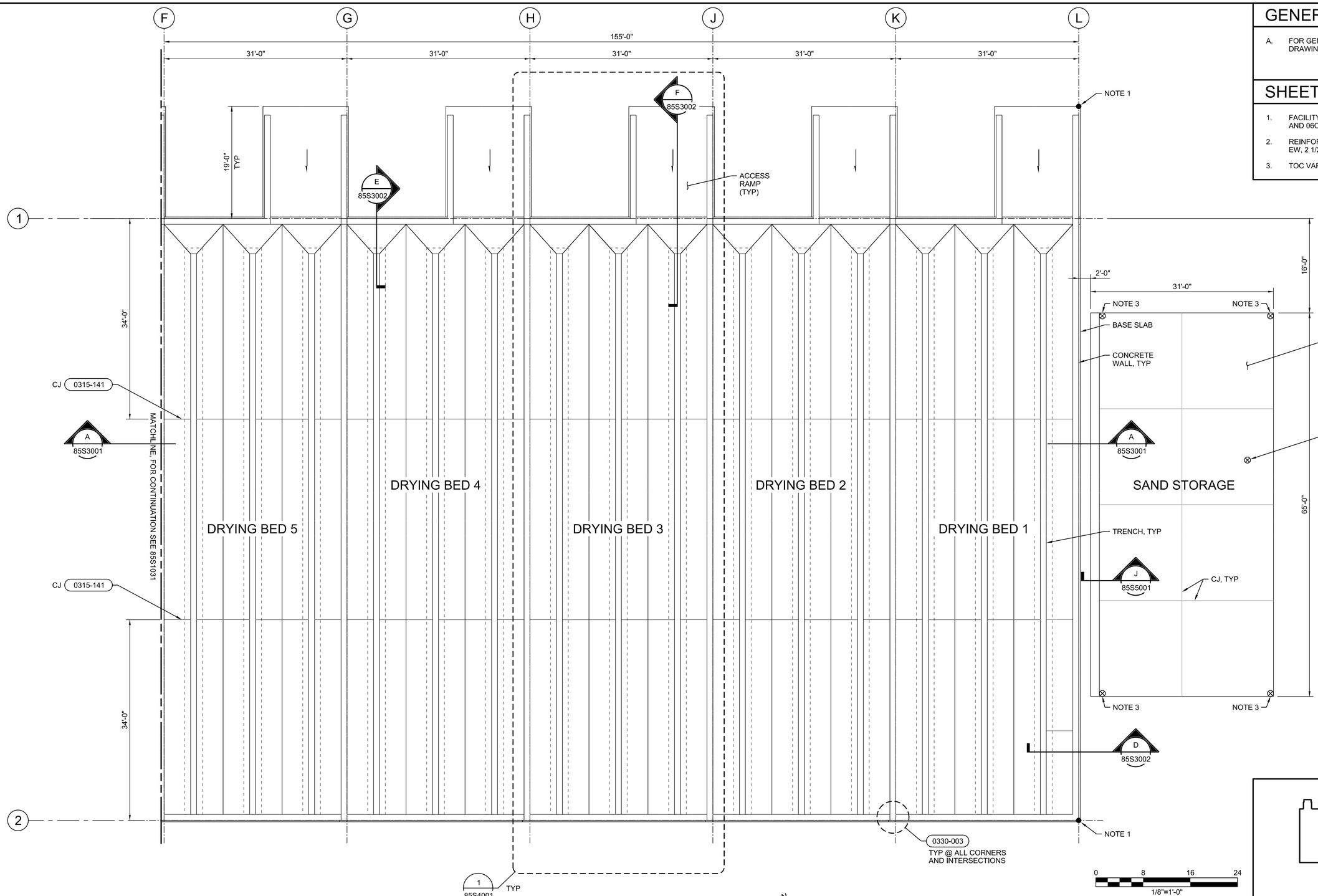

PLAN
1/8"=1'-0"

N

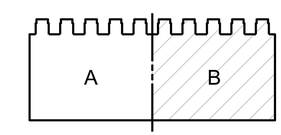

KEYPLAN

GENERAL SHEET NOTES

A. FOR GENERAL STRUCTURAL NOTES, SEE DRAWINGS 01S0001, 01S0002 AND 01S0003.

SHEET NOTES

1. FACILITY LOCATION CONTROL POINT, SEE 06C2003 AND 06C2004.
2. REINFORCE SAND STORAGE SLAB WITH #7@12" EW, 2 1/2" CLEAR FROM TOP SURFACE.
3. TOC VARIES, SEE CIVIL DRAWINGS.

FULL SIZE DRAWINGS = 22"x34"
BAR MEASURES 1" LONG
0" 1"

Registered Professional Engineer
81476
WAYNE W. KOHLER
Date Signed 6/20/25
ARIZONA U.S.A.

A/E FIRM	DESIGNED:	SUB SHEET NO.	TITLE OF SHEET	DRAWING NO.
JACOBS GOVERNMENT SERVICES COMPANY GREENWOOD VILLAGE, CO	W KOHLER CADD: B CLEGG TECH. REVIEW: A FIRTH DATE: 06/2025	85S1032	DRYING BEDS STRUCTURAL PLAN AREA B GRAND CANYON, SOUTH RIM	113 / 175376 PMIS/PKG NO. 257282 SHEET 382 OF 401

GRCA-257282

100% COMPLETE CONSTRUCTION DOCUMENTS

PLOT DATE: 6/18/2025 PLOT TIME: 8:52:34 AM SS6\V8i D3167666 - South Rim\4 Delivery\43 CAD Design\GRCA\257282\Microstation V8i Drawings\STRUC\85S1032_D3167666.dgn

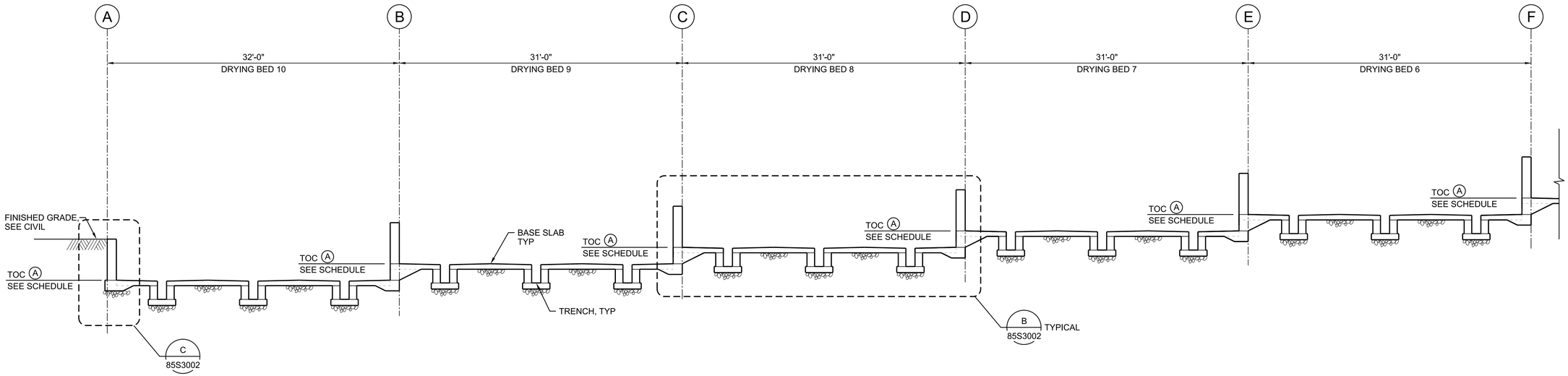

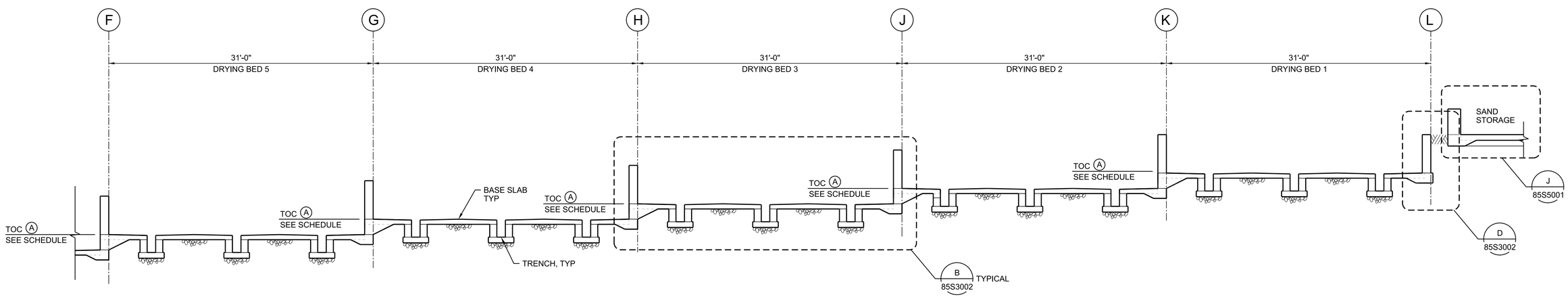

A OVERALL SECTION

3/16" = 1'-0"

85S1030
85S1031
85S1032

0 4 8 16
3/16"=1'-0"

FULL SIZE DRAWINGS = 22"x34"
BAR MEASURES 1" LONG

0" 1"

Wayne W. Kohler 81476 WAYNE W. KOHLER REGISTERED PROFESSIONAL ENGINEER ARIZONA U.S.A. 6/24/25	A/E FIRM JACOBS GOVERNMENT SERVICES COMPANY GREENWOOD VILLAGE, CO	DESIGNED: W KOHLER CADD: B CLEGG TECH. REVIEW: A FIRTH DATE: 06/2025	SUB SHEET NO. 85S3001	TITLE OF SHEET DRYING BEDS STRUCTURAL OVERALL SECTION GRAND CANYON, SOUTH RIM

DRAWING NO. 113 / 175376
PMIS/PKG NO. 257282
SHEET 383 OF 401

100% COMPLETE CONSTRUCTION DOCUMENTS

GRCA-257282

PLOT DATE: 6/18/2025 PLOT TIME: 8:52:30 AM SS6/V8I D3167666 - South Rim\4 Delivery\43 CAD Design\GRCA\257282\Microstation V8I Drawings\STRUC\85S3001_D3167666.dgn

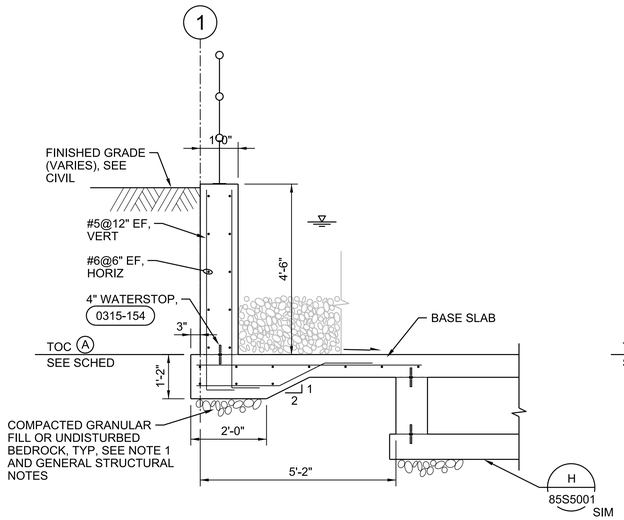

E TYPICAL END WALL SECTION

1/2"=1'-0"

85S1031
85S1032

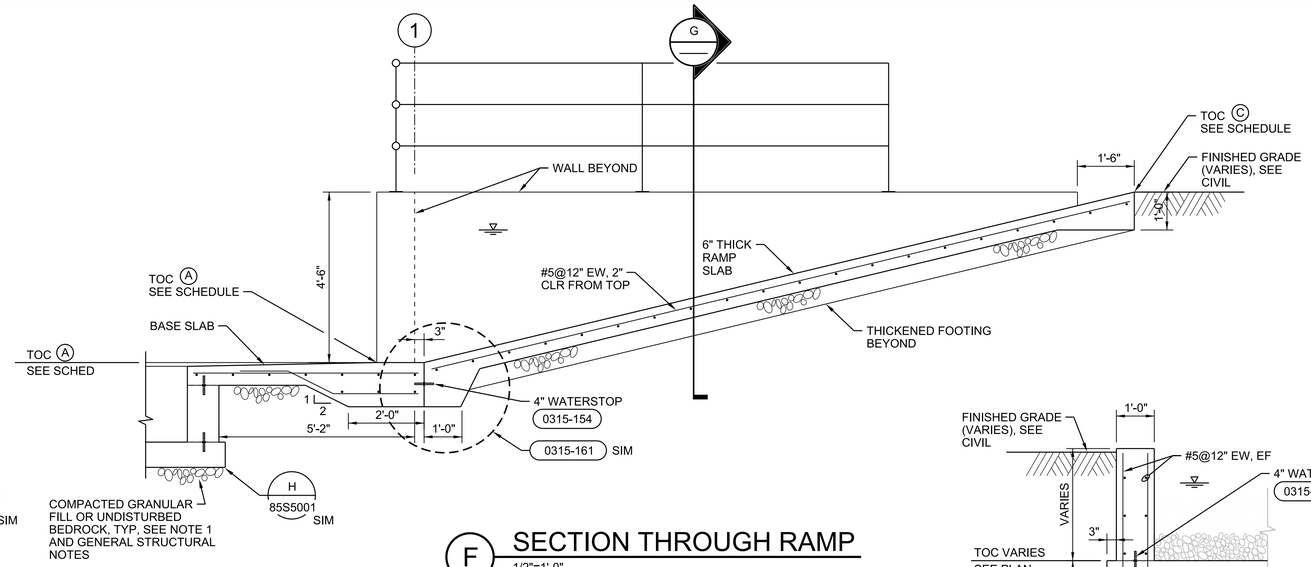

F SECTION THROUGH RAMP

1/2"=1'-0"

85S1031
85S1032
85S3001
85S4001

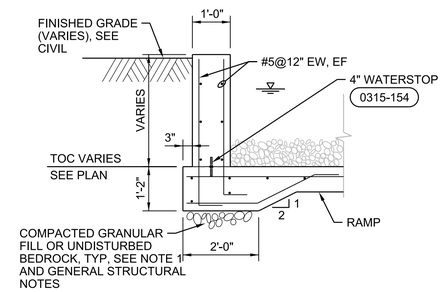

G SECTION @ RAMP WALL

1/2"=1'-0"

85S3001
85S4001

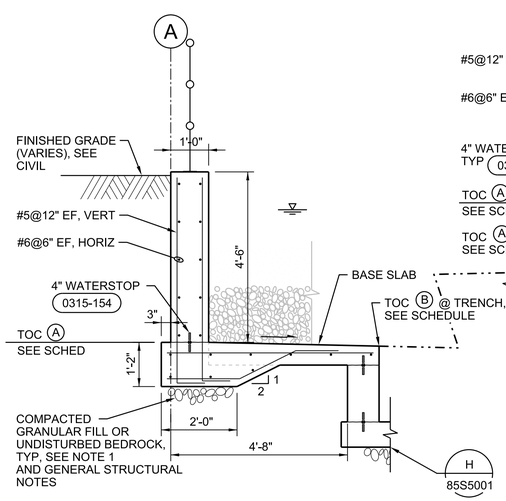

C SIDE WALL SECTION

1/2"=1'-0"

85S1031
85S3001

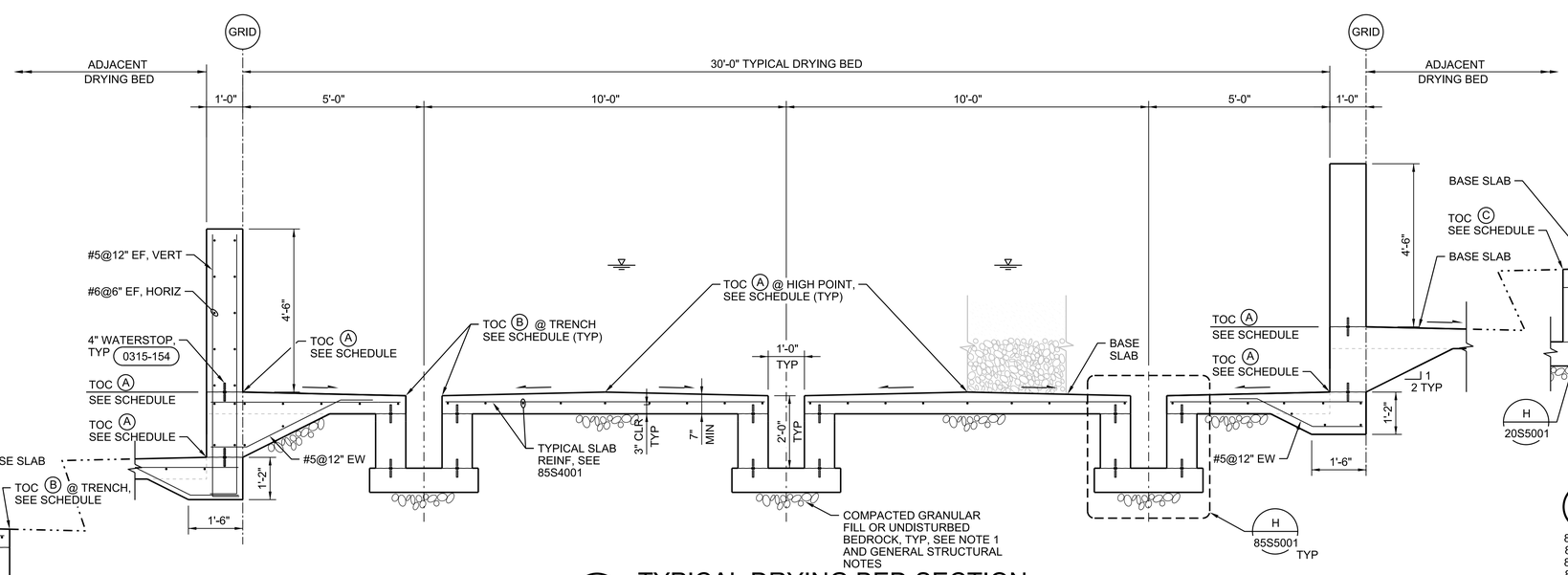

B TYPICAL DRYING BED SECTION

1/2"=1'-0"

85S3001
85S4001

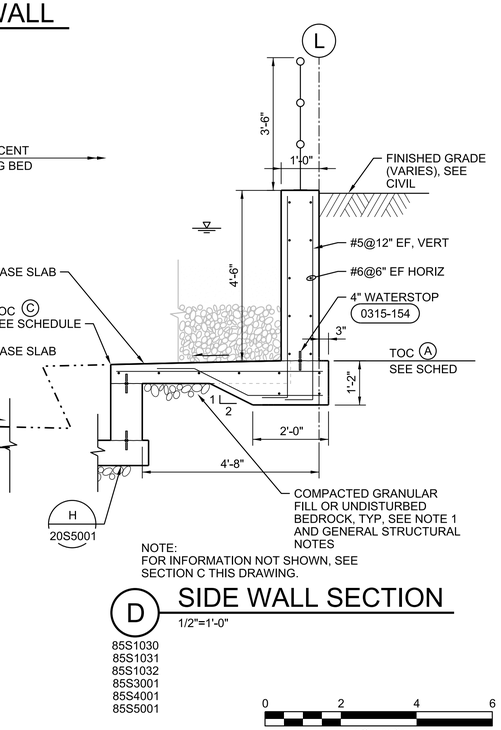

NOTE:
FOR INFORMATION NOT SHOWN, SEE SECTION C THIS DRAWING.

D SIDE WALL SECTION

1/2"=1'-0"

85S1030
85S1031
85S1032
85S3001
85S4001
85S5001

0 2 4 6
1/2"=1'-0"

GENERAL SHEET NOTES

A. FOR GENERAL STRUCTURAL NOTES, SEE DRAWINGS 01S0001, 01S0002 AND 01S0003.

LEGEND

- SAND AS SPECIFIED
- FREE DRAINING GRAVEL AS SPECIFIED
- (X) TOC ELEVATION - SEE SCHEDULE ON 85S4001

SHEET NOTES

1. BEDROCK IS LOCATED NEAR THE EXISTING GROUND SURFACE. SEE GEOTECHNICAL REPORT FOR ADDITIONAL INFORMATION.

GRCA-257282

100% COMPLETE CONSTRUCTION DOCUMENTS

PLOT DATE: 6/18/2025 PLOT TIME: 8:52:44 AM SS6/V8I D3167666 - South Rim\4 Delivery\43 CAD Design\GRCA\257282\Microstation V8I Drawings\STRUC\85S3002_D3167666.dgn

FULL SIZE DRAWINGS = 22"x34"
BAR MEASURES 1" LONG
0" 1"

Registered Professional Engineer (Civil) CERTIFICATE NO. 81476 WAYNE W. KOHLER Date Signed 6/20/25 ARIZONA U.S.A.

A/E FIRM	DESIGNED: W KOHLER	SUB SHEET NO.	TITLE OF SHEET	DRAWING NO.
JACOBS GOVERNMENT SERVICES COMPANY GREENWOOD VILLAGE, CO	CADD: B CLEGG TECH. REVIEW: A FIRTH DATE: 06/2025	85S3002	DRYING BEDS STRUCTURAL SECTIONS GRAND CANYON, SOUTH RIM	113 175376 PMIS/PKG NO. 257282 SHEET 384 OF 401

ELEVATION SCHEDULE

DRYING BED NO.	SLAB TOC @ BED PERIM & RIDGE	SLAB TOC @ TRENCH	TOC @ TOP OF RAMP & TOP OF WALL
	A	B	C
1	6779.50	6779.40	6784.00
2	6777.70	6777.60	6782.20
3	6775.90	6775.80	6780.40
4	6774.10	6774.00	6778.60
5	6772.30	6772.20	6776.80
6	6770.50	6770.40	6775.00
7	6768.70	6768.60	6773.20
8	6766.90	6766.80	6771.40
9	6765.10	6765.00	6769.60
10	6763.30	6763.20	6767.80

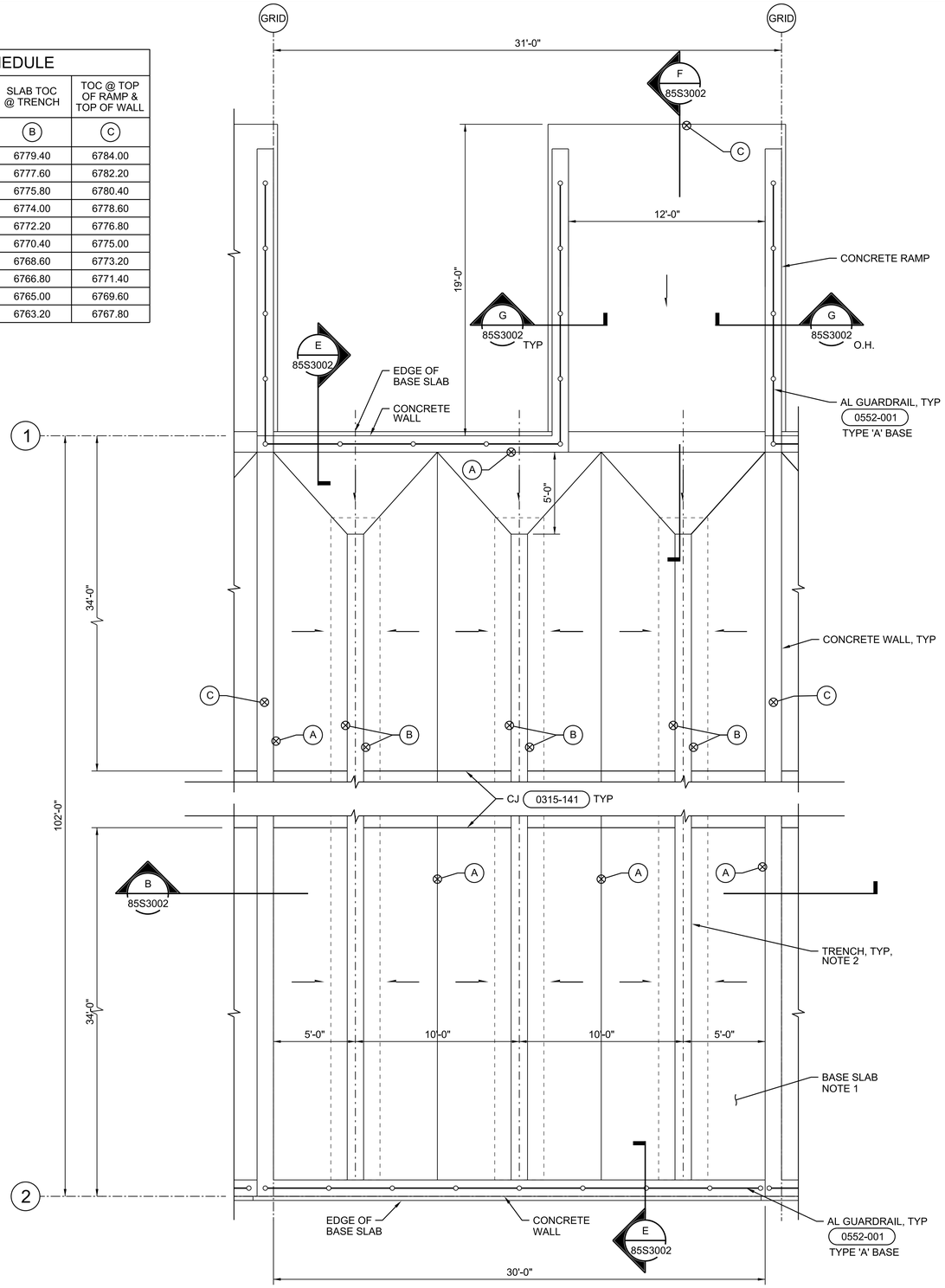

1 DRYING BED ENLARGED PLAN (TYPICAL)

1/4"=1'-0"

85S1030
85S1032
85S1040

GENERAL SHEET NOTES

A. FOR GENERAL STRUCTURAL NOTES, SEE DRAWINGS 01S0001, 01S0002 AND 01S0003.

SHEET NOTES

1. UNLESS OTHERWISE SHOWN, 7" THICK (MINIMUM) CONCRETE BASE SLAB. REINFORCE WITH #6@6" EW, 2" CLR FROM TOP SURFACE.
2. 1'-0" WIDE x 2'-0" DEEP TRENCH.

0 4 8 12
1/4"=1'-0"

FULL SIZE DRAWINGS = 22"x34"
BAR MEASURES 1" LONG
0" 1"

Wayne W. Kohler
Registered Professional Engineer (Structural)
81476
WAYNE W. KOHLER
ARIZONA U.S.A.
6/20/25

A/E FIRM	DESIGNED: W KOHLER	SUB SHEET NO.	TITLE OF SHEET	DRAWING NO.
JACOBS GOVERNMENT SERVICES COMPANY GREENWOOD VILLAGE, CO	CADD: B CLEGG TECH. REVIEW: A FIRTH DATE: 06/2025	85S4001	DRYING BEDS STRUCTURAL ENLARGED PLAN GRAND CANYON, SOUTH RIM	113 175376 PMIS/PKG NO. 257282 SHEET 385 OF 401

100% COMPLETE CONSTRUCTION DOCUMENTS

GRCA-257282

PLOT DATE: 6/18/2025 PLOT TIME: 8:52:34 AM SS6IV8i D3167666 - South Rim\4 Delivery\43 CAD Design\GRCA\257282\Microstation V8i Drawings\STRUC\85S4001_D3167666.dgn

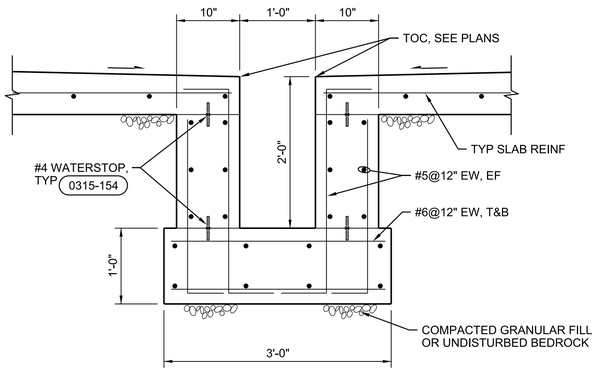

H TYPICAL TRENCH REINFORCING

1"=1'-0"

85S3002

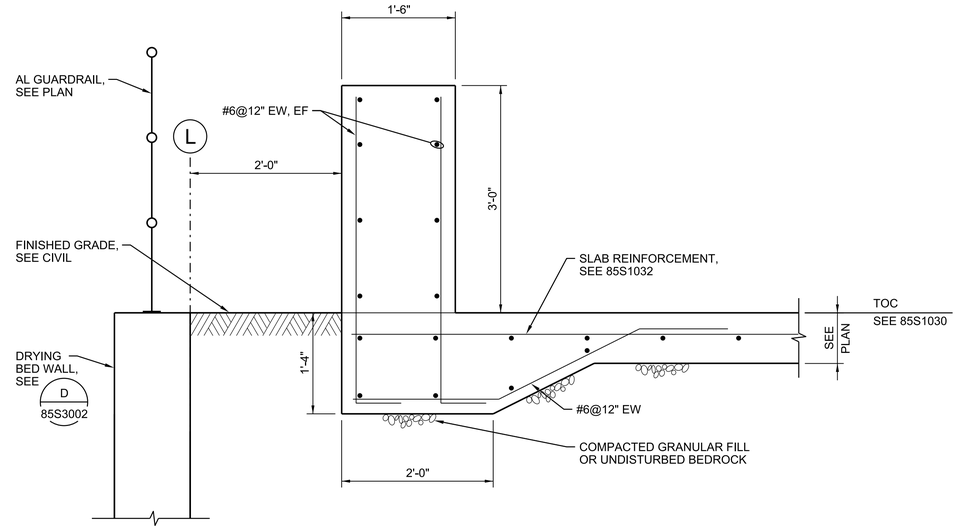

J TYPICAL TRENCH REINFORCING

1"=1'-0"

85S1030
85S1032
85S3001

GENERAL SHEET NOTES

A. FOR GENERAL STRUCTURAL NOTES, SEE DRAWINGS 01S0001, 01S0002 AND 01S0003.

SHEET NOTES

1. UNLESS OTHERWISE SHOWN, 7" THICK (MINIMUM) CONCRETE BASE SLAB. REINFORCE WITH #7@12" EW, 2" CLR FROM TOP SURFACE.

0 1 2 3
1"=1'-0"

FULL SIZE DRAWINGS = 22"x34"
BAR MEASURES 1" LONG
0" 1"

Registered Professional Engineer, Civil, Wayne W. Kohler, 81476, Arizona, U.S.A., Date Signed 6/24/25	A/E FIRM JACOBS GOVERNMENT SERVICES COMPANY GREENWOOD VILLAGE, CO	DESIGNED: W KOHLER CADD: B CLEGG TECH. REVIEW: A FIRTH DATE: 06/2025	SUB SHEET NO. 85S5001	TITLE OF SHEET DRYING BEDS STRUCTURAL DETAILS GRAND CANYON, SOUTH RIM

DRAWING NO. 113
PMIS/PKG NO. 175376
PMIS/PKG NO. 257282
SHEET 386 OF 401

100% COMPLETE CONSTRUCTION DOCUMENTS

GRCA-257282

PLOT DATE: 6/18/2025 PLOT TIME: 8:51:58 AM SS6/V8I D3167666 - South Rim\4 Delivery\43 CAD Design\GRCA\257282\Microstation V8I Drawings\STRUC\85S5001_D3167666.dgn

GENERAL SHEET NOTES

A. FOR CONTINUATION OF PIPING, SEE YARD PIPING DRAWINGS.

B. PROVIDE GRAVITY CLEANOUT PER STANDARD DETAIL 2240-101 ON 6" PD EVERY 100' TO PLANT DRAIN PUMP STATION.

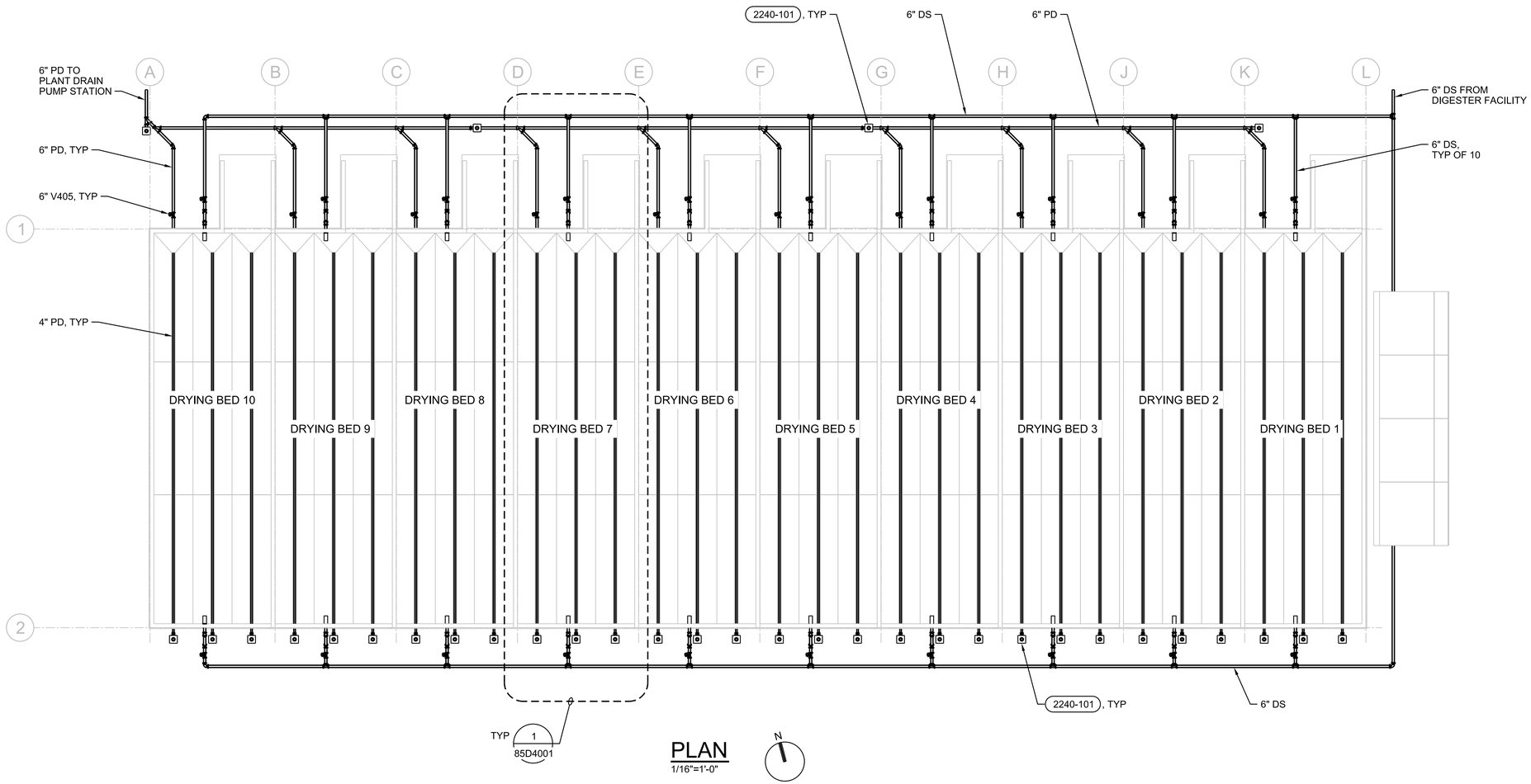

PLAN
1/16"=1'-0"

0 16 32 48
1/16"=1'-0"

FULL SIZE DRAWINGS = 22"x34"
BAR MEASURES 1" LONG
0" 1"

Professional Engineer (Civil) CERTIFICATE NO. 69048 DARREN EDWARDS Date Signed 6/19/25 ARIZONA, U.S.A.
JUNE 19, 2025

A/E FIRM	DESIGNED:	SUB SHEET NO.	TITLE OF SHEET	DRAWING NO.
JACOBS GOVERNMENT SERVICES COMPANY GREENWOOD VILLAGE, CO	R CAMPBELL CADD: G BROWN TECH. REVIEW: D EDWARDS DATE: 06/2025	85D1030	DRYING BEDS MECHANICAL PLAN OVERALL GRAND CANYON, SOUTH RIM	113 175376 PMIS/PKG NO. 257282 SHEET 387 OF 401

100% COMPLETE CONSTRUCTION DOCUMENTS

GRCA-257282

85D1030_D3167666.dgn

PLOT DATE: 6/18/2025 PLOT TIME: 9:11:48 AM SS6/V8i D3167666 - South Rim\4 Delivery\43 CAD Design\GRCA\257282\Microstation V8i Drawings\PROC\85D1030_D3167666.dgn

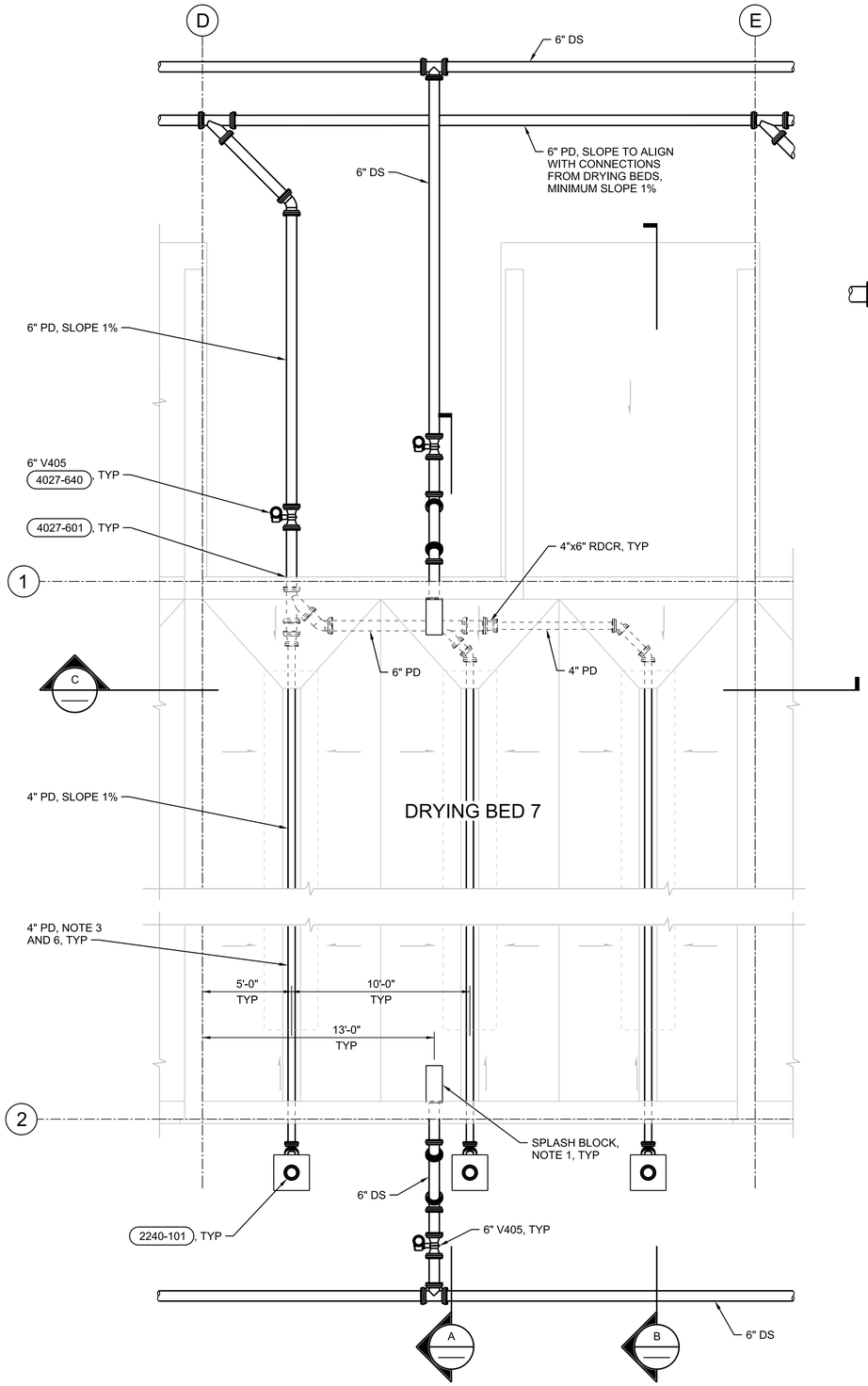

1 ENLARGED PLAN
1/4"=1'-0"
85D1030
0 4 8 12
1/4"=1'-0"

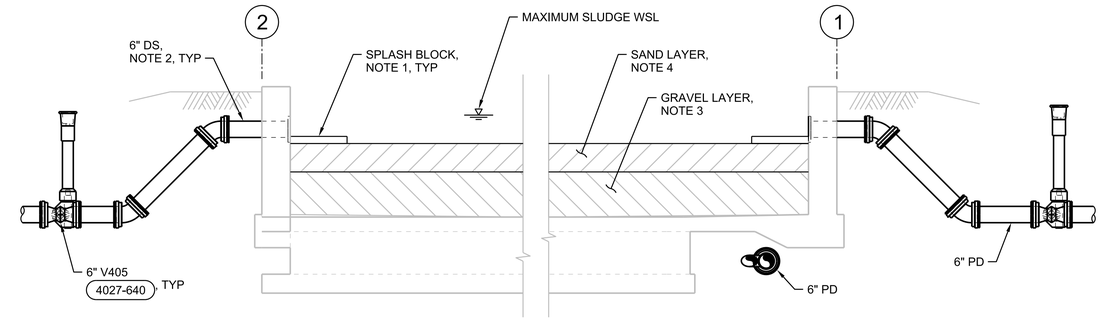

A SECTION
3/8"=1'-0"
0 2 4 6
3/8"=1'-0"

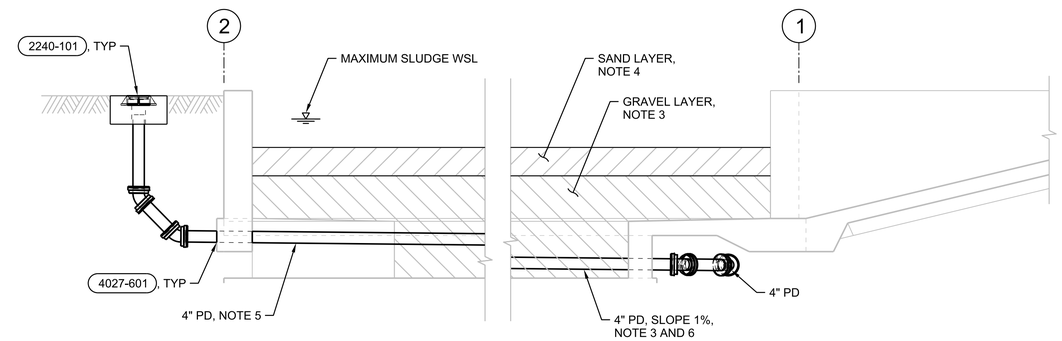

B SECTION
3/8"=1'-0"
0 2 4 6
3/8"=1'-0"

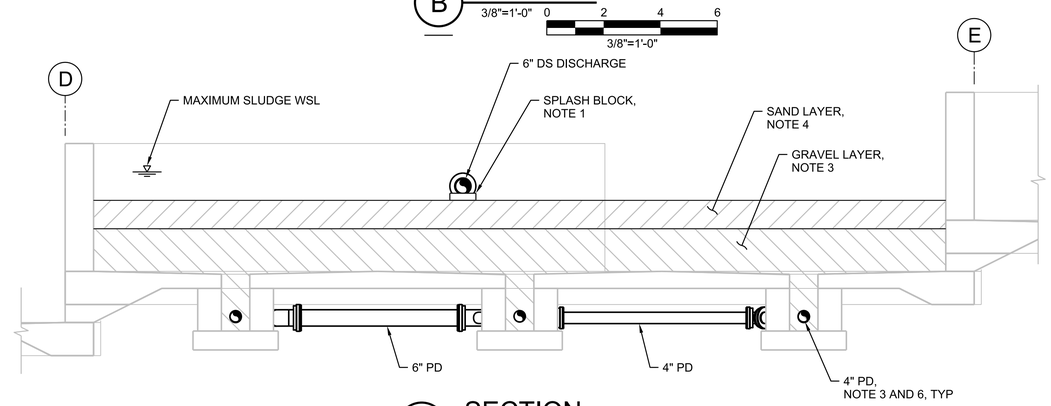

C SECTION
3/8"=1'-0"
0 2 4 6
3/8"=1'-0"

GENERAL SHEET NOTES

A. COMPONENTS AND MATERIALS SHOWN HERE SIMILAR FOR ALL 10 DRYING BEDS.

B. ALL PROCESS PIPING BELOW STRUCTURE TO BE ENCASED, SEE STRUCTURAL DRAWINGS.

SHEET NOTES

1. PROVIDE 24"Lx11"Wx3"T CONCRETE SPLASH BLOCK ON TOP OF SAND LAYER AT DISCHARGE FROM EACH 4" DS PIPE.
2. LOCATE INVERT OF 6" DS DISCHARGE 2'-9" ABOVE DRYING BED SLAB.
3. FILL BOTTOM OF DRYING BED AND TRENCH WITH GRAVEL. TOP OF GRAVEL TO BE 18" ABOVE TOP OF DRYING BED SLAB HIGHPOINT. TOP 3" OF GRAVEL LAYER TO BE 1/8" TO 1/4" SIZE, BELOW THIS LAYER GRAVEL TO BE 1/2" TO 1" SIZE. PLACE GRAVEL IN TRENCH TO PROVIDE ADEQUATE SUPPORT / BEDDING FOR 4" PD PIPE. ABOVE TRENCH PLACE IN LIFTS OF 6" MAXIMUM. GRADED FOR LEVEL SURFACE. WASH GRAVEL PRIOR TO PLACEMENT TO REMOVE FINES. SUBMIT SAMPLE AND DATA ON GRAVEL TYPES TO BE USED.
4. ON TOP OF GRAVEL LAYER, PROVIDE 12" LAYER OF SAND. SAND TO BE 0.5 mm TO 1.0 mm SIZE. SAND TO BE CLEAN, WASHED AND FREE OF ORGANIC MATTER, SILT OR CLAY. GRADED FOR LEVEL SURFACE. SUBMIT SAMPLE AND DATA ON SAND TO BE USED.
5. SOUTH OF TRENCH, LOCATE 4" PD EVENLY BETWEEN REINFORCING MATS TO MAXIMIZE CLEARANCE BETWEEN PIPE AND REINFORCING.
6. IN TRENCH PROVIDE 4" PERFORATED PVC PIPING PER SPECIFICATION 40 27 00.14. SLOPE 4" PD AT 1%.

FULL SIZE DRAWINGS = 22"x34"
BAR MEASURES 1" LONG
0" 1"

Registered Professional Engineer (Civil) 60048 DARREN EDWARDS Date Signed JUNE 19, 2025 ARIZONA, U.S.A.

A/E FIRM	DESIGNED:	SUB SHEET NO.	TITLE OF SHEET	DRAWING NO.
JACOBS GOVERNMENT SERVICES COMPANY GREENWOOD VILLAGE, CO	R CAMPBELL CADD: G BROWN TECH. REVIEW: D EDWARDS DATE: 06/2025	85D4001	DRYING BEDS MECHANICAL ENLARGED PLAN AND SECTIONS GRAND CANYON, SOUTH RIM	113 175376 PMIS/PKG NO. 257282 SHEET 388 OF 401

100% COMPLETE CONSTRUCTION DOCUMENTS

GRCA-257282

85D4001_D3167666.dgn

PLOT DATE: 6/18/2025 PLOT TIME: 9:13:12 AM SS6\V8i D3167666 - South Rim\4 Delivery\43 CAD Design\GRCA\257282\Microstation V8i Drawings\PROC\85D4001_D3167666.dgn

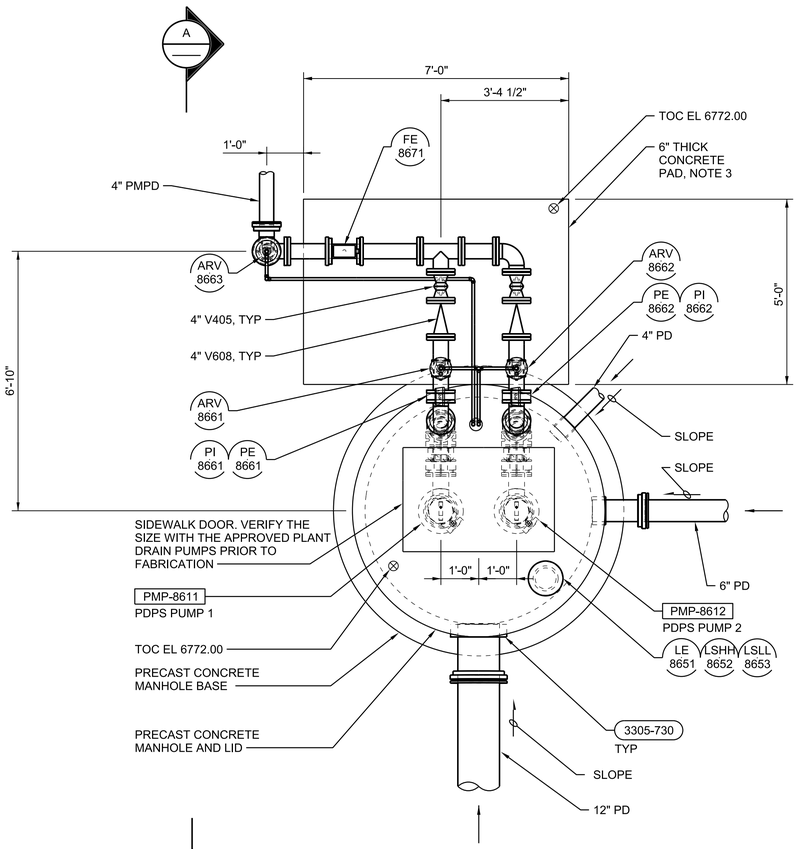

PLAN

1/2"=1'-0"

0 2 4 6

1/2"=1'-0"

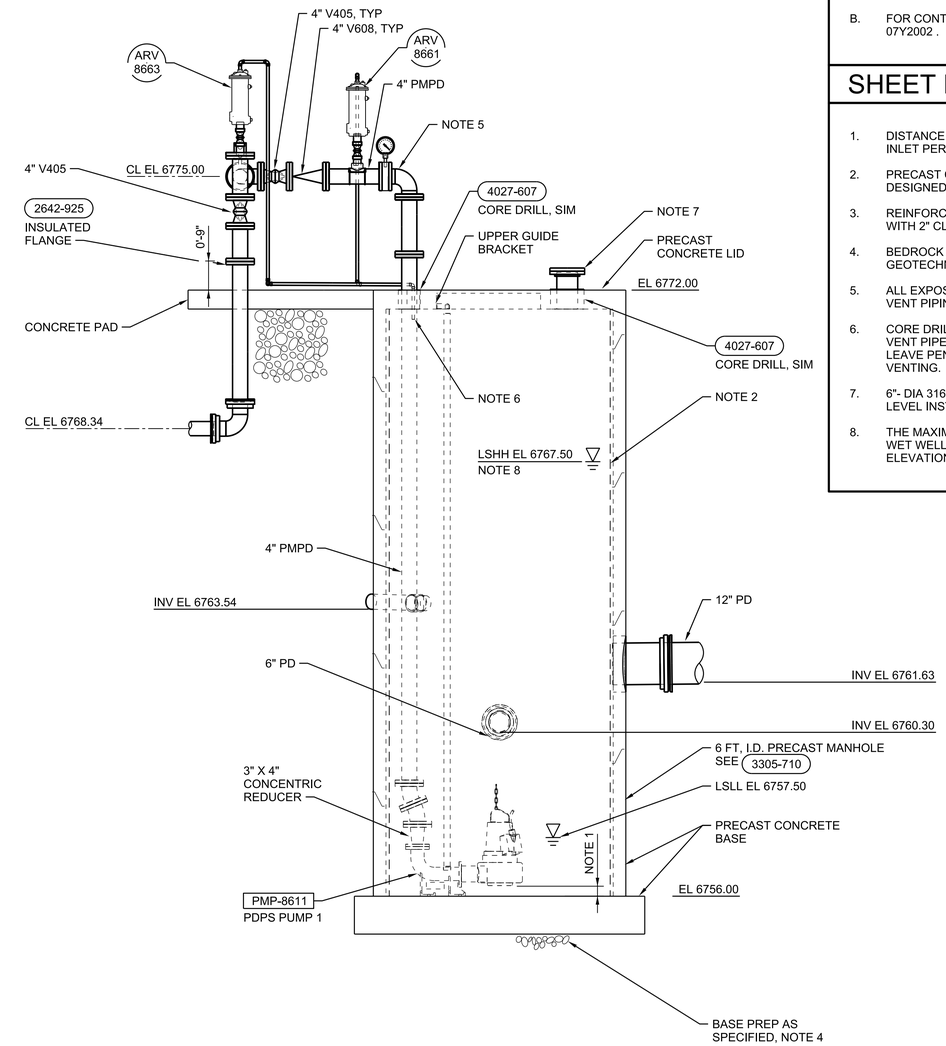

A SECTION

1/2"=1'-0"

0 2 4 6

1/2"=1'-0"

GENERAL SHEET NOTES

A. COAT ALL INTERIOR CONCRETE WITH CHEMICAL RESISTANT COATING, TYP AS PER 09 96 35.

B. FOR CONTINUATION OF PIPING, SEE DRAWING 07Y2002 .

SHEET NOTES

1. DISTANCE BETWEEN WET WELL FLOOR AND PUMP INLET PER APPROVED PUMP MANUFACTURER.
2. PRECAST CONCRETE MANHOLE SHALL BE DESIGNED BY PRECAST CONCRETE SUPPLIER.
3. REINFORCE CONCRETE PAD WITH #4@12 EA WAY WITH 2" CLEAR FROM TOP SURFACE.
4. BEDROCK IS NEAR EXISTING GRADE, SEE GEOTECHNICAL REPORT.
5. ALL EXPOSED PMPD PIPING, VALVES, ARV'S, AND VENT PIPING TO BE HEAT TRACED AND INSULATED.
6. CORE DRILL 4" HOLE THROUGH COVER. ROUTE VENT PIPES TO 2-INCH BELOW BOTTOM OF COVER. LEAVE PENETRATION UNSEALED FOR MANHOLE VENTING.
7. 6"- DIA 316 SST FLOOR PIPE WITH TOP FLANGE FOR LEVEL INSTRUMENT MOUNTING
8. THE MAXIMUM WATER SURFACE ELEVATION IN THE WET WELL IS EQUAL TO THE TOP OF WALL ELEVATION AT DRYING BED NO. 10(EL 6767.80).

GRCA-257282

100% COMPLETE CONSTRUCTION DOCUMENTS

FULL SIZE DRAWINGS = 22"x34"
BAR MEASURES 1" LONG

0" 1"

Registered Professional Engineer (Civil) CERTIFICATE NO. 60646 DARREN EDWARDS Date Signed 6/19/25 ARIZONA, U.S.A.

JUNE 19, 2025

A/E FIRM	DESIGNED:	SUB SHEET NO.	TITLE OF SHEET	DRAWING NO.
JACOBS GOVERNMENT SERVICES COMPANY GREENWOOD VILLAGE, CO	M CONLAY CADD: N HUBER TECH. REVIEW: D EDWARDS DATE: 06/2025	86D1030	PLANT DRAIN PUMP STATION MECHANICAL PLAN AND SECTION GRAND CANYON, SOUTH RIM	113 175376 PMIS/PKG NO. 257282 SHEET 389 OF 401

GENERAL NOTES

A. PROVIDE SEALOFFS PRIOR TO TERMINATION TO ALL DEVICES, EQUIPMENT, CONTROL STATIONS, CONTROL PANELS, SENSORS, SWITCHES, AND ELECTRICAL EQUIPMENT IN HAZARD AREAS AND WHEN ENTERING/LEAVING HAZARD AREAS. REFER TO DRAWINGS 01G0250 AND 01G0251 FOR AREA CLASSIFICATIONS.

B. MAINTAIN A MINIMUM OF 24" BETWEEN POWER CONDUITS AND CONTROL (EXCEPT AS SHOWN FOR HANDSTATIONS) AND INSTRUMENTATION CONDUITS EXCEPT AT POINT OF TERMINATION.

SHEET NOTES

1. BOND TO GROUND WIRE FROM DUCTBANK.
2. BOND TO REBAR IN CONCRETE.
3. PROVIDE BONDING GROUND WIRE AS INDICATED IN MANUFACTURERS INSTALLATION MANUAL.
4. PROVIDE 3/4" PVC SLEEVE THROUGH CONCRETE AND EXTEND TO 6 INCHES PAST EDGE OF SLAB.
5. VENDOR CABLE CONTRACTOR INSTALLED. PROVIDE 2" STAINLESS STEEL CONDUIT AND SEAL-OFFS. SPLIT-BODY (RETROFIT) SEAL-OFFS.
6. VENDOR CABLE CONTRACTOR INSTALLED. PROVIDE 1.5" STAINLESS STEEL CONDUIT AND SEAL-OFFS. SPLIT-BODY (RETROFIT) SEAL-OFFS.
7. REFER TO MECHANICAL DRAWING 86D1030 AND PID DRAWING 09N8601 FOR EXTENT OF HEAT TRACE REQUIRED.
8. USE EPDM/STAINLESS STEEL THROUGH-WALL MECHANICAL PIPE SEALS FOR CONDUITS TO WET WELL AND VALVE VAULT.
9. INSTALL MOTOR PROTECTION RELAYS MPR-8611 AND MPR-8612 IN LCS-8611/8612 IN ACCORDANCE WITH JACOBS DETAIL 2624-010.

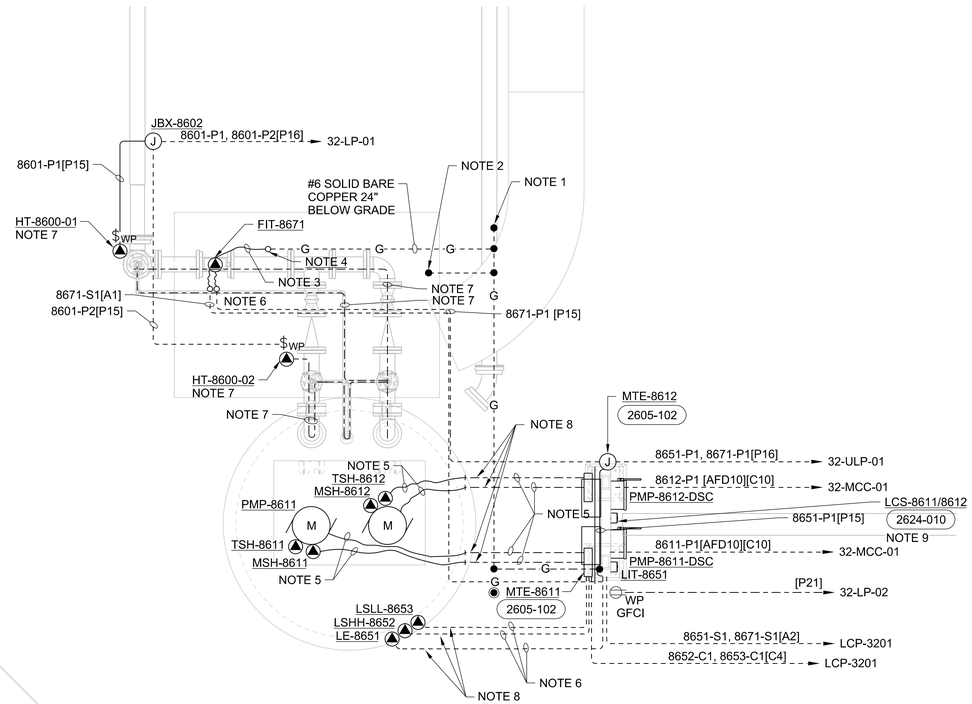

PLAN

1/2"=1'-0"

0 2 4 6

1/2"=1'-0"

FULL SIZE DRAWINGS = 22"x34"
BAR MEASURES 1" LONG

0" 1"

Registered Professional Engineer (Civil/Civil)
CERTIFICATE NO.
81240
DAVID
BURGER
Date Signed 6-19-2025
ARIZONA, U.S.A.

JUNE 19, 2025

A/E FIRM	DESIGNED:	SUB SHEET NO.	TITLE OF SHEET	DRAWING NO.
JACOBS GOVERNMENT SERVICES COMPANY GREENWOOD VILLAGE, CO	D BURGER CADD: J GARIBAY TECH. REVIEW: J LANDMAN DATE: 06/2025	86E1030	PLANT DRAIN PUMP ELECTRICAL PLAN GRAND CANYON, SOUTH RIM	113 / 175376 PMIS/PKG NO. 257282 SHEET 390 OF 401

GRCA-257282

100% COMPLETE CONSTRUCTION DOCUMENTS

PLOT DATE: 06/17/2025 PLOT TIME: 11:19:17 AM SS6/V8i $FILEL$

GENERAL SHEET NOTES

A. FOR GENERAL STRUCTURAL NOTES SEE DRAWINGS 01S0001 AND 01S0002.

SHEET NOTES

1. COORDINATE LOCATION WITH MECHANICAL.
2. FACILITY LOCATION CONTROL POINT. SEE CIVIL DRAWING 06C2001.
3. REINFORCE SLAB-ON-GRADE WITH #5@12" EW, T&B.

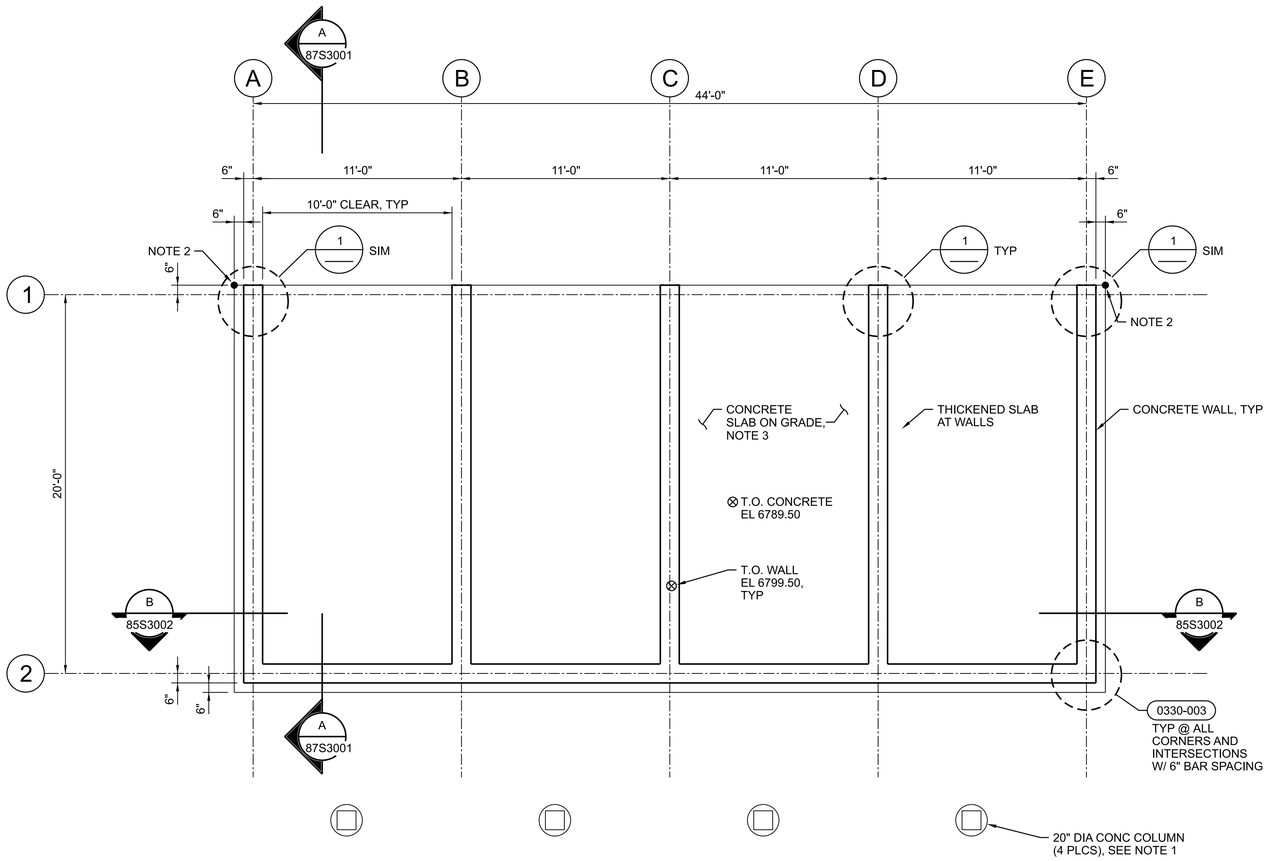

PLAN
1/4"=1'-0"

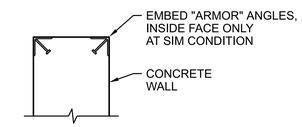

1 "ARMOR" ANGLES
1"=1'-0"
87S3001

0 4 8 12
1/4"=1'-0"

FULL SIZE DRAWINGS = 22"x34"
BAR MEASURES 1" LONG
0" 1"

Registered Professional Engineer (Civil) CERTIFICATE NO. 81476 WAYNE W. KOHLER ARIZONA U.S.A. Expires 6/30/25

A/E FIRM	DESIGNED: W KOHLER	SUB SHEET NO.	TITLE OF SHEET	DRAWING NO.
JACOBS GOVERNMENT SERVICES COMPANY GREENWOOD VILLAGE, CO	CADD: B CLEGG TECH. REVIEW: A FIRTH DATE: 06/2025	87S1030	COMPOST FACILITY STRUCTURAL FOUNDATION PLAN AND DETAIL GRAND CANYON, SOUTH RIM	113 175376 PMIS/PKG NO. 257282 SHEET 391 OF 401

100% COMPLETE CONSTRUCTION DOCUMENTS

GRCA-257282

PLOT DATE: 16-JUN-2025 PLOT TIME: 14:34 SS6\V8i D3167666 - South Rim\4 Delivery\43 CAD Design\GRCA\257282\Microstation V8i Drawings\STRUC\87S1030_D3167666.dgn

GENERAL SHEET NOTES

A. FOR GENERAL STRUCTURAL NOTES, SEE DRAWING 01S0001 to 01S0003.

B. ALL STEEL MATERIALS SHALL BE HOT DIPPED GALVANIZED.

C. 1 = ROOF DECK TYPE, SEE METAL DECK SCHEDULE ON 01S0002.

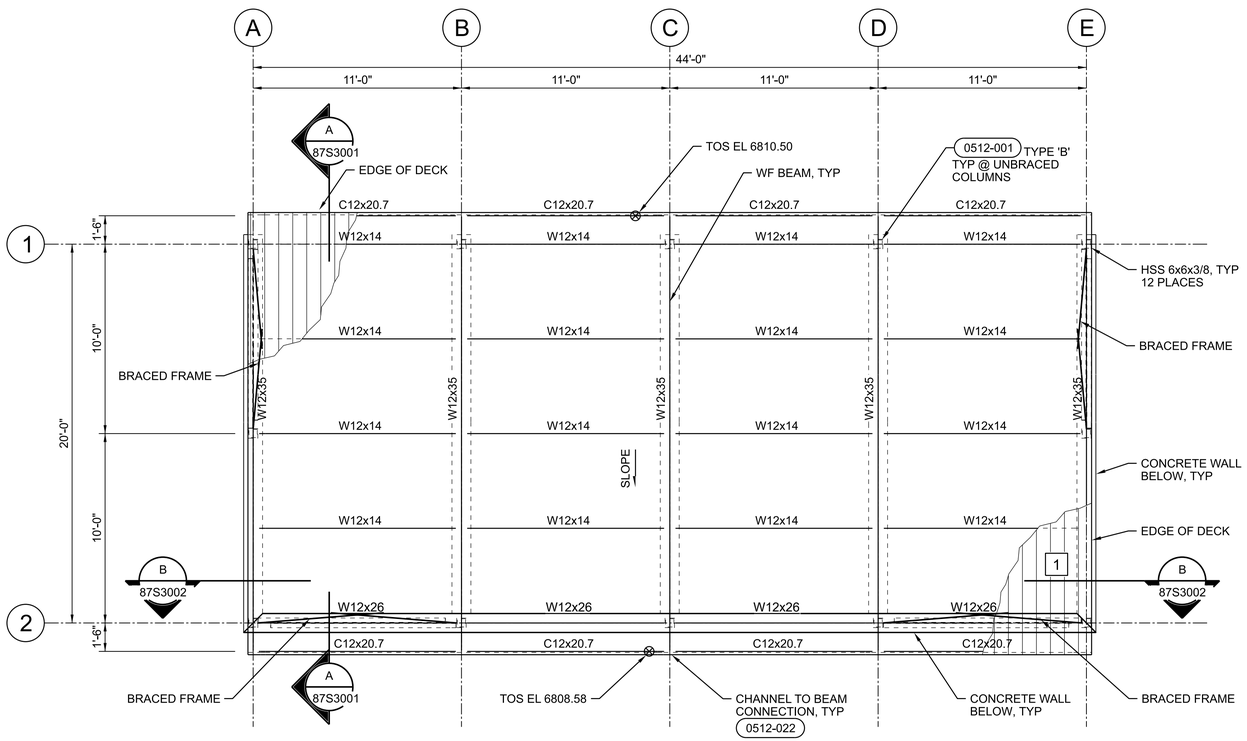

PLAN

1/4"=1'-0"

0 4 8 12

1/4"=1'-0"

FULL SIZE DRAWINGS = 22"x34"
BAR MEASURES 1" LONG

0" 1"

A/E FIRM JACOBS GOVERNMENT SERVICES COMPANY GREENWOOD VILLAGE, CO	DESIGNED: W KOHLER CADD: B CLEGG TECH. REVIEW: A FIRTH DATE: 06/2025	SUB SHEET NO. 87S1040	TITLE OF SHEET COMPOST FACILITY STRUCTURAL ROOF PLAN GRAND CANYON, SOUTH RIM	DRAWING NO. 113 175376 PMIS/PKG NO. 257282 SHEET 392 OF 401

100% COMPLETE CONSTRUCTION DOCUMENTS

GRCA-257282

PLOT DATE: 16-JUN-2025 PLOT TIME: 14:34 SS6/V8I D3167666 - South Rim\4 Delivery\43 CAD Design\GRCA\257282\Microstation V8I Drawings\STRUC\87S1040_D3167666.dgn

SHEET NOTES

1. BEDROCK IS LOCATED NEAR THE EXISTING GROUND SURFACE. SEE GEOTECHNICAL REPORT FOR ADDITIONAL INFORMATION.

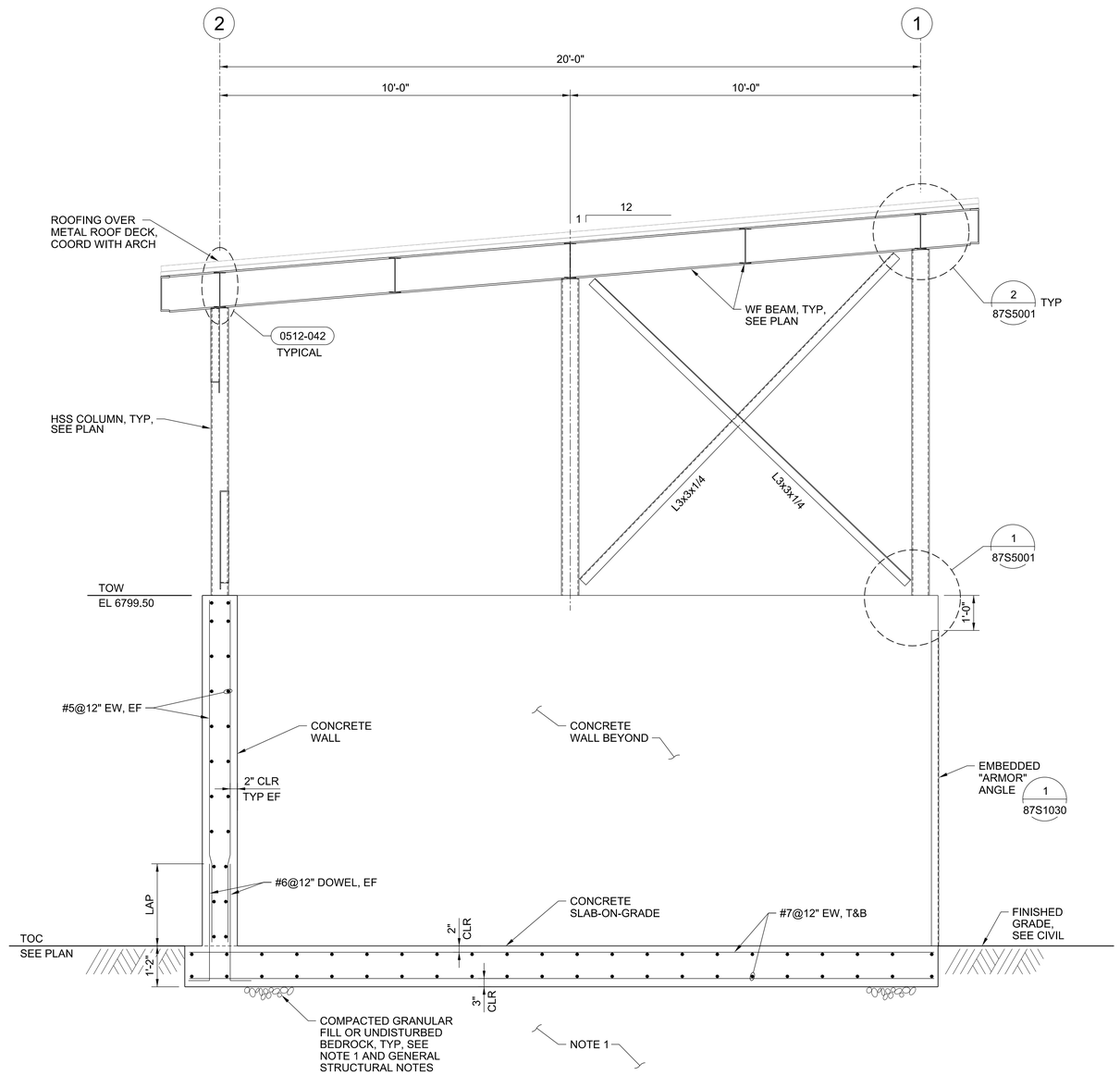

A SECTION
1/2"=1'-0"
87S1030
87S1040
87S3002

0 2 4 6
1/2"=1'-0"

FULL SIZE DRAWINGS = 22"x34"
BAR MEASURES 1" LONG
0" 1"

Registered Professional Engineer (Civil) CERTIFICATE NO. 81470 WAYNE W. KOHLER ARIZONA U.S.A. Date Signed 6/20/25	A/E FIRM JACOBS GOVERNMENT SERVICES COMPANY GREENWOOD VILLAGE, CO	DESIGNED: W KOHLER CADD: B CLEGG TECH. REVIEW: A FIRTH DATE: 06/2025	SUB SHEET NO. 87S3001	TITLE OF SHEET COMPOST FACILITY STRUCTURAL SECTION GRAND CANYON, SOUTH RIM	DRAWING NO. 113 175376 PMIS/PKG NO. 257282 SHEET 393 OF 401

GRCA-257282

100% COMPLETE CONSTRUCTION DOCUMENTS

PLOT DATE: 06\20\2025 PLOT TIME: 9:17:55 AM SS6\V8i D3167666 - South Rim\4 Delivery\43 CAD Design\GRCA\257282\Microstation V8i Drawings\STRUC\87S3001_D3167666.dgn