SHEET NOTES

1. BEDROCK IS LOCATED NEAR THE EXISTING GROUND SURFACE. SEE GEOTECHNICAL REPORT FOR ADDITIONAL INFORMATION.

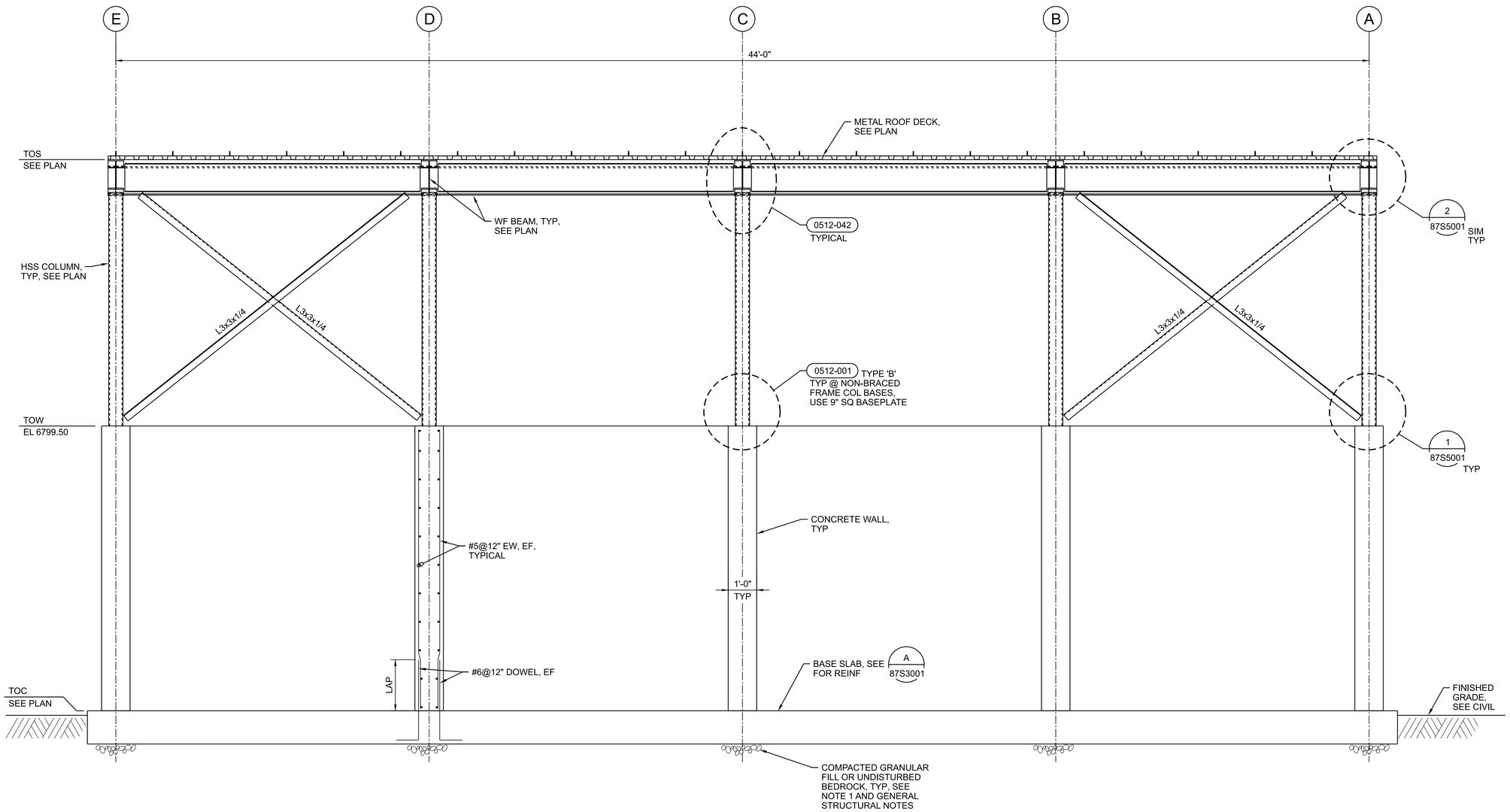

B SECTION
1/2"=1'-0"
87S1030
87S1040

0 2 4 6
1/2"=1'-0"

FULL SIZE DRAWINGS = 22"x34"
BAR MEASURES 1" LONG
0" 1"

Registered Professional Engineer (Civil) 81476 WAYNE W. KOHLER ARIZONA U.S.A. Date Signed 6/20/25	A/E FIRM JACOBS GOVERNMENT SERVICES COMPANY GREENWOOD VILLAGE, CO	DESIGNED: W KOHLER CADD: B CLEGG TECH. REVIEW: A FIRTH DATE: 06/2025	SUB SHEET NO. 87S3002	TITLE OF SHEET COMPOST FACILITY STRUCTURAL SECTION GRAND CANYON, SOUTH RIM	DRAWING NO. 113 / 175376 PMIS/PKG NO. 257282 SHEET 394 OF 401

PLOT DATE: 16-JUN-2025 PLOT TIME: 14:34 SS6\V8i D3167666 - South Rim\4 Delivery\43 CAD Design\GRCA\257282\Microstation V8i Drawings\STRUC\87S3002_D3167666.dgn
GRCA-257282
100% COMPLETE CONSTRUCTION DOCUMENTS

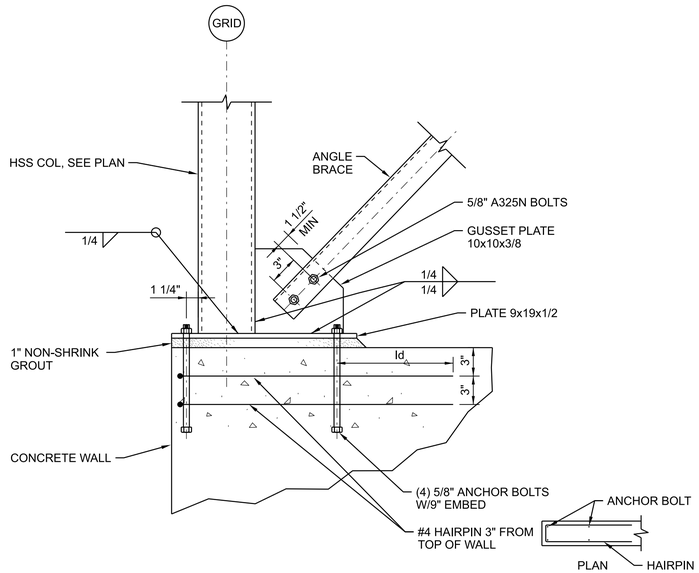

1 BRACE@ BASE CONNECTION

1 1/2"=1'-0"

87S1030
87S3001
87S3002

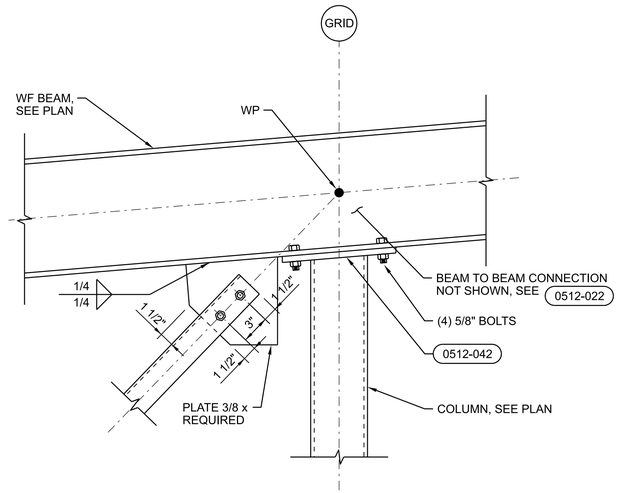

2 BRACE@ HEAD CONNECTION

1 1/2"=1'-0"

87S1030
87S3001
87S3002

0 1 2
1 1/2"=1'-0"

FULL SIZE DRAWINGS = 22"x34"
BAR MEASURES 1" LONG

0" 1"

REGISTERED PROFESSIONAL ENGINEER
81476
WAYNE W. KOHLER
ARIZONA U.S.A.
6/24/25

A/E FIRM JACOBS GOVERNMENT SERVICES COMPANY GREENWOOD VILLAGE, CO	DESIGNED: W KOHLER CADD: B CLEGG TECH. REVIEW: A FIRTH DATE: 06/2025	SUB SHEET NO. 87S5001	TITLE OF SHEET COMPOST FACILITY STRUCTURAL DETAILS GRAND CANYON, SOUTH RIM	DRAWING NO. 113 175376 PMIS/PKG NO. 257282 SHEET 395 OF 401

PLOT DATE: 16-JUN-2025 PLOT TIME: 14:34 SS6/V8I D3167666 - South Rim\4 Delivery\43 CAD Design\GRCA\257282\Microstation V8I Drawings\STRUC\87S5001_D3167666.dgn

GRCA-257282

100% COMPLETE CONSTRUCTION DOCUMENTS

GENERAL SHEET NOTES

A. FOR ADDITIONAL PLAN INFORMATION, SEE STRUCTURAL DRAWING 87S1030 AND 87S1040.

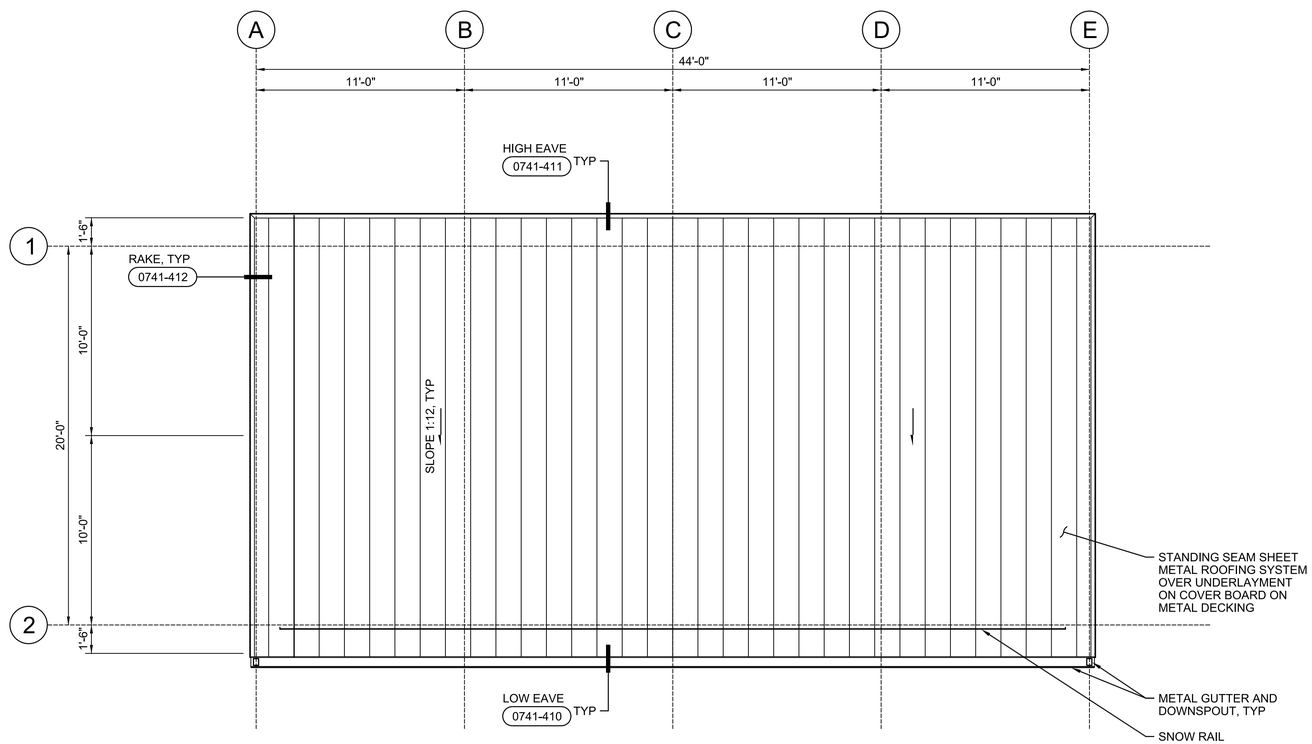

N

PLAN

1/4"=1'-0"

COLOR LIST

NOTES:

NO. 1 COLOR SELECTIONS FOR THIS PROJECT MAY BE NOTED IN, EXTERIOR FINISH SCHEDULE, PIPING SCHEDULE AND ON THE DRAWINGS BY THE LETTER-NUMBER COMBINATION IN THE MARK COLUMN OF THIS LIST.

NO. 2 SOME COLOR SELECTIONS MAY BE MADE IN VARIOUS SPECIFICATION SECTIONS.

NO. 3 USE ONLY THE COLORS NOTED OR SCHEDULED. IF A COLOR SELECTION IS NOT MADE, REQUEST ONE FROM THE CONTRACTING OFFICER.

NO. 4 THE LISTED MANUFACTURERS AND COLORS ARE ONLY INCLUDED FOR THE PURPOSES OF ESTABLISHING A COLOR SCHEME GUIDE AND ARE NOT INTENDED TO LIMIT THE CONSTRUCTION FROM PURPOSING ALTERINATE MANUFACTURERS AND COLORS FOR REVIEW AND APPROVAL BY THE CONTRACTING OFFICER. SPECIFICATION SECTIONS ARE LISTED IN PARENTTHESIS AFTER MANUFACTURERS.

MARK	MATERIAL	MANUFACTURER	COLOR
MISCELLANEOUS			
M-1	SHEET METAL ROOF PANELS	IMETCO (SPEC 07 41 13)	DENALI GREEN
M-2	SHEET METAL GUTTERS AND DOWNSPOUTS	IMETCO (SPEC 07 41 13)	DENALI GREEN

EXTERIOR FINISH SCHEDULE

ITEM / MATERIAL	FINISH	COLOR
SHEET METAL ROOF PANELS	FACTORY	M-1
SHEET METAL GUTTERS AND DOWNSPOUTS	FACTORY	M-2

0 4 8 12

1/4"=1'-0"

FULL SIZE DRAWINGS = 22"x34"
BAR MEASURES 1" LONG

0" 1"

REGISTERED ARCHITECT
CERTIFICATE NO. 80687
MORGAN SHOEMAKER
Date Signed 6/16/25
ARIZONA, U.S.A.
Expires 06-30-2027

A/E FIRM
JACOBS GOVERNMENT SERVICES COMPANY
GREENWOOD VILLAGE, CO

DESIGNED: M SHOEMAKER
CADD: M COLLINS
TECH. REVIEW: G KIRSTEN
DATE: 06/2025

SUB SHEET NO. 87A1040

TITLE OF SHEET
COMPOST FACILITY ARCHITECTURAL ROOF PLAN AND SCHEDULES
GRAND CANYON, SOUTH RIM

DRAWING NO. 113
175376
PMIS/PKG NO. 257282
SHEET 396 OF 401

GRCA-257282

100% COMPLETE CONSTRUCTION DOCUMENTS

PLOT DATE: 6/16/2025 PLOT TIME: 6:01:42 PM SS6/V8I D3167666 - South Rim\4 Delivery\43 CAD Design\GRCA\257282\Microstation V8i Drawings\ARCH\87A1040_D3167666.dgn

SHEET NOTES

1. PROVIDE A TOTAL OF SIXTEEN 7/8" DIAMETER HOLES IN SIDES OF NORTHERN 4' SECTION OF BA SPACED EVERY 3" ALTERNATING SIDES, TYPICAL.
2. PROVIDE ONE 7/8" DIAMETER HOLE IN BAND CAP AT BA INVERT TO ALLOW FOR DRAINAGE, TYPICAL.
3. MAKE CONNECTIONS TO COMPOST FAN WITH FLEXIBLE MECHANICAL COMPRESSION JOINT COUPLINGS. PIPING SHOWN FOR COMPOSTING FAN 4 IS SIMILAR FOR ALL FOUR FANS.

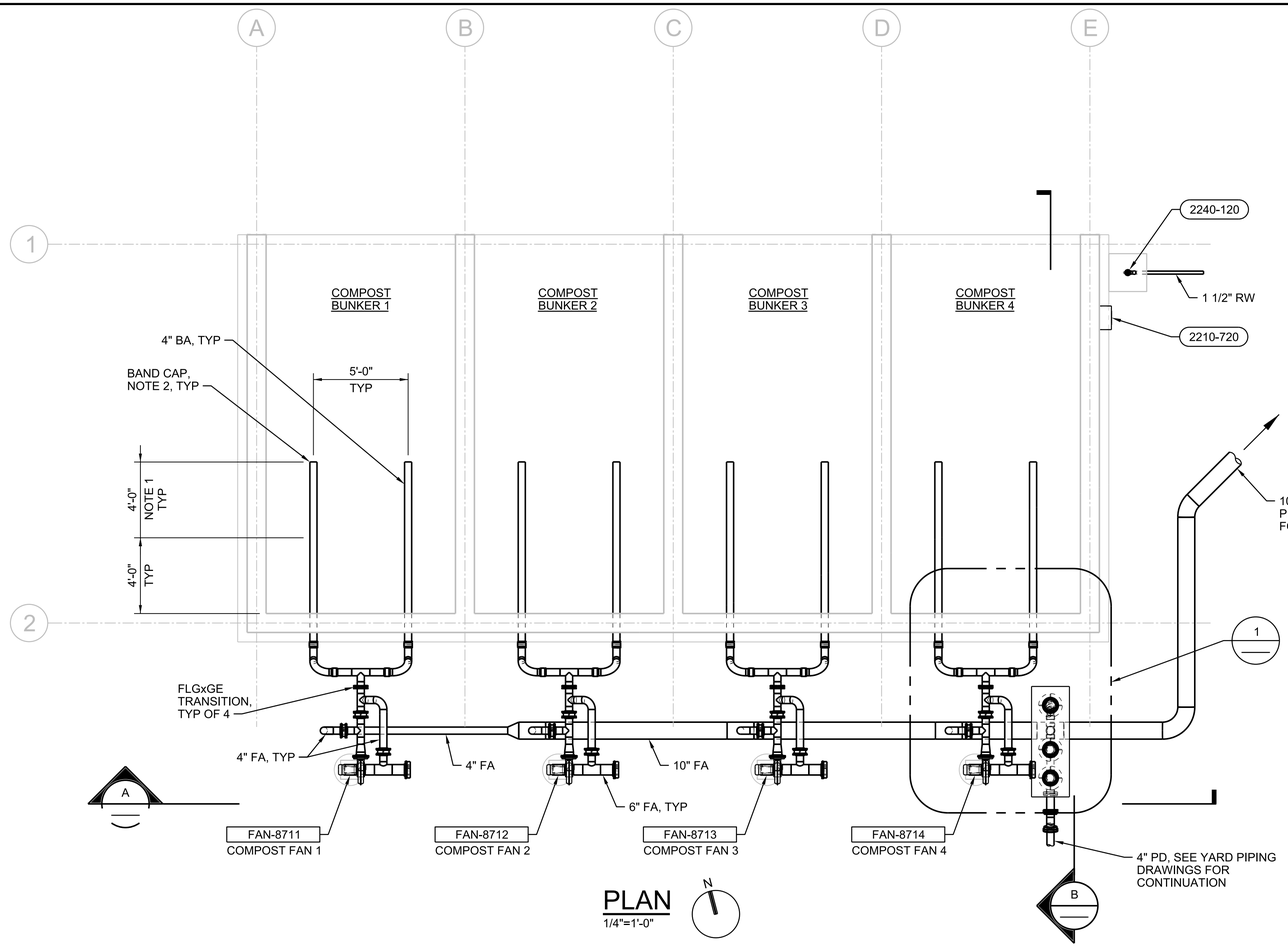

PLAN
1/4"=1'-0"

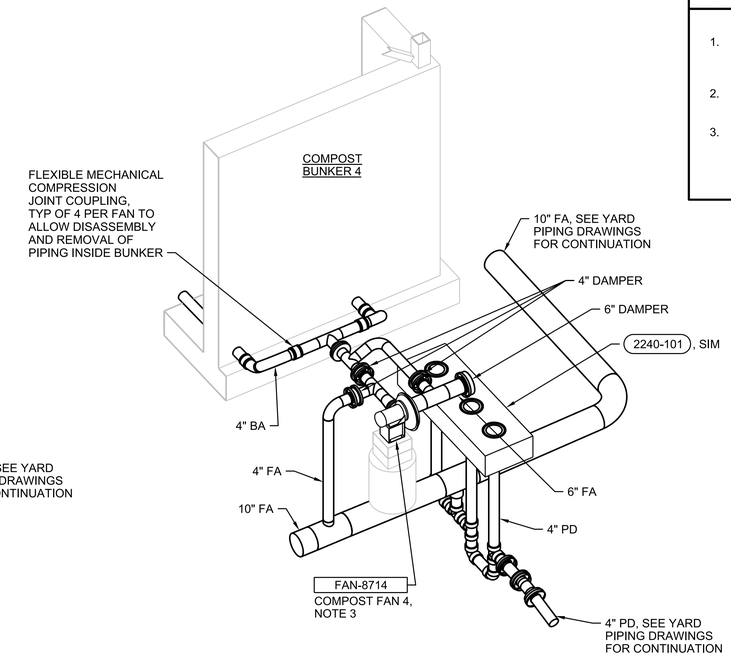

1 DETAIL
NTS

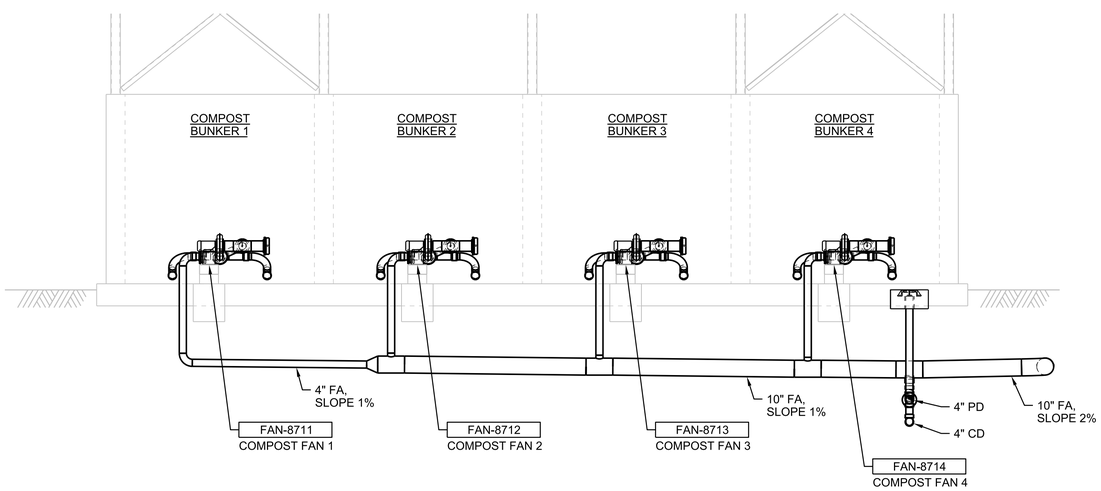

A SECTION
1/4"=1'-0"

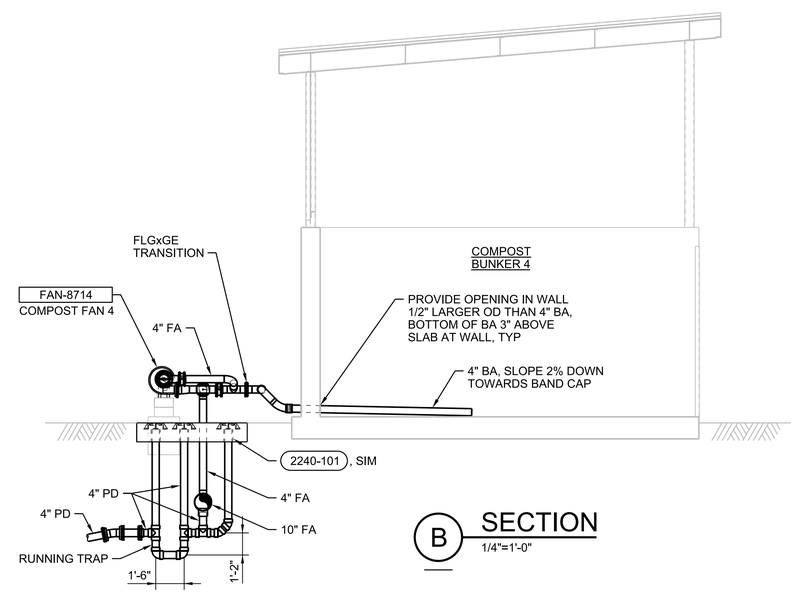

B SECTION
1/4"=1'-0"

0 4 8 12
1/4"=1'-0"

FULL SIZE DRAWINGS = 22"x34"
BAR MEASURES 1" LONG
0" 1"

Registered Professional Engineer (Civil) 69045 DARREN EDWARDS Date Signed 6/19/25 ARIZONA, U.S.A.
JUNE 19, 2025

A/E FIRM: JACOBS GOVERNMENT SERVICES COMPANY, GREENWOOD VILLAGE, CO	DESIGNED: R CAMPBELL	SUB SHEET NO.	TITLE OF SHEET: COMPOST FACILITY MECHANICAL PLAN, SECTIONS AND DETAIL — GRAND CANYON, SOUTH RIM
	CADD: G BROWN	87D1030	DRAWING NO. 113 / 175376
	TECH. REVIEW: D EDWARDS		PMIS/PKG NO. 257282
	DATE: 06/2025		SHEET 397 OF 401

100% COMPLETE CONSTRUCTION DOCUMENTS

GRCA-257282

PLOT DATE: 6/17/2025 PLOT TIME: 11:28:44 AM SS6/V8i D3167666 - South Rim\4 Delivery\43 CAD Design\GRCA\257282\Microstation V8i Drawings\PROC\87D1030_D3167666.dgn

GENERAL NOTES

1. PROVIDE SEALOFFS PRIOR TO TERMINATION TO ALL DEVICES, EQUIPMENT, CONTROL STATIONS, CONTROL PANELS, SENSORS, SWITCHES, AND ELECTRICAL EQUIPMENT IN HAZARD AREAS AND WHEN ENTERING/LEAVING HAZARD AREAS. REFER TO DRAWINGS 01G0250 AND 01G0251 FOR AREA CLASSIFICATION.
2. MAINTAIN A MINIMUM OF 24" BETWEEN POWER CONDUITS AND CONTROL (EXEPT AS SHOWN FOR HANDSTATIONS) AND INSTRUMENTATION CONDUITS EXCEPT AT POINT OF TERMINATION.

SHEET NOTES

1. CONNECT TO HEADWORKS GROUND RING. REFER TO DRAWING 20EP1030.
2. BOND TO REBAR IN CONCRETE.
3. COORDINATE INSTALLATION WITH MECHANICAL CONTRACTOR.
4. REFER TO DRAWING 09N8701 AND 87D1030 FOR P&ID AND PROCESS MECHANICAL. SEE JACOBS CONTROL STATION DETAIL 2624-013.
5. BOND TO GROUND WIRE FROM DUCTBANK.

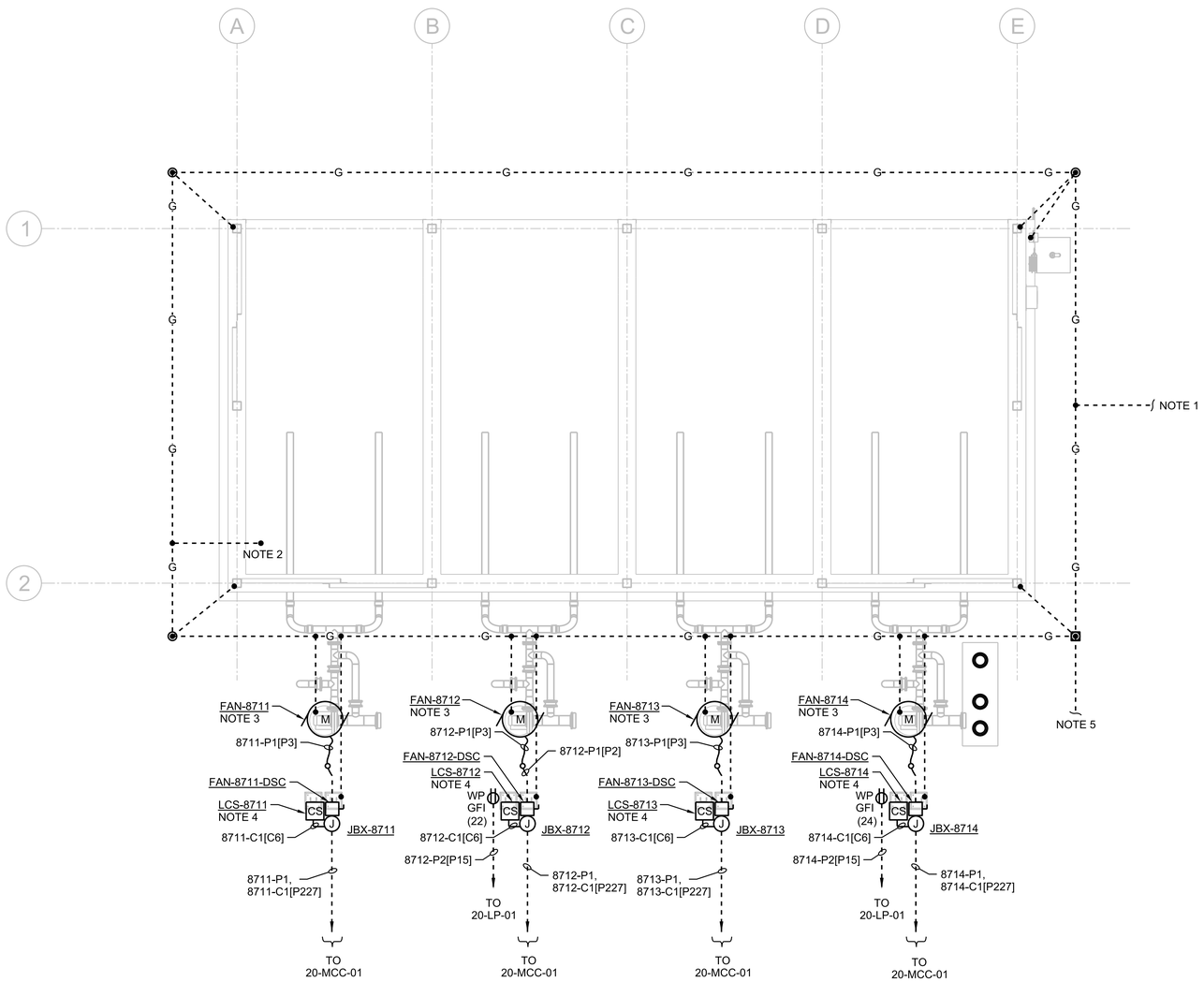

N

PLAN

1/4"=1'-0"

0 4 8 12

1/4"=1'-0"

FULL SIZE DRAWINGS = 22"x34"
BAR MEASURES 1" LONG

0" 1"

Registered Professional Engineer (Civil/Fire)
CERTIFICATE NO. 81240
DAVID BURGER
Date Signed 6-19-2025
ARIZONA, U.S.A.

JUNE 19, 2025

A/E FIRM	DESIGNED:	SUB SHEET NO.	TITLE OF SHEET	DRAWING NO.
JACOBS GOVERNMENT SERVICES COMPANY GREENWOOD VILLAGE, CO	D BURGER CADD: J GARIBAY TECH. REVIEW: J LANDMAN DATE: 06/2025	87E1030	COMPOST FACILITY ELECTRICAL POWER PLAN GRAND CANYON, SOUTH RIM	113 / 175376 PMIS/PKG NO. 257282 SHEET 398 OF 401

100% COMPLETE CONSTRUCTION DOCUMENTS

GRCA-257282

PLOT DATE: 6/16/2025 PLOT TIME: 11:37:51 PM SS6/V8I D3167666 - South Rim4 Delivery\43 CAD Design\GRCA\257282\Microstation V8I Drawings\ELEC\87E1030_D3167666.dgn

GENERAL SHEET NOTES

A. FOR GENERAL STRUCTURAL NOTES SEE DRAWINGS 01S0001, 01S0002, AND 01S0003.

B. FACILITY LOCATION CONTROL POINT, SEE CIVIL DRAWING 06C2002.

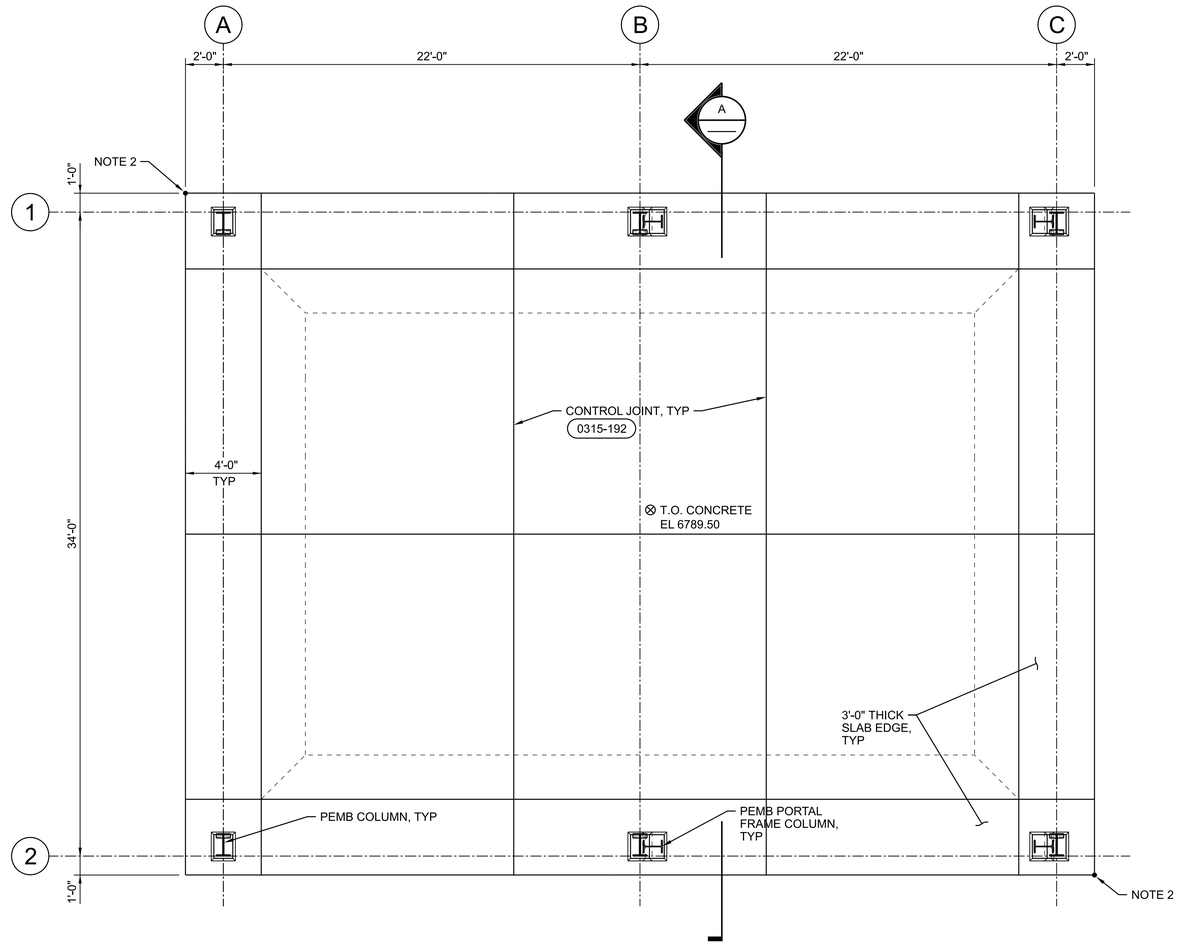

PLAN
1/4"=1'-0"
2

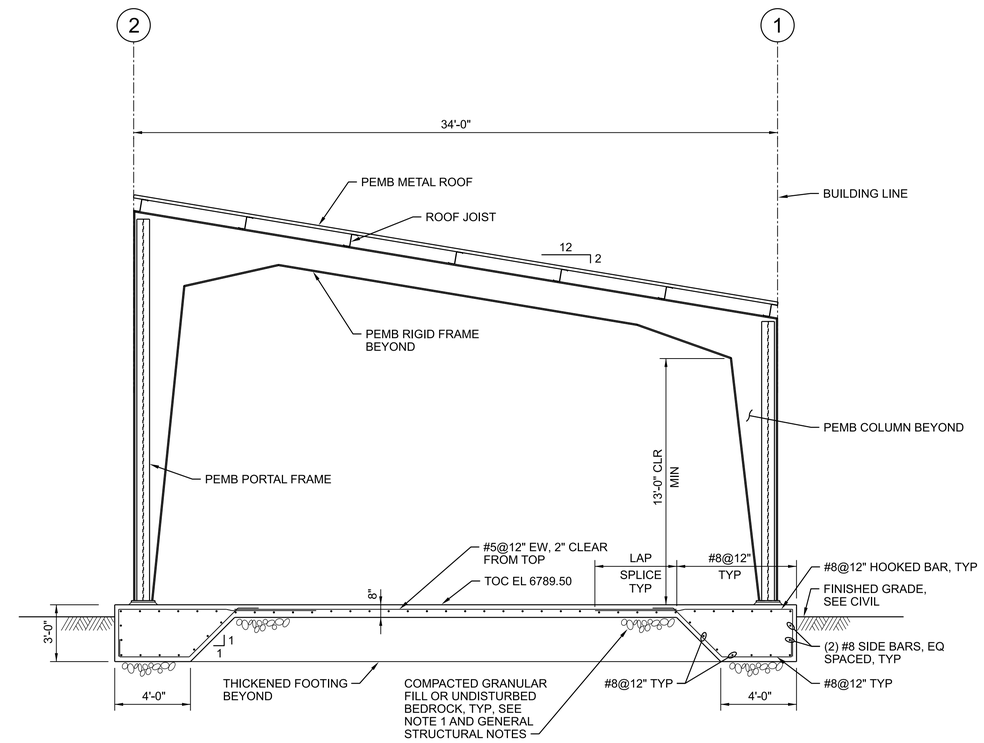

A
88S1040
SECTION
1/4"=1'-0"

0 4 8 12
1/4"=1'-0"

FULL SIZE DRAWINGS = 22"x34"
BAR MEASURES 1" LONG
0" 1"

Wayne W. Kohler REGISTERED PROFESSIONAL ENGINEER (CIVIL) 81476 WAYNE W. KOHLER DATE SIGNED 6/26/25 ARIZONA U.S.A.	A/E FIRM JACOBS GOVERNMENT SERVICES COMPANY GREENWOOD VILLAGE, CO	DESIGNED: C WEBSTER CADD: B CLEGG TECH. REVIEW: A FIRTH DATE: 06/2025	SUB SHEET NO. 88S1030	TITLE OF SHEET COVERED STORAGE STRUCTURAL PLAN AND SECTIONS GRAND CANYON, SOUTH RIM

DRAWING NO. 113
PMIS/PKG NO. 175376
SHEET 399 OF 401

100% COMPLETE CONSTRUCTION DOCUMENTS

GRCA-257282

PLOT DATE: 16-JUN-2025 PLOT TIME: 14:38 SS6/V8I D3167666 - South Rim\4 Delivery\43 CAD Design\GRCA\257282\Microstation V8I Drawings\STRUC\88S1030_D3167666.dgn

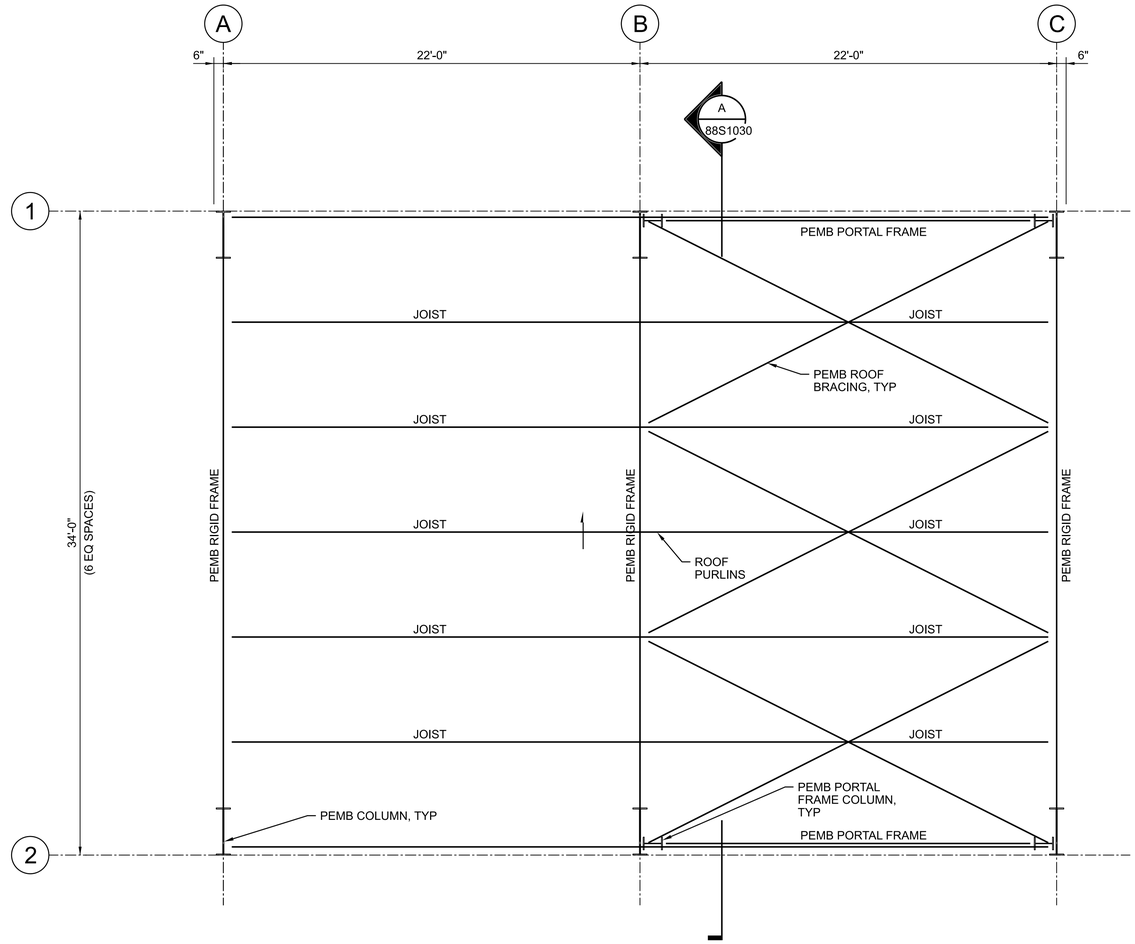

ROOF FRAMING PLAN

1/4"=1'-0"

N

GENERAL SHEET NOTES

A. FOR GENERAL STRUCTURAL NOTES SEE DRAWINGS 01S0001, 01S0002, AND 01S0003.

MINIMUM COMPONENTS AND CLADDING STRENGTH LEVEL WIND DESIGN PRESSURE:

ZONE	PRESSURE (PSF)
1	30.6; -28.3
2	45.8; -42.7
3	45.8; -42.7

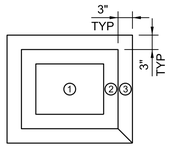

ROOF ZONE

MINIMUM UNFACTORED BALANCED SNOW LOAD DIAGRAM (NOTE 3):

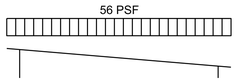

0 4 8 12

1/4"=1'-0"

FULL SIZE DRAWINGS = 22"x34"
BAR MEASURES 1" LONG

0" 1"

Registered Professional Engineer (Civil)
CERTIFICATE NO. 8147
WAYNE W. KOHLER
ARIZONA U.S.A.
Date Signed 6/20/25

A/E FIRM	DESIGNED:	SUB SHEET NO.
JACOBS GOVERNMENT SERVICES COMPANY GREENWOOD VILLAGE, CO	C WEBSTER CADD: B CLEGG TECH. REVIEW: A FIRTH DATE: 06/2025	88S1040

TITLE OF SHEET

COVERED STORAGE STRUCTURAL ROOF PLAN

GRAND CANYON, SOUTH RIM

DRAWING NO. 113 175376

PMIS/PKG NO. 257282

SHEET 400 OF 401

100% COMPLETE CONSTRUCTION DOCUMENTS

GRCA-257282

PLOT DATE: 16-JUN-2025 PLOT TIME: 14:36 SS6/V8i D3167666 - South Rim\4 Delivery\43 CAD Design\GRCA\257282\Microstation V8i Drawings\STRUC\88S1040_D3167666.dgn

GENERAL SHEET NOTES

A. FOR ADDITIONAL PLAN INFORMATION, SEE STRUCTURAL DRAWING 88S1030 AND 88S1040.

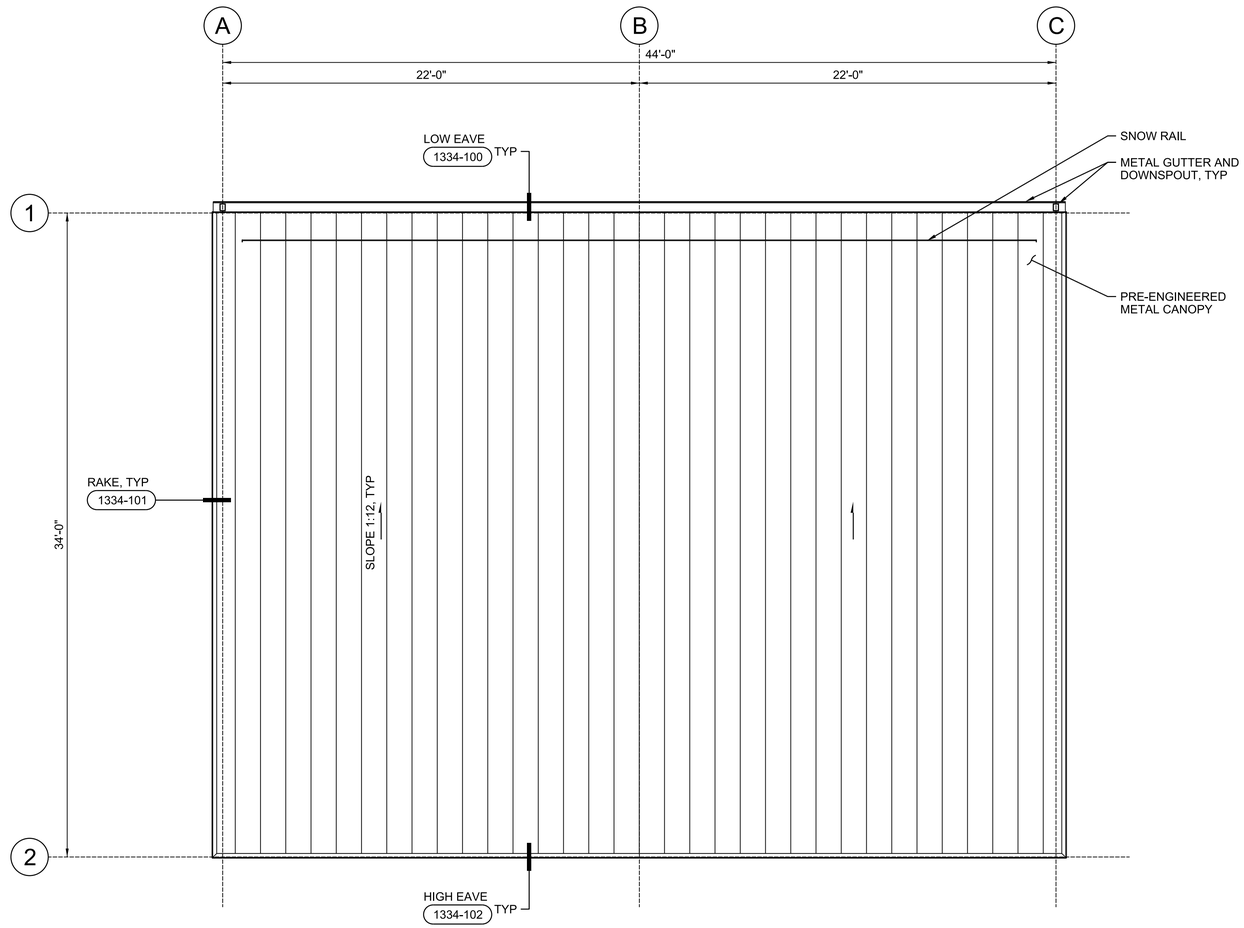

N

PLAN

1/4"=1'-0"

COLOR LIST

NOTES:

NO. 1 COLOR SELECTIONS FOR THIS PROJECT MAY BE NOTED IN EXTERIOR FINISH SCHEDULE AND ON THE DRAWINGS BY THE LETTER-NUMBER COMBINATION IN THE MARK COLUMN OF THIS LIST.

NO. 2 SOME COLOR SELECTIONS MAY BE MADE IN VARIOUS SPECIFICATION SECTIONS.

NO. 3 USE ONLY THE COLORS NOTED OR SCHEDULED. IF A COLOR SELECTION IS NOT MADE, REQUEST ONE FROM THE CONTRACTING OFFICER.

NO. 4 THE LISTED MANUFACTURERS AND COLORS ARE ONLY INCLUDED FOR THE PURPOSES OF ESTABLISHING A COLOR SCHEME GUIDE AND ARE NOT INTENDED TO LIMIT THE CONSTRUCTION FROM PURPOSING ALTERINATE MANUFACTURERS AND COLORS FOR REVIEW AND APPROVAL BY THE CONTRACTING OFFICER.

MARK	MATERIAL	MANUFACTURER	COLOR
MISCELLANEOUS			
M-1	SHEET METAL ROOF	AS SPECIFIED IN 13 34 19	GREEN
M-2	SHEET METAL GUTTERS AND DOWNSPOUTS	AS SPECIFIED IN 13 34 19	GREEN
M-3	STRUCTURAL FRAME AND COLUMNS	AS SPECIFIED IN 13 34 19	GREY

EXTERIOR FINISH SCHEDULE

ITEM / MATERIAL	FINISH	COLOR
SHEET METAL ROOF	FACTORY	M-1
SHEET METAL GUTTERS AND DOWNSPOUTS	FACTORY	M-2
STRUCTURAL FRAME AND CLOMUNS	FACTORY	M-3

0 4 8 12

1/4"=1'-0"

FULL SIZE DRAWINGS = 22"x34"
BAR MEASURES 1" LONG

0" 1"

REGISTERED ARCHITECT
CERTIFICATE NO. 30687
MORGAN SHOEMAKER
Date Signed 6/16/25
ARIZONA, U.S.A.
Expires 06-30-2027

A/E FIRM
JACOBS GOVERNMENT SERVICES COMPANY
GREENWOOD VILLAGE, CO

DESIGNED: M SHOEMAKER
CADD: M COLLINS
TECH. REVIEW: G KIRSTEN
DATE: 06/2025

SUB SHEET NO. 88A1040

TITLE OF SHEET
COVERED STORAGE ARCHITECTURAL ROOF PLAN AND SCHEDULES
GRAND CANYON, SOUTH RIM

DRAWING NO. 113 / 175376
PMIS/PKG NO. 257282
SHEET 401 OF 401

100% COMPLETE CONSTRUCTION DOCUMENTS

GRCA-257282

PLOT DATE: 6/16/2025 PLOT TIME: 6:01:42 PM SS6/V8i D3167666 - South Rim\4 Delivery\43 CAD Design\GRCA\257282\Microstation V8i Drawings\ARCH\88A1040_D3167666.dgn

100% COMPLETE
CONSTRUCTION DOCUMENTS

JUNE 2025

STANDARD DETAILS

NATIONAL PARK SERVICE
GRAND CANYON NATIONAL PARK
SOUTH RIM

© JACOBS

Jacobs

REGISTERED ARCHITECT
CERTIFICATE NO.
80680
MORGAN
SHOEMAKER
Date Signed 6/20/2025
ARIZONA, U.S.A.

Expires 06-30-2027

0300-600 THRU 0340-095
0422-104 THRU 0422-200
0641-001 THRU 0641-102
0700 SERIES
0800 SERIES
0900 SERIES
1000 SERIES
1200 SERIES
1300 SERIES

NATIONAL PARK SERVICE
GRAND CANYON NATIONAL PARK
SOUTH RIM

© JACOBS

Jacobs

Registered Professional Engineer (Structural)
CERTIFICATE NO.
81476
WAYNE W. KOHLER
DATE SIGNED 6/20/25
ARIZONA U.S.A.

Wayne W. Kohler

0310 SERIES
0330-001 THRU 0330-501
0422-001 THRU 0422-046
0500 SERIES
0614-056

NATIONAL PARK SERVICE
GRAND CANYON NATIONAL PARK
SOUTH RIM

© JACOBS

Jacobs

Registered Professional Engineer (Mechanical)
CERTIFICATE NO.
46267
SCOTT
HINTE
Date Signed 6-19-25
ARIZONA, U.S.A.

Scott Hinte

Expires 06-30-2026

2200 SERIES
2331-100 THRU 2331-190
2400 SERIES

NATIONAL PARK SERVICE
GRAND CANYON NATIONAL PARK
SOUTH RIM

© JACOBS

Jacobs

Registered Professional Engineer (Chemical)
CERTIFICATE NO.
79157
KENNETH
GALARDI
Date Signed 6-19-25
ARIZONA, U.S.A.

Expires 07-26-2026

2331-191 THRU 2331-901

NATIONAL PARK SERVICE
GRAND CANYON NATIONAL PARK
SOUTH RIM

© JACOBS

Jacobs

Registered Professional Engineer (Electrical)
CERTIFICATE NO.
81240
DAVID
BURGER
Date Signed 6-19-2025
ARIZONA, U.S.A.

JUNE 19, 2025

2605-002 THRU 2624-153
2656-207 THRU 2660-009

NATIONAL PARK SERVICE
GRAND CANYON NATIONAL PARK
SOUTH RIM

© JACOBS

Jacobs

Registered Professional Engineer (Civil)
CERTIFICATE NO.
83022
KAYLA D. ARCHER
Date Signed 6-23-2025
ARIZONA, U.S.A.

3100 SERIES
3200 SERIES
3300 SERIES

NATIONAL PARK SERVICE
GRAND CANYON NATIONAL PARK
SOUTH RIM

© JACOBS

Jacobs

Registered Professional Engineer (Mechanical)
CERTIFICATE NO.
69048
DARREN
EDWARDS
Date Signed
ARIZONA, U.S.A.

JUNE 19, 2025

2642-840 THRU 2642-932
4005-501 THRU 4027-957
4442 SERIES
4447 SERIES

NATIONAL PARK SERVICE
GRAND CANYON NATIONAL PARK
SOUTH RIM

© JACOBS

Jacobs

Registered Professional Engineer (Control Systems)
CERTIFICATE NO.
83873
ANDREW
WILLIAMS
Date Signed 06-20-2025
ARIZONA, U.S.A.

4091 SERIES

NATIONAL PARK SERVICE
GRAND CANYON NATIONAL PARK
SOUTH RIM

© JACOBS

Jacobs

DETAIL	SHEET TITLE/DESCRIPTION
<u>0300 SERIES</u>	
0310-051	FORM SNAP-TIE HOLE
0310-052	ALTERNATE FORM TIE-THROUGH BOLT
0315-001	PLASTIC WATERSTOP
0315-003	HYDROPHILIC/GROOVE WATERSTOP
0315-011	WATERSTOP JOINTS
0315-012	WATERSTOP CONNECTION
0315-131	WALL CONSTRUCTION JOINT SPACING
0315-141	SLAB CONSTRUCTION JOINT
0315-142	SLAB CONSTRUCTION JOINT
0315-143	SLAB CONSTRUCTION JOINT AT WALL
0315-151	WALL VERTICAL CONSTRUCTION JOINT
0315-154	WALL BASE CONSTRUCTION JOINT
0315-161	BASE SLAB CONTRACTION JOINT
0315-192	BUILDING SLAB ON GRADE SAWN CONTROL JOINT
0330-001	OPENING REINFORCEMENT
0330-002	OPENING REINFORCEMENT
0330-003	TYPICAL WALL CORNER & INTERSECTION REINFORCEMENT, 1 OF 3
0330-003	TYPICAL WALL CORNER & INTERSECTION REINFORCEMENT, 2 OF 3
0330-003	TYPICAL WALL CORNER & INTERSECTION REINFORCEMENT, 3 OF 3
0330-004	REINFORCEMENT AT HORIZONTAL CONSTRUCTION JOINT, 1 OF 2
0330-004	REINFORCEMENT AT HORIZONTAL CONSTRUCTION JOINT, 2 OF 2
0330-005	VERTICAL WALL REINFORCING/DOWEL PLACEMENT
0330-016	PIPE ENCASEMENT
0330-017	PIPE ENCASEMENT
0330-018	PIPE ENCASEMENT AT SLAB
0330-021	PIPE COLLAR
0330-041	SLAB AT DOOR OPENING
0330-043	TRENCH REINFORCING
0330-044	IN-SLAB SUMP REINFORCEMENT
0330-049	CONCRETE STAIR-ON GRADE
0330-056	CONCRETE EQUIPMENT PAD - TYPE 'E', 1 OF 5
0330-056	CONCRETE EQUIPMENT PAD - TYPE 'F', 2 OF 5
0330-056	CONCRETE EQUIPMENT PAD - TYPE 'G', 3 OF 5
0330-056	CONCRETE EQUIPMENT PAD - TYPE 'H', 4 OF 5
0330-056	CONCRETE EQUIPMENT PAD - NOTES, 5 OF 5
0330-077	FORMED CONCRETE TRENCH
0330-078	CONCRETE OR GROUT FILL KEY
0330-080	CONCRETE CURB
0330-082	FLOOR DRAIN
0330-084	CONDUIT IN STRUCTURAL CONCRETE
0330-101	CONNECTION OF NEW CONCRETE TO EXISTING
0330-105	ADHESIVE DOWEL
0330-500	VERTICAL CONCRETE REVEAL
0330-501	HORIZONTAL CONCRETE REVEAL

© JACOBS

Jacobs

DETAIL	SHEET TITLE/DESCRIPTION
0330-600	CONCRETE SMALL PIPE PENETRATION
0330-601	CONCRETE SMALL PIPE PENETRATION
0330-610	WALL PENETRATION AT DUCT
0340-095	SPLASHBLOCK

0400 SERIES

0422-001	REINFORCED MASONARY WALL CORNERS (SINGLE & DOUBLE MAT)
0422-002	CMU OPENING REINFORCEMENT
0422-003	CMU OPENING REINFORCEMENT, 1 OF 2
0422-003	CMU OPENING REINFORCEMENT, 2 OF 2
0422-004	INTERMEDIATE REINFORCED MASONRY SHEAR WALL
0422-005	CMU WALL PIER, 1 OF 2
0422-005	CMU WALL PIER, 2 OF 2
0422-006	CMU WALL COLUMN, 1 OF 2
0422-006	CMU WALL COLUMN, 2 OF 2
0422-031	CMU CONTROL JOINT
0422-041	CMU WALL AT RAKE
0422-046	MASONRY ANCHOR BOLT
0422-104	BASE OF WALL
0422-106	CMU PIPE PENETRATION
0422-108	WALL PENETRATION (EXTERIOR), 1 OF 4
0422-108	WALL PENETRATION (EXTERIOR), 2 OF 4
0422-108	WALL PENETRATION (EXTERIOR), 3 OF 4
0422-108	WALL PENETRATION (EXTERIOR), 4 OF 4
0422-109	WALL PENETRATION AT DUCT
0422-110	CMU SMALL PIPE PENETRATION
0422-200	PASS-THROUGH

0500 SERIES

0512-001	COLUMN BASE - STEEL
0512-002	POST BASE - STEEL
0512-020	TYPICAL BEAM CONNECTION - STEEL
0512-022	BEAM SINGLE PLATE SHEAR CONNECTION - STEEL
0512-041	CONTINUOUS TUBE COLUMN - BEAM CONNECTION - STEEL
0512-042	CONTINUOUS BEAM - COLUMN CONNECTION - STEEL
0512-055	EMBEDDED CONNECTION - STEEL
0512-056	BEAM / WALL CONNECTION - STEEL, 1 OF 2
0512-056	BEAM / WALL CONNECTION - STEEL, 2 OF 2
0512-101	MONORAIL DETAILS, 1 OF 2
0512-101	MONORAIL DETAILS, 2 OF 2
0512-122	LIFTING EYE
0514-020	TYPICAL BEAM CONNECTION - ALUMINUM
0514-056	BEAM / WALL CONNECTION - ALUMINUM, 1 OF 2
0514-056	BEAM / WALL CONNECTION - ALUMINUM, 2 OF 2
0514-057	BEAM / WALL SIDE CONNECTION - ALUMINUM, 1 OF 2
0514-057	BEAM / WALL SIDE CONNECTION - ALUMINUM, 2 OF 2

© JACOBS

Jacobs

DETAIL	SHEET TITLE/DESCRIPTION
0531-001	DECKING LEDGER SUPPORT ANGLE
0531-002	METAL DECK BEARING WALL TOP CONNECTION
0531-003	METAL DECK/WALL CONNECTION
0531-015	METAL DECK/BEARING WALL CLOSURE
0531-016	METAL DECK/NON-BEARING WALL CLOSURE PLATE
0551-001	STAIR DETAILS - ALUMINUM, 1 OF 5
0551-001	STAIR DETAILS - ALUMINUM, 2 OF 5
0551-001	STAIR DETAILS - ALUMINUM, 3 OF 5
0551-001	STAIR DETAILS - ALUMINUM, 4 OF 5
0551-001	STAIR DETAILS - ALUMINUM, 5 OF 5
0551-003	STAIR LANDING SUPPORT - ALUMINUM
0551-004	STAIR LANDING FRAMING - ALUMINUM
0551-005	STAIR LANDING FRAMING - ALUMINUM
0551-151	SHIPS LADDER
0551-251	PIPE SUPPORT
0552-001	RAILING - 3 RAIL - ALUMINUM, 1 OF 6
0552-001	RAILING - 3 RAIL STAIR - ALUMINUM (IBC), 2 OF 6
0552-001	RAILING POST ANCHORAGE TYPE 'A' - ALUMINUM, 3 OF 6
0552-001	RAILING POST ANCHORAGE TYPE 'B' - ALUMINUM, 4 OF 6
0552-001	RAILING POST ANCHORAGE TYPE 'C' - ALUMINUM, 5 OF 6
0552-001	RAILING POST ANCHORAGE TYPE 'D' - ALUMINUM, 6 OF 6
0553-001	STANDARD GRATING, 1 OF 4
0553-001	STANDARD GRATING, 2 OF 4
0553-001	STANDARD GRATING, 3 OF 4
0553-001	STANDARD GRATING, 4 OF 4
0553-040	WALKWAY BRACING CONNECTION - ALUMINUM
0554-001	CHECKERED FLOOR PLATE - ALUMINUM, 1 OF 4
0554-001	CHECKERED FLOOR PLATE - ALUMINUM, 2 OF 4
0554-001	CHECKERED FLOOR PLATE - ALUMINUM, 3 OF 4
0554-001	CHECKERED FLOOR PLATE - ALUMINUM, 4 OF 4
0554-002	FLOOR PLATE SUPPORT FRAMING
0558-002	TRUSS CLOSURE PLATE
0559-031	STRAIGHT EDGE WEIR - TYPE A

<u>0600 SERIES</u>

0614-056	BEAM / WALL CONNECTION - FIBER REINFORCED PLASTIC, 1 OF 2
0614-056	BEAM / WALL CONNECTION - FIBER REINFORCED PLASTIC, 2 OF 2
0641-001	CABINET
0641-002	CABINET
0641-100	VANITY COUNTERTOP
0641-102	COUNTERTOP

© JACOBS

DETAIL	SHEET TITLE/DESCRIPTION

0700 SERIES

0721-001	BASE OF WALL (FACED PERIMETER INSULATION BOARD)
0741-101	EAVE (METAL FRAMING)
0741-102	LOW EAVE AT WALL (METAL FRAMING)
0741-103	RIDGE (METAL FRAMING)
0741-104	RAKE (METAL FRAMING)
0741-105	RAKE AT WALL (METAL FRAMING)
0741-106	SIDEWALL
0741-201	EAVE (WOOD FRAMING)
0741-202	LOW EAVE AT WALL (WOOD FRAMING)
0741-203	RIDGE (WOOD FRAMING)
0741-204	RAKE (WOOD FRAMING)
0741-205	RAKE AT WALL (WOOD FRAMING)
0741-206	ENTRY GABLE (MAIN)
0741-207	ENTRY GABLE (SIDE AND BACK)
0741-208	SHED ROOF
0741-301	CANOPY
0741-302	CANOPY FASCIA
0741-303	CANOPY HEADWALL
0741-304	CANOPY RAKE
0741-305	CANOPY PIPE PENETRATION
0741-401	EAVE (CANOPY)
0741-410	LOW EAVE
0741-411	HIGH EAVE
0741-412	RAKE
0754-001	PREFABRICATED METAL COPING AND BASE FLASHING (CONCRETE WALL)
0754-002	PIPE PENETRATION
0754-004	BASE FLASHING
0754-005	METAL GUTTER AND DOWNSPOUT AT CURB
0754-006	CURB
0762-105	SCUPPER/CONDUCTOR HEAD SECTION
0762-106	SCUPPER/CONDUCTOR HEAD PLAN
0762-107	SCUPPER/CONDUCTOR HEAD ELEVATION
0770-001	MECHANICAL EQUIPMENT CURB
0770-010	FLEXIBLE BASE PIPE SEAL (METAL FRAMING)
0770-012	FLEXIBLE BASE PIPE SEAL (WOOD FRAMING)
0770-032	DUCT/PIPE PENETRATION

0800 SERIES

0811-001	DOOR HEAD
0811-002	DOOR JAMB
0811-012	DOOR HEAD
0811-013	DOOR HEAD
0811-014	DOOR JAMB
0811-015	DOOR JAMB

© JACOBS

Jacobs

DETAIL	SHEET TITLE/DESCRIPTION
0811-032	DOOR HEAD AND JAMB
0811-033	DOOR HEAD AND JAMB
0833-003	OVERHEAD DOOR HEAD (INSULATED)
0833-004	OVERHEAD DOOR JAMB AND SILL (INSULATED)
0833-007	OVERHEAD DOOR HEAD (INSULATED)
0833-008	OVERHEAD DOOR JAMB AND SILL (INSULATED)
0851-002	WINDOW HEAD AND SILL
0851-004	WINDOW HEAD AND SILL
0851-005	SIDELIGHT JAMB AND SILL
0871-001	DOOR SILL
0871-002	DOOR SILL
0871-003	DOOR SILL
0871-004	DOOR SILL
0871-010	DOOR SILL
0890-002	LOUVER HEAD AND SILL

0900 SERIES

0929-104	WALL DETAIL
0929-105	WALL DETAIL
0929-106	WALL DETAIL
0929-107	WALL DETAIL
0929-108	PARTITION DETAILS
0929-109	WALL DETAIL
0929-110	WALL DETAIL
0929-111	WALL DETAIL
0929-112	WALL DETAIL
0929-201	WALL AT CEILING
0929-401	SOFFIT
0929-403	CEILING TO METAL STUD WALL
0930-004	SHOWER STALL

1000 SERIES

1014-001	DANGER SIGN
1014-002	CAUTION SIGN
1014-004	HANDICAPPED PARKING SIGN
1014-006	HAZARDOUS MATERIAL SIGNAL
1014-009	FIRE DOOR SIGN
1014-010	ACCESSIBLE SIGNAGE
1014-011	EXIT WARNING SIGN
1080-003	DOCK BUMPER
1235-051	LAB CABINET SECTION
1235-052	LAB CABINET SECTION (ISLAND)
1235-100	DRAIN RACK
1334-100	EAVE
1334-101	RAKE
1334-102	HIGH EAVE

© JACOBS

Jacobs

DETAIL	SHEET TITLE/DESCRIPTION

2200 SERIES

2210-100	DRAINAGE DRYWELL
2210-102	TYPICAL PIPE PENETRATION THRU WALL
2210-103	WALL PIPE PENETRATION
2210-105	VENT THRU ROOF
2210-110	TYPICAL PIPE ENTRANCE
2210-300	INTERIOR HOSE VALVE
2210-562	PIPE FLOOR PENETRATION
2210-700	WATER TEMPERING VALVE
2210-720	HOSE RACKS, 1 OF 2
2210-720	HOSE RACKS, 2 OF 2
2210-850	THERMOMETER MOUNTING
2210-851	WATER HAMMER ARRESTOR
2230-100	SANITARY SEWER LIFT STATION, 1 OF 2
2230-100	SANITARY SEWER LIFT STATION, 2 OF 2
2230-103	UNDER SINK ACID NEUTRALIZATION TANK
2230-155	WATER HEATER WITH RECIRCULATION PUMP
2230-750	MAKEUP WATER HEADER CONNECTION
2230-900	DOMESTIC WATER ENTRY
2240-100	HUB DRAIN
2240-101	EXTERIOR CLEANOUT
2240-102	EXTERIOR DOUBLE CLEANOUT
2240-105	POST HYDRANT
2240-120	NON-FREEZE YARD HYDRANT
2240-124	NON-FREEZE WALL HYDRANT, 1 OF 2
2240-124	NON-FREEZE WALL HYDRANT, 2 OF 2
2240-127	LAVATORY TEMPERED WATER SUPPLY
2240-140	FLOOR CLEANOUT
2240-150	FLOOR DRAIN
2240-300	EMERGENCY SHOWER/EYEWASH UNIT

2300 SERIES

2331-100	RETURN DUCT AIR INTAKE
2331-103	FLOOR EXHAUST
2331-105	TRANSFER DUCT
2331-106	DUCT TRANSITION
2331-109	SMOKE DETECTOR MOUNTING (TYP)
2331-110	TYPICAL LOUVER/DUCT CONNECTION
2331-111	TYPICAL ROUND DUCT SPIN-IN TAKEOFF
2331-112	TYPICAL RECTANGULAR DUCT TAKEOFF
2331-190	TYPICAL ROUND DUCT FLOOR PENETRATION
2331-191	ALUMINUM CHECKER PLATE CONNECTION
2331-884	TYPICAL DUCT SADDLE SUPPORT
2331-889	TYPICAL ABOVE GROUND TO HDPE OR PVC FOUL AIR DUCT CONNECTION
2331-890	TYPICAL FOUL AIR INTAKE ASSEMBLY

© JACOBS

Jacobs

DETAIL	SHEET TITLE/DESCRIPTION
2331-898	VENT GAS TRAP AND DRAIN
2331-899	TEST PORT
2331-900	DUCT SUPPORT - GRADE MOUNTED
2331-901	DUCT SUPPORT FOR HORIZONTAL ROUND DUCT, 1 OF 2
2331-901	DUCT SUPPORT FOR HORIZONTAL ROUND DUCT, 2 OF 2
2331-902	DUCT SUPPORT FOR HORIZONTAL RECTANGULAR DUCT
2334-190	TYPICAL ROOF MOUNTED EXHAUST FAN
2334-301	ROOF MOUNTED FAN
2337-100	CEILING DIFFUSER TAKE-OFFS
2337-802	ROUND DUCT MOUNTED AIR OUTLET OR INLET
2338-100	TYPICAL EXHAUST HOOD
2381-101	UNIT HEATER MOUNTING

2400 SERIES

2413-100	CONDENSATE DRAIN

2600 SERIES

2605-002	DEVICE MOUNTING WALL OR COLUMN
2605-005	EQUIPMENT MOUNTING PEDESTAL
2605-006	RAILING MOUNTED EQUIPMENT SUPPORT
2605-008	ELECTRICAL EQUIPMENT SUPPORT
2605-012	PEDESTAL MOUNTED DEVICE
2605-013	PEDESTAL MOUNTED DEVICE AT RAILING
2605-017	CONDUIT SUPPORT ON STRUCTURE
2605-100	TERMINATION OF SHIELDED INSTRUMENTATION CABLE
2605-101	SUBMERSIBLE PUMP ELECTRICAL EQUIPMENT
2605-102	TERMINAL JUNCTION BOX (TJB)
2605-103	UNACCEPTABLE METHOD OF GROUNDING INSTRUMENTATION CABLE SHIELD
2605-202	GROUND TEST WELL
2605-203	CONDUIT GROUNDING
2605-205	GROUNDING ELECTRODE
2605-207	GENERAL STAIRWAY GROUNDING
2605-208	GROUND BUS BAR
2605-300	CONDUIT RACKING SYSTEM
2605-301	CONDUIT RACKING SYSTEM
2605-302	CONDUIT RACKING SYSTEM
2605-303	CONDUIT TO EQUIPMENT FROM CEILING
2605-305	CONDUIT TRANSITION AND SUPPORT
2605-306	INTERIOR WALL PENETRATION
2605-309	FLUSH CONDUIT STUB
2605-318	VERTICAL CONDUIT SUPPORT
2605-360	CONDUIT SUPPORT FROM STEEL BEAM
2605-361	CONDUIT SUPPORT FROM WALL

© JACOBS

Jacobs

DETAIL	SHEET TITLE/DESCRIPTION
2605-401	CONCRETE ENCASED DUCT BANK
2605-402	DUCT BANK
2605-403	CONCRETE ENCASED DUCT
2605-420	TYPICAL UNDERGROUND CONDUIT
2605-423	TRENCH AND CONDUIT PLACEMENT
2605-440	SITE PULL BOX
2605-442	LOW VOLTAGE MANHOLE
2605-443	MANHOLE-WITH GROUNDING
2605-445	CONDUIT MANHOLE ENTRANCE
2605-446	CONDUIT MANHOLE ENTRANCE
2605-448	CABLE RACK
2605-500	PANELBOARD NAMEPLATE
2605-501	OSHA/NEC PLACARD
2605-700	CABLE TRAY SUPPORT
2605-701	CABLE TRAY WALL PENETRATION
2605-702	CONDUIT DROP INTO CABLE TRAY
2605-900	RACEWAYS INSTALLED UNDER SLAB
2605-901	DUCTBANK ROUTED UNDER FOOTING
2622-002	TRANSFORMER MOUNTING
2622-005	STACKED TRANSFORMER MOUNTING INSTALLATION
2622-006	TRANSFORMER
2624-001	GO/NO-GO PANEL EXTERIOR
2624-002	GO/NO-GO PANEL EXTERIOR
2624-003	GO/NO-GO WIRING SCHEMATIC, 1 OF 2
2624-003	GO/NO-GO WIRING SCHEMATIC, 2 OF 2
2624-010	LOCAL CONTROL STATION DETAIL - FRONT, 1 OF 3
2624-010	LOCAL CONTROL STATION DETAIL - FRONT, 2 OF 3
2624-010	LOCAL CONTROL STATION DETAIL - SIDE, 3 OF 3
2624-012	FAN CONTROL STATION DETAIL - FRONT, 1 OF 2
2624-012	FAN CONTROL STATION DETAIL - SIDE, 2 OF 2
2624-013	COMPOST FAN CONTROL STATION DETAIL - FRONT, 1 OF 2
2624-013	COMPOST FAN CONTROL STATION DETAIL - SIDE, 2 OF 2
2624-021	ELECTRICAL - ANALOG ISOLATION BOM, 1 OF 3
2624-021	RELAY ISOLATION - FRONT, 2 OF 3
2624-021	RELAY ISOLATION - SUBPANEL, 3 OF 3
2624-022	ELECTICAL - RELAY ISOLATION BOM, 1 OF 3
2624-022	RELAY ISOLATION - FRONT, 2 OF 3
2624-022	RELAY ISOLATION - SUBPANEL, 3 OF 3
2624-153	MOTOR TERMINATION ENCLOSURE
2642-840	PUSH-ON JOINT BOND
2642-842	FLANGED JOINT BOND
2642-910	CATHODIC PROTECTION WIRE CONNECTION FOR STEEL AND DUCTILE IRON PIPE
2642-925	CATHODIC PROTECTION INSULATING FLANGE
2642-932	INSULATED BOLTS AND TAPPED FLANGES

© JACOBS

Jacobs

DETAIL	SHEET TITLE/DESCRIPTION
2656-207	PAVED AREA LIGHT POLE FOOTING
2656-212	LIGHTING POLE MOUNTING
2656-213	LIGHTING POLE MOUNTING
2656-214	ON SLAB AREA LIGHTING POLE MOUNTING
2656-216	PAVED AREA LIGHT POLE FOOTING FOR AREAS WITH NO CAR TRAFFIC
2656-218	STEEL WALKWAY LIGHTING POLE MOUNT TO POLE
2656-219	LIGHTING POLE MOUNT TO SIDE OF CONCRETE WALL
2660-001	HEAT TRACE - TYPICAL INSTALLATION OVERVIEW
2660-002	HEAT TRACE SENSOR PLACEMENT
2660-003	TYPICAL HEATER CIRCUIT WIRING DIAGRAM
2660-004	HEAT TRACED PIPE LABEL
2660-005	HEAT CABLE WRAP
2660-006	POWER CONNECTION BOX BRAIDED CABLE
2660-007	STANDOFF INSULATION
2660-008	POWER CONNECTION BOX NON BRAIDED CABLE
2660-009	TYPICAL HEATER CABLE INSTALLATION, 1 OF 2
2660-009	TYPICAL HEATER CABLE INSTALLATION, 2 OF 2

3100 SERIES

3123-110	TYPICAL TRENCH
3123-115	SURFACE RESTORATION
3123-120	TRENCH PIPE CROSSING
3125-130	GRAVEL CONSTRUCTION ENTRANCE
3125-135	WHEEL WASH
3125-140	TEMPORARY STOCKPILE COVERING
3125-150	ESC BLANKET ON SLOPE
3125-160	CHECK DAMS
3125-165	SEDIMENT FENCE
3125-186	BIOFILTER BAG INLET BARRIER

3200 SERIES

3212-210	ASPHALT CONCRETE PAVEMENT
3212-215	PAVEMENT CONNECTION
3213-220	TYPICAL CONCRETE SIDEWALK
3213-240	CONCRETE PAVEMENT
3213-250	CONCRETE TO ASPHALT TRANSITION
3215-260	GRAVEL SURFACING
3216-315	CONCRETE CURB
3216-330	CONCRETE VALLEY GUTTER
3231-410	CHAIN LINK FENCE
3231-425	CANTILEVER SLIDE GATE

© JACOBS

Jacobs

DETAIL	SHEET TITLE/DESCRIPTION

3300 SERIES

3305-710	MANHOLE BASE SECTION - 6" TO 24" PIPE
3305-712	CAST-IN-PLACE MANHOLE BASE
3305-720	ECCENTRIC MANHOLE TOP SECTION
3305-722	FLAT TOP MANHOLE
3305-725	MANHOLE FRAME AND COVER
3305-726	WATERTIGHT MANHOLE FRAME AND COVER
3305-730	PIPE CONNECTIONS
3305-954	BOLLARD
3312-770	FIRE HYDRANT
3344-780	CATCH BASIN
3344-782	CATCH BASIN FRAME AND GRATE
3344-790	PRECAST TRENCH DRAIN

4000 SERIES

4005-501	PIPE SUPPORT SADDLE SUPPORT PEDESTAL TYPE - NON-ADJUSTABLE
4005-502	PROCESS AIR SADDLE SUPPORT PEDESTAL TYPE - NON-ADJUSTABLE
4005-503	PIPE SUPPORT - WALL MOUNT
4005-505	PIPE SUPPORT - WALL MOUNTED
4005-508	PIPE SUPPORT - WALL MOUNTED MEDIUM
4005-509	PIPE SUPPORT - WALL MOUNTED - PROCESS AIR
4005-510	PIPE SUPPORT - FLANGE SUPPORT PEDESTAL
4005-516	PIPE SUPPORT - VERTICAL BEND SUPPORT
4005-524	FLOOR PIPE SUPPORT
4005-537	ALP PIPE SUPPORT - PIPE RACK STYLE A
4005-538	ALP PIPE SUPPORT - CANTELEVER (TYPE "A"), 1 OF 2
4005-538	ALP PIPE SUPPORT - CANTELEVER (TYPE "B"), 2 OF 2
4005-550	OVERHEAD PIPE HANGER
4005-558	TRAPEZE PIPE HANGER
4005-559	TRAPEZE PIPE HANGER
4027-181	TYPE 1 FLUSHING CONNECTION
4027-187	PROCESS LINE CLEAN-OUT SETTING
4027-191	LINE DRAIN VALVE INSTALLATION
4027-600	DUCTILE IRON WALL PIPE
4027-601	MECHANICAL JOINT WALL PIPE FOR DIP
4027-605	STEEL AND STAINLESS WALL PIPE
4027-607	WALL PIPE PENETRATION SEAL
4027-620	FLOOR SLEEVE
4027-621	FLOOR SLEEVE
4027-640	BURIED GATE AND PLUG VALVE BOX
4027-957	CHEMICAL INJECTION QUILL ASSEMBLY
4091-150	CONDUIT MOUNTED GAS SENSOR INSTALLATION
4091-158	RETRACTABLE PH SENSOR INSTALLATION-INLINE MOUNTING

© JACOBS

Jacobs

DETAIL	SHEET TITLE/DESCRIPTION
4091-163	PRESSURE TRANSDUCER
4091-169	TYPICAL ANALYZER PROBE HANDRAIL MOUNT
4091-180	RETRACTABLE TSS SENSOR INSTALLATION - INLINE MOUNTING
4091-181	TSS SENSOR INSTALLATION - INLINE MOUNTING
4091-203	FLUME OF WEIR FLOW ELEMENT INSTALLATION
4091-217	THERMAL MASS FLOW ELEMENT INSTALLATION
4091-219	FLOW TRANSMITTER - MAGNETIC
4091-240	PDT INSTALLATION FOR VENTED TANK LEVEL MEASUREMENT
4091-248	TYPICAL FLOAT TYPE LEVEL SWITCH INSTALLATION MOUNTING IN TANK WITH OPEN ROOF
4091-248	TYPICAL FLOAT TYPE LEVEL SWITCH INSTALLATION MOUNTING IN TANK WITH CLOSED ROOF
4091-267	SUBMERSIBLE LEVEL TRANSMITTER INSTALLATION
4091-271	SINGLE FLOAT TYPE LEVEL SWITCH INSTALLATION
4091-304	PRESSURE SWITCH & INDICATOR INSTALLATION, 1 OF 2
4091-304	PRESSURE SWITCH AND INDICATOR WITH ANNULAR SEAL INSTALLATION, 2 OF 2
4091-305	PRESSURE CONNECTION INSTALLATION, 1 OF 2
4091-305	PRESSURE CONNECTION INSTALLATION, 2 OF 2
4091-382	STANCHION SUPPORT FOR CASE MOUNTED INSTRUMENTS, 1 OF 2
4091-382	RAIN HOOD INSTALLATION, 2 OF 2
4091-384	WALL MOUNTED INSTRUMENT

4400 SERIES

4442-664	HORIZ CONTFGL END SUCTION PUMP SEAL WATER
4442-715	SMALL PUMP SUPPORT
4447-898	STAINLESS STEEL FA FLOOR PIPE

© JACOBS

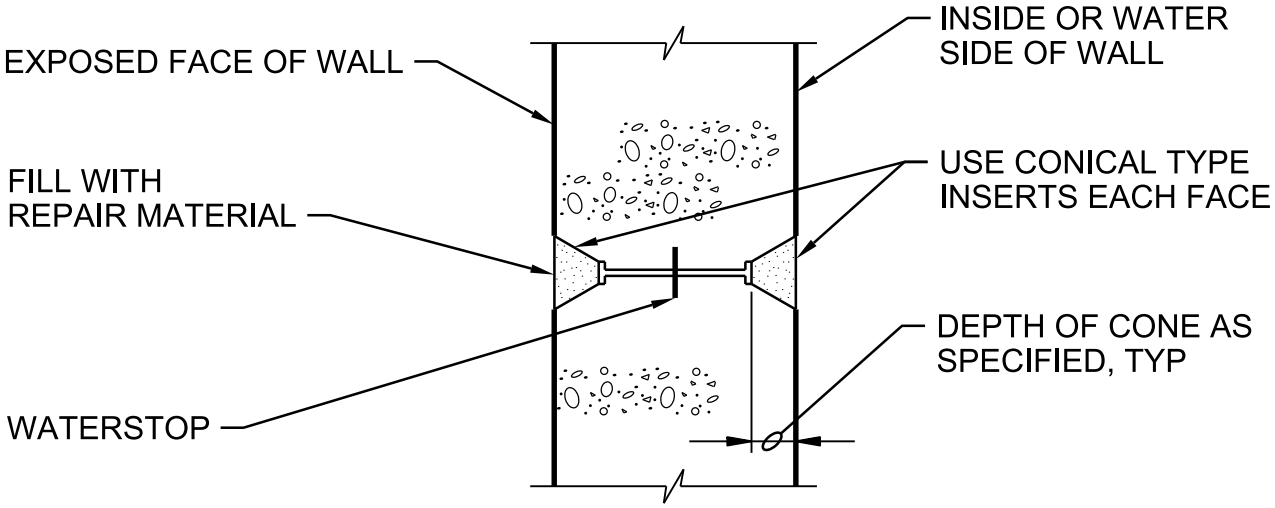

NOTE:

THE SPACING OF FORM TIES ON EXPOSED PORTIONS OF WALLS SHALL BE APPROXIMATELY EQUAL HORIZONTALLY AND VERTICALLY AND SHALL BE UNIFORM IN EACH DIRECTION.

FORM SNAP-TIE HOLE

NTS

NATIONAL PARK SERVICE
GRAND CANYON NATIONAL PARK
SOUTH RIM

0310-051

© JACOBS

Jacobs

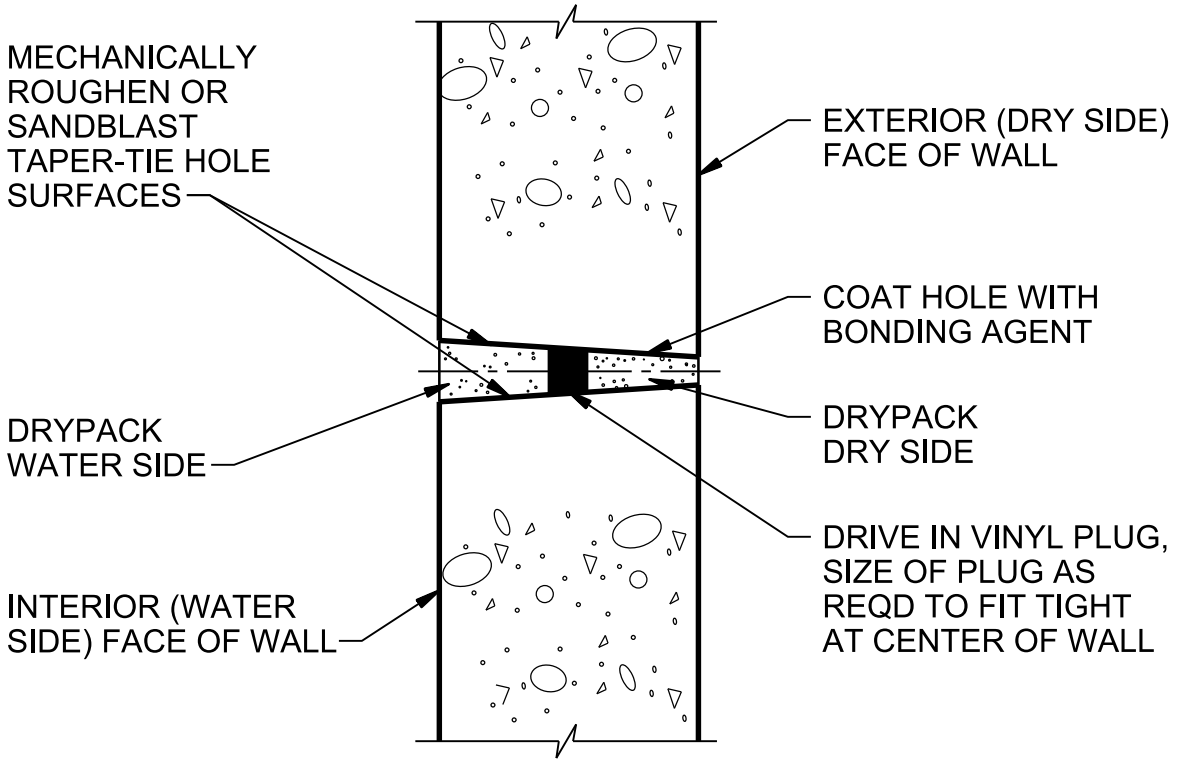

NOTE:

MINIMUM HOLE DIAMETER AT EXTERIOR FACE = 1". TAPER HOLE SO THAT MINIMUM HOLE DIAMETER AT INTERIOR FACE = 1 1/4"

CONSTRUCTION STEPS:

1. SANDBLAST OR MECHANICALLY ROUGHEN WITH ELECTRIC EQUIPMENT.
2. DRIVE IN VINYL PLUG.
3. COAT HOLE ON DRY SIDE OF PLUG AND WHILE BONDING AGENT IS TACKY, DRYPACK.
4. COAT HOLE ON WATER SIDE OF PLUG AND WHILE BONDING AGENT IS TACKY, DRYPACK.
5. USE CATEGORY II, NON-SHRINK GROUT AS SPECIFIED.

ALTERNATE FORM TIE-THROUGH BOLT

NTS

NATIONAL PARK SERVICE
GRAND CANYON NATIONAL PARK
SOUTH RIM

0310-052

© JACOBS

Jacobs

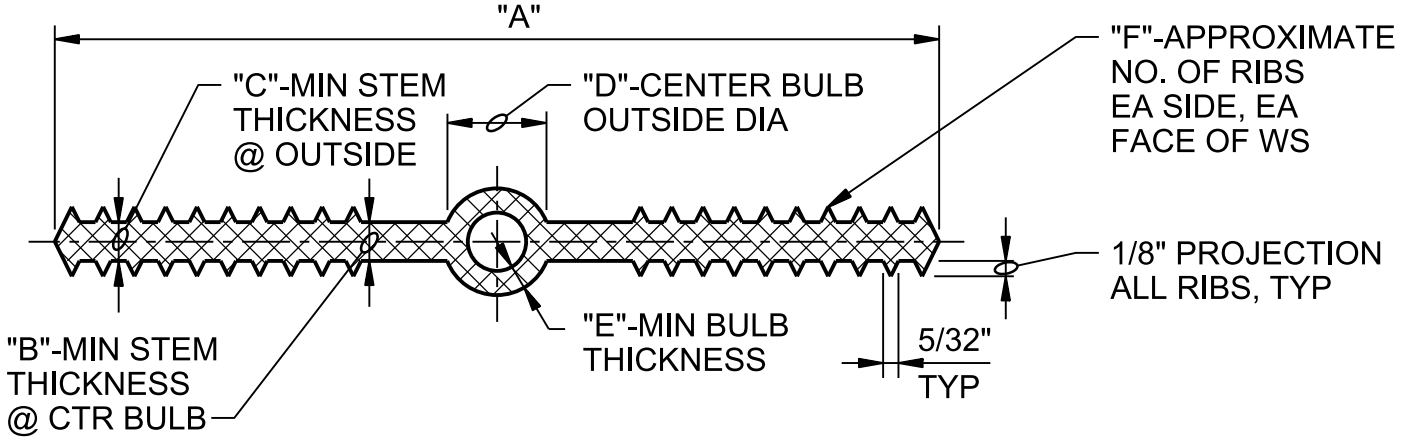

SIZE	"A"	"B"	"C"	"D"	"E"	"F"
6"x3/8"	6"	3/8"	3/8"	7/8"	1/4"	6
9"x3/8"	9"	3/8"	3/8"	1"	1/4"	8

NOTES:

1. NON-ROUND CENTER BULBS SHALL HAVE A MINIMUM OUTSIDE DIMENSION OF 'D'.
2. SEE SPLICE DETAIL 0315-011
3. BULB TYPE WATERSTOP SHOWN IS REQUIRED FOR EXPANSION AND CONTROL JOINTS. SIMILAR WATERSTOPS WITHOUT CENTER BULB MAY BE SUBSTITUTED AT CONSTRUCTION JOINTS.
4. USE 6 INCH WATERSTOPS IN ALL CONSTRUCTION JOINTS UNLESS SPECIFICALLY SHOWN OTHERWISE.

PLASTIC WATERSTOP

NTS

NATIONAL PARK SERVICE
GRAND CANYON NATIONAL PARK
SOUTH RIM

0315-001

© JACOBS

Jacobs

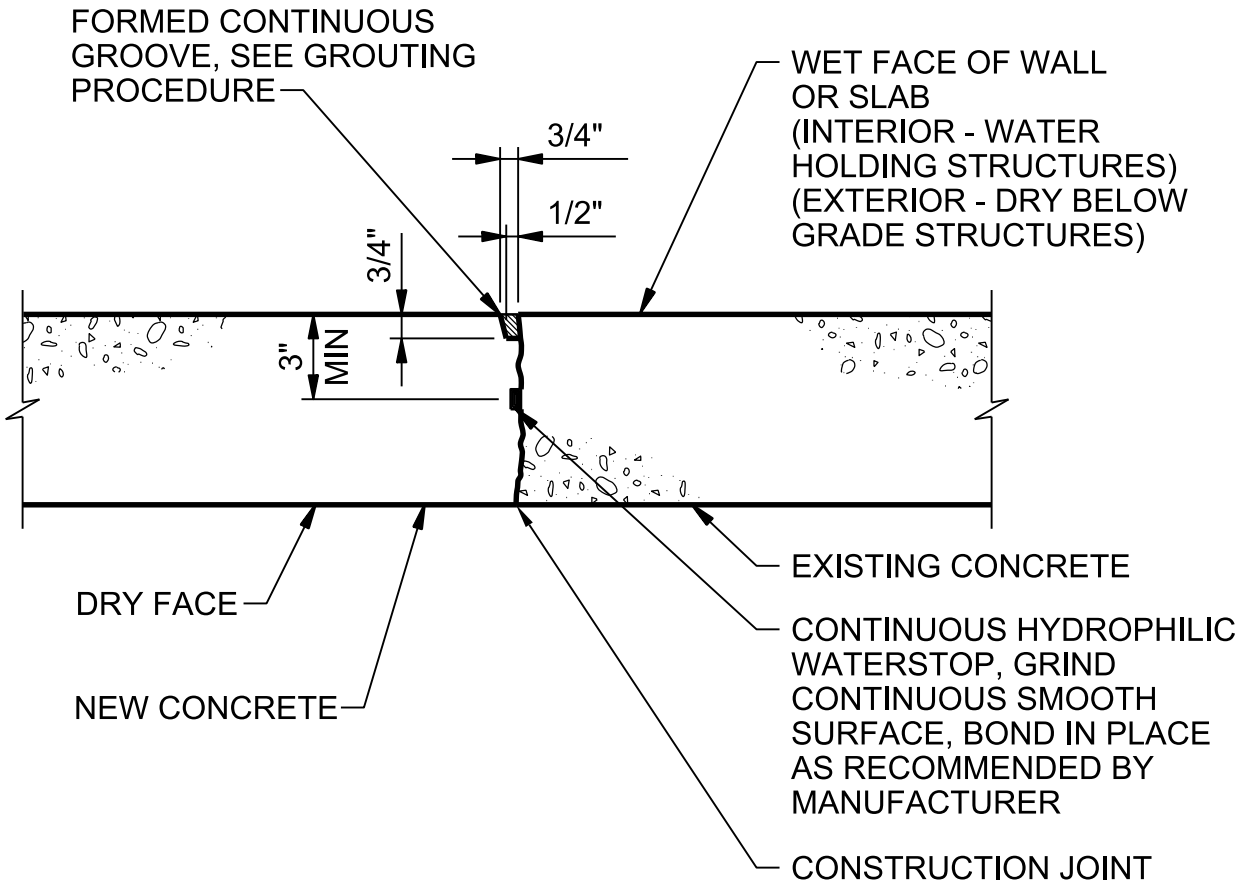

NOTE:

FOR USE IN NON-MOVING CONSTRUCTION JOINTS AND ONLY WHERE SPECIFICALLY INDICATED ON PLANS.

GROUTING PROCEDURE:

1. WAIT UNTIL NEW CONCRETE MINIMUM 28 DAYS OLD PRIOR TO GROUTING GROOVE.
2. ROUGHEN AND CLEAN SURFACES OF GROOVE WITH POWER WIRE BRUSH OR SANDBLASTING.
3. SATURATE AREA FOR 24 HOURS PRIOR TO GROUTING.
4. DRY PACK WITH TYPE II NON-SHRINK GROUT.
5. USE STEEL HAMMER AND STEEL TOOL TO DENSELY PACK GROUT INTO GROOVE.
6. WATER CURE GROUT FOR 4 DAYS MINIMUM.

HYDROPHILIC/GROOVE WATERSTOP

NTS

NATIONAL PARK SERVICE
GRAND CANYON NATIONAL PARK
SOUTH RIM

0315-003

© JACOBS

Jacobs

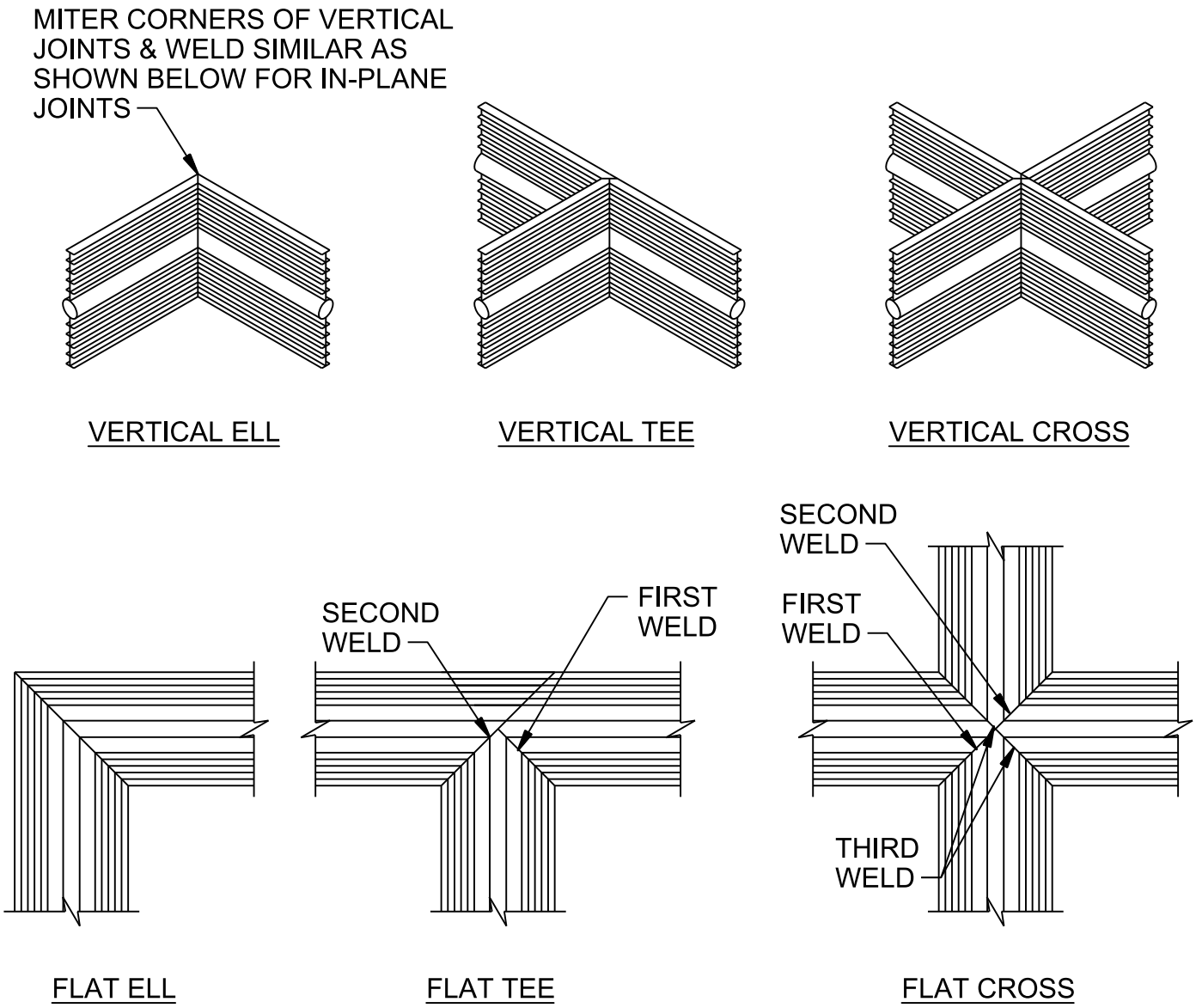

NOTE:

ALL WELDS SHALL BE PER WATERSTOP MANUFACTURER'S RECOMMENDATIONS.

WATERSTOP JOINTS

NTS

NATIONAL PARK SERVICE
GRAND CANYON NATIONAL PARK
SOUTH RIM

0315-011

© JACOBS

Jacobs

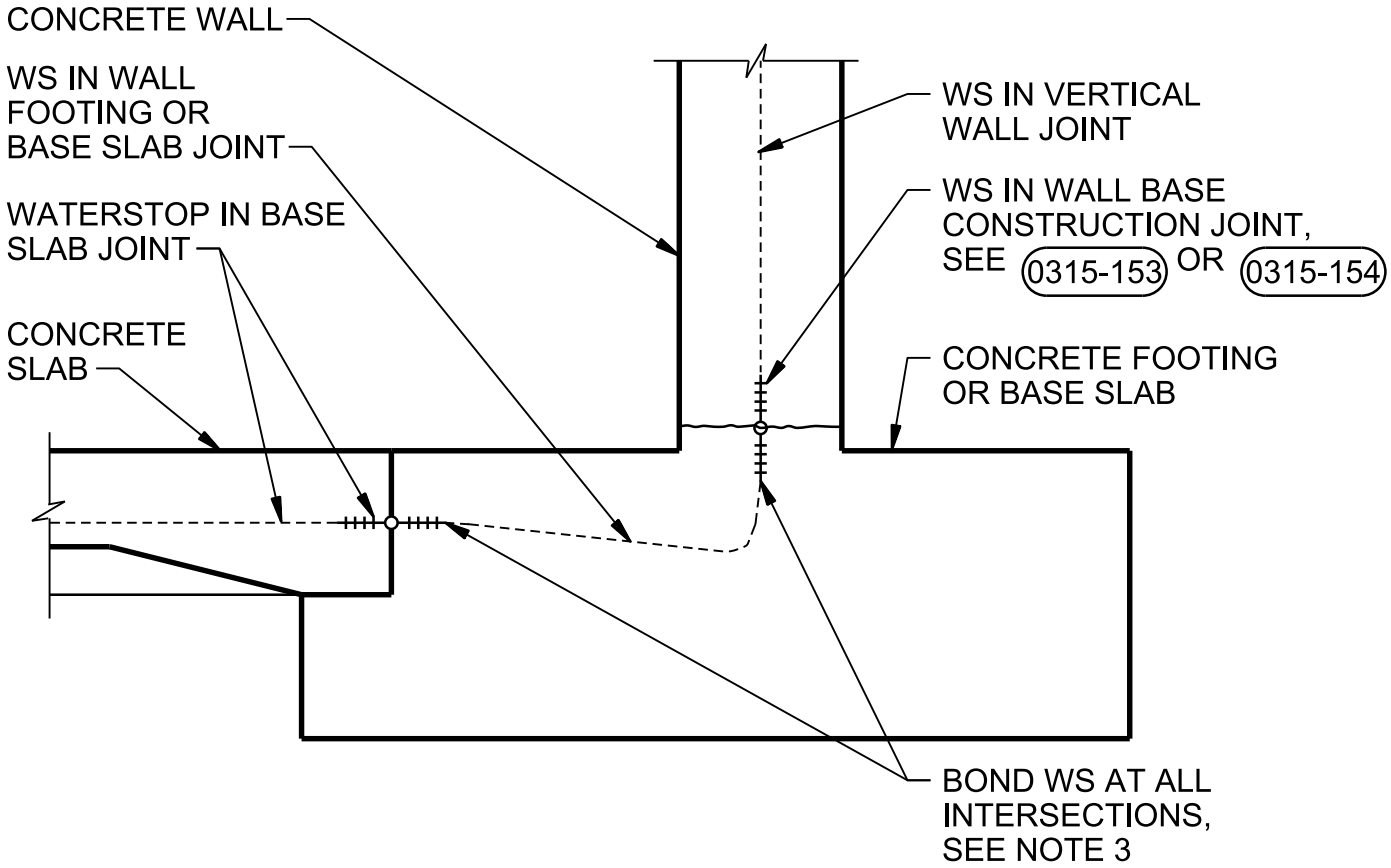

NOTES:

1. SUBMIT DETAILS OF SPLICING AND LOCATION.
2. BOND OR SPLICE ALL HORIZONTAL TRANSVERSE WATERSTOPS IN BASE SLAB JOINTS TO CONTINUOUS LONGITUDINAL WATERSTOP IN WALL BASE FOR COMPLETE SEAL.
3. BOND OR SPLICE ALL VERTICAL WATERSTOPS IN WALL JOINTS TO LONGITUDINAL WATERSTOP IN WALL BASE FOR COMPLETE SEAL, SEE 0315-011 FLAT CROSS JOINT.
4. FOR PLASTIC WATERSTOP DETAILS, SEE 0315-001

WATERSTOP CONNECTION

NTS

NATIONAL PARK SERVICE
GRAND CANYON NATIONAL PARK
SOUTH RIM

0315-012

© JACOBS

Jacobs

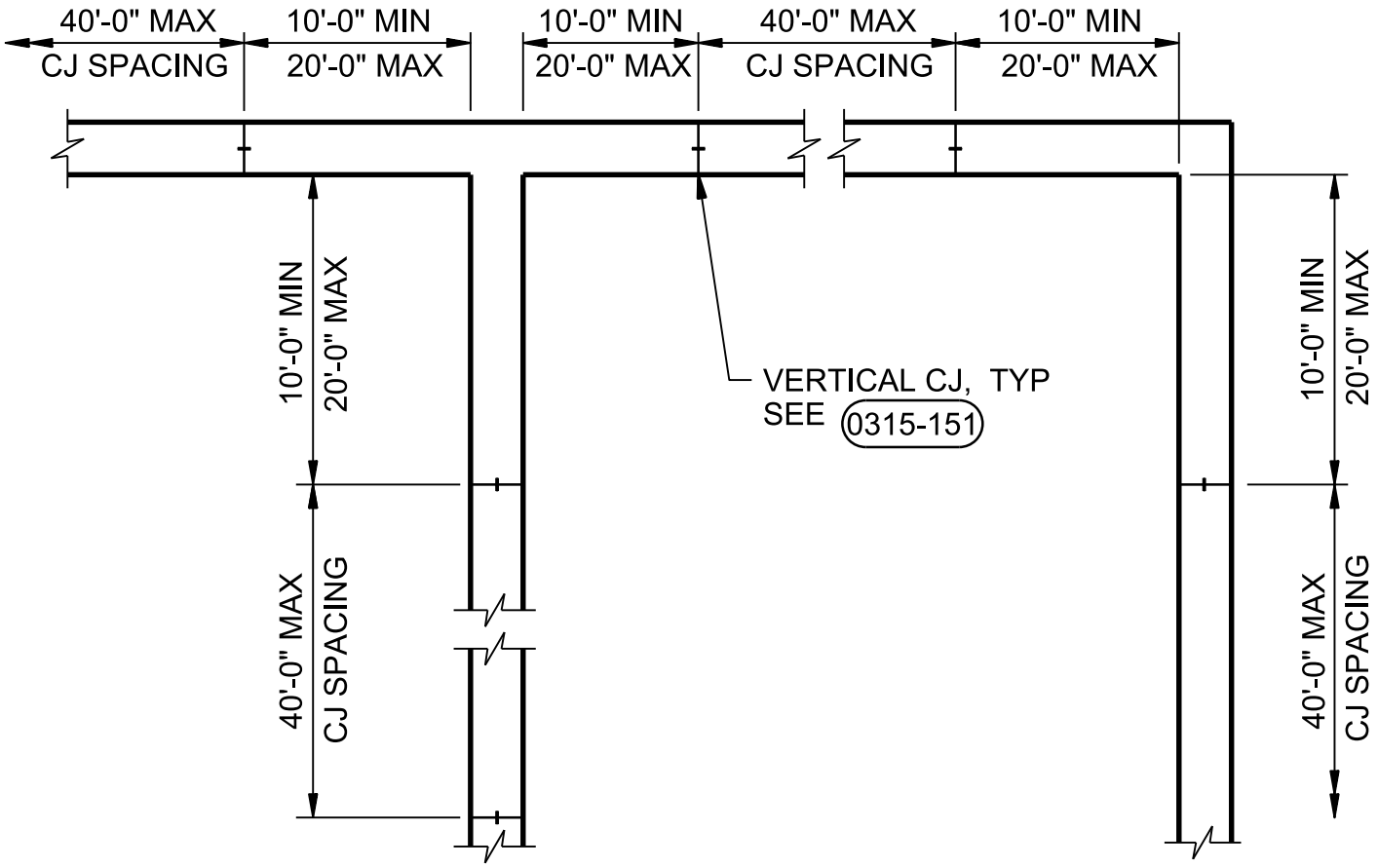

PLAN

NOTES:

1. COORDINATE CONSTRUCTION JOINT LOCATIONS AND TIME BETWEEN CONCRETE POURS WITH SPECIFICATION 03 30 00.
2. LOCATE WALL CONSTRUCTION JOINTS AS SHOWN, UNLESS INDICATED OTHERWISE.

WALL CONSTRUCTION JOINT SPACING

NTS

NATIONAL PARK SERVICE
GRAND CANYON NATIONAL PARK
SOUTH RIM

0315-131

© JACOBS

Jacobs

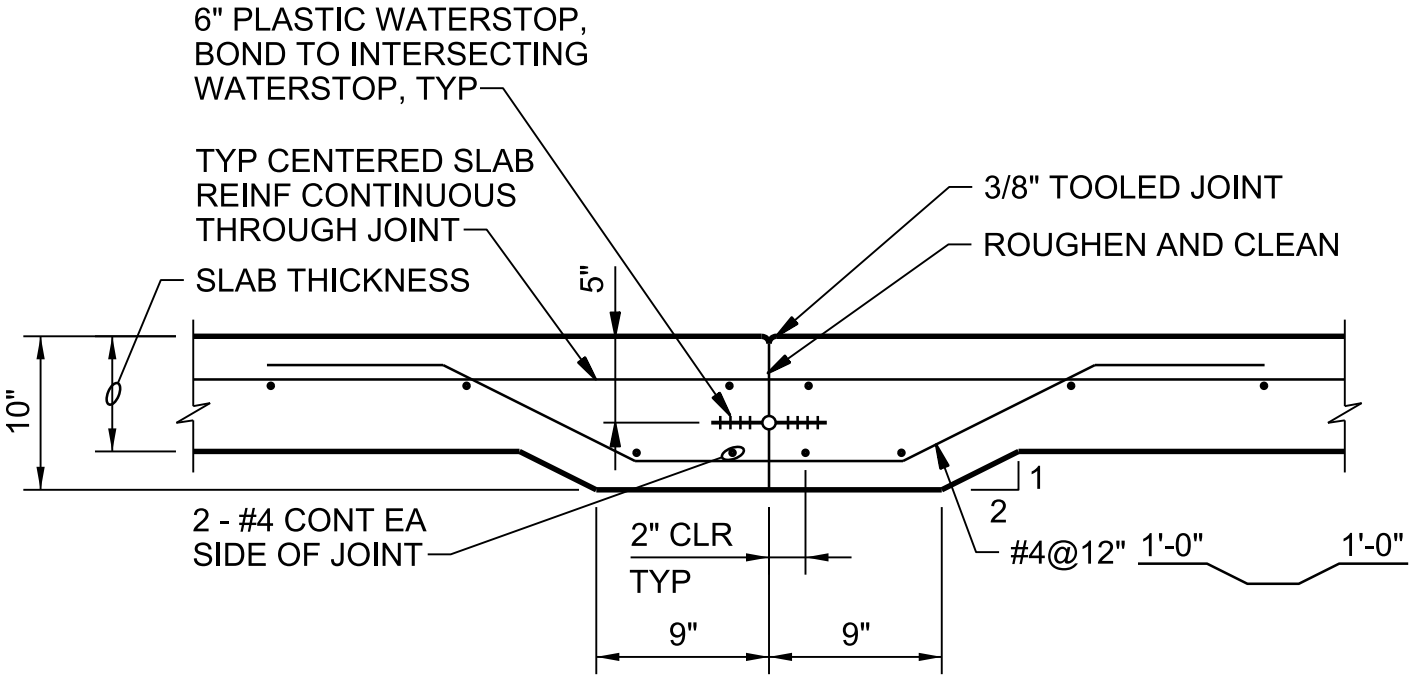

SLAB CONSTRUCTION JOINT

NTS

NATIONAL PARK SERVICE
GRAND CANYON NATIONAL PARK
SOUTH RIM

0315-141

© JACOBS

Jacobs

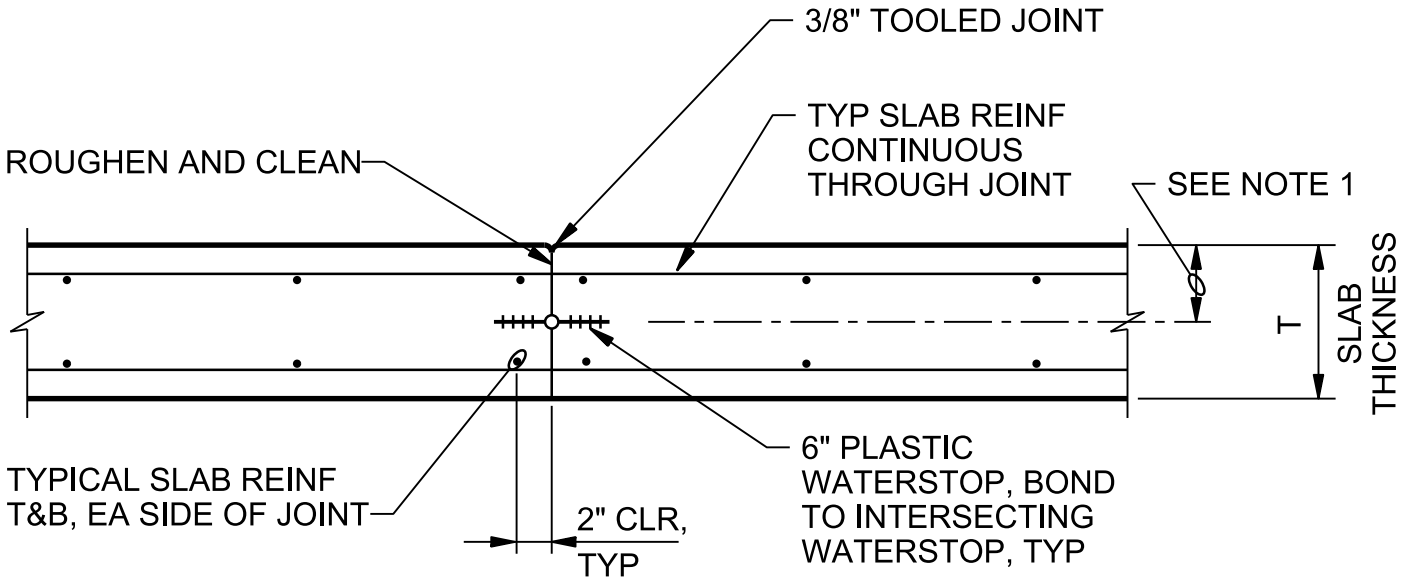

NOTE:

1. WATERSTOP DEPTH = T/2 OR 5 1/2" MAXIMUM WHEN USED IN CONJUNCTION WITH DETAIL 0315-153 BUT 6 1/2" MAXIMUM WHEN USED IN CONJUNCTION WITH DETAIL 0315-154 .

SLAB CONSTRUCTION JOINT

NTS

NATIONAL PARK SERVICE
GRAND CANYON NATIONAL PARK
SOUTH RIM

0315-142

© JACOBS

Jacobs

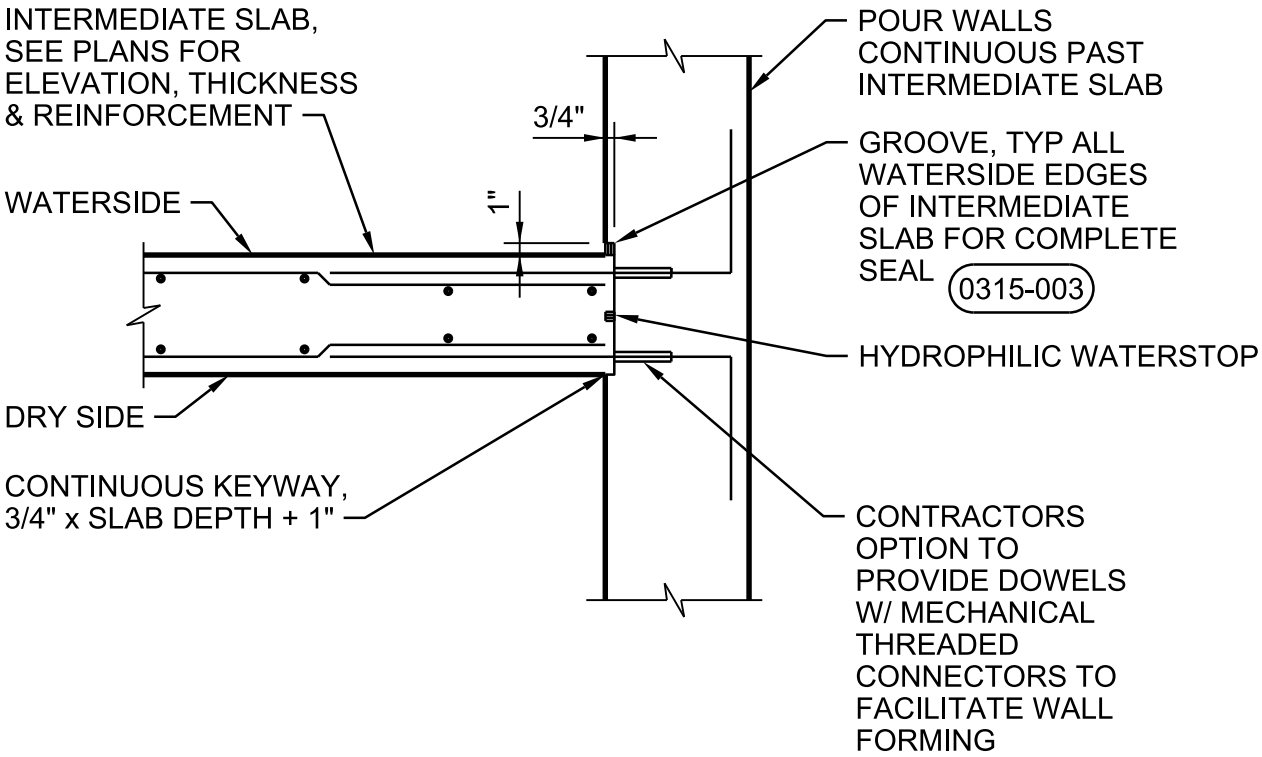

SLAB CONSTRUCTION JOINT AT WALL

NTS

NATIONAL PARK SERVICE
GRAND CANYON NATIONAL PARK
SOUTH RIM

0315-143

© JACOBS

Jacobs

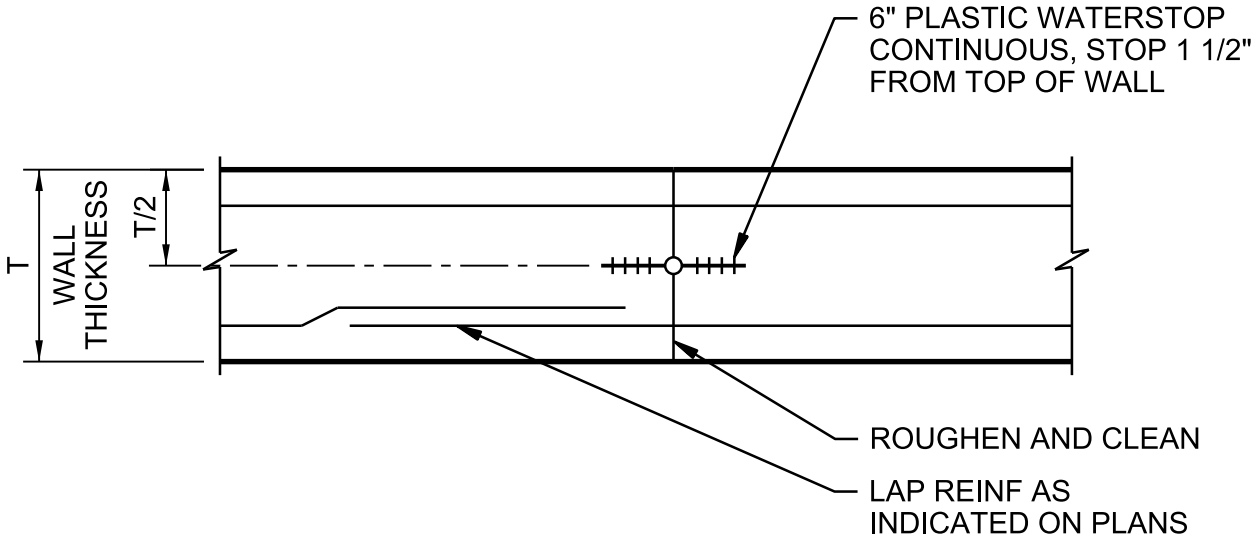

PLAN

NOTES:

1. ALL REINFORCEMENT CONTINUOUS ACROSS JOINT.
2. FOR LOCATIONS, SEE 0315-131

WALL VERTICAL CONSTRUCTION JOINT

NTS

NATIONAL PARK SERVICE
GRAND CANYON NATIONAL PARK
SOUTH RIM

0315-151

© JACOBS

Jacobs

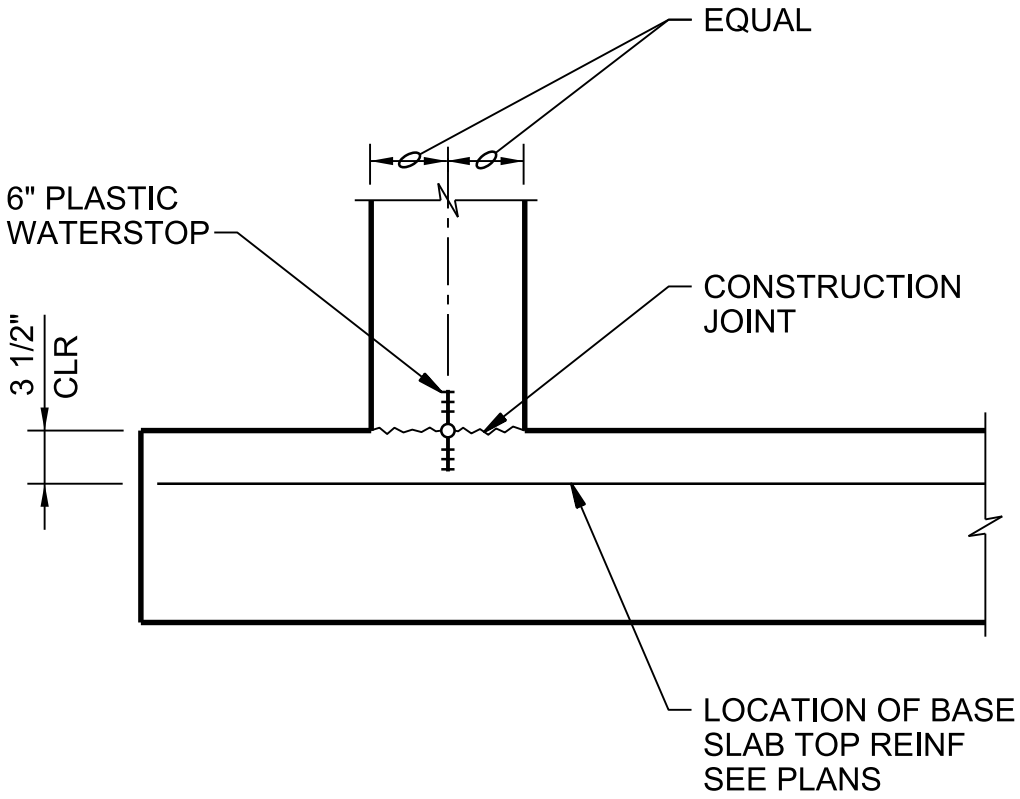

NOTES:

1. FOR WALLS WITH SINGLE MAT OF REINFORCING LOCATE WATERSTOP ON LIQUID FACE, 1" CLEAR OF REINFORCEMENT.
2. SECURE WATERSTOP IN-PLACE AS SPECIFIED.

WALL BASE CONSTRUCTION JOINT

NTS

NATIONAL PARK SERVICE
GRAND CANYON NATIONAL PARK
SOUTH RIM

0315-154

© JACOBS

Jacobs

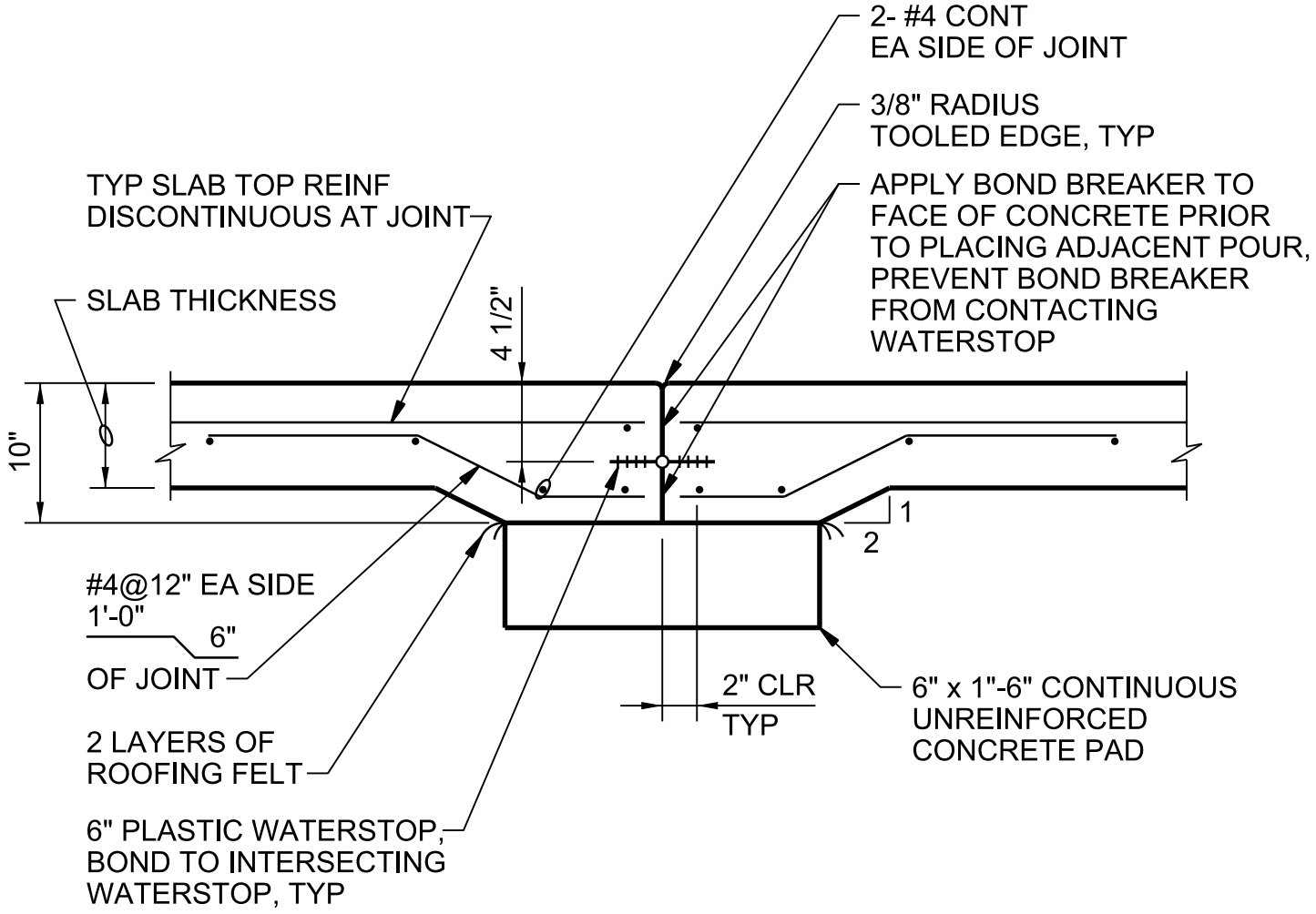

BASE SLAB CONTRACTION JOINT

NTS

NATIONAL PARK SERVICE
GRAND CANYON NATIONAL PARK
SOUTH RIM

0315-161

© JACOBS

Jacobs

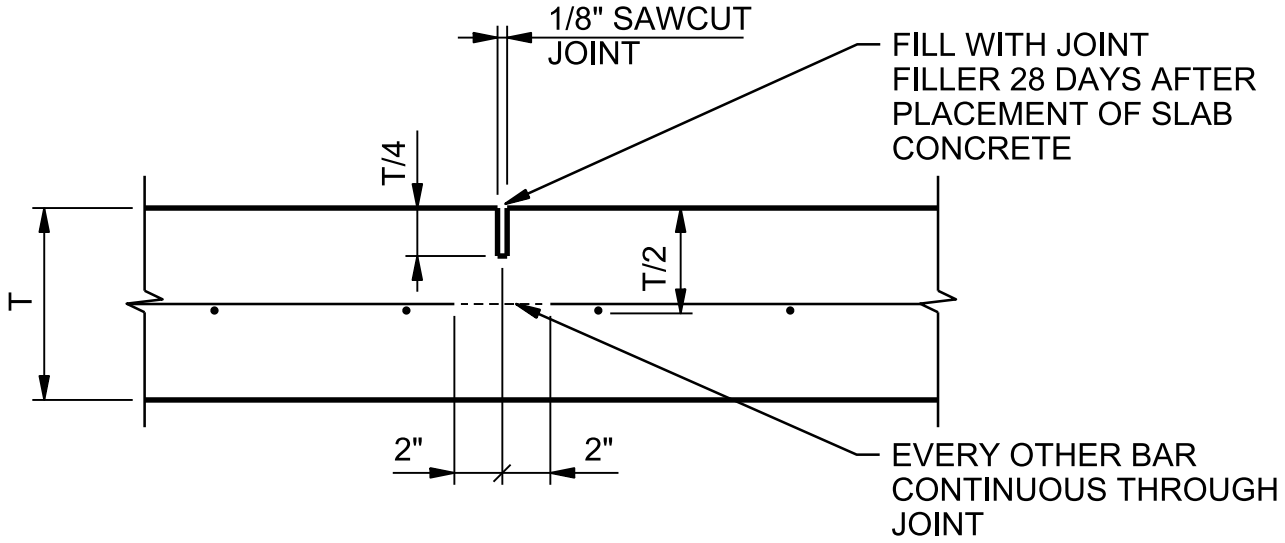

SINGLE REINFORCEMENT MAT

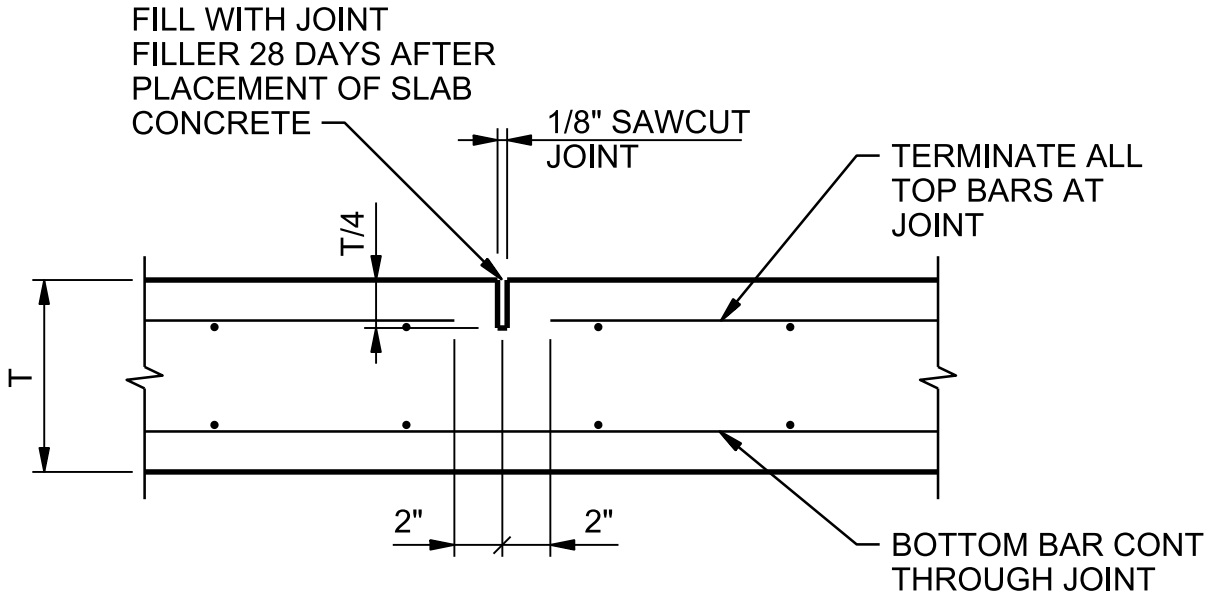

DOUBLE REINFORCEMENT MAT

NOTES:

1. CONTRACTOR SHALL USE STRING LINE OR OTHER POSITIVE MEANS TO PLACE REINFORCEMENT AND LOCATE SAWCUT.

BUILDING SLAB ON GRADE SAWN CONTROL JOINT

NTS

NATIONAL PARK SERVICE
GRAND CANYON NATIONAL PARK
SOUTH RIM

0315-192

© JACOBS

Jacobs

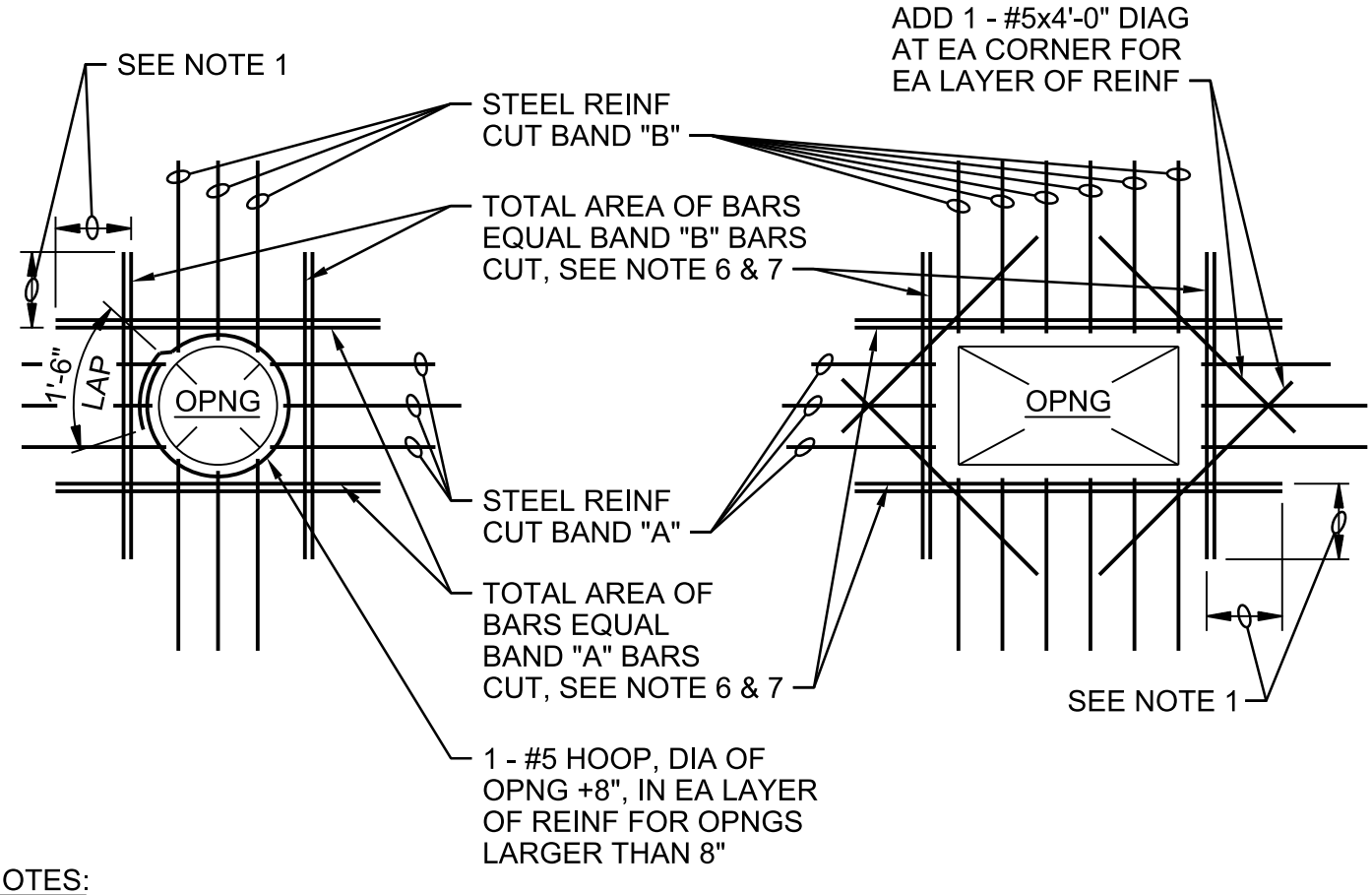

NOTES:

1. PROVIDE MINIMUM LAP, SEE GENERAL STRUCTURAL NOTES.
2. TYPICAL FOR ALL OPENINGS IN CONCRETE WALLS OF BELOW GRADE AND HYDRAULIC STRUCTURES AND ALL STRUCTURAL CONCRETE SLABS UNLESS INDICATED OTHERWISE ON PLANS.
3. DO NOT WELD REINFORCEMENT TO PIPE SLEEVES AND INSERTS.
4. PROVIDE A MINIMUM OF 2 "A" BARS AND 2 "B" BARS EACH SIDE OF OPENING (1 EACH FACE), INCLUDING DOWELS AND CORNER BARS, TYPICAL.
5. FOR OPENINGS LARGER THAN 8'-0", REINFORCE SAME AS FOR 8'-0" OPENINGS.
6. SPACE AT 3 BAR DIAMETERS (OR 3" MINIMUM) ON CENTER. LOCATE HALF OF TOTAL AREA ON EACH SIDE OF OPENING.
7. AT OPENINGS WITHIN 12" OF AN INTERSECTING WALL OR SLAB, PROVIDE ONLY THE EXTRA REINFORCEMENT WHICH WILL FIT, AT THE BAR SPACING IN NOTE 6.

OPENING REINFORCEMENT

NTS

NATIONAL PARK SERVICE
GRAND CANYON NATIONAL PARK
SOUTH RIM

0330-001

© JACOBS

Jacobs

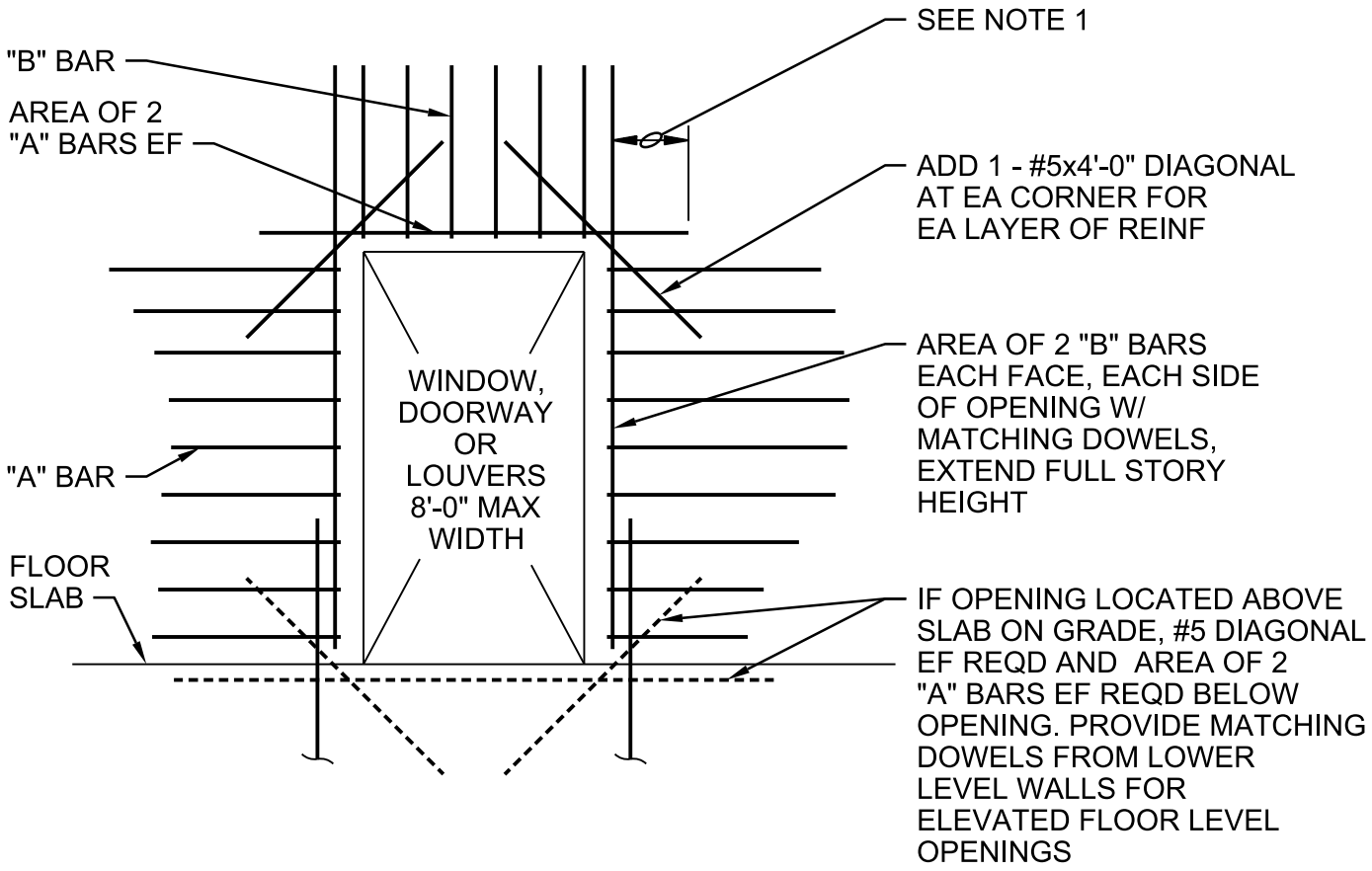

ELEVATION

NOTES:

1. PROVIDE MINIMUM LAP, SEE GENERAL STRUCTURAL NOTES.
2. TYPICAL FOR ALL OPENINGS IN ABOVE GROUND BUILDING CONCRETE WALLS UNLESS INDICATED OTHERWISE ON PLANS.
3. DO NOT WELD REINFORCEMENT TO PIPE SLEEVES AND INSERTS.

OPENING REINFORCEMENT

NTS

NATIONAL PARK SERVICE
GRAND CANYON NATIONAL PARK
SOUTH RIM

0330-002

© JACOBS

Jacobs

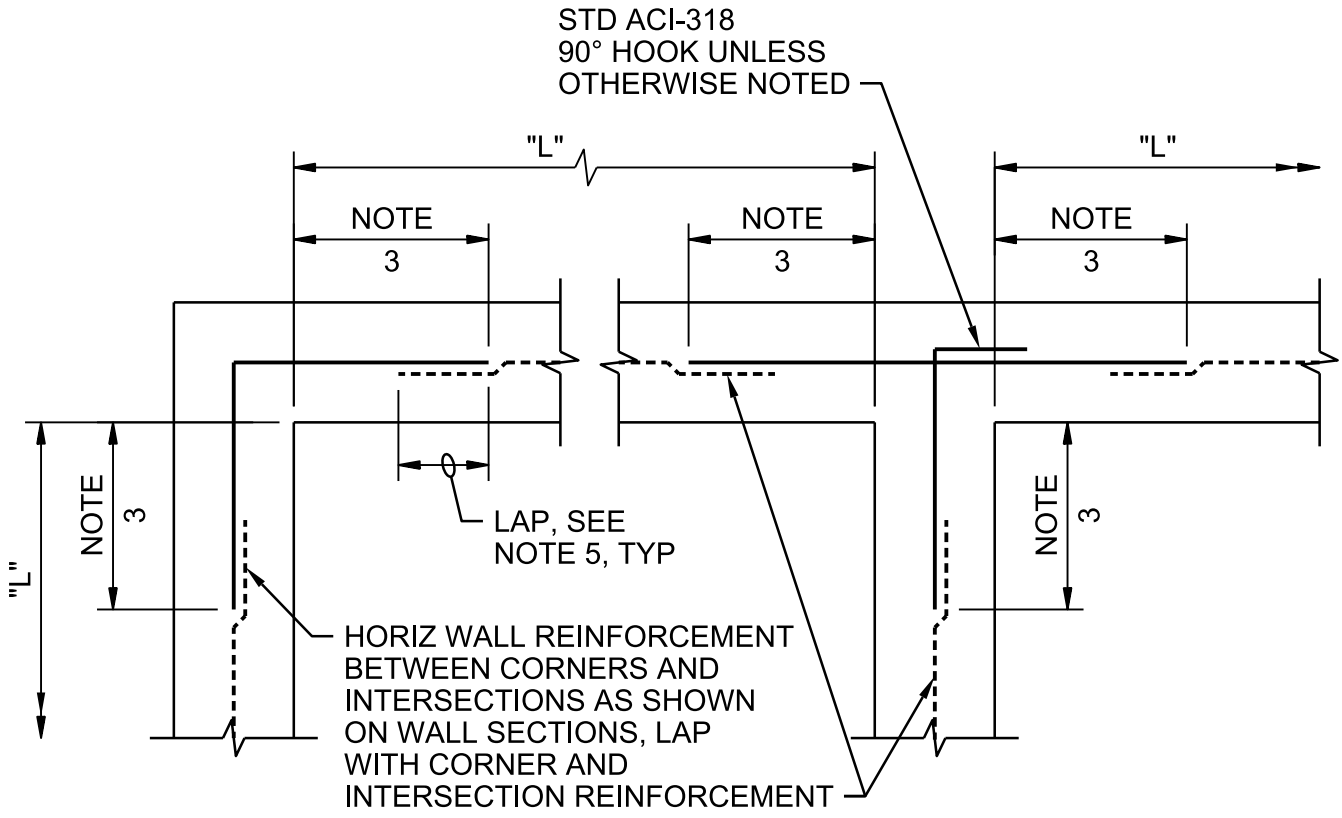

SINGLE REINFORCEMENT MAT

TYPICAL WALL CORNER & INTERSECTION REINFORCEMENT

NTS

DETAIL 1 OF 3

NATIONAL PARK SERVICE
GRAND CANYON NATIONAL PARK
SOUTH RIM

0330-003

© JACOBS

Jacobs

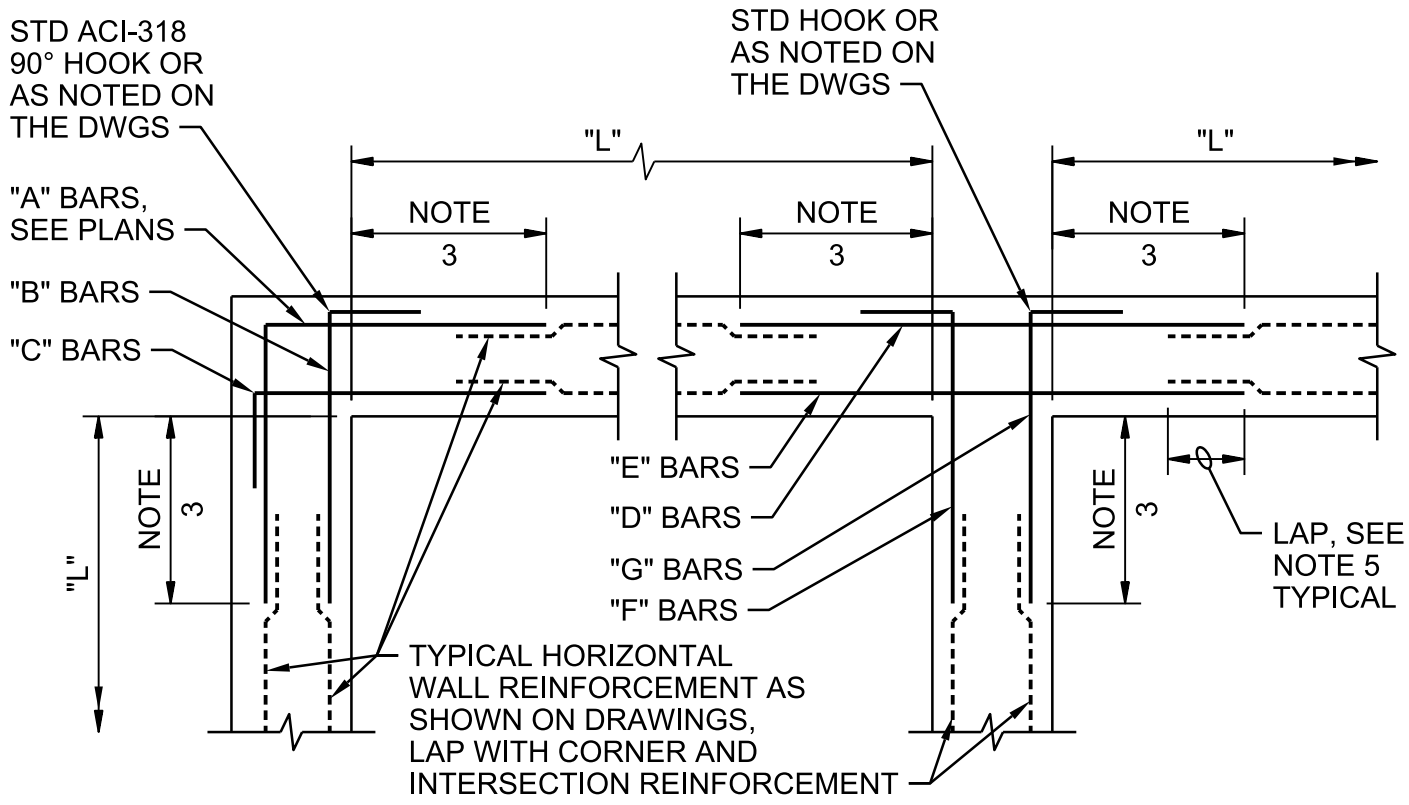

DOUBLE REINFORCEMENT MAT

TYPICAL WALL CORNER & INTERSECTION REINFORCEMENT

NTS

DETAIL 2 OF 3

NATIONAL PARK SERVICE
GRAND CANYON NATIONAL PARK
SOUTH RIM

0330-003

© JACOBS

Jacobs

NOTES:

1. TYPICAL HORIZONTAL WALL CORNER AND INTERSECTION REINFORCEMENT LAYOUT IS SHOWN TO AVOID CONGESTION AND PERMIT PROPER PLACEMENT, FOR SIZE AND SPACING SEE PLANS. ALL HORIZONTAL REINFORCEMENT AT CORNERS AND INTERSECTIONS SHALL BE FABRICATED AND INSTALLED WITH SPLICES LOCATED WHERE SHOWN REGARDLESS OF BAR SIZE AND SPACING.

2. WHERE THE CORNER OR INTERSECTION REINFORCEMENT SIZE AND SPACING IS NOT SHOWN, NOTED OR TABULATED ON THE PLANS, THE SIZE AND SPACING SHALL BE THE SAME AS THE WALL HORIZONTAL REINFORCEMENT SHOWN ON THE WALL SECTIONS OR AS NOTED FOR THE REINFORCEMENT BETWEEN THE CORNERS OR INTERSECTIONS.

3. EXCEPT WHERE OTHERWISE SHOWN ON THE DRAWINGS, THE LENGTH INDICATED AS "NOTE 3" SHALL BE THE LESSER OF L/4, 10 FEET, OR 1.0 TIMES THE HEIGHT OF THE WALL, EXCEPT THAT IN NO CASE SHALL IT BE LESS THAN A LAP LENGTH.

4. L = LENGTH OF WALL PARALLEL TO THE BAR LENGTH IN QUESTION.

5. EXCEPT WHERE OTHERWISE SHOWN ON THE DRAWINGS, THE LENGTH INDICATED AS "NOTE 5" SHALL BE EQUAL TO ONE "LAP LENGTH" AS REQUIRED BY THE GENERAL STRUCTURAL NOTES. USE THE LAP LENGTH AS REQUIRED FOR THE SMALLER OF THE TWO REINFORCEMENT BARS BEING SPLICED.

6. UNLESS OTHERWISE NOTED, "B" AND "C" BARS ARE THE SAME SIZE AND SPACING AND "F" AND "G" BARS ARE THE SAME SIZE AND SPACING.

TYPICAL WALL CORNER & INTERSECTION REINFORCEMENT

NTS

DETAIL 3 OF 3

NATIONAL PARK SERVICE
GRAND CANYON NATIONAL PARK
SOUTH RIM

0330-003

© JACOBS

Jacobs

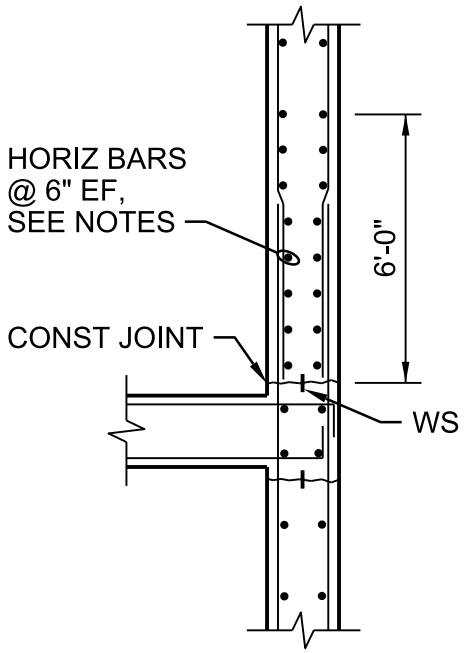

AT ELEVATED SLAB

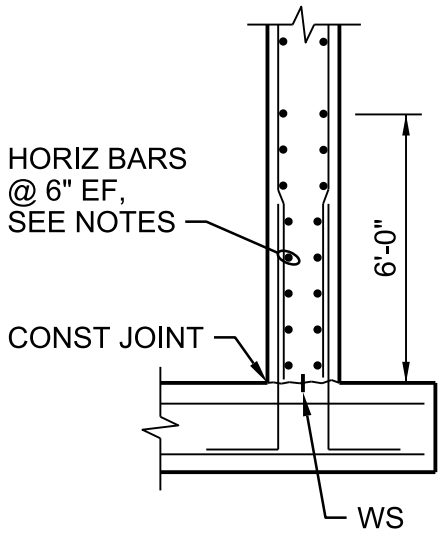

AT BASE SLAB

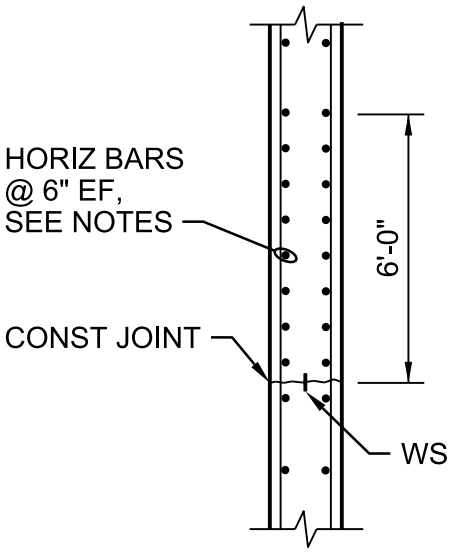

AT INTERMEDIATE CONSTRUCTION JOINT

NOTES:

1. PROVIDE HORIZONTAL BARS AT 6” SPACING EACH FACE IN THE FIRST 6’-0” ABOVE ALL HORIZONTAL WALL CONSTRUCTION JOINTS IN LIQUID CONTAINING AND BELOW-GRADE STRUCTURES. WHERE TYPICAL WALL HORIZONTAL BARS ARE AT 12” SPACING, PROVIDE ADDITIONAL BARS FOR 6” SPACING.

2. HORIZONTAL BAR SIZE FOR THE 6’-0” ZONE SHALL BE THE TYPICAL WALL HORIZONTAL BAR SIZE SHOWN ON THE DRAWINGS OR THE MINIMUM BAR SIZE IN THE TABLE BELOW, WHICHEVER IS GREATER.

WALL THICKNESS (INCHES)	MINIMUM BAR SIZE
10	#5
12, 14	#6
16, 18, 20	#7
≥22	#8

3. PROVIDE CORNER BARS AT 6" SPACING EACH FACE TO LAP WITH THE BARS SHOWN ABOVE, SEE 0330-003.

REINFORCEMENT AT HORIZONTAL CONSTRUCTION JOINT

NTS

DETAIL 1 OF 2

0330-004

NATIONAL PARK SERVICE
GRAND CANYON NATIONAL PARK
SOUTH RIM

© JACOBS

Jacobs

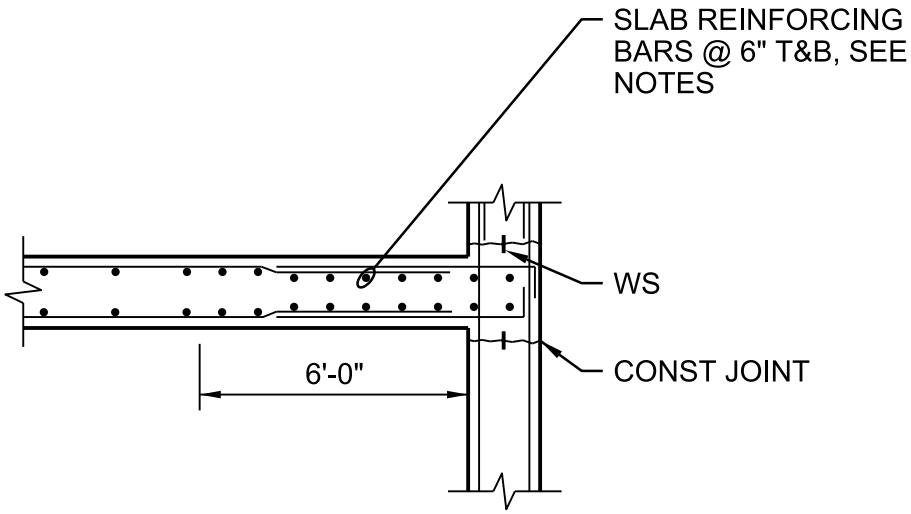

AT ELEVATED SLAB

NOTES:

1. THIS DETAIL APPLIES TO STRUCTURAL ELEMENTS THAT ARE PART OF HYDRAULIC STRUCTURES OR PART OF BELOW-GRADE STRUCTURES. WHERE SPACING OF TYPICAL SLAB BARS IS GREATER THAN 6", PROVIDE ADDITIONAL BARS FOR NET SPACING OF 6" MAXIMUM.

2. BAR SIZE FOR THE 6'-0" ZONE SHALL BE THE TYPICAL SLAB BAR SIZE SHOWN ON THE DRAWINGS OR THE MINIMUM BAR SIZE IN THE TABLE BELOW, WHICHEVER IS GREATER.

SLAB THICKNESS (INCHES)	MINIMUM BAR SIZE
H ≤ 10"	#5
10" > H ≤ 14"	#6
14" > H ≤ 20"	#7
H > 20"	#8

REINFORCEMENT AT HORIZONTAL CONSTRUCTION JOINT

NTS

DETAIL 2 OF 2

NATIONAL PARK SERVICE
GRAND CANYON NATIONAL PARK
SOUTH RIM

0330-004

© JACOBS

Jacobs

ACI MINIMUM HOOK EMBEDMENT LENGTH	
BAR SIZE	MIN EMBED
#4	7"
#5	9"
#6	11"
#7	12"
#8	14"
#9	16"
#10	17"

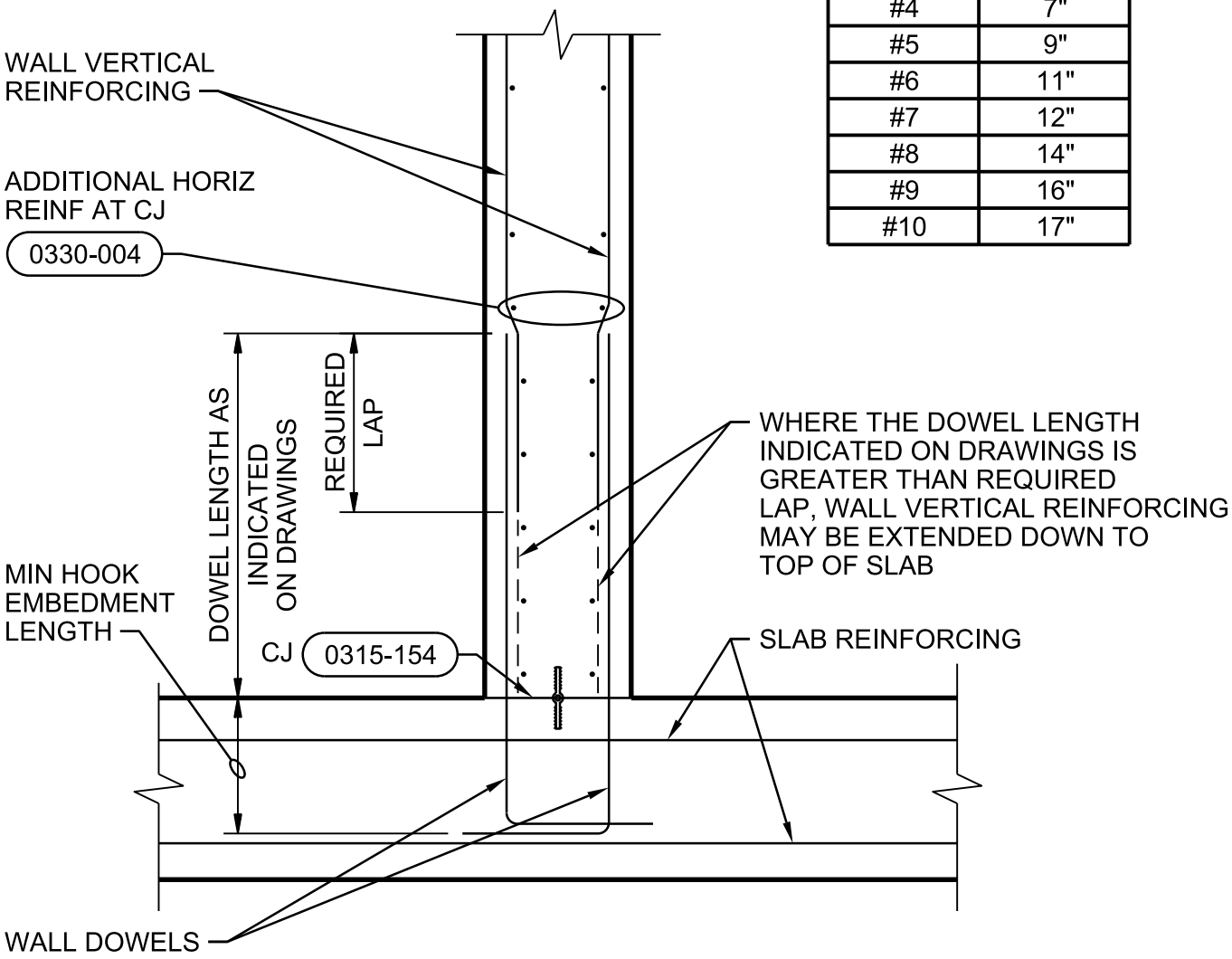

WALL SECTION

NOTE:

UNLESS NOTED OTHERWISE, ALL DOWEL HOOKS SHALL EXTEND TO AND BE TIED OFF TO BOTTOM MAT OF SLAB REINFORCING.

VERTICAL WALL REINFORCING / DOWEL PLACEMENT

NTS

NATIONAL PARK SERVICE
GRAND CANYON NATIONAL PARK
SOUTH RIM

0330-005

© JACOBS

Jacobs

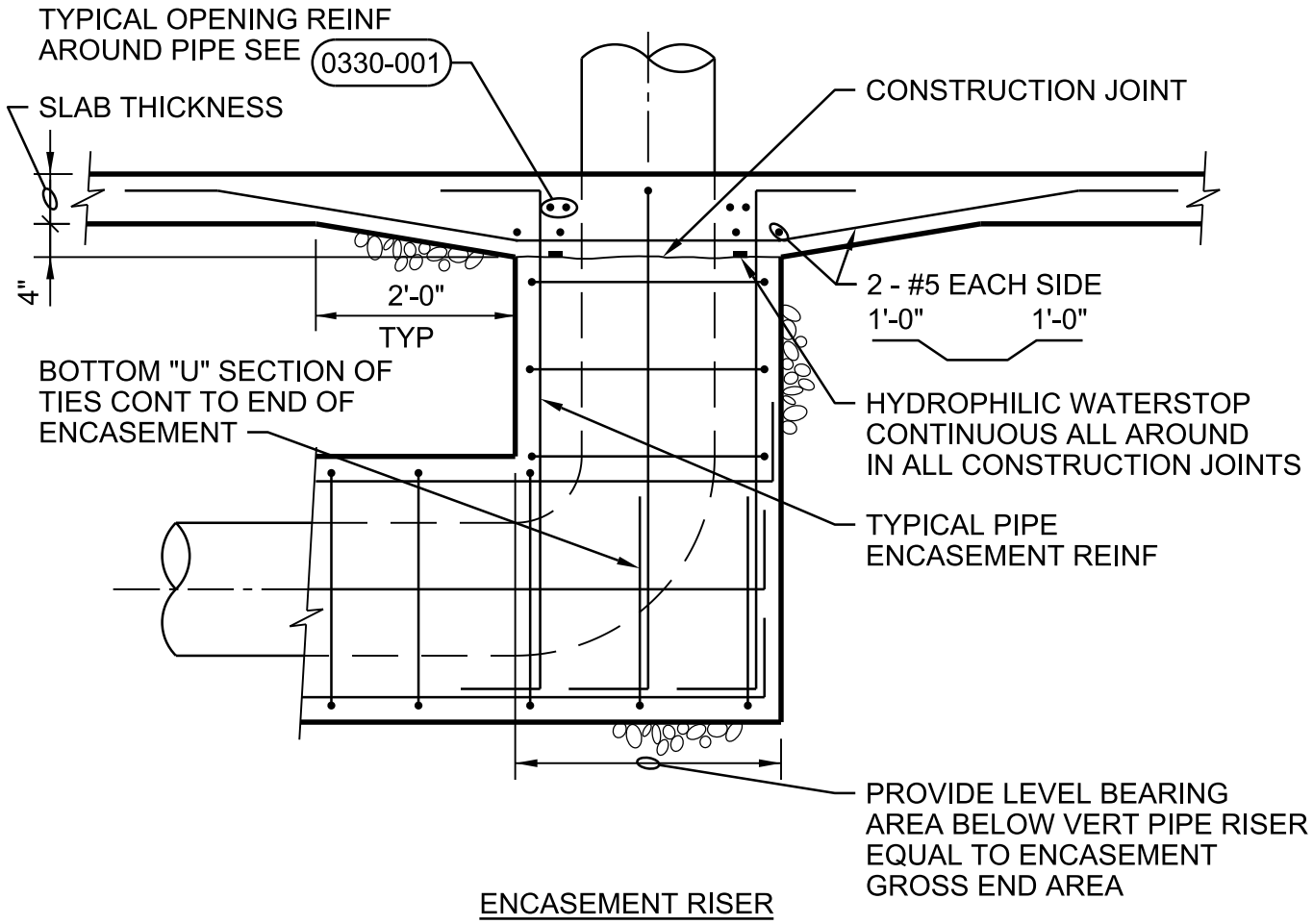

ENCASEMENT RISER

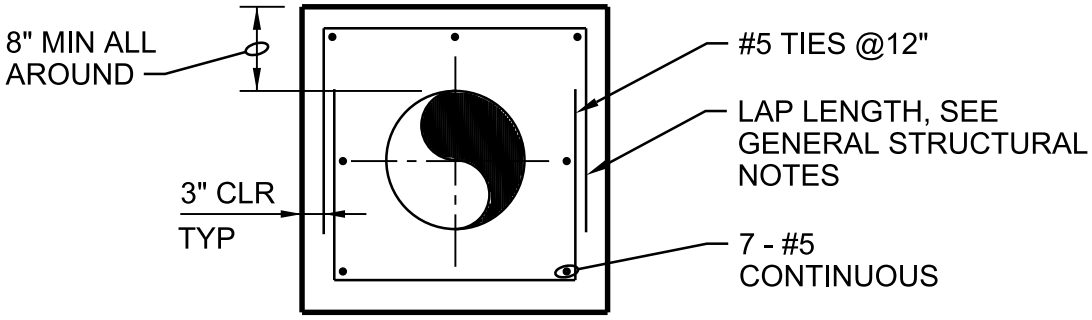

SECTION

NOTES:

1. SECTION APPLIES TO PIPES W/ DIAMETERS 18" AND SMALLER. FOR 20" DIAMETER PIPES AND LARGER, SEE 0330-017
2. WHEN PIPE ENCASEMENT IS CLOSER THAN 4" TO SLAB ABOVE, TIE SLAB & ENCASEMENT TOGETHER. SEE 0330-018

PIPE ENCASEMENT

NTS

NATIONAL PARK SERVICE
GRAND CANYON NATIONAL PARK
SOUTH RIM

0330-016

© JACOBS

Jacobs

PIPE ENCASEMENT TABLE								
PIPE DIA (IN.)	H=10 FEET		H=20 FEET		H=30 FEET		H=40 FEET	
	T (in)	REINF	T (in)	REINF	T (in)	REINF	T (in)	REINF
20 THRU 30	8	#5@12"	10	#5@12"	10	#5@12"	10	#6@12"
36 THRU 42	10	#5@12"	10	#6@12"	10	#7@12"	10	#6@6"
48 THRU 54	10	#6@12"	10	#7@12"	10	#7@6"	12	#7@6"
UP TO 60	10	#6@12"	10	#6@6"	14	#7@6"	14	#7@6"

HEAVY DARK LINE INDICATES BREAK BETWEEN ONE LAYER OF REINFORCEMENT AND TWO. SEE NOTE 2.

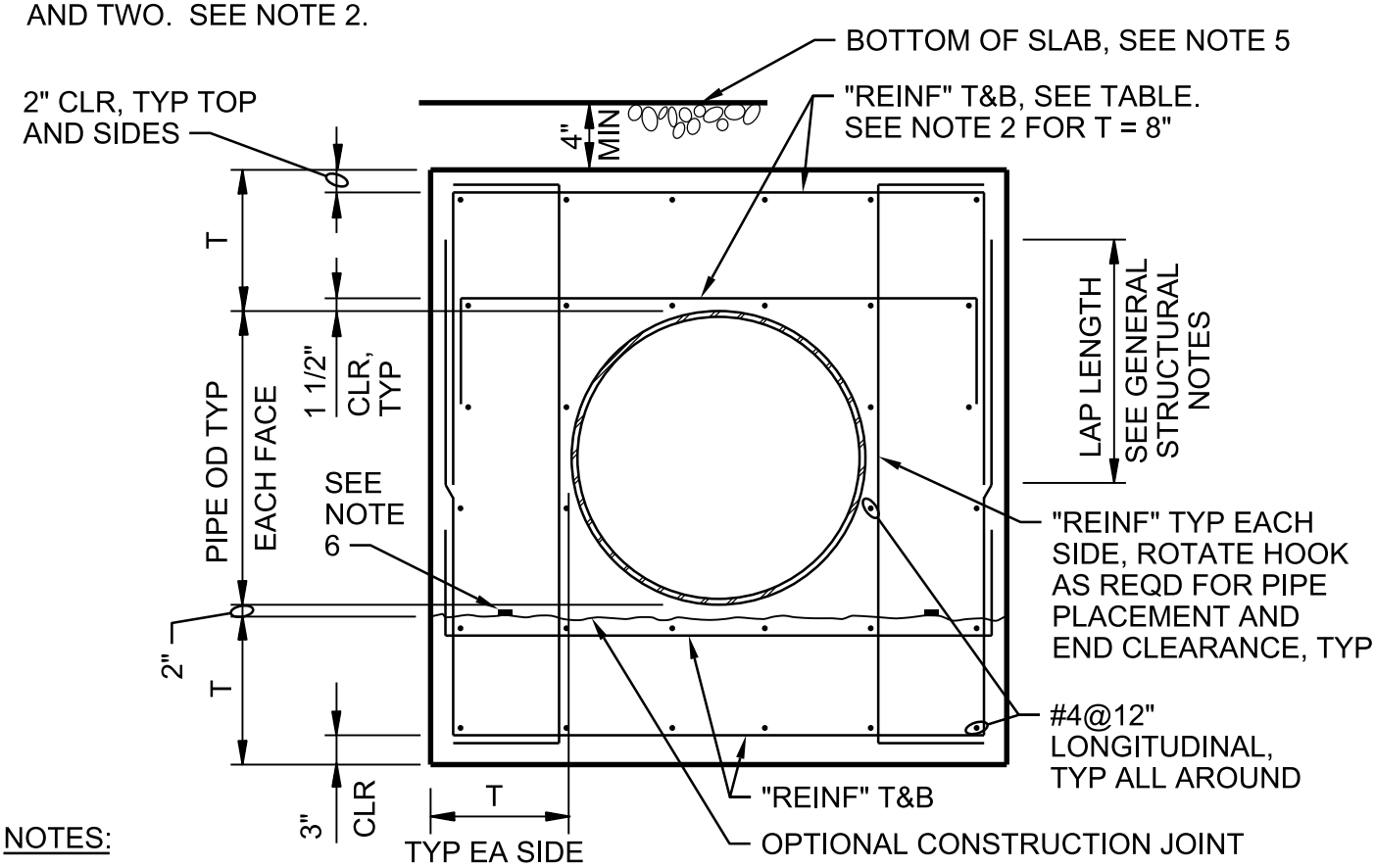

NOTES:

1. THIS DETAIL APPLIES TO PIPE DIAMETER OF 20" AND LARGER. FOR SMALLER THAN 20", SEE DETAIL 0330-016.
2. FOR T=8" REINFORCEMENT SHALL BE ONE LAYER AND CENTERED IN SLABS OR WALLS. SIM 0330-016.
3. FOR ENCASEMENT AT PIPE RISER, SEE 0330-016.
4. "H" IS FILL HEIGHT OR WATER DEPTH OR COMBINATION ABOVE PIPE.
5. WHEN PIPE ENCASEMENT CLOSER THAN 4" TO SLAB ABOVE, TIE SLAB & ENCASEMENT TOGETHER. SEE 0330-018.
6. HYDROPHILIC WATERSTOP CONTINUOUS ALL AROUND IN ALL CONSTRUCTION JOINTS.

PIPE ENCASEMENT

NTS

NATIONAL PARK SERVICE
GRAND CANYON NATIONAL PARK
SOUTH RIM

0330-017

© JACOBS

Jacobs

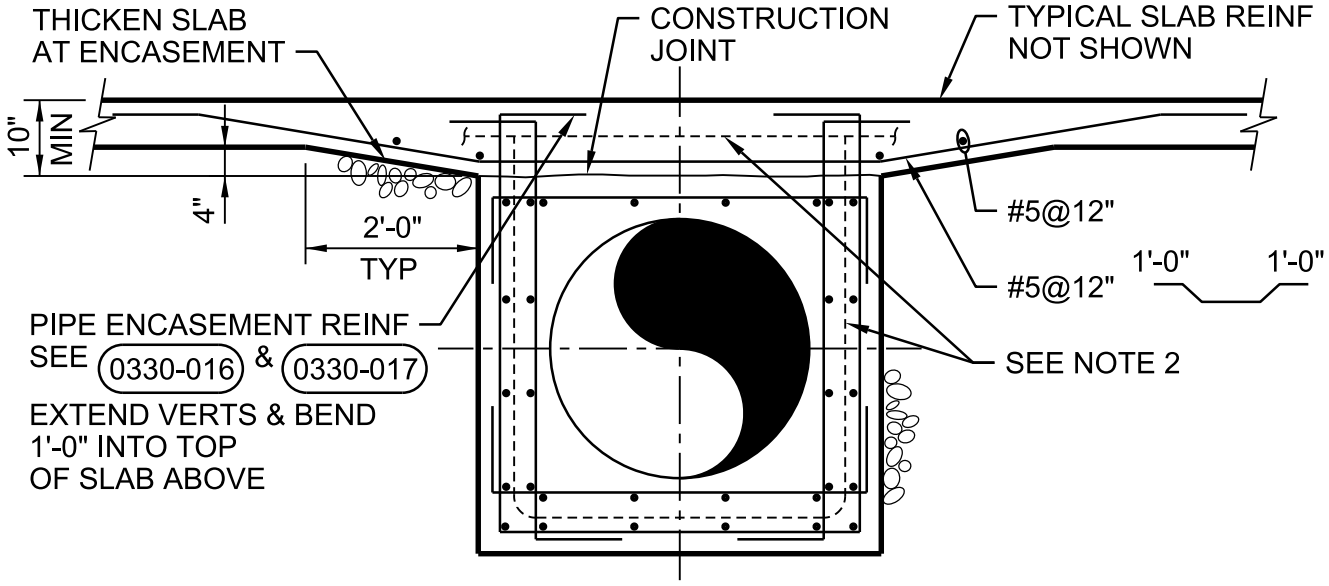

SECTION

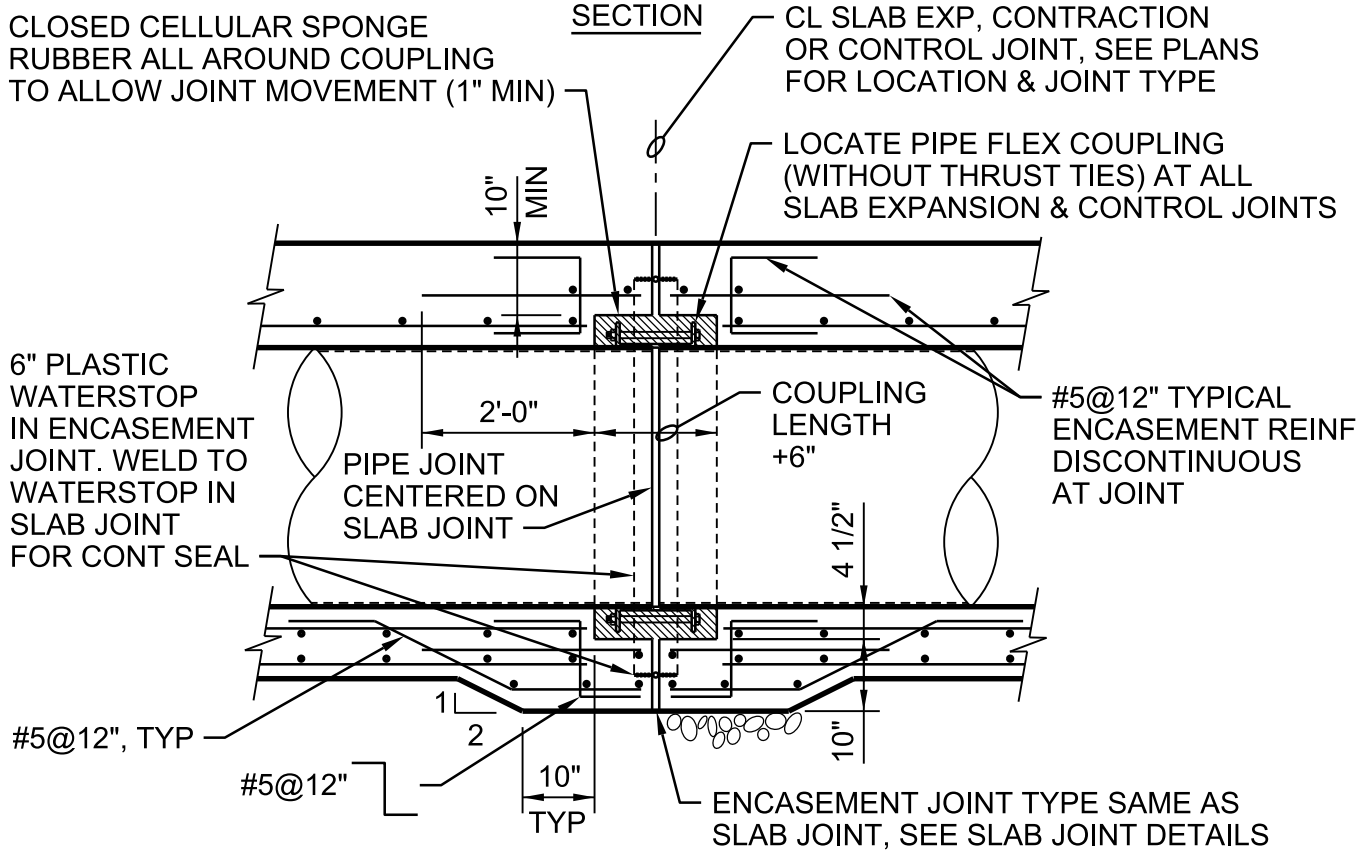

JOINT DETAIL

NOTES:

1. TIE PIPE ENCASEMENT TO SLAB AS SHOWN WHEN DISTANCE BETWEEN PIPE ENCASEMENT AND BOTTOM OF SLAB IS LESS THAN 4".
2. 6" PLASTIC WS IN ENCASEMENT JOINTS. WELD TO WS IN SLAB JOINTS.

PIPE ENCASEMENT AT SLAB

NTS

NATIONAL PARK SERVICE
GRAND CANYON NATIONAL PARK
SOUTH RIM

0330-018

© JACOBS

Jacobs

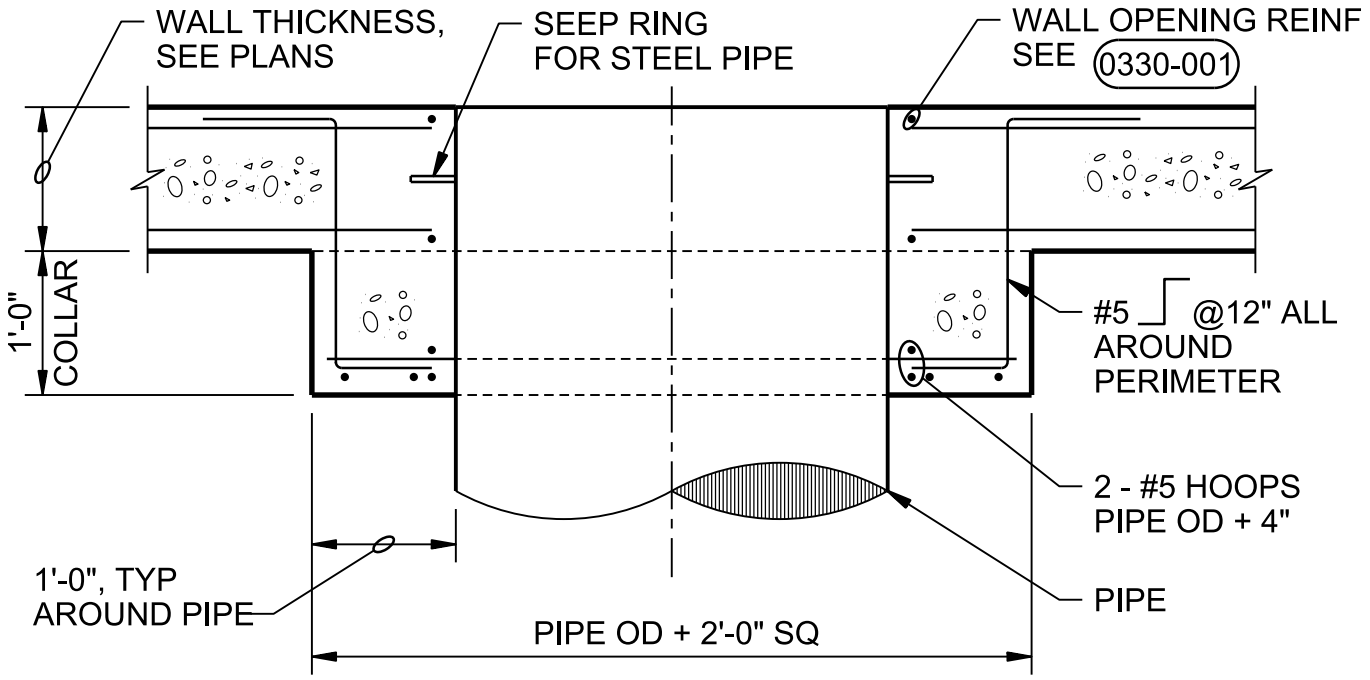

PLAN/SECTION

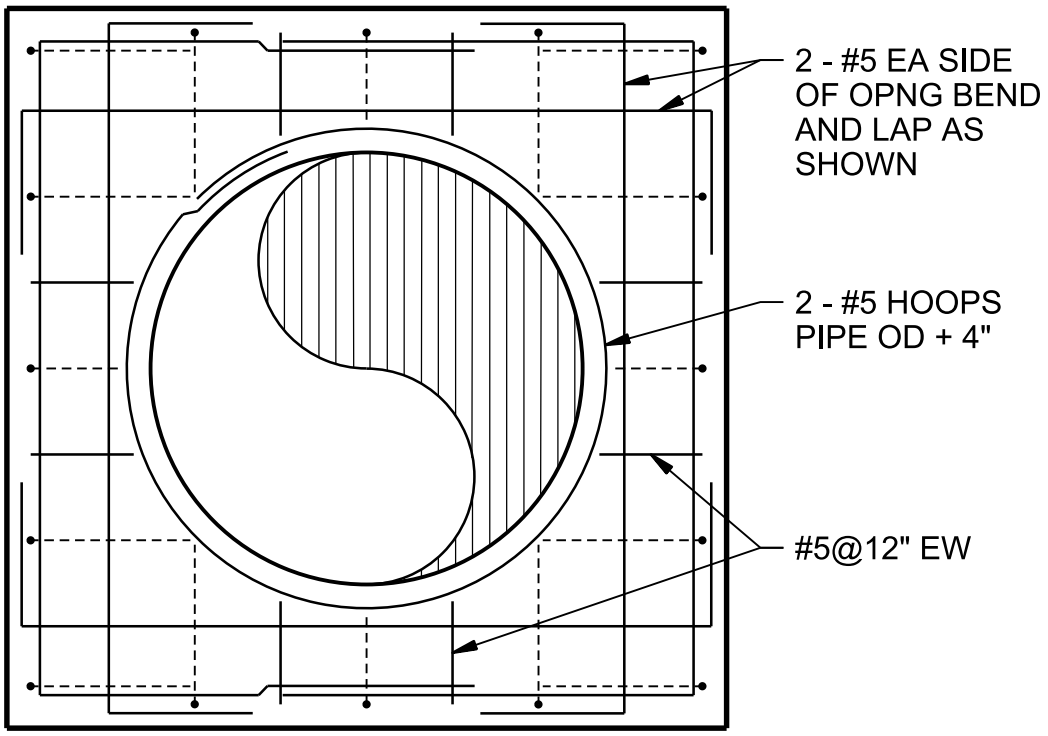

ELEVATION

PIPE COLLAR

NTS

NATIONAL PARK SERVICE
GRAND CANYON NATIONAL PARK
SOUTH RIM

0330-021

© JACOBS

Jacobs

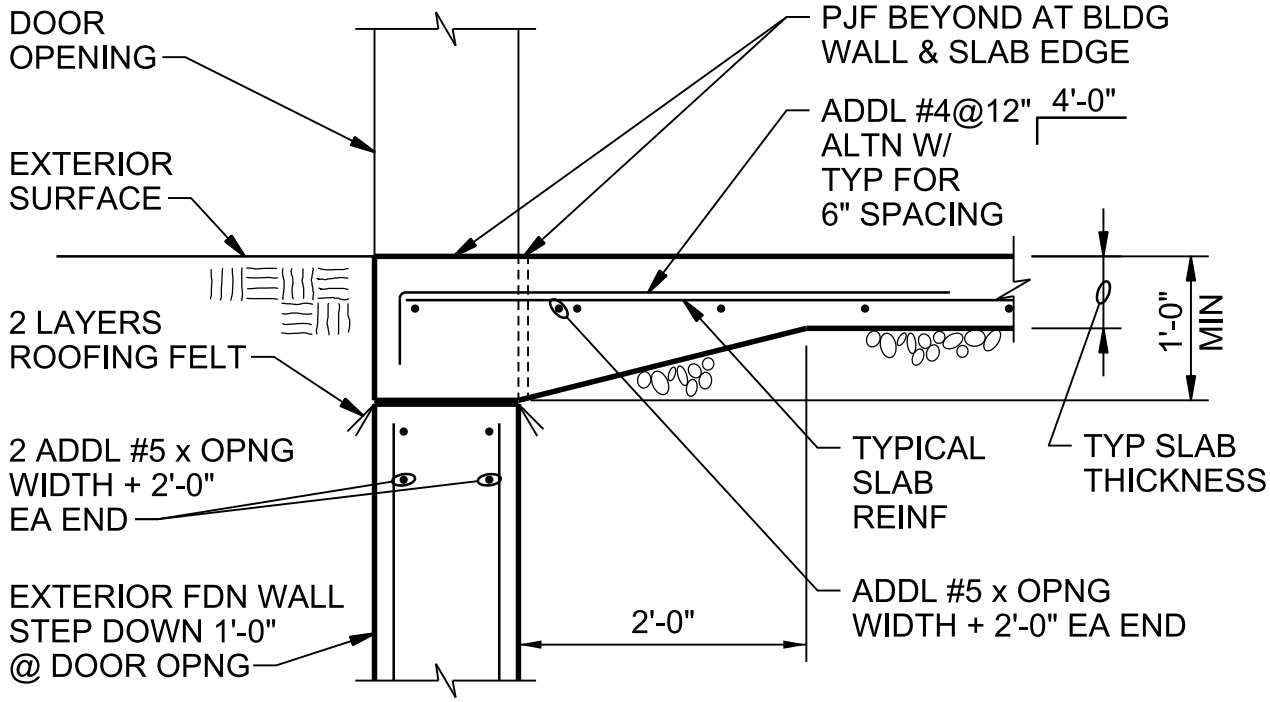

EXTERIOR

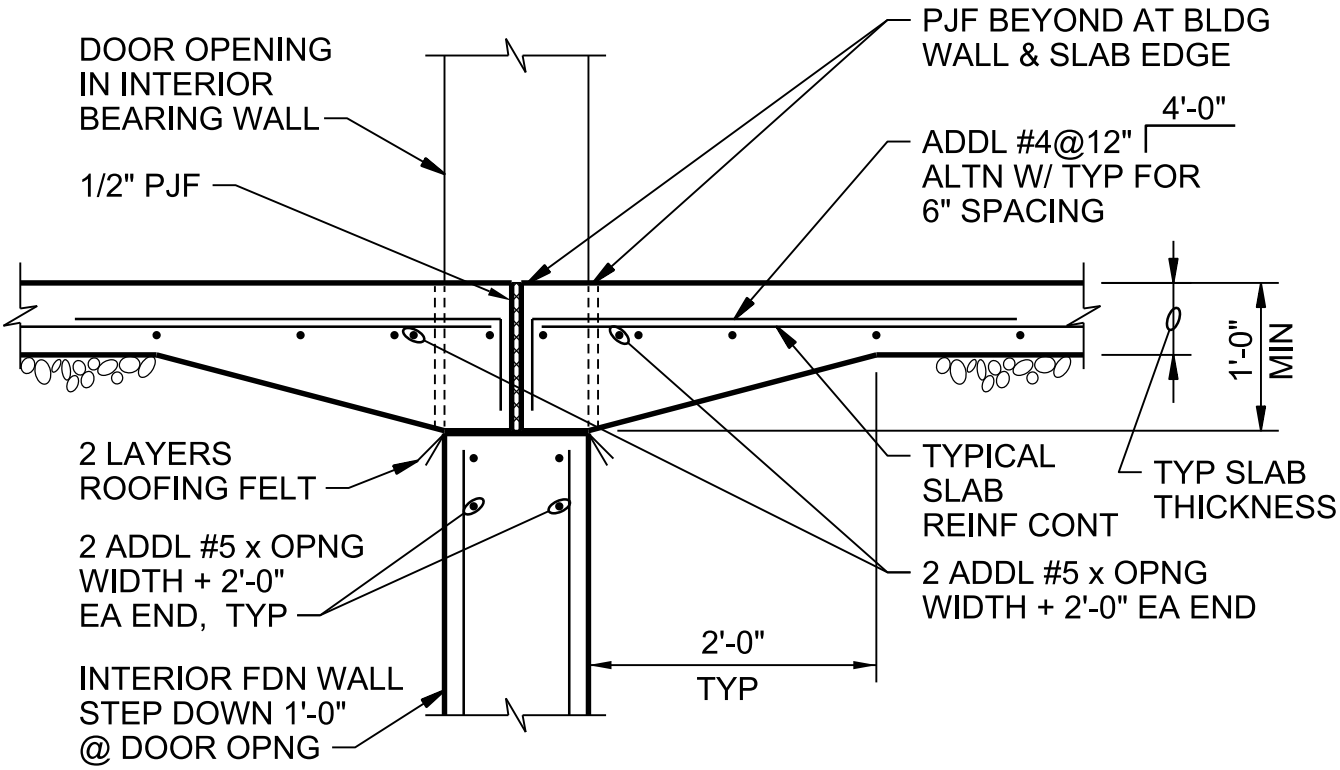

INTERIOR

SLAB AT DOOR OPENING

NTS

NATIONAL PARK SERVICE
GRAND CANYON NATIONAL PARK
SOUTH RIM

0330-041

© JACOBS

Jacobs

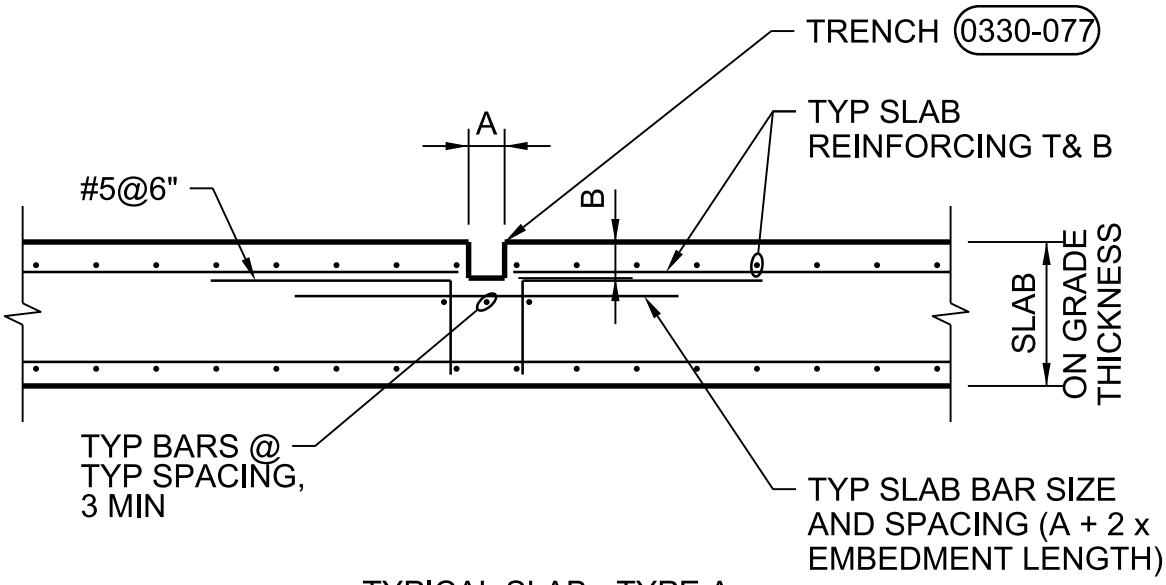

TYPICAL SLAB - TYPE A

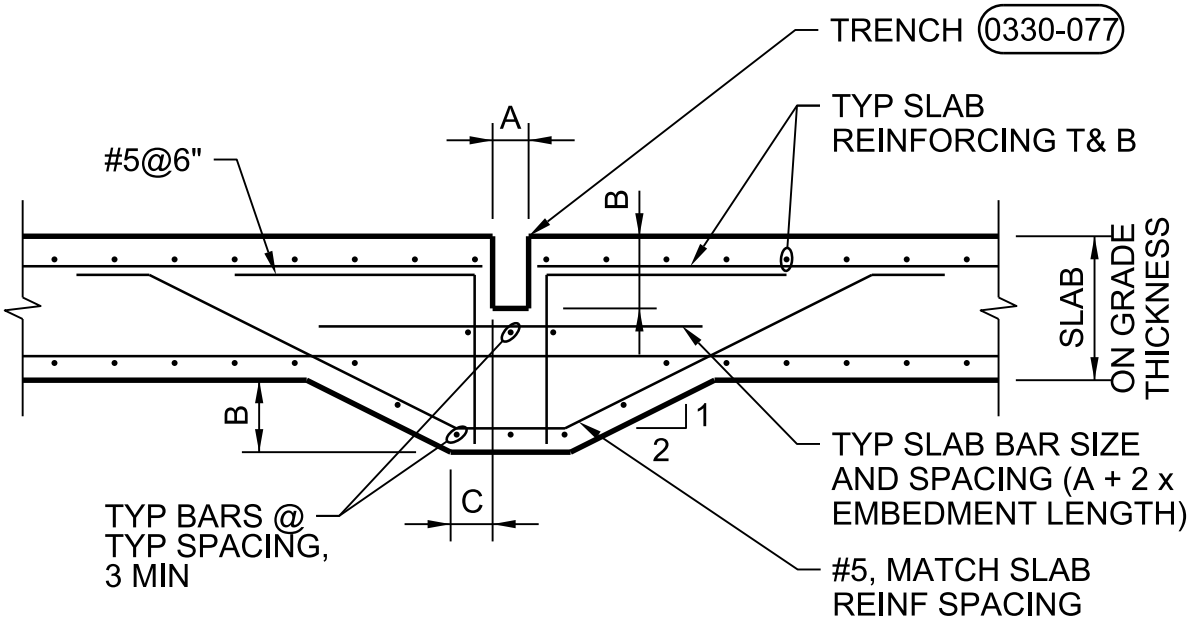

THICKENED SLAB - TYPE B

DIMENSIONS:

A = TRENCH WIDTH:	SEE PLANS
B = TRENCH DEPTH:	SEE PLANS
C = 6" WHEN:	A < 1'-0"
C = 1'-0" WHEN:	A ≥ 1'-0"

TRENCH REINFORCING

NTS

NATIONAL PARK SERVICE
GRAND CANYON NATIONAL PARK
SOUTH RIM

0330-043

© JACOBS

Jacobs

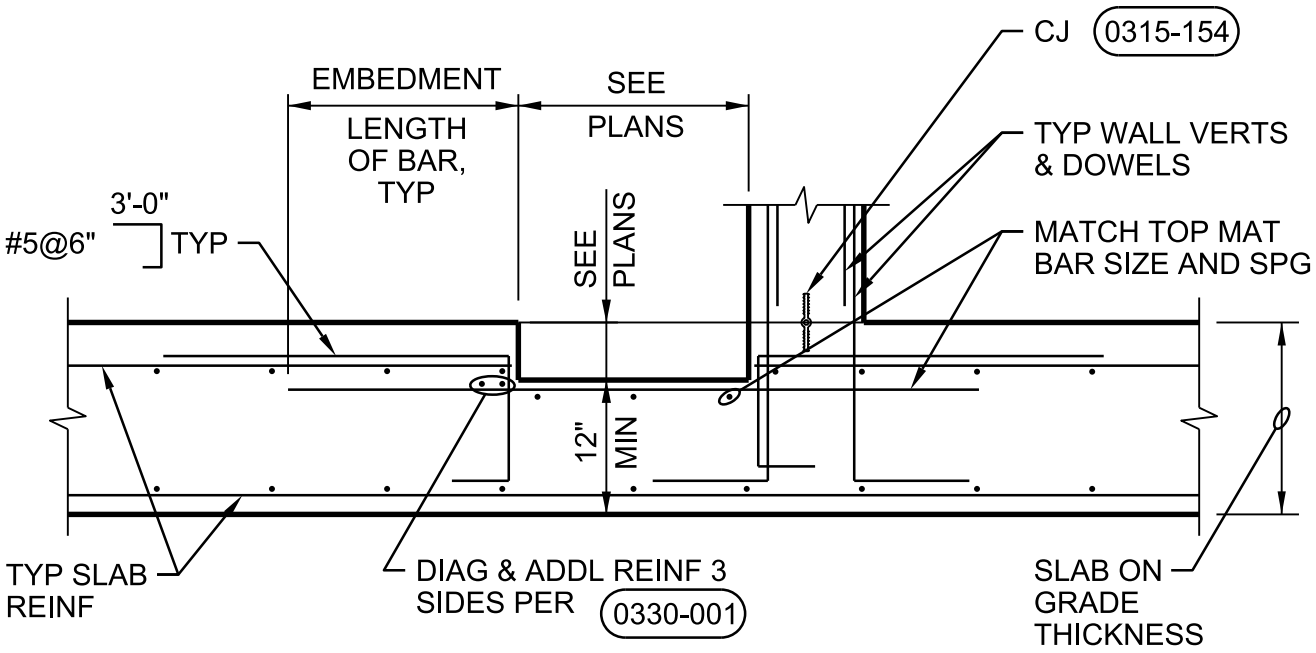

TYPICAL SLAB - TYPE 'A'

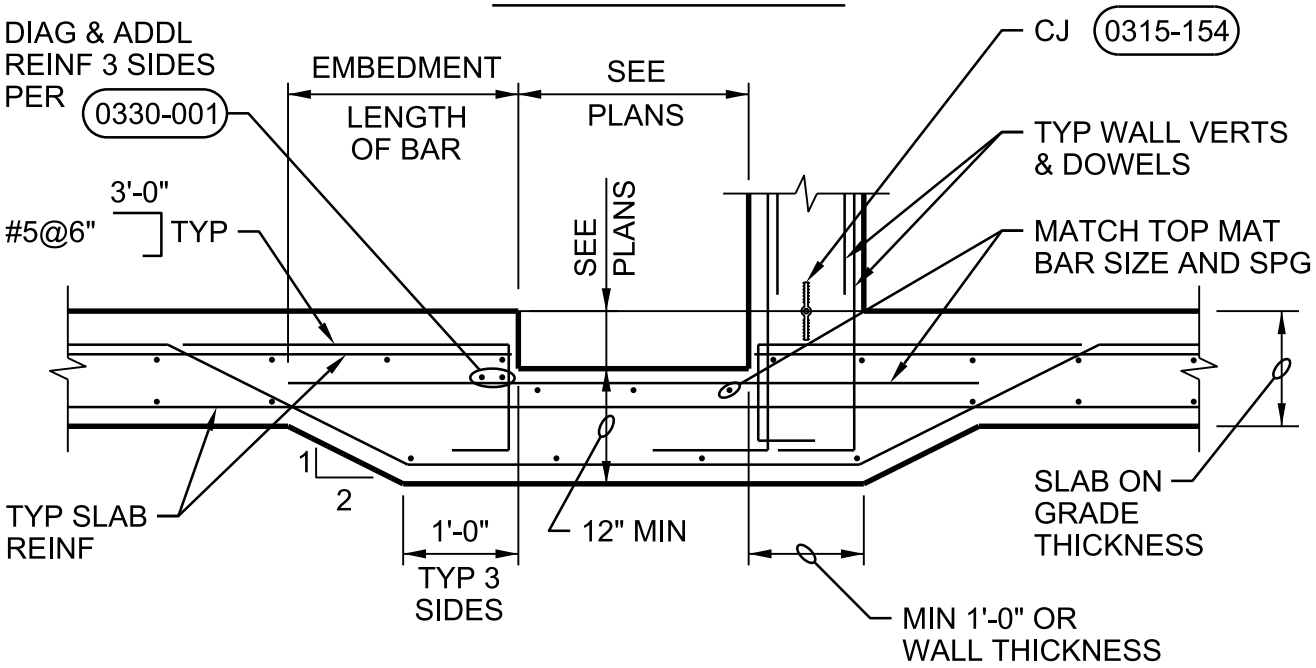

THICKENED SLAB - TYPE 'B'

NOTES:

1. REBAR LOCATION SHALL ACCOMMODATE GRATING CONNECTIONS WHERE REQUIRED. SEE DETAIL 0553-001

IN-SLAB SUMP REINFORCEMENT

NTS

NATIONAL PARK SERVICE
GRAND CANYON NATIONAL PARK
SOUTH RIM

0330-044

© JACOBS

Jacobs

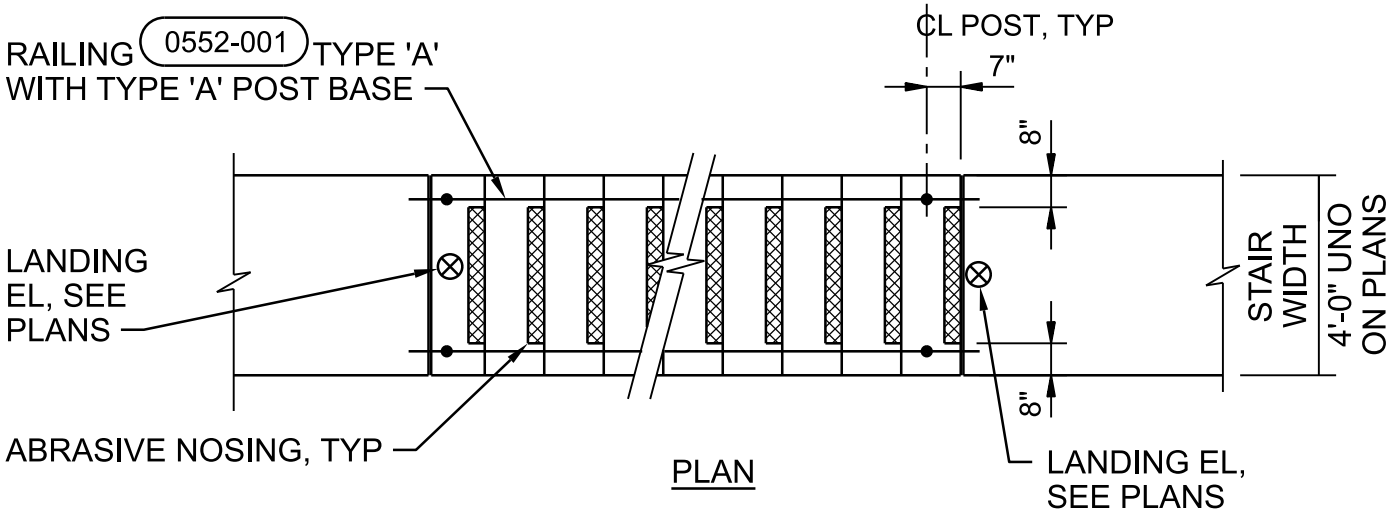

PLAN

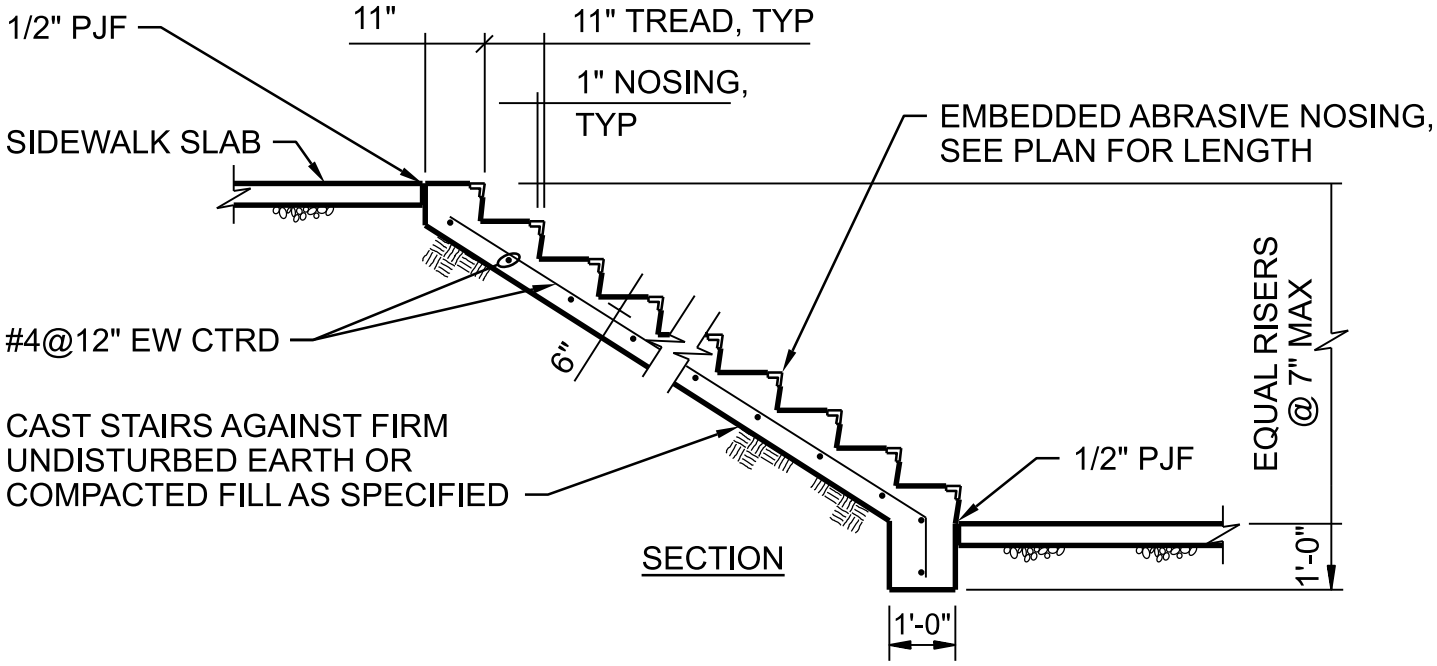

SECTION

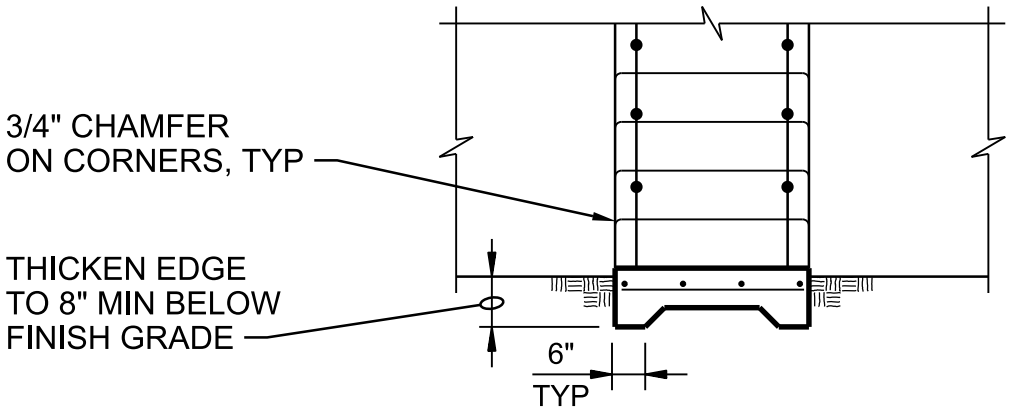

SECTION THROUGH TREAD

CONCRETE STAIR - ON GRADE

NTS

NATIONAL PARK SERVICE
GRAND CANYON NATIONAL PARK
SOUTH RIM

0330-049

© JACOBS

Jacobs

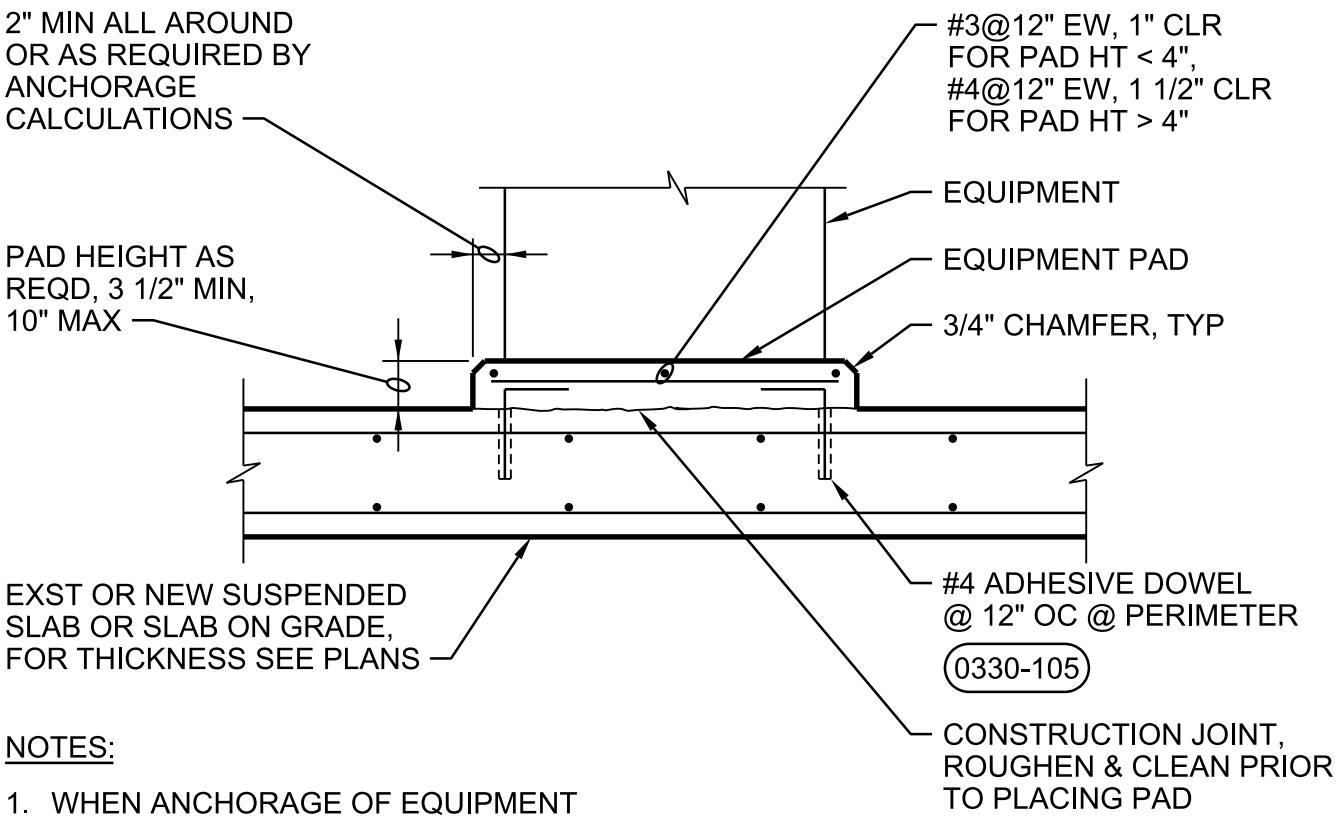

NOTES:

1. WHEN ANCHORAGE OF EQUIPMENT TO PAD IS REQUIRED, USE CONCRETE ANCHORS SPECIFIED.
2. CONCRETE PADS FOR ELECTRICAL EQUIPMENT SHALL BE 3 1/2" HIGH, UNLESS NOTED OTHERWISE.

TYPE 'E'

GENERAL NOTE:

FOR GENERAL NOTES SEE DETAIL 5 OF 5.

CONCRETE EQUIPMENT PAD - TYPE 'E'

NTS

DETAIL 1 OF 5

0330-056

NATIONAL PARK SERVICE
GRAND CANYON NATIONAL PARK
SOUTH RIM

© JACOBS

Jacobs

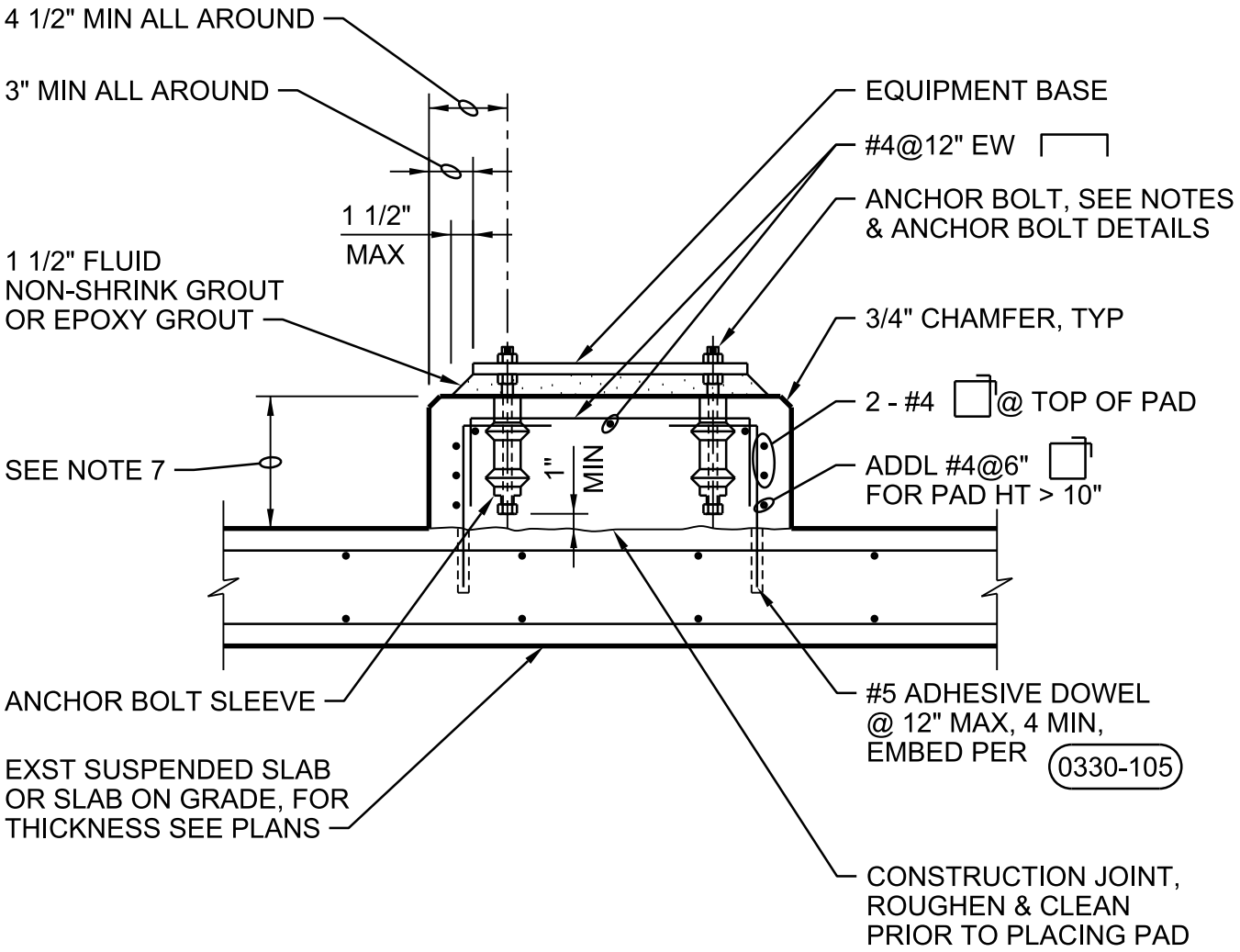

TYPE 'F'

GENERAL NOTE:

FOR GENERAL NOTES SEE DETAIL 5 OF 5.

CONCRETE EQUIPMENT PAD - TYPE 'F'

NTS

DETAIL 2 OF 5

0330-056

NATIONAL PARK SERVICE
GRAND CANYON NATIONAL PARK
SOUTH RIM

© JACOBS

Jacobs

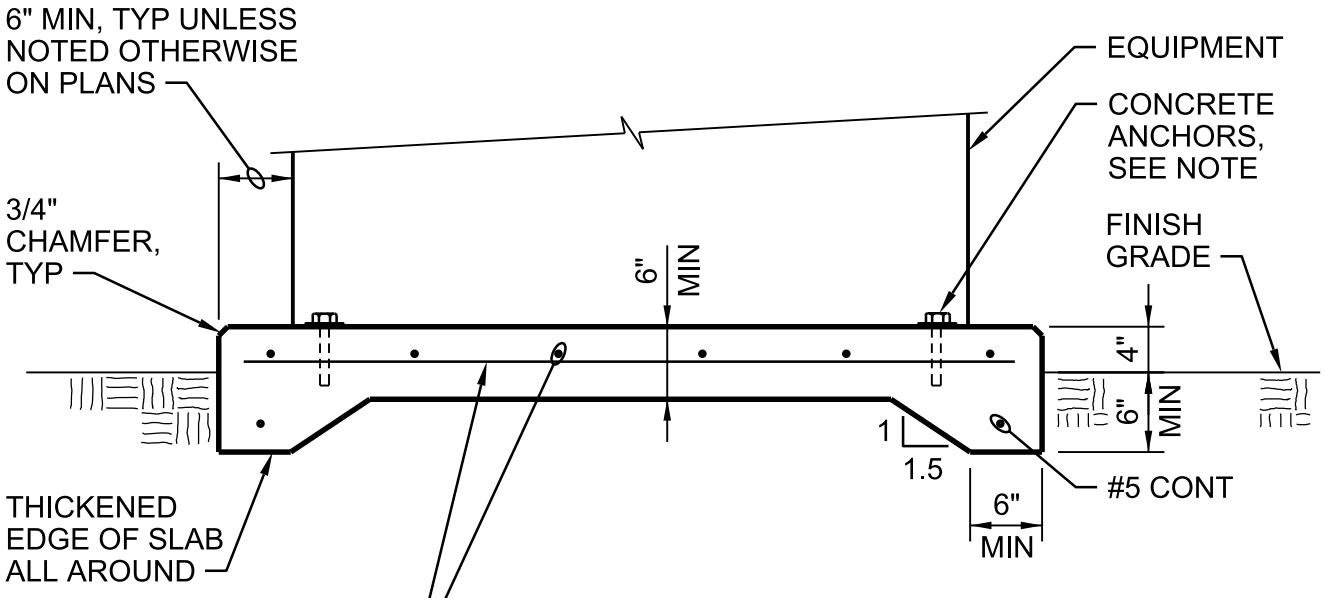

NOTE:

WHEN ANCHORAGE OF EQUIPMENT TO PAD IS REQUIRED, USE CONCRETE ANCHORS SPECIFIED.

TYPE 'G'

GENERAL NOTE:

FOR GENERAL NOTES SEE DETAIL 5 OF 5.

CONCRETE EQUIPMENT PAD - TYPE 'G'

NTS

DETAIL 3 OF 5

0330-056

NATIONAL PARK SERVICE
GRAND CANYON NATIONAL PARK
SOUTH RIM

© JACOBS

Jacobs

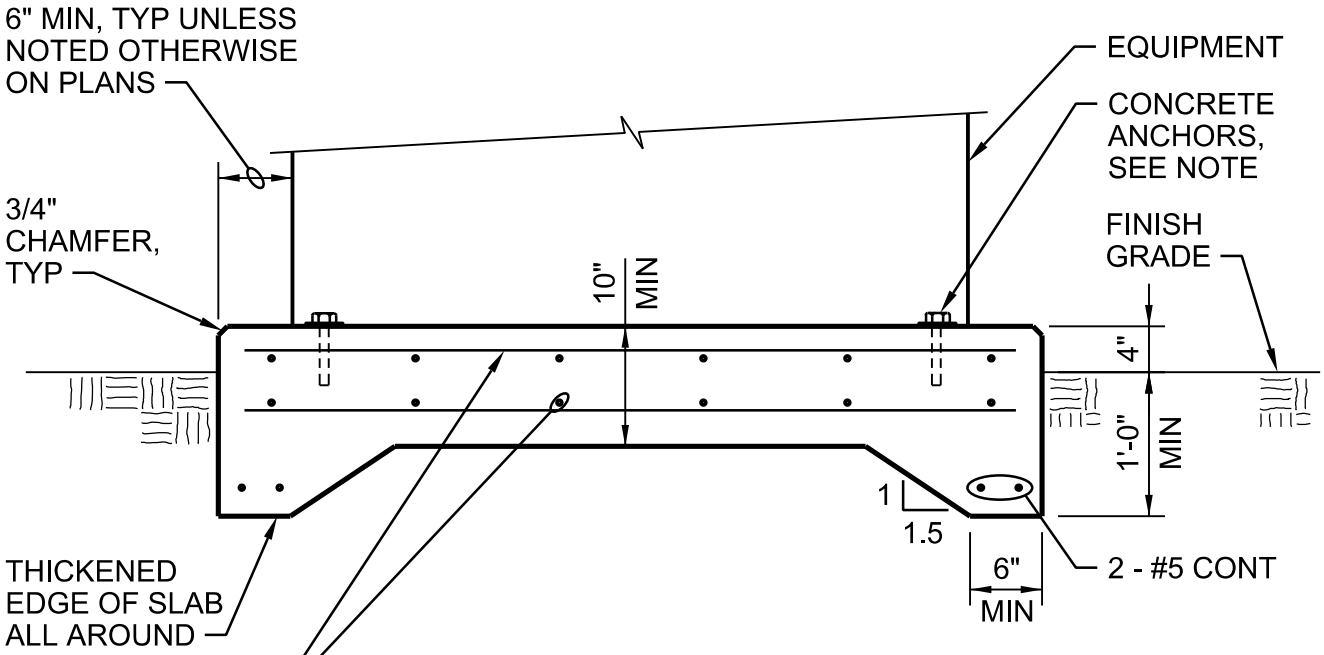

NOTE:

WHEN ANCHORAGE OF EQUIPMENT TO PAD IS REQUIRED, USE CONCRETE ANCHORS SPECIFIED.

TYPE 'H'

GENERAL NOTE:

FOR GENERAL NOTES SEE DETAIL 5 OF 5.

CONCRETE EQUIPMENT PAD - TYPE 'H'

NTS

DETAIL 4 OF 5

0330-056

NATIONAL PARK SERVICE
GRAND CANYON NATIONAL PARK
SOUTH RIM

© JACOBS

Jacobs

NOTES:

1. PAD SIZE SHALL BE MINIMUM INDICATED OR AS SHOWN ON THE PLANS OR AS INDICATED BY THE MANUFACTURER AND APPROVED BY THE CONTRACTING OFFICER.

2. THE SIZE, NUMBER, TYPE, LOCATION, AND THREAD PROJECTION OF THE ANCHOR BOLTS SHALL BE DETERMINED BY THE EQUIPMENT MANUFACTURER AND AS APPROVED BY THE CONTRACTING OFFICER. ANCHOR BOLTS SHALL BE HELD IN POSITION WITH A TEMPLATE OR OTHER ACCEPTABLE MEANS, MATCHING THE BASE PLATE, WHILE PAD IS BEING PLACED.

3. ANCHOR BOLT SLEEVES SHALL BE USED TO PROVIDE MINIMUM ANCHOR BOLT MOVEMENT OF 1/2" IN ALL HORIZONTAL DIRECTIONS. THE MINIMUM SLEEVE LENGTH SHALL BE 8 TIMES THE BOLT DIAMETER.

4. ANCHOR BOLT SLEEVES SHALL HAVE A MINIMUM INTERNAL DIAMETER 1" GREATER THAN BOLT DIAMETER AND A MAXIMUM INTERNAL DIAMETER 3" GREATER THAN ANCHOR BOLT DIAMETER. SLEEVES SHALL BE FILLED WITH NON-SHRINK GROUT AFTER BOLTS ARE ALIGNED. SEE 0330-057.

5. EQUIPMENT BASES SHALL BE INSTALLED LEVEL UNLESS INDICATED OTHERWISE.

6. WEDGES, SHIMS, OR LEVELING NUTS SHALL BE USED TO SUPPORT THE BASE WHILE THE GROUT IS PLACED. WEDGES OR SHIMS SHALL BE REMOVED AFTER GROUT IS SET AND PACK VOID WITH GROUT.

7. HEIGHT OF PADS SHALL BE MINIMUM REQUIRED FOR ANCHOR BOLT CLEARANCE TO KEEP ANCHOR BOLT ABOVE SUPPORTING SLAB (SEE TABLE BELOW). WHERE EQUIPMENT OR PIPING ELEVATION REQUIRE A PAD HEIGHT LESS THAN THE MINIMUM SHOWN, USE TYPE "B" EQUIPMENT PAD WITH BLOCKOUT.

8. TYPE "D" PAD SHALL BE USED ONLY WHERE SPECIFICALLY INDICATED. PLACE THE SURROUNDING FLOOR SLAB AFTER THE EQUIPMENT PAD.

9. AT CONTRACTOR'S OPTION, CONCRETE ANCHORS MAY BE USED IN LIEU OF CAST-IN-PLACE ANCHOR BOLTS FOR EQUIPMENT ANCHOR BOLTS LESS THAN 3/4" DIAMETER WHEN APPROVED BY THE EQUIPMENT MANUFACTURER AND APPROVED BY THE CONTRACTING OFFICER. ANCHORS SHALL BE INSTALLED WITH 4" MINIMUM EDGE DISTANCE IN EACH DIRECTION.

AB DIA (IN.)	1/2	5/8	3/4	7/8	1	1 1/4	1 3/8	1 1/2	1 3/4	2
MIN PAD HT (IN.)	7	8 1/2	10	11	12 1/2	15	16 1/2	18	21	24

CONCRETE EQUIPMENT PAD - NOTES

NTS

DETAIL 5 OF 5

0330-056

NATIONAL PARK SERVICE
GRAND CANYON NATIONAL PARK
SOUTH RIM

© JACOBS

Jacobs

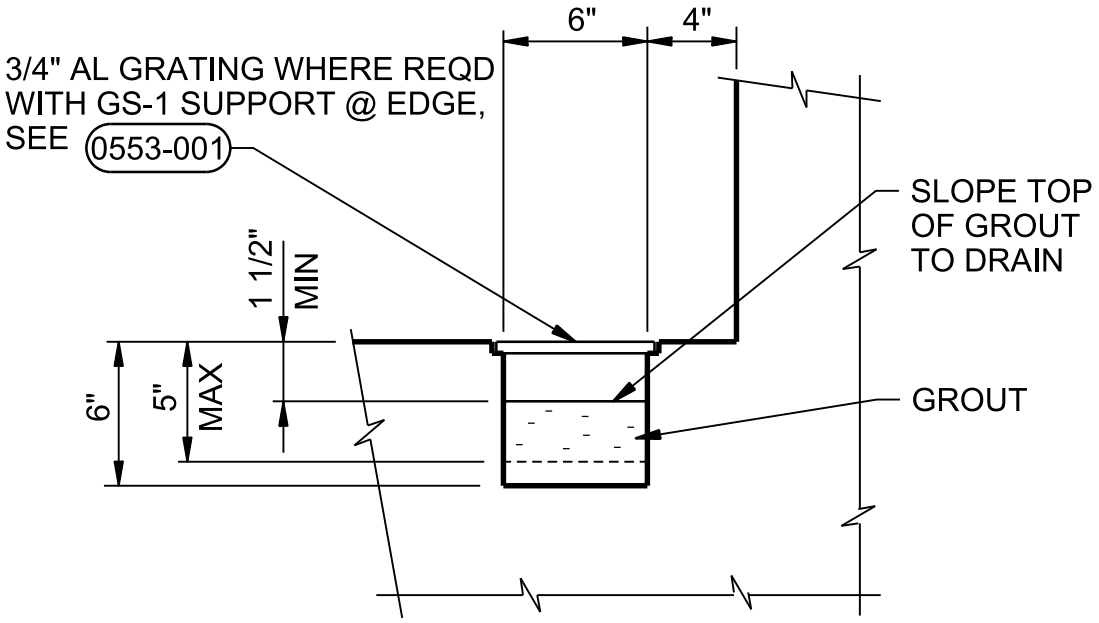

NOTES:

1. PROVIDE GRATING WHERE GUTTER CROSSES WALKWAY OR WORKING AREAS.
2. WHERE TRENCH IS ADJACENT TO WALL DO NOT PROVIDE GRATING UNLESS SPECIFICALLY SHOWN.

FORMED CONCRETE TRENCH

NTS

NATIONAL PARK SERVICE
GRAND CANYON NATIONAL PARK
SOUTH RIM

0330-077

© JACOBS

Jacobs

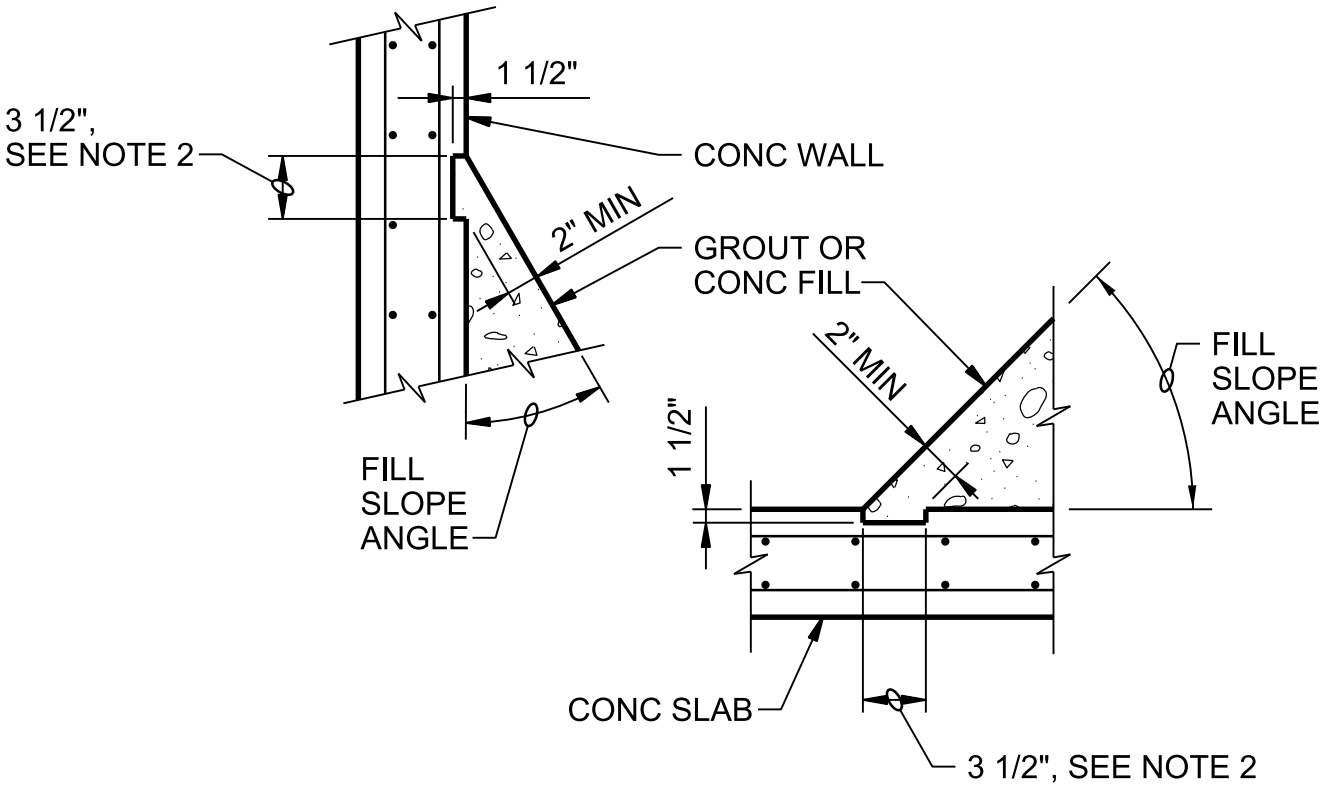

NOTES:

1. PROVIDE KEY FOR ALL FILL WHERE FILL SLOPE ANGLE TO WALL OR SLAB IS LESS THAN 45 DEGREES.
2. LENGTHEN 3 1/2" BLOCKOUT AS REQUIRED TO MAINTAIN 2" MINIMUM THICKNESS OF GROUT OR CONCRETE FILL.

CONCRETE OR GROUT FILL KEY

NTS

NATIONAL PARK SERVICE
GRAND CANYON NATIONAL PARK
SOUTH RIM

0330-078

© JACOBS

Jacobs

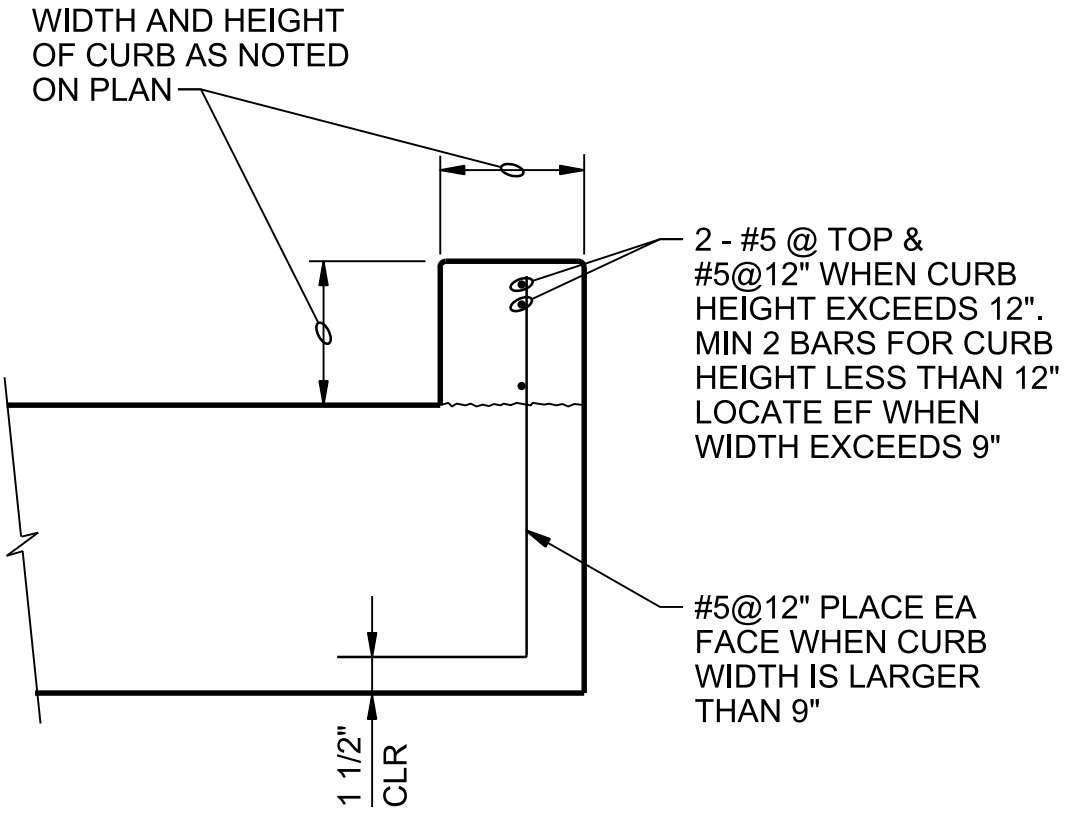

CONCRETE CURB

NTS

NATIONAL PARK SERVICE
GRAND CANYON NATIONAL PARK
SOUTH RIM

0330-080

© JACOBS

Jacobs

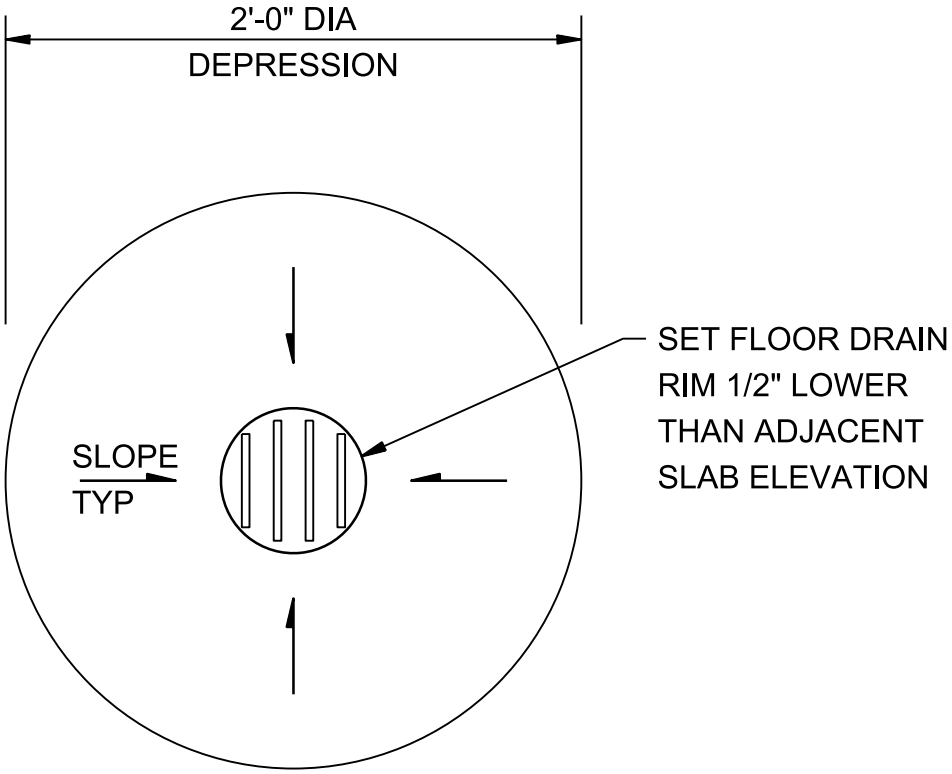

FLOOR DRAIN

NTS

NATIONAL PARK SERVICE
GRAND CANYON NATIONAL PARK
SOUTH RIM

0330-082

© JACOBS

Jacobs

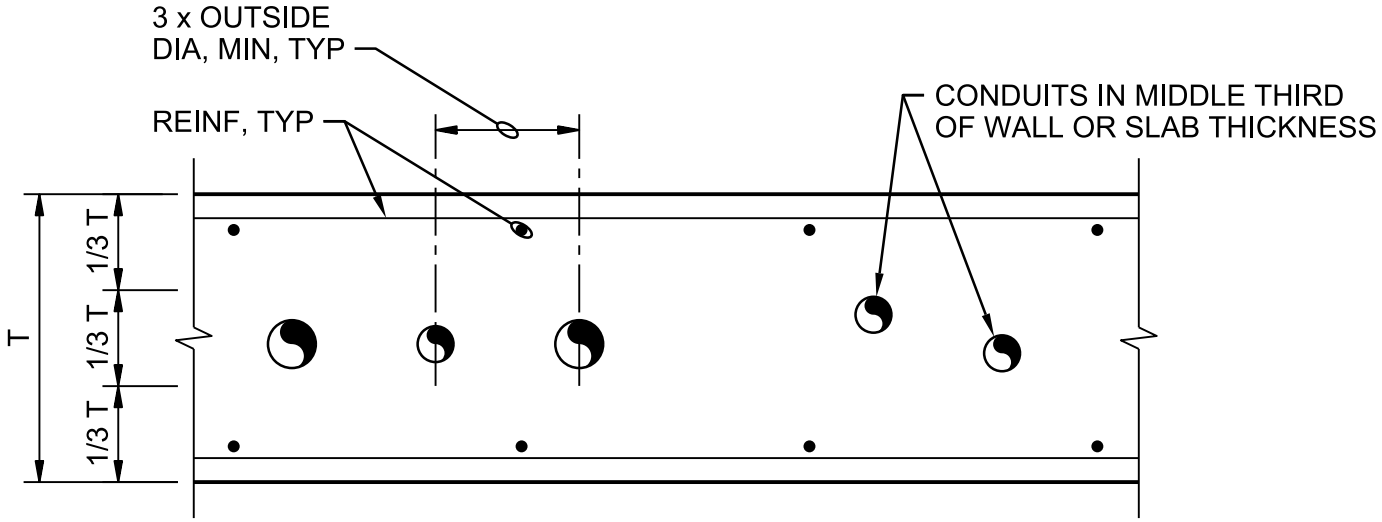

WALL OR ELEVATED SLAB

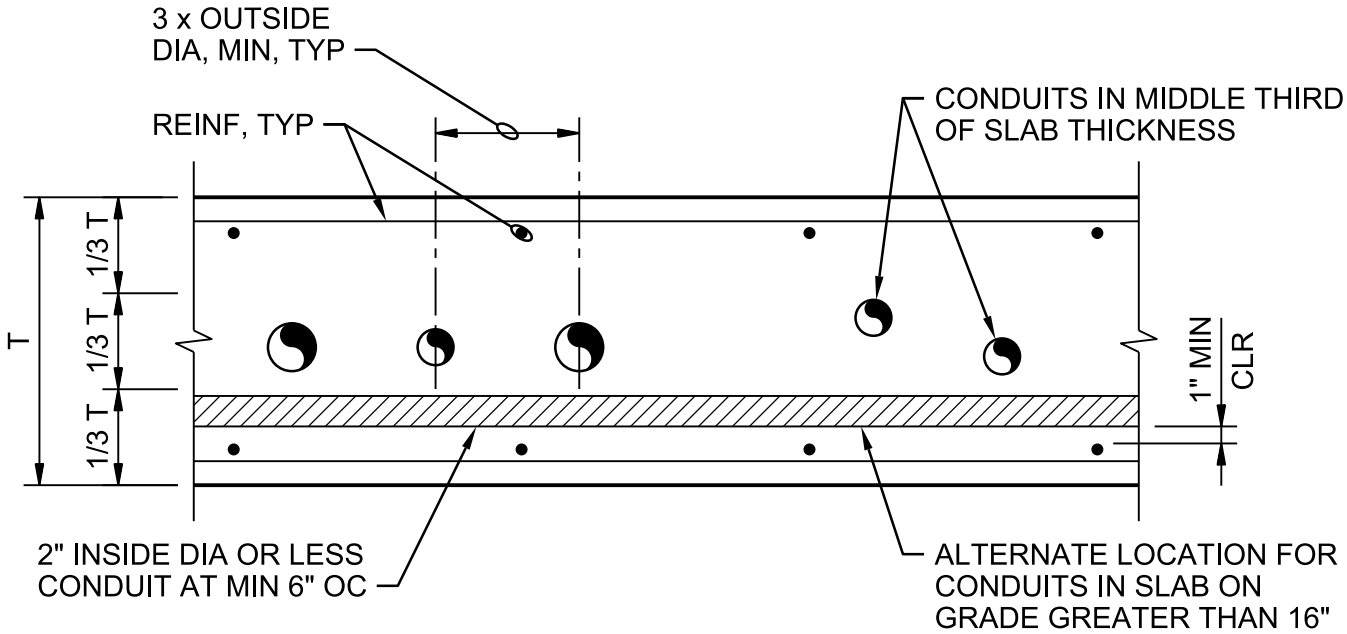

SLAB ON GRADE

NOTES:

1. AT EXIT OR ENTRY TO SLAB, REINFORCE OPENINGS CREATED BY MULTIPLE CONDUITS PER 0330-001.
2. FOR SHORT SECTIONS OF ELEMENTS, SUCH AS WALL PIERS, PLACE CONDUITS AS DIRECTED BY CONTRACTING OFFICER.

CONDUIT IN STRUCTURAL CONCRETE

NTS

NATIONAL PARK SERVICE
GRAND CANYON NATIONAL PARK
SOUTH RIM

0330-084

© JACOBS

Jacobs

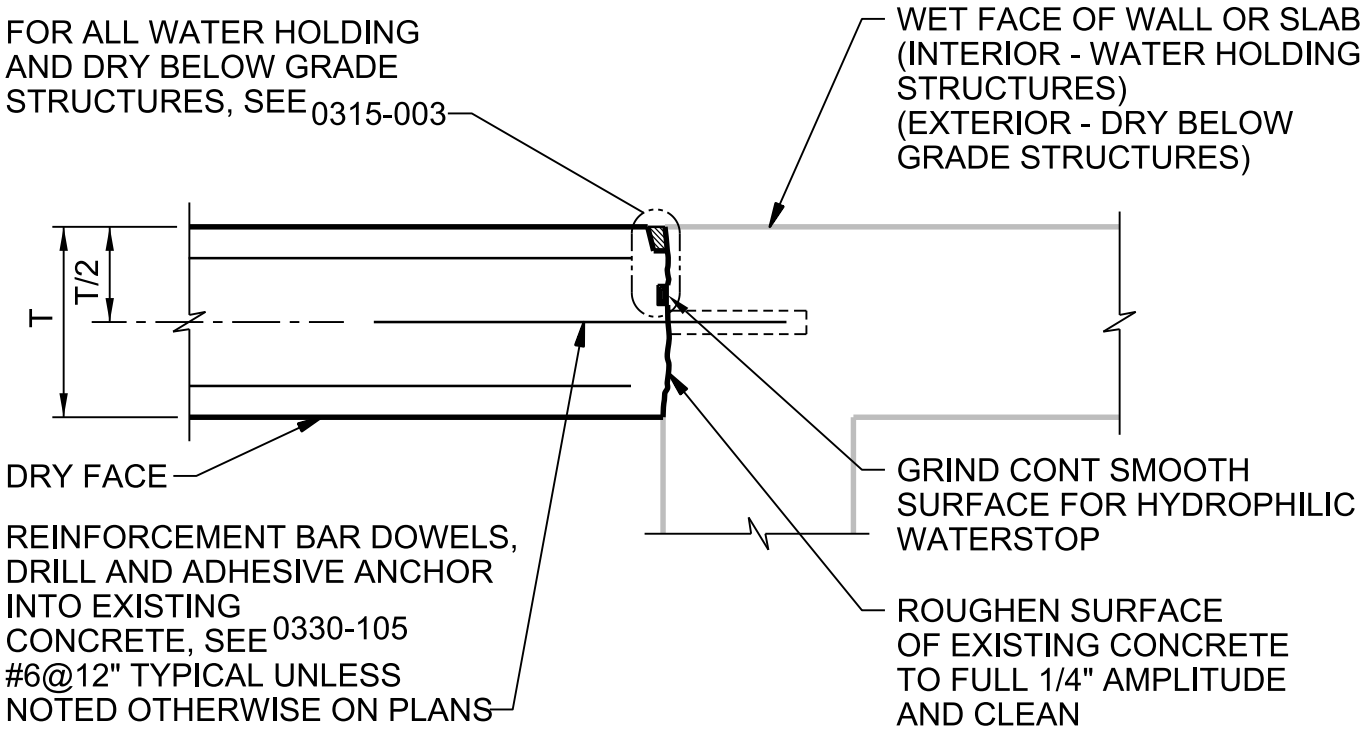

WALL - PLAN

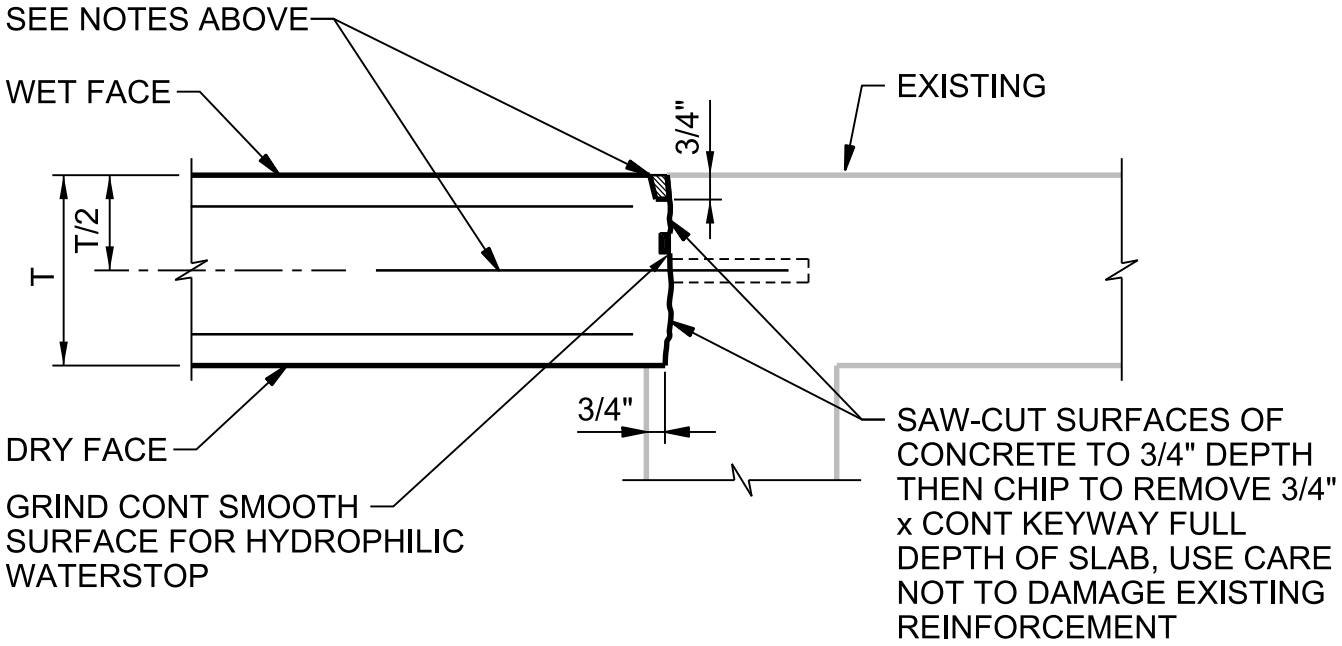

SLAB - SECTION

CONNECTION OF NEW CONCRETE TO EXISTING

NTS

NATIONAL PARK SERVICE
GRAND CANYON NATIONAL PARK
SOUTH RIM

0330-101

© JACOBS

Jacobs

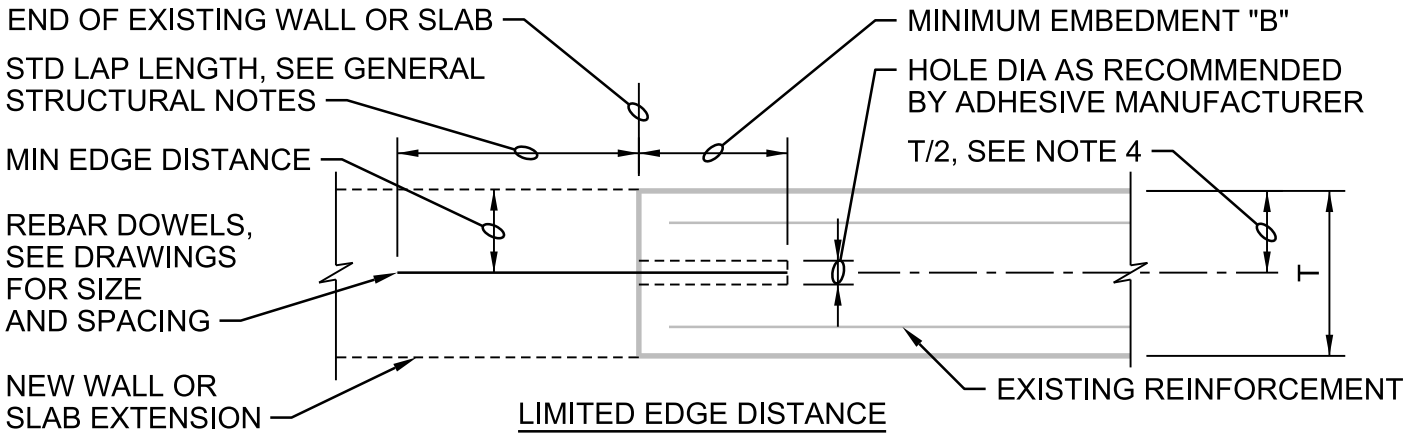

LIMITED EDGE DISTANCE

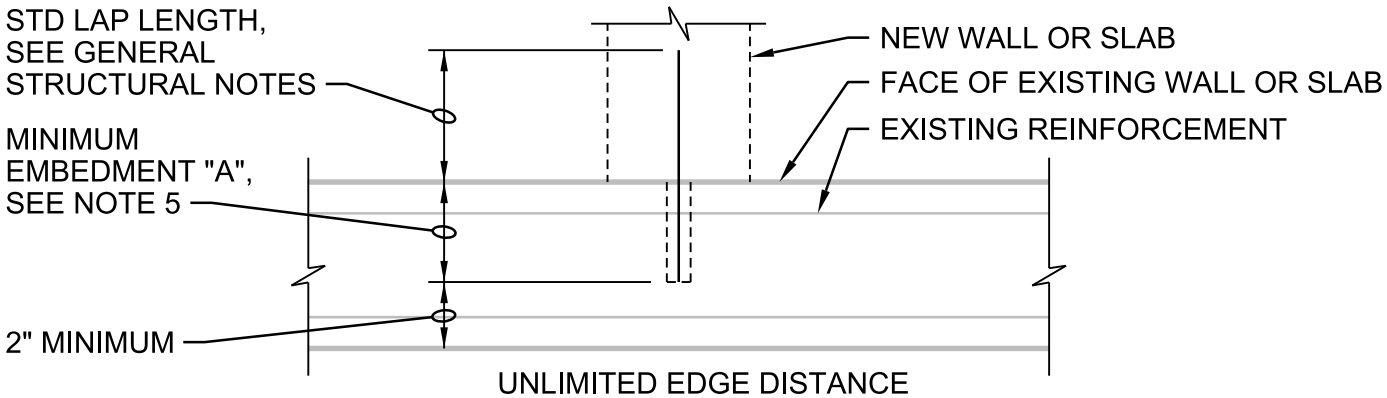

UNLIMITED EDGE DISTANCE

DOWEL SIZE	MINIMUM EDGE DISTANCE	MINIMUM EMBEDMENT "A"	MINIMUM EMBEDMENT "B"
#3	2 1/2"	5"	8"
#4	3 1/2"	7"	11"
#5	4"	8"	13"
#6	5"	10 1/2"	16"
#7	6"	12 1/2"	20"
#8	7"	14"	22"
#9	7 1/2"	15"	24"

NOTES:

1. CONFORM TO REQUIREMENTS OF SPECIFICATION SECTION 03 63 00, CONCRETE DOWELING.
2. FOLLOW ADHESIVE MANUFACTURER'S INSTRUCTIONS FOR INSTALLATION.
3. USE MINIMUM EMBEDMENTS SHOWN, EXCEPT USE MANUFACTURER'S MINIMUM RECOMMENDED EMBEDMENT IF GREATER.
4. LOCATE DOWELS CENTERED IN WALL OR SLAB UNLESS OTHERWISE NOTED ON DRAWINGS. WHERE 2 ROWS OF DOWELS INDICATED, STAGGER SPACING & LOCATE ALTERNATING DOWELS AT MINIMUM EDGE DISTANCE FROM OPPOSITE FACES.
5. PROVIDE MINIMUM EMBEDMENT "A" SHOWN IN TABLE UNLESS SHORTER EMBEDMENT DEPTH IS CALLED OUT ON DRAWINGS.

ADHESIVE DOWEL

NTS

NATIONAL PARK SERVICE
GRAND CANYON NATIONAL PARK
SOUTH RIM

0330-105

© JACOBS

Jacobs

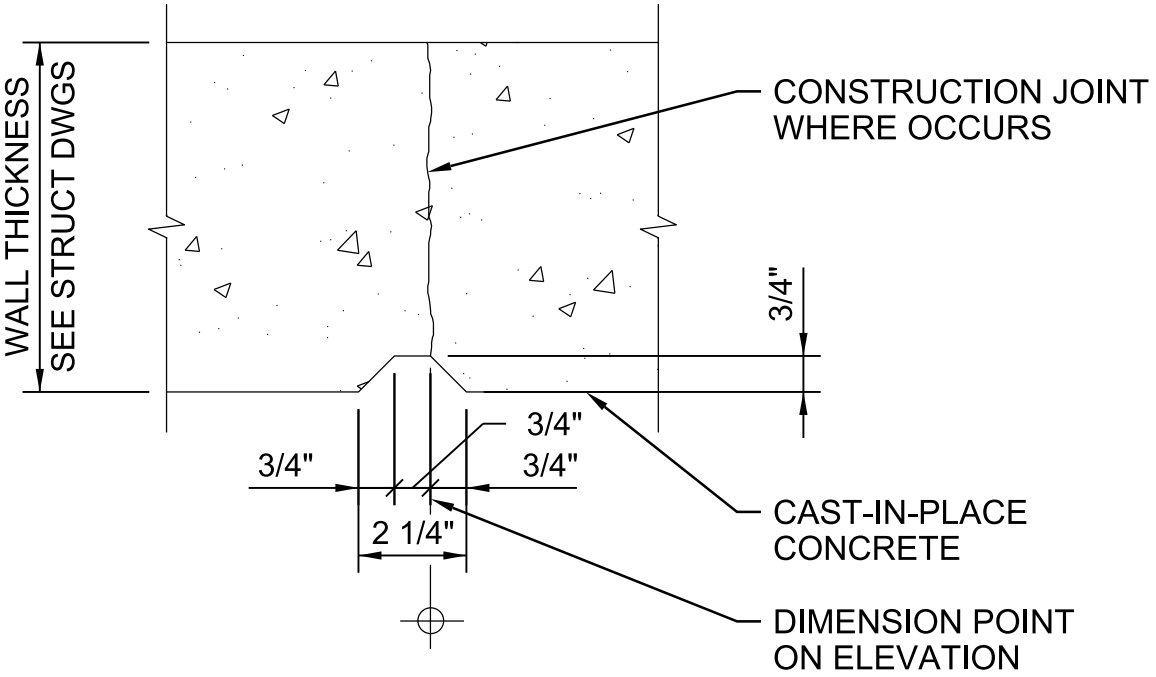

VERTICAL CONCRETE REVEAL

NTS

NATIONAL PARK SERVICE
GRAND CANYON NATIONAL PARK
SOUTH RIM

0330-500

© JACOBS

Jacobs

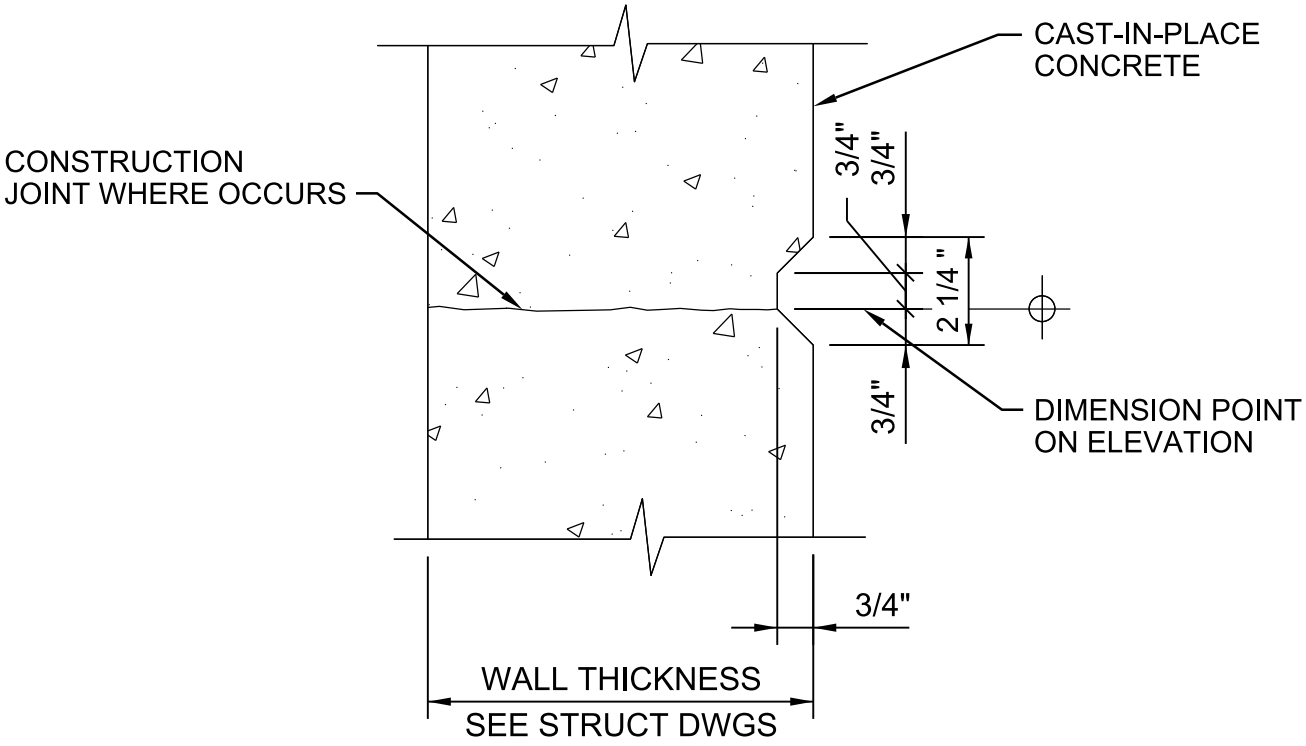

HORIZONTAL CONCRETE REVEAL

NTS

NATIONAL PARK SERVICE
GRAND CANYON NATIONAL PARK
SOUTH RIM

0330-501

© JACOBS

Jacobs

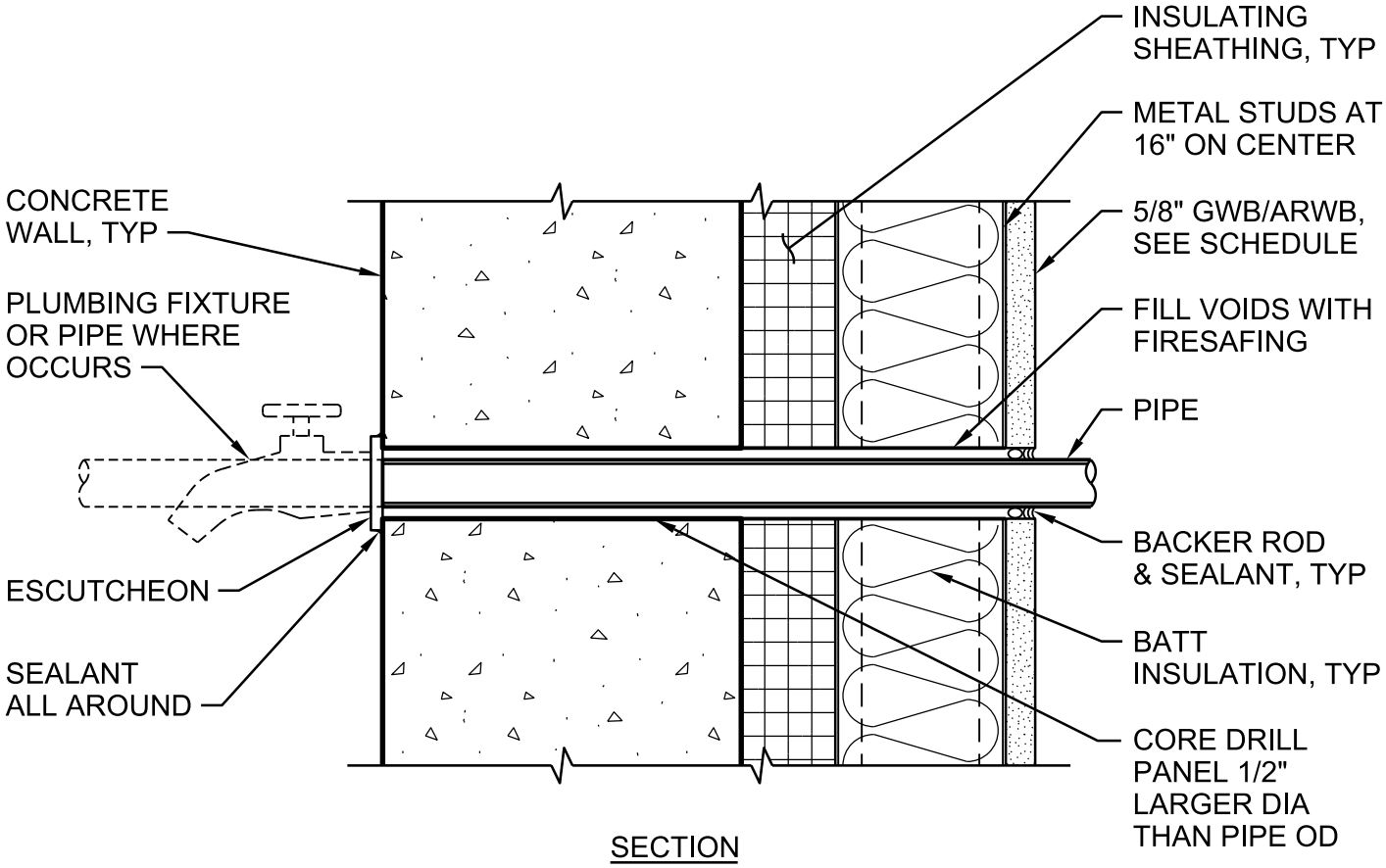

SECTION

CONCRETE SMALL PIPE PENETRATION

NTS

NATIONAL PARK SERVICE
GRAND CANYON NATIONAL PARK
SOUTH RIM

0330-600

© JACOBS

Jacobs

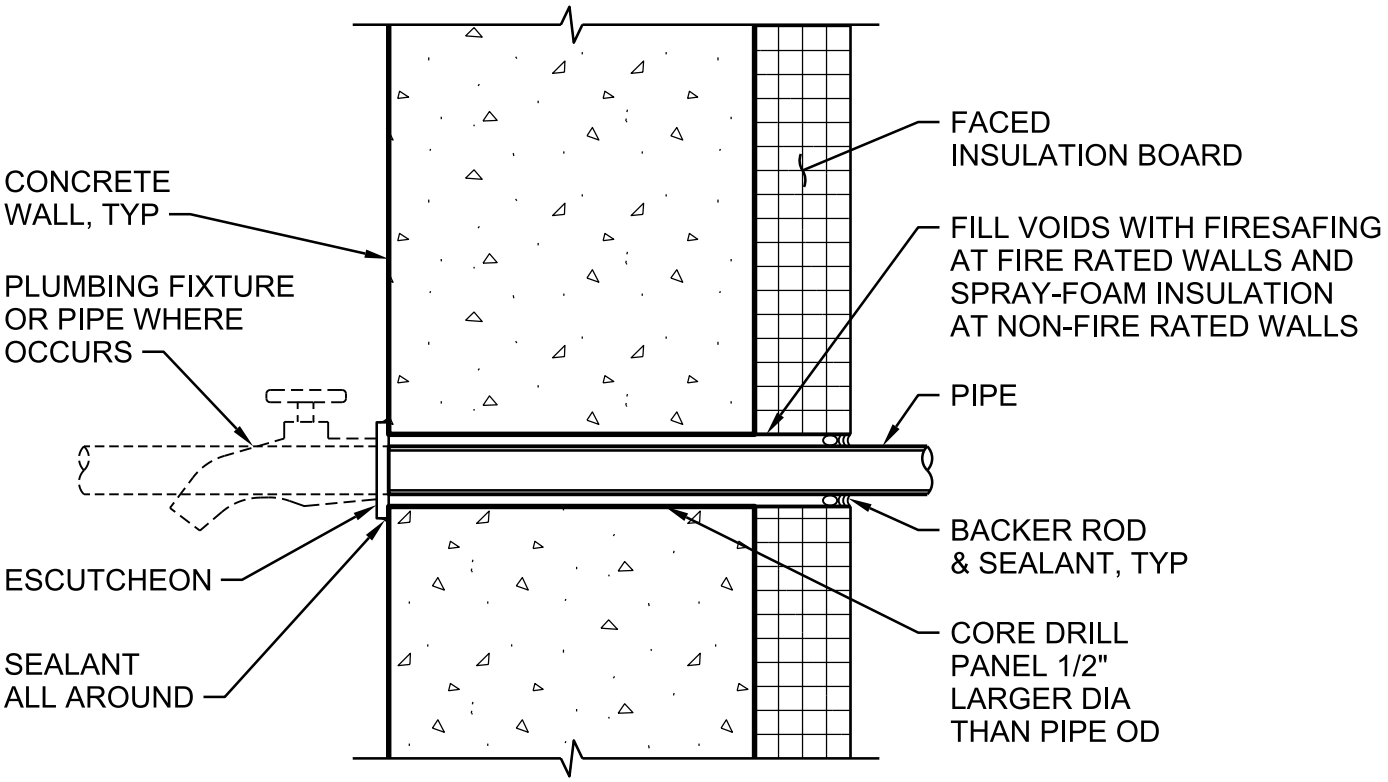

SECTION

CONCRETE SMALL PIPE PENETRATION

NTS

NATIONAL PARK SERVICE
GRAND CANYON NATIONAL PARK
SOUTH RIM

0330-601

© JACOBS

Jacobs

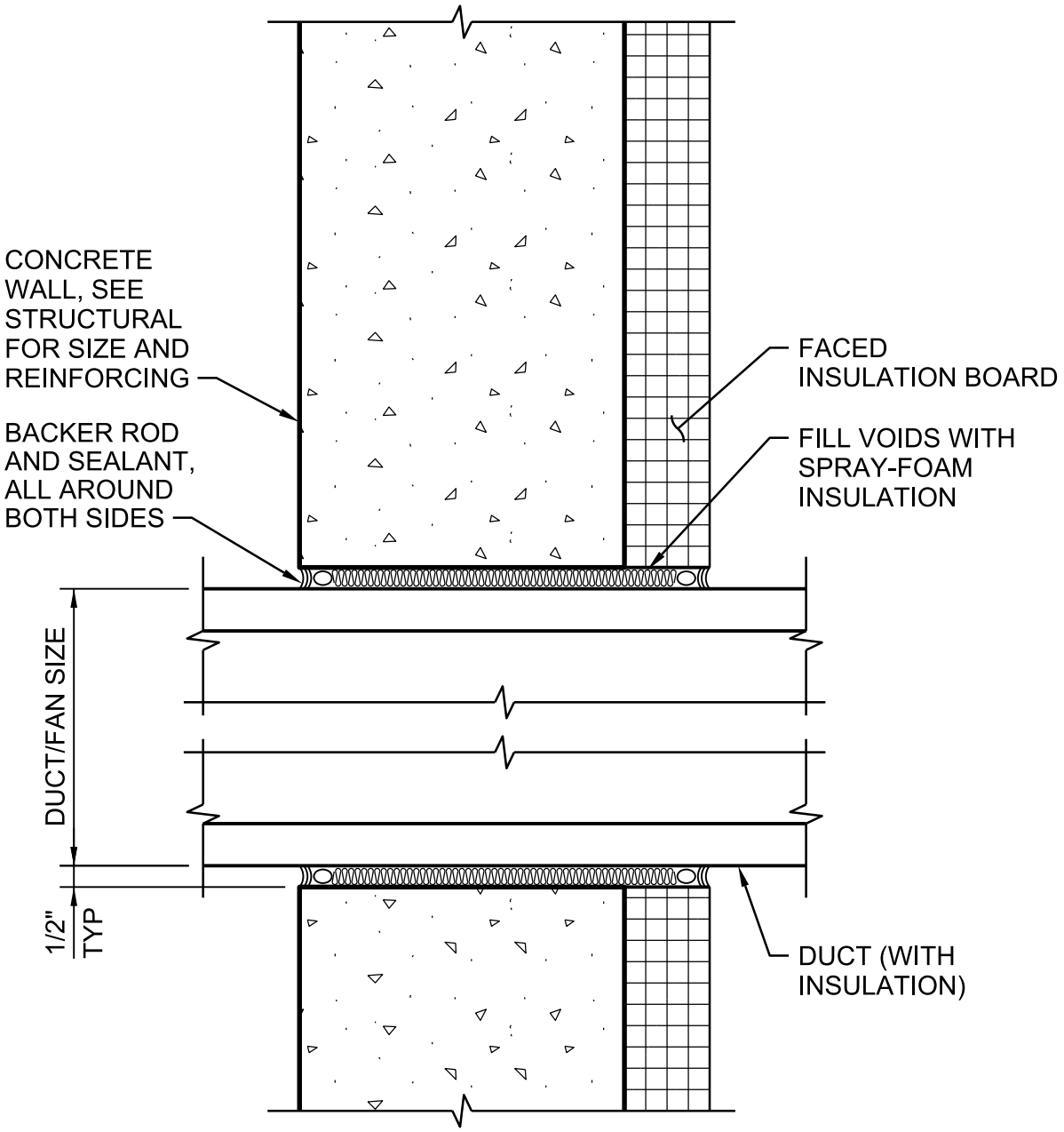

WALL PENETRATION AT DUCT

NTS

NATIONAL PARK SERVICE
GRAND CANYON NATIONAL PARK
SOUTH RIM

0330-610

© JACOBS

Jacobs

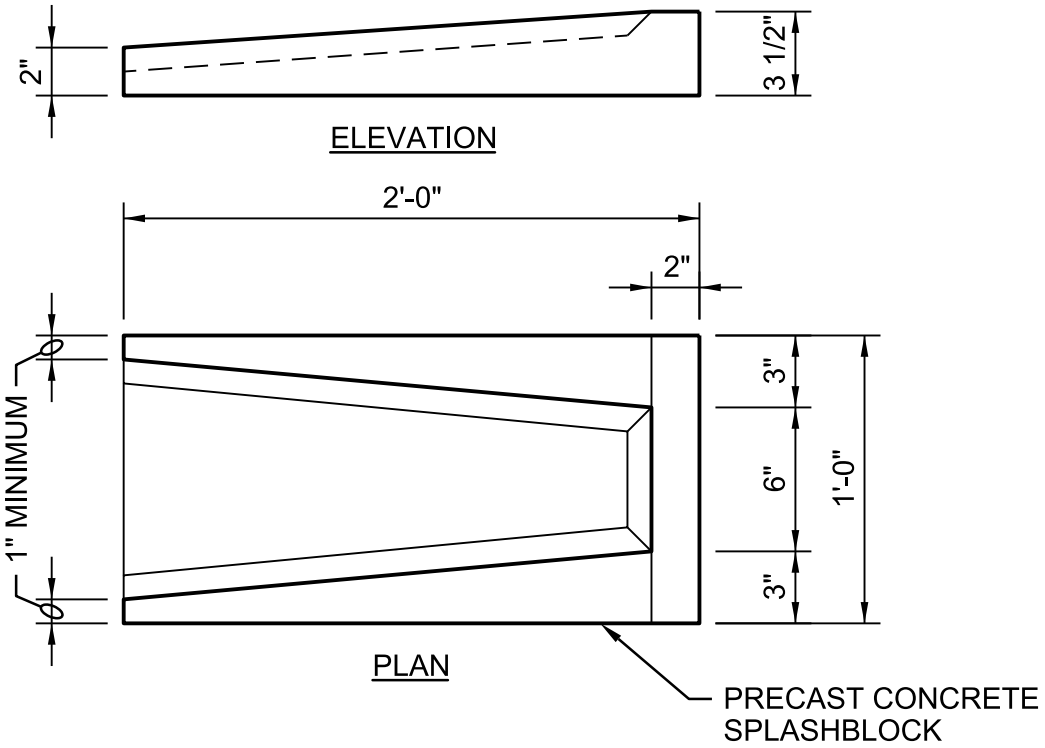

SPLASHBLOCK

NTS

NATIONAL PARK SERVICE
GRAND CANYON NATIONAL PARK
SOUTH RIM

0340-095

© JACOBS

Jacobs

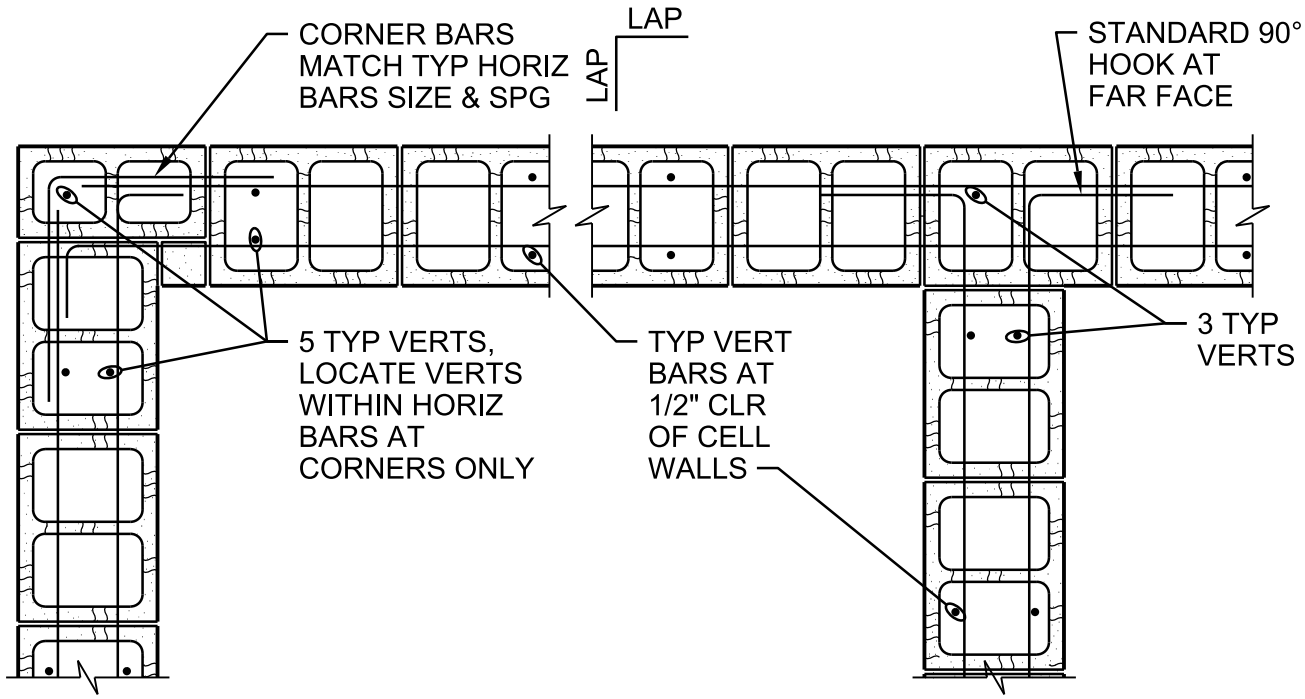

EXTERIOR CORNER

INTERIOR CORNER

DOUBLE MAT PLAN FOR HORIZONTAL BARS

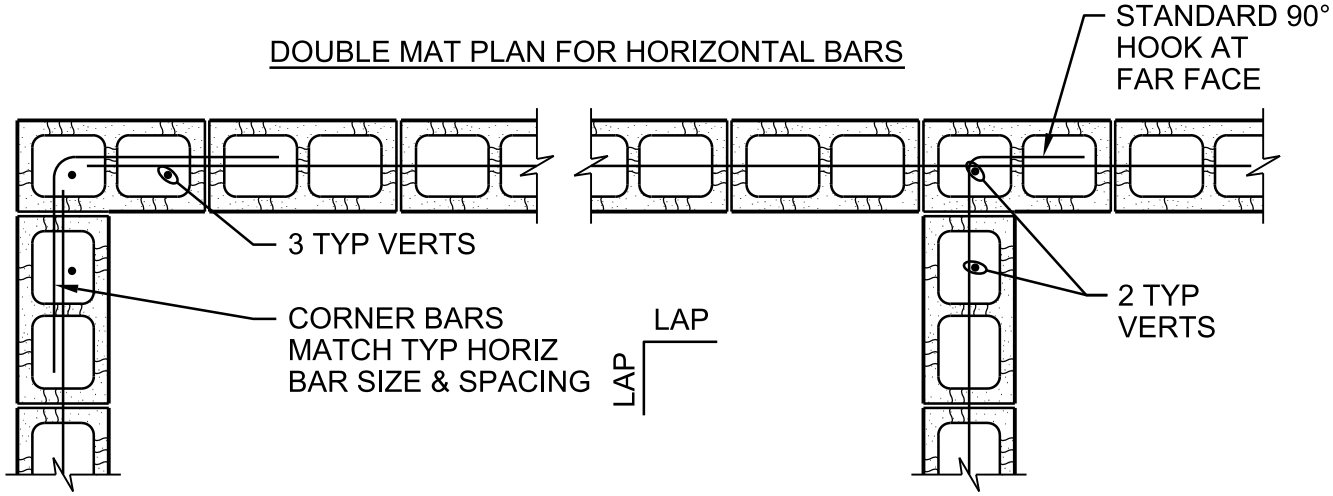

EXTERIOR CORNER

INTERIOR CORNER

SINGLE MAT PLAN FOR HORIZONTAL BARS

NOTES:

1. LAP=48 BAR DIAMETERS, BUT NOT LESS THAN 2'-0" FOR HORIZONTAL BARS UNLESS NOTED OTHERWISE.

2. AT OPENINGS, CONTROL JOINTS, OR CORNERS LESS THAN 6'-0" IN LENGTH, SEE DETAILS 0422-003, 0422-005 AND 0422-006.

REINFORCED MASONRY

WALL CORNERS (SINGLE & DOUBLE MAT)

NTS

NATIONAL PARK SERVICE
GRAND CANYON NATIONAL PARK
SOUTH RIM

0422-001

© JACOBS

Jacobs

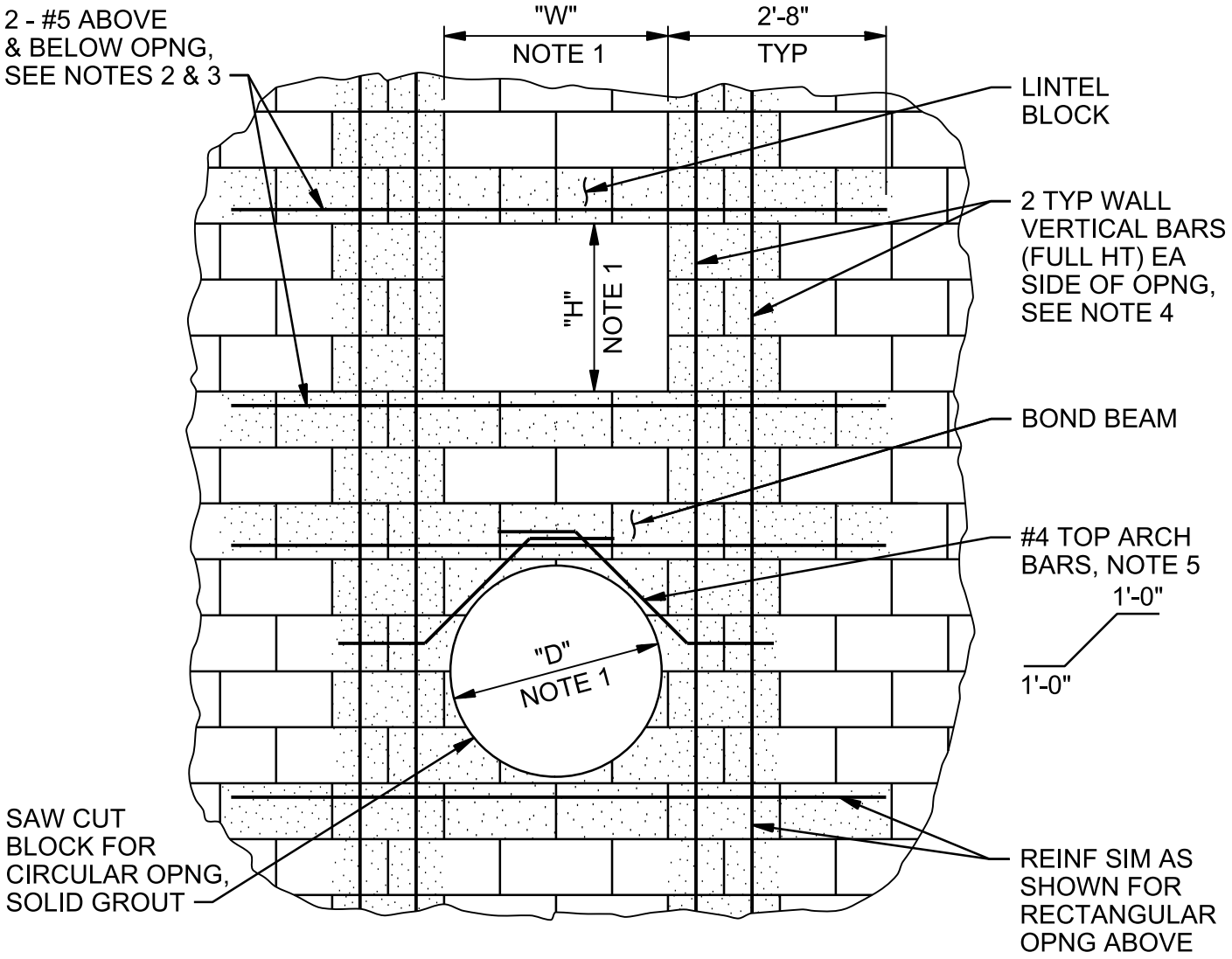

NOTES:

1. TYPICAL FOR ALL OPENINGS WITH (W, H, OR D) 2'-0" OR GREATER AND 4'-0" OR LESS, UNLESS NOTED OTHERWISE. SEE PLANS FOR LARGER OPENINGS.
2. AT ADJACENT OPENINGS WITH LESS THAN 8'-0" WALL BETWEEN, CONTINUE HORIZONTAL REINFORCEMENT TO 2'-8" BEYOND FURTHEST OPENING.
3. AT OPENINGS LOCATED WITHIN 2'-8" OF CORNER, CONTINUE HORIZONTAL REINFORCEMENT AROUND CORNER PER DETAIL 0422-001
4. LOCATE VERTICAL BARS CENTERED IN 2 ADJACENT CELLS IN 8" WALLS, AND EACH FACE IN SINGLE GROUT CELL IN 12" WALLS. LAP 48 BAR DIAMETERS WITH MATCHING FOUNDATION DOWELS.
5. LOCATE #4 ARCH BARS CENTERED IN 8" WALLS, AND EACH FACE IN 12" WALLS.

CMU OPENING REINFORCEMENT

NTS

NATIONAL PARK SERVICE
GRAND CANYON NATIONAL PARK
SOUTH RIM

0422-002

© JACOBS

Jacobs

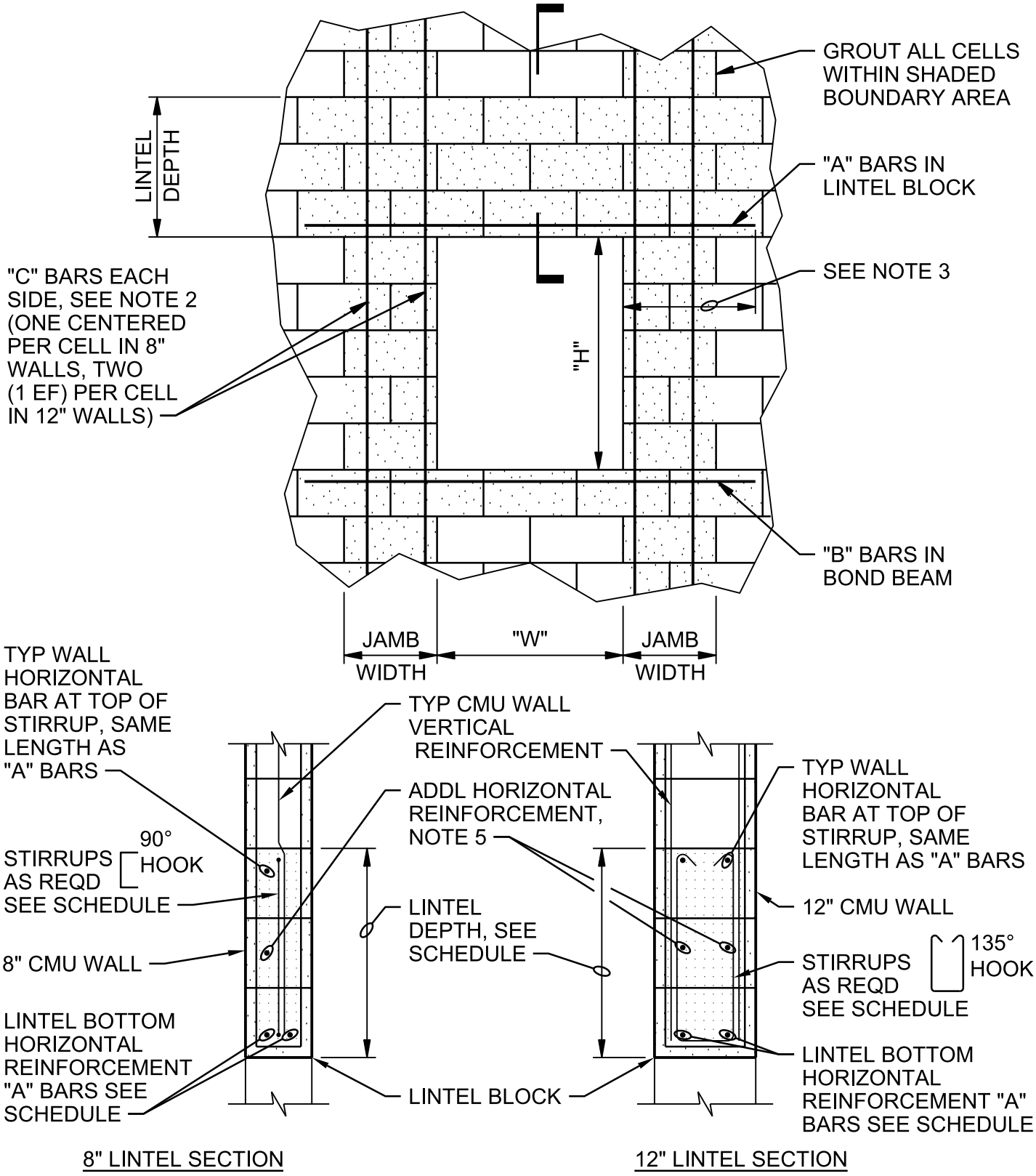

CMU OPENING REINFORCEMENT

NTS

DETAIL 1 OF 2

0422-003

NATIONAL PARK SERVICE
GRAND CANYON NATIONAL PARK
SOUTH RIM

© JACOBS

Jacobs

CMU OPENING REINFORCEMENT SCHEDULE						
8" WALLS						
W	LINTEL DEPTH	STIRRUP SIZE, SPG	"A" BARS	"B" BARS	"C" BARS	JAMB WIDTH
≤2'-8"	8"	-	1	1	1	8"
>2'-8"≤4'-0"	16"	-	2	1	1	8"
>4'-0"≤6'-0"	24"	#3@8"	2	1	2	16"
>6'-0"≤8'-0"	32"	#3@16"	2	2	3	24"
>8'-0"≤10'-0"	48"	#3@24"	2	2	3	24"
12" WALLS						
W	LINTEL DEPTH	STIRRUP SIZE, SPG	"A" BARS	"B" BARS	"C" BARS	JAMB WIDTH
≤2'-8"	8"	-	2	2	2	8"
>2'-8"≤4'-0"	16"	-	2	2	2	8"
>4'-0"≤6'-0"	24"	#3@8"	2	2	4	16"
>6'-0"≤8'-0"	32"	#3@16"	2	2	6	24"
>8'-0"≤12'-0"	48"	#3@24"	2	2	6	24"

NOTES:

1. USE BAR QUANTITIES AND SIZES GIVEN IN LINTEL SCHEDULE UNLESS OTHERWISE NOTED ON THE DRAWINGS.
2. EXTEND "C" BARS 48 BAR DIAMETERS, BUT NOT LESS THAN 2'-0" BEYOND TOP AND BOTTOM OF OPENING EXCEPT THAT WHEN "H" OR "W" EXCEEDS 2'-0", "C" BARS SHALL EXTEND FULL HEIGHT.
3. "A" AND "B" BARS SHALL EXTEND 48 BAR DIAMETERS, BUT NOT LESS THAN 2'-0" EACH SIDE OF THE OPENINGS. WHERE THERE IS LESS THAN 8'-0" BETWEEN ADJACENT OPENINGS, EXTEND REINFORCEMENT CONTINUOUS TO 2'-8" BEYOND FURTHEST OPENING.
4. FOR BAR SIZES, MATCH TYPICAL WALL REINFORCEMENT AS SHOWN ON THE BUILDING WALL SECTIONS.
5. FOR LINTEL DEPTHS EQUAL TO OR GREATER THAN 48" PROVIDE ADDITIONAL LAYER OF HORIZONTAL REINFORCEMENT AT 12" FROM BOTTOM OF LINTEL. MATCH SIZE OF TYPICAL WALL HORIZONTAL REINFORCEMENT.

CMU OPENING REINFORCEMENT

NTS

DETAIL 2 OF 2

NATIONAL PARK SERVICE
GRAND CANYON NATIONAL PARK
SOUTH RIM

0422-003

© JACOBS

Jacobs

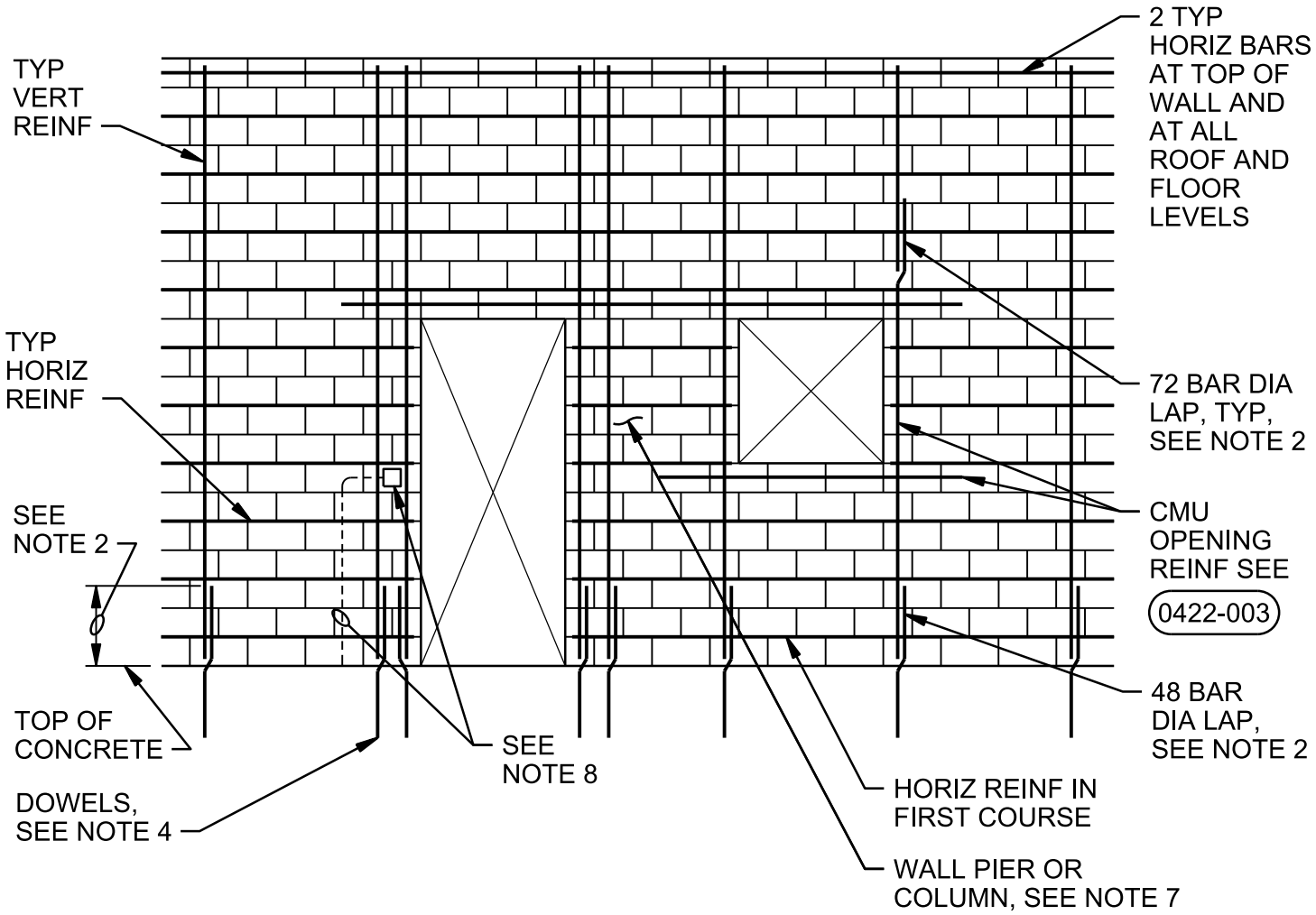

ELEVATION

NOTES:

1. FOR TYPICAL WALL REINFORCEMENT, SEE WALL SECTIONS AND DETAILS FOR EACH FACILITY. FOR MINIMUM REINFORCEMENT REQUIREMENTS, SEE GENERAL STRUCTURAL NOTES.
2. LAP VERTICAL REINFORCEMENT WITH WALL DOWELS 48 BAR DIAMETERS (2'-0" MIN), LAP ALL OTHER VERTICAL AND HORIZONTAL BARS 72 BAR DIAMETERS.
3. PROVIDE DOWEL BARS IN FOUNDATION TO MATCH ALL VERTICAL REINFORCEMENT.
4. FOR ADDED REINFORCEMENT AT WALL INTERSECTIONS AND CORNERS, SEE 0422-001.
5. GROUT EACH SIDE OF OPENING AS NOTED IN TYPICAL OPENING REINFORCEMENT DETAIL 0422-003.
6. FOR HORIZONTAL REINFORCEMENT AT OPENINGS SEE PIER AND COLUMN DETAILS 0422-005 AND 0422-006.
7. DO NOT PLACE VERTICAL CONDUIT IN THE SAME CELL AS VERTICAL REINFORCEMENT.

INTERMEDIATE REINFORCED MASONRY SHEAR WALL

NTS

NATIONAL PARK SERVICE
GRAND CANYON NATIONAL PARK
SOUTH RIM

0422-004

© JACOBS

Jacobs

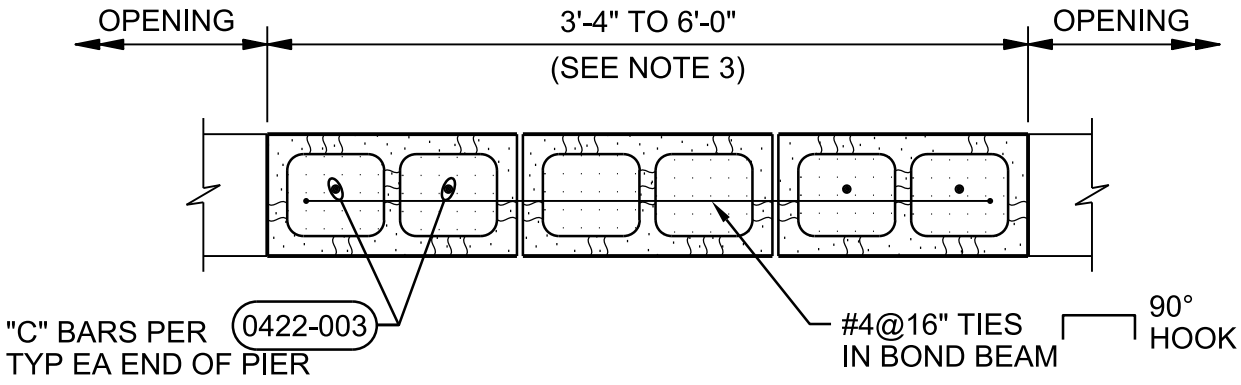

INTERIOR PLAN

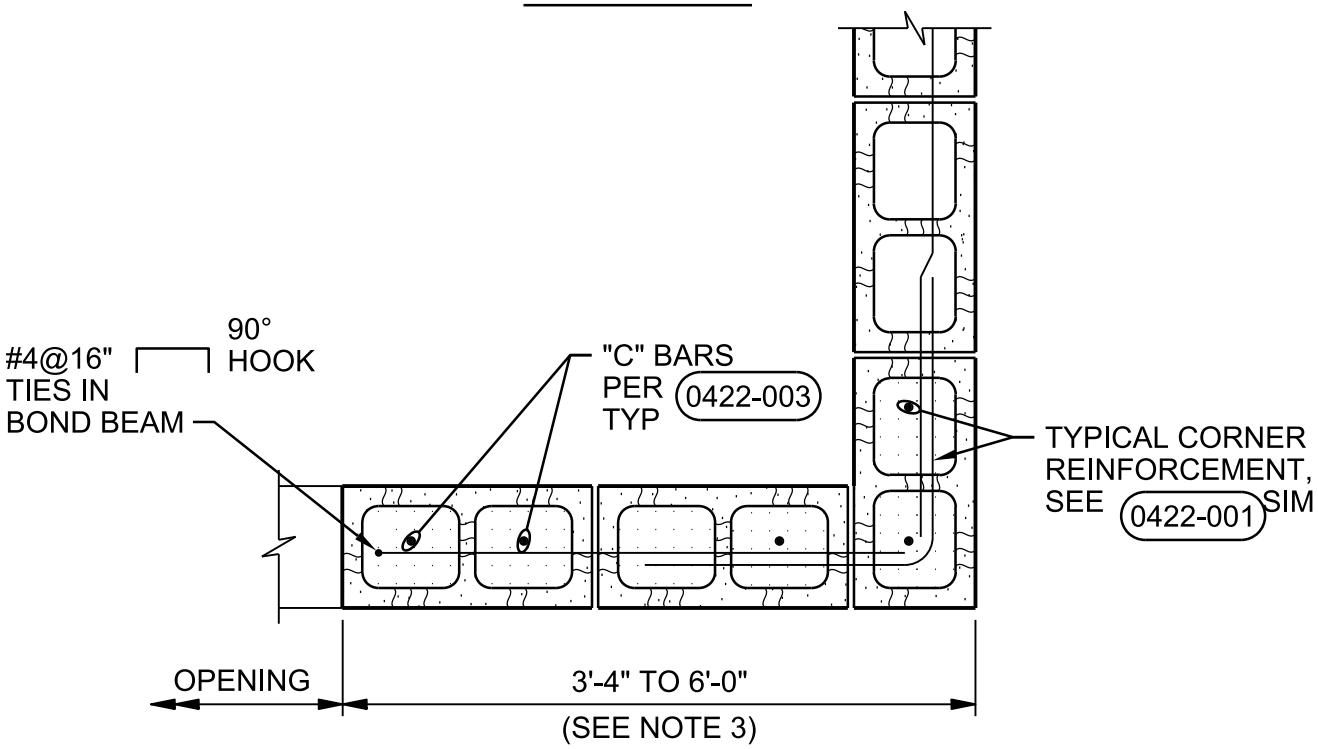

CORNER PLAN

8" CMU WALL

NOTES:

1. SOLID GROUT PIERS FULL WALL HEIGHT.
2. WHERE PIERS ARE CENTERED BELOW BEAM BEARING, REDUCE TIE SPACING TO 8".
3. FOR 8" CMU WALL PIERS 2'-8" AND LESS, SEE WALL COLUMN DETAIL 0422-006

CMU WALL PIER

NTS

DETAIL 1 OF 2

0422-005

NATIONAL PARK SERVICE
GRAND CANYON NATIONAL PARK
SOUTH RIM

© JACOBS

Jacobs

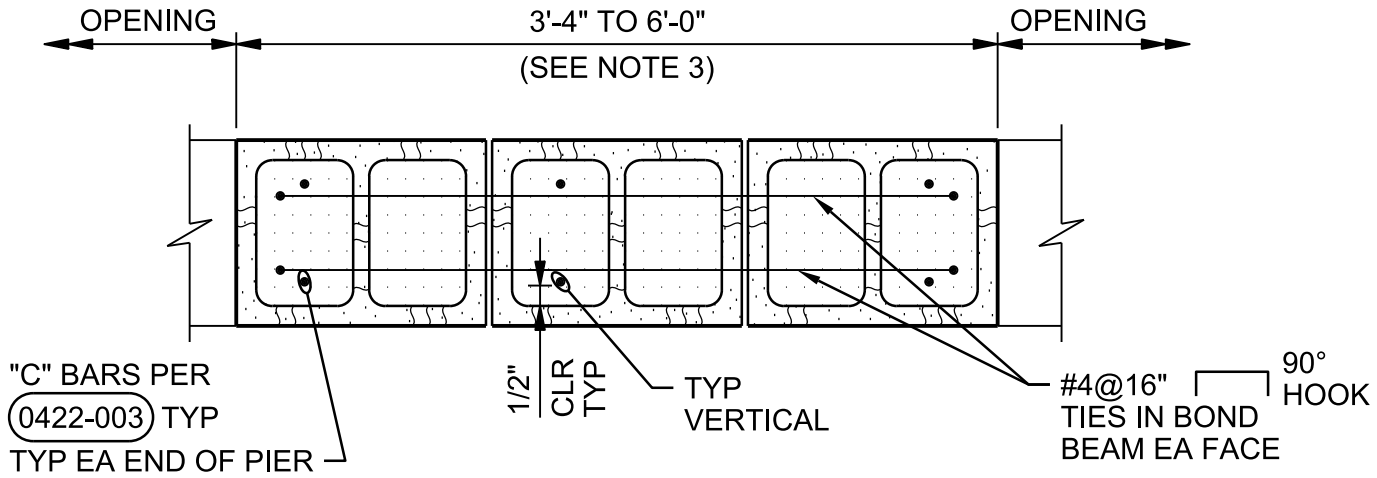

INTERIOR PLAN

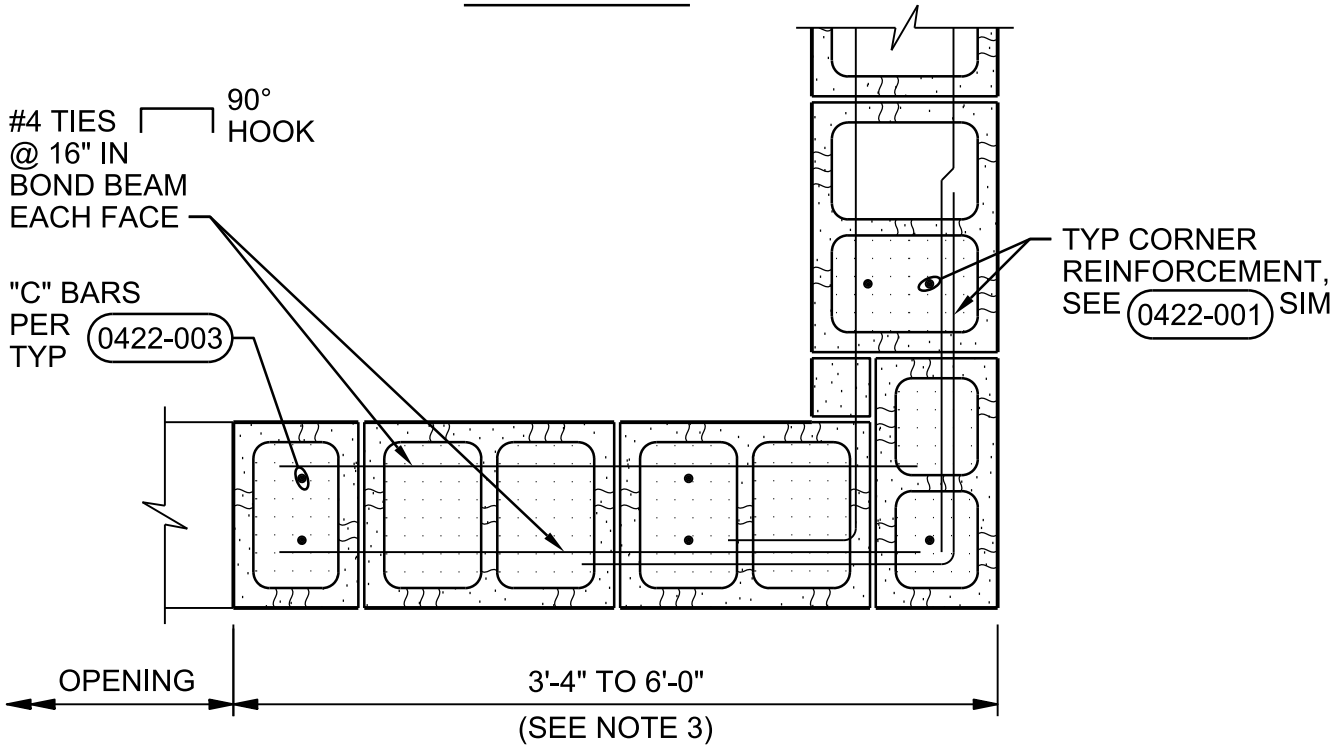

CORNER PLAN

12" CMU WALL

NOTES:

1. SOLID GROUT PIERS FULL WALL HEIGHT.
2. WHERE PIERS ARE CENTERED BELOW BEAM BEARING, REDUCE TIE SPACING TO 8".
3. FOR 12" CMU WALL PIERS 2'-8" AND LESS, SEE WALL COLUMN DETAIL 0422-006

CMU WALL PIER

NTS

DETAIL 2 OF 2

0422-005

NATIONAL PARK SERVICE
GRAND CANYON NATIONAL PARK
SOUTH RIM

© JACOBS

Jacobs

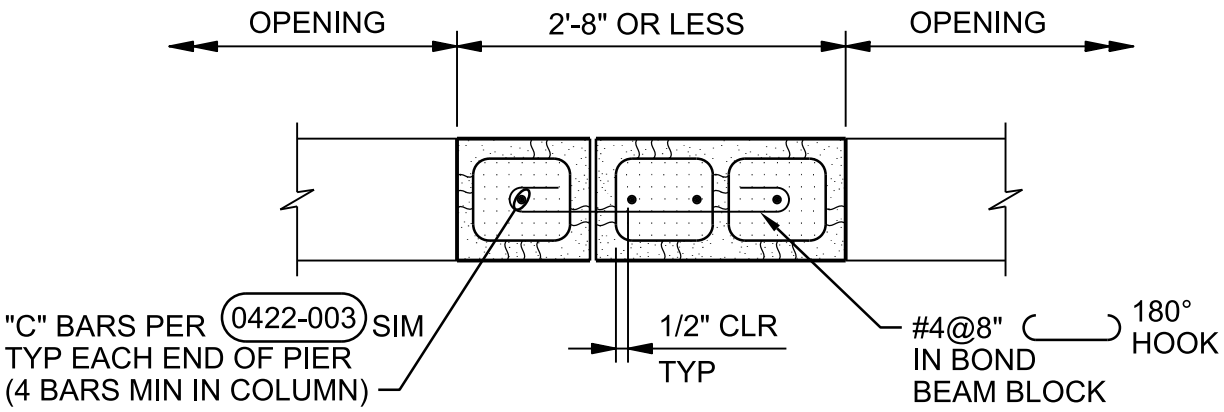

INTERIOR PLAN

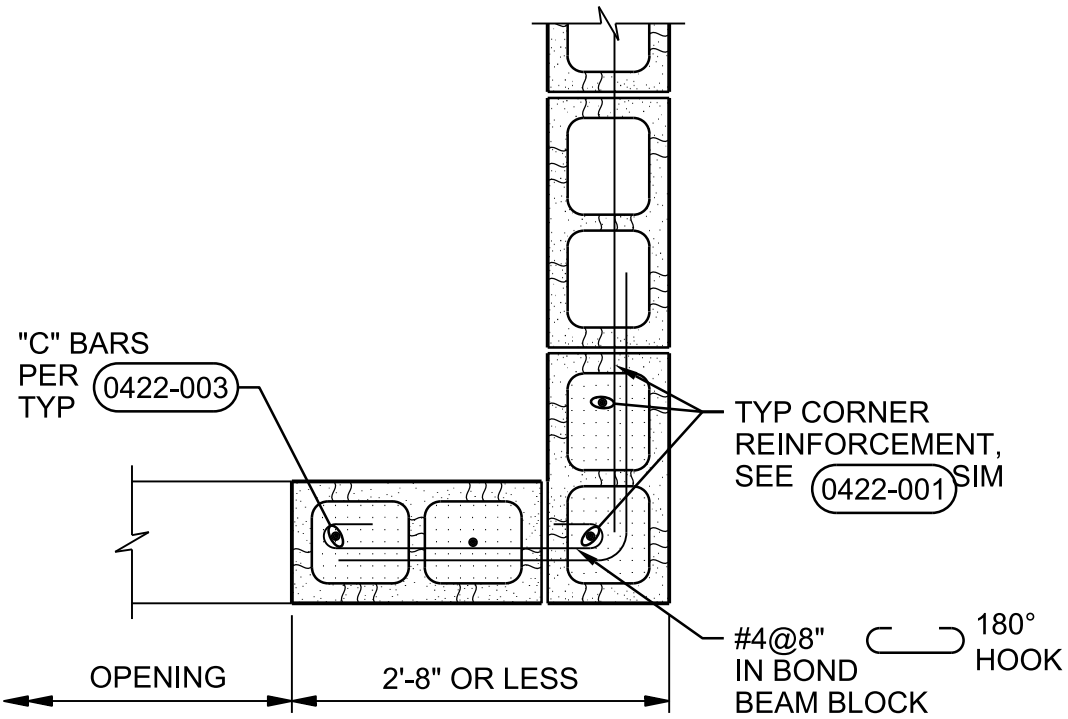

CORNER PLAN

8" CMU WALL

NOTE:

GROUT WALL COLUMNS FULL WALL HEIGHT.

CMU WALL COLUMN

NTS

DETAIL 1 OF 2

0422-006

NATIONAL PARK SERVICE
GRAND CANYON NATIONAL PARK
SOUTH RIM

© JACOBS

Jacobs

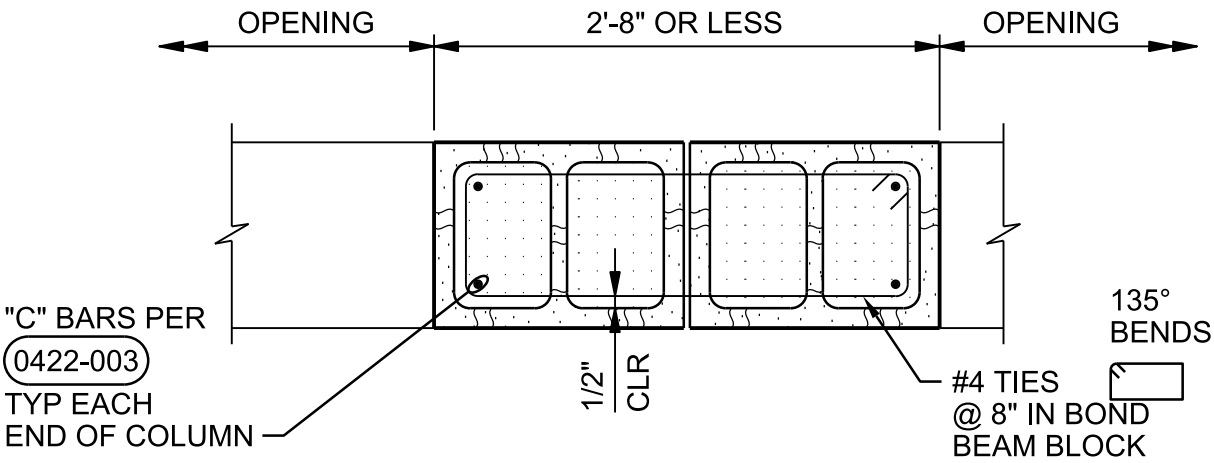

INTERIOR PLAN

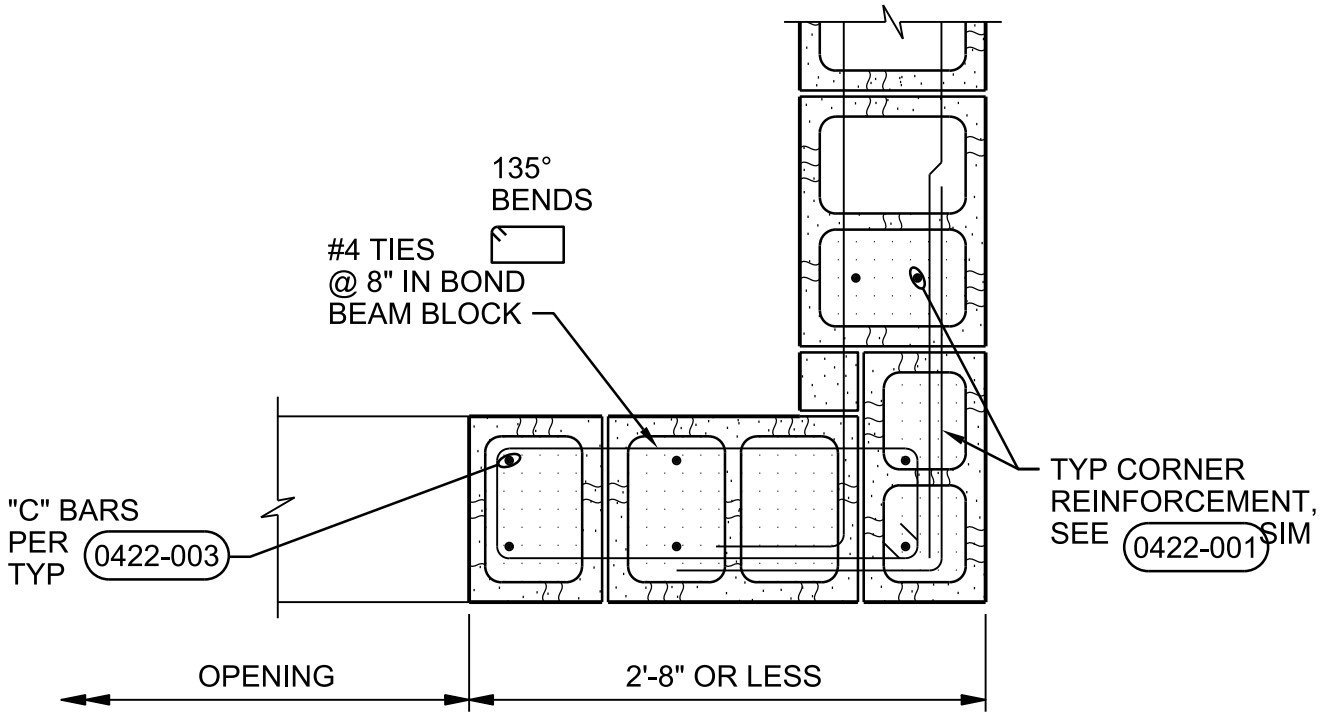

CORNER PLAN

12" CMU WALL

NOTE:

GROUT WALL COLUMNS FULL WALL HEIGHT.

CMU WALL COLUMN

NTS

DETAIL 2 OF 2

0422-006

NATIONAL PARK SERVICE
GRAND CANYON NATIONAL PARK
SOUTH RIM

© JACOBS

Jacobs

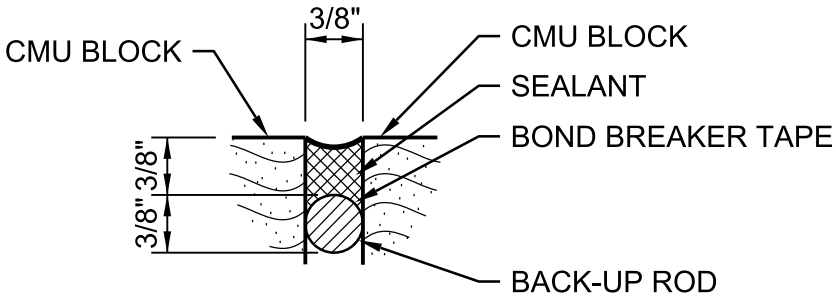

ENLARGED DETAIL

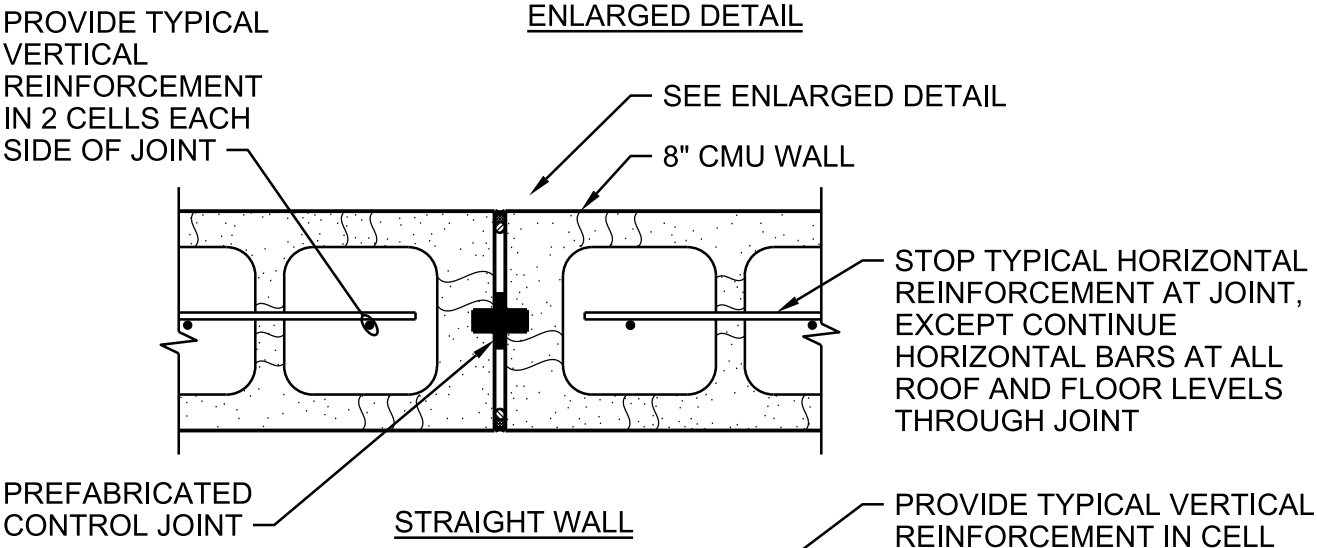

STRAIGHT WALL

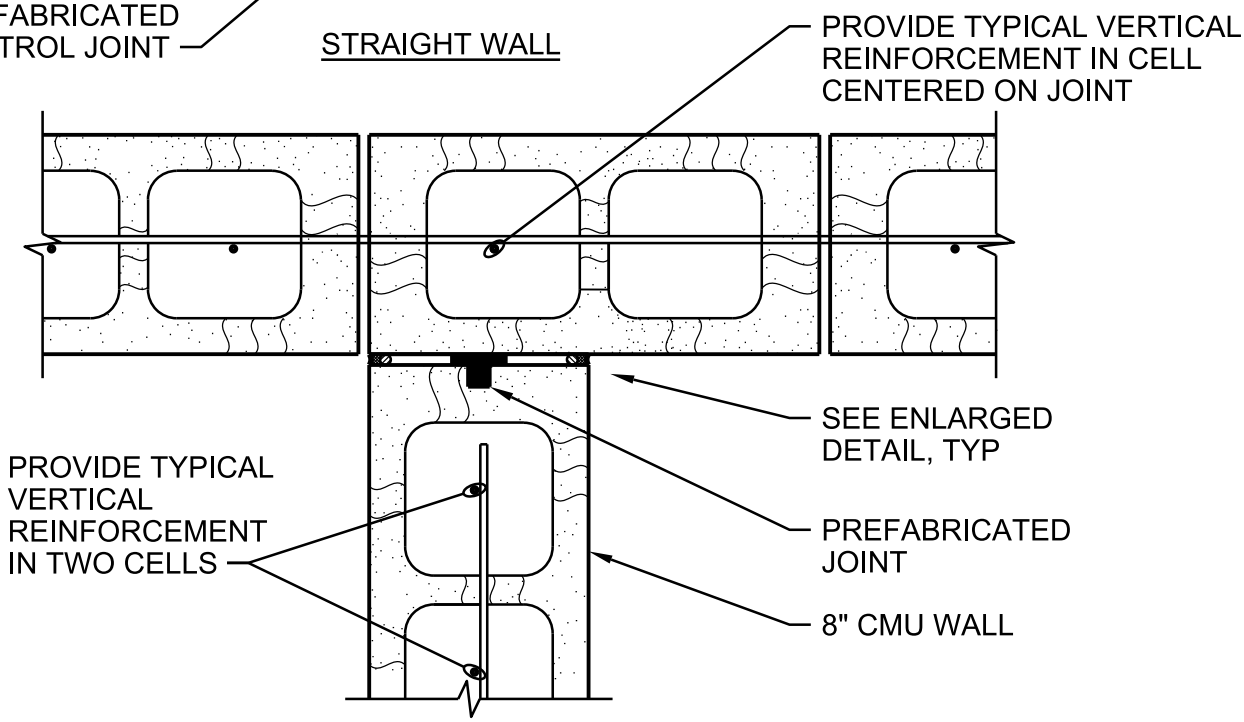

T-WALL

NOTE:

1. 12" CMU WALL WITH 2 LAYERS OF REINFORCEMENT IS SIMILAR.
2. FOR MASONRY CONTROL JOINT LOCATIONS SEE PLANS.

CMU CONTROL JOINT

NTS

NATIONAL PARK SERVICE
GRAND CANYON NATIONAL PARK
SOUTH RIM

0422-031

© JACOBS

Jacobs

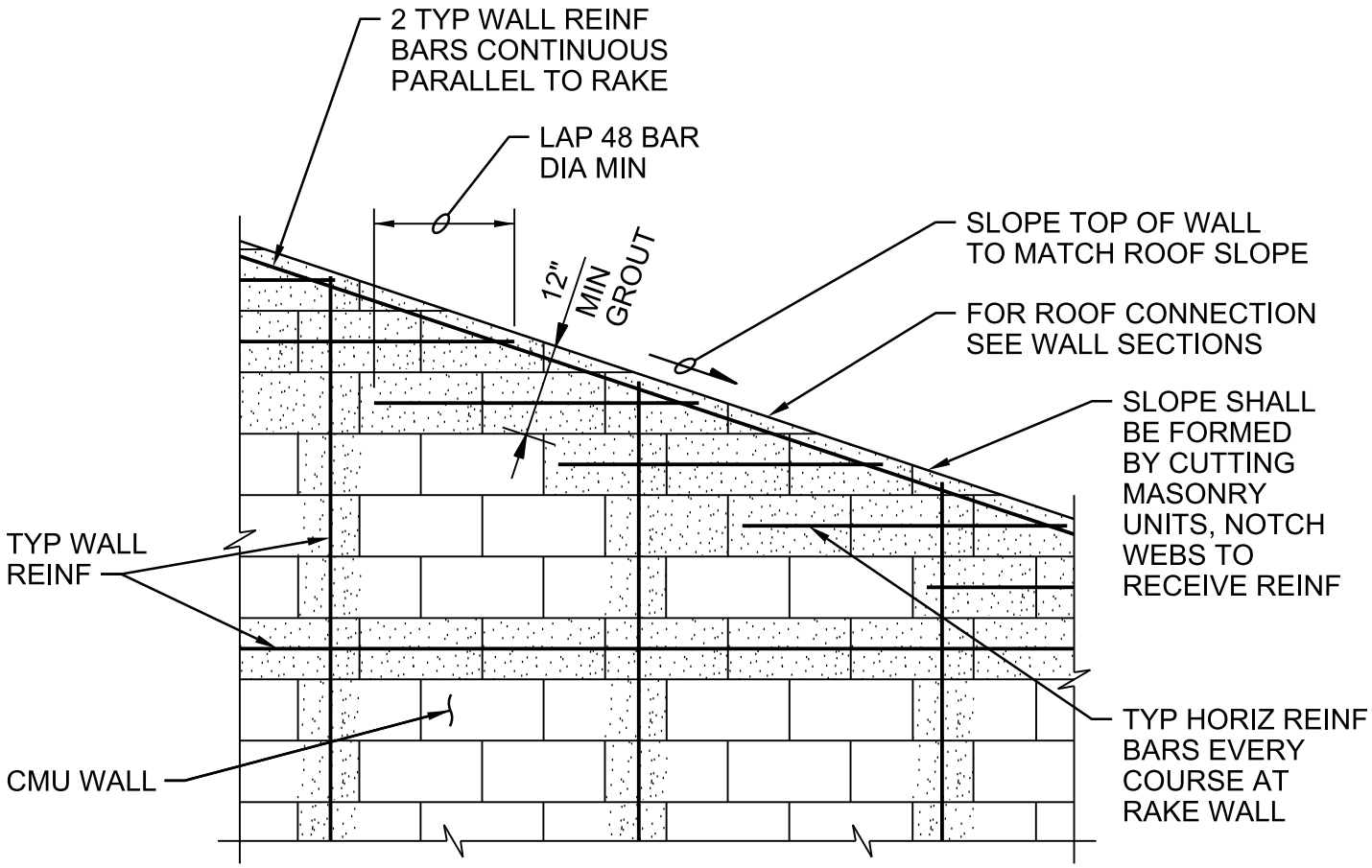

NOTE:

GROUT MINIMUM 12" AT TOP OF WALL.

CMU WALL AT RAKE

NTS

NATIONAL PARK SERVICE
GRAND CANYON NATIONAL PARK
SOUTH RIM

0422-041

© JACOBS

Jacobs

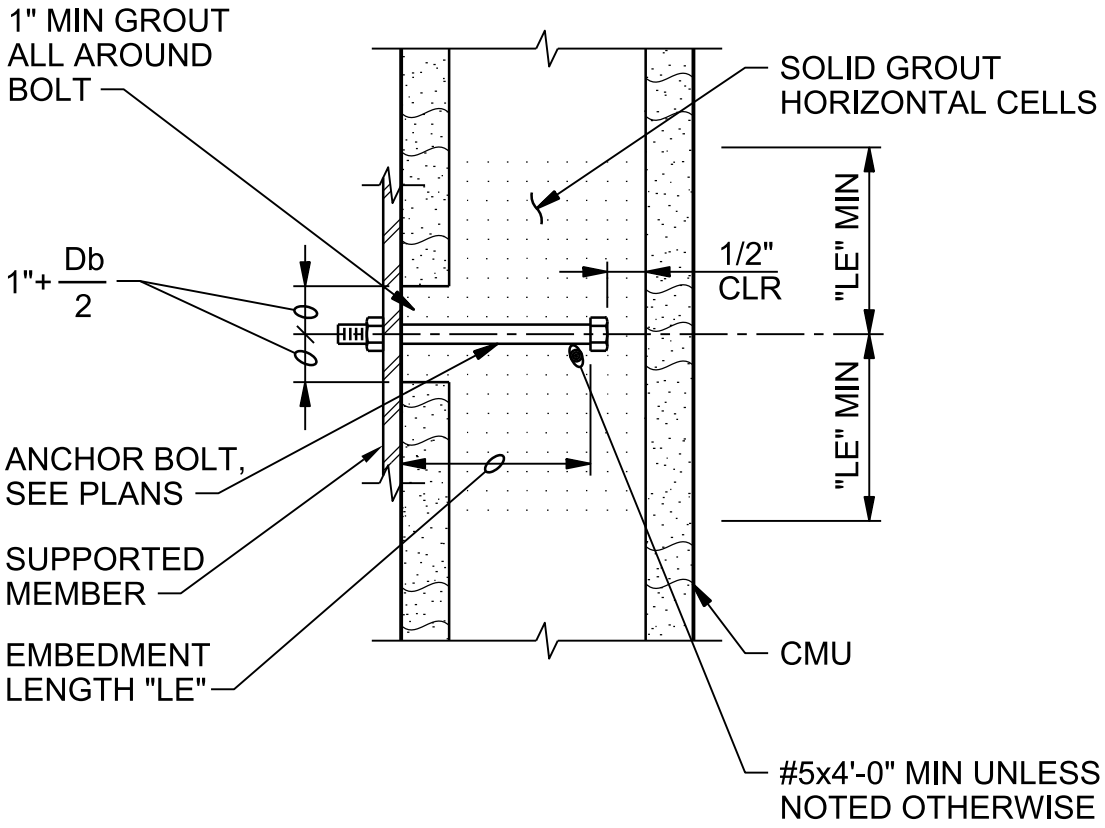

NOTE:

Db = DIAMETER OF BOLT

MASONRY ANCHOR BOLT

NTS

NATIONAL PARK SERVICE
GRAND CANYON NATIONAL PARK
SOUTH RIM

0422-046

© JACOBS

Jacobs

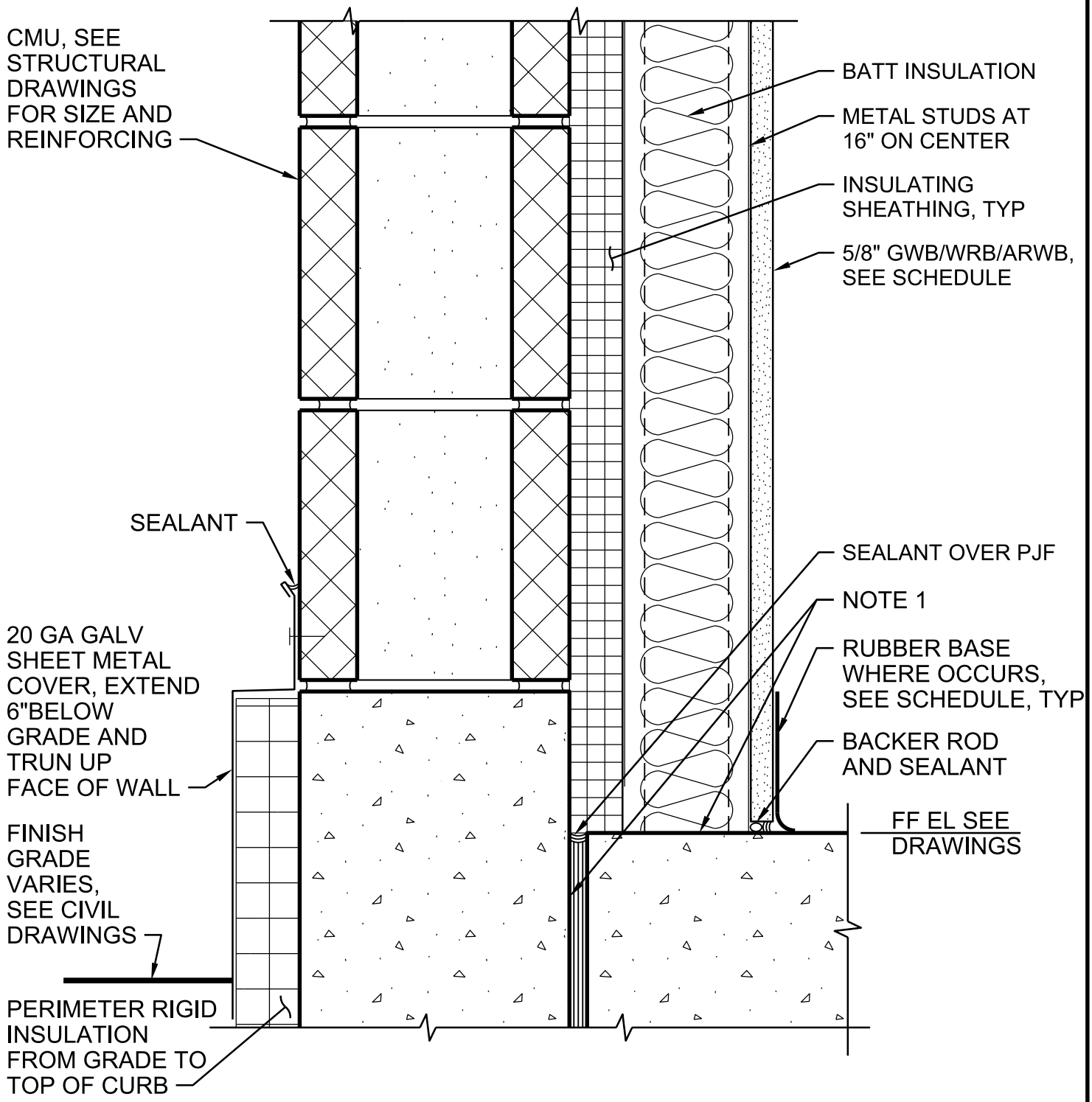

NOTES:

1. CONCRETE FOUNDATION AND SLAB, SEE STRUCTURAL DRAWINGS.

BASE OF WALL

NTS

NATIONAL PARK SERVICE
GRAND CANYON NATIONAL PARK
SOUTH RIM

0422-104

© JACOBS

Jacobs

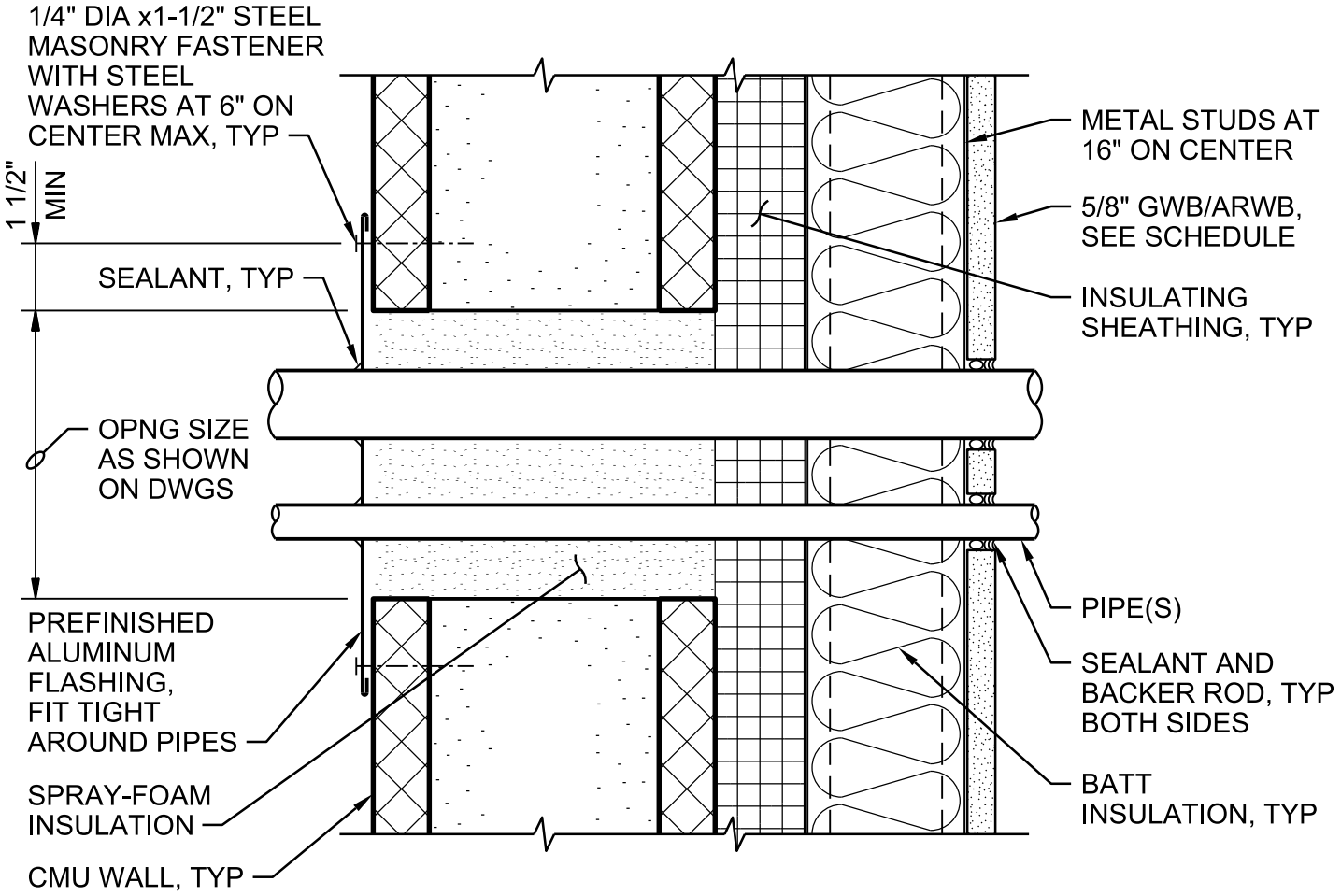

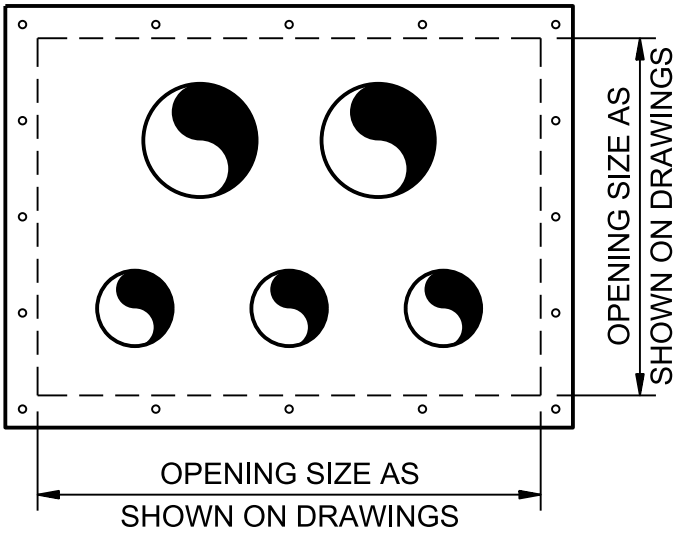

ELEVATION

CMU PIPE PENETRATION

NTS

NATIONAL PARK SERVICE
GRAND CANYON NATIONAL PARK
SOUTH RIM

0422-106

© JACOBS

Jacobs

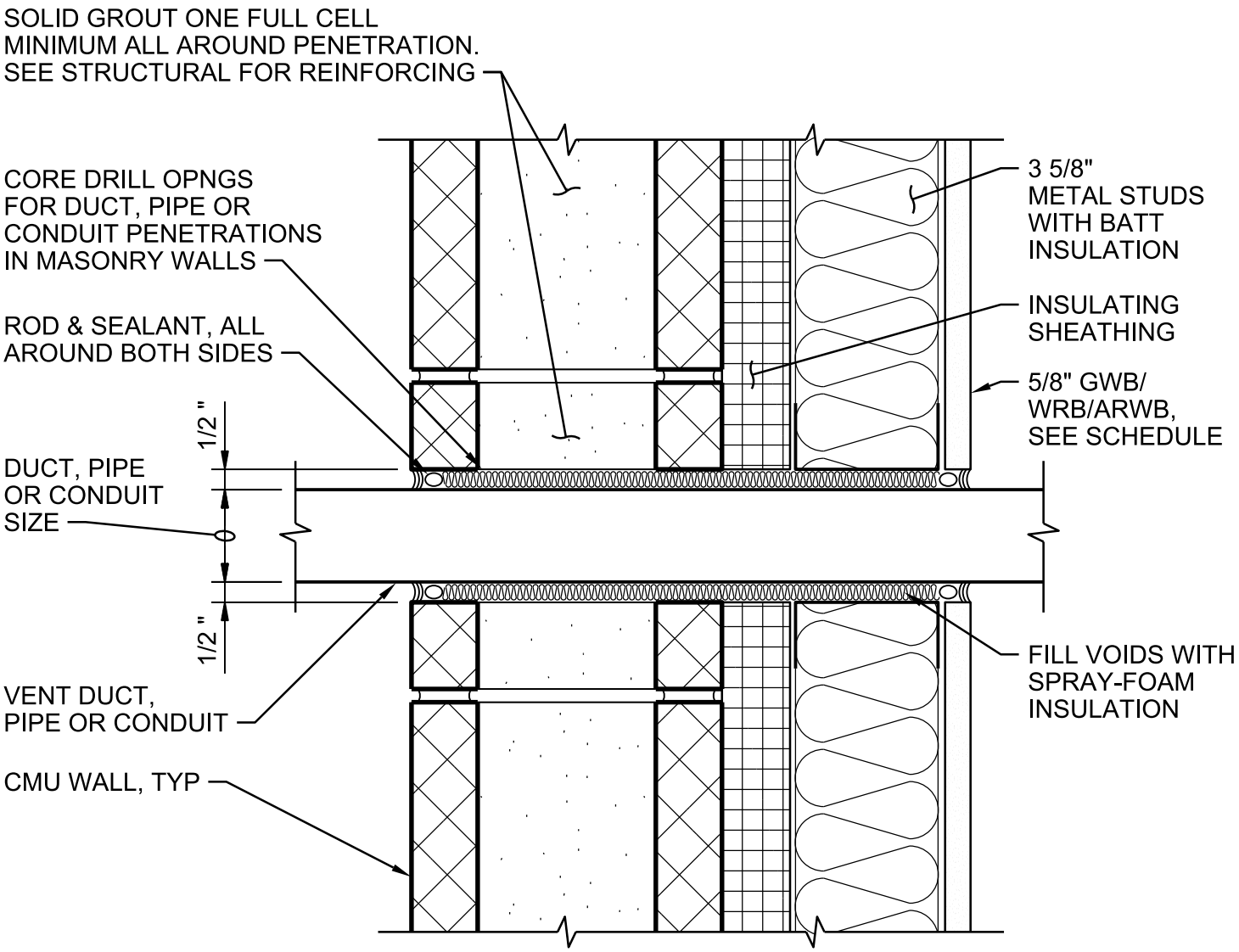

WALL PENETRATION (EXTERIOR)

NTS

DETAIL 1 OF 4

0422-108

NATIONAL PARK SERVICE
GRAND CANYON NATIONAL PARK
SOUTH RIM

© JACOBS

Jacobs

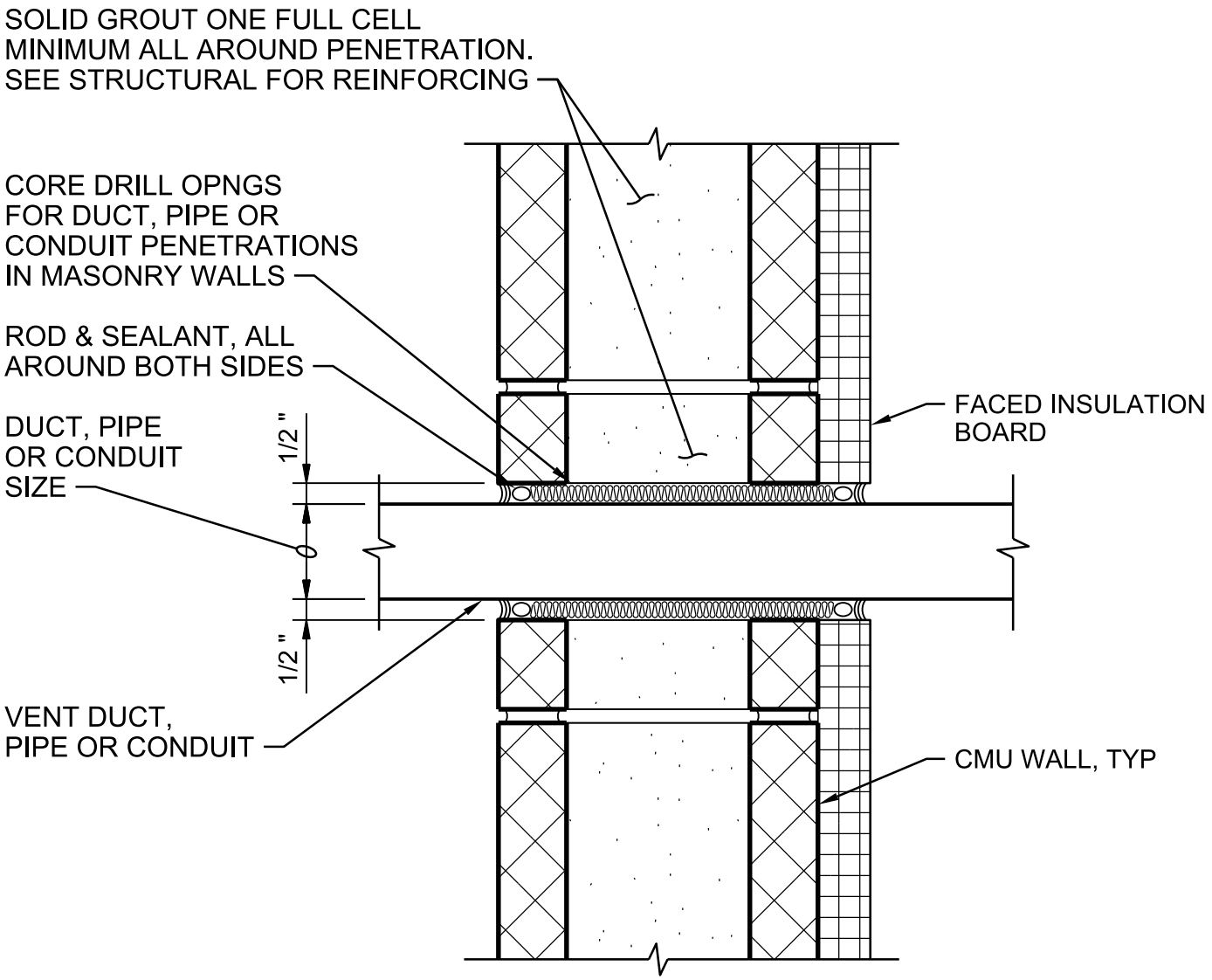

WALL PENETRATION (EXTERIOR)

NTS

DETAIL 2 OF 4

0422-108

NATIONAL PARK SERVICE
GRAND CANYON NATIONAL PARK
SOUTH RIM

© JACOBS

Jacobs

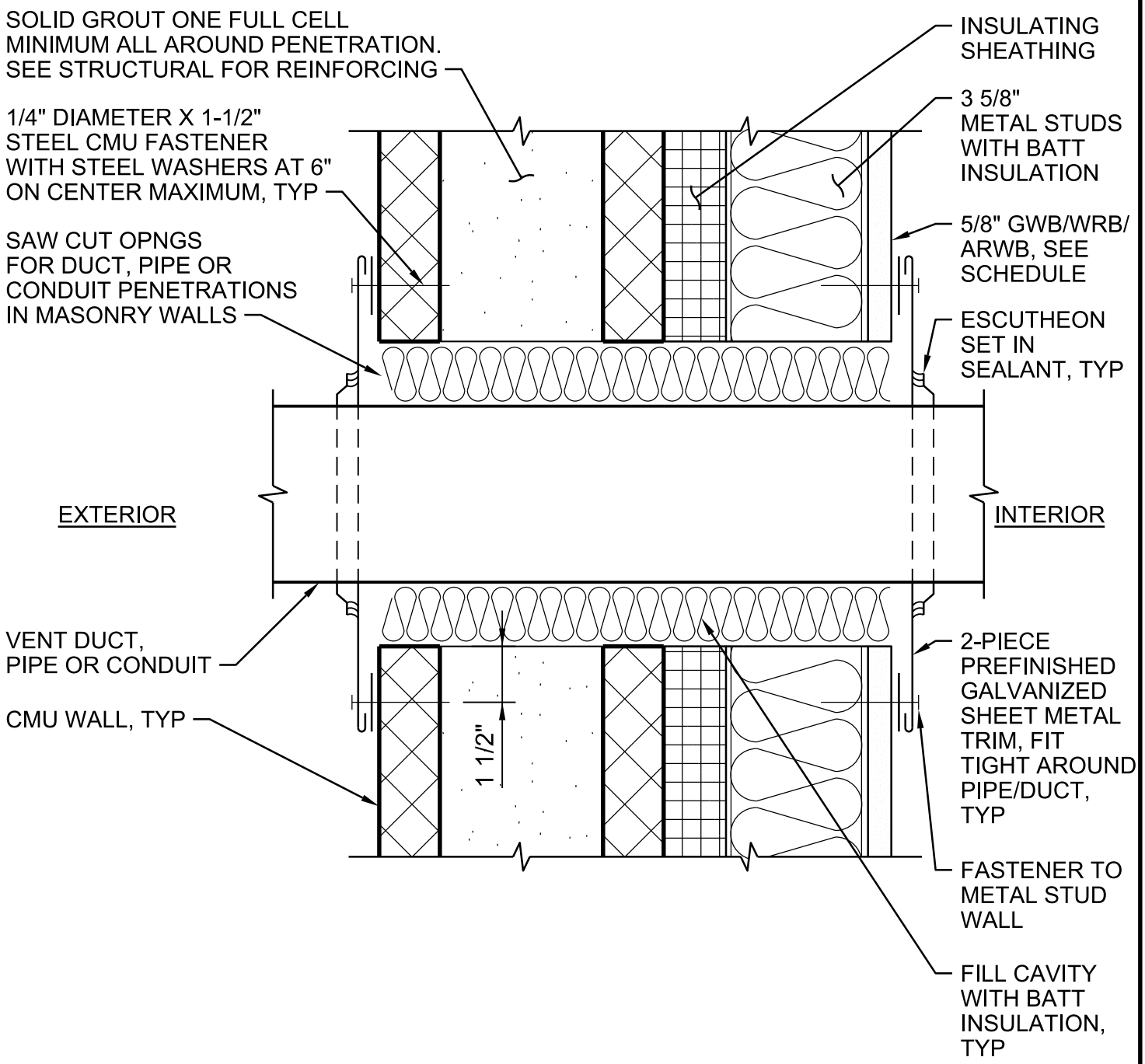

WALL PENETRATION (EXTERIOR)

NTS

DETAIL 3 OF 4

NATIONAL PARK SERVICE
GRAND CANYON NATIONAL PARK
SOUTH RIM

0422-108

© JACOBS

Jacobs

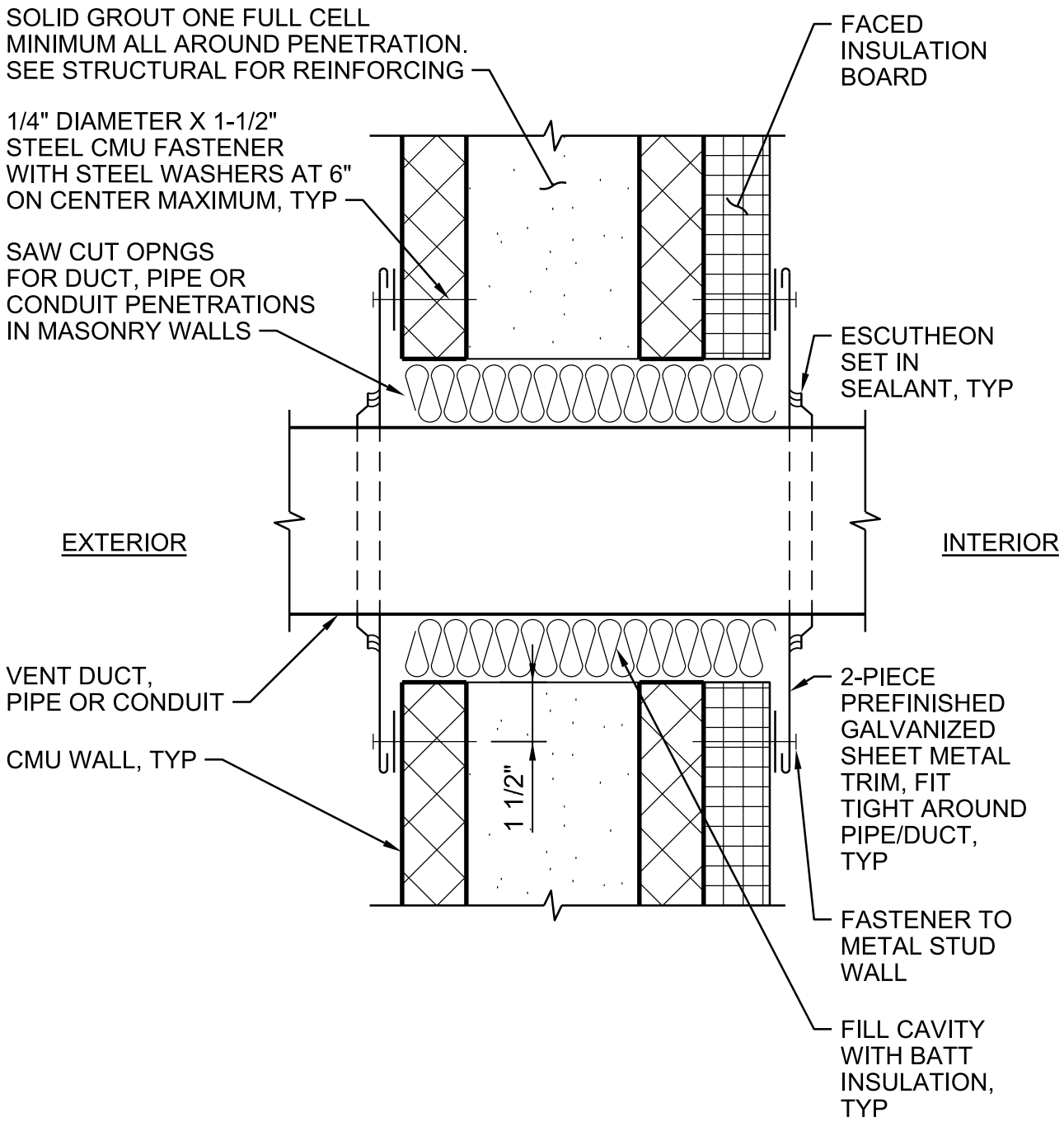

WALL PENETRATION (EXTERIOR)

NTS

DETAIL 4 OF 4

0422-108

NATIONAL PARK SERVICE
GRAND CANYON NATIONAL PARK
SOUTH RIM

© JACOBS

Jacobs

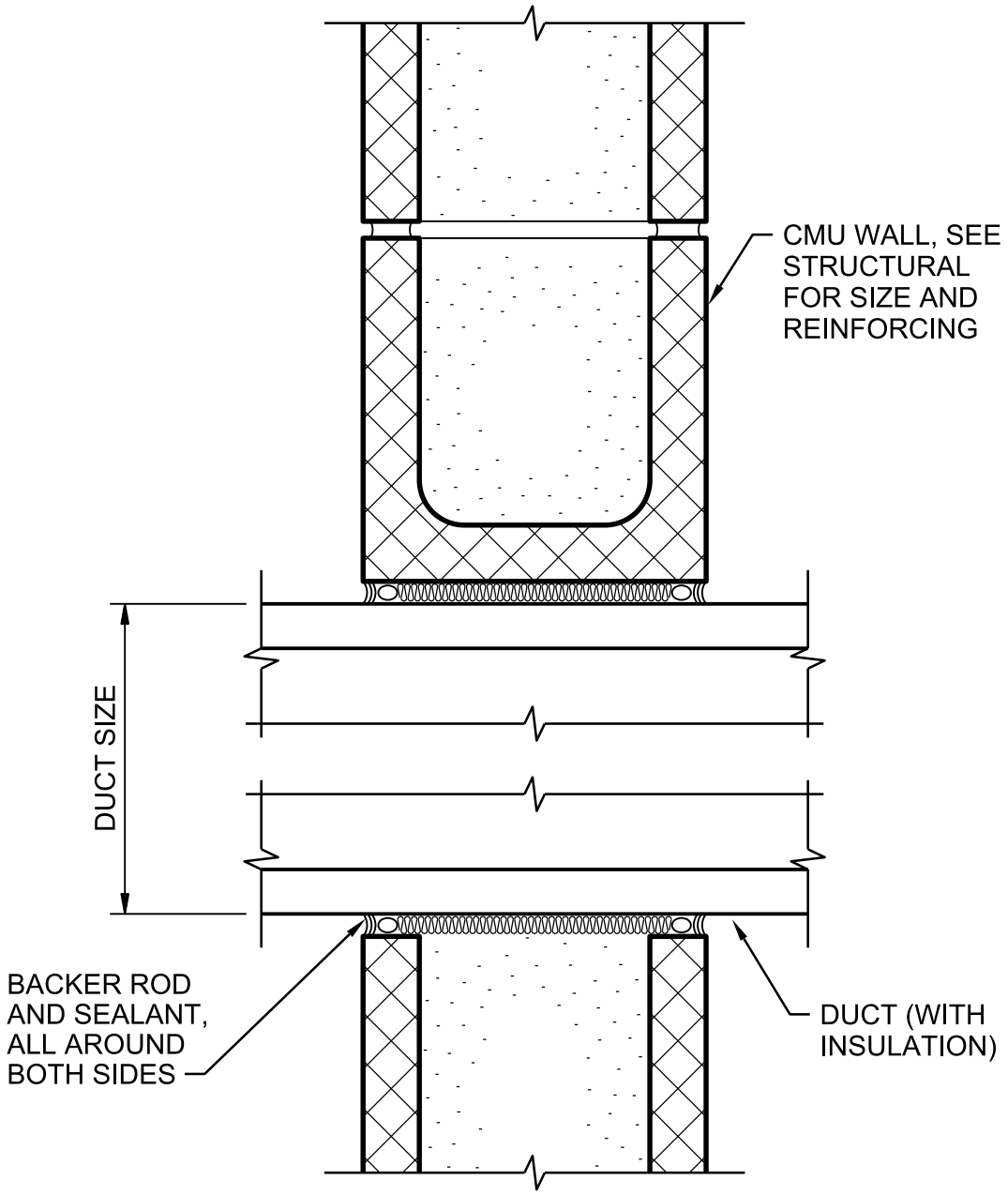

WALL PENETRATION AT DUCT

NTS

NATIONAL PARK SERVICE
GRAND CANYON NATIONAL PARK
SOUTH RIM

0422-109

© JACOBS

Jacobs

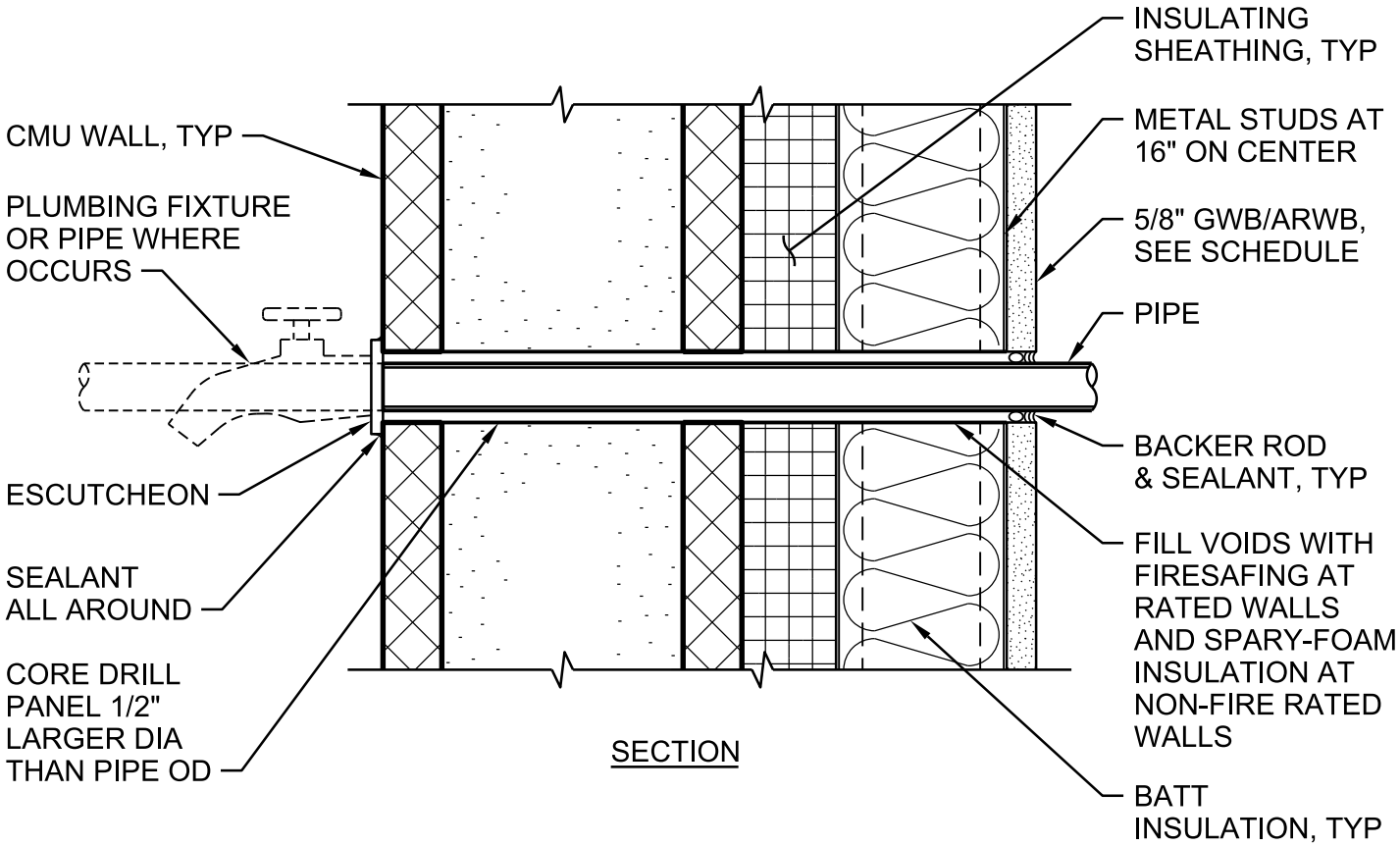

CMU SMALL PIPE PENETRATION

NTS

NATIONAL PARK SERVICE
GRAND CANYON NATIONAL PARK
SOUTH RIM

0422-110

© JACOBS

Jacobs

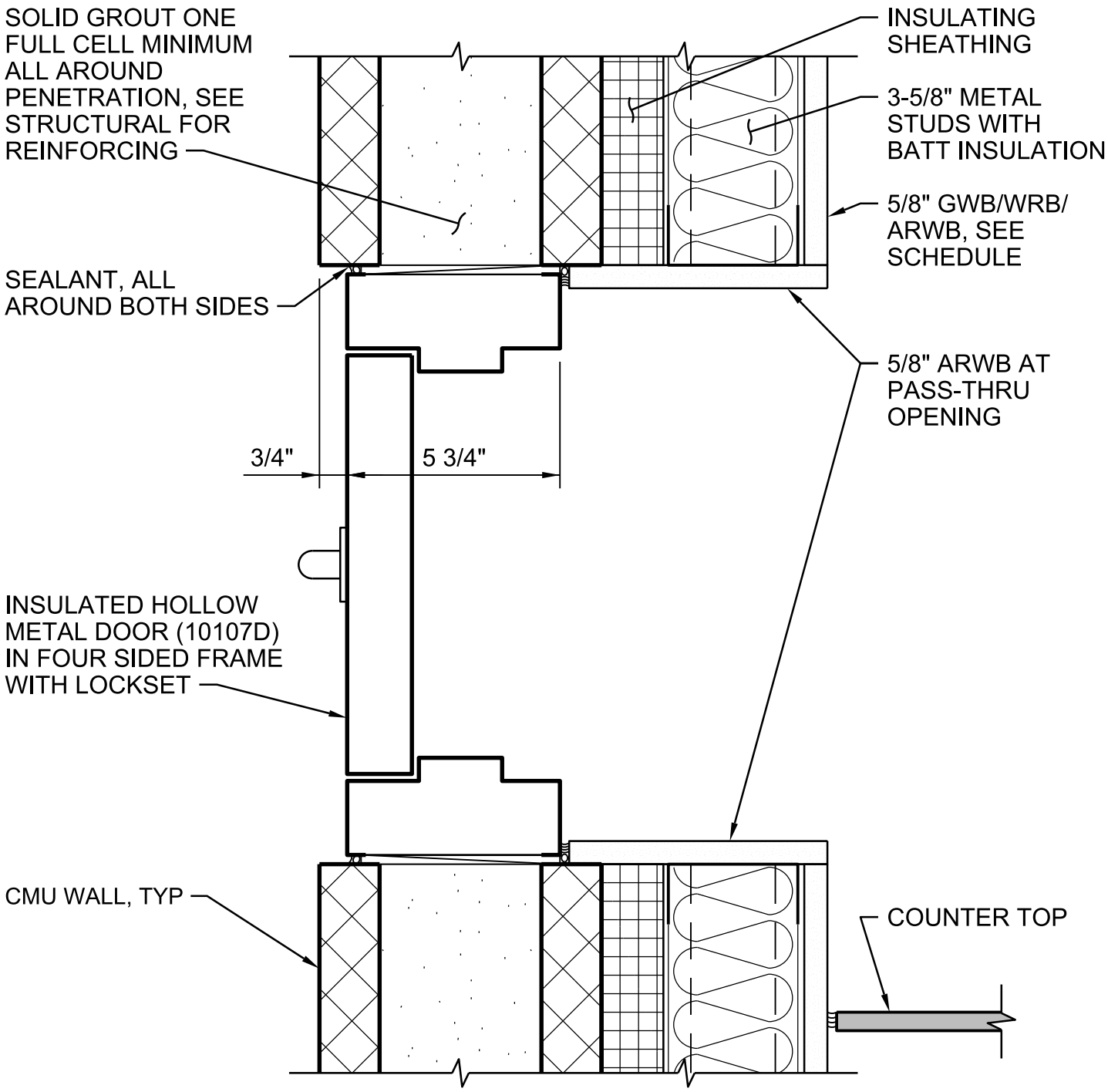

PASS-THROUGH

NTS

NATIONAL PARK SERVICE
GRAND CANYON NATIONAL PARK
SOUTH RIM

0422-200

© JACOBS

Jacobs

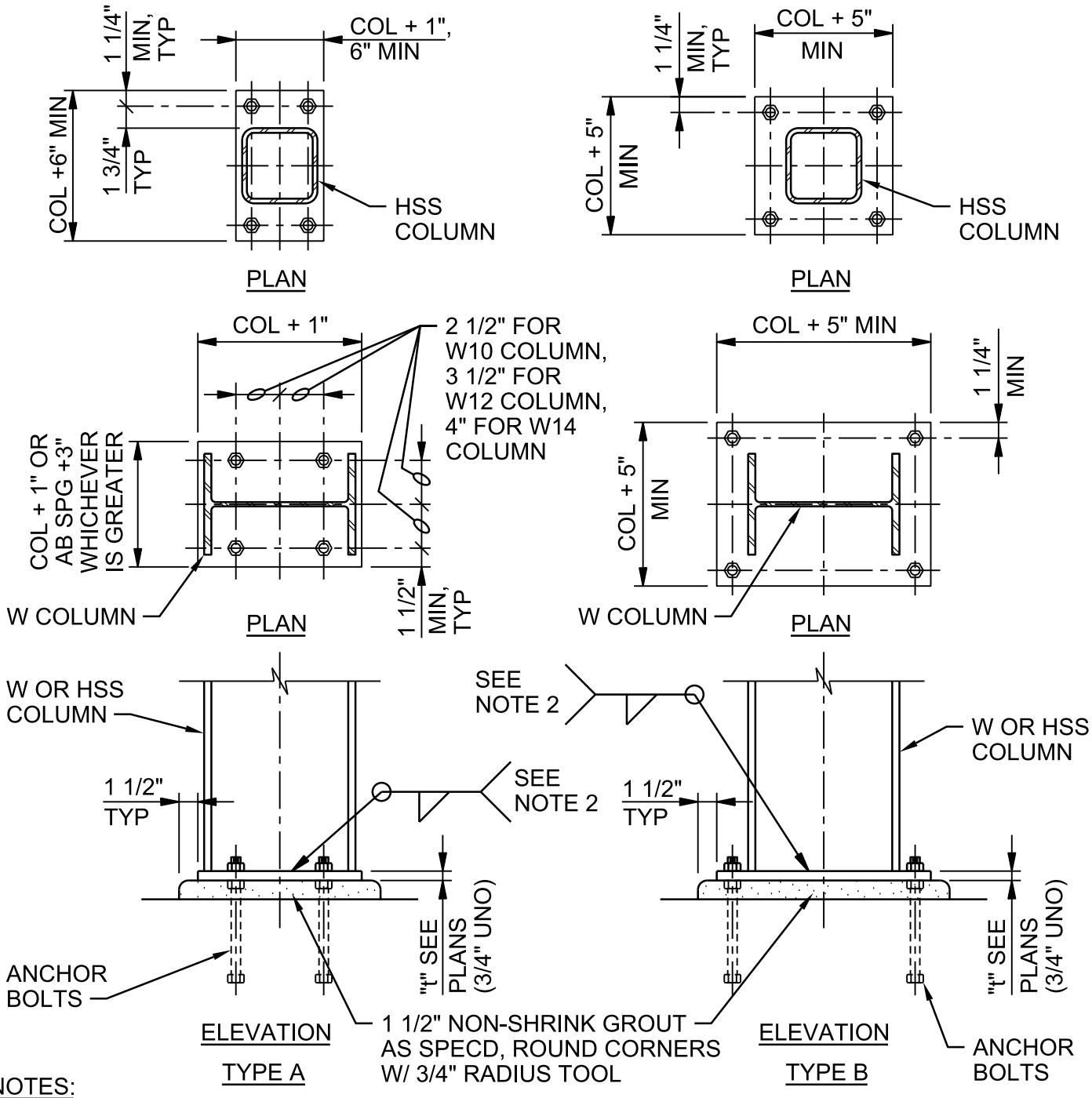

NOTES:

1. UNLESS OTHERWISE NOTED, ANCHOR BOLTS SHALL BE 3/4" DIA x REQUIRED WITH LEVELING NUTS AND 1'-0" MINIMUM EMBED AND BASEPLATES SHALL BE CENTERED ON COLUMN.
2. WELD SIZE SHALL BE DETERMINED BY THE THICKEST MEMBER JOINED; MINIMUM WELD SIZE SHALL BE 3/16" FILLET FOR MATERIAL THICKNESSES UP TO AND INCLUDING 1/2", 1/4" FILLET FOR THICKNESSES OVER 1/2" TO 3/4", AND 5/16" FILLET FOR MATERIAL THICKNESSES OVER 3/4". ALL WELDS SHALL BE SINGLE-PASS WELDS.

COLUMN BASE - STEEL

NTS

NATIONAL PARK SERVICE
GRAND CANYON NATIONAL PARK
SOUTH RIM

0512-001

© JACOBS

Jacobs

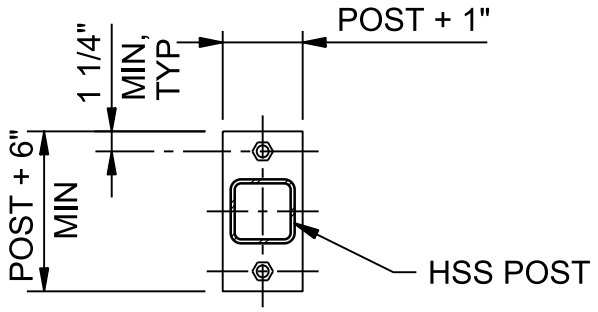

PLAN

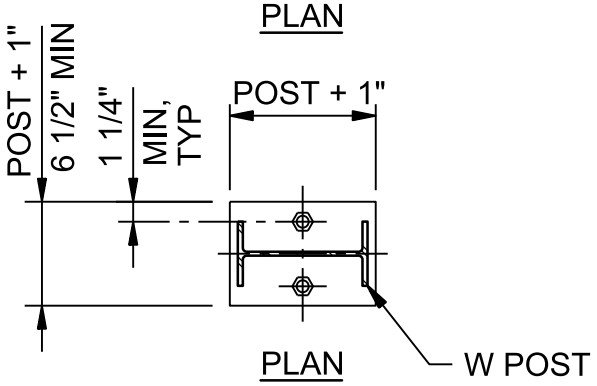

PLAN

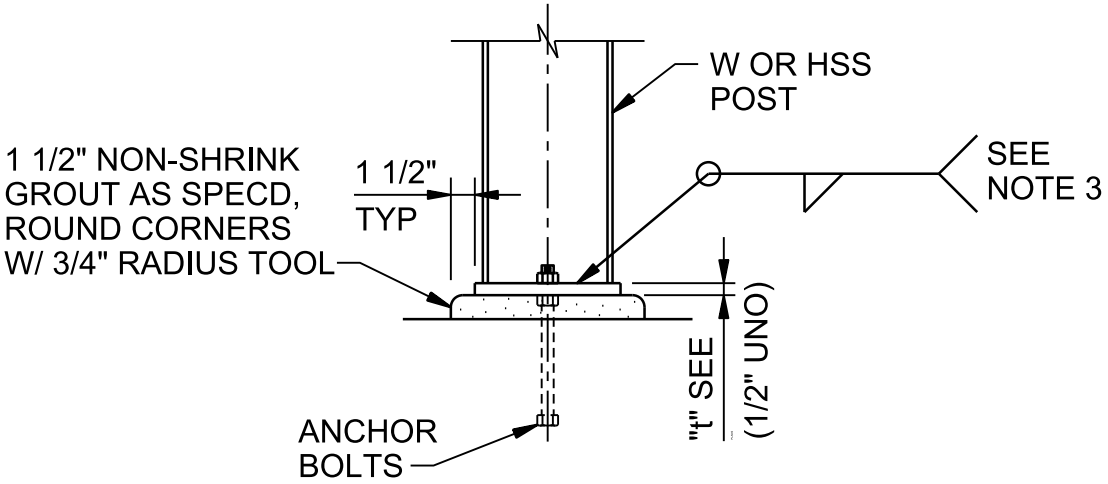

ELEVATION

NOTES:

1. UNLESS OTHERWISE NOTED, ANCHOR BOLTS SHALL BE 3/4" DIA x REQUIRED WITH LEVELING NUTS AND 1'-0" MINIMUM EMBED AND BASEPLATES SHALL BE CENTERED ON POSTS.
2. USE OF 2 - BOLT STEEL POST BASEPLATE ANCHORAGE DETAIL SHOWN SHALL BE LIMITED TO STEEL SUPPORT MEMBERS WEIGHING LESS THAN 300 LBS IN ACCORDANCE WITH OSHA STANDARDS.
3. WELD SIZE SHALL BE DETERMINED BY THE THICKEST MEMBER JOINED; MINIMUM WELD SIZE SHALL BE 3/16" FILLET FOR MATERIAL THICKNESSES UP TO AND INCLUDING 1/2", 1/4" FILLET FOR THICKNESSES OVER 1/2" TO 3/4", AND 5/16" FILLET FOR MATERIAL THICKNESSES OVER 3/4". ALL WELDS SHALL BE SINGLE-PASS WELDS.

POST BASE - STEEL

NTS

NATIONAL PARK SERVICE
GRAND CANYON NATIONAL PARK
SOUTH RIM

0512-002

© JACOBS

Jacobs

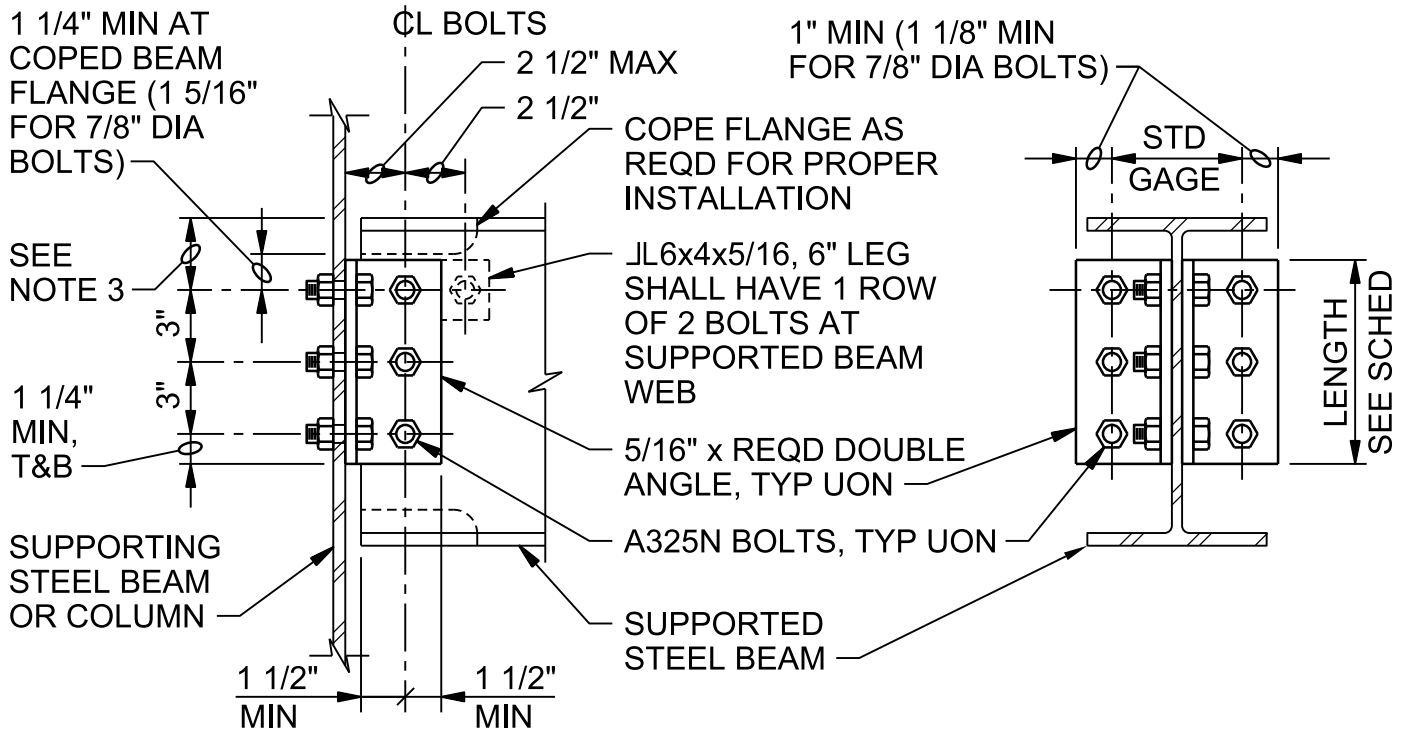

NOMINAL BEAM DEPTH, INCHES	ROWS OF BOLTS	BOLT DIA, INCHES	DOUBLE ANGLE, LENGTH, INCHES	COMMENTS
36	10	7/8"	2'-6"	ANGLE THK = 3/8"
33	9	7/8"	2'-3"	ANGLE THK = 3/8"
30	8	7/8"	2'-0"	ANGLE THK = 3/8"
27	7	3/4"	1'-8 1/2"	-
24	6	3/4"	1'-5 1/2"	-
21	5	3/4"	1'-2 1/2"	-
16-18	4	3/4"	0'-11 1/2"	-
12-15	3	3/4"	0'-8 1/2"	-
8-10	2	3/4"	0'-5 1/2"	-
6	1	3/4"	0'-3"	⅃L 6"x4"x5/16"
4	1	3/4"	0'-2 1/2"	⅃L 6"x4"x5/16"

NOTES:

1. ALL BEAM FRAMING CONNECTIONS SHALL CONFORM TO THIS DETAIL UNLESS SPECIFICALLY NOTED OTHERWISE OR APPROVED IN WRITING BY THE CONTRACTING OFFICER.
2. PROVIDE ADDITIONAL 1 1/2" LENGTH TO DOUBLE ANGLE FOR STAGGERED BOLT CONNECTIONS WHEN REQUIRED OR USED.
3. DIMENSION SHALL BE 3" UNLESS OTHERWISE REQUIRED FOR PROPER FABRICATION.

TYPICAL BEAM CONNECTION - STEEL

NTS

NATIONAL PARK SERVICE
GRAND CANYON NATIONAL PARK
SOUTH RIM

0512-020

© JACOBS

Jacobs

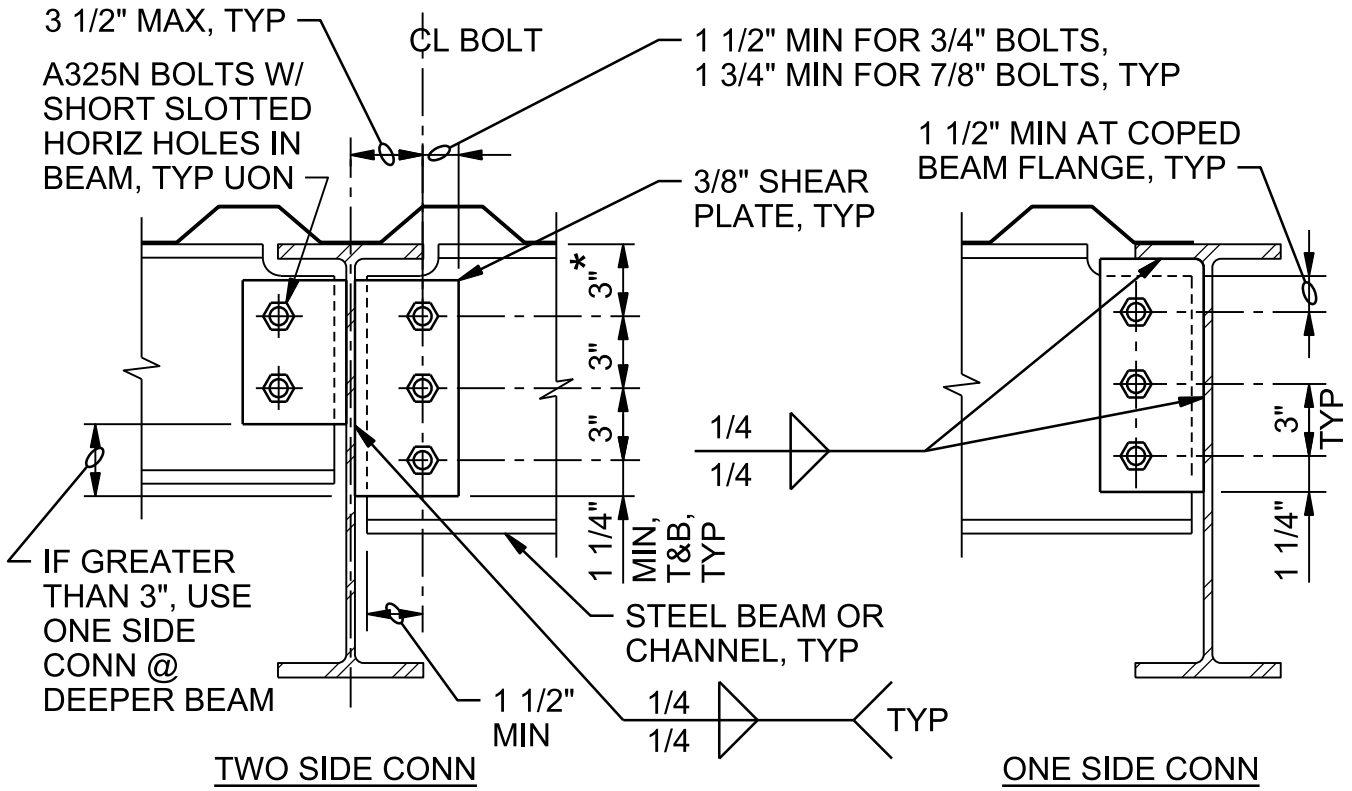

NOMINAL BEAM DEPTH, INCHES	ROWS OF BOLTS	BOLT DIA, INCHES	LENGTH OF SHEAR PLATE
27	8	7/8"	2'-0"
24	7	3/4"	1'-8 1/2"
21	6	3/4"	1'-5 1/2"
18	5	3/4"	1'-2 1/2"
16	4	3/4"	11 1/2"
12-15	3	3/4"	8 1/2"
8-10	2	3/4"	5 1/2"

NOTES:

1. THIS DETAIL APPLIES ONLY WHERE SPECIFICALLY SHOWN ON DRAWINGS.
2. CONNECTION DETAIL SHOWN APPLICABLE ONLY TO BEAMS BRACED BY METAL DECK (COMPOSITE OR NON-COMPOSITE); FOR OTHER BEAM FRAMING CONDITIONS, SEE DETAIL 0512-020
3. (*) DIMENSION SHALL BE 3" UNLESS OTHERWISE REQUIRED FOR PROPER FABRICATION.

BEAM SINGLE PLATE SHEAR CONNECTION - STEEL

NTS

NATIONAL PARK SERVICE
GRAND CANYON NATIONAL PARK
SOUTH RIM

0512-022

© JACOBS

Jacobs

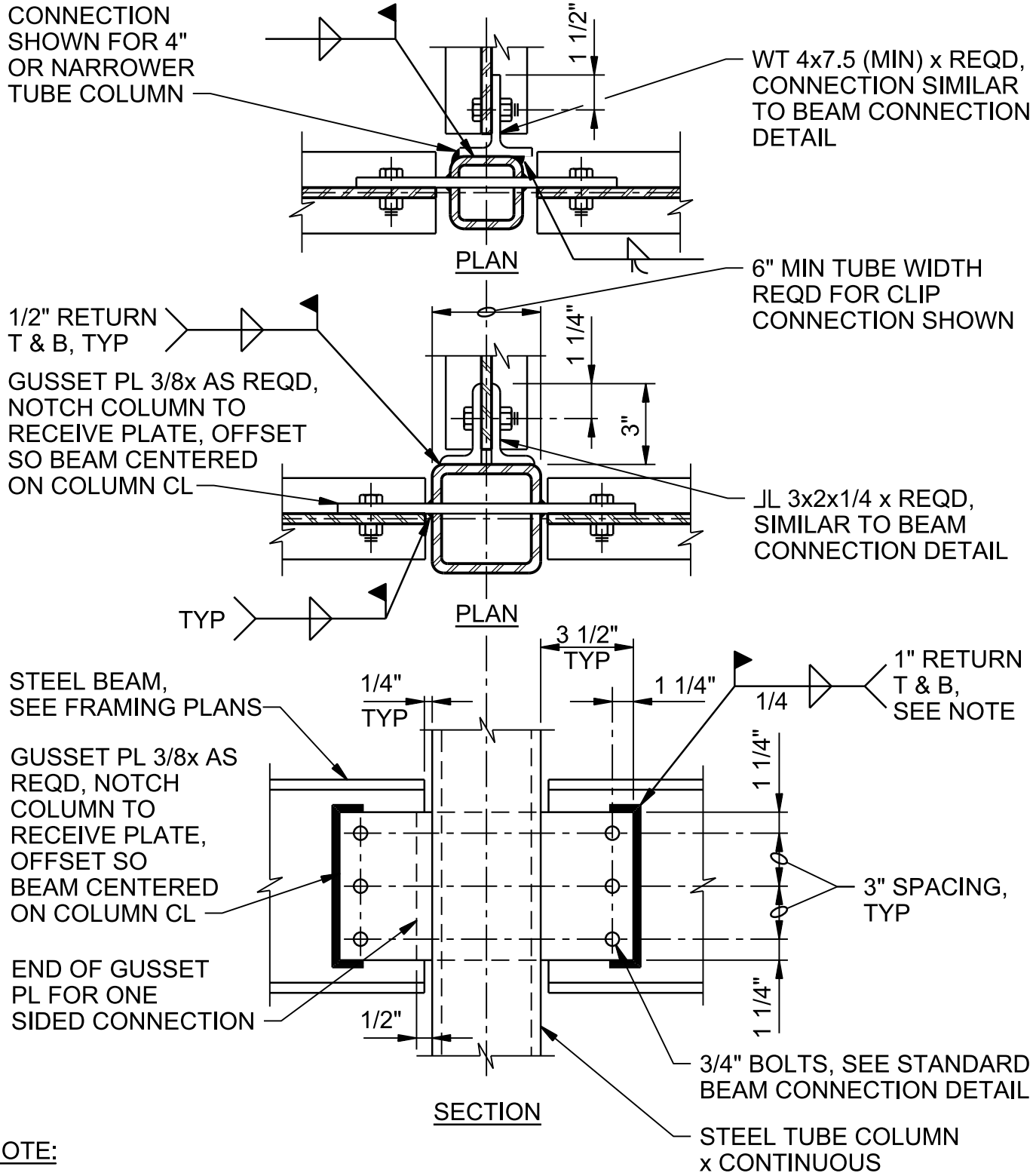

NOTE:

BOLTED CONNECTION INDICATED TYPICAL, WELD CONNECTION ONLY AT COLUMNS INDICATED ON PLANS.

CONTINUOUS TUBE COLUMN - BEAM CONNECTION - STEEL

NTS

NATIONAL PARK SERVICE
GRAND CANYON NATIONAL PARK
SOUTH RIM

0512-041

© JACOBS

Jacobs

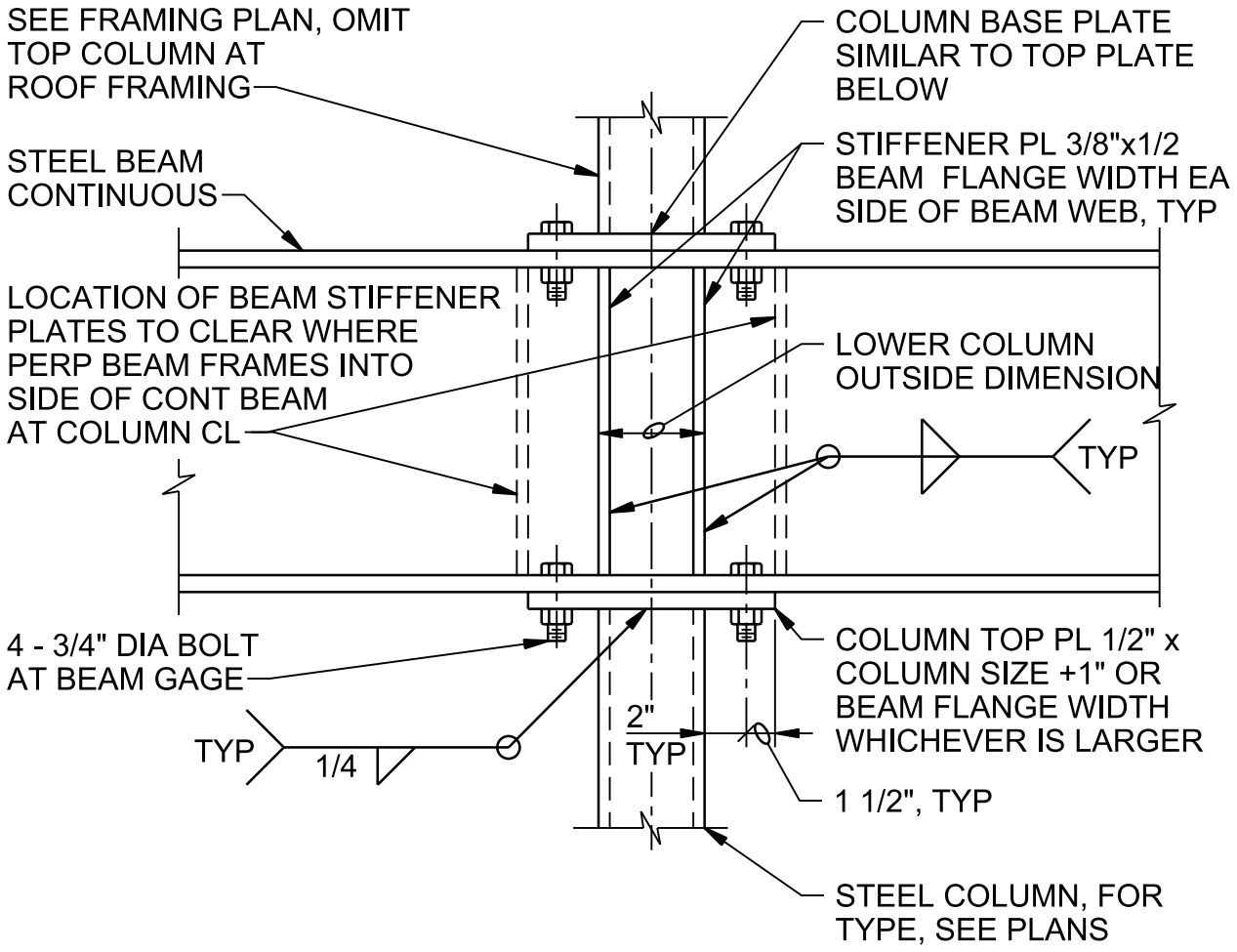

CONTINUOUS BEAM - COLUMN CONNECTION - STEEL

NTS

NATIONAL PARK SERVICE
GRAND CANYON NATIONAL PARK
SOUTH RIM

0512-042

© JACOBS

Jacobs

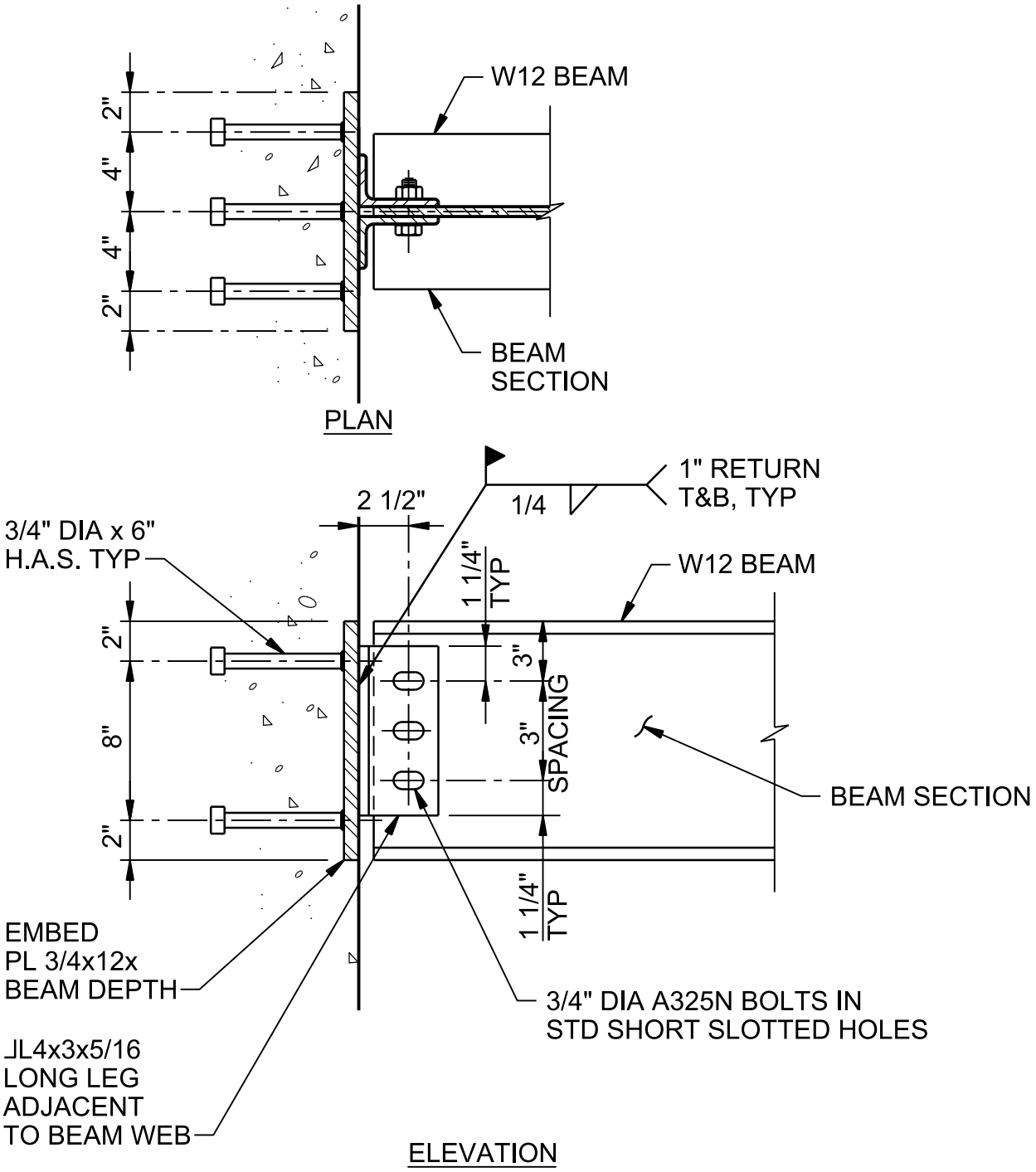

EMBEDDED CONNECTION - STEEL

NTS

NATIONAL PARK SERVICE
GRAND CANYON NATIONAL PARK
SOUTH RIM

0512-055

© JACOBS

Jacobs

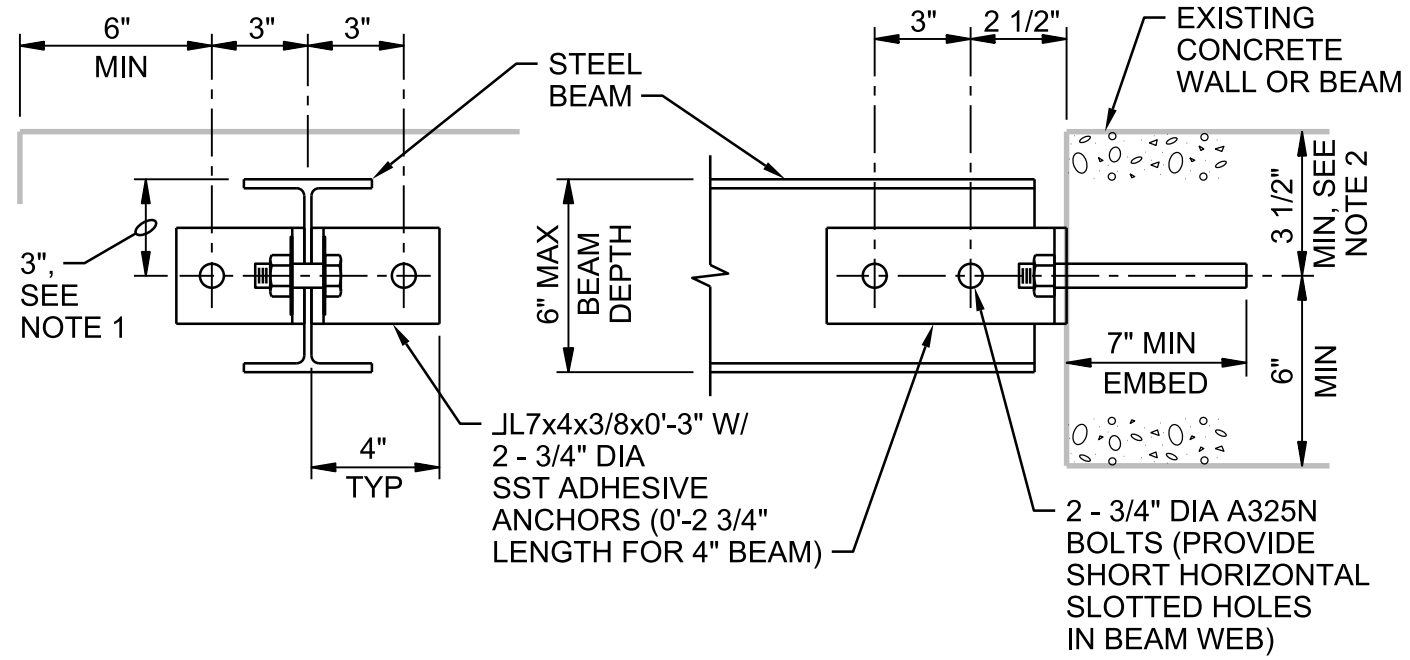

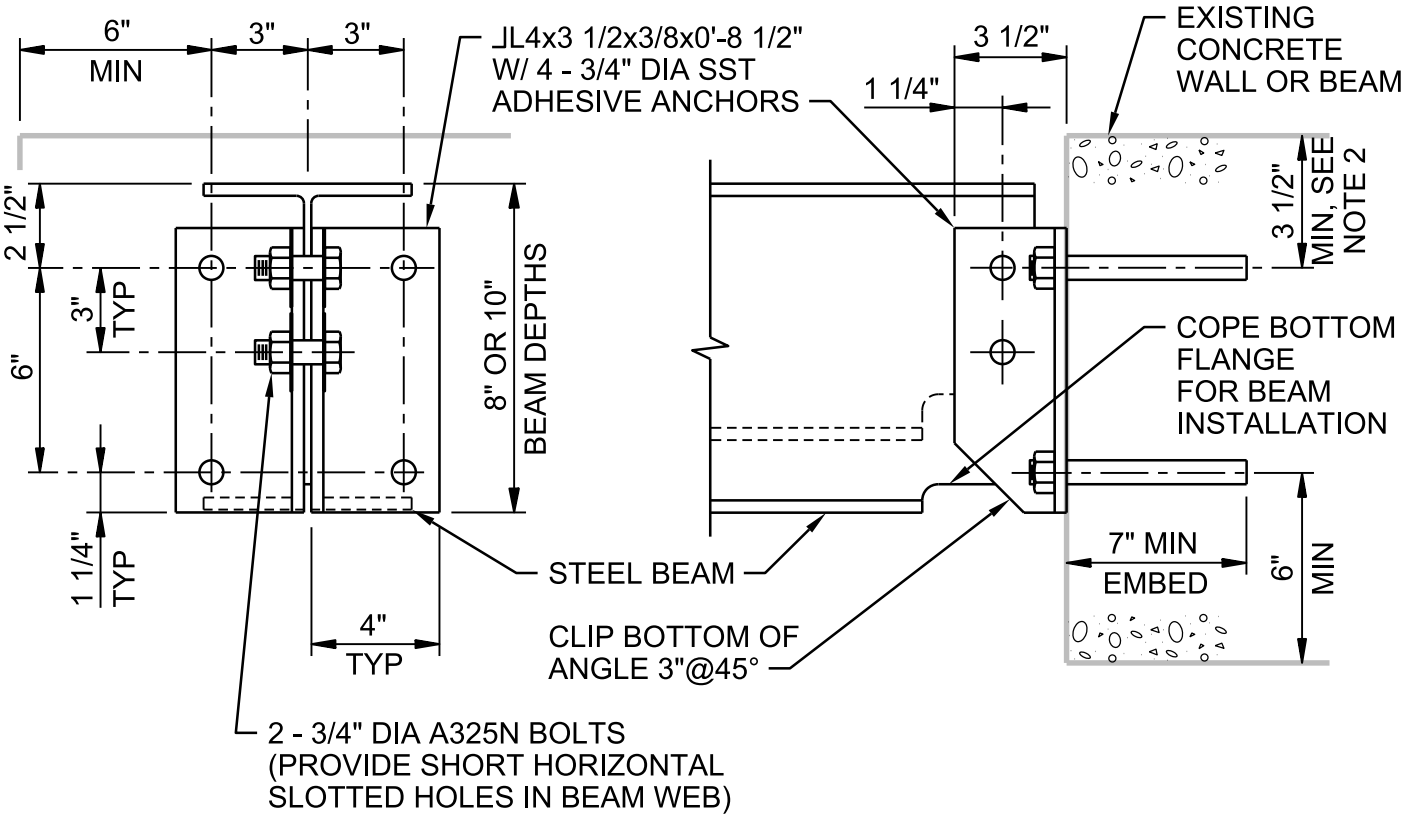

BEAM / WALL CONNECTION - STEEL

NTS

DETAIL 1 OF 2

0512-056

NATIONAL PARK SERVICE
GRAND CANYON NATIONAL PARK
SOUTH RIM

© JACOBS

Jacobs

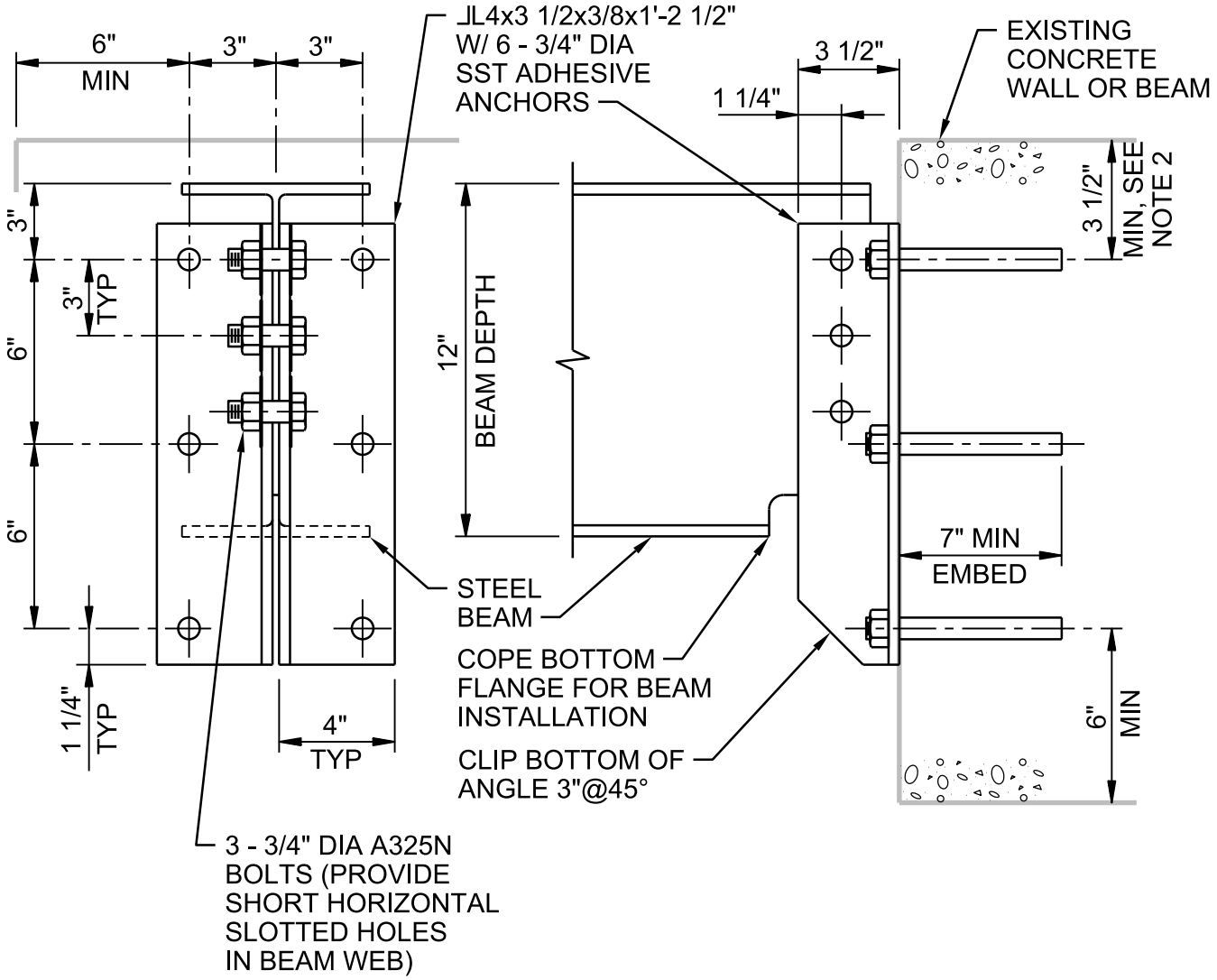

NOTES:

1. 3" DIMENSION TYPICAL EXCEPT 2 1/2" FOR 5" BEAMS AND 2" FOR 4" BEAMS.

2. DO NOT CUT EXISTING CONCRETE BEAM TOP REINFORCING DURING DRILL-IN ANCHOR INSTALLATION. FIELD LOCATE BEAM REINFORCING PRIOR TO FABRICATION WITH GROUND PENETRATING RADAR OR OTHER ACCEPTABLE MEANS. ADD LENGTH TO CLIP ANGLES AS REQUIRED TO LOWER ANCHORS TO CLEAR REINFORCING WHILE MAINTAINING SPACING AND EDGE DISTANCE AS SHOWN.

3. WHERE BOTH ENDS OF BEAM ARE ATTACHED TO A WALL, PROVIDE LONG HORIZONTALLY SLOTTED HOLES IN BEAM WEB AT ONE END. TIGHTEN NUTS SNUG TIGHT, BACK OFF 1/2 TURN, AND LOCK WITH DOUBLE NUT.

BEAM / WALL CONNECTION - STEEL

NTS

DETAIL 2 OF 2

NATIONAL PARK SERVICE
GRAND CANYON NATIONAL PARK
SOUTH RIM

0512-056

© JACOBS

Jacobs

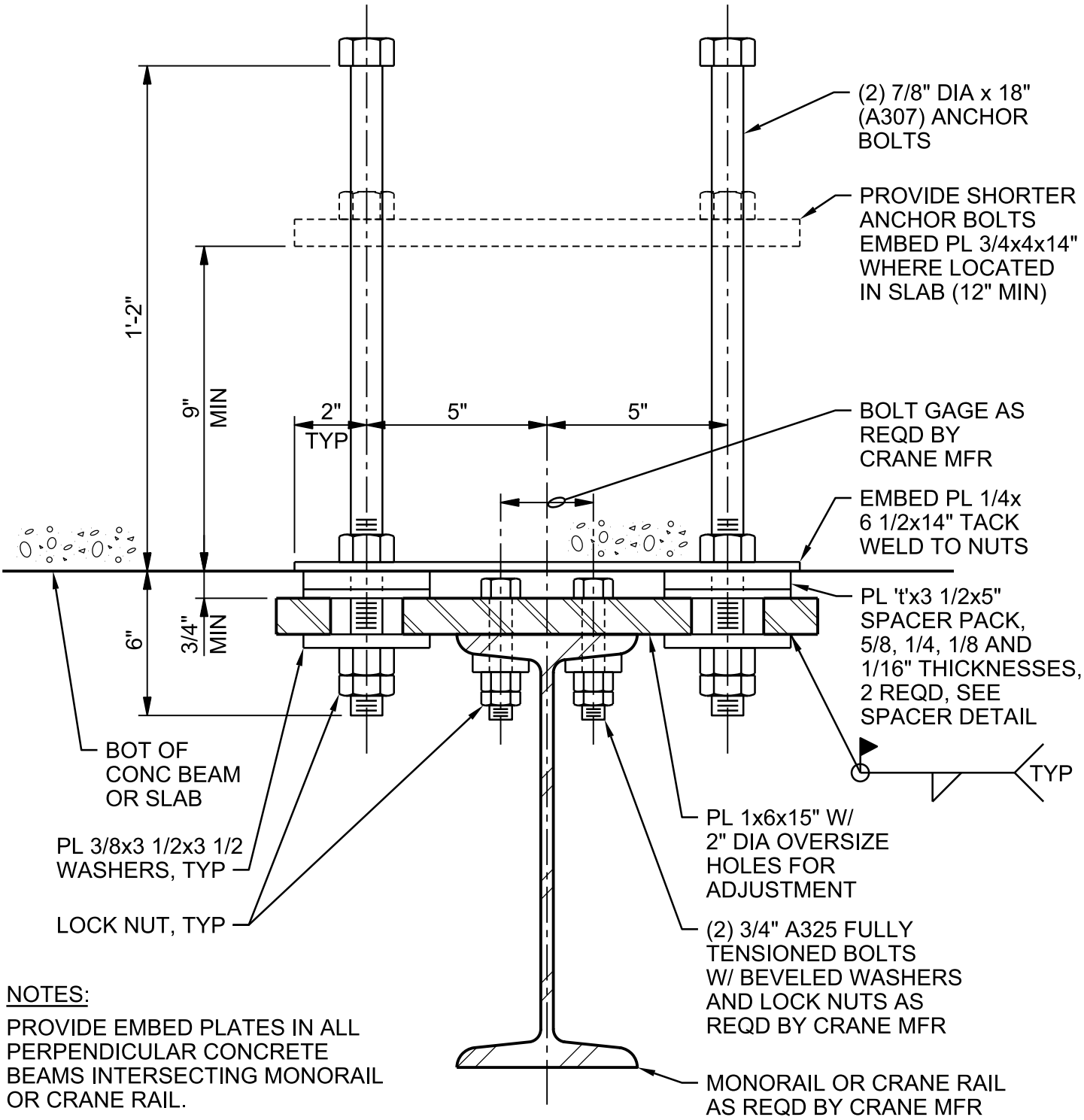

NOTES:

PROVIDE EMBED PLATES IN ALL PERPENDICULAR CONCRETE BEAMS INTERSECTING MONORAIL OR CRANE RAIL.

MONORAIL CONNECTION

MONORAIL DETAILS

NTS

DETAIL 1 OF 2

0512-101

NATIONAL PARK SERVICE
GRAND CANYON NATIONAL PARK
SOUTH RIM

© JACOBS

Jacobs

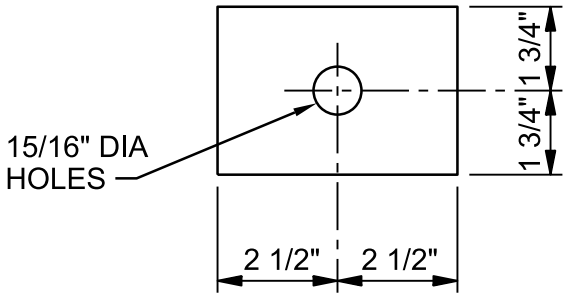

SPACER DETAIL

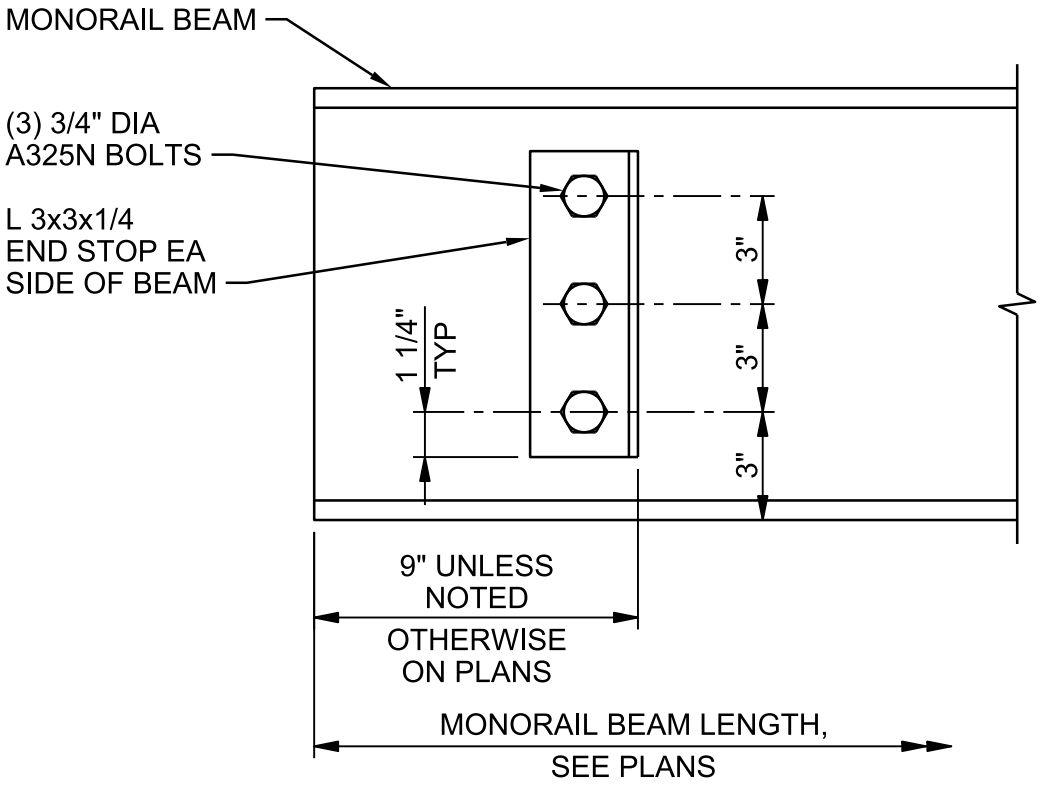

MONORAIL STOP

MONORAIL DETAILS

NTS

DETAIL 2 OF 2

0512-101

NATIONAL PARK SERVICE
GRAND CANYON NATIONAL PARK
SOUTH RIM

© JACOBS

Jacobs

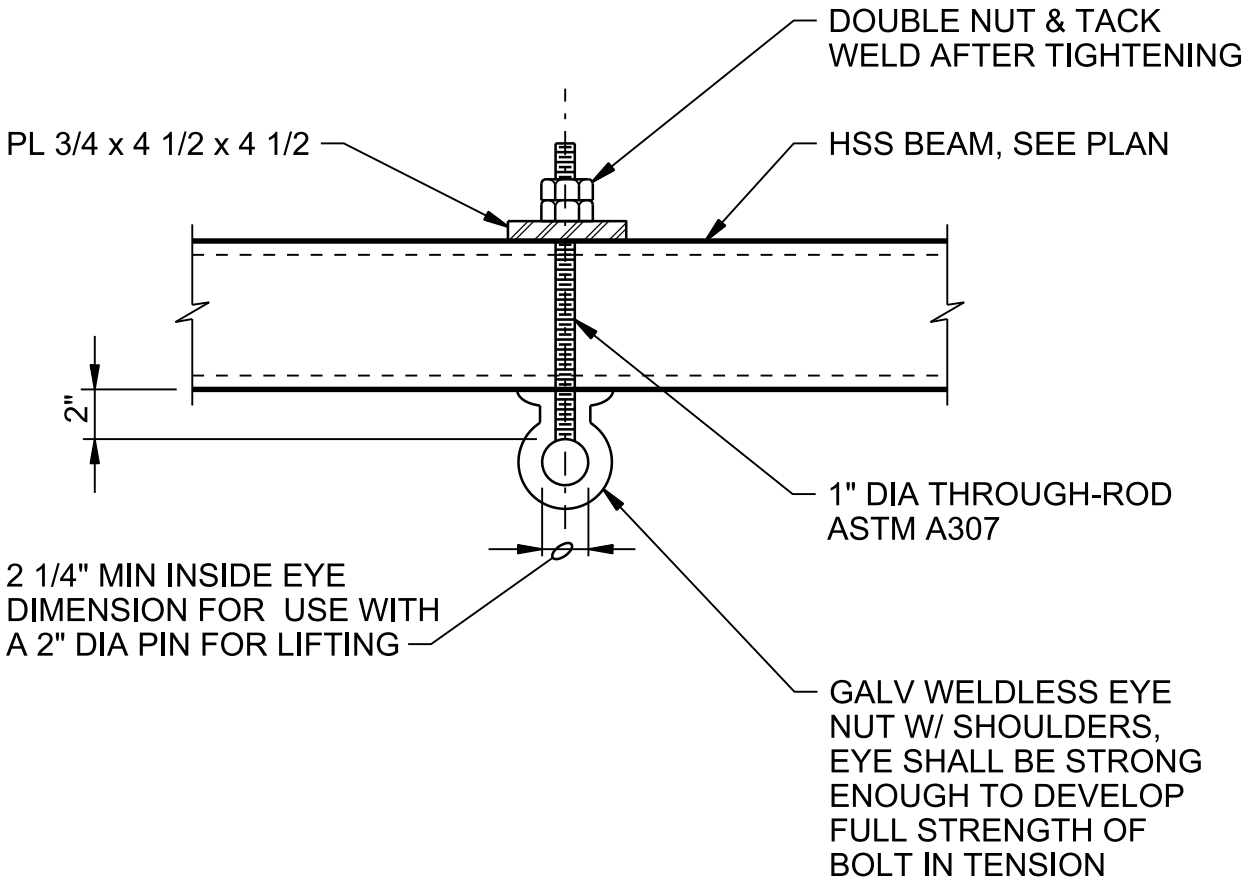

NOTES:

1. MAXIMUM LOAD RATING FOR LIFTING EYE 4000 LBS.
2. SUBMIT DATA ON EYE BOLT WITH SHOP DRAWINGS.

LIFTING EYE

NTS

NATIONAL PARK SERVICE
GRAND CANYON NATIONAL PARK
SOUTH RIM

0512-122

© JACOBS

Jacobs

ALUMINUM		
NOMINAL BEAM DEPTH, INCHES	ROWS OF BOLTS	LENGTH OF ANGLE
10	3	7 1/2"
7-8-9	2	5"
5-6	1	3"
4	1	2 3/4"

NOTES:

1. NUMBER OF ROWS IS EQUAL TO NUMBER OF BOLTS TO ENCLOSED WEB.
2. ALL FRAMING CONNECTIONS SHALL CONFORM TO SCHEDULE UNLESS DETAILED OTHERWISE ON FRAMING PLANS.

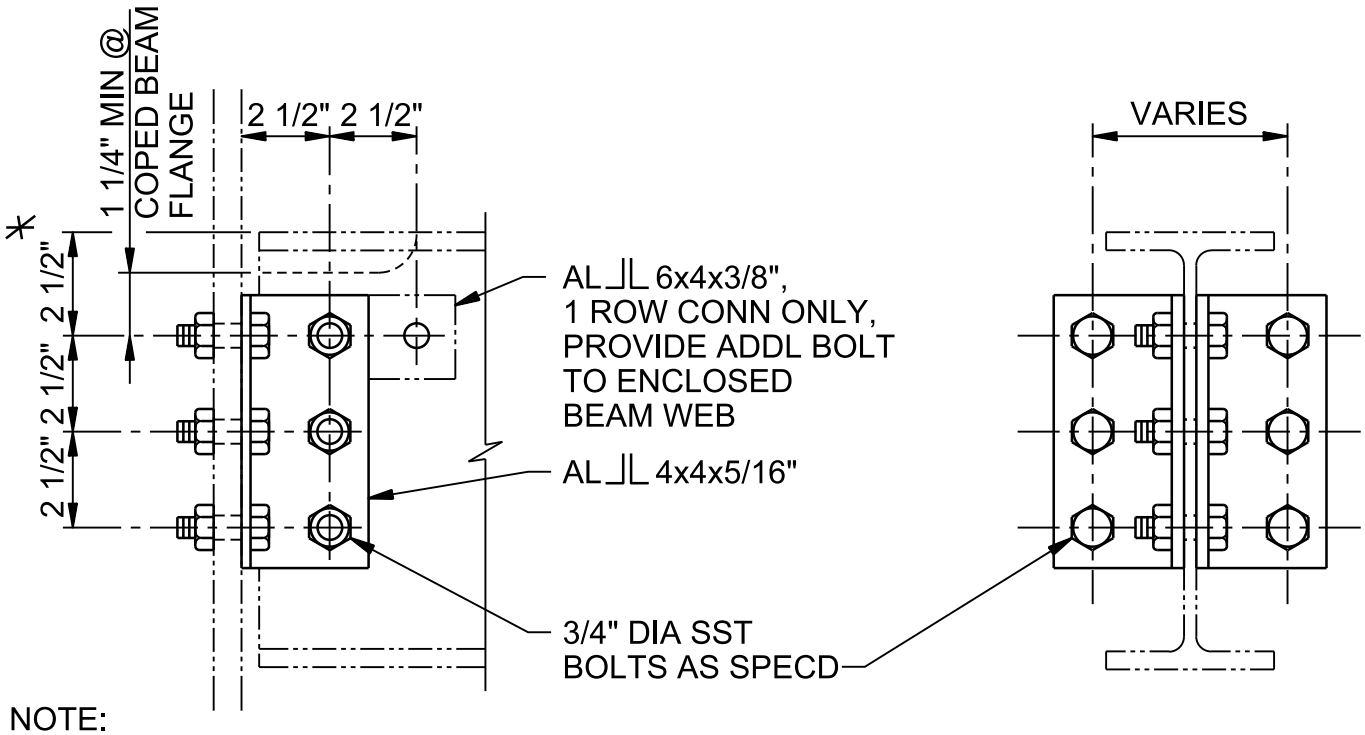

NOTE:

* 2 1/2" DIMENSION TYPICAL EXCEPT 2" FOR 4" BEAM.

TYPICAL BEAM CONNECTION - ALUMINUM

NTS

NATIONAL PARK SERVICE
GRAND CANYON NATIONAL PARK
SOUTH RIM

0514-020

© JACOBS

Jacobs

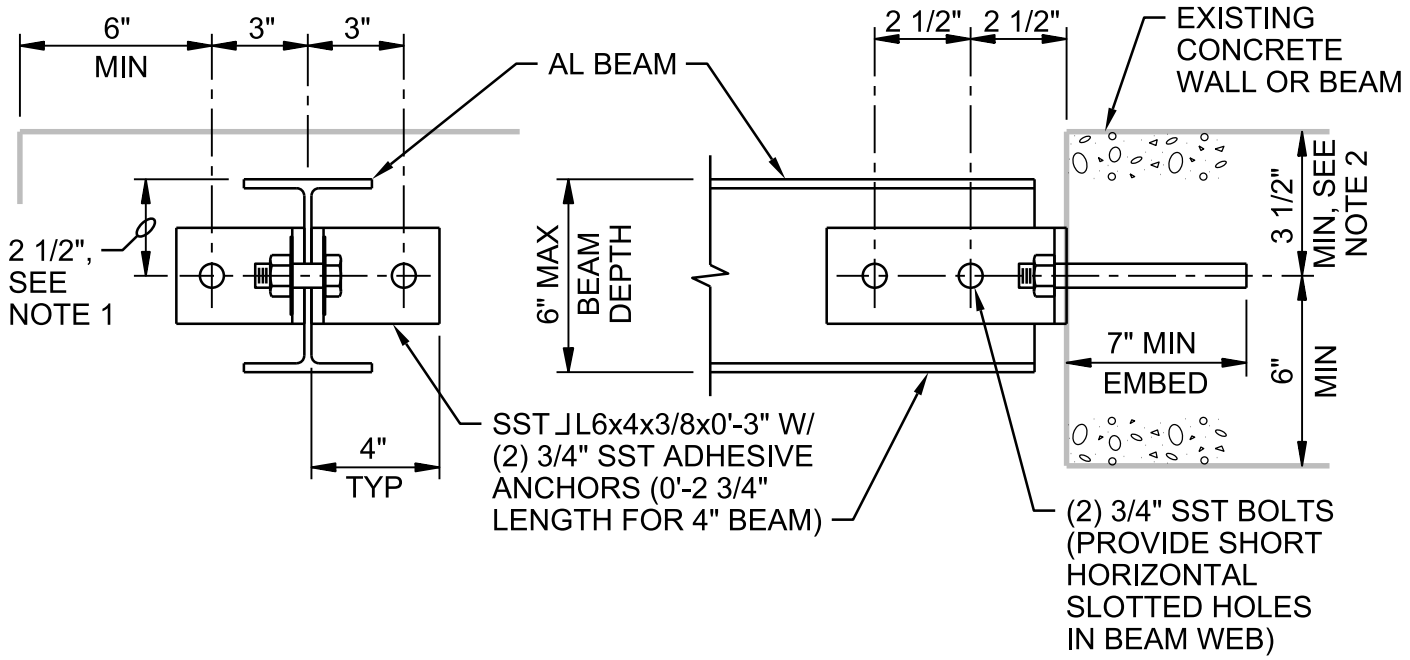

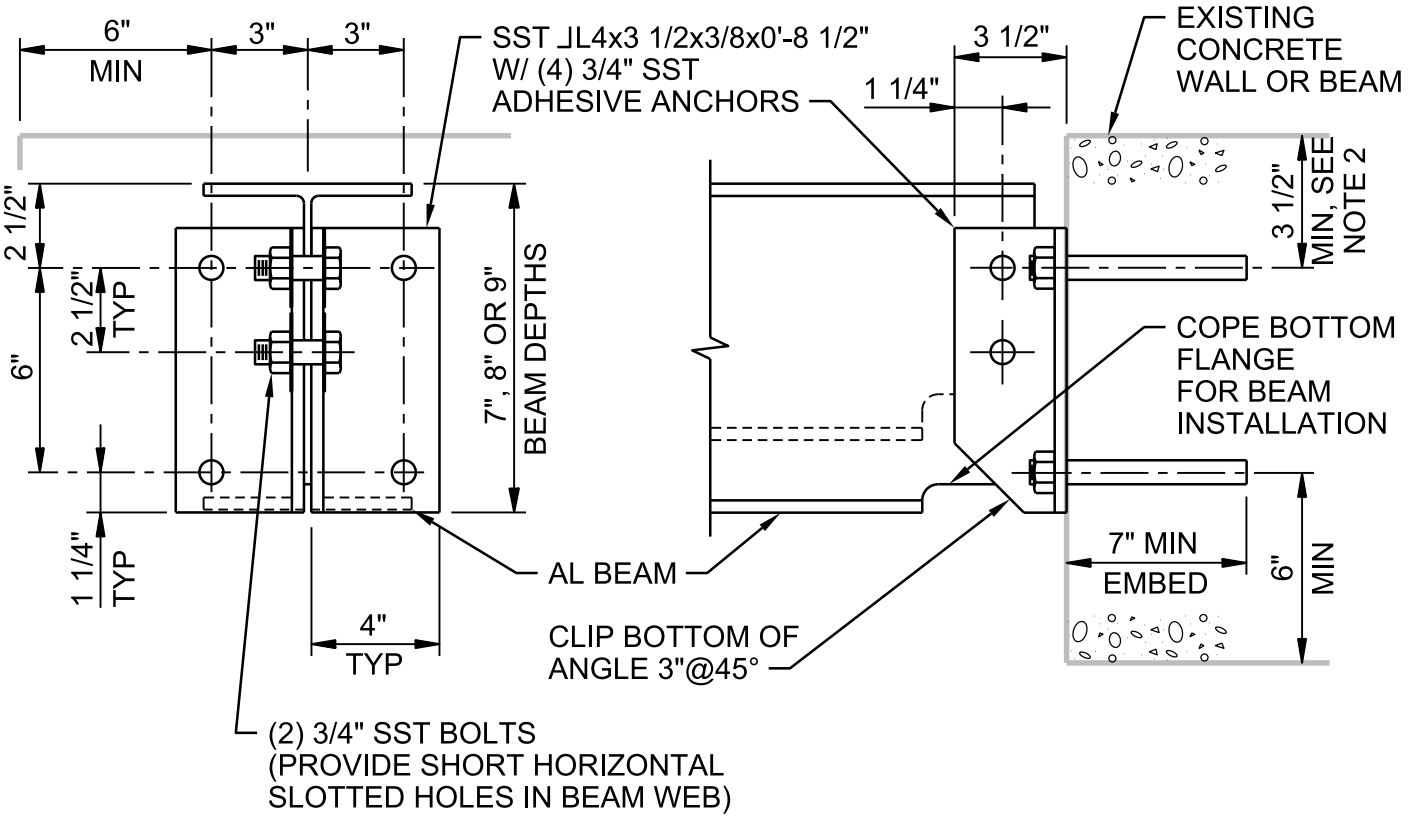

BEAM / WALL CONNECTION - ALUMINUM

NTS

DETAIL 1 OF 2

0514-056

NATIONAL PARK SERVICE
GRAND CANYON NATIONAL PARK
SOUTH RIM

© JACOBS

Jacobs

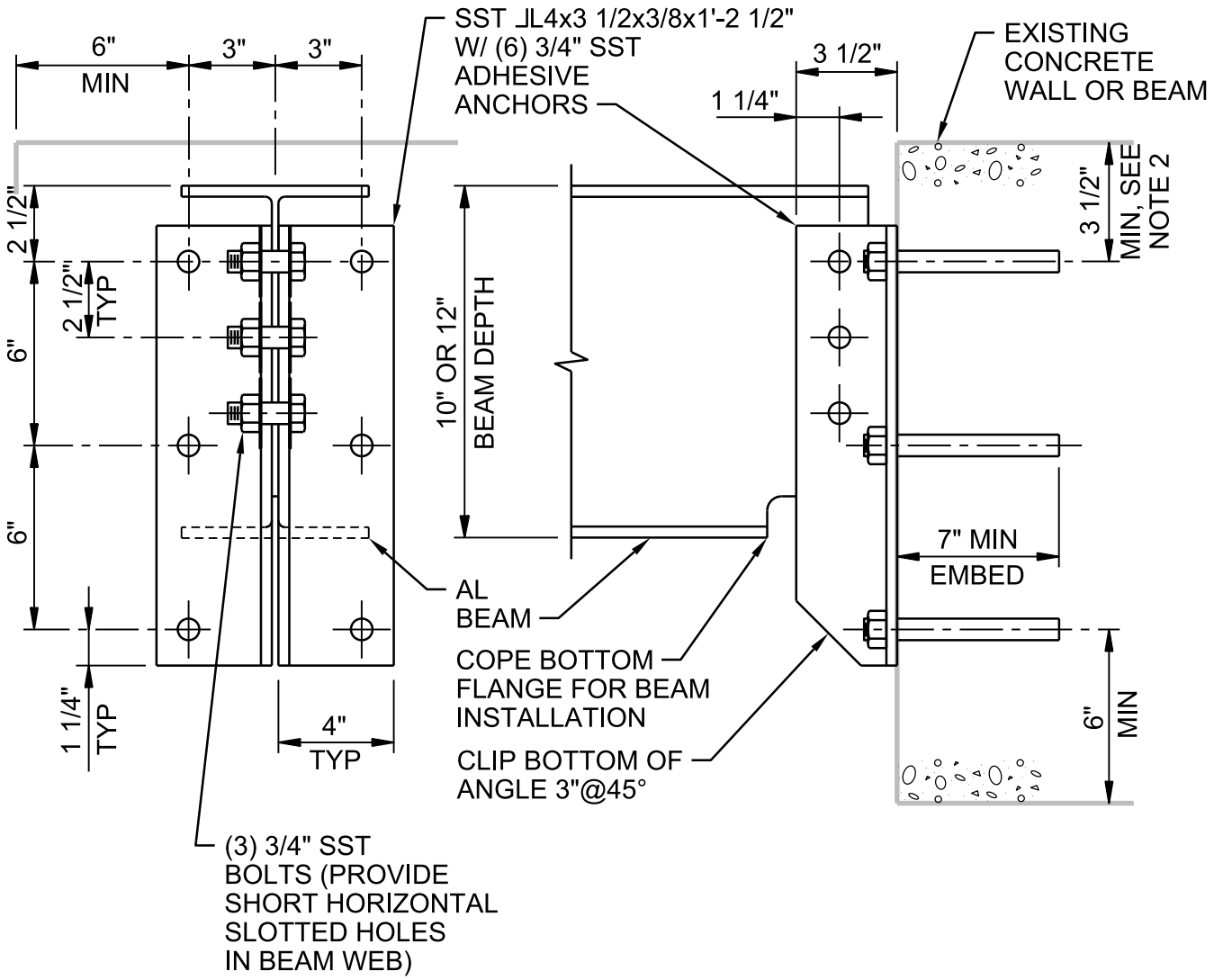

NOTES:

1. 2 1/2" DIMENSION TYPICAL EXCEPT 2" FOR 4" BEAMS.

2. DO NOT CUT EXISTING CONCRETE BEAM TOP REINFORCING DURING DRILL-IN ANCHOR INSTALLATION. FIELD LOCATE BEAM REINFORCING PRIOR TO FABRICATION WITH GROUND PENETRATING RADAR OR OTHER ACCEPTABLE MEANS. ADD LENGTH TO CLIP ANGLES AS REQUIRED TO LOWER ANCHORS TO CLEAR REINFORCING WHILE MAINTAINING SPACING AND EDGE DISTANCE AS SHOWN.

3. WHERE BOTH ENDS OF BEAM ARE ATTACHED TO A WALL, PROVIDE LONG HORIZONTALLY SLOTTED HOLES IN BEAM WEB AT ONE END. TIGHTEN NUTS SNUG TIGHT, BACK OFF 1/2 TURN, AND LOCK WITH DOUBLE NUT.

4. PROVIDE PROTECTION FOR DISSIMILAR MATERIALS PER SPECIFICATIONS.

BEAM / WALL CONNECTION - ALUMINUM

NTS

DETAIL 2 OF 2

NATIONAL PARK SERVICE
GRAND CANYON NATIONAL PARK
SOUTH RIM

0514-056

© JACOBS

Jacobs

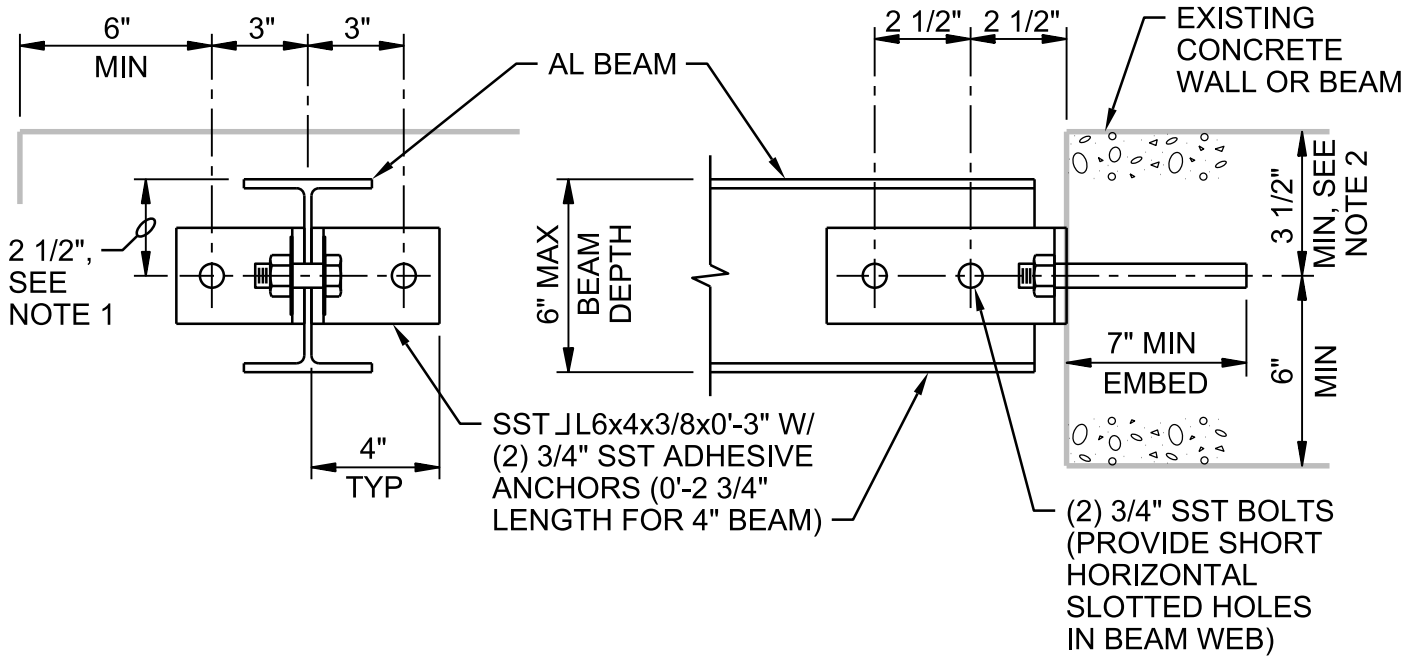

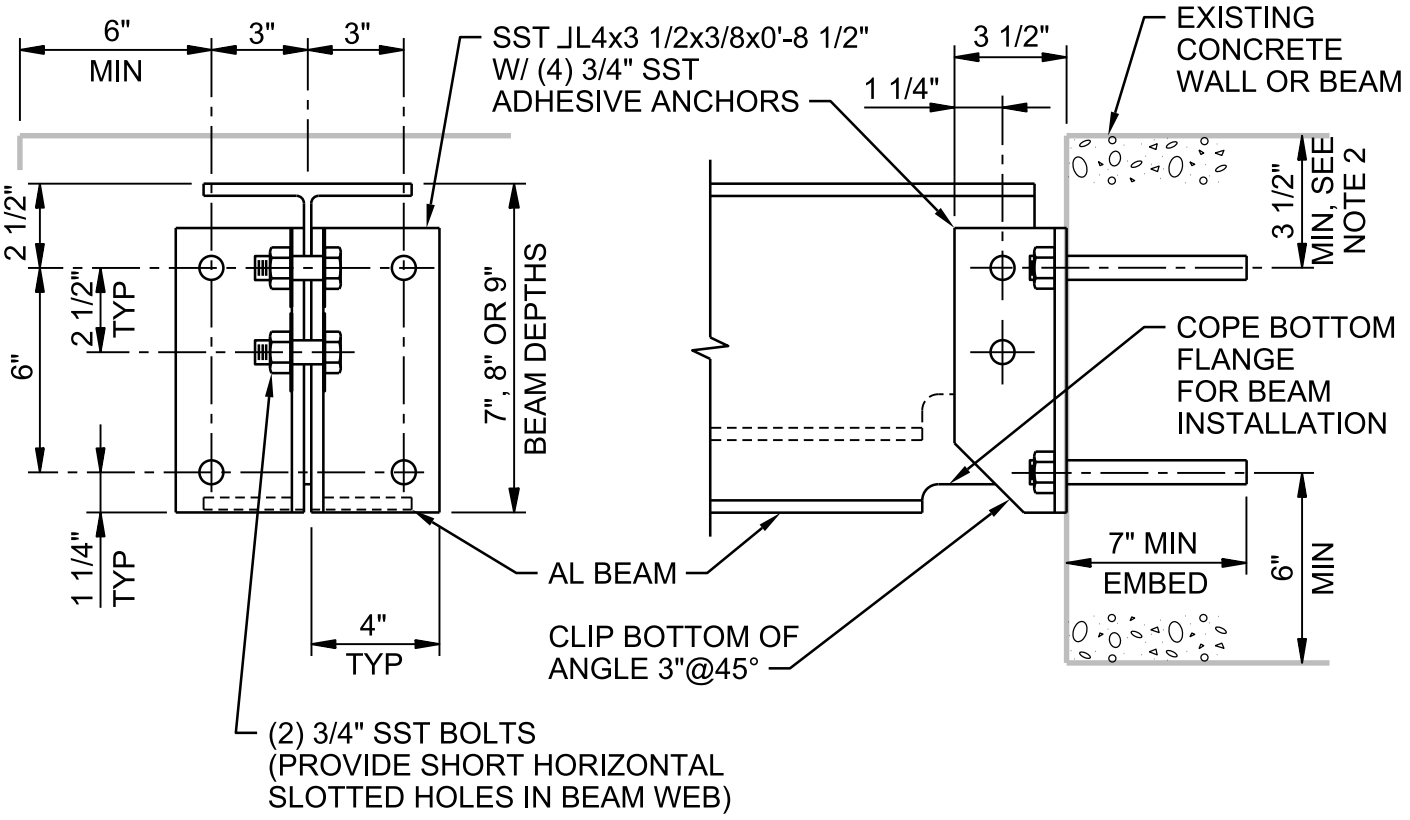

BEAM / WALL SIDE CONNECTION - ALUMINUM

NTS

DETAIL 1 OF 2

0514-057

NATIONAL PARK SERVICE
GRAND CANYON NATIONAL PARK
SOUTH RIM

© JACOBS

Jacobs

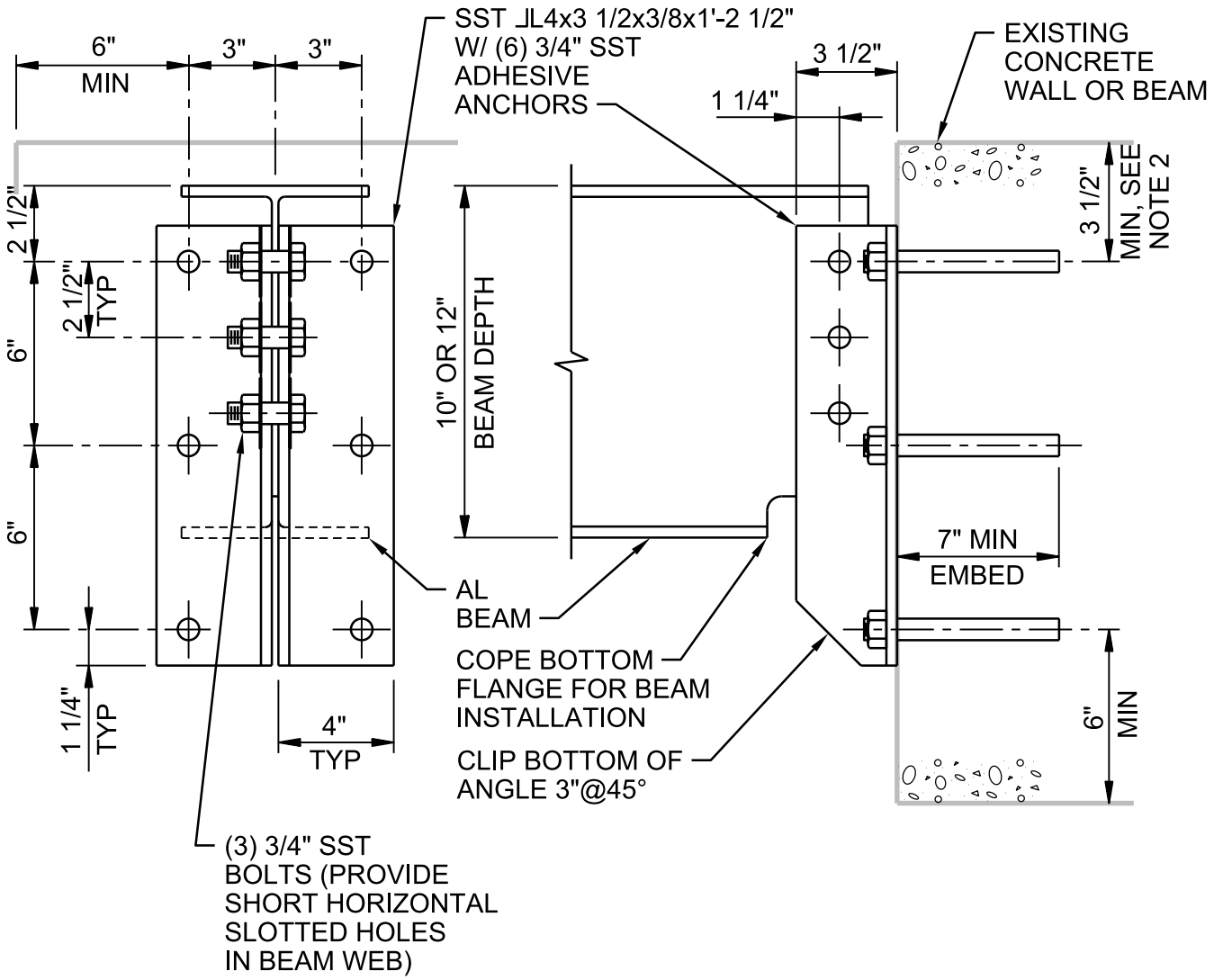

NOTES:

1. 2 1/2" DIMENSION TYPICAL EXCEPT 2" FOR 4" BEAMS.

2. DO NOT CUT EXISTING CONCRETE BEAM TOP REINFORCING DURING DRILL-IN ANCHOR INSTALLATION. FIELD LOCATE BEAM REINFORCING PRIOR TO FABRICATION WITH GROUND PENETRATING RADAR OR OTHER ACCEPTABLE MEANS. ADD LENGTH TO CLIP ANGLES AS REQUIRED TO LOWER ANCHORS TO CLEAR REINFORCING WHILE MAINTAINING SPACING AND EDGE DISTANCE AS SHOWN.

3. WHERE BOTH ENDS OF BEAM ARE ATTACHED TO A WALL, PROVIDE LONG HORIZONTALLY SLOTTED HOLES IN BEAM WEB AT ONE END. TIGHTEN NUTS SNUG TIGHT, BACK OFF 1/2 TURN, AND LOCK WITH DOUBLE NUT.

4. PROVIDE PROTECTION FOR DISSIMILAR MATERIALS PER SPECIFICATIONS.

BEAM / WALL SIDE CONNECTION - ALUMINUM

NTS

DETAIL 2 OF 2

NATIONAL PARK SERVICE
GRAND CANYON NATIONAL PARK
SOUTH RIM

0514-057

© JACOBS

Jacobs

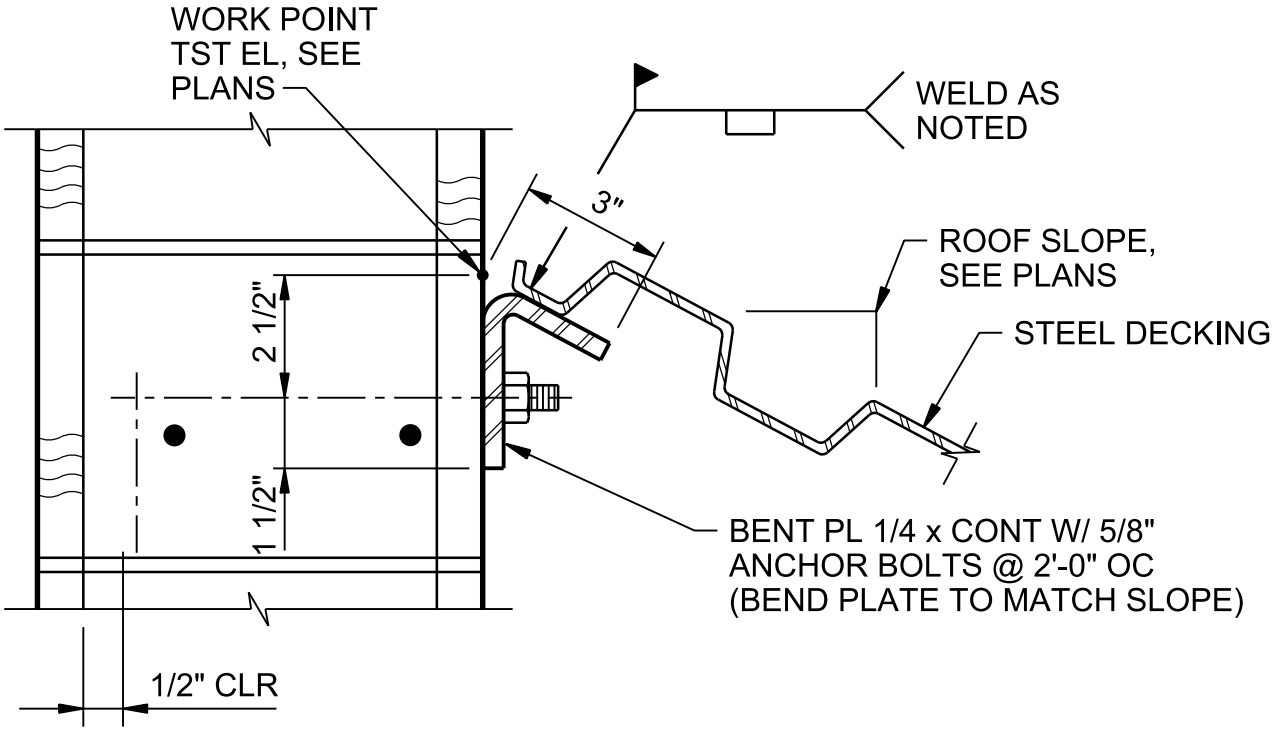

DECKING AT ANGLE TO WALL

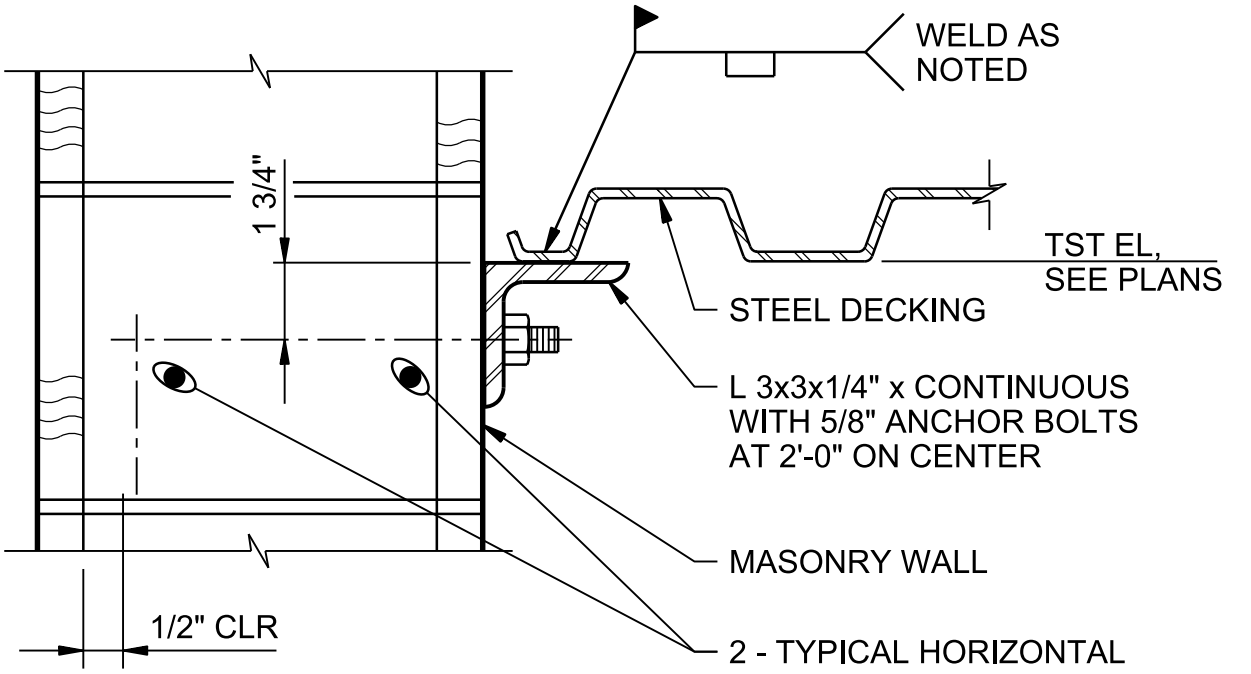

DECKING NORMAL TO WALL

DECKING LEDGER SUPPORT ANGLE

NTS

NATIONAL PARK SERVICE
GRAND CANYON NATIONAL PARK
SOUTH RIM

0531-001

© JACOBS

Jacobs

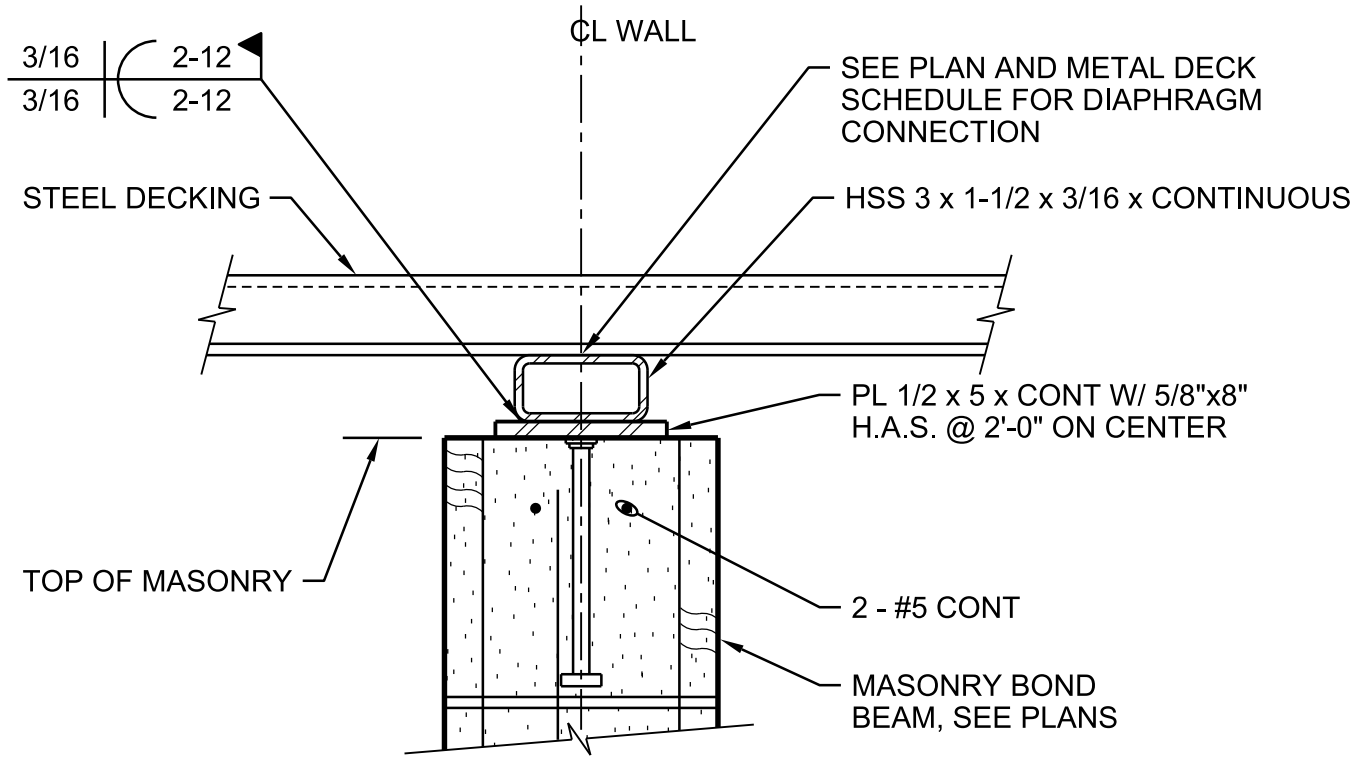

NOTES:

1. WHERE DECKING SPAN IS PARALLEL TO WALL, LOCATE VALLEY OF DECKING CENTERED ON WALL.
2. FOR CLOSURE, SEE (0531-016) TYPICAL UNLESS OTHERWISE NOTED . NOT SHOWN FOR CLARITY.

METAL DECK BEARING WALL TOP CONNECTION

NTS

NATIONAL PARK SERVICE
GRAND CANYON NATIONAL PARK
SOUTH RIM

0531-002

© JACOBS

Jacobs

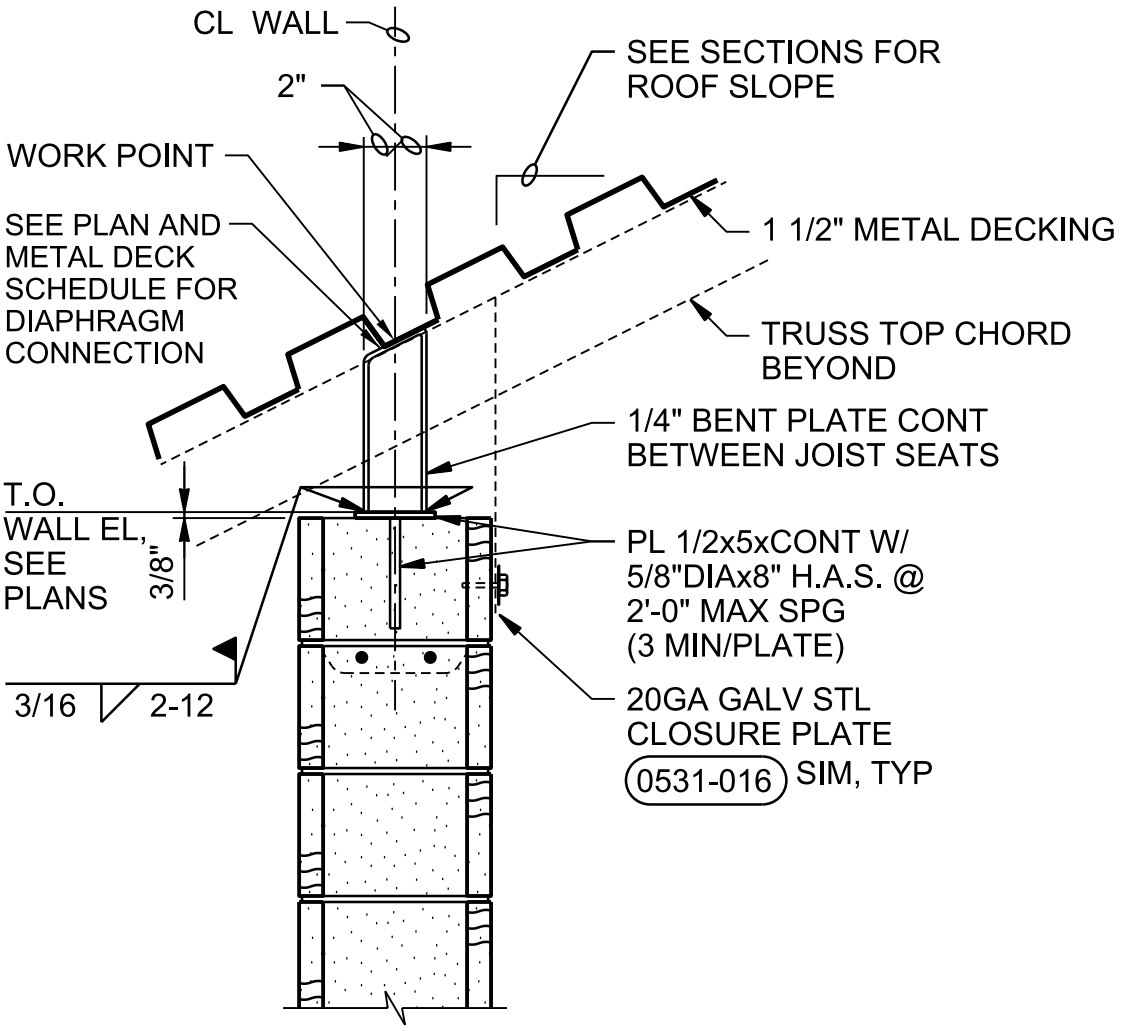

METAL DECK/WALL CONNECTION

NTS

NATIONAL PARK SERVICE
GRAND CANYON NATIONAL PARK
SOUTH RIM

0531-003

© JACOBS

Jacobs

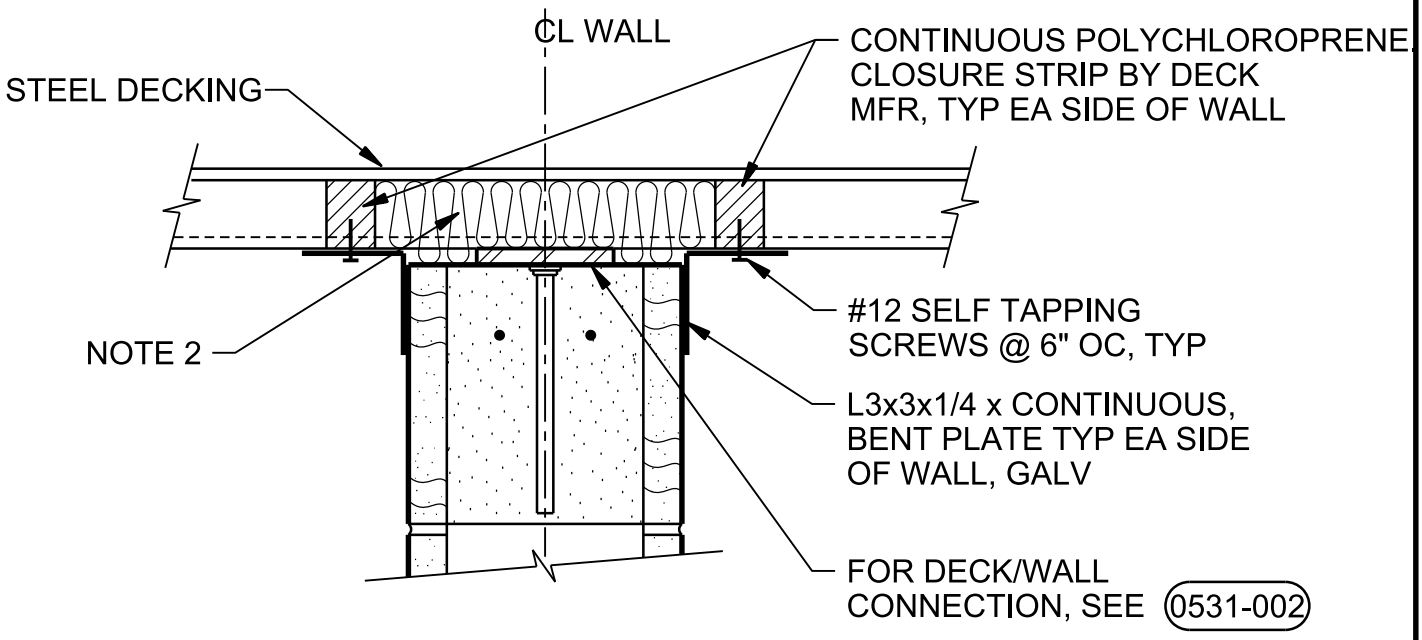

NOTE:

1. WALL CLOSURE NOT REQUIRED WHERE DECKING IS PARALLEL TO WALL.

2. PROVIDE FIRESAFING AT FIRE-RATED WALLS. PROVIDE MINERAL FIBER INSULATION AT NON-FIRE-RATED WALLS.

METAL DECK/BEARING WALL CLOSURE

NTS

NATIONAL PARK SERVICE
GRAND CANYON NATIONAL PARK
SOUTH RIM

0531-015

© JACOBS

Jacobs

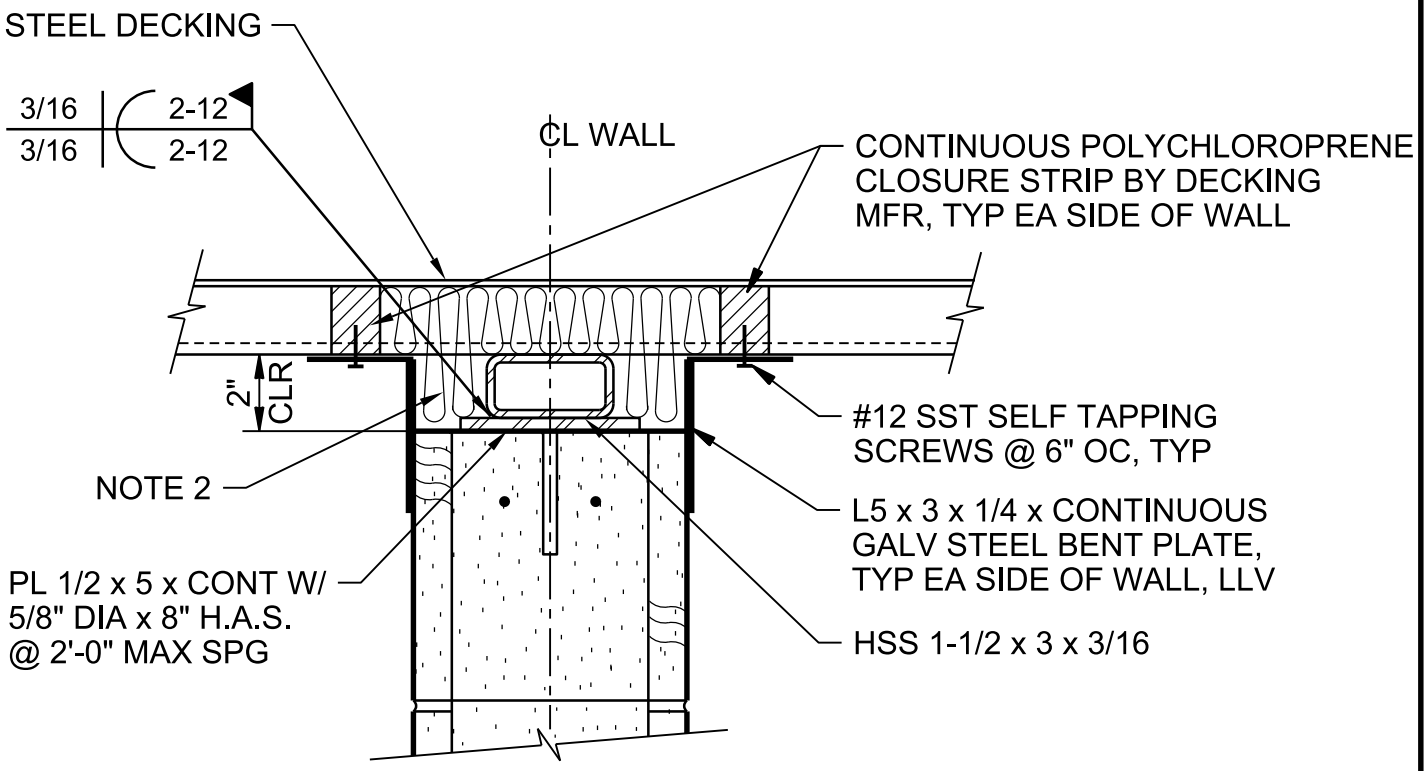

NOTE:

1. POLYCHLOROPRENE CLOSURE STRIPS NOT REQUIRED WHERE DECKING SPAN IS PARALLEL TO WALL.
2. PROVIDE FIRESAFING AT FIRE-RATED WALLS. PROVIDE MINERAL FIBER INSULATION AT NON-FIRE-RATED WALLS.

METAL DECK/BEARING WALL CLOSURE PLATE

NTS

NATIONAL PARK SERVICE
GRAND CANYON NATIONAL PARK
SOUTH RIM

0531-016

© JACOBS

Jacobs

NOTES:

1. PROVIDE PROTECTION FOR DISSIMILAR METALS AND FOR ALUMINUM IN CONTACT WITH CONCRETE PER SPECIFICATIONS.
2. AMERICAN STANDARD C12x7.41 ALUMINUM STRINGERS TYPICAL EXCEPT WHERE OTHERWISE NOTED ON PLANS.
3. STAIR RAILING NOT SHOWN.
4. STAIR MANUFACTURER TO COORDINATE BOLTED TREADS AND RAILING CONNECTIONS.
5. ALL FASTENERS SHALL BE STAINLESS STEEL.
6. FIELD VERIFY DIMENSIONS AND ELEVATIONS PRIOR TO FABRICATION.
7. FOR RISER PLATE SEE PARTIAL RISER PLATE DETAIL UNLESS NOTED OTHERWISE. CLEARANCE BETWEEN TOP OF RISER PLATE AND BOTTOM OF TREAD TO BE 3 3/4" MAXIMUM. FOR STAIRS WITH PICKET RAILING EXTEND RISER PLATE PER FULL RISER PLATE DETAIL.

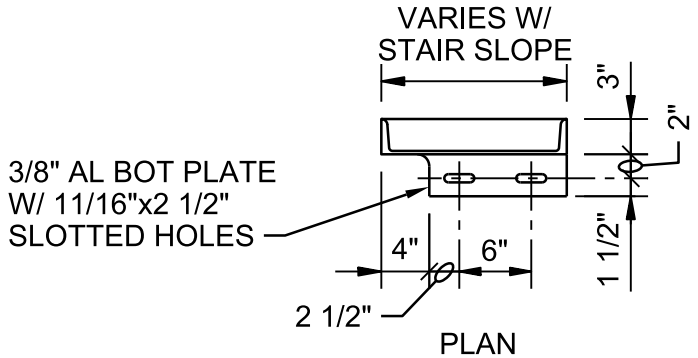

PLAN

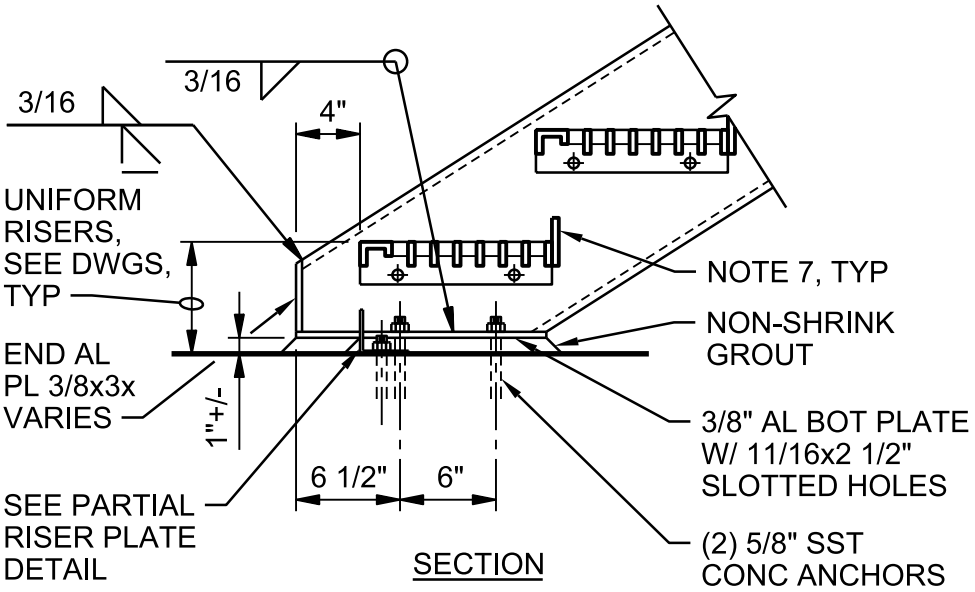

SECTION

BOTTOM CONNECTION

STAIR DETAILS - ALUMINUM

NTS

DETAIL 1 OF 5

0551-001

NATIONAL PARK SERVICE
GRAND CANYON NATIONAL PARK
SOUTH RIM

© JACOBS

Jacobs

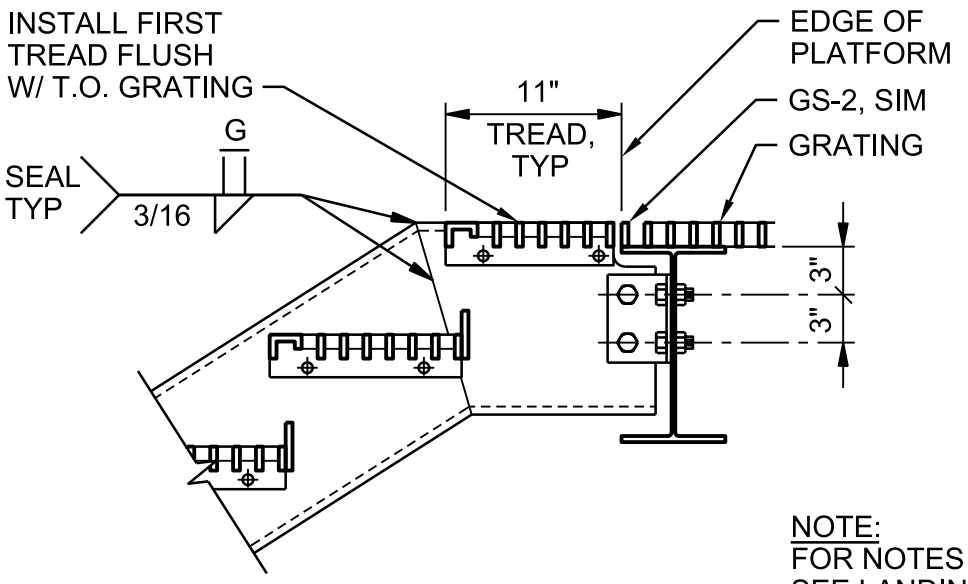

NOTE:
FOR NOTES NOT SHOWN
SEE LANDING CONNECTION.

TOP CONNECTION - ALUMINUM

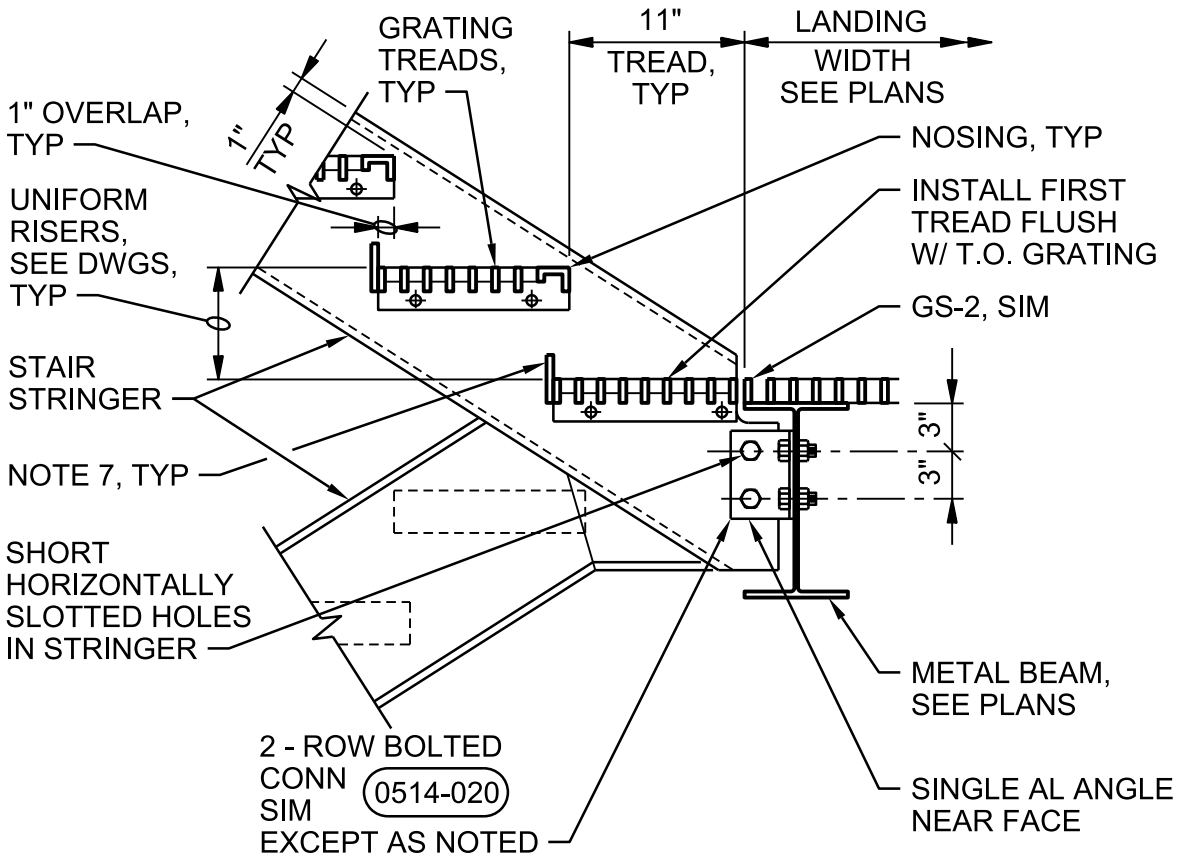

LANDING CONNECTION - ALUMINUM

STAIR DETAILS - ALUMINUM

NTS

DETAIL 2 OF 5

0551-001

NATIONAL PARK SERVICE
GRAND CANYON NATIONAL PARK
SOUTH RIM

© JACOBS

Jacobs

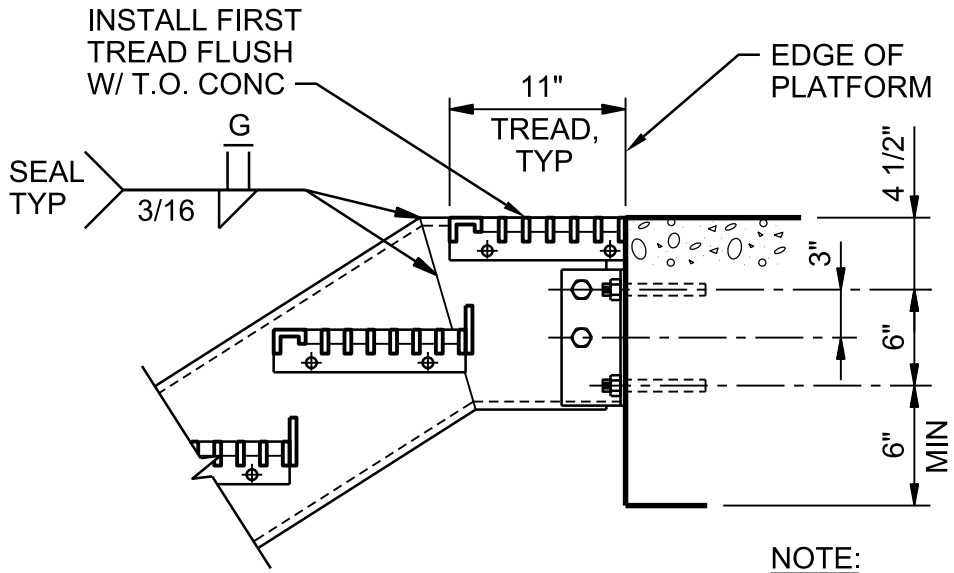

NOTE:
FOR NOTES NOT SHOWN
SEE LANDING CONNECTION.

TOP CONNECTION - CONCRETE

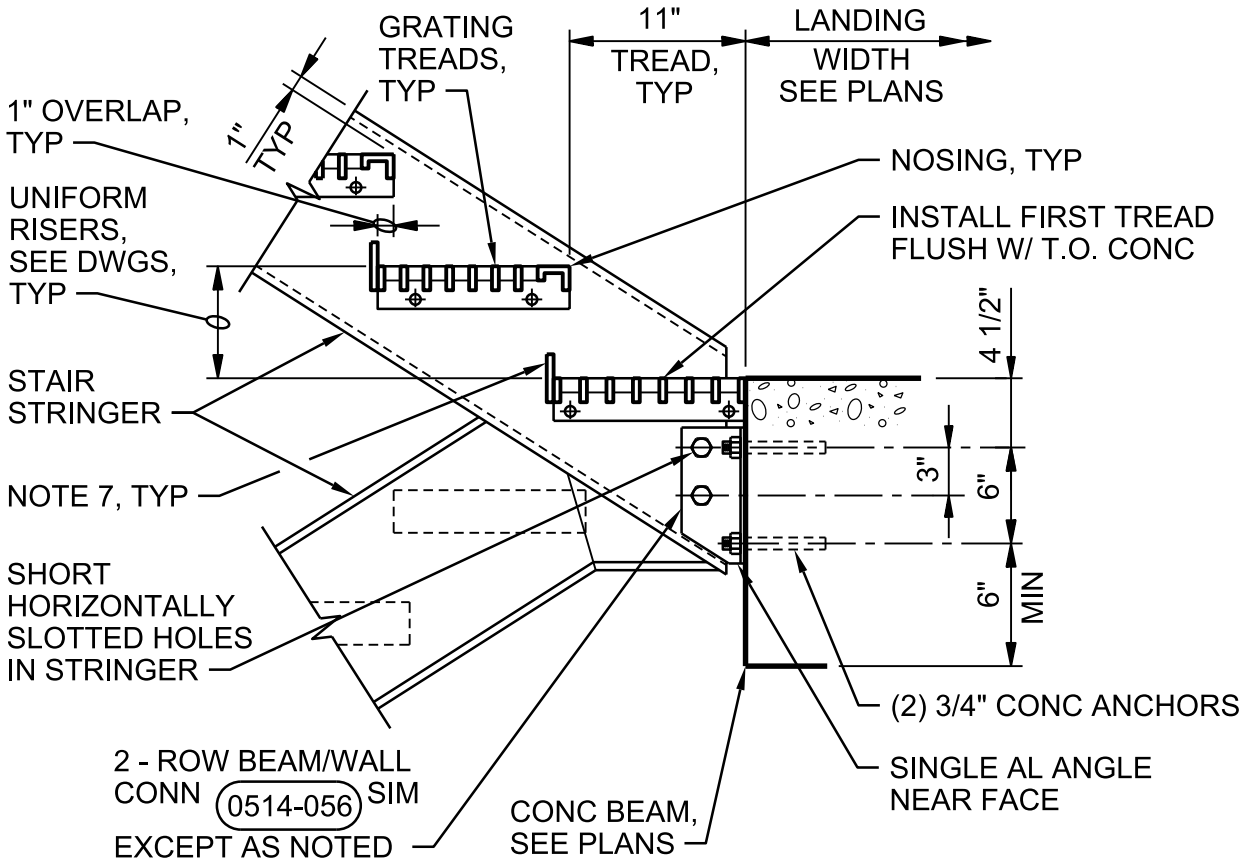

LANDING CONNECTION - CONCRETE

STAIR DETAILS - ALUMINUM

NTS

DETAIL 3 OF 5

0551-001

NATIONAL PARK SERVICE
GRAND CANYON NATIONAL PARK
SOUTH RIM

© JACOBS

Jacobs

STAIRWAY WIDTH	TREAD BEARING BARS
	ALUMINUM TREAD
2'-3" OR LESS	1" x 3/16"
2'-9" OR LESS	1 1/4" x 3/16"
3'-3" OR LESS	1 1/2" x 3/16"
4'-7" OR LESS	1 3/4" x 3/16"

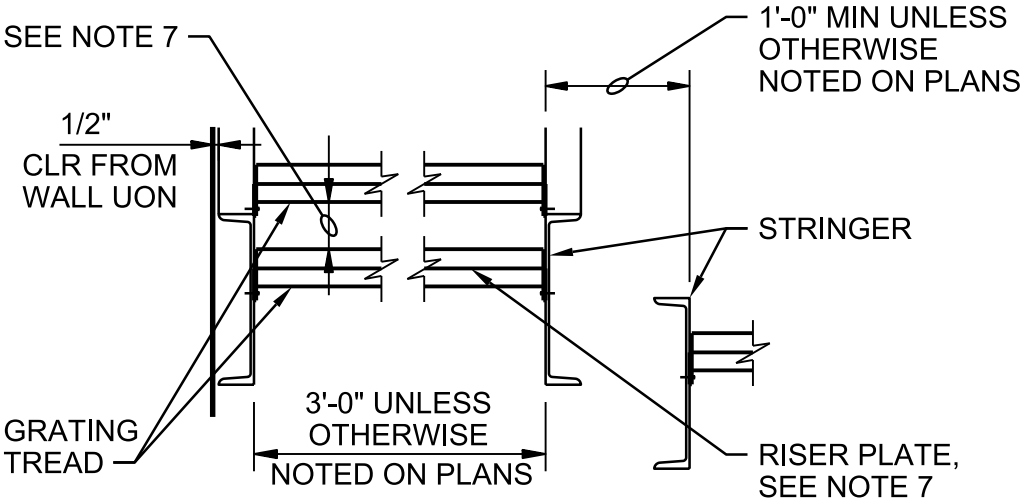

STAIR TREADS

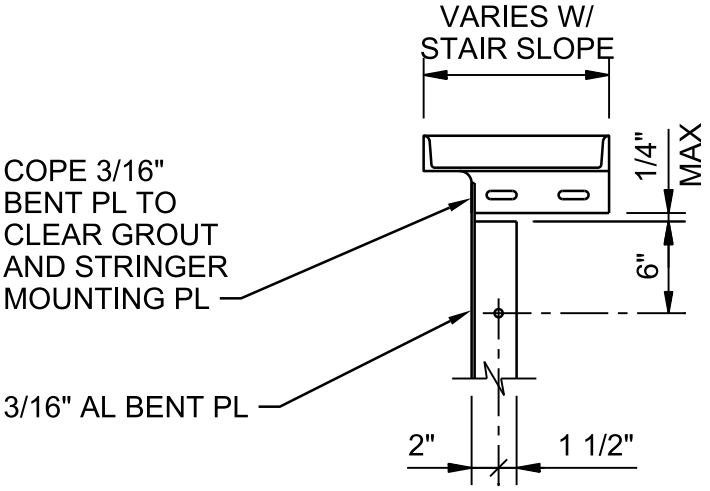

PLAN

BOTTOM CLOSURE PLATE

STAIR DETAILS - ALUMINUM

NTS

DETAIL 4 OF 5

0551-001

NATIONAL PARK SERVICE
GRAND CANYON NATIONAL PARK
SOUTH RIM

© JACOBS

Jacobs

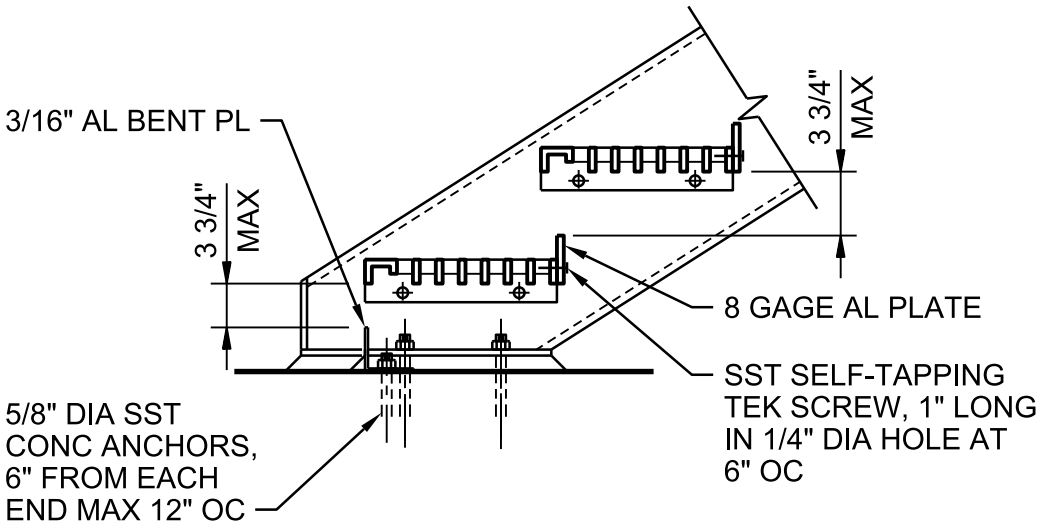

PARTIAL RISER PLATE

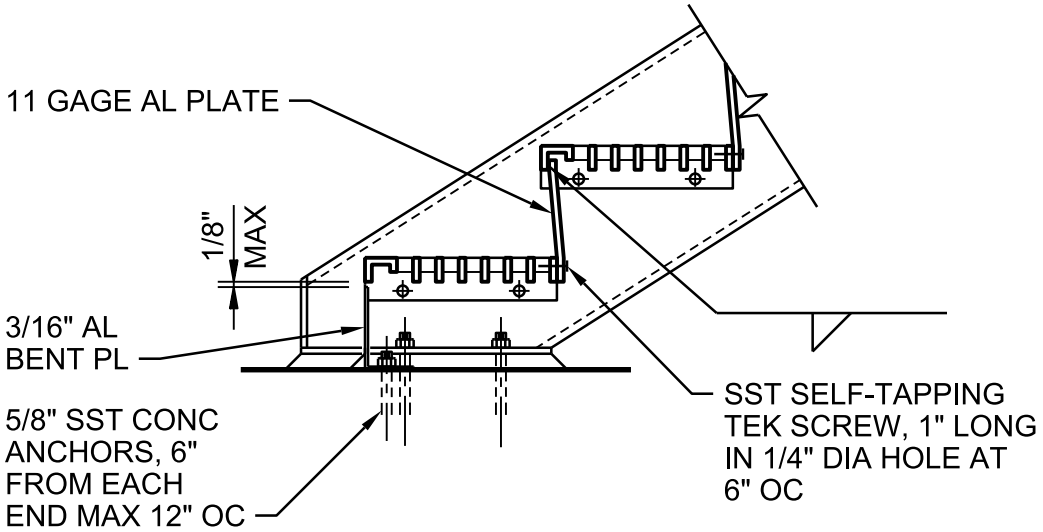

FULL RISER PLATE

STAIR DETAILS - ALUMINUM

NTS

DETAIL 5 OF 5

0551-001

NATIONAL PARK SERVICE
GRAND CANYON NATIONAL PARK
SOUTH RIM

© JACOBS

Jacobs

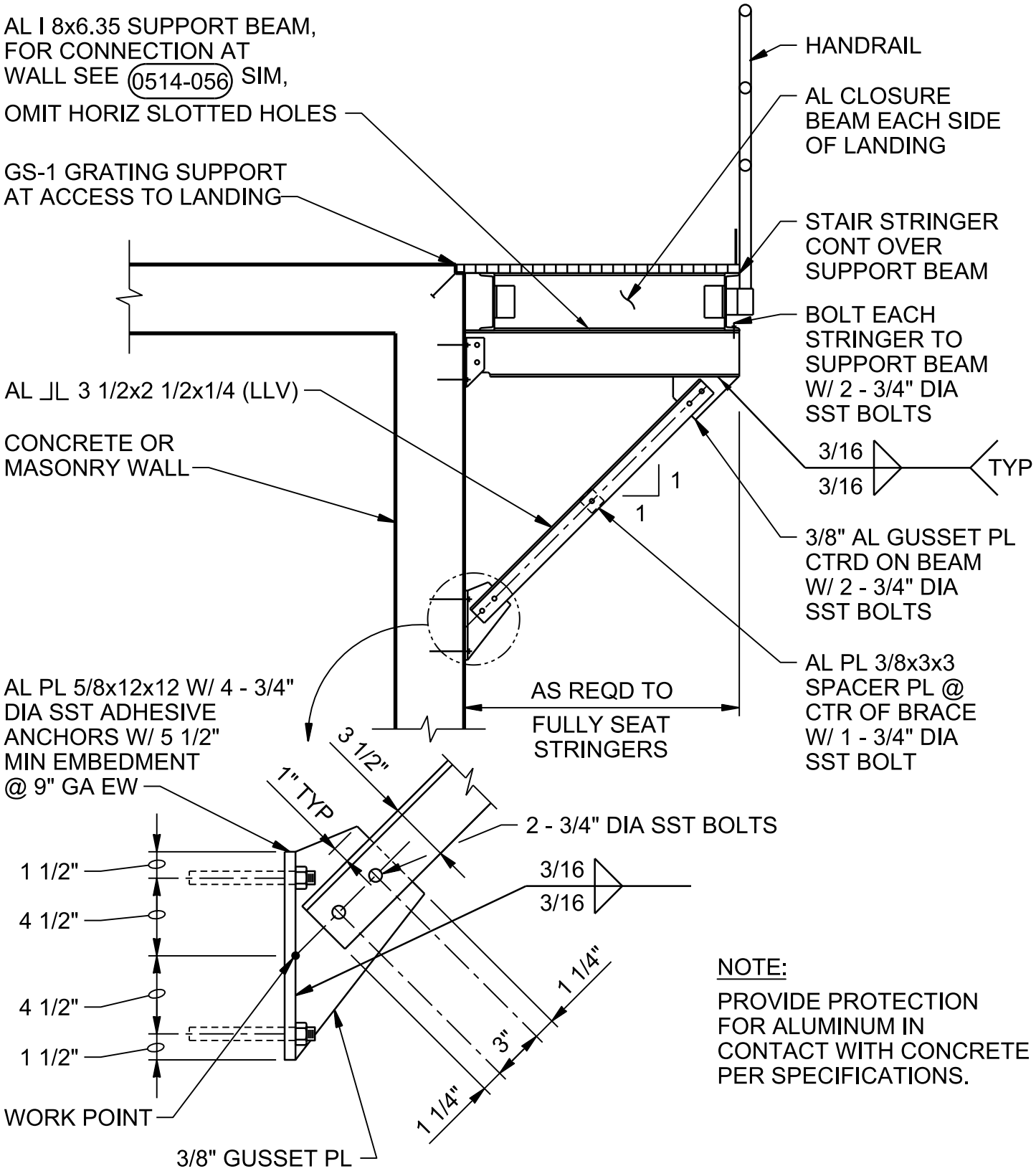

NOTE:

PROVIDE PROTECTION FOR ALUMINUM IN CONTACT WITH CONCRETE PER SPECIFICATIONS.

STAIR LANDING SUPPORT - ALUMINUM

NTS

NATIONAL PARK SERVICE
GRAND CANYON NATIONAL PARK
SOUTH RIM

0551-003

© JACOBS

Jacobs

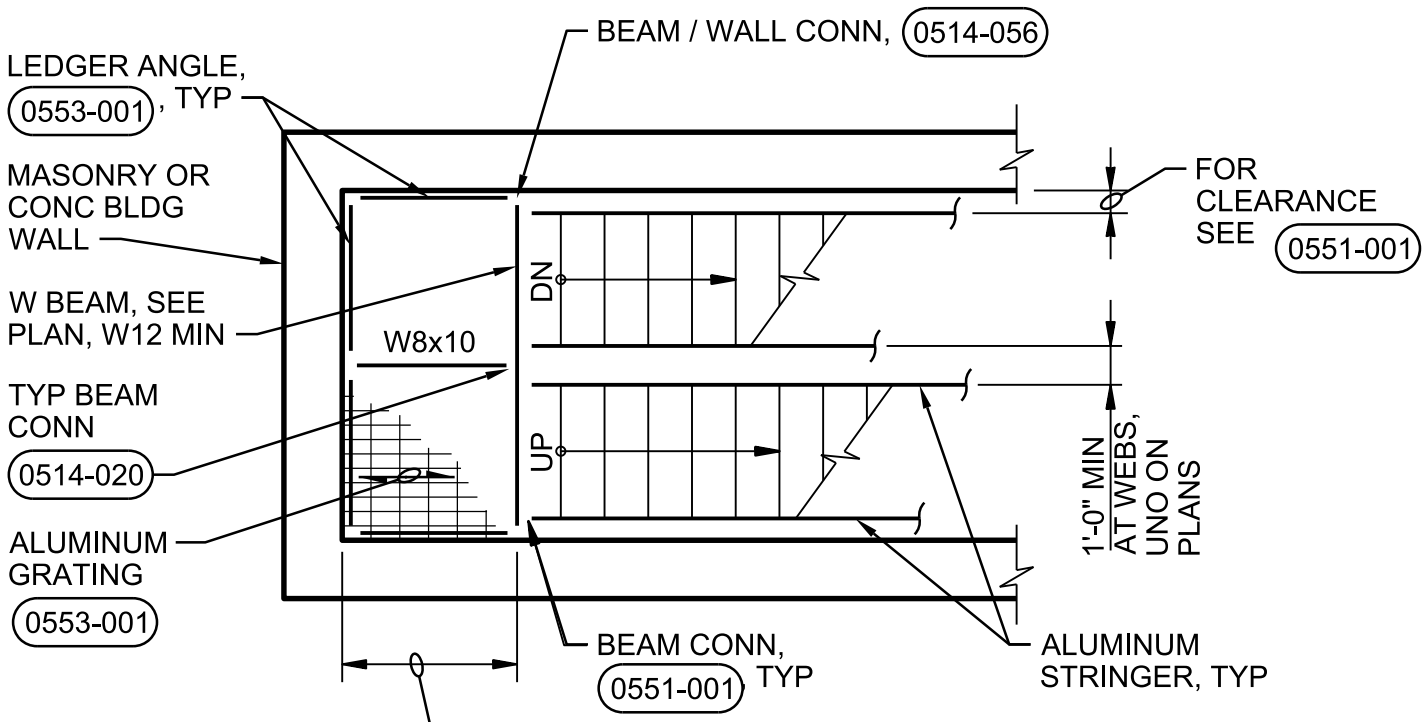

TYPE A
ENCLOSED STAIRWELL PLAN

LANDING WIDTH AS NOTED ON PLANS, MAX 4'-6", SEE NOTE 1

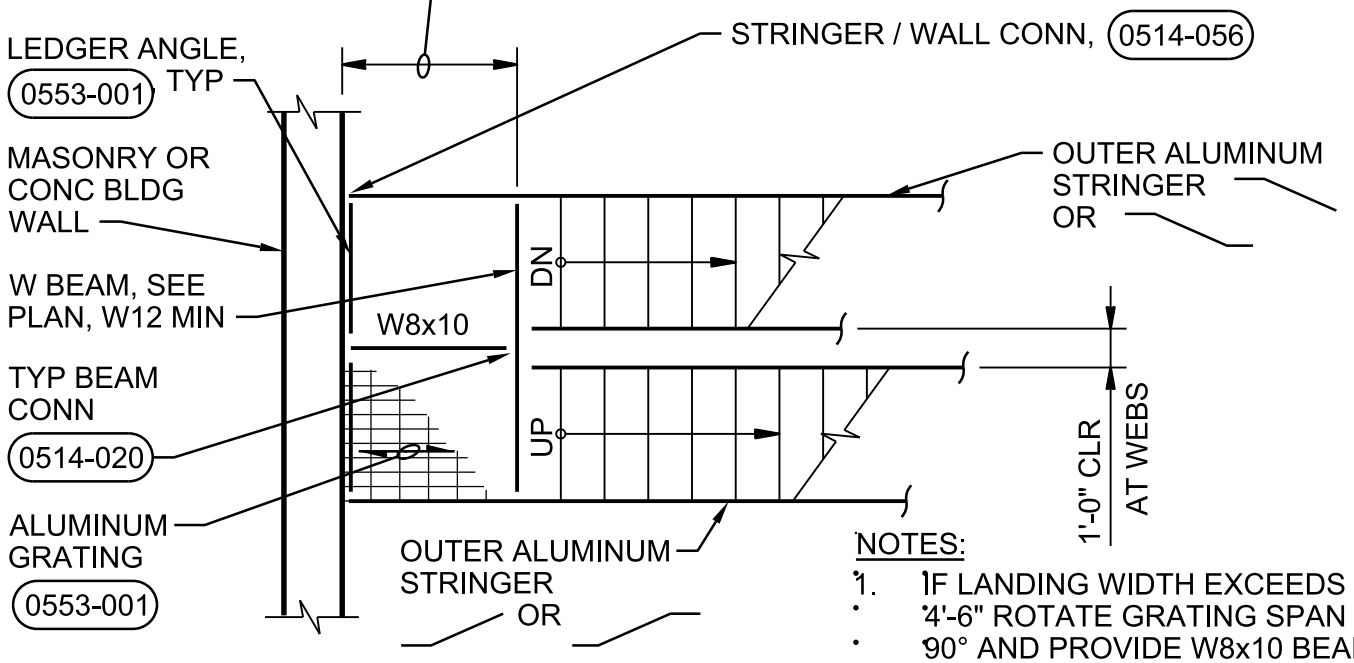

TYPE B
OPEN STAIRWAY PLAN

NOTES:

1. IF LANDING WIDTH EXCEEDS 4'-6" ROTATE GRATING SPAN 90° AND PROVIDE W8x10 BEAM AT 4'-6" MAXIMUM SPACING.
2. RAILING NOT SHOWN.
3. PROVIDE TOE BOARD AT TYPE B LANDING

STAIR LANDING FRAMING - ALUMINUM

NTS

NATIONAL PARK SERVICE
GRAND CANYON NATIONAL PARK
SOUTH RIM

0551-004

© JACOBS

Jacobs

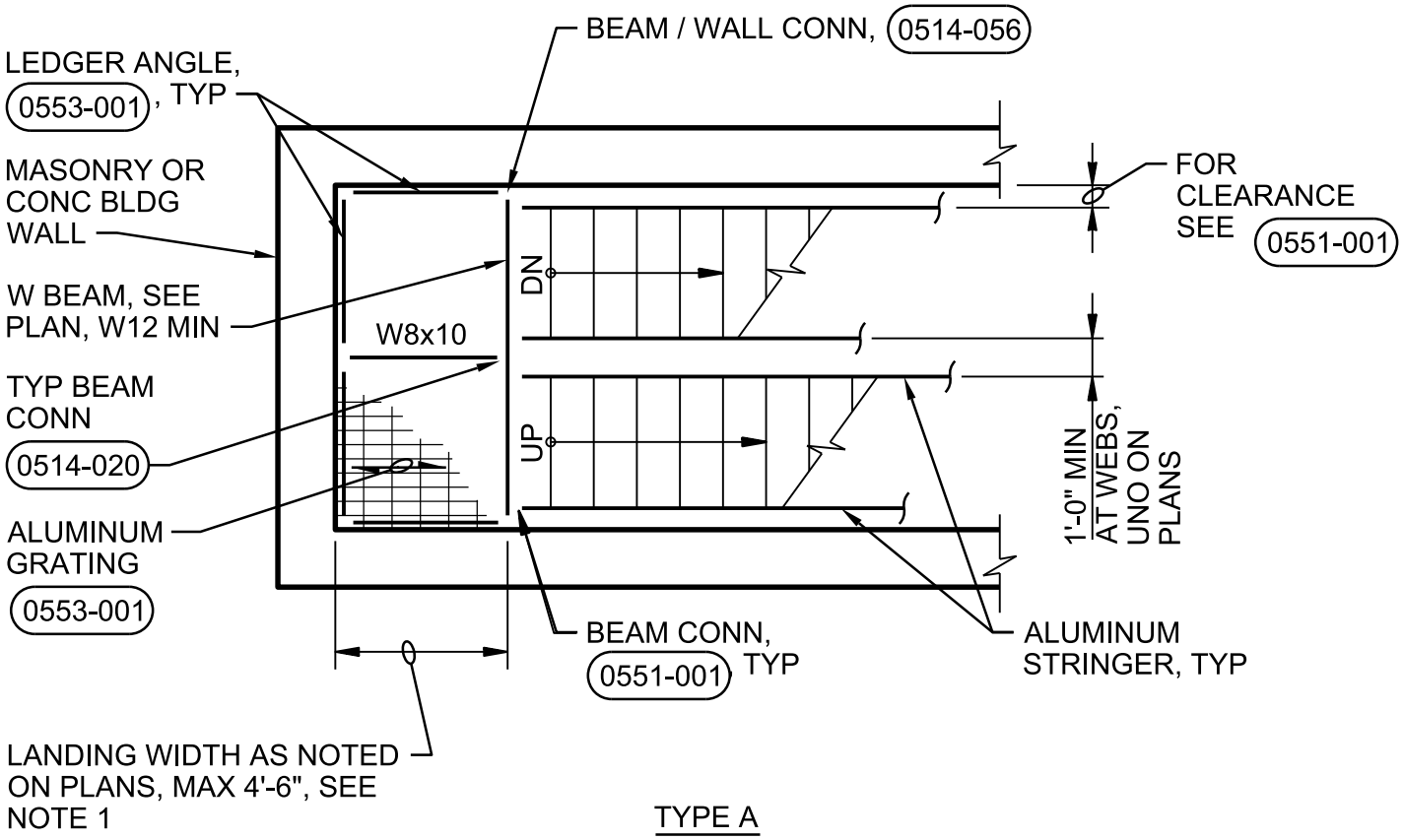

TYPE A

ENCLOSED STAIRWELL PLAN

NOTES:

1. IF LANDING WIDTH EXCEEDS 4'-6" ROTATE GRATING SPAN 90° AND PROVIDE ɪ8 BEAM AT 4'-6" MAXIMUM SPACING.

2. RAILING NOT SHOWN.

STAIR LANDING FRAMING - ALUMINUM

NTS

NATIONAL PARK SERVICE
GRAND CANYON NATIONAL PARK
SOUTH RIM

0551-005

© JACOBS

Jacobs

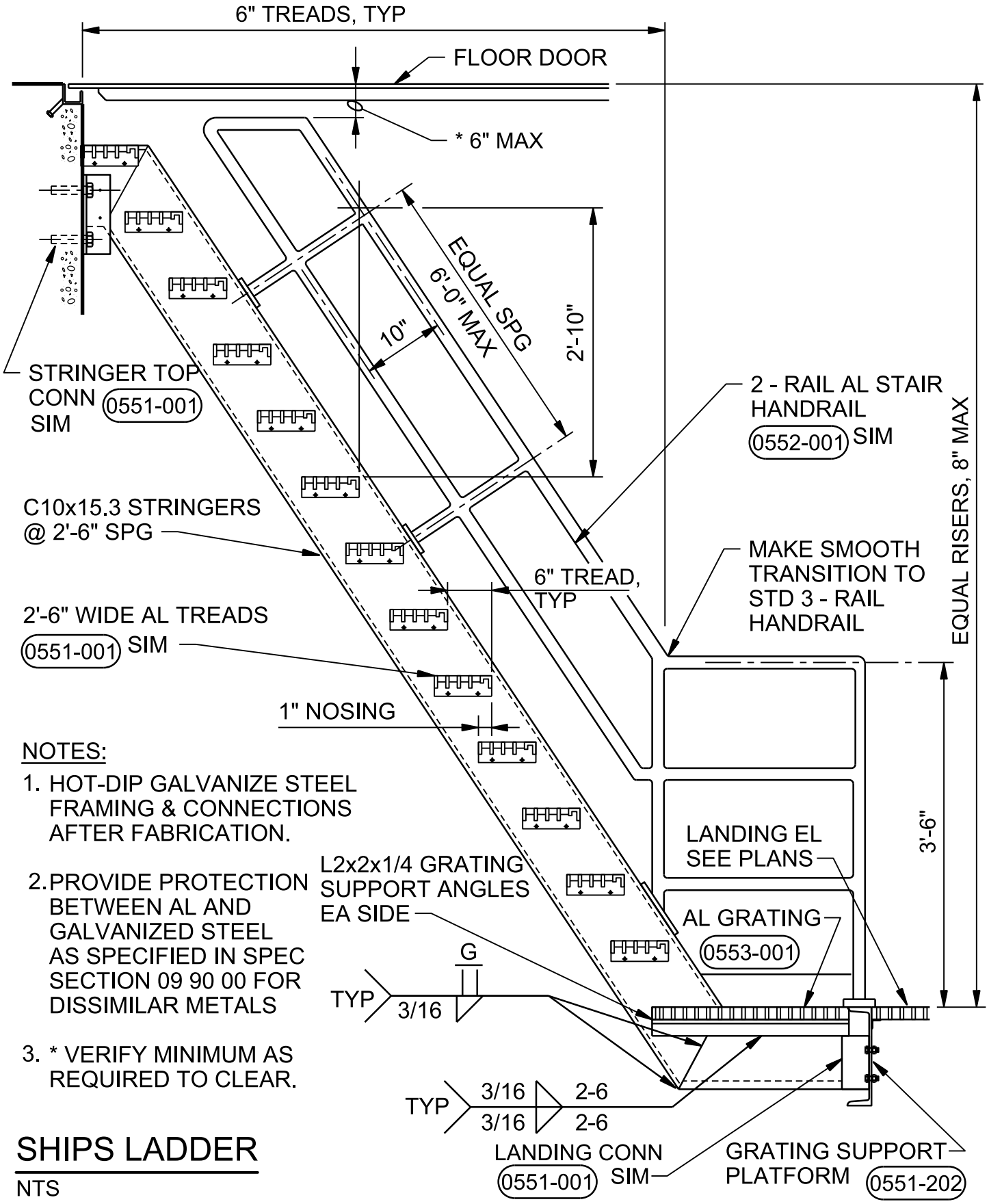

NOTES:

1. HOT-DIP GALVANIZE STEEL FRAMING & CONNECTIONS AFTER FABRICATION.
2. PROVIDE PROTECTION BETWEEN AL AND GALVANIZED STEEL AS SPECIFIED IN SPEC SECTION 09 90 00 FOR DISSIMILAR METALS
3. * VERIFY MINIMUM AS REQUIRED TO CLEAR.

SHIPS LADDER

NTS

NATIONAL PARK SERVICE
GRAND CANYON NATIONAL PARK
SOUTH RIM

0551-151

© JACOBS

Jacobs

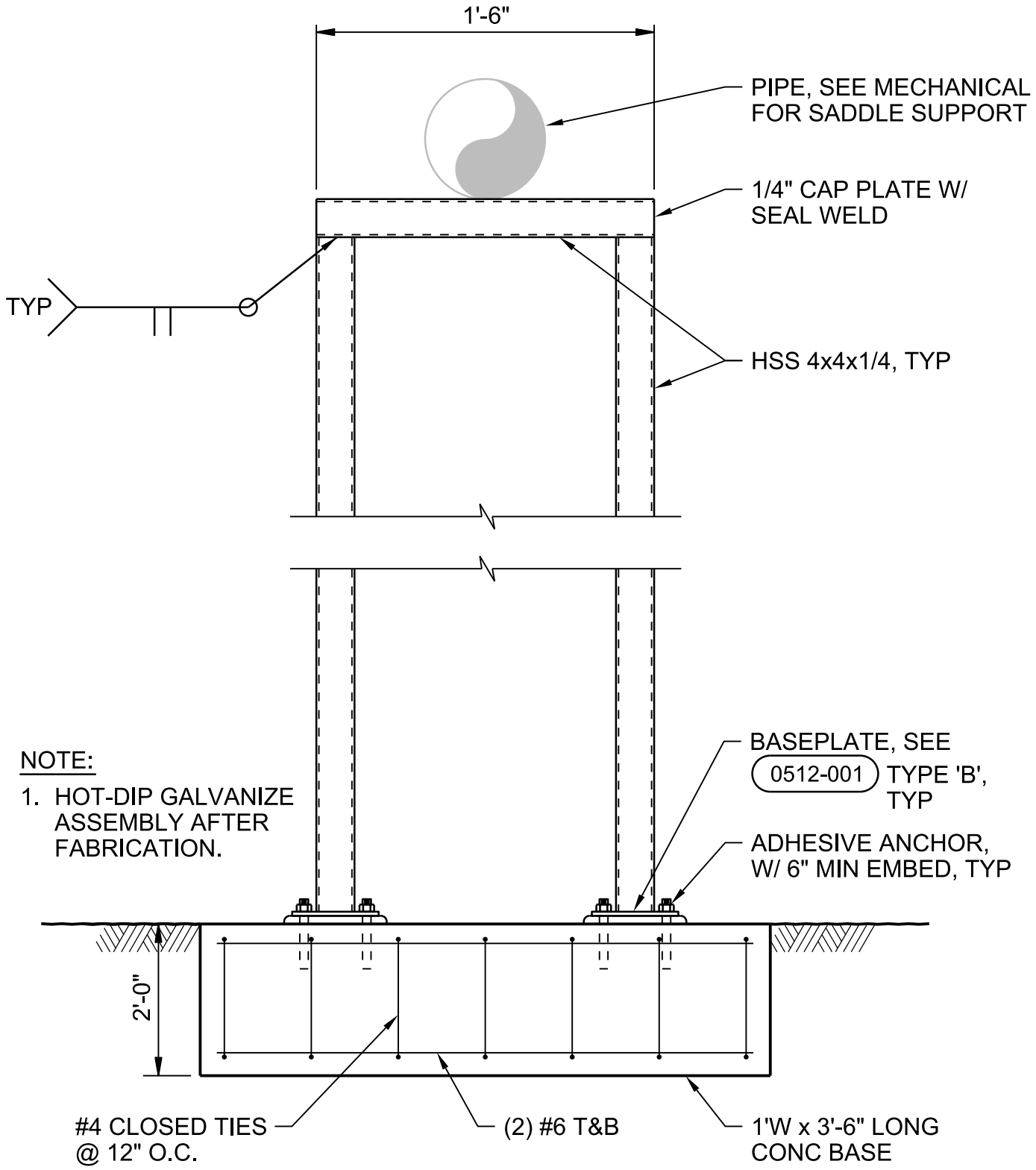

NOTE:

1. HOT-DIP GALVANIZE ASSEMBLY AFTER FABRICATION.

PIPE SUPPORT

NTS

NATIONAL PARK SERVICE
GRAND CANYON NATIONAL PARK
SOUTH RIM

0551-251

© JACOBS

Jacobs

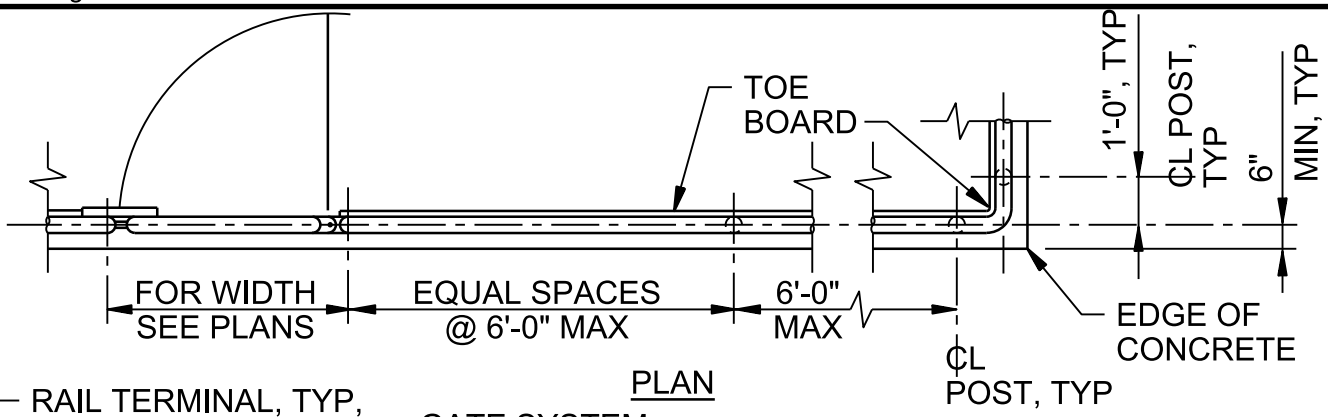

PLAN

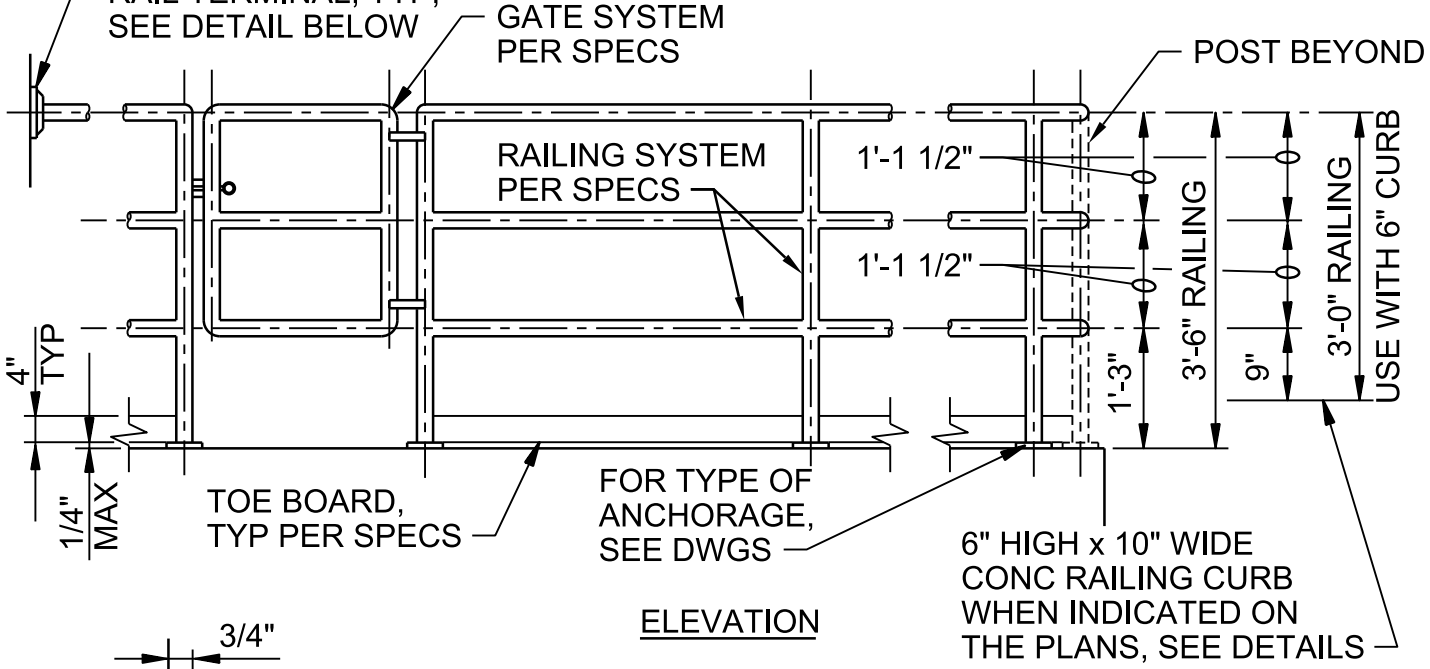

ELEVATION

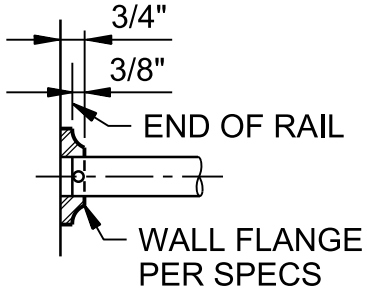

RAIL TERMINAL

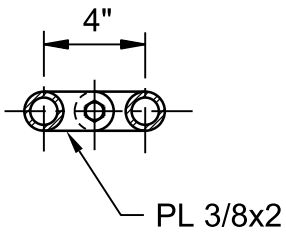

PLAN

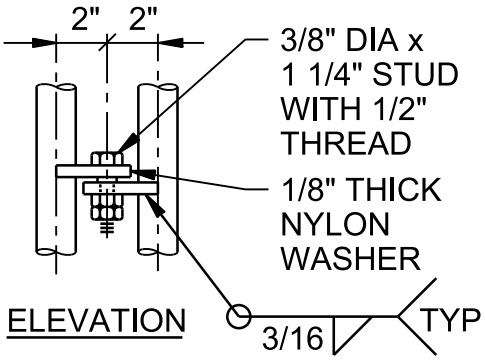

ELEVATION

HINGE

NOTES:

1. FASTEN RAIL TO WALL FLANGE PER MANUFACTURER'S RECOMMENDATIONS.
2. WALL FLANGE TO BE MOUNTED TO WALL WITH (2) 3/8" DIA SST WEDGE ANCHORS.
3. AT CONTRACTOR'S OPTION FABRICATE HINGES OR PROVIDE OTHER HINGES PER SPECIFICATIONS. ANODIZE FINISH AFTER ALL WELDING PER SPECIFICATIONS.

RAILING - 3 RAIL - ALUMINUM

NTS

DETAIL 1 OF 6

0552-001

NATIONAL PARK SERVICE
GRAND CANYON NATIONAL PARK
SOUTH RIM

© JACOBS

Jacobs

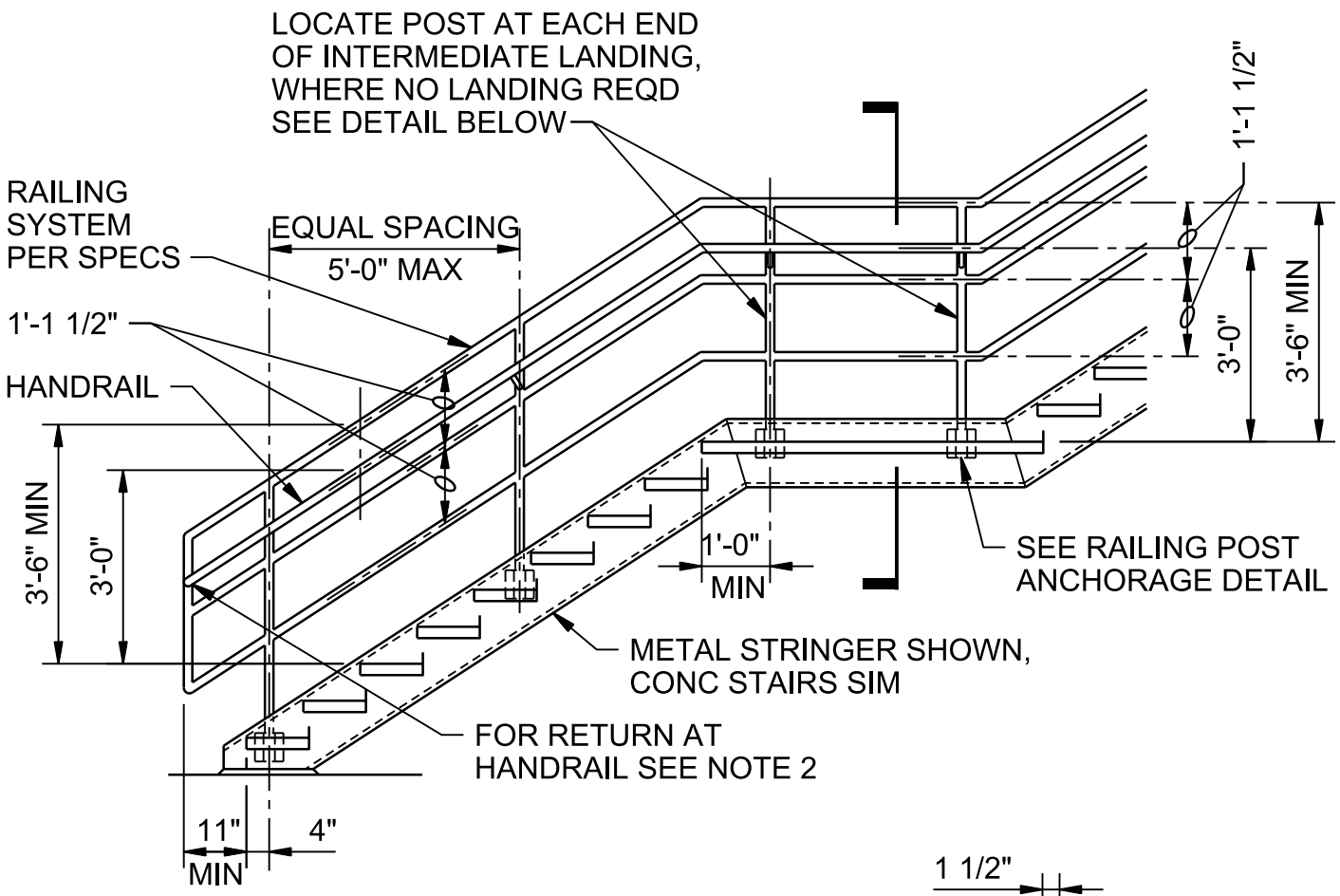

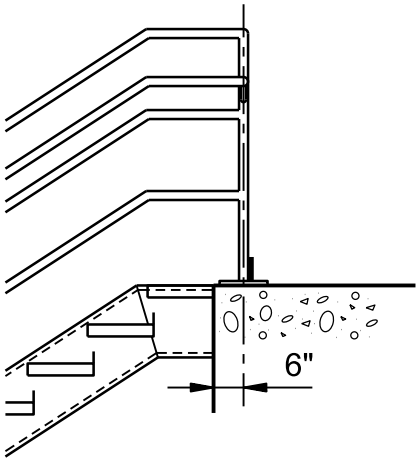

RAILING DETAIL WITHOUT LANDING

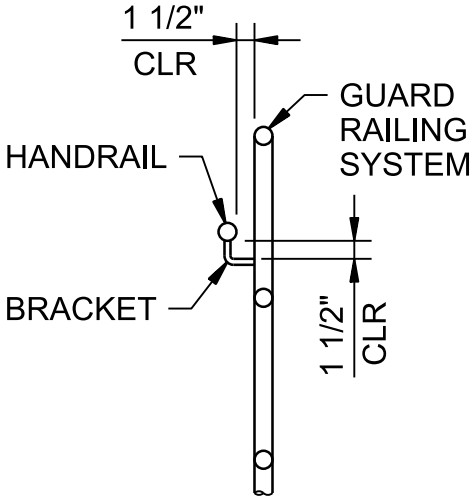

RAILING SECTION

NOTES:

1. PROVIDE TOE BOARD AT LANDING WHERE REQUIRED.

2. RETURN ENDS OF HANDRAIL TO GUARD AT BOTH ENDS.

RAILING - 3 RAIL STAIR - ALUMINUM (IBC)

NTS

DETAIL 2 OF 6

NATIONAL PARK SERVICE
GRAND CANYON NATIONAL PARK
SOUTH RIM

0552-001

© JACOBS

Jacobs

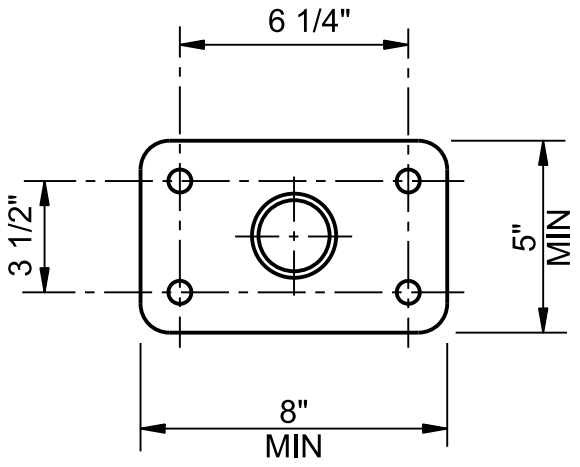

PLAN

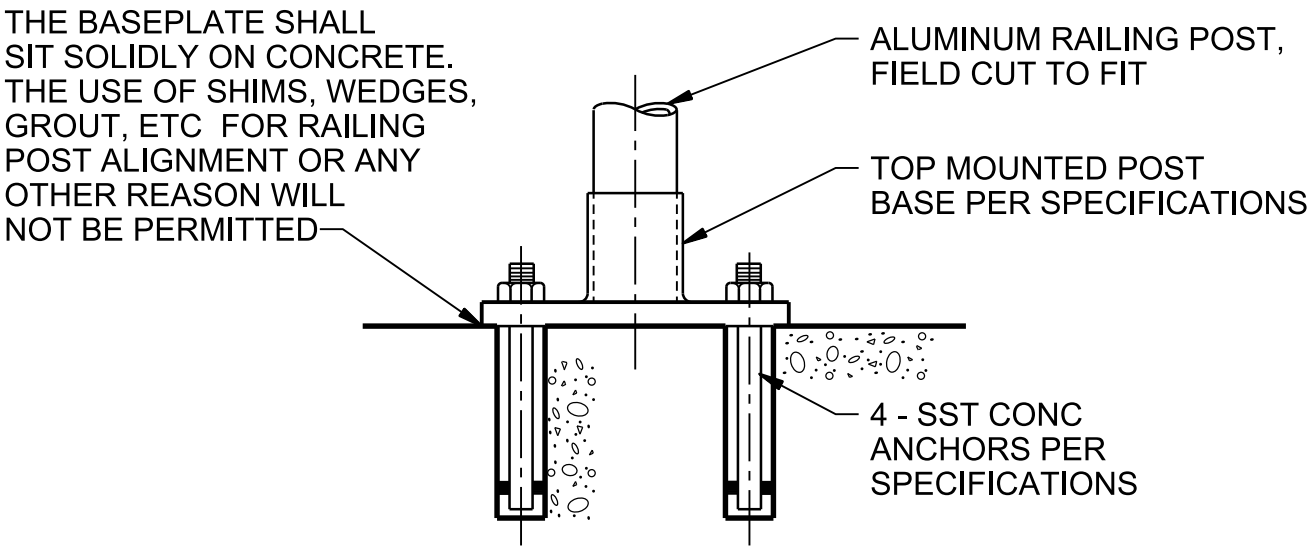

ELEVATION

TYPE 'A'

NOTE:

PROVIDE PROTECTION FOR DISSIMILAR METALS AND FOR ALUMINUM IN CONTACT WITH CONCRETE PER SPECIFICATIONS.

RAILING POST ANCHORAGE TYPE 'A' - ALUMINUM

NTS

DETAIL 3 OF 6

NATIONAL PARK SERVICE
GRAND CANYON NATIONAL PARK
SOUTH RIM

0552-001

© JACOBS

Jacobs

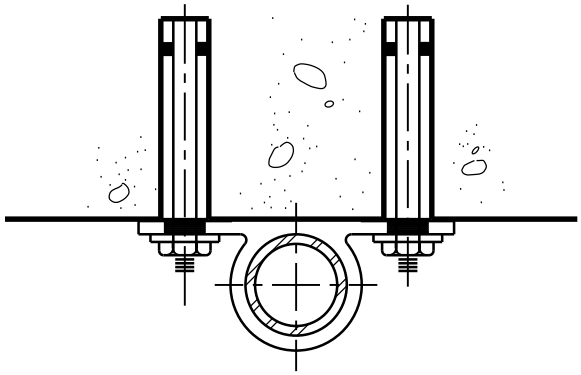

PLAN

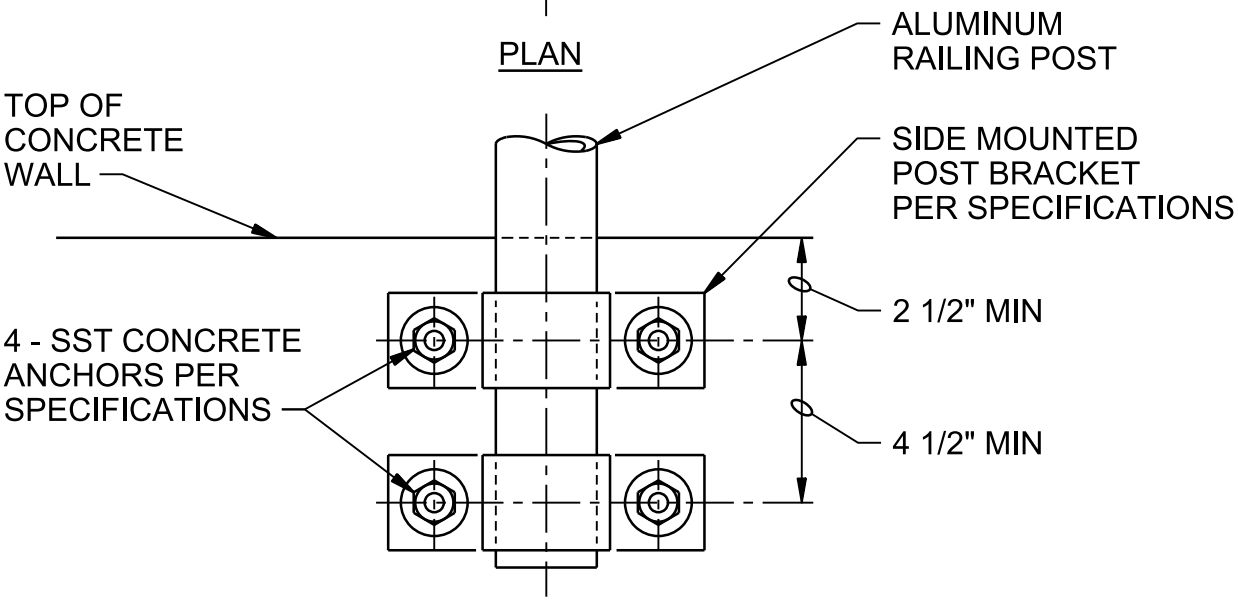

ELEVATION

TYPE 'B'

NOTES:

1. PROVIDE PROTECTION FOR DISSIMILAR METALS AND FOR ALUMINUM IN CONTACT WITH CONCRETE PER SPECIFICATIONS.

2. USE SIDE MOUNTED POST BRACKET AS A TEMPLATE FOR THE ANCHOR BOLTS.

RAILING POST ANCHORAGE TYPE 'B' - ALUMINUM

NTS

DETAIL 4 OF 6

0552-001

NATIONAL PARK SERVICE
GRAND CANYON NATIONAL PARK
SOUTH RIM

© JACOBS

Jacobs

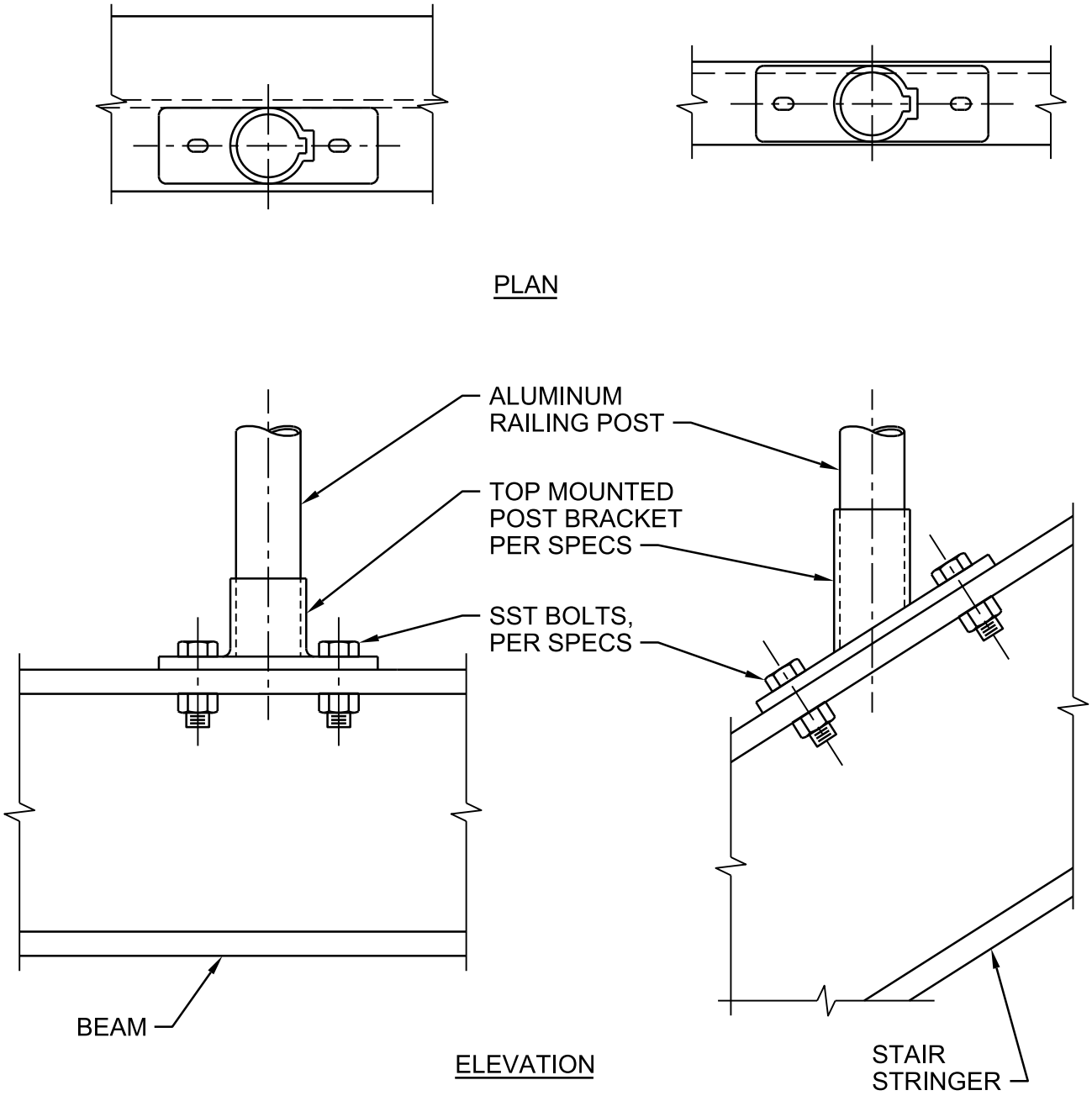

TYPE 'C'

NOTE:

PROVIDE PROTECTION FOR DISSIMILAR METALS PER SPECIFICATIONS.

RAILING POST ANCHORAGE TYPE 'C' - ALUMINUM

NTS

DETAIL 5 OF 6

0552-001

NATIONAL PARK SERVICE
GRAND CANYON NATIONAL PARK
SOUTH RIM

© JACOBS

Jacobs

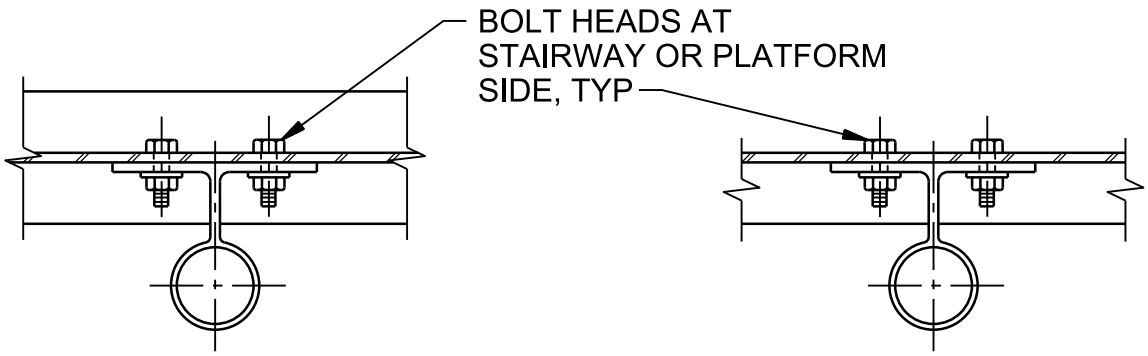

PLAN

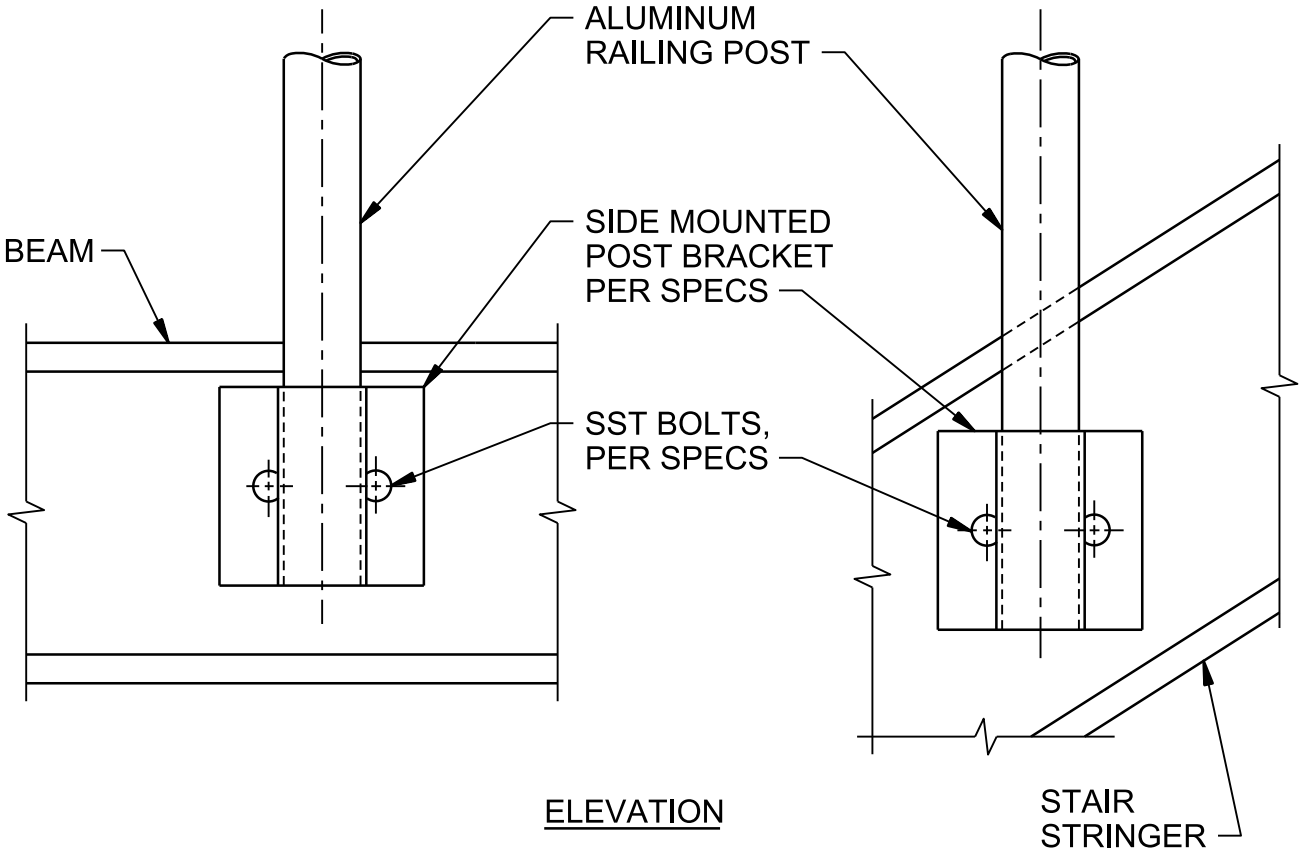

ELEVATION

TYPE 'D'

NOTE:

PROVIDE PROTECTION FOR DISSIMILAR METALS PER SPECIFICATIONS.

RAILING POST ANCHORAGE TYPE 'D' - ALUMINUM

NTS

DETAIL 6 OF 6

0552-001

NATIONAL PARK SERVICE
GRAND CANYON NATIONAL PARK
SOUTH RIM

© JACOBS

Jacobs

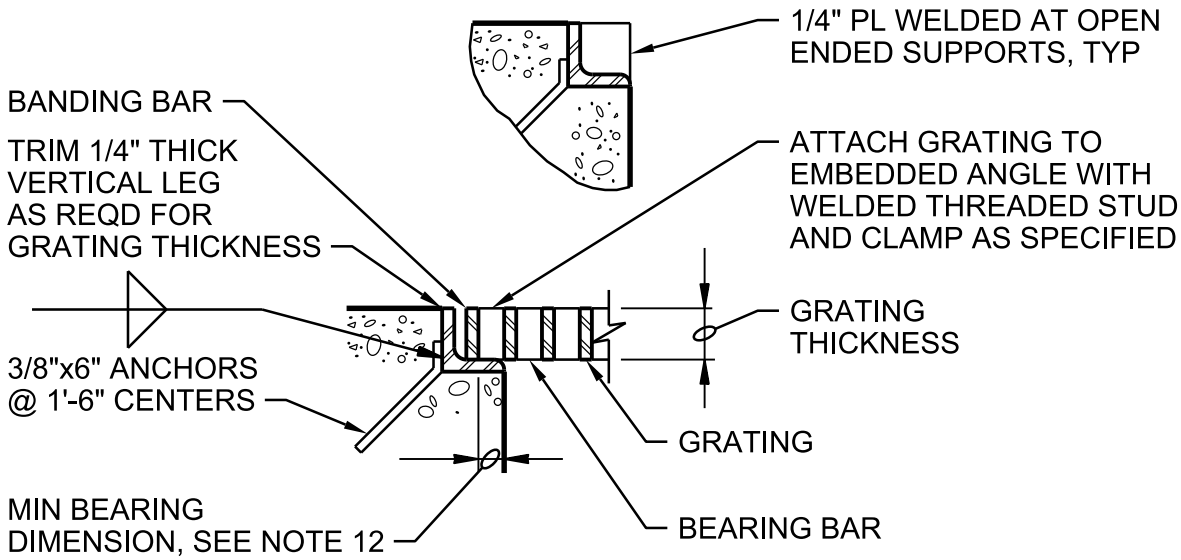

GS-1

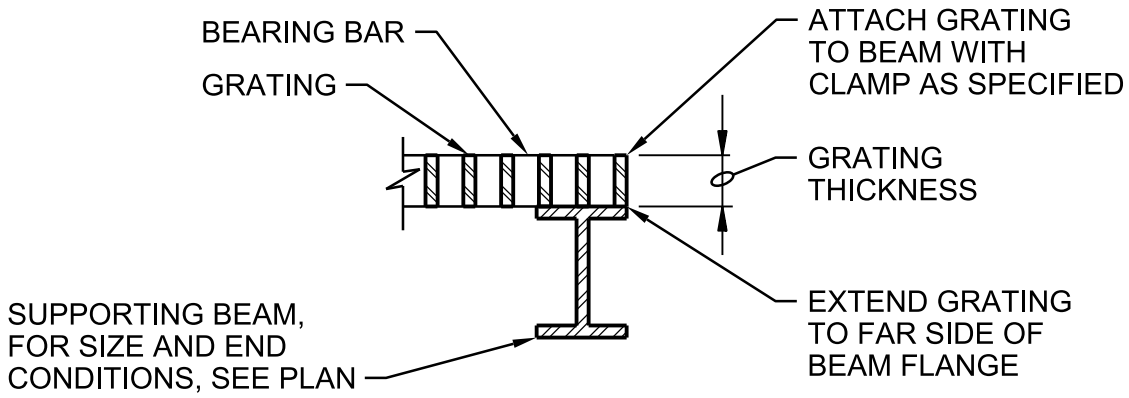

GS-2 - ONE SIDED

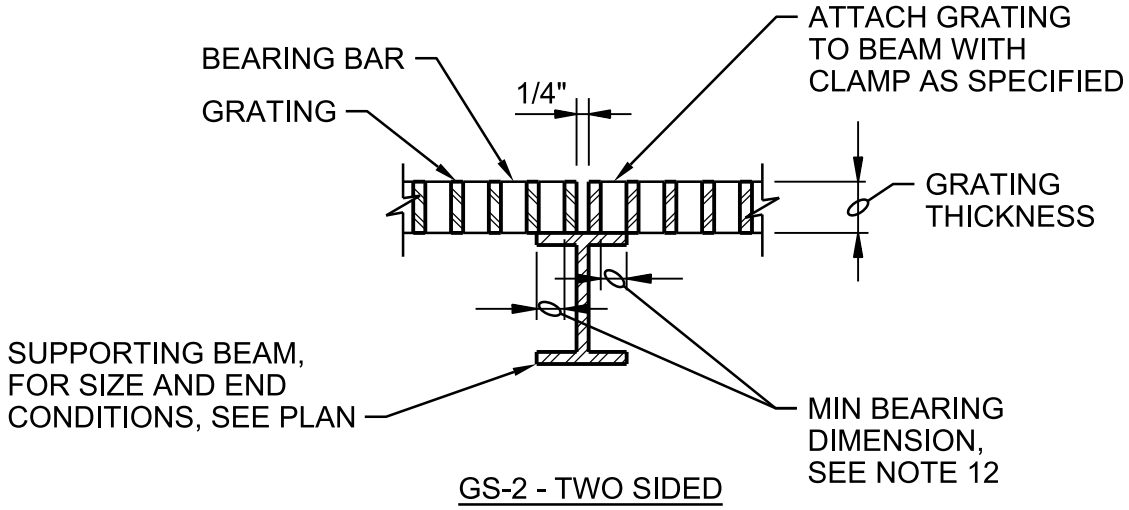

GS-2 - TWO SIDED

STANDARD GRATING

NTS

DETAIL 1 OF 4

0553-001

NATIONAL PARK SERVICE
GRAND CANYON NATIONAL PARK
SOUTH RIM

© JACOBS

Jacobs

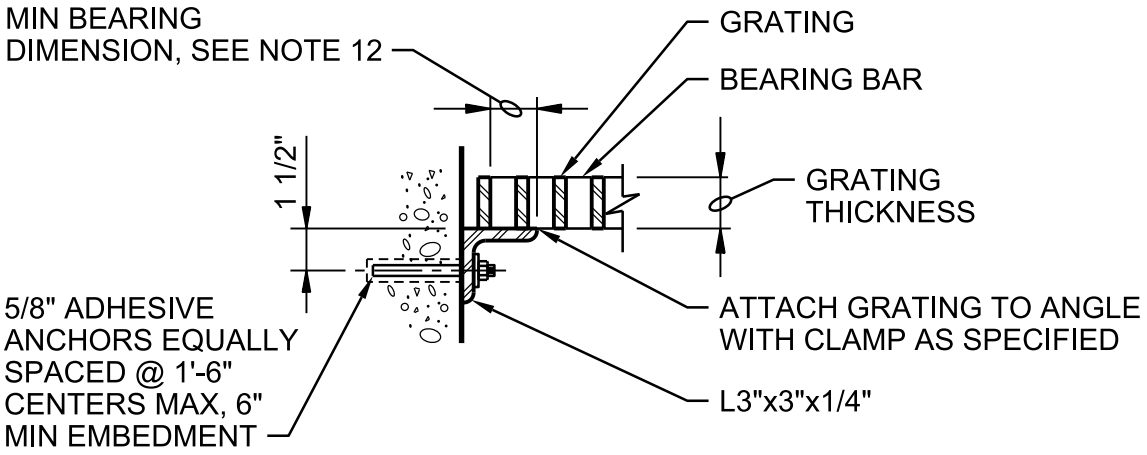

NOTES:

1. USE GS-3 ONLY FOR LIGHT DUTY GRATING, TYPE 'A'.

2. INSTALL ANCHORS MAXIMUM 4" FROM EACH END.

3. WHEN ANCHOR IS WITHIN 4" OF A CONCRETE EDGE, UTILIZE MANUFACTURER'S LOW-TORQUE INSTALLATION PROCEDURES.

GS-3

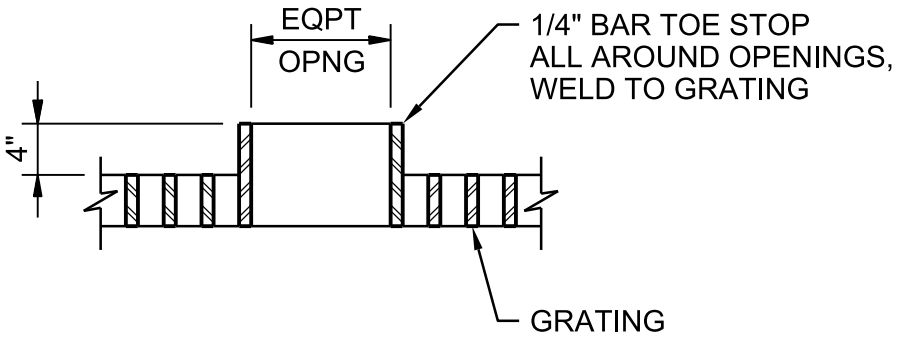

EQUIPMENT OPENINGS

STANDARD GRATING

NTS

DETAIL 2 OF 4

0553-001

NATIONAL PARK SERVICE
GRAND CANYON NATIONAL PARK
SOUTH RIM

© JACOBS

Jacobs

GENERAL NOTES:

1. GRATING SHALL BE LIGHT DUTY GRATING UNLESS OTHERWISE NOTED ON DRAWINGS.

2. GRATING SPAN IS INDICATED BY , SEE PLAN.

3. INDIVIDUAL GRATING SECTIONS SHALL NOT EXCEED 3'-0" IN WIDTH OR WEIGH MORE THAN 150 POUNDS, UNLESS INDICATED OTHERWISE, FOR TYPES 'A' & 'B' GRATING. TYPE 'C' GRATING SHALL HAVE A MINIMUM WIDTH OF 2'-0" REGARDLESS OF WEIGHT.

4. SHOP DRAWINGS BASED ON FIELD DIMENSIONS SHALL BE SUBMITTED TO THE CONTRACTING OFFICER PRIOR TO FABRICATION.

5. MATERIAL FOR SUPPORTS OF STEEL AND ALUMINUM GRATING TO BE SAME AS GRATING, EXCEPT METAL SUPPORTS THAT ARE TO BE EMBEDDED IN CONCRETE SHALL BE TYPE 316 STAINLESS STEEL.

6. UNLESS NOTED OTHERWISE ON PLANS, GRATING THICKNESS SHALL BE AS TABULATED IN "GRATING THICKNESS TABLE" FOR APPLICABLE GRATING TYPE.

7. FOR SERRATED BEARING BARS, INCREASE GRATING THICKNESSES SHOWN IN TABLES BY 1/4".

8. BEARING BAR THICKNESS FOR GRATING TO BE 3/16" MINIMUM. SEE SPECIFICATIONS FOR SPACING OF BEARING AND CROSS BARS.

9. BAND ALL EDGES. MATCH DEPTH OF BEARING BAR.

10. TYPE OF MATERIAL USED SHALL BE AS SHOWN ON PLANS OR AS SPECIFIED. THIS STANDARD DETAIL INCLUDES 2 TYPES, ALTHOUGH BOTH MAY NOT BE INCLUDED IN PROJECT.

11. THE HORIZONTAL CLEARANCE BETWEEN THE GRATING AND GRATING SUPPORTS SHALL NOT BE LESS THAN 1/4" NOR GREATER THAN 1/2" AND AS SPECIFIED.

12. MINIMUM BEARING HORIZONTAL DIMENSION = 1" FOR GRATING DEPTH 2 1/4" OR LESS. MINIMUM BEARING HORIZONTAL DIMENSION = 2" FOR GRATING DEPTH GREATER THAN 2 1/4"

STANDARD GRATING

NTS

DETAIL 3 OF 4

0553-001

NATIONAL PARK SERVICE
GRAND CANYON NATIONAL PARK
SOUTH RIM

© JACOBS

Jacobs

LIGHT DUTY GRATING
TYPE 'A'
(100 PSF)

GRATING THICKNESS TABLE

MAXIMUM SPAN	STEEL	ALUMINUM
3'-6"	1"	1 1/4"
4'-0"	1"	1 1/2"
4'-6"	1"	1 3/4"
5'-0"	1 1/4"	1 3/4"
5'-6"	1 1/4"	2"
6'-0"	1 1/2"	2 1/4"
6'-6"	1 1/2"	2 1/4"
7'-0"	1 3/4"	2 1/2"

MEDIUM DUTY GRATING
TYPE 'B'
(500 PSF)

GRATING THICKNESS TABLE

MAXIMUM SPAN	STEEL	ALUMINUM
< 2'-0"	1"	1"
2'-6"	1"	1 1/4"
3'-0"	1 1/4"	1 1/2"
3'-6"	1 1/4"	1 3/4"
4'-0"	1 1/2"	2"
4'-6"	1 3/4"	2 1/4"
5'-0"	1 3/4"	2 1/2"
5'-6"	2"	DO NOT USE ALUMINUM GRATING
6'-0"	2 1/4"	
6'-6"	2 1/2"	

HEAVY DUTY GRATING
TYPE 'C'
(H 20 WHEEL LOAD)

GRATING THICKNESS TABLE

MAXIMUM SPAN	STEEL	ALUMINUM
1'-0"	2"x3/16"	DO NOT USE ALUMINUM GRATING
1'-8"	2 1/2"x1/4"	
2'-0"	2 1/2"x3/8" OR 3"x1/4"	
2'-6"	3"x3/8" OR 4"x1/4"	
3'-3"	3 1/2"x3/8"	
4'-0"	4"x3/8"	
5'-0"	4 1/2"x3/8"	

STANDARD GRATING

NTS

DETAIL 4 OF 4

0553-001

NATIONAL PARK SERVICE
GRAND CANYON NATIONAL PARK
SOUTH RIM

© JACOBS

Jacobs

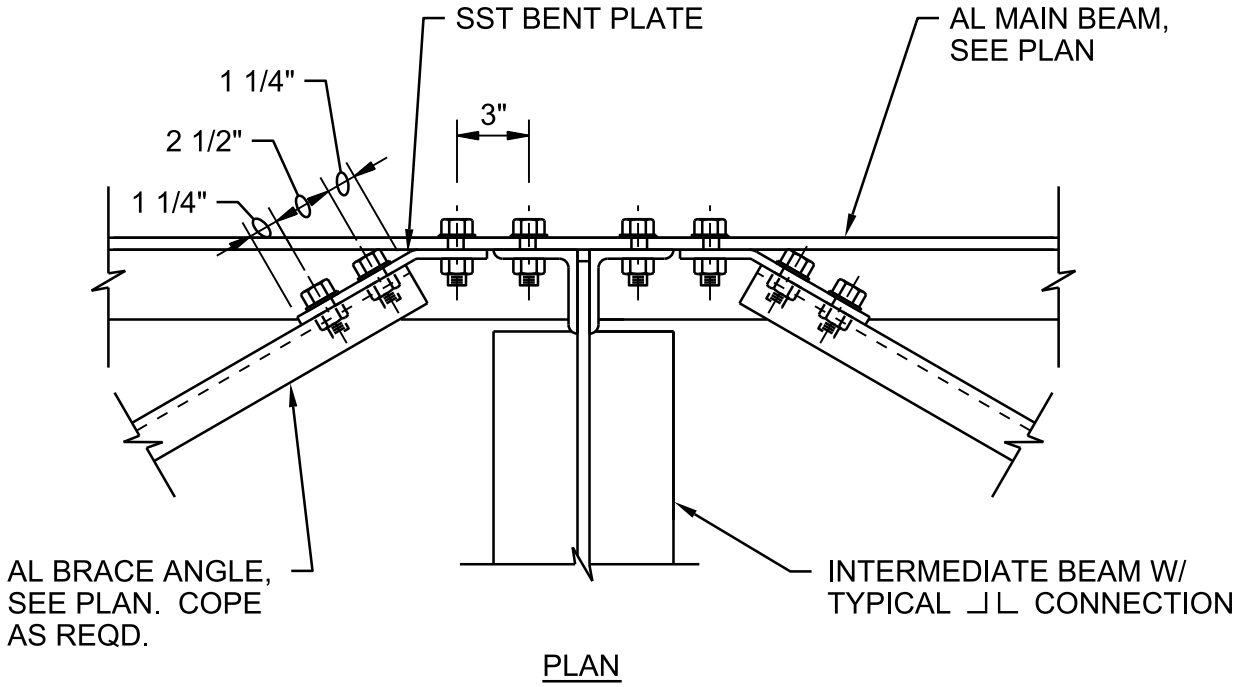

PLAN

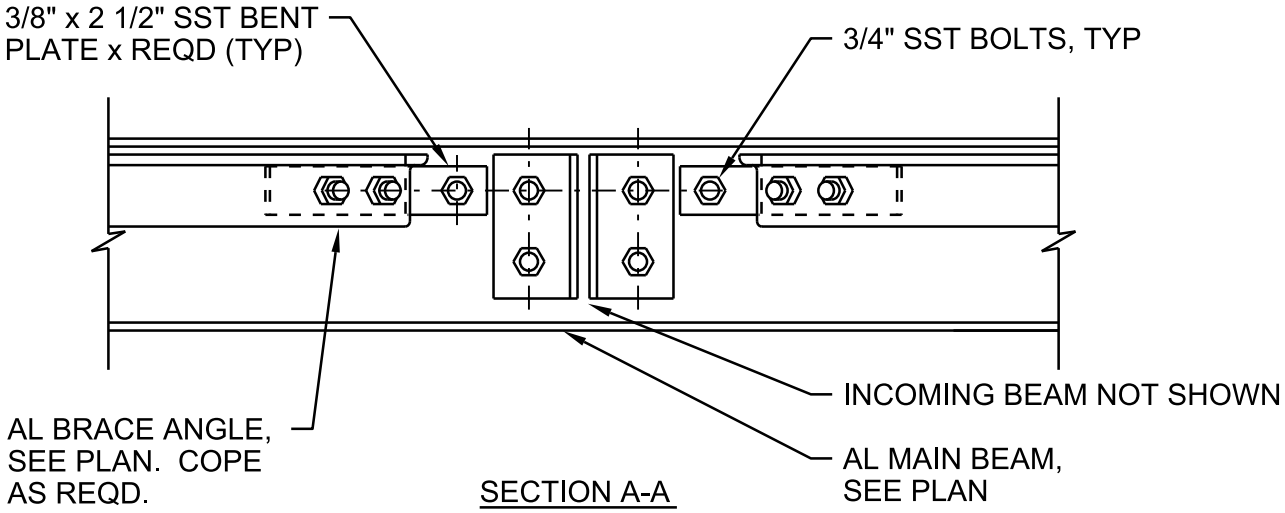

SECTION A-A

WALKWAY BRACING CONNECTION - ALUMINUM

NTS

NATIONAL PARK SERVICE
GRAND CANYON NATIONAL PARK
SOUTH RIM

0553-040

© JACOBS

Jacobs

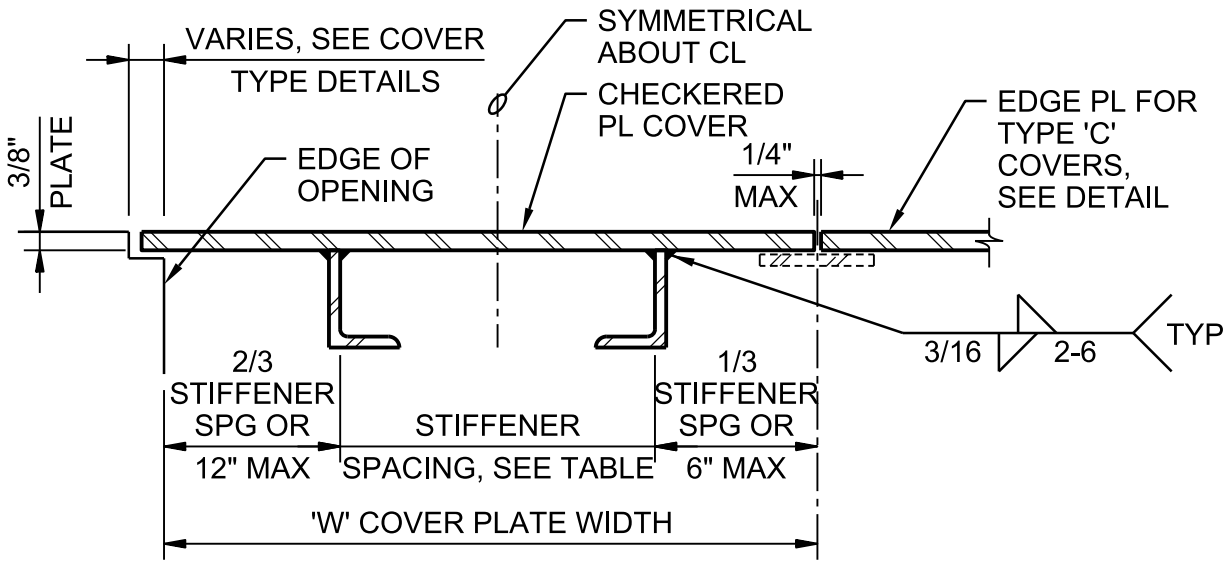

TABLE			
OPENING SPAN LENGTH 'L'	STIFFENER SIZE	MAX STIFFENER SPACING	MAX PLATE WIDTH 'W'
L<2'-6"	NONE	-	5'-0"
2'-6"≤L<3'-6"	L2x1 1/2x1/4	1'-6"	4'-0"
3'-6"≤L<4'-0"	L2 1/2x1 1/2x1/4	1'-6"	4'-0"
4'-0"≤L<4'-6"	L2 1/2x1 1/2x1/4	1'-3"	4'-0"
4'-6"≤L<5'-0"	L3x2x1/4	1'-6"	4'-0"
5'-0"≤L<5'-6"	L3x2x1/4	1'-3"	3'-0"
5'-6"≤L<6'-0"	L3 1/2x2 1/2x1/4	1'-6"	3'-0"
6'-0"≤L<6'-6"	L3 1/2x2 1/2x1/4	1'-3"	2'-6"
6'-6"≤L<7'-0"	L4x3x1/4	1'-3"	2'-6"
7'-0"≤L<7'-6"	L4x3x1/4	1'-0"	2'-0"

NOTES:
1. STIFFENERS TO BE PLACED LONG LEG VERTICAL.
2. SPAN DIRECTION OF PLATE TO BE PARALLEL TO STIFFENERS, AND SHALL BE SHORT DIMENSION OF OPENING UNLESS NOTED OTHERWISE ON PLANS.
3. MAXIMUM ALLOWABLE UNIFORM DESIGN LOAD = 300psf.
4. MAXIMUM WEIGHT OF COVER PLATE TO BE 125 POUNDS.
5. COVER PLATES AND STIFFENERS ARE ALUMINUM PLATES AND ANGLES.
6. ALL COVER PLATES TO HAVE A MINIMUM OF TWO EYES AS SHOWN IN LIFTING EYE DETAILS.

COVER STIFFENERS

CHECKERED FLOOR PLATE - ALUMINUM

NTS

DETAIL 1 OF 4

0554-001

NATIONAL PARK SERVICE
GRAND CANYON NATIONAL PARK
SOUTH RIM

© JACOBS

Jacobs

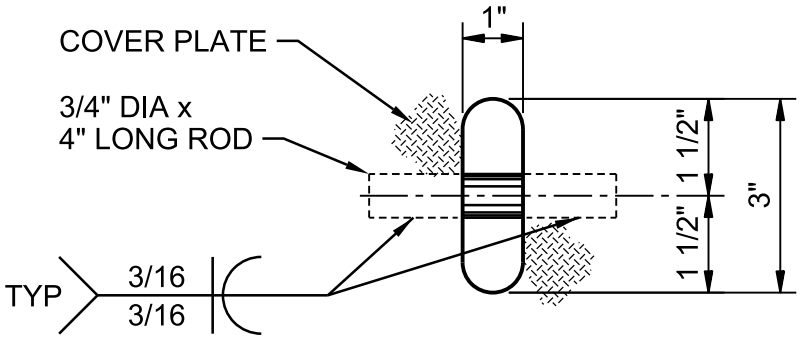

NOTE:
THIS DETAIL IS APPLICABLE TO TYPES 'A' AND 'B' COVERS AND OTHER COVERS NOT INTENDED TO BE AIRTIGHT.

LIFTING EYE TYPE 'A'

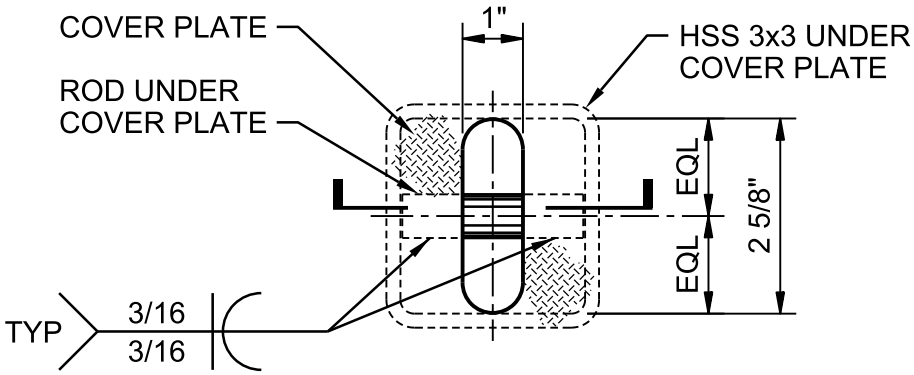

PLAN

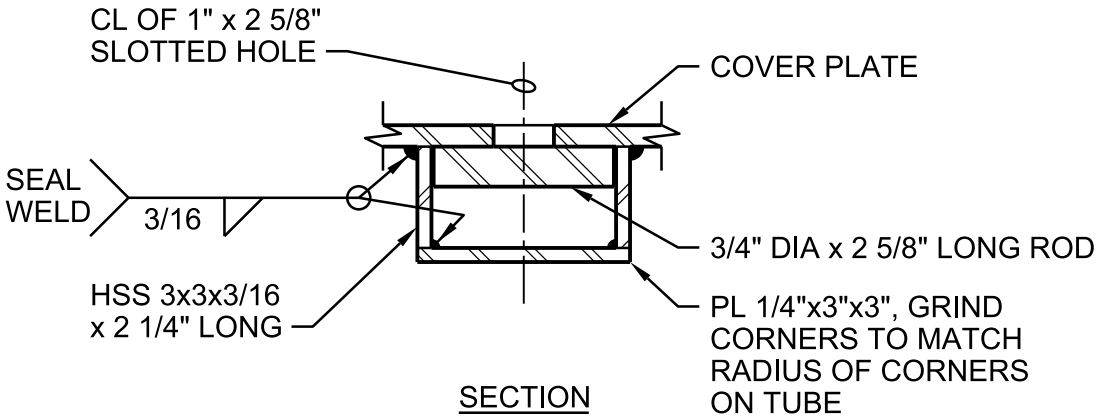

SECTION

NOTE:
THIS DETAIL IS APPLICABLE TO TYPE 'C' COVERS AND OTHER AIR TIGHT COVERS.

LIFTING EYE TYPE 'B'

CHECKERED FLOOR PLATE - ALUMINUM

NTS

© CH2M HILL

DETAIL 2 OF 4

0554-001

NATIONAL PARK SERVICE
GRAND CANYON NATIONAL PARK
SOUTH RIM

© JACOBS

Jacobs

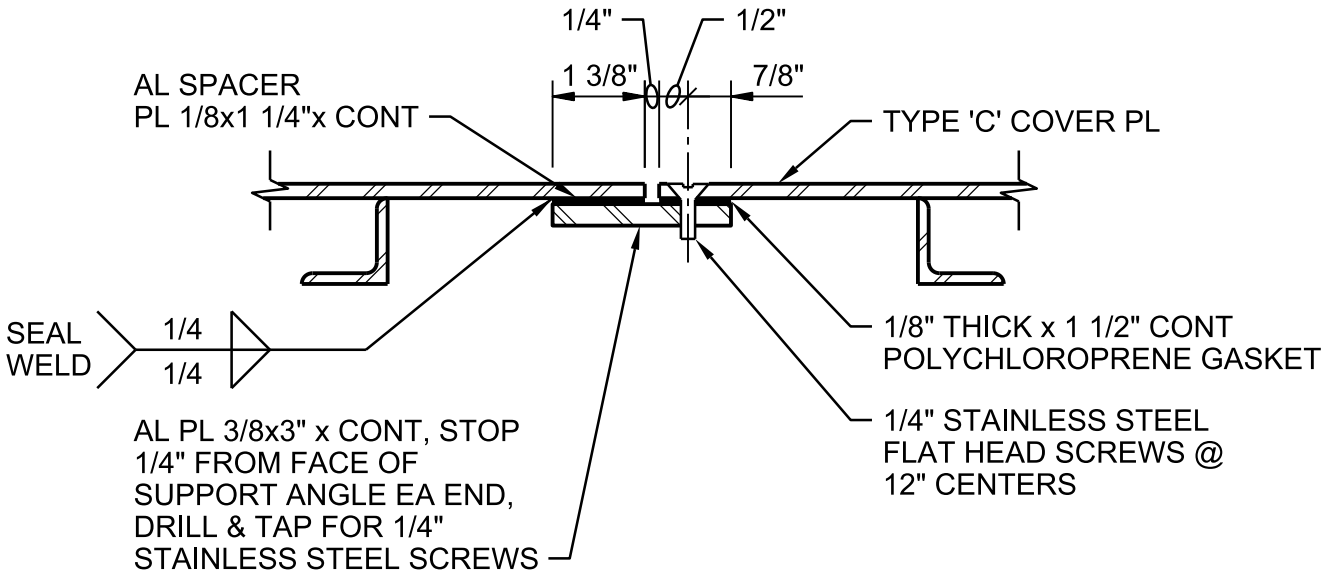

NOTE:
THIS DETAIL IS APPLICABLE TO TYPE 'C' COVERS AND OTHER AIR TIGHT COVERS.

EDGE PLATE DETAIL

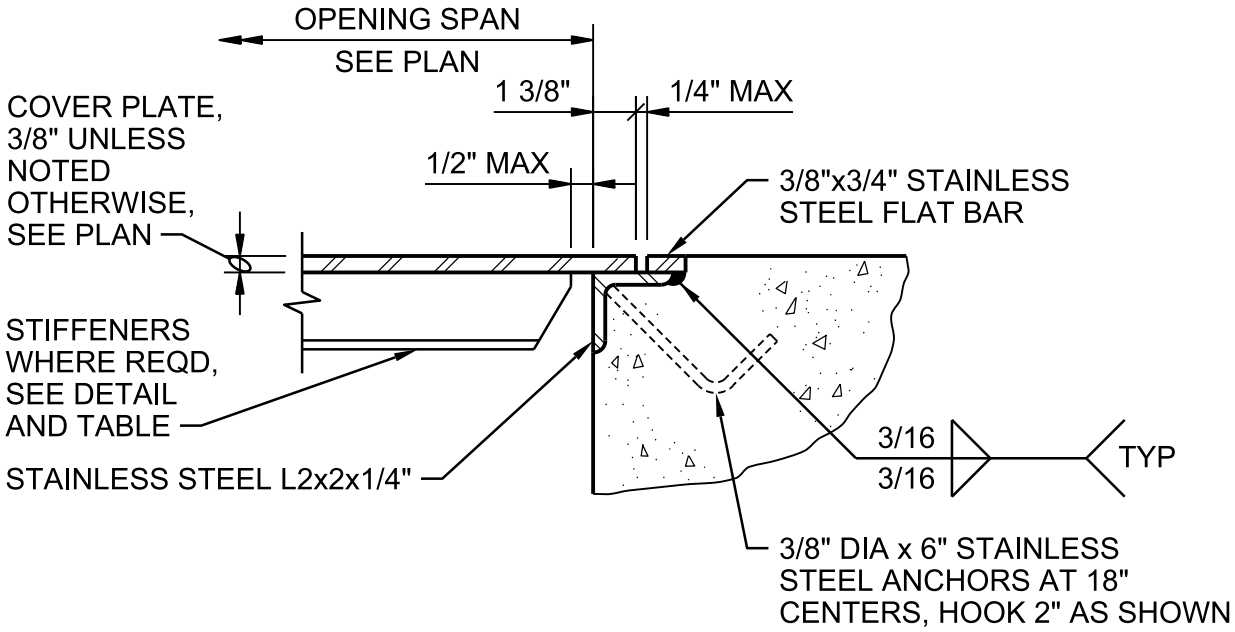

COVER TYPE 'A'

CHECKERED FLOOR PLATE - ALUMINUM

NTS

DETAIL 3 OF 4

0554-001

NATIONAL PARK SERVICE
GRAND CANYON NATIONAL PARK
SOUTH RIM

© JACOBS

Jacobs

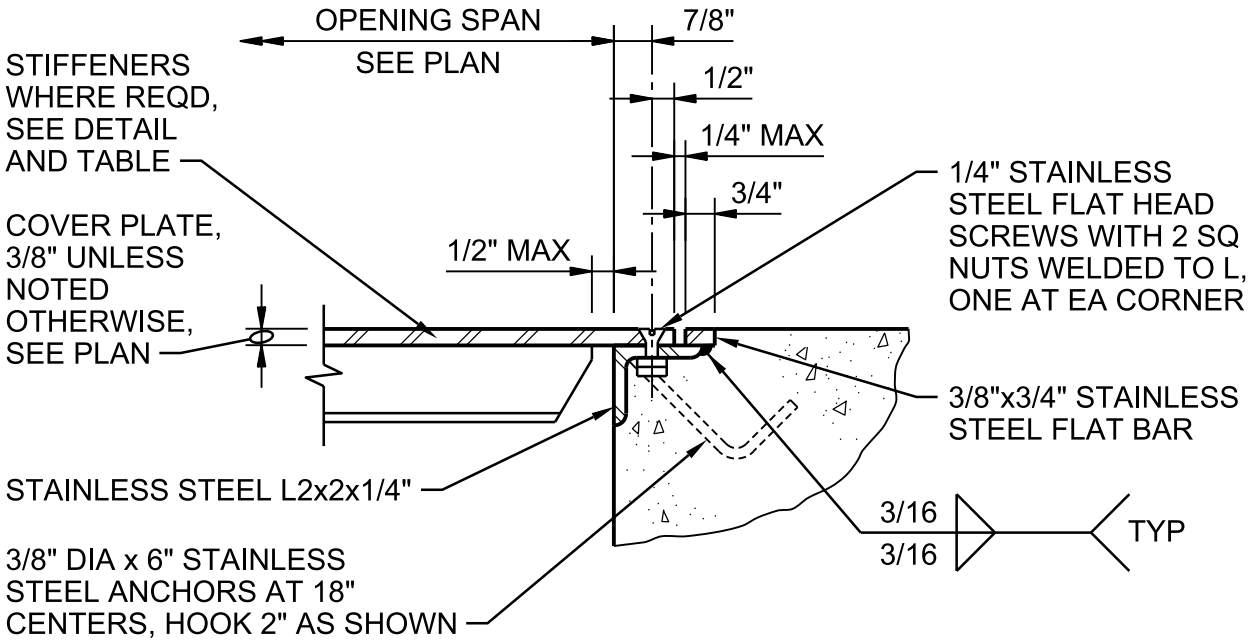

COVER TYPE 'B'

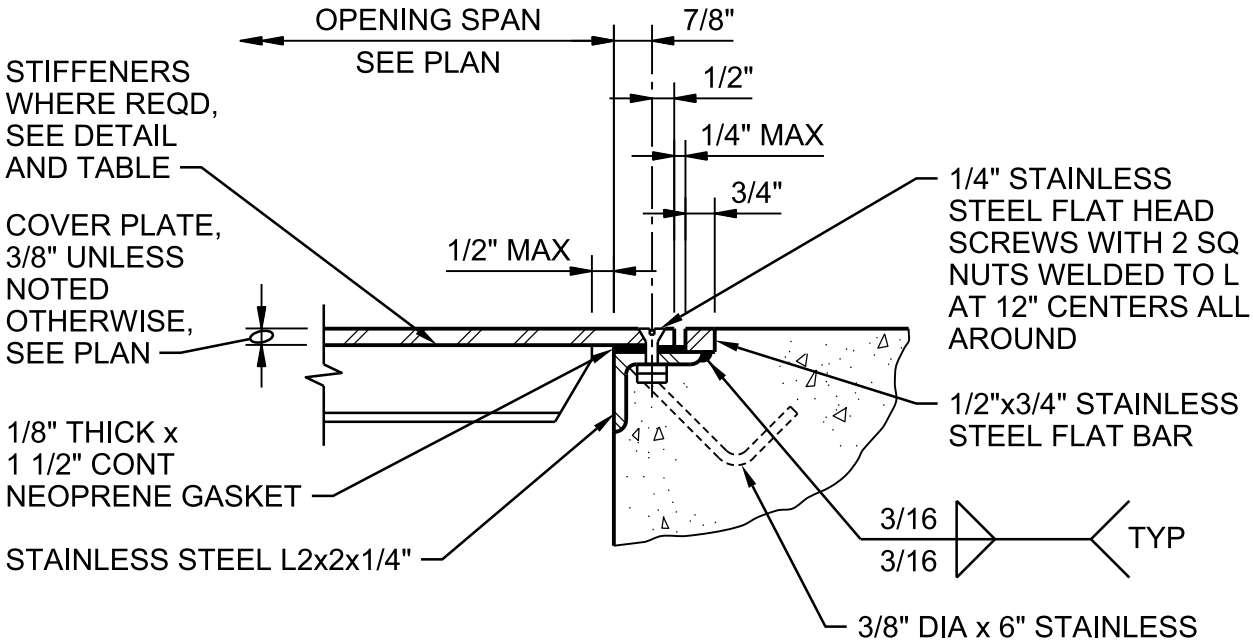

NOTE:
THIS DETAIL IS APPLICABLE AT OPENINGS THAT REQUIRE AIR TIGHT COVERS.

COVER TYPE 'C'

CHECKERED FLOOR PLATE - ALUMINUM

NTS

DETAIL 4 OF 4

0554-001

NATIONAL PARK SERVICE
GRAND CANYON NATIONAL PARK
SOUTH RIM

© JACOBS

Jacobs

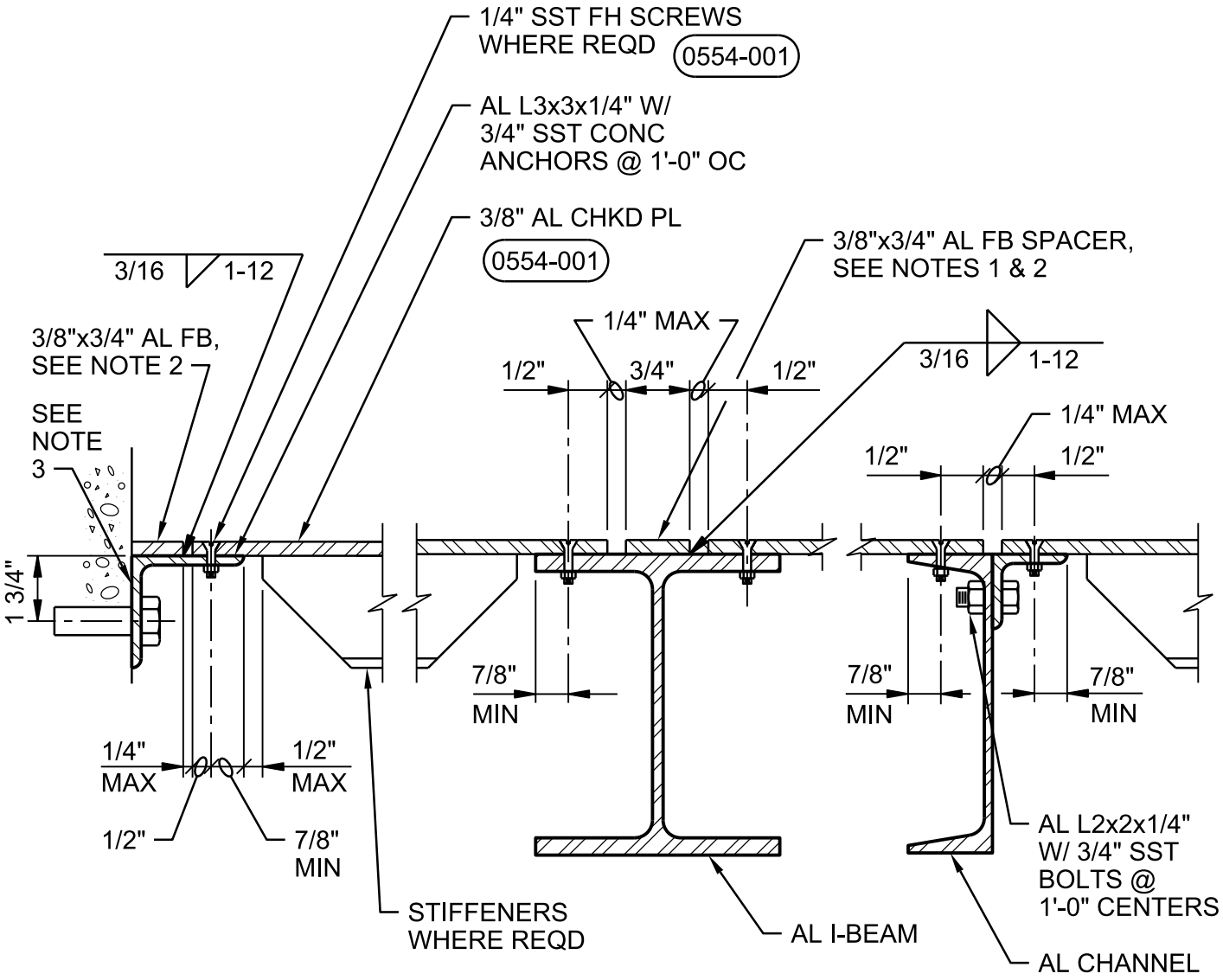

NOTES:

1. PROVIDE AL FB 3/8" AT CL SUPPORT WHERE FLANGE WIDTH (OR FLANGE PLUS ANGLE) EXCEEDS 4".

2. TYPE "B" COVER SHOWN. DETAIL SIMILAR FOR TYPE 'A' COVER. PROVIDE 1/2" THICK FLAT BAR SPACERS FOR TYPE 'C' COVER.

3. PROVIDE PROTECTION FOR DISSIMILAR METALS AND FOR ALUMINUM IN CONTACT WITH CONCRETE PER SPECIFICATIONS.

FLOOR PLATE SUPPORT FRAMING

NTS

NATIONAL PARK SERVICE
GRAND CANYON NATIONAL PARK
SOUTH RIM

0554-002

© JACOBS

Jacobs

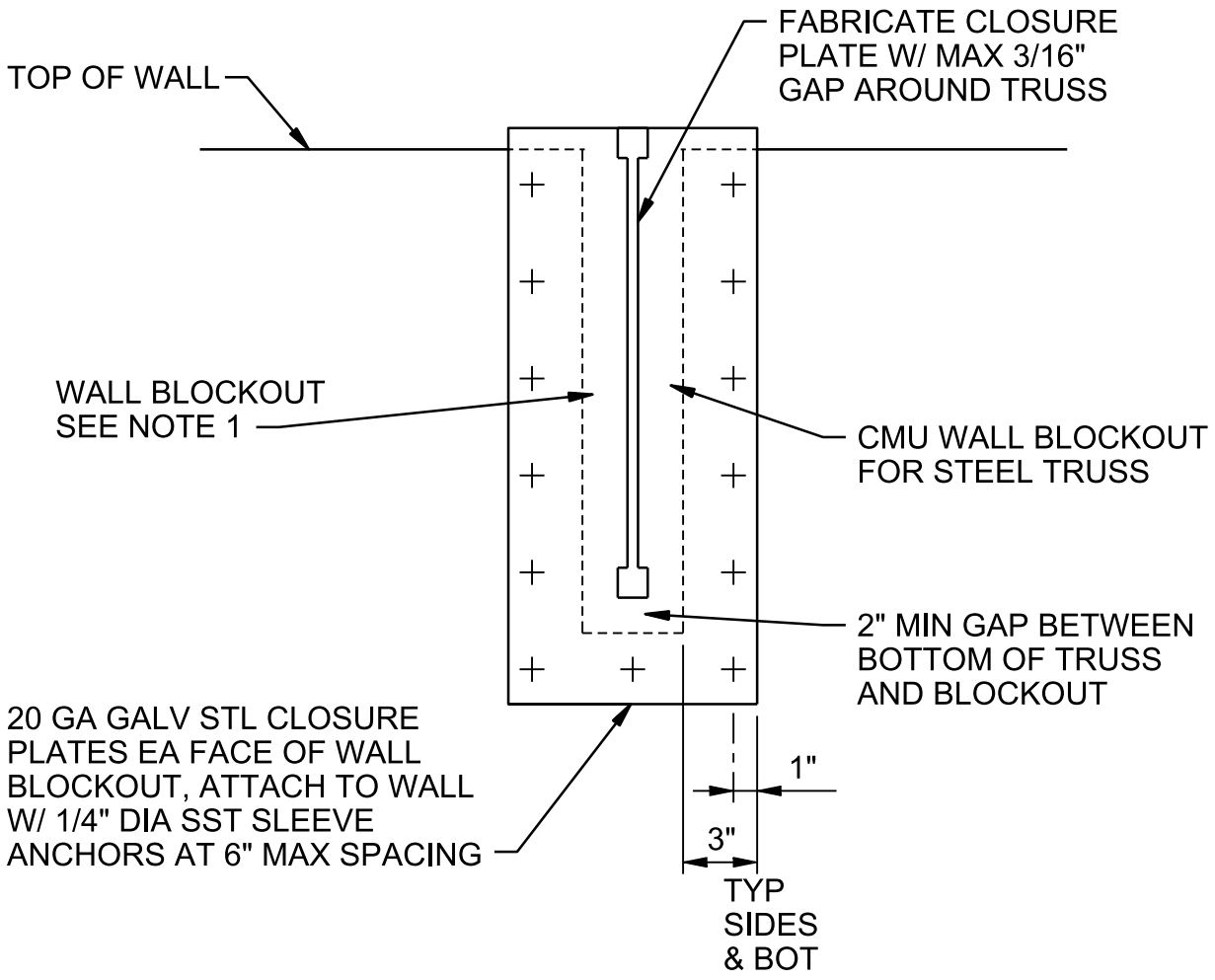

NOTES:

1. FILL WALL BLOCKOUT WITH FIRESAFING AT FIRE-RATED WALLS. FILL WITH MINERAL FIBER INSULATION AT NON-FIRE-RATED WALLS.

TRUSS CLOSURE PLATE

NTS

NATIONAL PARK SERVICE
GRAND CANYON NATIONAL PARK
SOUTH RIM

0558-002

© JACOBS

Jacobs

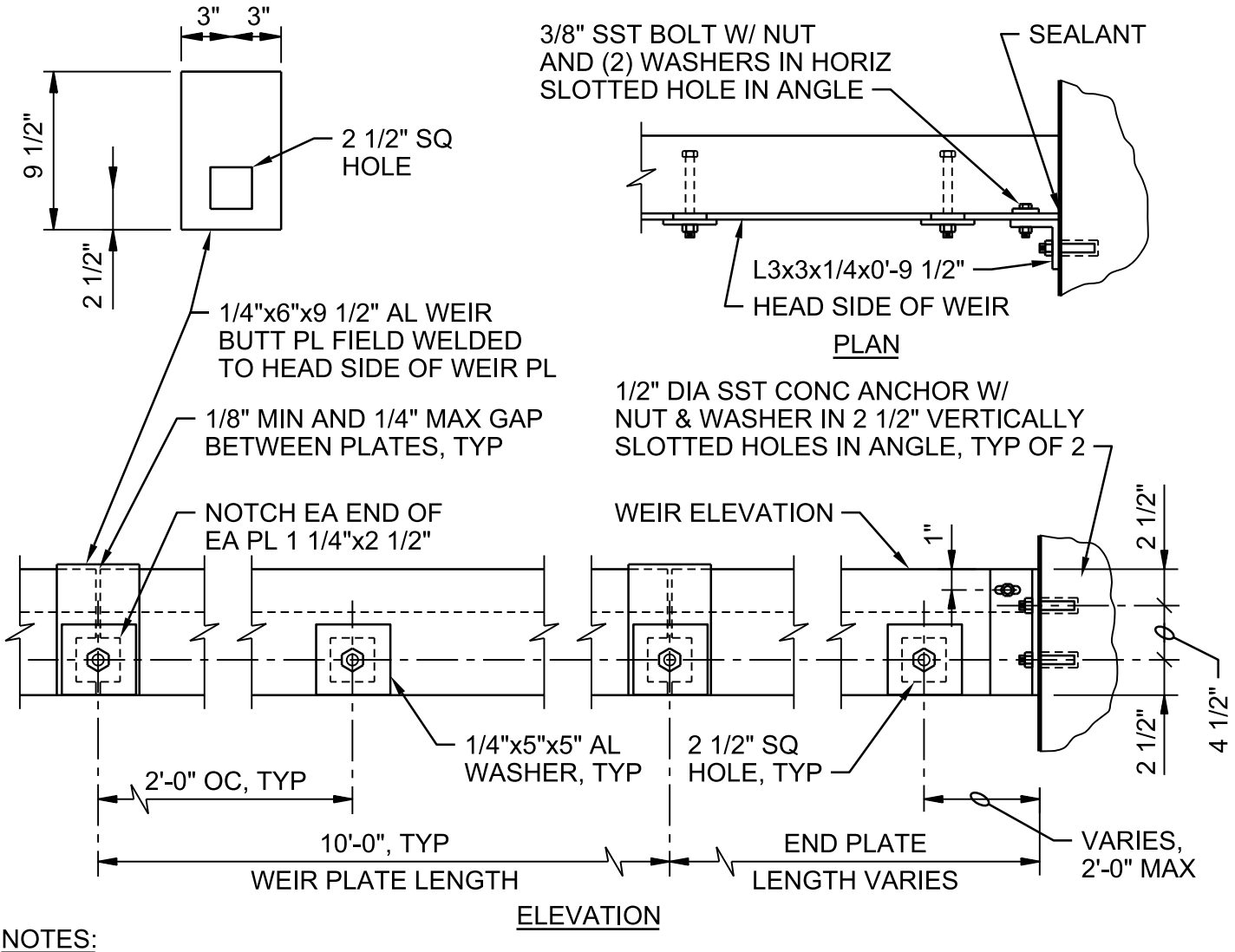

NOTES:

1. ALL PARTS EXCEPT FASTENERS SHALL BE ALUMINUM AS SPECIFIED.
2. ALL FASTENERS SHALL BE SST AS SPECIFIED.
3. STEEL TROWEL TOP OF CONCRETE WALL TO OBTAIN SMOOTH, DENSE FINISH.
4. PROVIDE CONTINUOUS SEALANT BETWEEN WEIR PLATE AND CONCRETE WALL AND BETWEEN END OF WEIR PLATE AND CONCRETE WALL.

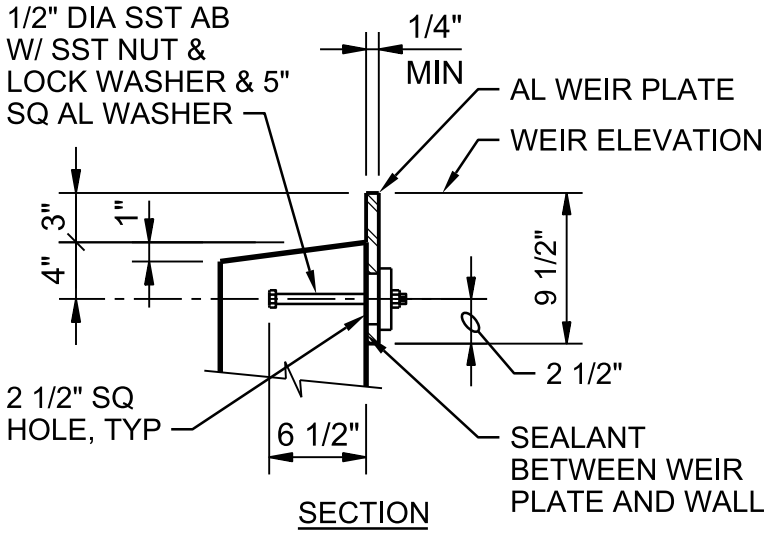

STRAIGHT EDGE WEIR - TYPE A

NTS ALUMINUM

NATIONAL PARK SERVICE
GRAND CANYON NATIONAL PARK
SOUTH RIM

0559-031

© JACOBS

Jacobs

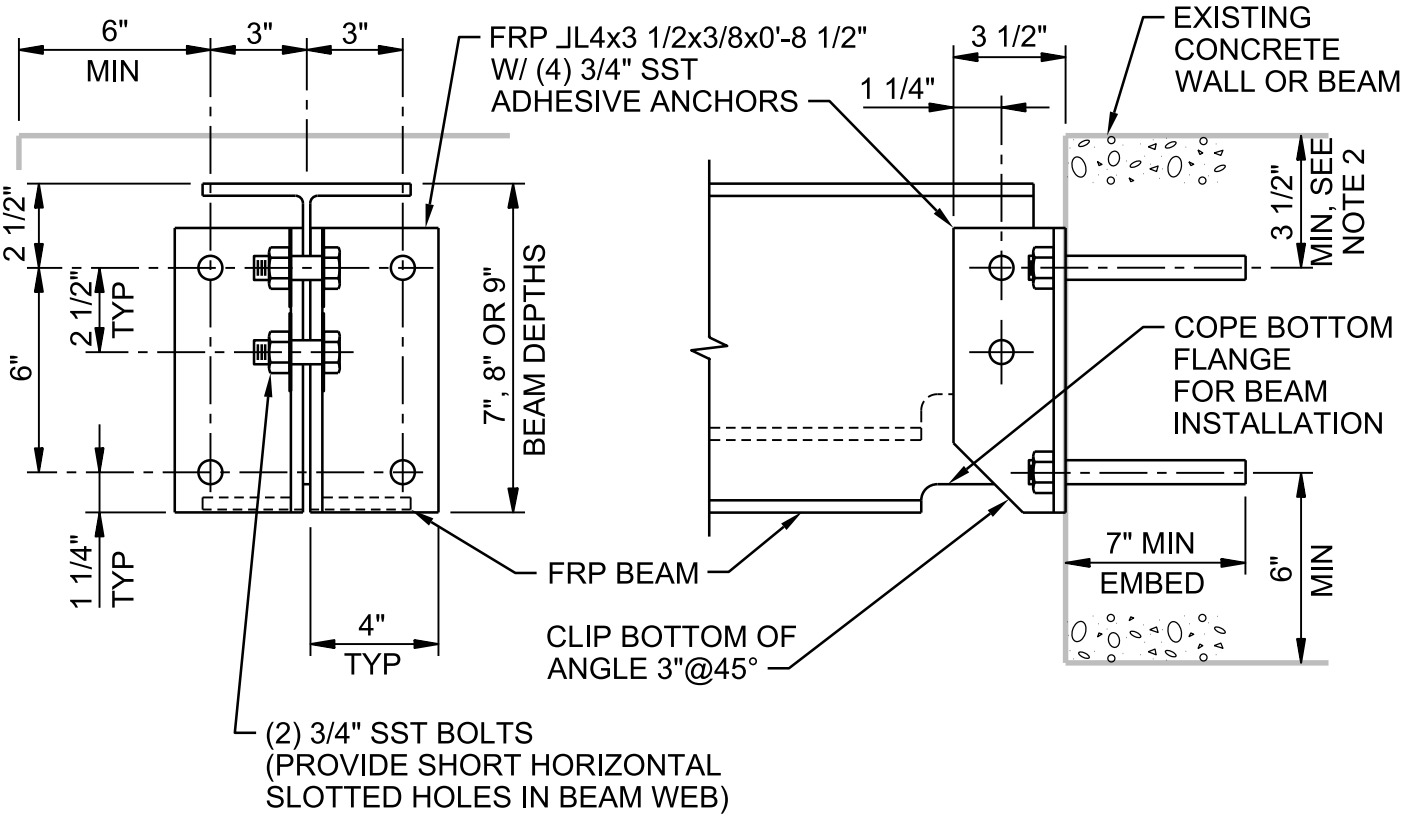

BEAM / WALL CONNECTION - FIBER REINFORCED PLASTIC

NTS

DETAIL 1 OF 2

NATIONAL PARK SERVICE
GRAND CANYON NATIONAL PARK
SOUTH RIM

0614-056

© JACOBS

Jacobs

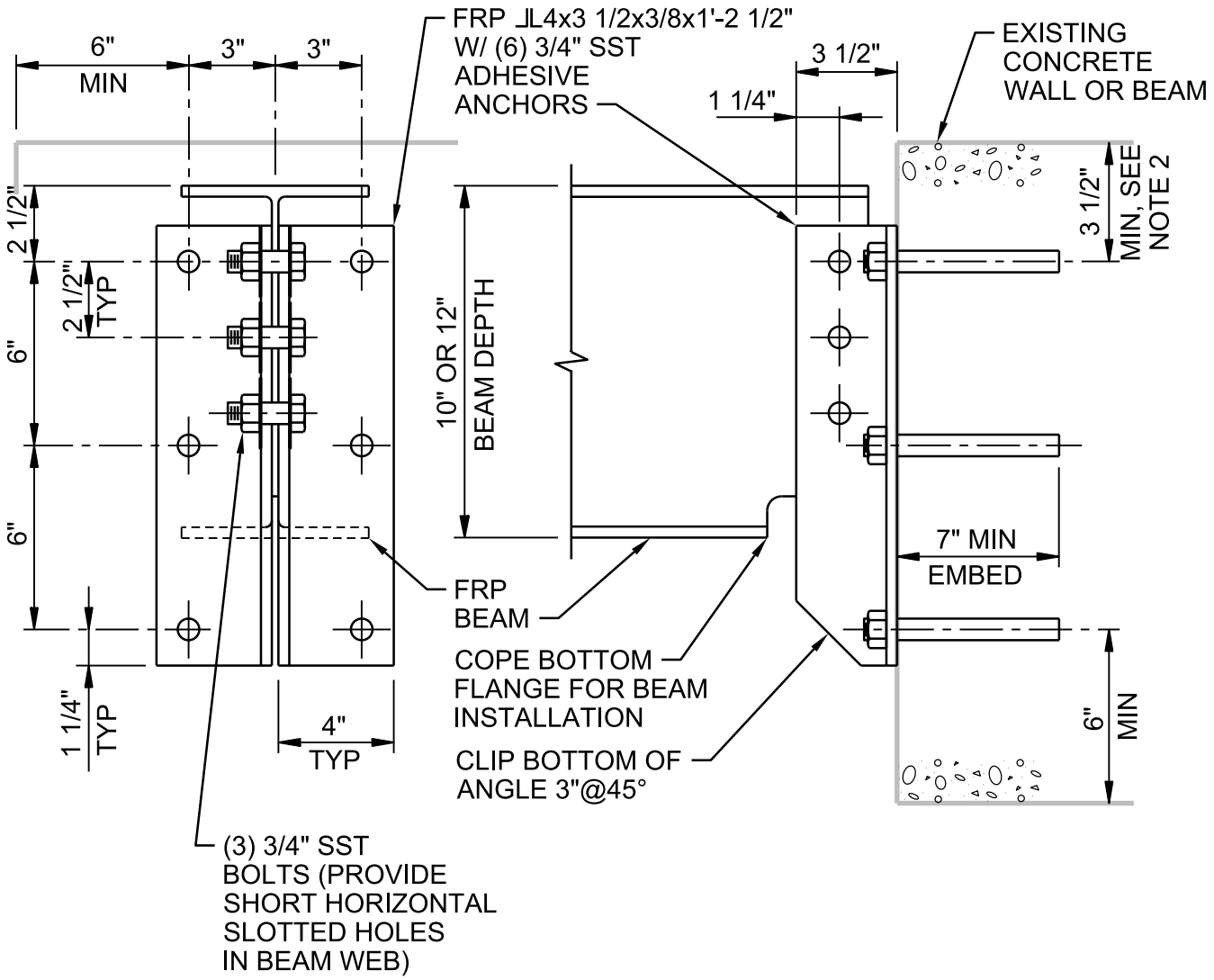

NOTES:

1. 2 1/2" DIMENSION TYPICAL EXCEPT 2" FOR 4" BEAMS.

2. DO NOT CUT EXISTING CONCRETE BEAM TOP REINFORCING DURING DRILL-IN ANCHOR INSTALLATION. FIELD LOCATE BEAM REINFORCING PRIOR TO FABRICATION WITH GROUND PENETRATING RADAR OR OTHER ACCEPTABLE MEANS. ADD LENGTH TO CLIP ANGLES AS REQUIRED TO LOWER ANCHORS TO CLEAR REINFORCING WHILE MAINTAINING SPACING AND EDGE DISTANCE AS SHOWN.

3. WHERE BOTH ENDS OF BEAM ARE ATTACHED TO A WALL, PROVIDE LONG HORIZONTALLY SLOTTED HOLES IN BEAM WEB AT ONE END. TIGHTEN NUTS SNUG TIGHT, BACK OFF 1/2 TURN, AND LOCK WITH DOUBLE NUT.

4. ALL SST ANCHORS, BOLTS, AND NUTS SHALL BE FUSION BONDED EPOXY COATED

BEAM / WALL CONNECTION - FIBER REINFORCED PLASTIC

NTS

DETAIL 2 OF 2

NATIONAL PARK SERVICE
GRAND CANYON NATIONAL PARK
SOUTH RIM

0614-056

© JACOBS

Jacobs

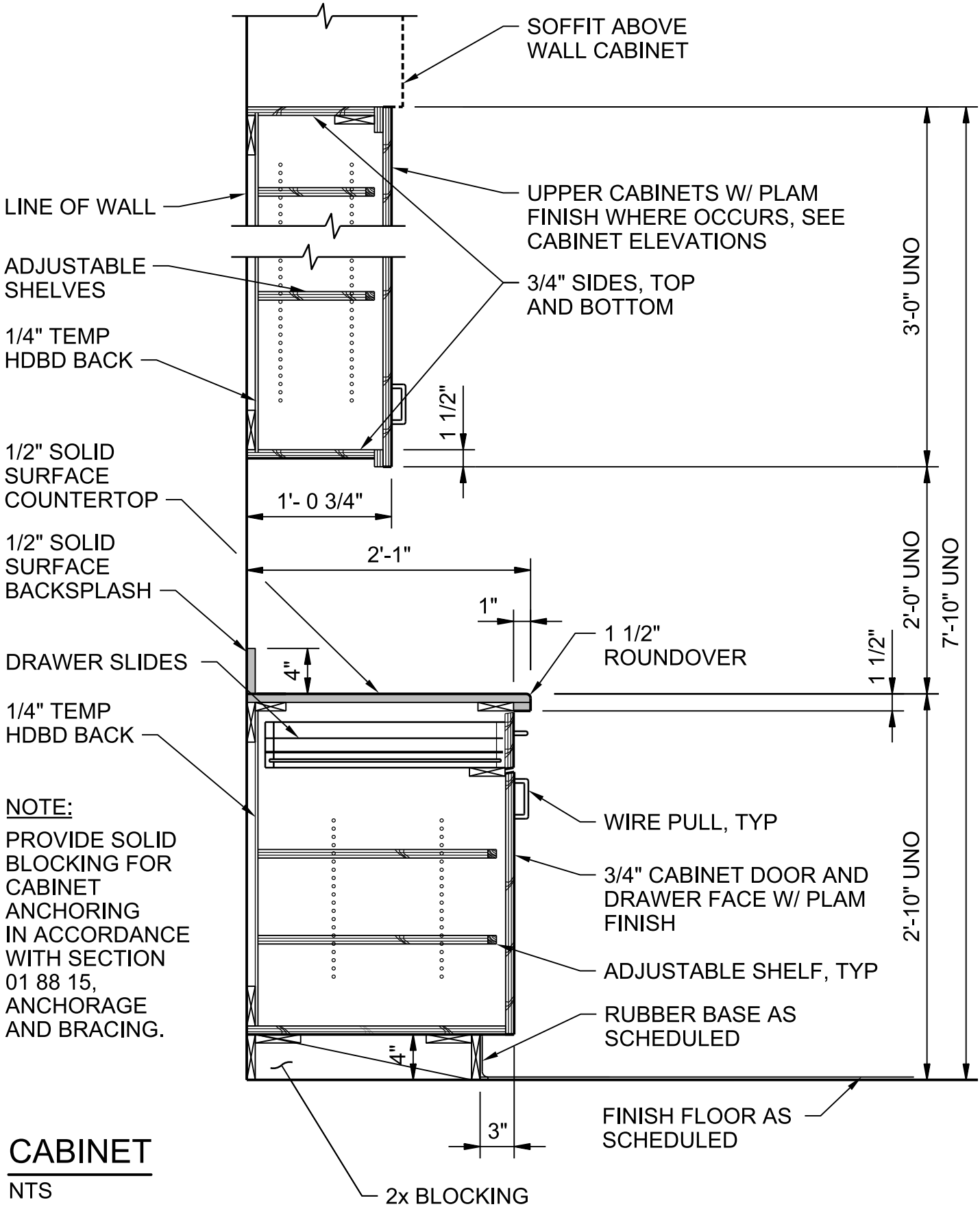

NOTE:

PROVIDE SOLID BLOCKING FOR CABINET ANCHORING IN ACCORDANCE WITH SECTION 01 88 15, ANCHORAGE AND BRACING.

CABINET

NTS

NATIONAL PARK SERVICE
GRAND CANYON NATIONAL PARK
SOUTH RIM

0641-001

© JACOBS

Jacobs

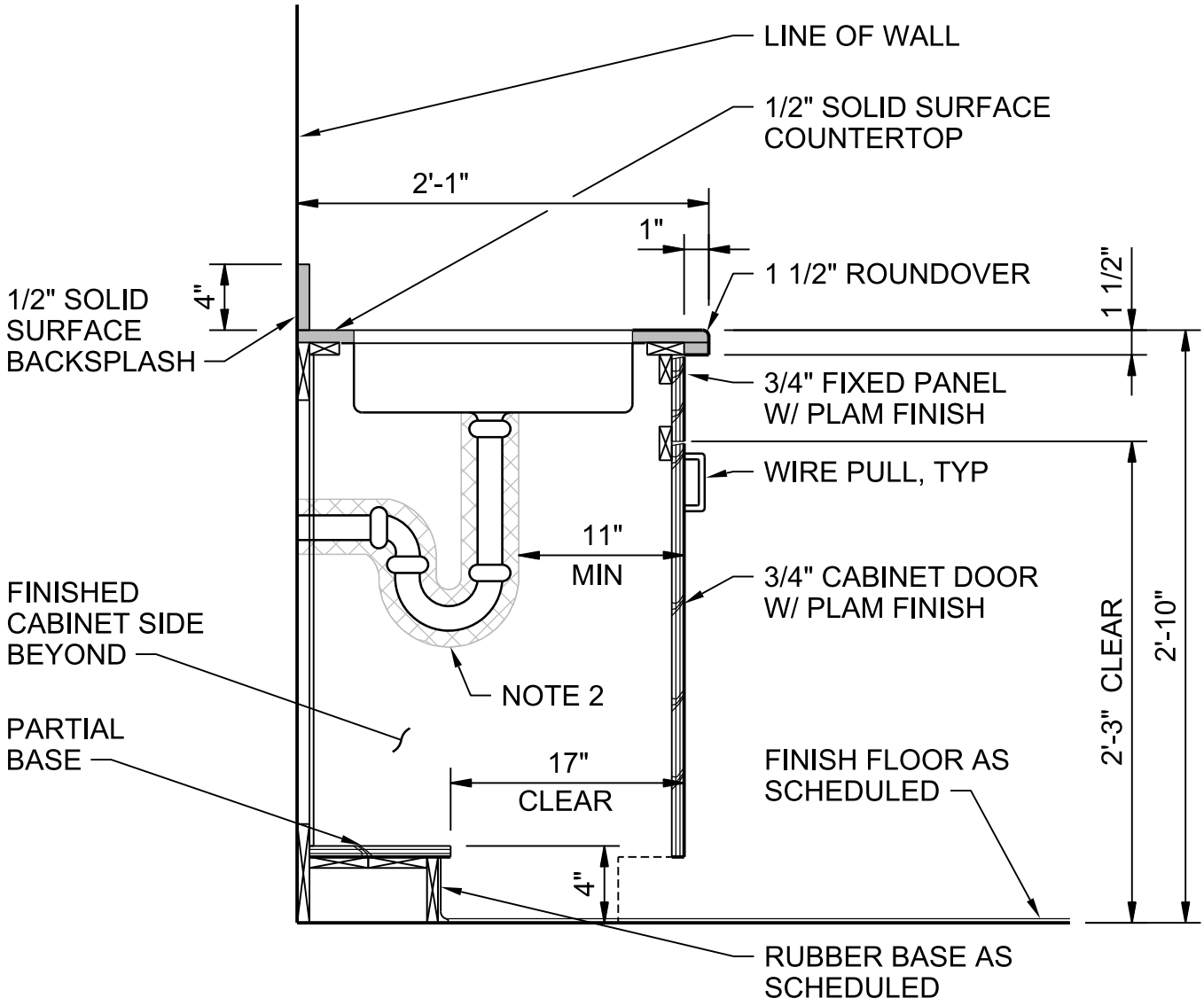

NOTES :

1. PROVIDE SOLID BLOCKING FOR CABINET ANCHORING IN ACCORDANCE WITH SECTION 01 88 15, ANCHORAGE AND BRACING.

2. EXPOSED PIPES AND SURFACES SHALL BE INSULATED OR OTHERWISE CONFIGURED TO PROTECT AGAINST CONTACT WITH SHARP OR ABRASIVE SURFACES.

CABINET

NTS

NATIONAL PARK SERVICE
GRAND CANYON NATIONAL PARK
SOUTH RIM

0641-002

© JACOBS

Jacobs

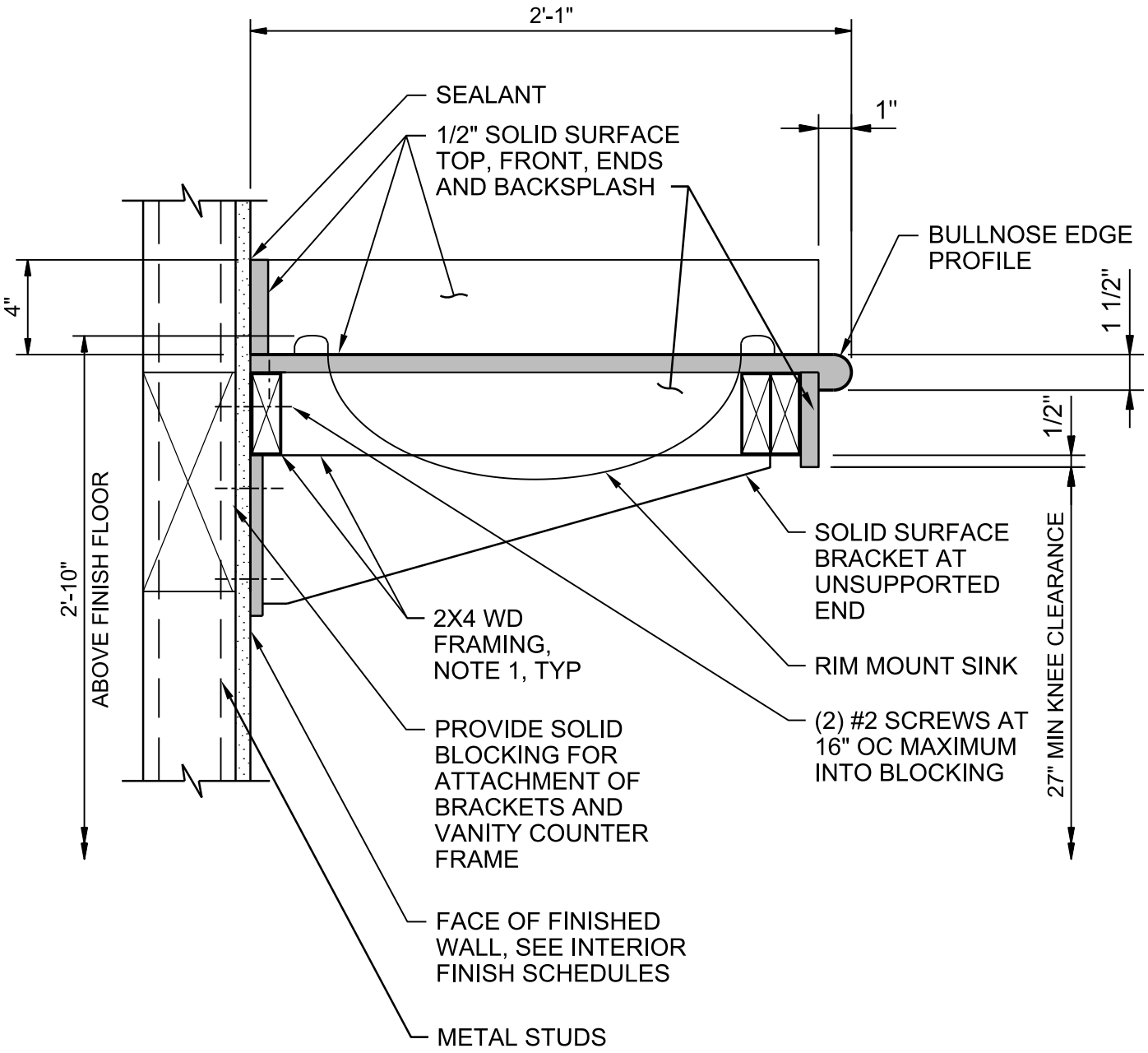

NOTES:

1. PROVIDE STEEL SUPPORT BRACKETS WHERE COUNTERTOP EXCEEDS SIX FEET.

VANITY COUNTERTOP

NTS

NATIONAL PARK SERVICE
GRAND CANYON NATIONAL PARK
SOUTH RIM

0641-100

© JACOBS

Jacobs

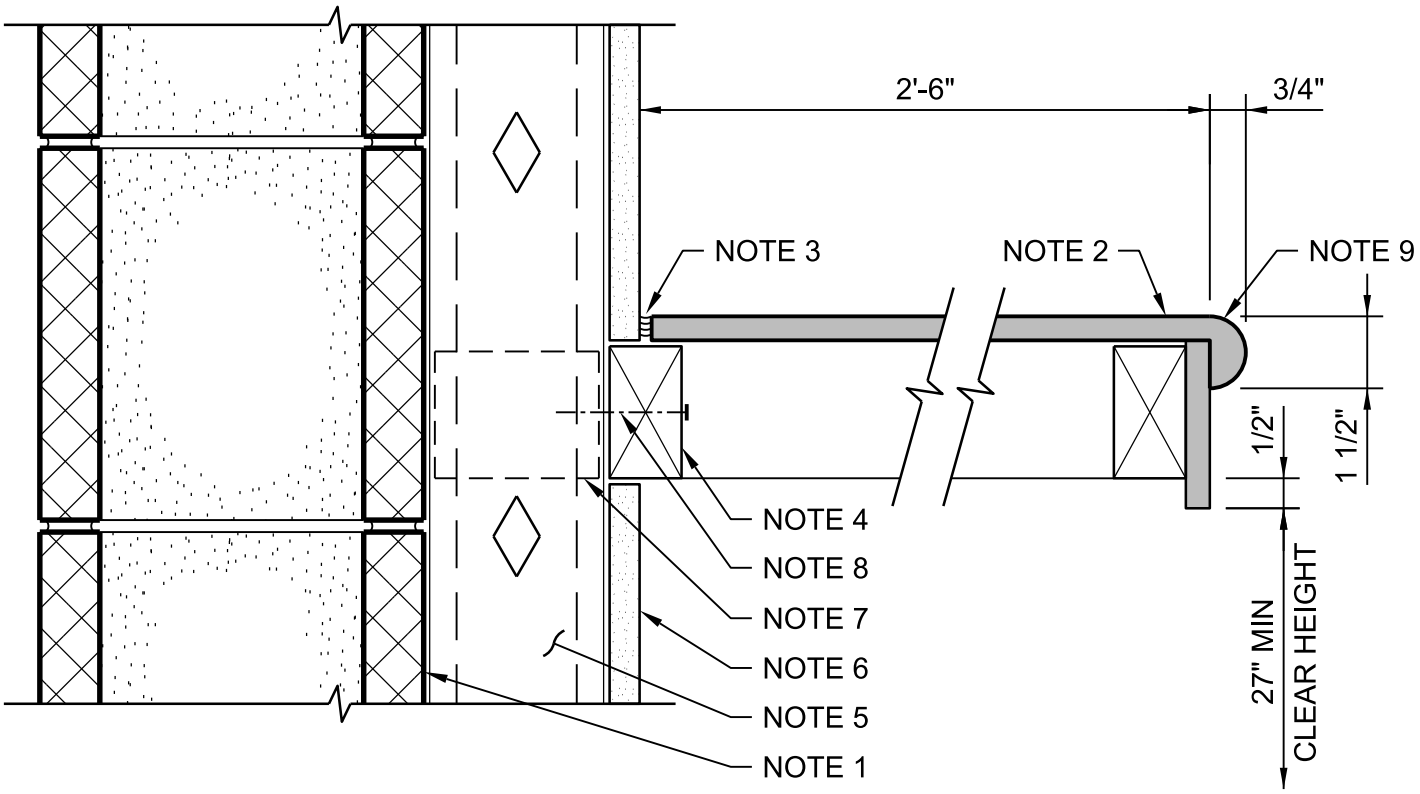

NOTES:

1. CMU WALL
2. 1/2" SOLID SURFACE TOP, FRONT AND ENDS
3. SEALANT
4. 2x4 WOOD FRAMING WITH STEEL SUPPORT BRACKETS
5. 3 5/8" METAL STUDS
6. GWB
7. PROVIDE SOLID BLOCKING FOR COUNTERTOP FRAME SUPPORT
8. (2) #2 SCREWS AT 16" OC MAX INTO BLOCKING
9. BULLNOSE EDGE PROFILE

COUNTERTOP

NTS

NATIONAL PARK SERVICE
GRAND CANYON NATIONAL PARK
SOUTH RIM

0641-102

© JACOBS

Jacobs

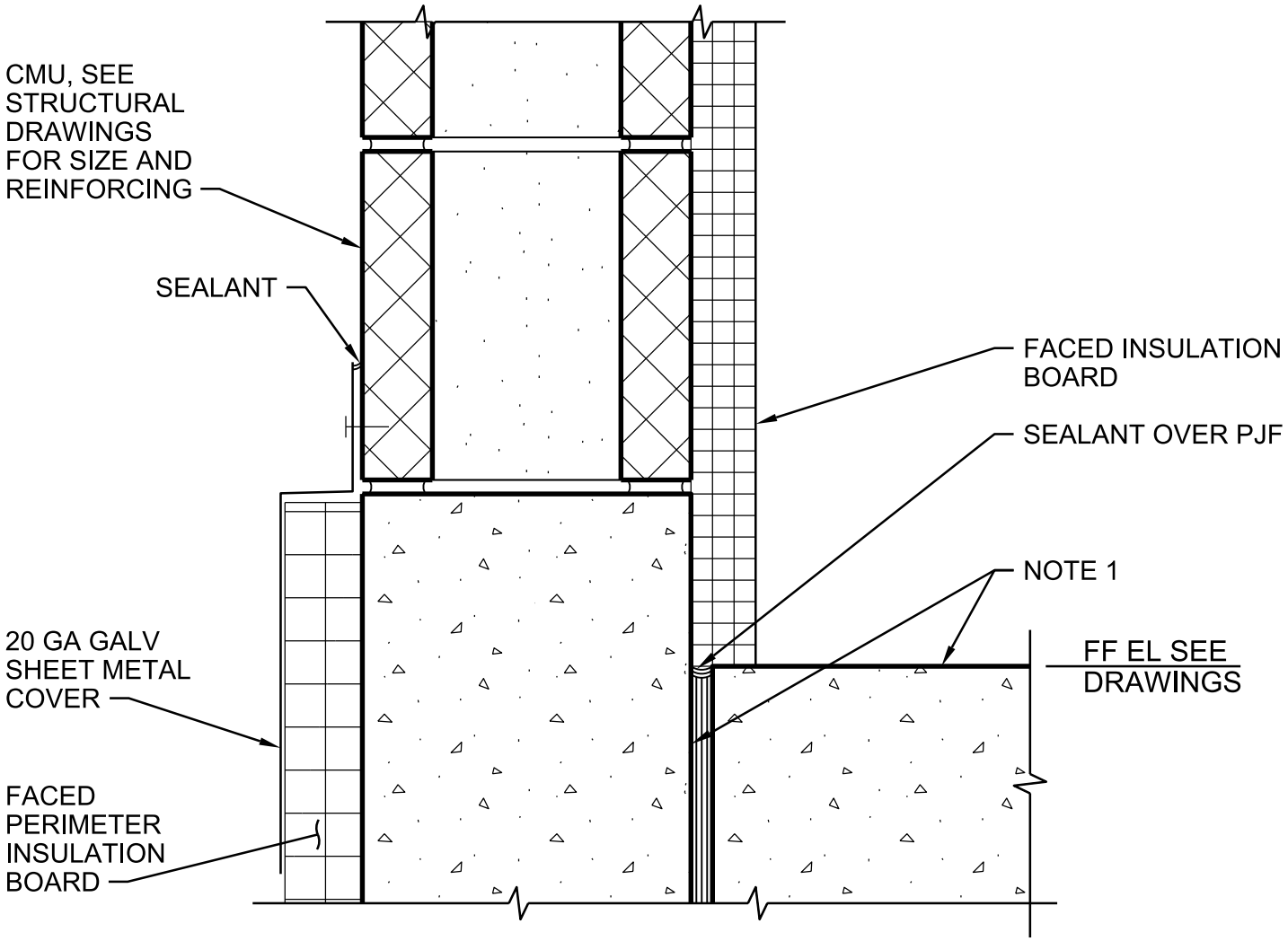

NOTES:

1. CONCRETE FOUNDATION AND SLAB, SEE STRUCTURAL DRAWINGS.

BASE OF WALL (FACED PERIMETER INSUALTION BOARD)

NTS

NATIONAL PARK SERVICE
GRAND CANYON NATIONAL PARK
SOUTH RIM

0721-001

© JACOBS

Jacobs

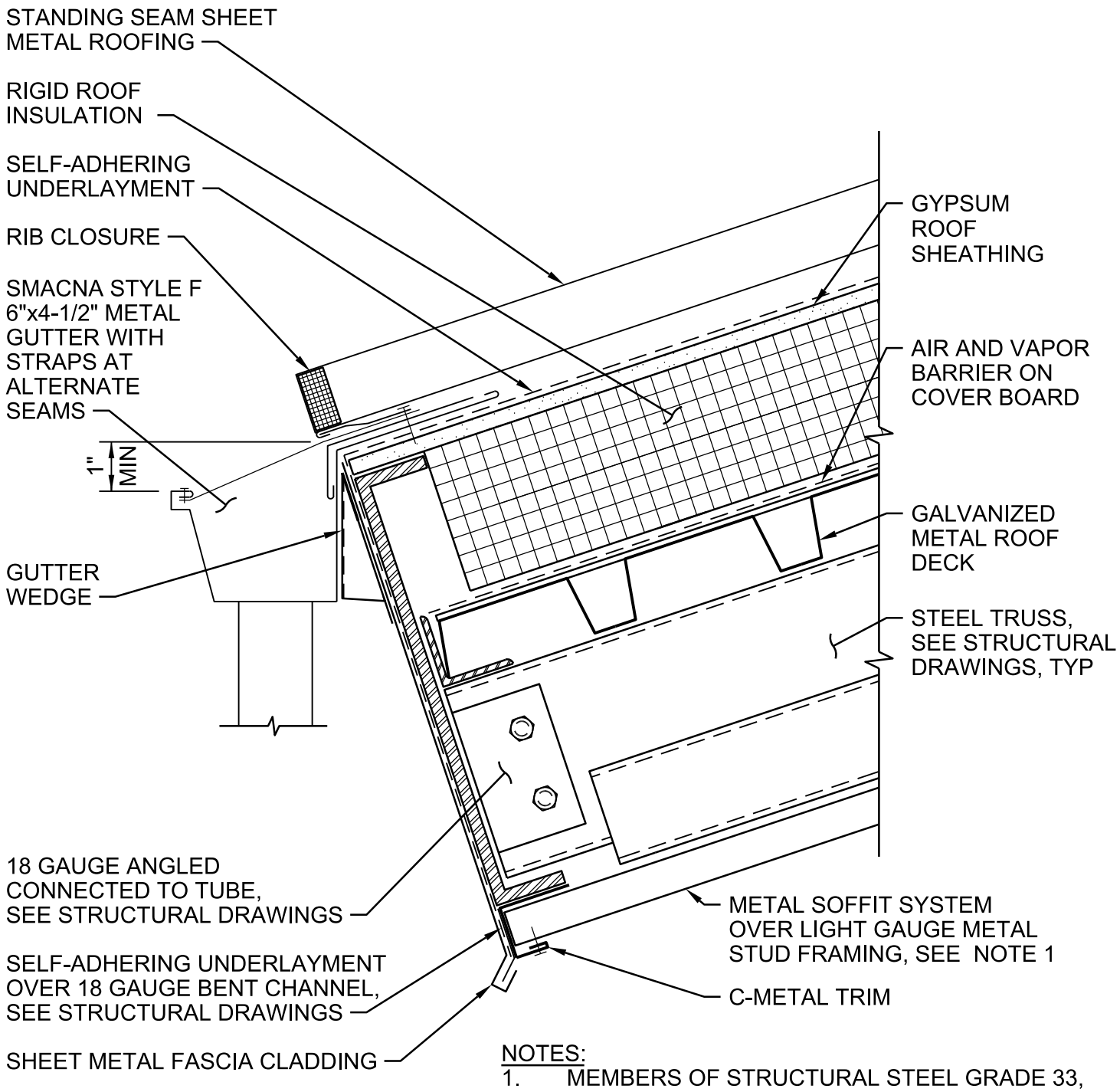

NOTES:

1. MEMBERS OF STRUCTURAL STEEL GRADE 33, HIGH STRENGTH LOW-ALLOY STEEL, TYPE A OR B, GRADE 50, OR A500, GRADE B, WITH G60 GALVANIZED COATING AND MINIMUM DESIGN THICKNESS EQUAL TO 0.0346". COLD-FORMED RECTANGULAR TUBING OR C-SECTIONS WITH RETURN LIPS AND UNPUNCHED WEBS. PROVIDE MANUFACTURER'S STANDARD ACCESSORIES.

EAVE (METAL FRAMING)

NTS

NATIONAL PARK SERVICE
GRAND CANYON NATIONAL PARK
SOUTH RIM

0741-101

© JACOBS

Jacobs

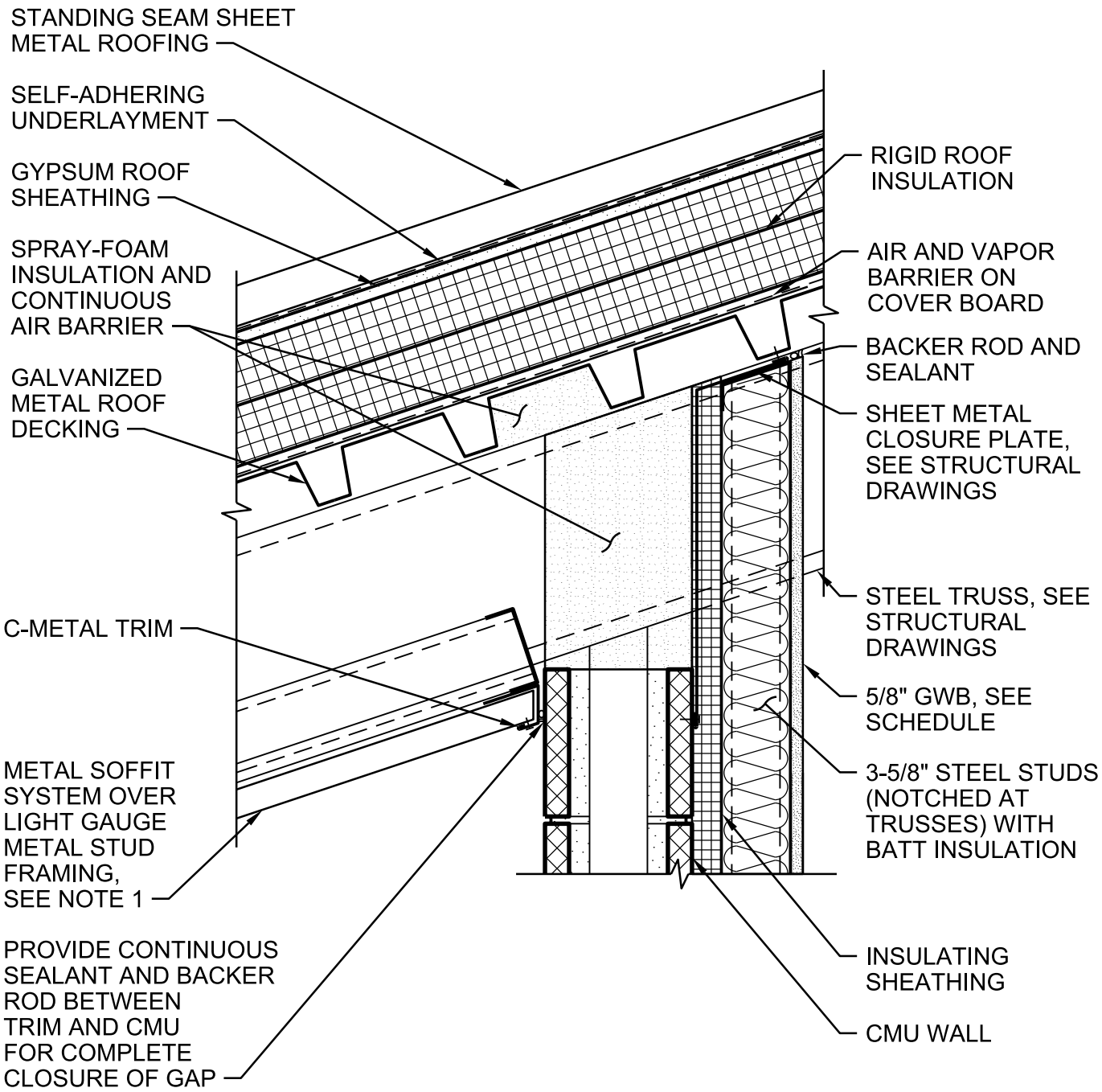

NOTES:

1. MEMBERS OF STRUCTURAL STEEL GRADE 33, HIGH STRENGTH LOW-ALLOY STEEL, TYPE A OR B, GRADE 50, OR A500, GRADE B, WITH G60 GALVANIZED COATING AND MINIMUM DESIGN THICKNESS EQUAL TO 0.0346", COLD-FORMED RECTANGULAR TUBING OR C-SECTIONS WITH RETURN LIPS AND UNPUNCHED WEBS. PROVIDE MANUFACTURER'S STANDARD ACCESSORIES.

LOW EAVE AT WALL (METAL FRAMING)

NTS

NATIONAL PARK SERVICE
GRAND CANYON NATIONAL PARK
SOUTH RIM

0741-102

© JACOBS

Jacobs

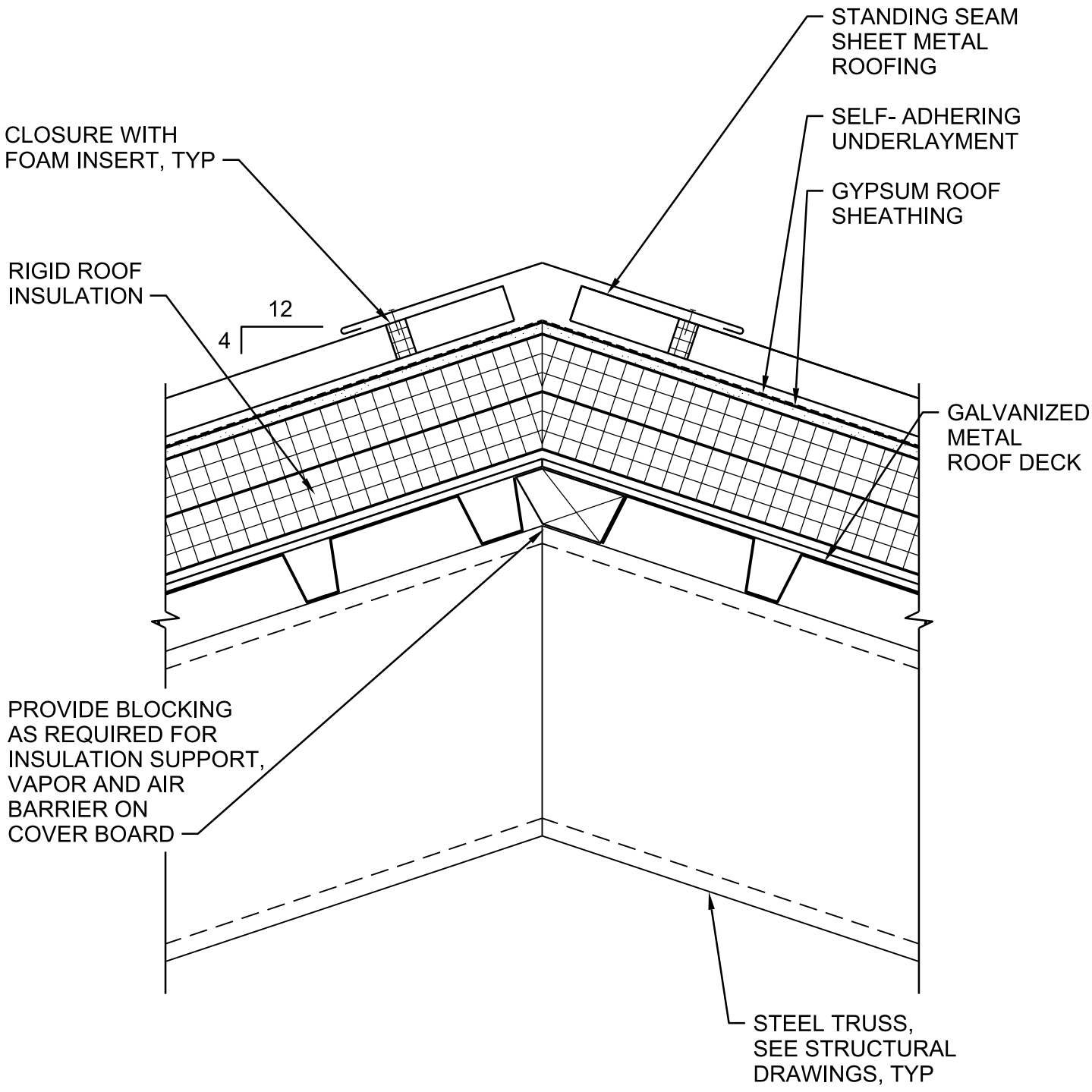

RIDGE (METAL FRAMING)

NTS

NATIONAL PARK SERVICE
GRAND CANYON NATIONAL PARK
SOUTH RIM

0741-103

© JACOBS

Jacobs

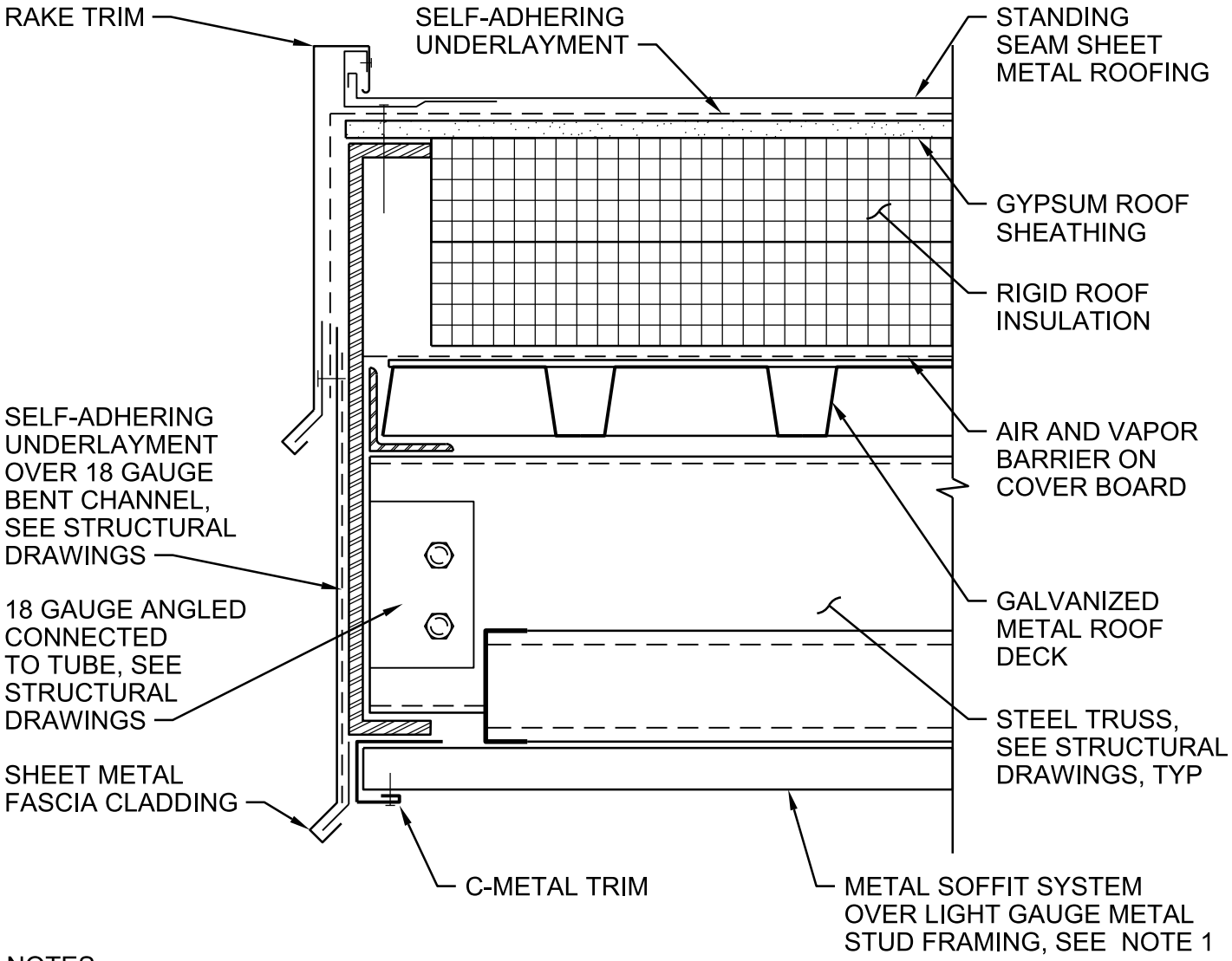

NOTES:
1.MEMBERS OF STRUCTURAL STEEL GRADE 33, HIGH STRENGTH LOW-ALLOY STEEL, TYPE A OR B, GRADE 50, OR A500, GRADE B, WITH G60 GALVANIZED COATING AND MINIMUM DESIGN THICKNESS EQUAL TO 0.0346". COLD-FORMED RECTANGULAR TUBING OR C-SECTIONS WITH RETURN LIPS AND UNPUNCHED WEBS. PROVIDE MANUFACTURER'S STANDARD ACCESSORIES.

RAKE (METAL FRAMING)

NTS

NATIONAL PARK SERVICE
GRAND CANYON NATIONAL PARK
SOUTH RIM

0741-104

© JACOBS

Jacobs

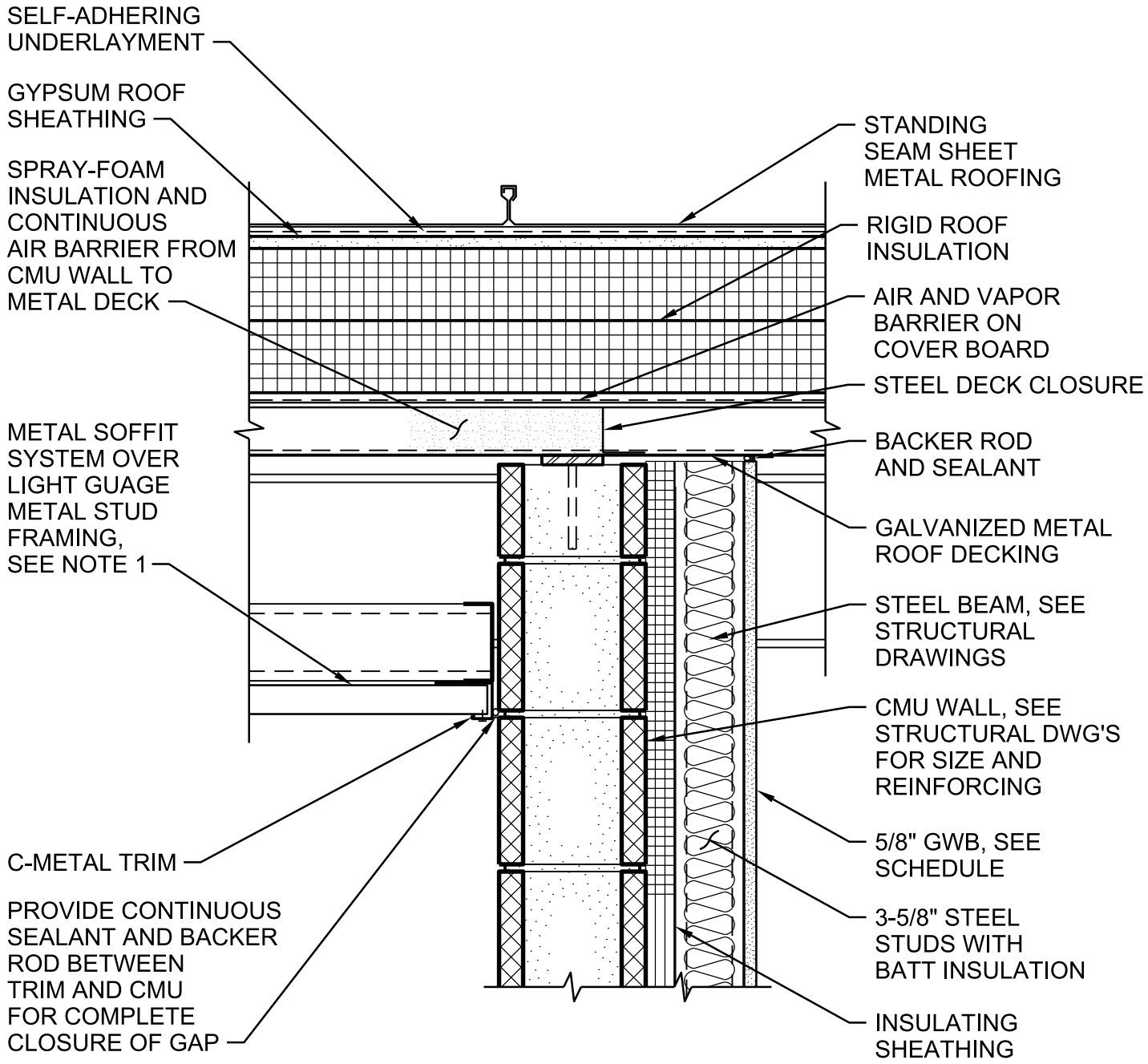

NOTES:

1. MEMBERS OF STRUCTURAL STEEL GRADE 33, HIGH STRENGTH LOW-ALLOY STEEL, TYPE A OR B, GRADE 50, OR A500, GRADE B, WITH G60 GALVANIZED COATING AND MINIMUM DESIGN THICKNESS EQUAL TO 0.0346". COLD-FORMED RECTANGULAR TUBING OR C-SECTIONS WITH RETURN LIPS AND UNPUNCHED WEBS. PROVIDE MANUFACTURER'S STANDARD ACCESSORIES.

RAKE AT WALL (METAL FRAMING)

NTS

NATIONAL PARK SERVICE
GRAND CANYON NATIONAL PARK
SOUTH RIM

0741-105

© JACOBS

Jacobs

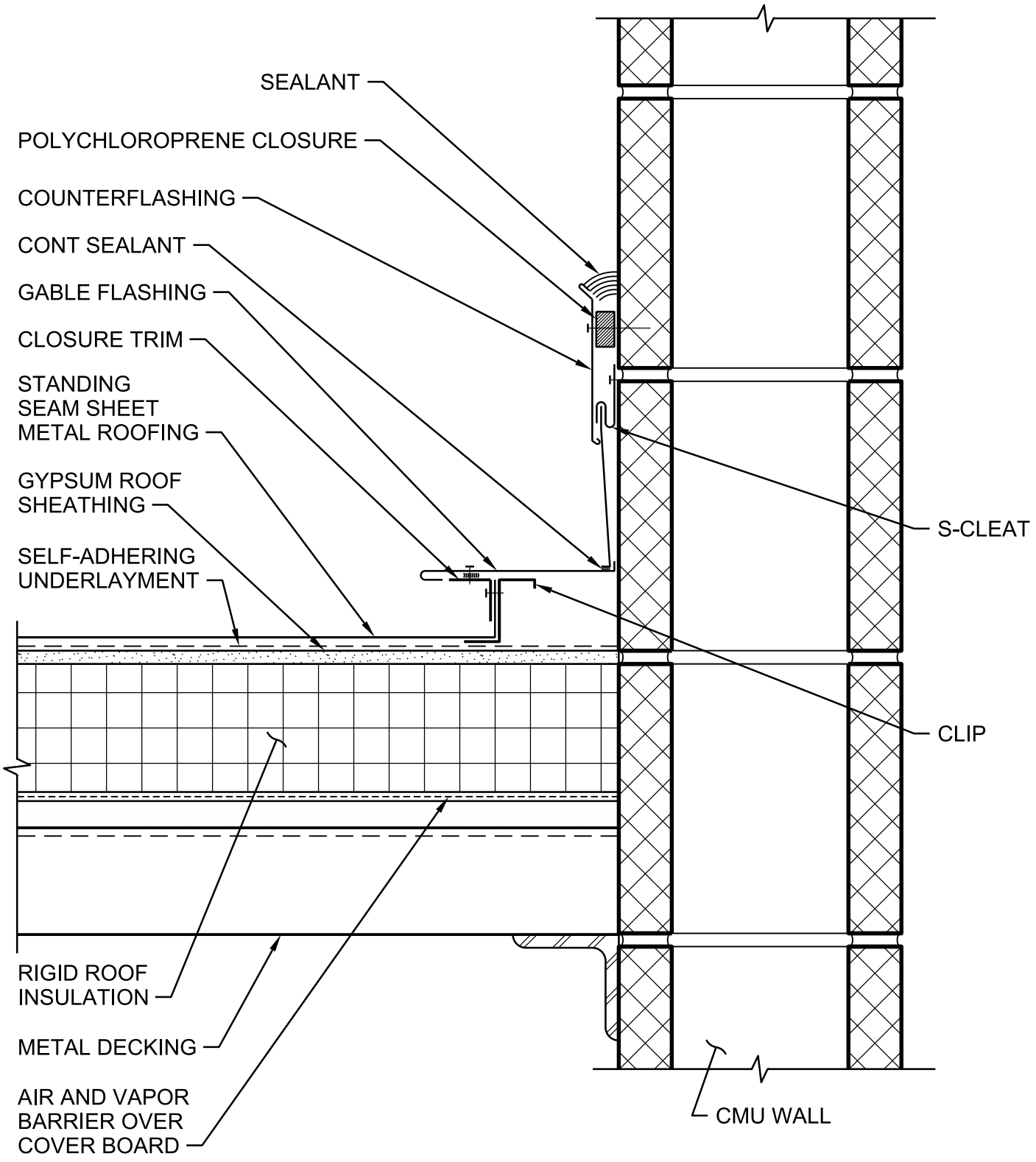

SIDEWALL

NTS

NATIONAL PARK SERVICE
GRAND CANYON NATIONAL PARK
SOUTH RIM

0741-106

© JACOBS

Jacobs

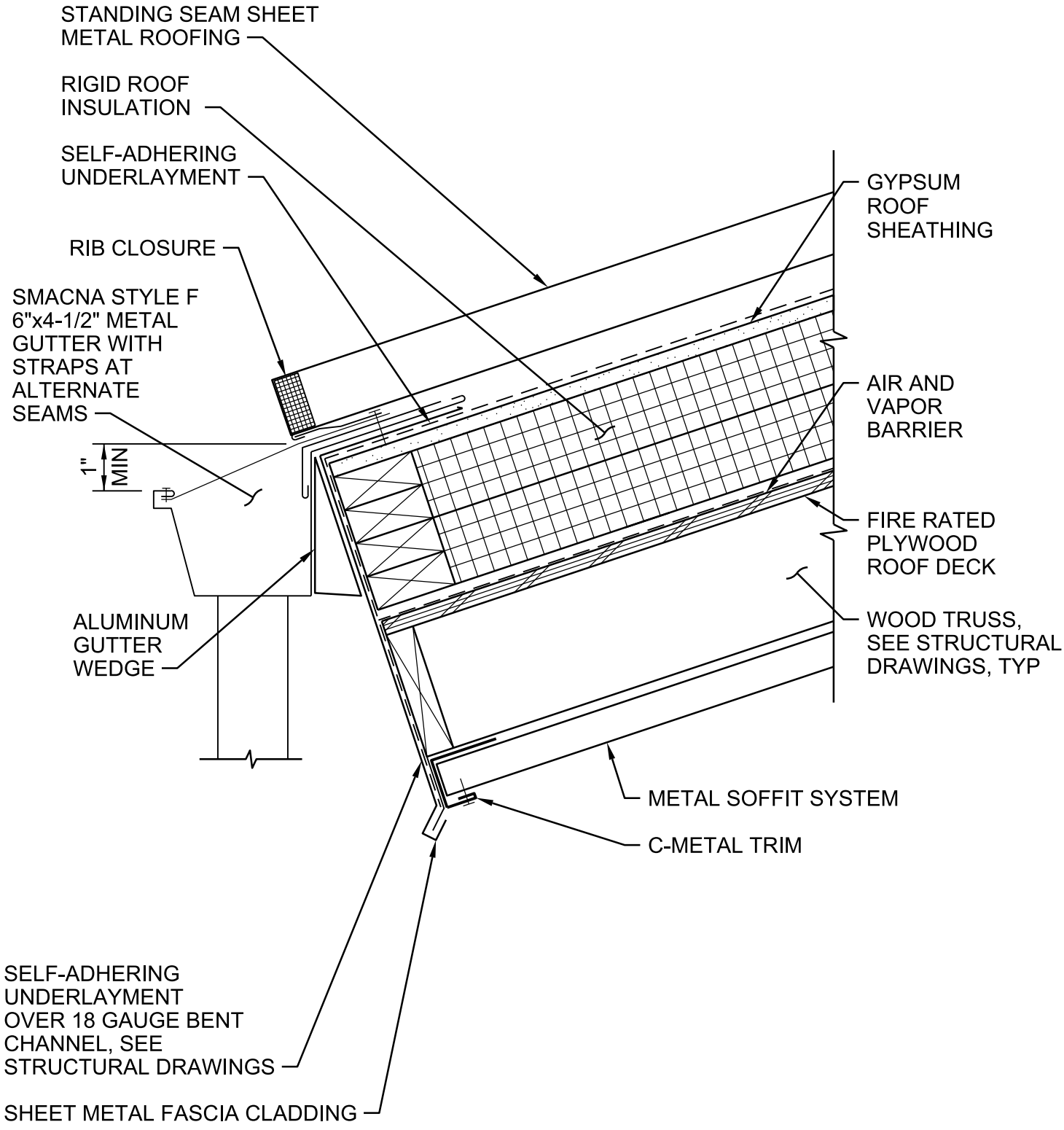

EAVE (WOOD FRAMING)

NTS

NATIONAL PARK SERVICE
GRAND CANYON NATIONAL PARK
SOUTH RIM

0741-201

© JACOBS

Jacobs

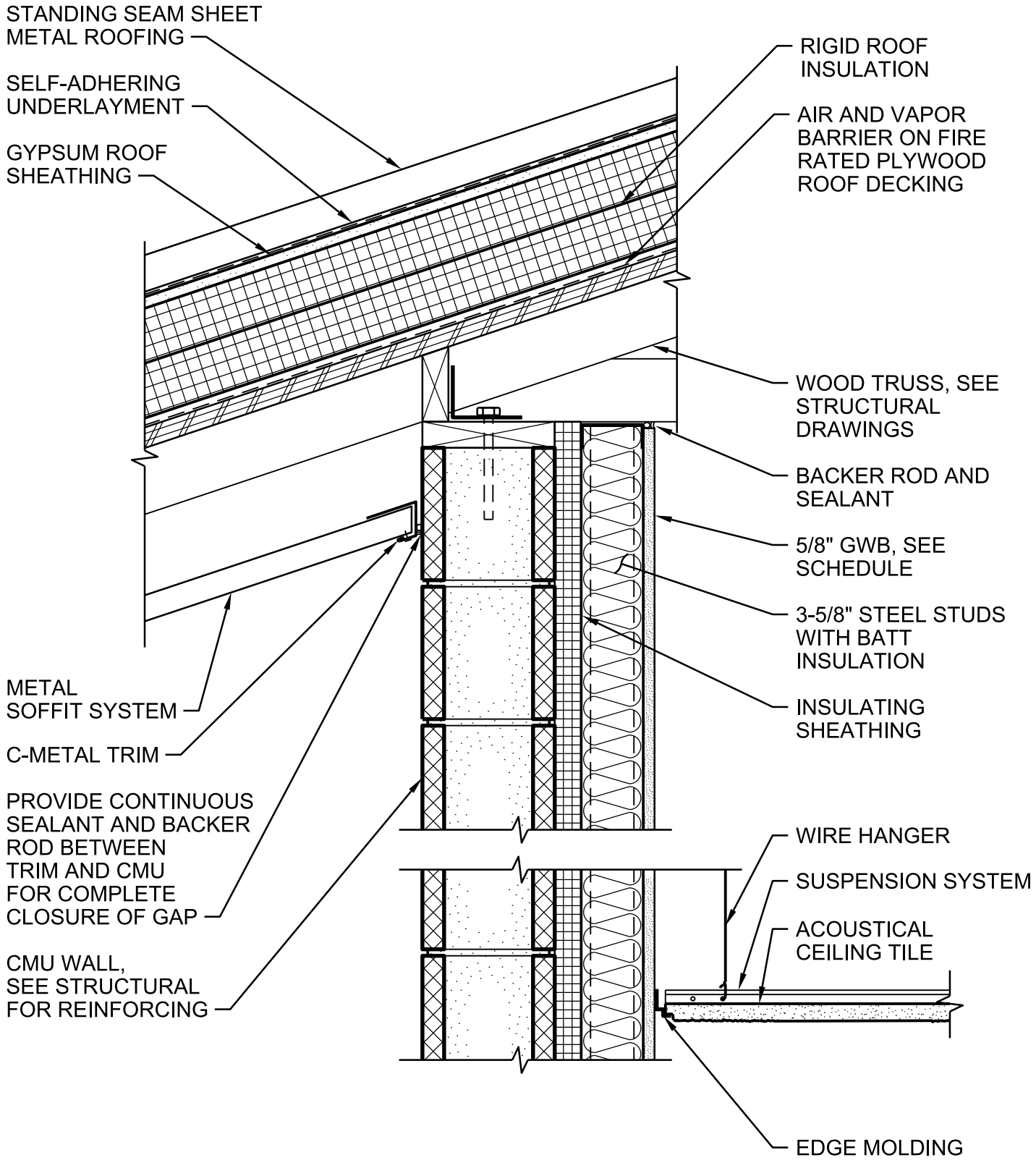

LOW EAVE AT WALL (WOOD FRAMING)

NTS

NATIONAL PARK SERVICE
GRAND CANYON NATIONAL PARK
SOUTH RIM

0741-202

© JACOBS

Jacobs

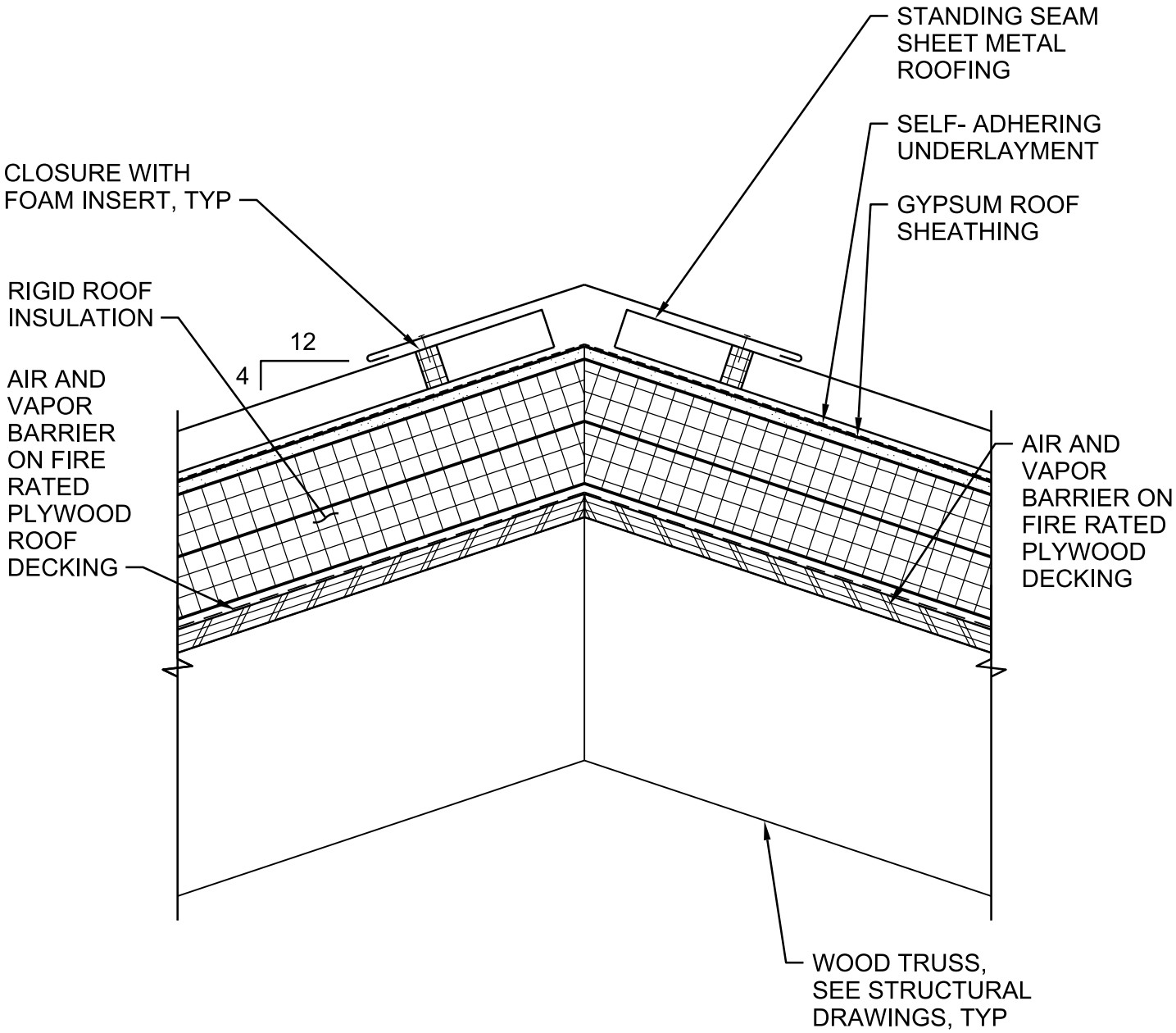

RIDGE (WOOD FRAMING)

NTS

NATIONAL PARK SERVICE
GRAND CANYON NATIONAL PARK
SOUTH RIM

0741-203

© JACOBS

Jacobs

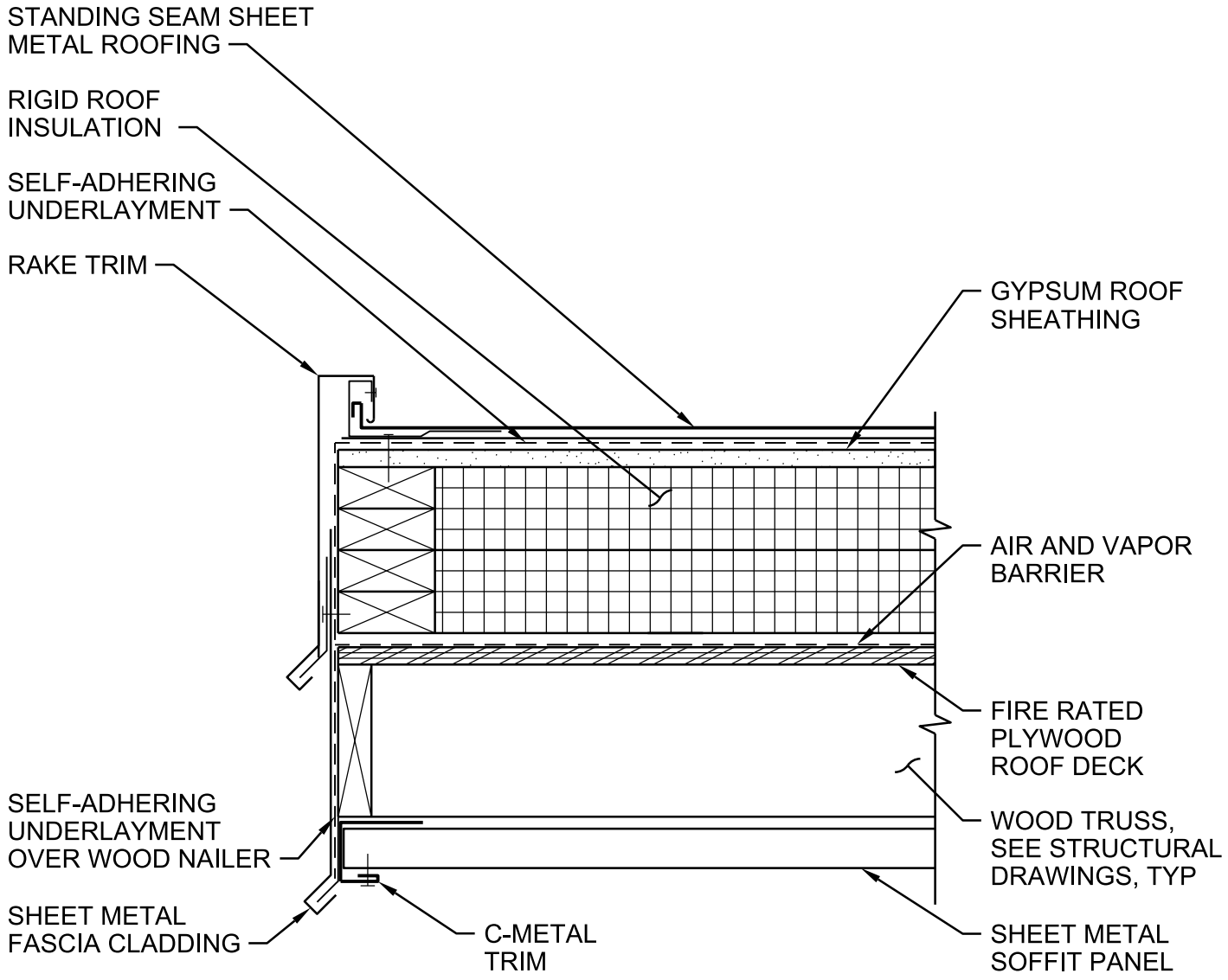

RAKE (WOOD FRAMING)

NTS

NATIONAL PARK SERVICE
GRAND CANYON NATIONAL PARK
SOUTH RIM

0741-204

© JACOBS

Jacobs

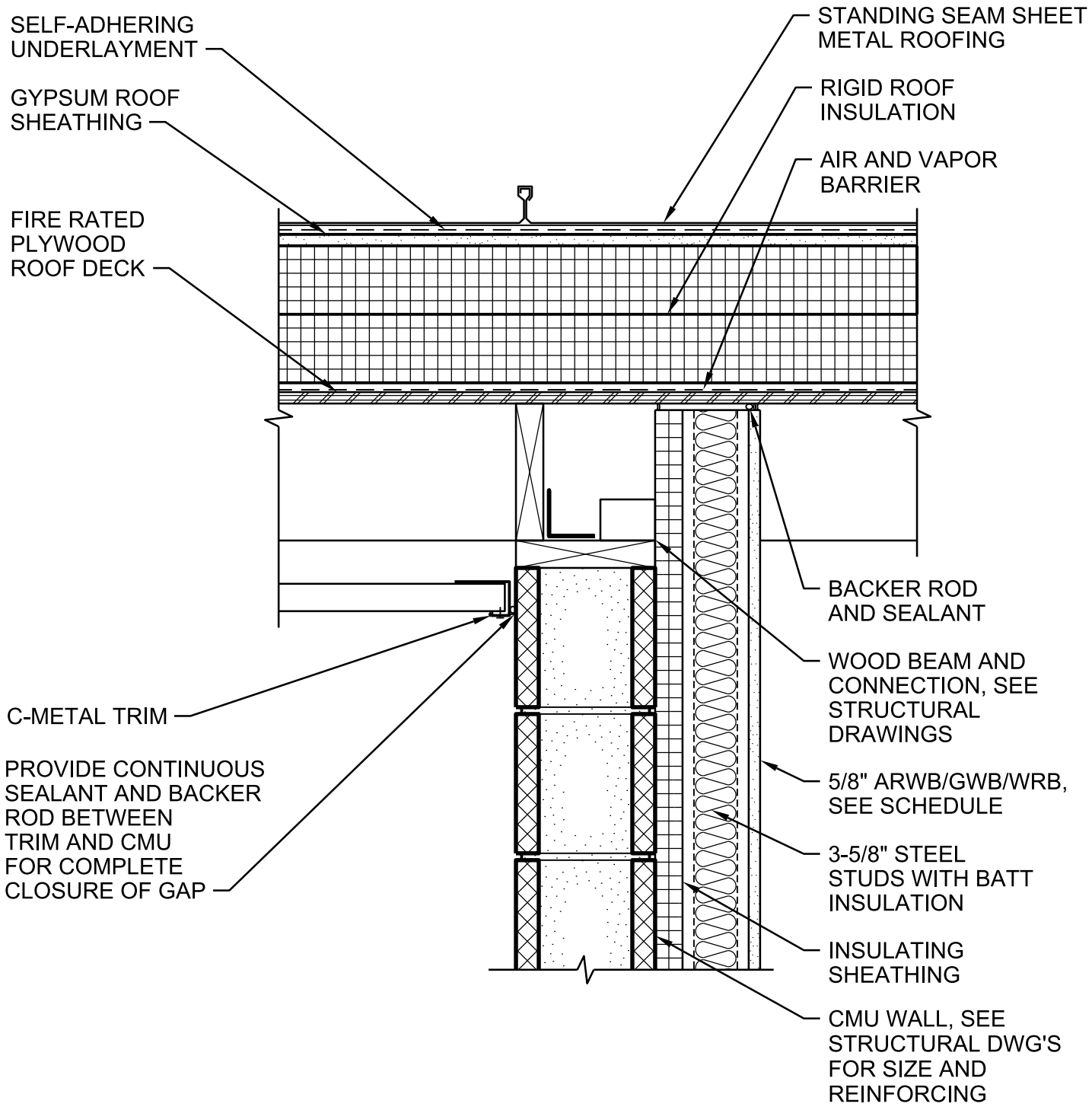

RAKE AT WALL (WOOD FRAMING)

NTS

NATIONAL PARK SERVICE
GRAND CANYON NATIONAL PARK
SOUTH RIM

0741-205

© JACOBS

Jacobs

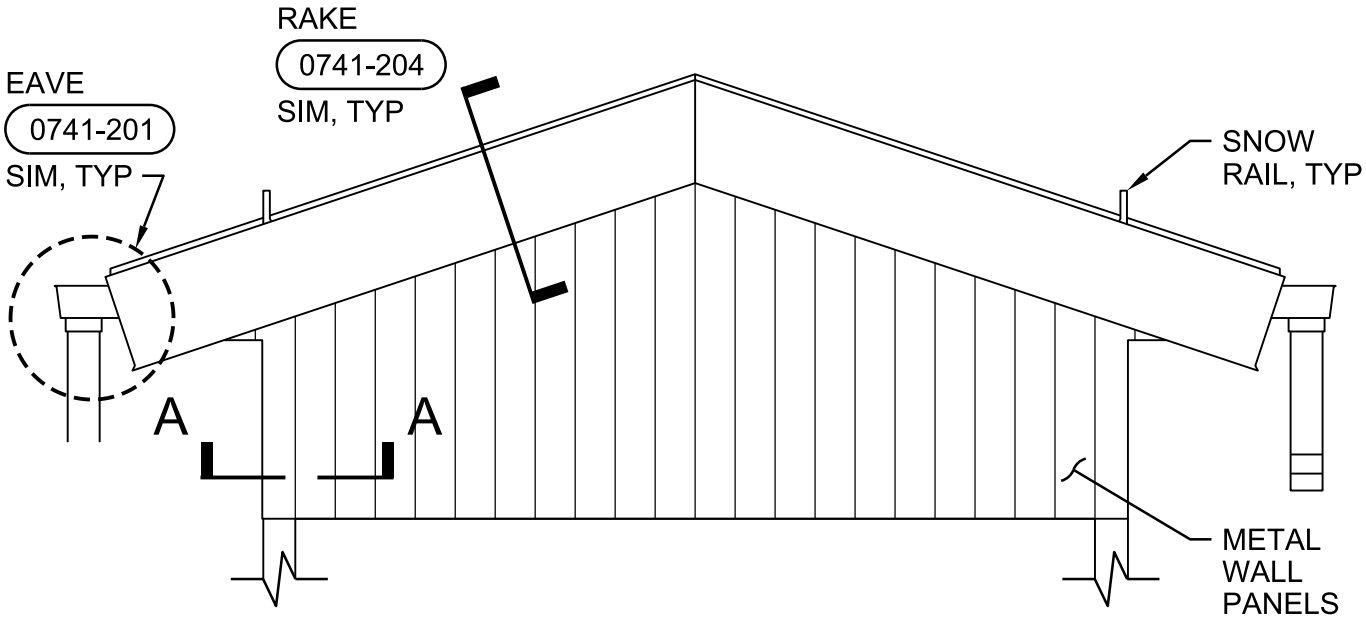

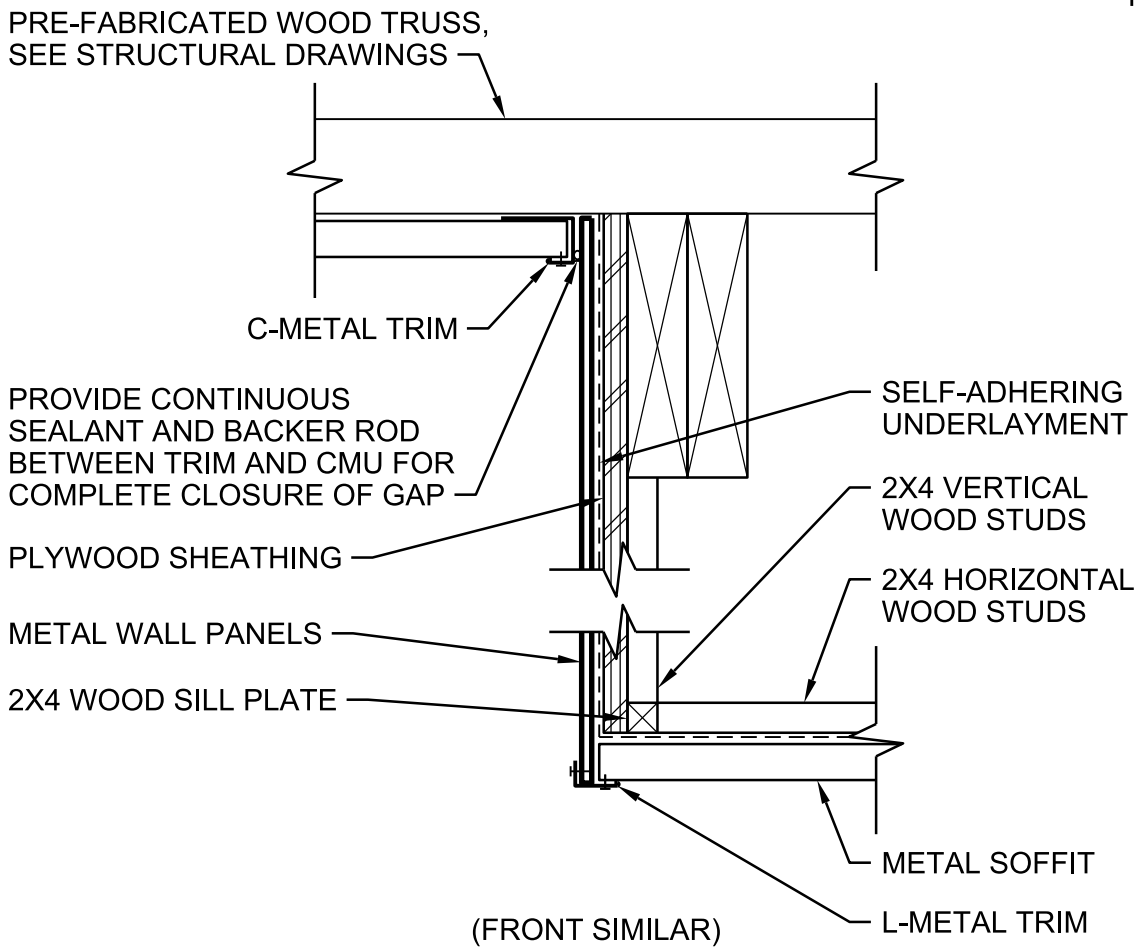

(FRONT SIMILAR)

SECTION A
(SOFFIT)

ENTRY GABLE (MAIN)

NTS

NATIONAL PARK SERVICE
GRAND CANYON NATIONAL PARK
SOUTH RIM

0741-206

© JACOBS

Jacobs

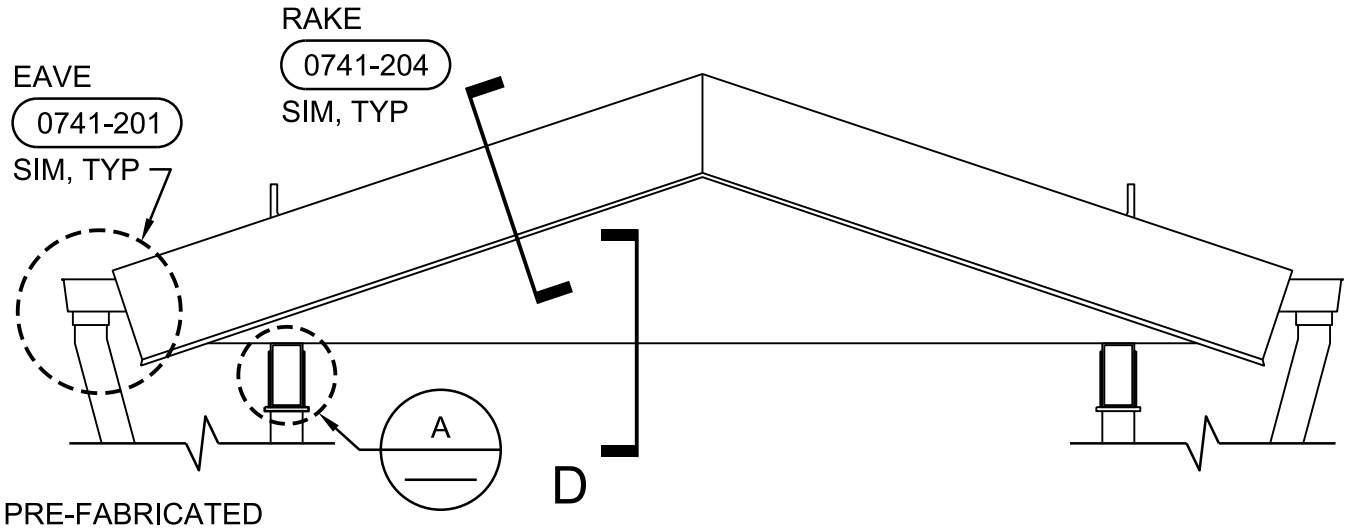

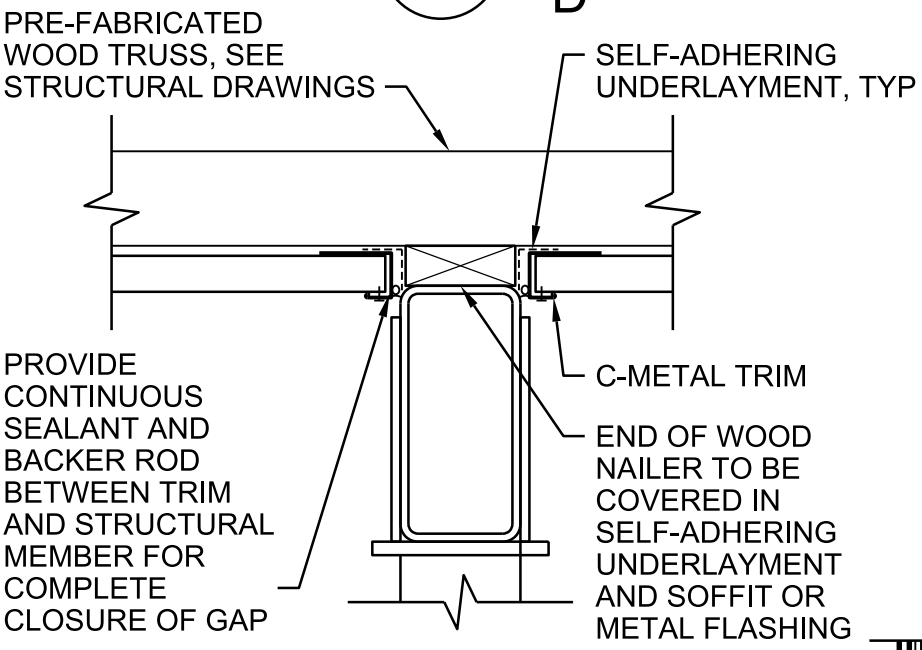

SECTION A
(SOFFIT TO BEAM)

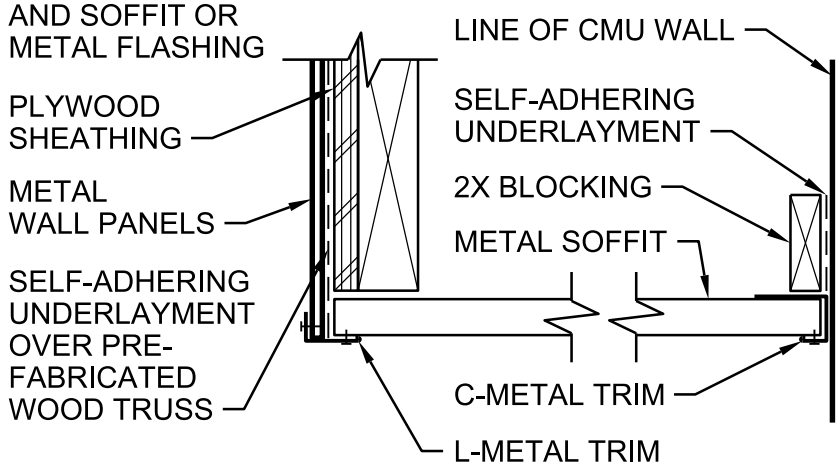

SECTION D
(GABLE FACE SECTION)

ENTRY GABLE (SIDE AND BACK)

NTS

NATIONAL PARK SERVICE
GRAND CANYON NATIONAL PARK
SOUTH RIM

0741-207

© JACOBS

Jacobs

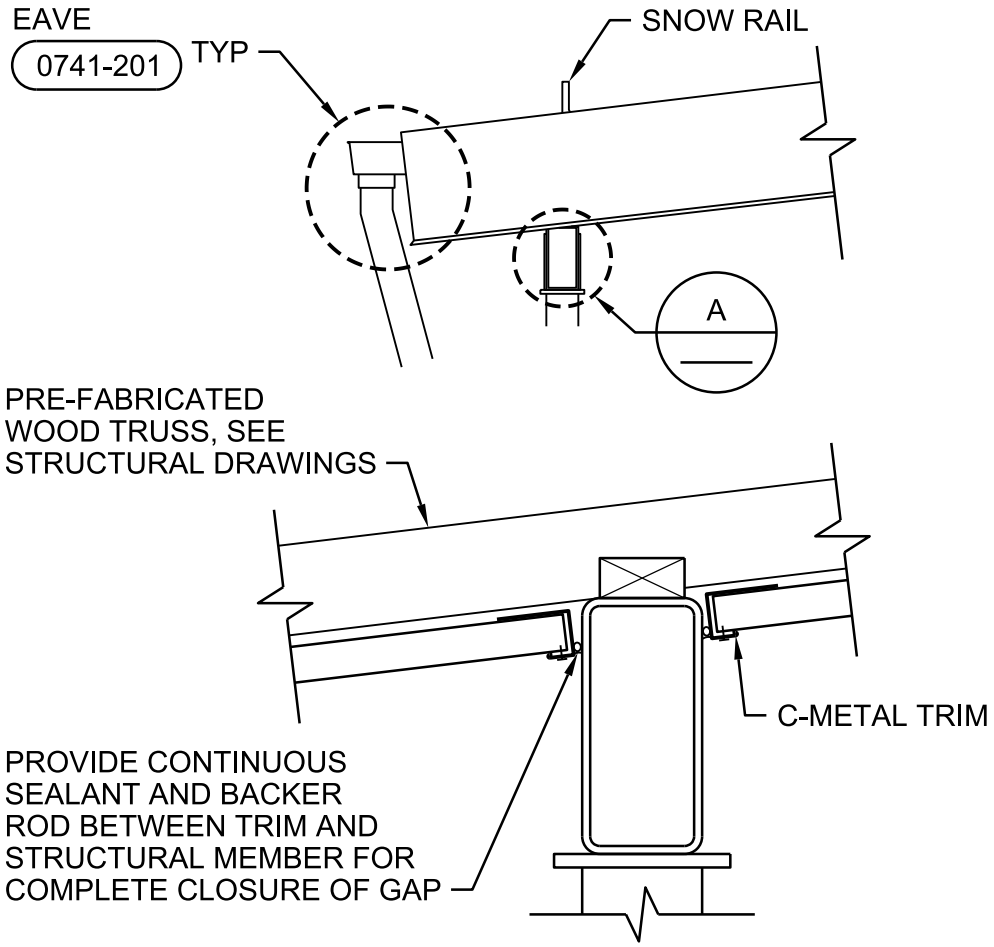

SECTION A
(SOFFIT TO BEAM)

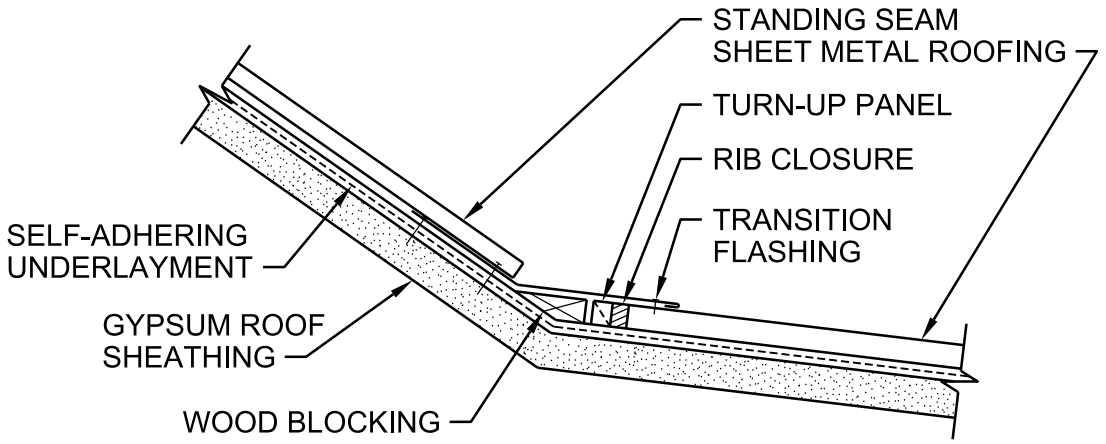

SLOPE TRANSITION

SHED ROOF

NTS

NATIONAL PARK SERVICE
GRAND CANYON NATIONAL PARK
SOUTH RIM

0741-208

© JACOBS

Jacobs

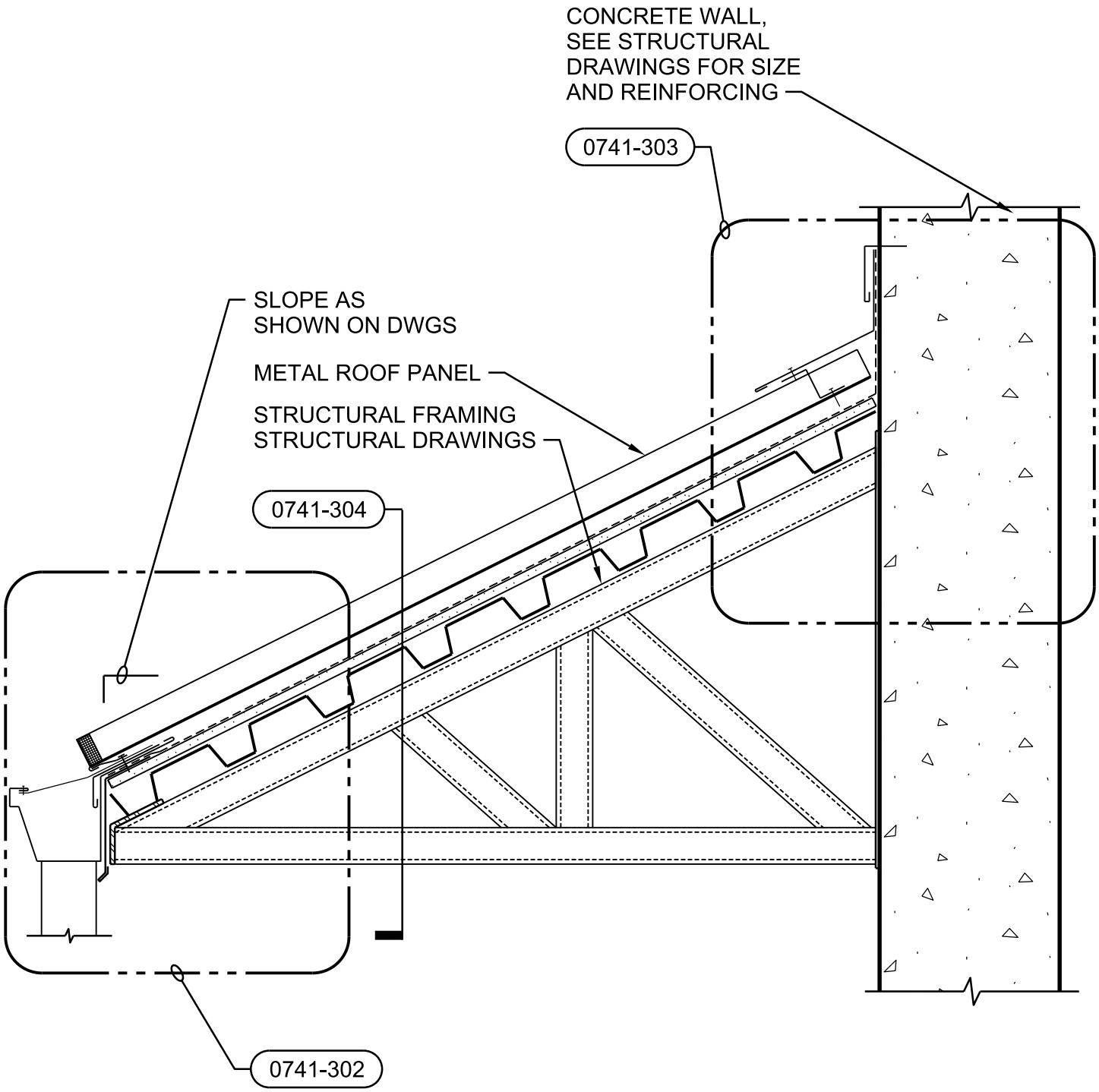

CANOPY

NTS

NATIONAL PARK SERVICE
GRAND CANYON NATIONAL PARK
SOUTH RIM

0741-301

© JACOBS

Jacobs

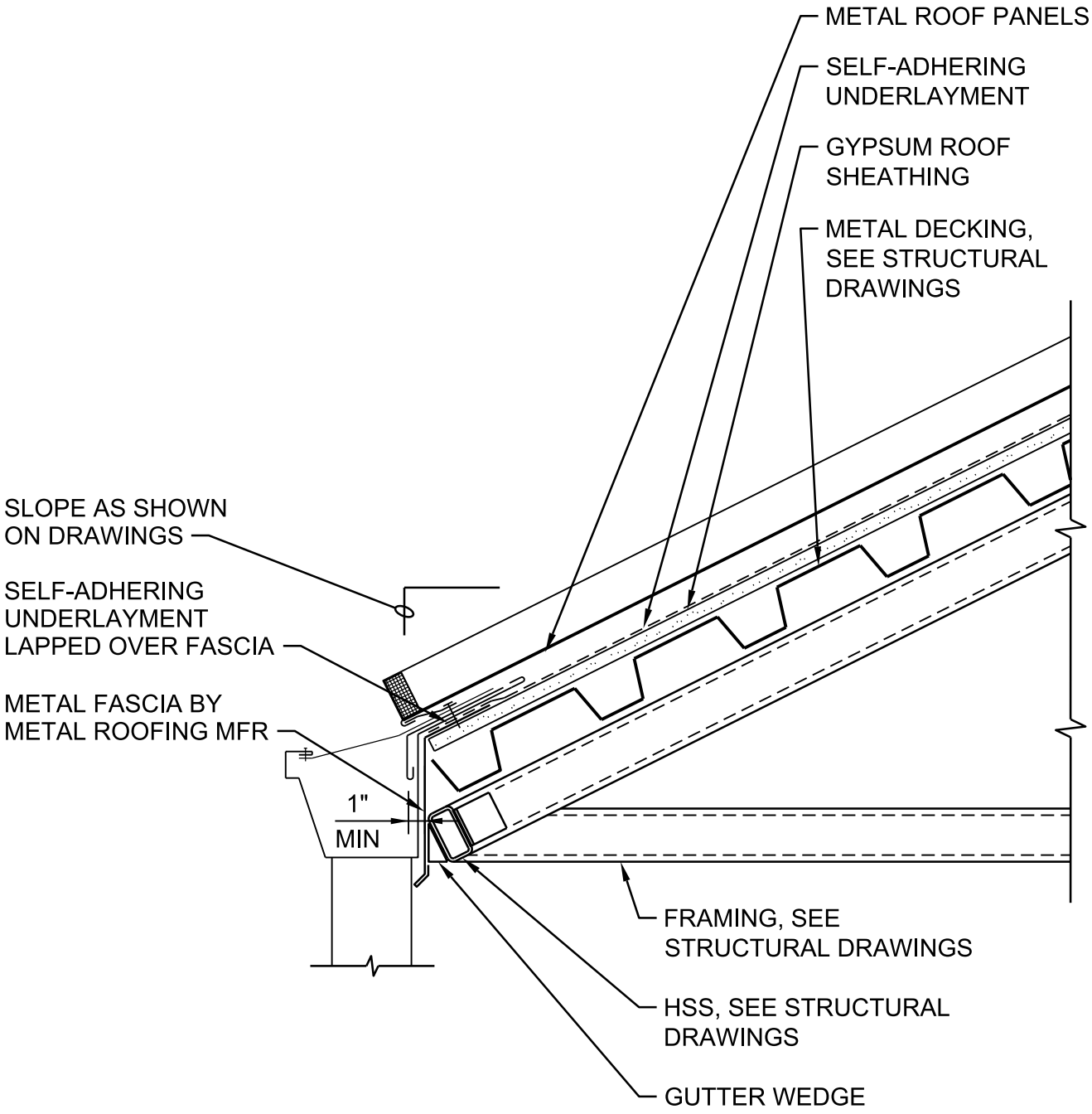

CANOPY FASCIA

NTS

NATIONAL PARK SERVICE
GRAND CANYON NATIONAL PARK
SOUTH RIM

0741-302

© JACOBS

Jacobs

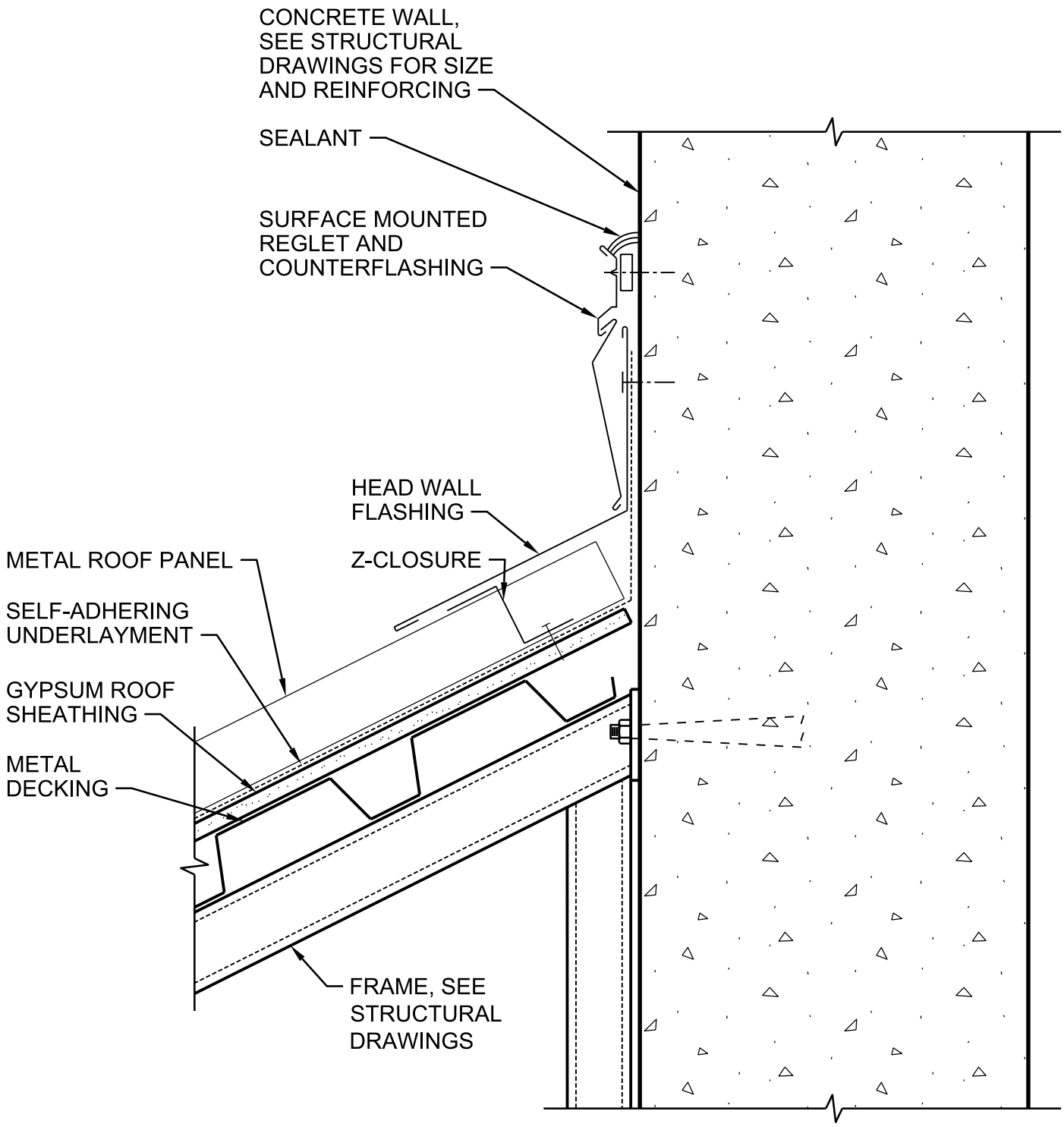

CANOPY HEADWALL

NTS

NATIONAL PARK SERVICE
GRAND CANYON NATIONAL PARK
SOUTH RIM

0741-303

© JACOBS

Jacobs

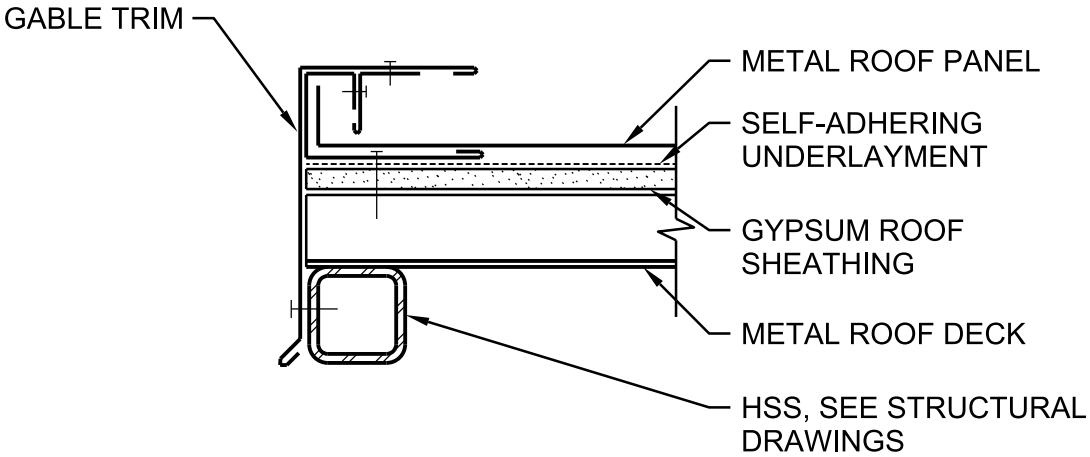

CANOPY RAKE

NTS

NATIONAL PARK SERVICE
GRAND CANYON NATIONAL PARK
SOUTH RIM

0741-304

© JACOBS

Jacobs

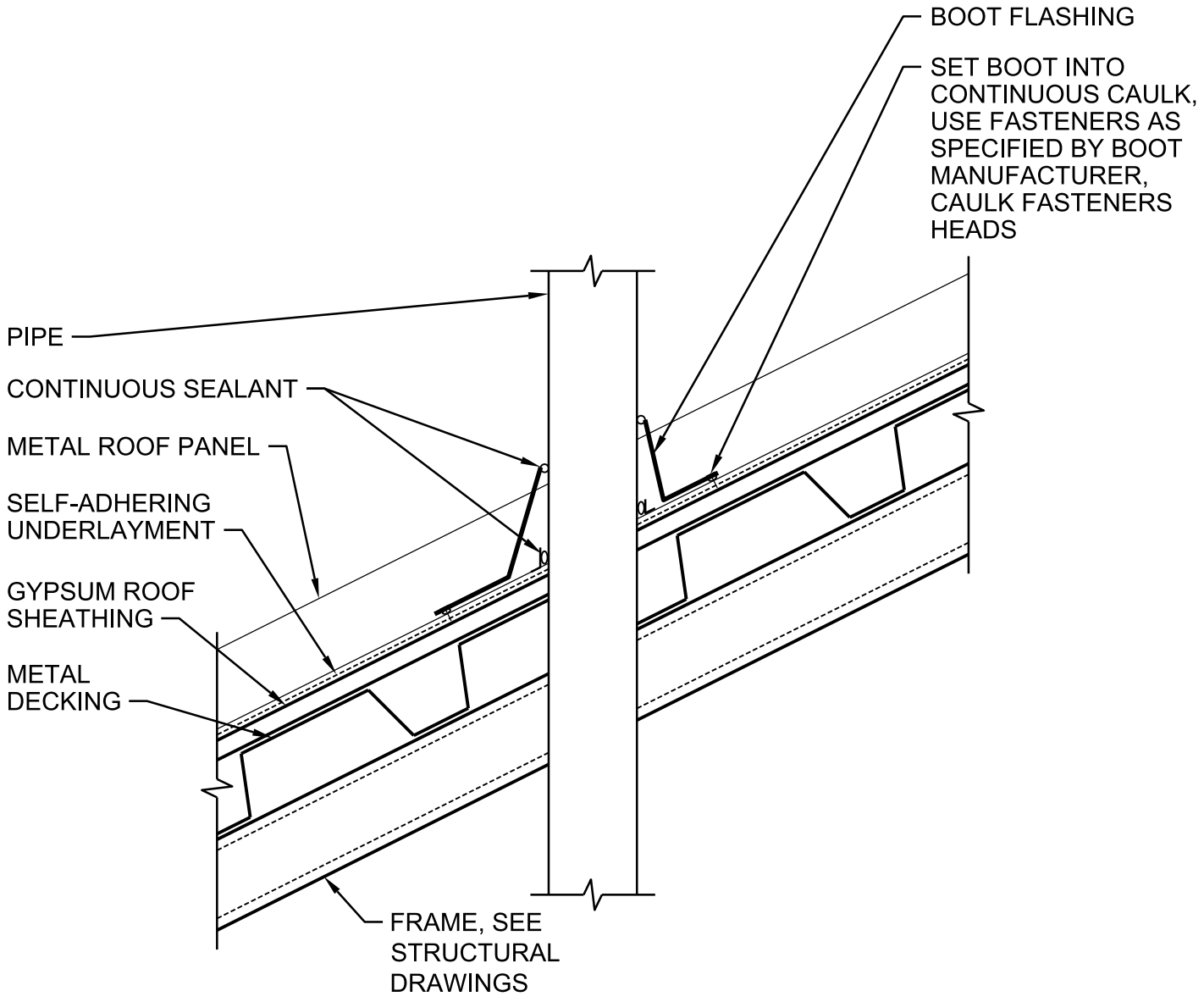

CANOPY PIPE PENETRATION

NTS

NATIONAL PARK SERVICE
GRAND CANYON NATIONAL PARK
SOUTH RIM

0741-305

© JACOBS

Jacobs

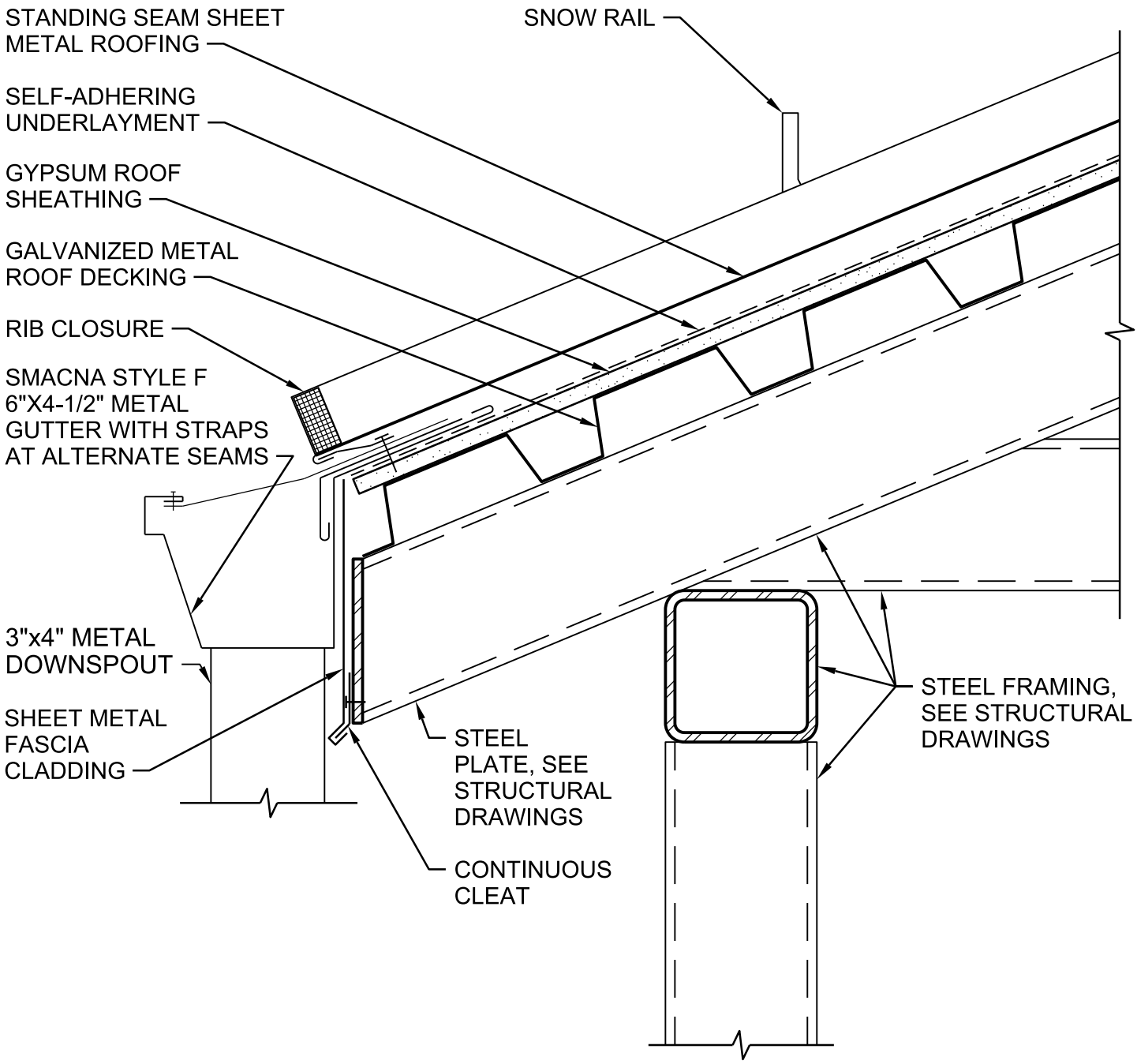

EAVE (CANOPY)

NTS

NATIONAL PARK SERVICE
GRAND CANYON NATIONAL PARK
SOUTH RIM

0741-401

© JACOBS

Jacobs

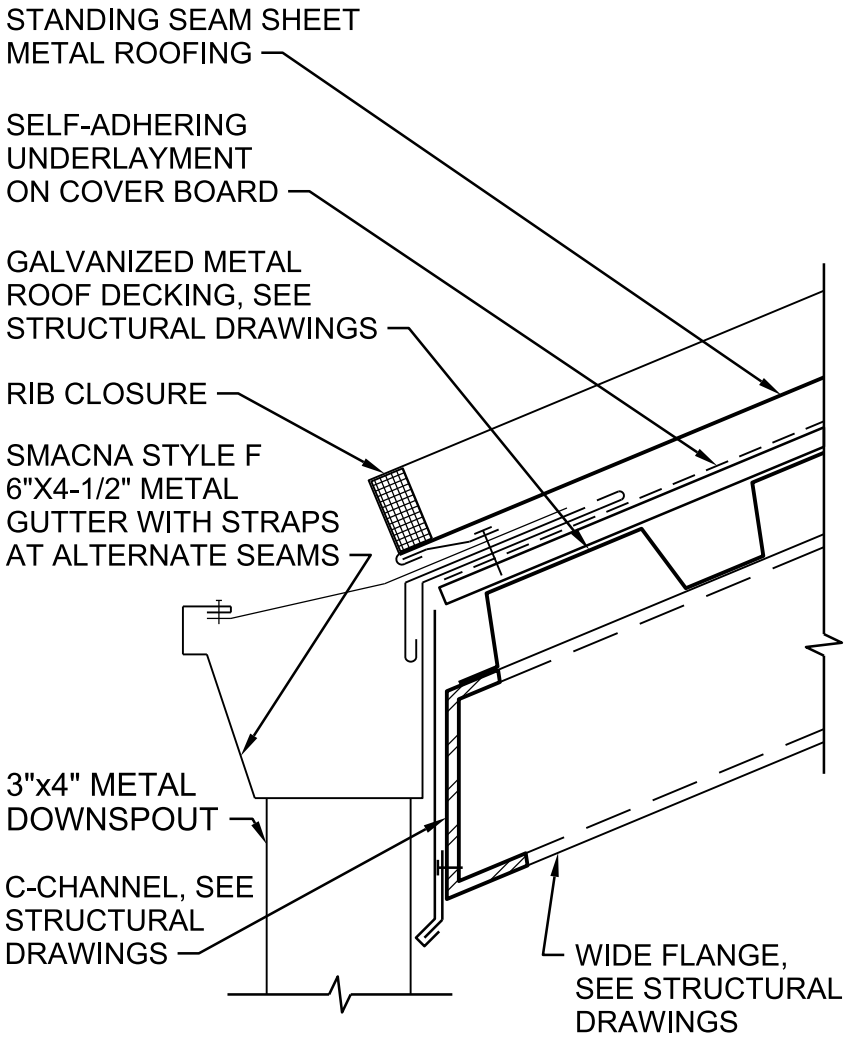

LOW EAVE

NTS

NATIONAL PARK SERVICE
GRAND CANYON NATIONAL PARK
SOUTH RIM

0741-410

© JACOBS

Jacobs

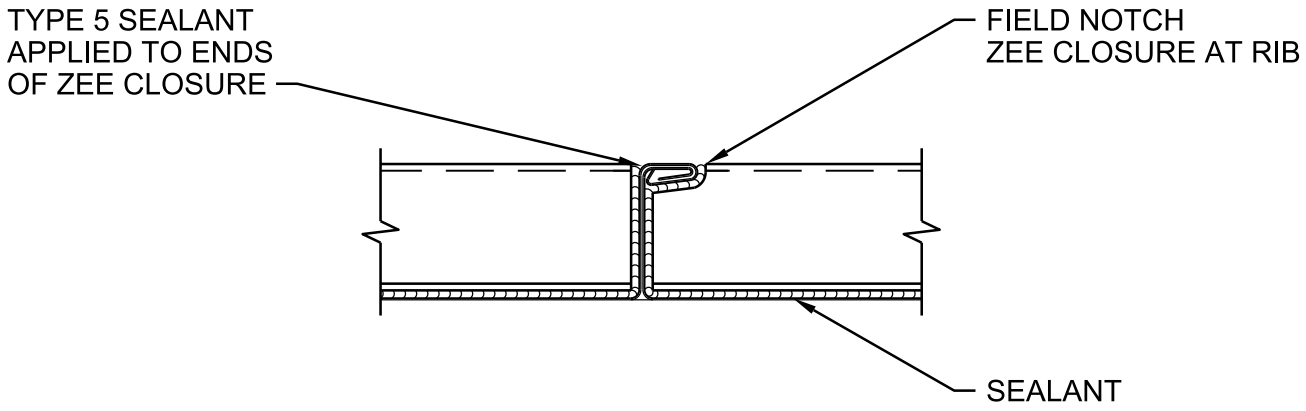

SECTION A-A

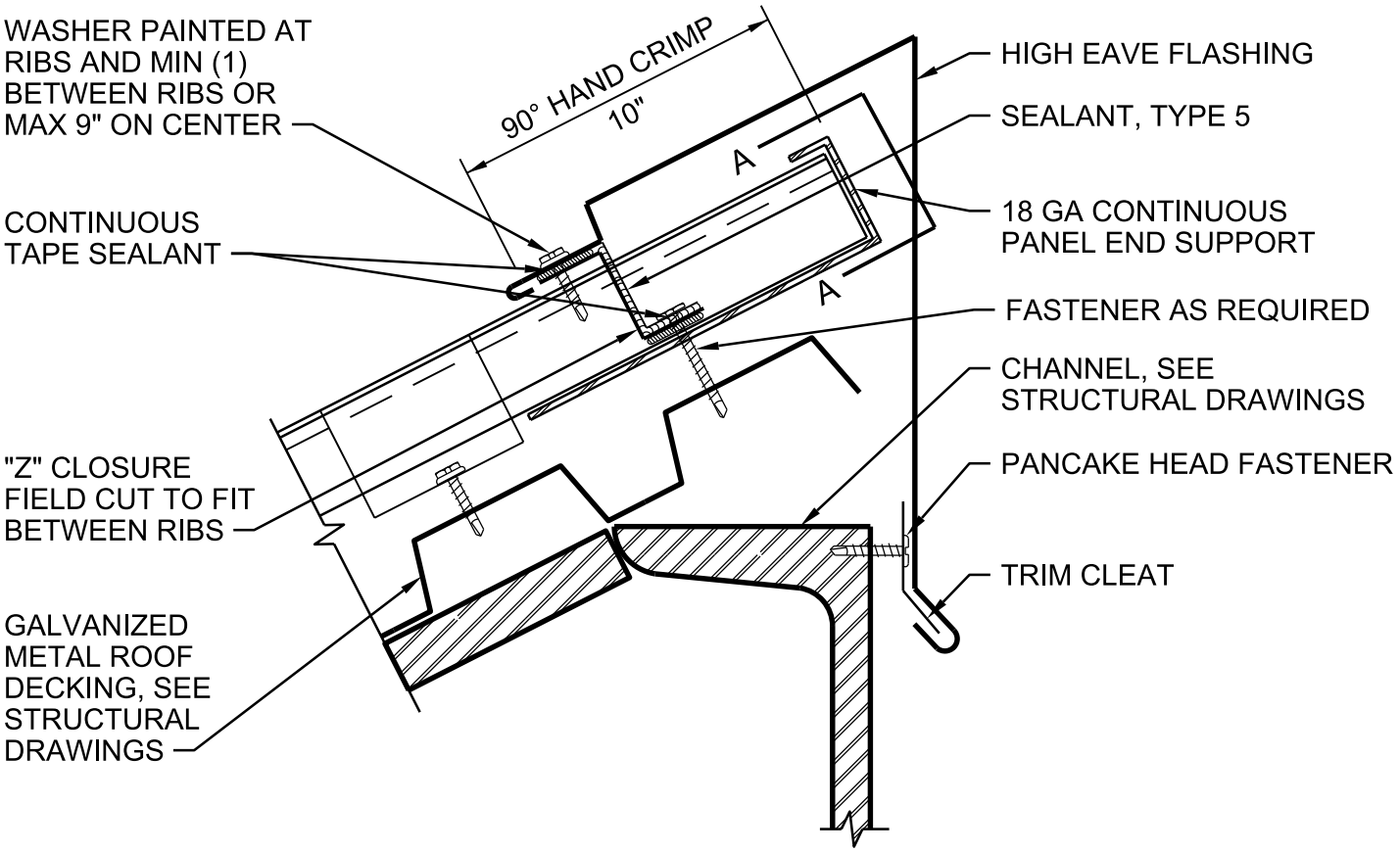

HIGH EAVE

NTS

NATIONAL PARK SERVICE
GRAND CANYON NATIONAL PARK
SOUTH RIM

0741-411

© JACOBS

Jacobs

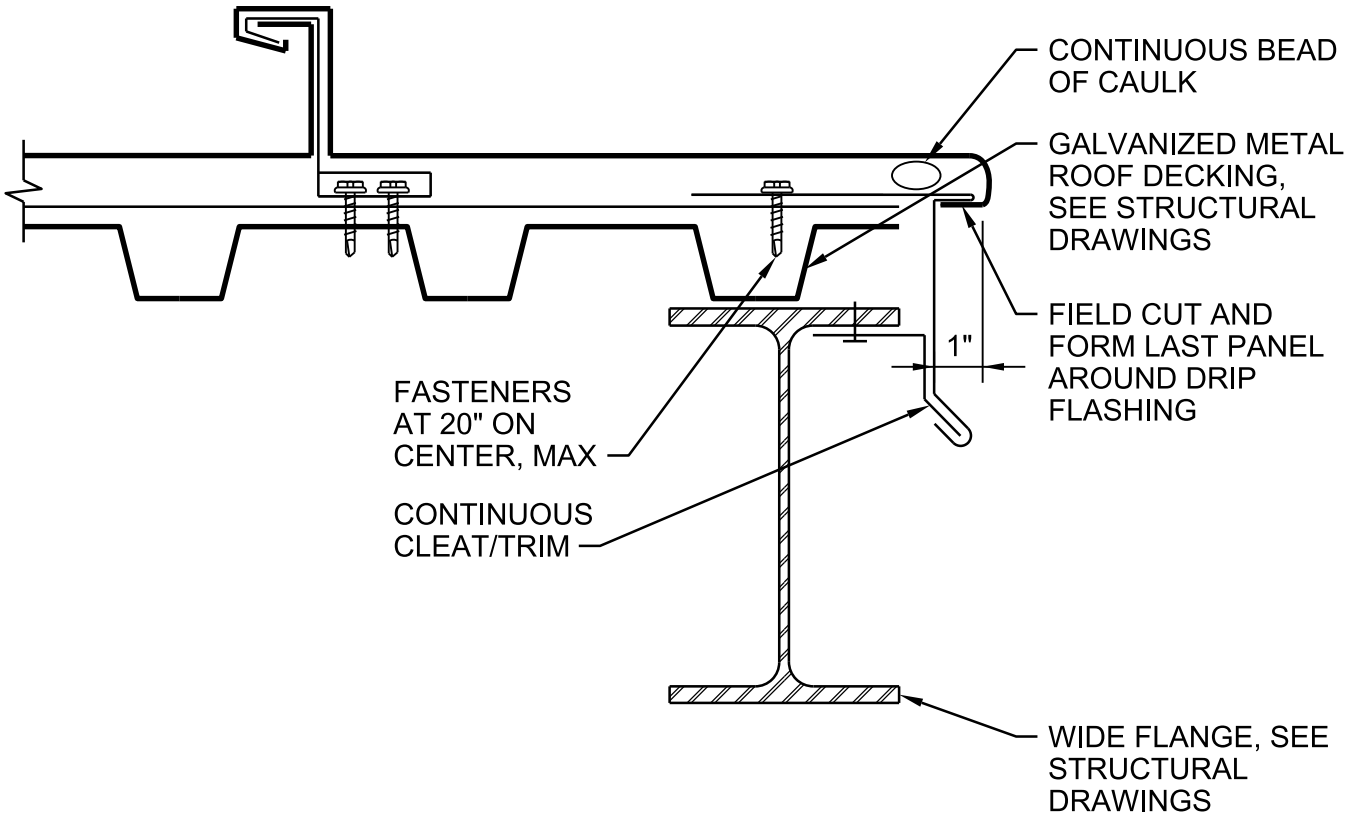

RAKE

NTS

NATIONAL PARK SERVICE
GRAND CANYON NATIONAL PARK
SOUTH RIM

0741-412

© JACOBS

Jacobs

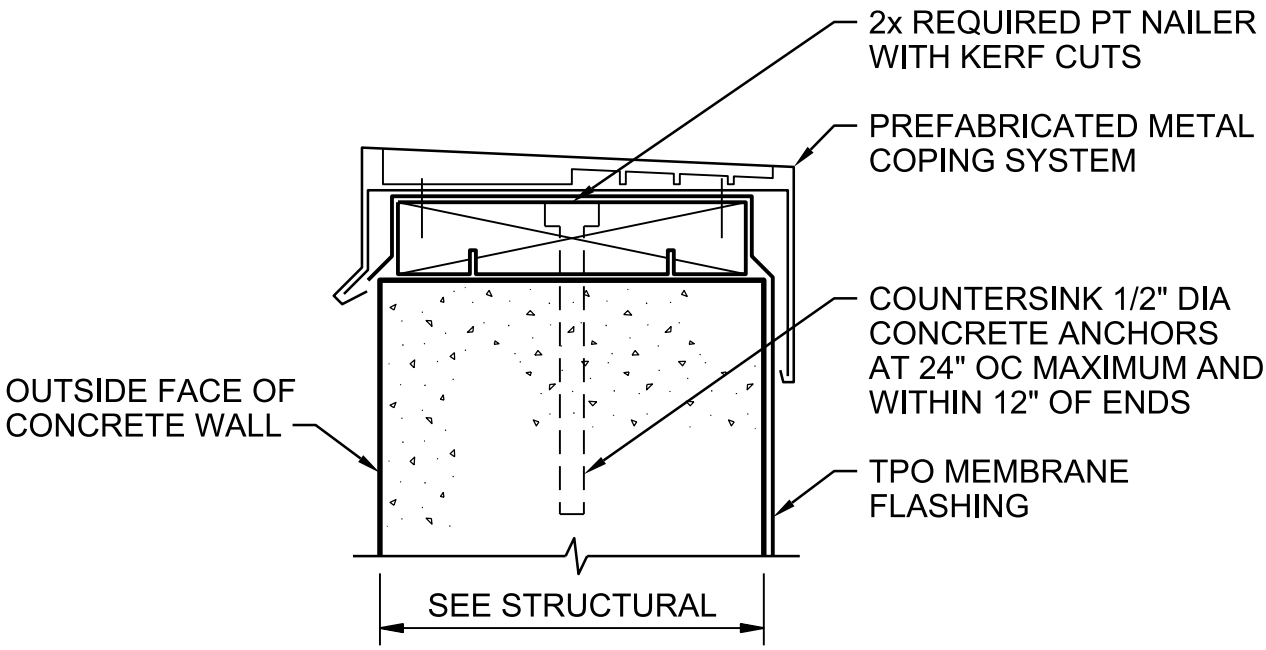

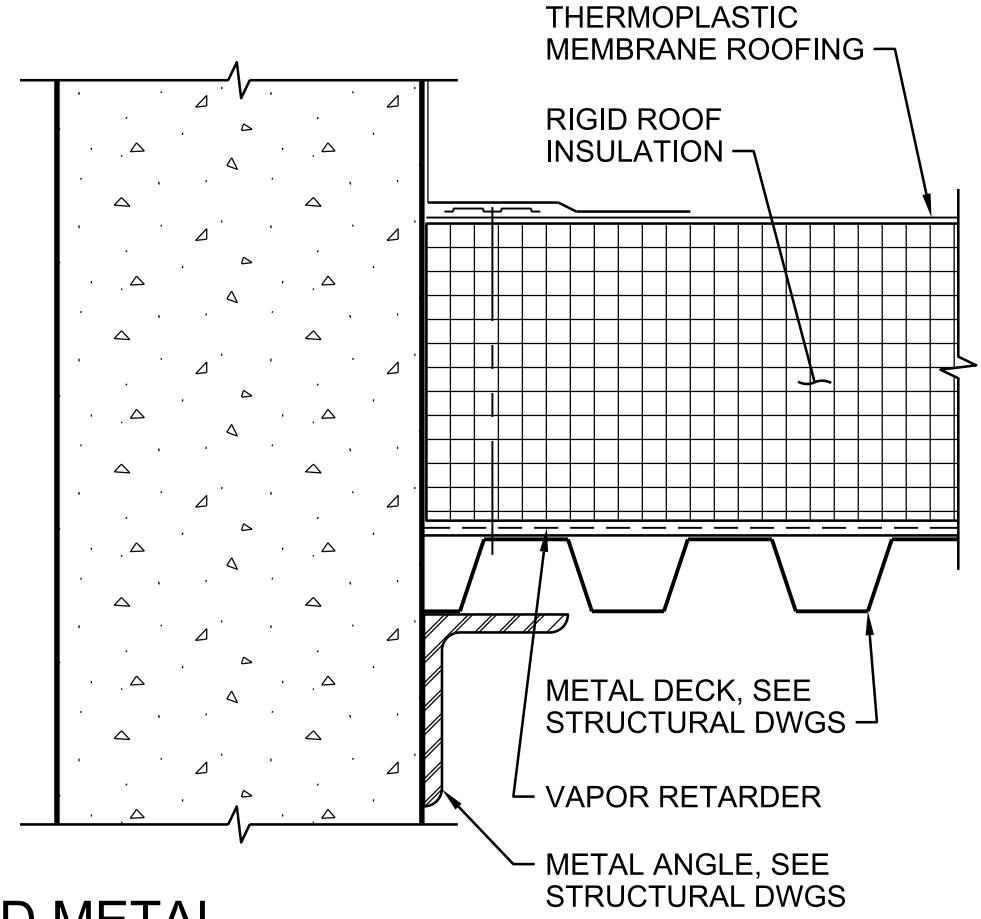

PREFABRICATED METAL COPING AND BASE FLASHING (CONCRETE WALL)

NTS

NATIONAL PARK SERVICE
GRAND CANYON NATIONAL PARK
SOUTH RIM

0754-001

© JACOBS

Jacobs

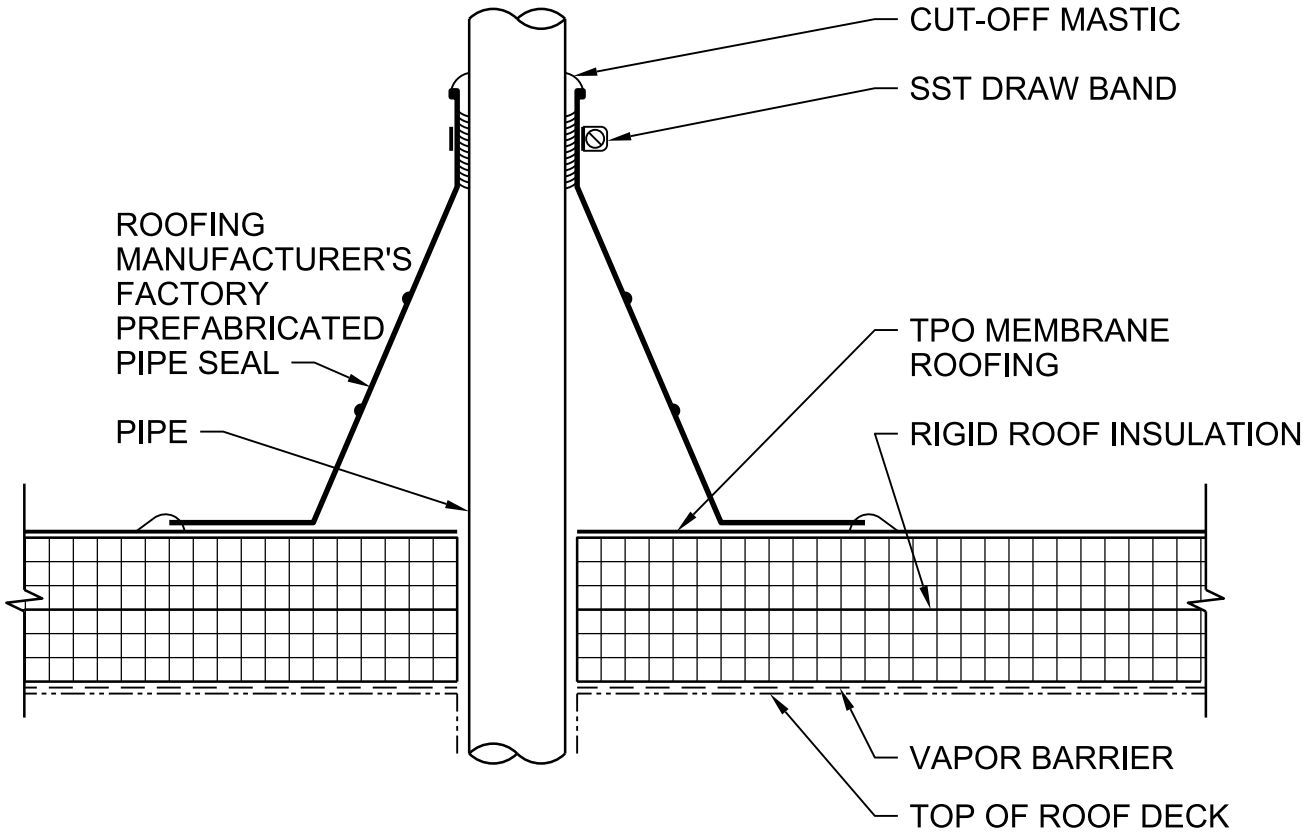

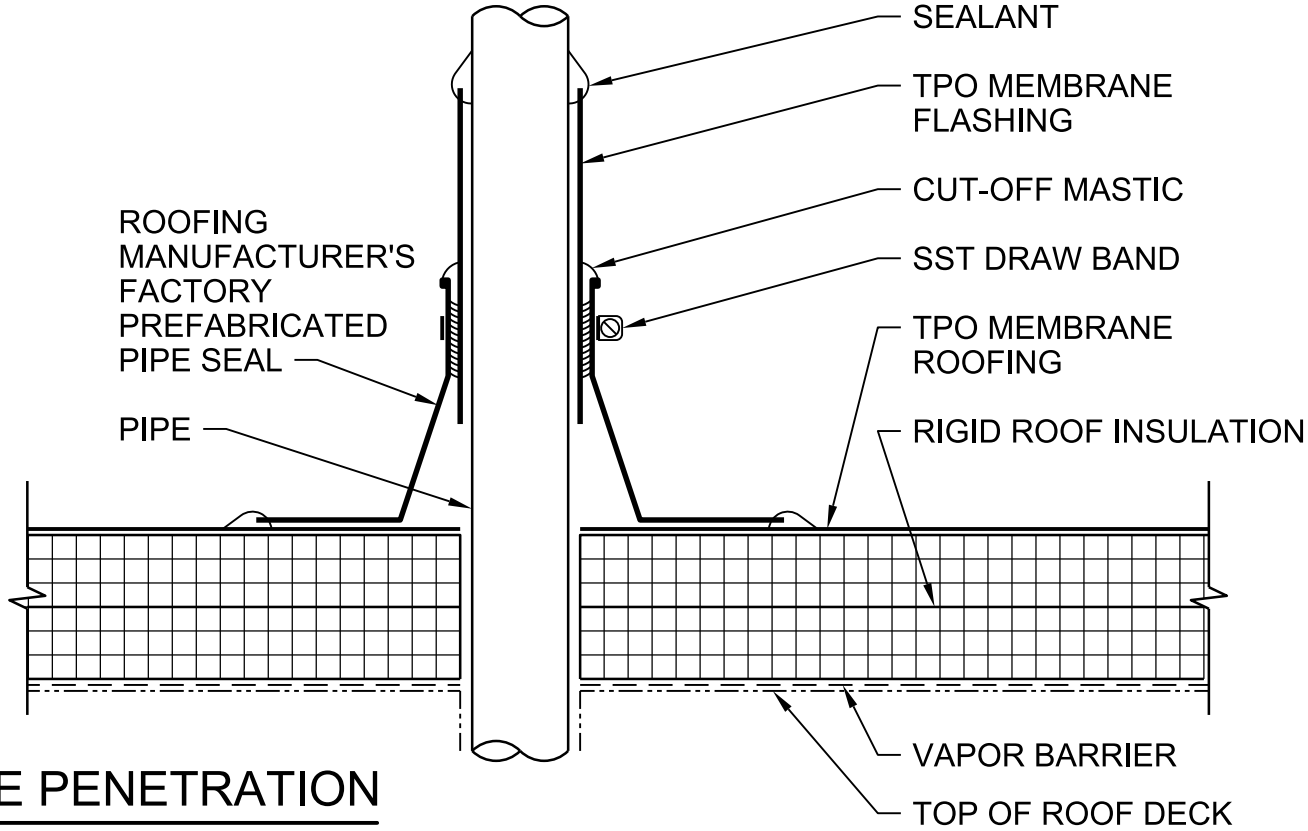

PIPE PENETRATION

NTS

NATIONAL PARK SERVICE
GRAND CANYON NATIONAL PARK
SOUTH RIM

0754-002

© JACOBS

Jacobs

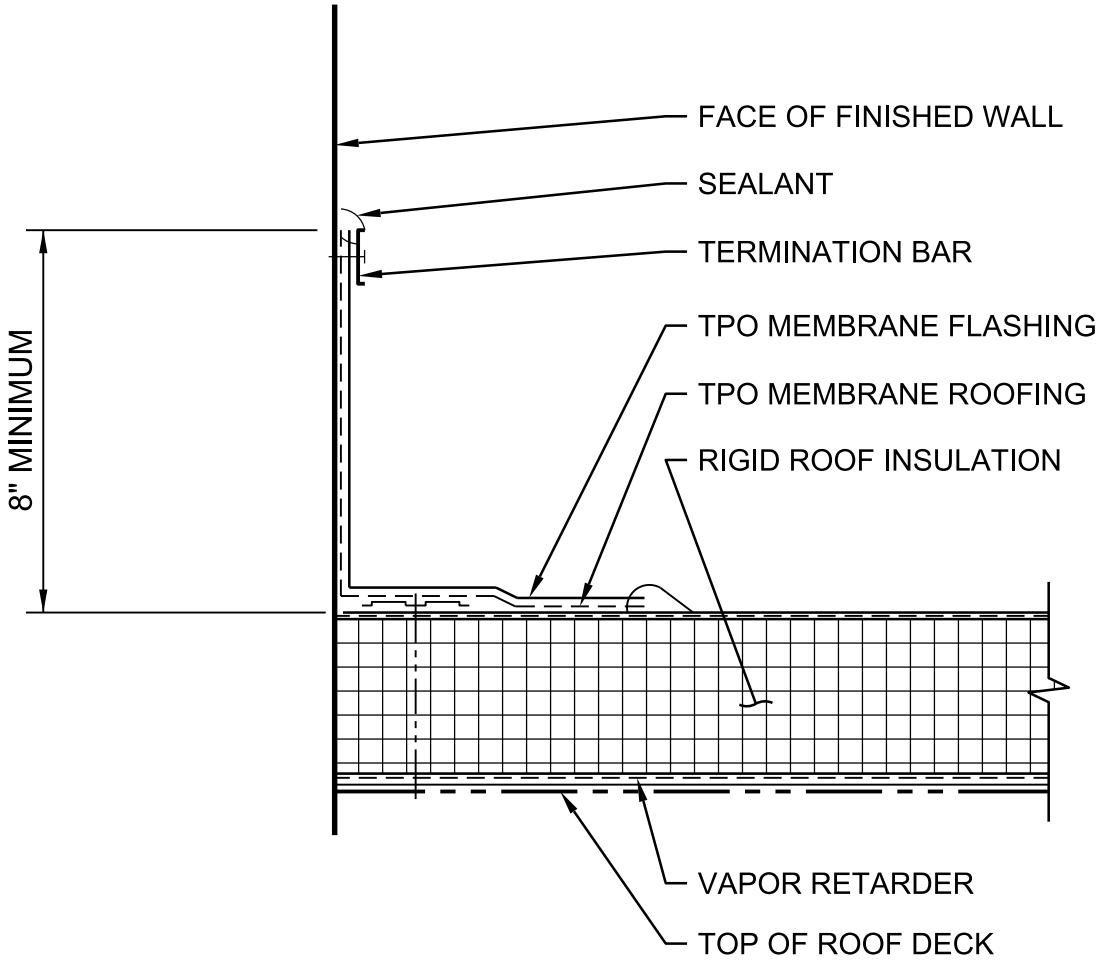

BASE FLASHING

NTS

NATIONAL PARK SERVICE
GRAND CANYON NATIONAL PARK
SOUTH RIM

0754-004

© JACOBS

Jacobs

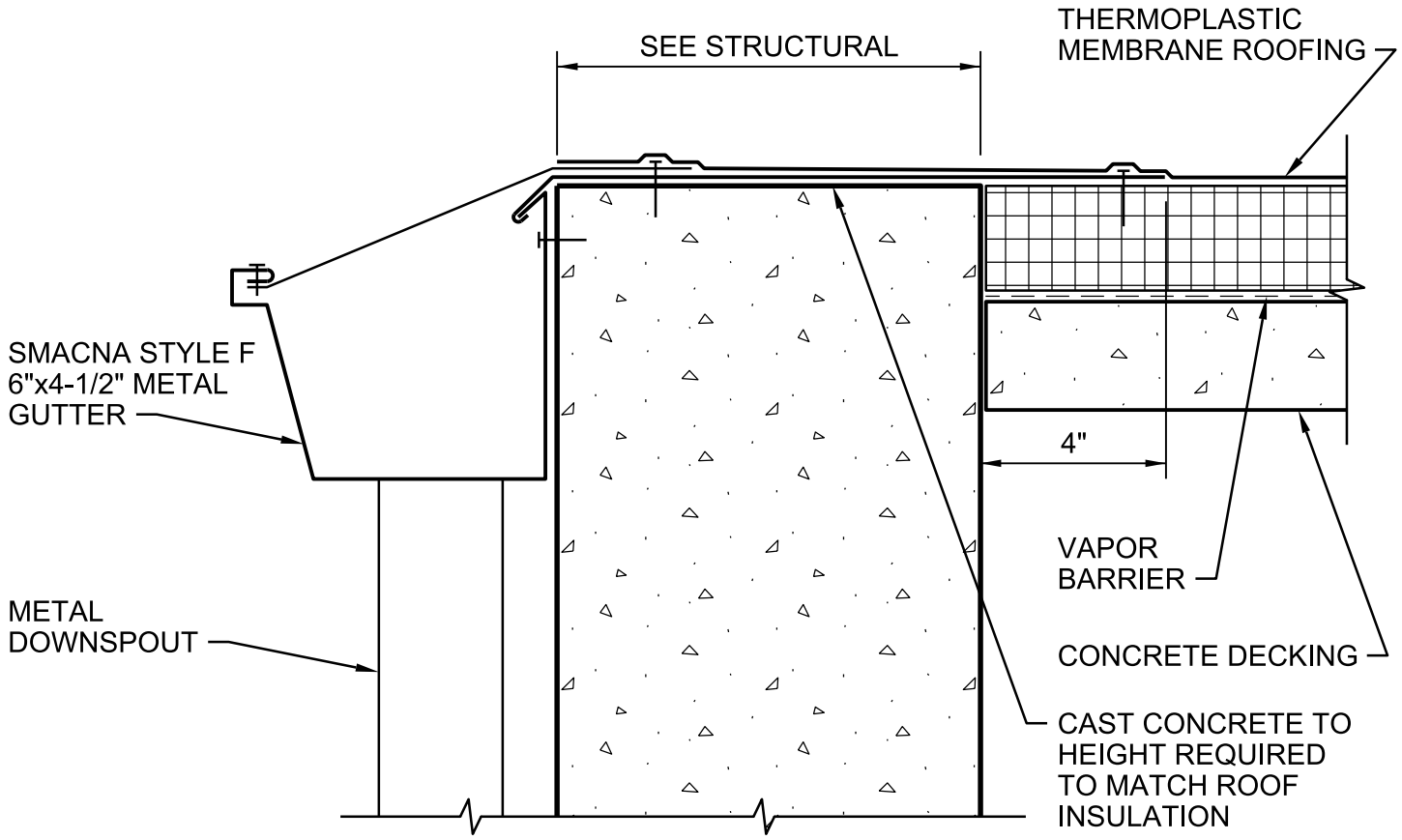

METAL GUTTER AND DOWNSPOUT AT CURB

NTS

NATIONAL PARK SERVICE
GRAND CANYON NATIONAL PARK
SOUTH RIM

0754-005

© JACOBS

Jacobs

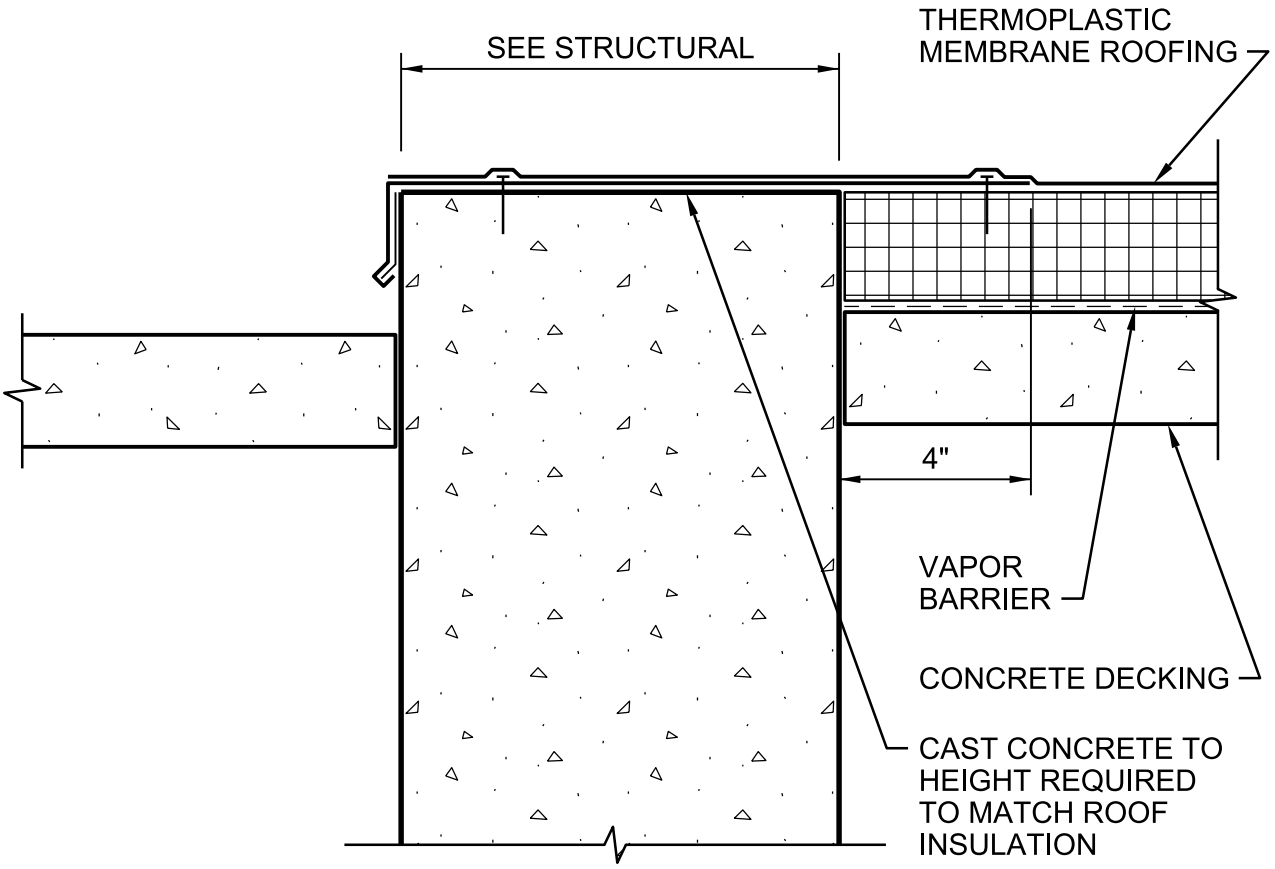

CURB

NTS

NATIONAL PARK SERVICE
GRAND CANYON NATIONAL PARK
SOUTH RIM

0754-006

© JACOBS

Jacobs

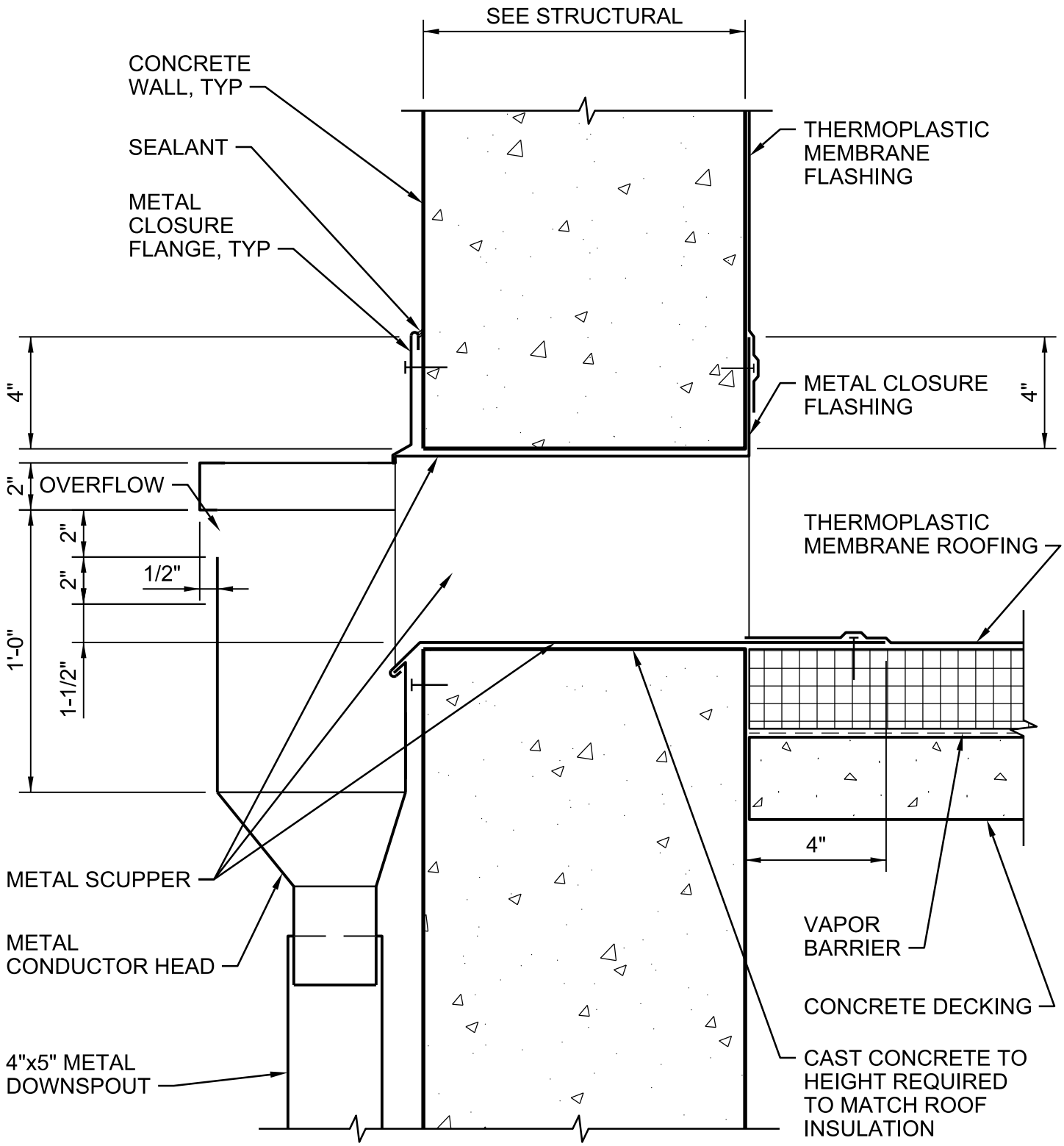

SCUPPER CONDUCTOR HEAD SECTION

NTS

NATIONAL PARK SERVICE
GRAND CANYON NATIONAL PARK
SOUTH RIM

0762-105

© JACOBS

Jacobs

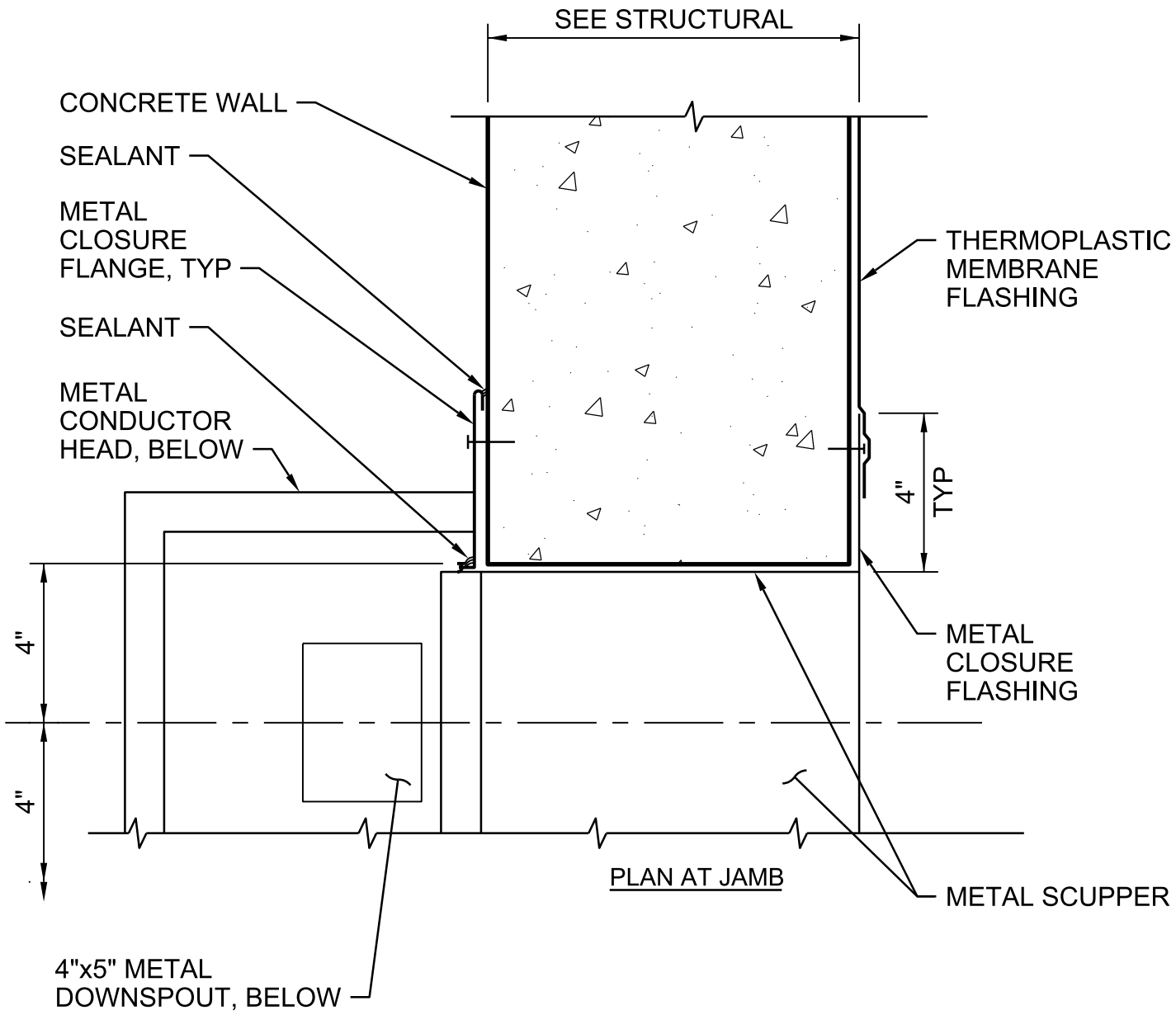

SCUPPER/CONDUCTOR HEAD PLAN

NTS

NATIONAL PARK SERVICE
GRAND CANYON NATIONAL PARK
SOUTH RIM

0762-106

© JACOBS

Jacobs

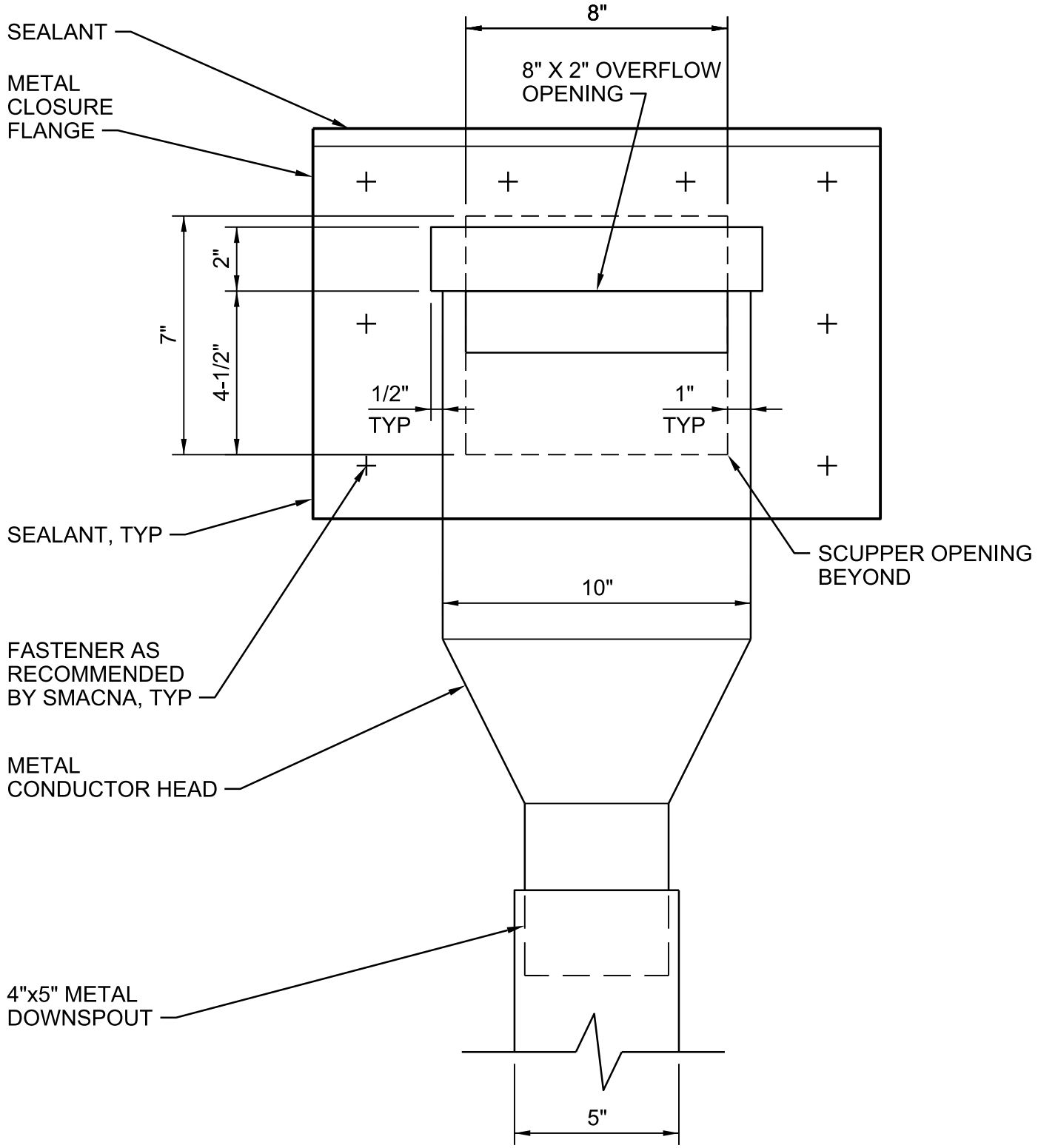

SCUPPER CONDUCTOR HEAD ELEVATION

NTS

NATIONAL PARK SERVICE
GRAND CANYON NATIONAL PARK
SOUTH RIM

0762-107

© JACOBS

Jacobs

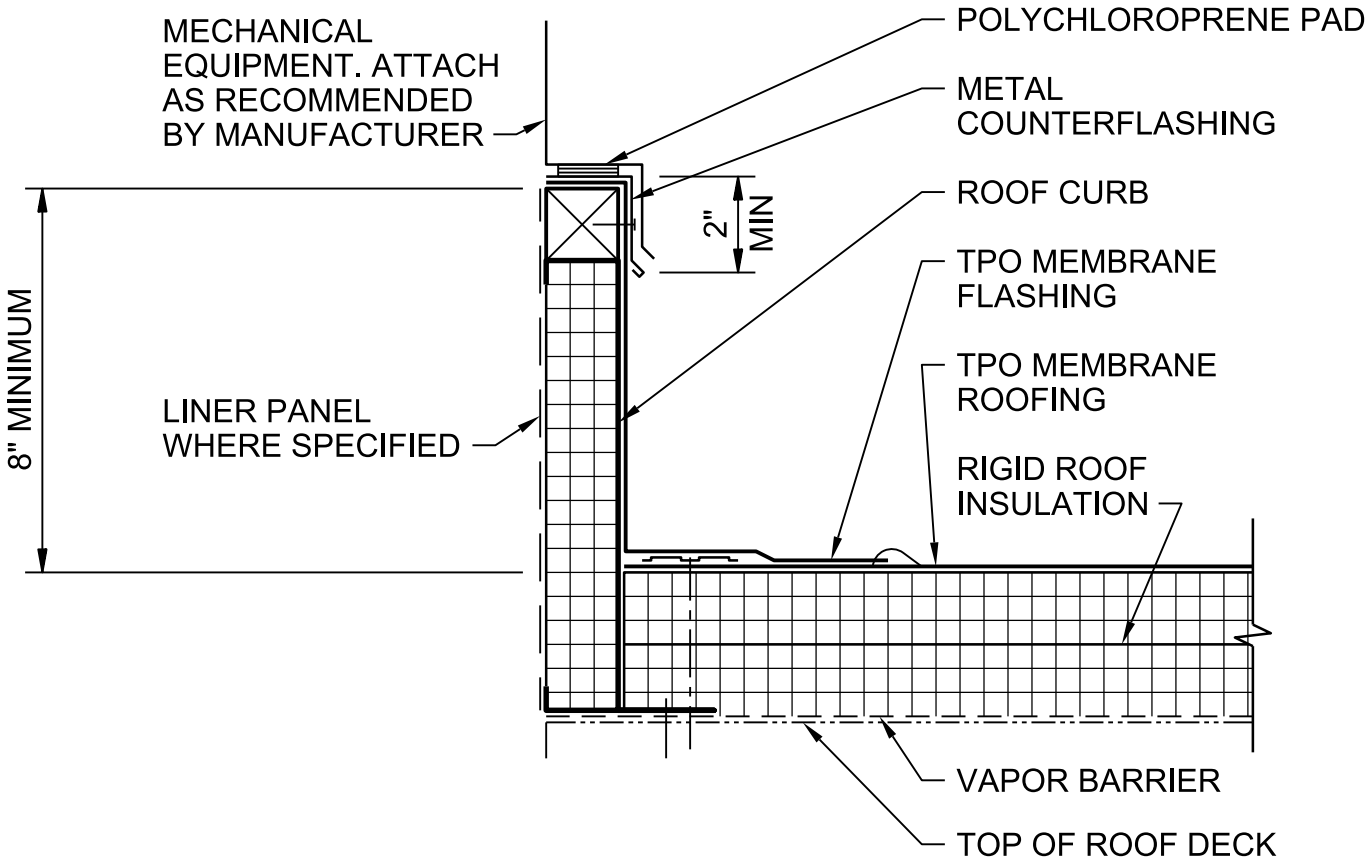

MECHANICAL EQUIPMENT CURB

NTS

NATIONAL PARK SERVICE
GRAND CANYON NATIONAL PARK
SOUTH RIM

0770-001

© JACOBS

Jacobs

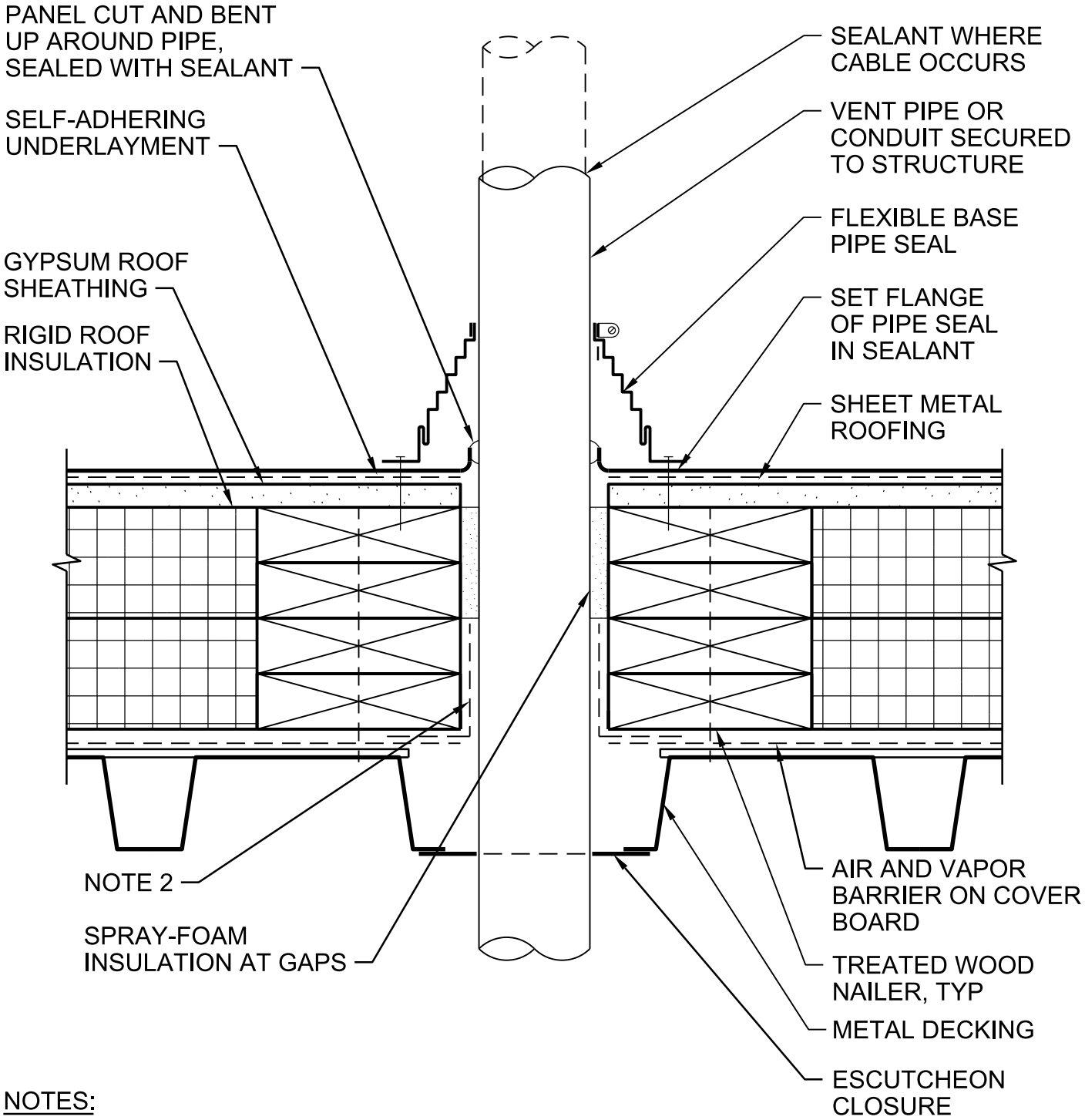

NOTES:

1. PIPE PENETRATION TO BE IN PAN OF PANEL ONLY.
2. PROVIDE TRANSITION FLASHING BETWEEN PIPE/CONDUIT AND VAPOR BARRIER.

FLEXIBLE BASE PIPE SEAL (METAL FRAMING)

NTS

NATIONAL PARK SERVICE
GRAND CANYON NATIONAL PARK
SOUTH RIM

0770-010

© JACOBS

Jacobs

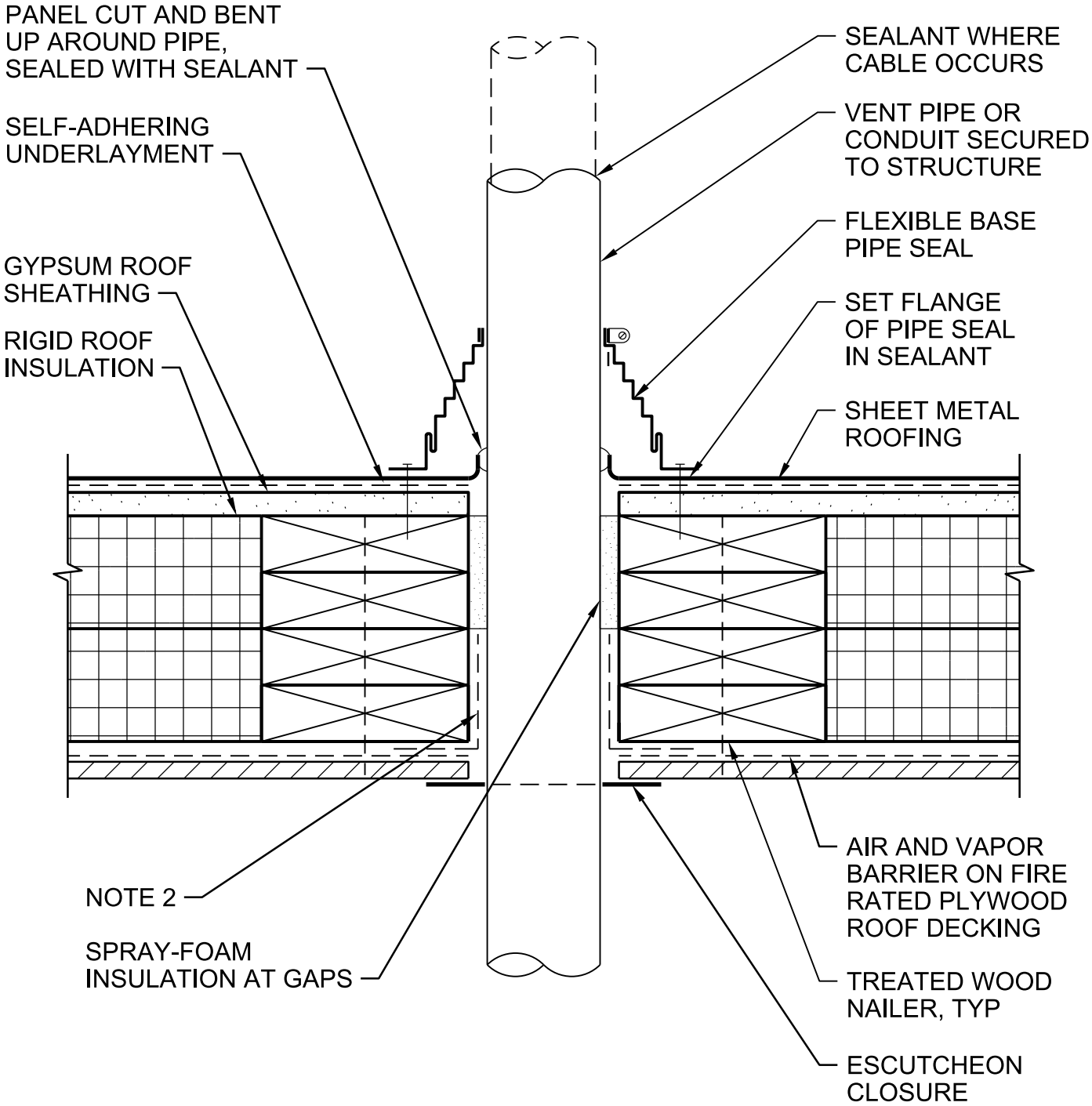

NOTES:

1. PIPE PENETRATION TO BE IN PAN OF PANEL ONLY.
2. PROVIDE TRANSITION FLASHING BETWEEN PIPE/CONDUIT AND VAPOR BARRIER.

FLEXIBLE BASE PIPE SEAL (WOOD FRAMING)

NTS

NATIONAL PARK SERVICE
GRAND CANYON NATIONAL PARK
SOUTH RIM

0770-012

© JACOBS

Jacobs

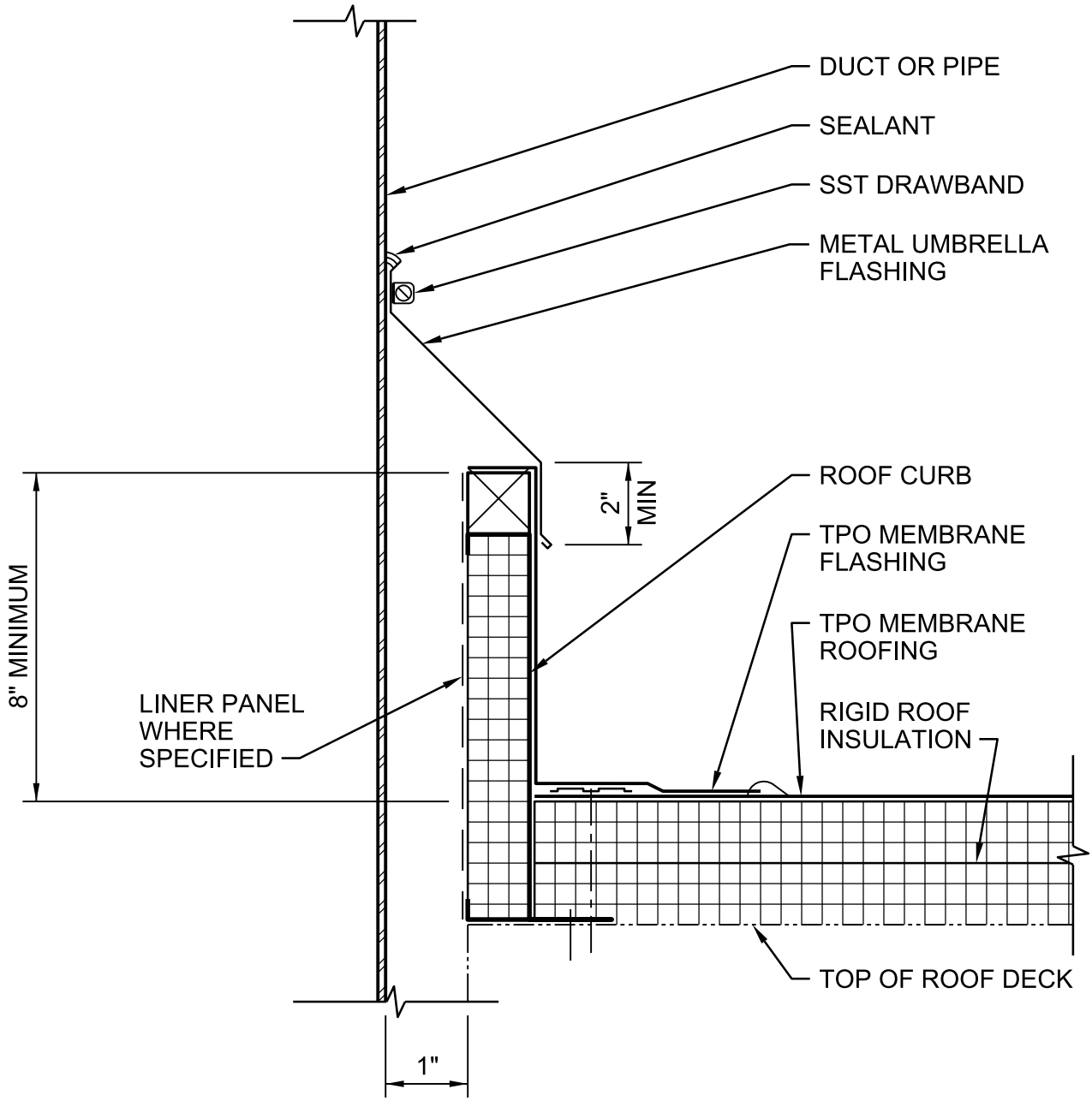

DUCT/PIPE PENETRATION

NTS

NATIONAL PARK SERVICE
GRAND CANYON NATIONAL PARK
SOUTH RIM

0770-032

© JACOBS

Jacobs

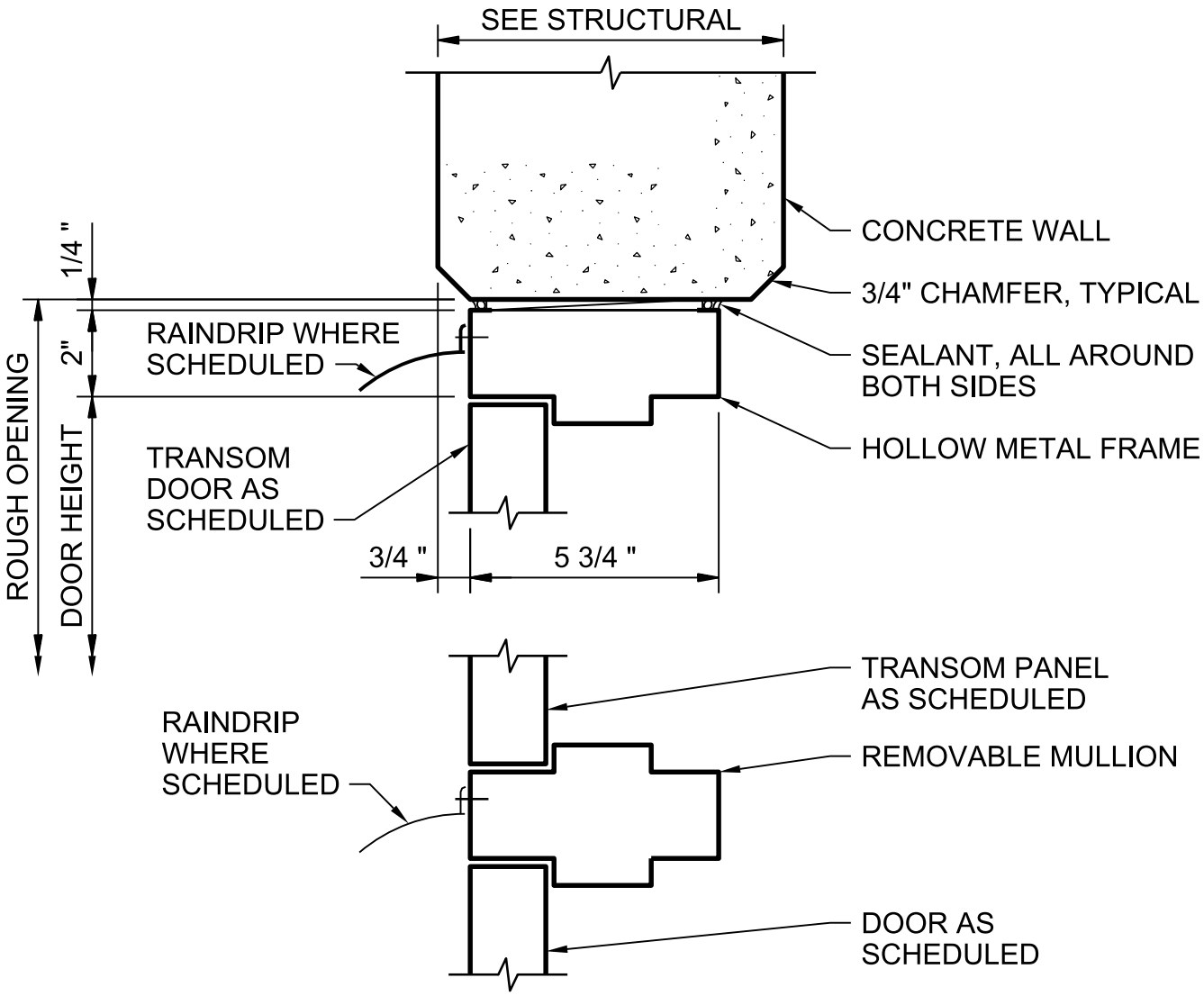

(TRANSOM TO DOOR HEAD WHERE OCCURS)

DOOR HEAD

NTS

NATIONAL PARK SERVICE
GRAND CANYON NATIONAL PARK
SOUTH RIM

0811-001

© JACOBS

Jacobs

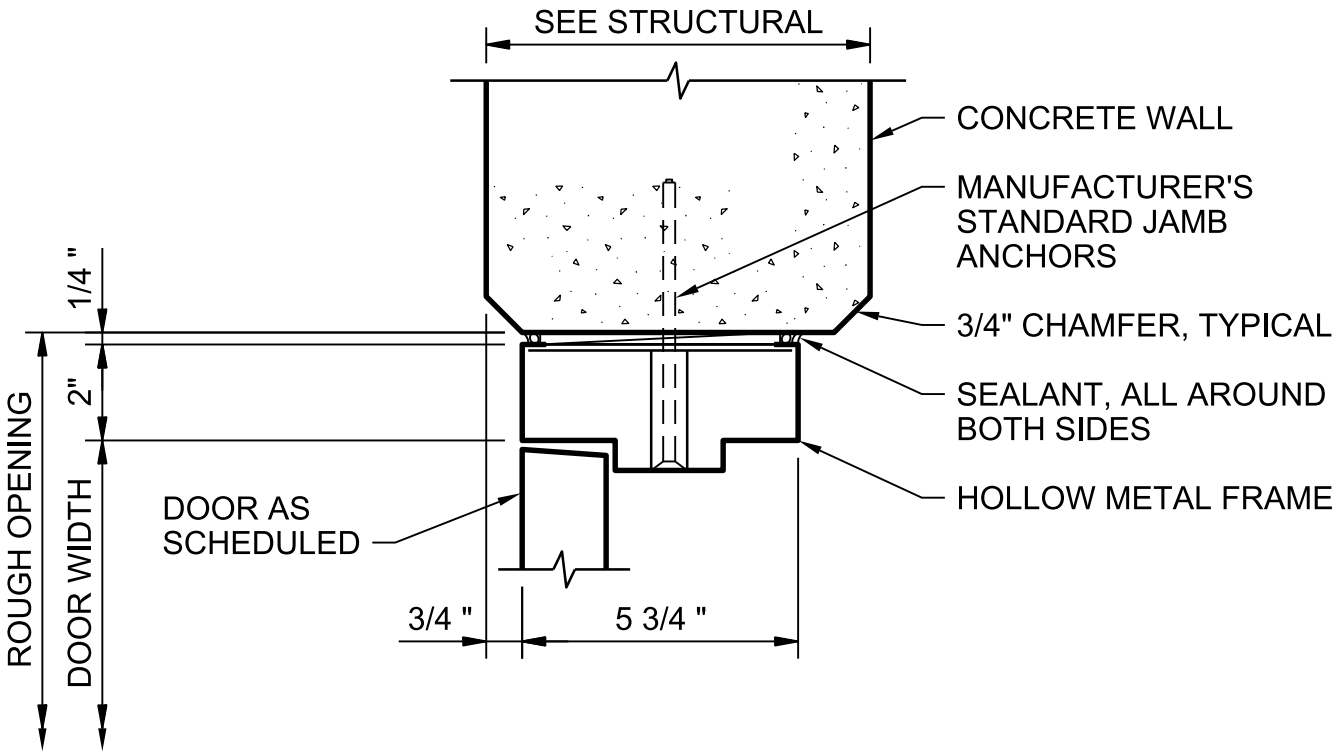

DOOR JAMB

NTS

NATIONAL PARK SERVICE
GRAND CANYON NATIONAL PARK
SOUTH RIM

0811-002

© JACOBS

Jacobs

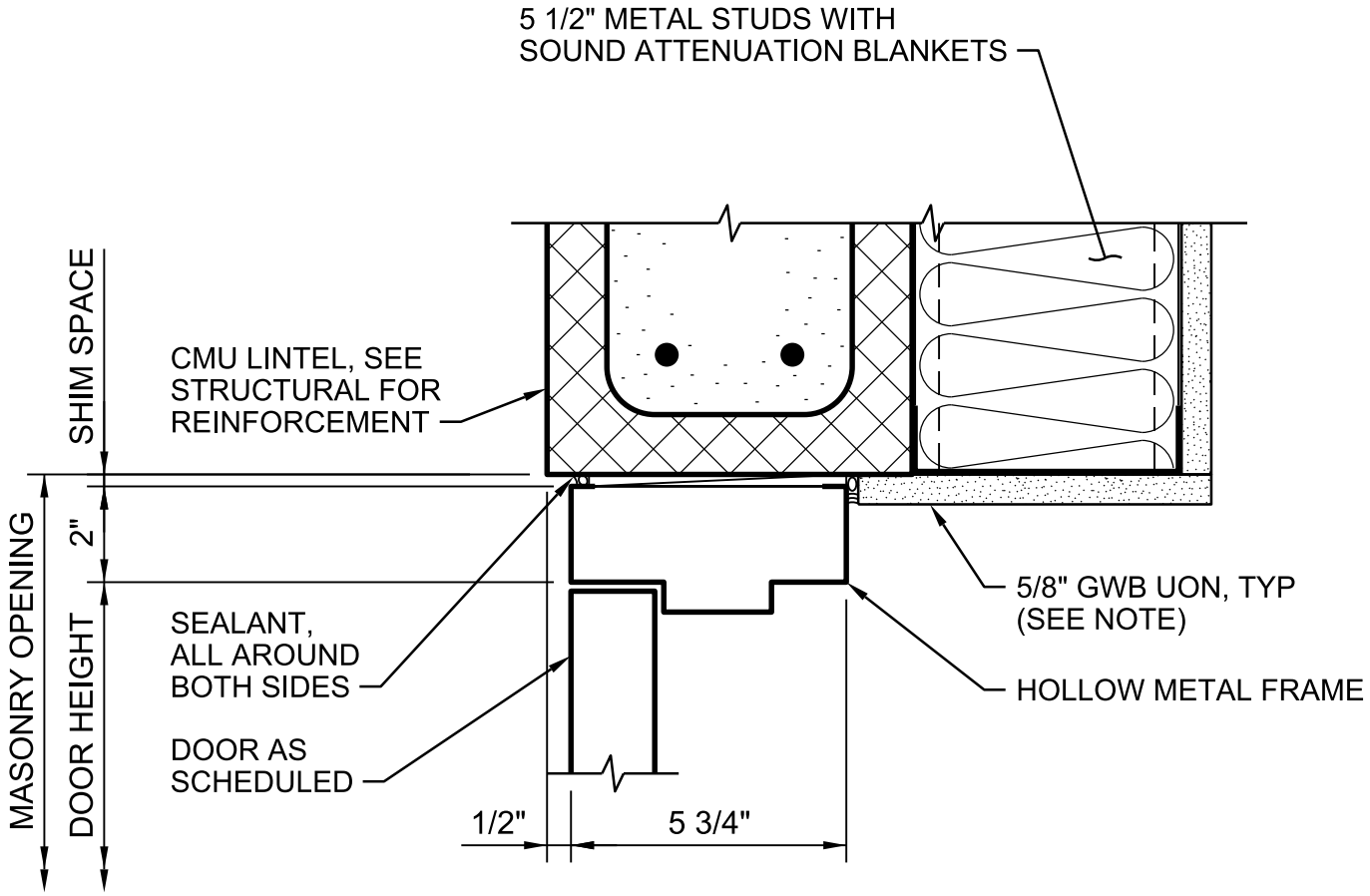

JAMB SIMILAR

NOTES:

1. SEE INTERIOR FINISH SCHEDULE FOR WALL BOARD TYPE.

DOOR HEAD

NTS

NATIONAL PARK SERVICE
GRAND CANYON NATIONAL PARK
SOUTH RIM

0811-012

© JACOBS

Jacobs

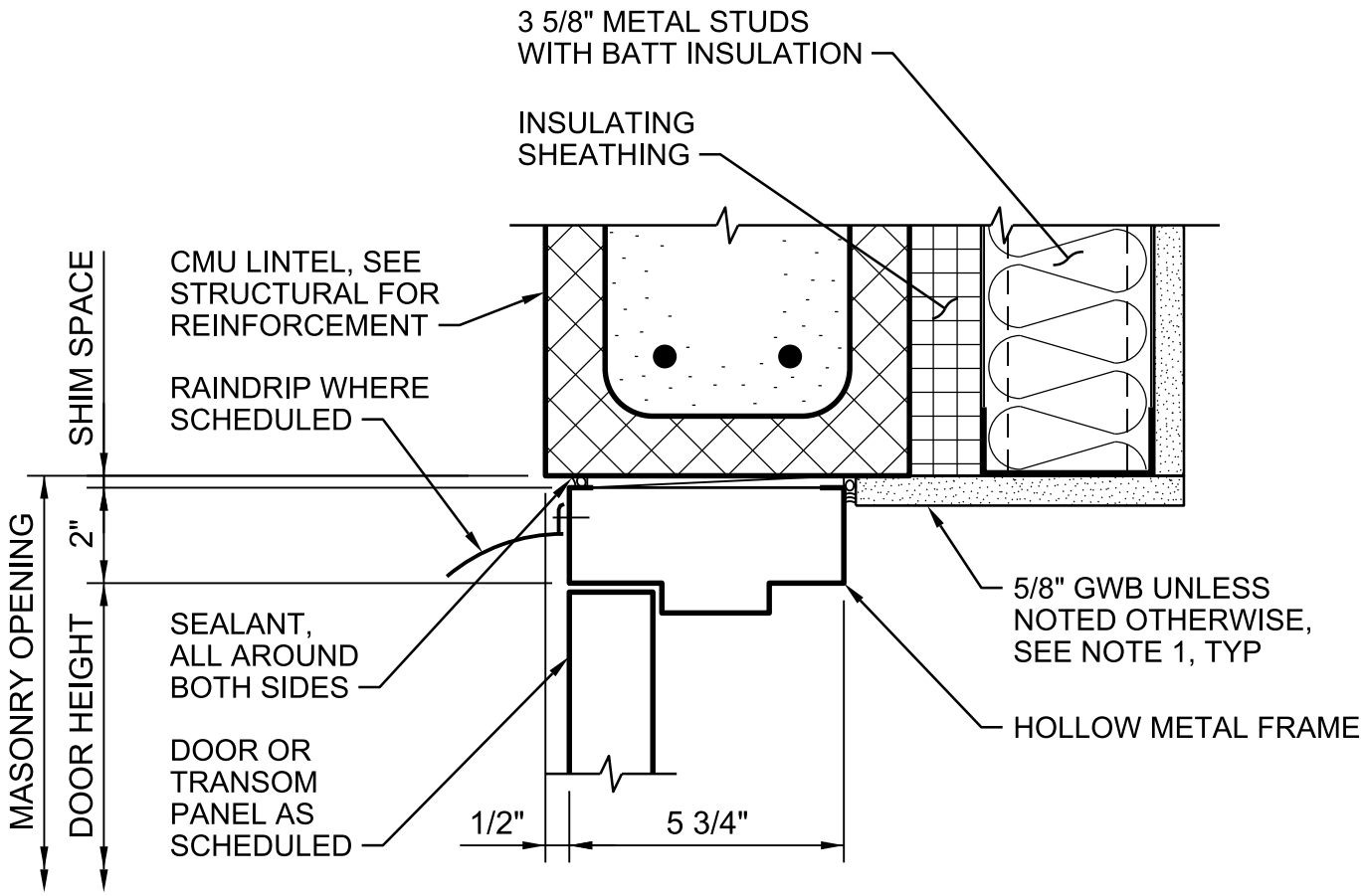

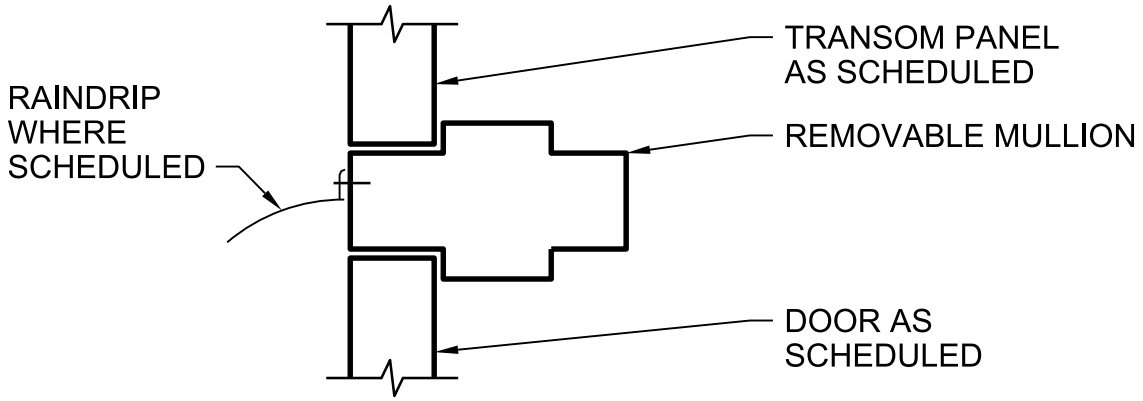

(TRANSOM TO DOOR HEAD WHERE OCCURS)

NOTES:

1. SEE INTERIOR FINISH SCHEDULE FOR WALL BOARD TYPE.

DOOR HEAD

NTS

NATIONAL PARK SERVICE
GRAND CANYON NATIONAL PARK
SOUTH RIM

0811-013

© JACOBS

Jacobs

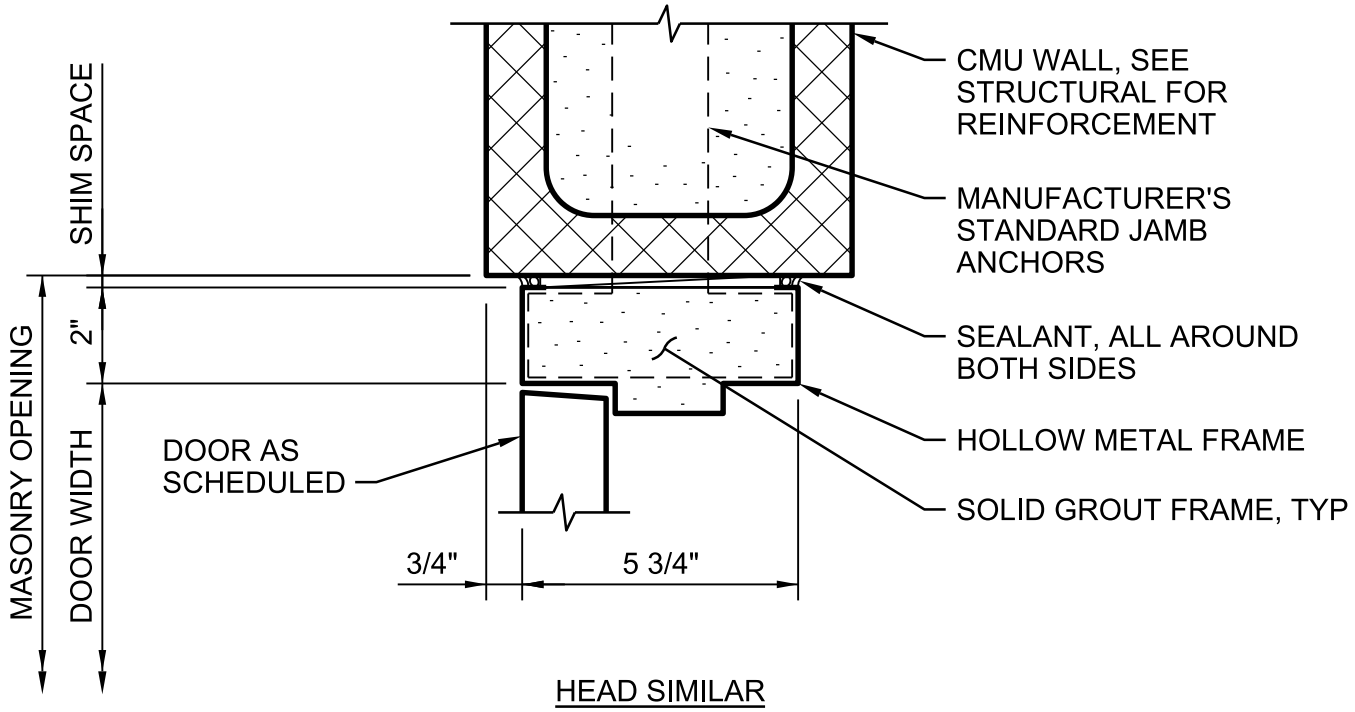

HEAD SIMILAR

DOOR JAMB

NTS

NATIONAL PARK SERVICE
GRAND CANYON NATIONAL PARK
SOUTH RIM

0811-014

© JACOBS

Jacobs

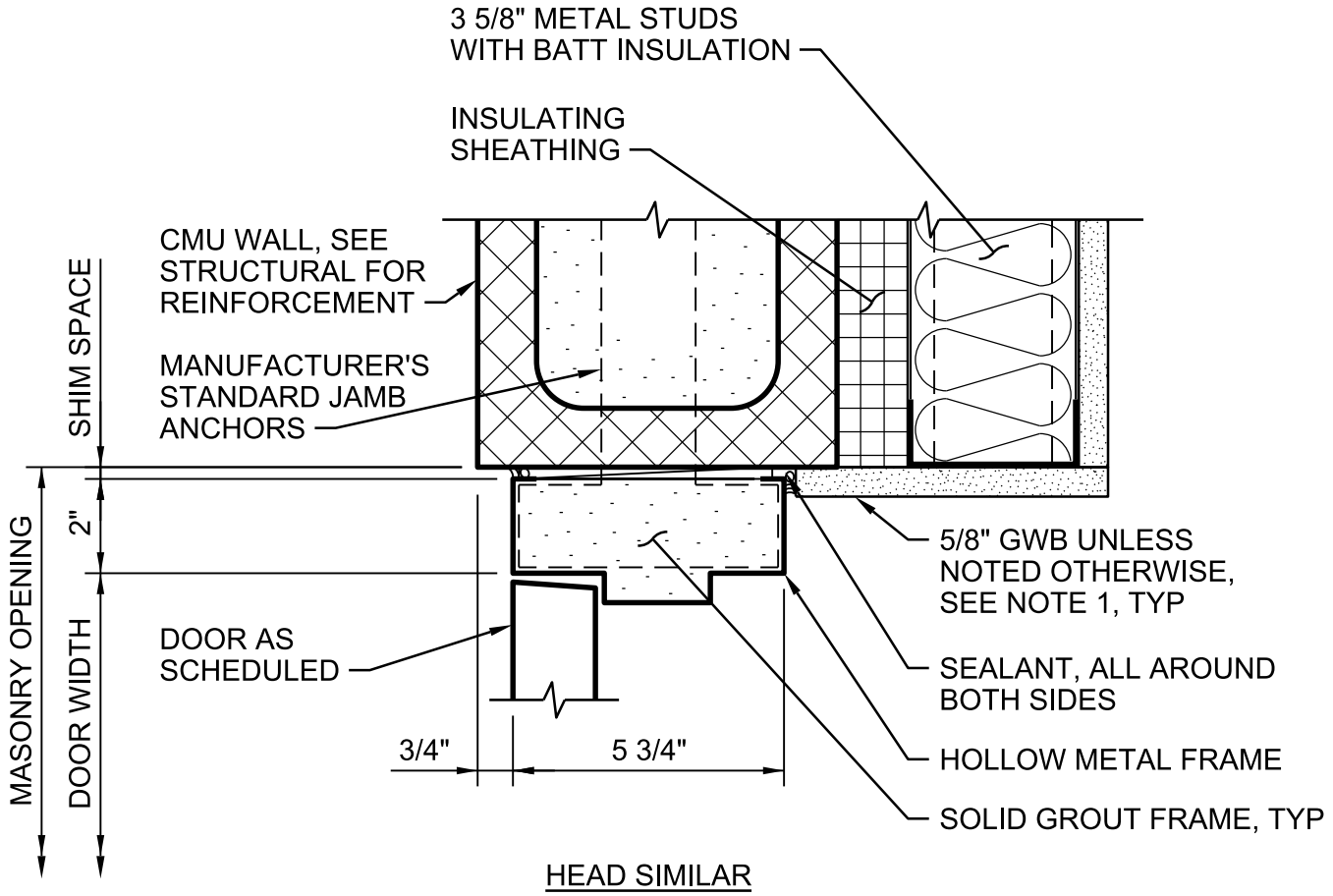

HEAD SIMILAR

DOOR JAMB

NTS

NATIONAL PARK SERVICE
GRAND CANYON NATIONAL PARK
SOUTH RIM

0811-015

© JACOBS

Jacobs

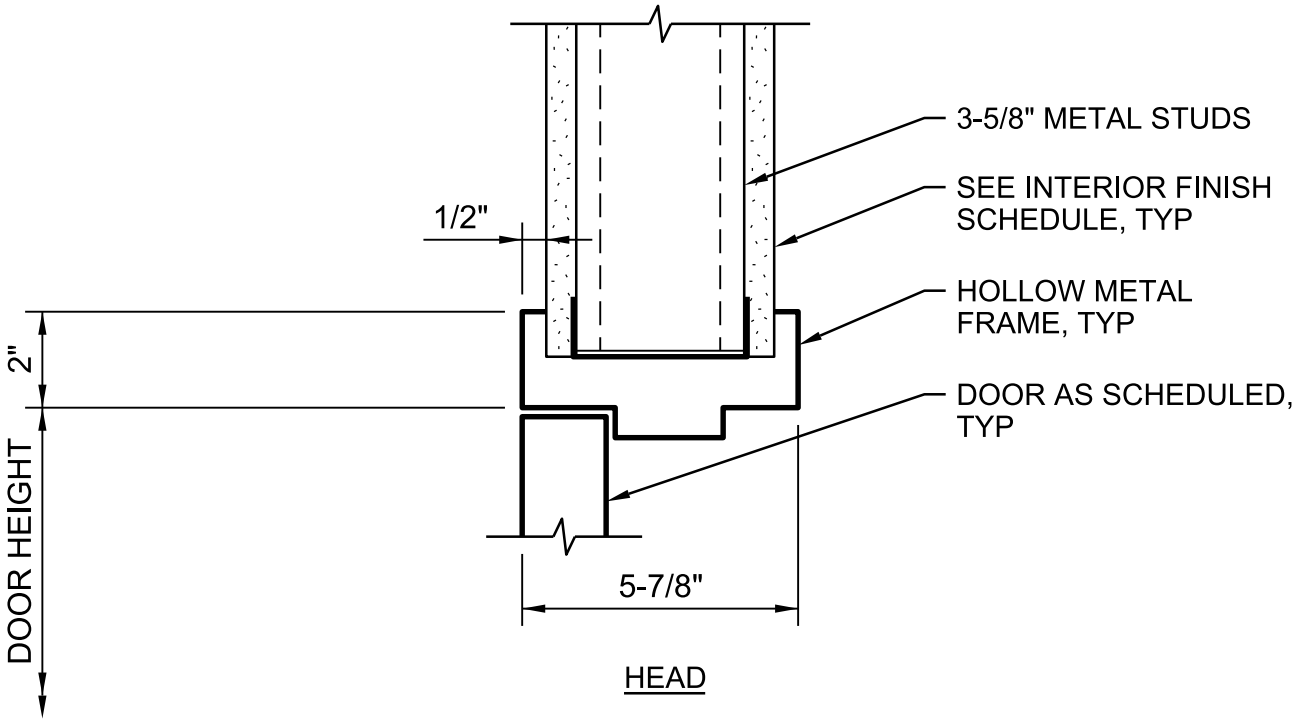

HEAD

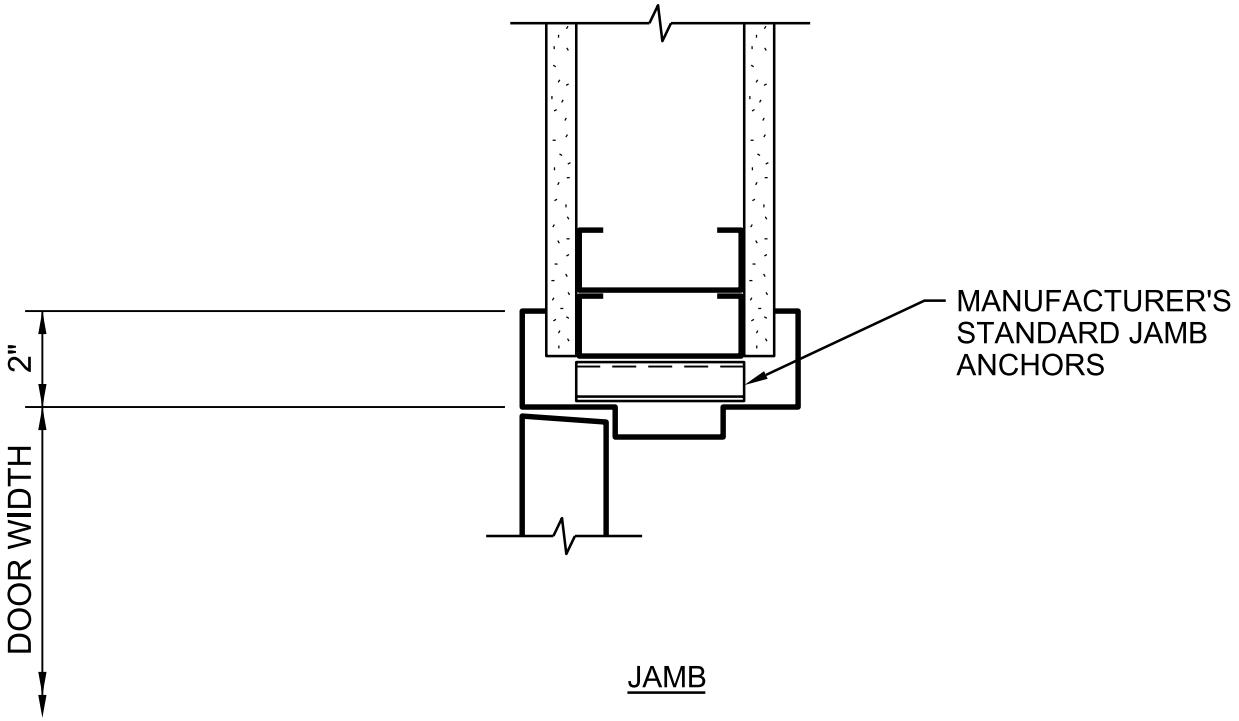

JAMB

DOOR HEAD AND JAMB

NTS

NATIONAL PARK SERVICE
GRAND CANYON NATIONAL PARK
SOUTH RIM

0811-032

© JACOBS

Jacobs

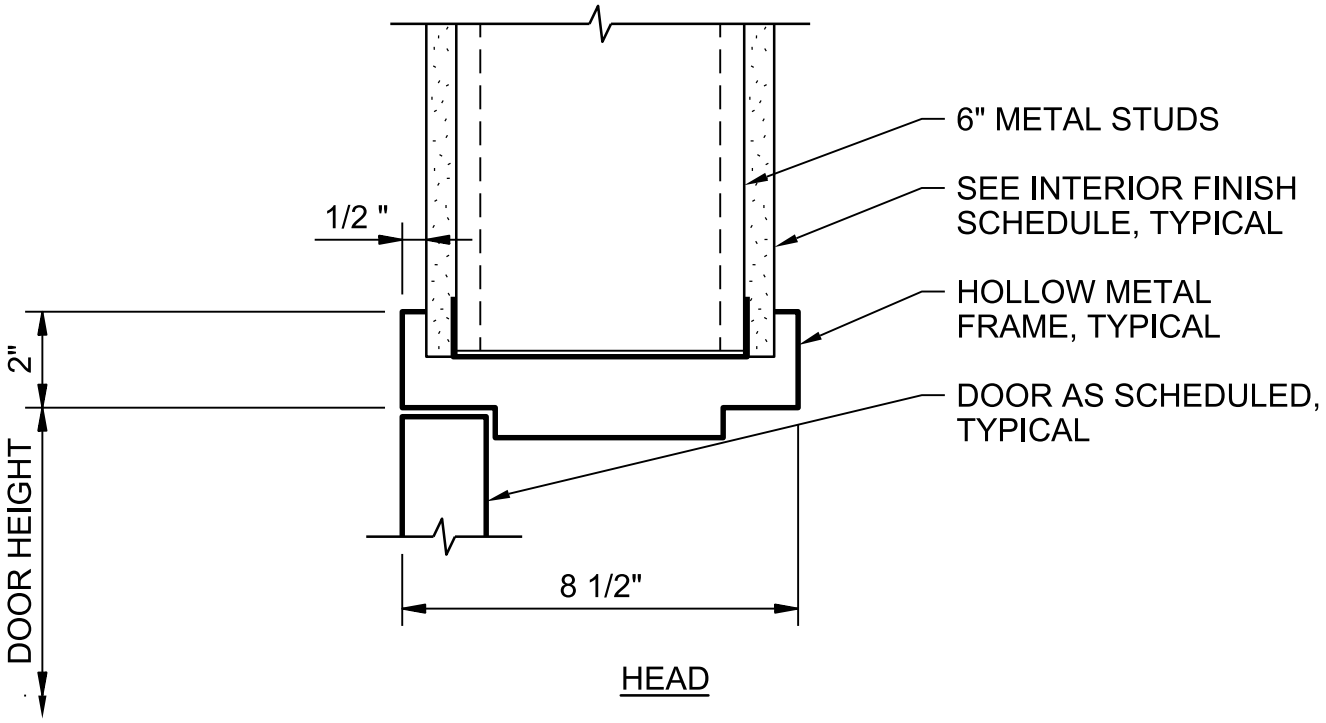

HEAD

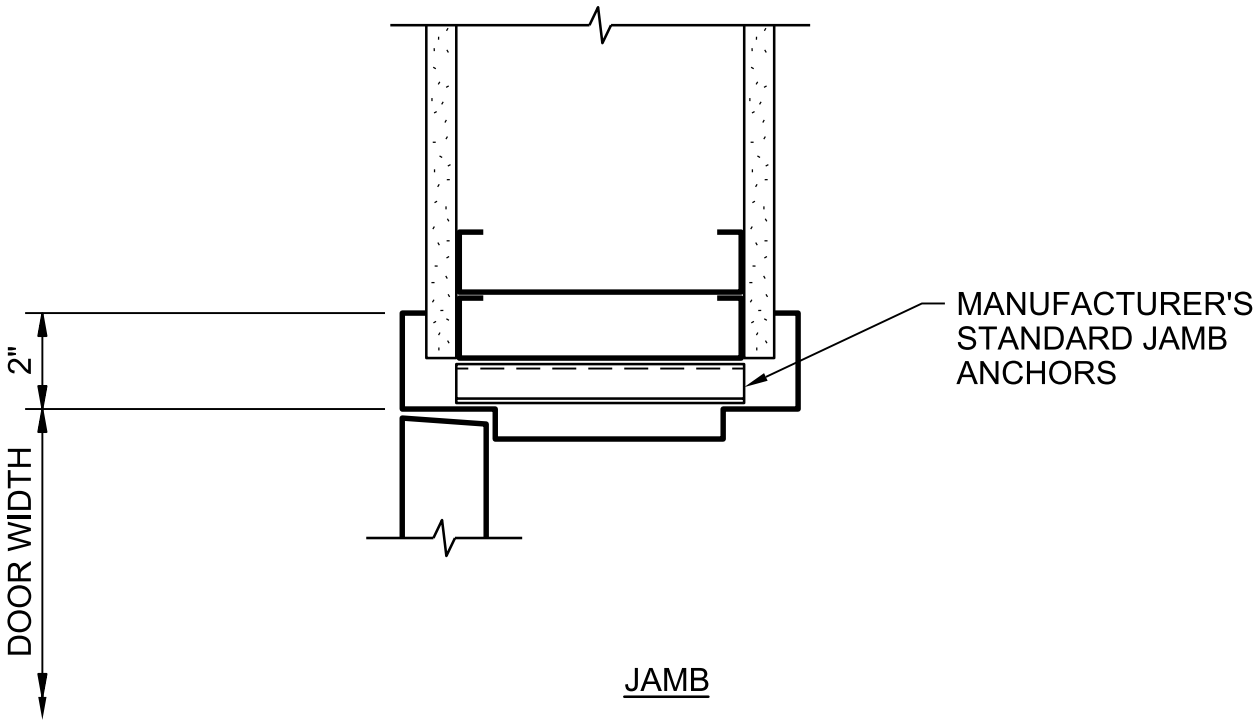

JAMB

DOOR HEAD AND JAMB

NTS

NATIONAL PARK SERVICE
GRAND CANYON NATIONAL PARK
SOUTH RIM

0811-033

© JACOBS

Jacobs

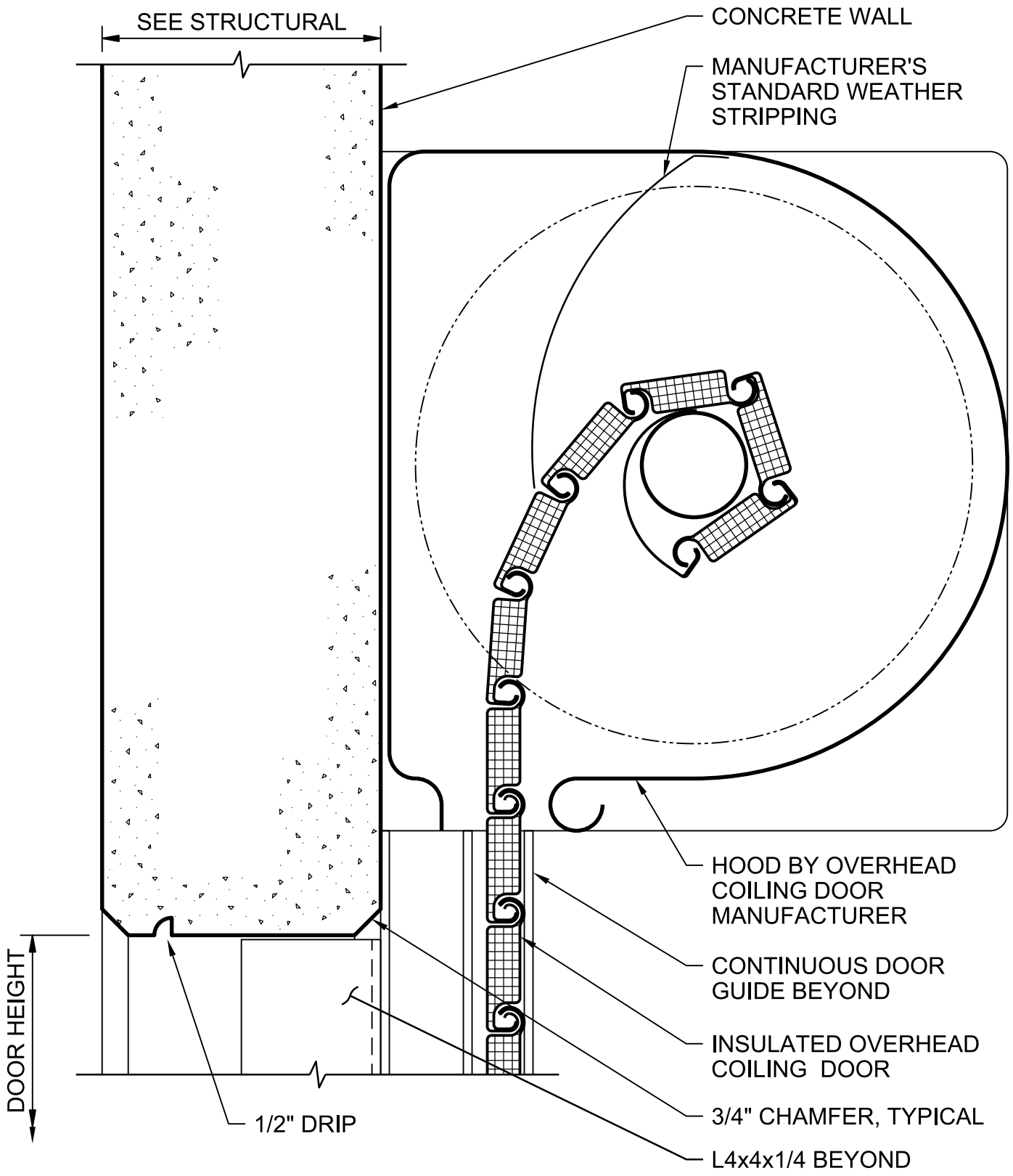

OVERHEAD COILING DOOR HEAD (INSULATED)

NTS

NATIONAL PARK SERVICE
GRAND CANYON NATIONAL PARK
SOUTH RIM

0833-003

© JACOBS

Jacobs

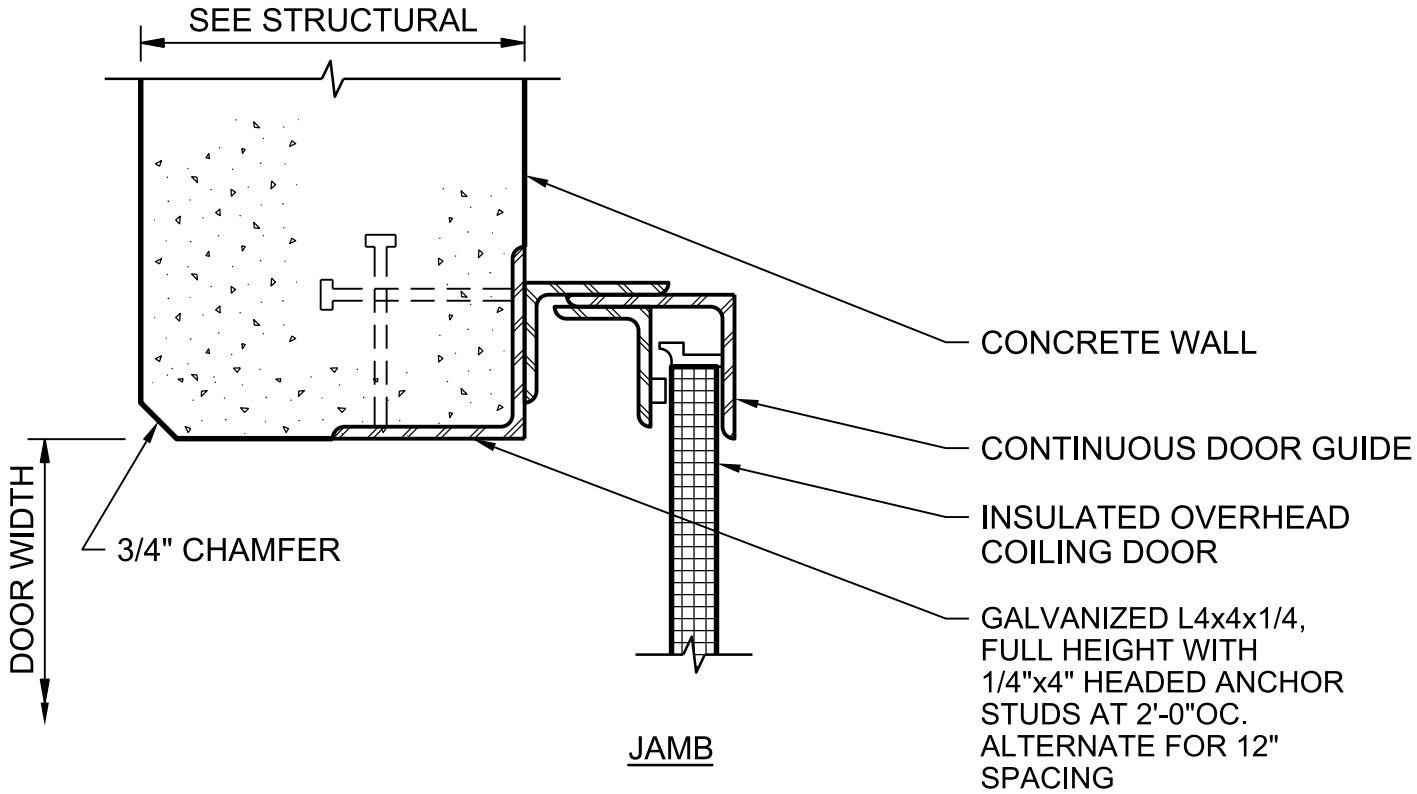

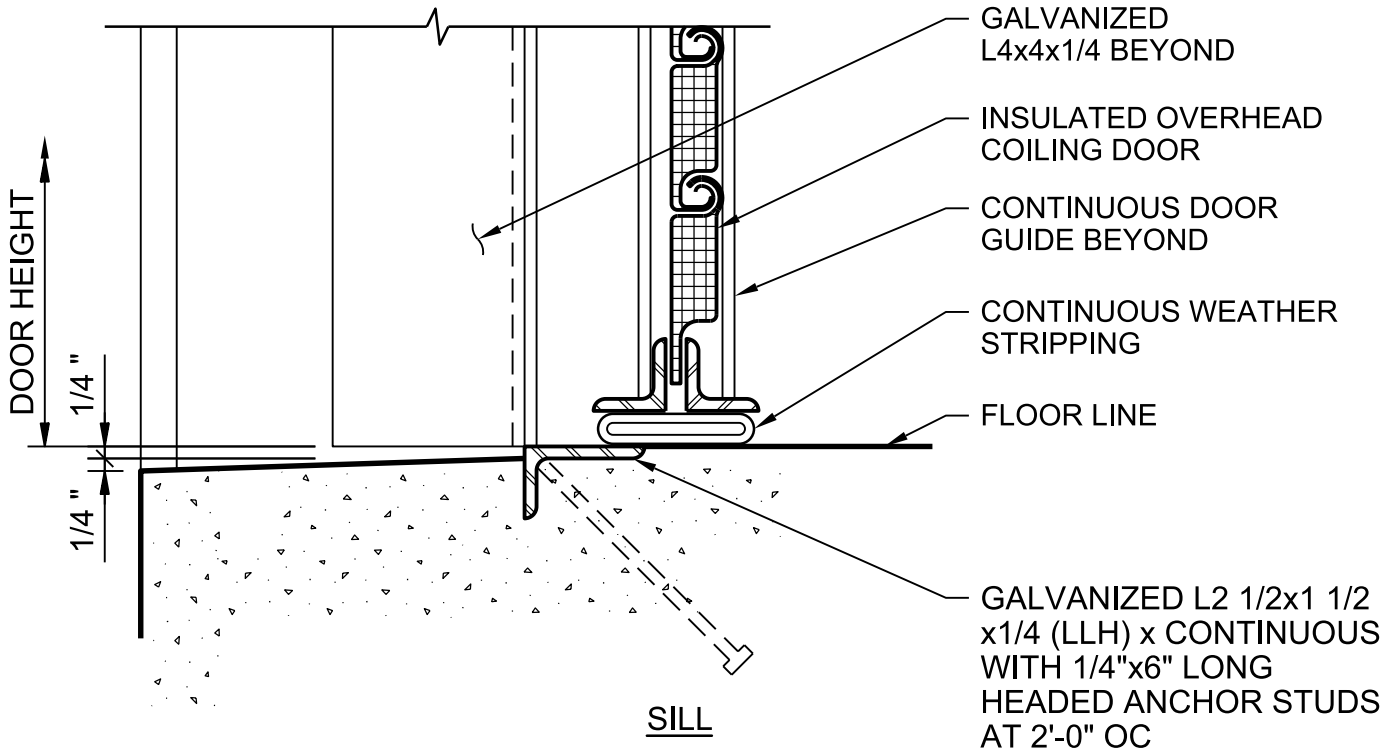

OVERHEAD COILING DOOR JAMB AND SILL (INSULATED)

NTS

NATIONAL PARK SERVICE
GRAND CANYON NATIONAL PARK
SOUTH RIM

0833-004

© JACOBS

Jacobs

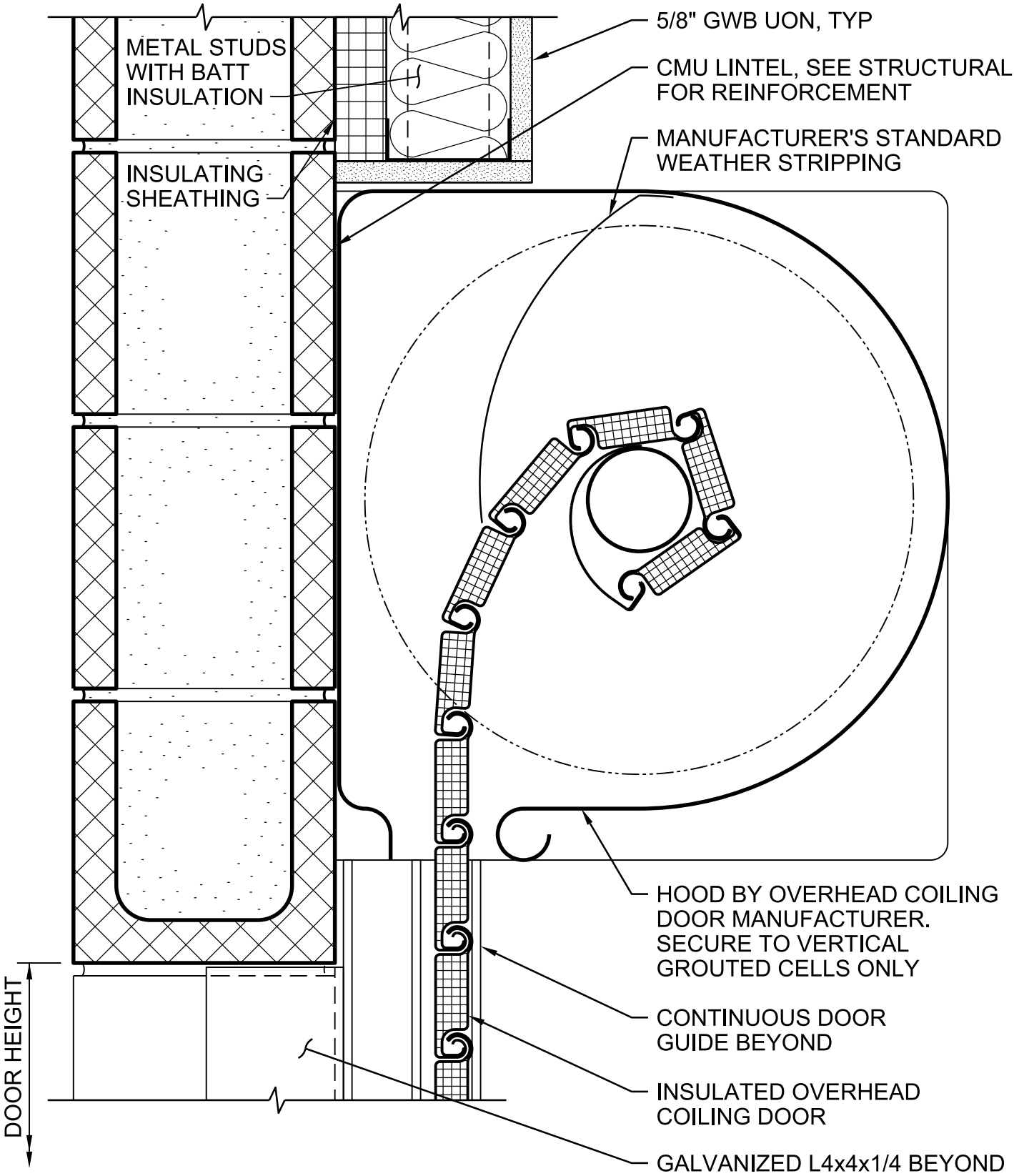

OVERHEAD COILING DOOR HEAD (INSULATED)

NTS

NATIONAL PARK SERVICE
GRAND CANYON NATIONAL PARK
SOUTH RIM

0833-007

© JACOBS

Jacobs

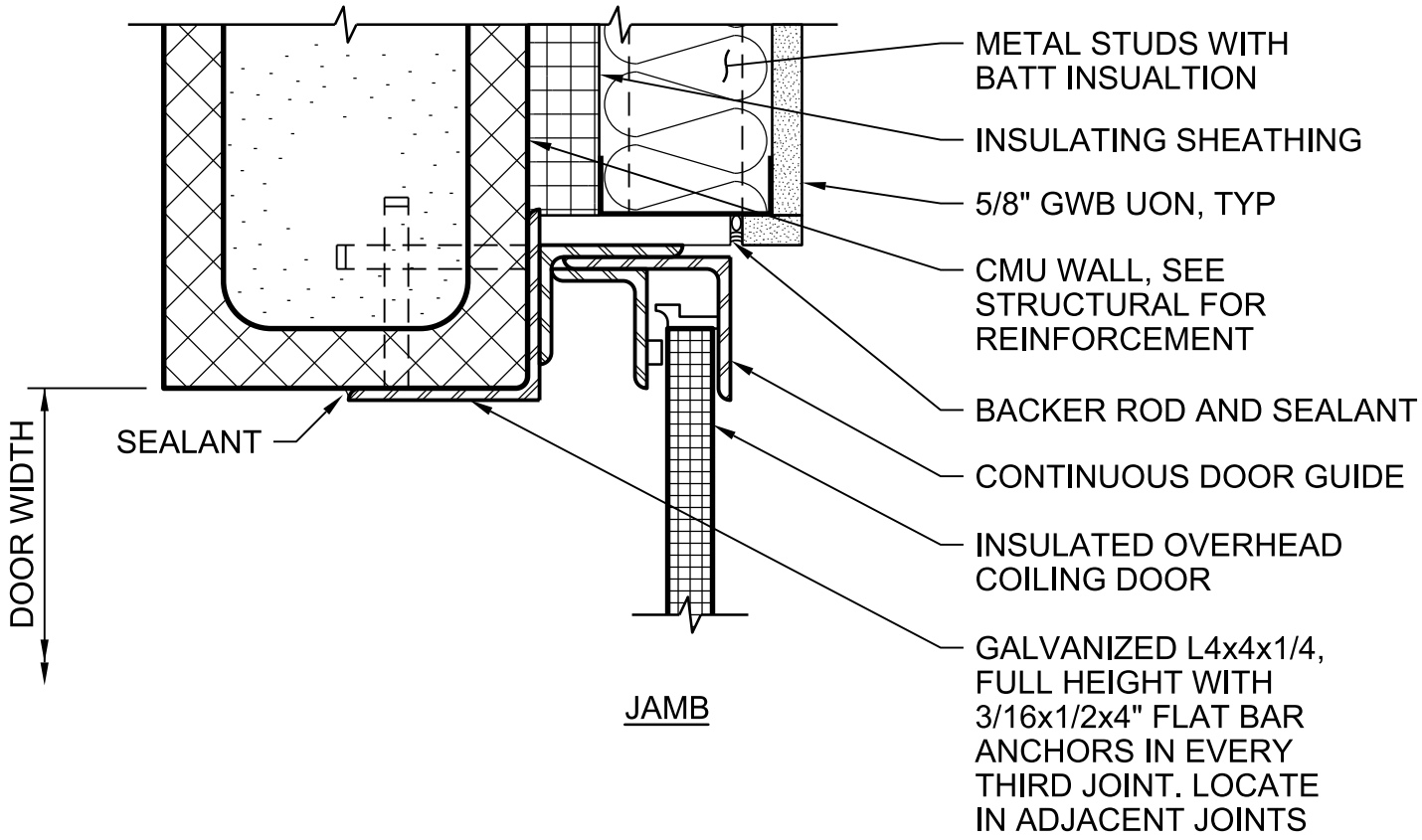

JAMB

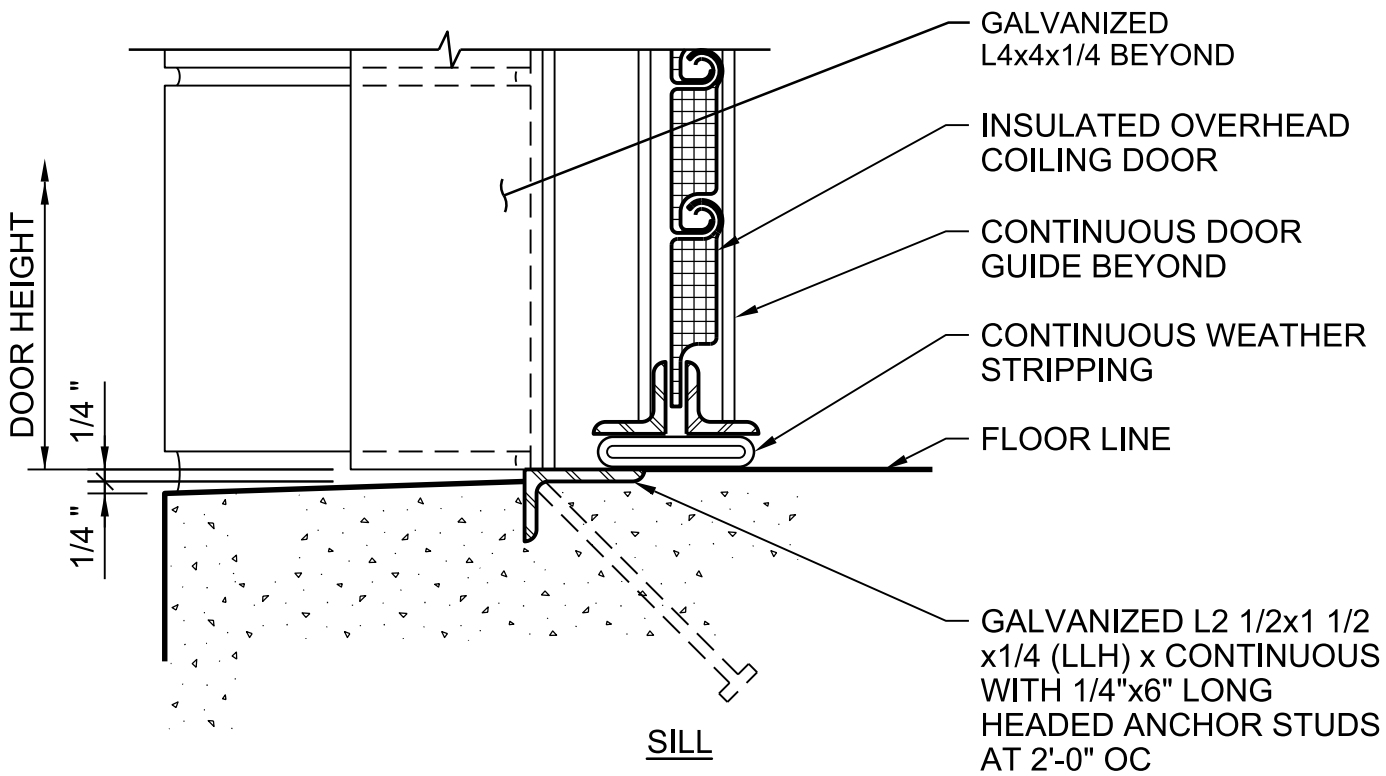

SILL

OVERHEAD COILING DOOR JAMB AND SILL (INSULATED)

NTS

NATIONAL PARK SERVICE
GRAND CANYON NATIONAL PARK
SOUTH RIM

0833-008

© JACOBS

Jacobs

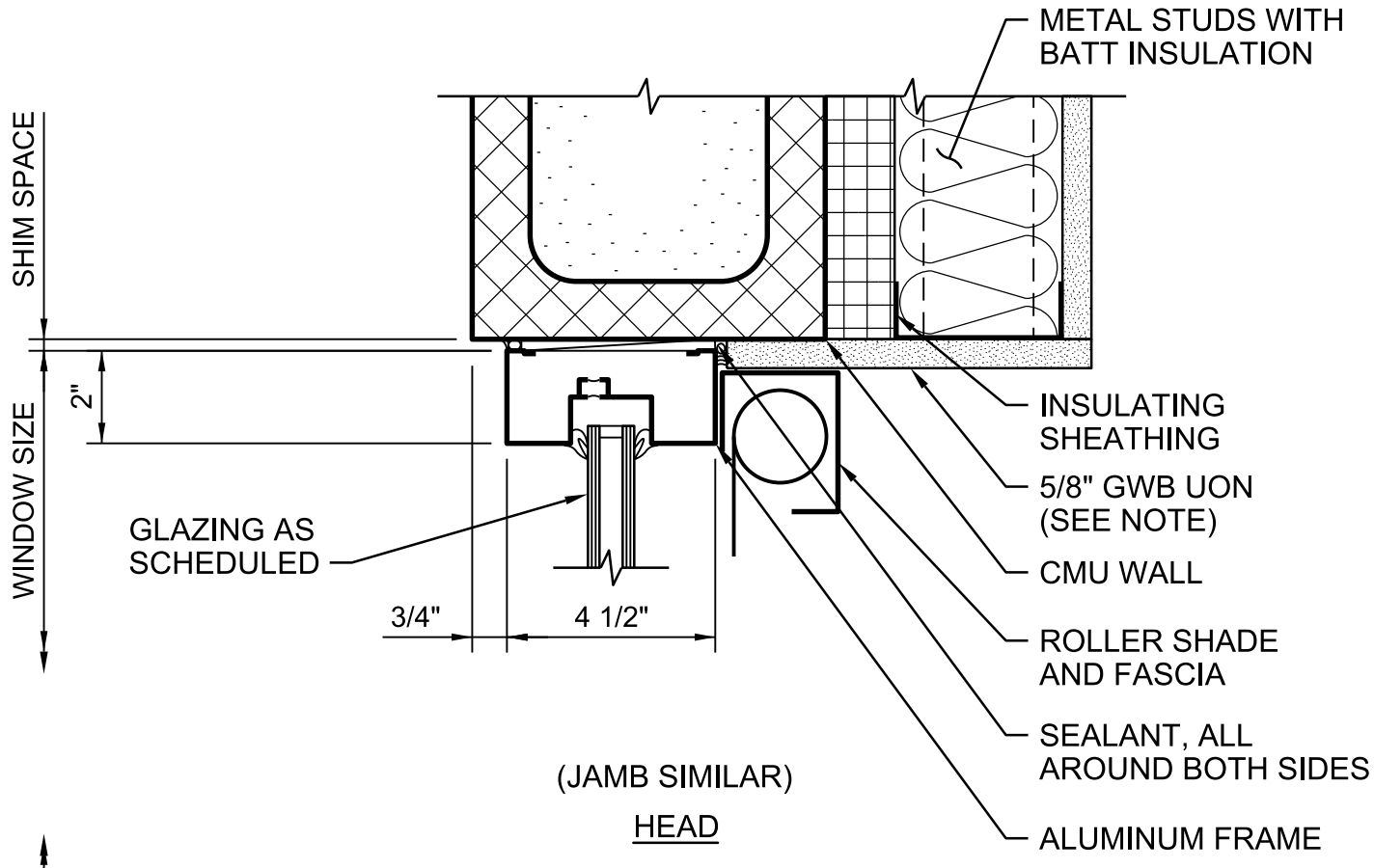

HEAD

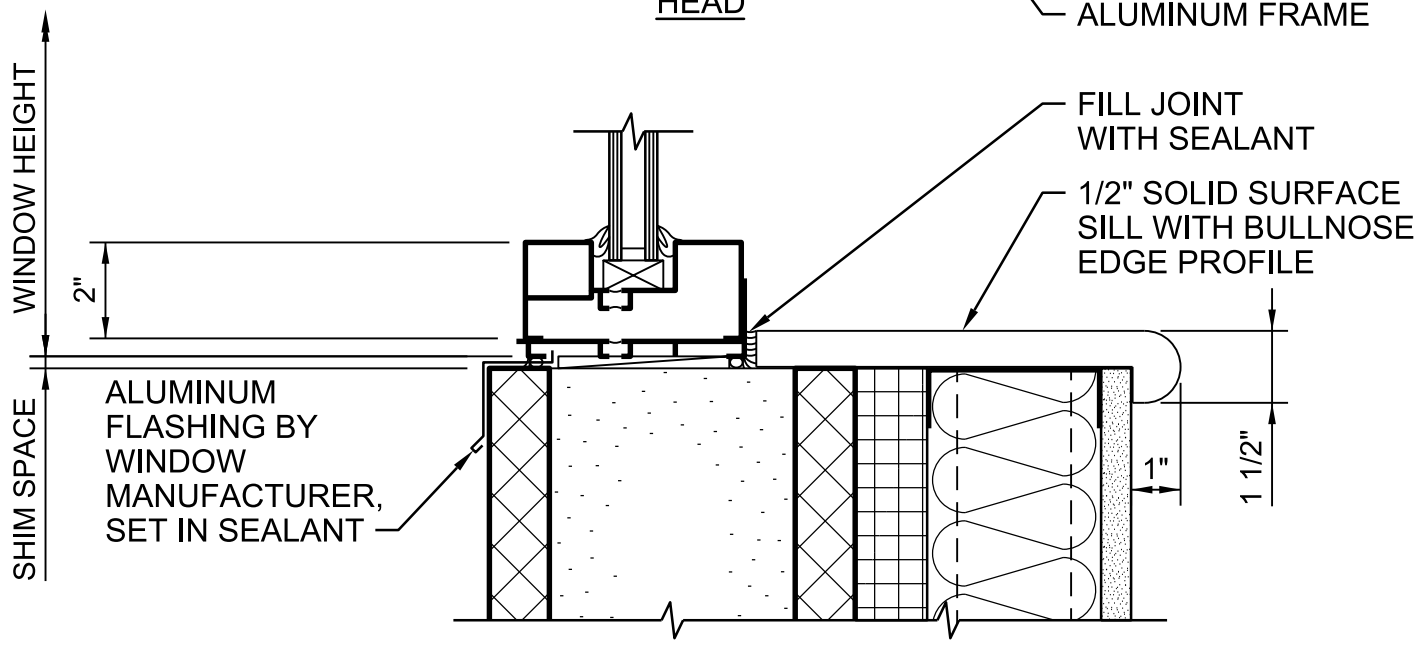

SILL

NOTES:

1. SEE INTERIOR FINISH SCHEDULE FOR WALL BOARD TYPE.

WINDOW HEAD AND SILL

NTS

NATIONAL PARK SERVICE
GRAND CANYON NATIONAL PARK
SOUTH RIM

0851-002

© JACOBS

Jacobs

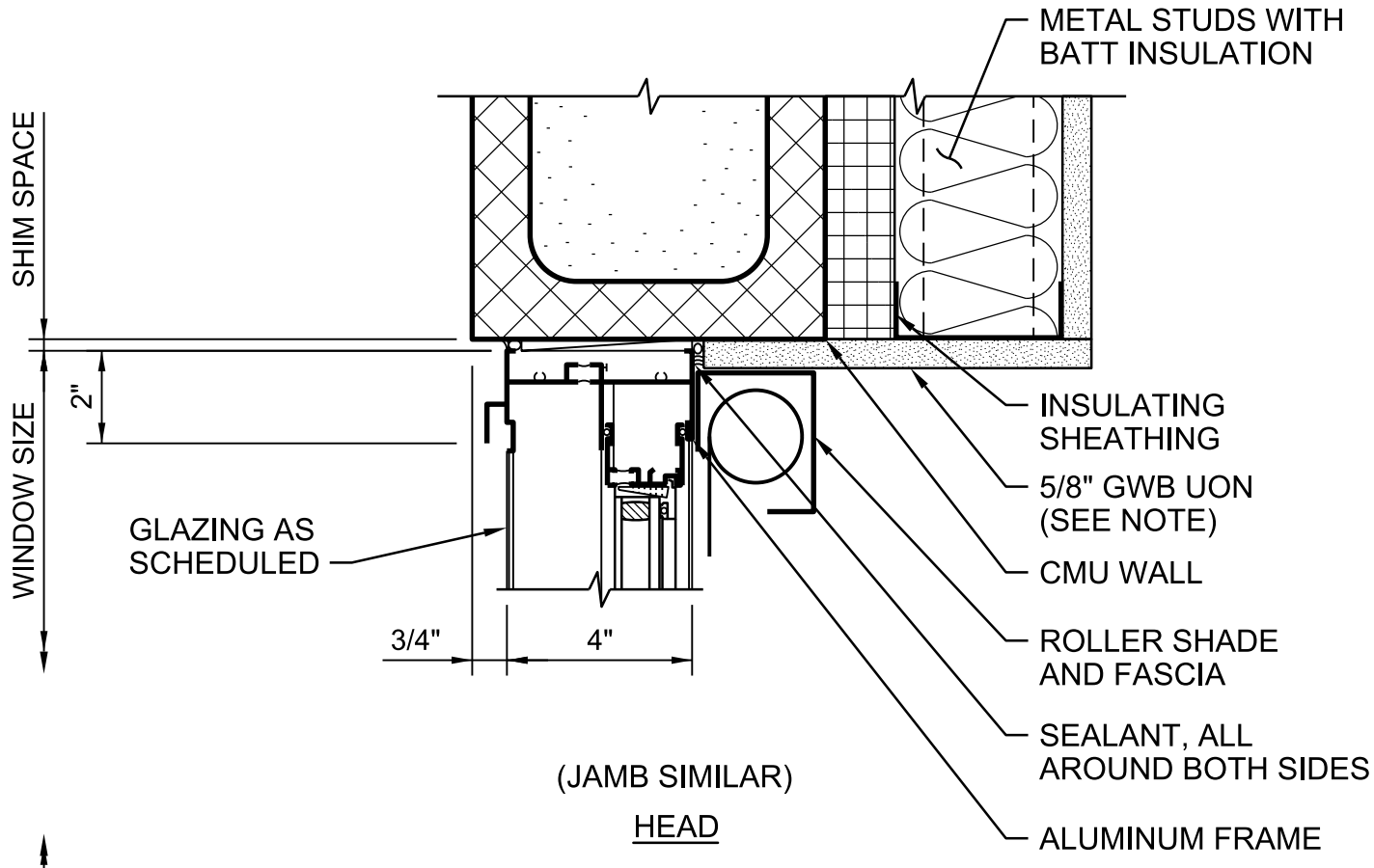

(JAMB SIMILAR)

HEAD

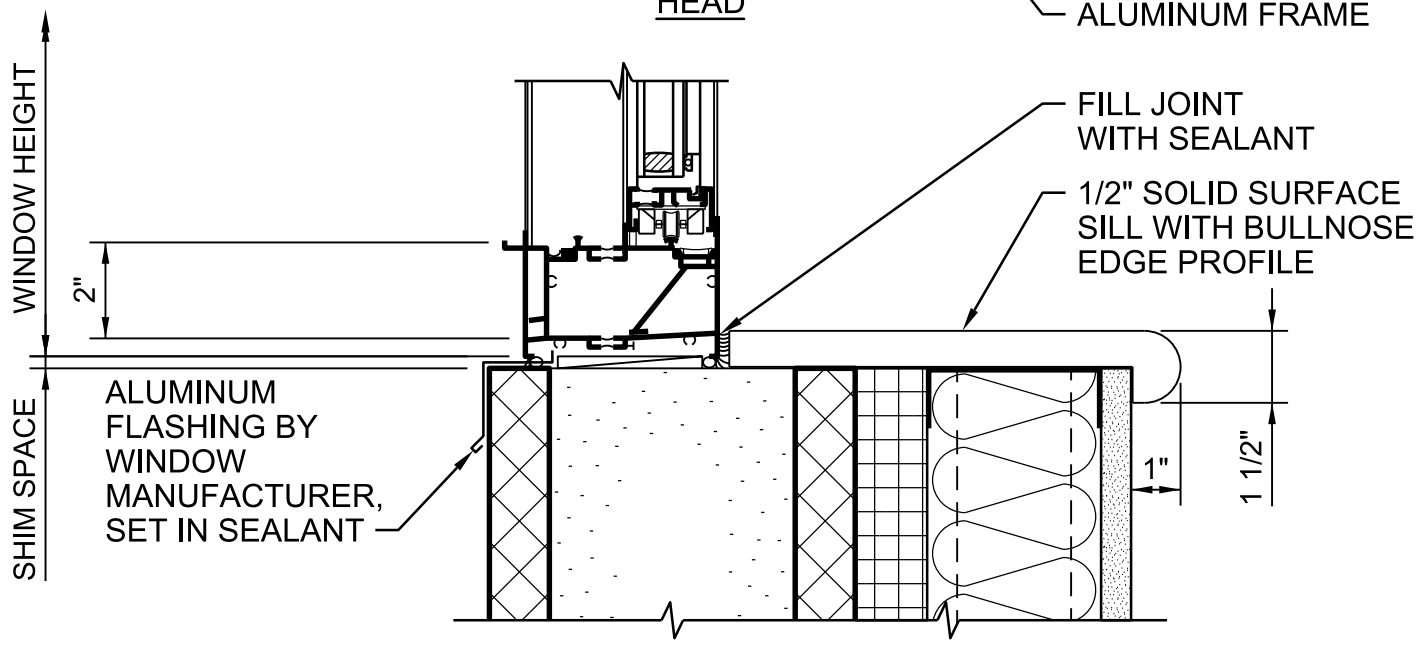

SILL

NOTES:

1. SEE INTERIOR FINISH SCHEDULE FOR WALL BOARD TYPE.

WINDOW HEAD AND SILL

NTS

NATIONAL PARK SERVICE
GRAND CANYON NATIONAL PARK
SOUTH RIM

0851-004

© JACOBS

Jacobs

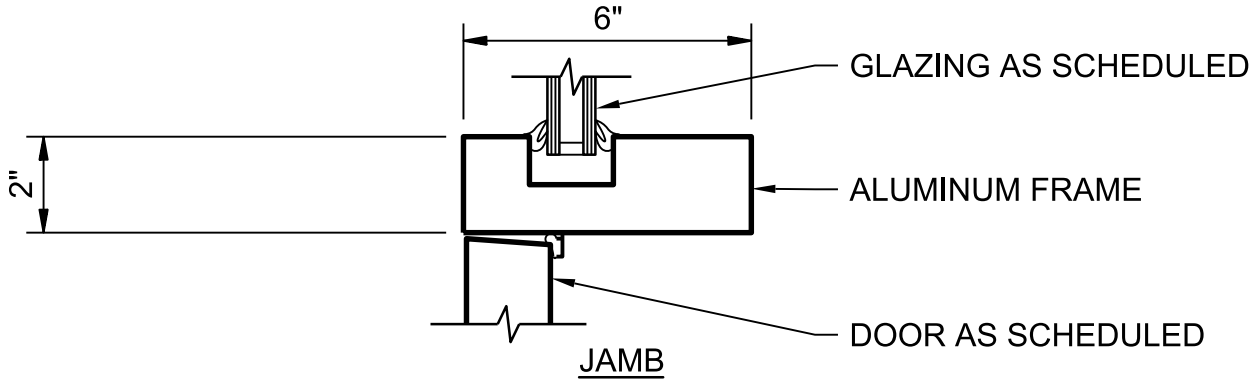

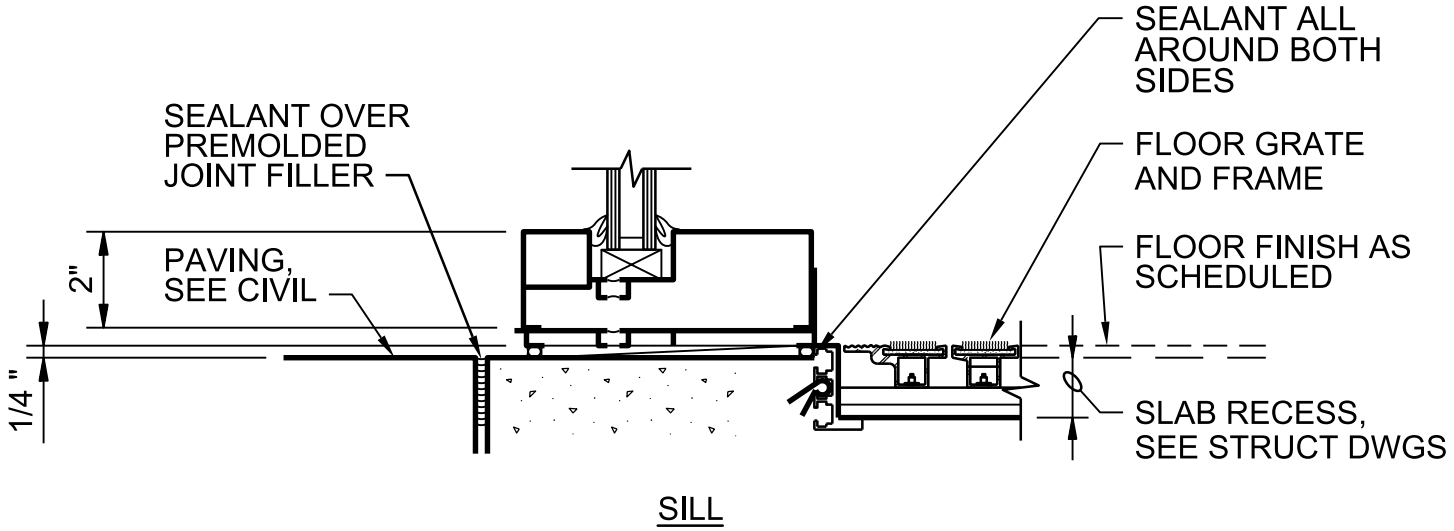

SIDELIGHT JAMB AND SILL

NTS

NATIONAL PARK SERVICE
GRAND CANYON NATIONAL PARK
SOUTH RIM

0851-005

© JACOBS

Jacobs

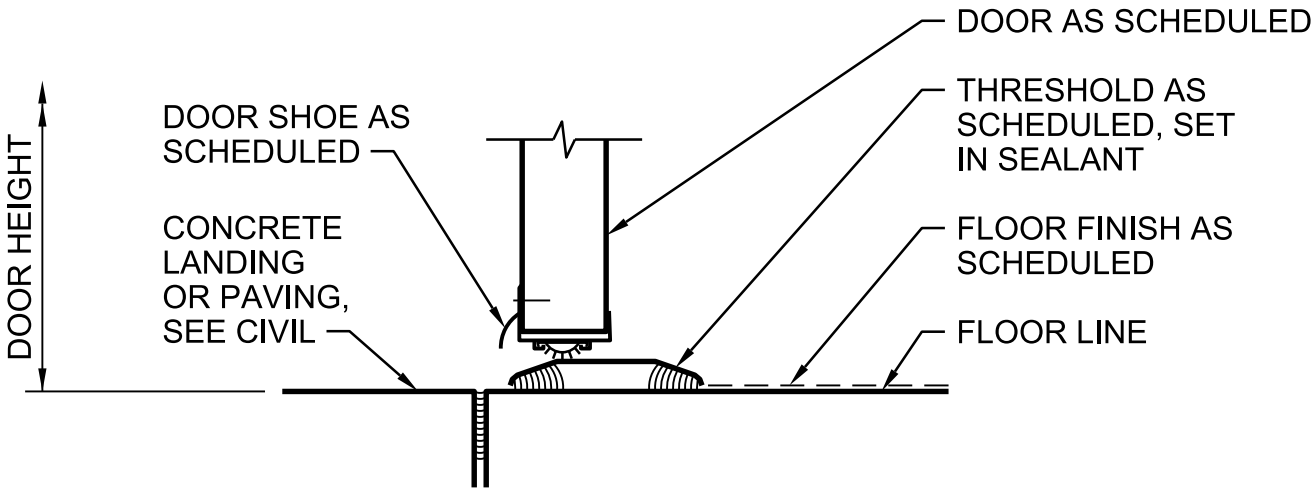

DOOR SILL

NTS

NATIONAL PARK SERVICE
GRAND CANYON NATIONAL PARK
SOUTH RIM

0871-001

© JACOBS

Jacobs

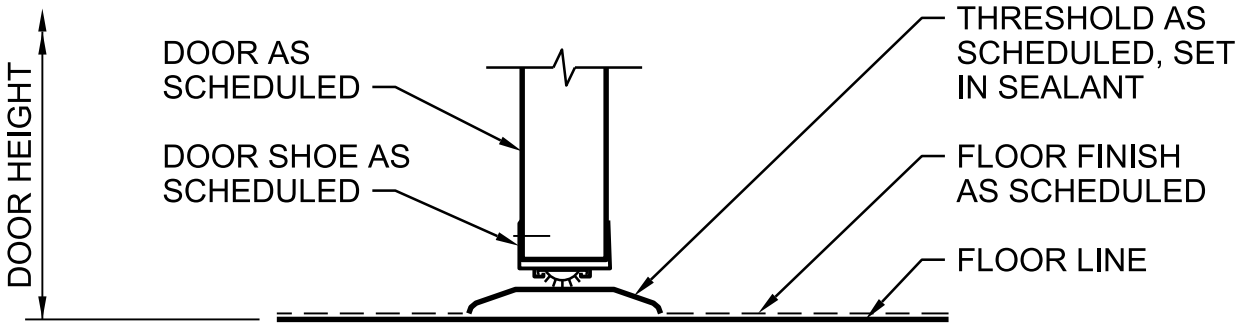

DOOR SILL

NTS

NATIONAL PARK SERVICE
GRAND CANYON NATIONAL PARK
SOUTH RIM

0871-002

© JACOBS

Jacobs

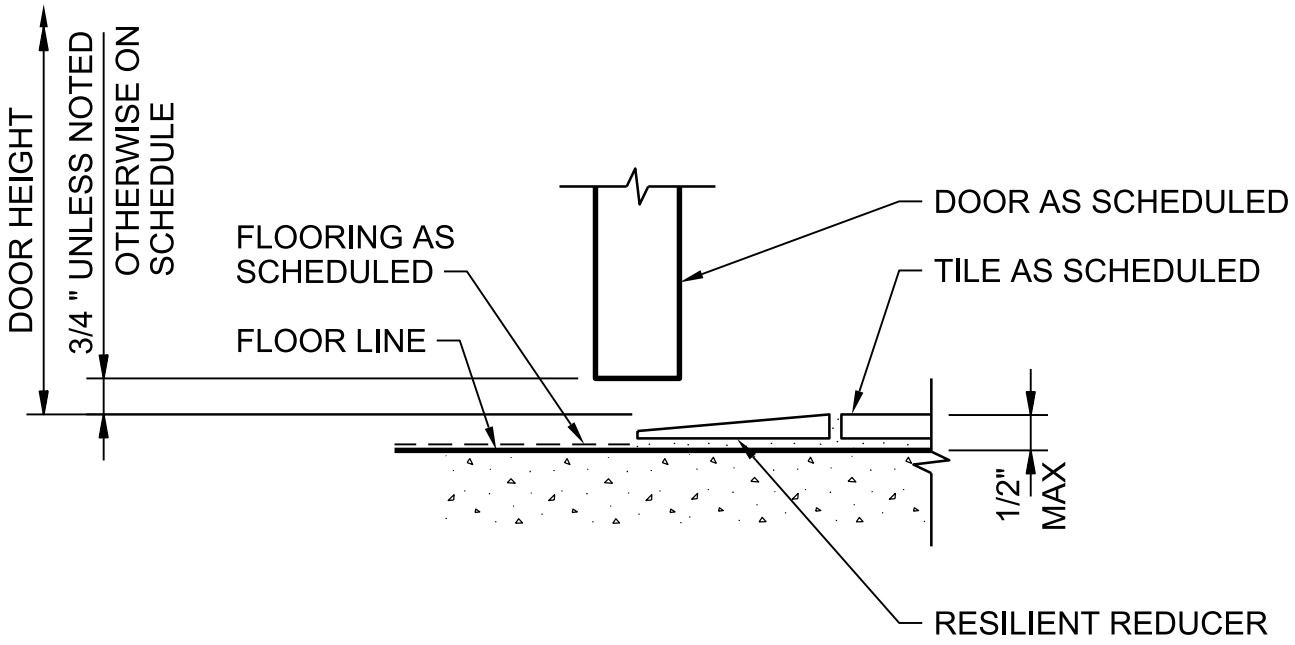

DOOR SILL

NTS

NATIONAL PARK SERVICE
GRAND CANYON NATIONAL PARK
SOUTH RIM

0871-003

© JACOBS

Jacobs

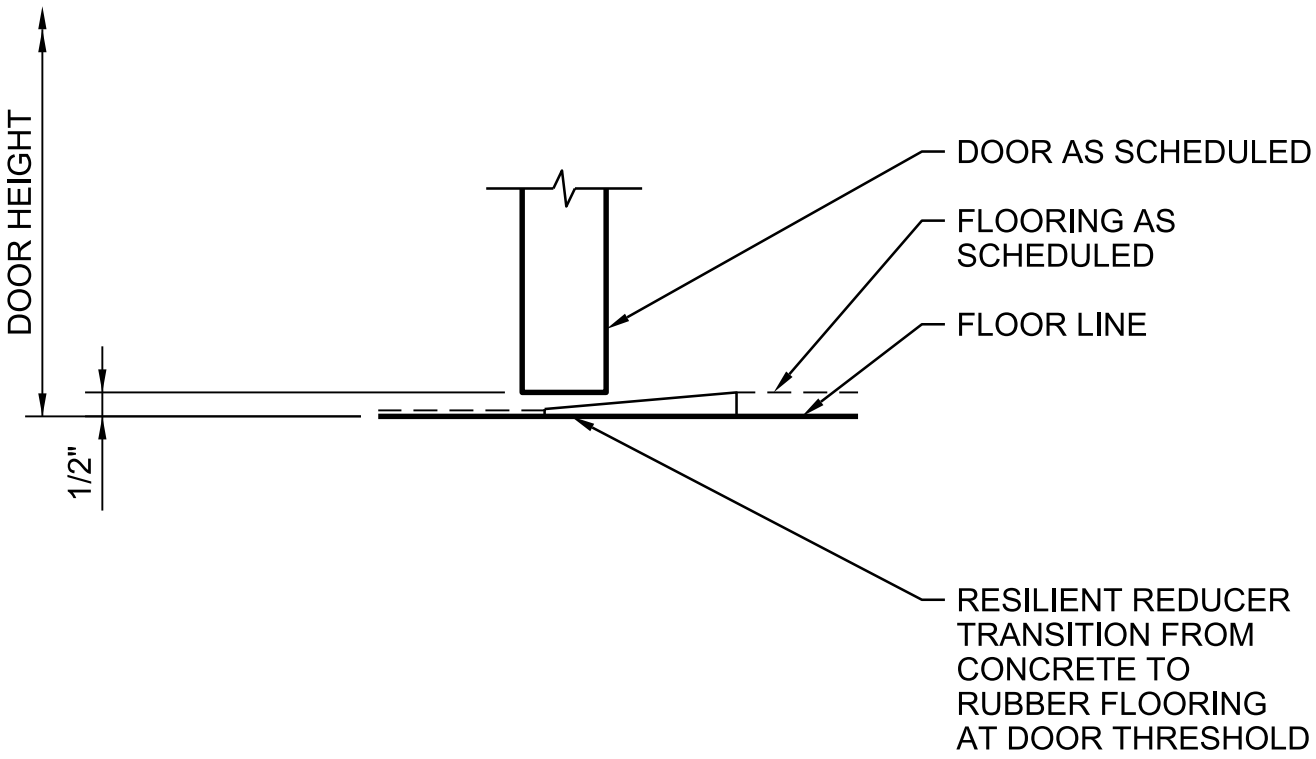

DOOR SILL

NTS

NATIONAL PARK SERVICE
GRAND CANYON NATIONAL PARK
SOUTH RIM

0871-004

© JACOBS

Jacobs

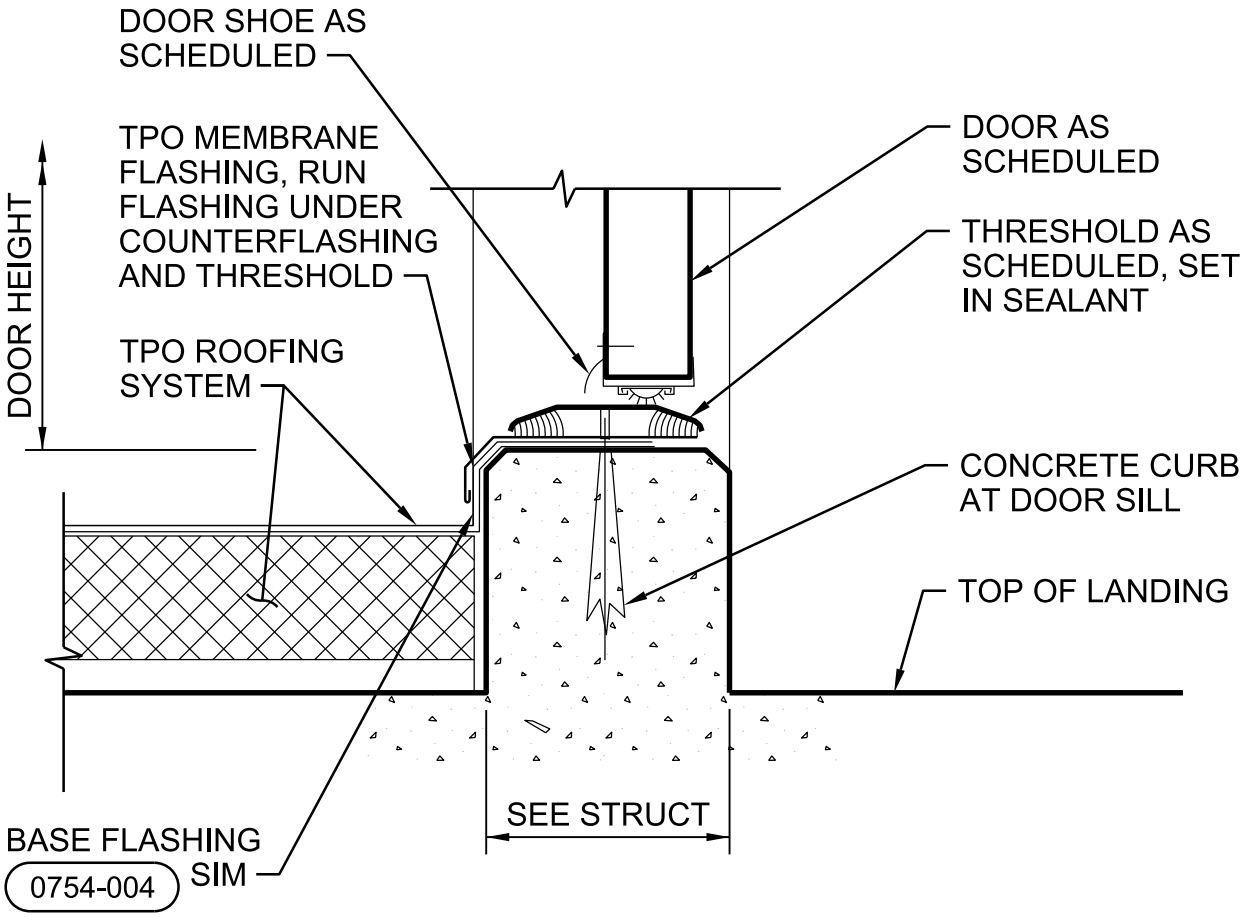

DOOR SILL

NTS

NATIONAL PARK SERVICE
GRAND CANYON NATIONAL PARK
SOUTH RIM

0871-010

© JACOBS

Jacobs

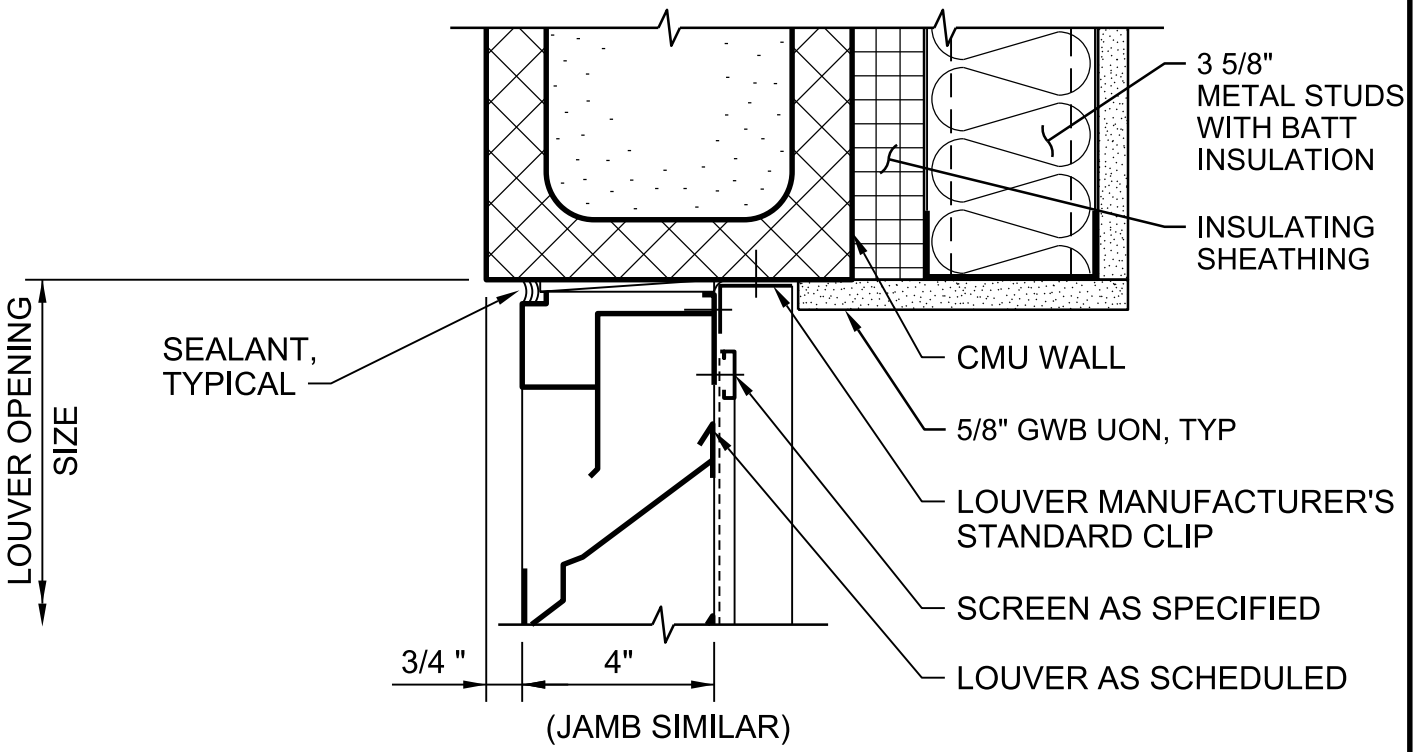

HEAD

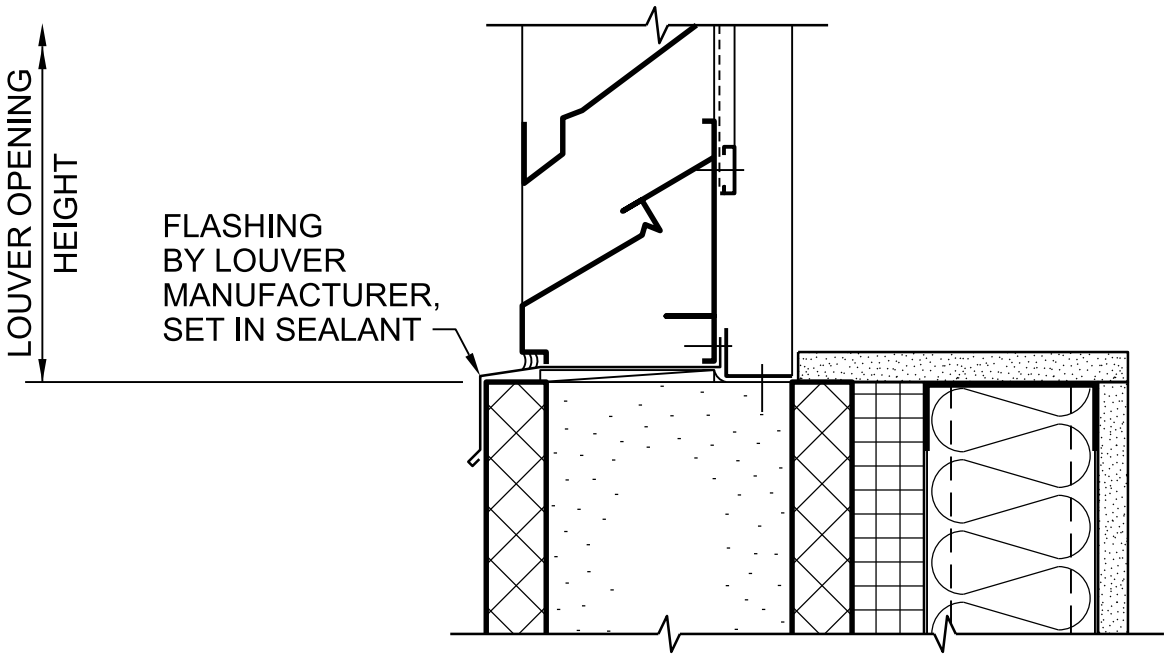

SILL

LOUVER HEAD AND SILL

NTS

NATIONAL PARK SERVICE
GRAND CANYON NATIONAL PARK
SOUTH RIM

0890-002

© JACOBS

Jacobs

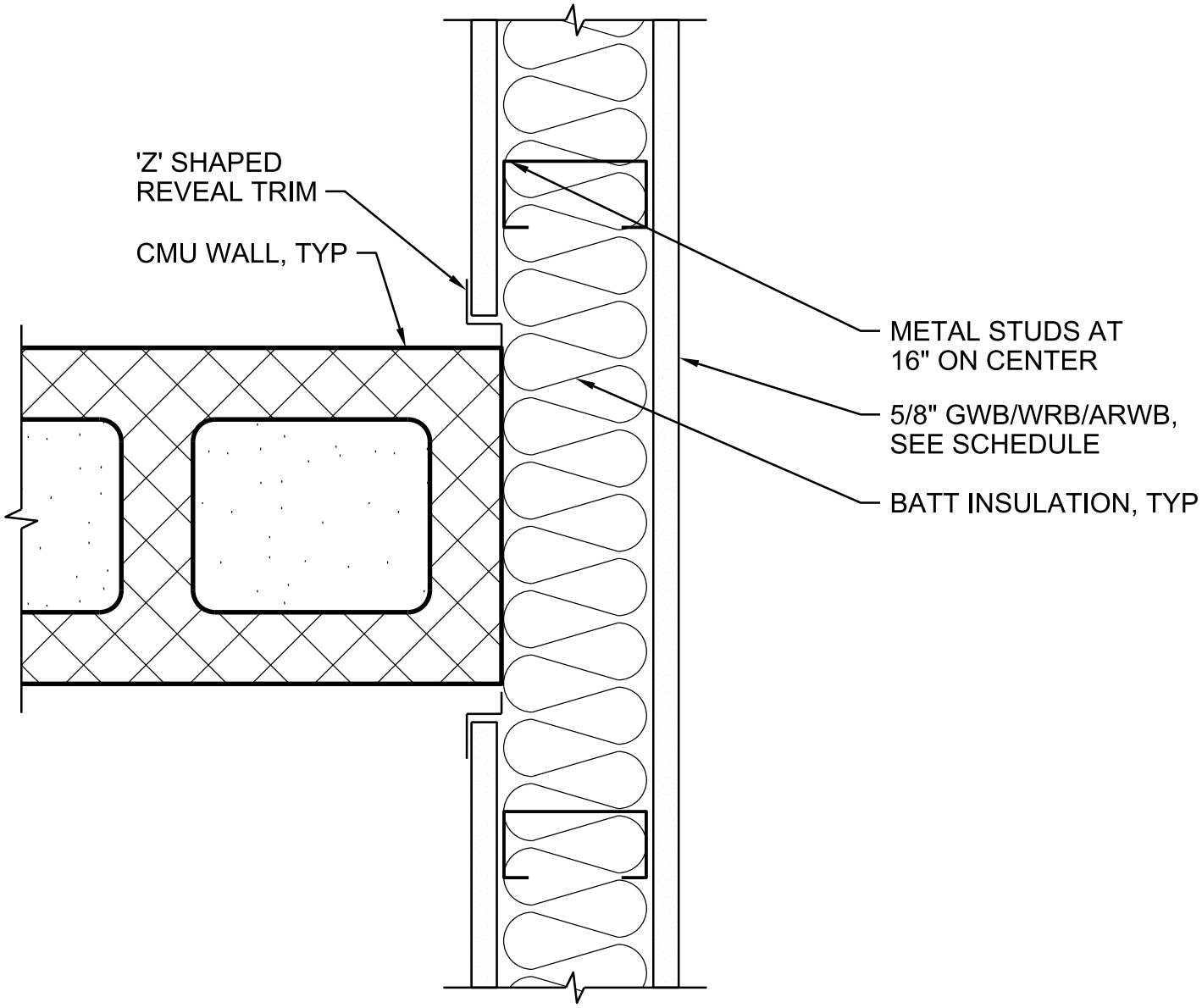

WALL DETAIL

NTS

NATIONAL PARK SERVICE
GRAND CANYON NATIONAL PARK
SOUTH RIM

0929-112

© JACOBS

Jacobs

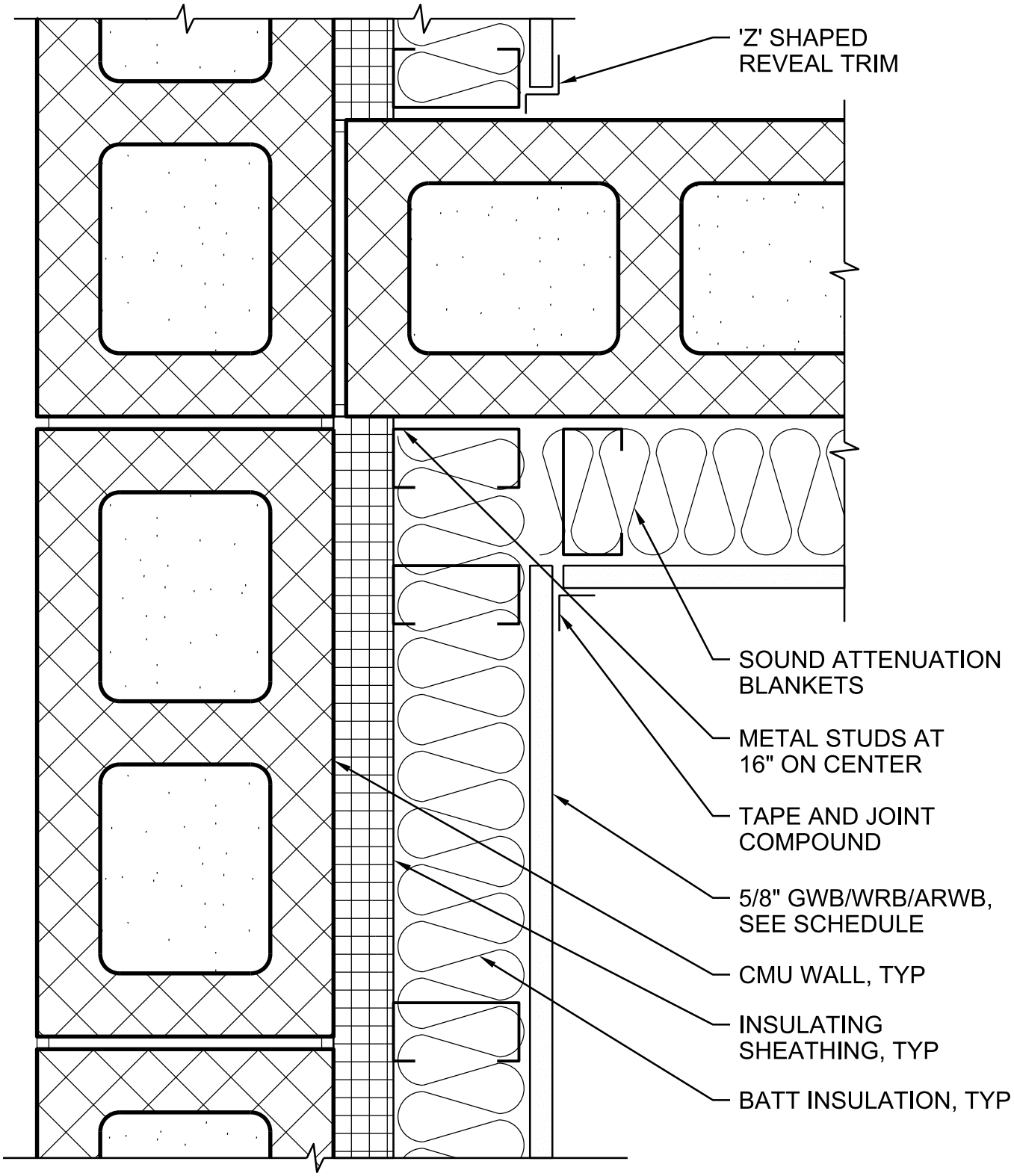

WALL DETAIL

NTS

NATIONAL PARK SERVICE
GRAND CANYON NATIONAL PARK
SOUTH RIM

0929-105

© JACOBS

Jacobs

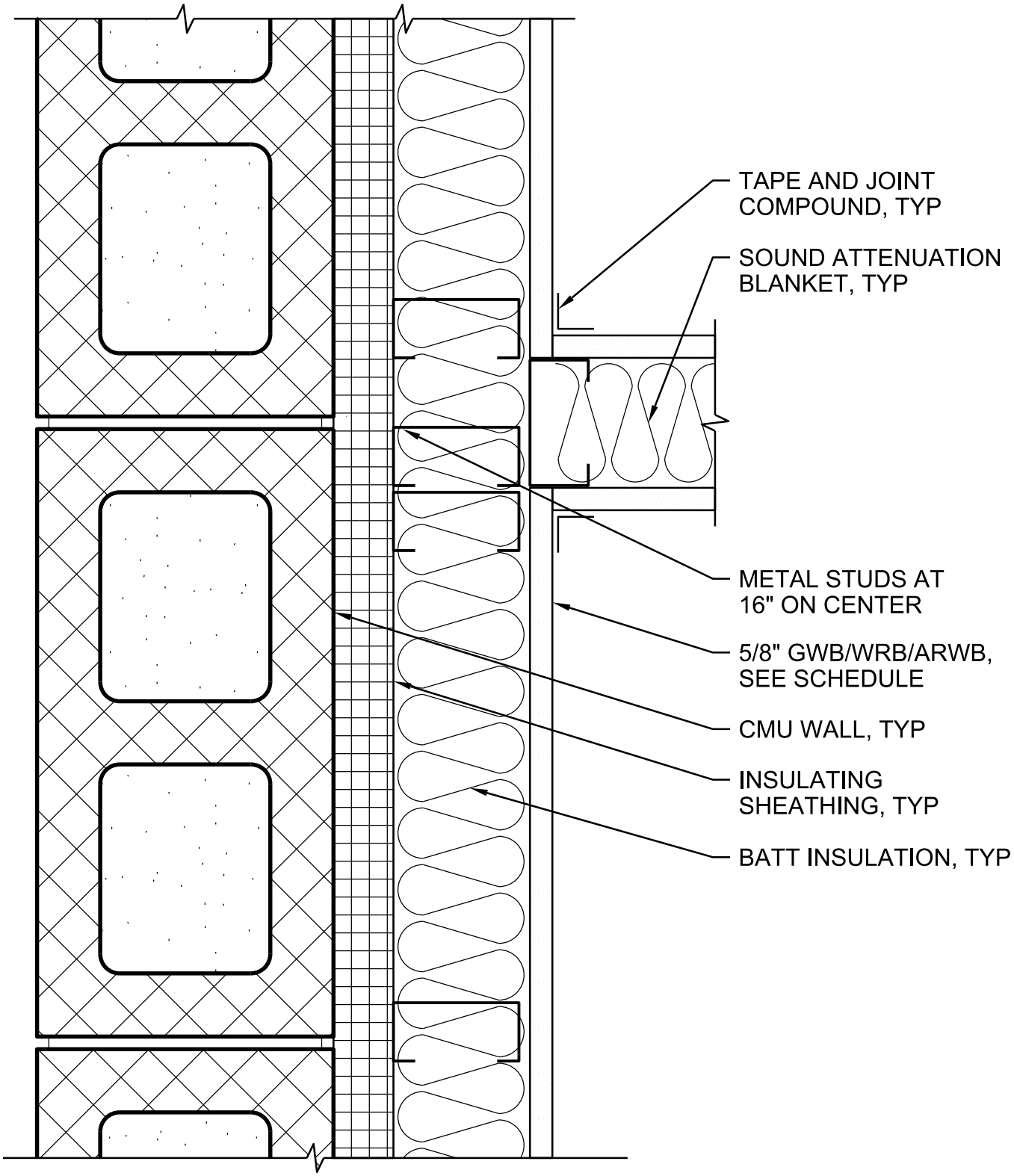

WALL DETAIL

NTS

NATIONAL PARK SERVICE
GRAND CANYON NATIONAL PARK
SOUTH RIM

0929-106

© JACOBS

Jacobs

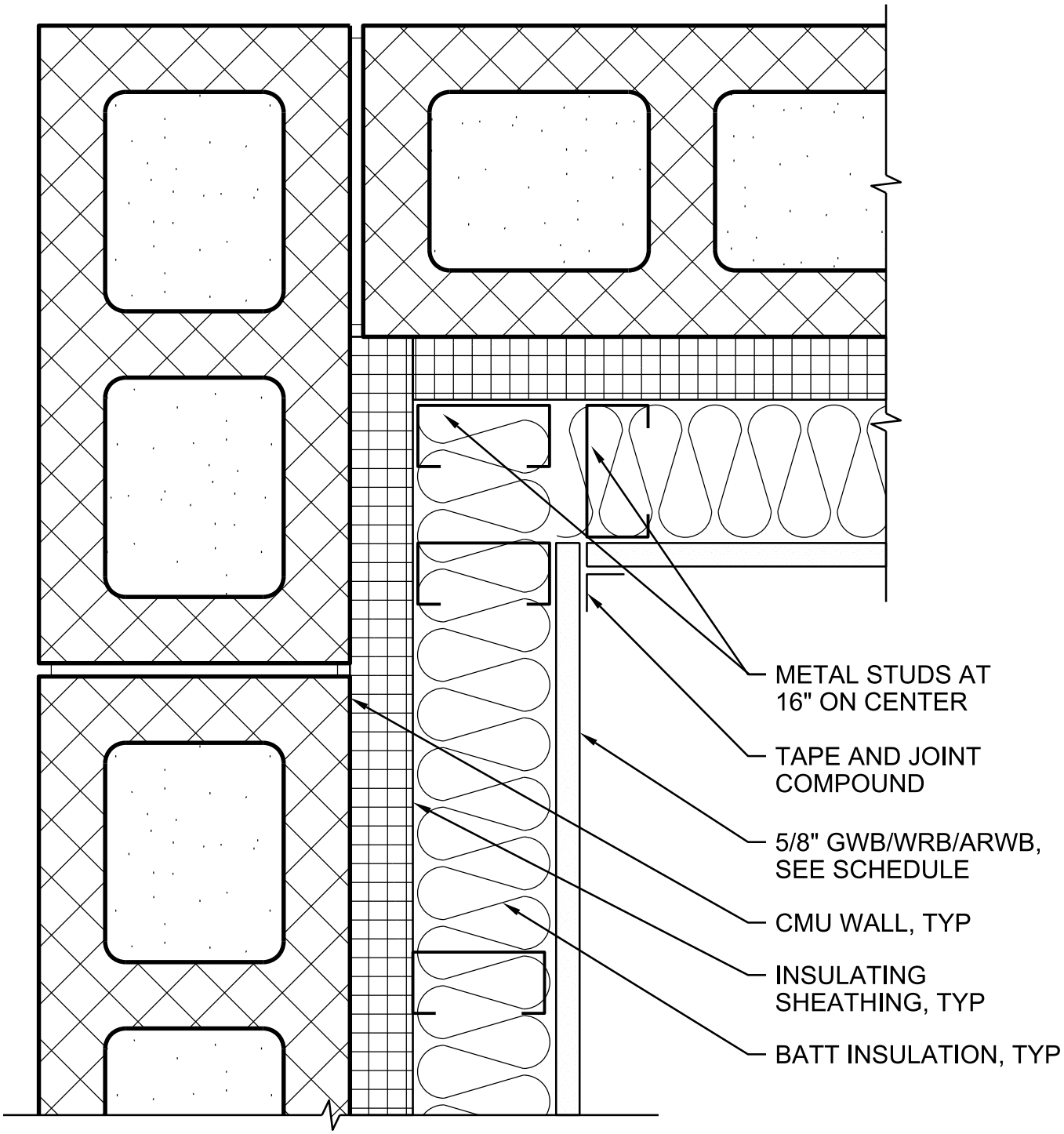

WALL DETAIL

NTS

NATIONAL PARK SERVICE
GRAND CANYON NATIONAL PARK
SOUTH RIM

0929-107

© JACOBS

Jacobs

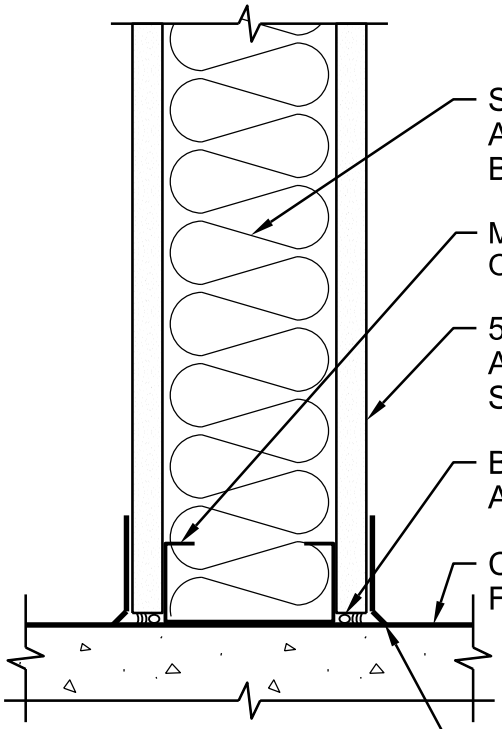

BASE OF WALL

(STUD WALL TO CONCRETE WALL SIMILAR)

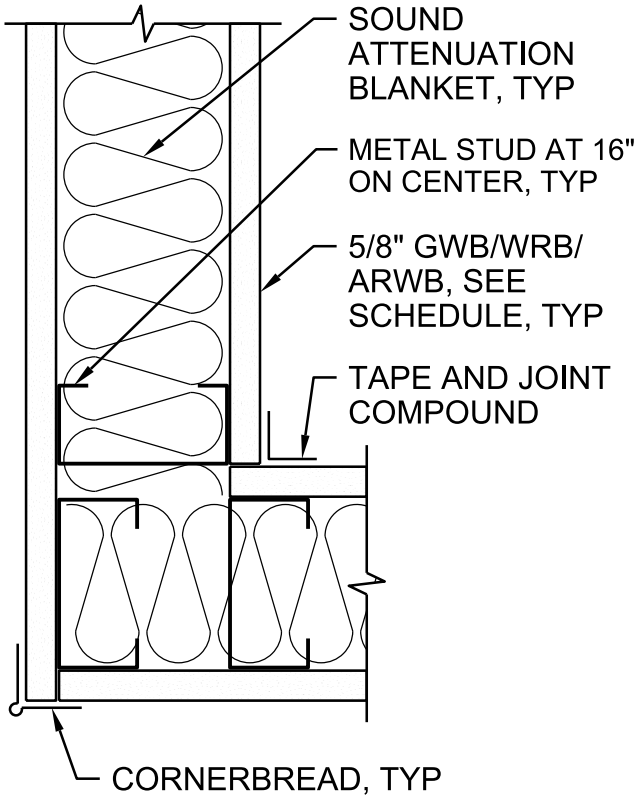

CORNER

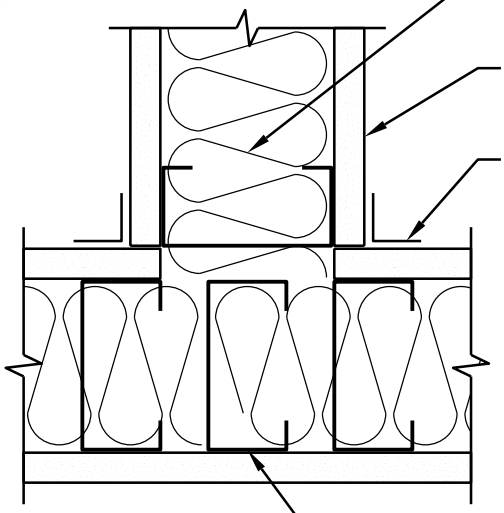

PARTITION INTERSECTION

PARTITION DETAILS

NTS

NATIONAL PARK SERVICE
GRAND CANYON NATIONAL PARK
SOUTH RIM

0929-108

© JACOBS

Jacobs

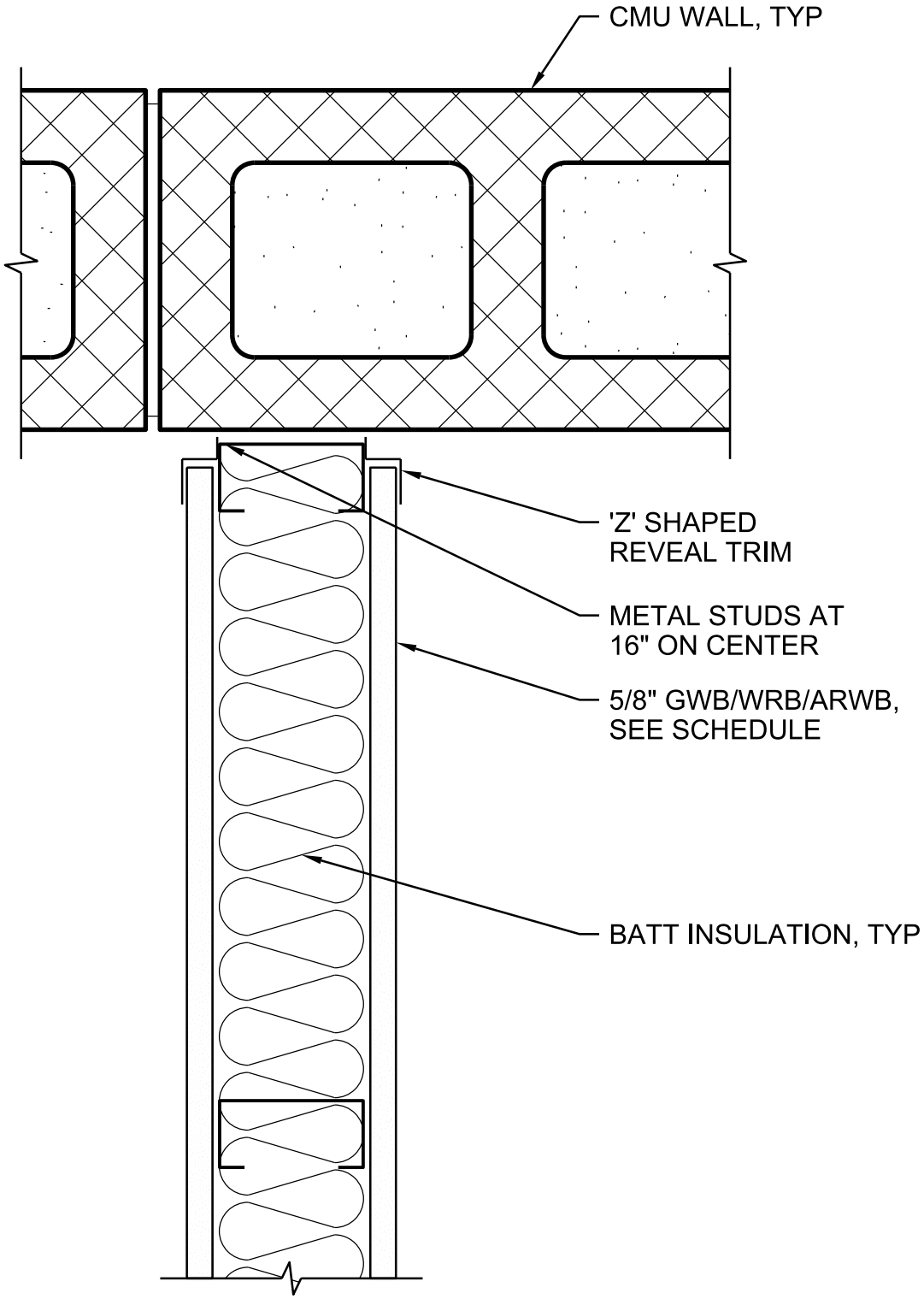

WALL DETAIL

NTS

NATIONAL PARK SERVICE
GRAND CANYON NATIONAL PARK
SOUTH RIM

0929-109

© JACOBS

Jacobs

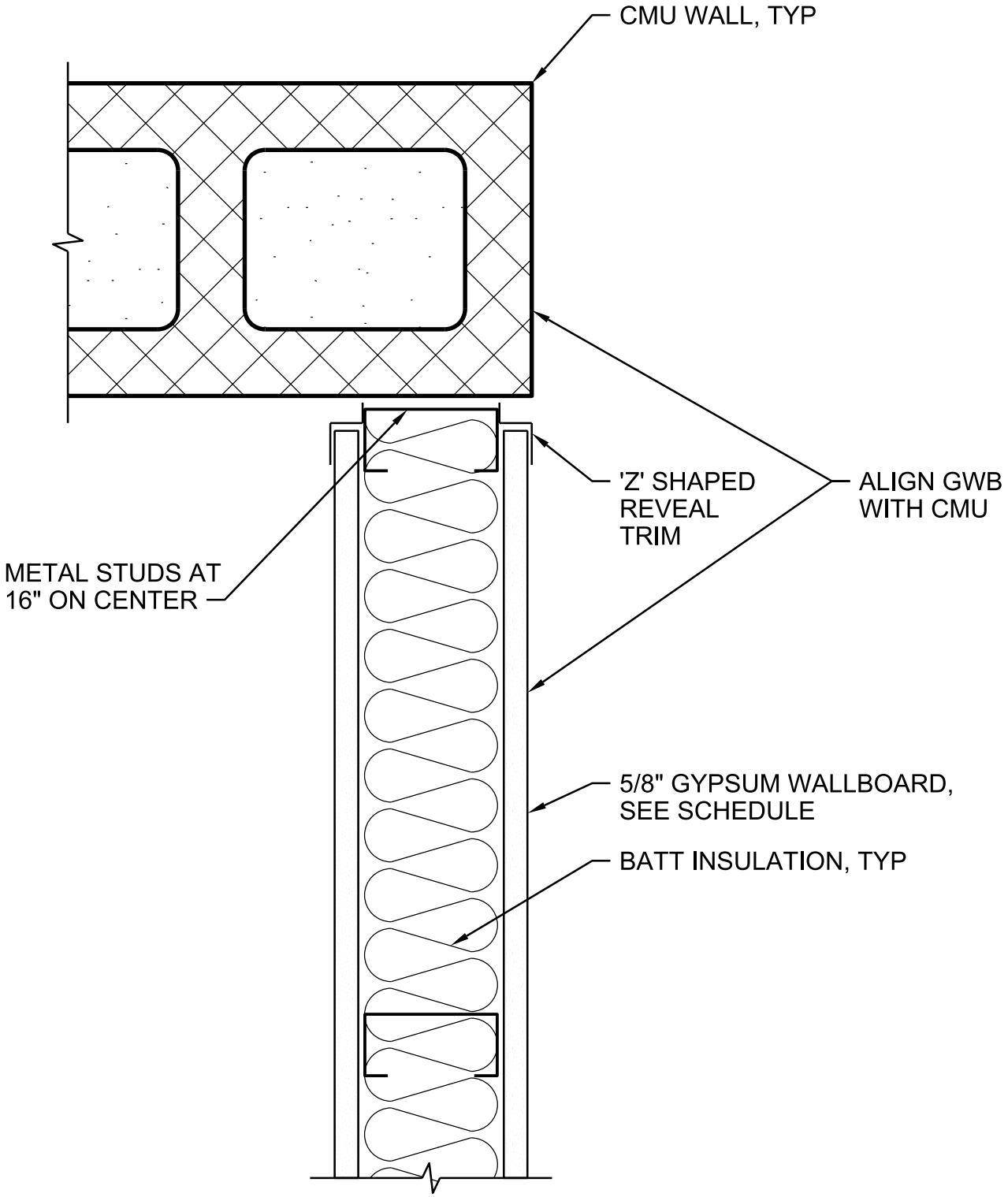

WALL DETAIL

NTS

NATIONAL PARK SERVICE
GRAND CANYON NATIONAL PARK
SOUTH RIM

0929-110

© JACOBS

Jacobs

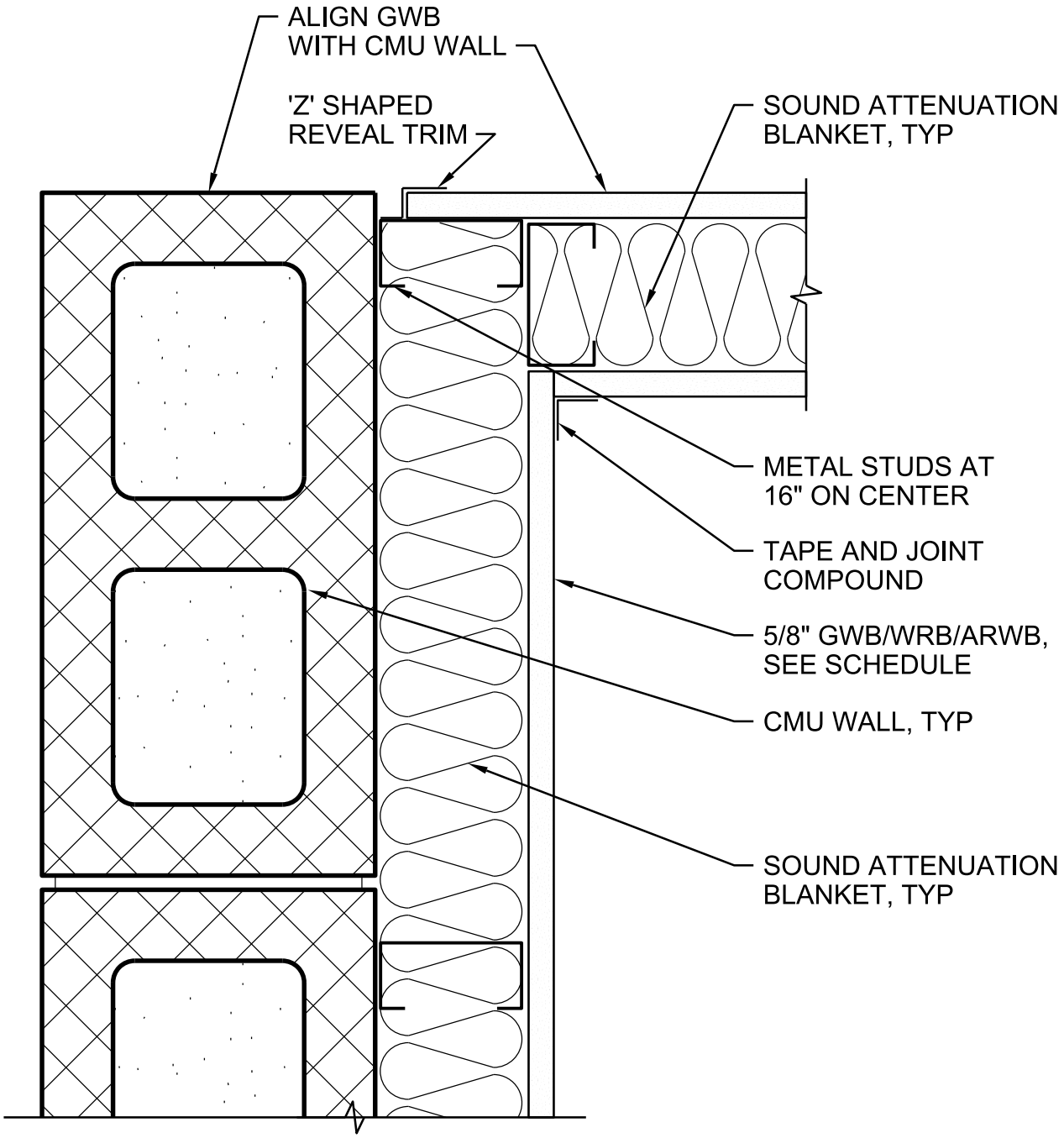

WALL DETAIL

NTS

NATIONAL PARK SERVICE
GRAND CANYON NATIONAL PARK
SOUTH RIM

0929-111

© JACOBS

Jacobs

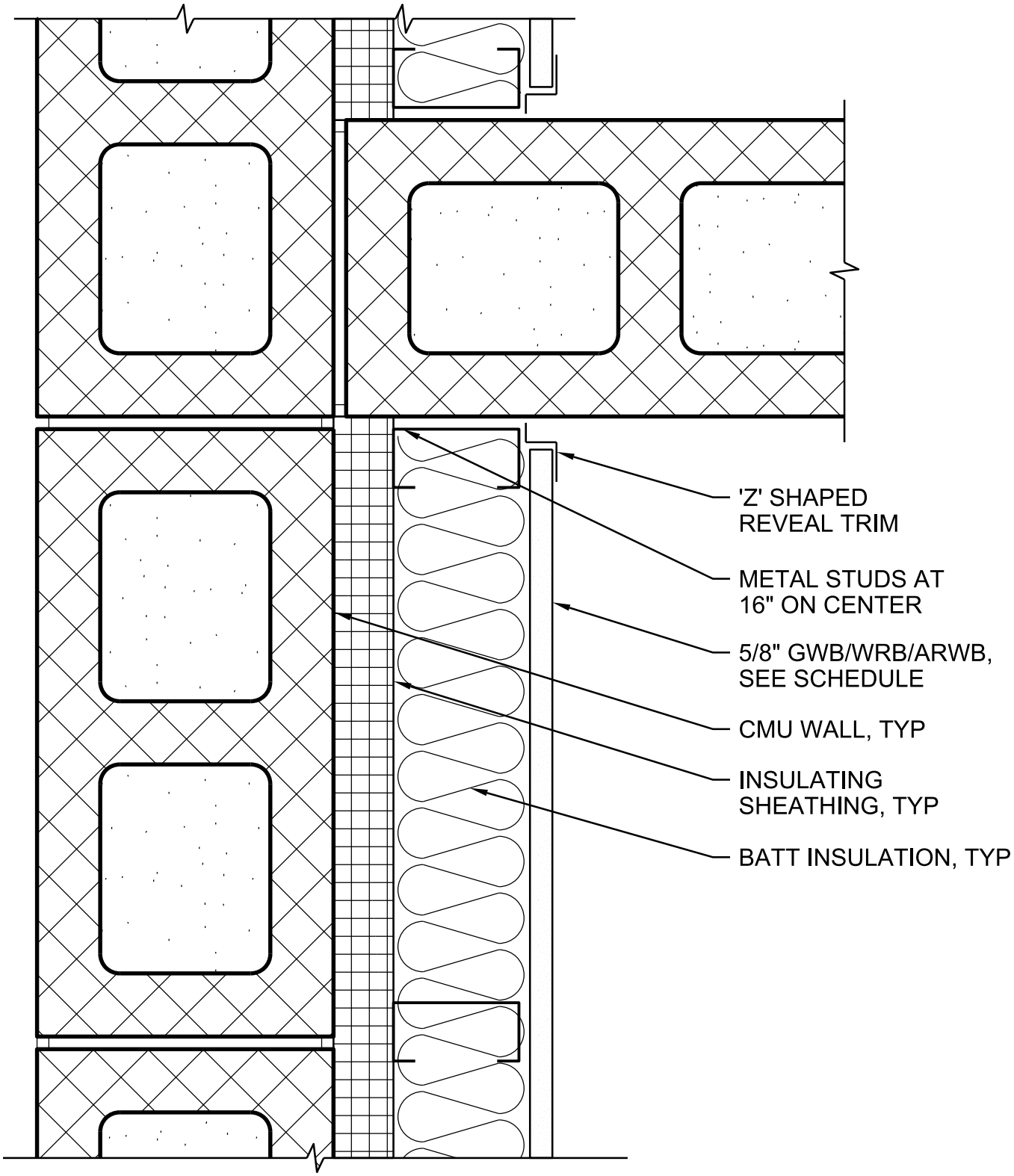

WALL DETAIL

NTS

NATIONAL PARK SERVICE
GRAND CANYON NATIONAL PARK
SOUTH RIM

0929-104

© JACOBS

Jacobs

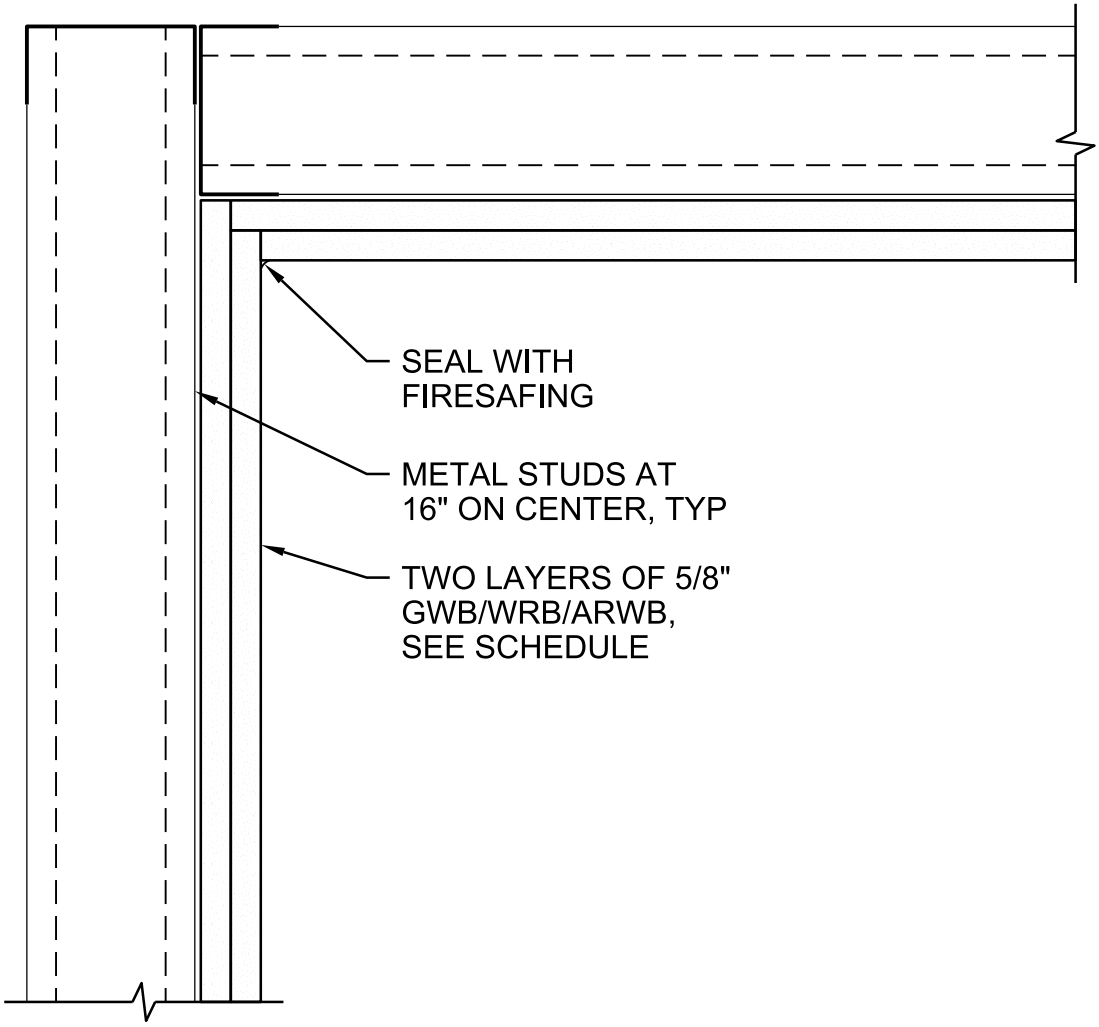

WALL TO CEILING

NTS

NATIONAL PARK SERVICE
GRAND CANYON NATIONAL PARK
SOUTH RIM

0929-201

© JACOBS

Jacobs

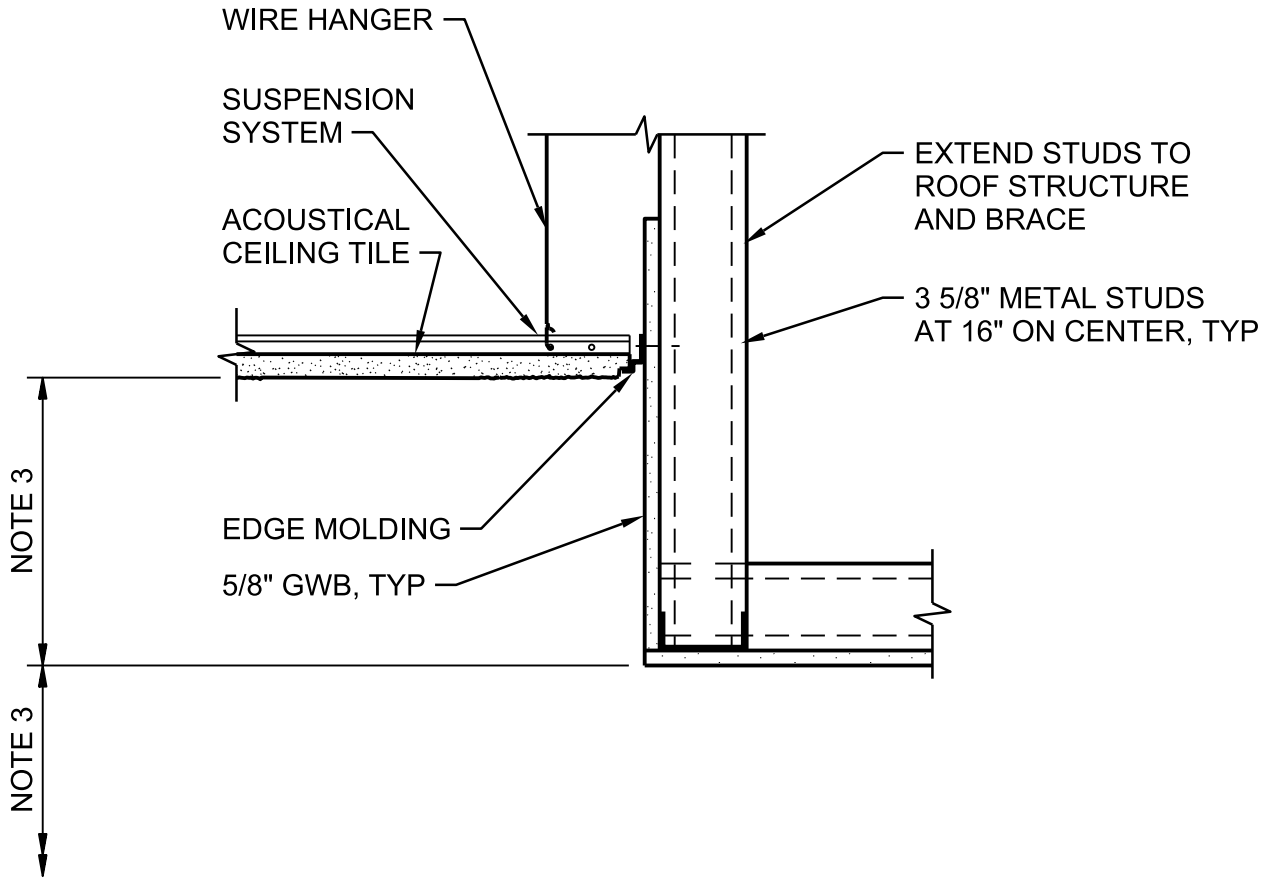

NOTES:

1. ITEMS TO BE PROVIDED BY DRYWALL CEILING SUSPENSION SYSTEM MANUFACTURER.

2. INSTALL SUSPENDED DRYWALL CEILING SUSPENSION SYSTEM IN ACCORDANCE WITH SPEC SECTION 01 88 15, ANCHORAGE AND BRACING. PROVIDE BRACING AS REQUIRED.

3. REFER TO INTERIOR ELEVATIONS FOR HEIGHTS.

SOFFIT

NTS

NATIONAL PARK SERVICE
GRAND CANYON NATIONAL PARK
SOUTH RIM

0929-401

© JACOBS

Jacobs

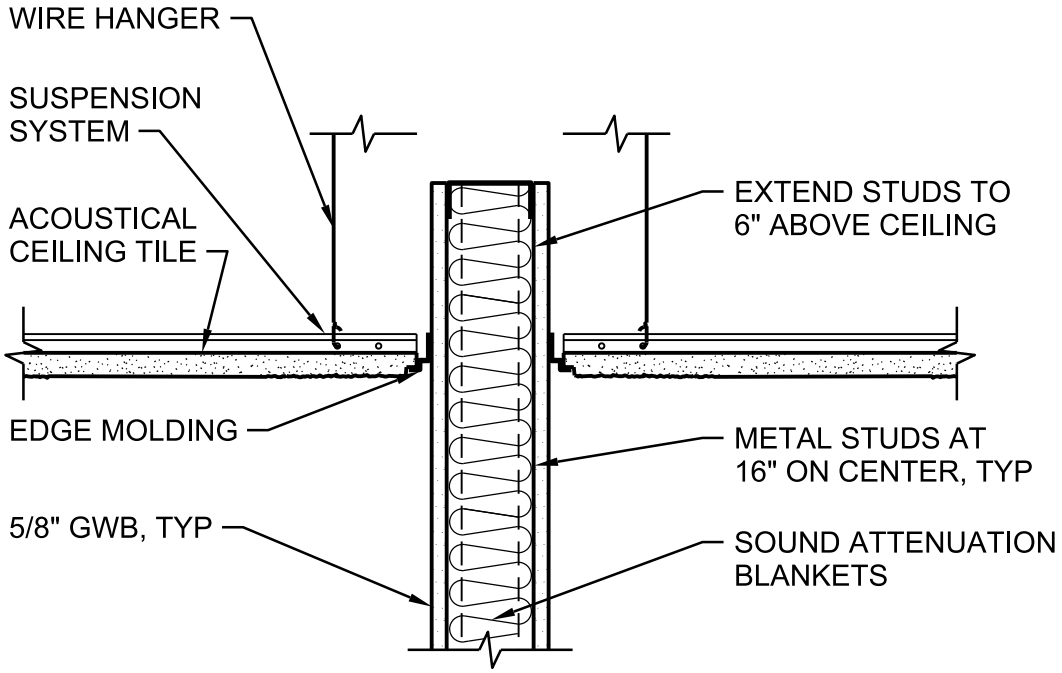

NOTES:

1. INSTALL SUSPENDED ACOUSTICAL CEILING SUSPENSION SYSTEM IN ACCORDANCE WITH SPEC SECTION 01 88 15, ANCHORAGE AND BRACING. PROVIDE BRACING AS REQUIRED.

CEILING TO METAL STUD WALL

NTS

NATIONAL PARK SERVICE
GRAND CANYON NATIONAL PARK
SOUTH RIM

0929-403

© JACOBS

Jacobs

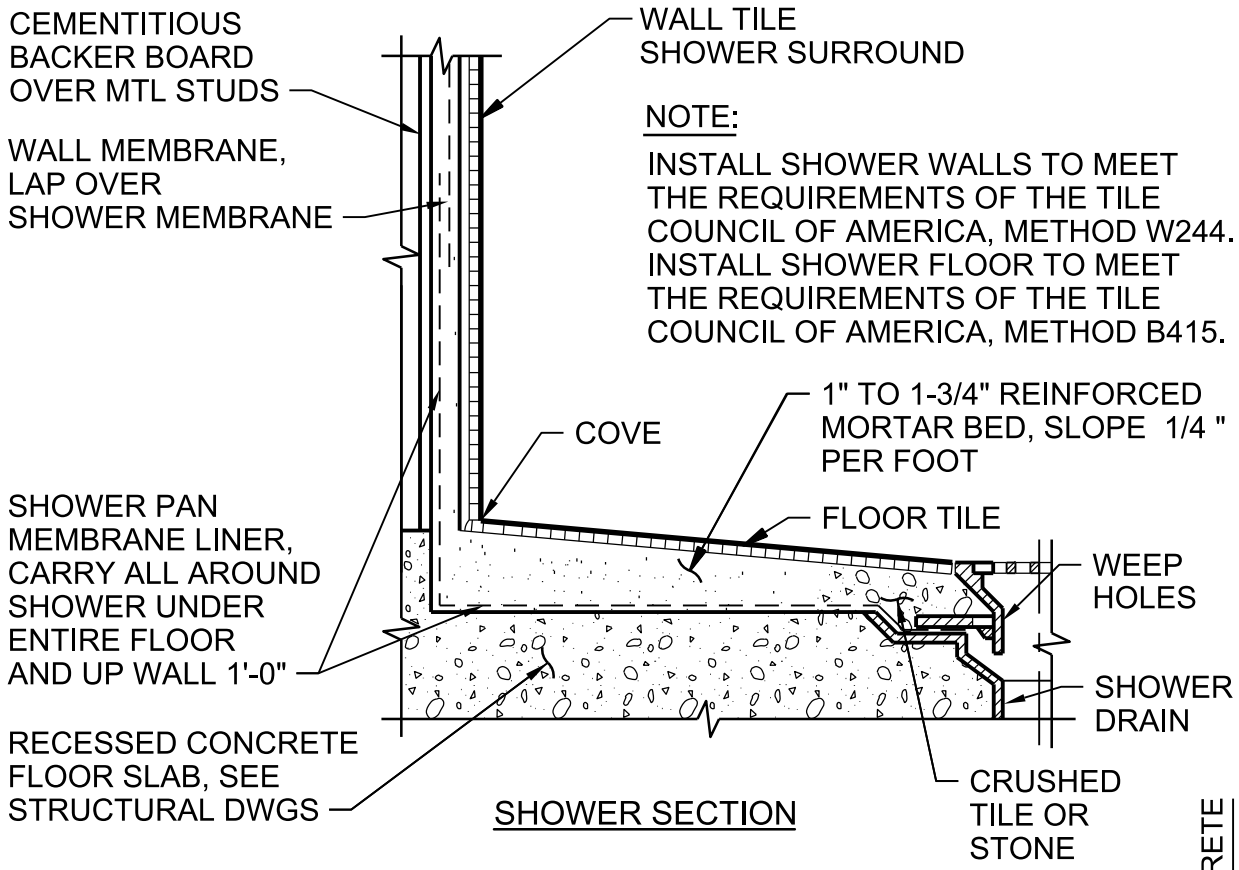

SHOWER SECTION

SHOWER

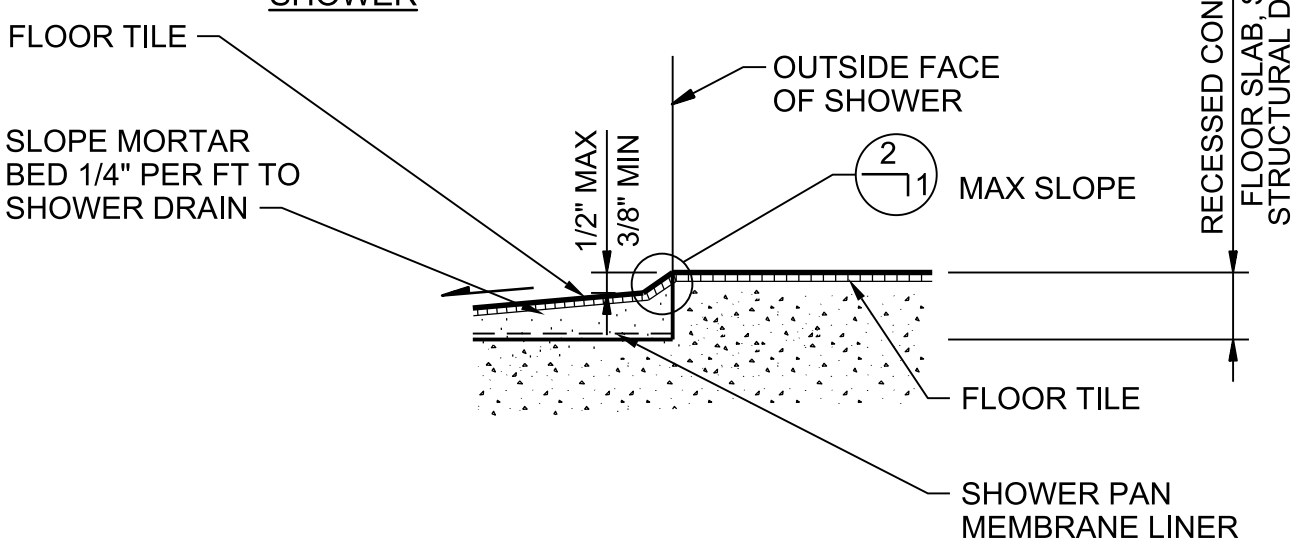

SHOWER CURB DETAIL

SHOWER STALL

NTS

NATIONAL PARK SERVICE
GRAND CANYON NATIONAL PARK
SOUTH RIM

0930-004

© JACOBS

Jacobs

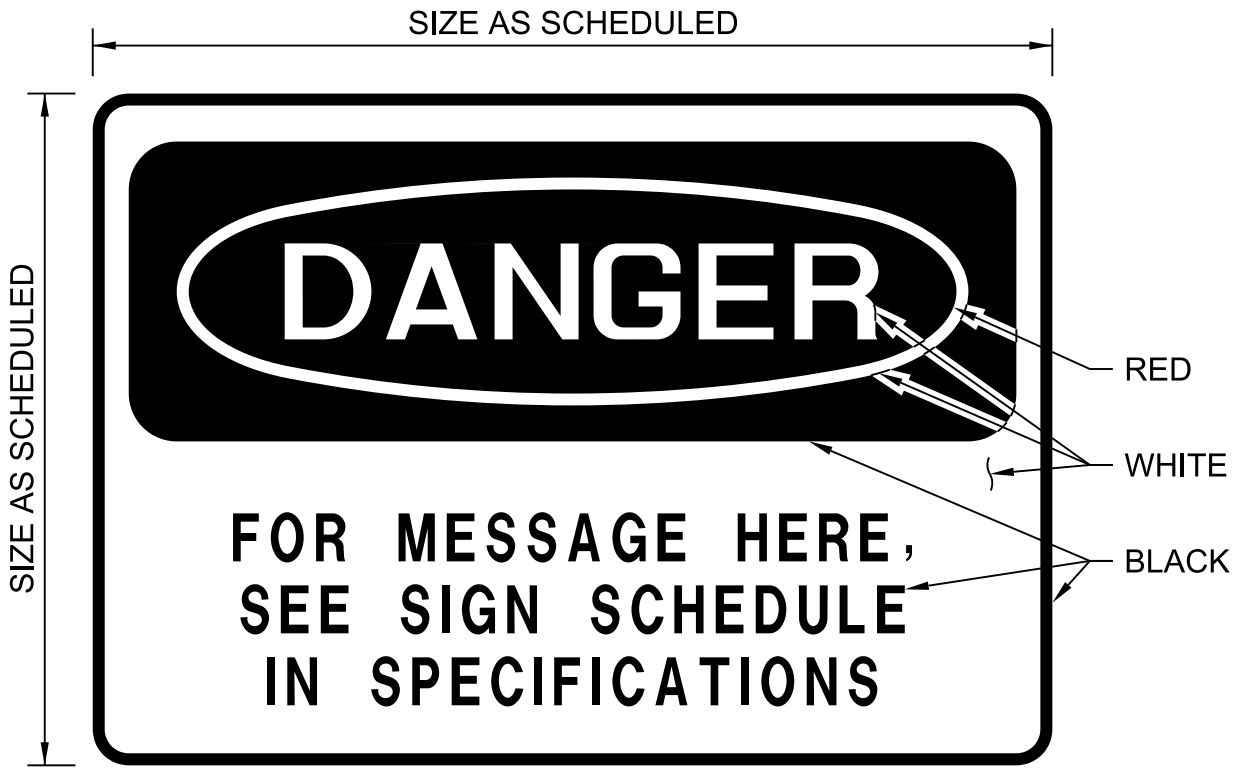

DANGER SIGN

NTS

NATIONAL PARK SERVICE
GRAND CANYON NATIONAL PARK
SOUTH RIM

1014-001

© JACOBS

Jacobs

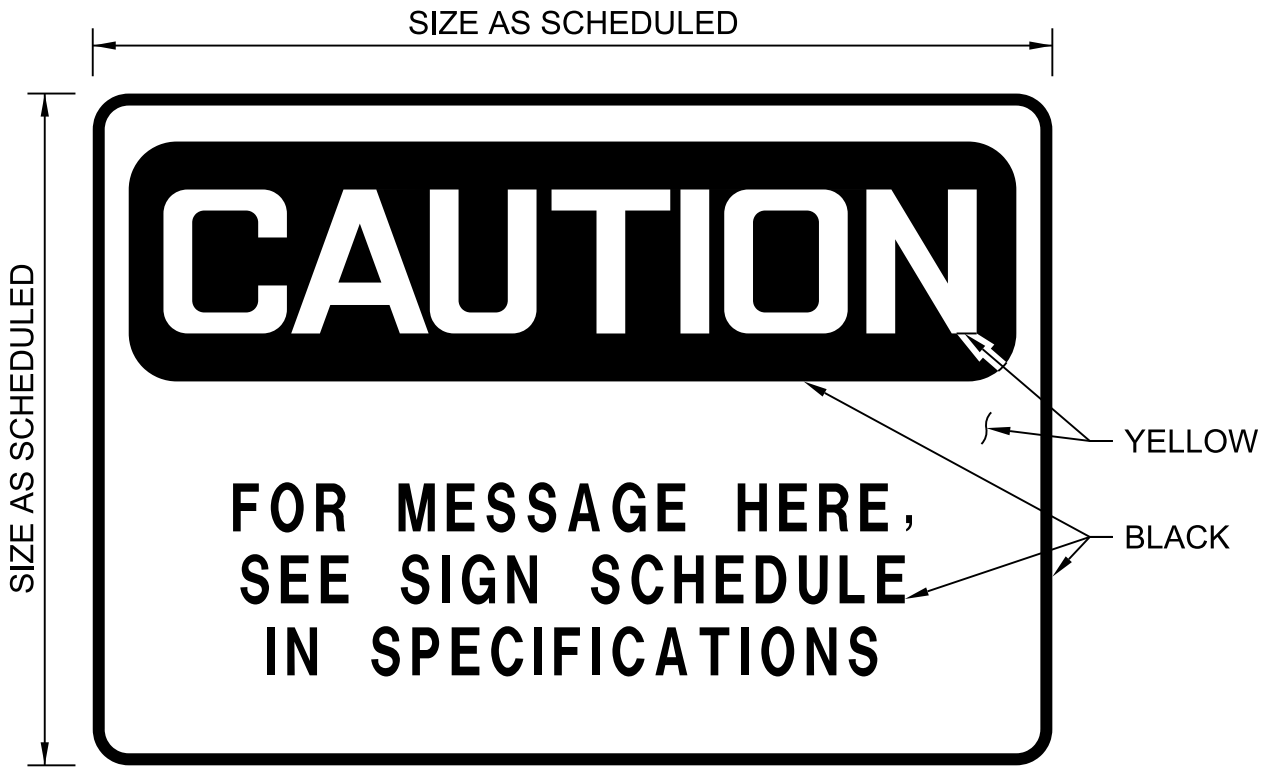

CAUTION SIGN

NTS

NATIONAL PARK SERVICE
GRAND CANYON NATIONAL PARK
SOUTH RIM

1014-002

© JACOBS

Jacobs

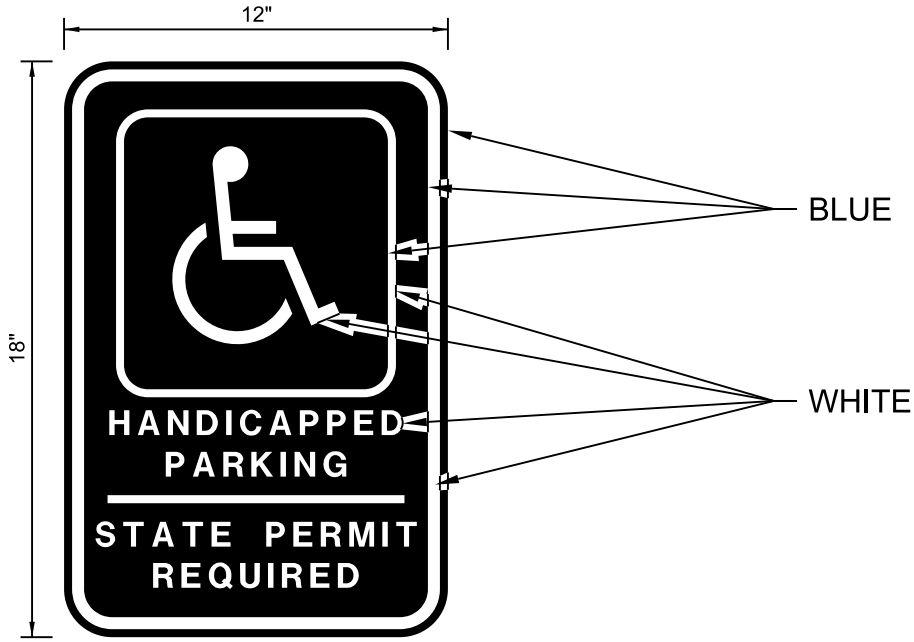

HANDICAPPED PARKING SIGN

NTS

NATIONAL PARK SERVICE
GRAND CANYON NATIONAL PARK
SOUTH RIM

1014-004

© JACOBS

Jacobs

HEALTH HAZARD -
BLUE BACKGROUND

4 DEADLY
3 EXTREME DANGER
2 HAZARDOUS
1 SLIGHTLY HAZARDOUS
0 NORMAL MATERIALS

FLAMMABILITY HAZARD -
RED BACKGROUND

FLASH POINTS
4 BELOW 73 F
3 BELOW 100 F
2 BELOW 200 F
1 ABOVE 200 F
0 WILL NOT BURN

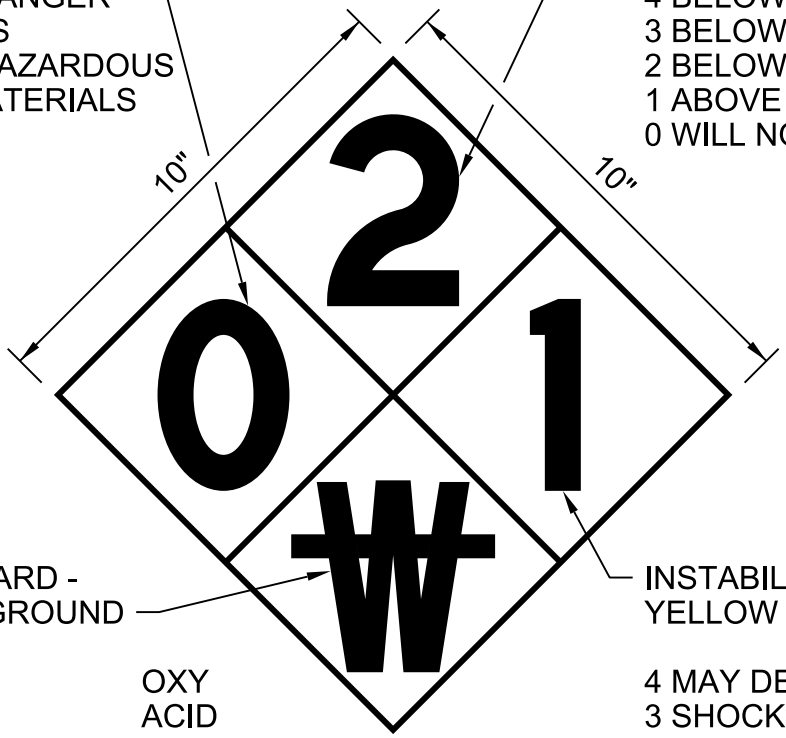

SPECIAL HAZARD -
WHITE BACKGROUND

OXIDIZER	OXY
ACID	ACID
ALKALI	ALK
CORROSIVE	COR
USE NO WATER	₩
RADIATION HAZARD	☢

INSTABILITY HAZARD -
YELLOW BACKGROUND

4 MAY DETONATE
3 SHOCK & HEAT MAY DETONATE
2 VIOLENT CHEMICAL CHANGE
1 UNSTABLE IF HEATED
0 STABLE

NOTES:

1. LETTER HEIGHT: 4"
   LETTER COLOR: BLACK
2. NUMBERS AND LETTERS ON ABOVE SIGNAL DETAIL ARE EXAMPLES ONLY. SEE SPECIFICATION 10 14 00 FOR REQUIREMENTS ON THIS PROJECT.

HAZARDOUS MATERIAL SIGNAL

NTS

NATIONAL PARK SERVICE
GRAND CANYON NATIONAL PARK
SOUTH RIM

1014-006

© JACOBS

Jacobs

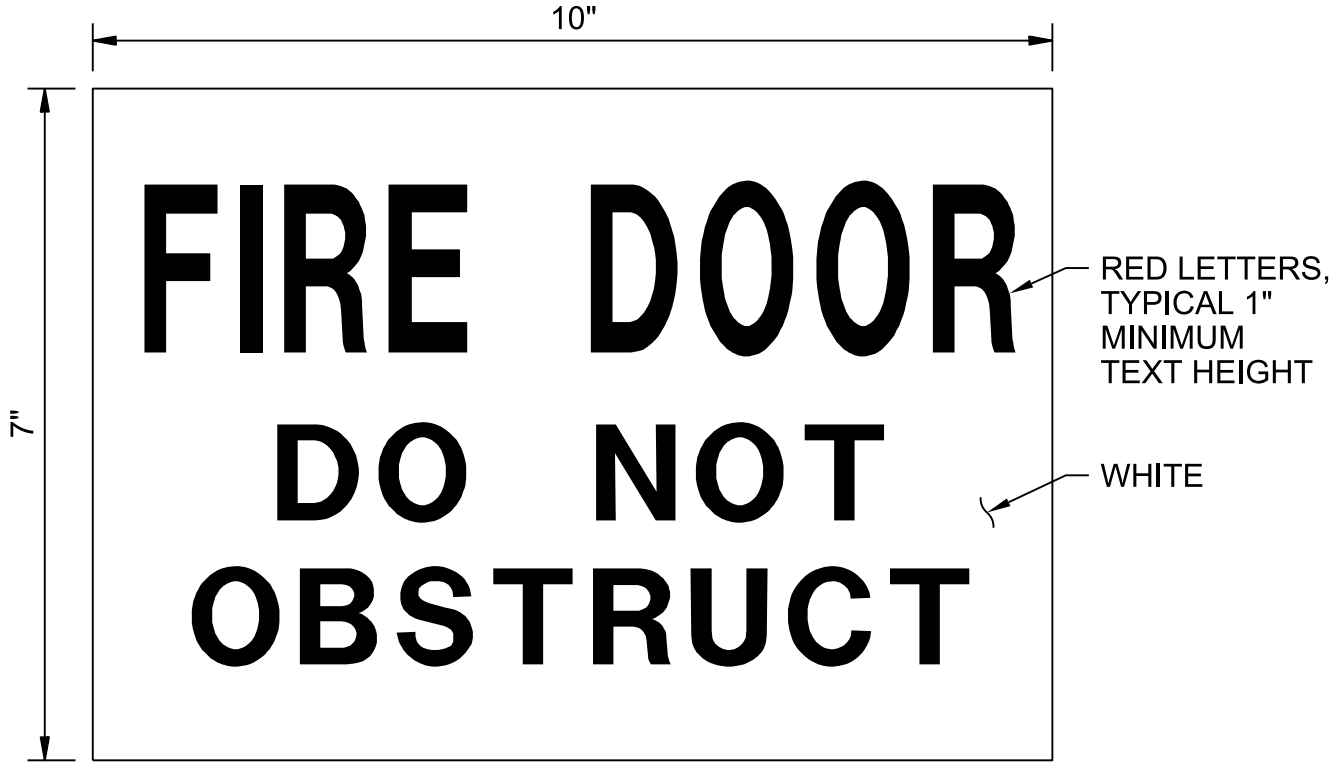

FIRE DOOR SIGN

NTS

NATIONAL PARK SERVICE
GRAND CANYON NATIONAL PARK
SOUTH RIM

1014-009

© JACOBS

Jacobs

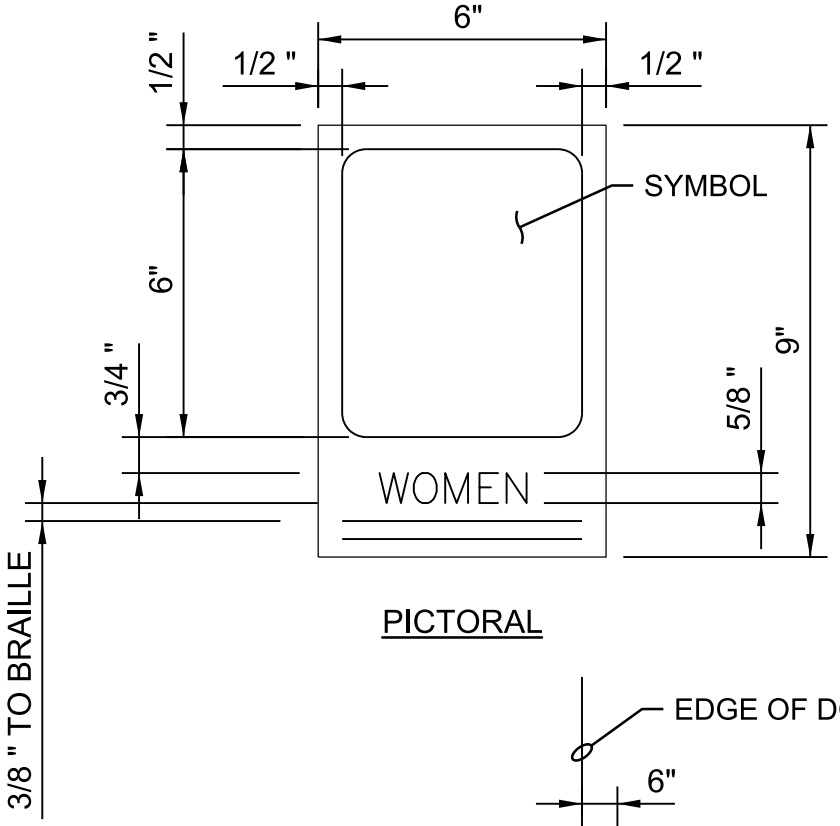

PICTORAL

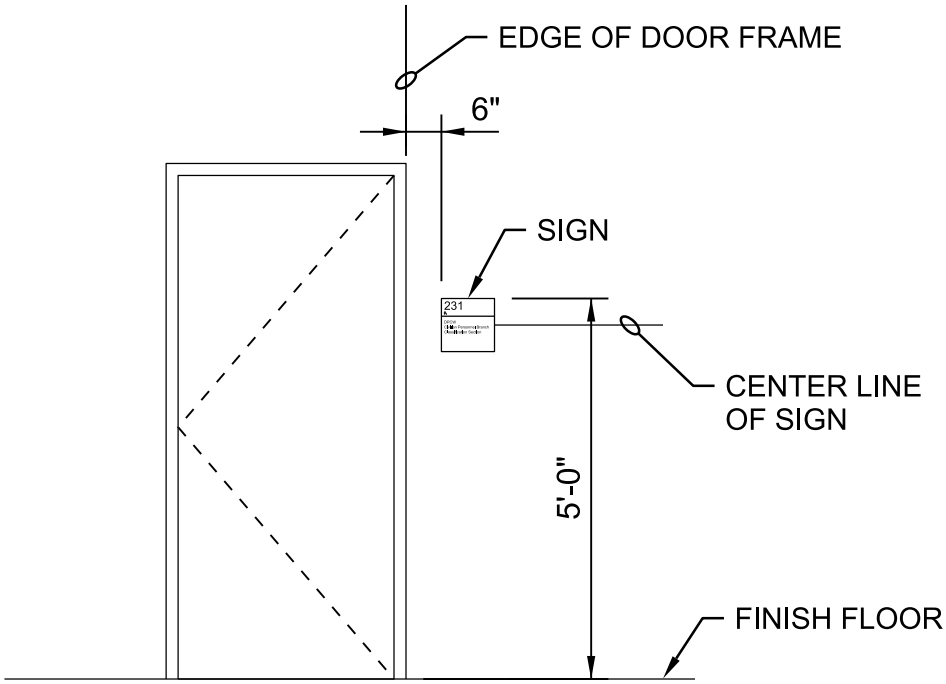

TYPICAL SIGNAGE MOUNTING

NOTES:

1. TYPOGRAPHY HELVETICA MEDIUM.
2. 5/8" CAPITAL LETTER HEIGHT.

ACCESSIBLE SIGNAGE

NTS

NATIONAL PARK SERVICE
GRAND CANYON NATIONAL PARK
SOUTH RIM

1014-010

© JACOBS

Jacobs

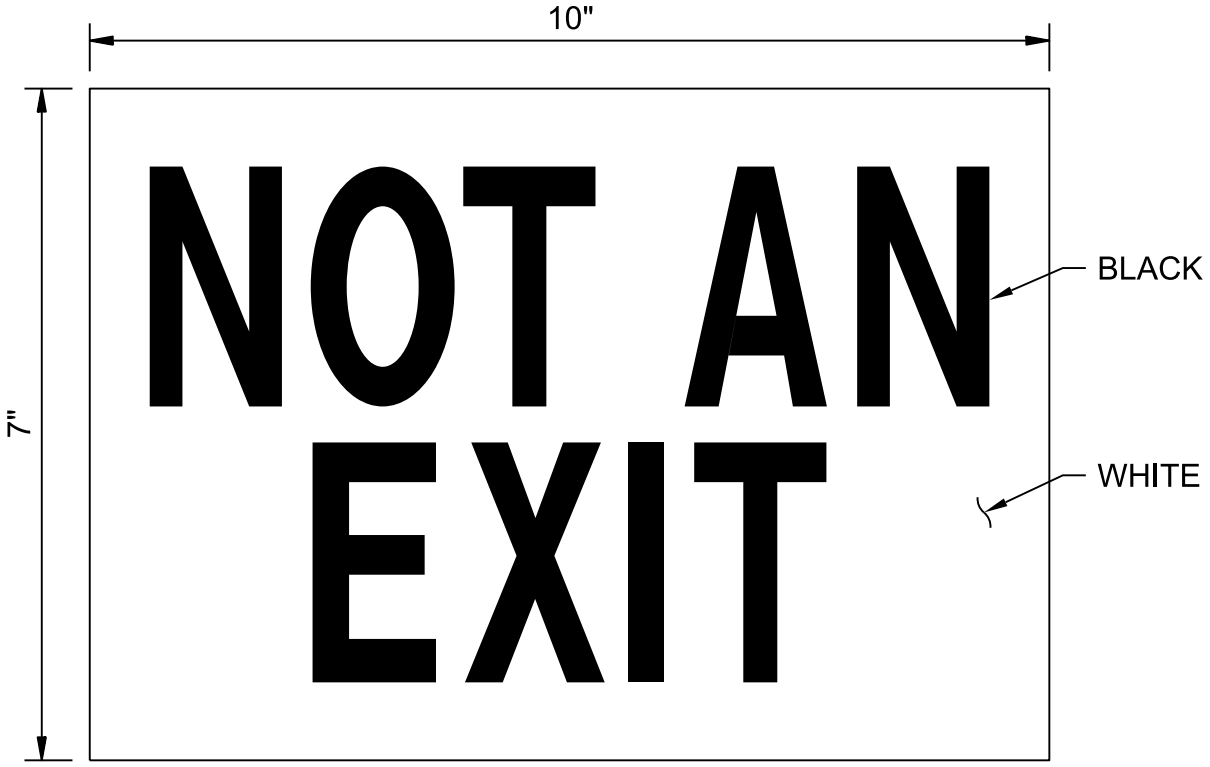

EXIT WARNING SIGN

NTS

NATIONAL PARK SERVICE
GRAND CANYON NATIONAL PARK
SOUTH RIM

1014-011

© JACOBS

Jacobs

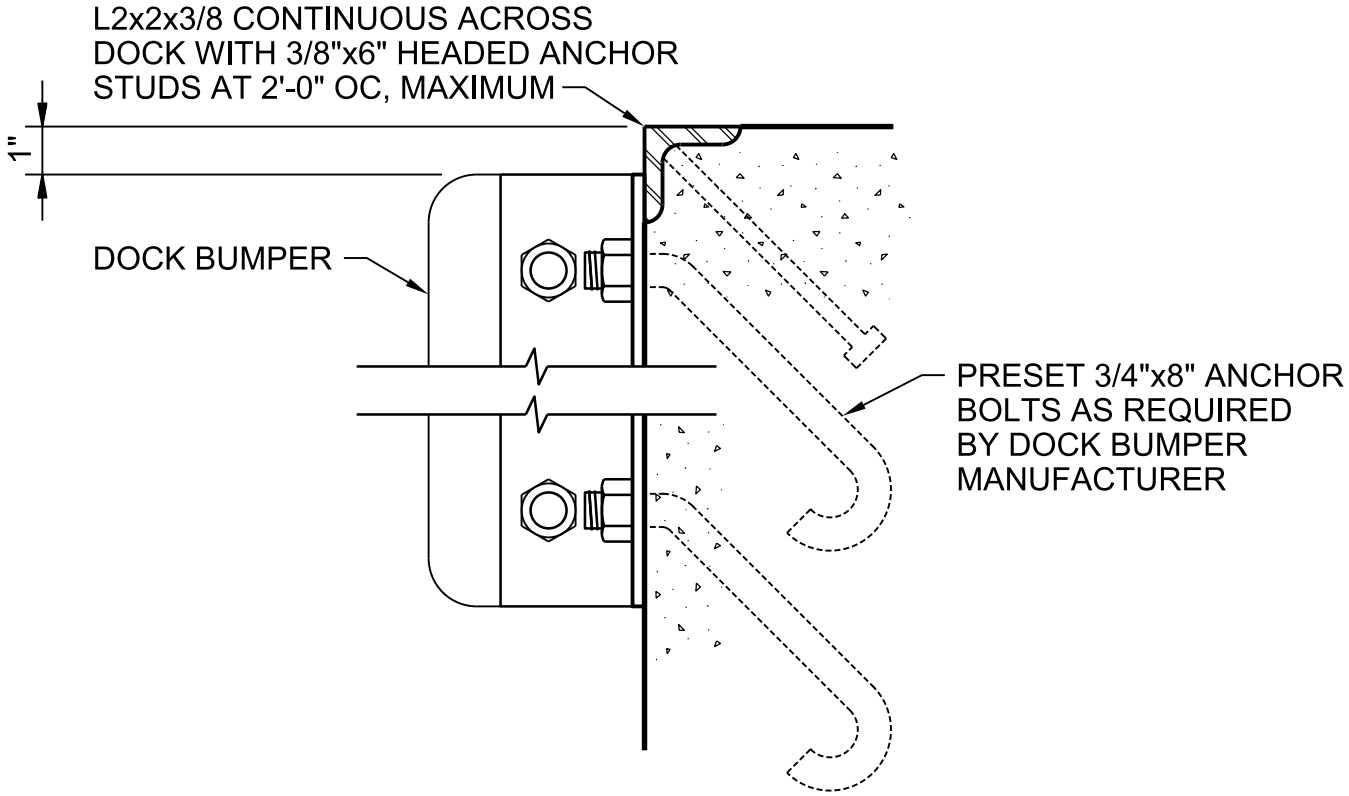

DOCK BUMPER

NTS

NATIONAL PARK SERVICE
GRAND CANYON NATIONAL PARK
SOUTH RIM

1080-003

© JACOBS

Jacobs

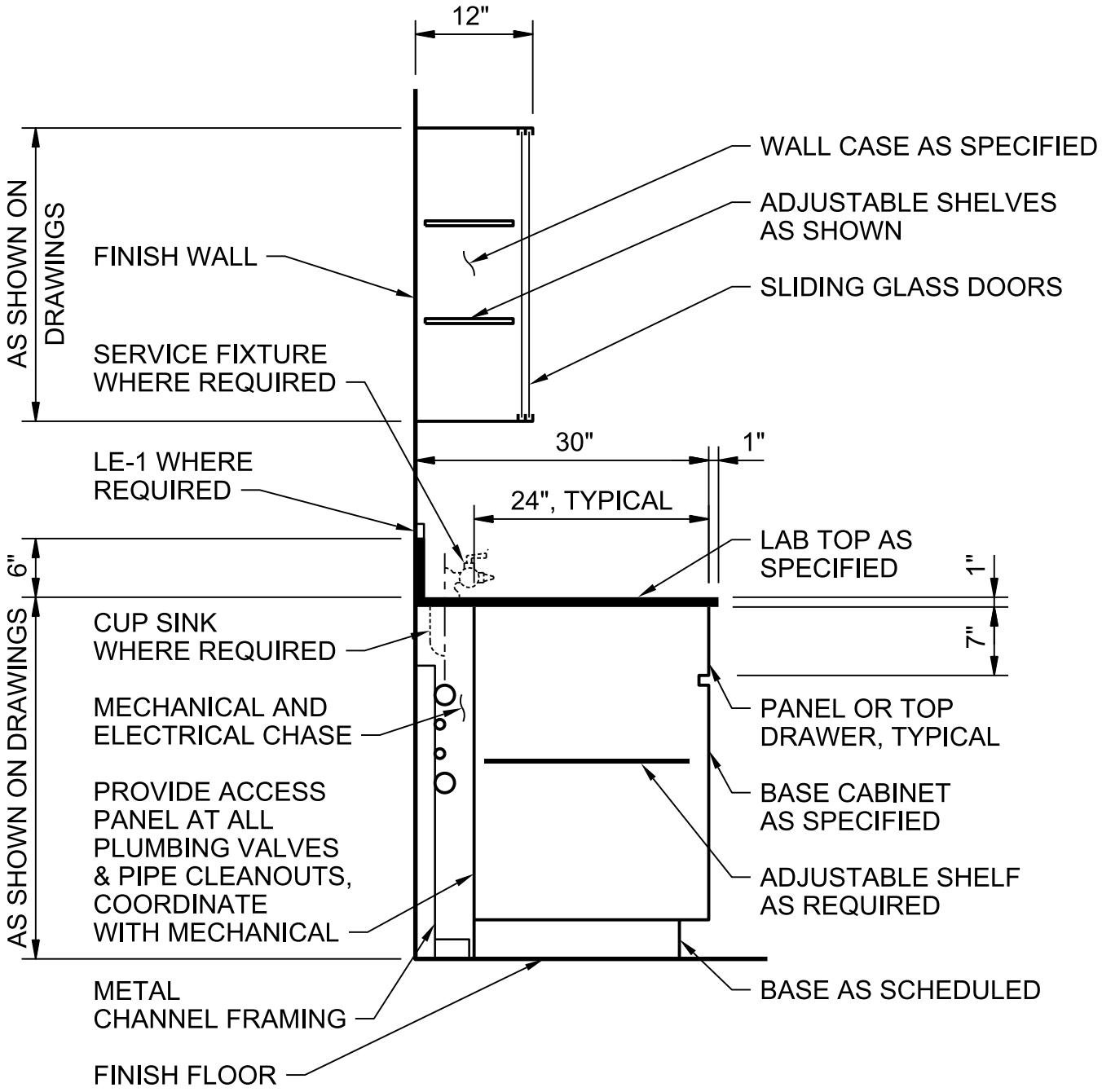

NOTES:

1. SEE SPECIFICATIONS FOR ADDITIONAL CONSTRUCTION INFORMATION.

LAB CABINET SECTION

NTS

NATIONAL PARK SERVICE
GRAND CANYON NATIONAL PARK
SOUTH RIM

1235-051

© JACOBS

Jacobs

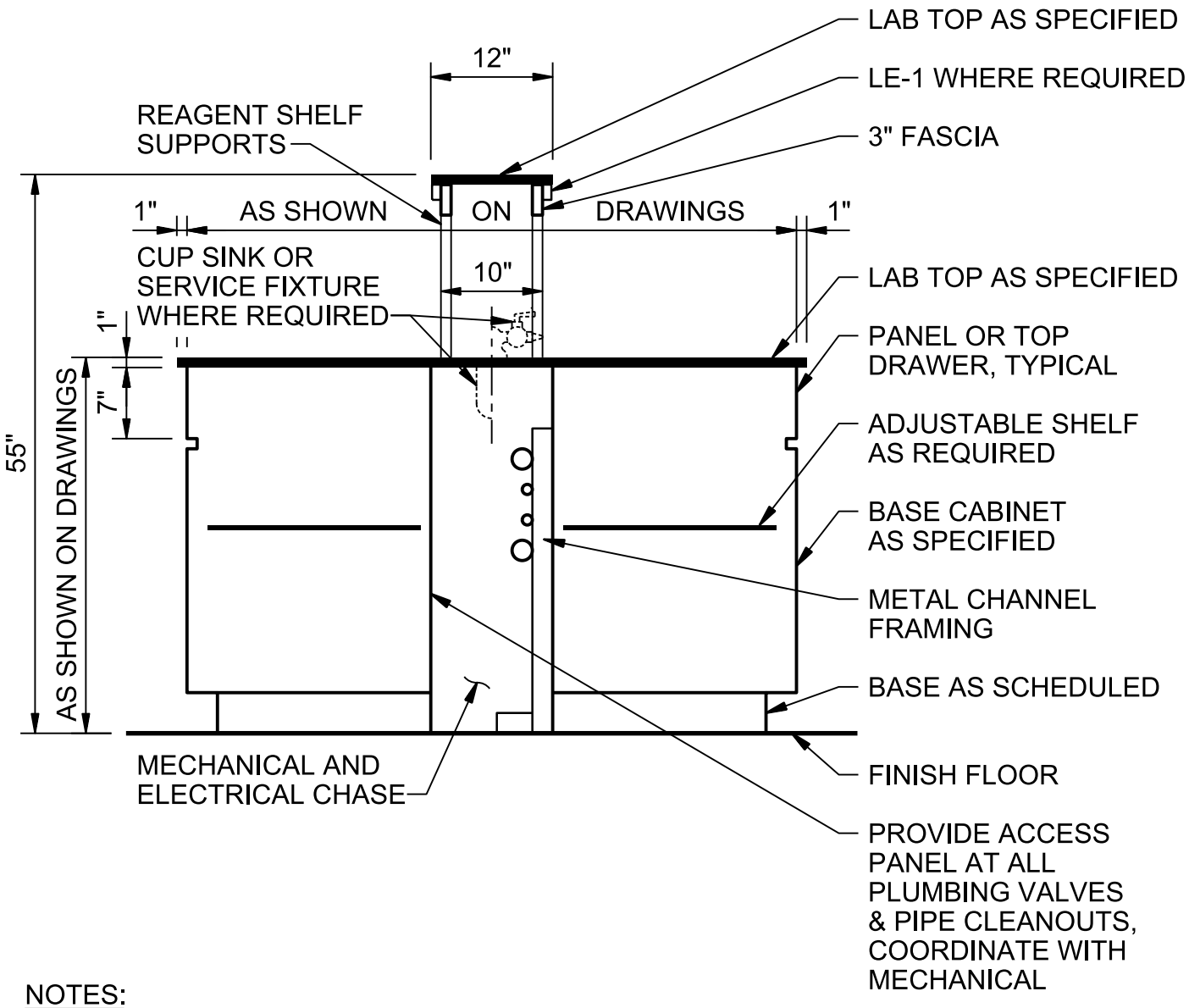

NOTES:

1. SEE SPECIFICATIONS FOR ADDITIONAL CONSTRUCTION INFORMATION.

LAB CABINET SECTION (ISLAND)

NTS

NATIONAL PARK SERVICE
GRAND CANYON NATIONAL PARK
SOUTH RIM

1235-052

© JACOBS

Jacobs

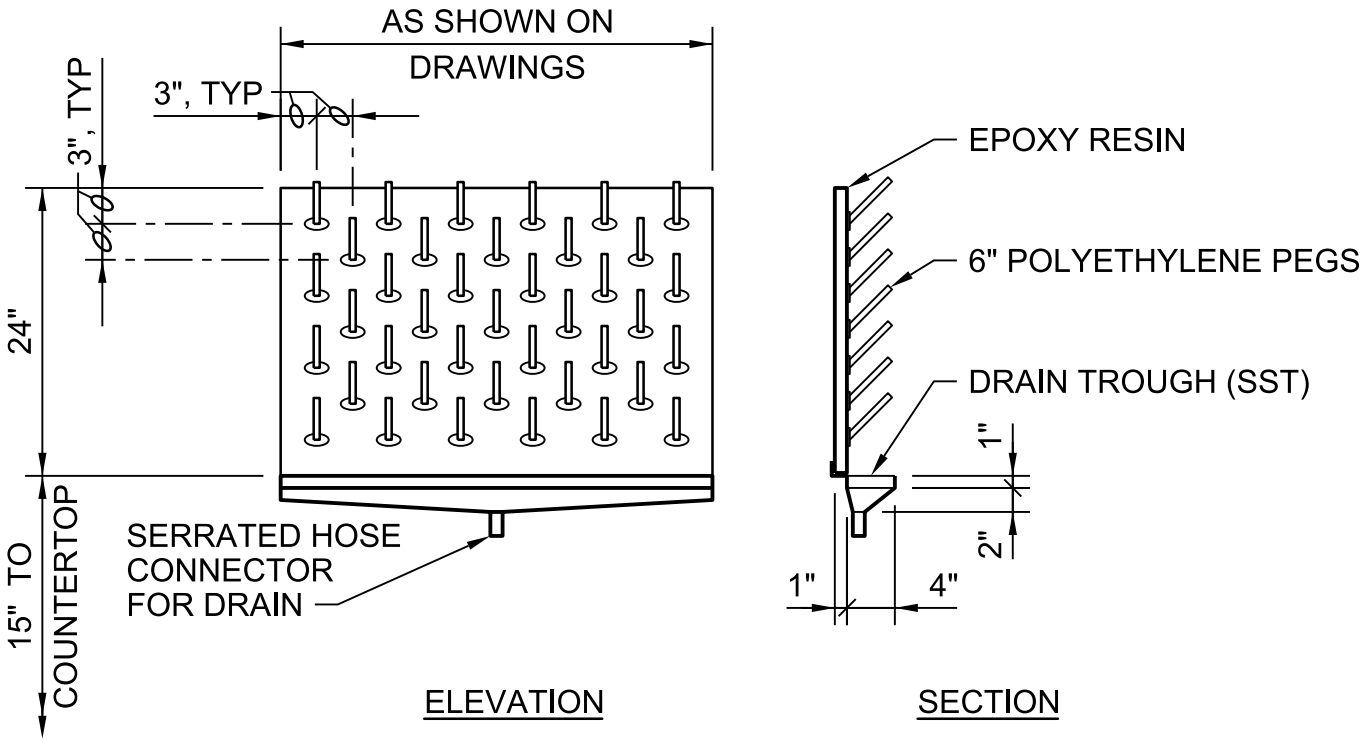

DRAIN RACK

NTS

NATIONAL PARK SERVICE
GRAND CANYON NATIONAL PARK
SOUTH RIM

1235-100

© JACOBS

Jacobs

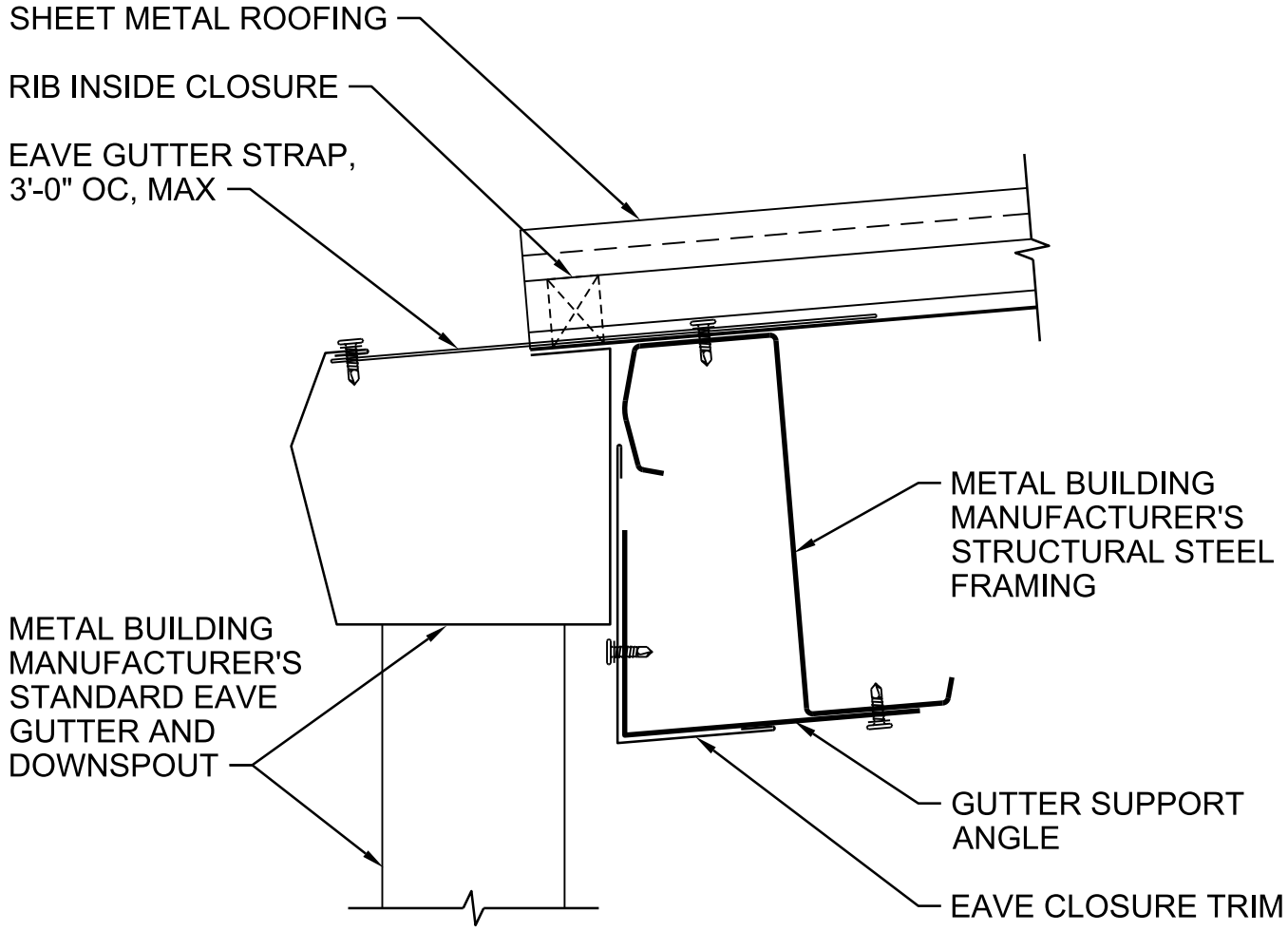

EAVE

NTS

NATIONAL PARK SERVICE
GRAND CANYON NATIONAL PARK
SOUTH RIM

1334-100

© JACOBS

Jacobs

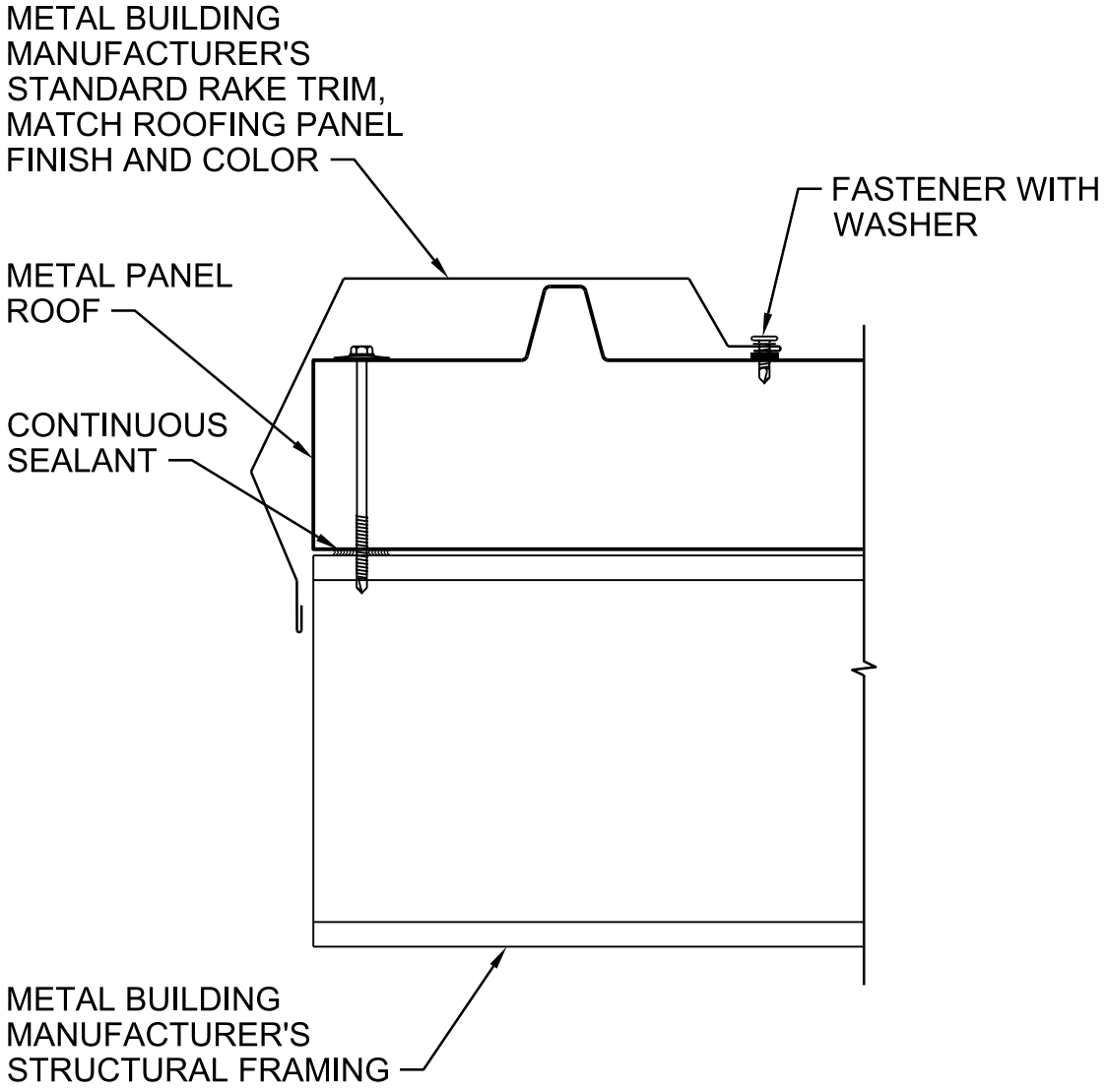

RAKE

NTS

NATIONAL PARK SERVICE
GRAND CANYON NATIONAL PARK
SOUTH RIM

1334-101

© JACOBS

Jacobs

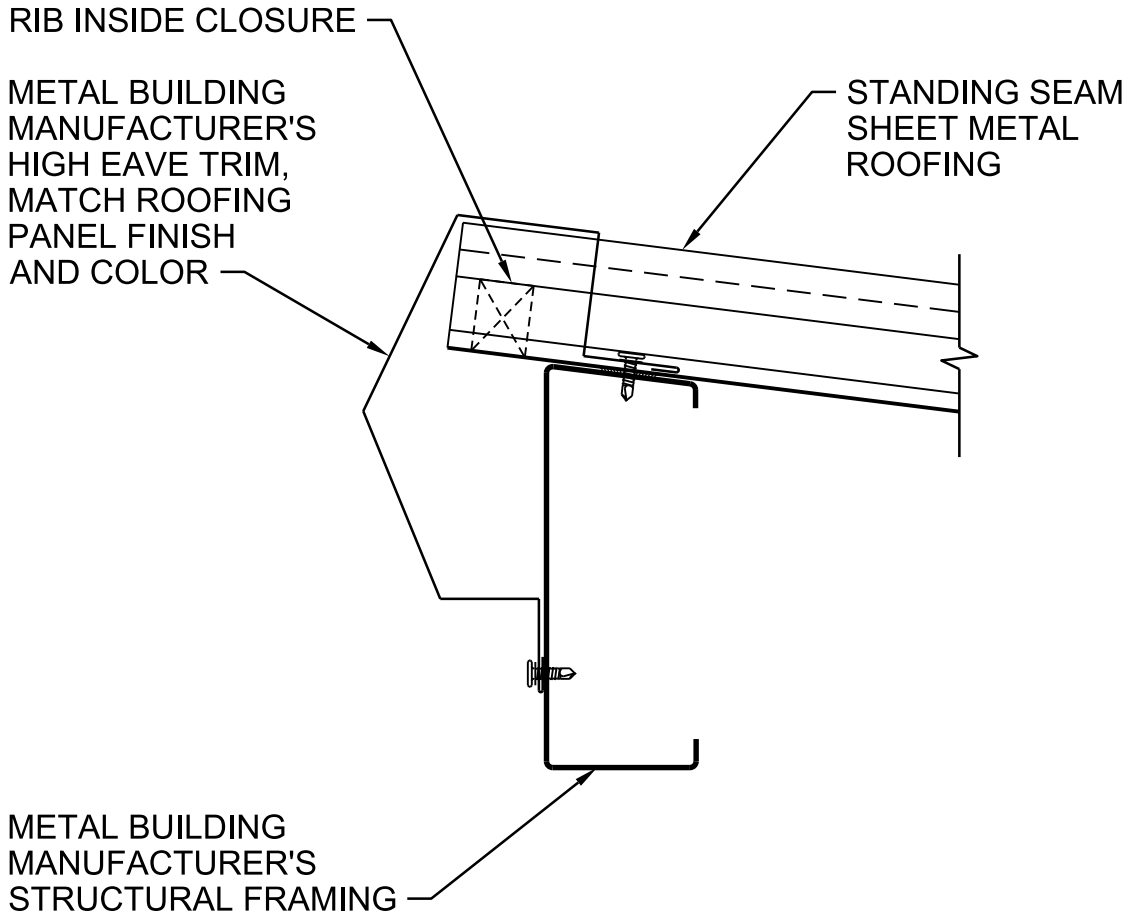

HIGH EAVE

NTS

NATIONAL PARK SERVICE
GRAND CANYON NATIONAL PARK
SOUTH RIM

1334-102

© JACOBS

Jacobs

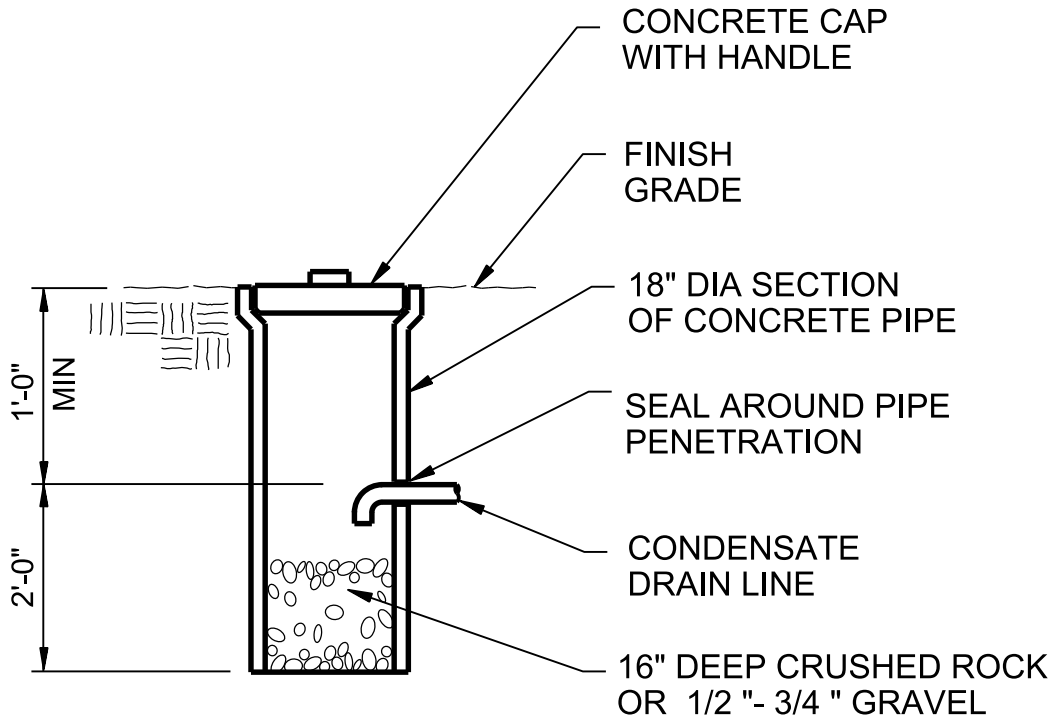

DRAINAGE DRYWELL

NTS

NATIONAL PARK SERVICE
GRAND CANYON NATIONAL PARK
SOUTH RIM

2210-100

© JACOBS

Jacobs

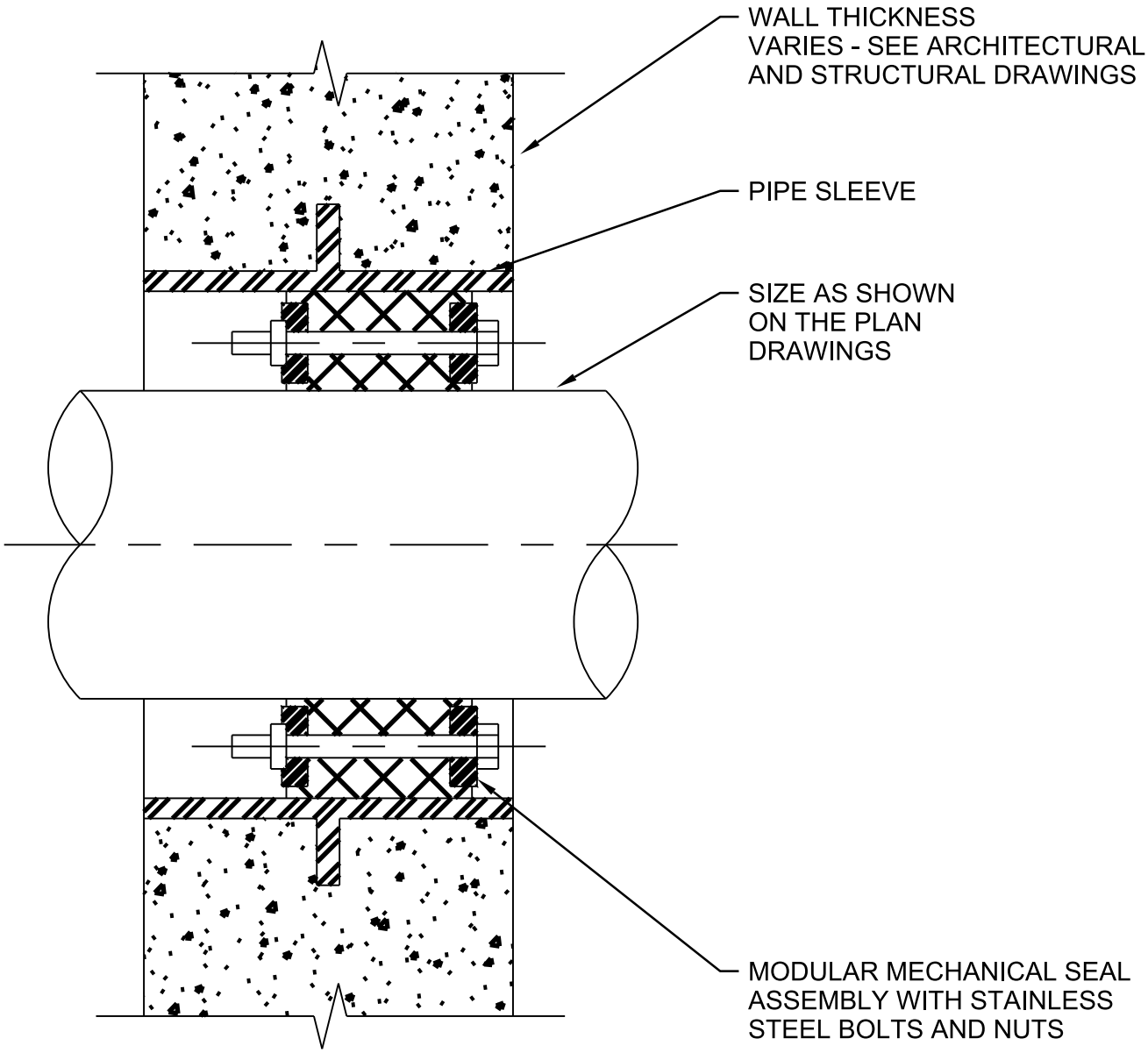

TYPICAL PIPE PENETRATION THRU WALL

NTS

NATIONAL PARK SERVICE
GRAND CANYON NATIONAL PARK
SOUTH RIM

2210-102

© JACOBS

Jacobs

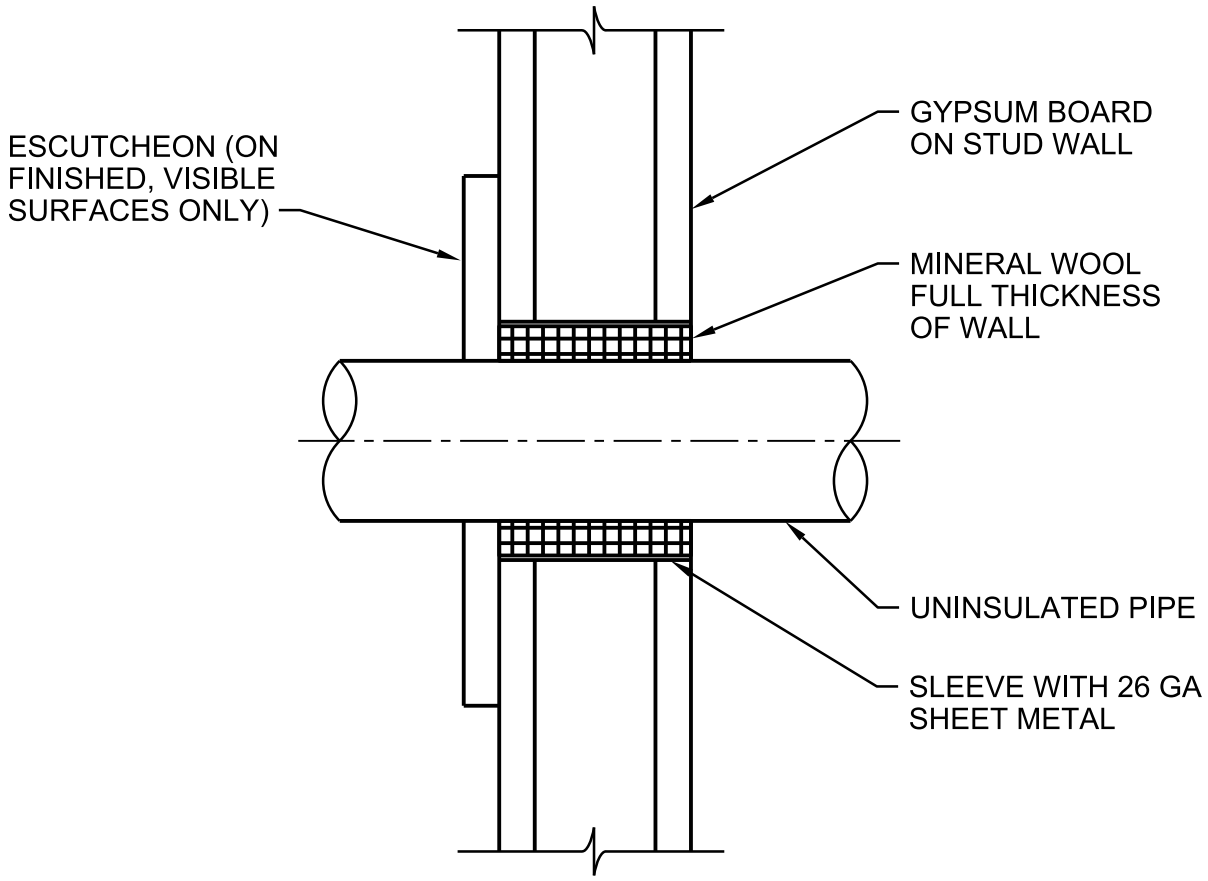

NOTES:

1. SEE SPECIFICATION FOR NON-RATED WALLS.

WALL PIPE PENETRATION

NTS

NATIONAL PARK SERVICE
GRAND CANYON NATIONAL PARK
SOUTH RIM

2210-103

© JACOBS

Jacobs

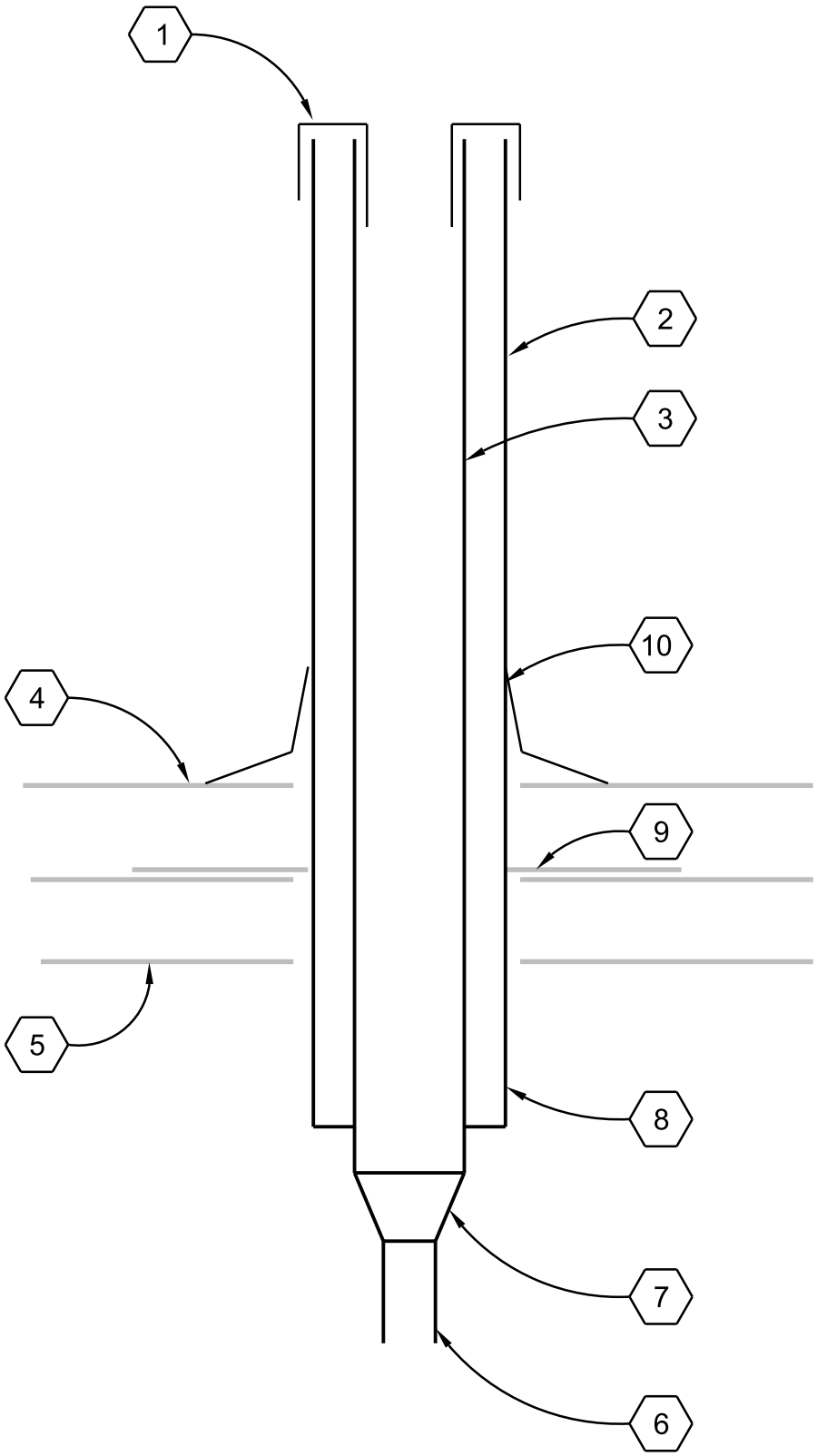

1. COUNTER FLASHING
2. FOR 4" VTR USE 7" DIA X 36" LONG SM CONE WITH SOLDERED SEAM FOR 3" VTR USE 6" DIA X 36" LONG SM CONE WITH SOLDERED SEAM
3. VTR WITH CONTINUOUS INSULATION THRU ROOFING.
4. ROOF
5. DECKING
6. PLUMBING VENT PIPE
7. INCREASE VENT SIZE AS INDICATED
8. EXTEND INSULATION 9" BELOW ROOF DECK
9. 18" X 18" FLASHING BASE
10. ROOF BOOT OR SEALING PER ROOF MANUFACTURER INSTRUCTION

VENT THRU ROOF

NTS

NATIONAL PARK SERVICE
GRAND CANYON NATIONAL PARK
SOUTH RIM

2210-105

© JACOBS

Jacobs

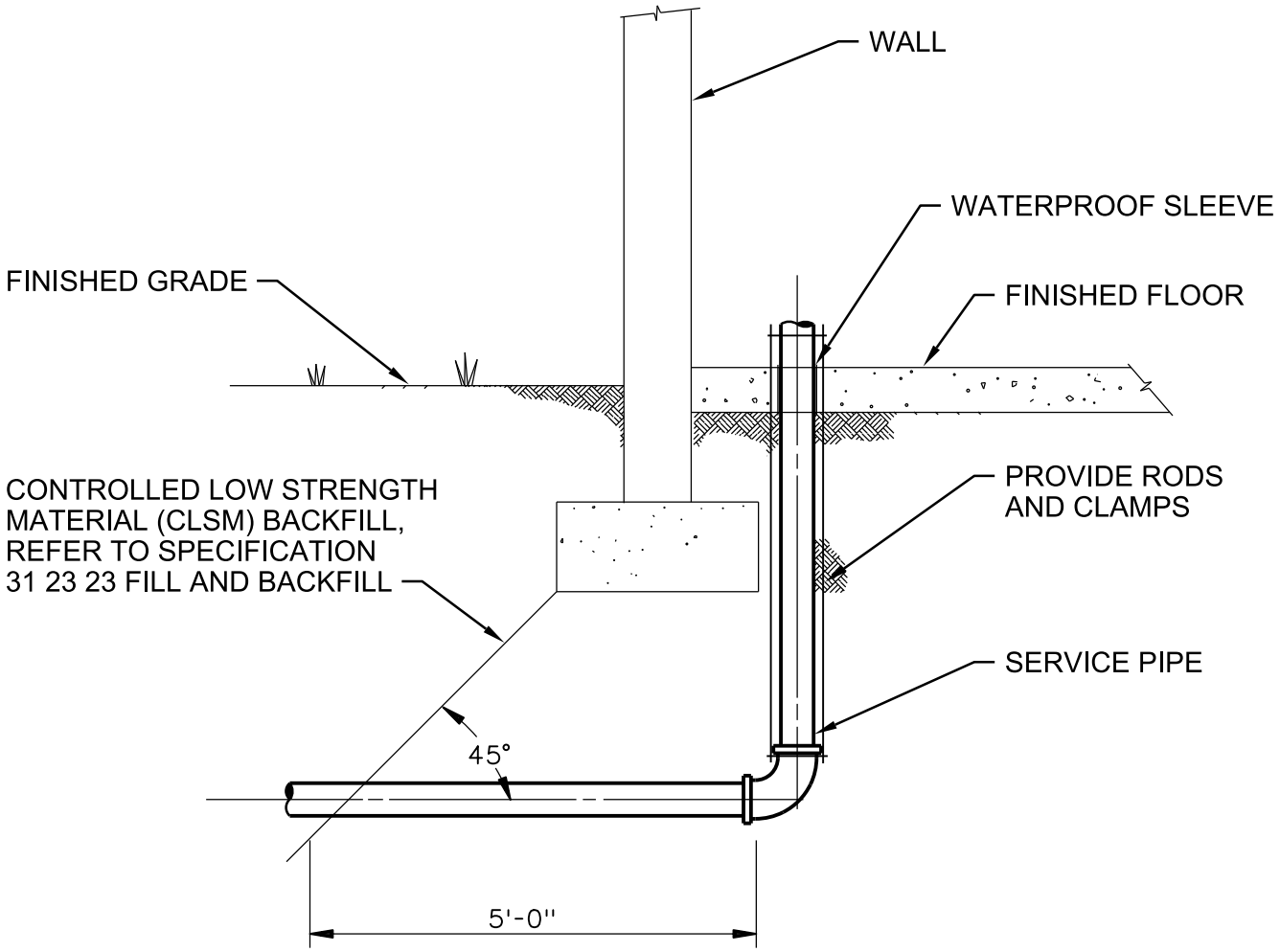

NOTE:

1. BITUMINOUS COATED INSIDE AND OUTSIDE SEAL EACH END.

TYPICAL PIPE ENTRANCE

NTS

NATIONAL PARK SERVICE
GRAND CANYON NATIONAL PARK
SOUTH RIM

2210-110

© JACOBS

Jacobs

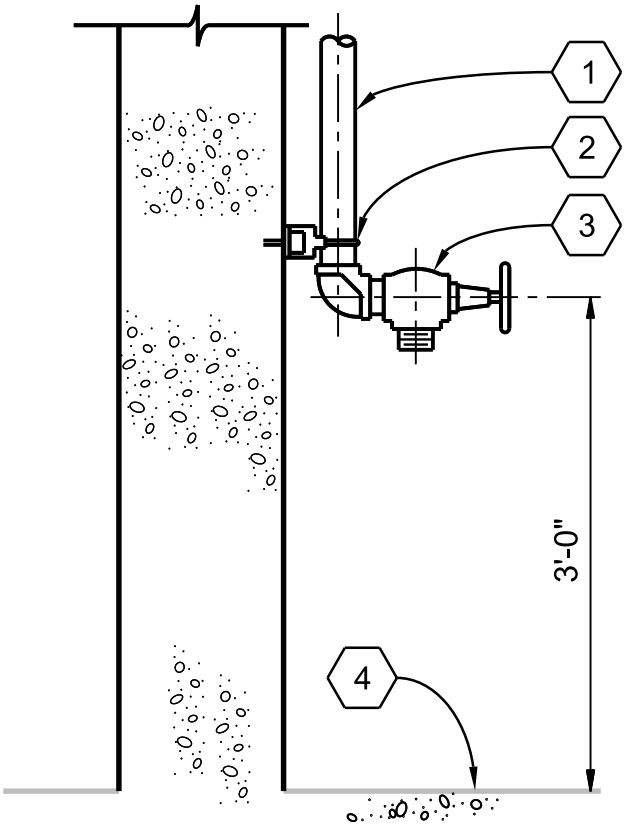

1. WATER SUPPLY LINE.
2. PIPE SUPPORT.
3. 3/4" HB-1 OR 1" HB-2 HOSE BIB (SEE PLANS FOR FIXTURE TAG)
4. FINISH FLOOR.

NOTES

A. ROTATE HOSE VALVE 30° OFF WALL.

B. FOR HOSE VALVE SIZE SEE PLANS

INTERIOR HOSE VALVE

NTS

NATIONAL PARK SERVICE
GRAND CANYON NATIONAL PARK
SOUTH RIM

2210-300

© JACOBS

Jacobs

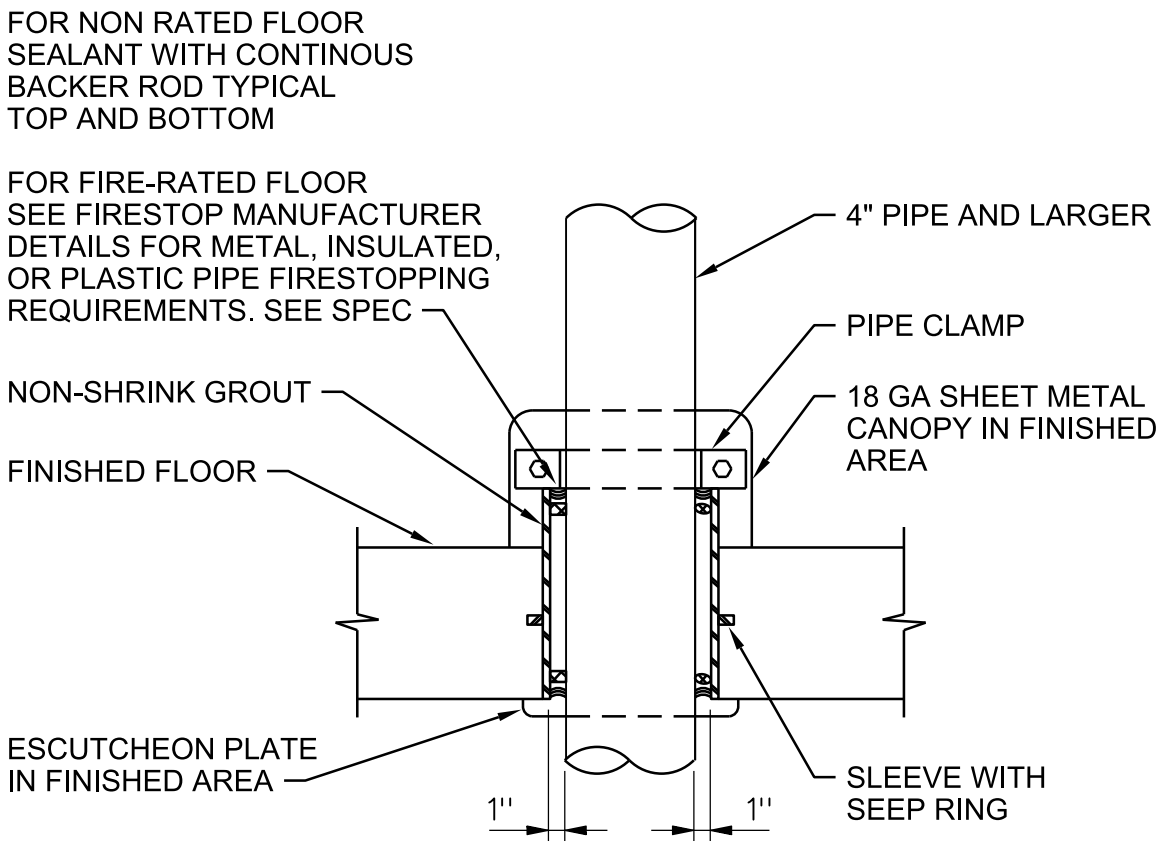

NOTES:

1. FOR SEALANT SPECIFICATION, SEE SECTION 07 92 00.
2. FOR FIRE STOPPING REQUIREMENTS, SEE SECTION 07 84 00.
3. FIRSTOPPING IS TO BE PER NATIONAL LISTED ASSEMBLY.

PIPE FLOOR PENETRATION

NTS

NATIONAL PARK SERVICE
GRAND CANYON NATIONAL PARK
SOUTH RIM

2210-562

© JACOBS

Jacobs

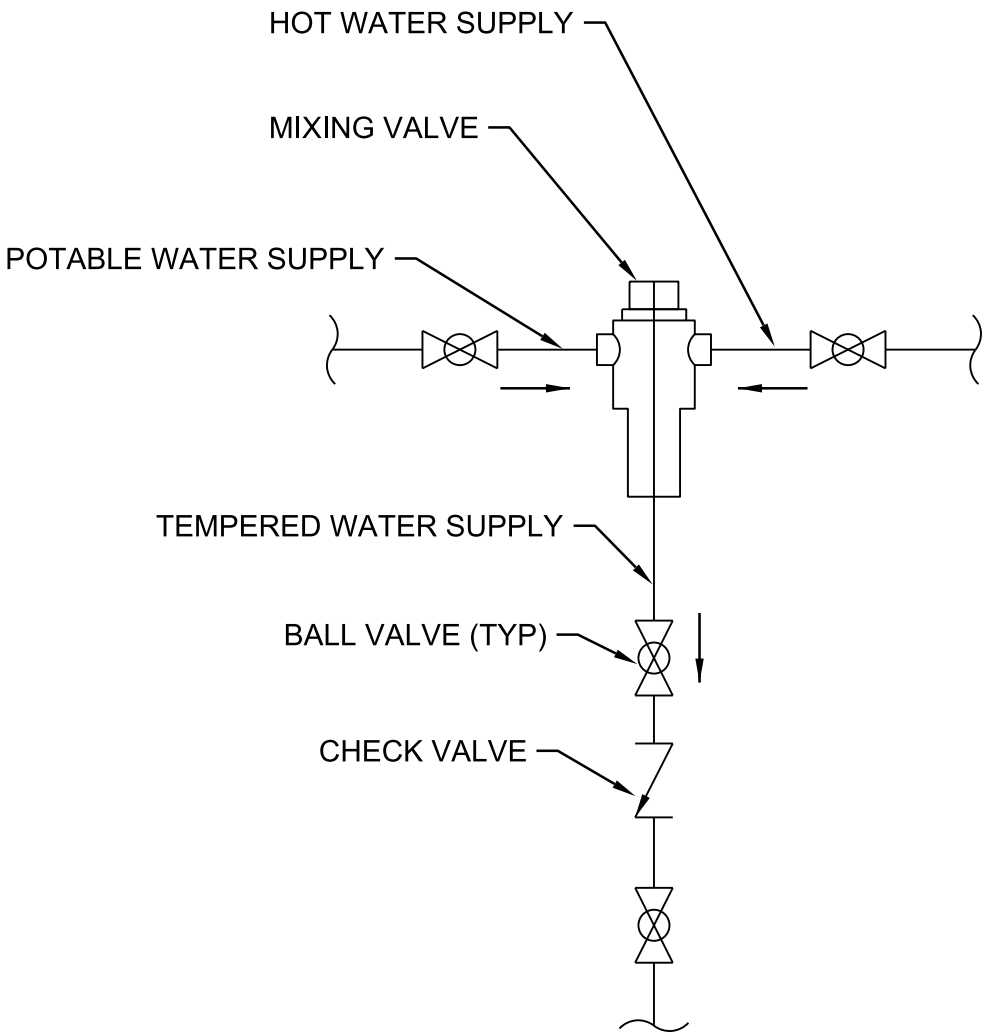

WATER TEMPERING VALVE

NTS

NATIONAL PARK SERVICE
GRAND CANYON NATIONAL PARK
SOUTH RIM

2210-700

© JACOBS

Jacobs

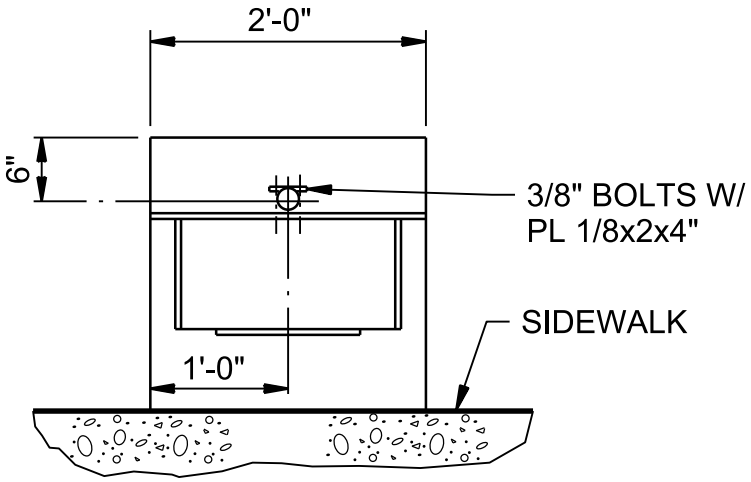

PLAN-POST MOUNT

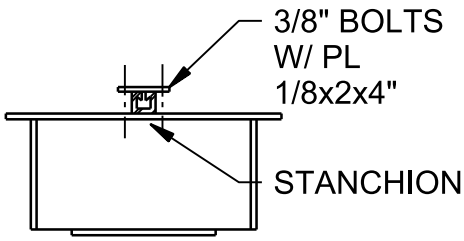

STANCHION MOUNTED

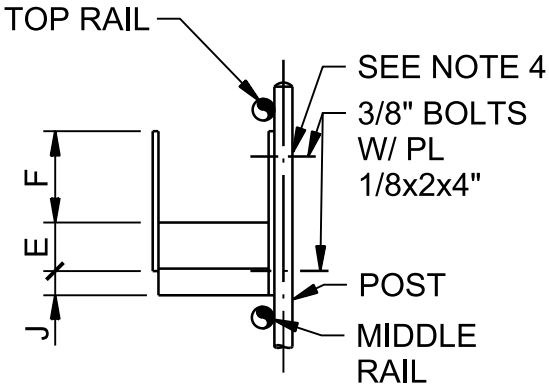

HANDRAIL POST MOUNTED

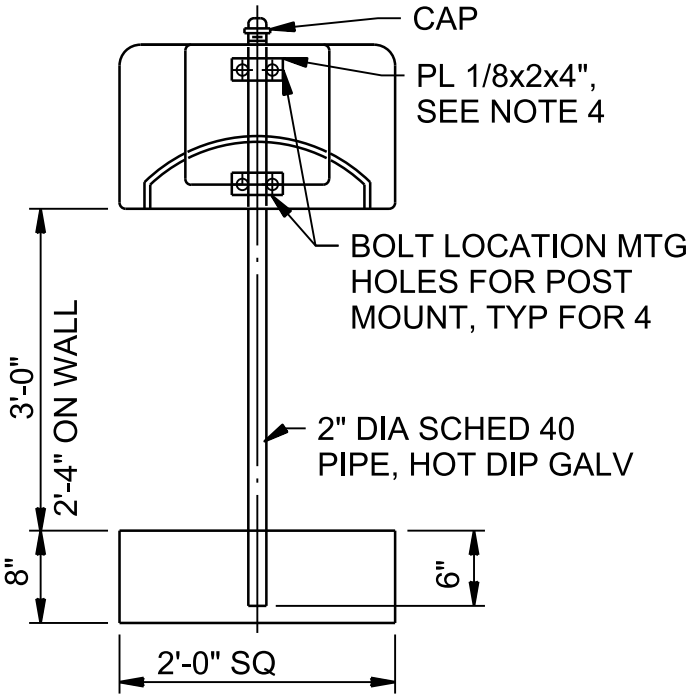

SECTION

HOSE RACKS

NTS

DETAIL 1 OF 2

2210-720

NATIONAL PARK SERVICE
GRAND CANYON NATIONAL PARK
SOUTH RIM

© JACOBS

Jacobs

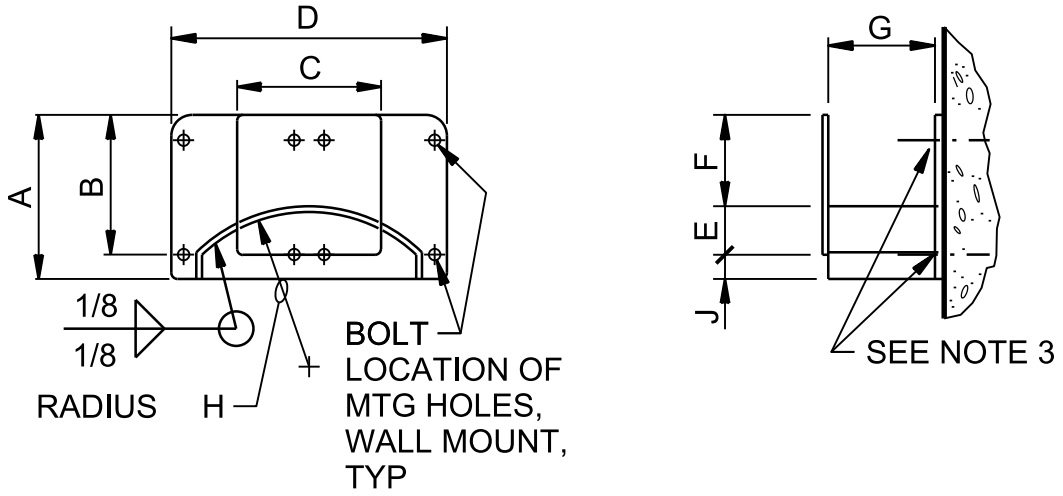

WALL MOUNTED

DIMENSION IN INCHES

RACK TYPE	A	B	C	D	E	F	G	H	J
TYPE A-3/4" & 1" HOSE	10-1/2	9	9	18	3	6	7-1/2	9-3/4	1-1/2
TYPE B-1 1/2" HOSE	14	12	12	24	4	8	10	13	2

NOTES:

1. INTERIOR UNITS SHALL BE FABRICATED FROM 1/8" A-36 STEEL PLATE AND ENTIRE UNIT SHALL BE HOT DIP GALVANIZED AFTER FABRICATION.
2. EXTERIOR UNITS SHALL BE FABRICATED FROM 3/16" 6061-T6 ALUMINUM ALLOY PLATE.
3. ATTACH TO CONCRETE WALL WITH (4) - 3/8" STAINLESS STEEL STUD TYPE WEDGE ANCHORS.
4. ATTACH TO VERTICAL HANDRAIL OR INDIVIDUAL POST WITH PLATES AND (4)- 3/8" STAINLESS STEEL BOLTS.
5. ATTACH TO STEEL COLUMN WITH (4)- 3/8" ROUND HEAD BOLTS, ONE IN EACH CORNER. INSERT DOUBLE SPACER NUTS BETWEEN COLUMN AND HOSE RACK.

HOSE RACKS

NTS

DETAIL 2 OF 2

2210-720

NATIONAL PARK SERVICE
GRAND CANYON NATIONAL PARK
SOUTH RIM

© JACOBS

Jacobs

1. THERMOMETER
2. 3/4 INCH BUSHING ON 1 INCH AND LARGER TEES
3. STEM
4. WELL
5. 3/4 INCH CONNECTION, SEE NOTES A, B, AND C
6. PIPES 3 INCH AND LARGER
7. OUTLET
8. PIPES 2 1/2 INCH AND SMALLER
9. INLET

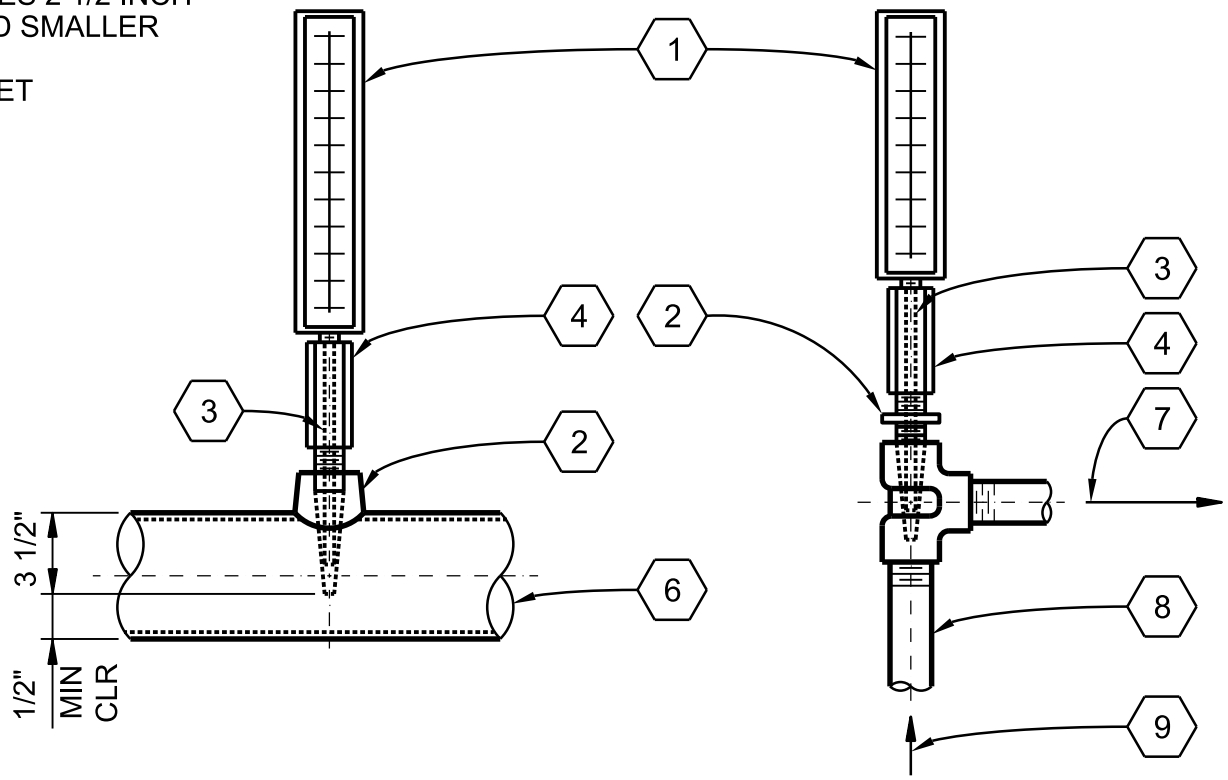

NOTES:

A. FOR STEEL, GALVANIZED STEEL, 2 1/2 INCH AND SMALLER USE 3/4 INCH BUSHING IN TEE.

B. FOR DUCTILE IRON ALL SIZES, US A 3/4 INCH OUTLET PIPE SADDLE.

C. FOR STEEL AND STAINLESS STEEL PIPES 3 INCH AND LARGER, AND PRESSURE VESSELS, USE 3/4 INCH THREAD-O-LETS AS SHOWN.

THERMOMETER MOUNTING

NTS

NATIONAL PARK SERVICE
GRAND CANYON NATIONAL PARK
SOUTH RIM

2210-850

© JACOBS

Jacobs

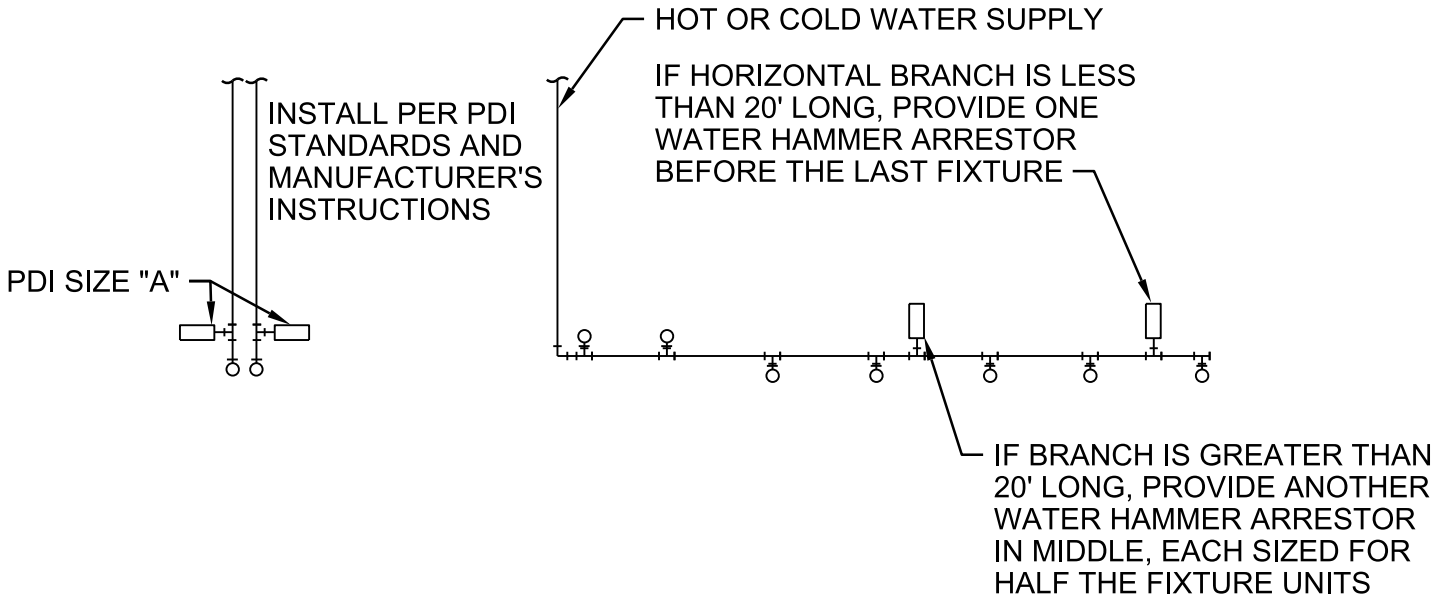

SINGLE FIXTURE

PDI SIZE	PIPE SIZE	FIXTURE UNIT LOAD
A	1/2"	1-11
B	3/4"	12-32
C	1"	33-60
D	1 1/4"	61-113
E	1 1/2"	114-154
F	2"	155-330

MULTIPLE FIXTURES

FIXTURE UNIT TABULATION		
FIXTURE	COLD	HOT
FLUSH VALVE WATER CLOSET	6.0	-
LAB SINK	0.5	0.5
KITCHEN SINK	1.0	1.0
LAVATORY	0.5	0.5
MOP BASIN	2.25	2.25
WATER COOLER	.25	-
SHOWER	1.0	1.0

PROVIDE WATER HAMMER ARRESTERS WITH PISTON AND O-RING CONSTRUCTION, HAVING PDI #WH-201, ASSE #1010 AND ANSI #A112.26.1M CERTIFICATION. INSTALL IN HORIZONTAL OR VERTICAL POSITION, BUT NEVER UPSIDE DOWN. INSTALL INLINE WITH WATER FLOW DIRECTION IF POSSIBLE. SIZE UNITS PER TABLES ABOVE.

WATER HAMMER ARRESTOR

NTS

NATIONAL PARK SERVICE
GRAND CANYON NATIONAL PARK
SOUTH RIM

2210-851

© JACOBS

Jacobs

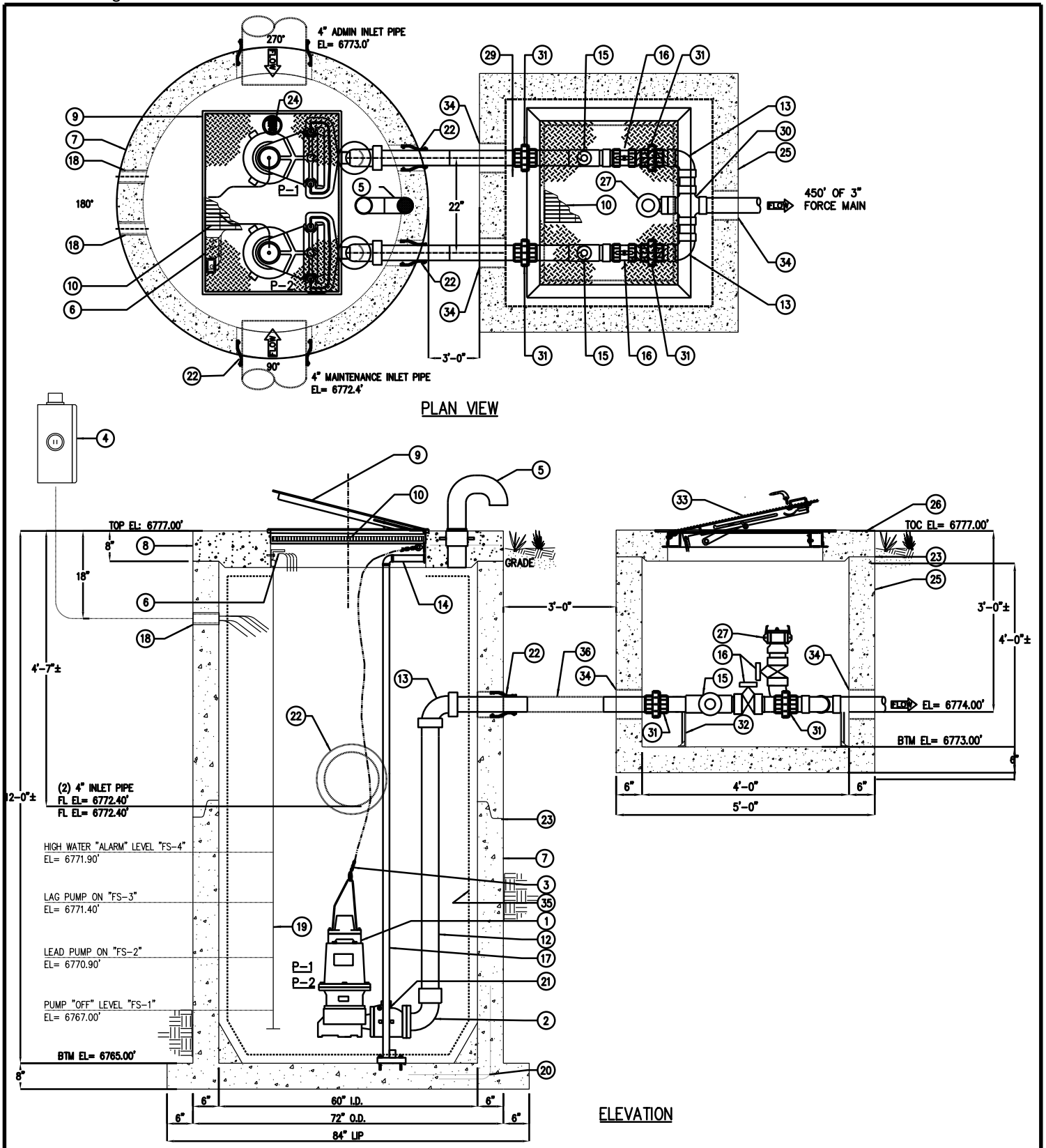

SANITARY SEWER LIFT STATION

NTS

DETAIL 1 OF 2

2230-100

NATIONAL PARK SERVICE
GRAND CANYON NATIONAL PARK
SOUTH RIM

© JACOBS

Jacobs

KEYED NOTES		
MARK	QTY	DESCRIPTION
1	2	2½" SUBMERSIBLE PUMP
2	2	2½"x3" BASE ELBOW
3	2	STAINLESS STEEL CHAINS
4	1	DUPLEX CONTROL PANEL NEMA 4X FRP w/ GENERATOR RECEPTACLE
5	1	4" SS VENT
6	1	SS CABLE BRACKET
7	1	60" DIA x 12'-0" DEEP CONCRETE WET WELL
8	1	8" THK FLAT CONCRETE TOP
9	1	30"x48" HATCHWAY
10	1	SAFETY GRATE
11	–	NOT USED
12	2	3" SCH 80 PVC DISCHARGE PIPE
13	5	3" SCH 80 PVC 90° ELL
14	2	SS UPPER GUIDE BRACKETS
15	2	3" BRONZE SWING CHECK
16	3	3" BRONZE GATE VALVE
17	4	SS GUIDE RAILS
18	2	3" THREADED COUPLING
19	1	LEVEL CONTROL TRANSDUCER
20	–	REBAR AS REQ'D
21	2	LIFT-OUT ASSEMBLY
22	4	RESILIENT RUBBER BOOT
23	–	ALL JOINTS MADE WATER-TIGHT w/ PLASTIC FLEXIBLE GASKET
24	1	NAMEPLATE INDICATING: MFG: MODEL: DATE:
25	1	48" SQ x 4'-0" DEEP PRECAST CONCRETE VALVE VAULT
26	1	6" THK VALVE VAULT LID
27	1	2" CAMLOCK w/ DUST COVER
28	–	NOT USED
29	–	NOT USED

KEYED NOTES		
MARK	QTY	DESCRIPTION
30	1	3" SCH 80 PVC CROSS
31	4	3" SCH 80 PVC UNION
32	3	GALVANIZED PIPE SUPPORT
33	1	24"x24" ALUMINUM HATCHWAY
34	–	SEAL w/ NON-SHRINK GROUT
35	1	EPOXY LINER
36	2	3" INTERCONNECTING PIPING

SANITARY SEWER LIFT STATION

NTS

DETAIL 2 OF 2

NATIONAL PARK SERVICE
GRAND CANYON NATIONAL PARK
SOUTH RIM

2230-100

© JACOBS

Jacobs

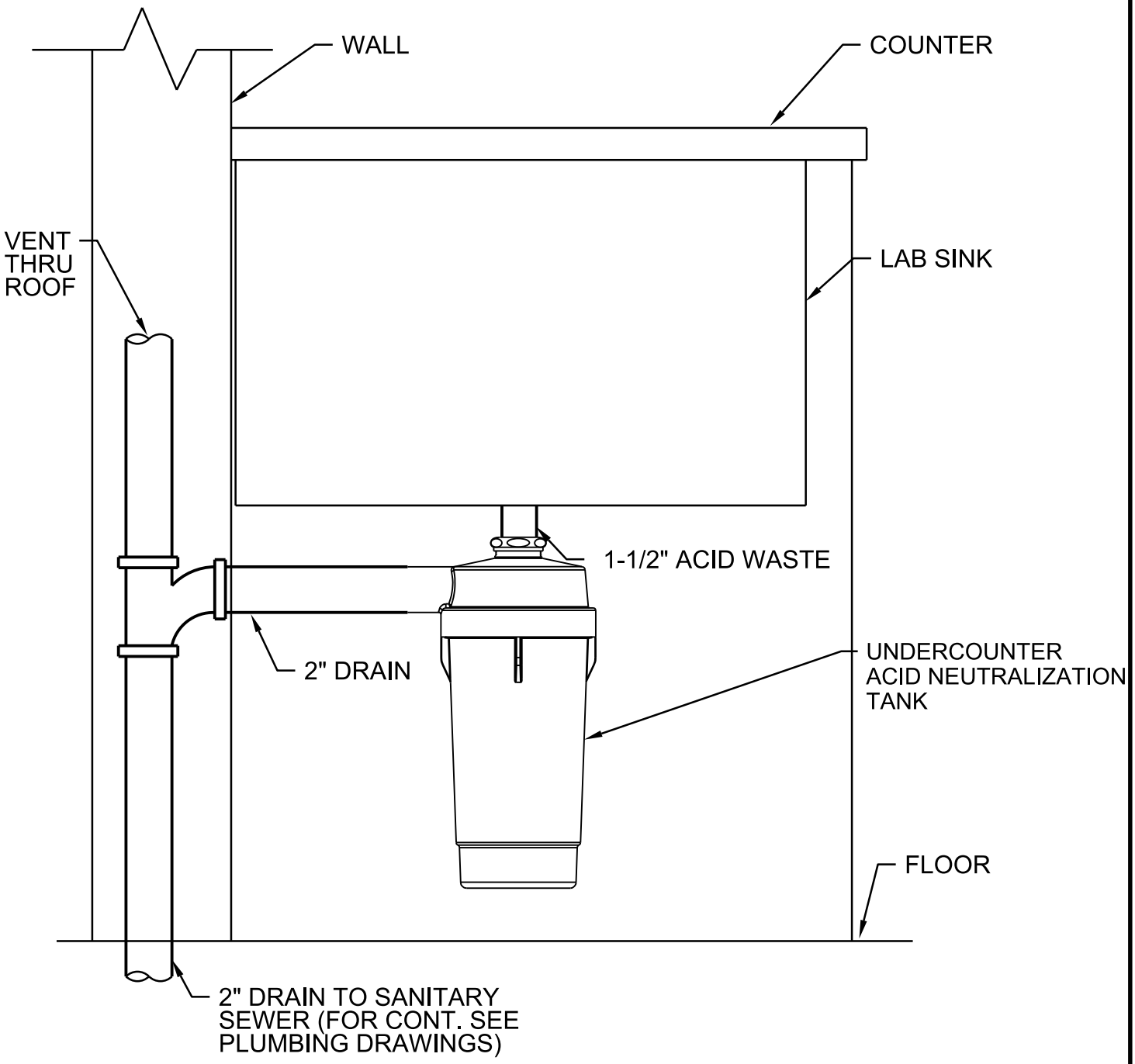

UNDER SINK ACID NEUTRALIZATION TANK

NTS

NATIONAL PARK SERVICE
GRAND CANYON NATIONAL PARK
SOUTH RIM

2230-103

© JACOBS

Jacobs

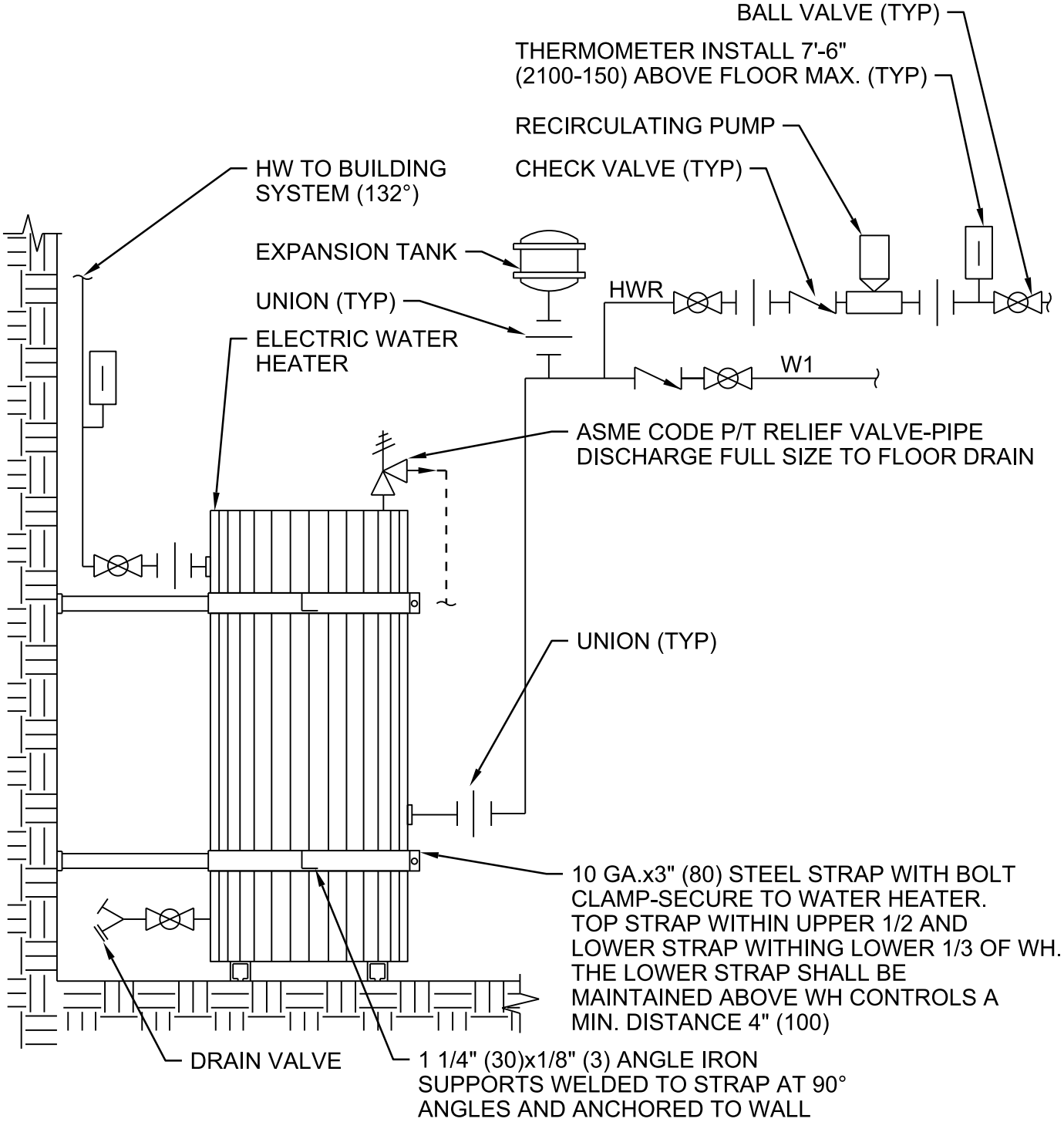

NOTE:

1. INSTALLATION MUST BE ACCORDING TO MANUFACTURER'S INSTRUCTIONS.

WATER HEATER WITH RECIRCULATION PUMP

NTS

NATIONAL PARK SERVICE
GRAND CANYON NATIONAL PARK
SOUTH RIM

2230-155

© JACOBS

Jacobs

NOTES

A. PROVIDE DRAIN LINE AT EACH RPBP AIR GAP CONNECTION AND EXTENDED TO HUB DRAIN. SIZE TO MATCH RPBP.

B. SUPPORT AS REQUIRED. KEEP ARRANGEMENT CLOSE TO WALL AS WELL AS MAINTAINING CLEARANCE REQUIREMENTS.

1. CW DOMESTIC WATER SUPPLY (FOR CONT. SEE PLUMBING DWGS)
2. 19MM HV-1 DRAIN VALVE WITH THREADED HOSE END
3. REDUCED PRESSURE BACKFLOW PREVENTER
4. ROUTE DRAIN LINE TO HUB DRAIN OR FLOOR DRAIN
5. CW TO BLDG MAKEUP WATER SUPPLY.
6. ISOLATION VALVE
7. FINISHED FLOOR
8. Y-STRAINER
9. WATER METER
10. PRESSURE GAUGE
11. PRV INLET PRESSURE 85 PSIG SET OUTLET PRESSURE AT 60 PSIG

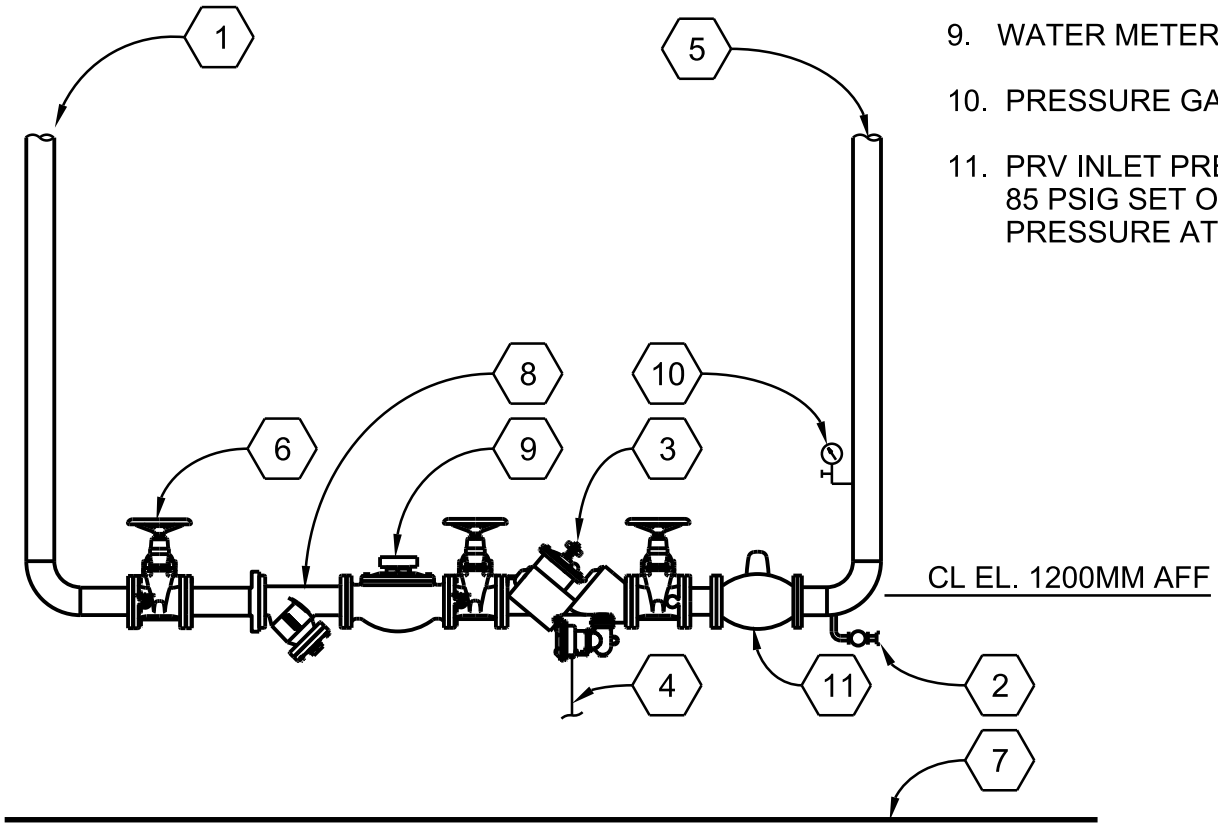

MAKEUP WATER HEADER CONNECTION

NTS

NATIONAL PARK SERVICE
GRAND CANYON NATIONAL PARK
SOUTH RIM

2230-750

© JACOBS

Jacobs

1. CW (FOR CONT. SEE PLUMBING DWGS)
2. DRAIN VALVE
3. INSTALL METER PER MANUFACTURER'S REQUIREMENTS WHERE INDICATED ON PLANS
4. REDUCED PRESSURE BACKFLOW PREVENTER
5. HUB DRAIN UNDER RPBD
6. CW BLDG SUPPLY
7. BYPASS VALVE
8. WATER METER. MONITORED BY BLDG. AUTOMATION SYSTEM (BAS)
9. ISOLATION VALVE, TYP
10. FINISHED FLOOR

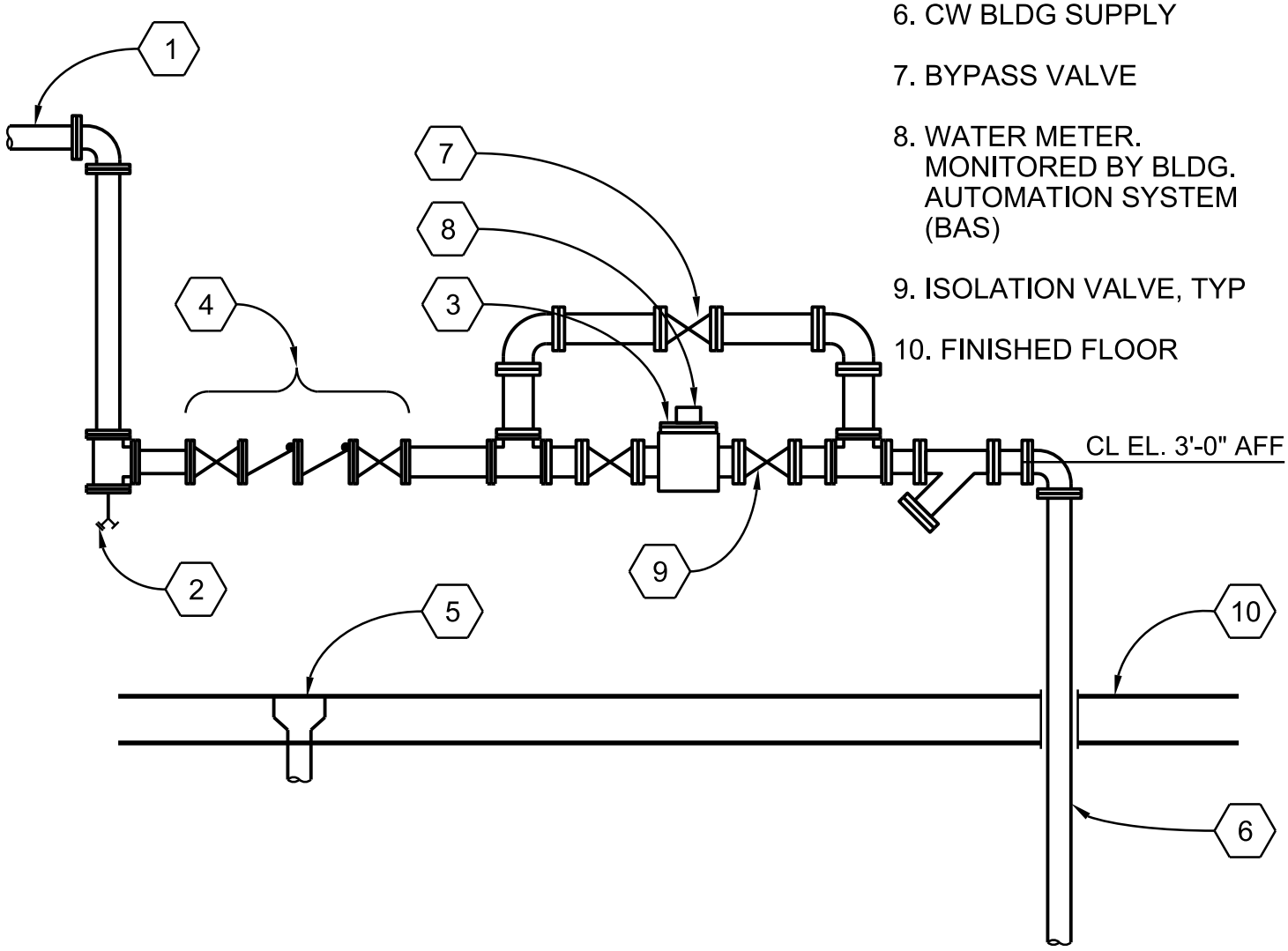

DOMESTIC WATER ENTRY

NTS

NATIONAL PARK SERVICE
GRAND CANYON NATIONAL PARK
SOUTH RIM

2230-900

© JACOBS

Jacobs

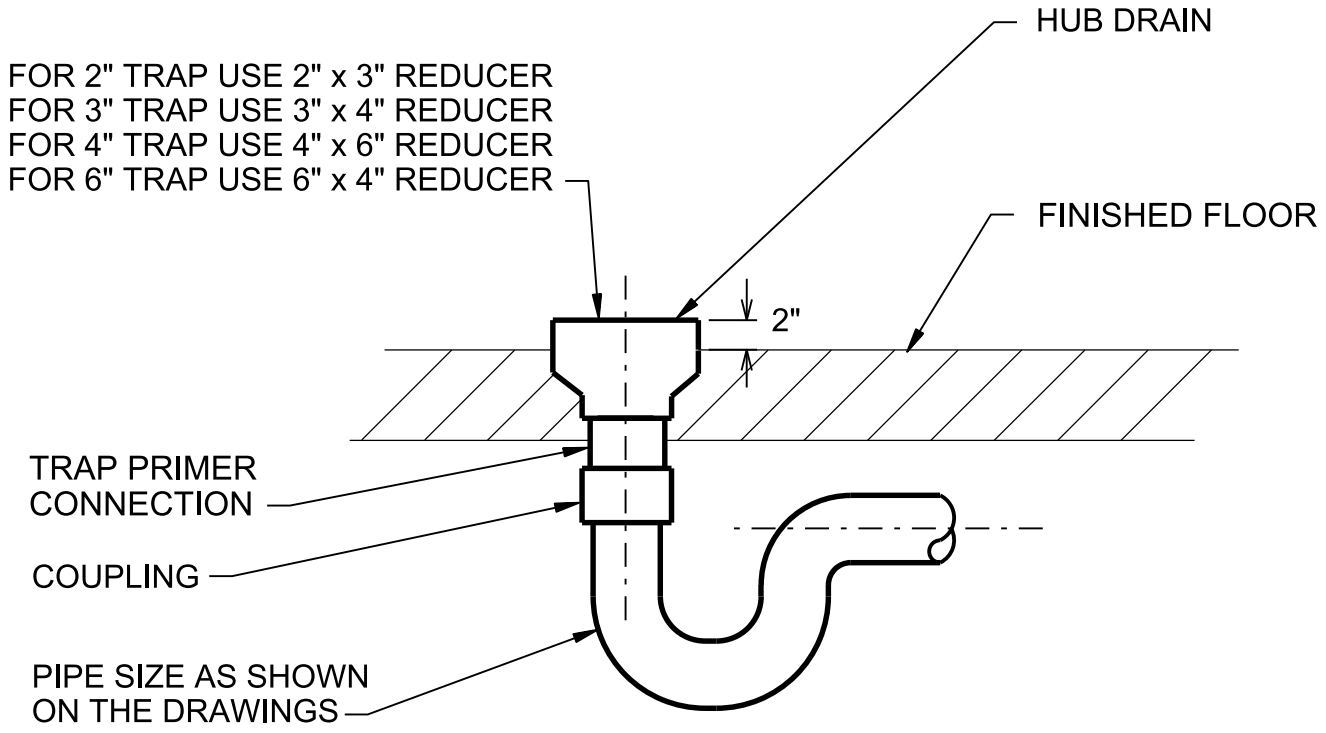

HUB DRAIN

NTS

NATIONAL PARK SERVICE
GRAND CANYON NATIONAL PARK
SOUTH RIM

2240-100

© JACOBS

Jacobs

1. CLEANOUT BOX WITH CI COVER MARKED "CO".
2. CLEANOUT FITTING
3. FINISH GRADE
4. BEND OR WYE, AS REQUIRED.
5. 1'-6" X 1'-6" X6" CONCRETE PAD.

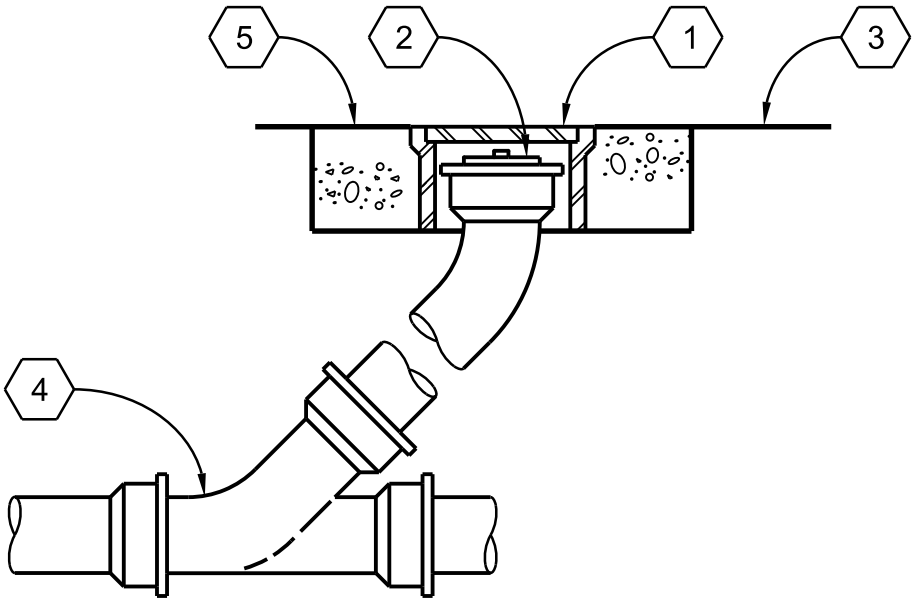

EXTERIOR CLEANOUT

NTS

NATIONAL PARK SERVICE
GRAND CANYON NATIONAL PARK
SOUTH RIM

2240-101

© JACOBS

Jacobs

1. CLEANOUT BOX WITH CI COVER MARKED "DCO".
2. CLEANOUT FITTING
3. FINISH GRADE
4. BEND OR WYE, AS REQUIRED.
5. 1'-6" X 1'-6" X6" CONCRETE PAD.

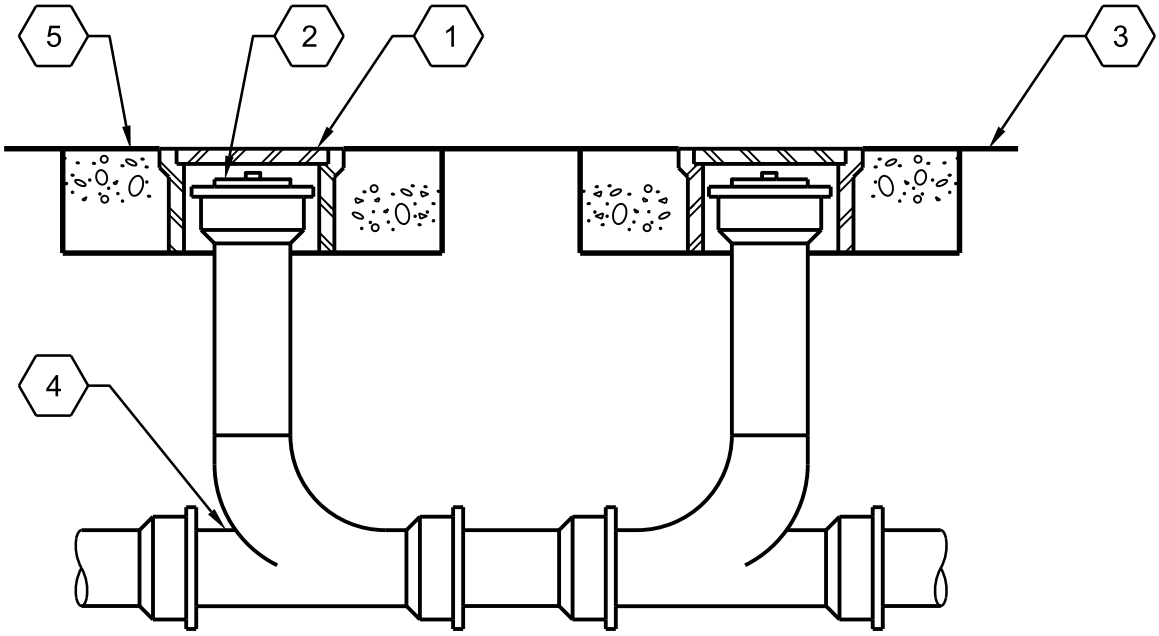

EXTERIOR DOUBLE CLEANOUT

NTS

NATIONAL PARK SERVICE
GRAND CANYON NATIONAL PARK
SOUTH RIM

2240-102

© JACOBS

Jacobs

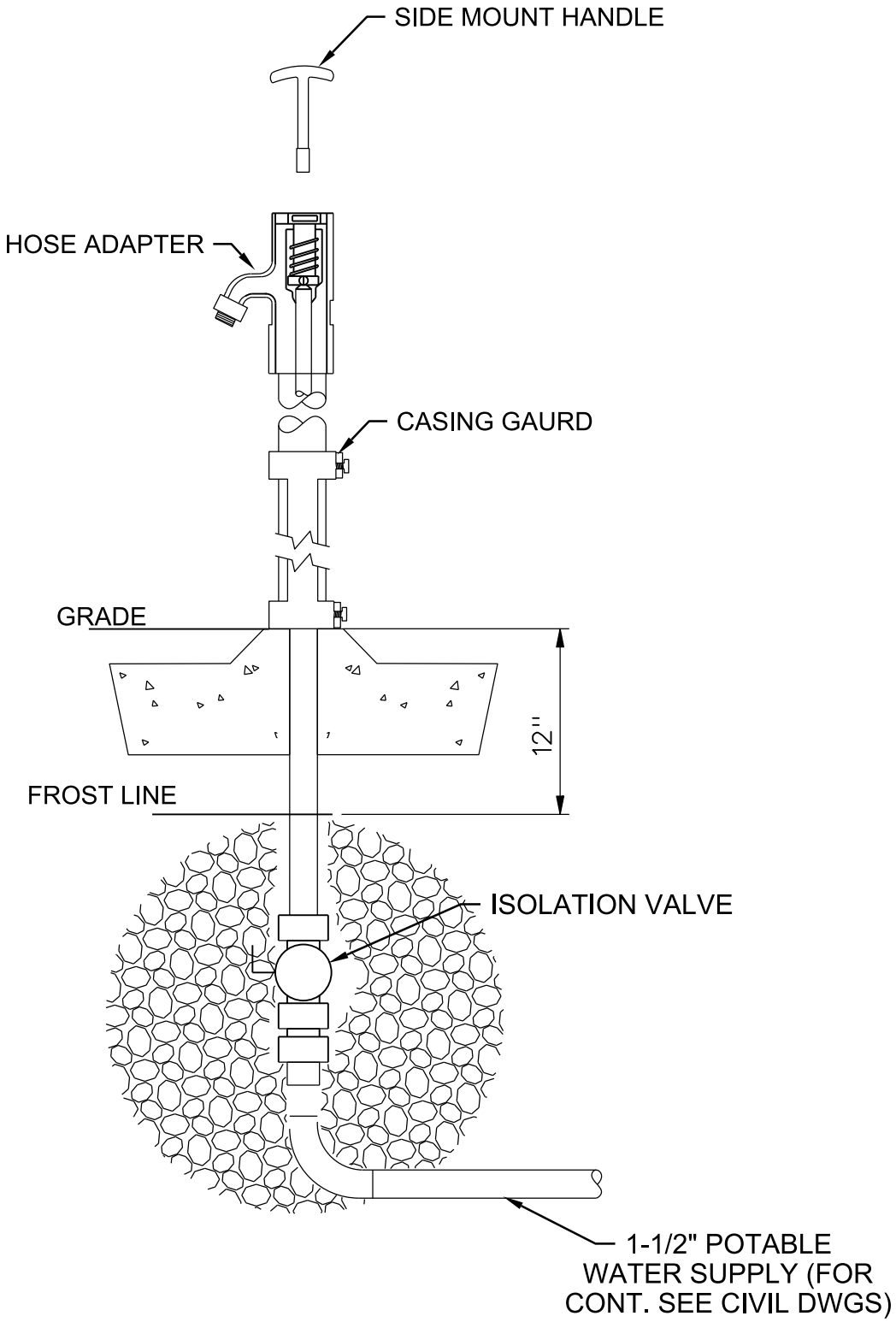

POST HYDRANT

NTS

NATIONAL PARK SERVICE
GRAND CANYON NATIONAL PARK
SOUTH RIM

2240-105

© JACOBS

Jacobs

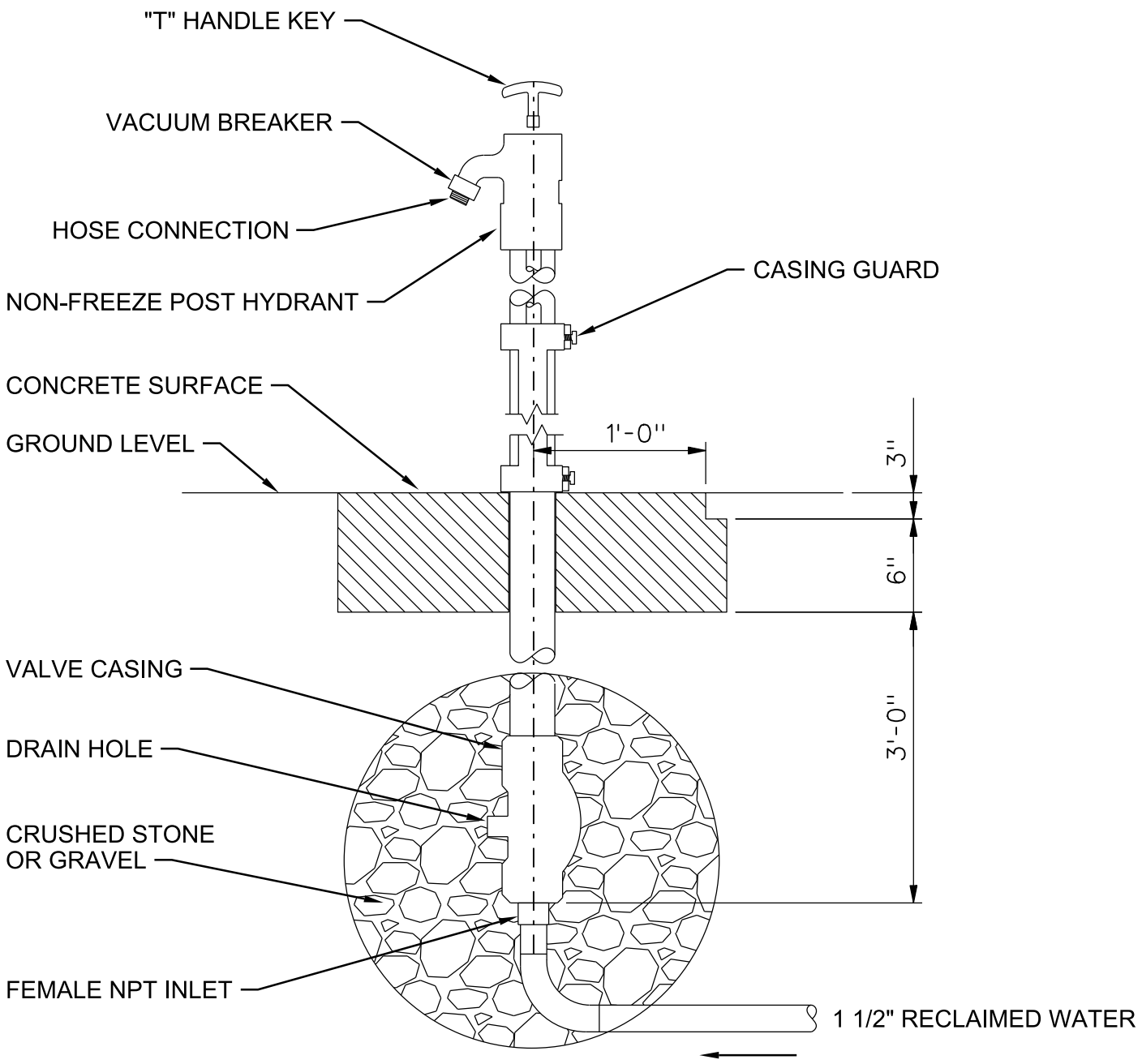

NON-FREEZE YARD HYDRANT

NTS

NATIONAL PARK SERVICE
GRAND CANYON NATIONAL PARK
SOUTH RIM

2240-120

© JACOBS

Jacobs

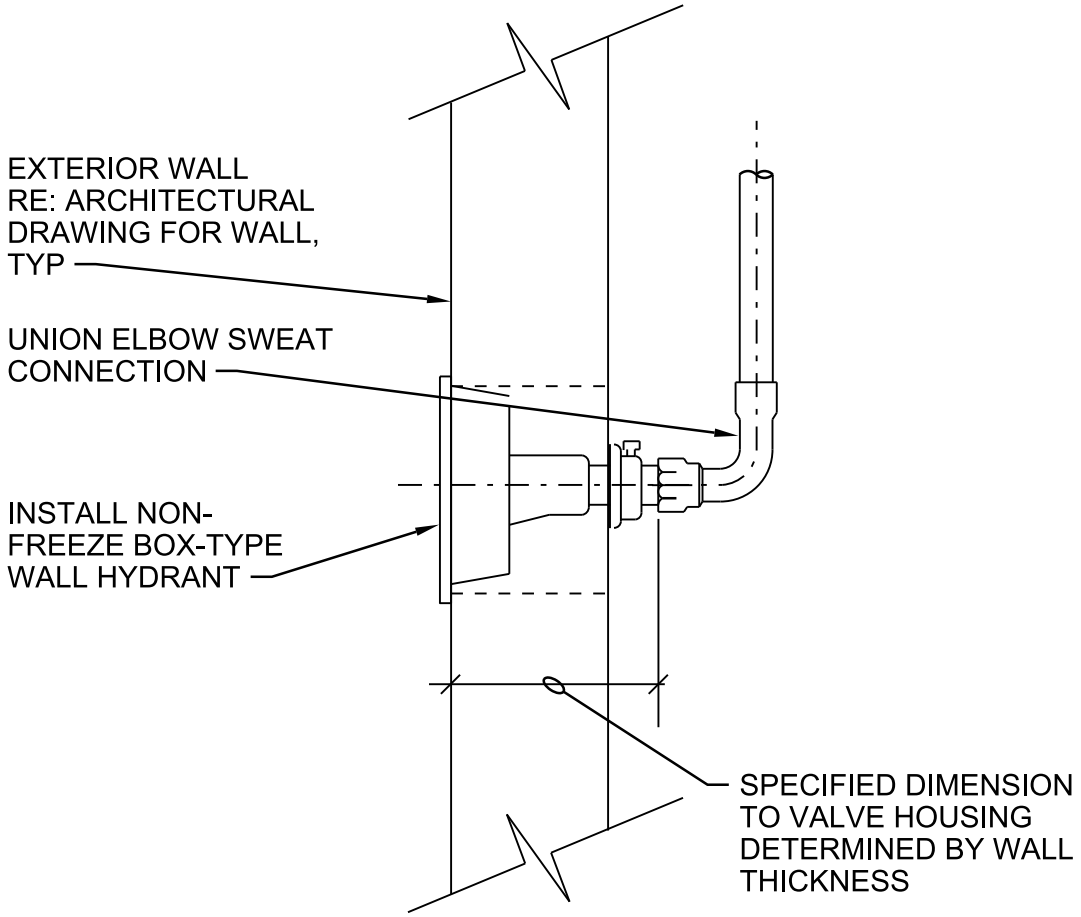

NON-FREEZE WALL HYDRANT

NTS

DETAIL 1 OF 2

NATIONAL PARK SERVICE
GRAND CANYON NATIONAL PARK
SOUTH RIM

2240-124

© JACOBS

Jacobs

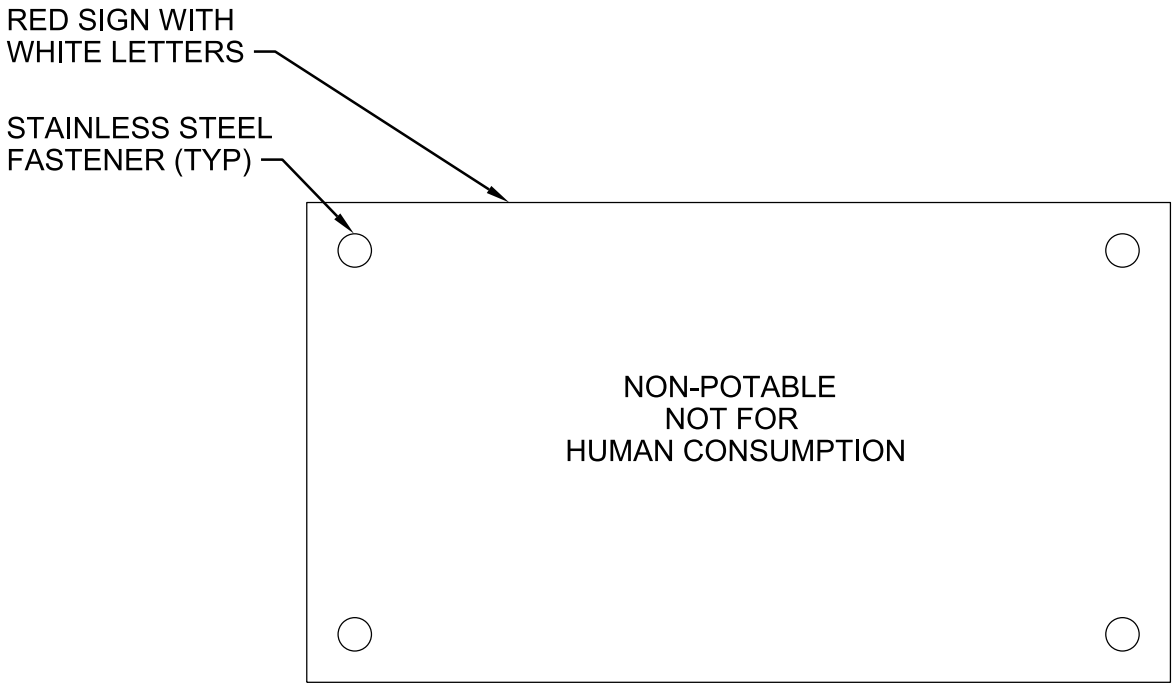

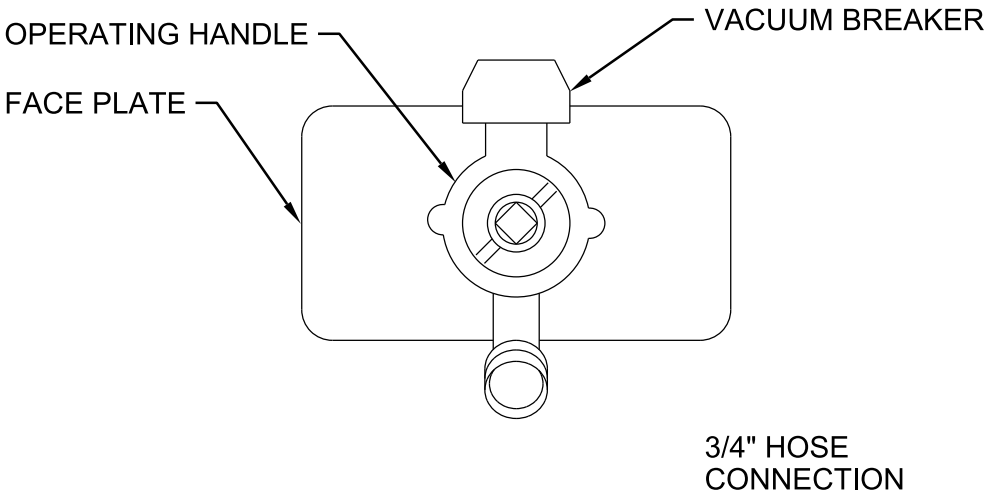

NOTES:

1. MOUNT SIGN ON WALL OR COLUMN ABOVE HOSE BIBB IN SUCH A MANNER SO AS NOT TO OBSTRUCT A CLEAR VIEW OF SIGN.

2. CENTER SIGN OVER HOSE BIBB.

NON-FREEZE WALL HYDRANT

NTS

DETAIL 2 OF 2

NATIONAL PARK SERVICE
GRAND CANYON NATIONAL PARK
SOUTH RIM

2240-124

© JACOBS

Jacobs

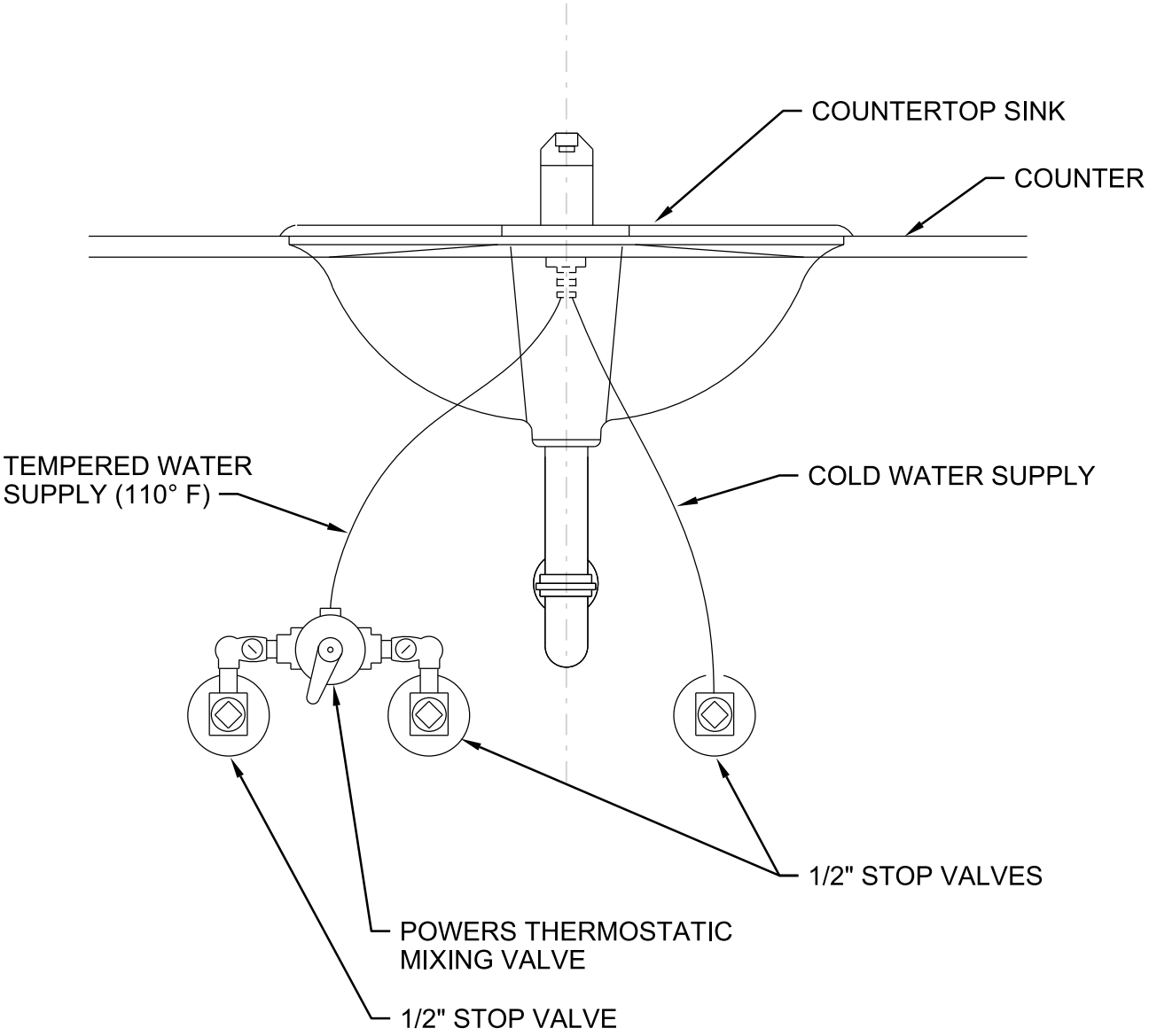

LAVATORY TEMPERED WATER SUPPLY

NTS

NATIONAL PARK SERVICE
GRAND CANYON NATIONAL PARK
SOUTH RIM

2240-127

© JACOBS

Jacobs

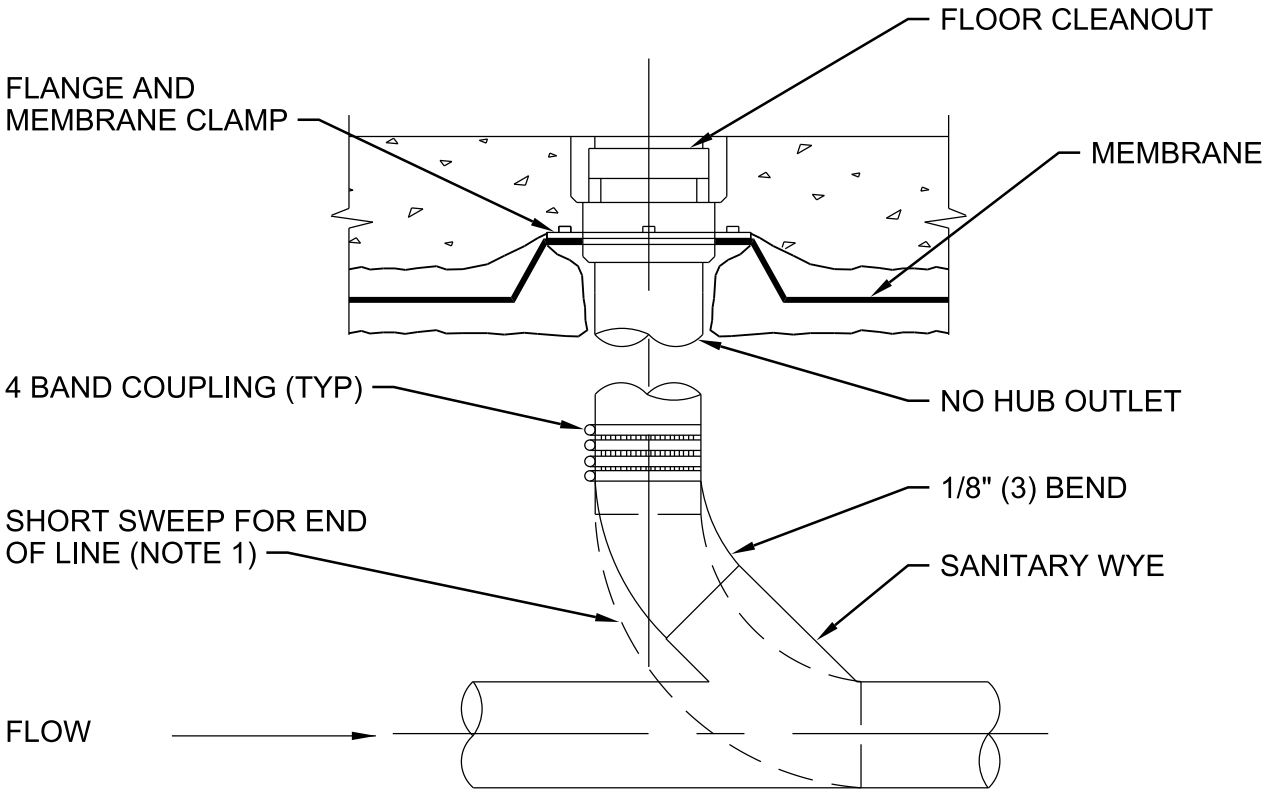

NOTE:

1. FOR CLEANOUT LOCATED AT THE END OF RUN, REPLACE WHY AND 1/8" (3) BEND WITH A SHORT SWEEP ELBOW.

FLOOR CLEANOUT

NTS

NATIONAL PARK SERVICE
GRAND CANYON NATIONAL PARK
SOUTH RIM

2240-140

© JACOBS

Jacobs

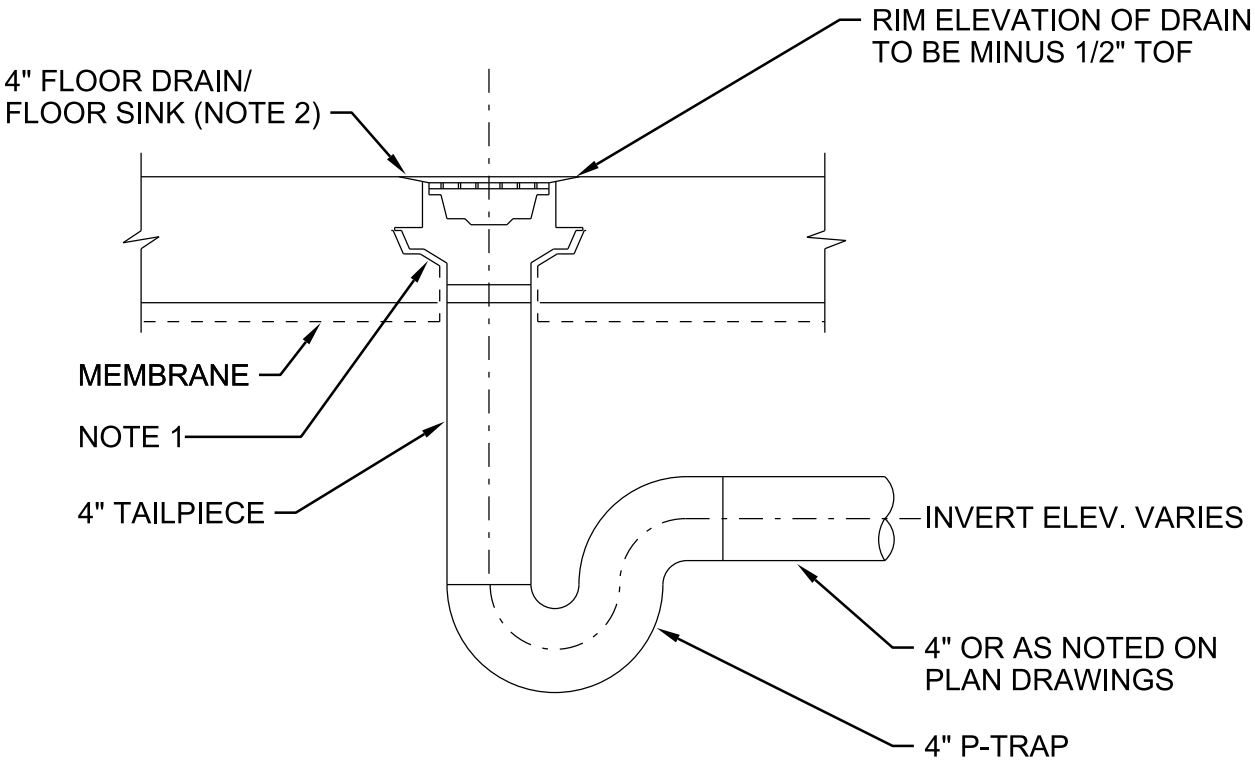

NOTES:

1. IF MEMBRANE EXISTS, ATTACH TO FLASHING COLLAR.
2. PROVIDE FLOOR DRAIN/SINK AS SPECIFIED IN SECTIONS 22 40 00.

FLOOR DRAIN

NTS

NATIONAL PARK SERVICE
GRAND CANYON NATIONAL PARK
SOUTH RIM

2240-150

© JACOBS

Jacobs

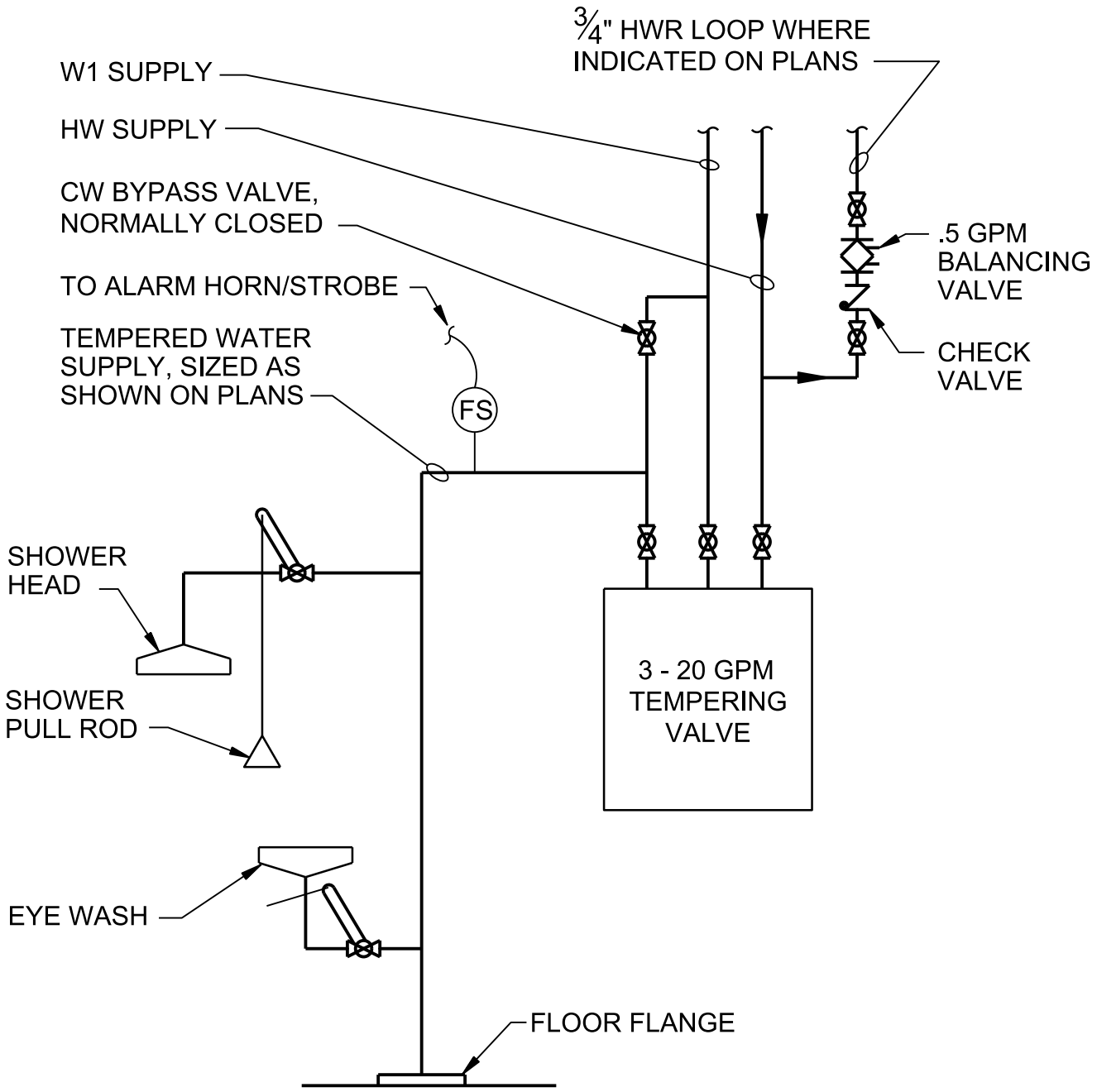

EMERGENCY SHOWER/EYEWASH UNIT

NTS

NATIONAL PARK SERVICE
GRAND CANYON NATIONAL PARK
SOUTH RIM

2240-300

© JACOBS

Jacobs

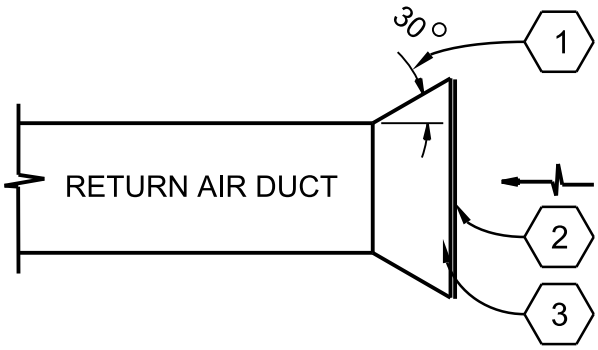

1. TYPICAL FOR 2 OR 4 SIDES (IF SPACE ALLOWS)
2. 1/2" GALVANIZED MESH SCREEN
3. INTAKE AREA EQUAL TO A MINIMUM OF TWO RETURN AIR DUCT AREAS

RETURN DUCT AIR INTAKE

NTS

NATIONAL PARK SERVICE
GRAND CANYON NATIONAL PARK
SOUTH RIM

2331-100

© JACOBS

Jacobs

1. SEE PLAN FOR SIZE OF DUCT
2. 1/2" GRID SST SCREEN
3. FINISHED FLOOR
4. WALL
5. DUCT SUPPORT PER SMACNA "HVAC DUCT CONSTRUCTION STANDARDS"

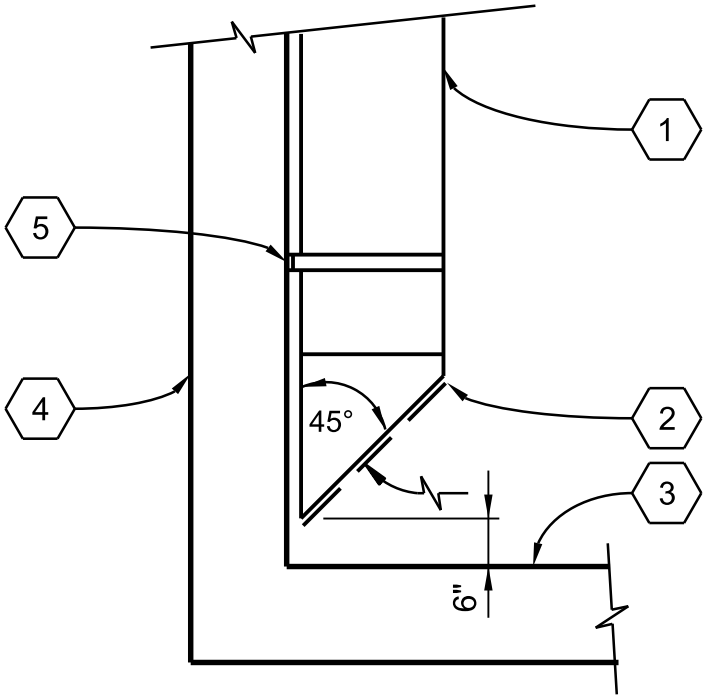

FLOOR EXHAUST

NTS

NATIONAL PARK SERVICE
GRAND CANYON NATIONAL PARK
SOUTH RIM

2331-103

© JACOBS

Jacobs

1. WALL (PARTITION)
2. FACE OPENING
3. FD WHERE INDICATED
4. 1" ACOUSTICAL LINER
5. TRANSFER GRILLE AS INDICATED
6. LINED DUCT

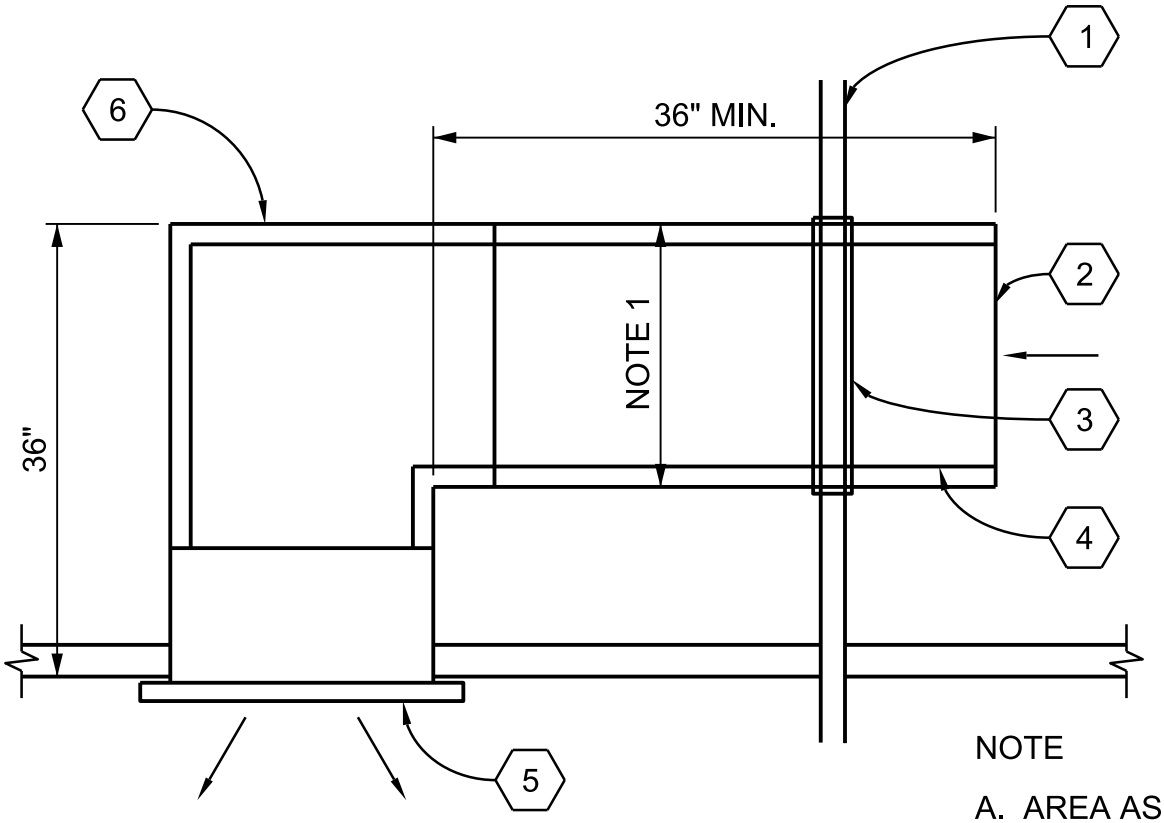

NOTE

A. AREA AS INDICATED

NOTE

A. AREA AS INDICATED

TRANSFER DUCT

NTS

NATIONAL PARK SERVICE
GRAND CANYON NATIONAL PARK
SOUTH RIM

2331-105

© JACOBS

Jacobs

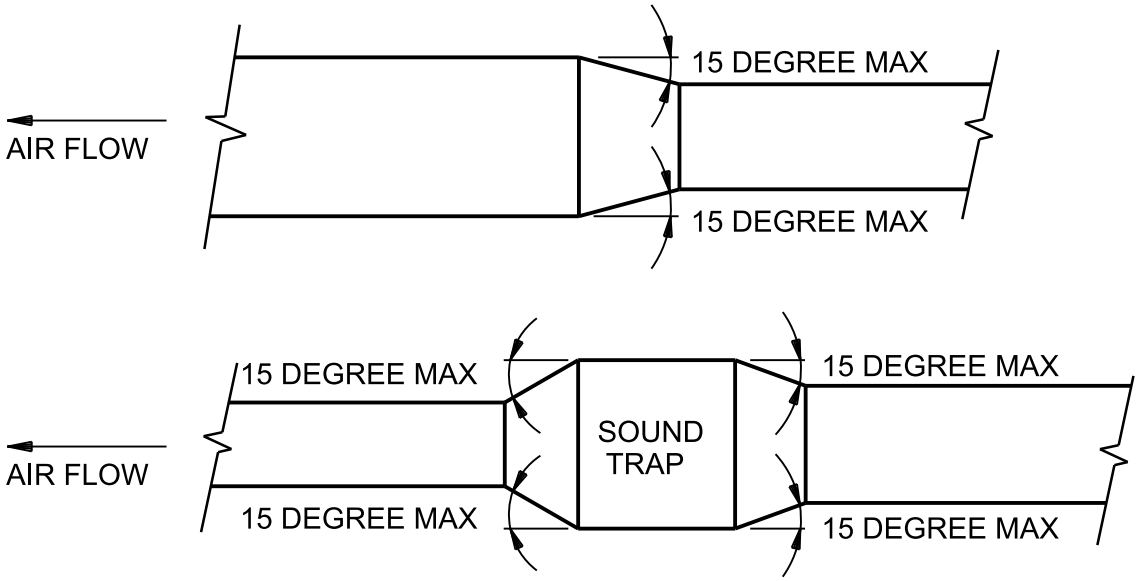

NOTE:

A. UNLESS OTHERWISE INDICATED ON PLANS, ABRUPT TRANSITIONS ARE NOT ALLOWED.

DUCT TRANSITION

NTS

NATIONAL PARK SERVICE
GRAND CANYON NATIONAL PARK
SOUTH RIM

2331-106

© JACOBS

Jacobs

1. NEOPRENE GASKET
2. MOUNTING NUTS
3. RETURN TUBE
4. INTAKE TUBE
5. MOUNTING PLATE
6. DUCT

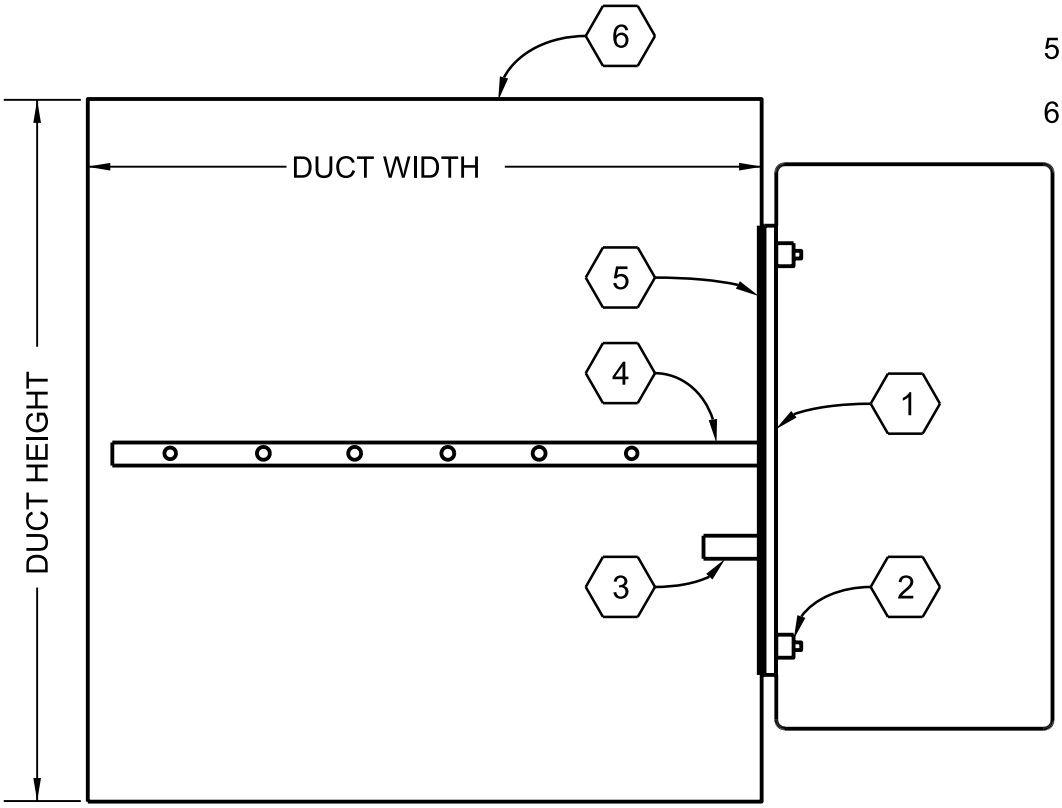

NOTES:

A. INSTALL IN STRICT ACCORDANCE WITH MANUFACTURER'S INSTALLATION INSTRUCTIONS.

B. PROVIDE ACCESS DOOR AT SAMPLING TUBES.

SMOKE DETECTOR MOUNTING (TYP)

NTS

NATIONAL PARK SERVICE
GRAND CANYON NATIONAL PARK
SOUTH RIM

2331-109

© JACOBS

Jacobs

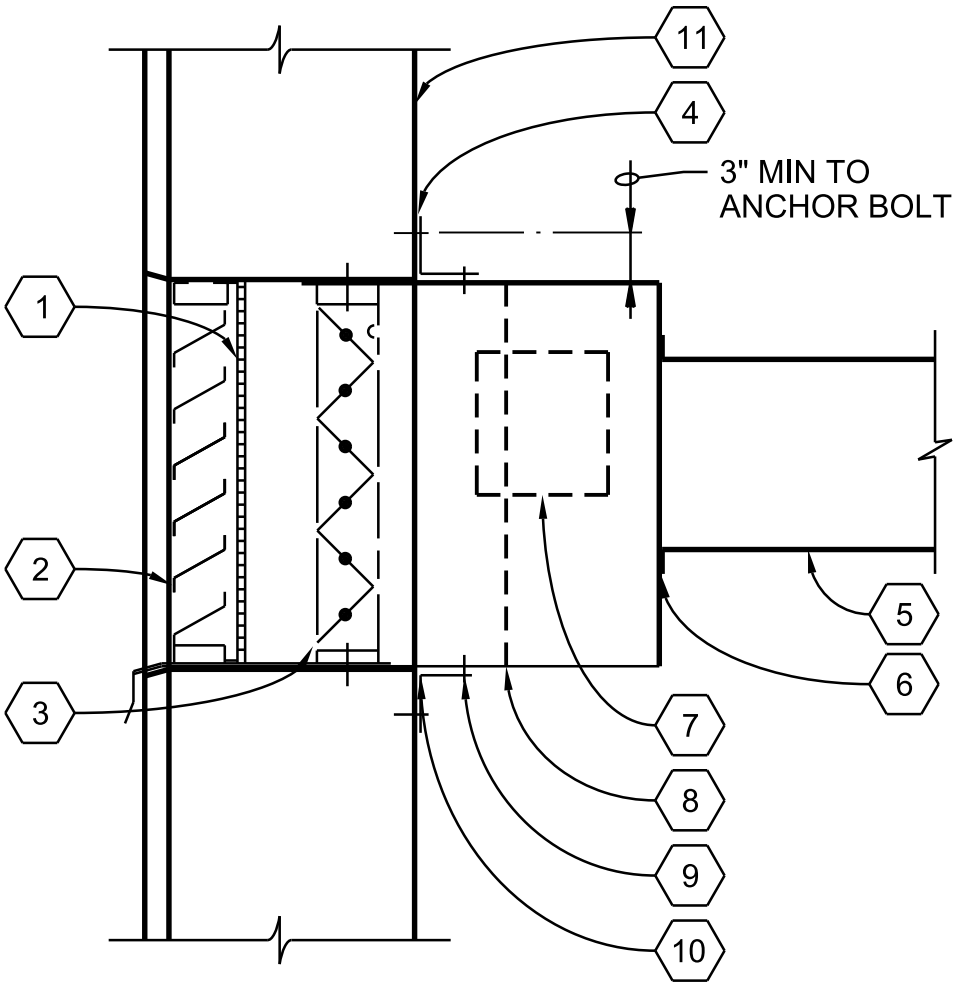

1. BIRDSCREEN
2. FIXED LOUVER, SEE ARCHITECTURAL DRAWINGS
3. OPTIONAL MOTORIZED DAMPER OR BACKDRAFT DAMPER. PROVIDE WHERE SHOWN ON DRAWINGS
4. SEAL WITH SEALANT
5. DUCT
6. SEAL PERIMETER WEATHER TIGHT
7. HINGED ACCESS DOOR WHERE REQUIRED
8. PLENUM FULL SIZE OF LOUVER, SLOPE BOTTOM TO DRAIN OUTSIDE
9. SHEET METAL SCREWS TYPICAL
10. ANGLE SUPPORT FRAME ON ALL FOUR SIDES OF PLENUM
11. WALL

TYPICAL LOUVER/DUCT CONNECTION

NTS

NATIONAL PARK SERVICE
GRAND CANYON NATIONAL PARK
SOUTH RIM

2331-110

© JACOBS

Jacobs

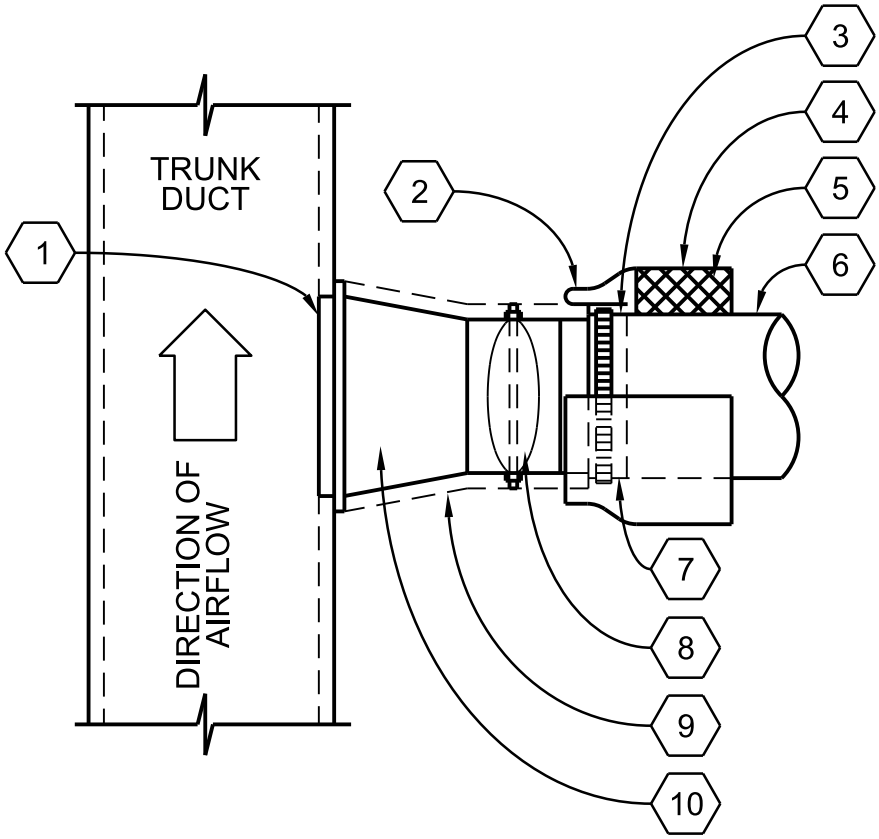

1. INSULATION GUARD WHERE REQUIRED
2. FOLD INSULATION JACKET UNDER AND SECURE TO DUCTWORK WITH DUCT TAPE
3. PULL INNER LINER OVER SHEET METAL DUCT AND SECURE WITH STAINLESS STEEL DRAW BAND
4. INSULATION JACKET
5. FLEX DUCT INSULATION
6. INNER LINER
7. APPLY DUCT SEALANT TO END OF SHEET METAL DUCT BEFORE LINER IS INSTALLED
8. MANUAL DAMPER WITH LOCKING QUADRANT
9. EXTERNAL INSULATION
10. SPIN-IN DUCT FITTING

TYPICAL ROUND DUCT SPIN-IN TAKEOFF

NTS

NATIONAL PARK SERVICE
GRAND CANYON NATIONAL PARK
SOUTH RIM

2331-111

© JACOBS

Jacobs

1. 1" INSULATION GUARD WHERE REQUIRED FOR INTERNALLY LINED DUCTWORK.
2. MANUAL DAMPER W/ LOCKING QUADRANT
3. CLOSE OPENINGS AT CORNERS

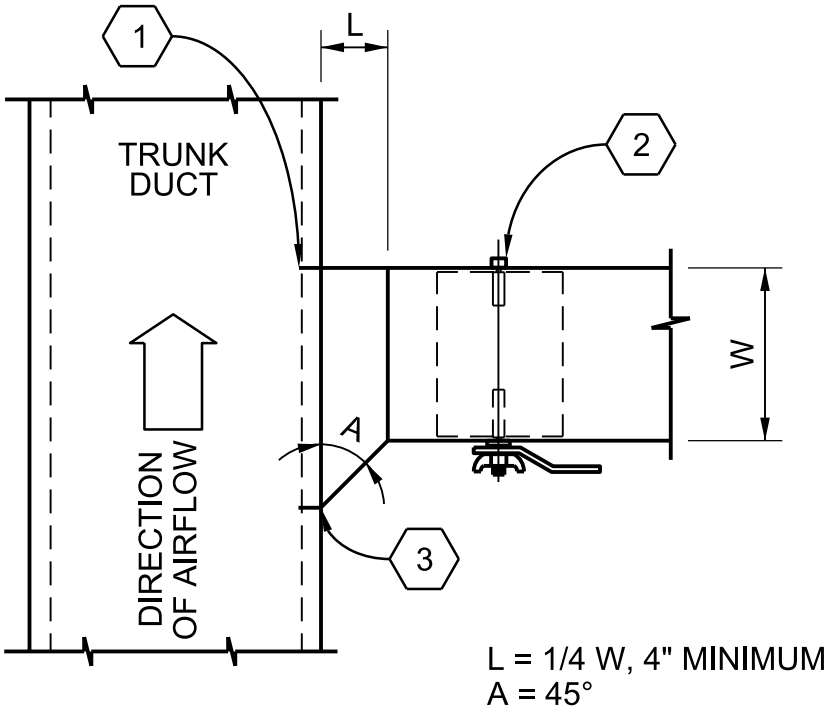

TYPICAL RECTANGULAR DUCT TAKEOFF

NTS

NATIONAL PARK SERVICE
GRAND CANYON NATIONAL PARK
SOUTH RIM

2331-112

© JACOBS

Jacobs

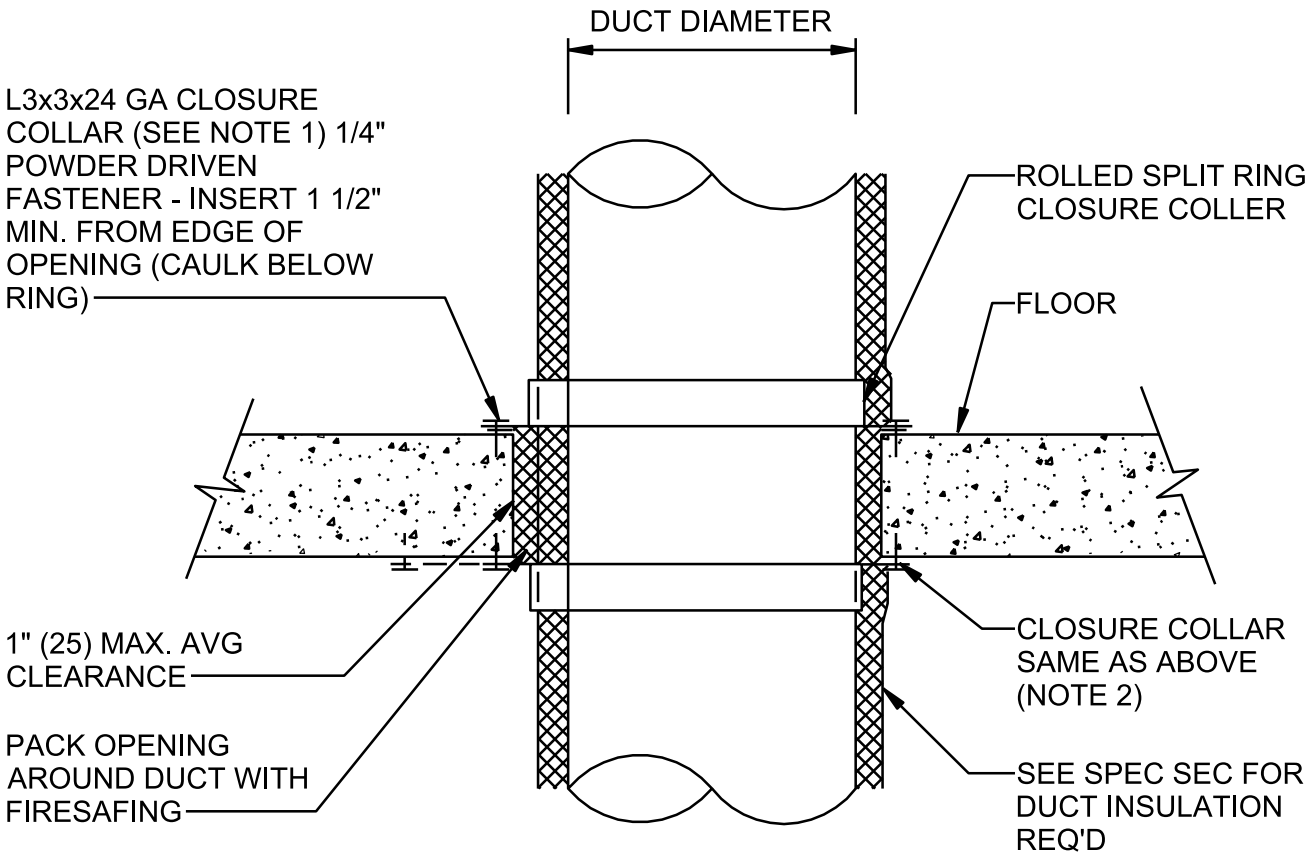

NOTES:

1. CLOSURE COLLARS NOT TO BE USED FOR SUPPORTING DUCT. PROVIDE INDEPENDENT SUPPORT FROM ABOVE OR BELOW PER SMACNA CONSTR STDS.
2. FOR METAL DECKS, EXTEND ANGLE CLOSURE COLLAR AND CLOSURE STRIPS TO SEAL COLLAR TO FLUTED SURFACE.

TYPICAL ROUND DUCT FLOOR PENETRATION

NTS

NATIONAL PARK SERVICE
GRAND CANYON NATIONAL PARK
SOUTH RIM

2331-190

© JACOBS

Jacobs

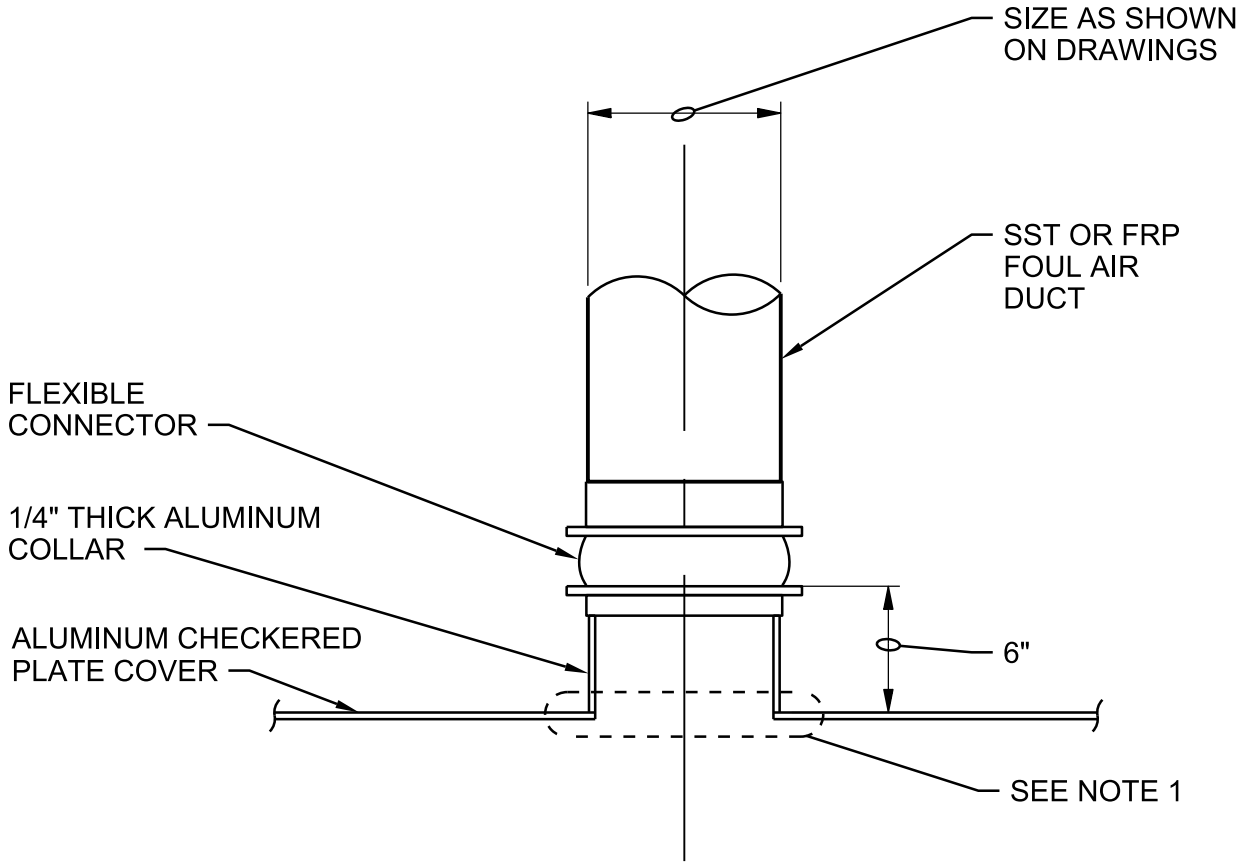

NOTE:

1. CONNECTION TO CHECKER PLATE TO BE WELDED OR FLANGED. FOR FLANGED CONNECTION, FLANGE & BOLTING PATTERN PER 23 31 16.16. HARDWARE TO BE ALL TYPE 316 SST. PROVIDE GASKET.

ALUMINUM CHECKER PLATE CONNECTION

NTS

NATIONAL PARK SERVICE
GRAND CANYON NATIONAL PARK
SOUTH RIM

2331-191

© JACOBS

Jacobs

DUCT DIAMETER (IN)	WIDTH, W (IN)	THICKNESS T1 (IN)	THICKNESS T2 (IN)
< 30	2	3/16	1/4
30 - 48	2 1/2	1/4	3/8

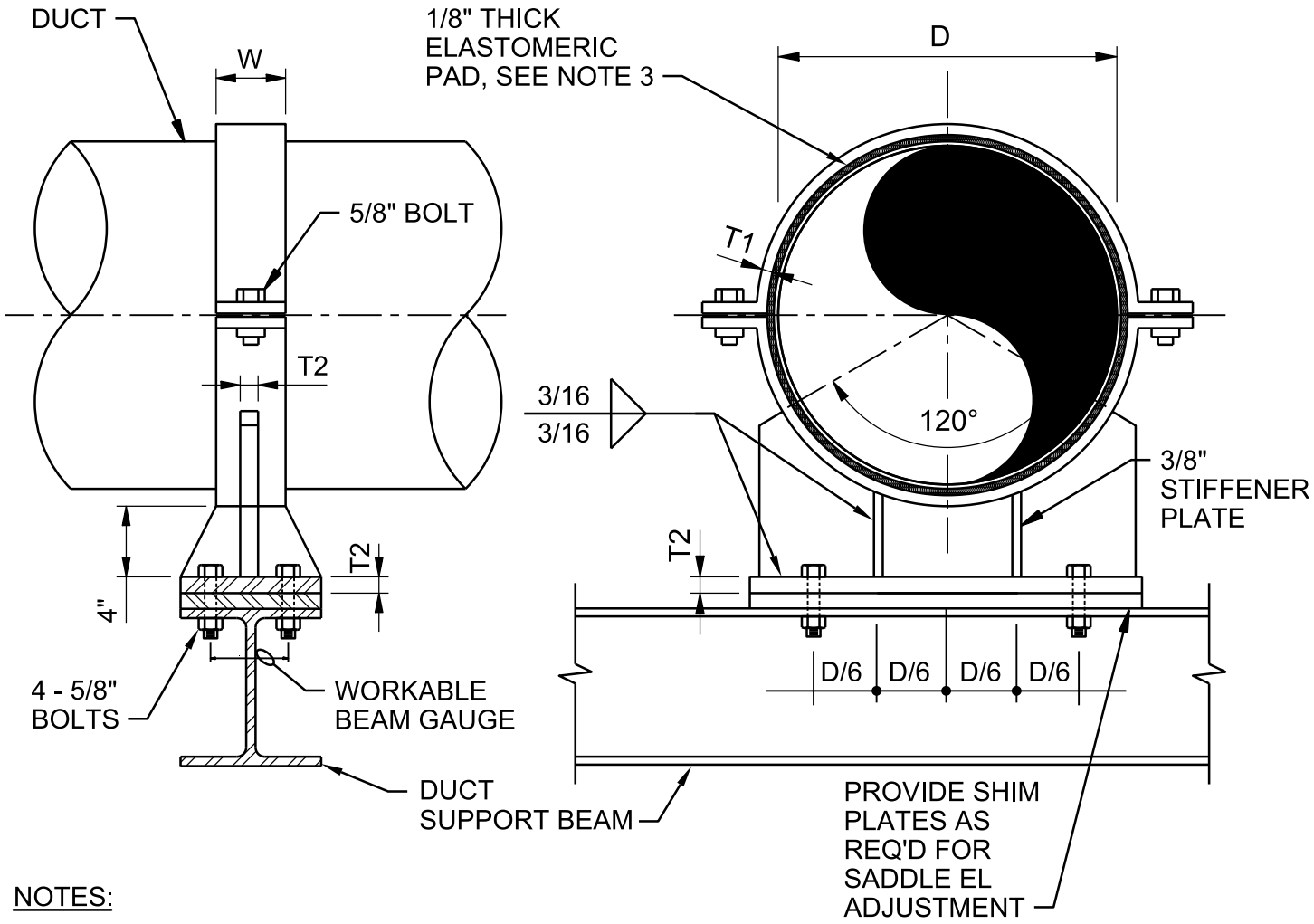

NOTES:

1. PROVIDE SADDLE SUPPORT WHERE SHOWN ON DRAWINGS WITH NECESSARY SUPPORT SPACING REQUIREMENTS MEETING SPECIFICATION 23 31 16.16

2. REFER TO AREA CLASSIFICATION AND MATERIALS SELECTION TABLE FOR MATERIALS OF CONSTRUCTION.

3. WHERE THIS DETAIL IS SPECIFIED AS A "GUIDE" ON PLANS, DO NOT INSTALL ELASTOMERIC PAD, INSTALL 1/4" SPACER BETWEEN PIPE STRAPS AND PROVIDE 1/4" THICK POLYTETRAFLOUROETHYLENE ADHESIVE SHEET ON LOWER PIPE STRAP IN CONTACT WITH DUCT.

TYPICAL DUCT SADDLE SUPPORT

NTS

NATIONAL PARK SERVICE
GRAND CANYON NATIONAL PARK
SOUTH RIM

2331-884

© JACOBS

Jacobs

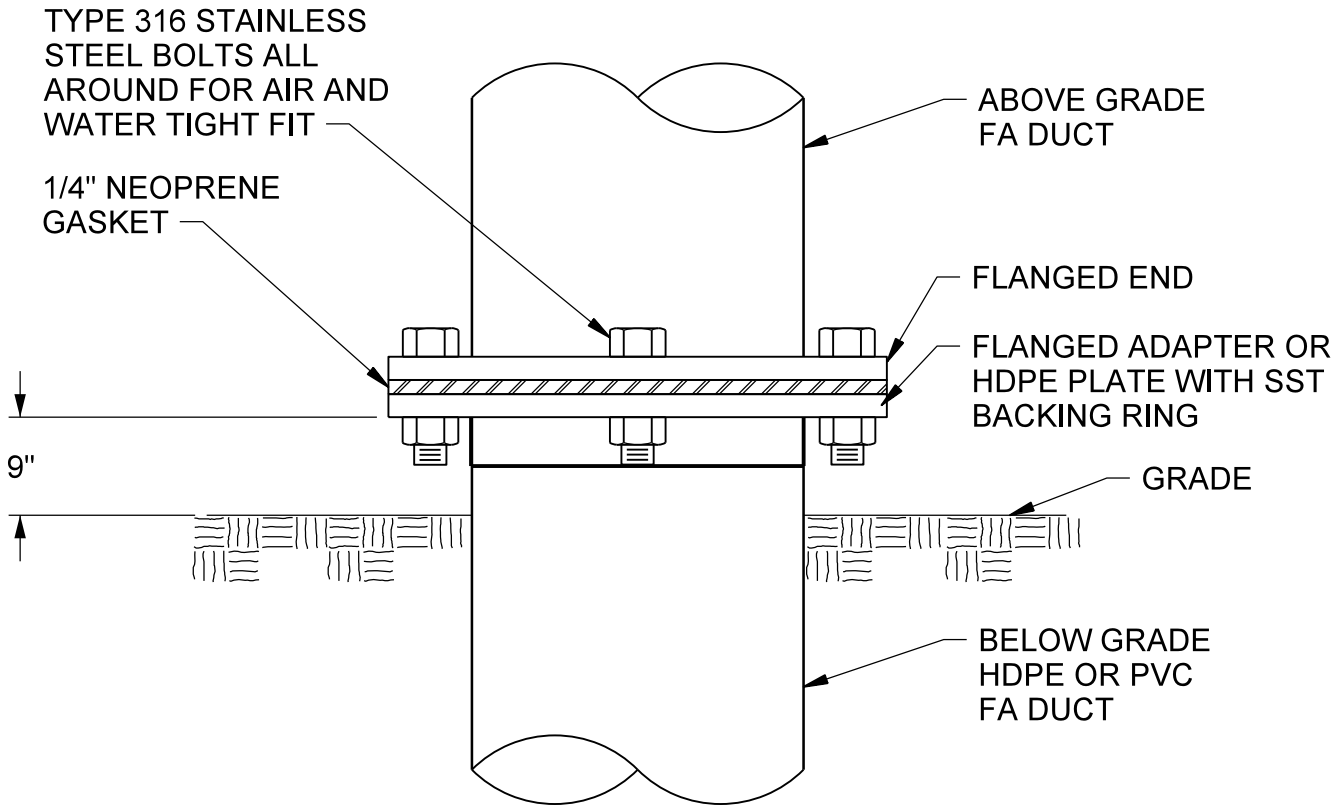

NOTES:

1. INSIDE DIAMETER OF ABOVE GROUND FA DUCT AND HDPE OR PVC SHALL MATCH, UNLESS NOTED OTHERWISE.

2. WHEN HDPE OR PVC AND ABOVE GROUND FA DUCT SIZES DO NOT MATCH, PROVIDE FLANGE ADAPTER WITH MATCHING BOLT PATTERN.

3. AT INDOOR LOCATIONS, SHEET METAL DUCT SHALL MATCH BELOW GRADE DUCT IN TERMS OF FLANGE AND BOLT PATTERN.

4. VERTICAL DUCT ABOVE CONNECTION SHALL BE SUPPORTED TO PREVENT UNDUE STRESS ON FLANGED CONNECTION.

TYPICAL ABOVE GROUND TO HDPE OR PVC FOUL AIR DUCT CONNECTION

NTS

NATIONAL PARK SERVICE
GRAND CANYON NATIONAL PARK
SOUTH RIM

2331-889

© JACOBS

Jacobs

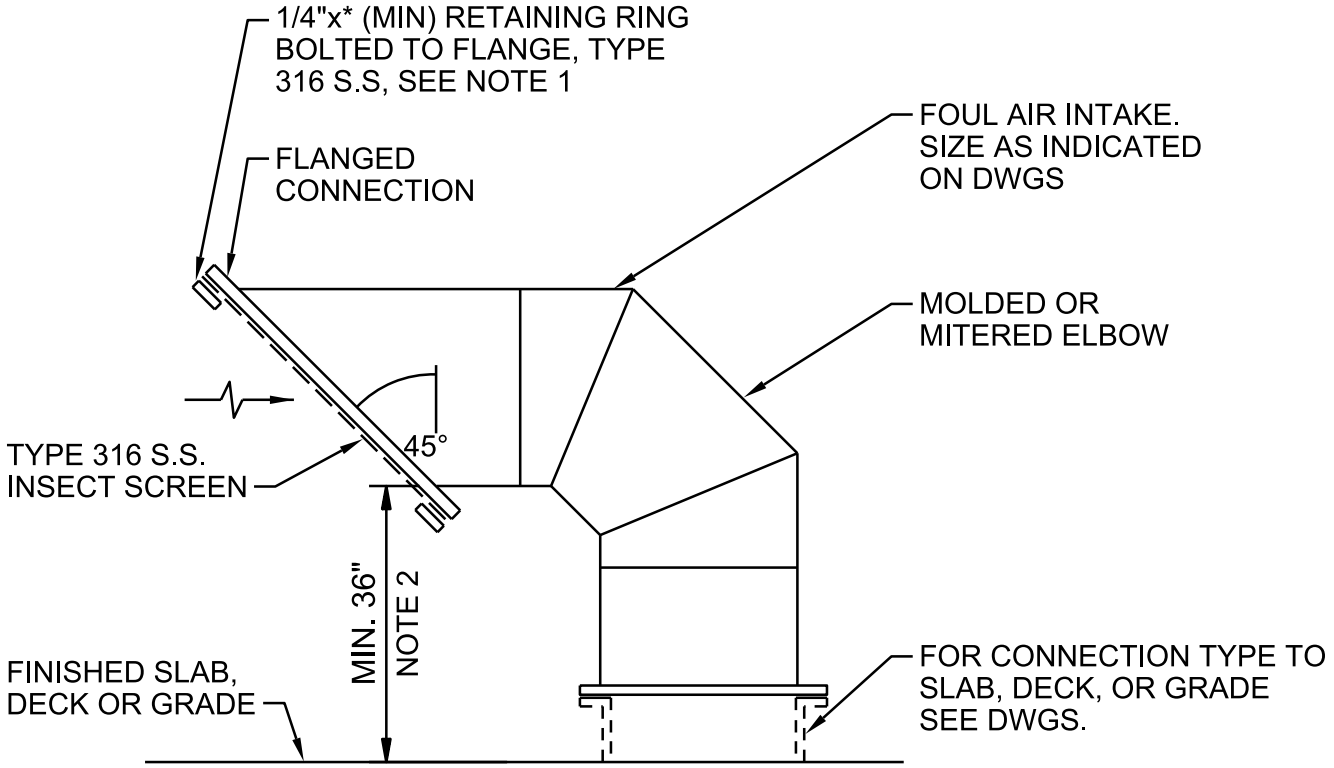

NOTES:

1. PROVIDE RING WITH INSIDE DIAMETER TO PRODUCE SPECIFIED AIR FLOW AS PART OF HVAC BALANCING.

2. MINIMUM HEIGHT OF 36" FOR EXTERIOR LOCATIONS. OTHERWISE 12" FOR INDOORS.

TYPICAL FOUL AIR INTAKE ASSEMBLY

NTS

NATIONAL PARK SERVICE
GRAND CANYON NATIONAL PARK
SOUTH RIM

2331-890

© JACOBS

Jacobs

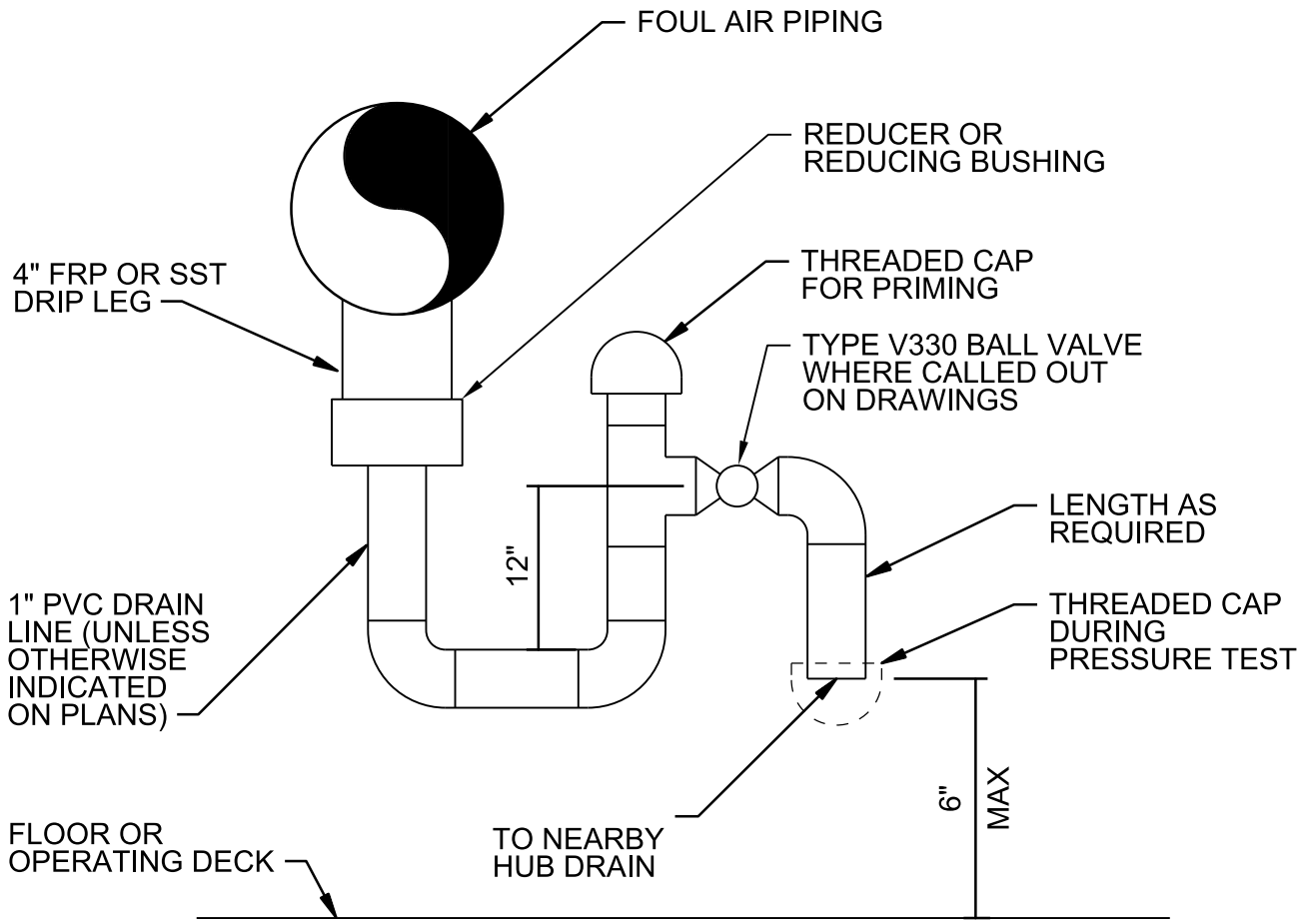

NOTES:

1. DETAIL TAILORED TO FRP DUCT. SIMILAR FOR STAINLESS STEEL LINED DUCT SYSTEM.
2. COAT EXPOSED PVC PIPING FOR UV PROTECTION.
3. INSULATE P-TRAP SECTION ONLY FOR OUTDOOR LOCATION.

VENT GAS TRAP AND DRAIN

NTS

NATIONAL PARK SERVICE
GRAND CANYON NATIONAL PARK
SOUTH RIM

2331-898

© JACOBS

Jacobs

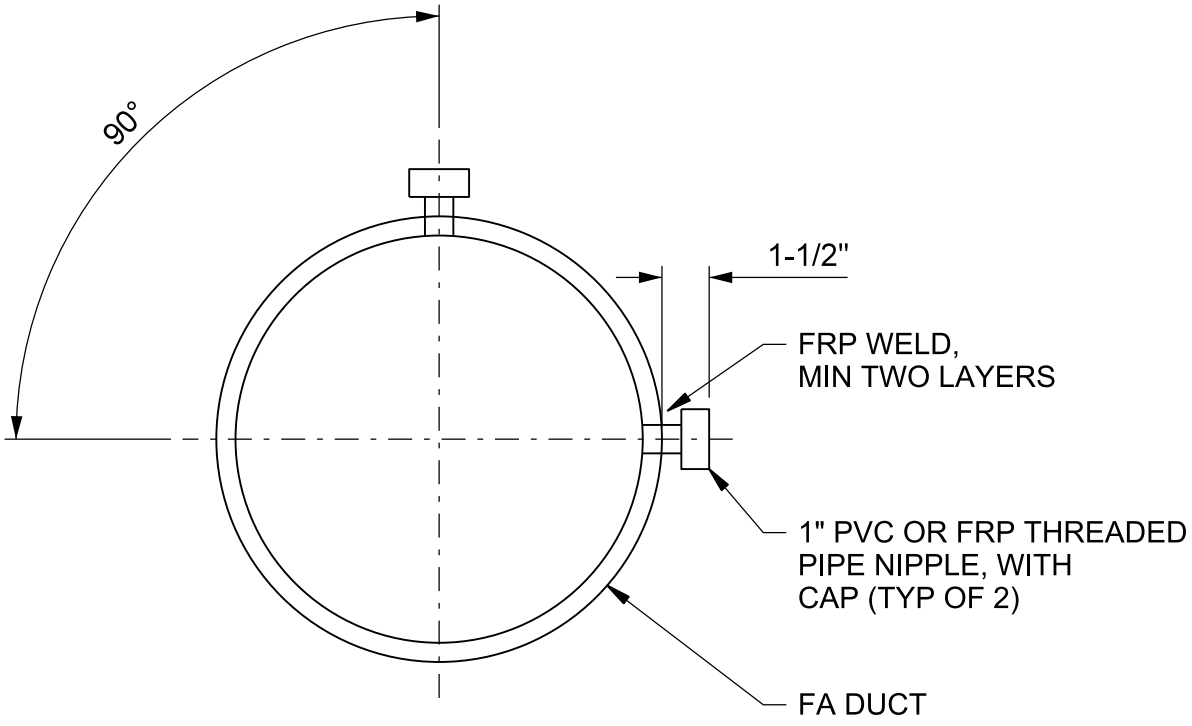

NOTES:

1. INSTALL TEST PORT WITH A MINIMUM LENGTH OF 3 DUCT DIAMETERS OF STRAIGHT DUCT UPSTREAM AND MINIMUM OF 1 DUCT DIAMETER OF STRAIGHT DUCT DOWNSTREAM.

2. AS CONSTRUCTED EACH PORT MUST BE ABLE TO FREELY PASS A SPECIFIED PITOT TUBE.

3. WHERE POSSIBLE ON HORIZONTAL DUCT RUNS DO NOT INSTALL TEST PORTS WITHIN 45 DEGREES OF THE DUCT INVERT.

TEST PORT

NTS

NATIONAL PARK SERVICE
GRAND CANYON NATIONAL PARK
SOUTH RIM

2331-899

© JACOBS

Jacobs

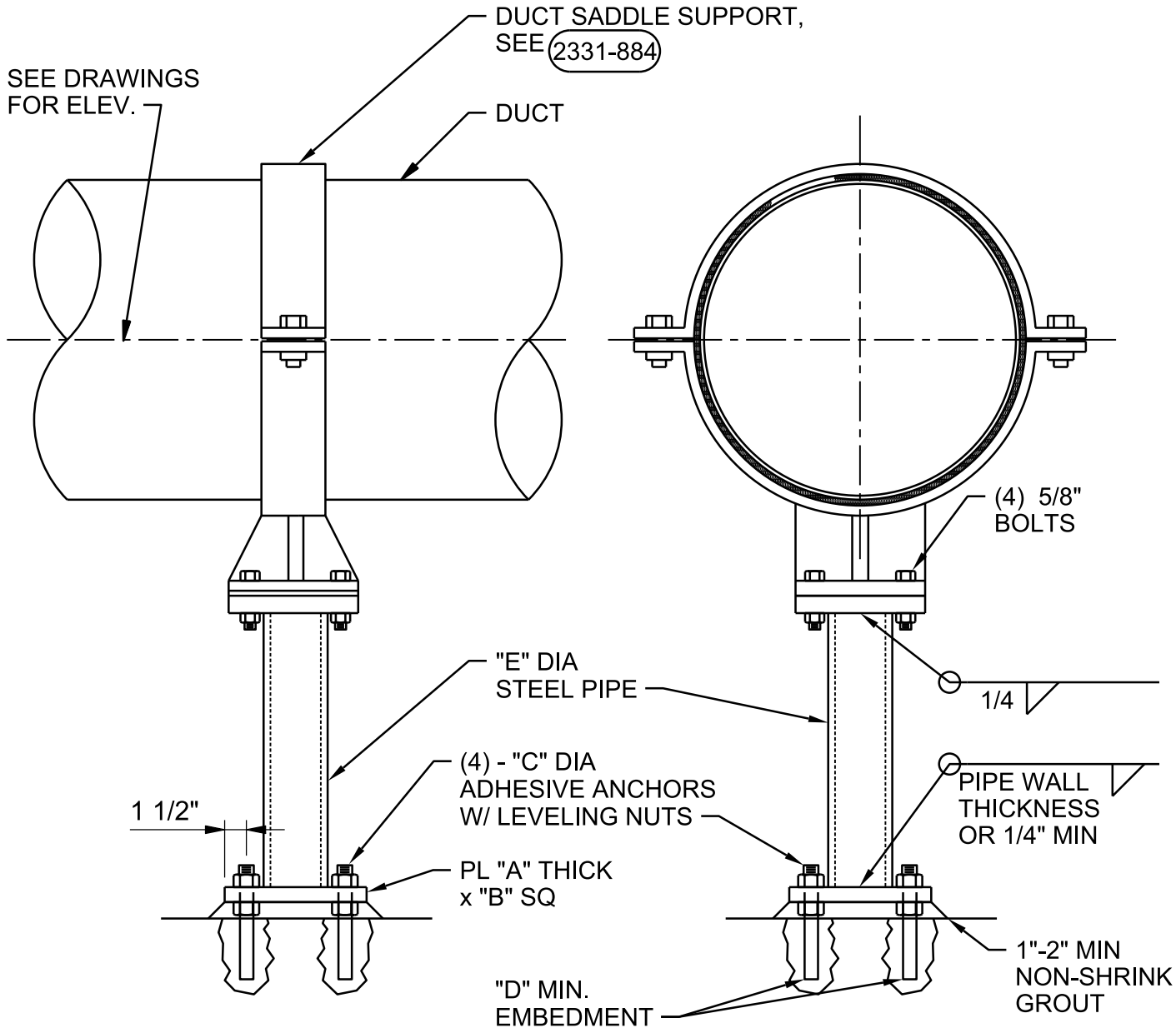

NOTES:

1. REFER TO AREA CLASSIFICATION AND MATERIALS SELECTION TABLE FOR MATERIALS OF CONSTRUCTION.

2. DUCT SUPPORT SHOWN IS INDICATIVE. CONTRACTOR'S DESIGN IN ACCORDANCE WITH SECTION 40 05 15 SHALL INDICATE DIMENSIONS FOR COMPONENTS.

DUCT SUPPORT - GRADE MOUNTED

NTS

NATIONAL PARK SERVICE
GRAND CANYON NATIONAL PARK
SOUTH RIM

2331-900

© JACOBS

Jacobs

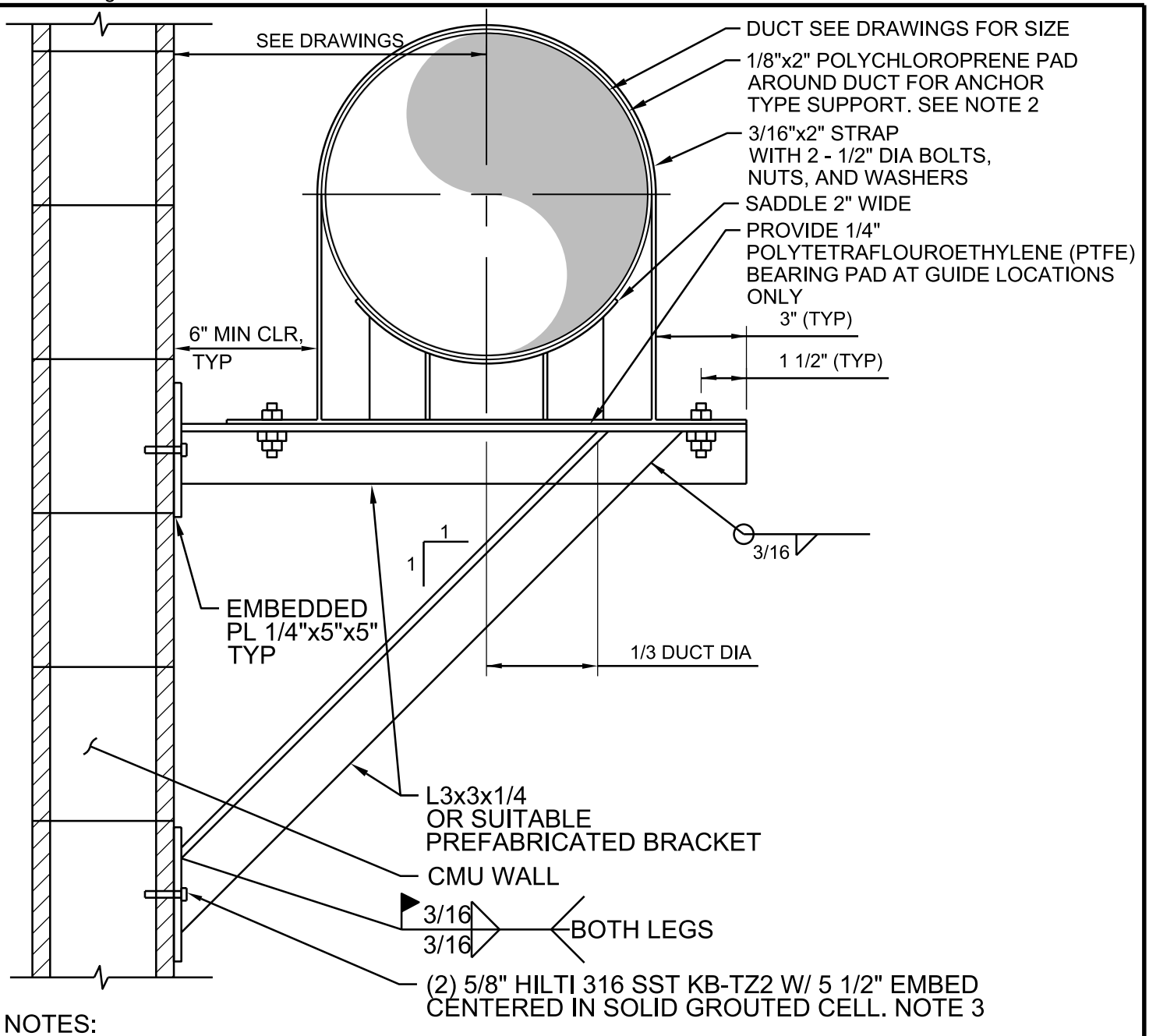

NOTES:

1. REFER TO AREA CLASSIFICATION AND MATERIALS SELECTION TABLE FOR MATERIALS OF CONSTRUCTION.
2. AT GUIDE SUPPORT TYPE LOCATIONS PROVIDE OVERSIZED STRAP TO ALLOW 1/8" CLEARANCE AROUND DUCT AND 1/4" THK X BEAM WIDTH PTFE BEARING PAD. AT ANCHOR SUPPORT TYPE LOCATIONS PROVIDE 1/4" X BEAM WIDTH POLYCHLOROPRENE PAD ALL AROUND DUCT AND TIGHTEN STRAP. SEE PLANS FOR SUPPORT TYPE.
3. SUBMIT FINAL DESIGN AND CALCULATIONS FOR SUPPORT AND ANCHORAGE AS SPECIFIED.

DUCT SUPPORT FOR HORIZONTAL ROUND DUCT

NTS

DETAIL 1 OF 2

NATIONAL PARK SERVICE
GRAND CANYON NATIONAL PARK
SOUTH RIM

2331-901

© JACOBS

Jacobs

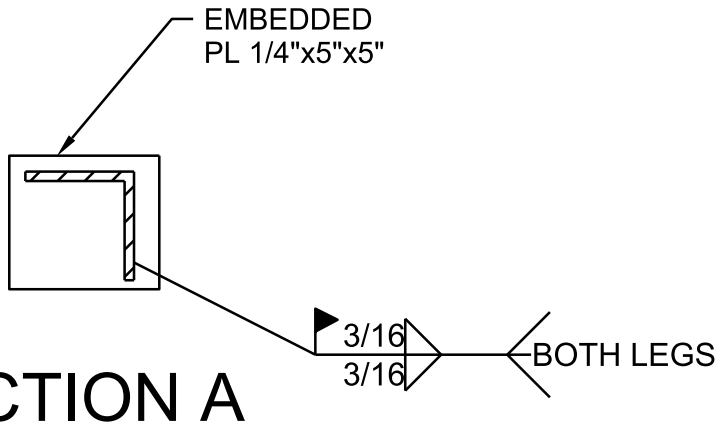

SECTION A

NTS

NOTES:

1. REFER TO MATERIAL SELECTION TABLE AND AREA CLASSIFICATION TABLE FOR MATERIAL OF CONSTRUCTION.

2. AT GUIDE SUPPORT TYPE LOCATIONS PROVIDE OVERSIZED STRAP TO ALLOW 1/8" CLEARANCE AROUND DUCT AND 1/4" THK X BEAM WIDTH POLYTETRAFLOUROETHYLENE BEARING PAD. AT ANCHOR SUPPORT TYPE LOCATIONS PROVIDE 1/4" X BEAM WIDTH POLYCHLOROPRENE PAD ALL AROUND DUCT AND TIGHTEN STRAP. SEE PLANS FOR SUPPORT TYPE.

3. SUBMIT FINAL DESIGN AND CALCULATIONS FOR SUPPORT AND ANCHORAGE AS SPECIFIED.

DUCT SUPPORT FOR HORIZONTAL ROUND DUCT

NTS

DETAIL 2 OF 2

NATIONAL PARK SERVICE
GRAND CANYON NATIONAL PARK
SOUTH RIM

2331-901

© JACOBS

Jacobs

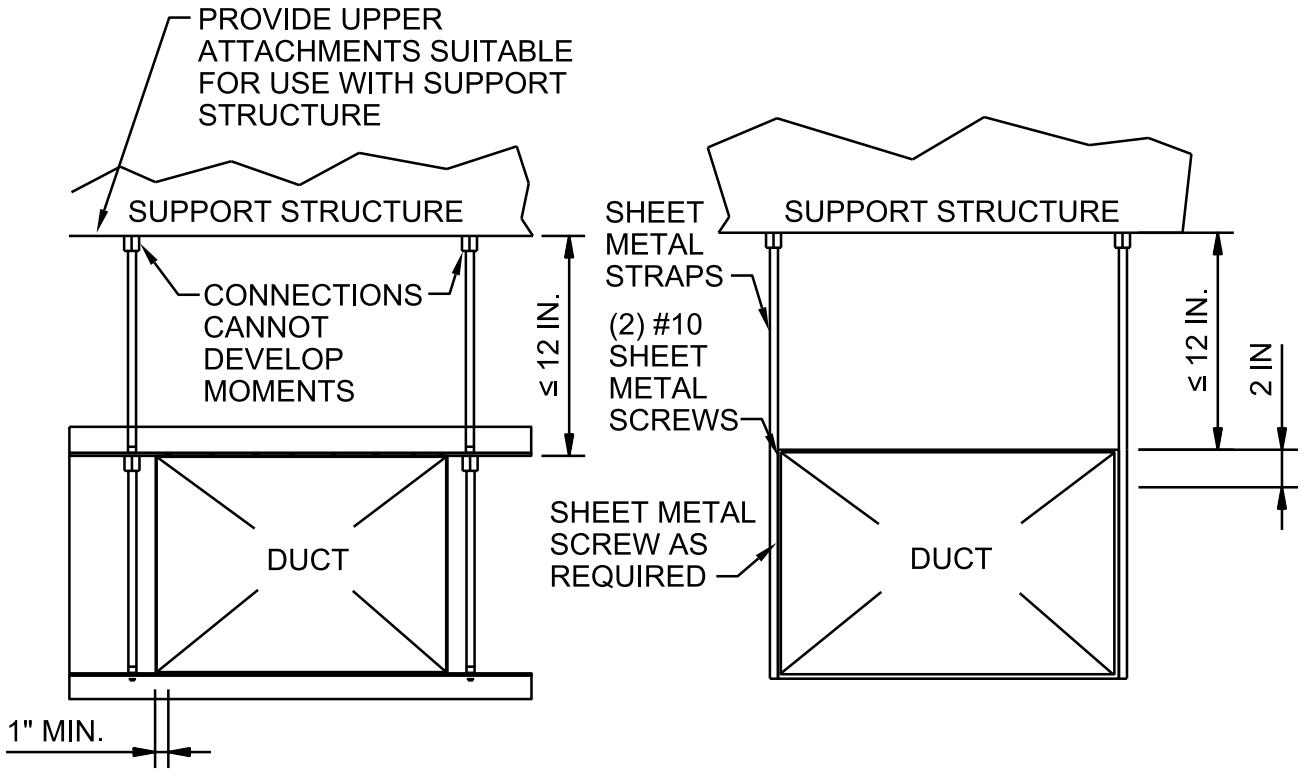

NOTES:

1. PROVIDE UPPER ATTACHMENTS, SUPPORTS, AND SMACNA REQUIREMENTS.
2. MAINTAIN HANGER LENGTH OF LESS THAN 12" WHERE POSSIBLE.

DUCT SUPPORT FOR HORIZONTAL RECTANGULAR DUCT

NTS

NATIONAL PARK SERVICE
GRAND CANYON NATIONAL PARK
SOUTH RIM

2331-902

© JACOBS

Jacobs

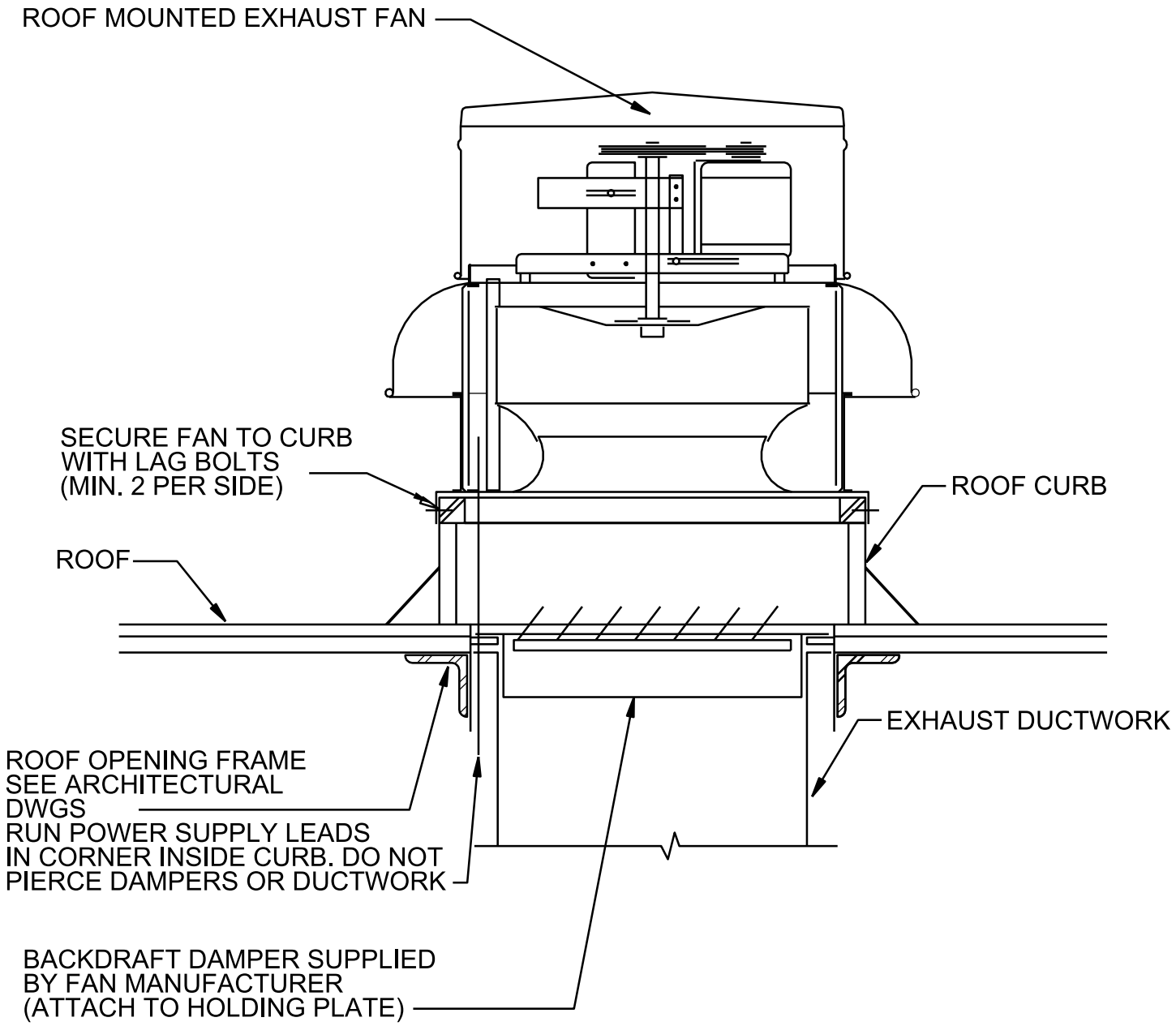

TYPICAL ROOF MOUNTED EXHAUST FAN

NTS

NATIONAL PARK SERVICE
GRAND CANYON NATIONAL PARK
SOUTH RIM

2334-190

© JACOBS

Jacobs

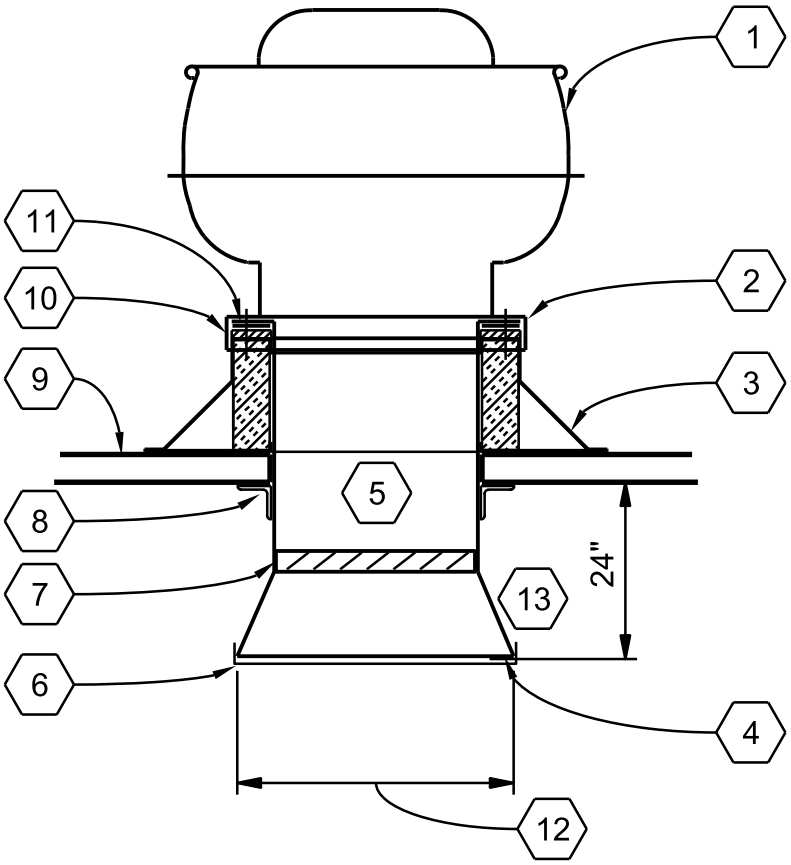

1. FAN
2. PROVIDE 1" MINIMUM FLANGE ON SLEEVE
3. PRE-FABRICATED ROOF CURB. COORDINATE SLOPE TO MATCH ROOF
4. TERMINATE DUCT WITH MESH SCREEN, MIN 70% FREE AREA, SCREEN MATERIAL TO MATCH DUCT
5. ROOF OPENING AS REQUIRED BY EQUIPMENT MANUFACTURER
6. SHEET METAL SLEEVE
7. PROVIDE BACKDRAFT DAMPER WHERE INDICATED ON DRAWINGS
8. ROOF
9. FASTEN SLEEVE FLANGE AND FAN TO CRB
10. RUBBER PAD
11. INTAKE AREA EQUAL TO A MINIMUM OF TWO EXHAUST AIR DUCT AREAS
12. 30°

NOTES

A. REFER TO ARCHITECTURAL DRAWINGS FOR ROOF CONSTRUCTION AND CURB FLASHING.

B. REFER TO STRUCTURAL DRAWINGS FOR ROOF OPENING DETAILS.

ROOF MOUNTED FAN

NTS

NATIONAL PARK SERVICE
GRAND CANYON NATIONAL PARK
SOUTH RIM

2334-301

© JACOBS

Jacobs

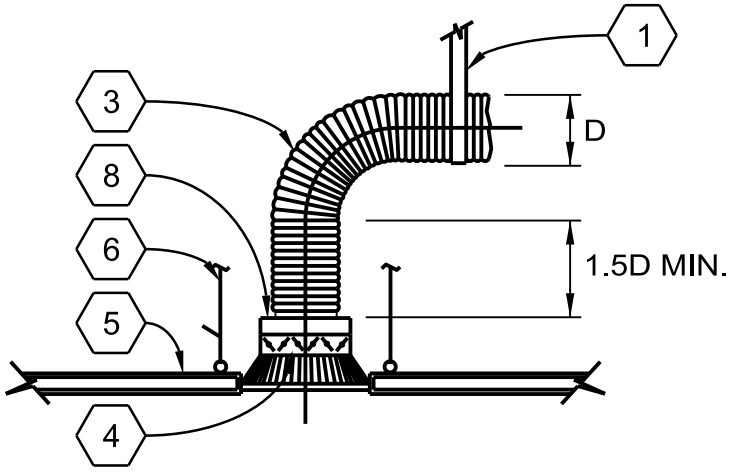

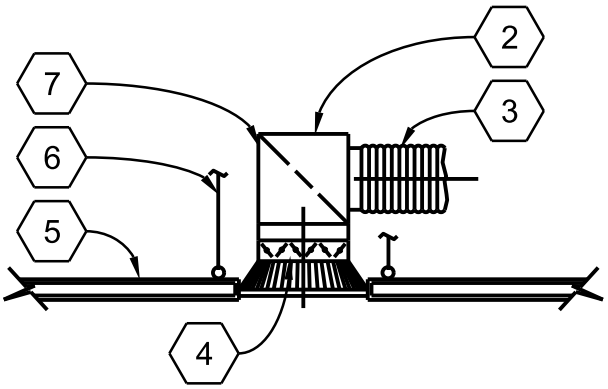

ALTERNATIVE - WHEN SPACE IS LIMITED

1. STRAP HANGER
2. INSULATE SAME AS DUCT WORK
3. FLEX SUPPLY DUCT
4. OPPOSED BLADE DAMPER (WHEN INDICATED ON PLAN)
5. CEILING
6. HANGER
7. PLENUM WITH TURNING VANES
8 ROUND NECK ADAPTOR

CEILING DIFFUSER TAKE-OFFS

NTS

NATIONAL PARK SERVICE
GRAND CANYON NATIONAL PARK
SOUTH RIM

2337-100

© JACOBS

Jacobs

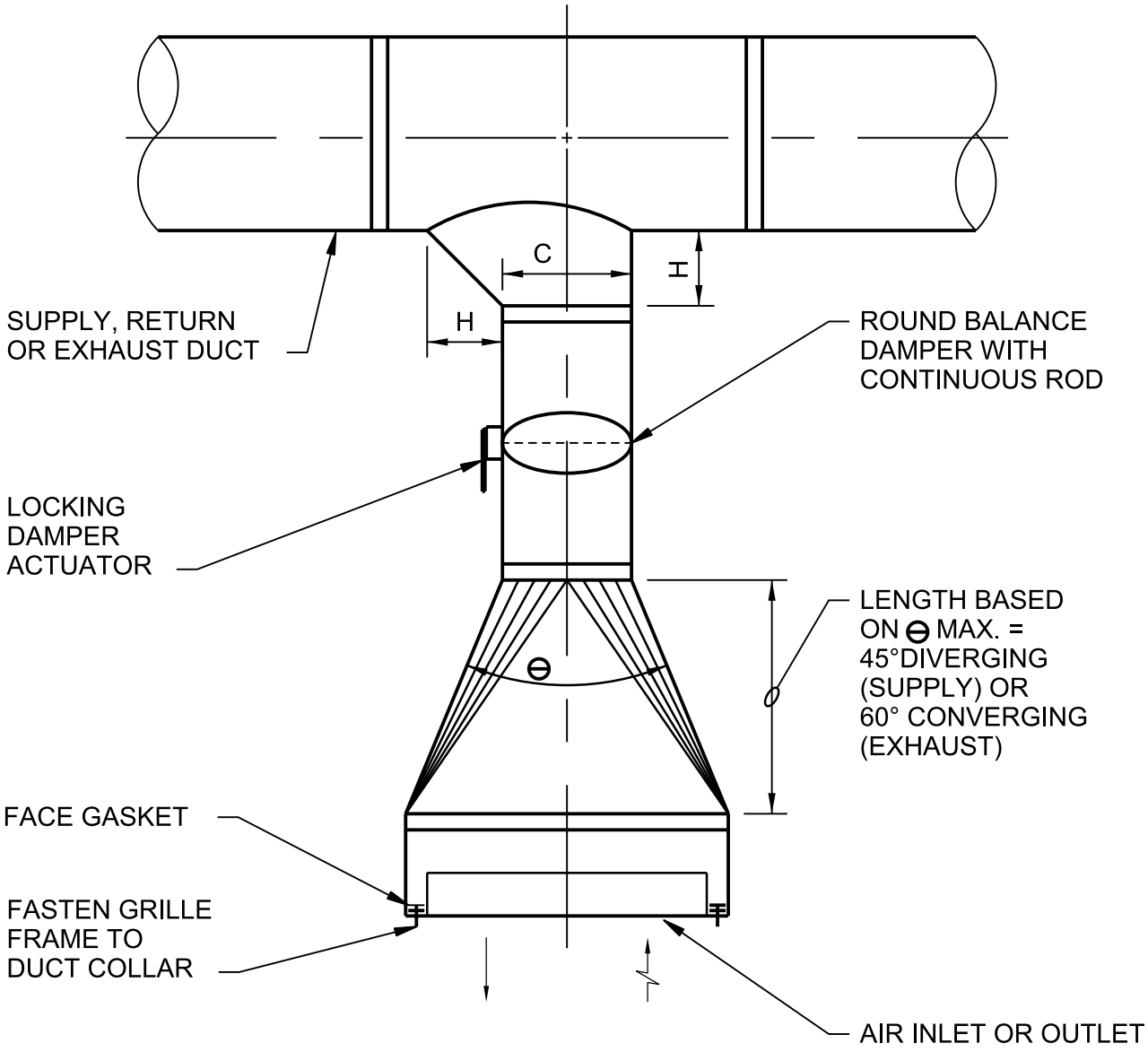

C (INCHES)	H (INCHES)
3 - 8	4
9 - 14	7
15 - 26	10
>26	13

ROUND DUCT MOUNTED AIR OUTLET OR INLET

NTS

NATIONAL PARK SERVICE
GRAND CANYON NATIONAL PARK
SOUTH RIM

2337-802

© JACOBS

Jacobs

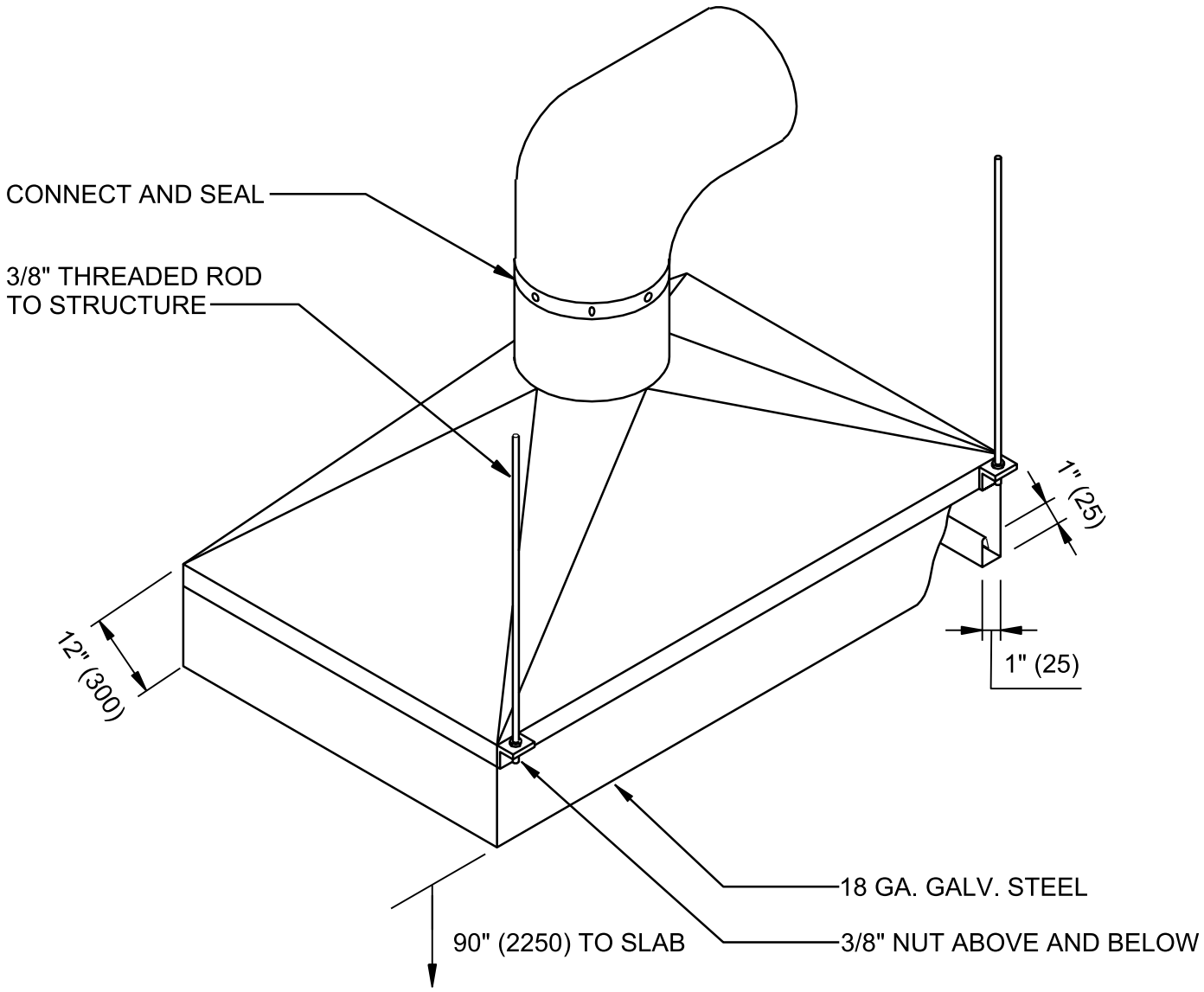

TYPICAL EXHAUST HOOD

NTS

NATIONAL PARK SERVICE
GRAND CANYON NATIONAL PARK
SOUTH RIM

2338-100

© JACOBS

Jacobs

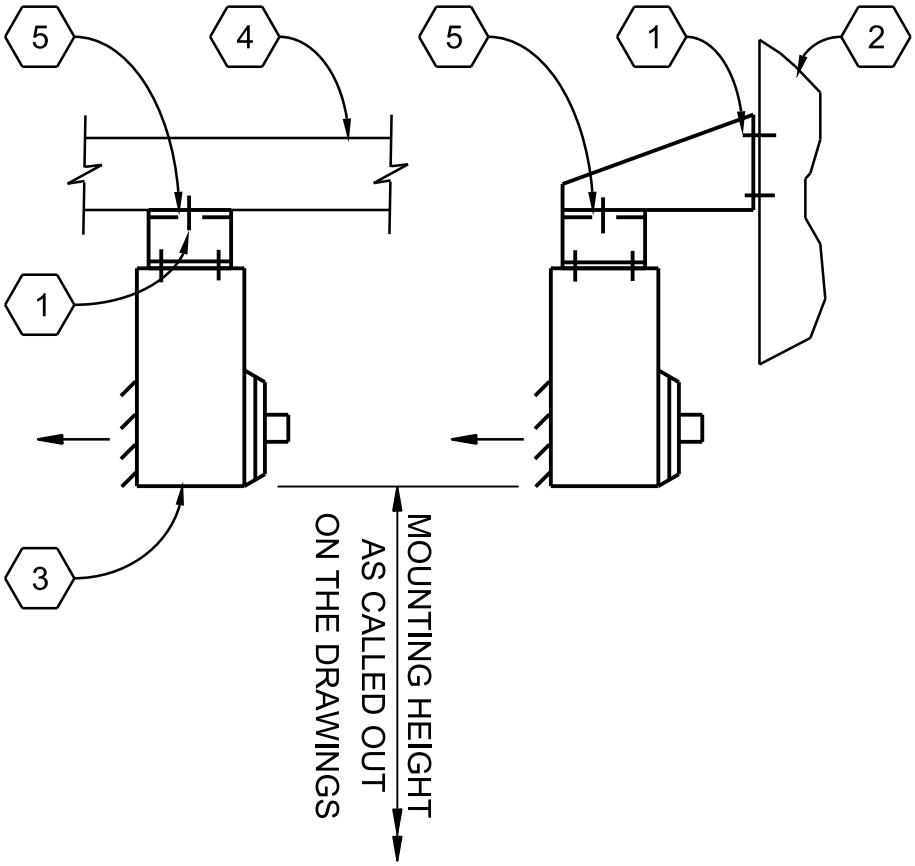

1. FOR CONCRETE, USE 3/8" CONCRETE ANCHORS. FOR WOOD, USE BOLTS 2 1/2" SST LAG
2. WALL
3. UNIT HEATER
4. CEILING OR ROOF
5. MANUFACTURER'S MOUNTING BRACKETS, TYP

NOTE:

A. USE THREADED HANGER RODS ONLY WHERE MANUFACTURER'S MOUNTING BRACKETS ARE NOT PRACTICAL.

UNIT HEATER MOUNTING

NTS

NATIONAL PARK SERVICE
GRAND CANYON NATIONAL PARK
SOUTH RIM

2381-101

© JACOBS

Jacobs

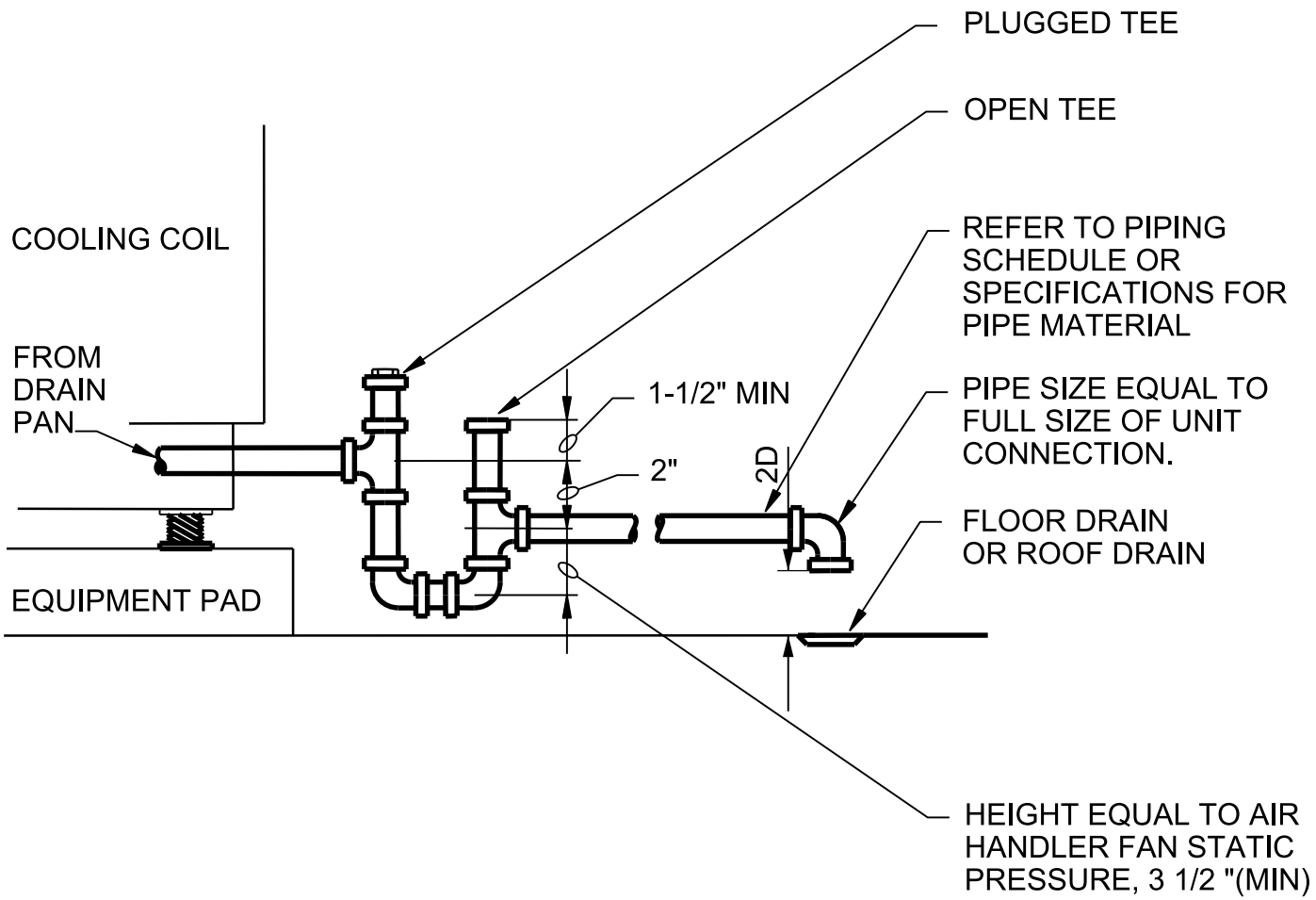

NOTE:

1. EXTERNALLY INSULATE ALL CONDENSATE LINES.
   (SEE PIPING SCHEDULE OR SPECIFICATIONS FOR INSULATION TYPE)

SEE PIPING SCHEDULE OR SPECIFICATIONS FOR INSULATION TYPE

CONDENSATE DRAIN

NTS

NATIONAL PARK SERVICE
GRAND CANYON NATIONAL PARK
SOUTH RIM

2413-100

© JACOBS

Jacobs

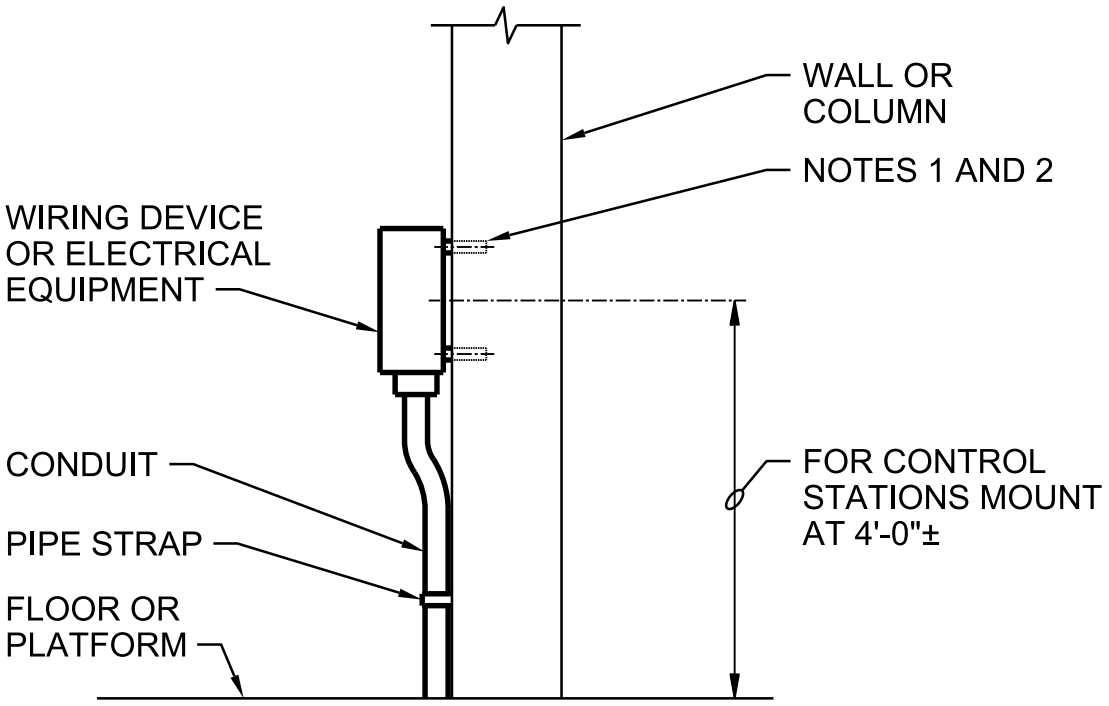

NOTES:

1. MOUNT ENCLOSURE ON 1/2" SPACERS OF 1/2" SCHEDULE 80 PVC CONDUIT.

2. BOXES 6 INCHES SQUARE AND LESS SHALL BE SUPPORTED BY TWO ANCHORS. LARGER BOXES SHALL BE SUPPORTED BY AT LEAST FOUR.

DEVICE MOUNTING WALL OR COLUMN

NTS

NATIONAL PARK SERVICE
GRAND CANYON NATIONAL PARK
SOUTH RIM

2605-002

© JACOBS

Jacobs

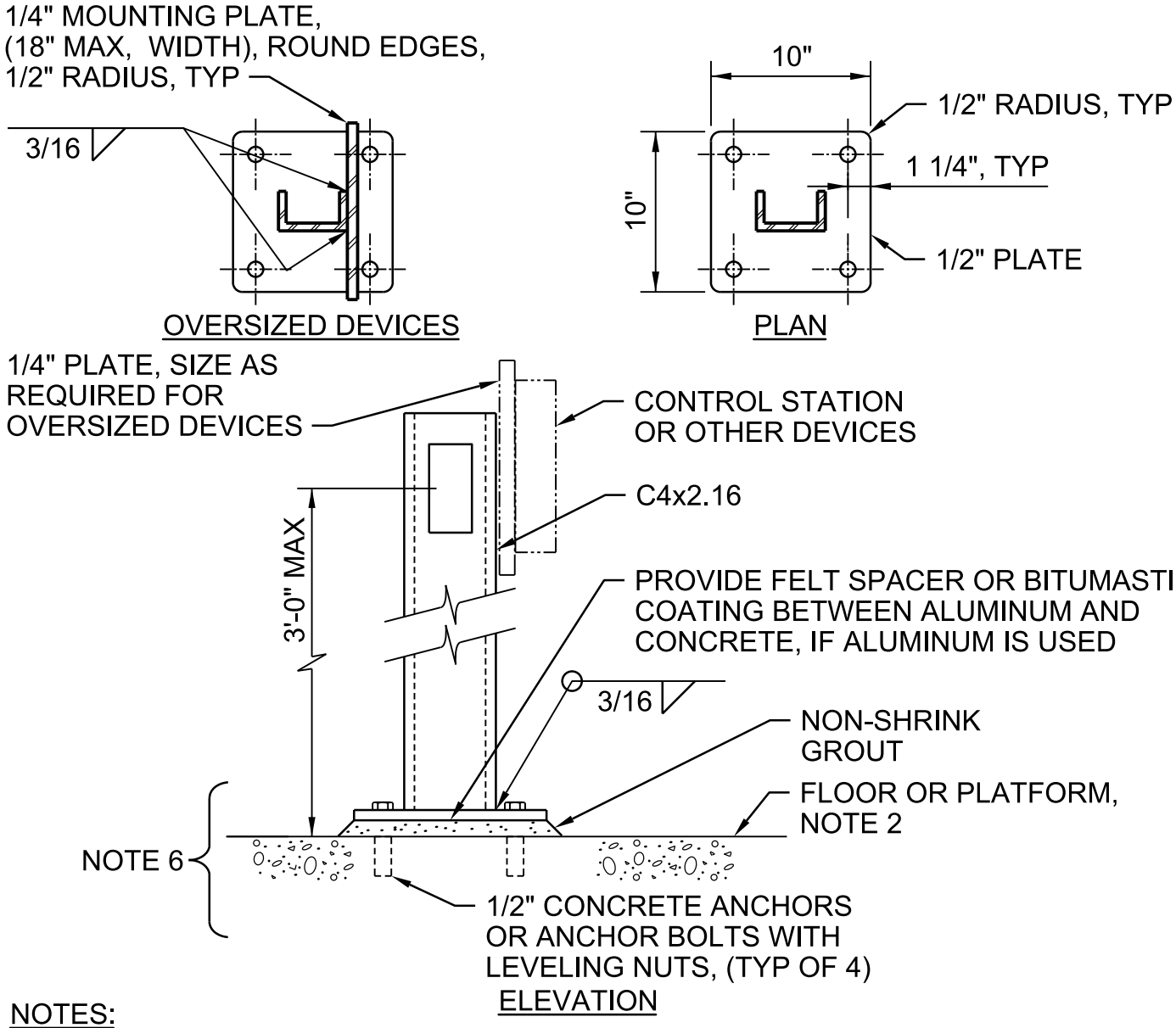

NOTES:

1. USE WASHERS AND SPLIT-LOCK WASHERS UNDER ALL NUTS.
2. FOR YARD LOCATIONS, PROVIDE 2'-0" SQUARE x 6" THICK CONCRETE PAD AT GRADE WITH 3#4 REBAR EACH WAY, CENTERED.
3. CONTROL STATIONS DEVICES AND EQUIPMENT HAVING A FRONTAL AREA NOT GREATER THAN 2'-0" SQ FT SHALL BE PEDESTAL MOUNTED UNLESS OTHERWISE INDICATED.
4. WHERE EQUIPMENT REQUIRES A LARGE BACKPLATE AND A SINGLE SUPPORT LEG IS INSUFFICIENT USE DETAIL, 2605-008b
5. PROVIDE SUNSHIELDS FOR INSTRUMENTS AND CONTROL STATIONS WITH LIGHTS, SEE INSTRUMENTATION AND CONTROL DETAILS.
6. UNLESS OTHERWISE NOTED ON PLAN DRAWINGS.

EQUIPMENT MOUNTING PEDESTAL

NTS

NATIONAL PARK SERVICE
GRAND CANYON NATIONAL PARK
SOUTH RIM

2605-005

© JACOBS

Jacobs

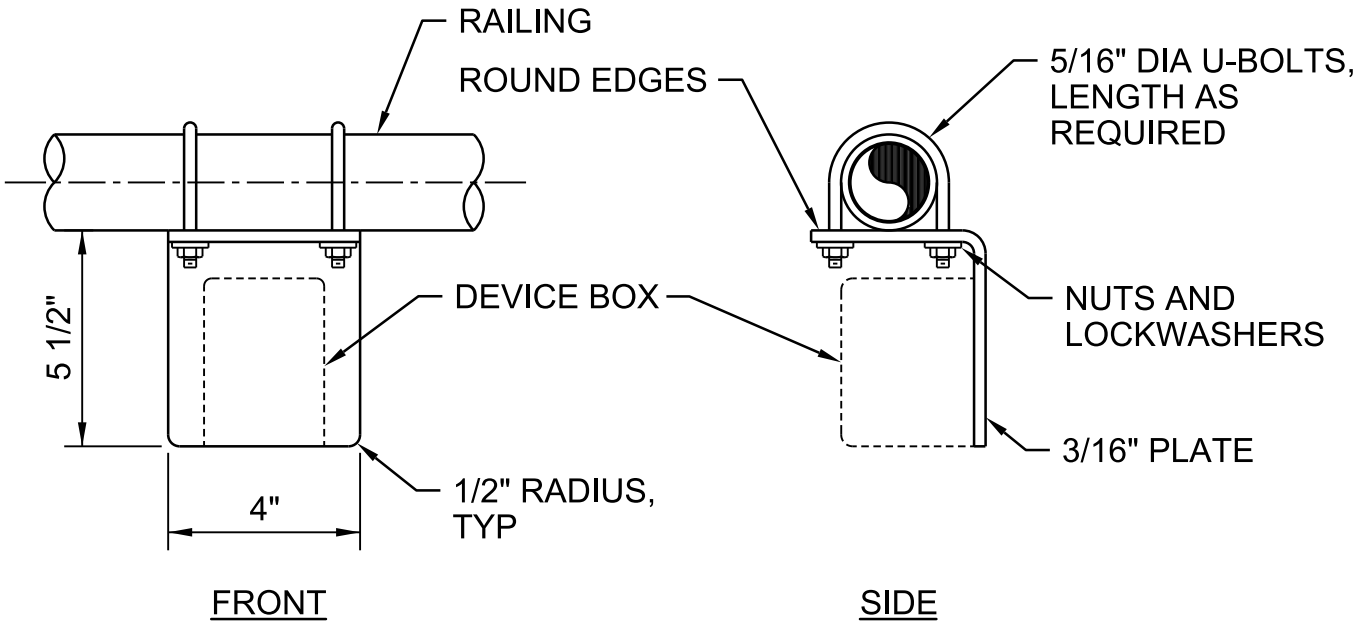

NOTES:

1. AT ALUMINUM RAILING, PROVIDE PROTECTION FOR ALUMINUM IN CONTACT WITH STEEL MEMBERS AND CONNECTIONS PER SPECIFICATIONS.

RAILING MOUNTED EQUIPMENT SUPPORT

NTS

NATIONAL PARK SERVICE
GRAND CANYON NATIONAL PARK
SOUTH RIM

2605-006

© JACOBS

Jacobs

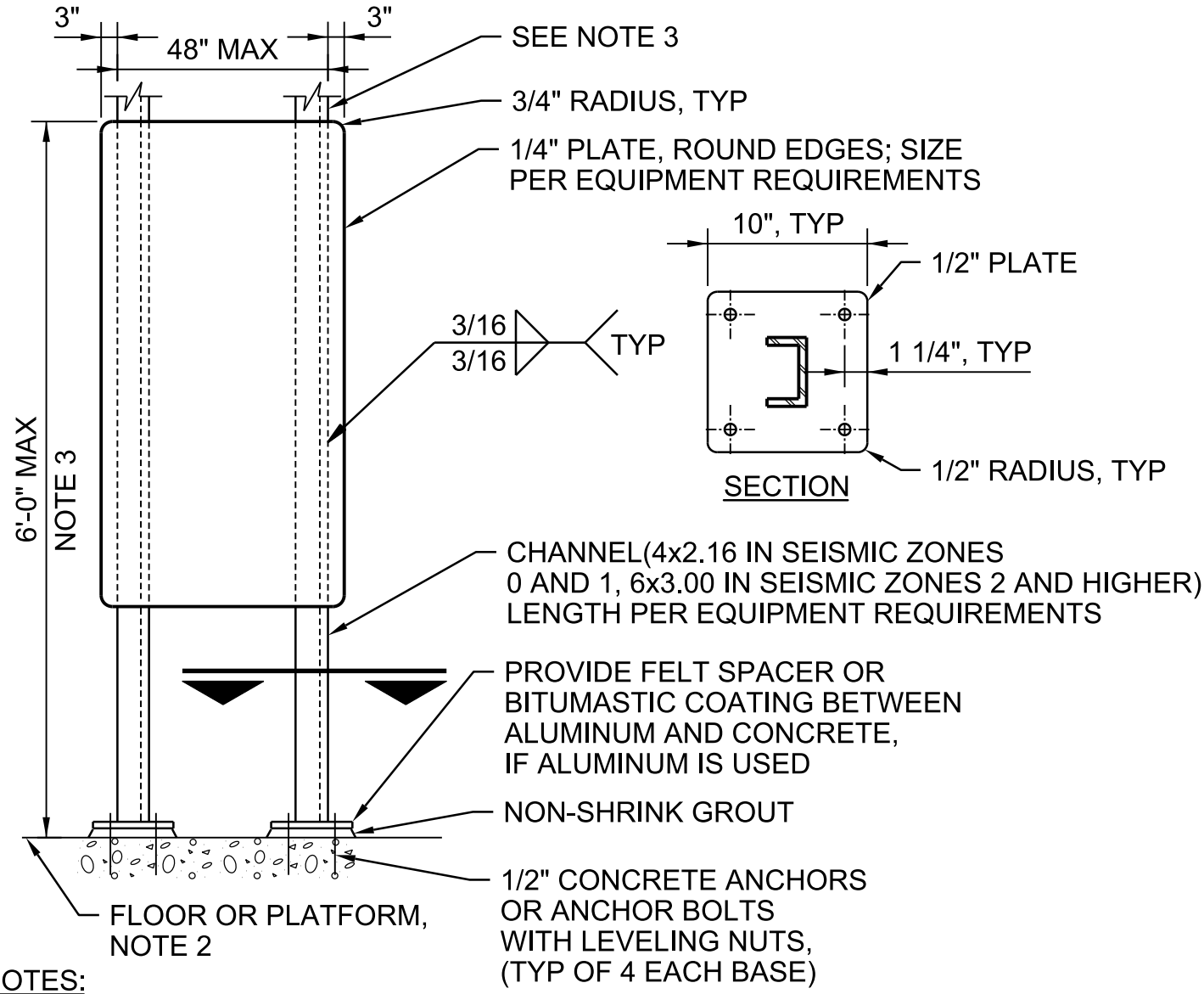

NOTES:

1. USE WASHER AND SPLIT LOCK WASHER UNDER ALL NUTS.

2. FOR YARD LOCATIONS PROVIDE A 6 INCH THICK CONCRETE PAD AT GRADE WITH #4 BAR @ 12" OC EACH WAY, CENTERED. THE PAD SHALL BE 12 INCHES LONGER THAN THE MOUNTING PLATE BY ONE HALF THE HEIGHT OF THE MOUNTING PLATE ABOVE FINISHED GRADE. MINIMUM WIDTH 24 INCHES.

3. FOR HEIGHTS EXCEEDING 5'-0" OR WEIGHT OF MOUNTED EQUIPMENT EXCEEDING 200 LBS, SIZE POSTS AND CONNECTIONS FOR LATERAL LOADS. EXTEND POSTS TO STRUCTURE ABOVE WHERE REQUIRED BY CALCULATION.

4. PROVIDE SUNSHIELD FOR INSTRUMENTS AND CONTROL STATIONS WITH LIGHTS, SEE INSTRUMENTATION AND CONTROL DETAILS.

ELECTRICAL EQUIPMENT SUPPORT

NTS

NATIONAL PARK SERVICE
GRAND CANYON NATIONAL PARK
SOUTH RIM

2605-008

© JACOBS

Jacobs

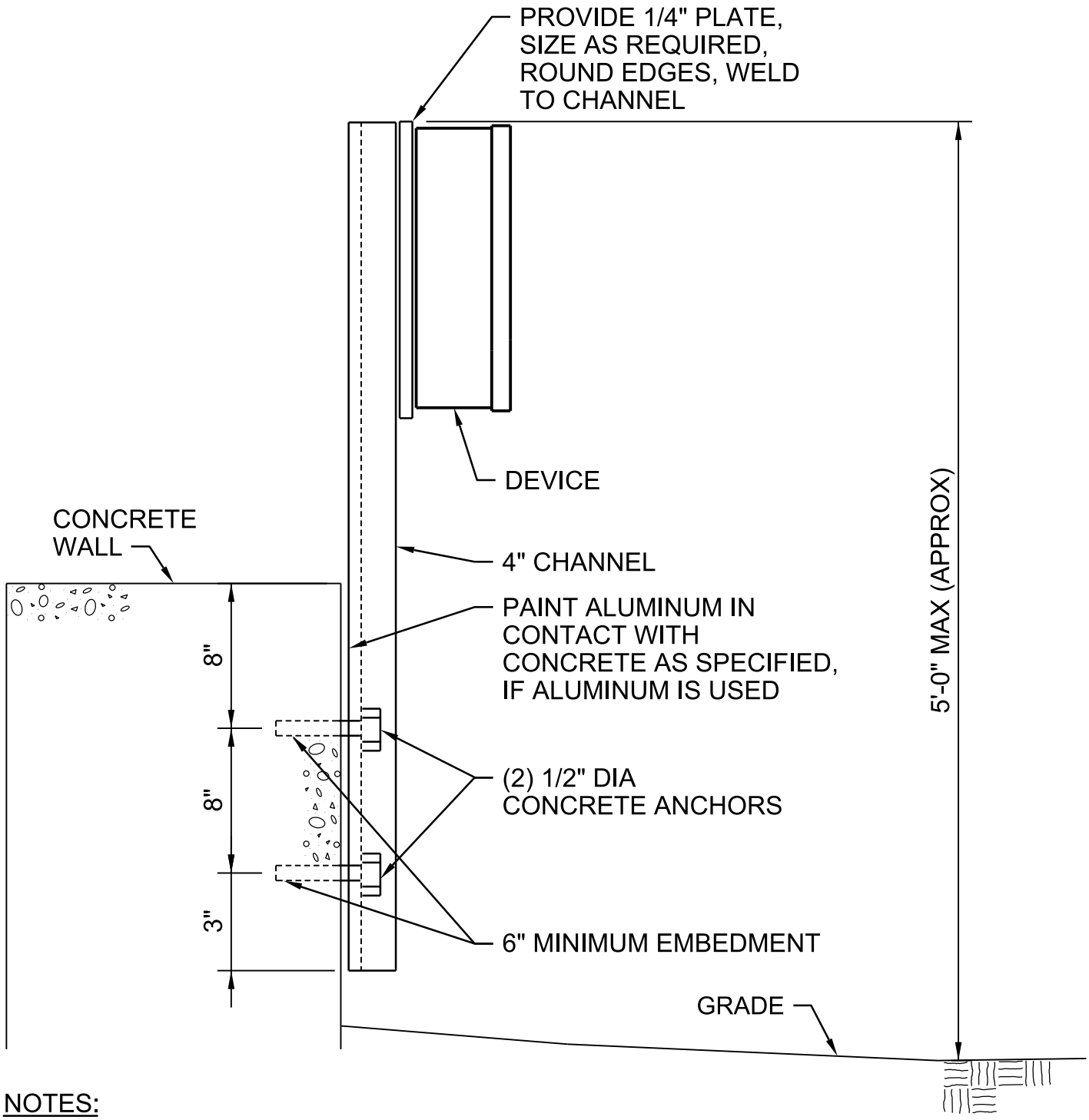

NOTES:

1. EQUIPMENT HAVING A FRONTAL AREA GREATER THAN 3 SQUARE FEET OR WIDER THAN 18 INCHES SHALL BE SUPPORTED BY 2 CHANNELS.

2. USE WASHER AND SPLIT-LOCK WASHERS UNDER ALL NUTS AND BOLTS.

PEDESTAL MOUNTED DEVICE

NTS

NATIONAL PARK SERVICE
GRAND CANYON NATIONAL PARK
SOUTH RIM

2605-012

© JACOBS

Jacobs

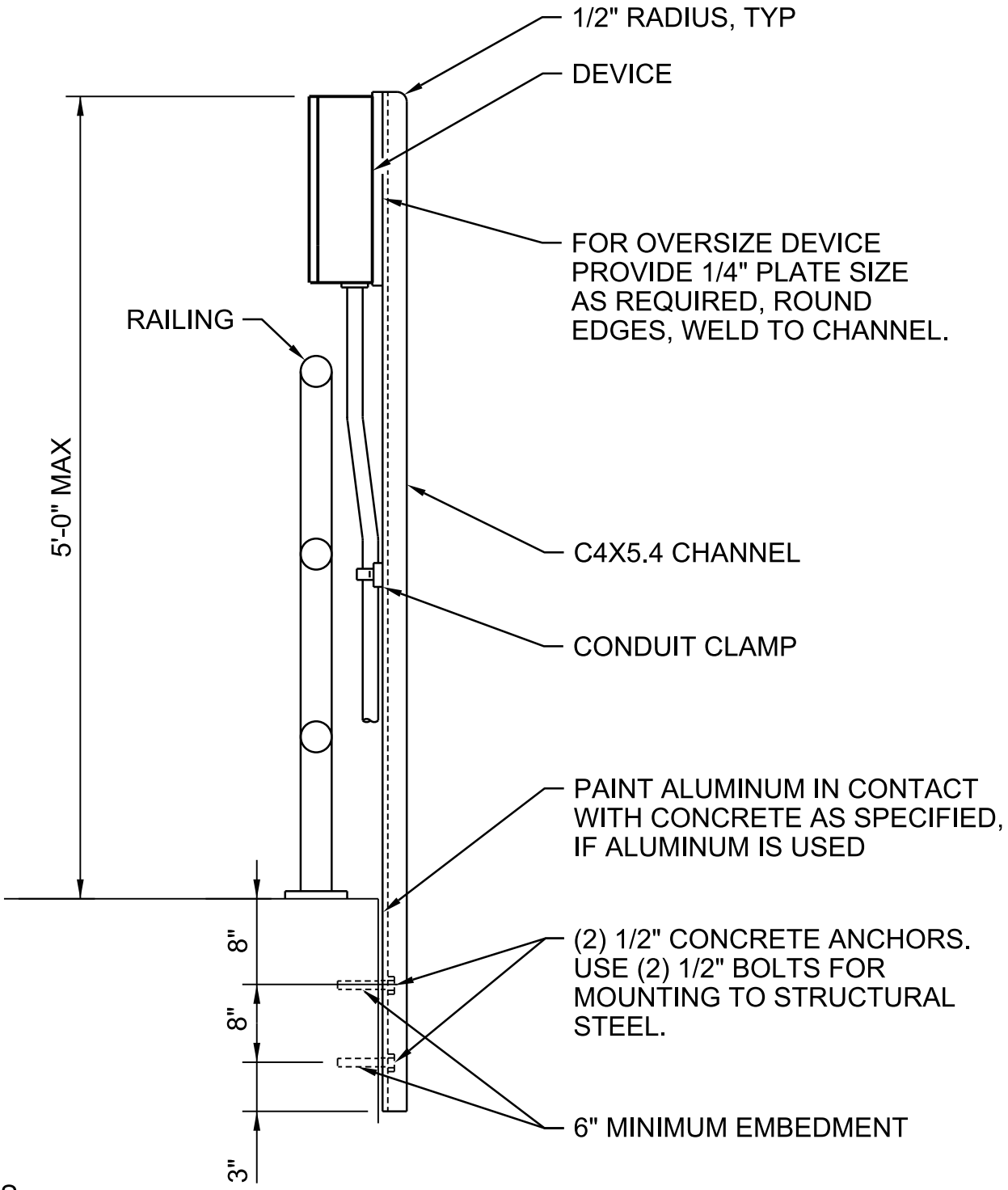

NOTES:

1. EQUIPMENT HAVING A FRONTAL AREA GREATER THAN 3 SQUARE FEET OR WIDER THAN 18 INCHES SHALL BE SUPPORTED BY TWO CHANNELS. INSTALL RING AND SPLIT LOCK WASHERS UNDER ALL NUTS AND BOLTS.

PEDESTAL MOUNTED DEVICE AT RAILING

NTS

NATIONAL PARK SERVICE
GRAND CANYON NATIONAL PARK
SOUTH RIM

2605-013

© JACOBS

Jacobs

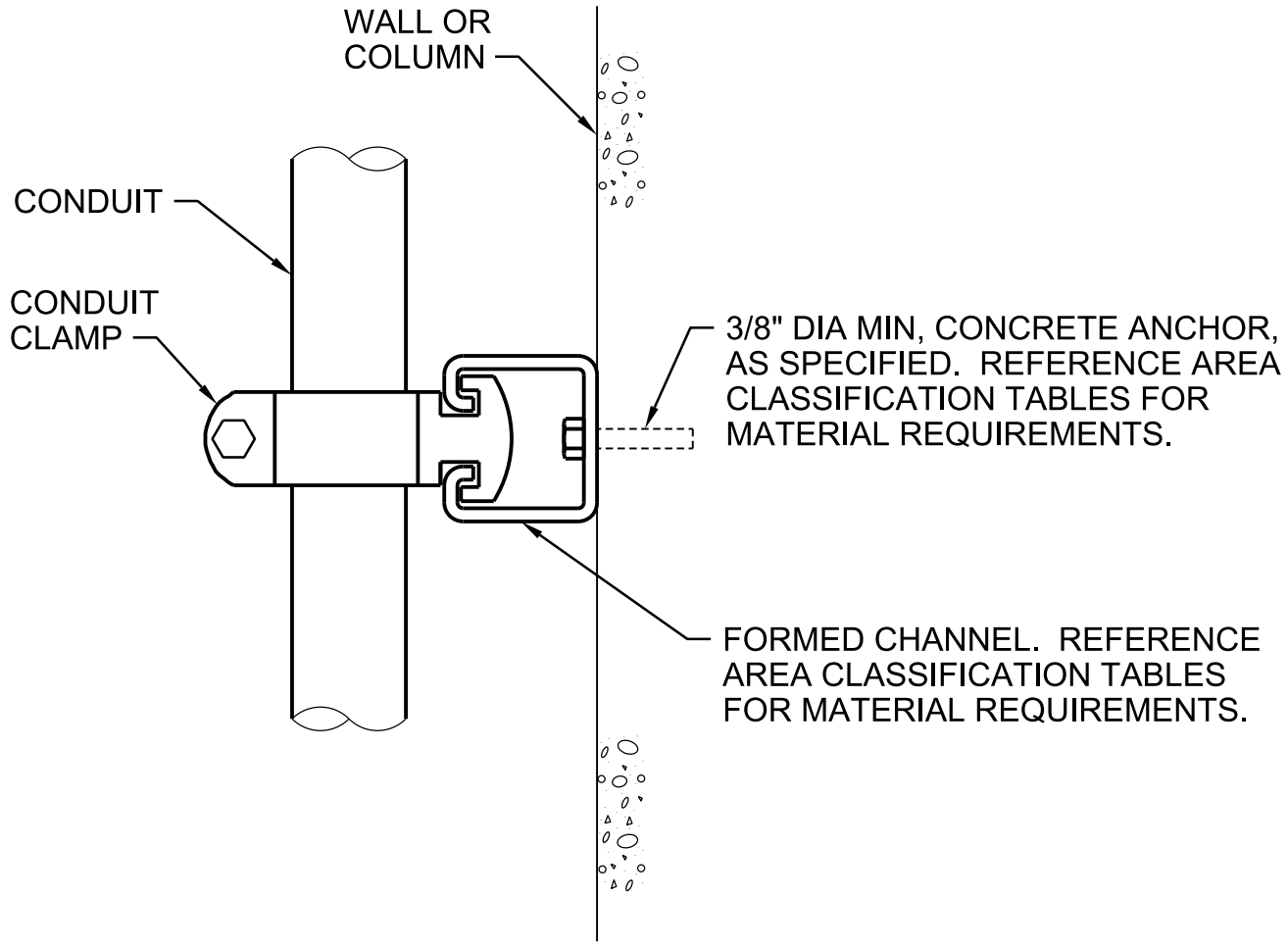

NOTES:

1. THIS DETAIL APPLIES ONLY WHEN THERE IS MORE THAT ONE CONDUIT TO SUPPORT.

CONDUIT SUPPORT ON STRUCTURE

NTS

NATIONAL PARK SERVICE
GRAND CANYON NATIONAL PARK
SOUTH RIM

2605-017

© JACOBS

Jacobs

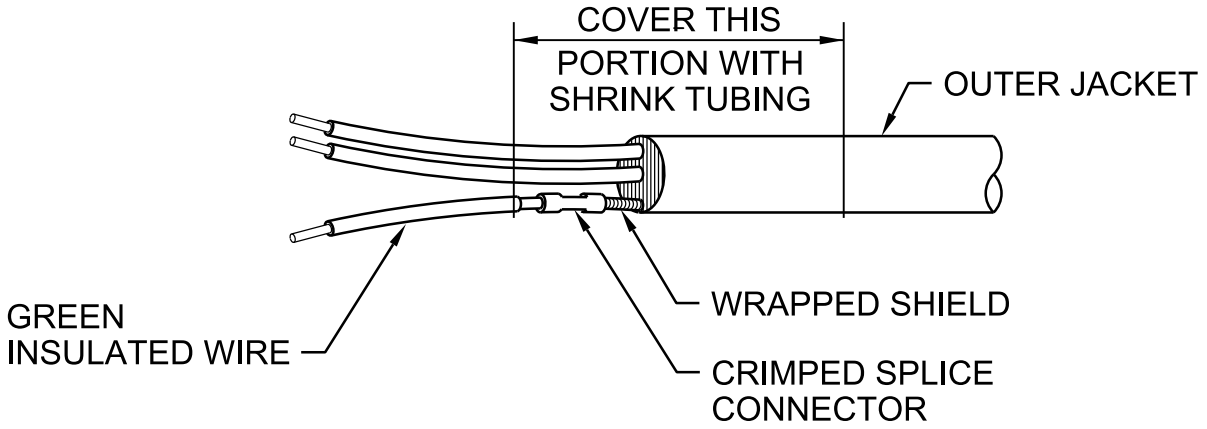

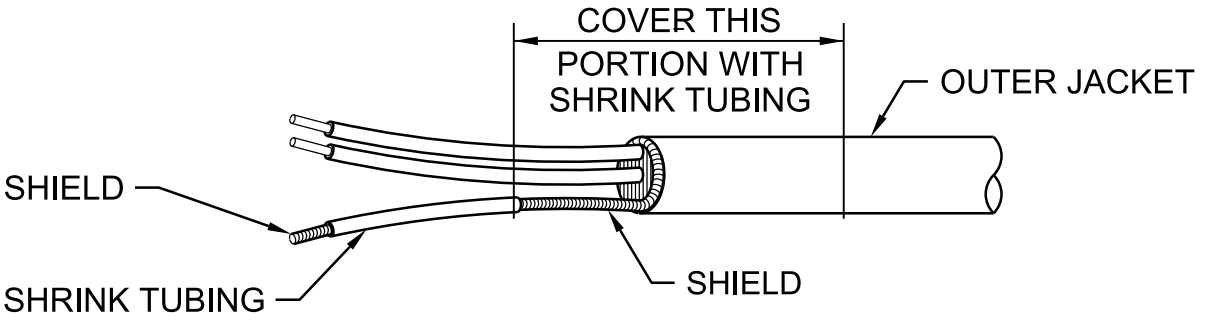

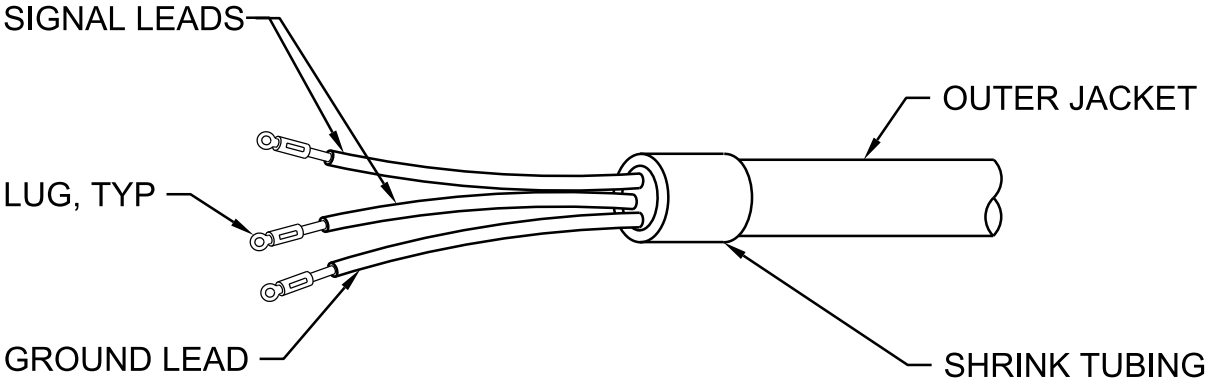

NOTES:

1. ALL SHIELDED INSTRUMENTATION CABLE SHALL BE TERMINATED IN ACCORDANCE WITH THIS DETAIL WHERE GROUNDING IS REQUIRED.

TERMINATION OF SHIELDED INSTRUMENTATION CABLE

NTS

NATIONAL PARK SERVICE
GRAND CANYON NATIONAL PARK
SOUTH RIM

2605-100

© JACOBS

Jacobs

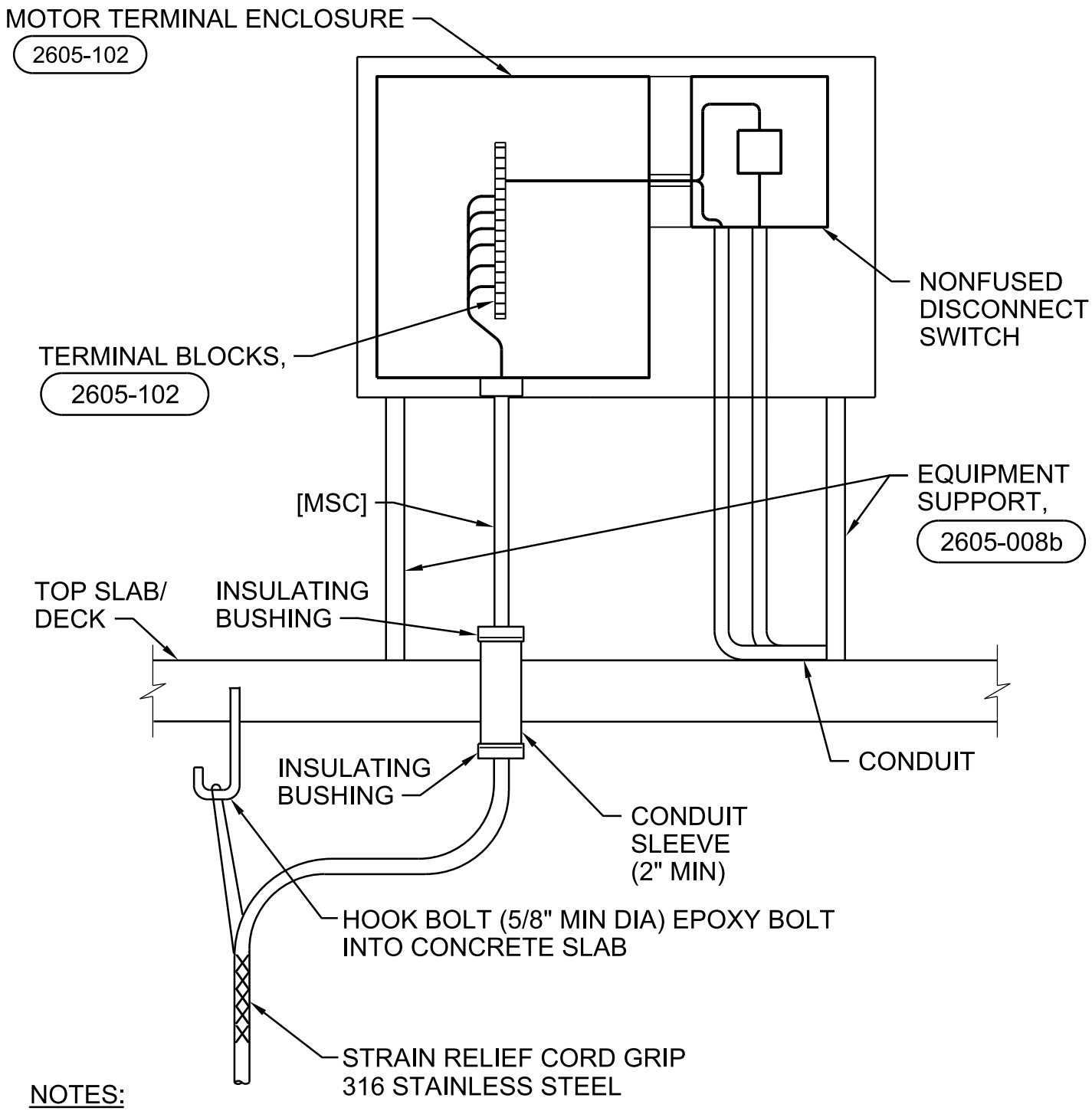

NOTES:

1. FOR CONTROL REQUIREMENTS, SEE MOTOR CONTROL DIAGRAMS.
2. FOR ENCLOSURE TYPES, SEE SCHEDULE OF ELECTRICAL AND MECHANICAL MATERIAL FOR CORROSION CONTROL IN GENERAL SECTION OF THE DRAWINGS.

SUBMERSIBLE PUMP ELECTRICAL EQUIPMENT

NTS

NATIONAL PARK SERVICE
GRAND CANYON NATIONAL PARK
SOUTH RIM

2605-101

© JACOBS

Jacobs

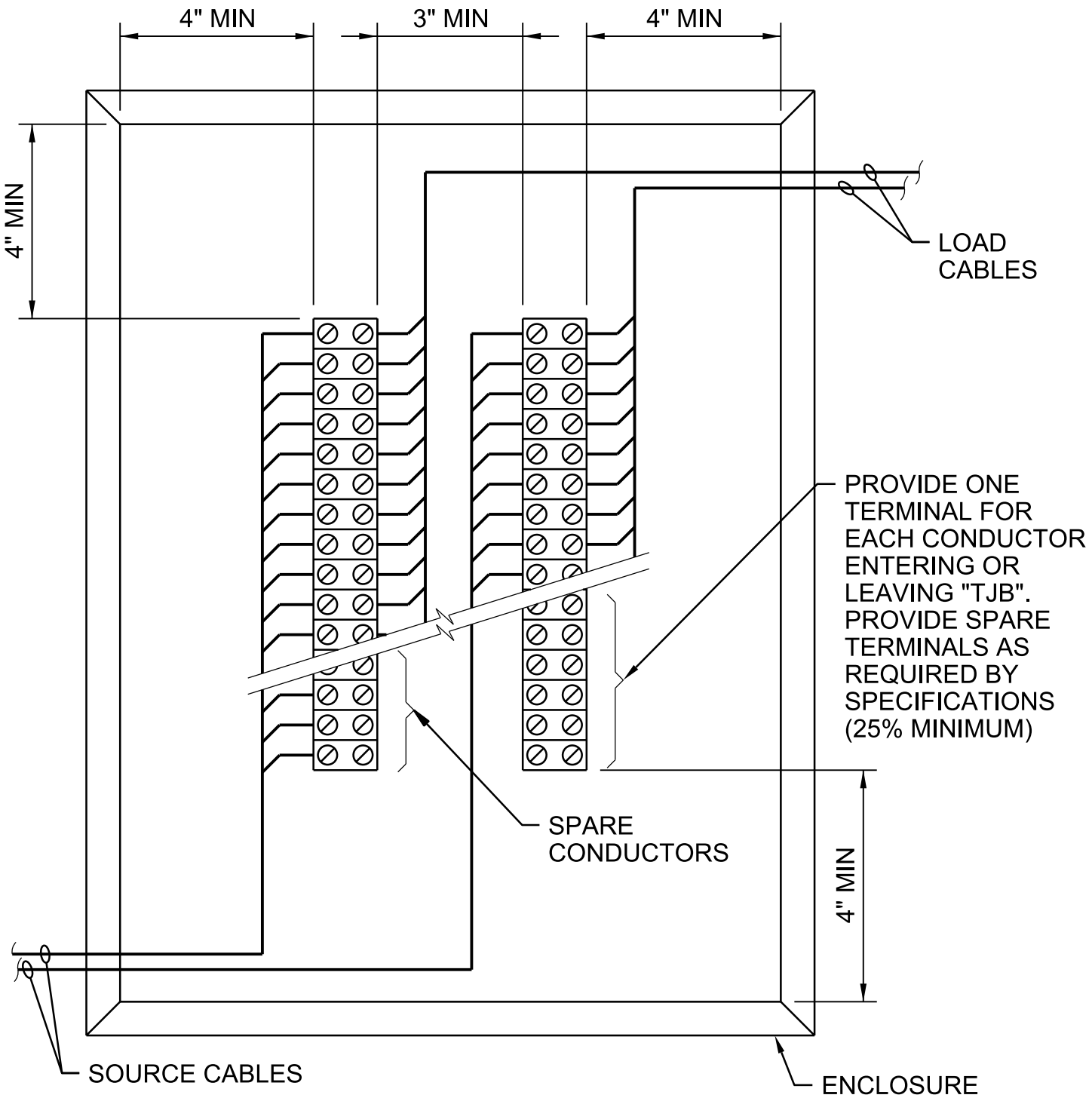

TERMINAL JUNCTION BOX (TJB)

NTS

NATIONAL PARK SERVICE
GRAND CANYON NATIONAL PARK
SOUTH RIM

2605-102

© JACOBS

Jacobs

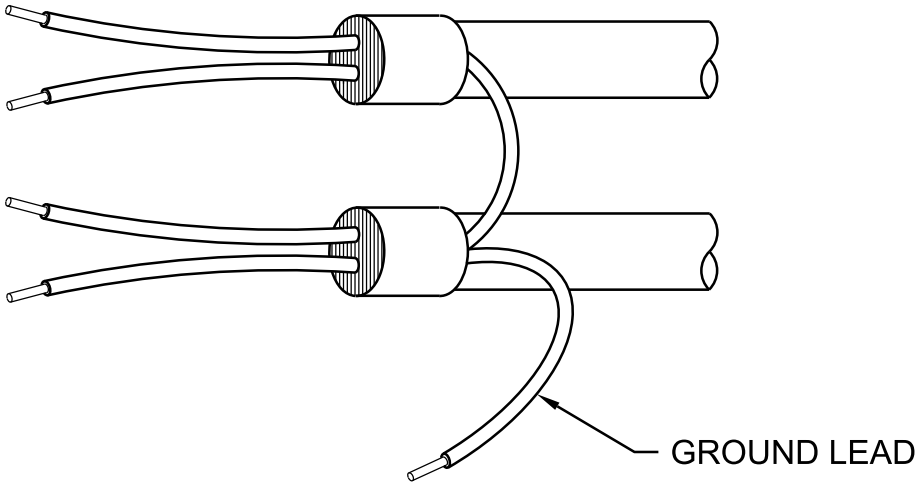

UNACCEPTABLE METHOD OF GROUNDING INSTRUMENTATION CABLE SHIELD

NTS

NATIONAL PARK SERVICE
GRAND CANYON NATIONAL PARK
SOUTH RIM

2605-103

© JACOBS

Jacobs

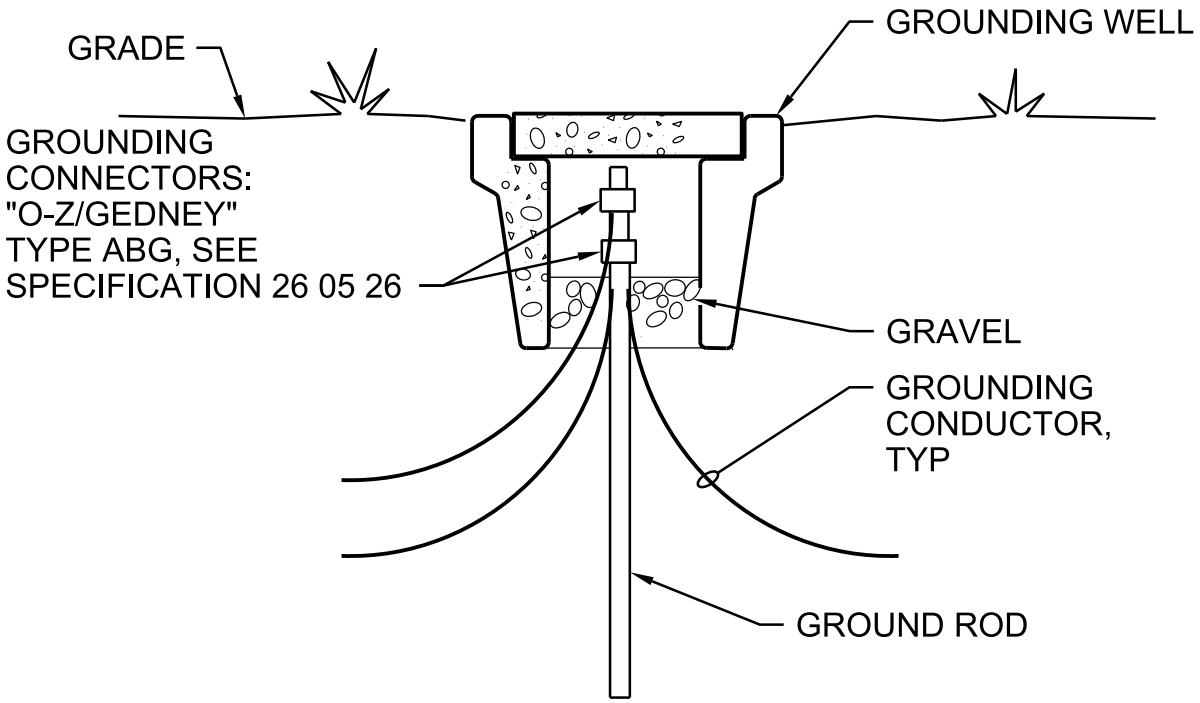

GROUND TEST WELL

NTS

NATIONAL PARK SERVICE
GRAND CANYON NATIONAL PARK
SOUTH RIM

2605-202

© JACOBS

Jacobs

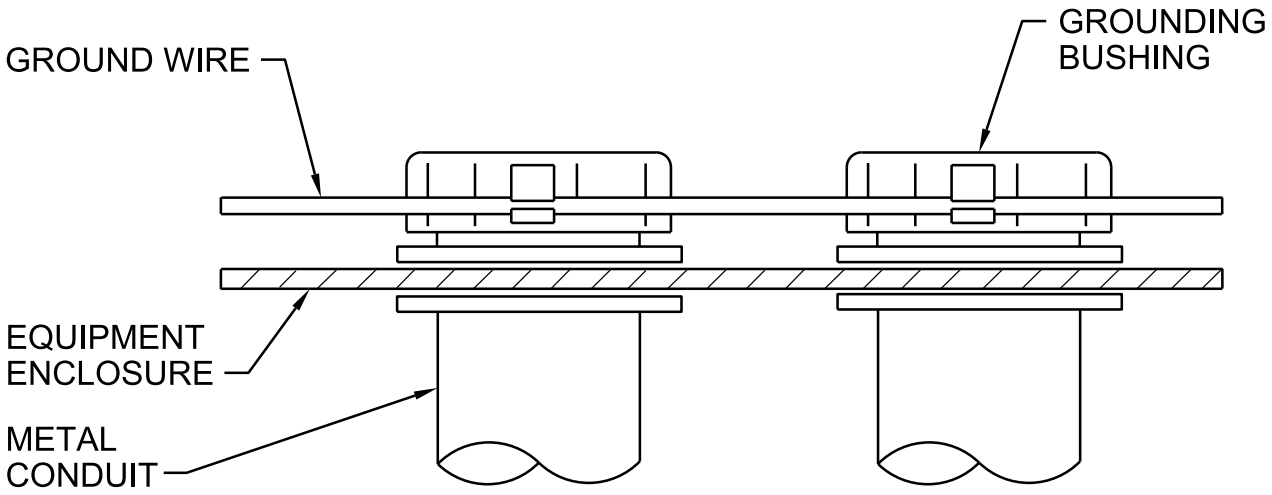

NOTES:

1. THE ENDS OF ALL CONDUITS REQUIRED TO BE GROUNDED BY THE SPECIFICATIONS SHALL BE GROUNDED IN ACCORDANCE WITH THIS DETAIL.

CONDUIT GROUNDING

NTS

NATIONAL PARK SERVICE
GRAND CANYON NATIONAL PARK
SOUTH RIM

2605-203

© JACOBS

Jacobs

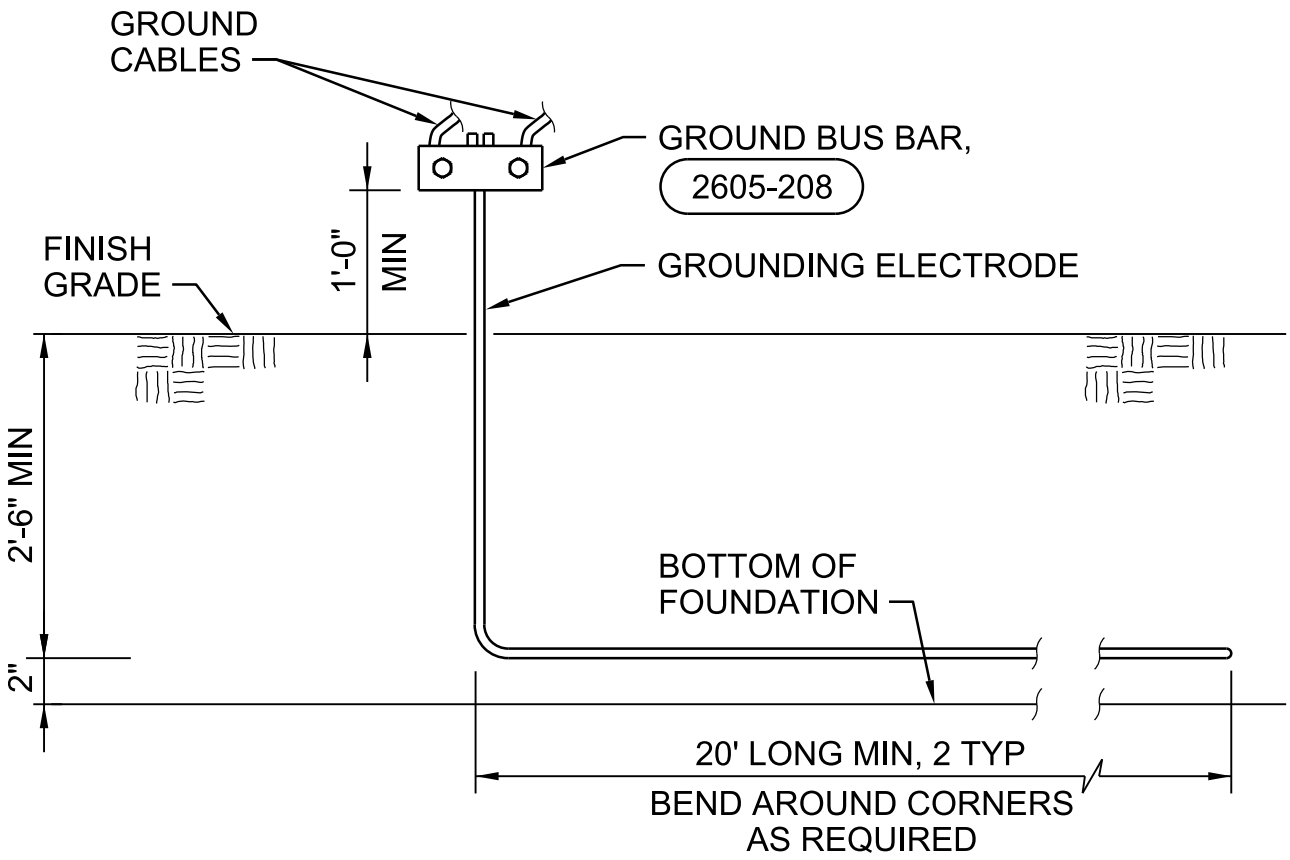

GROUNDING ELECTRODE

NTS

NATIONAL PARK SERVICE
GRAND CANYON NATIONAL PARK
SOUTH RIM

2605-205

© JACOBS

Jacobs

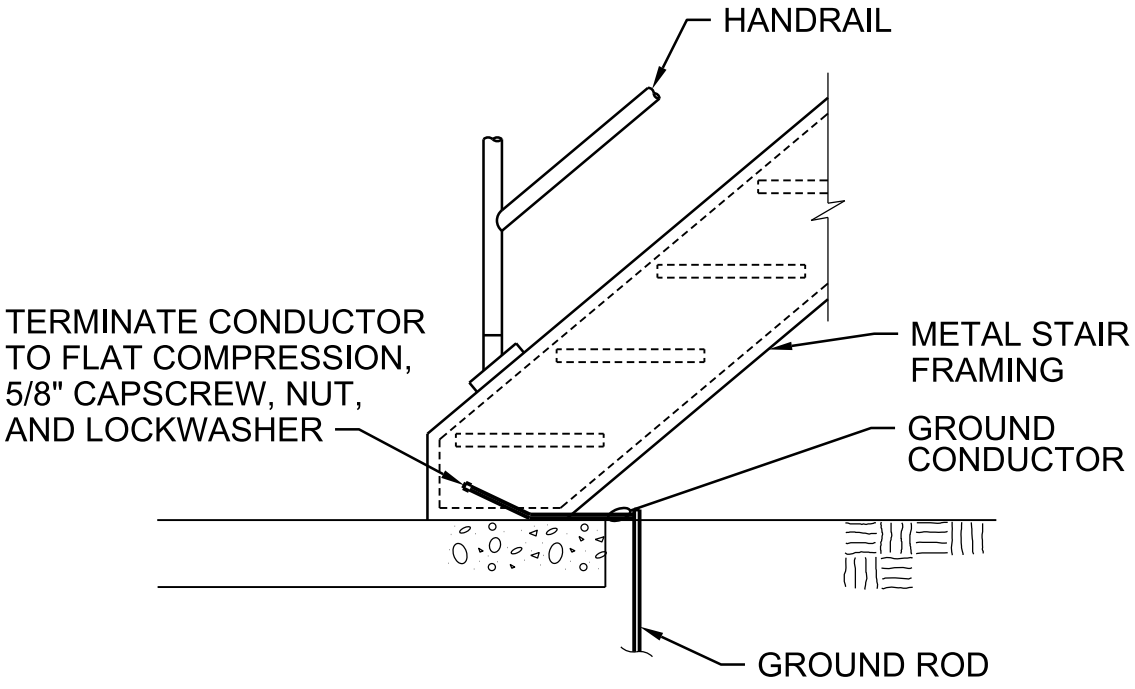

GENERAL STAIRWAY GROUNDING

NTS

NATIONAL PARK SERVICE
GRAND CANYON NATIONAL PARK
SOUTH RIM

2605-207

© JACOBS

Jacobs

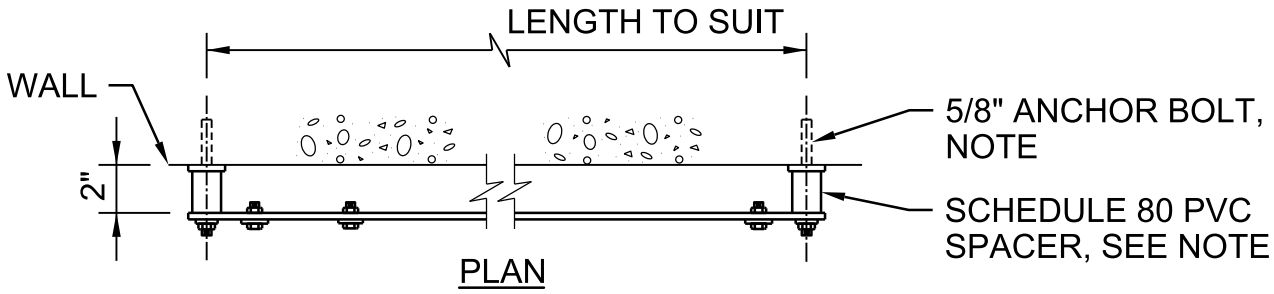

PLAN

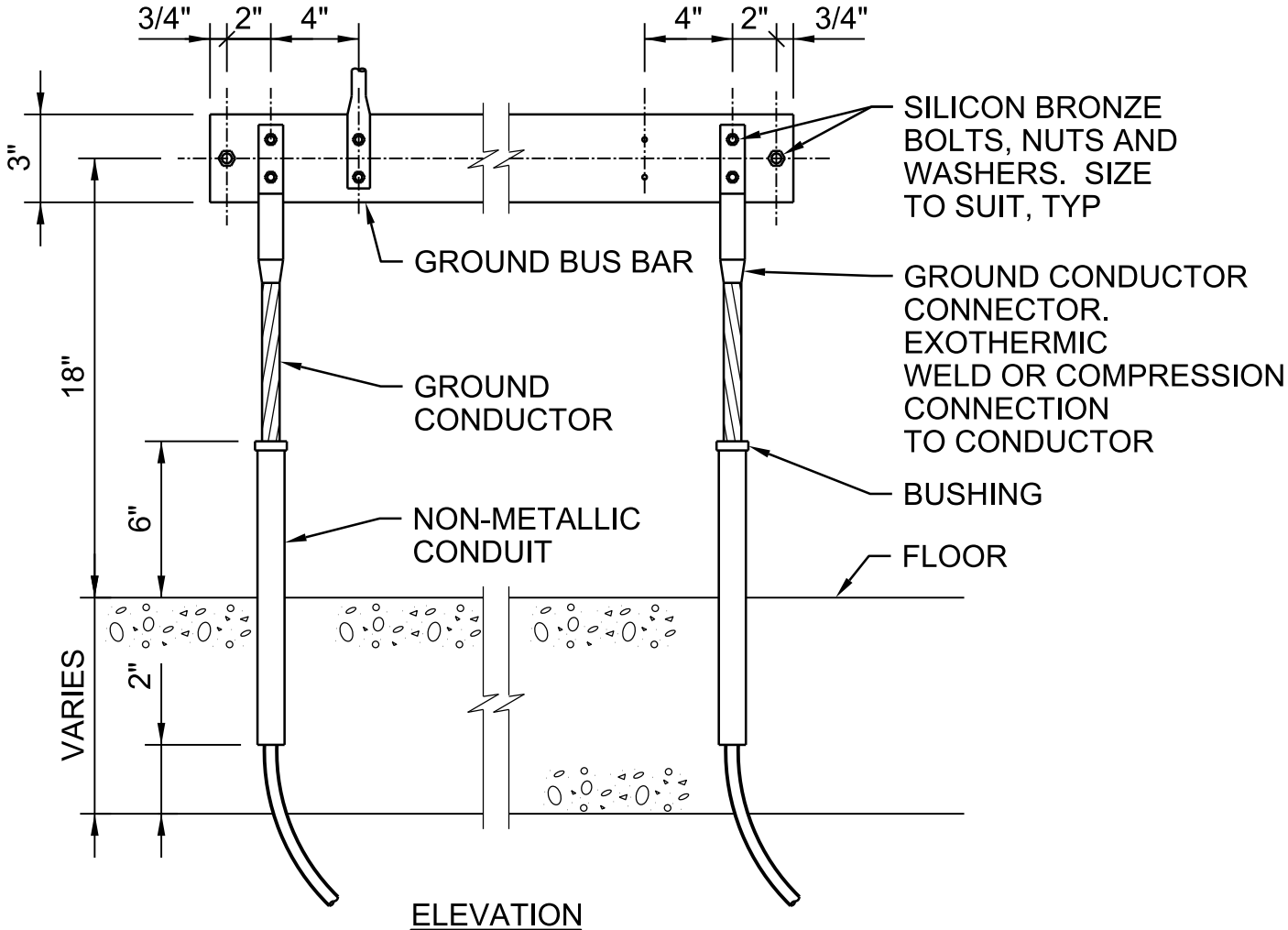

ELEVATION

NOTES:

1. MAXIMUM SPAN BETWEEN SUPPORTS NOT TO EXCEED 24".

GROUND BUS BAR

NTS

NATIONAL PARK SERVICE
GRAND CANYON NATIONAL PARK
SOUTH RIM

2605-208

© JACOBS

Jacobs

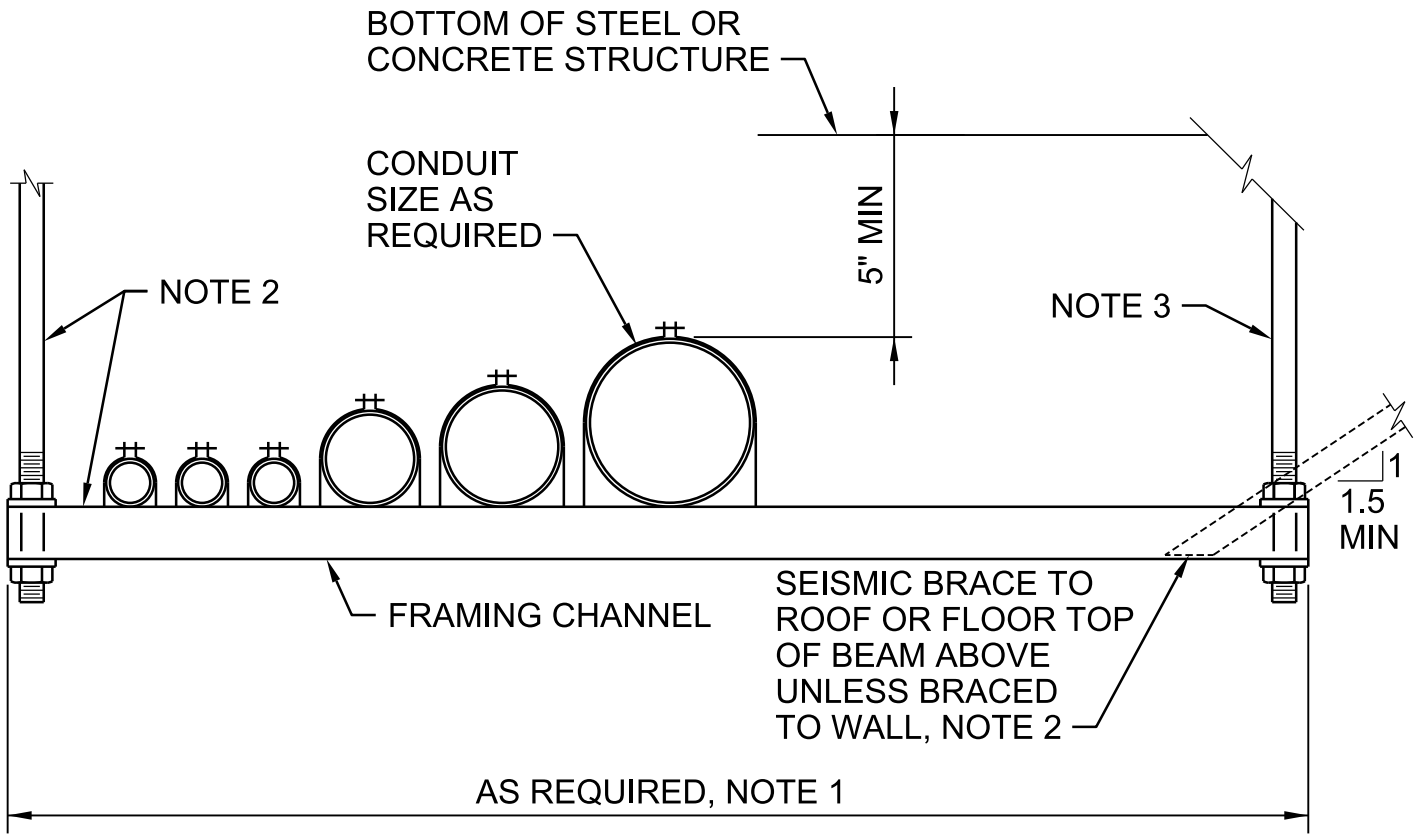

SINGLE RACK

NOTES:

1. LENGTH VARIES WITH NUMBER OF CONDUITS TO BE SUPPORTED AND SPACING BETWEEN CONDUITS.

2. DETERMINE SPAN AND TYPE OF SUPPORTS, LOCATE SUPPORTS, AND SIZE SUPPORT RODS, CONNECTIONS AND BRACES AS SPECIFIED IN SECTION 01 88 15.

3. AT STEEL STRUCTURE, USE MALLEABLE BEAM CLAMP. AT CONCRETE STRUCTURE, USE UNIVERSAL CONCRETE INSERT, CHANNEL WITH #4 x 3'-0" THREADED ROD AND ATTACHMENT PLATE. TYPE AND SIZE AS SPECIFIED IN SECTION 01 88 15.

4. SPACE CONDUIT SUFFICIENTLY TO ALLOW REMOVAL OF ONE CONDUIT WITHOUT DISTURBING ADJACENT CONDUITS.

CONDUIT RACKING SYSTEM

NTS

NATIONAL PARK SERVICE
GRAND CANYON NATIONAL PARK
SOUTH RIM

2605-300

© JACOBS

Jacobs

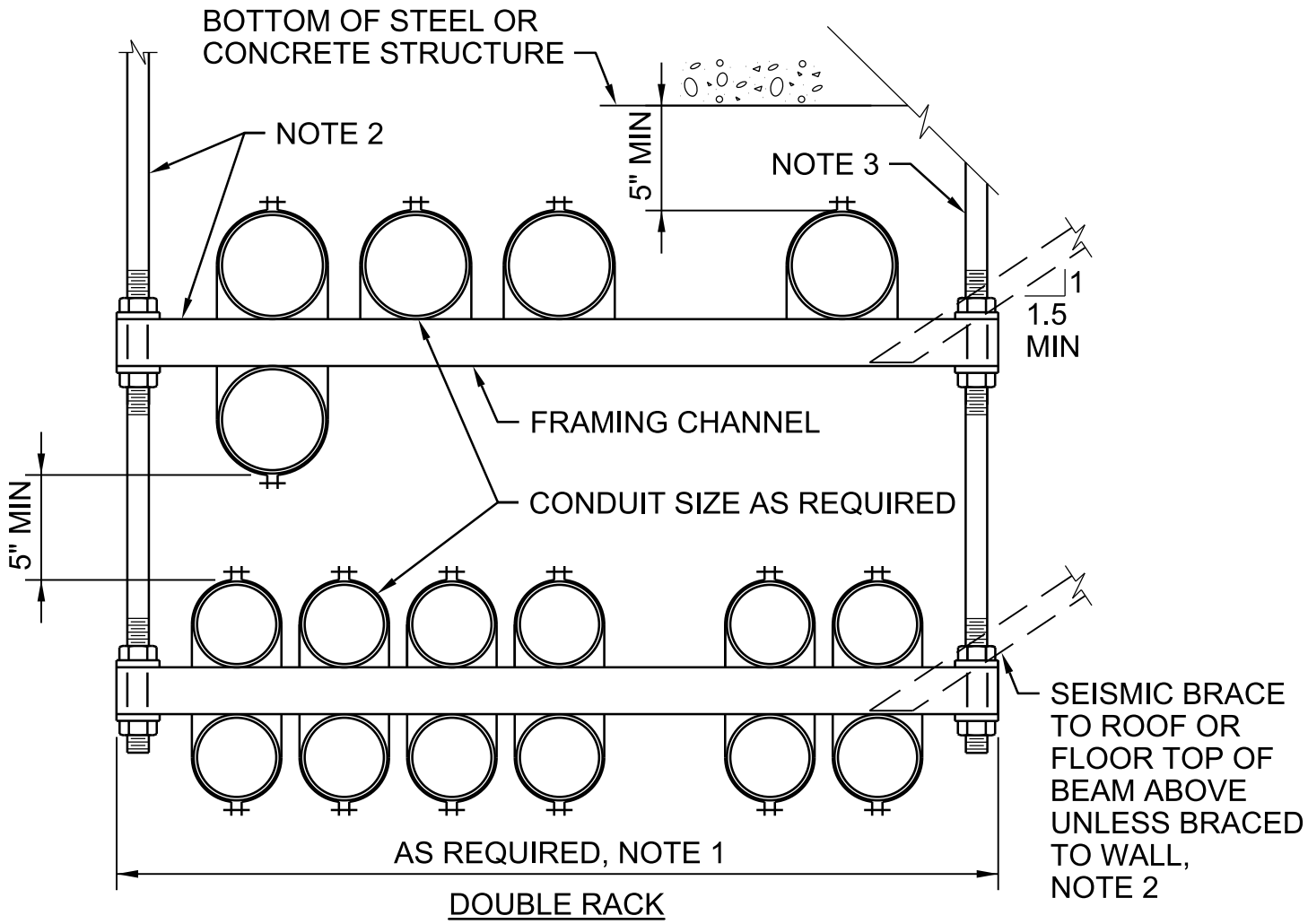

DOUBLE RACK

NOTES:

1. LENGTH VARIES WITH NUMBER OF CONDUITS TO BE SUPPORTED AND SPACING BETWEEN CONDUITS.

2. DETERMINE SPAN AND TYPE OF SUPPORTS, LOCATE SUPPORTS, AND SIZE SUPPORT RODS, CONNECTIONS AND BRACES AS SPECIFIED IN SECTION 01 88 15.

3. AT STEEL STRUCTURE, USE GRINNEL MALLEABLE BEAM CLAMP. AT CONCRETE STRUCTURE, USE CONCRETE INSERT, UNISTRUT CHANNEL WITH #4 x 3'-0" THREADED ROD AND ATTACHMENT PLATE. TYPE AND SIZE AS SPECIFIED IN SECTION 01 88 15.

4. SPACE CONDUIT SUFFICIENTLY TO ALLOW REMOVAL OF ONE CONDUIT WITHOUT DISTURBING ADJACENT CONDUITS.

CONDUIT RACKING SYSTEM

NTS

NATIONAL PARK SERVICE
GRAND CANYON NATIONAL PARK
SOUTH RIM

2605-301

© JACOBS

Jacobs

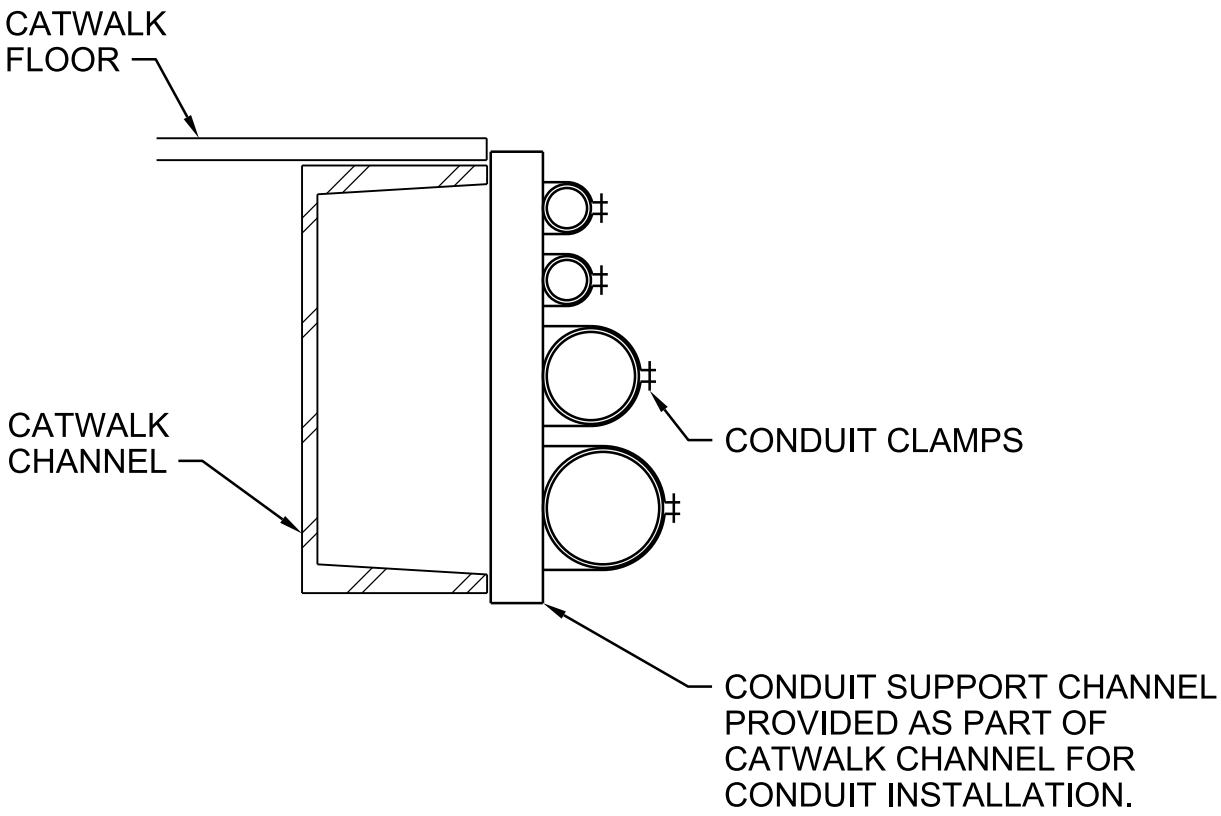

NOTES:

1. LOCATE AND SIZE SUPPORTS FOR VERTICAL AND LATERAL LOADS AS SPECIFIED IN SECTION 01 88 15.

CONDUIT RACKING SYSTEM

NTS

NATIONAL PARK SERVICE
GRAND CANYON NATIONAL PARK
SOUTH RIM

2605-302

© JACOBS

Jacobs

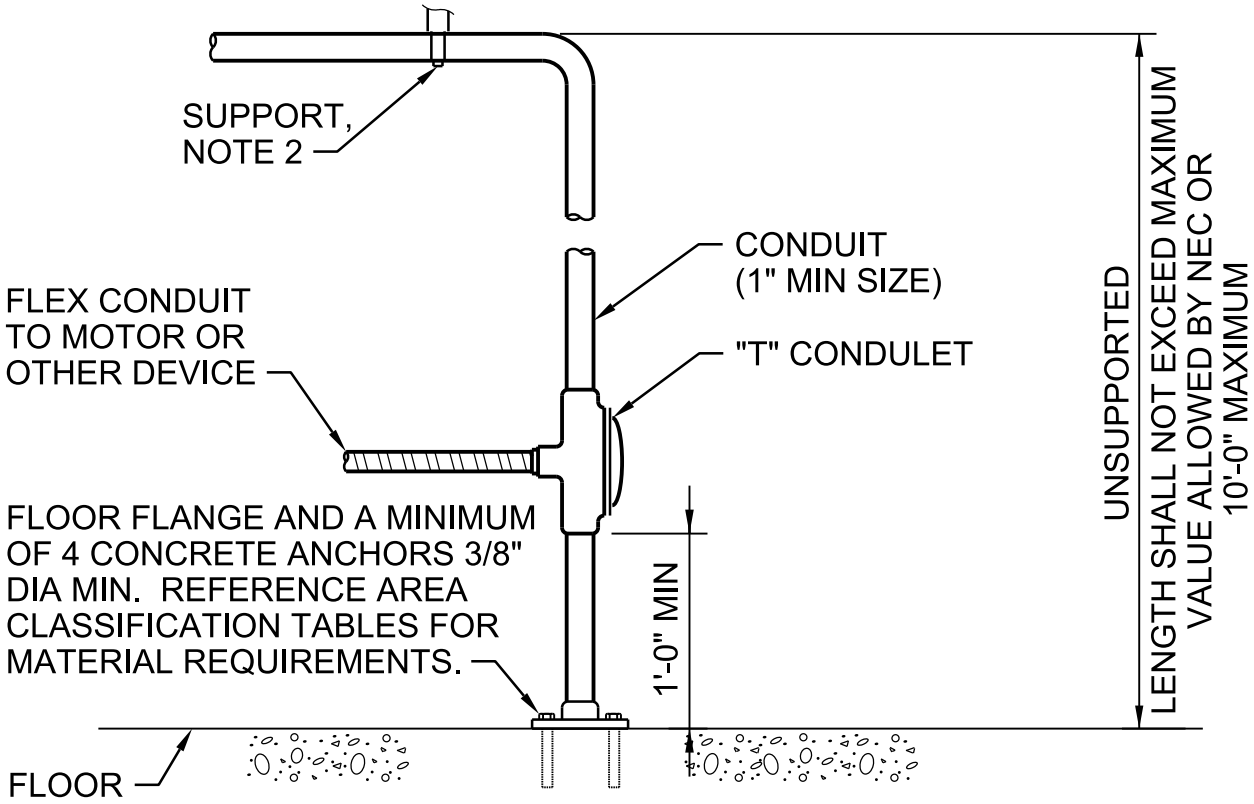

NOTES:

1. INSTALLATION OF CONDUIT TO A MOTOR OR OTHER DEVICE WHERE A FLEXIBLE CONNECTION IS REQUIRED AND NO JUNCTION BOXES OR CONTROL DEVICES ARE REQUIRED SHALL BE MADE IN ACCORDANCE WITH THIS DETAIL.

2. SIZE TOP AND ANY INTERMEDIATE LATERAL SUPPORTS AS SPECIFIED IN SECTION 01 88 15.

CONDUIT TO EQUIPMENT FROM CEILING

NTS

NATIONAL PARK SERVICE
GRAND CANYON NATIONAL PARK
SOUTH RIM

2605-303

© JACOBS

Jacobs

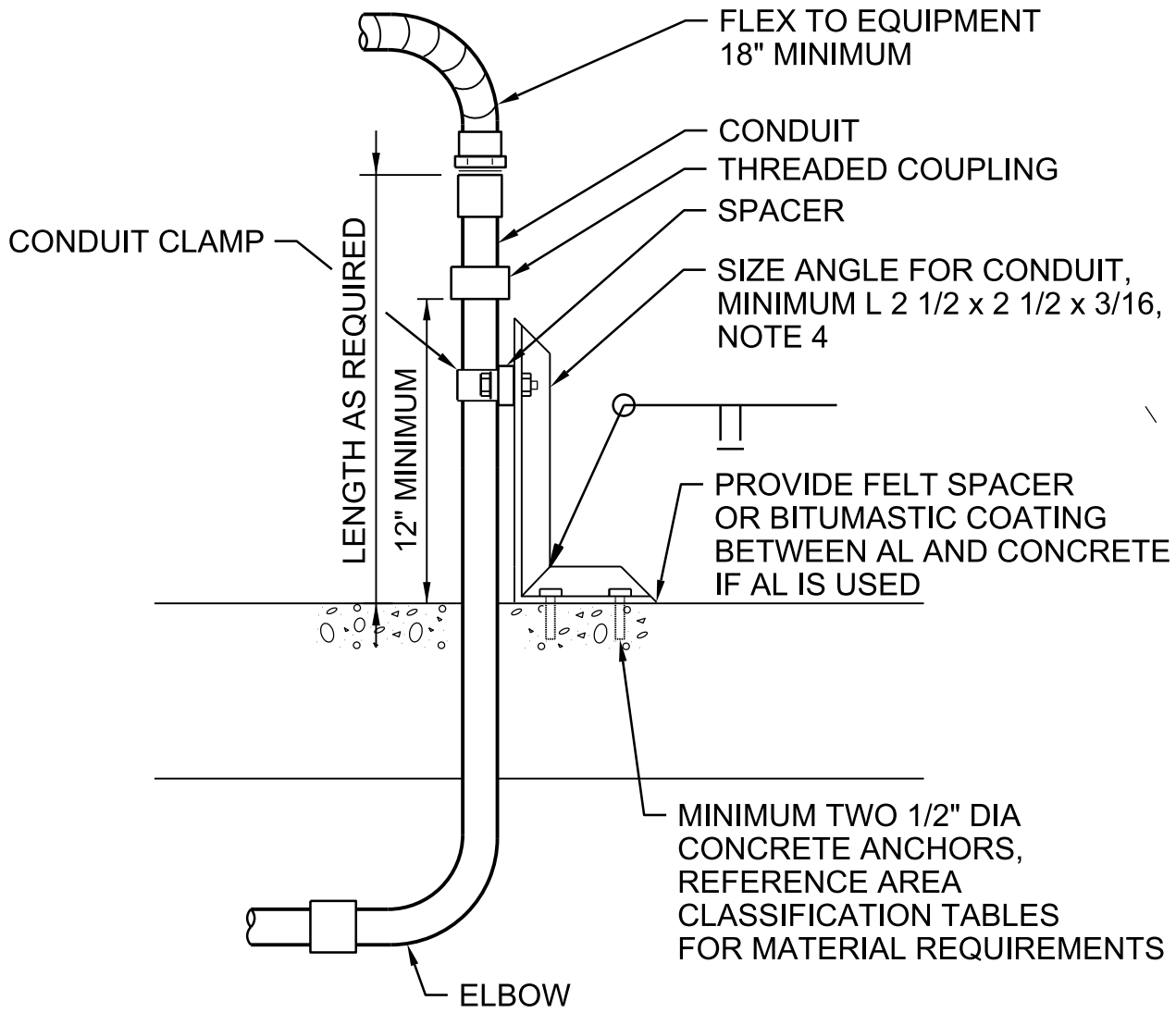

NOTES:

1. PROVIDE SUPPORT FOR ALL METAL CONDUITS WHICH EXTEND MORE THAN 18 INCHES OUT OF THE SLAB WITHIN 3 INCHES OF THE END OF THE CONDUIT.

2. PROVIDE SUPPORT FOR ALL PVC CONDUIT WITHIN 3 INCHES OF THE END OF THE CONDUIT.

3. THIS DETAIL SHALL BE USED FOR SUPPORT OF ALL CONDUITS WHICH ARE NOT OTHERWISE SUPPORTED IN A RIGID MANNER SUCH AS AGAINST AN EQUIPMENT BASE, WALL, COLUMN, ETC, AS REQUIRED ABOVE.

4. FOR ANY ANGLE GREATER THAN 2'-6" TALL, SIZE ANGLE SUPPORT PER SPECIFICATION 01 88 15.

CONDUIT TRANSITION AND SUPPORT

NTS

NATIONAL PARK SERVICE
GRAND CANYON NATIONAL PARK
SOUTH RIM

2605-305

© JACOBS

Jacobs

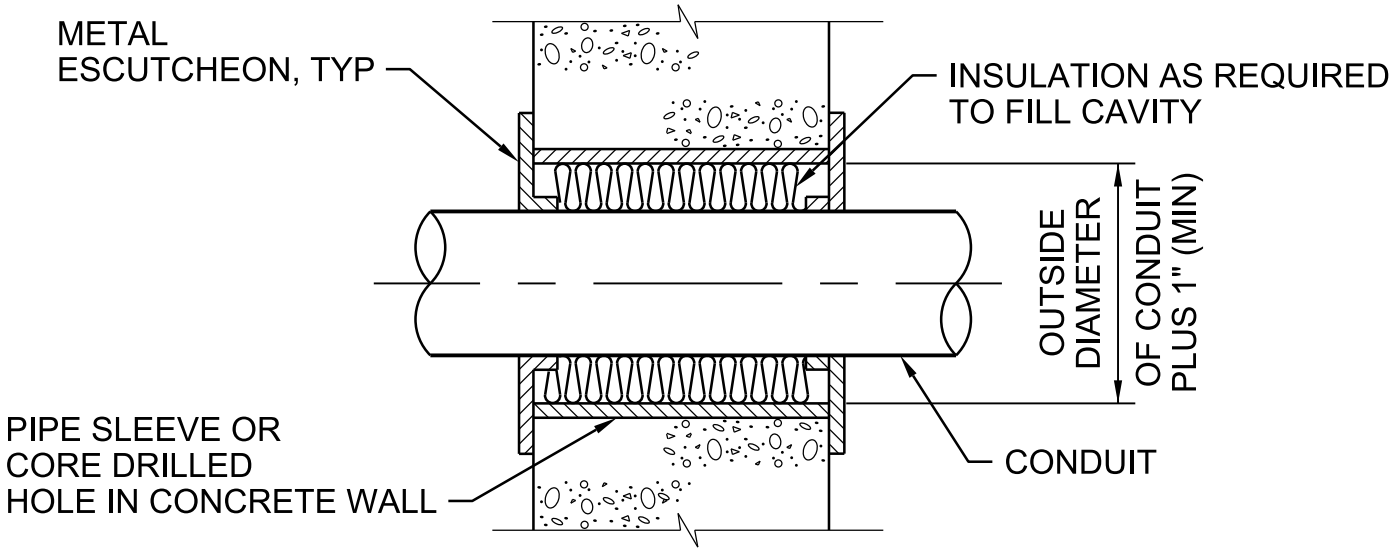

NOTES:

1. CONDUITS WHICH INDIVIDUALLY PASS THRU AN INTERIOR WALL SHALL BE INSTALLED IN ACCORDANCE WITH THIS DETAIL.

INTERIOR WALL PENETRATION

NTS

NATIONAL PARK SERVICE
GRAND CANYON NATIONAL PARK
SOUTH RIM

2605-306

© JACOBS

Jacobs

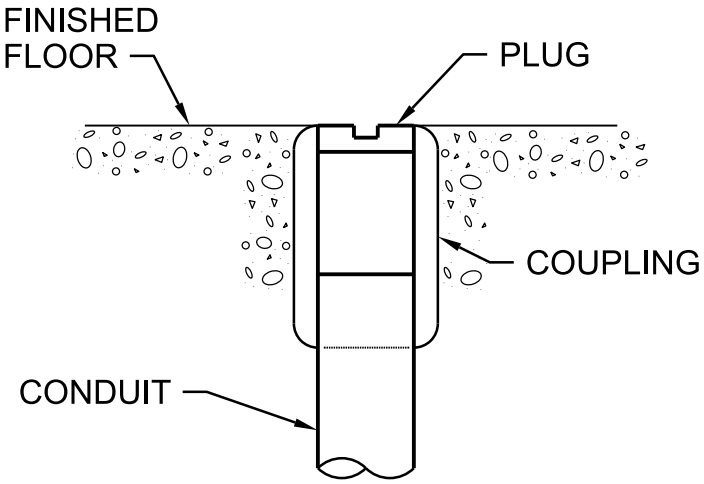

NOTES:

1. CONDUITS WHICH ARE STUBBED UP IN A CONCRETE SLAB FOR FUTURE EXTENSION SHALL BE INSTALLED IN ACCORDANCE WITH THIS DETAIL.

FLUSH CONDUIT STUB

NTS

NATIONAL PARK SERVICE
GRAND CANYON NATIONAL PARK
SOUTH RIM

2605-309

© JACOBS

Jacobs

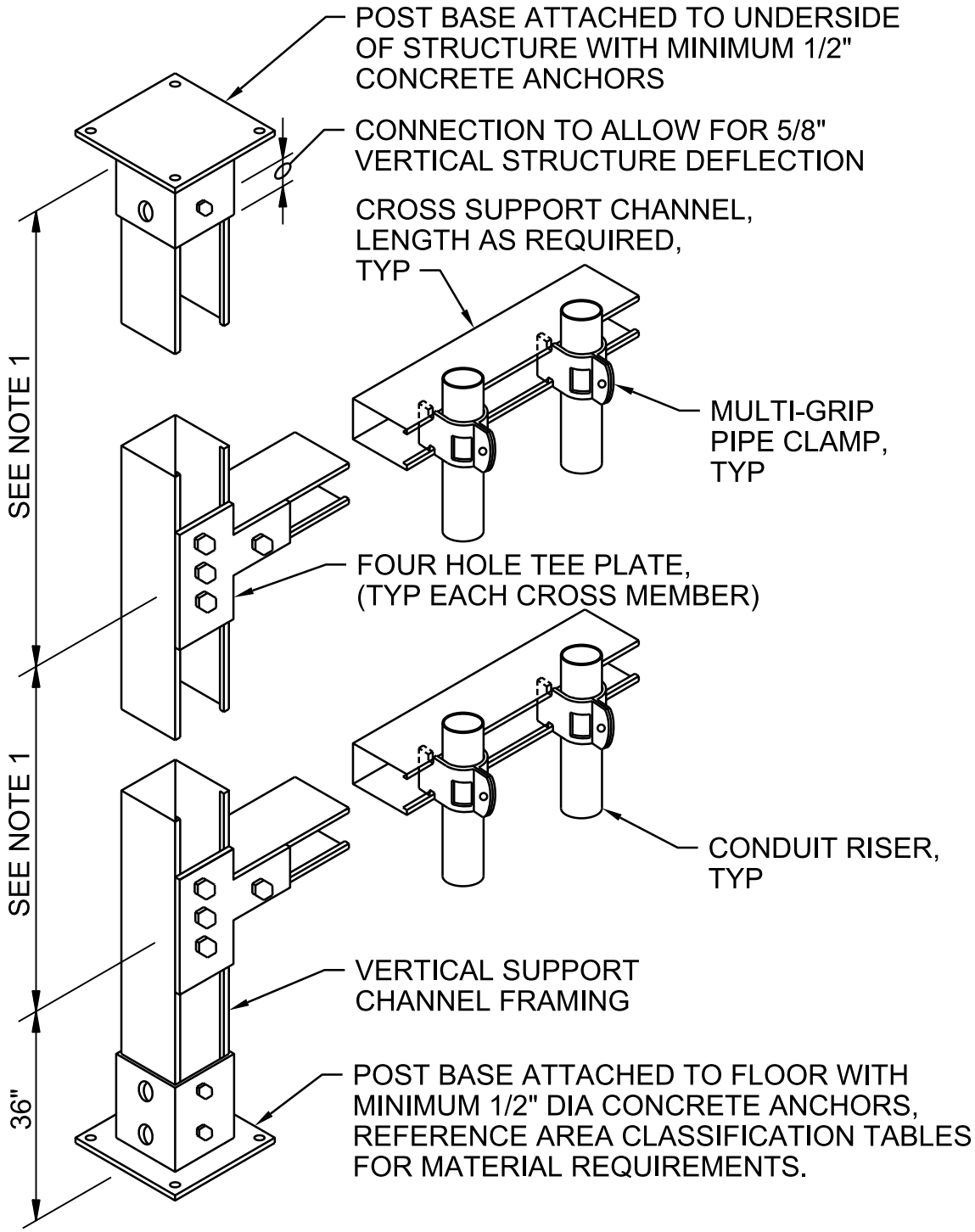

NOTES:

1. LENGTH AS REQUIRED TO LIMIT UNSUPPORTED CONDUIT LENGTH TO MAXIMUM VALUES ALLOWED BY NEC.

2. SIZE SUPPORT POST, CROSS CHANNELS, AND CONNECTIONS FOR VERTICAL AND LATERAL LOADS AS SPECIFIED IN SECTION 01 88 15.

VERTICAL CONDUIT SUPPORT

NTS

NATIONAL PARK SERVICE
GRAND CANYON NATIONAL PARK
SOUTH RIM

2605-318

© JACOBS

Jacobs

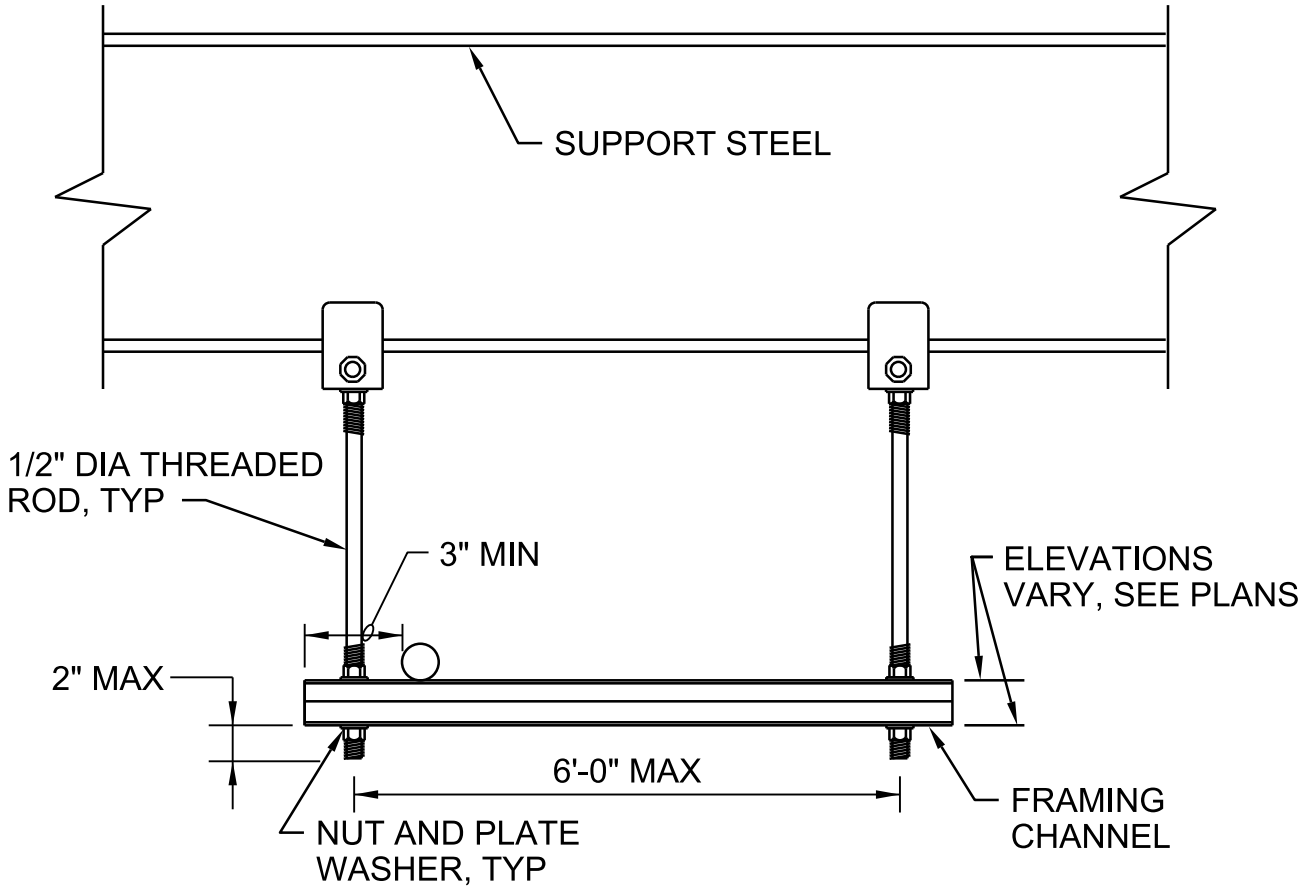

NOTES:

1. USE SWIVEL JOINTS WHERE REQUIRED FOR APPLICATIONS THAT REQUIRE ANGLED CONNECTIONS.

2. ALL CONTRACTOR FURNISHED METALS SHALL BE IN ACCORDANCE WITH SPECIFICATIONS AND CLASSIFICATION TABLES.

CONDUIT SUPPORT FROM STEEL BEAM

NTS

NATIONAL PARK SERVICE
GRAND CANYON NATIONAL PARK
SOUTH RIM

2605-360

© JACOBS

Jacobs

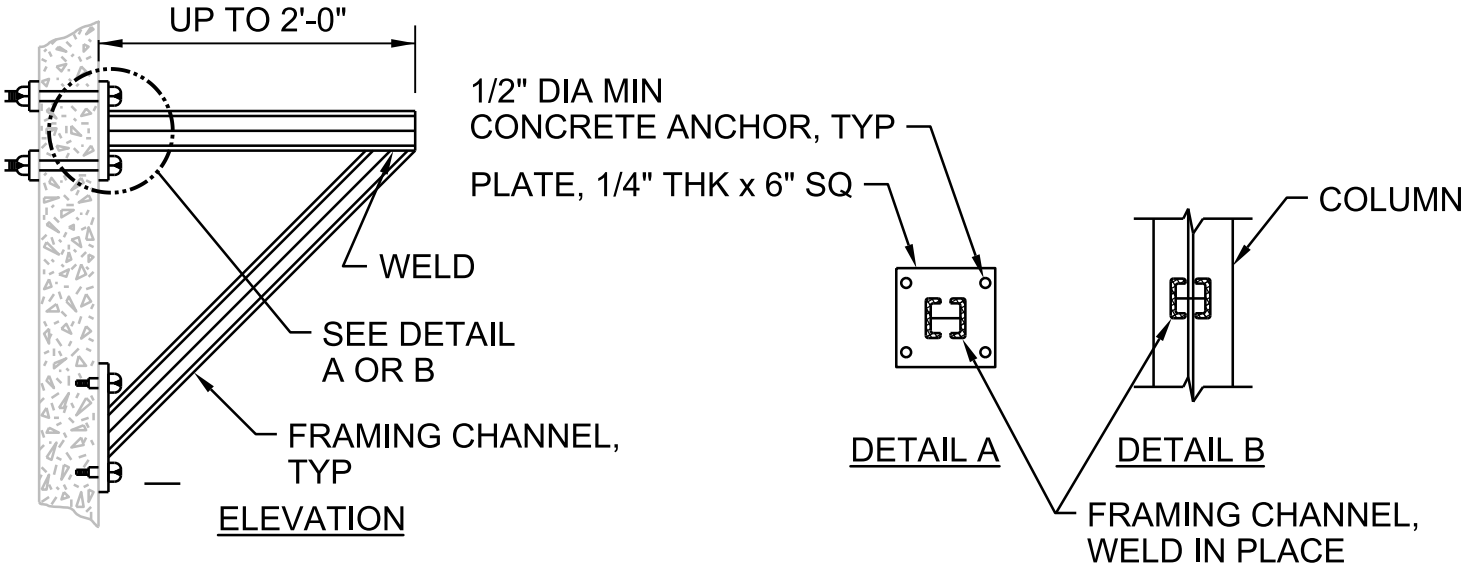

CONDUIT SUPPORT FROM WALL

NTS

NATIONAL PARK SERVICE
GRAND CANYON NATIONAL PARK
SOUTH RIM

2605-361

© JACOBS

Jacobs

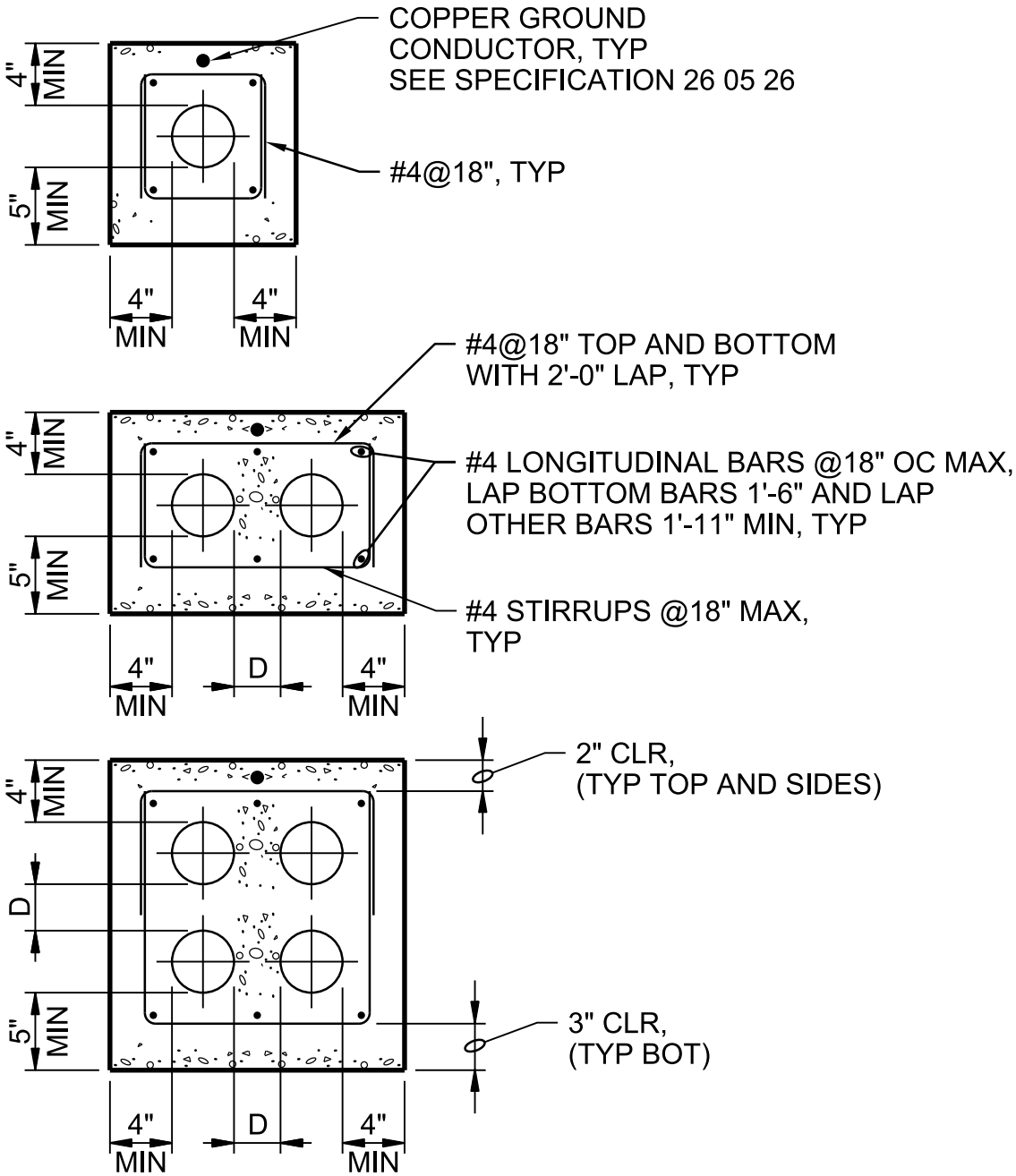

D = 3" FOR 2" AND
LARGER CONDUITS

D = 2" FOR 1 1/2" AND
SMALLER CONDUITS

NOTES:

1. PROVIDE 6" MINIMUM COMPACTED GRAVEL, 3/4" MINUS, UNDER ALL CONCRETE ENCASED DUCT RUNS.

CONCRETE ENCASED DUCT BANK

NTS

NATIONAL PARK SERVICE
GRAND CANYON NATIONAL PARK
SOUTH RIM

2605-401

© JACOBS

Jacobs

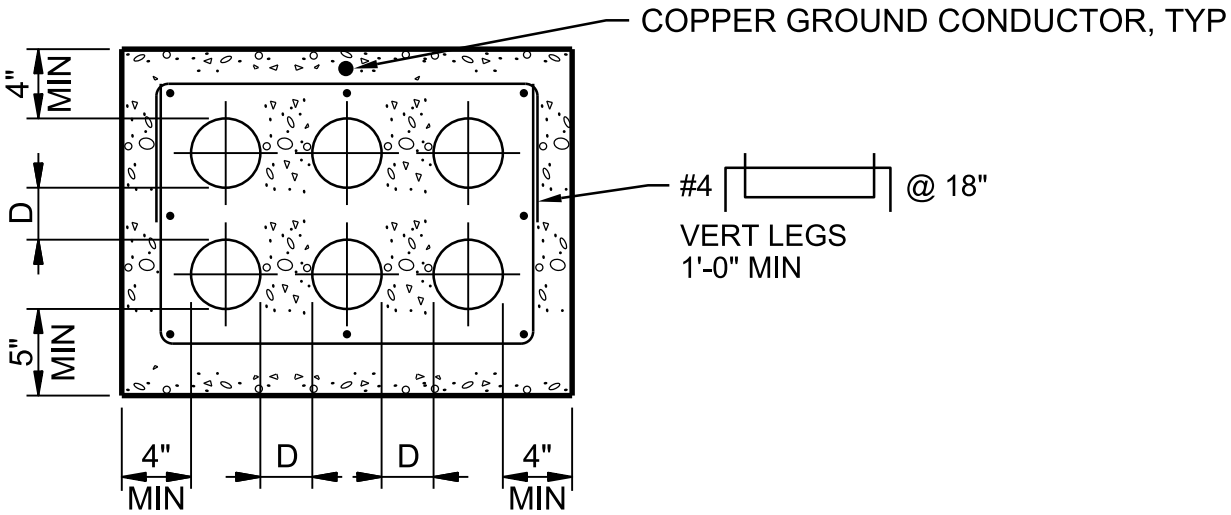

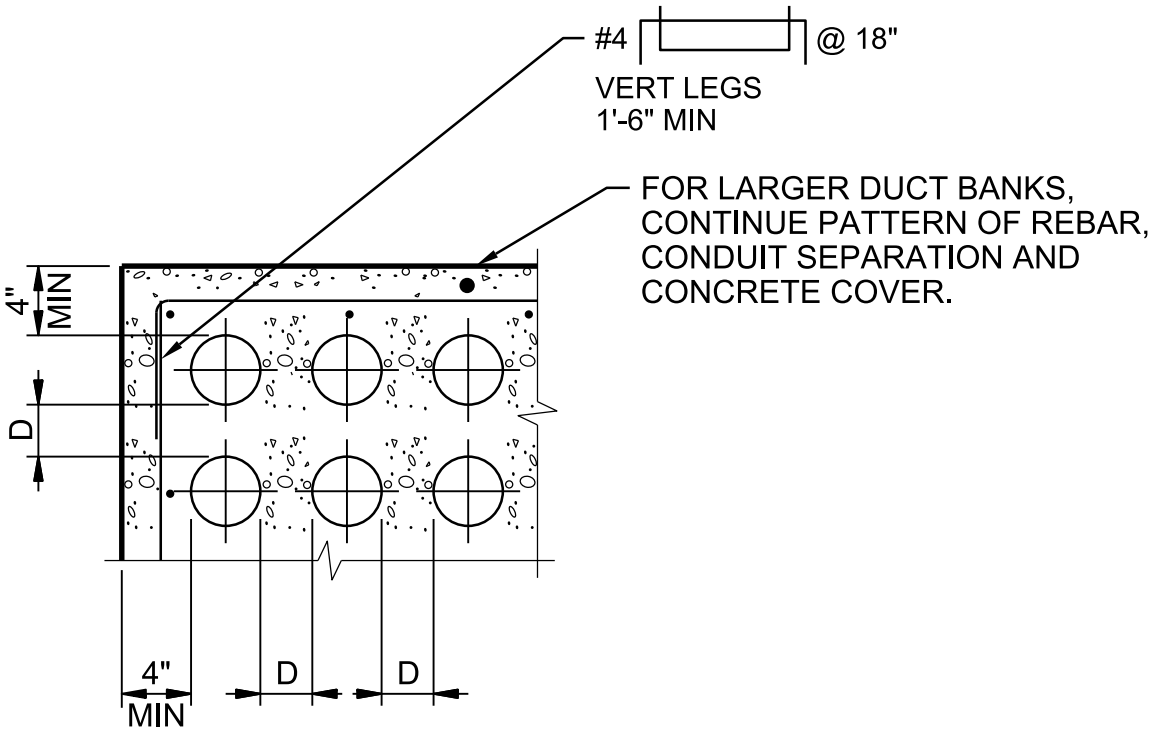

DUCT BANK

NTS

NATIONAL PARK SERVICE
GRAND CANYON NATIONAL PARK
SOUTH RIM

2605-402

© JACOBS

Jacobs

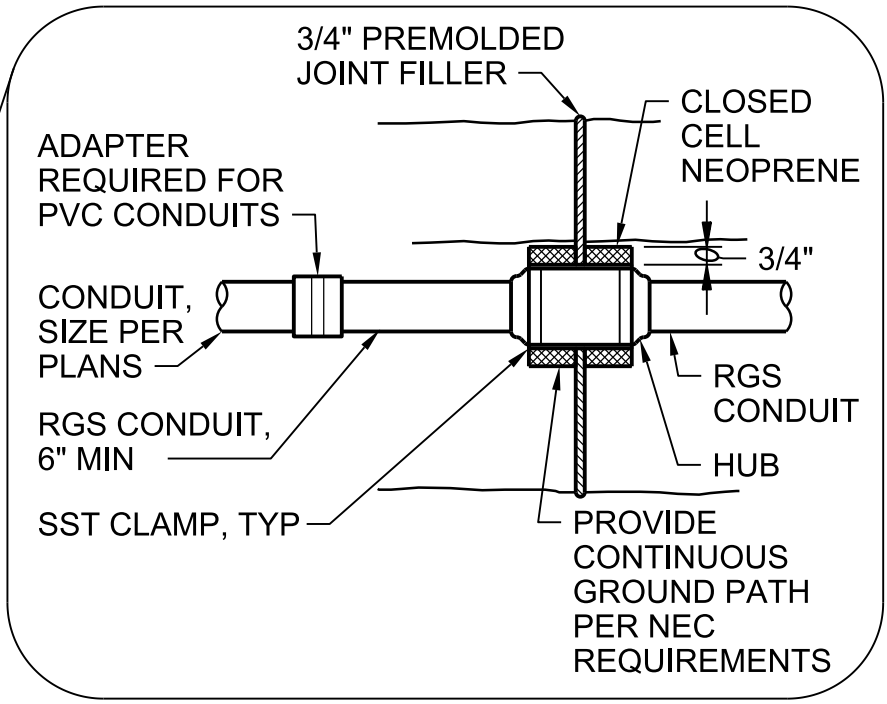

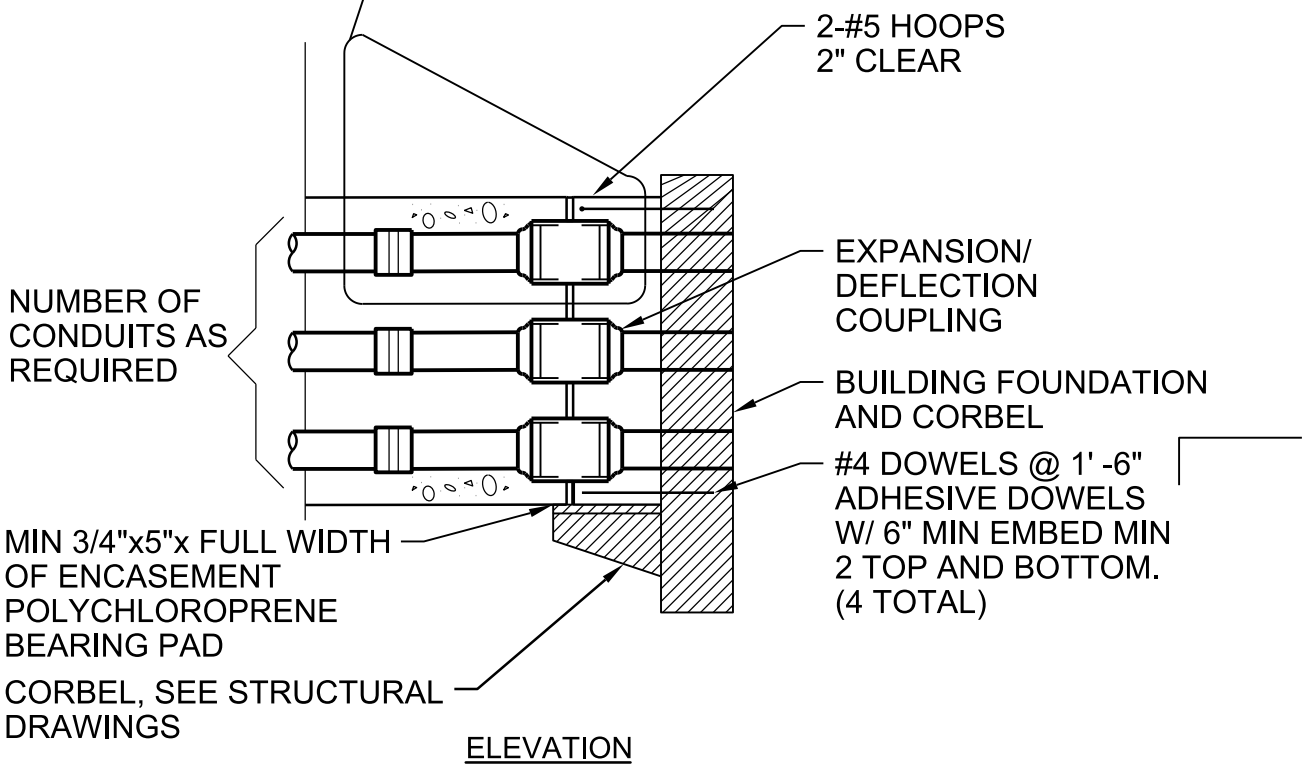

ELEVATION

NOTES:

1. DETAIL APPLIES TO CONDUIT AT BUILDING INTERFACES.

CONCRETE ENCASED DUCT

NTS

NATIONAL PARK SERVICE
GRAND CANYON NATIONAL PARK
SOUTH RIM

2605-403

© JACOBS

Jacobs

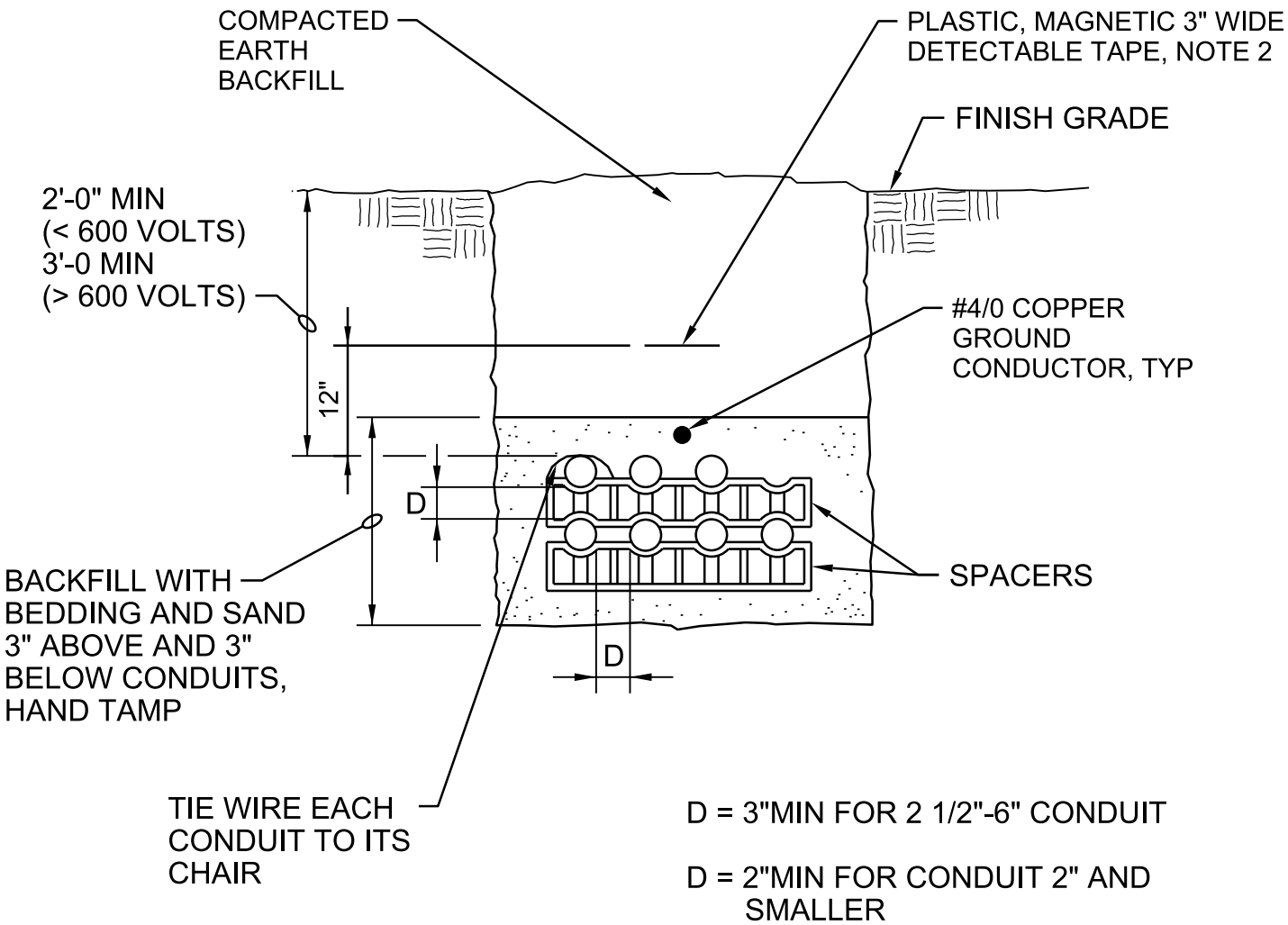

NOTES:

1. INSTALLATION OF DIRECT BURIAL DUCT BANKS WHICH INCLUDE THREE OR MORE CONDUITS SHALL BE MADE IN ACCORDANCE WITH THIS DETAIL.

2. ADD WARNING TAPE FOR CONDUIT RUNS OVER 100 FEET ONLY.

TYPICAL UNDERGROUND CONDUIT

NTS

NATIONAL PARK SERVICE
GRAND CANYON NATIONAL PARK
SOUTH RIM

2605-420

© JACOBS

Jacobs

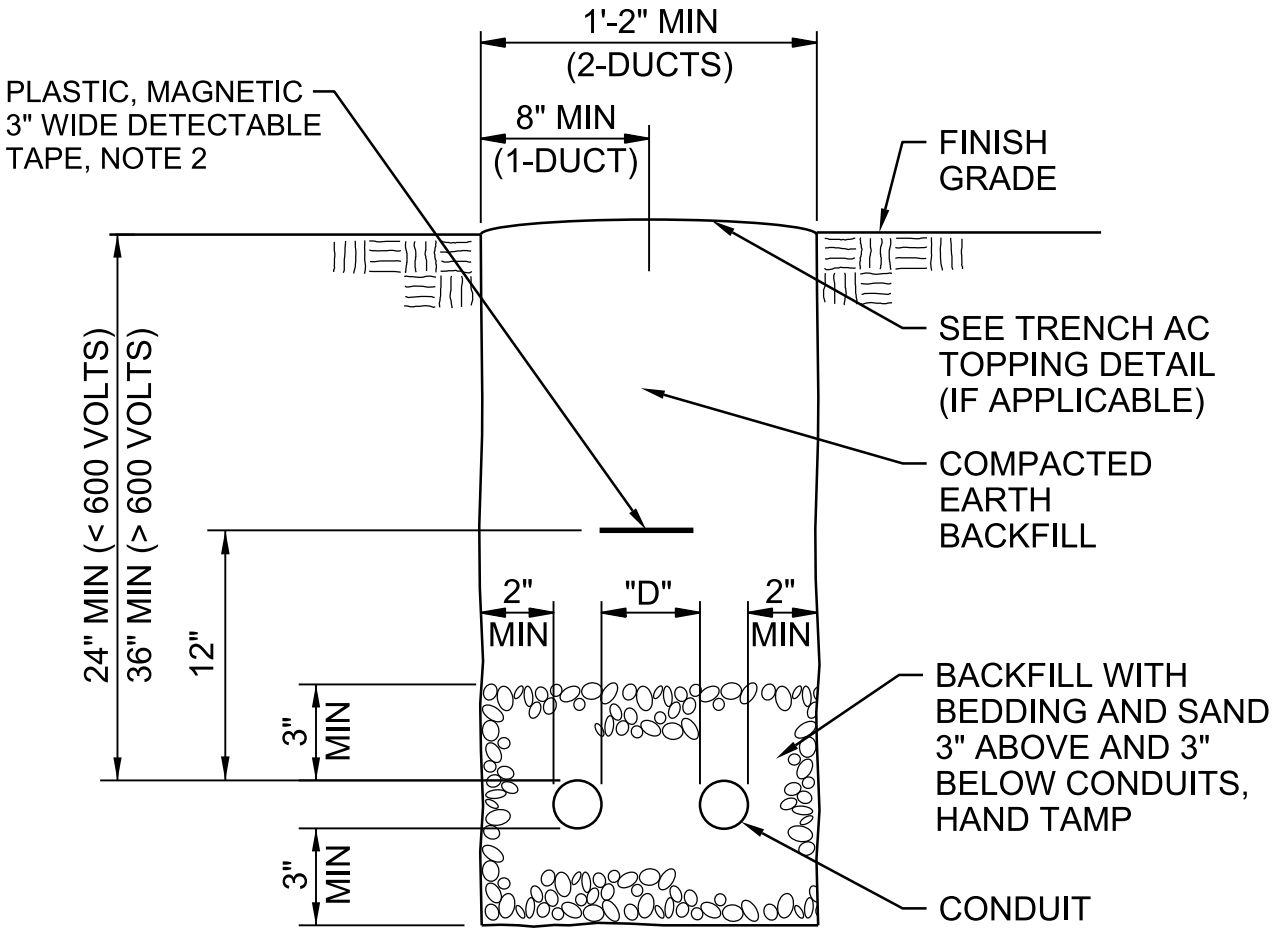

D = 3" MIN FOR 2 1/2" AND LARGER CONDUIT

D = 2" MIN FOR 2" AND SMALLER CONDUIT

NOTES:

1. INSTALLATION OF DIRECT BURIED DUCT BANKS WHICH INCLUDE TWO OR LESS CONDUITS SHALL BE MADE IN ACCORDANCE WITH THIS DETAIL.

2. ADD WARNING TAPE FOR CONDUIT RUNS OVER 100 FEET ONLY.

TRENCH AND CONDUIT PLACEMENT

NTS

NATIONAL PARK SERVICE
GRAND CANYON NATIONAL PARK
SOUTH RIM

2605-423

© JACOBS

Jacobs

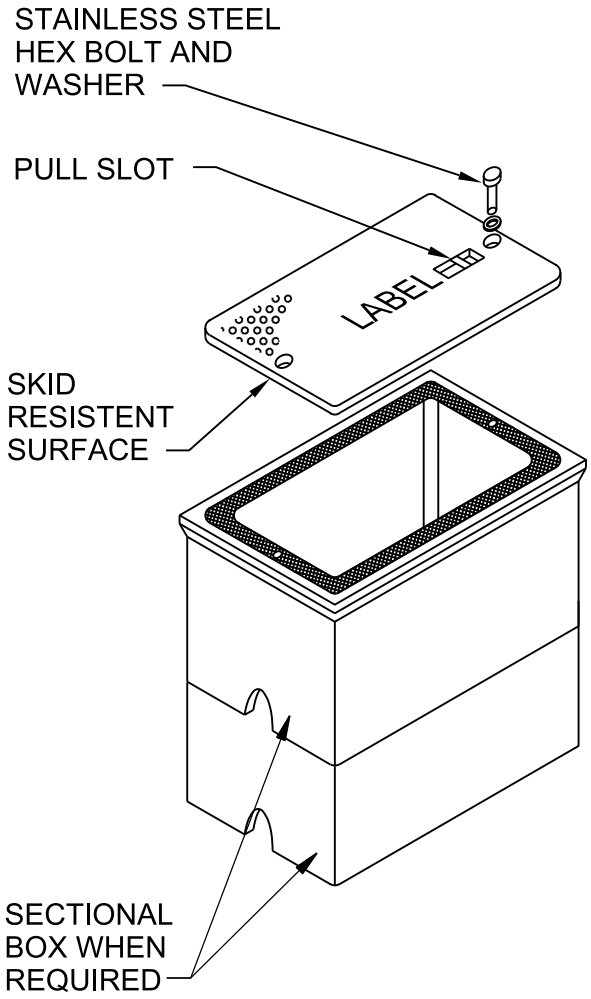

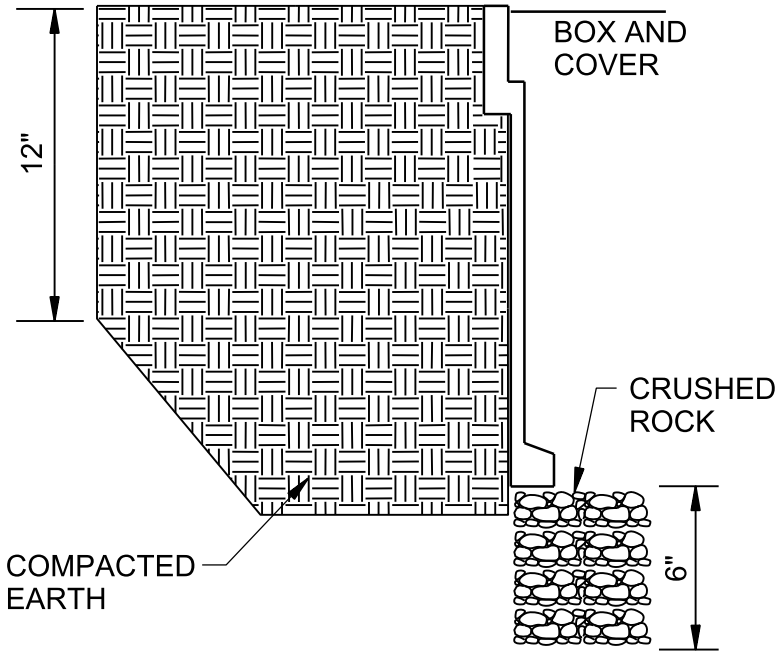

HANDHOLE REQUIREMENTS

1. HOUSING SHALL BE A POLYMER CONCRETE REINFORCED WITH A HEAVY WEAVE FIBERGLASS REINFORCING WITH COMPRESSIVE STRENGTH OF NO LESS THAN 10,000 psi.

2. COVER AND BOX SHALL BE H-20 RATED.

3. PROVIDE STAINLESS STEEL BOLTS AND INSERTS.

4. PROVIDE WITH (2) 2 1/2" MOUSEHOLES.

5. PROVIDE LABEL "ELECTRICAL" ON COVER.

6. MUST BE LISTED BY NATIONALLY RECOGNIZED TESTING LABORATORY (NRTL) PER NATIONAL ELECTRICAL CODE OR ALL CABLE LISTED FOR WET LOCATION OR DIRECT BURIAL.

SITE PULL BOX

NTS

NATIONAL PARK SERVICE
GRAND CANYON NATIONAL PARK
SOUTH RIM

2605-440

© JACOBS

Jacobs

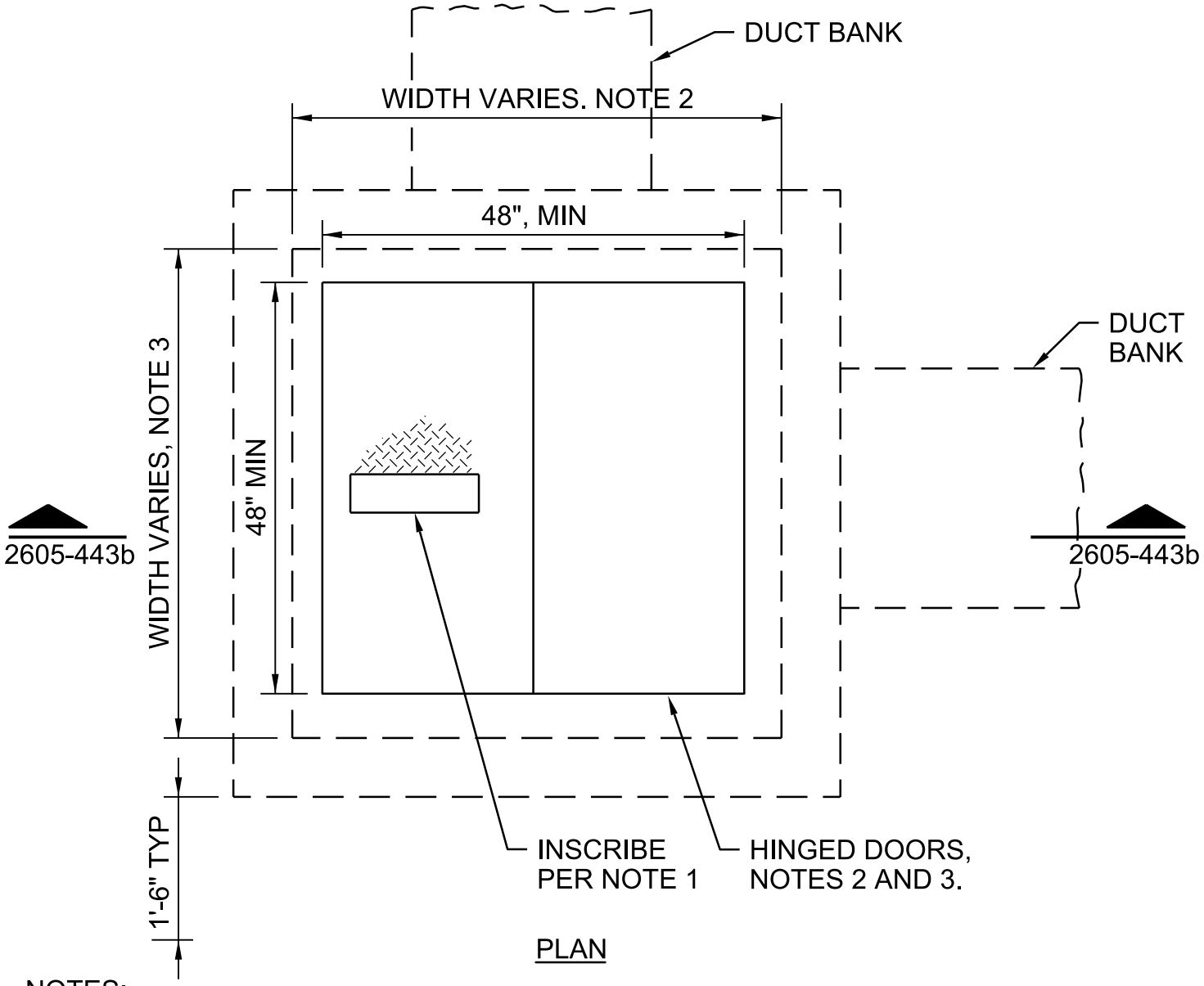

PLAN

NOTES:

1. INSCRIBE "ELECTRICAL LOW VOLTAGE" IF ALL CIRCUITS IN MANHOLE ARE 600V OR LESS.

2. SEE MANHOLE SCHEDULE.

3. LEAF ASSEMBLIES OF MANHOLES OVER 2FT BY 3FT TO BE EQUIPPED WITH END-HINGED, TORSION SPRING OPENING ASSIST-TYPE COVERS.

4. POUR CONCRETE PERIMETER SKIRT FOR ALL UNGROUND BOXES IN PAVED AREAS. SKIRT SHALL EXTEND MINIMUM 6" HORIZONTALLY AND 12" VERTICALLY AROUND THE BOX.

LOW VOLTAGE MANHOLE

NTS

NATIONAL PARK SERVICE
GRAND CANYON NATIONAL PARK
SOUTH RIM

2605-442

© JACOBS

Jacobs

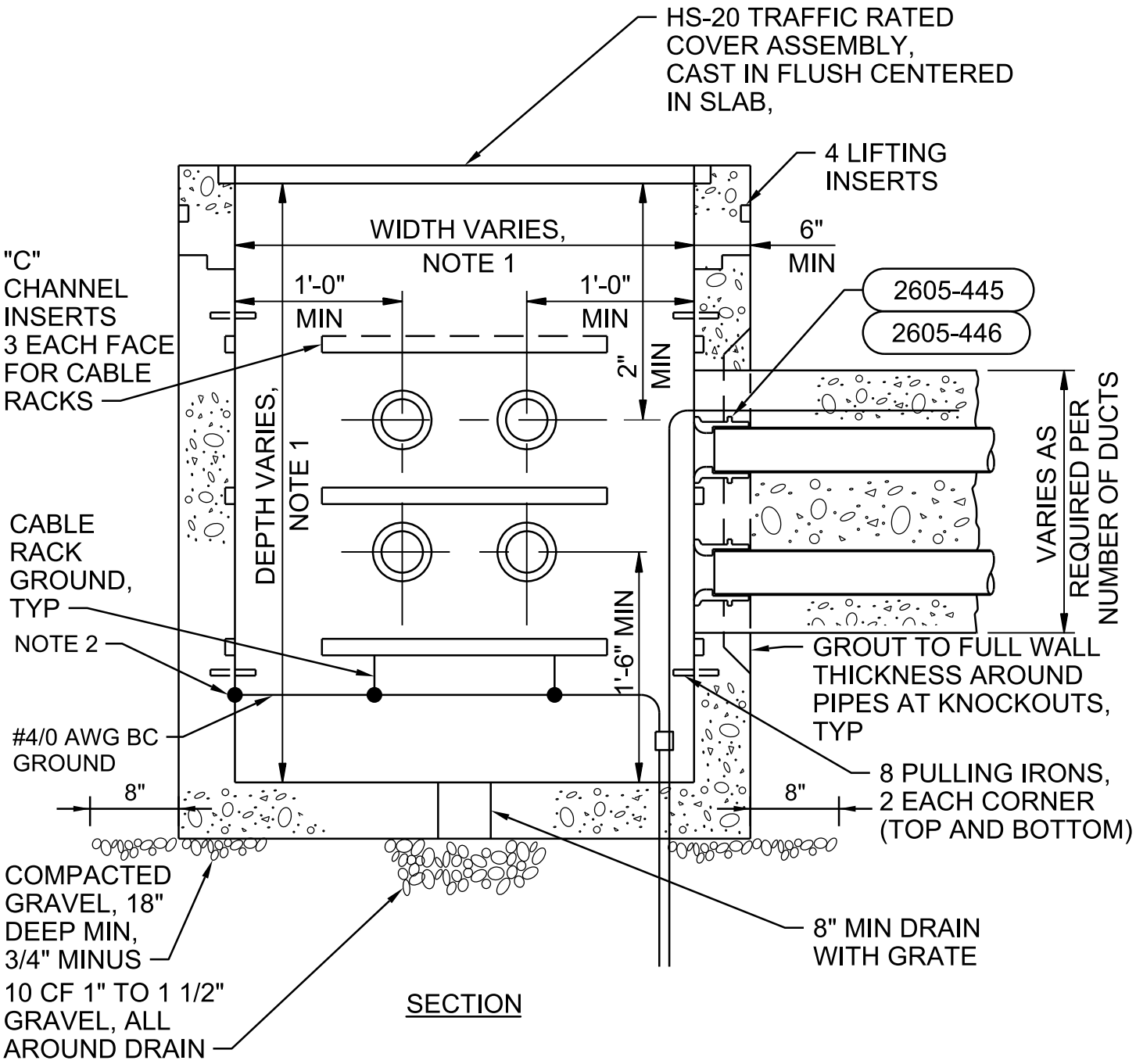

SECTION

NOTES:

1. SEE MANHOLE SCHEDULE.

2. SCREW-TYPE COPPER GROUND BUS IN EACH MANHOLE.

MANHOLE-WITH GROUNDING

NTS

NATIONAL PARK SERVICE
GRAND CANYON NATIONAL PARK
SOUTH RIM

2605-443

© JACOBS

Jacobs

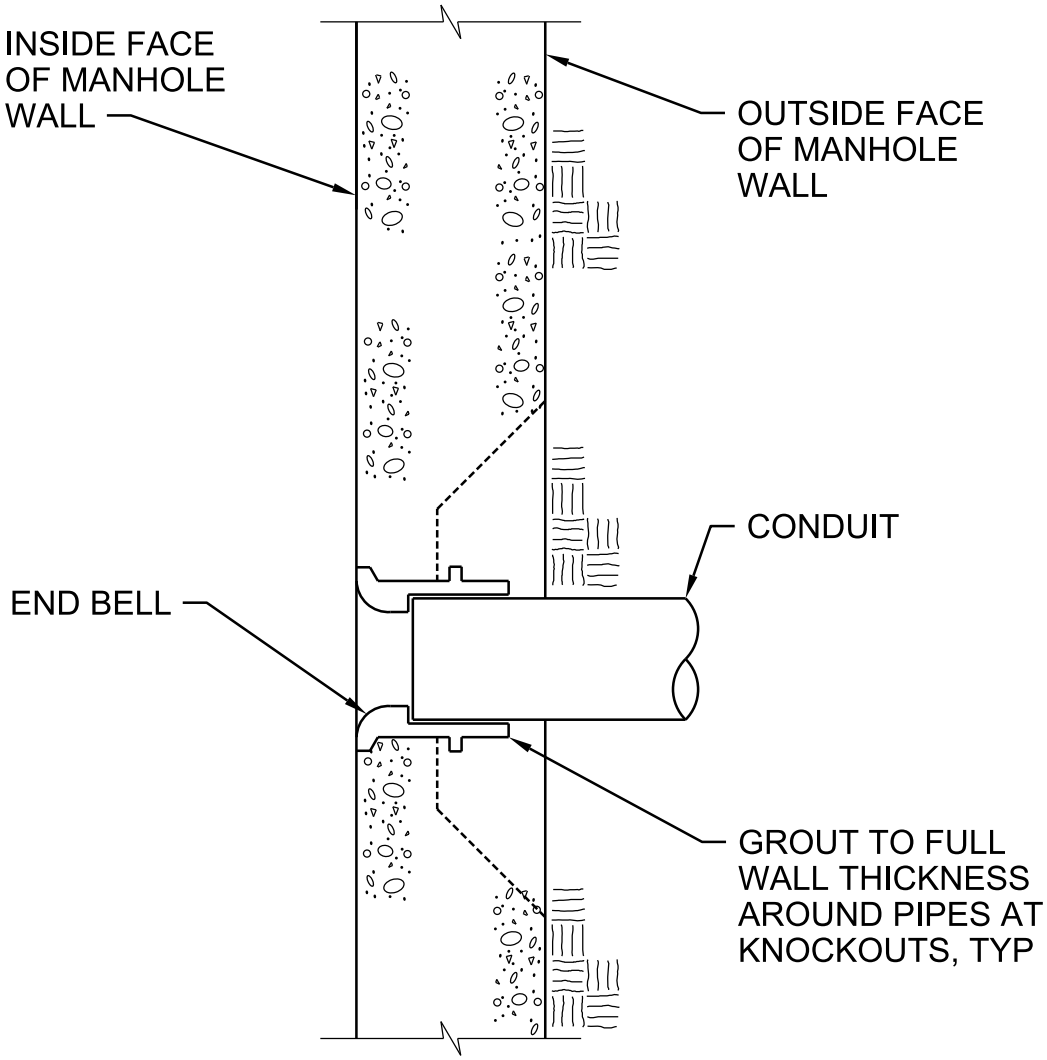

CONDUIT MANHOLE ENTRANCE

NTS

NATIONAL PARK SERVICE
GRAND CANYON NATIONAL PARK
SOUTH RIM

2605-445

© JACOBS

Jacobs

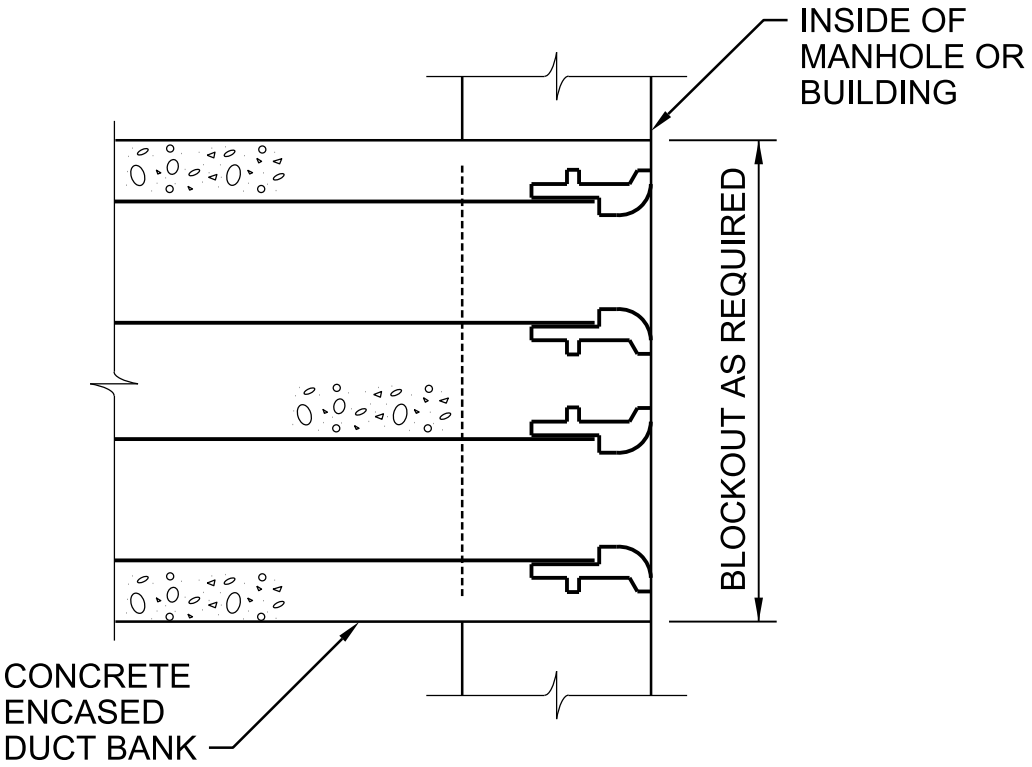

CONDUIT MANHOLE ENTRANCE

NTS

NATIONAL PARK SERVICE
GRAND CANYON NATIONAL PARK
SOUTH RIM

2605-446

© JACOBS

Jacobs

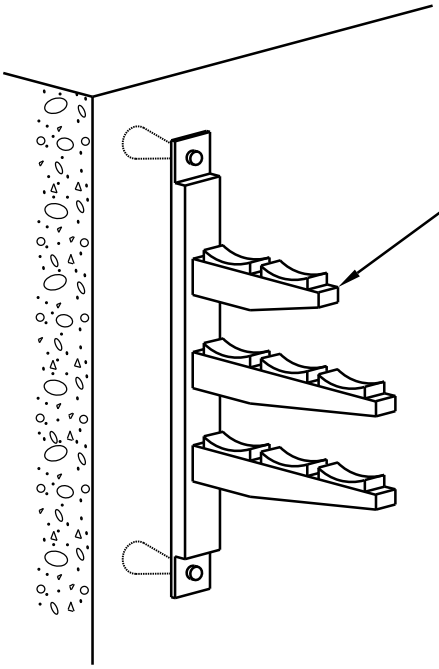

CABLE RACK

NTS

NATIONAL PARK SERVICE
GRAND CANYON NATIONAL PARK
SOUTH RIM

2605-448

© JACOBS

Jacobs

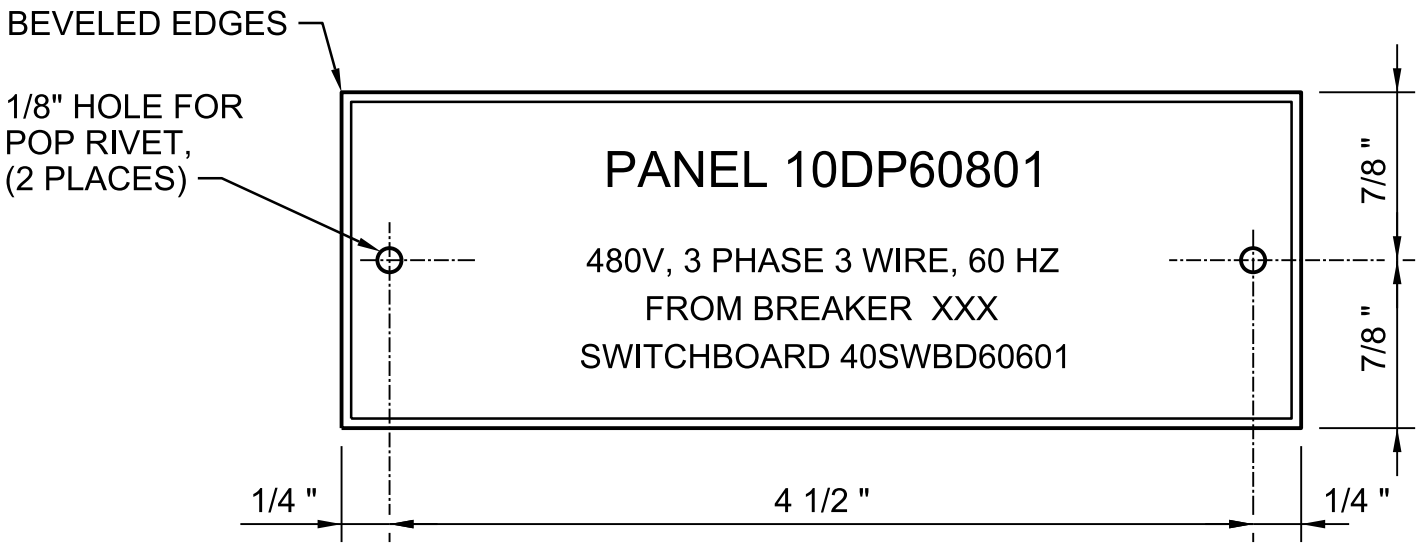

TOP ROW: 1/2 " LETTERS
OTHER ROWS: 3/16 " LETTERS
1/4 " SPACING BETWEEN FIRST 2 ROWS
1/8 " SPACING BETWEEN OTHER ROWS

COLOR SCHEDULE		
PANEL TYPE	BACKGROUND	LETTERING
208/120 VOLT, 60 HZ	BLACK	WHITE
480 VOLT, 60 HZ	BLACK	WHITE
EMERGENCY SERVICES	RED	BLACK

REQUIRED DATA

FIRST LINE: PANEL DESIGNATION
SECOND LINE: PHASE, VOLTAGE, FREQUENCY
THIRD AND FOURTH LINES: POWER SOURCE AND BREAKER

XXX = BASED ON FINAL DESIGN SHOP DRAWING

NOTES:

1. ALUMINUM NAMEPLATES SECURED WITH SCREWS FOR OUTDOOR EQUIPMENT. PHENOLIC PLASTIC IN ALL OTHER CASES.

PANELBOARD NAMEPLATE

NTS

NATIONAL PARK SERVICE
GRAND CANYON NATIONAL PARK
SOUTH RIM

2605-500

© JACOBS

Jacobs

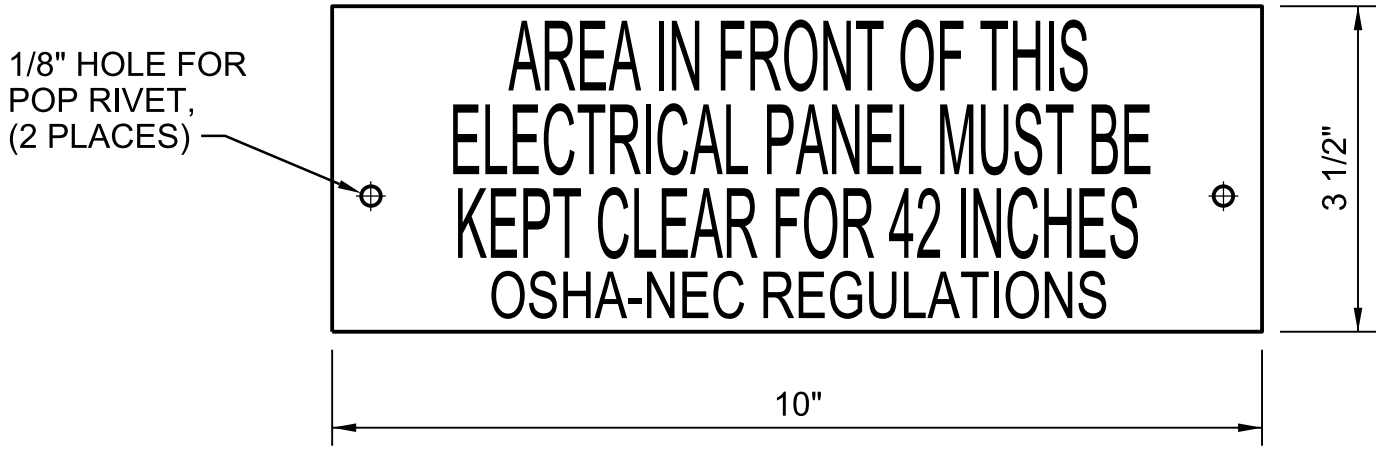

TOP 3 ROWS: 3/4 " LETTERS
BOTTOM ROW: 1/2 " LETTERS
WHITE LETTERING ON RED BACKGROUND

OSHA/NEC PLACARD

NTS

NATIONAL PARK SERVICE
GRAND CANYON NATIONAL PARK
SOUTH RIM

2605-501

© JACOBS

Jacobs

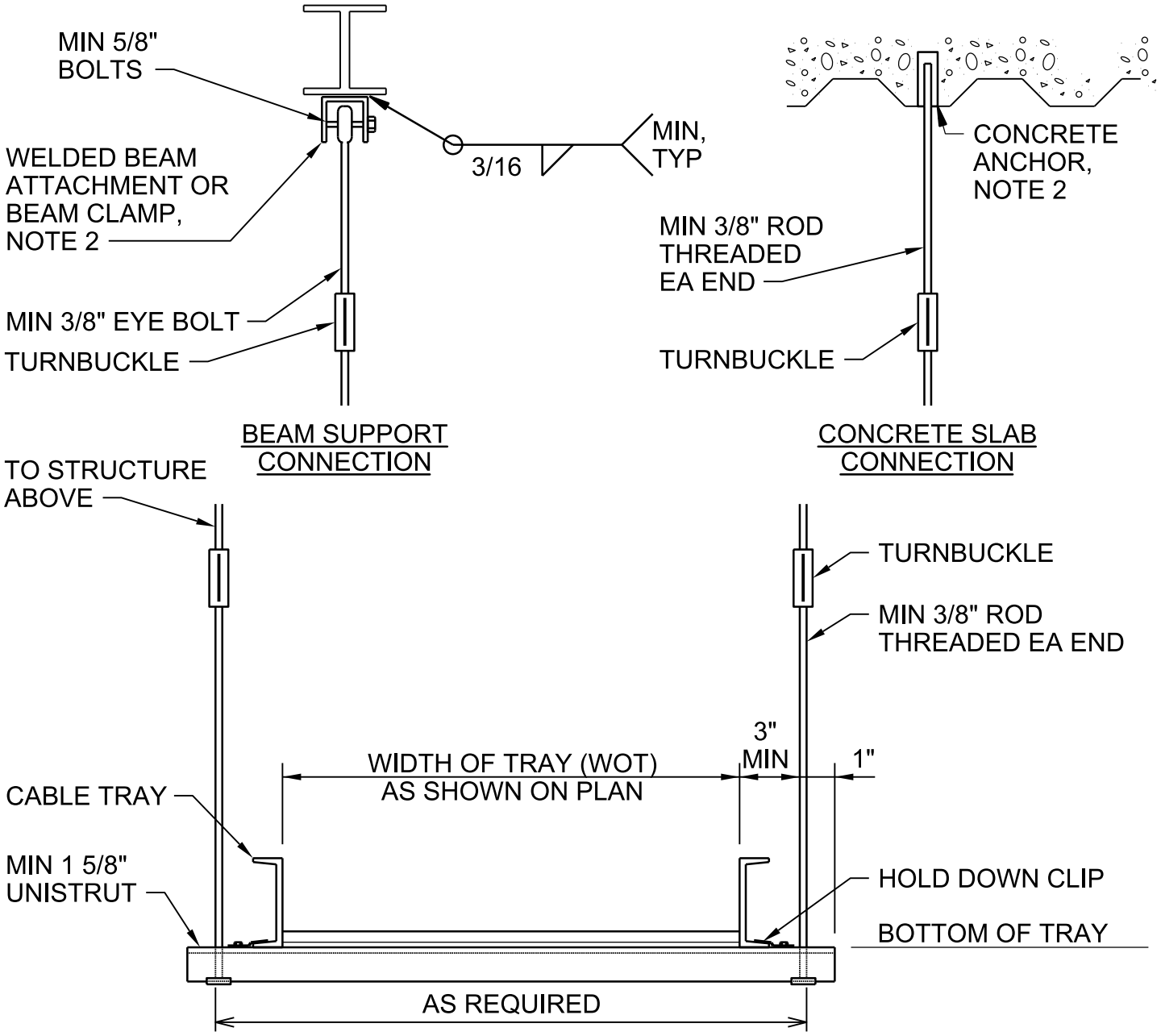

NOTES:

1. FOR MATERIAL TYPE, SEE AREA CLASSIFICATION AND MATERIAL SELECTION TABLE.
2. DETERMINE SPAN AND TYPE OF SUPPORTS, LOCATE SUPPORTS, AND SIZE SUPPORT RODS, CONNECTIONS AND BRACES PER MANUFACTURERS RECOMMENDATIONS.
3. SIZE STRUT SUPPORTS AS REQUIRED TO SPAN BETWEEN SUPPORT POINTS PER MANUFACTURER'S REQUIREMENTS.

CABLE TRAY SUPPORT

NTS

NATIONAL PARK SERVICE
GRAND CANYON NATIONAL PARK
SOUTH RIM

2605-700

© JACOBS

Jacobs

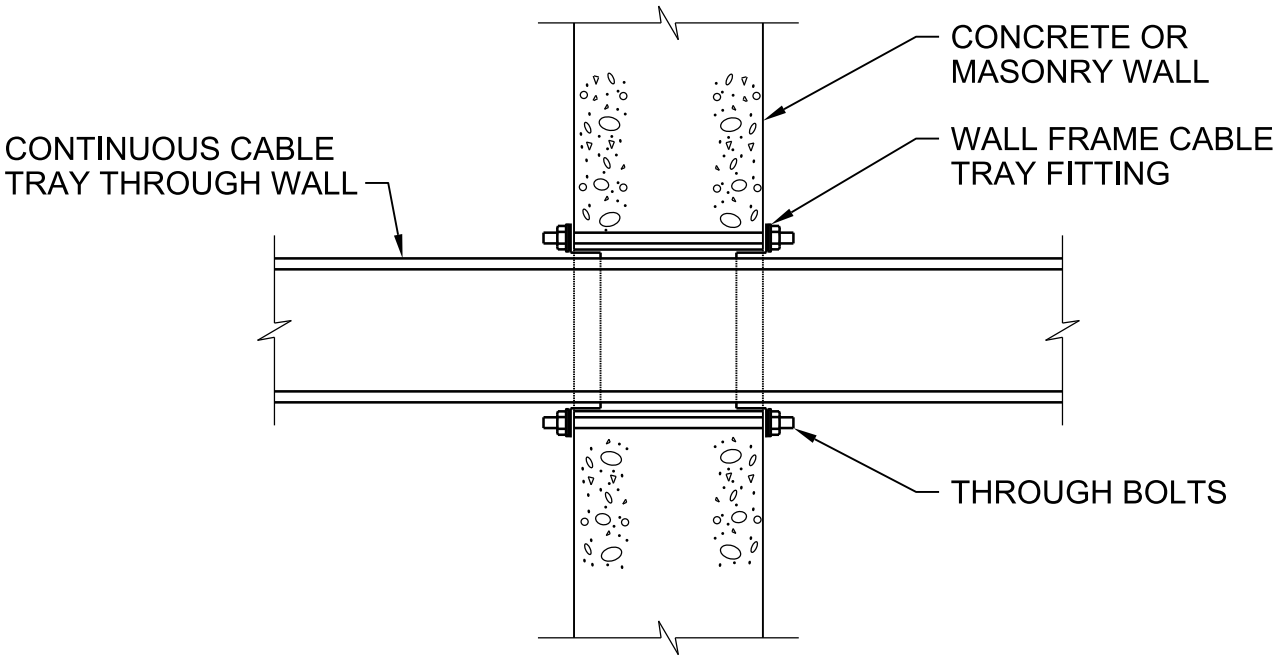

NOTES:

1. SEAL OPENING IN AND AROUND CABLE TRAY WITH FIRE EXPANSIVE INTUMESCENT BAGS LISTED BY A NATIONALLY RECOGNIZED TESTING LABORATORY (NRTL).

CABLE TRAY WALL PENETRATION

NTS

NATIONAL PARK SERVICE
GRAND CANYON NATIONAL PARK
SOUTH RIM

2605-701

© JACOBS

Jacobs

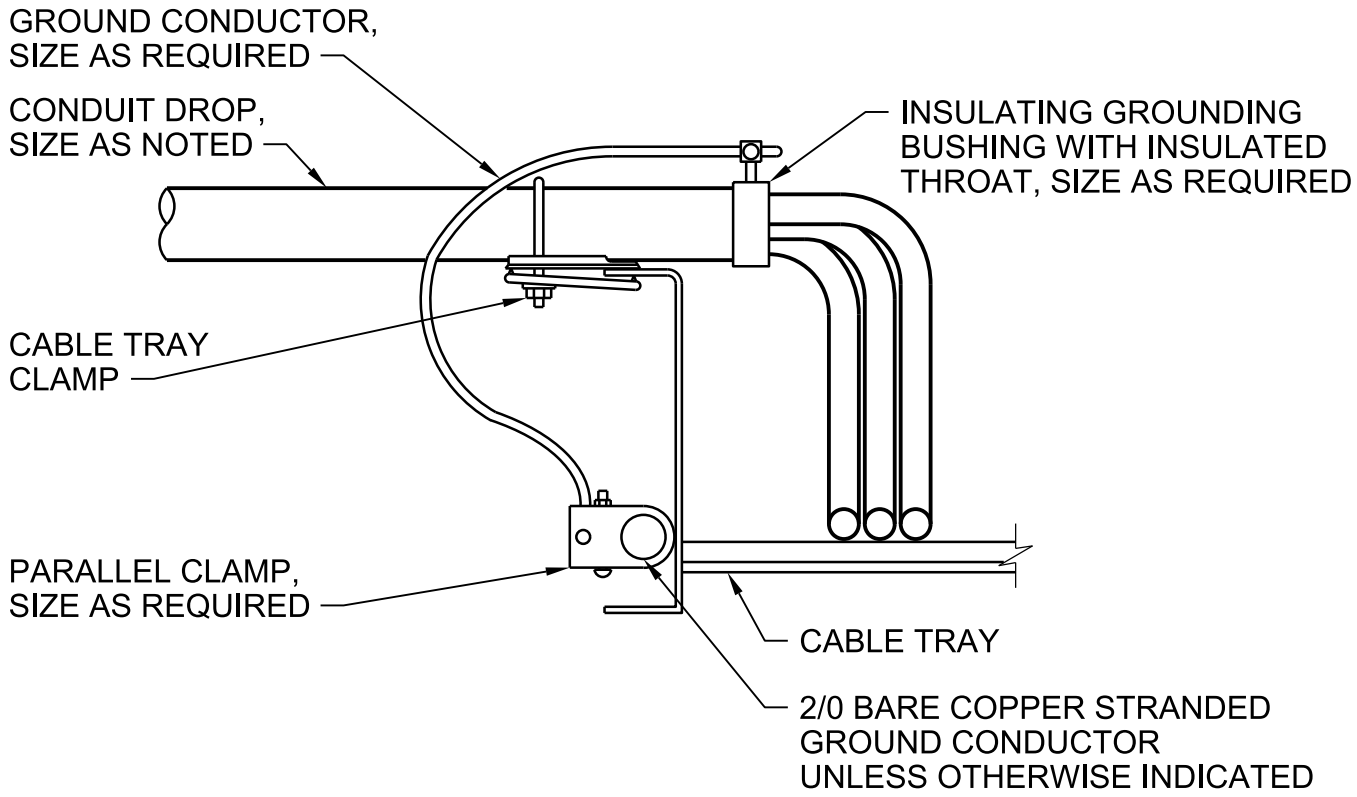

NOTES:

1. FASTENING HARDWARE IN TRAY SHALL BE ROUNDED AND HAVE NO SHARP CORNERS.

2. FOR MATERIAL TYPE, SEE AREA CLASSIFICATION AND MATERIAL SELECTION TABLE.

CONDUIT DROP INTO CABLE TRAY

NTS

NATIONAL PARK SERVICE
GRAND CANYON NATIONAL PARK
SOUTH RIM

2605-702

© JACOBS

Jacobs

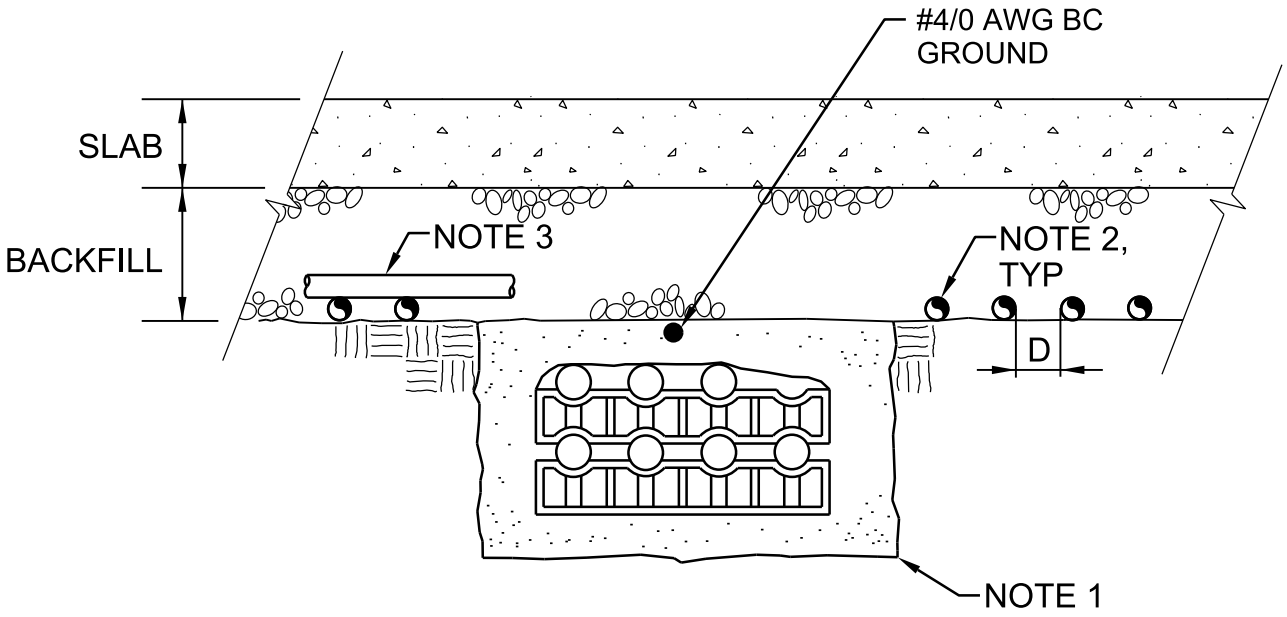

D = 3"MIN FOR 2"-6" CONDUIT

D = 2"MIN FOR <2 INCH CONDUIT

NOTES:

1. SIMILAR TO STANDARD DETAIL 2605-420. THE PLACEMENT OF MULTIPLE LAYERS OF RACEWAYS UNDER A SLAB ON GRADE SHALL BE INSTALLED IN A TRENCH BELOW THE BACKFILL ZONE, AS SPECIFIED IN SECTION 31 23 23-3.01.

2. INDIVIDUAL RACEWAYS OR A SINGLE LAYER OF RACEWAYS SHALL BE INSTALLED AT THE LOWEST ELEVATION OF THE BACKFILL ZONE WITH SPACING PER NOTE 1.

3. RACEWAYS THAT CROSS WITHIN THE BACKFILL ZONE SHALL BE INSTALLED AS A SINGLE LAYER ABOVE RACEWAYS IN THE LOWEST ELEVATION OF THE BACKFILL ZONE. SPACE RACEWAYS PER "D", THIS DETAIL. NO MORE THAN TWO LAYERS OF RACEWAYS SHALL BE INSTALLED IN THE BACKFILL ZONE, AND ONLY AT THE LOWEST ELEVATION.

RACEWAYS INSTALLED UNDER SLAB

NTS

NATIONAL PARK SERVICE
GRAND CANYON NATIONAL PARK
SOUTH RIM

2605-900

© JACOBS

Jacobs

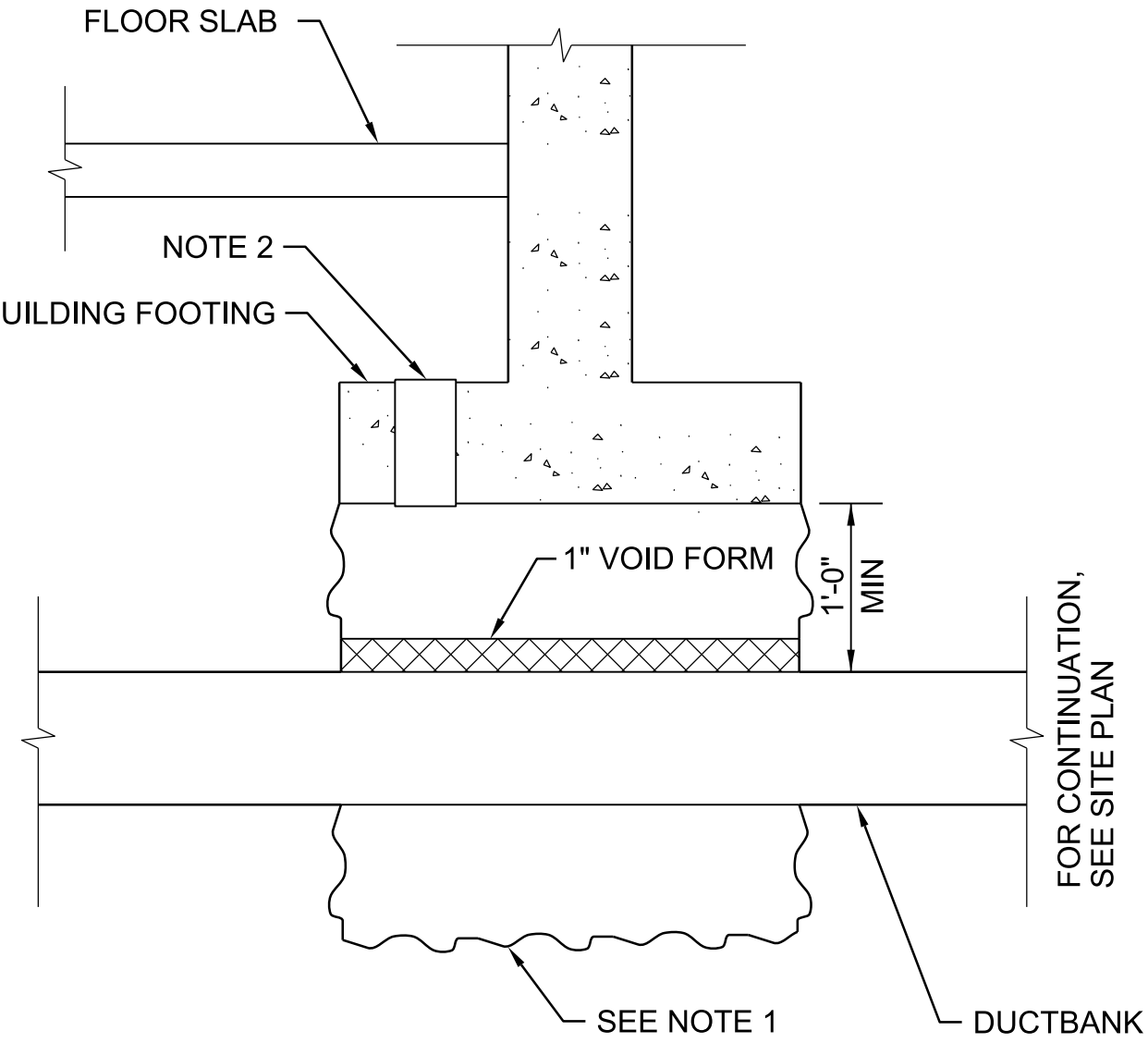

NOTES:

1. BACKFILL ENTIRE DEPTH OF DUCTBANK EXCAVATION BELOW FOOTING WITH CONTROLLED LOW STRENGTH FILL. PROVIDE A MINIMUM OF 12" OF FILL ON ALL SIDES OF DUCTBANK.

2. PROVIDE SLEEVES AS REQUIRED FOR CONDUIT INSTALLATION FROM DUCTBANKS TO ELECTRICAL EQUIPMENT MOUNTED AGAINST EXTERIOR WALL.

DUCTBANK ROUTED UNDER FOOTING

NTS

NATIONAL PARK SERVICE
GRAND CANYON NATIONAL PARK
SOUTH RIM

2605-901

© JACOBS

Jacobs

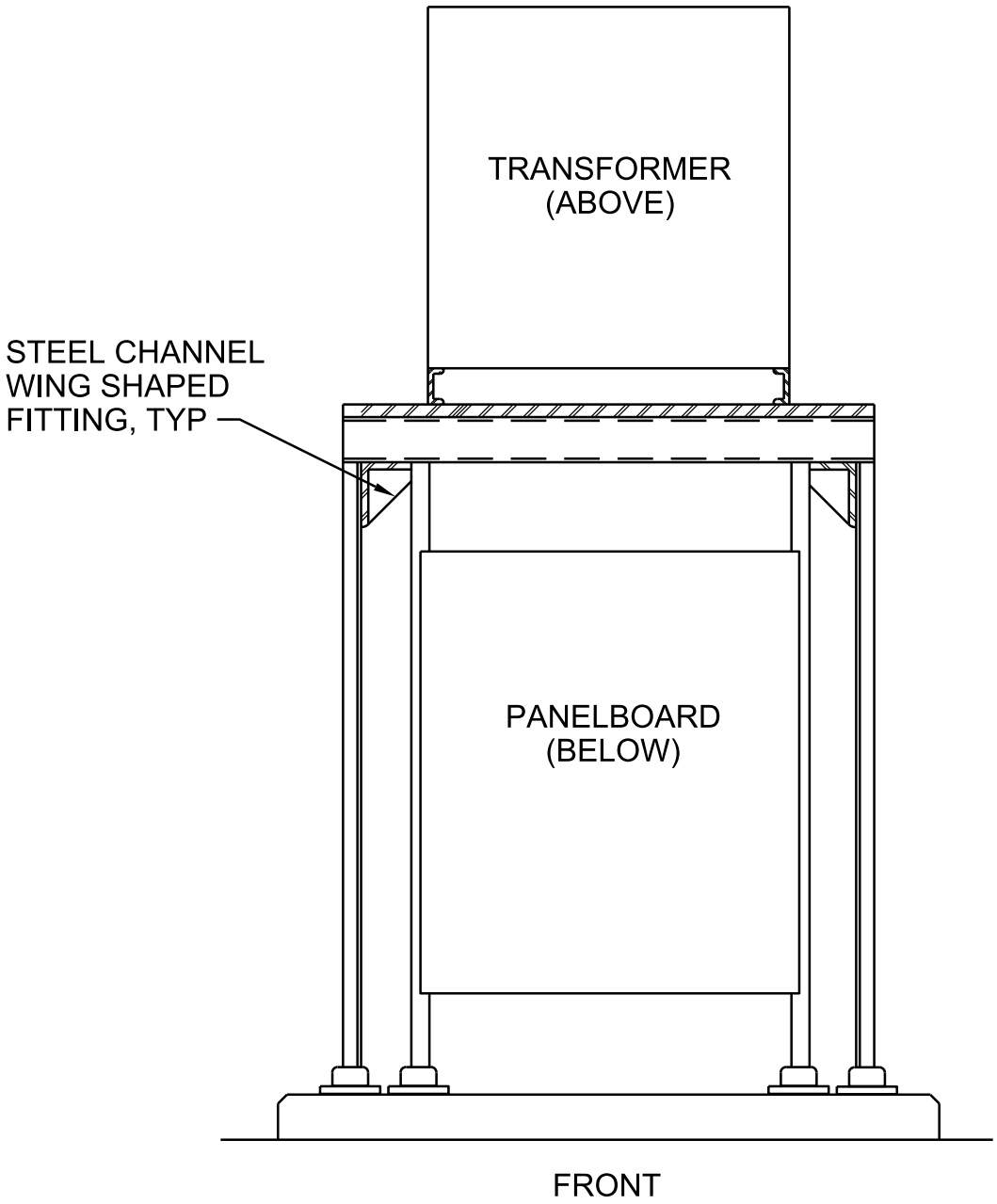

NOTES:

1. USE WASHERS, SPLIT-LOCK WASHERS UNDER ALL NUTS AND BOLTS.
2. CONCRETE ANCHORS, SEE SPECIFICATIONS.
3. FOR MATERIAL TYPE REQUIREMENTS AND AREA CLASSIFICATIONS, SEE AREA CLASSIFICATION TABLE ON DRAWING 01G028.

TRANSFORMER MOUNTING

NTS

NATIONAL PARK SERVICE
GRAND CANYON NATIONAL PARK
SOUTH RIM

2622-002

© JACOBS

Jacobs

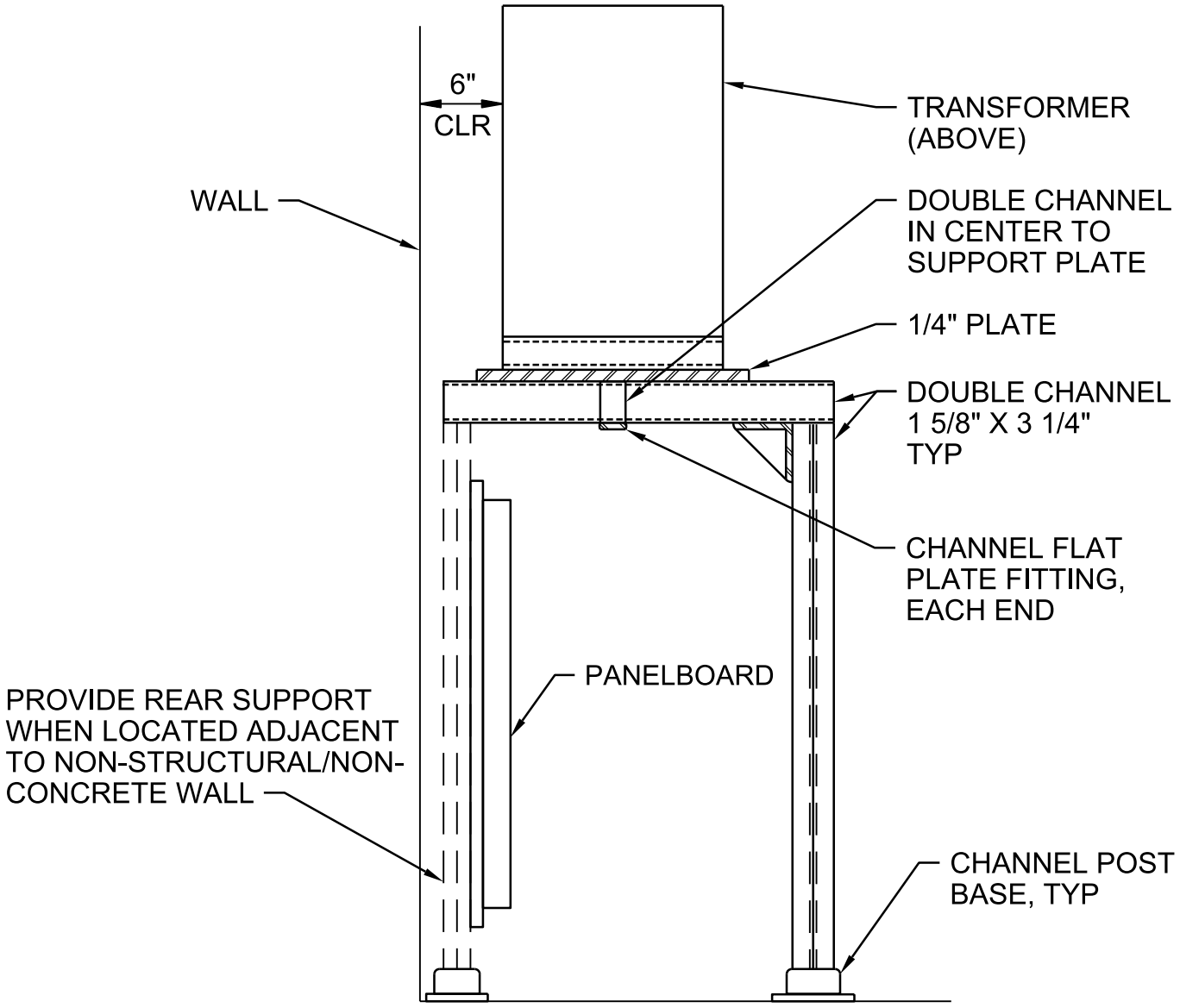

SIDE

NOTES:

1. FOR MATERIAL TYPE REQUIREMENTS AND AREA CLASSIFICATIONS, SEE AREA CLASSIFICATION TABLE ON DRAWING 01G028.

STACKED TRANSFORMER MOUNTING INSTALLATION

NTS

NATIONAL PARK SERVICE
GRAND CANYON NATIONAL PARK
SOUTH RIM

2622-005

© JACOBS

Jacobs

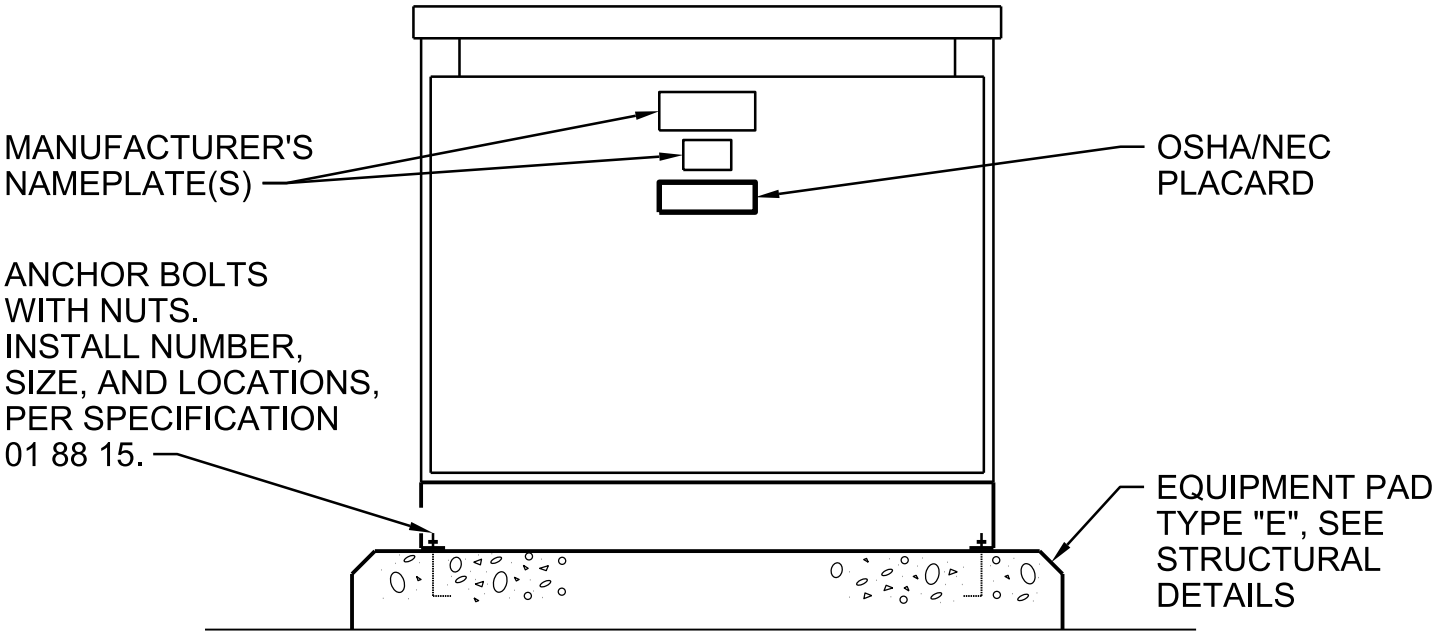

TRANSFORMER

NTS

NATIONAL PARK SERVICE
GRAND CANYON NATIONAL PARK
SOUTH RIM

2622-006

© JACOBS

Jacobs

NOTES:
1. ADD PANEL DESIGNATION. REFER TO PLANS AND P&ID'S FOR PANEL DESIGNATIONS.

2. 30 MILLIMETER LED INDICATOR OILTIGHT/WATERTIGHT, NEMA 4X, 120V AC TRANSFORMER. REFER TO P&ID'S FOR INSTRUMENT TAGS. G = GREEN, R = RED.

3. 30 MILLIMETER PUSHBUTTON OILTIGHT/WATERTIGHT, NEMA 4X, RETURN ON RELEASE OPERATION, 1 N.O, 1 N.C. CONTACTS. REFER TO P&ID'S FOR INSTRUMENT TAGS.

4. SEE DETAILS 2624-003 SHEET 1 OF 2 FOR WIRING DIAGRAM.

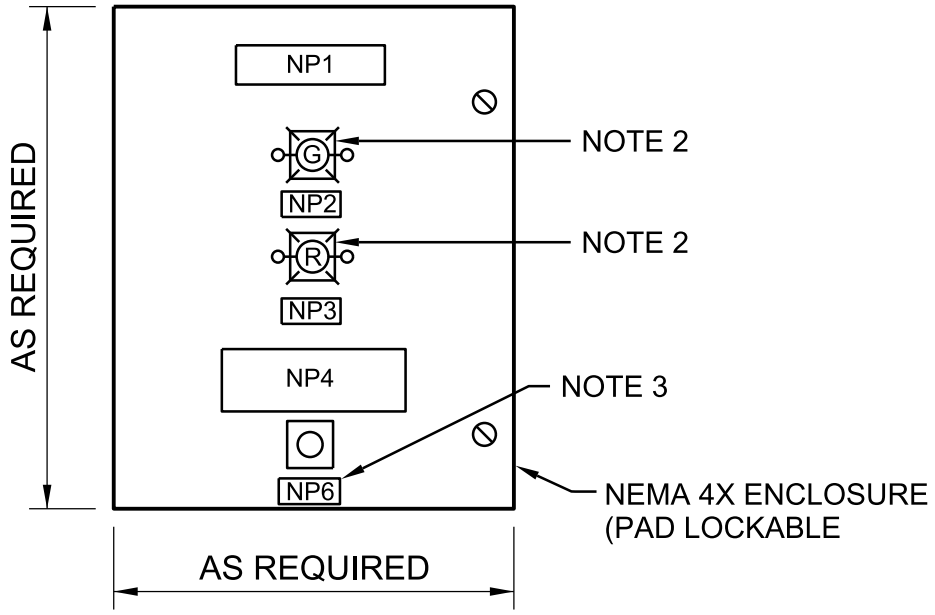

ITEM NO.	NAMEPLATE ENGRAVING
NP1	FACILITY GO/NO-GO PANEL SEE NOTE 1
NP2	GO
NP3	NO-GO
NP4	CAUTION-DO NOT ENTER IF RED "NO-GO LIGHT" IS LIT. COMBUSTIBLE GAS MAY BE PRESENT OR VENTILATION FAILURE MAY HAVE OCCURED.
NP6	PUSH TO TEST

GO/NO-GO PANEL EXTERIOR

NTS

NATIONAL PARK SERVICE
GRAND CANYON NATIONAL PARK
SOUTH RIM

2624-001

© JACOBS

Jacobs

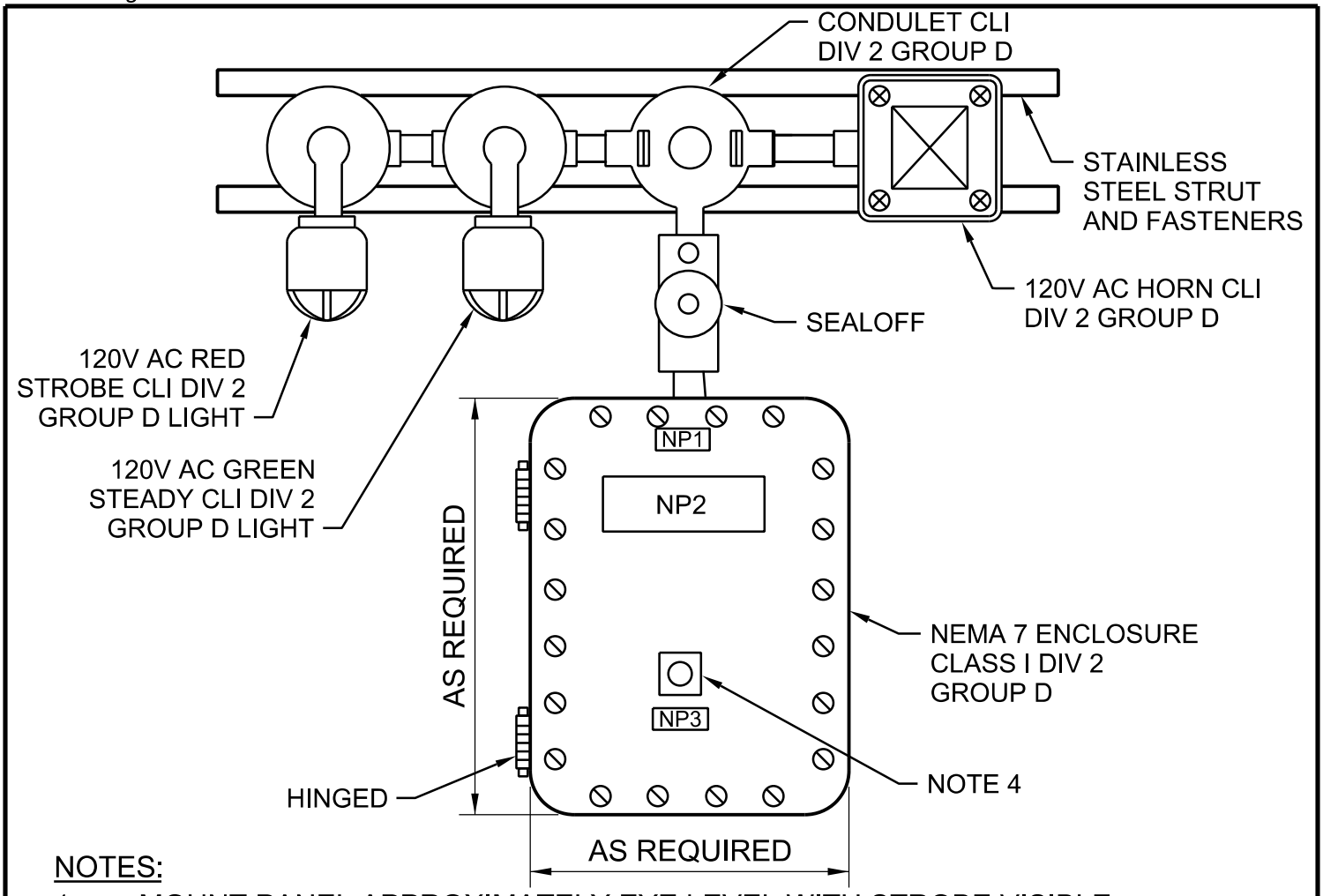

NOTES:

1. MOUNT PANEL APPROXIMATELY EYE LEVEL WITH STROBE VISIBLE THROUGHOUT AREA.

2. BUILD OUT WALL STRUT AS NECESSARY FOR MOUNTING.

3. ADD PANEL DESIGNATION. REFER TO PLANS AND P&ID'S FOR PANEL DESIGNATIONS.

4. 30 MILLIMETER PUSHBUTTON OILTIGHT/WATERTIGHT, NEMA 7, RETURN ON RELEASE OPERATION, 1 N.O, 1 N.C. CONTACTS. REFER TO P&ID'S FOR INSTRUMENT TAGS.

5. SEE DETAIL 2624-003 SHEET 2 OF 2 FOR WIRING DIAGRAM.

ITEM NO.	DESCRIPTION
NP1	PNL333205B
NP2	CAUTION-EXIT ROOM IMMEDIATELY IF "RED" WARNING STROBE IS LIT OR HORN IS OUNDING. COMBUSTIBLE GAS MAY BE PRESENT OR VENTILATION SYSTEM FAILURE MAY HAVE OCCURRED.
NP3	PUSH TO TEST

GO/NO-GO PANEL INTERIOR

NTS

NATIONAL PARK SERVICE
GRAND CANYON NATIONAL PARK
SOUTH RIM

2624-002

© JACOBS

Jacobs

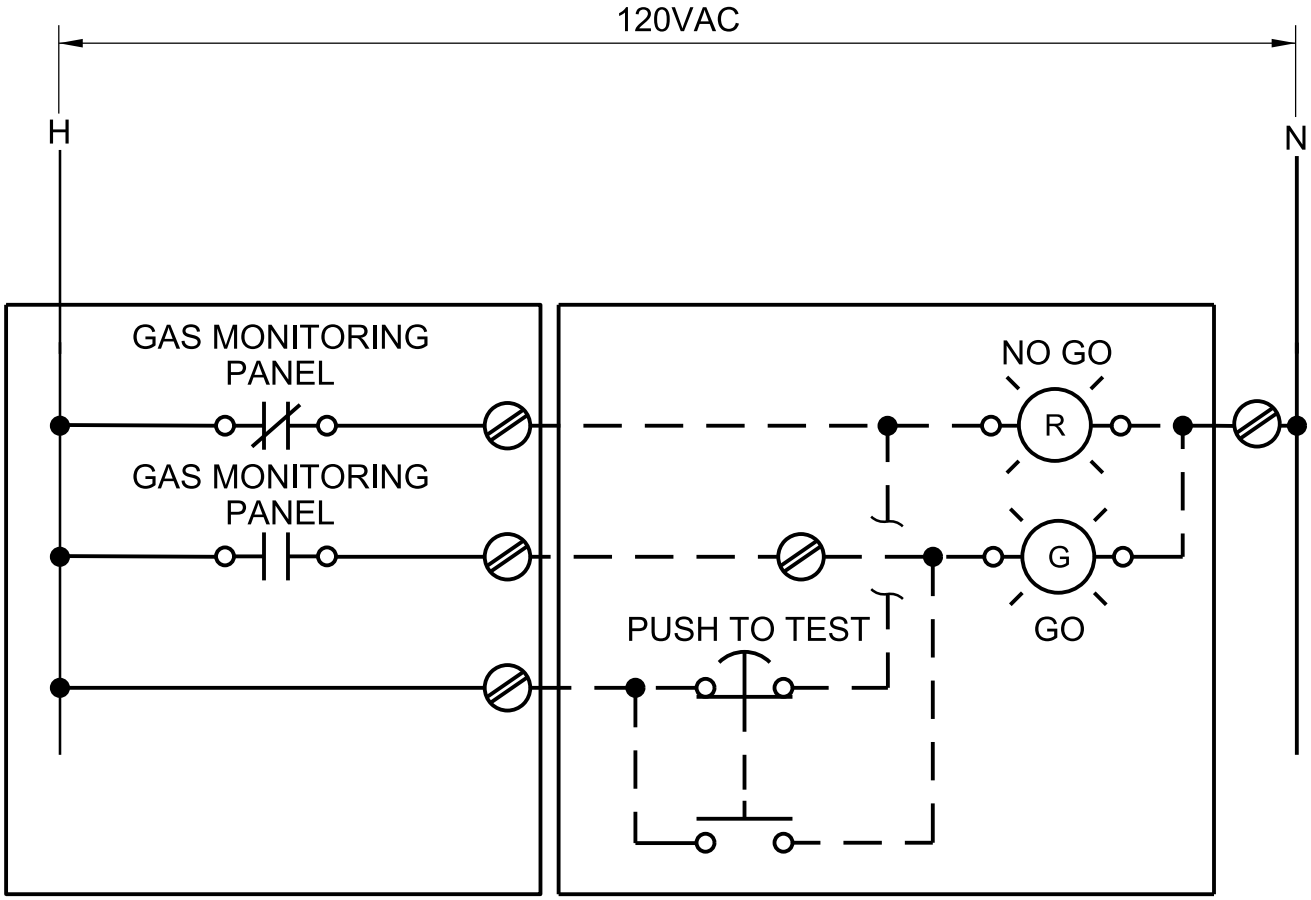

GO/NO-GO WIRING DIAGRAM

NTS

DETAIL 1 OF 2

2624-003

NATIONAL PARK SERVICE
GRAND CANYON NATIONAL PARK
SOUTH RIM

© JACOBS

Jacobs

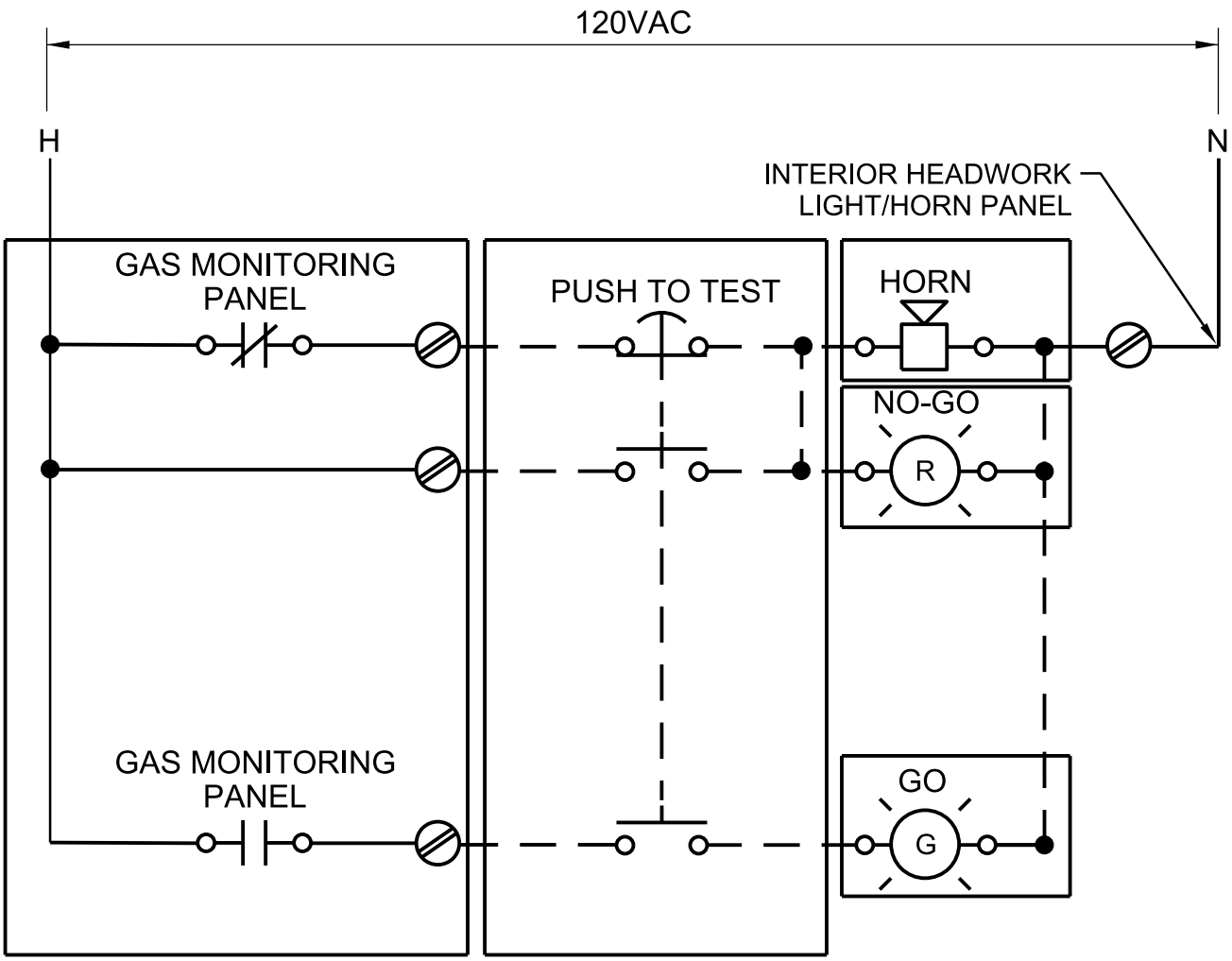

GAS MONITORING ALARM PANEL WIRING DIAGRAM

NTS

DETAIL 2 OF 2

2624-003

NATIONAL PARK SERVICE
GRAND CANYON NATIONAL PARK
SOUTH RIM

© JACOBS

Jacobs

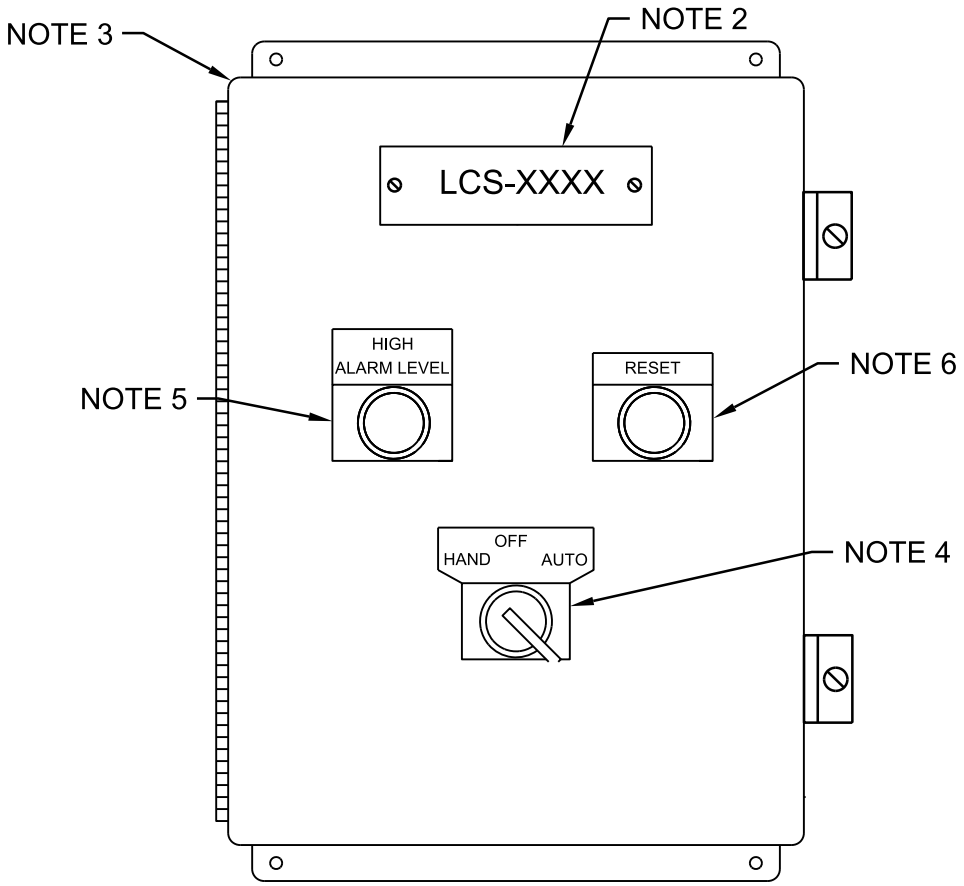

NOTES:

1. REFER TO P&ID's FOR LOCAL CONTROL STATIONS REQUIRING MOTOR PROTECTION RELAYS (MPR's), TAGGING, AND DEVICES. REFER TO PUMP CONTROL DIAGRAMS FOR WIRING.

2. ENGRAVED NAMEPLATE, REFER TO SPECIFICATION 26 05 02 FOR REQUIREMENTS. PROVIDE 2 STAINLESS STEEL SCREWS.

3. STAINLESS STEEL ENCLOSURE, 12"x10"x6" (NOMINAL), NEMA 4X, CONTINUOUS HINGE COVER, GASKETED, STAINLESS STEEL SCREW-DOWN CLAMPS COVER, WITH BACK PLATE.

4. 30 MILLIMETER SWITCH, OILTIGHT/WATERTIGHT, NEMA 4X, OPERATION, 2 N.O, 2 N.C. CONTACTS. REFER TO P&ID'S FOR INSTRUMENT TAGS.

5. 30 MILLIMETER LED INDICATOR, RED, OILTIGHT/WATERTIGHT, NEMA 4X, WITH 120V AC TRANSFORMER. REFER TO P&ID'S FOR INSTRUMENT TAGS.

6. 30 MILLIMETER PUSHBUTTON, BLACK, RETURN ON RELEASE, OILTIGHT/WATERTIGHT, NEMA 4X, OPERATION, 2 N.O, 2 N.C. CONTACTS. REFER TO P&ID'S FOR INSTRUMENT TAGS.

LOCAL CONTROL STATION DETAIL - FRONT

NTS

DETAIL 1 OF 3

2624-010

NATIONAL PARK SERVICE
GRAND CANYON NATIONAL PARK
SOUTH RIM

© JACOBS

Jacobs

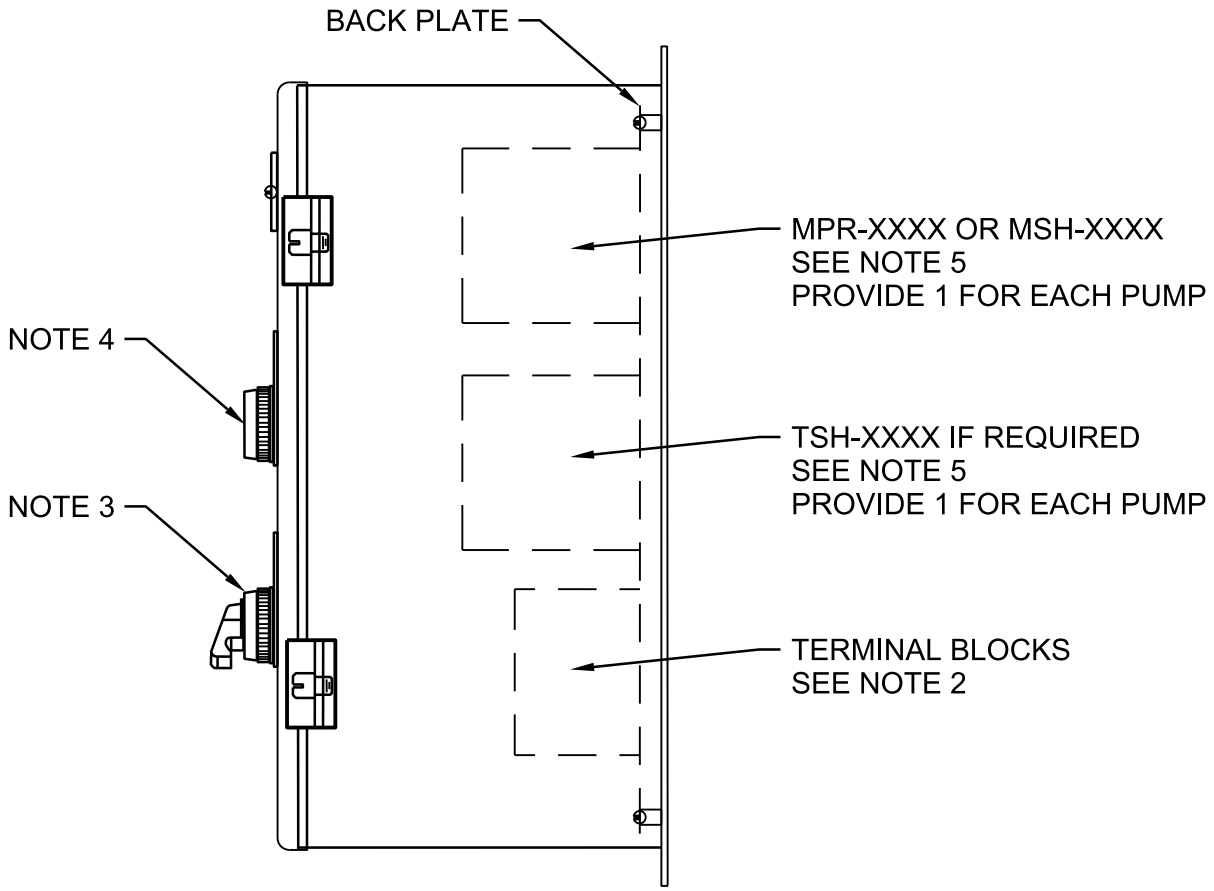

NOTES:

1. REFER TO P&ID's FOR LOCAL CONTROL STATIONS REQUIRING MOTOR PROTECTION RELAYS (MPR's), TAGGING, AND SWITCHES.

2. PROVIDE DIN RAIL AND TERMINAL BLOCKS, REFER TO P&ID's AND WIRING DIAGRAMS FOR NUMBER OF TERMINATION POINTS REQUIRED.

3. 30mm OIL TIGHT SWITCH WITH ENGRAVED LEGEND PLATE.

4. 30mm OIL TIGHT PUSHBUTTON WITH ENGRAVED LEGEND PLATE.

5. MOTOR PROTECTION RELAY IF REQUIRED, REFER TO P&ID DRAWINGS, PROVIDED BY PUMP MANUFACTURER, INSTALLED BY CONTRACTOR. MANUFACTURS VARY IN METHOD OF PROTECTION AND MAY UTILIZED ONE RELAY (MPR-XXXX) OR TWO RELAYS (MSH-XXXX AND TSH-XXXX). COORDINATE WITH PUMP MANUFACTURER FOR FINAL WIRING OF RELAY(S).

LOCAL CONTROL STATION DETAIL - SIDE

NTS

DETAIL 3 OF 3

2624-010

NATIONAL PARK SERVICE
GRAND CANYON NATIONAL PARK
SOUTH RIM

© JACOBS

Jacobs

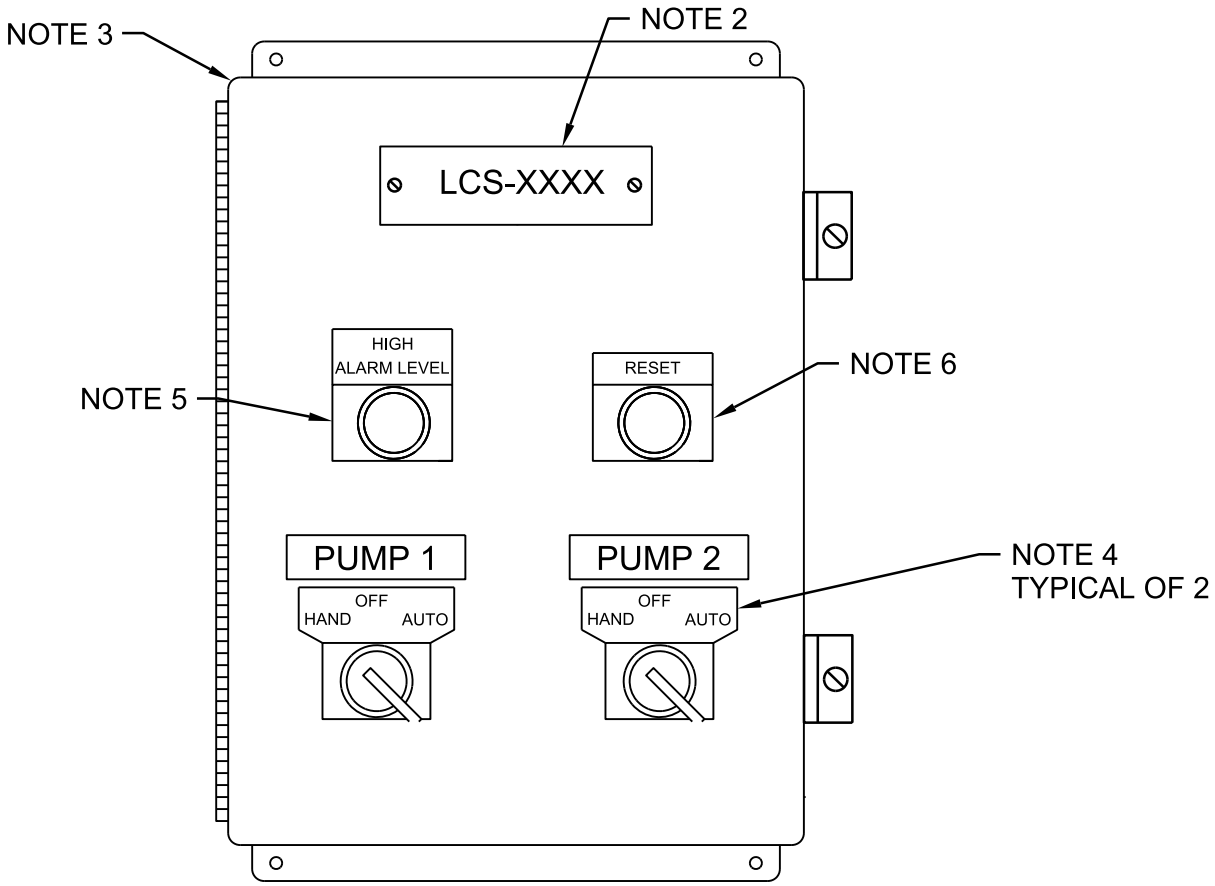

NOTES:

1. REFER TO P&ID's FOR LOCAL CONTROL STATIONS REQUIRING MOTOR PROTECTION RELAYS (MPR's), TAGGING, AND DEVICES. REFER TO PUMP CONTROL DIAGRAMS FOR WIRING.

2. ENGRAVED NAMEPLATE, REFER TO SPECIFICATION 26 05 02 FOR REQUIREMENTS. PROVIDE 2 STAINLESS STEEL SCREWS.

3. STAINLESS STEEL ENCLOSURE, 12"x10"x6" (NOMINAL), NEMA 4X, CONTINUOUS HINGE COVER, GASKETED, STAINLESS STEEL SCREW-DOWN CLAMPS COVER, WITH BACK PLATE.

4. 30 MILLIMETER SWITCH, OILTIGHT/WATERTIGHT, NEMA 4X, OPERATION, 2 N.O, 2 N.C. CONTACTS. REFER TO P&ID'S FOR INSTRUMENT TAGS.

5. 30 MILLIMETER LED INDICATOR, RED, OILTIGHT/WATERTIGHT, NEMA 4X, WITH 120V AC TRANSFORMER. REFER TO P&ID'S FOR INSTRUMENT TAGS.

6. 30 MILLIMETER PUSHBUTTON, BLACK, RETURN ON RELEASE, OILTIGHT/WATERTIGHT, NEMA 4X, OPERATION, 2 N.O, 2 N.C. CONTACTS. REFER TO P&ID'S FOR INSTRUMENT TAGS.

LOCAL CONTROL STATION DETAIL - FRONT

NTS

DETAIL 2 OF 3

2624-010

NATIONAL PARK SERVICE
GRAND CANYON NATIONAL PARK
SOUTH RIM

© JACOBS

Jacobs

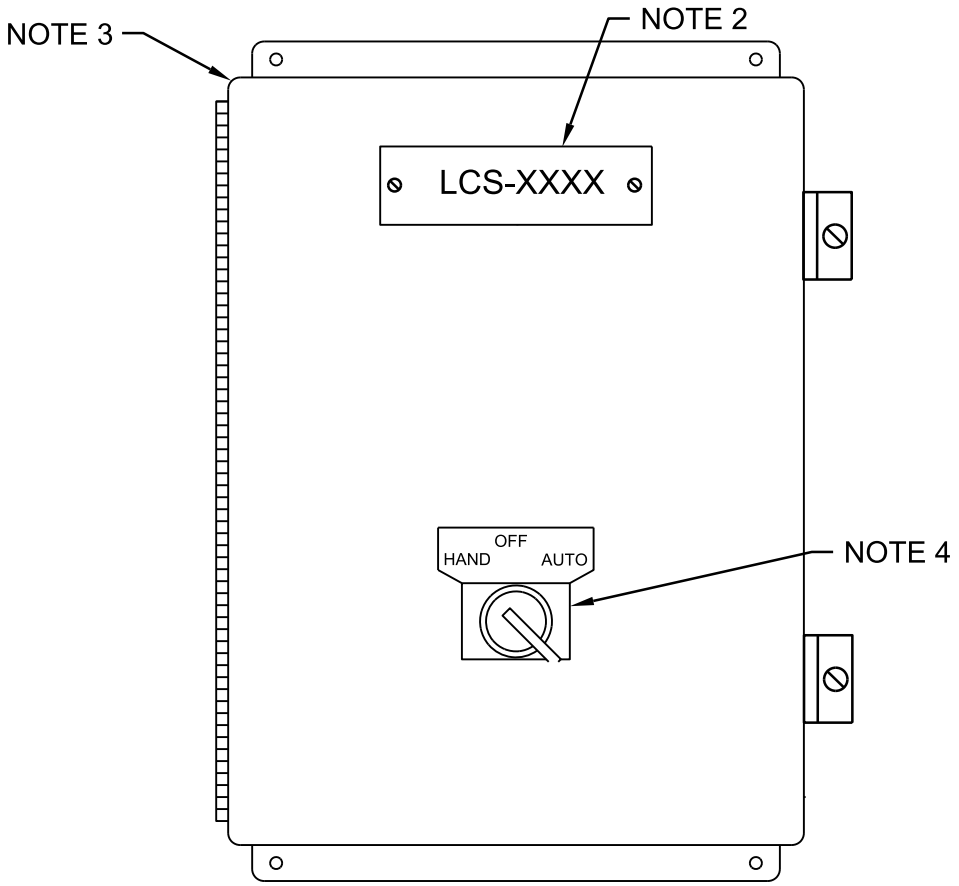

NOTES:

1. REFER TO EQUIPMENT CONTROL DIAGRAMS FOR WIRING.

2. ENGRAVED NAMEPLATE, REFER TO SPECIFICATION 26 05 02 FOR REQUIREMENTS. PROVIDE 2 STAINLESS STEEL SCREWS.

3. STAINLESS STEEL ENCLOSURE, 12"x10"x6" (NOMINAL), NEMA 4X, CONTINUOUS HINGE COVER, GASKETED, STAINLESS STEEL SCREW-DOWN CLAMPS COVER, WITH BACK PLATE.

4. 30 MILLIMETER SWITCH, OILTIGHT/WATERTIGHT, NEMA 4X, OPERATION, 2 N.O, 2 N.C. CONTACTS. REFER TO P&ID'S FOR INSTRUMENT TAGS.

FAN CONTROL STATION DETAIL - FRONT

NTS

DETAIL 1 OF 2

2624-012

NATIONAL PARK SERVICE
GRAND CANYON NATIONAL PARK
SOUTH RIM

© JACOBS

Jacobs

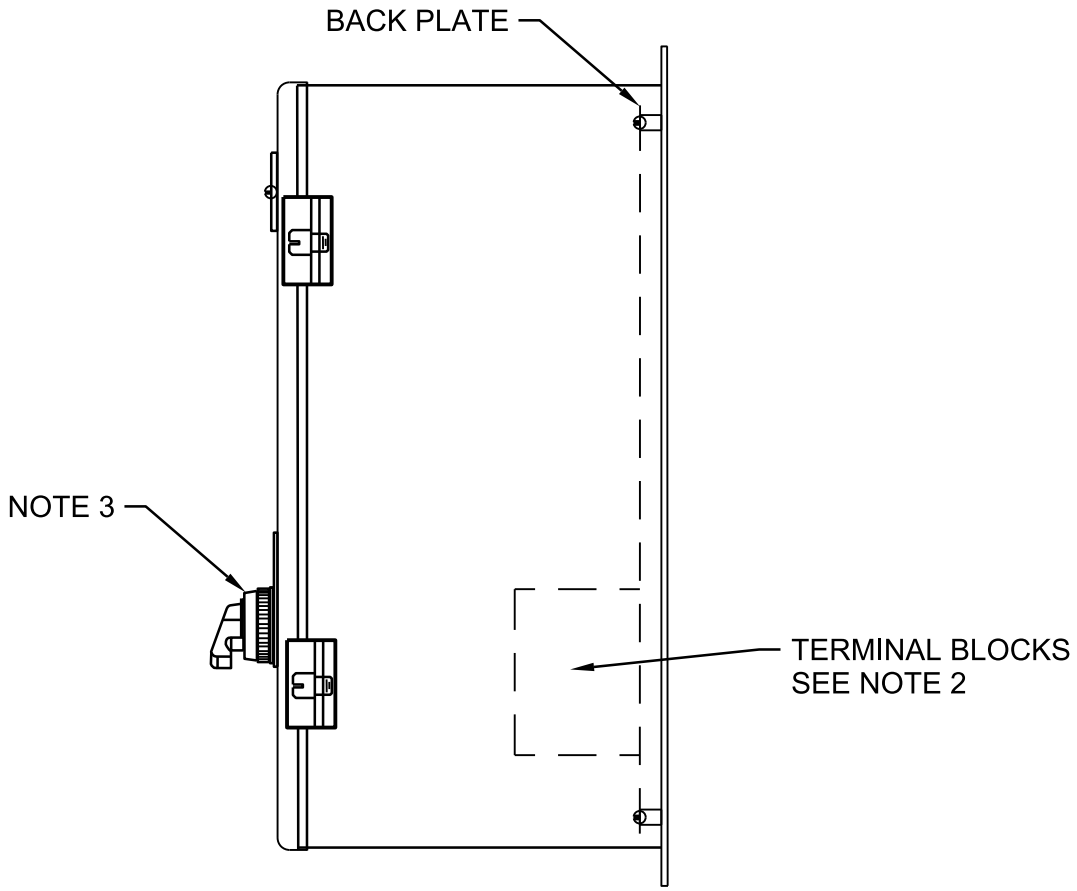

NOTES:

1. REFER TO P&ID's FOR LOCAL CONTROL STATIONS REQUIRING MOTOR PROTECTION RELAYS (MPR's), TAGGING, AND SWITCHES.

2. PROVIDE DIN RAIL AND TERMINAL BLOCKS, REFER TO P&ID's AND WIRING DIAGRAMS FOR NUMBER OF TERMINATION POINTS REQUIRED.

3. 30mm OIL TIGHT SWITCH WITH ENGRAVED LEGEND PLATE.

FAN CONTROL STATION DETAIL - SIDE

NTS

DETAIL 2 OF 2

2624-012

NATIONAL PARK SERVICE
GRAND CANYON NATIONAL PARK
SOUTH RIM

© JACOBS

Jacobs

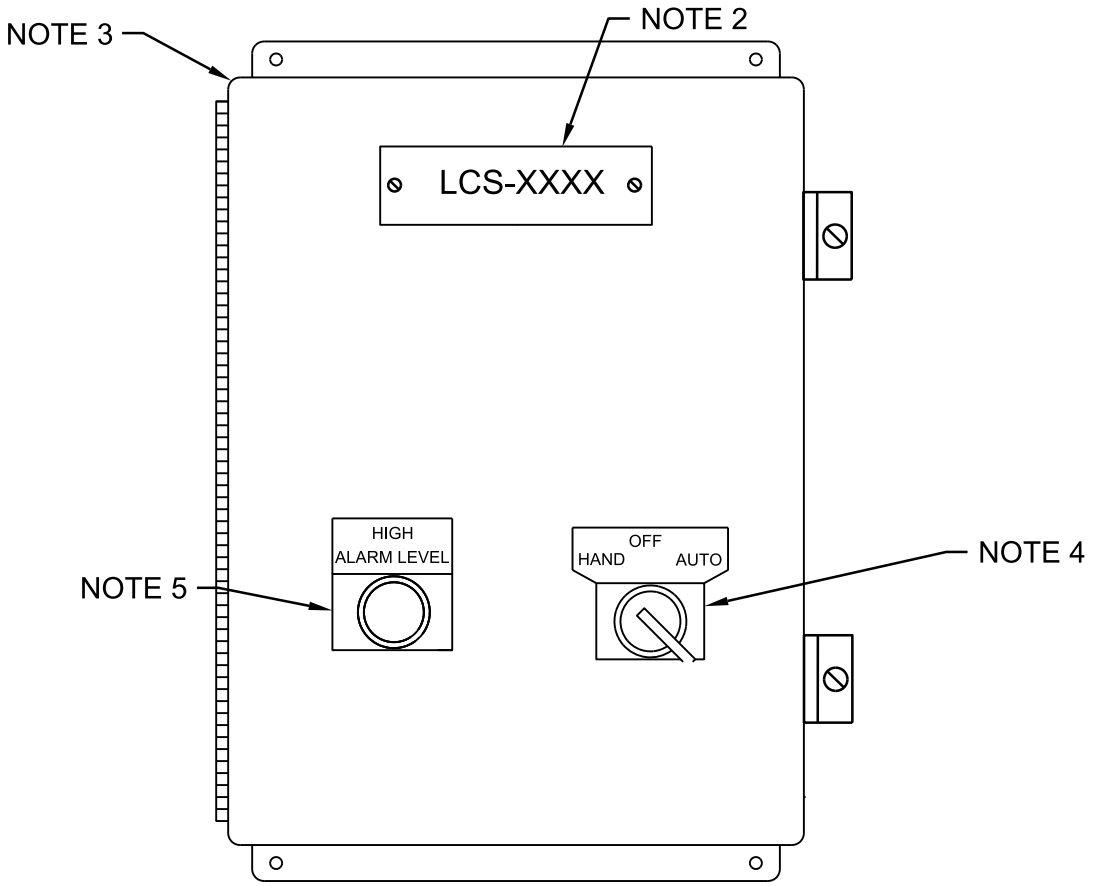

NOTES:

1. REFER TO EQUIPMENT PUMP CONTROL DIAGRAMS FOR WIRING.

2. ENGRAVED NAMEPLATE, REFER TO SPECIFICATION 26 05 02 FOR REQUIREMENTS. PROVIDE 2 STAINLESS STEEL SCREWS.

3. STAINLESS STEEL ENCLOSURE, 18"x12"x8" (NOMINAL), NEMA 4X, CONTINUOUS HINGE COVER, GASKETED, STAINLESS STEEL SCREW-DOWN CLAMPS COVER, WITH BACK PLATE.

4. 30 MILLIMETER SWITCH, OILTIGHT/WATERTIGHT, NEMA 4X, OPERATION, 2 N.O, 2 N.C. CONTACTS. REFER TO P&ID'S FOR INSTRUMENT TAGS.

5. 30 MILLIMETER LED INDICATOR, GREEN, OILTIGHT/WATERTIGHT, NEMA 4X, WITH 120V AC TRANSFORMER. REFER TO P&ID'S FOR INSTRUMENT TAGS.

COMPOST FAN CONTROL STATION DETAIL - FRONT

NTS

DETAIL 1 OF 2

2624-013

NATIONAL PARK SERVICE
GRAND CANYON NATIONAL PARK
SOUTH RIM

© JACOBS

Jacobs

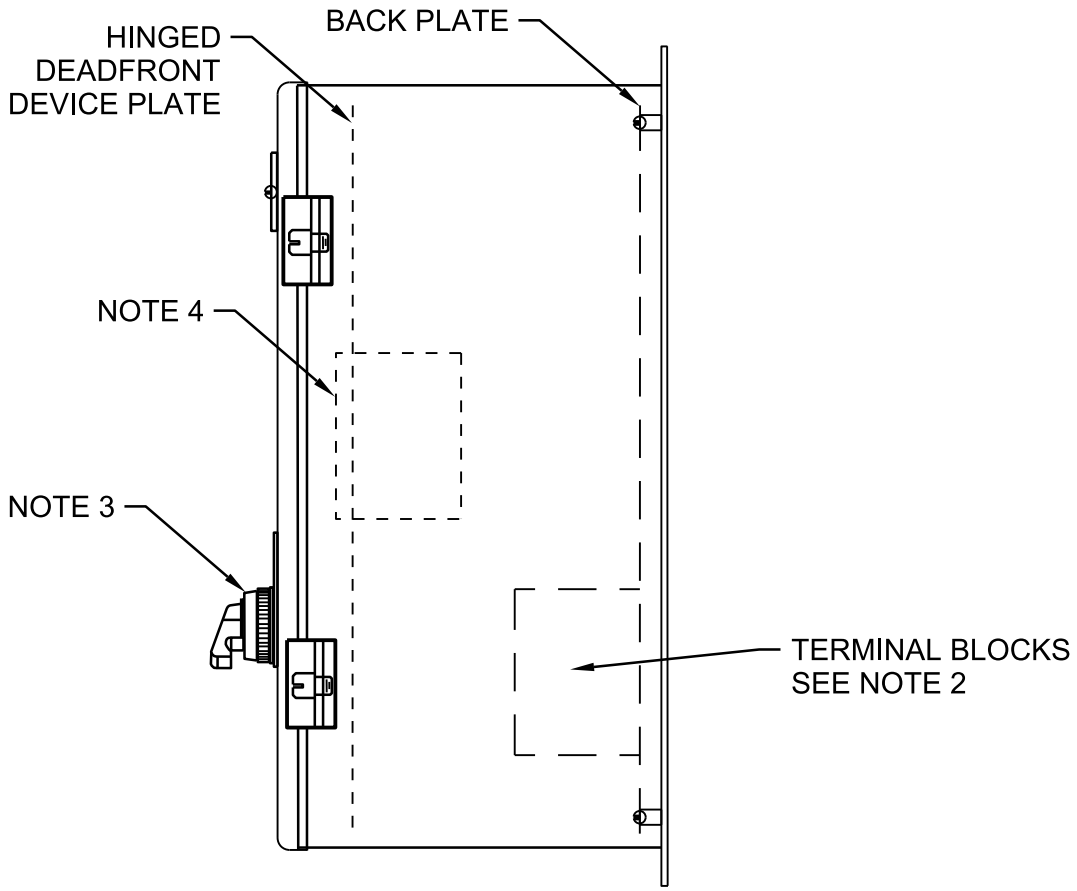

NOTES:

1. REFER TO P&ID's FOR LOCAL CONTROL STATIONS REQUIRING MOTOR PROTECTION RELAYS (MPR's), TAGGING, AND SWITCHES.

2. PROVIDE DIN RAIL AND TERMINAL BLOCKS, REFER TO P&ID's AND WIRING DIAGRAMS FOR NUMBER OF TERMINATION POINTS REQUIRED.

3. 30mm OIL TIGHT SWITCH WITH ENGRAVED LEGEND PLATE.

4. ON/OFF REPEAT CYCLE TIMER, PANEL MOUNT, INDEPENDENTLY CONFIGUREABLE ON-TIME AND OFF-TIME PERIODS, RANGES 1 TO 10 SECONDS/MINUTES/HOURS DIP SWITCH SELECTABLE, UNIVERSAL POWERED 20 TO 240 VAC, DPDT MECHANICAL RELAY 10 AMP RESISTIVE AT 250 VAC.

COMPOST FAN CONTROL STATION DETAIL - SIDE

NTS

DETAIL 2 OF 2

2624-013

NATIONAL PARK SERVICE
GRAND CANYON NATIONAL PARK
SOUTH RIM

© JACOBS

Jacobs

ITEM	QTY	SALIENT CHARACTERISTICS	DESCRIPTION
1	1	PHYSICAL: 20"x20"x8" HWD, 316 STAINLESS STEEL, BRUSHED FINISH FUNCTIONAL: WALL MOUNT PERFORMANCE: NEMA-4X, IP66	ENCLOSURE N-4X, 316 SS
2	1	PHYSICAL: 17"x17"x0.104", CARBON STEEL, POWDER COATED WHITE FUNCTIONAL: NONE PERFORMANCE: NONE	17"x17" BACKPLATE
3	5	PHYSICAL: 35mm DIN RAIL FUNCTIONAL: 1 CHANNEL ANALOG ISOLATOR, 19.3 TO 253 VACDC POWER, 0/4-20 MILLI-AMP INPUT/OUTPUT PERFORMANCE: INTRINSICALLY SAFE ISOLATION, ATEX 2081 IID	2 CHANNEL ISOLATION,120VAC, RELAY OUTPUT
4	1	PHYSICAL: 35mm DIN RAIL, MINIATURE CIRCUIT BREAKER FUNCTIONAL: 1-POLE, 2AMP, THERMAL MAGNETIC, 277 V AC PERFORMANCE: UL 1077	1POLE CIRCUIT BREAKER, 2AMP, 277VAC, 10KAIC
5	5	PHYSICAL: 14"x1", 35mm DIN RAIL MOUNTING, POLYAMIDE PA66 HOUSING, GREY, ZINC CHROMATE CLAMP AND SCREWS, NICKEL PLATED COPPER ALLOY CURRENT BAR FUNCTIONAL: 600 V AC 16 AMP PERFORMANCE: NONE	FUSE HOLDER, 24VDC, INDICATING
6	5	PHYSICAL: 14"x1", 35mm DIN RAIL MOUNTING, POLYAMIDE PA66 HOUSING, GREY, ZINC CHROMATE CLAMP AND SCREWS, NICKEL PLATED COPPER ALLOY CURRENT BAR FUNCTIONAL: 600 V AC 16 AMP PERFORMANCE: NONE	0.25 AMP FUSE, 250VAC GLASS FUSE
7	3	PHYSICAL: MULTI-CIRCUIT, TWO-LEVEL, 2 SQUARE MILLIMETER, FEED-THROUGH, TERMINAL BLOCK, 35mm DIN RAIL MOUNTING, COLOR: GREY FUNCTIONAL: 600 VOLT, 35 AMP, WIRE #22-#12 AWG PERFORMANCE: NONE	600V. 35 AMP, 22-12 AWG, TERMINAL BLOCK
8	1	PHYSICAL: MULTI-CIRCUIT, TWO-LEVEL, 2 SQUARE MILLIMETER, FEED-THROUGH, GROUNDING TERMINAL BLOCK, 35mm DIN RAIL MOUNTING, COLOR: GREEN/YELLOW FUNCTIONAL: TERMINAL GROUNDING BLOCK, 600 VOLT, 35 AMP, WIRE #22-#12 AWG PERFORMANCE: NONE	FEED THROUGH GROUND, 22-10 AWG TERMINAL BLOCK YEL. GRN
9	1	PHYSICAL: MULTI-CIRCUIT, TWO-LEVEL, 2 SQUARE MILLIMETER, FEED-THROUGH, TERMINAL BLOCK, 35mm DIN RAIL MOUNTING, COLOR: GREY FUNCTIONAL: 600 VOLT, 35 AMP, WIRE #22-#12 AWG PERFORMANCE: NONE	END BARRIER
10	2	PHYSICAL: 35mm DIN RAIL, FUNCTIONAL:MATCHING END ANCHOR FOR ITEM 8 PERFORMANCE: NONE	END ANCHOR
11	A/R	PHYSICAL: 35mm DIN RAIL, FUNCTIONAL: nONE PERFORMANCE: NONE	35MM DIN RAIL
12	A/R	PHYSICAL: 1" x 1", WHITE, PLASTIC WIRE DUCT FUNCTIONAL:NONE PERFORMANCE: NONE	WIRE DUCT WTH COVER

ELECTRICAL - ANALOG ISOLATION BOM

NTS

DETAIL 1 OF 3

2624-021

NATIONAL PARK SERVICE
GRAND CANYON NATIONAL PARK
SOUTH RIM

© JACOBS

Jacobs

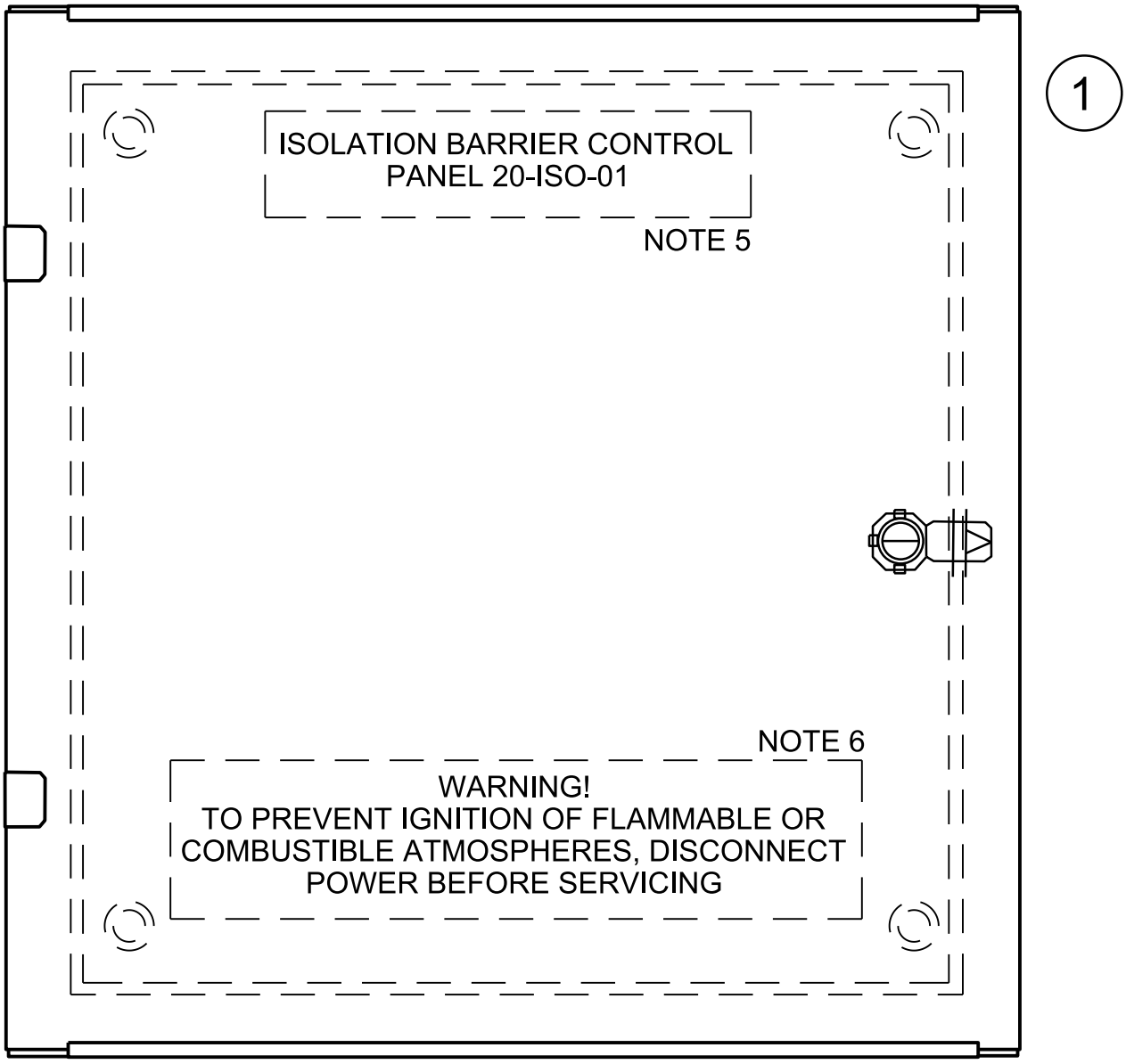

NOTES:

1. FABRICATE IN UL LISTED SHOP.
2. PROVIDE UL LABEL.
3. CONDUIT ENTRY THROUGH BOTTOM ONLY.
4. PROVIDE FASTENERS AND WIRE AS REQUIRED.
5. PHENOLIC LABEL: BLACK WITH RED LETTERS. MODIFY PANEL TAG TO MATCH PLAN CALLOUTS.
6. PHENOLIC LABEL: RED WITH WHITE LETTERS.

RELAY ISOLATION - FRONT

NTS

DETAIL 2 OF 3

2624-021

NATIONAL PARK SERVICE
GRAND CANYON NATIONAL PARK
SOUTH RIM

© JACOBS

Jacobs

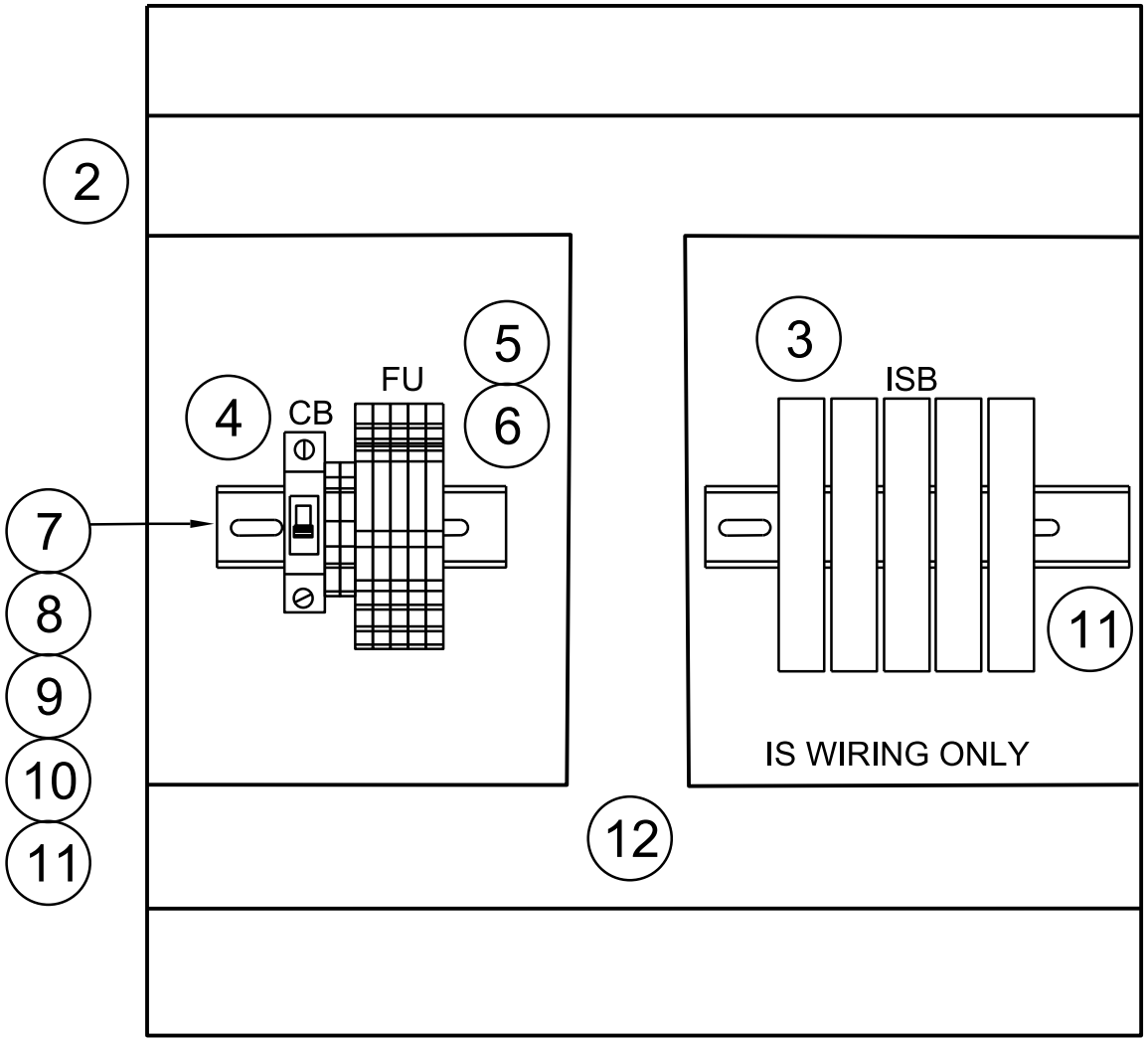

NOTES:

1. FABRICATE IN UL LISTED SHOP.
2. PROVIDE UL LABEL.
3. CONDUIT ENTRY THROUGH BOTTOM ONLY.
4. PROVIDE FASTENERS AND WIRE AS REQUIRED.

RELAY ISOLATION -SUBPANEL

NTS

DETAIL 3 OF 3

2624-021

NATIONAL PARK SERVICE
GRAND CANYON NATIONAL PARK
SOUTH RIM

© JACOBS

Jacobs

ITEM	QTY	SALIENT CHARACTERISTICS	DESCRIPTION
1	1	PHYSICAL: 20"x20"x8" HWD, 316 STAINLESS STEEL, BRUSHED FINISH FUNCTIONAL: WALL MOUNT PERFORMANCE: NEMA-4X, IP66	ENCLOSURE N-4X, 316 SS
2	1	PHYSICAL: 17"x17"x0.104", CARBON STEEL, POWDER COATED WHITE FUNCTIONAL: NONE PERFORMANCE: NONE	17"x17" BACKPLATE
3	5	PHYSICAL: 35mm DIN RAIL FUNCTIONAL: 2 CHANNEL ISOLATION BARRIER, 120VAC POWER, 253 VOLT 2 AMP RELAY OUTPUT PERFORMANCE: ATEX 2081 IID	2 CHANNEL ISOLATION,120VAC, RELAY OUTPUT
4	1	PHYSICAL: 35mm DIN RAIL, MINIATURE CIRCUIT BREAKER FUNCTIONAL: 1-POLE, 2AMP, THERMAL MAGNETIC, 277 V AC PERFORMANCE: UL 1077	1POLE CIRCUIT BREAKER, 2AMP, 277VAC, 10KAIC
5	5	PHYSICAL: 14"x1", 35mm DIN RAIL MOUNTING, POLYAMIDE PA66 HOUSING, GREY, ZINC CHROMATE CLAMP AND SCREWS, NICKEL PLATED COPPER ALLOY CURRENT BAR FUNCTIONAL: 600 V AC 16 AMP PERFORMANCE: NONE	FUSE HOLDER, 24VDC, INDICATING
6	5	PHYSICAL: CARTRIDGE STYLE, CYLINDRICAL GLASS FUSE, 1/4" DIAMETER x1-1/4" LONG FUNCTIONAL: 0.25 AMP, NONREJECTION PERFORMANCE: TIME DELAY	0.25 AMP FUSE, 250VAC GLASS FUSE
7	3	PHYSICAL: MULTI-CIRCUIT, TWO-LEVEL, 2 SQUARE MILLIMETER, FEED-THROUGH, TERMINAL BLOCK, 35mm DIN RAIL MOUNTING, COLOR: GREY FUNCTIONAL: 600 VOLT, 35 AMP, WIRE #22-#12 AWG PERFORMANCE: NONE	600V. 35 AMP, 22-12 AWG, TERMINAL BLOCK
8	1	PHYSICAL: MULTI-CIRCUIT, TWO-LEVEL, 2 SQUARE MILLIMETER, FEED-THROUGH, GROUNDING TERMINAL BLOCK, 35mm DIN RAIL MOUNTING, COLOR: GREEN/YELLOW FUNCTIONAL: TERMINAL GROUNDING BLOCK, 600 VOLT, 35 AMP, WIRE #22-#12 AWG PERFORMANCE: NONE	FEED THROUGH GROUND, 22-10 AWG TERMINAL BLOCK YEL. GRN
9	1	PHYSICAL: 35mm DIN RAIL, FUNCTIONAL:MATCHING END BARIER FOR ITEM 8 PERFORMANCE: NONE	END BARRIER
10	2	PHYSICAL: 35mm DIN RAIL, FUNCTIONAL:MATCHING END ANCHOR FOR ITEM 8 PERFORMANCE: NONE	END ANCHOR
11	A/R	PHYSICAL: 1" x 1", WHITE, PLASTIC WIRE DUCT FUNCTIONAL:NONE PERFORMANCE: NONE	35MM DIN RAIL
12	A/R	PHYSICAL: 1" x 1", WHITE, PLASTIC WIRE DUCT FUNCTIONAL:NONE PERFORMANCE: NONE	WIRE DUCT WTH COVER

ELECTRICAL - RELAY ISOLATION BOM

NTS

DETAIL 1 OF 3

2624-022

NATIONAL PARK SERVICE
GRAND CANYON NATIONAL PARK
SOUTH RIM

© JACOBS

Jacobs

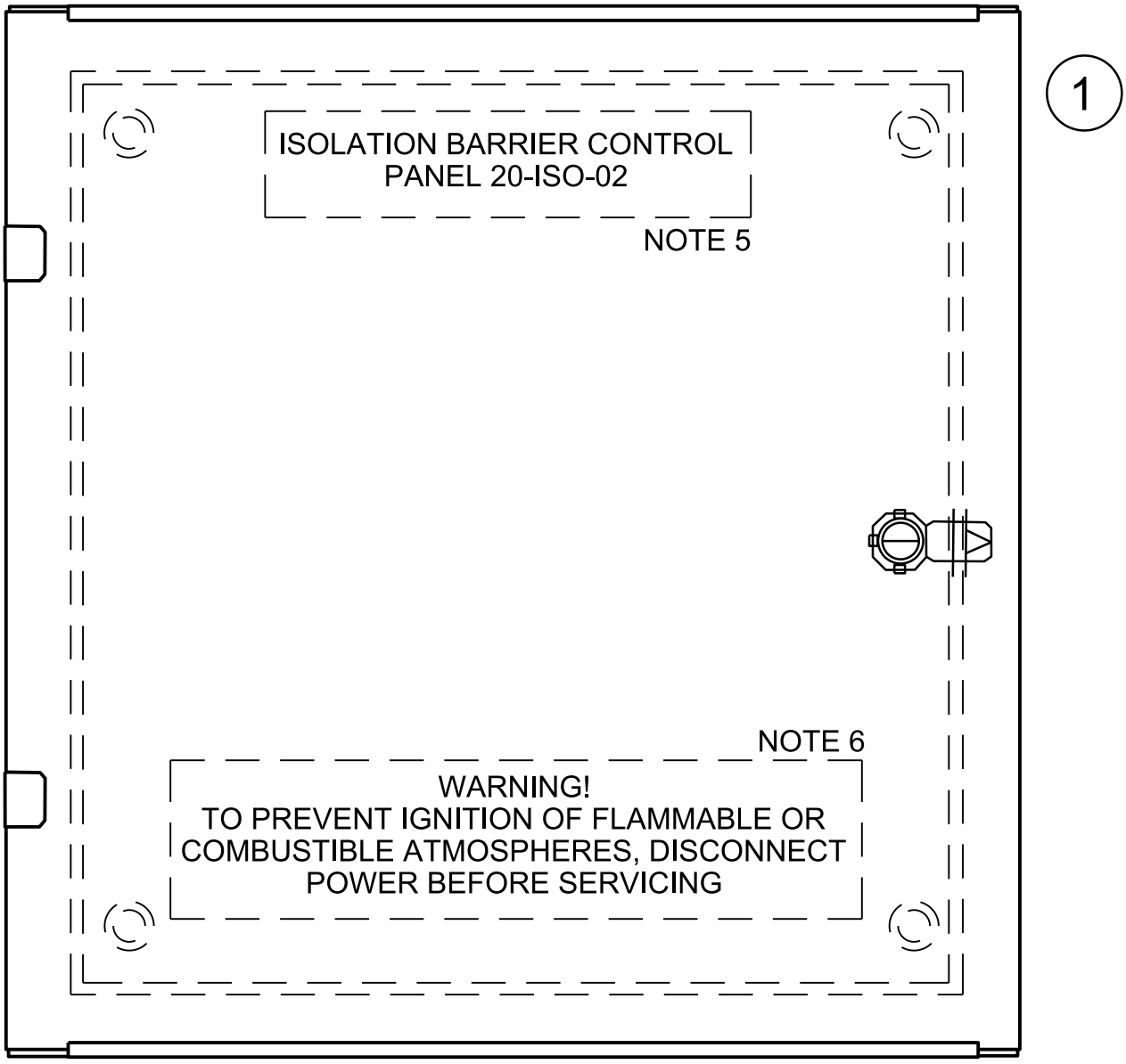

NOTES:

1. FABRICATE IN UL LISTED SHOP.
2. PROVIDE UL LABEL.
3. CONDUIT ENTRY THROUGH BOTTOM ONLY.
4. PROVIDE FASTENERS AND WIRE AS REQUIRED.
5. PHENOLIC LABEL: BLACK WITH RED LETTERS. MODIFY PANEL TAG TO MATCH PLAN CALLOUTS.
6. PHENOLIC LABEL: RED WITH WHITE LETTERS.

RELAY ISOLATION - FRONT

NTS

DETAIL 2 OF 3

2624-022

NATIONAL PARK SERVICE
GRAND CANYON NATIONAL PARK
SOUTH RIM

© JACOBS

Jacobs

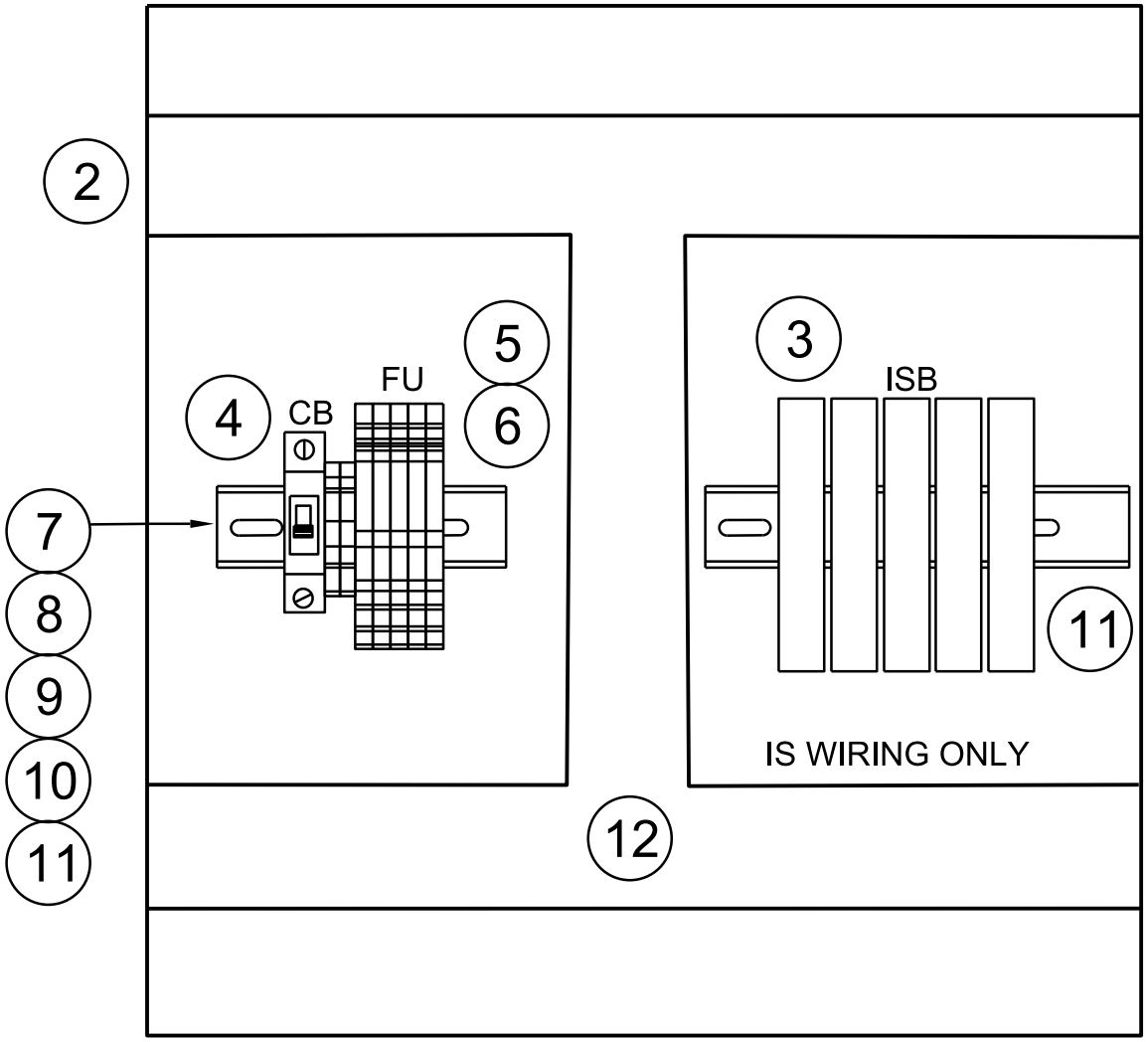

NOTES:

1. FABRICATE IN UL LISTED SHOP.
2. PROVIDE UL LABEL.
3. CONDUIT ENTRY THROUGH BOTTOM ONLY.
4. PROVIDE FASTENERS AND WIRE AS REQUIRED.

RELAY ISOLATION -SUBPANEL

NTS

DETAIL 3 OF 3

2624-022

NATIONAL PARK SERVICE
GRAND CANYON NATIONAL PARK
SOUTH RIM

© JACOBS

Jacobs

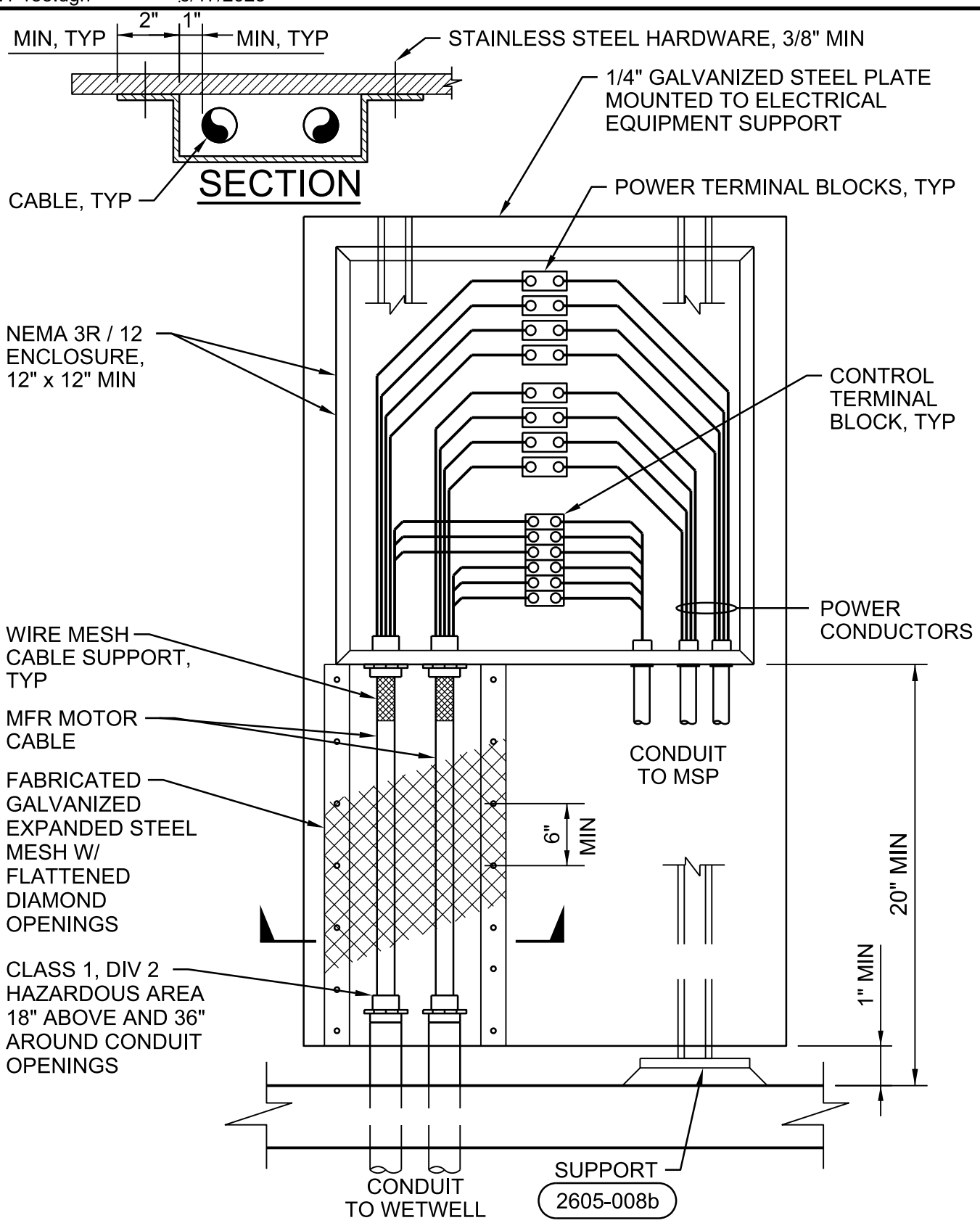

MOTOR TERMINATION ENCLOSURE

NTS

(SIMILAR FOR CONTROL TERMINATIONS)

NATIONAL PARK SERVICE
GRAND CANYON NATIONAL PARK
SOUTH RIM

2624-153

© JACOBS

Jacobs

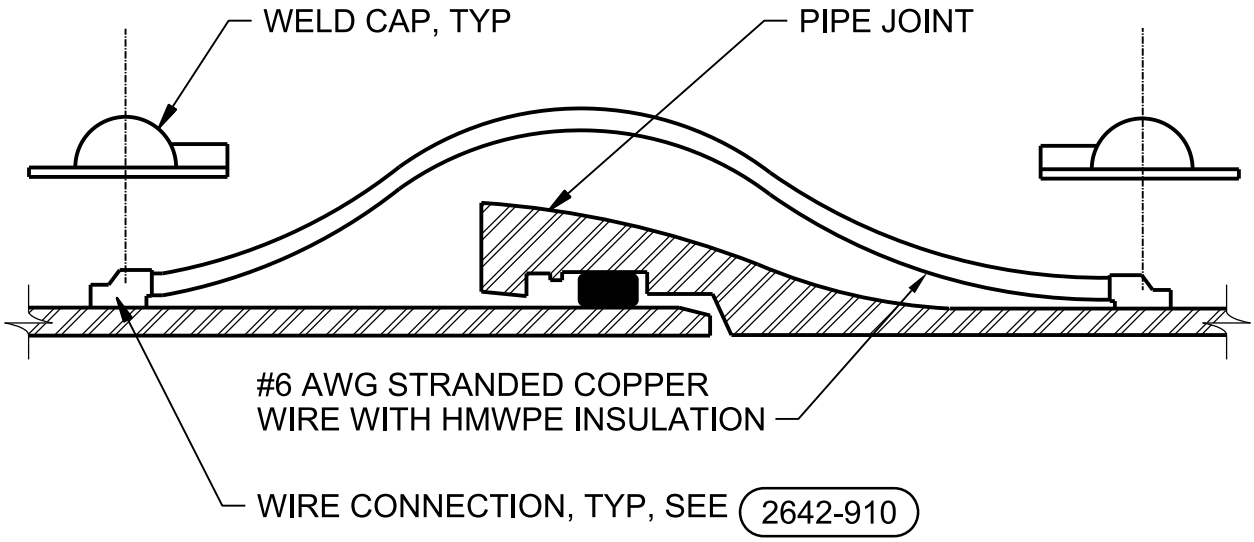

NOTES:

1. TWO JOINT BOND WIRES REQUIRED PER JOINT.

PUSH-ON JOINT BOND

NTS

NATIONAL PARK SERVICE
GRAND CANYON NATIONAL PARK
SOUTH RIM

2642-840

© JACOBS

Jacobs

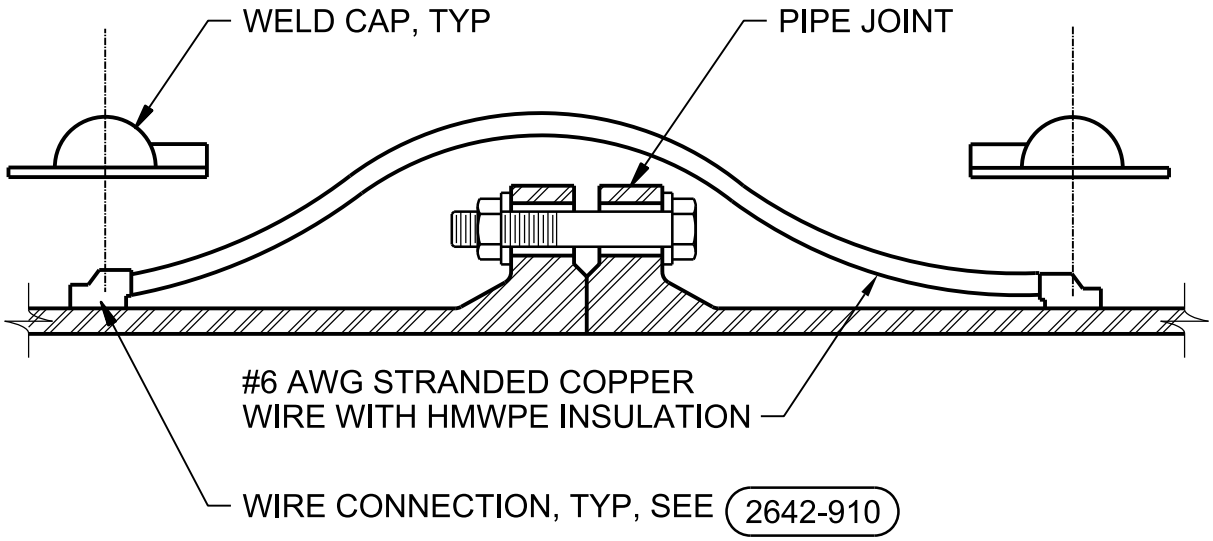

NOTES:

1. TWO JOINT BOND WIRES REQUIRED PER JOINT.

FLANGED JOINT BOND

NTS

NATIONAL PARK SERVICE
GRAND CANYON NATIONAL PARK
SOUTH RIM

2642-842

© JACOBS

Jacobs

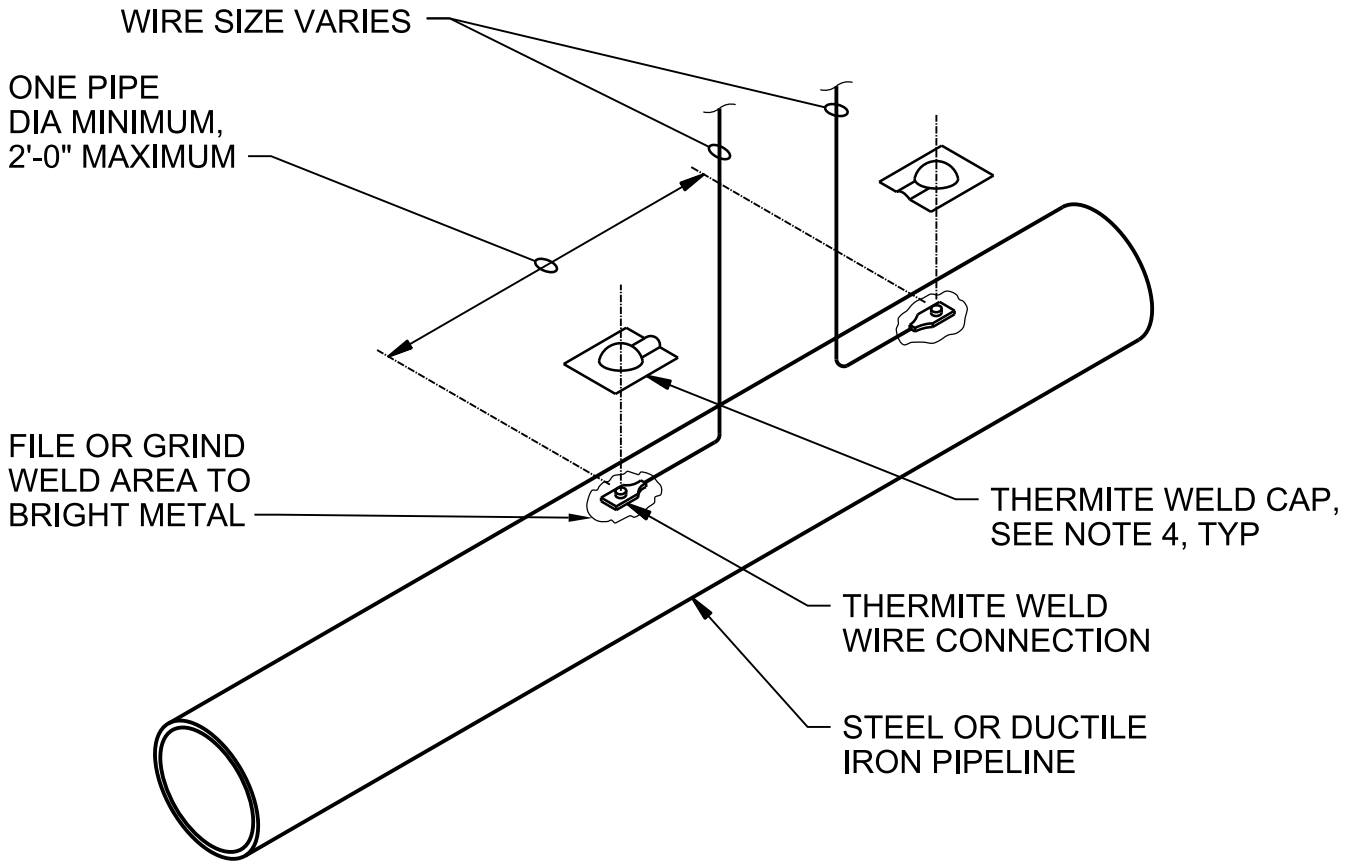

NOTES:

1. COPPER SLEEVE REQUIRED FOR THERMITE WELDING OF #4 AWG AND SMALLER WIRE.
2. USE COPPER SLEEVE ON #6 AWG JOINT BONDING WIRES.
3. WELDER AND CARTRIDGE SIZE VARIES ACCORDING TO WIRE SIZE AND PIPE MATERIAL, CONSULT WELDER MANUFACTURER FOR RECOMMENDED WELDER AND CARTRIDGE.
4. COAT WELD AREA AND FILL RECESS ON THERMITE WELD CAP WITH COLD APPLIED COAL TAR MASTIC AND APPLY CAP TO WELD.

CATHODIC PROTECTION WIRE CONNECTION FOR STEEL AND DUCTILE IRON PIPE

NTS

NATIONAL PARK SERVICE
GRAND CANYON NATIONAL PARK
SOUTH RIM

2642-910

© JACOBS

Jacobs

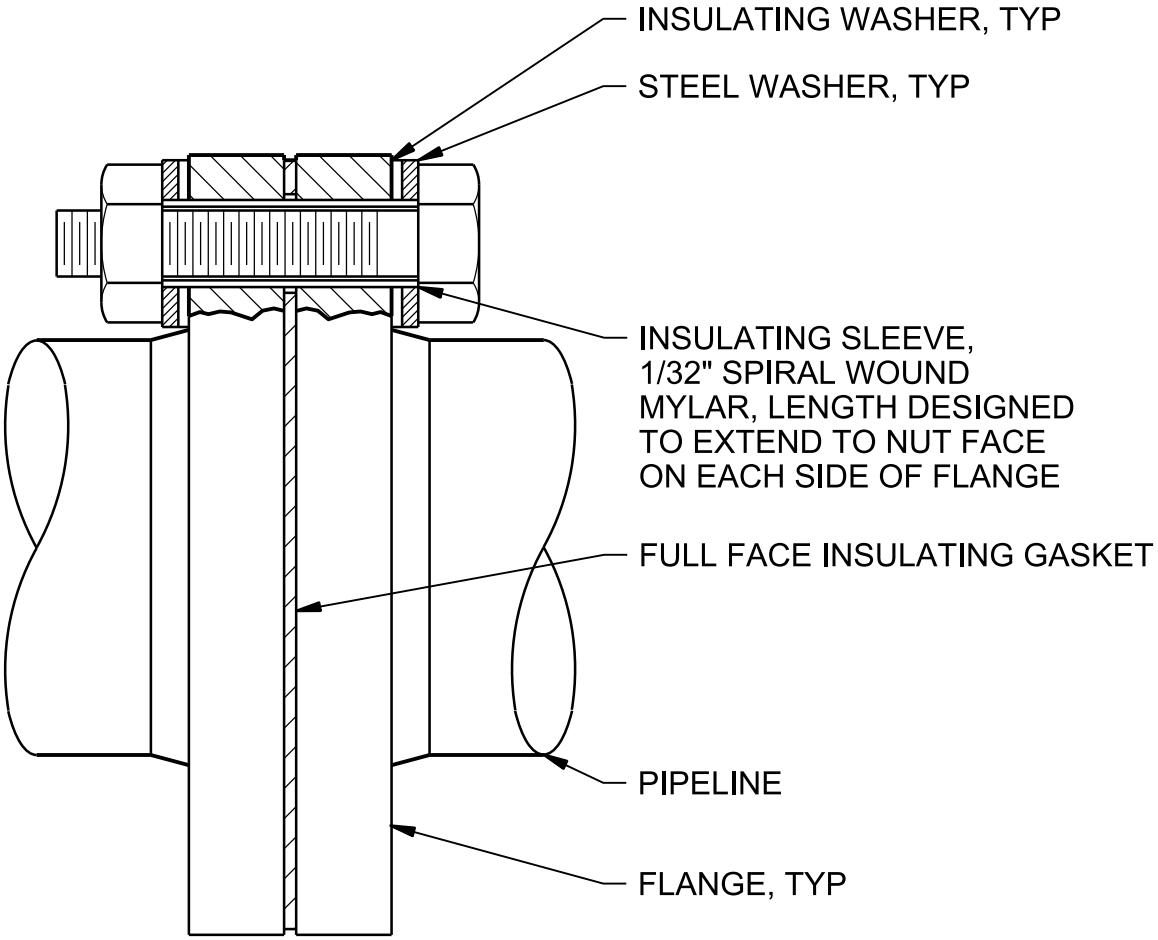

NOTES:

1. ABOVE GRADE INSULATING FLANGE INSTALLATION SHOWN.
2. FOR BURIED OR SUBMERGED INSULATING FLANGE INSTALLATION DO NOT INSTALL INSULATING WASHER ON PROTECTED OR NEW SIDE OF FLANGE.
3. COAT BURIED OR SUBMERGED INSULATED FLANGES WITH COLD APPLIED COAL TAR MASTIC AFTER ASSEMBLING JOINT AND WRAP WITH A BUTYL RUBBER ADHESIVE, POLYETHYLENE BACKED TAPE.

CATHODIC PROTECTION

INSULATING FLANGE

NTS

NATIONAL PARK SERVICE
GRAND CANYON NATIONAL PARK
SOUTH RIM

2642-925

© JACOBS

Jacobs

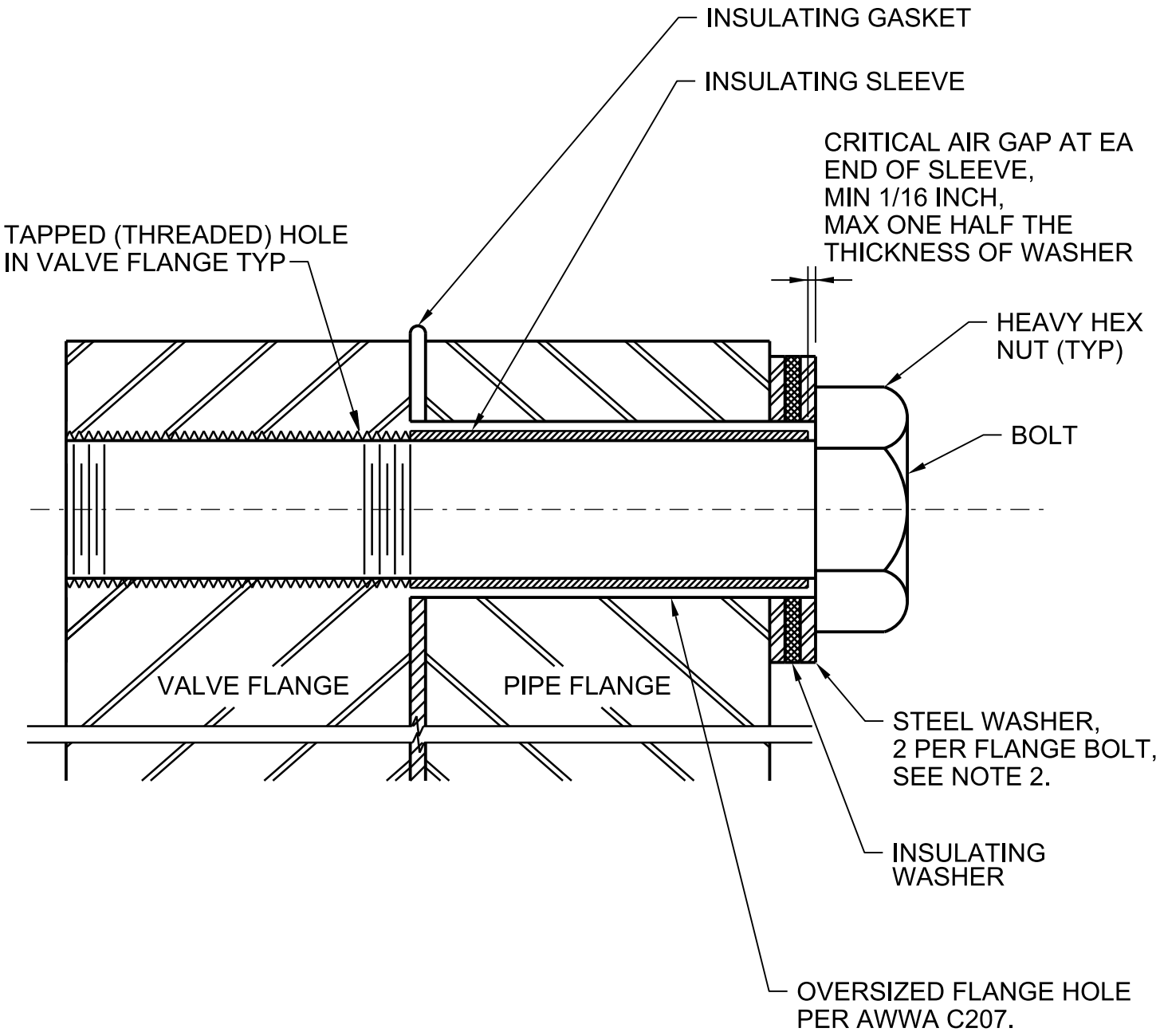

NOTES:

1. COAT COMPLETED JOINT AS SPECIFIED AFTER INSULATION.
2. FOR PIPE SMALLER THAN 36 INCH DIAMETER, DELETE INNER STEEL WASHER.

INSULATED BOLTS AND TAPPED FLANGES

NTS

NATIONAL PARK SERVICE
GRAND CANYON NATIONAL PARK
SOUTH RIM

2642-932

© JACOBS

Jacobs

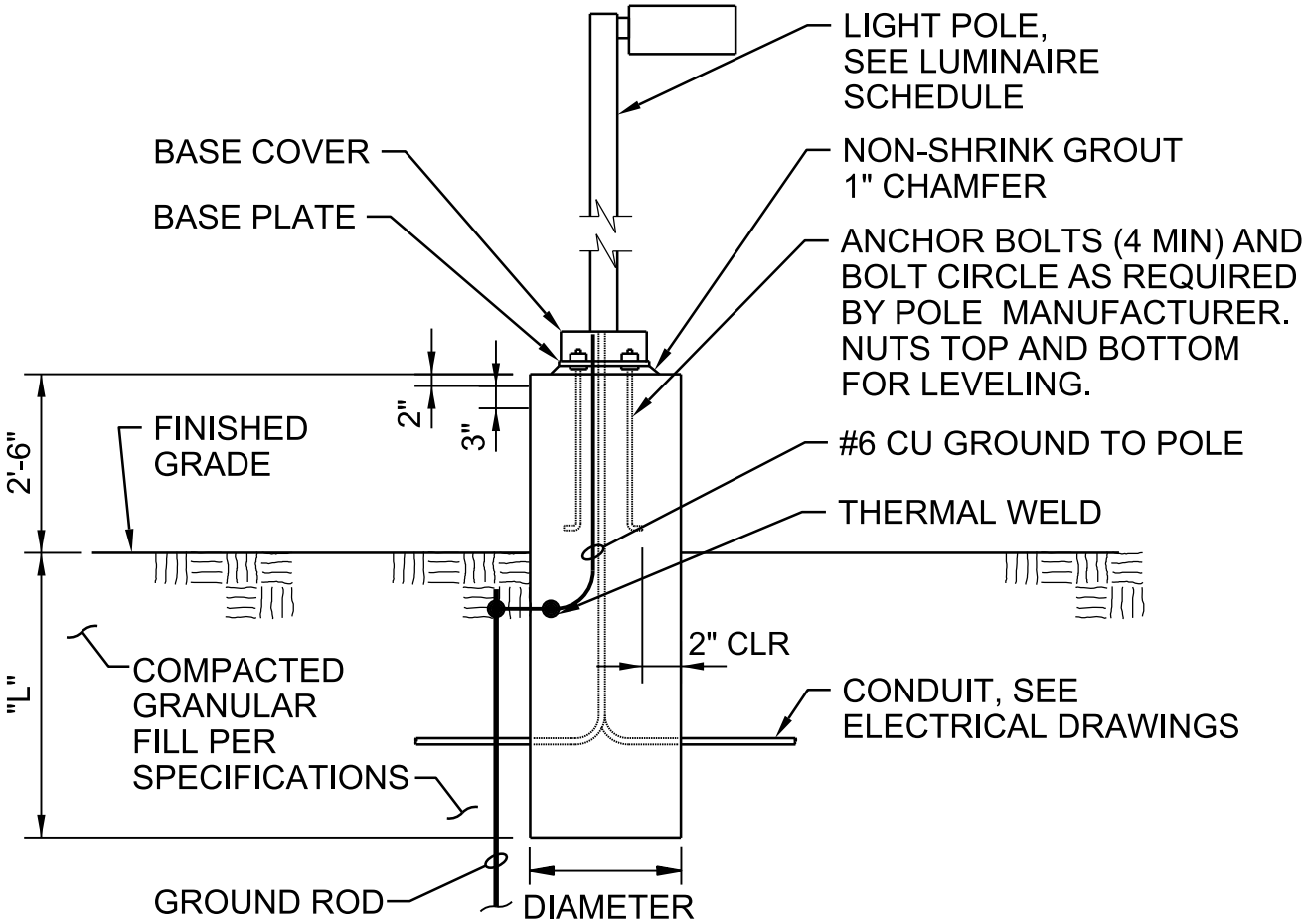

MAX POLE HEIGHT	DIAMETER	"L"	VERTICAL BARS	HOOP BARS
10 FT	1'-6"	4'-0"	5 - #5	#3@10"
25 FT	2'-0"	6'-0"	8 - #5	#3@10"

NOTES:

1. ALL REBAR DESIGNED AND PROVIDED BY FOOTING MANUFACTURER (NOT SHOWN).
2. INSTALL 2 CONDUITS (MINIMUM) PER POLE.
3. CONDUITS SHALL BE STUBBED UP TO WITHIN 6 INCHES OF THE POLE HANDHOLE.
4. FOR PROPER ORIENTATION OF POLE, COORDINATE WITH SITE PLANS.
5. ADDITIONAL CONDUIT SLEEVE MAY BE INSTALLED BY MANUFACTURER TO HOUSE GROUND CONDUCTOR CONNECTING TO GROUND ROD.
6. COORDINATE WITH STRUCTURAL AND CIVIL FOR ALL POLE BASE REQUIREMENTS.

PAVED AREA LIGHT POLE FOOTING

NTS

NATIONAL PARK SERVICE
GRAND CANYON NATIONAL PARK
SOUTH RIM

2656-207

© JACOBS

Jacobs

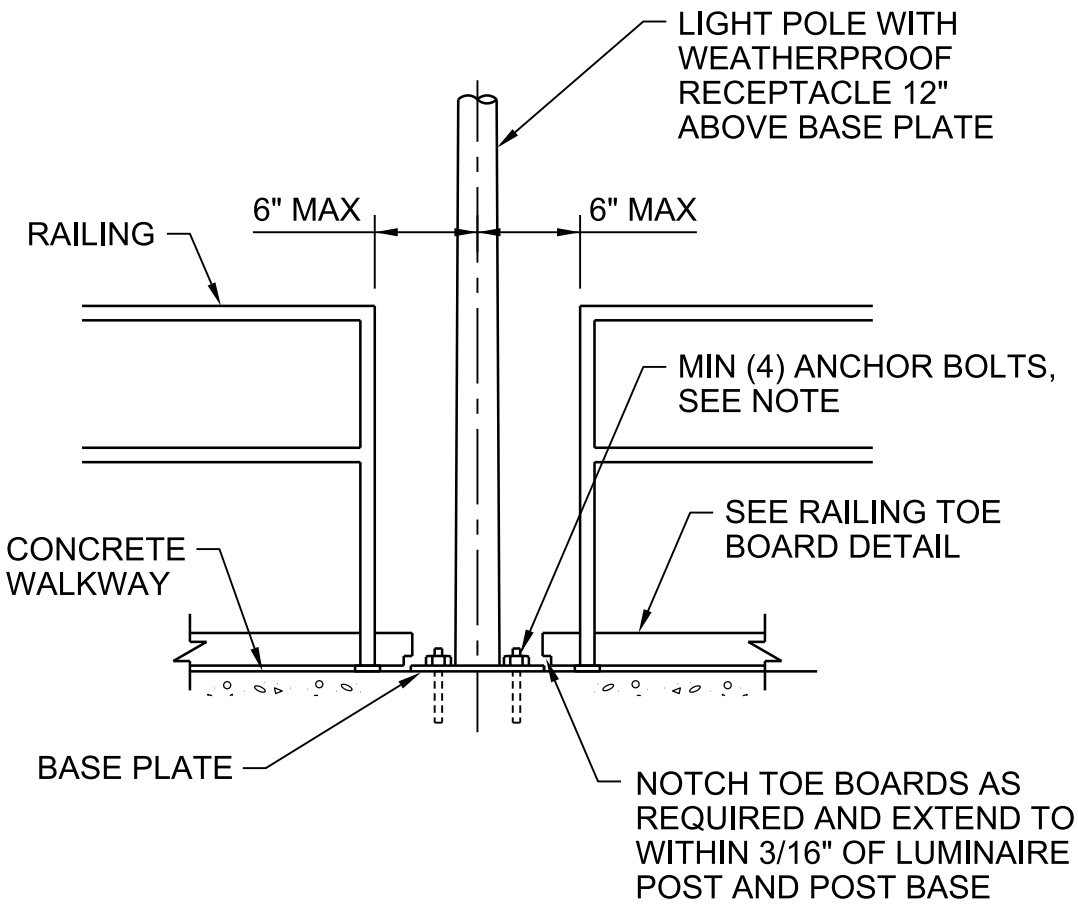

NOTES:

1. SUBMIT FINAL DESIGN AND CALCULATIONS FOR SUPPORT AND ANCHORAGE AS SPECIFIED.

2. COORDINATE WITH STRUCTURAL RAILING DRAWINGS.

LIGHTING POLE MOUNTING

NTS

NATIONAL PARK SERVICE
GRAND CANYON NATIONAL PARK
SOUTH RIM

2656-212

© JACOBS

Jacobs

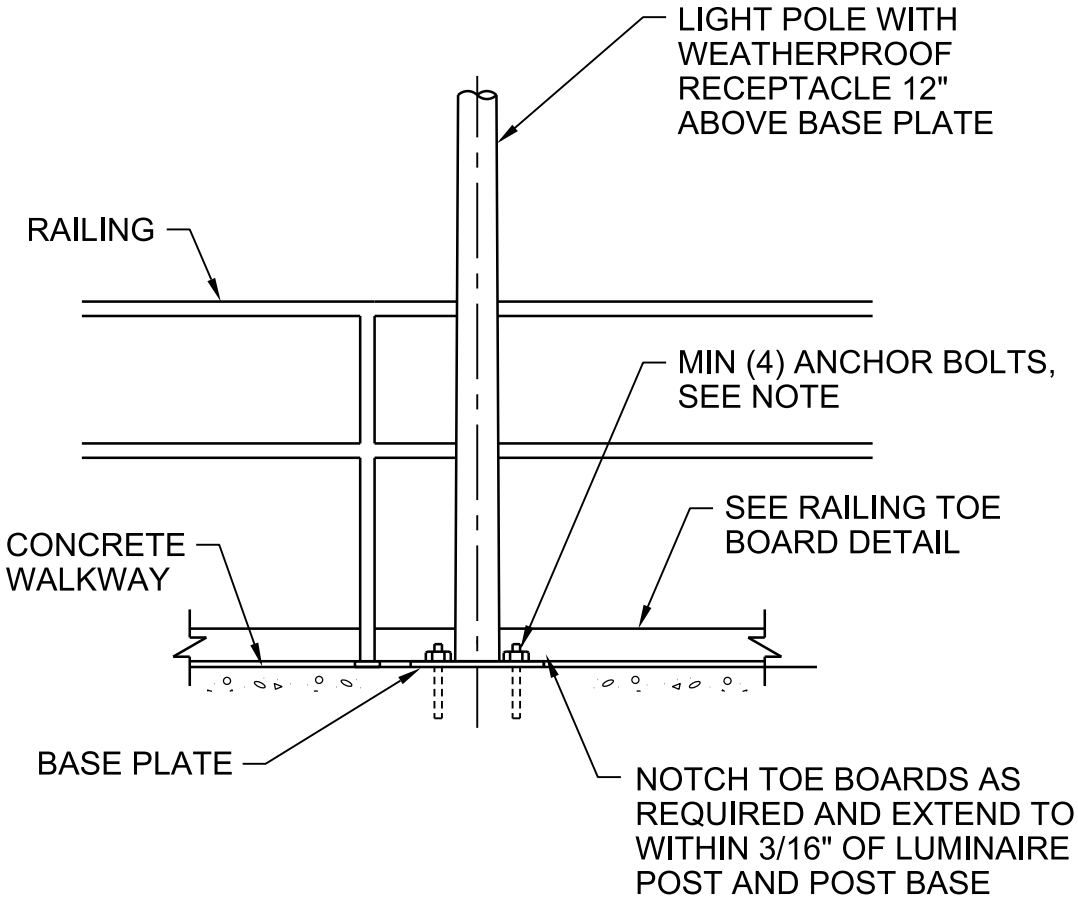

NOTES:

1. SUBMIT FINAL DESIGN AND CALCULATIONS FOR SUPPORT AND ANCHORAGE AS SPECIFIED.

2. COORDINATE WITH STRUCTURAL RAILING DRAWINGS.

LIGHTING POLE MOUNTING

NTS

NATIONAL PARK SERVICE
GRAND CANYON NATIONAL PARK
SOUTH RIM

2656-213

© JACOBS

Jacobs

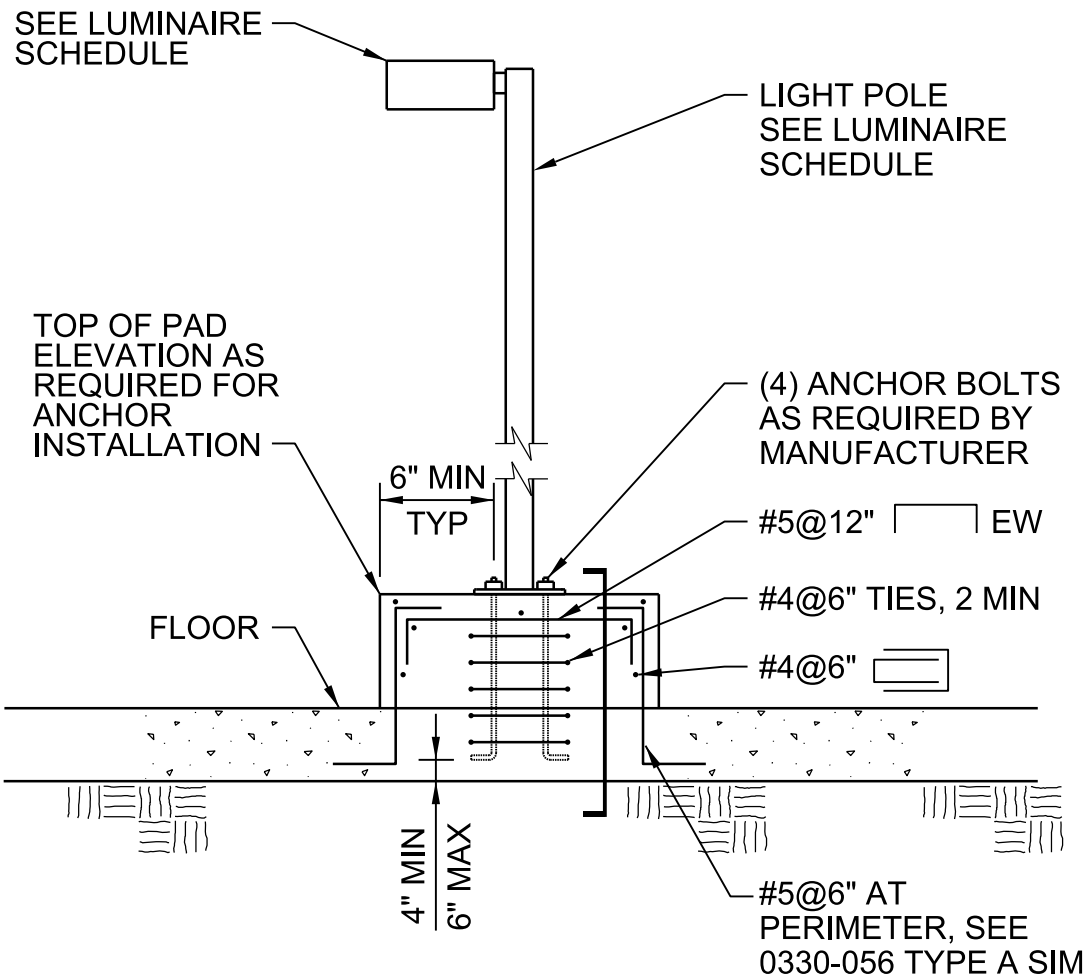

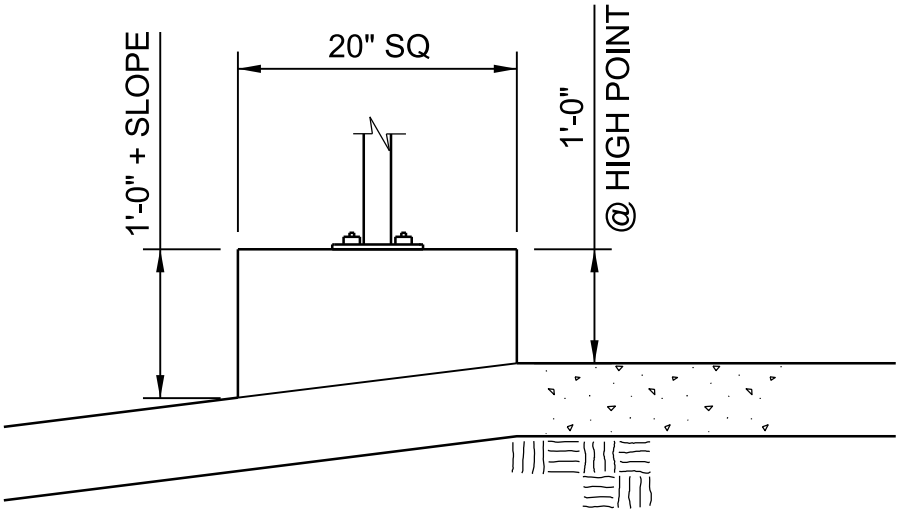

ON SLAB AREA LIGHTING POLE MOUNTING

NTS

NATIONAL PARK SERVICE
GRAND CANYON NATIONAL PARK
SOUTH RIM

2656-214

© JACOBS

Jacobs

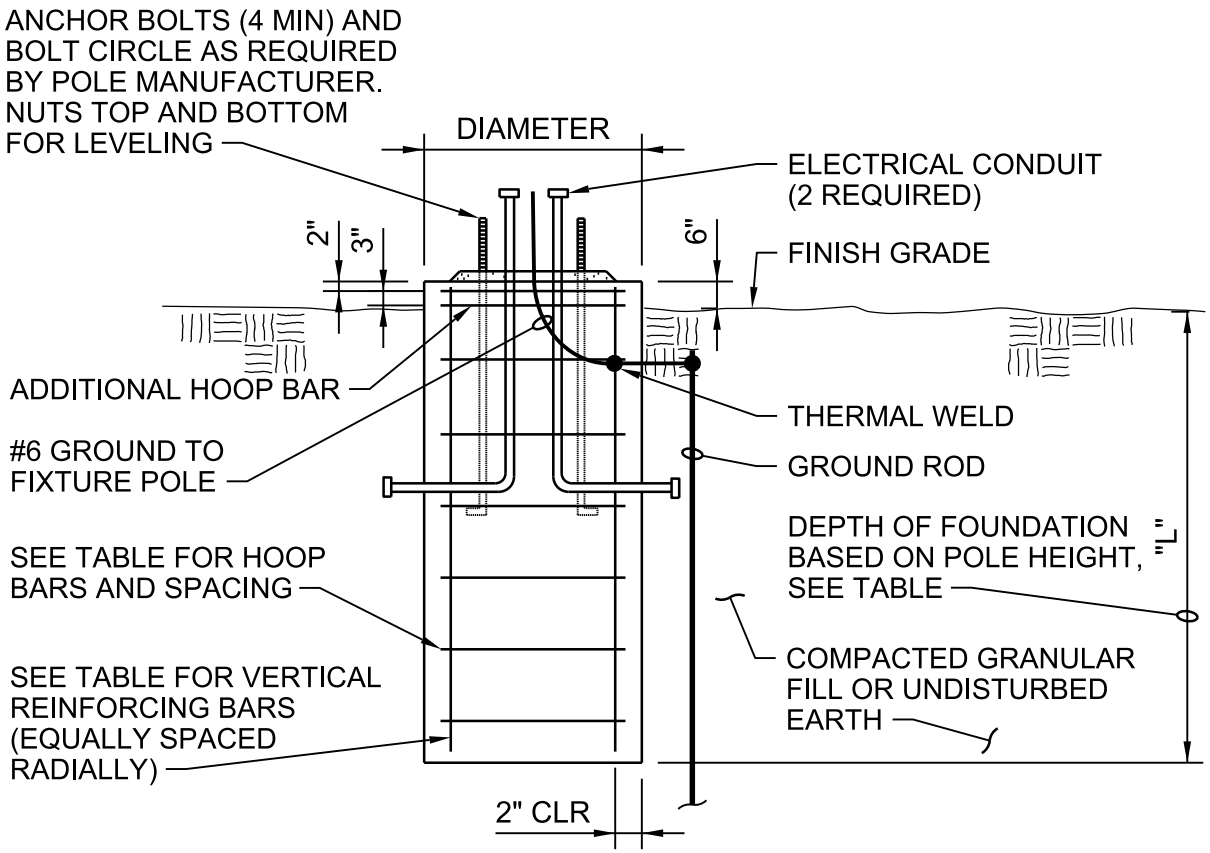

MAX POLE HEIGHT	DIAMETER	"L"	VERTICAL BARS	HOOP BARS
10 FT	1'-6"	4'-0"	5 - #5	#3@10"

NOTES:

1. ALL REBAR DESIGNED AND PROVIDED BY FOOTING MANUFACTURER (NOT SHOWN).
2. INSTALL 2 CONDUITS (MINIMUM) PER POLE.
3. CONDUITS SHALL BE STUBBED UP TO WITHIN 6 INCHES OF THE POLE HANDHOLE.
4. FOR PROPER ORIENTATION OF POLE, COORDINATE WITH SITE PLANS.
5. ADDITIONAL CONDUIT SLEEVE MAY BE INSTALLED BY MANUFACTURER TO HOUSE GROUND CONDUCTOR CONNECTING TO GROUND ROD.
6. COORDINATE WITH STRUCTURAL AND CIVIL FOR ALL POLE BASE REQUIREMENTS.

PAVED AREA LIGHT POLE FOOTING
FOR AREAS WITH NO CAR TRAFFIC

NTS

NATIONAL PARK SERVICE
GRAND CANYON NATIONAL PARK
SOUTH RIM

2656-216

© JACOBS

Jacobs

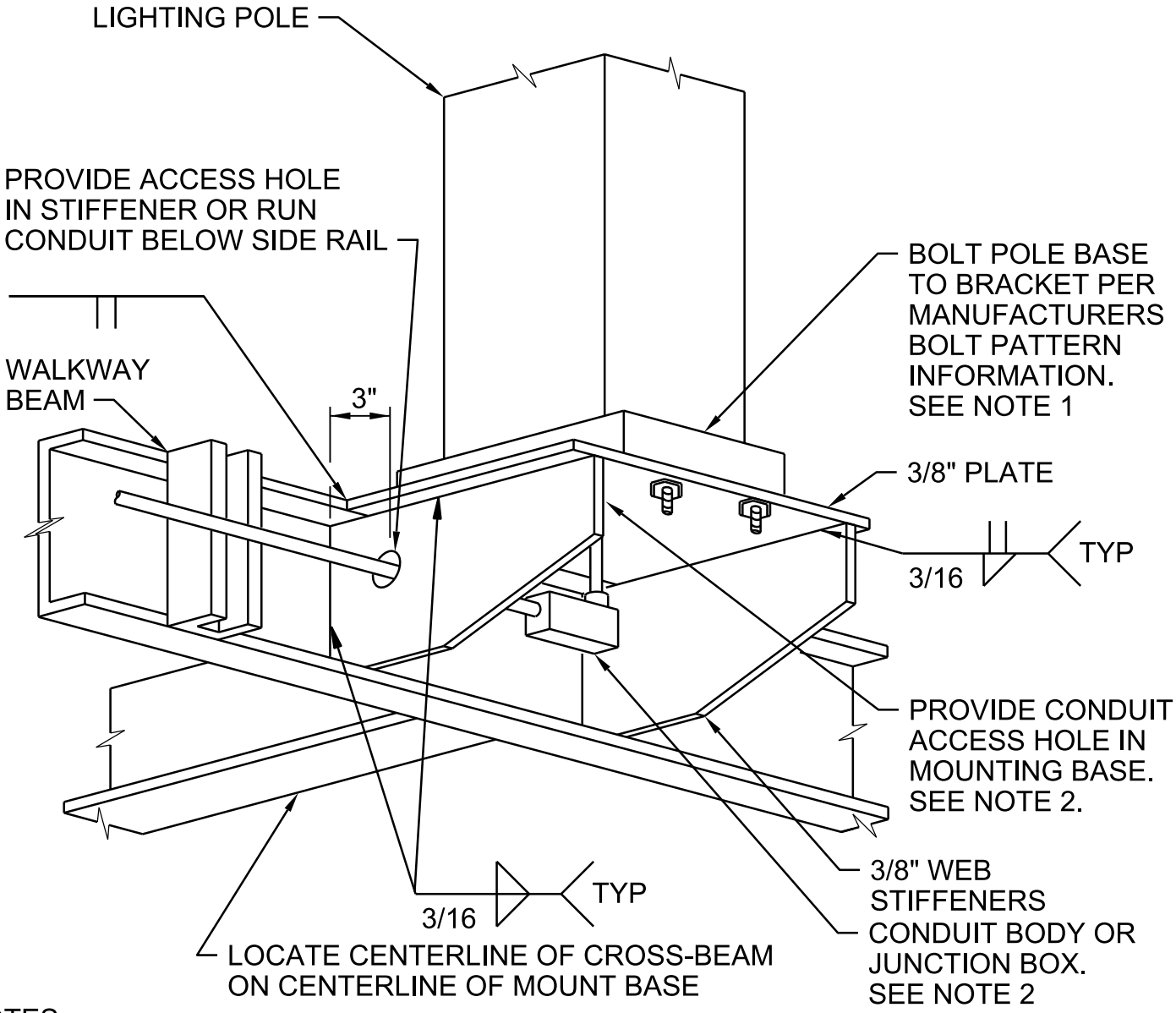

NOTES:

1. PROVIDE 2" EDGE DISTANCE FOR POLE BASE BOLTS IN MOUNTING PLATE.

2. COORDINATE CONDUIT ACCESS HOLES AND JUNCTION BOX REQUIREMENTS WITH MANUFACTURER.

3. COMPLETE ALL WELDING PRIOR TO PAINTING.

4. COORDINATE CONNECTION TO WALKWAY WITH CLARIFIER BRIDGE MANUFACTURER.

STEEL WALKWAY LIGHTING POLE MOUNT TO POLE

NTS

NATIONAL PARK SERVICE
GRAND CANYON NATIONAL PARK
SOUTH RIM

2656-218

© JACOBS

Jacobs

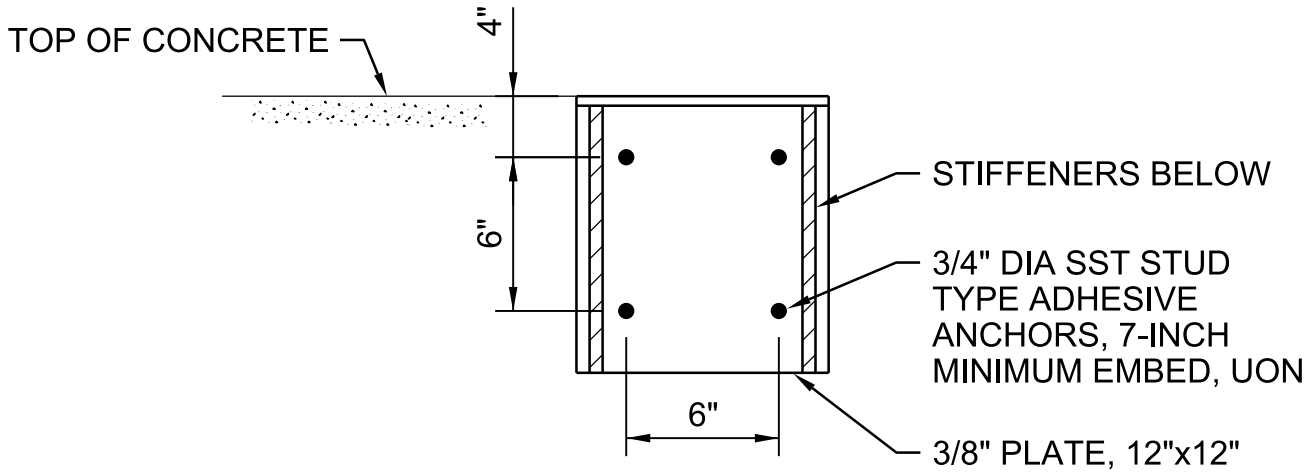

PLAN

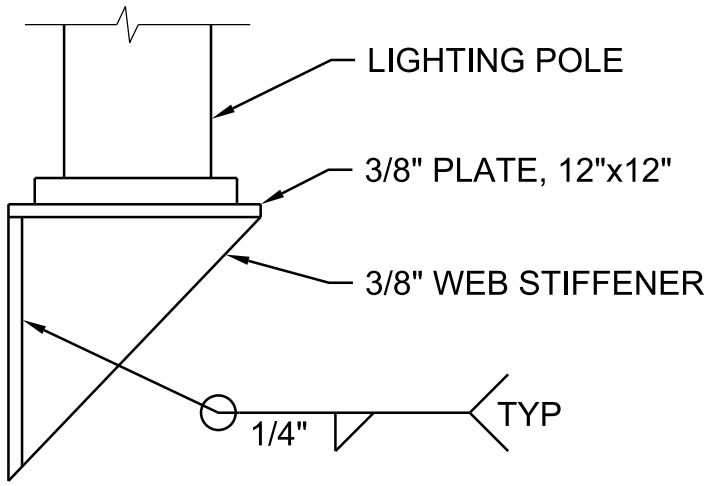

ELEVATION

NOTES:

1. GALVANIZE ENTIRE ASSEMBLY AFTER FABRICATION.

2. ATTACH BRACKET TO WALKWAY BEAM WITH 4 3/4" DIA A325N BOLTS. COORDINATE SUPPORT WITH BRIDGE MANUFACTURER.

LIGHTING POLE MOUNT TO SIDE OF CONCRETE WALL

NTS

NATIONAL PARK SERVICE
GRAND CANYON NATIONAL PARK
SOUTH RIM

2656-219

© JACOBS

Jacobs

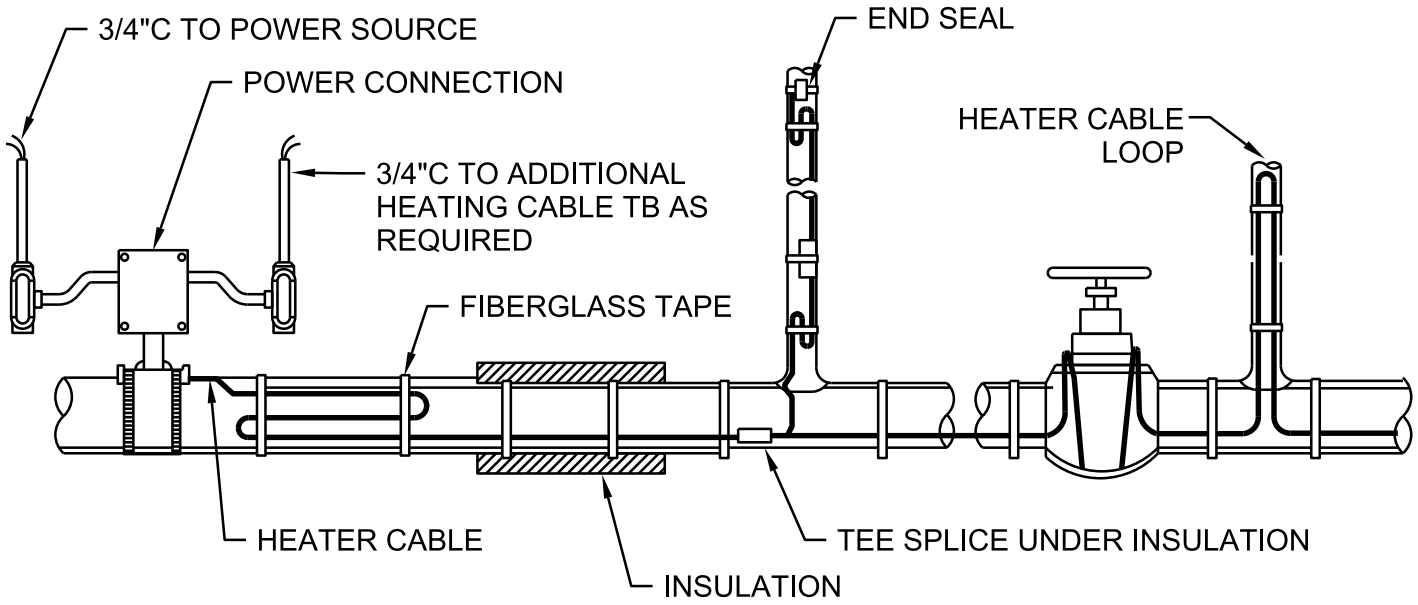

HEAT TRACE - TYPICAL INSTALLATION OVERVIEW

NTS

NATIONAL PARK SERVICE
GRAND CANYON NATIONAL PARK
SOUTH RIM

2660-001

© JACOBS

Jacobs

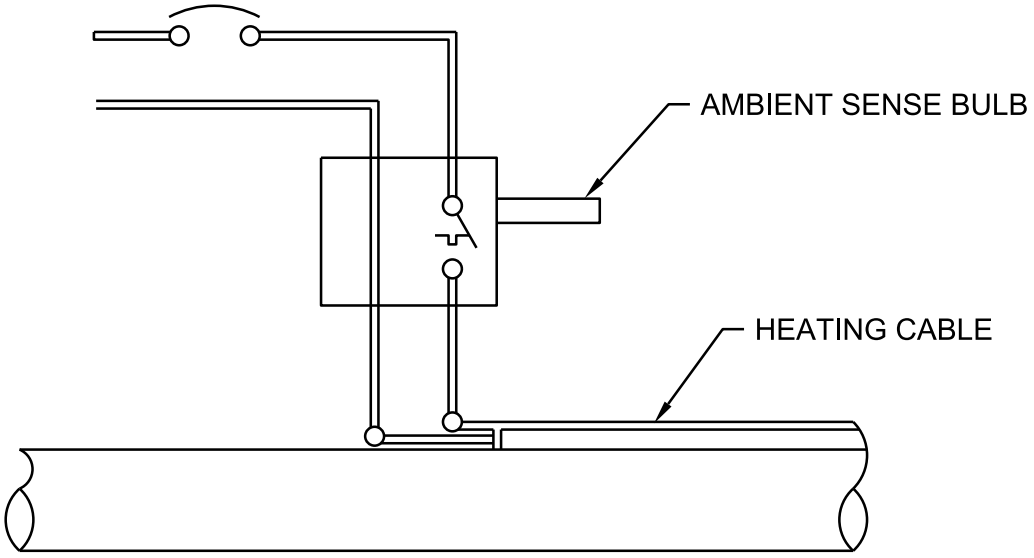

AMBIENT AIR SENSING

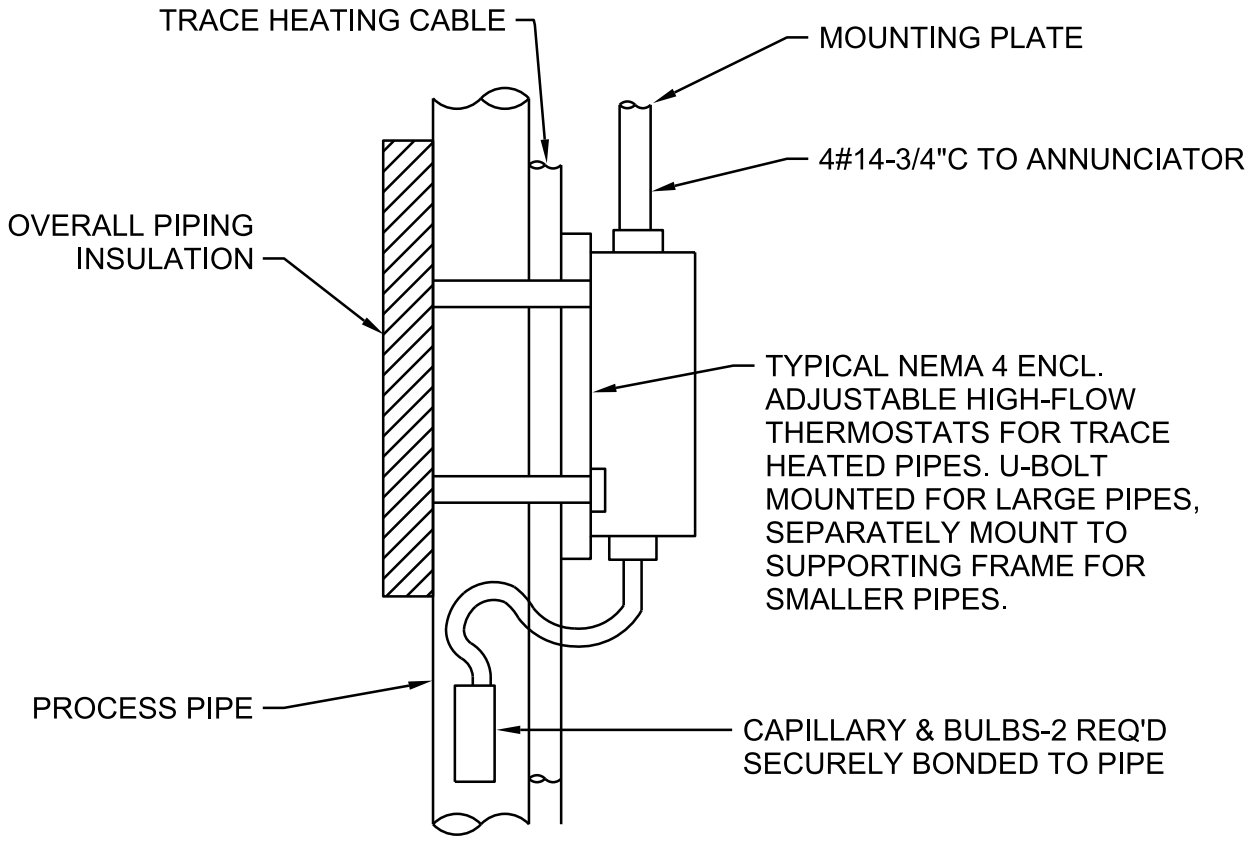

HEAT TRACE SENSOR PLACEMENT

NTS

NATIONAL PARK SERVICE
GRAND CANYON NATIONAL PARK
SOUTH RIM

2660-002

© JACOBS

Jacobs

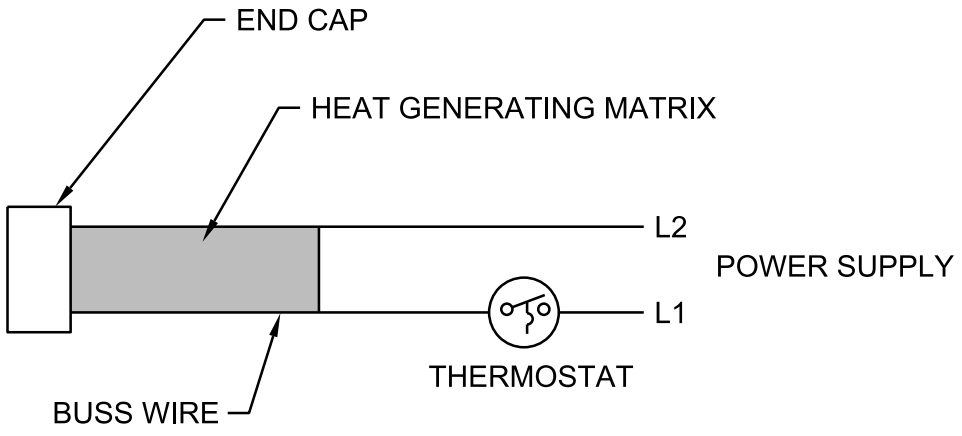

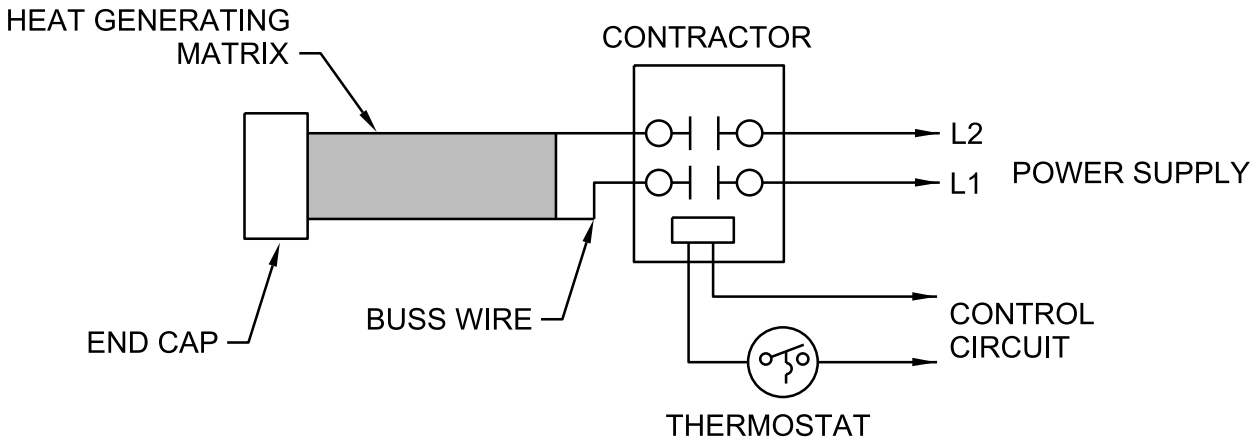

TYPICAL HEATER CIRCUIT WIRING DIAGRAM

NTS

NATIONAL PARK SERVICE
GRAND CANYON NATIONAL PARK
SOUTH RIM

2660-003

© JACOBS

Jacobs

GENERAL INFORMATION			
PROJECT NUMBER		INSTALLATION CONTRACTOR	
UNIT NUMBER		NUMBER	
CUSTOMER REF NUMBER		INSPECTOR	
RECORD 1: PRIOR TO INSTALLATION			
CABLE TYPE		REEL NUMBER	
REEL LENGTH		OHMS)*	
TESTED BY DATE		WITNESSED BY DATE	
RECORD 2: AFTER CABLE INSTALLATION			
LINE NUMBER		THERMOSTAT NUMBER	
EQUIPMENT NUMBER		JUNCTION BOX NUMBER	
CIRCUIT HEATER NUMBER		OFF	
CIRCUIT SWITCH NUMBER		HEATER LENGTH	
METAL CONNECTED TO EARTH GROUND		OHMS)*	
TESTED BY DATE		WITNESSED BY DATE	
RECORD 3: AFTER THERMAL INSULATION IS INSTALLED			
INSULATION WATERTIGHT		OHMS)*	
TESTED BY DATE		WITNESSED BY DATE	
RECORD 4: FINAL COMMISSIONING			
PANEL NUMBER		AMBIENT TEMP (C)	
BREAKER NUMBER		PIPE TEMP (C)	
BOLTS		MINS)	
TESTED BY DATE		WITNESSED BY DATE	

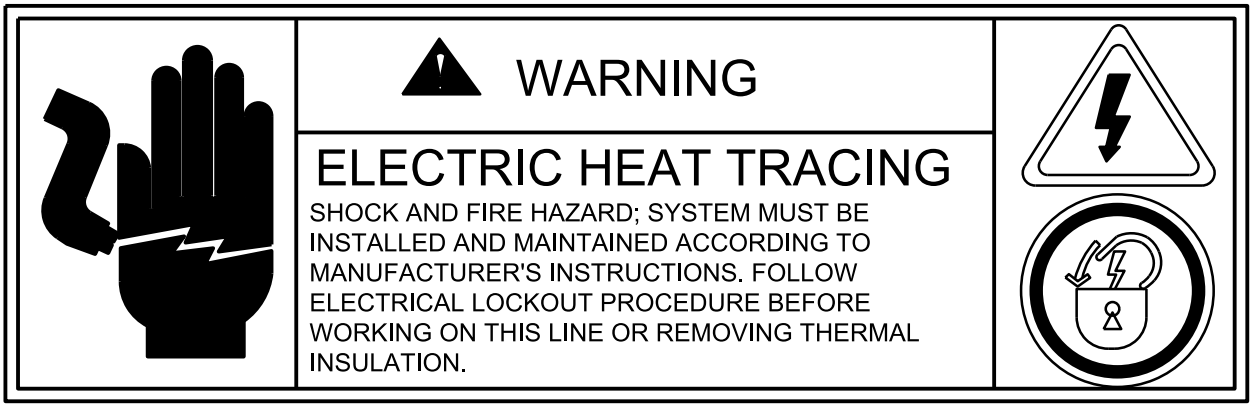

NOTE: PLACE LABEL EVERY TEN (10) FEET.

HEAT TRACED PIPE LABEL

NTS

NATIONAL PARK SERVICE
GRAND CANYON NATIONAL PARK
SOUTH RIM

2660-004

© JACOBS

Jacobs

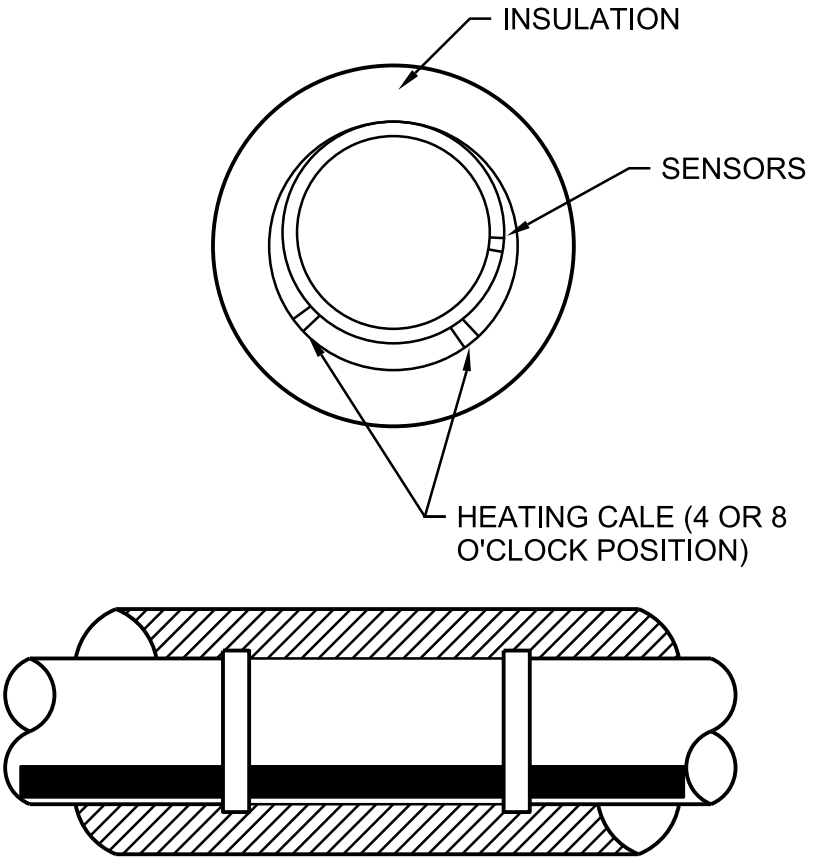

NOTES:

1. WHEN STRAIGHT TRACING IS USED, INSTALL THE HEATER CABLE ON THE LOWER QUADRANT OF THE PIPE. THIS HELPS PREVENT PHYSICAL DAMAGE TO THE HEATER CABLE FROM FALLING OBJECTS AND BEING WALKED ON.

2. ALTERNATIVE LOCATION IS THE 2 AND 10 O'CLOCK POSITION.

3. SECURE PIPE AT 12" INTERVALS WITH FIBERGRASS TAPE.

HEAT CABLE WRAP

NTS

NATIONAL PARK SERVICE
GRAND CANYON NATIONAL PARK
SOUTH RIM

2660-005

© JACOBS

Jacobs

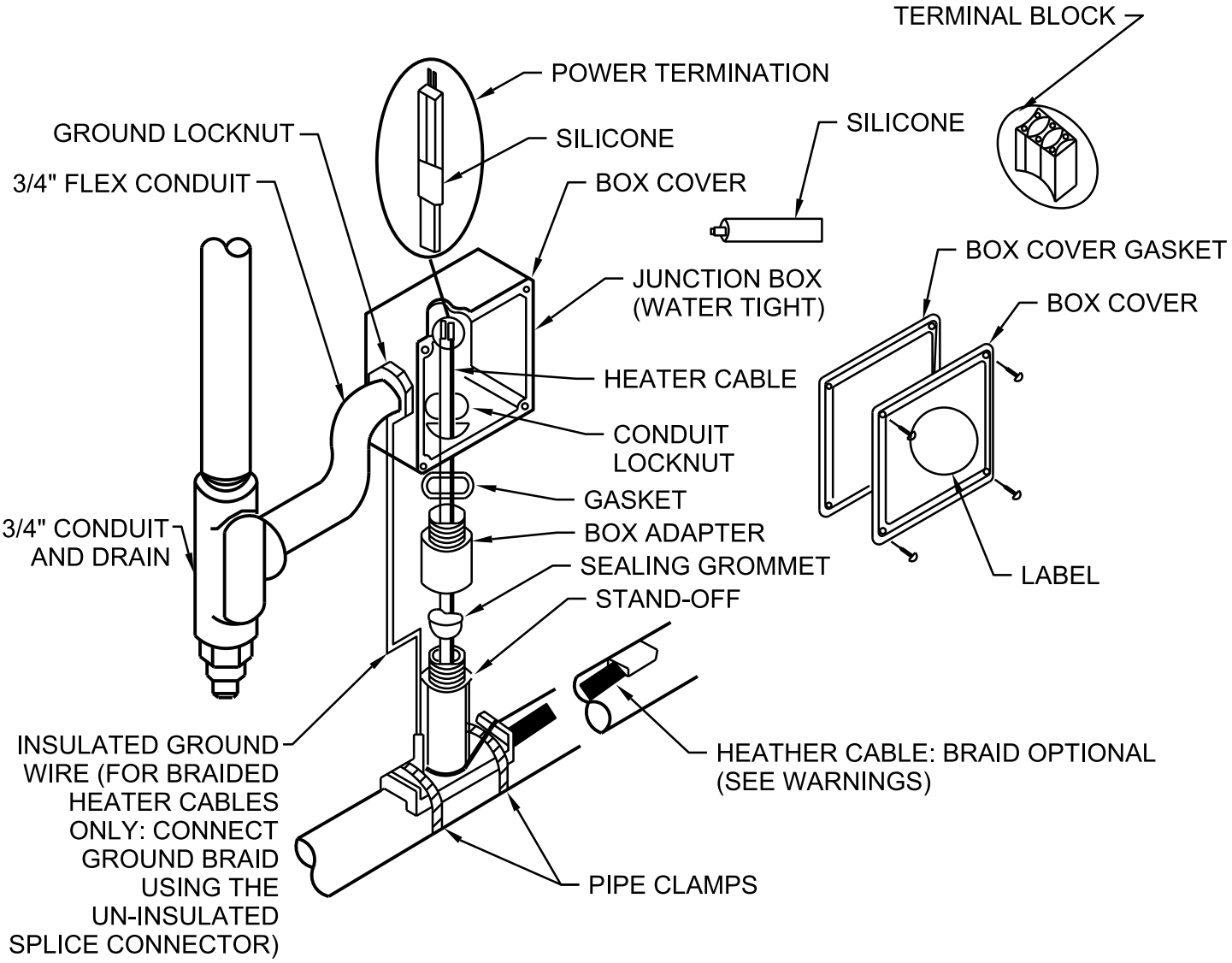

NOTES:

1. ARTICLE 427 OF THE NATIONAL ELECTRIC CODE REQUIRES THAT ALL HEATERS SHALL HAVE METAL COVERINGS AND BE PROVIDED WITH BRANIC CIRCUIT GROUND-FAULT PROTECTION.

2. IS NUISANCE TIPPING OF GROUND FAULT BREAKERS OCCURS DUE TO CONDENSATION IN THE JUNCTION BOX, ELECTRICAL CONNECTIONS SHOULD BE MOISTURE PROOFED BY USE OF COATING OR SEALANT.

POWER CONNECTION BOX BRAIDED CABLE

NTS

NATIONAL PARK SERVICE
GRAND CANYON NATIONAL PARK
SOUTH RIM

2660-006

© JACOBS

Jacobs

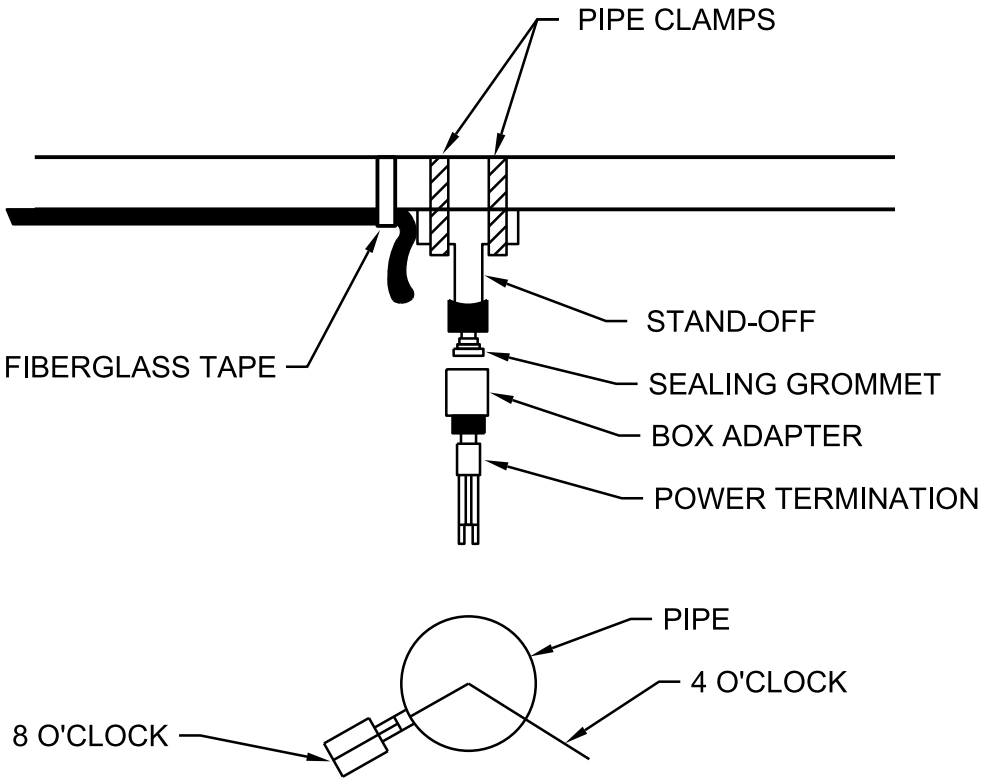

NOTES:

1. DO NOT PLACE PIPE CLAMPS OVER THE HEATER CABLE.
2. RECOMMEND INSTALLING AT THE 4 OR 8 O'CLOCK POSITIONS.

STANDOFF INSULATION

NTS

NATIONAL PARK SERVICE
GRAND CANYON NATIONAL PARK
SOUTH RIM

2660-007

© JACOBS

Jacobs

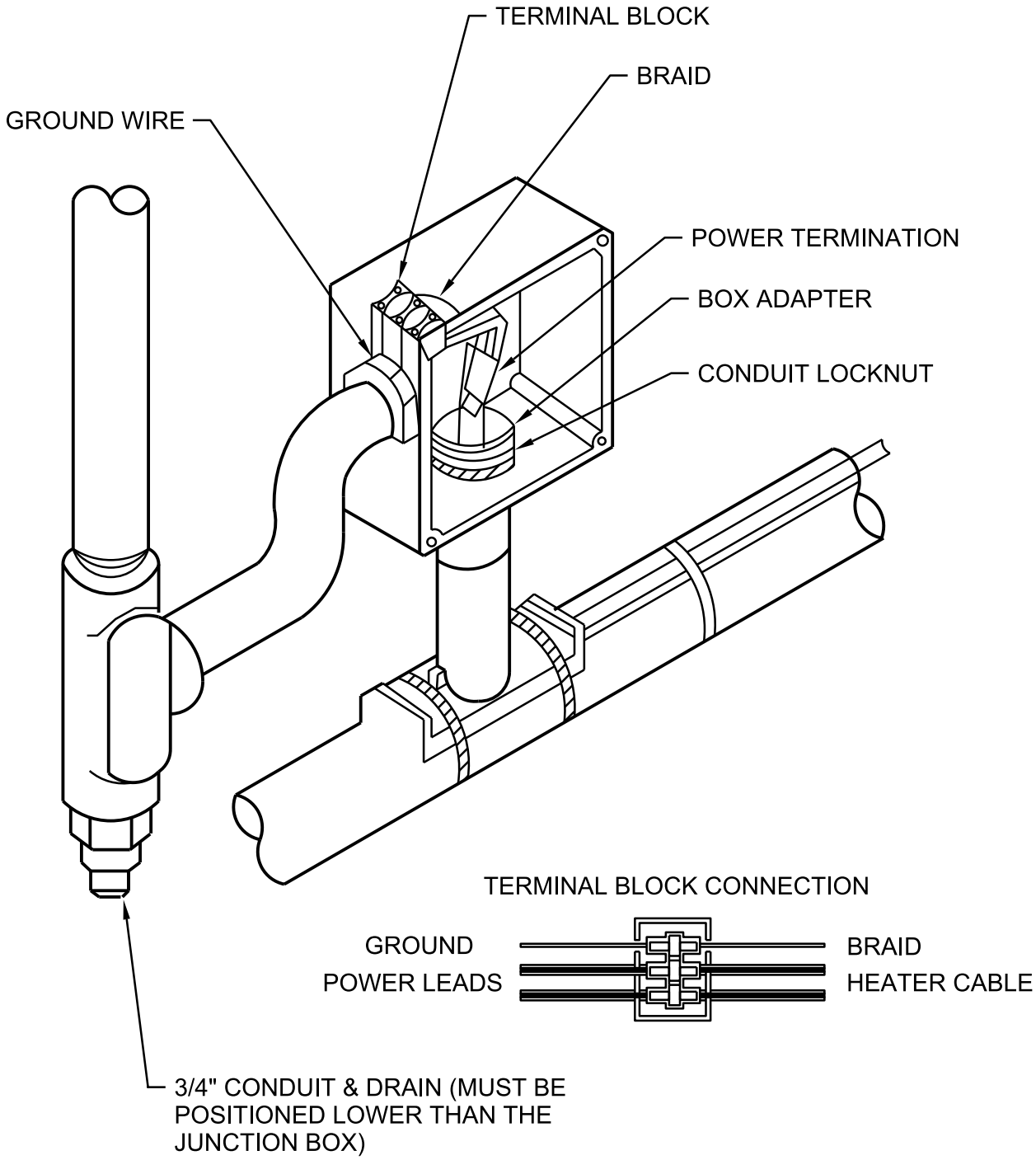

POWER CONNECTION BOX NON BRAIDED CABLE

NTS

NATIONAL PARK SERVICE
GRAND CANYON NATIONAL PARK
SOUTH RIM

2660-008

© JACOBS

Jacobs

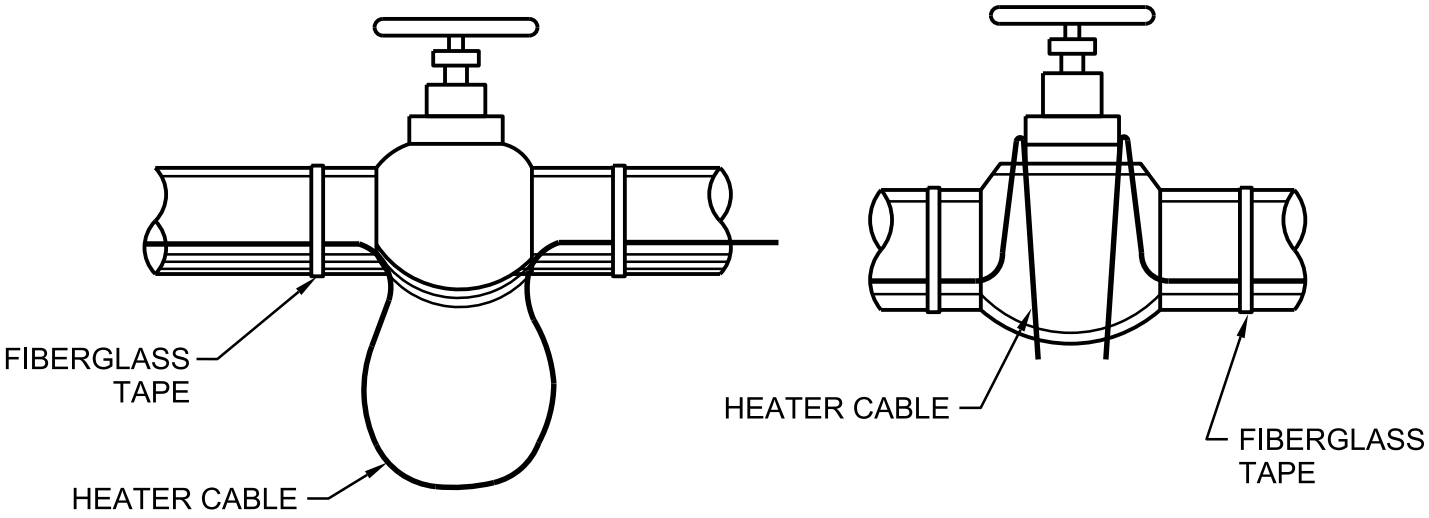

VALVE
(MAY VARY FOR DIFFERENT VALVE SHAPES)

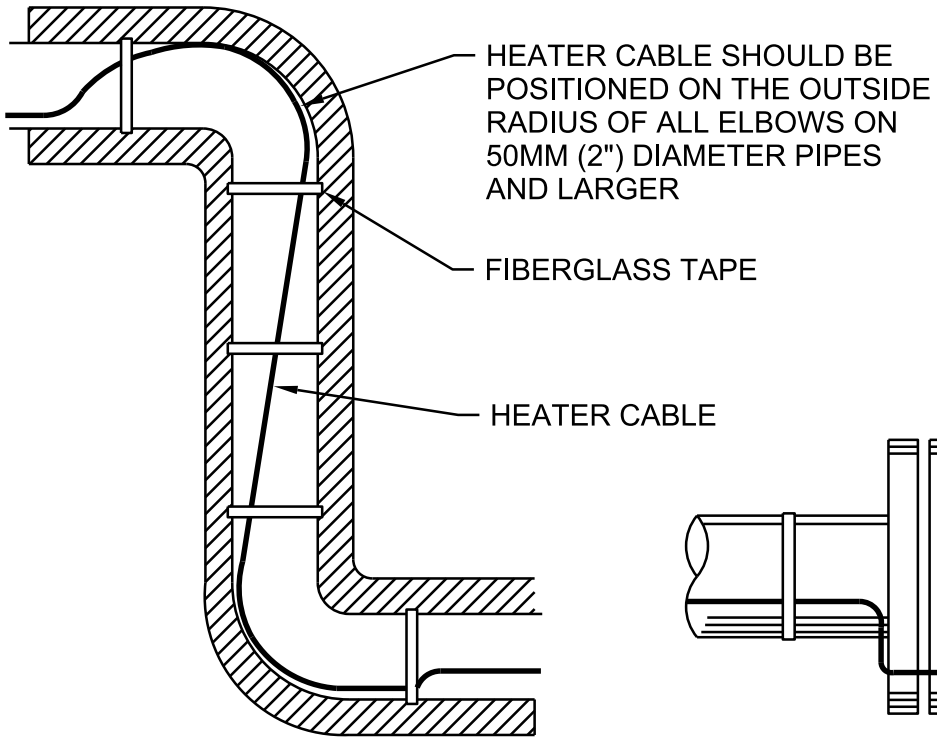

ELBOW

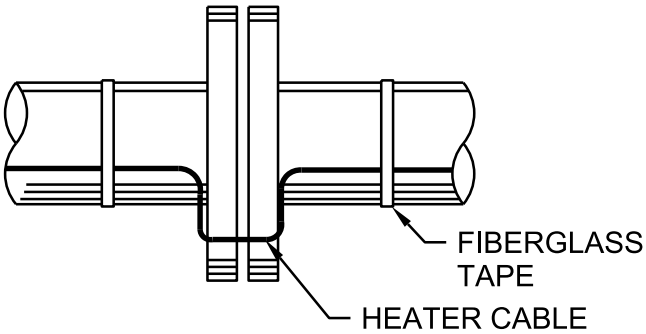

FLANGE

TYPICAL HEATER CABLE INSTILLATION

NTS

DETAIL 1 OF 2

2660-009

NATIONAL PARK SERVICE
GRAND CANYON NATIONAL PARK
SOUTH RIM

© JACOBS

Jacobs

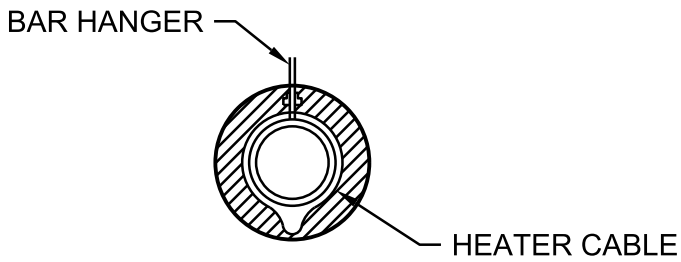

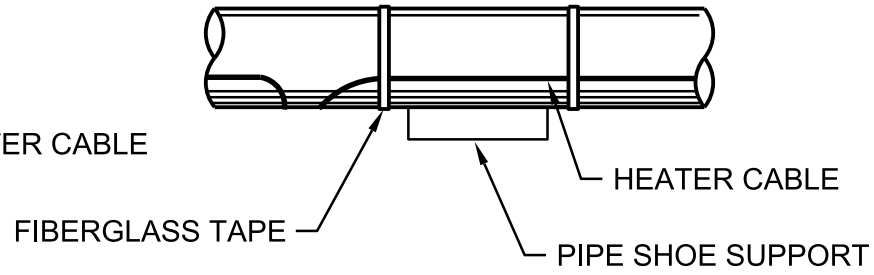

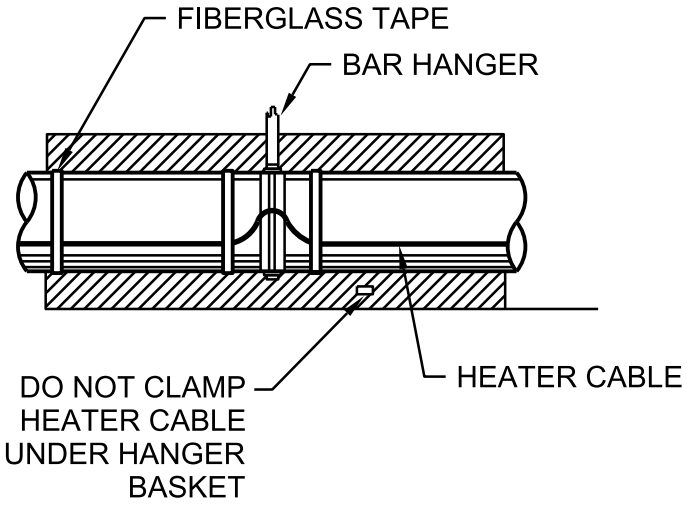

HANGER SUPPORT

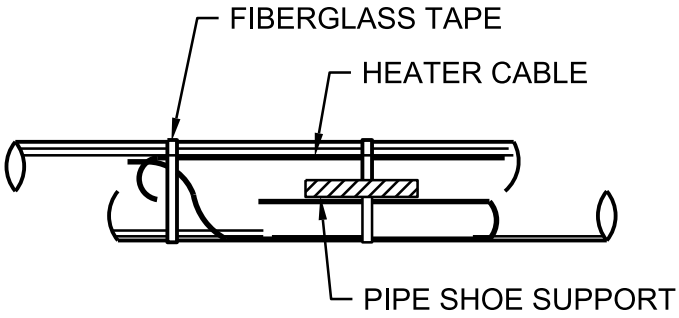

SHOE SUPPORT

TYPICAL HEATER CABLE INSTILLATION

NTS

DETAIL 2 OF 2

2660-009

NATIONAL PARK SERVICE
GRAND CANYON NATIONAL PARK
SOUTH RIM

© JACOBS

Jacobs

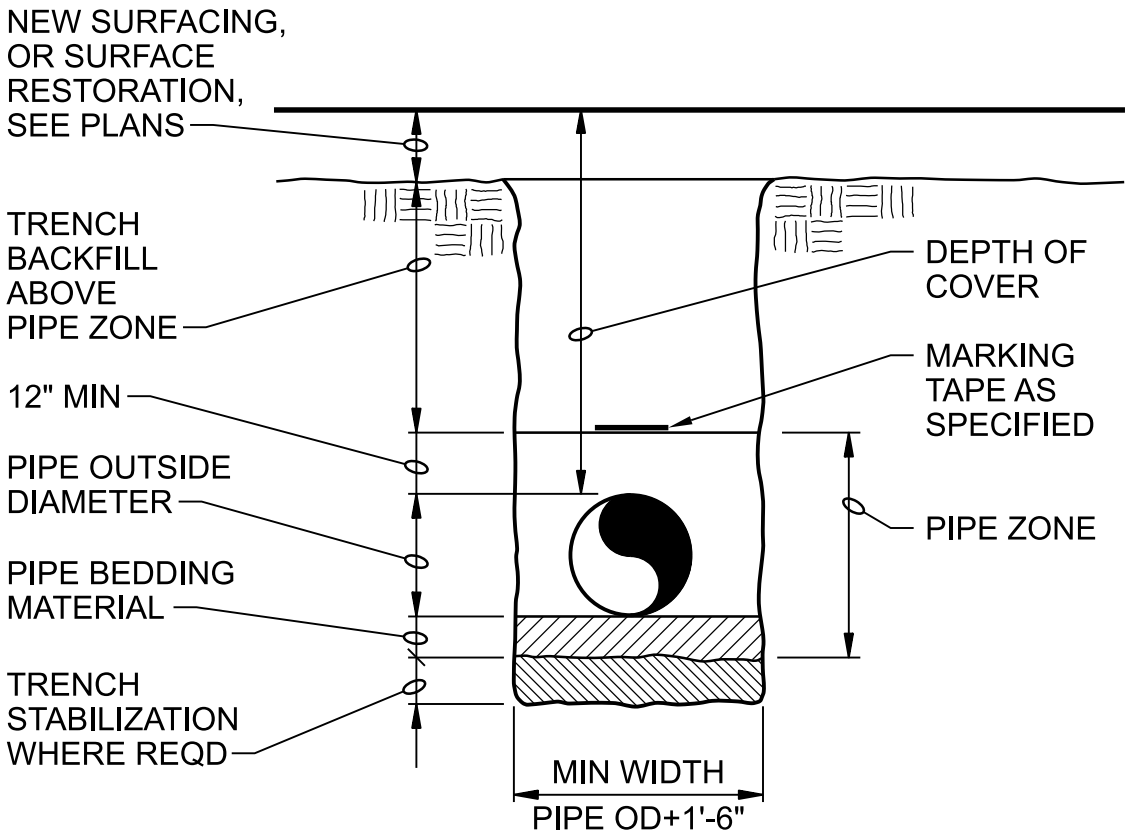

TYPICAL TRENCH

NTS

NATIONAL PARK SERVICE
GRAND CANYON NATIONAL PARK
SOUTH RIM

3123-110

© JACOBS

Jacobs

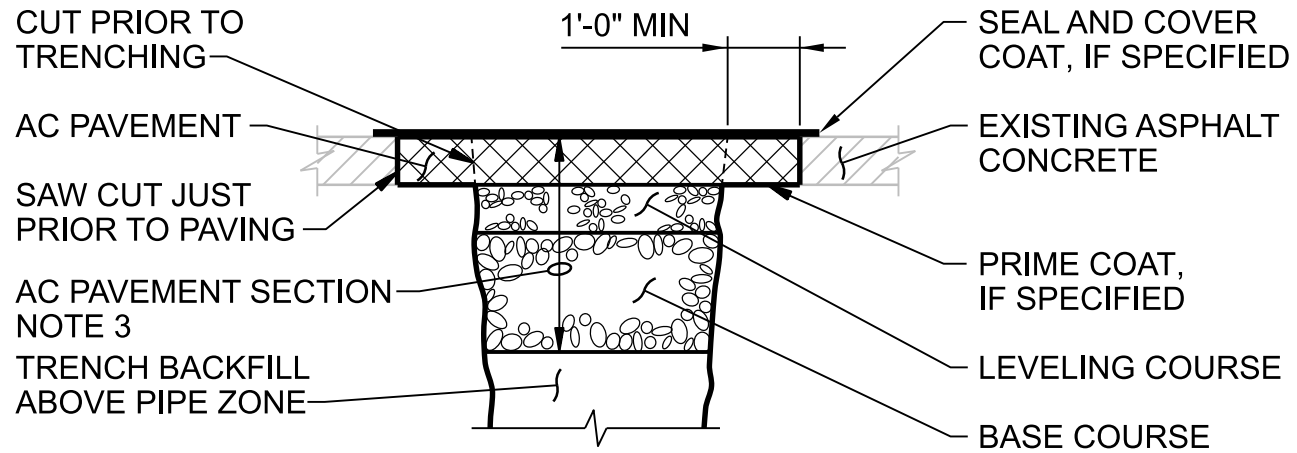

ASPHALT SURFACING

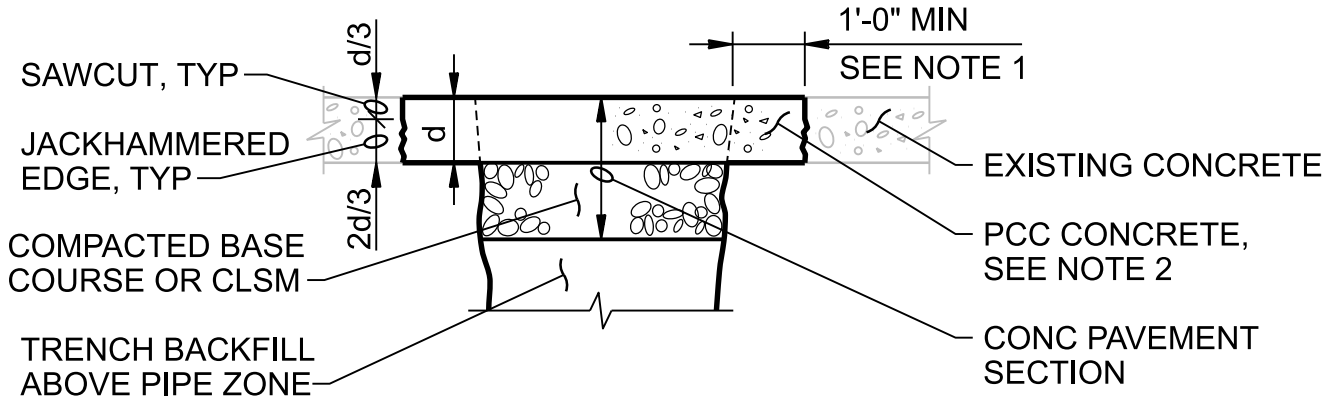

PCC CONCRETE SURFACING

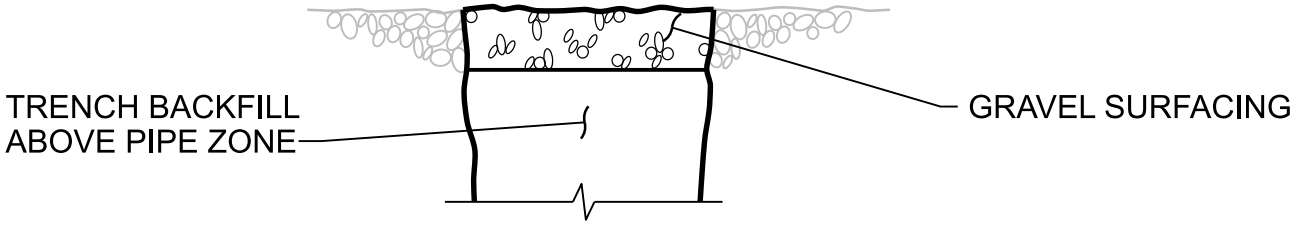

GRAVEL SURFACING

NOTES:

1. IF LOCATION OF TRENCH SAW CUT IS WITHIN 2 FEET OF AN EXISTING JOINT OR EDGE OF CONCRETE, REPLACE ENTIRE CONCRETE TO THE JOINT OR EDGE.

2. CONSTRUCT JOINTS ACROSS NEW CONCRETE TO MATCH EXISTING JOINT TYPES AND LOCATIONS.

3. PROVIDE 4" AC ON 4" BASE COURSE OR MATCH EXISTING, WHICHEVER IS GREATER.

SURFACE RESTORATION

NTS

NATIONAL PARK SERVICE
GRAND CANYON NATIONAL PARK
SOUTH RIM

3123-115

© JACOBS

Jacobs

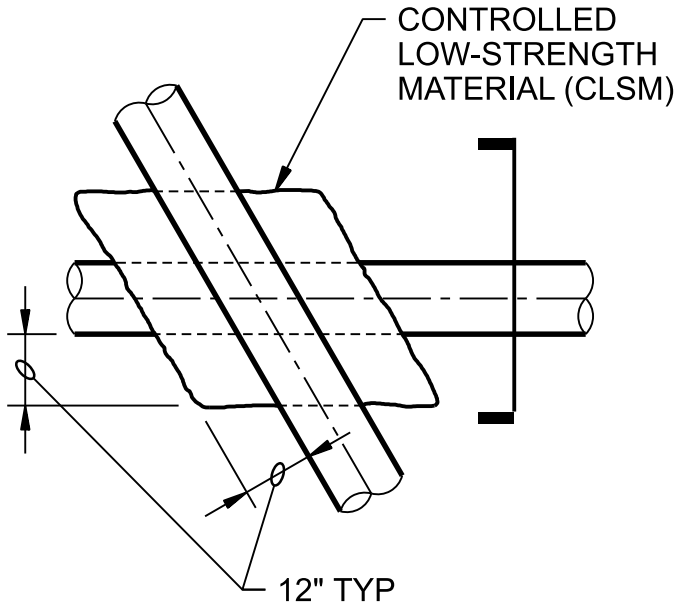

PLAN

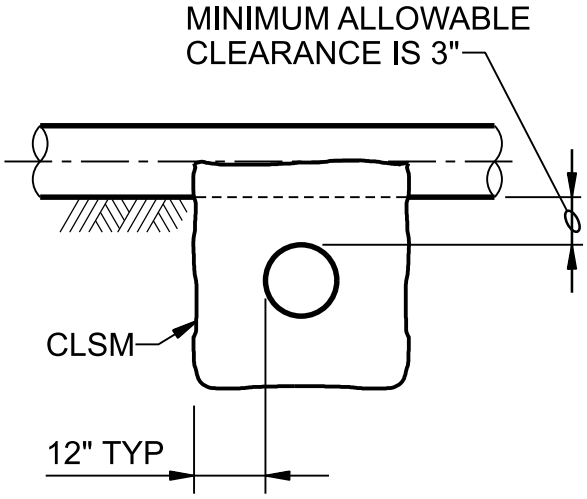

SECTION

NOTES:

CLSM SUPPORT IS REQUIRED:

1. WHEN BOTH PIPELINES ARE NEW AND CLEARANCE BETWEEN THEM IS LESS THAN 12".
2. WHEN A NEW PIPELINE IS CROSSING OVER AN EXISTING PIPELINE AND THE CLEARANCE BETWEEN THEM IS LESS THAN 12".
3. AT ALL PIPE CROSSINGS WHERE A NEW PIPELINE IS CROSSING UNDER AN EXISTING PIPELINE.
4. REFER TO SPECIFICATION SECTION 31 23 23.15 FOR CLSM REQUIREMENTS.

TRENCH PIPE CROSSING

NTS

NATIONAL PARK SERVICE
GRAND CANYON NATIONAL PARK
SOUTH RIM

3123-120

© JACOBS

Jacobs

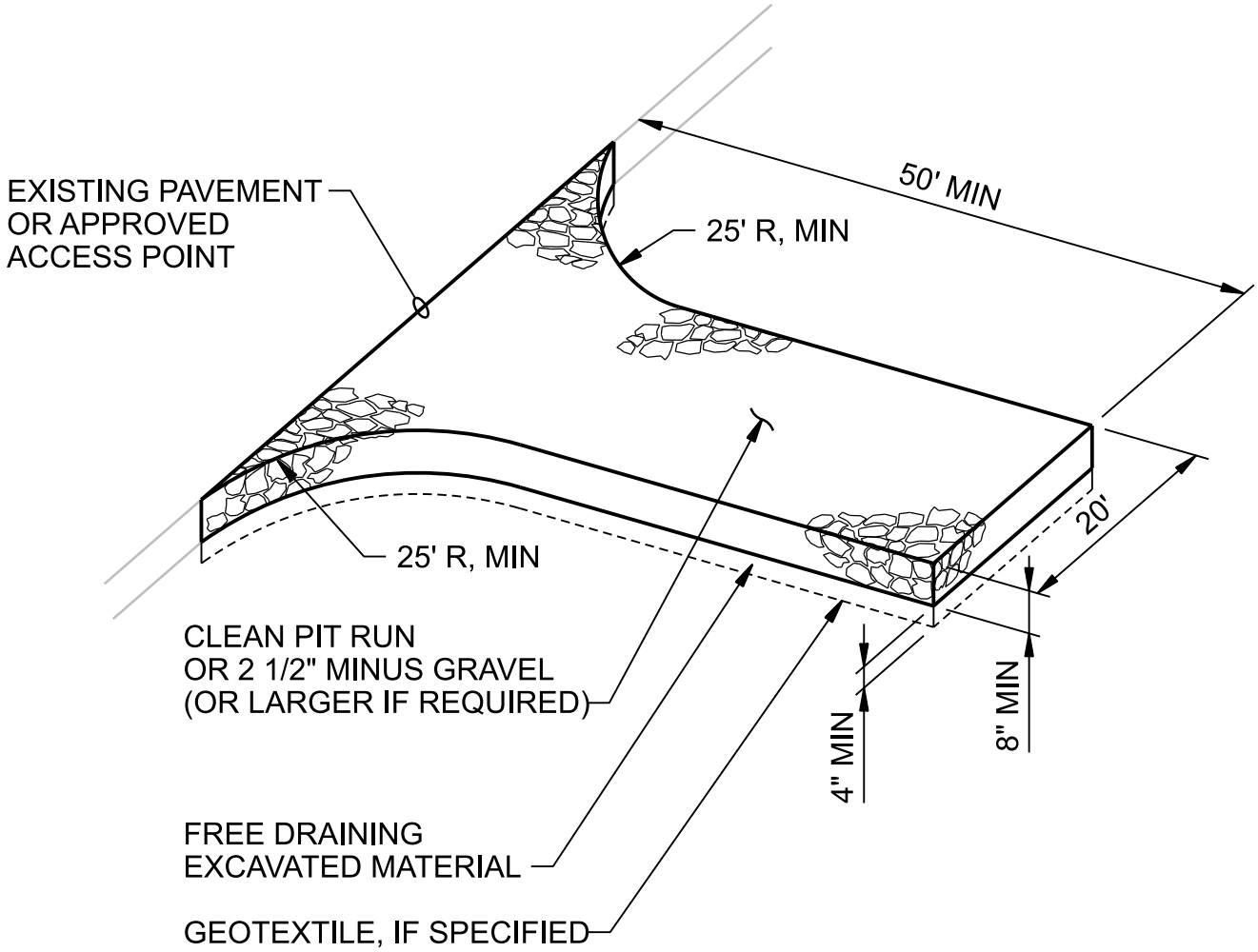

NOTES:

1. ADDITIONAL GRAVEL MAY HAVE TO BE ADDED PERIODICALLY TO MAINTAIN PROPER FUNCTION OF THE PAD.

2. REMOVE GRAVEL ENTRANCE AND REPLACE WITH NEW BASE COURSE PRIOR TO COMPLETION OF ACCESS ROAD.

GRAVEL CONSTRUCTION ENTRANCE

NTS

NATIONAL PARK SERVICE
GRAND CANYON NATIONAL PARK
SOUTH RIM

3125-130

© JACOBS

Jacobs

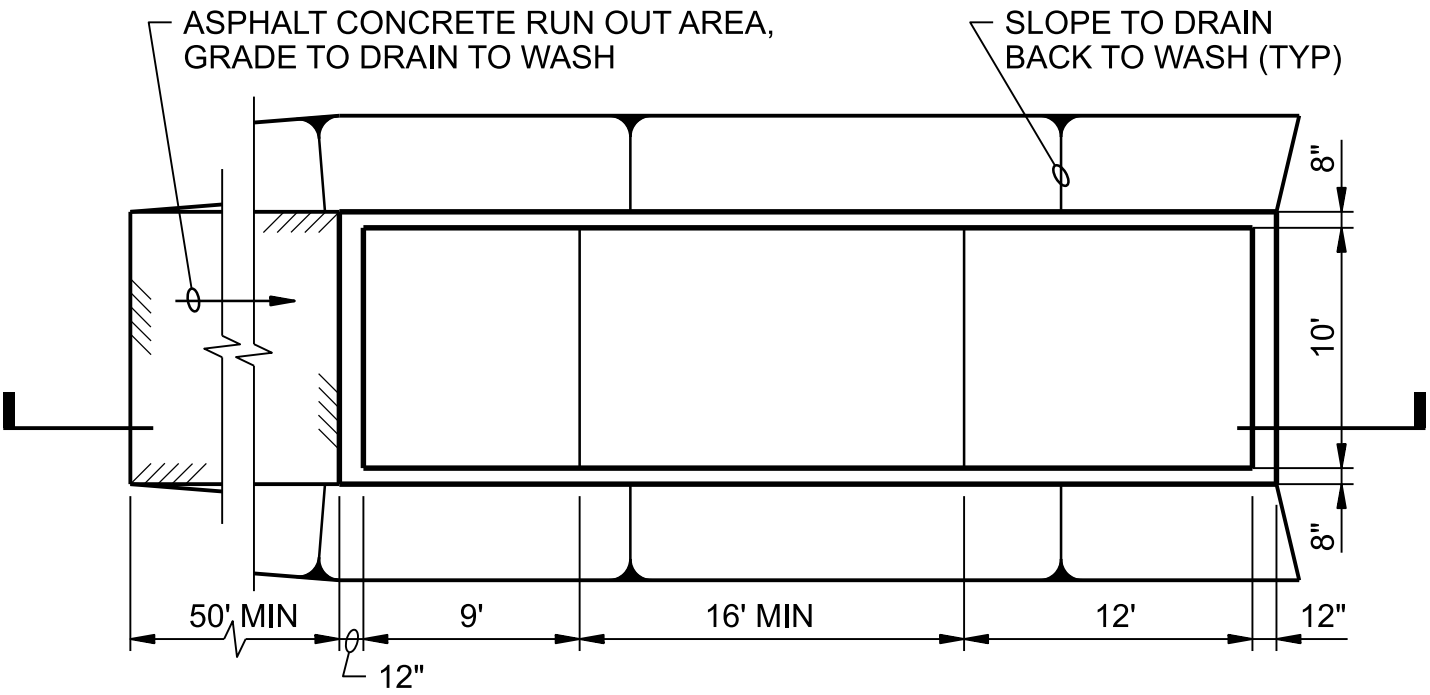

PLAN

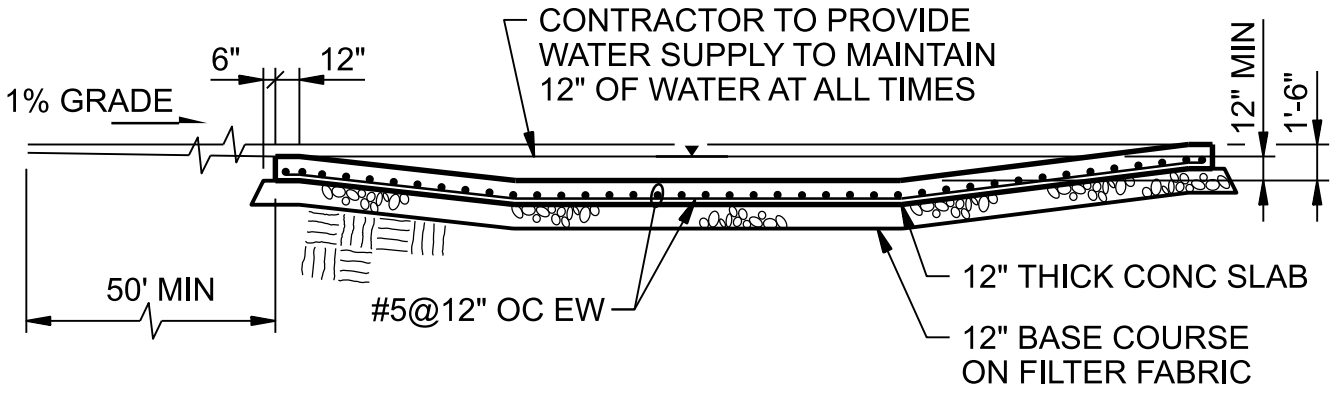

SECTION

NOTE:

CONTRACTOR TO REMOVE ACCUMULATED SEDIMENT FROM WHEEL WASH, MAY BE PIPED TO AN APPROVED SEDIMENT TRAP.

WHEEL WASH

NTS

NATIONAL PARK SERVICE
GRAND CANYON NATIONAL PARK
SOUTH RIM

3125-135

© JACOBS

Jacobs

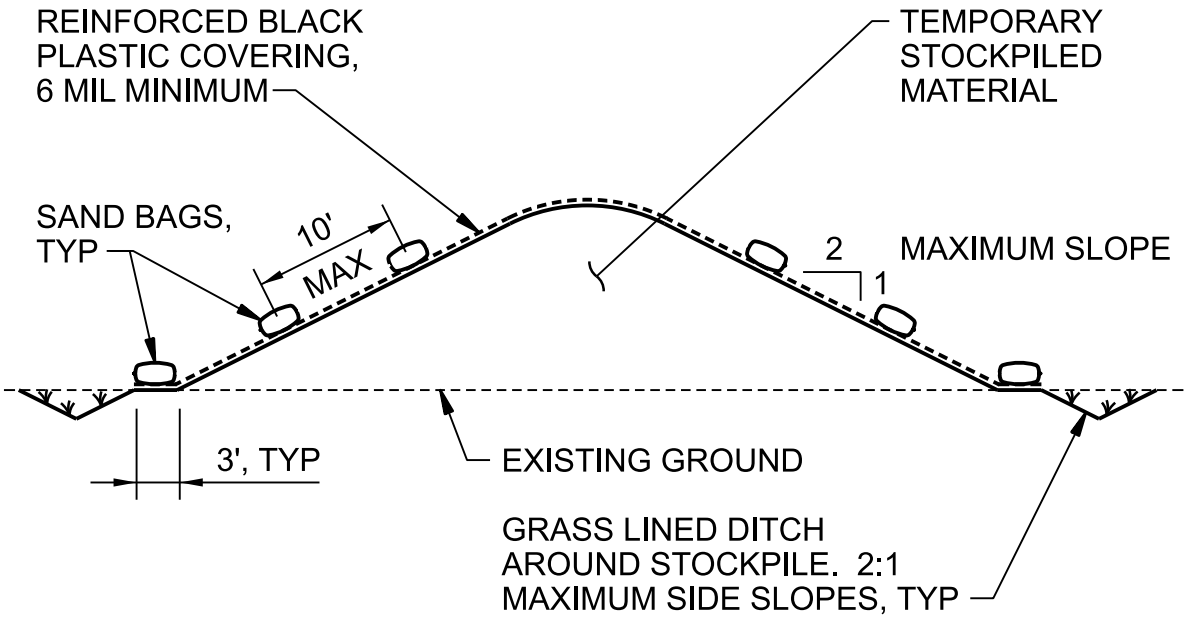

NOTES:

1. ALL SEAMS SHALL BE TAPED OR WEIGHTED DOWN FULL LENGTH. ALL SEAMS SHALL HAVE A MINIMUM 12" OVERLAP.

2. SEAMS PARALLEL TO THE SLOPE CONTOUR SHALL HAVE THE UPHILL SHEET OVERLAP THE DOWN HILL SHEET.

3. NO SURFACE RUN-OFF SHALL BE ALLOWED TO RUN UNDER THE PLASTIC COVERING.

4. DRAINAGE FROM AREAS COVERED BY REINFORCED PLASTIC SHEETING SHALL BE CONTROLLED SUCH THAT NO DISCHARGE OCCURS DIRECTLY ONTO UNCONTROLLED DISTURBED AREAS OF THE CONSTRUCTION SITE.

5. ALL SAND BAGS SHALL BE MAINTAINED IN PLACE WITH ROPE.

TEMPORARY STOCKPILE COVERING

NTS

NATIONAL PARK SERVICE
GRAND CANYON NATIONAL PARK
SOUTH RIM

3125-140

© JACOBS

Jacobs

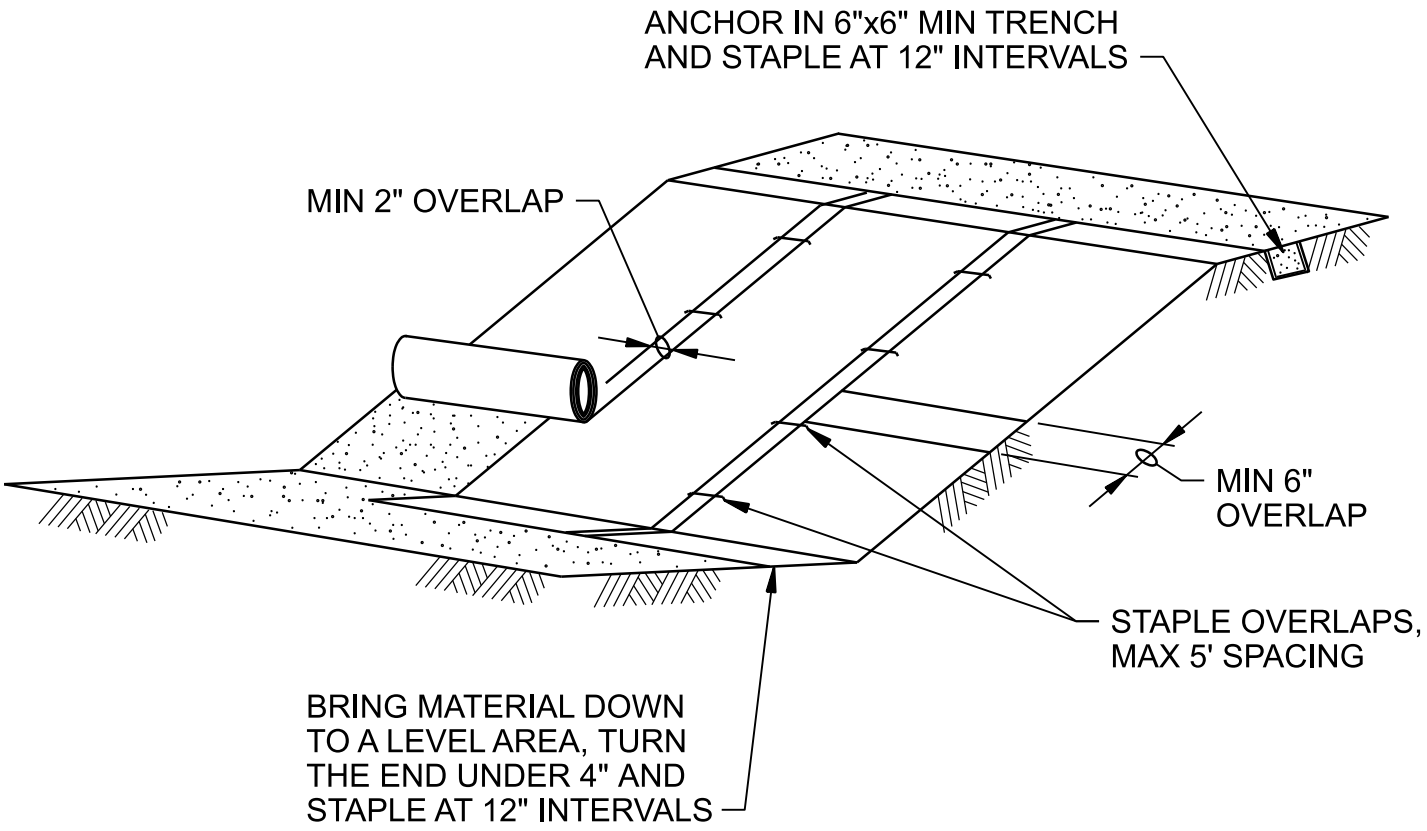

NOTES:

1. IF THERE IS A BERM AT THE TOP OF SLOPE, ANCHOR UPSLOPE OF THE BERM.
2. SLOPE SURFACE SHALL BE SMOOTH BEFORE PLACEMENT FOR PROPER SOIL CONTACT.
3. DO NOT STRETCH BLANKETS/MATTINGS TIGHT, ALLOW THE ROLLS TO MOLD TO ANY IRREGULARITIES.
4. STAPLING PATTERN AS PER MANUFACTURER'S RECOMMENDATIONS.
5. FOR SLOPES LESS THAN 3:1, ROLLS MAY BE PLACED IN HORIZONTAL STRIPS.
6. LIME, FERTILIZE AND SEED BEFORE INSTALLATION. PLANTING OF SHRUBS, TREES, ETC SHOULD OCCUR AFTER INSTALLATION.

ESC BLANKET ON SLOPE

NTS

NATIONAL PARK SERVICE
GRAND CANYON NATIONAL PARK
SOUTH RIM

3125-150

© JACOBS

Jacobs

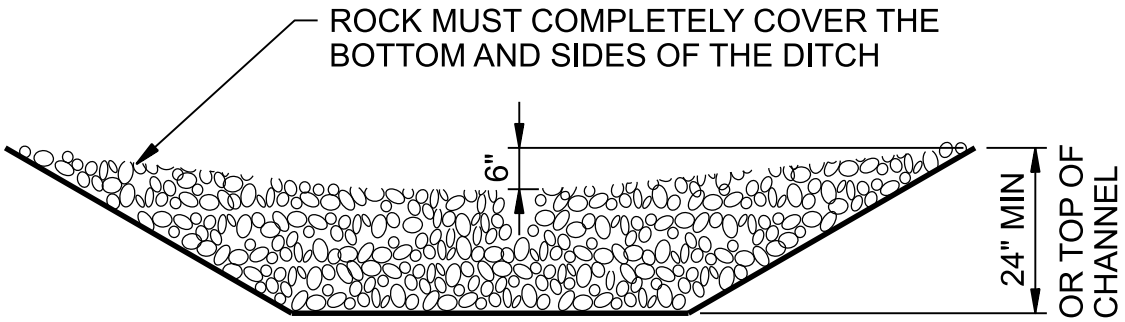

CROSS SECTION

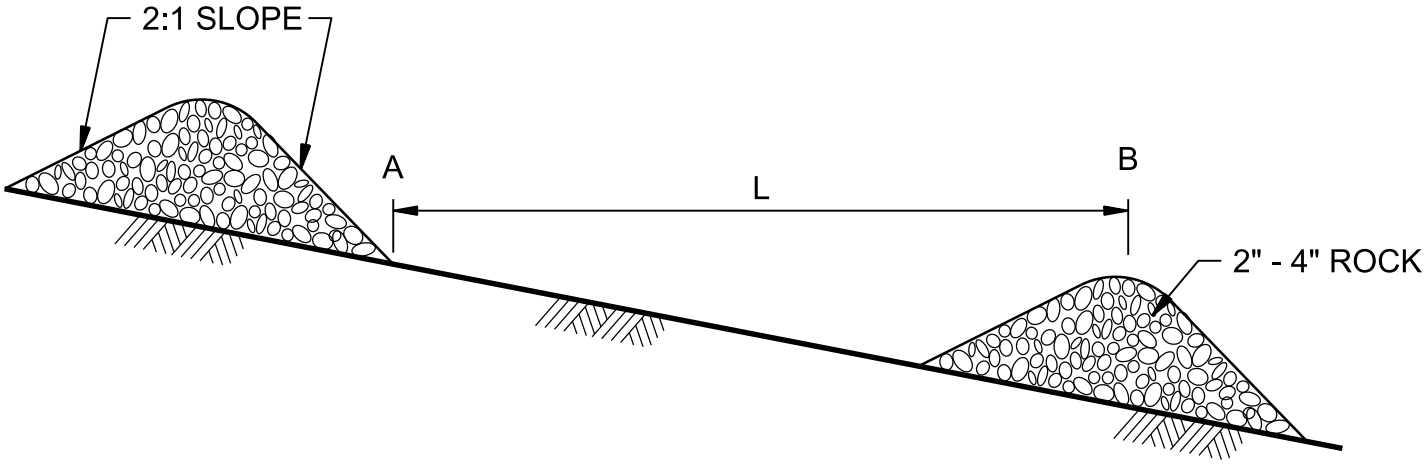

L = THE DISTANCE SUCH THAT POINTS A AND B ARE OF EQUAL ELEVATIONS

DAM SPACING

MAINTENANCE STANDARDS:

1. ANY SEDIMENT DEPOSITION OF MORE THAN 0.5 FEET SHALL BE REMOVED SO THAT THE CHANNEL IS RESTORED TO ITS DESIGN CAPACITY.

2. THE CHANNEL SHALL BE EXAMINED FOR SIGNS OF SCOURING AND EROSION OF THE BED AND BANKS. IF SCOURING OR EROSION HAS OCCURRED, AFFECTED AREAS SHALL BE PROTECTED BY RIP-RAP OR AN EROSION CONTROL BLANKET OR NET.

CHECK DAMS

NTS

NATIONAL PARK SERVICE
GRAND CANYON NATIONAL PARK
SOUTH RIM

3125-160

© JACOBS

Jacobs

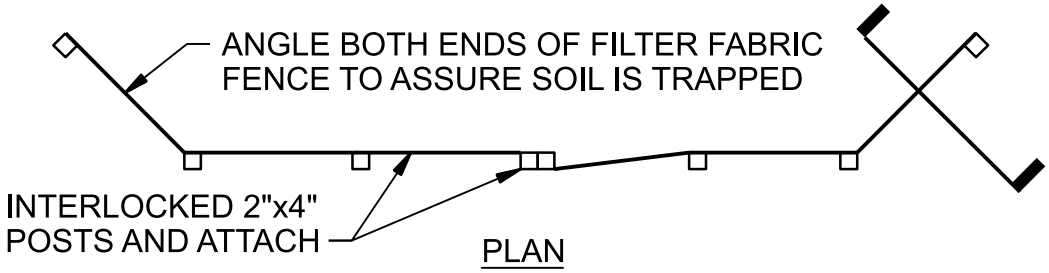

PLAN

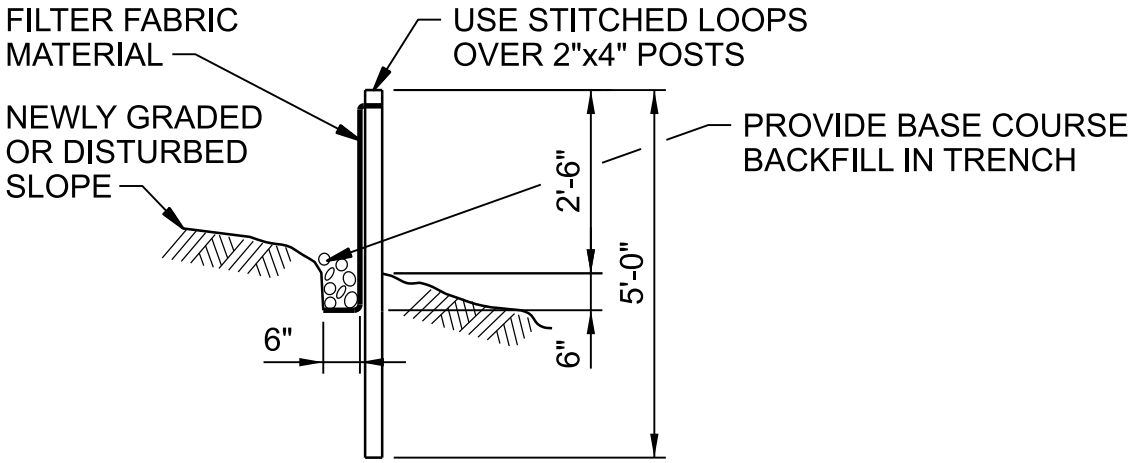

SECTION

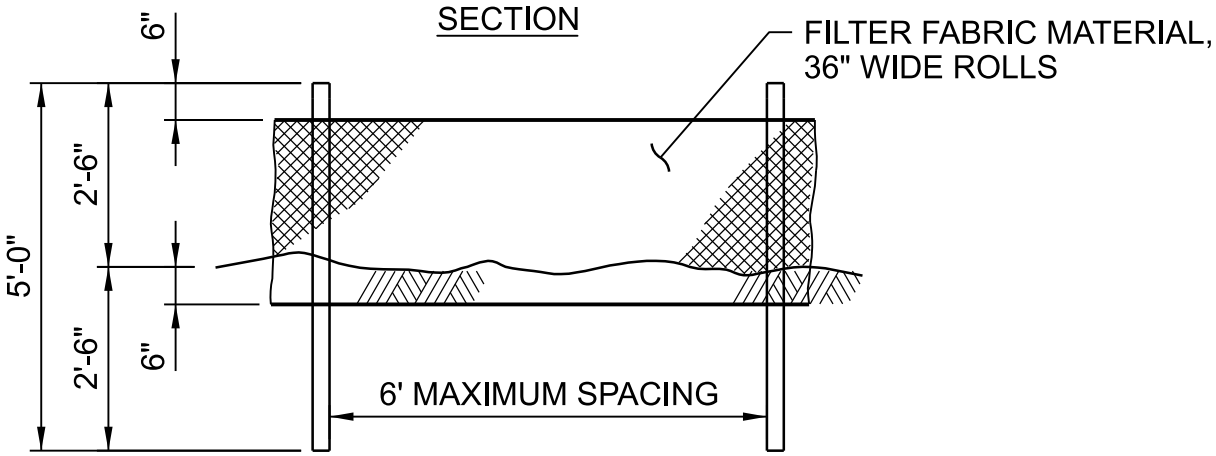

ELEVATION

NOTES:

1. BURY BOTTOM OF FILTER FABRIC 6" VERTICALLY BELOW FINISHED GRADE.
2. 2"x4" DOUGLAS FIR OR STEEL FENCE POSTS.
3. STITCHED LOOPS TO BE INSTALLED DOWNHILL SIDE OF SLOPE.
4. COMPACT ALL AREAS OF FILTER FABRIC TRENCH.

SILT FENCE

NTS

NATIONAL PARK SERVICE
GRAND CANYON NATIONAL PARK
SOUTH RIM

3125-165

© JACOBS

Jacobs

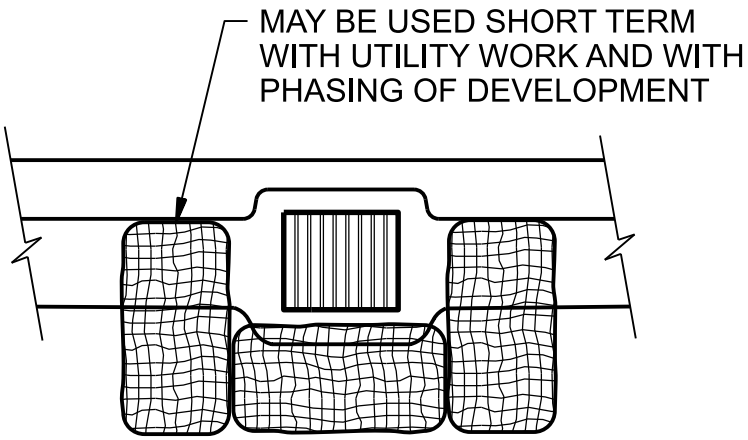

CURB INLET

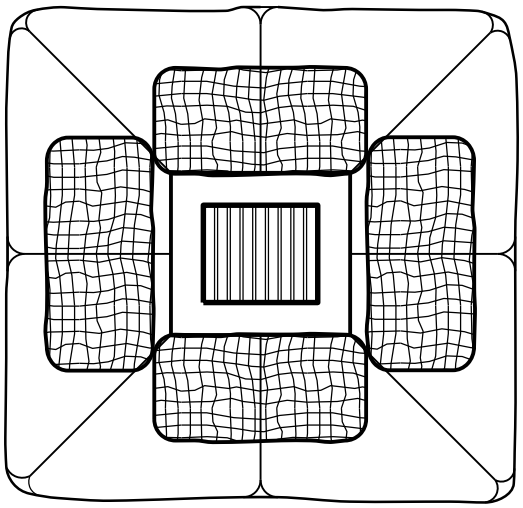

AREA DRAIN

BIOFILTER BAG INLET BARRIER

NTS

NATIONAL PARK SERVICE
GRAND CANYON NATIONAL PARK
SOUTH RIM

3125-186

© JACOBS

Jacobs

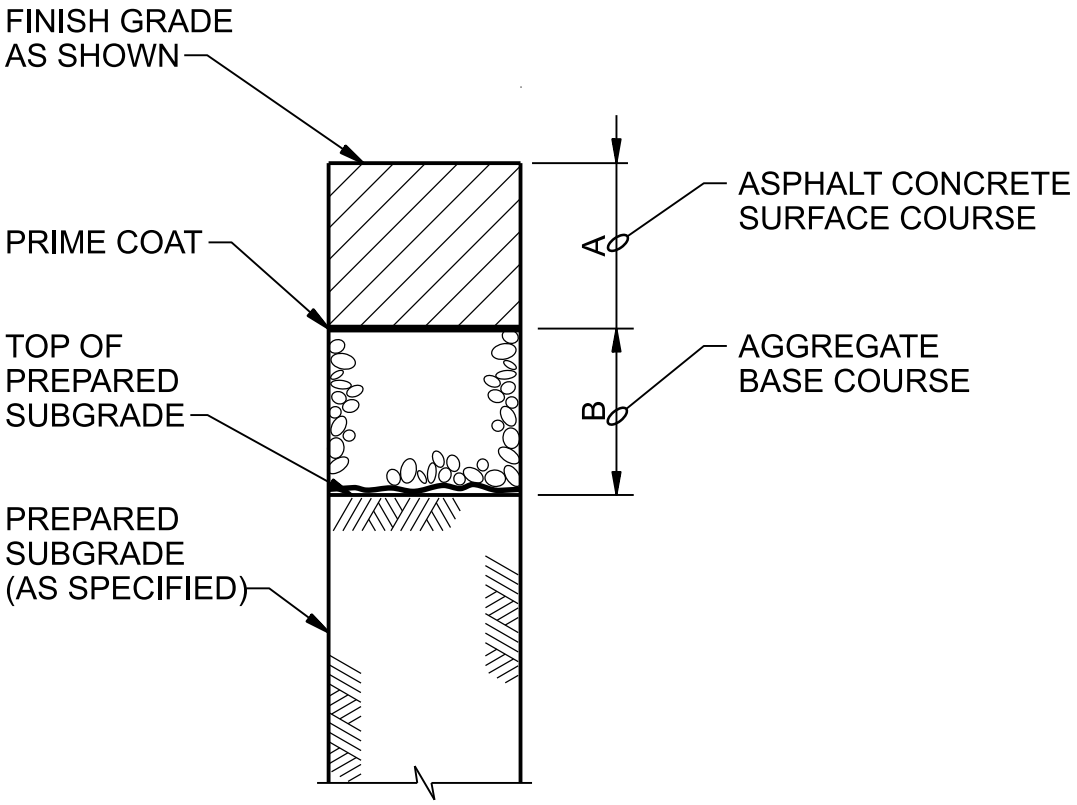

PAVEMENT TYPE(S)	DIMENSION (INCHES)	
	A	B
ALL	4"	4"

ASPHALT CONCRETE PAVEMENT

NTS

NATIONAL PARK SERVICE
GRAND CANYON NATIONAL PARK
SOUTH RIM

3212-210

© JACOBS

Jacobs

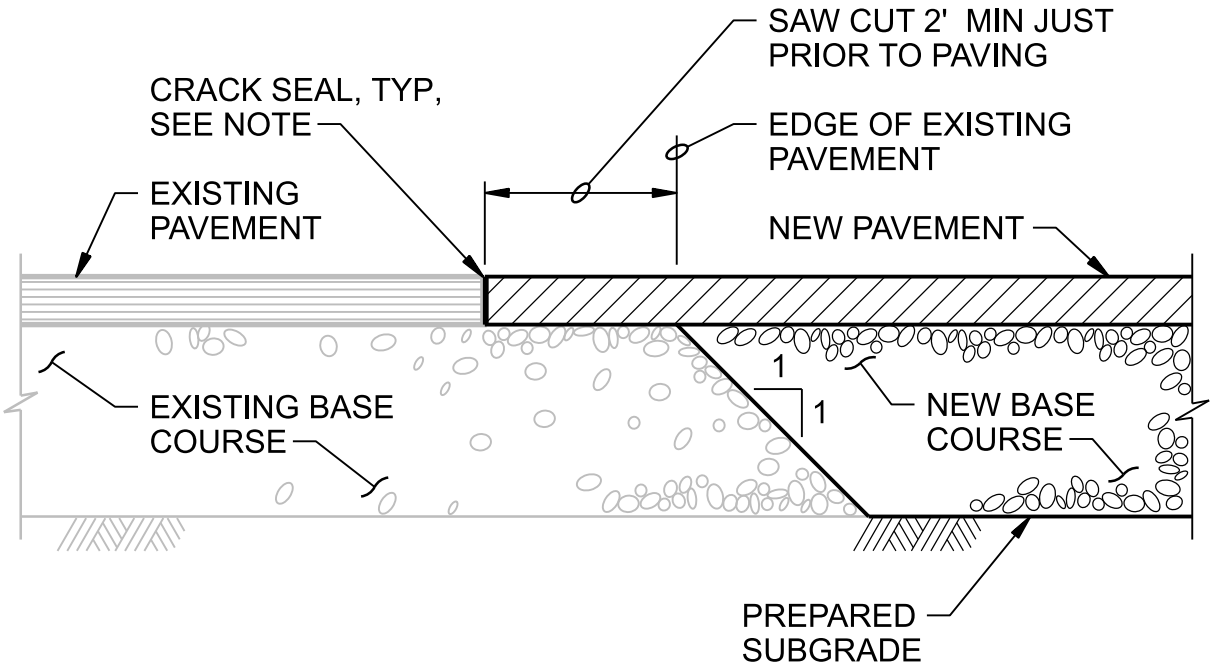

NOTE:

PAINT EDGE OF EXISTING ASPHALT WITH TACK COAT PRIOR TO PAVING.
CRACK SEAL JOINT AFTER PAVING OPERATION HAS BEEN COMPLETED.

PAVEMENT CONNECTION

NTS

NATIONAL PARK SERVICE
GRAND CANYON NATIONAL PARK
SOUTH RIM

3212-215

© JACOBS

Jacobs

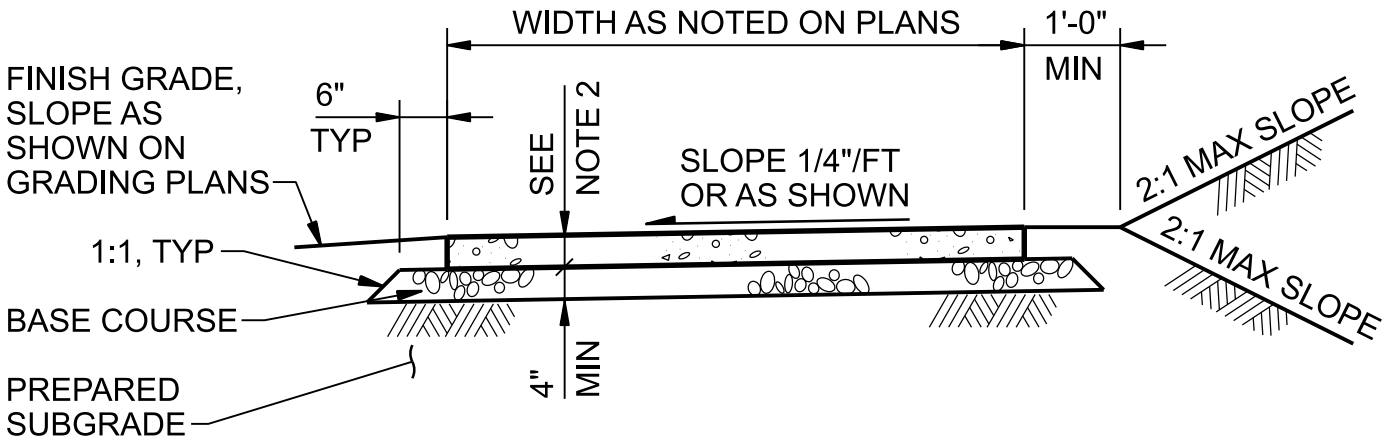

TYPICAL SECTION

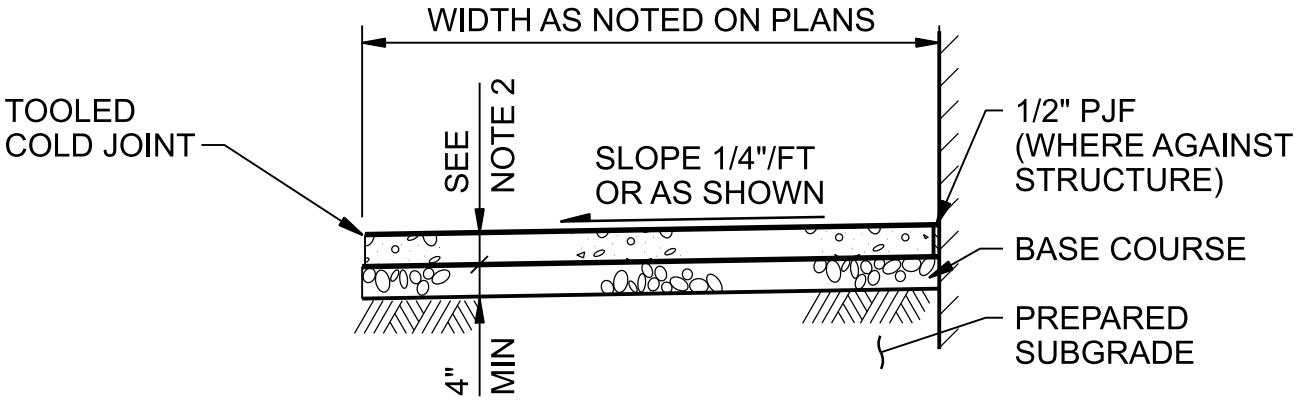

TYPICAL SECTION AT BUILDING

NOTES:

1. SIDEWALKS 8 FEET AND WIDER SHALL HAVE A LONGITUDINAL CONTRACTION JOINT AT THE MIDPOINT.

2. CONCRETE DEPTH FOR STANDARD SIDEWALKS SHALL BE NOMINAL 4" MINIMUM, THICKNESS IN DRIVEWAY SHALL BE 6" MINIMUM.

TYPICAL CONCRETE SIDEWALK

NTS

NATIONAL PARK SERVICE
GRAND CANYON NATIONAL PARK
SOUTH RIM

3213-220

© JACOBS

Jacobs

PAVEMENT TYPE(S) SEE NOTE 5	DIMENSION (INCHES)		REINFORCING
	A	B	C
CI	9"	4"	#4@12" CTD 2" COVER

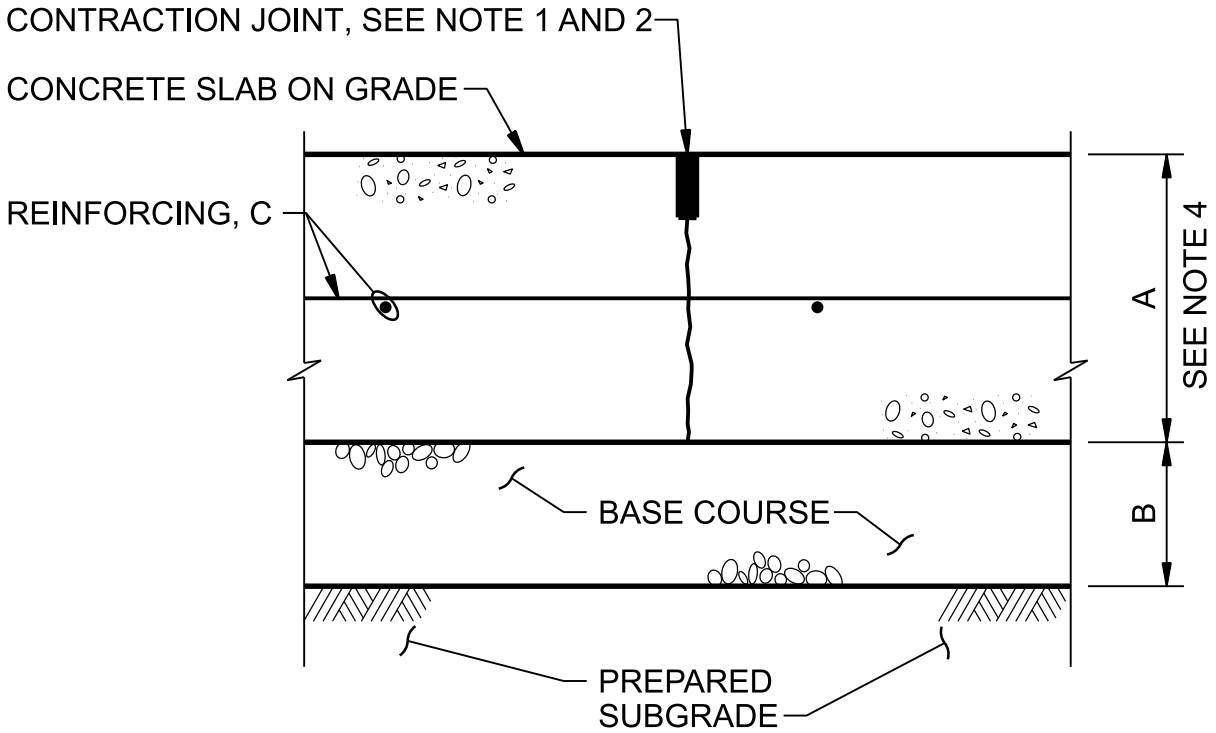

NOTES:

1. CONTRACTION JOINT SHALL BE MADE, CLEANED WITH COMPRESSED AIR, AND FILLED WITH SEALANT AS SPECIFIED.
2. CONCRETE JOINT SPACING: 12'x12' OR AS SHOWN.
3. INSTALL 1/2" PREMOLDED JOINT FILLER FULL DEPTH WHERE CONCRETE PAVEMENT ABUTS CONCRETE CURB, BUILDING OR ANY RIGID STRUCTURE.
4. PROVIDE A 12" THICK BY 18" WIDE THICKENED EDGE AROUND PERIMETER OF SLAB. TRANSITION THICKENED EDGE TO NORMAL 9" THICKNESS IN 18".
5. PROVIDE PORTLAND CEMENT CONCRETE PAVEMENT TYPE AS SPECIFIED IN SECTION 32 13 13; CONCRETE PAVING.

CONCRETE PAVEMENT

NTS

NATIONAL PARK SERVICE
GRAND CANYON NATIONAL PARK
SOUTH RIM

3213-240

© JACOBS

Jacobs

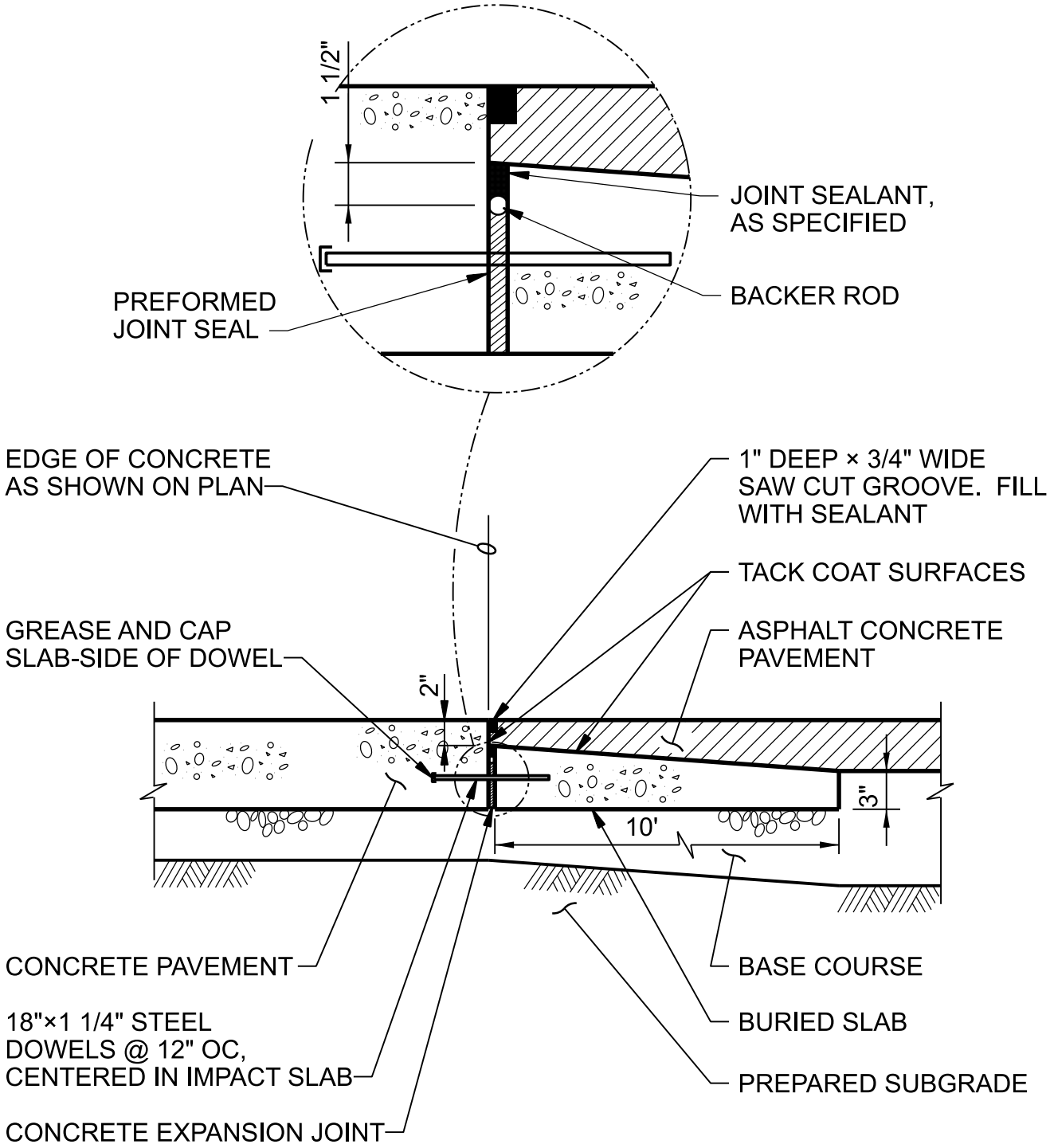

CONCRETE TO ASPHALT TRANSITION

NTS

NATIONAL PARK SERVICE
GRAND CANYON NATIONAL PARK
SOUTH RIM

3213-250

© JACOBS

Jacobs

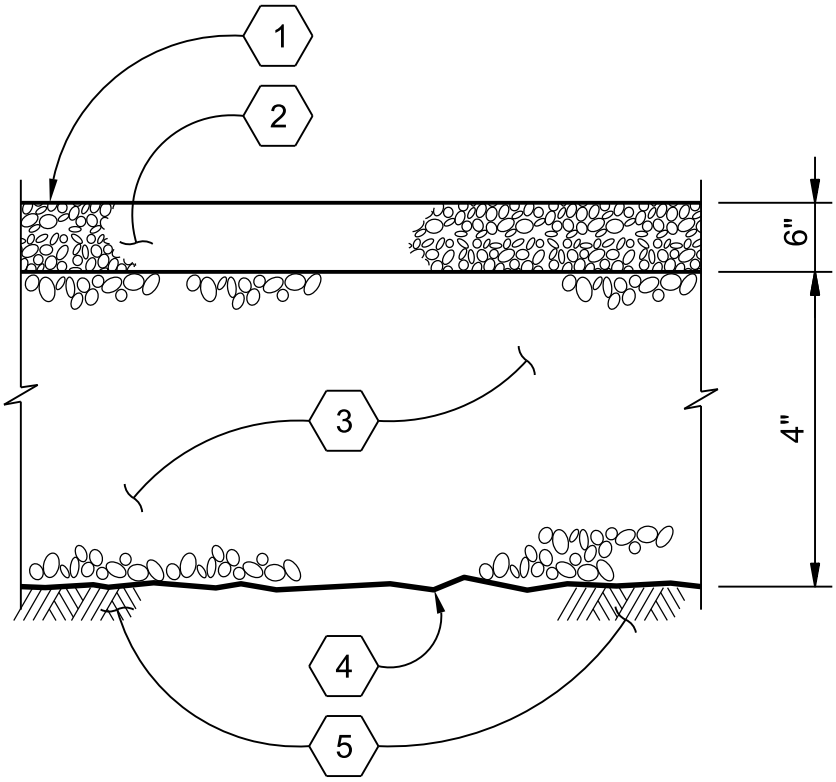

1. FINISH GRADE
2. GRAVEL SURFACING
3. BASE COURSE
4. GEOTEXTILE
5. PREPARED SUBGRADE

GRAVEL SURFACING

NTS

NATIONAL PARK SERVICE
GRAND CANYON NATIONAL PARK
SOUTH RIM

3215-260

© JACOBS

Jacobs

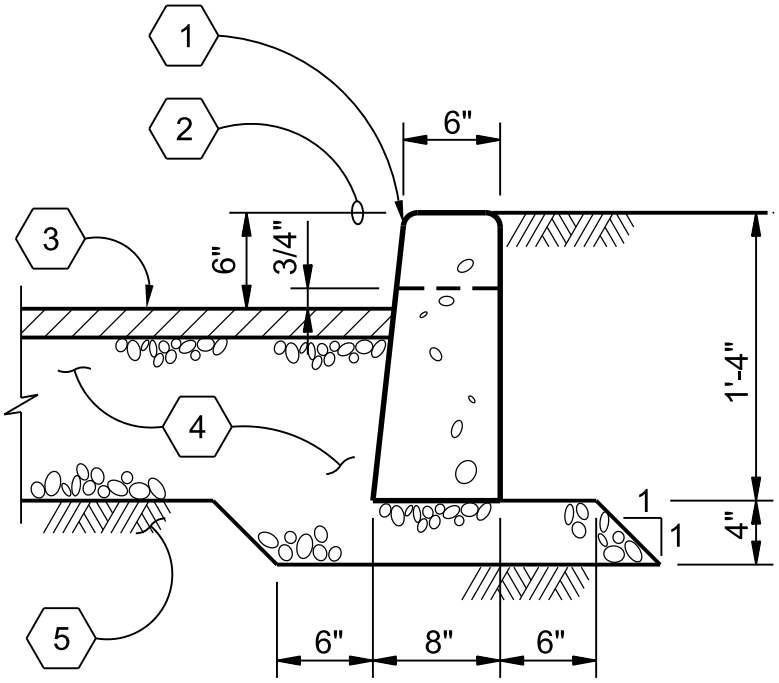

1. 3/4" RADIUS, TYP
2. TOP OF CURB AT DRIVEWAY APPROACH
3. PAVEMENT SURFACE
4. BASE COURSE
5. PREPARED SUBGRADE

CONCRETE CURB

NTS

NATIONAL PARK SERVICE
GRAND CANYON NATIONAL PARK
SOUTH RIM

3216-315

© JACOBS

Jacobs

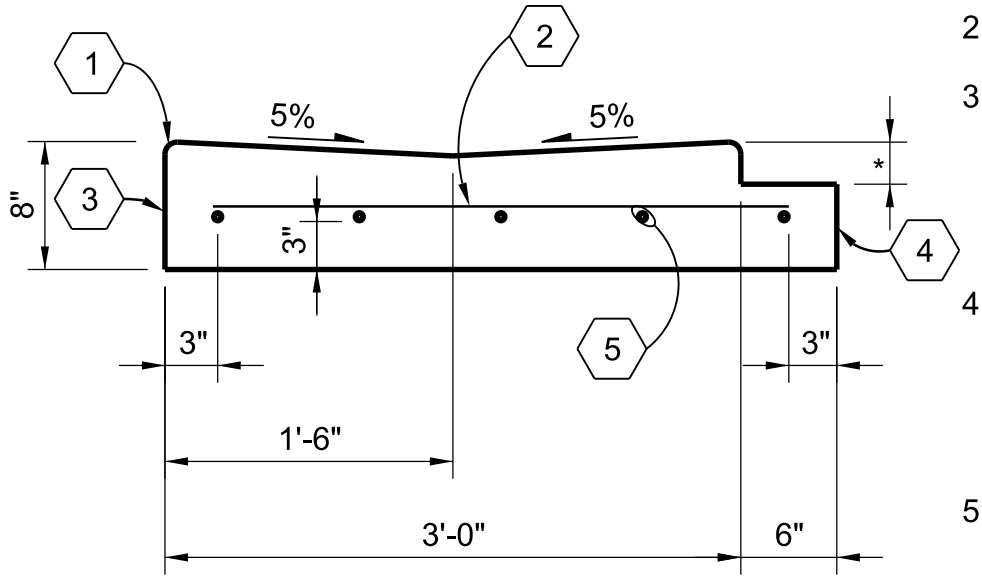

1. 3/4" R, TYP
2. #4 @ 12"
3. PLACE PREMOLDED FILLER AGAINST VERTICAL FACE WHERE VALLEY GUTTER ABUTS CONCRETE.
4. CONSTRUCT 6" x 4" DEPRESSED BENCH WHERE VALLEY GUTTER ABUTS ASPHALT PAVEMENT.
5. #4 @ 8"

GENERAL CIVIL NOTES:

1. * = THICKNESS OF ASPHALT PAVING.
2. WHEN BENCH IS NOT REQUIRED, CONSTRUCT 1" BATTER ON VERTICAL FACE.
3. PROVIDE 3" MINIMUM COVER ON ALL REINFORCING STEEL.

CONCRETE VALLEY GUTTER

NTS

NATIONAL PARK SERVICE
GRAND CANYON NATIONAL PARK
SOUTH RIM

3216-330

© JACOBS

Jacobs

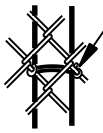

NO. 9 GALV
WIRE CLIP
SPACE 12" MAX
BOTTOM TIE
TO BE 10" MAX
ABOVE GROUND

LINE POST CONNECTION

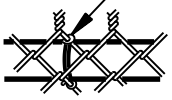

NO. 9 GALV
WIRE CLIP
SPACE 24" MAX

TOP RAIL CONNECTION

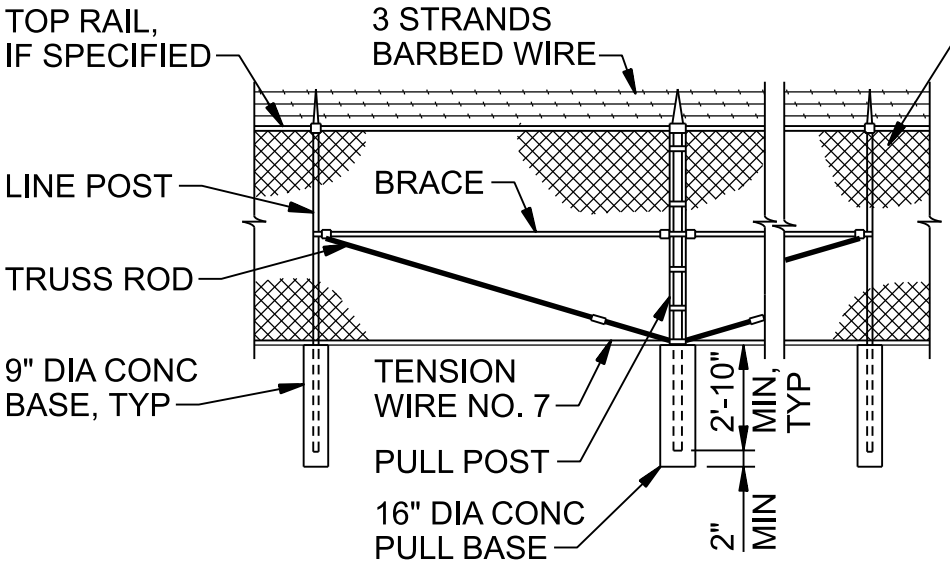

TYPICAL PULL POST

NOTES:

1. BRACE AND TRUSS ROD REQUIRED AT GATES AND SIDE OF ALL CORNER POSTS.
2. FABRIC ATTACHED TO OUTSIDE OF POSTS.

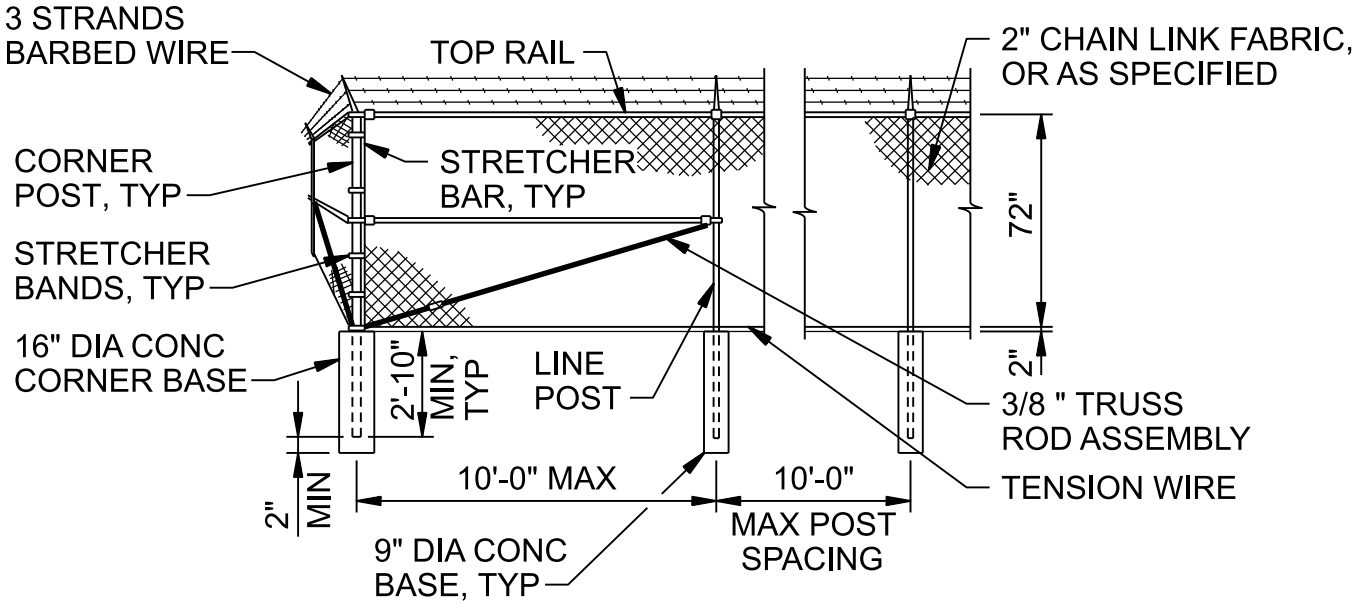

TYPICAL CORNER POST

CHAIN LINK FENCE

NTS

NATIONAL PARK SERVICE
GRAND CANYON NATIONAL PARK
SOUTH RIM

3231-410

© JACOBS

Jacobs

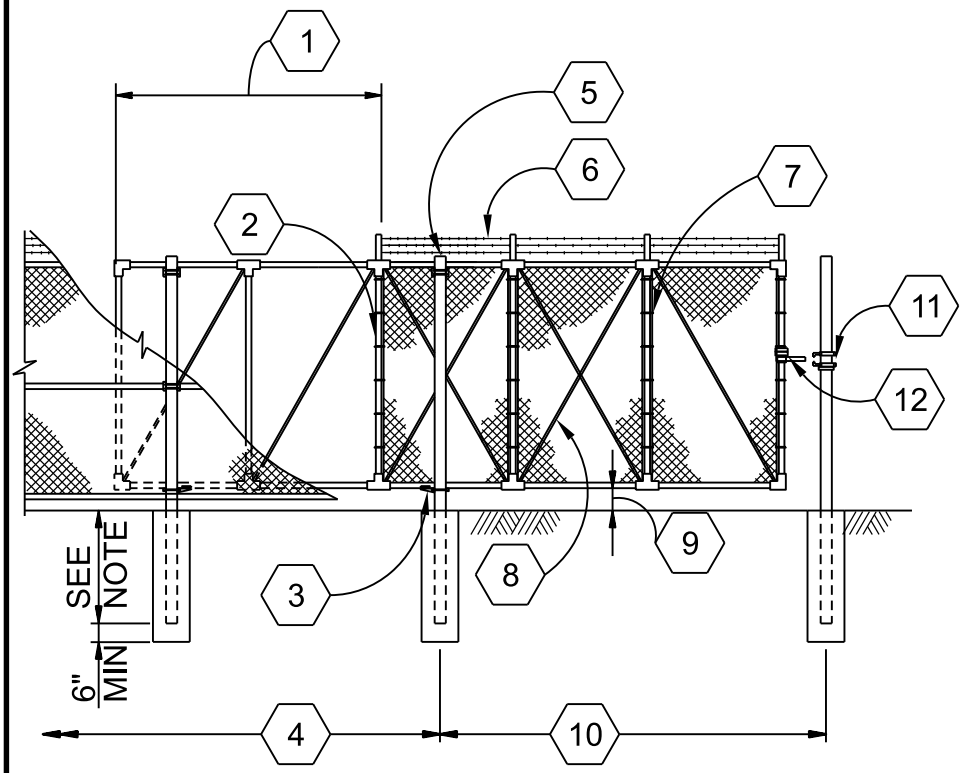

1. OVERHANG, OMIT FABRIC AND WIRE
2. STRETCH BAR AND BANDS
3. GUIDE ROLLER ASSEMBLY
4. CHAIN LINK FENCE
5. TRUCK ASSEMBLY
6. BARBED WIRE, IF SPECIFIED
7. TIE WIRES, AS SPECIFIED
8. BRACE, TYP
9. 2"
10. GATE OPENING BETWEEN POSTS
11. CATCH
12. LATCH

NOTE:
POST SETS PER MANUFACTURER'S RECOMMENDATIONS FOR GATE OPENING AND GATE POST SIZES.

CANTILEVER SLIDE GATE

NTS

NATIONAL PARK SERVICE
GRAND CANYON NATIONAL PARK
SOUTH RIM

3231-425

© JACOBS

Jacobs

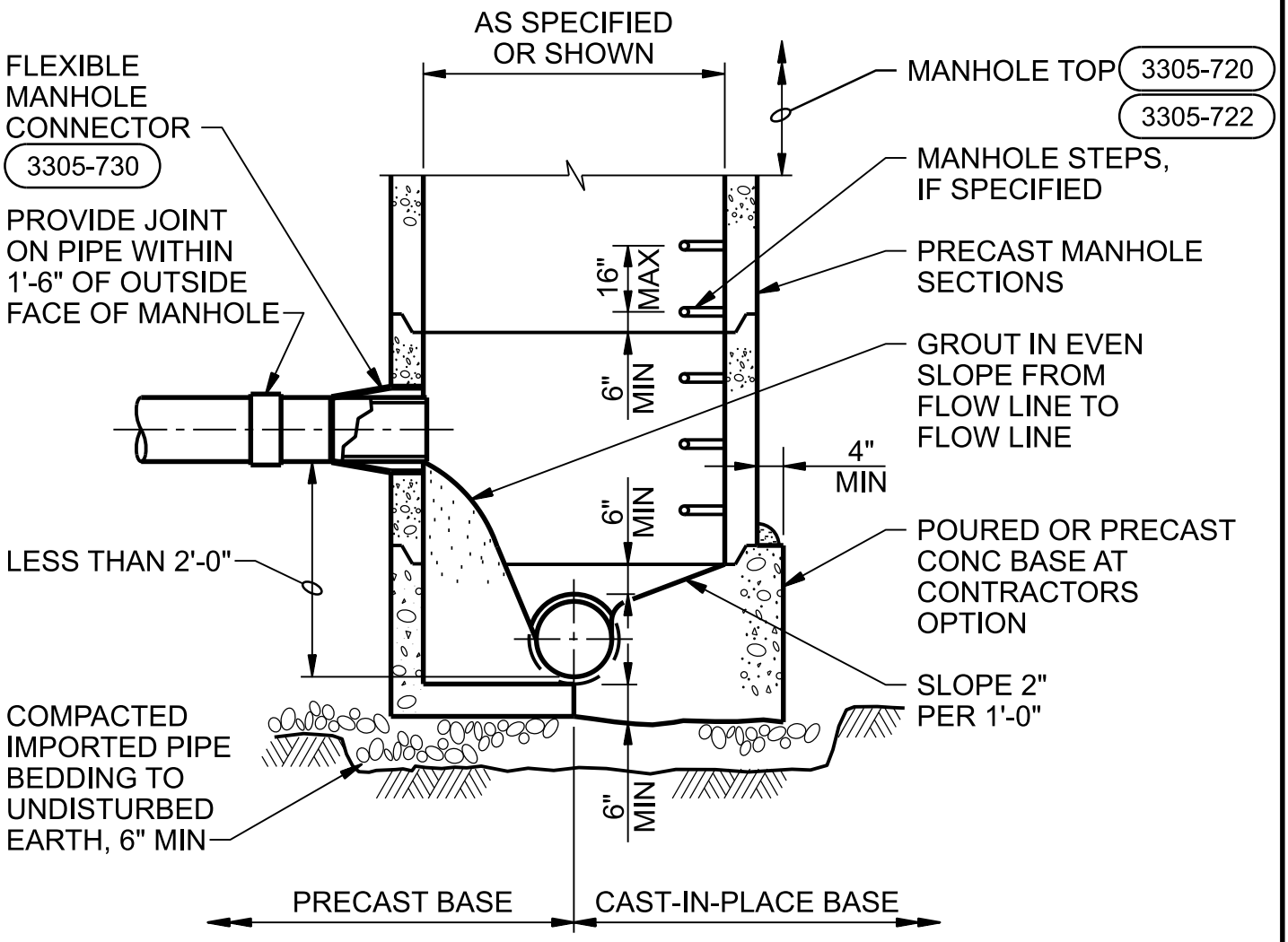

MANHOLE BASE SECTION - 6" TO 24" PIPE

NTS

NATIONAL PARK SERVICE
GRAND CANYON NATIONAL PARK
SOUTH RIM

3305-710

© JACOBS

Jacobs

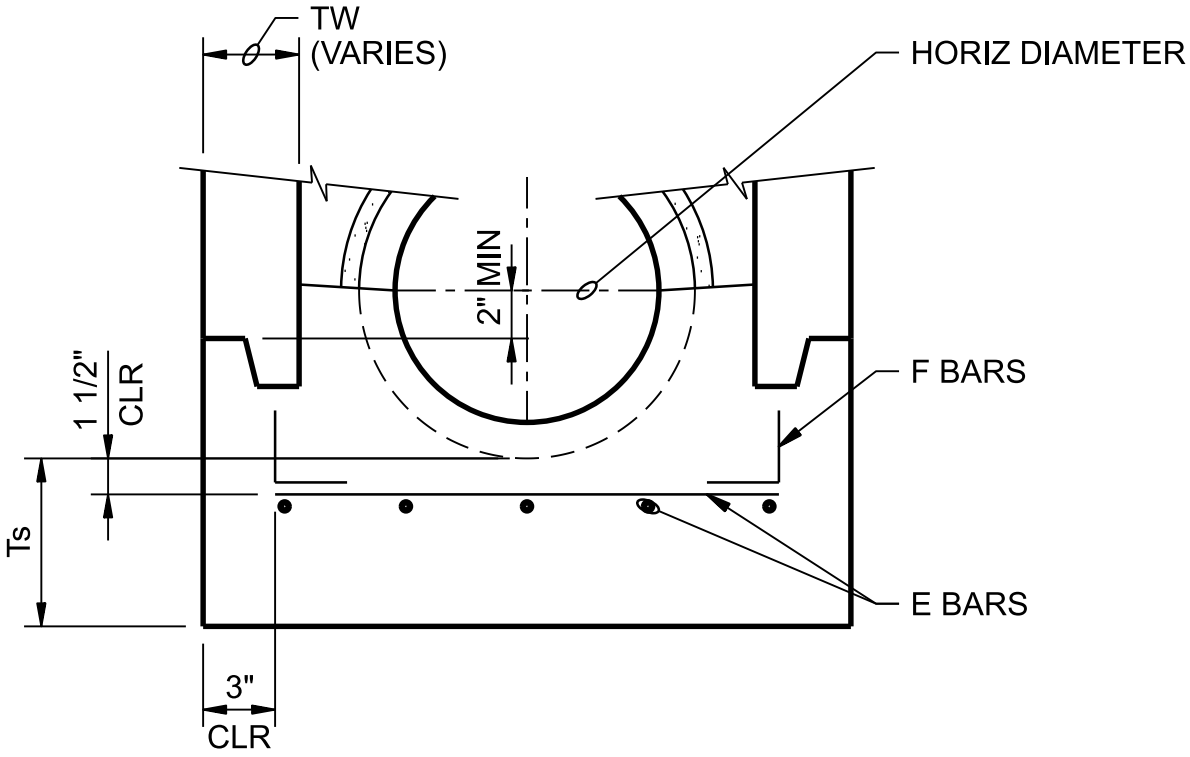

BASE I.D.		60"		72"		84"		96"	
TYPE	DEPTH*	0' - 15'	15' - 30'	0' - 15'	15' - 30'	0' - 15'	15' - 30'	0' - 15'	15' - 30'
CAST IN PLACE	Ts	7.0"	9.0"	7.0"	9.0"	8.0"	10.0"	9.0"	11.0"
	E BARS	#4@12"	#4@9"	#4@9"	#4@6"	#4@8"	#4@9"	#4@7"	#5@8"
	F BARS	#4@12"	#4@9"	#4@9"	#4@6"	#4@8"	#4@9"	#4@7"	#5@8"

* DEPTH FROM LOWEST INVERT TO FINISH GRADE

CAST-IN-PLACE MANHOLE BASE

NTS

NATIONAL PARK SERVICE
GRAND CANYON NATIONAL PARK
SOUTH RIM

3305-712

© JACOBS

Jacobs

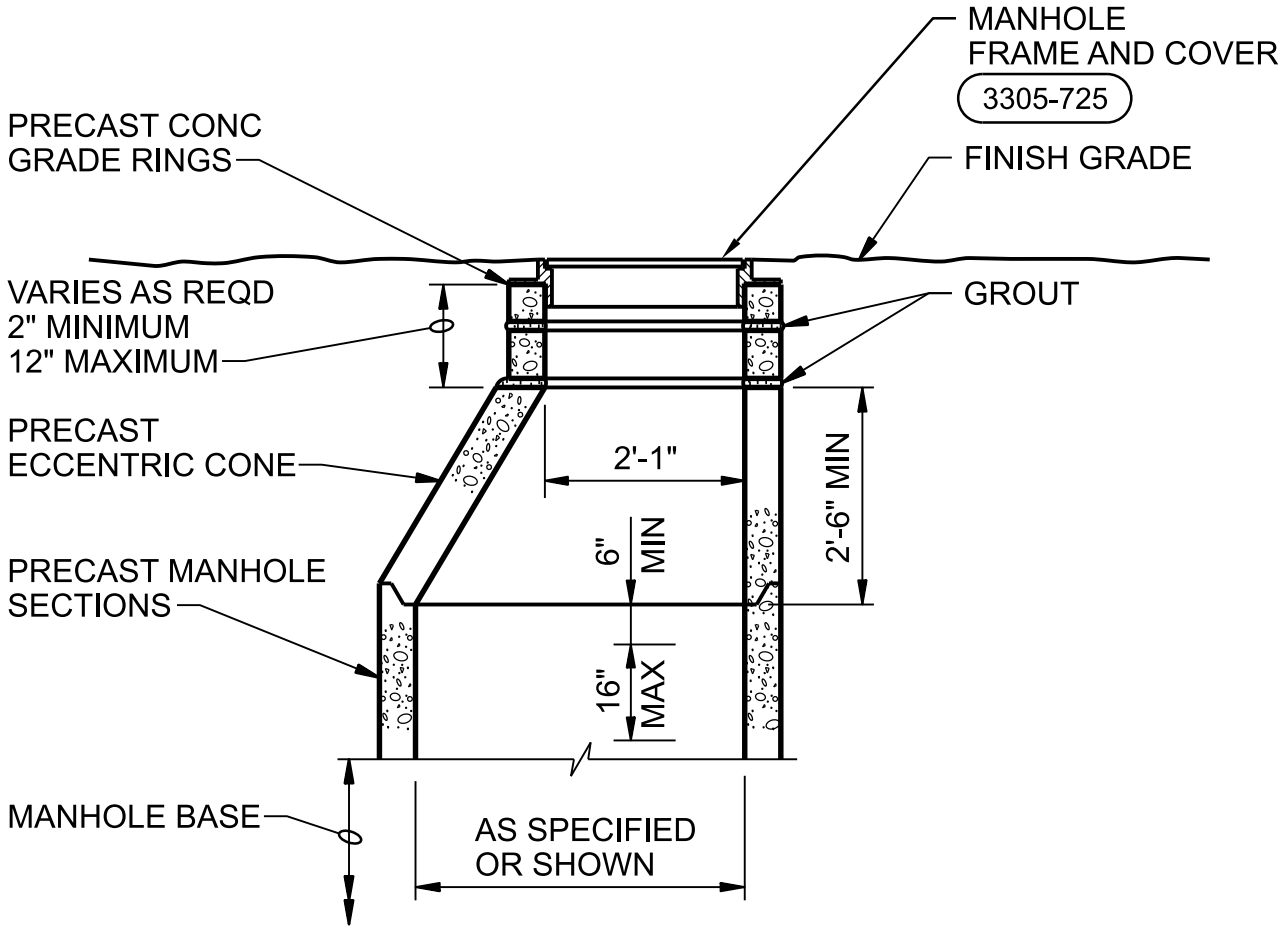

ECCENTRIC MANHOLE TOP SECTION

NTS

NATIONAL PARK SERVICE
GRAND CANYON NATIONAL PARK
SOUTH RIM

3305-720

© JACOBS

Jacobs

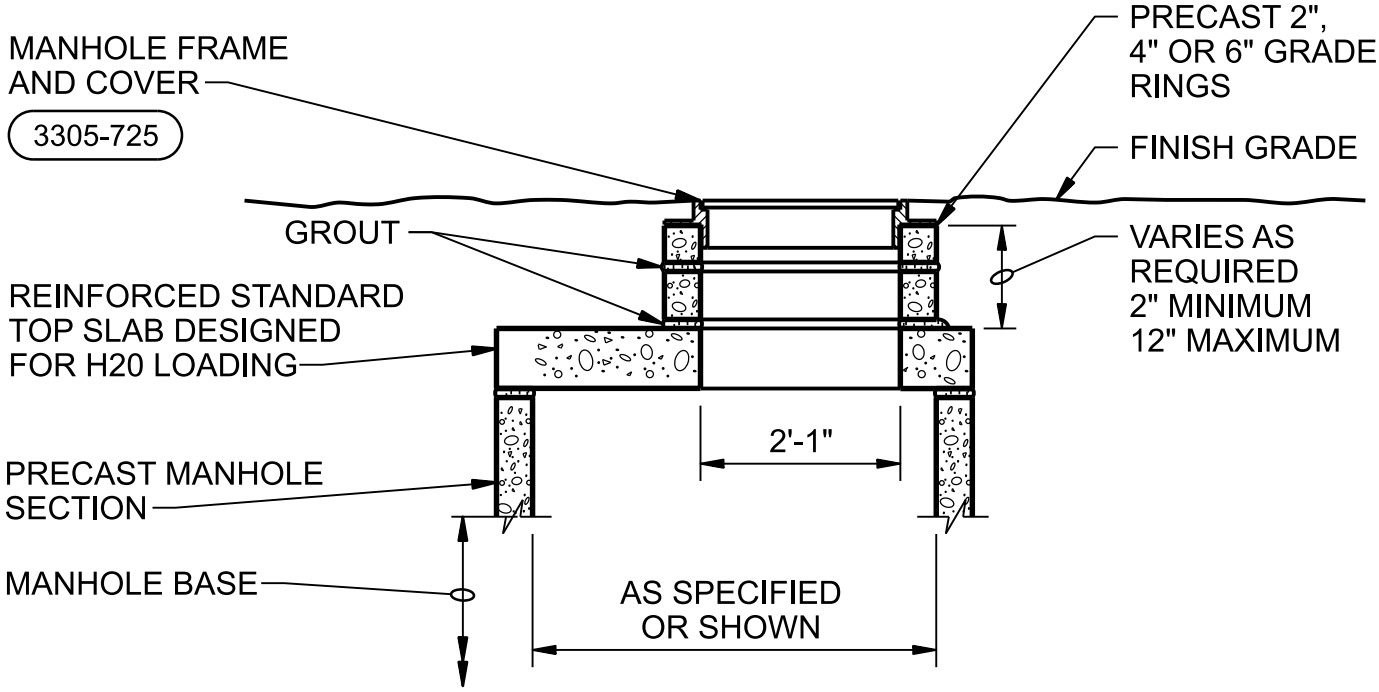

FLAT TOP MANHOLE

NTS

NATIONAL PARK SERVICE
GRAND CANYON NATIONAL PARK
SOUTH RIM

3305-722

© JACOBS

Jacobs

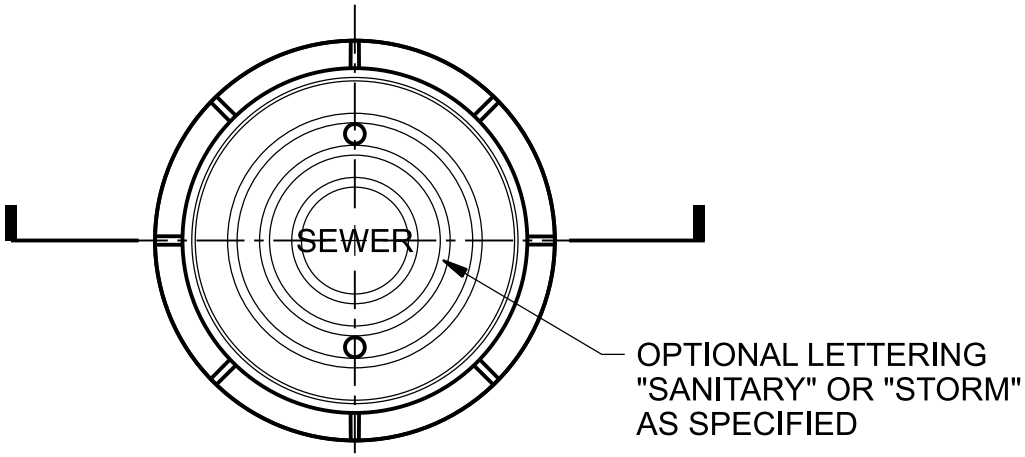

SOLID COVER

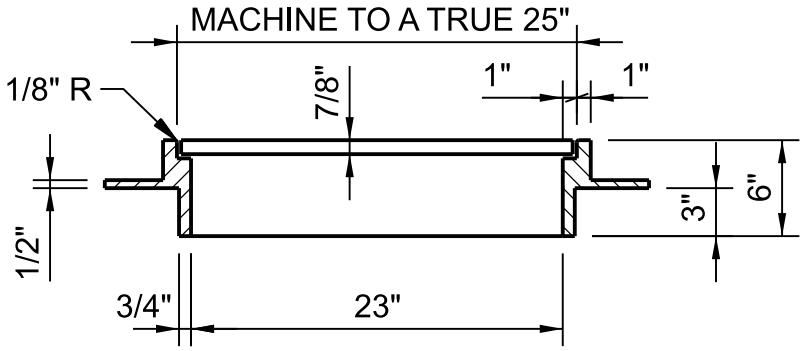

SECTION

MANHOLE FRAME AND COVER

NTS

NATIONAL PARK SERVICE
GRAND CANYON NATIONAL PARK
SOUTH RIM

3305-725

© JACOBS

Jacobs

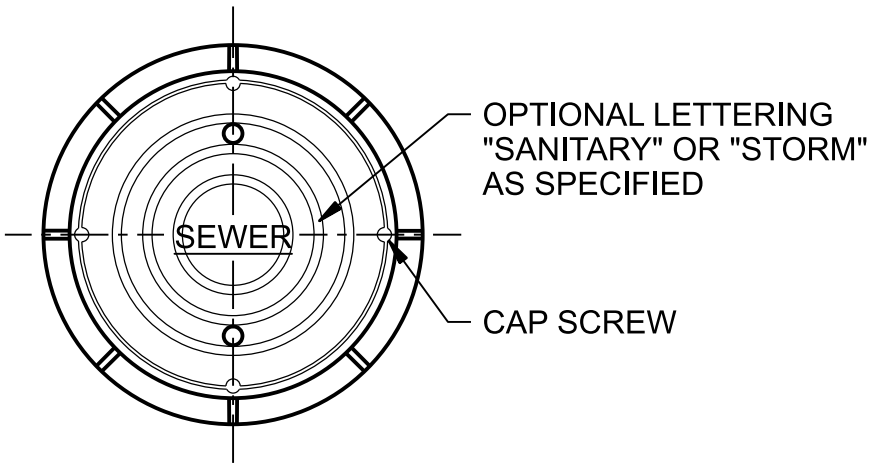

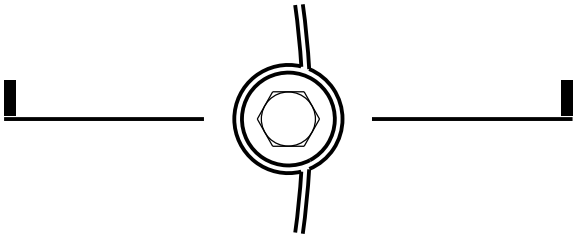

CAP SCREW

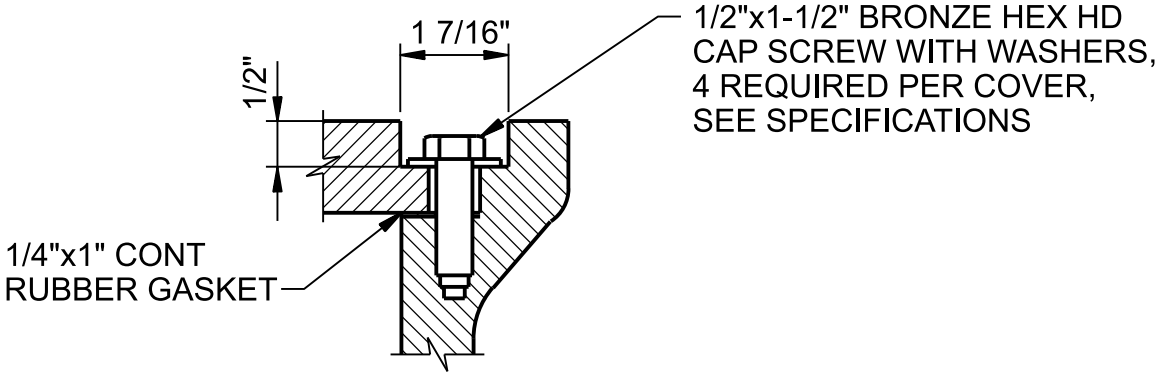

SECTION

NOTE:

WATERTIGHT MANHOLE FRAME AND COVER SIMILAR TO STANDARD MANHOLE FRAME AND COVER 3305-725 EXCEPT AS SHOWN.

WATERTIGHT MANHOLE FRAME AND COVER

NTS

NATIONAL PARK SERVICE
GRAND CANYON NATIONAL PARK
SOUTH RIM

3305-726

© JACOBS

Jacobs

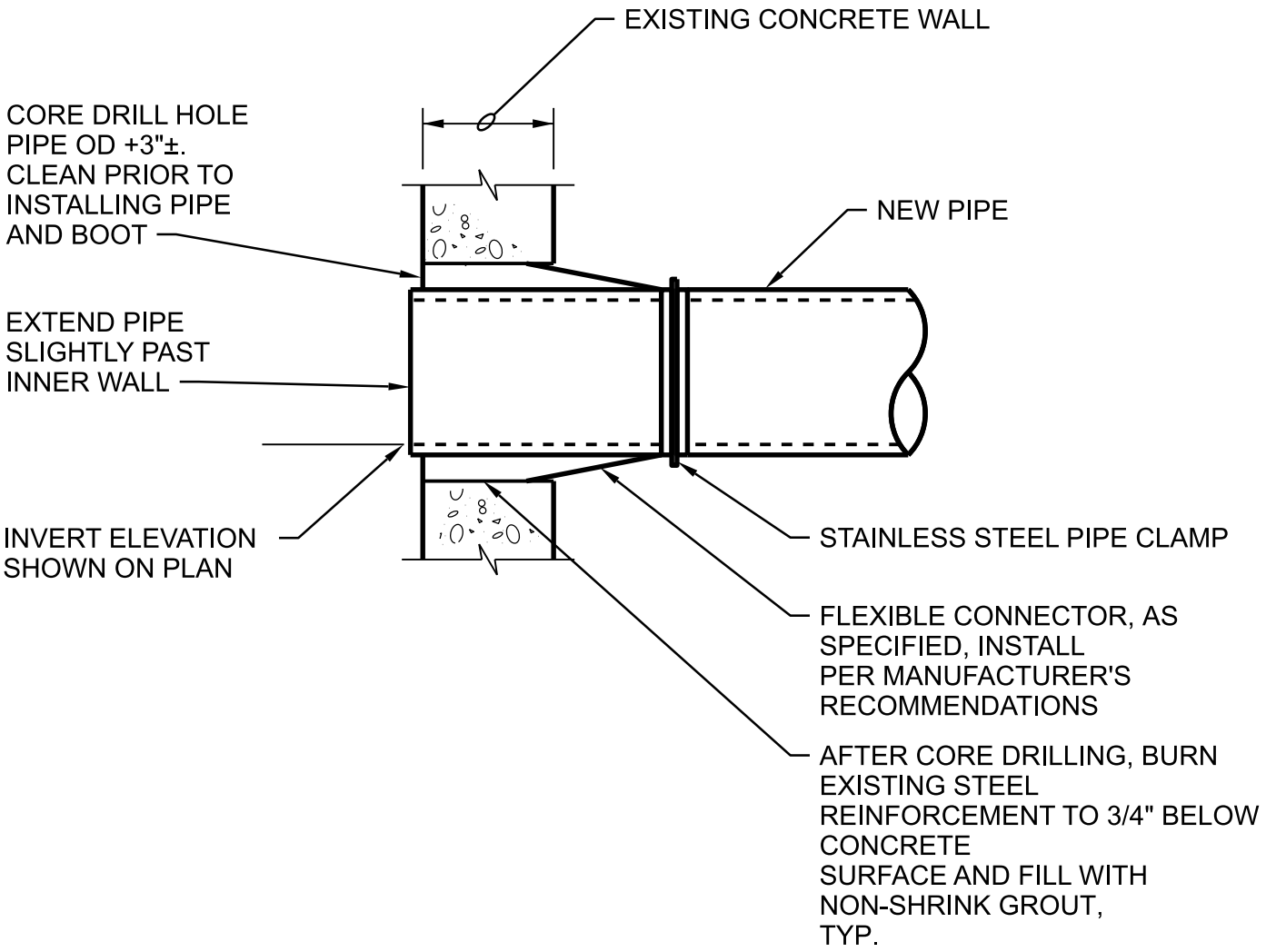

PIPE CONNECTIONS

NTS

NATIONAL PARK SERVICE
GRAND CANYON NATIONAL PARK
SOUTH RIM

3305-730

© JACOBS

Jacobs

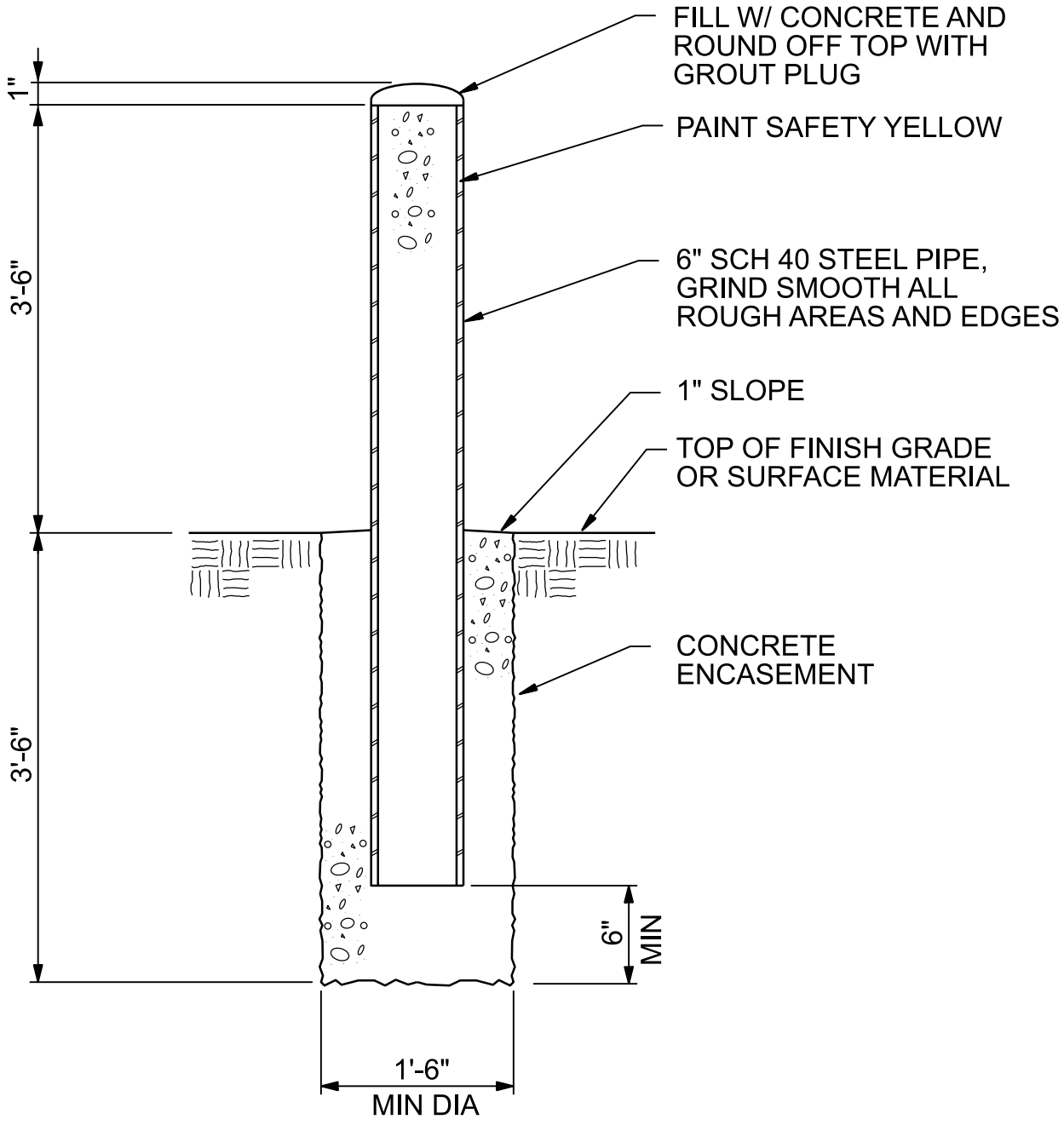

BOLLARD

NTS

NATIONAL PARK SERVICE
GRAND CANYON NATIONAL PARK
SOUTH RIM

3305-954

© JACOBS

Jacobs

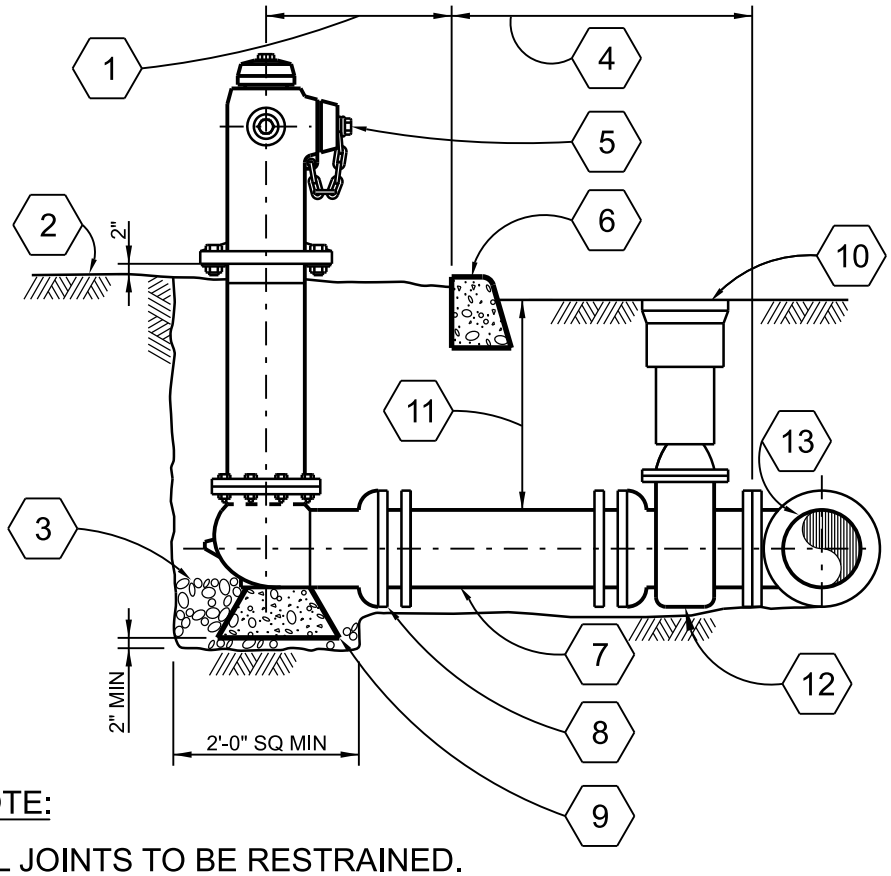

1. 3'-0" UNLESS SHOWN OTHERWISE
2. FINISH GRADE
3. 3/4" DRAIN ROCK TO EL 6" ABOVE WEEP HOLE IN BARREL
4. AS SHOWN OR SPECIFIED
5. NOZZLE THREADS AS SPECIFIED
6. CURB WHERE APPLICABLE
7. 6" WATER LINE
8. MJ HYDRANT OUTLET
9. PRECAST CONC PIER BLOCK, 16" SQ BASE
10. VALVE BOX
11. COVER AS SPECIFIED
12. 6" FLGxMJ GATE VALVE
13. WATER MAIN W/ MJxFLG TEE

NOTE:

ALL JOINTS TO BE RESTRAINED.

FIRE HYDRANT

NTS

NATIONAL PARK SERVICE
GRAND CANYON NATIONAL PARK
SOUTH RIM

3312-770

© JACOBS

Jacobs

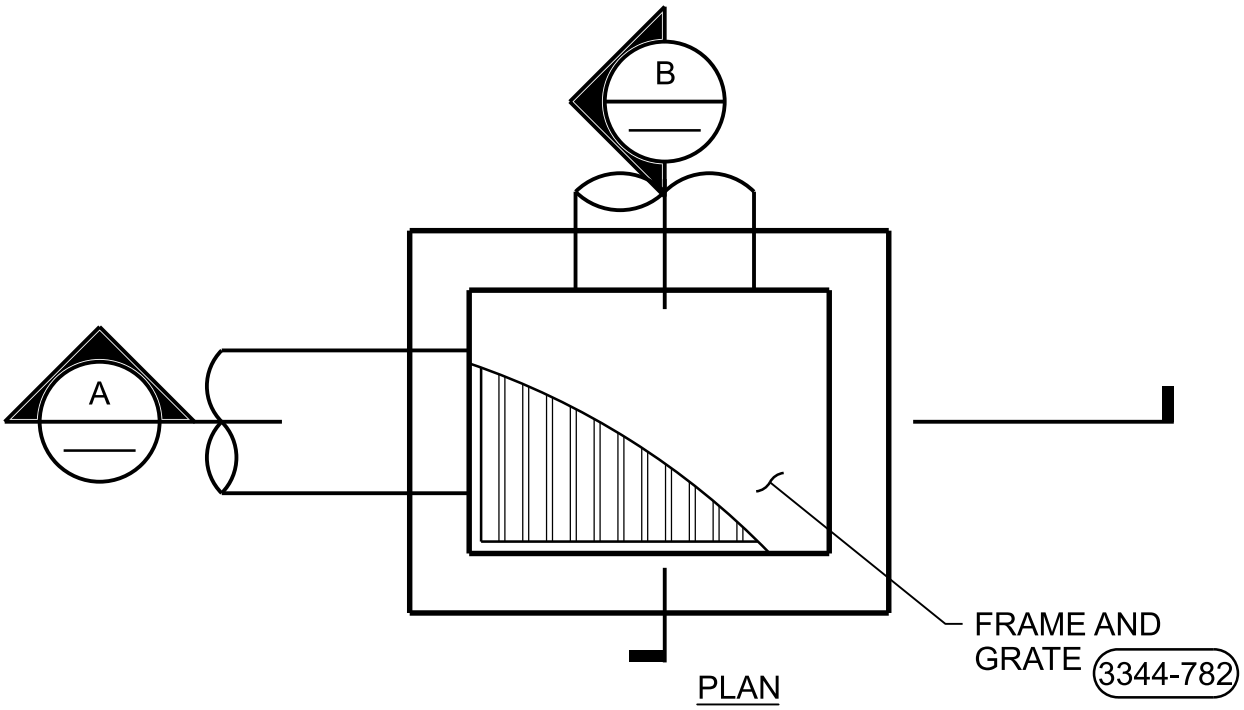

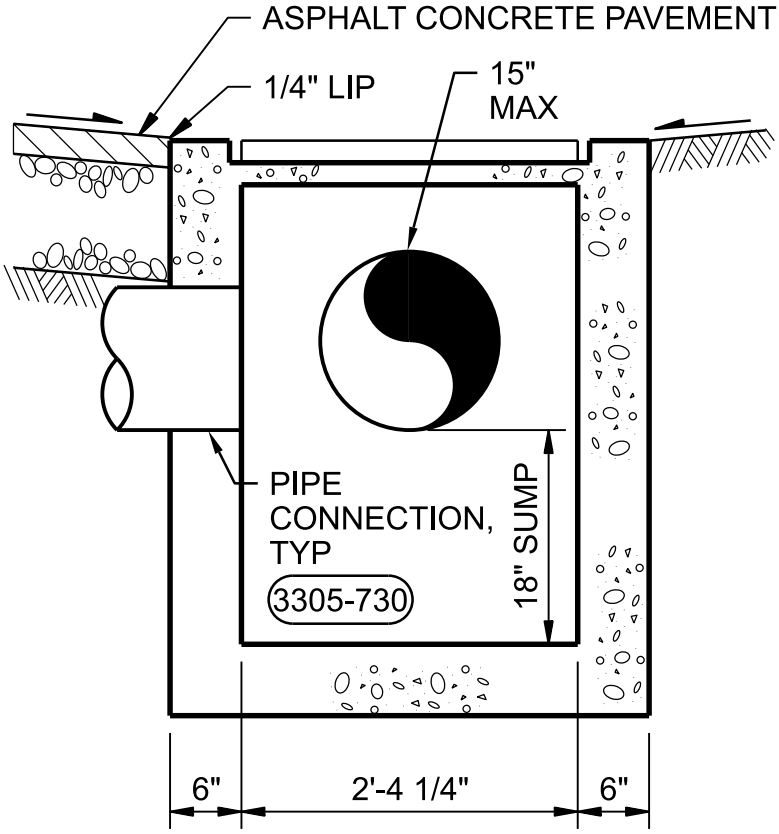

A SECTION
NTS

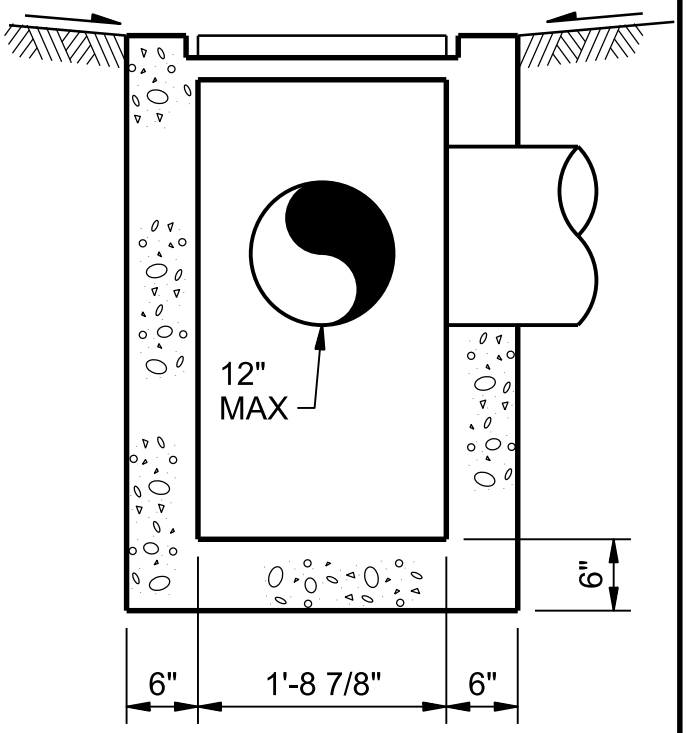

B SECTION
NTS

CATCH BASIN

NTS

NATIONAL PARK SERVICE
GRAND CANYON NATIONAL PARK
SOUTH RIM

3344-780

© JACOBS

Jacobs

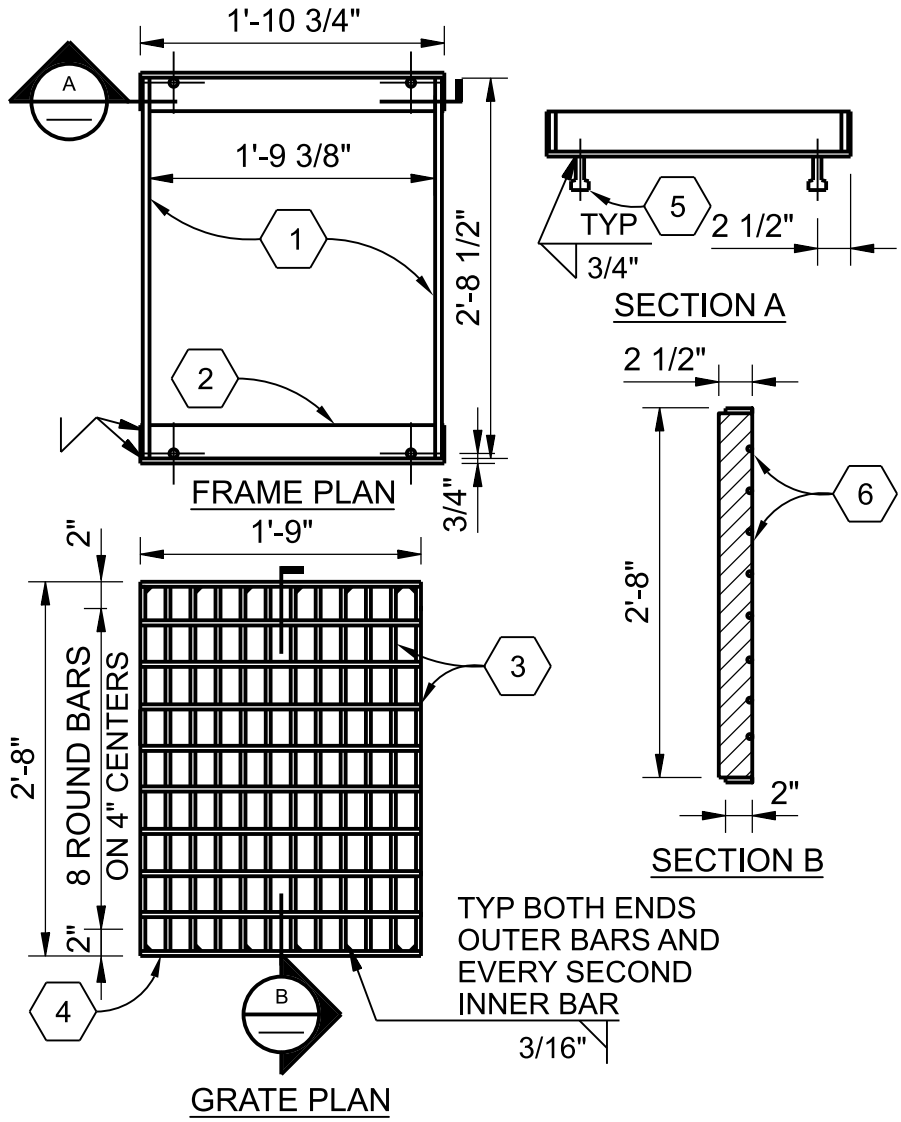

1. 2 1/2"x 1/2" FLAT BAR
2. 3"x2 1/2"x3/8" ANGLE
3. 3/8" x 2 1/2" FLAT BARS AT 1 7/8 " ON CENTER
4. 3/8" x 2" FLAT BAR EACH END
5. 5/8" x 3" BOLTS, 2 EACH END
6. CROSS BARS 3/8" ROUND OR RECTANGULAR BAR

CATCH BASIN FRAME AND GRATE

NTS

NATIONAL PARK SERVICE
GRAND CANYON NATIONAL PARK
SOUTH RIM

3344-782

© JACOBS

Jacobs

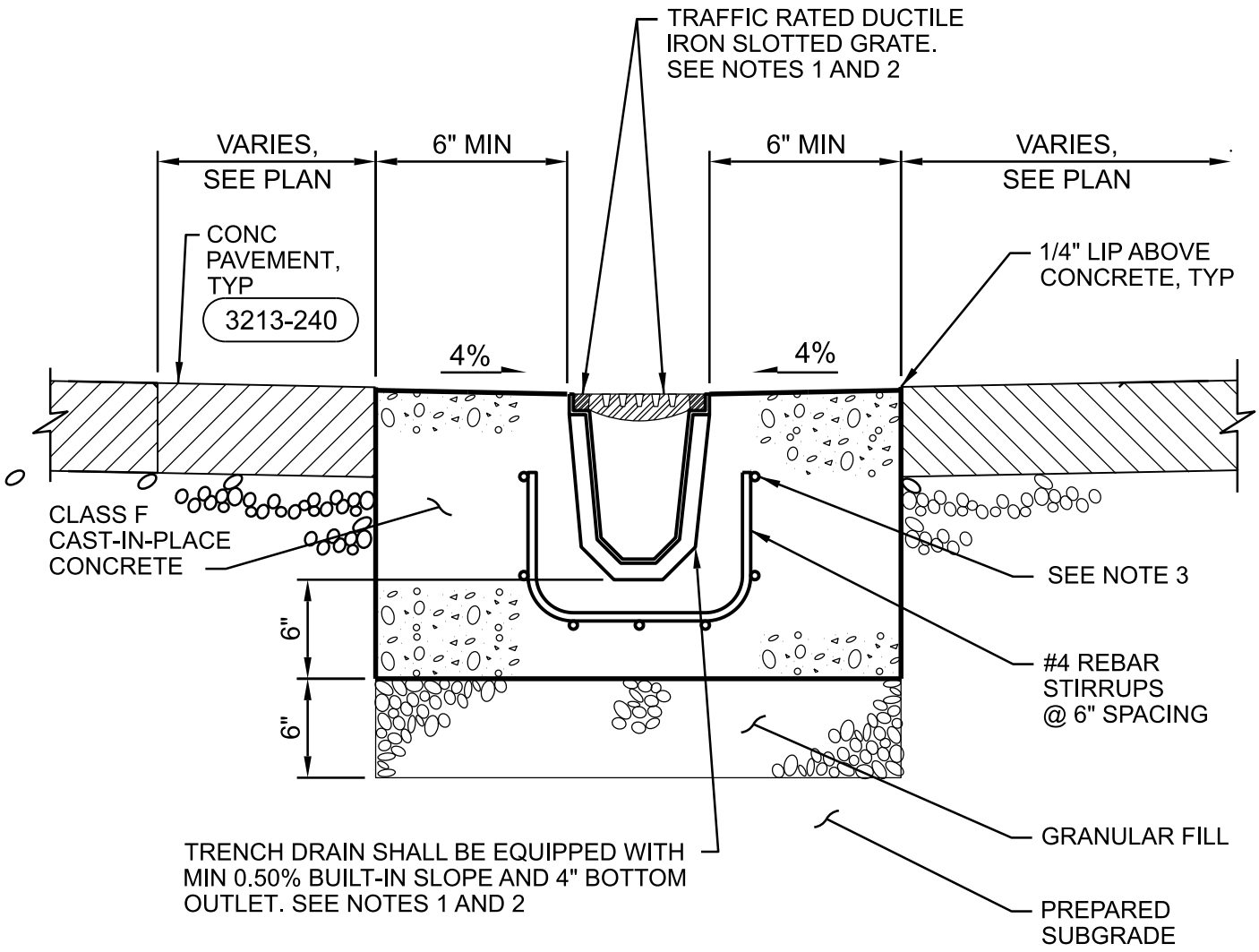

NOTES:

1. SEE MANUFACTURER'S SPECIFICATIONS FOR CHANNEL DEPTH AND WIDTH. INSTALL IN ACCORDANCE WITH MANUFACTURER'S INSTRUCTIONS.

2. HS-20 LOAD RATING REQUIRED.

3. TOP BAR SHALL MAINTAIN CONSTANT DEPTH BELOW GRADE (MINIMUM 2" CLEAR DISTANCE). SECOND BAR SHALL BE SPACED MINIMUM 2" AND MAXIMUM 6" FROM TOP BAR. BOTTOM 3 BARS SHALL BE CENTERED AND SPACED SYMMETRICALLY (MINIMUM 2", MAXIMUM 6" SPACING).

PRECAST TRENCH DRAIN

NTS

NATIONAL PARK SERVICE
GRAND CANYON NATIONAL PARK
SOUTH RIM

3344-790

© JACOBS

Jacobs

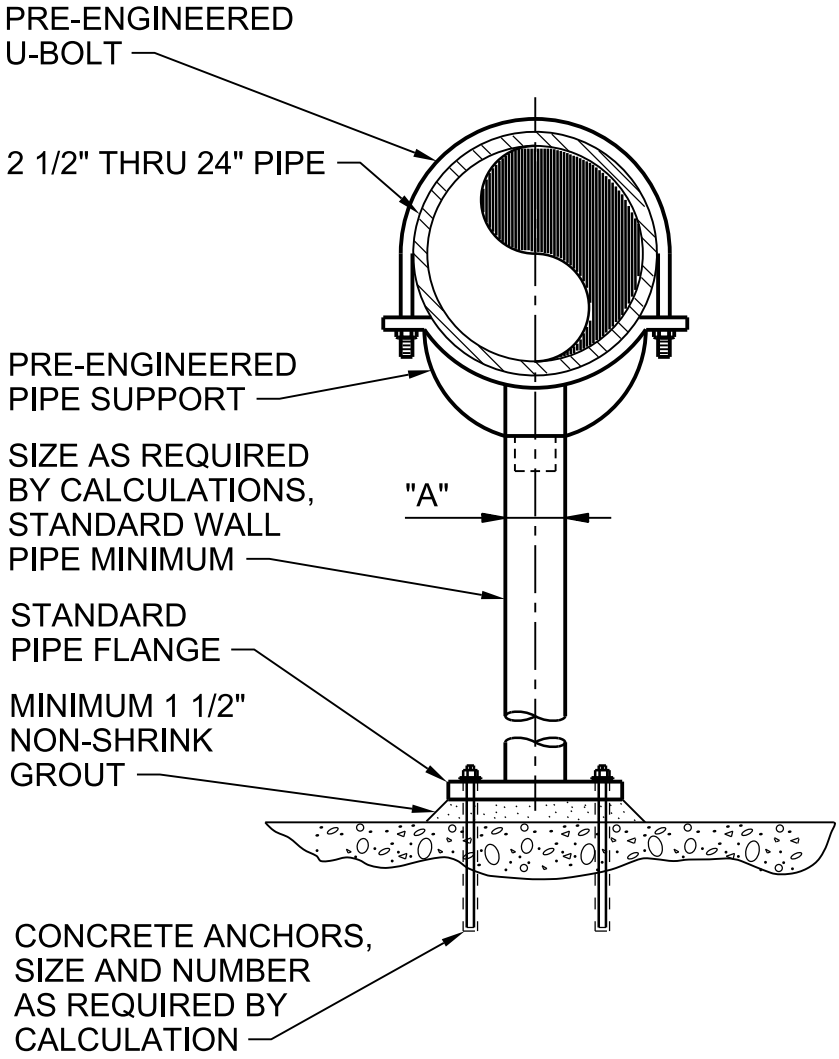

DIMENSION TABLE	
PIPE SIZE	"A" MINIMUM NOMINAL PIPE SIZE
2-1/2"	2-1/2"
3"	2-1/2"
4"	3"
6"	3"
8"	3"
10"	3"
12"	3"
14"	3"
16"	3"
20"	4"
24"	4"

NOTE:
SUBMIT FINAL DESIGN AND CALCULATIONS FOR SUPPORT AND ANCHORAGE AS SPECIFIED.

PIPE SUPPORT

SADDLE SUPPORT PEDESTAL TYPE - NON-ADJUSTABLE

NTS

NATIONAL PARK SERVICE
GRAND CANYON NATIONAL PARK
SOUTH RIM

4005-501

© JACOBS

Jacobs

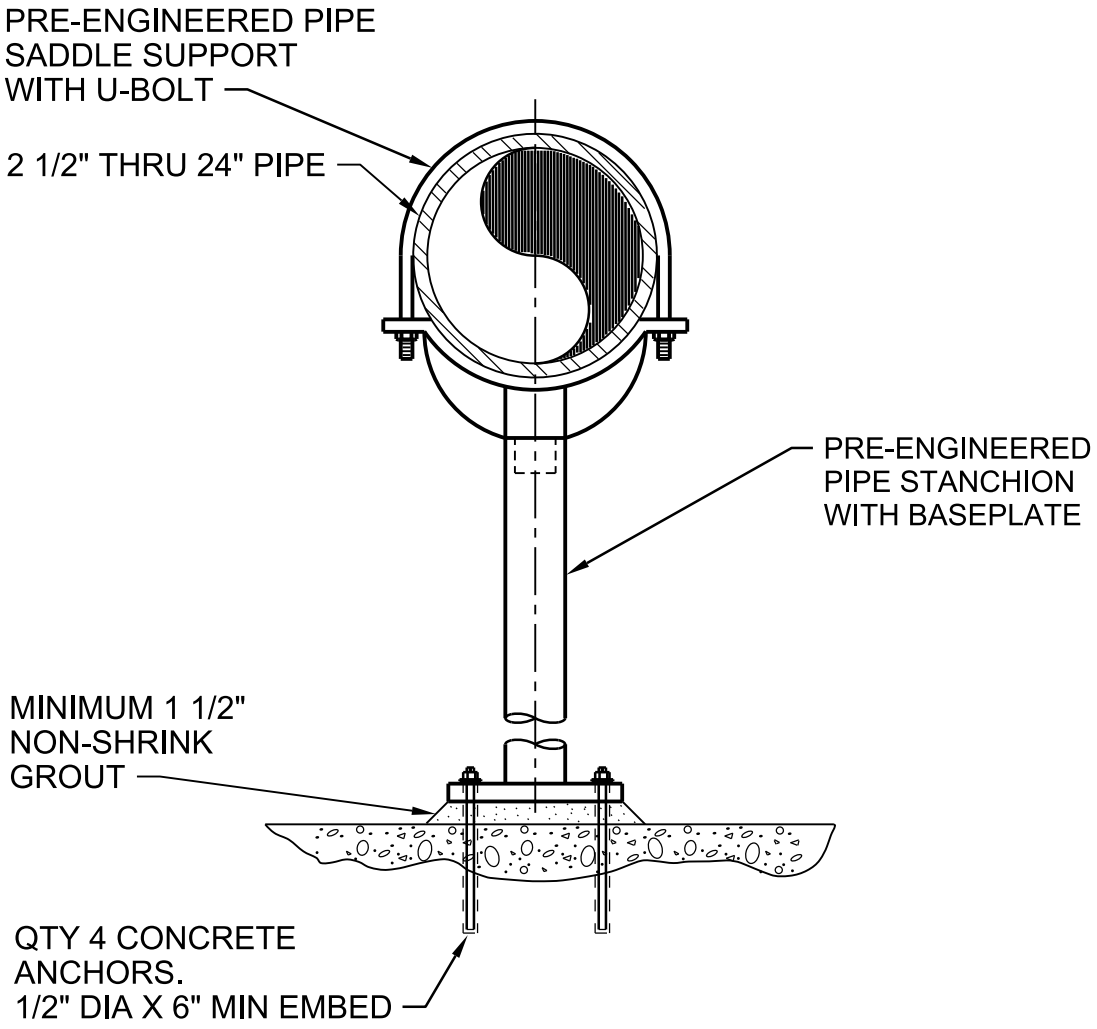

PROCESS AIR

SADDLE SUPPORT PEDESTAL TYPE - NON-ADJUSTABLE

NTS

NATIONAL PARK SERVICE
GRAND CANYON NATIONAL PARK
SOUTH RIM

4005-502

© JACOBS

Jacobs

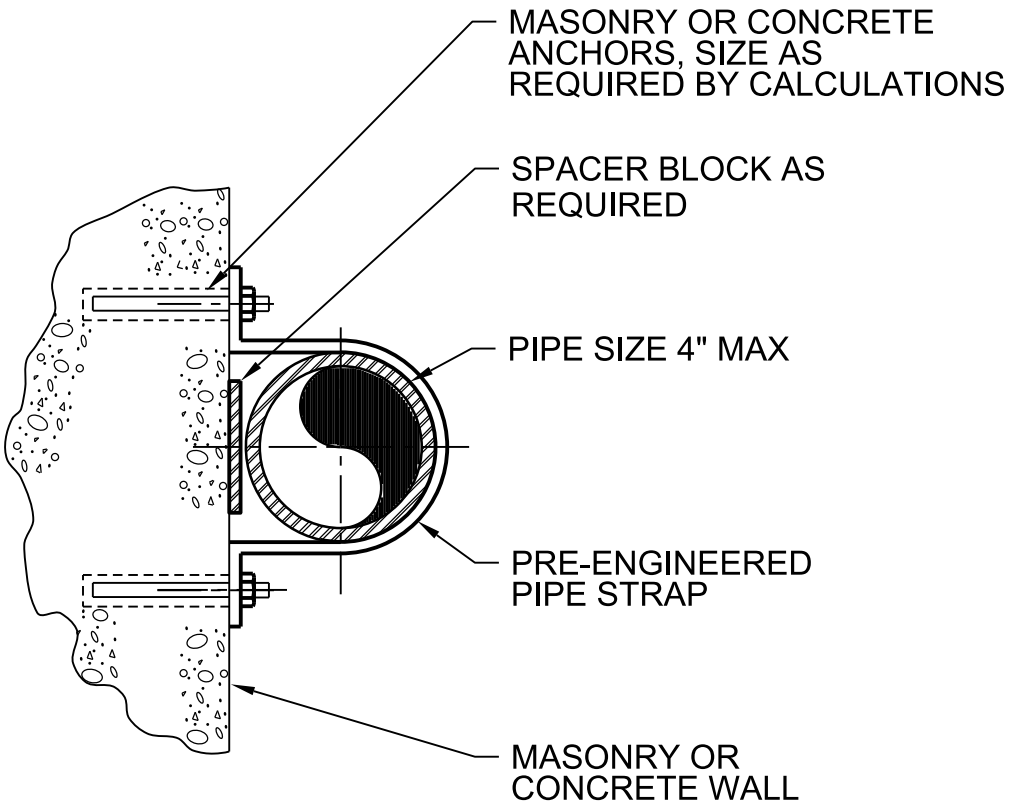

NOTES:

1. ONLY FOR VERTICAL PIPES.
2. NOT FOR USE ON CEILINGS OR BOTTOMS OF BEAMS.
3. PROVIDE PIPE PROTECTION BARRIER AS SPECIFIED. FABRICATE OVERSIZE STRAP WHERE REQUIRED.
4. SUBMIT FINAL DESIGN AND CALCULATIONS FOR SUPPORT AND ANCHORAGE AS SPECIFIED.

PIPE SUPPORT - WALL MOUNT

NTS

NATIONAL PARK SERVICE
GRAND CANYON NATIONAL PARK
SOUTH RIM

4005-503

© JACOBS

Jacobs

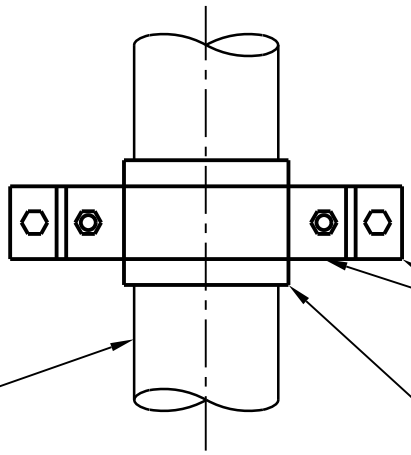

PLAN OR
VERTICAL PIPE
ELEVATION

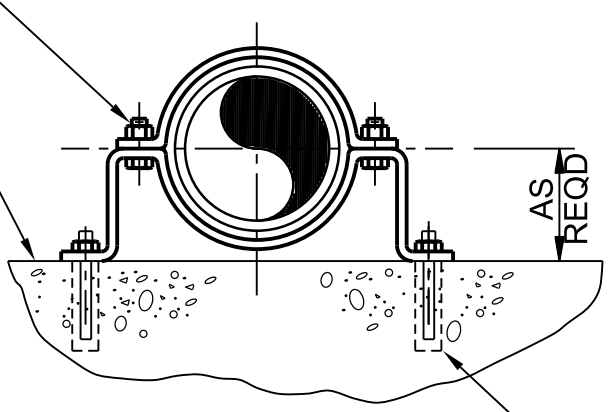

SECTION

NOTES:

1. ONLY FOR VERTICAL OR FLOOR MOUNTED PIPES.
2. SUBMIT FINAL DESIGN AND CALCULATIONS FOR SUPPORT AND ANCHORAGE AS SPECIFIED.

PIPE SUPPORT - WALL MOUNTED

NTS

NATIONAL PARK SERVICE
GRAND CANYON NATIONAL PARK
SOUTH RIM

4005-505

© JACOBS

Jacobs

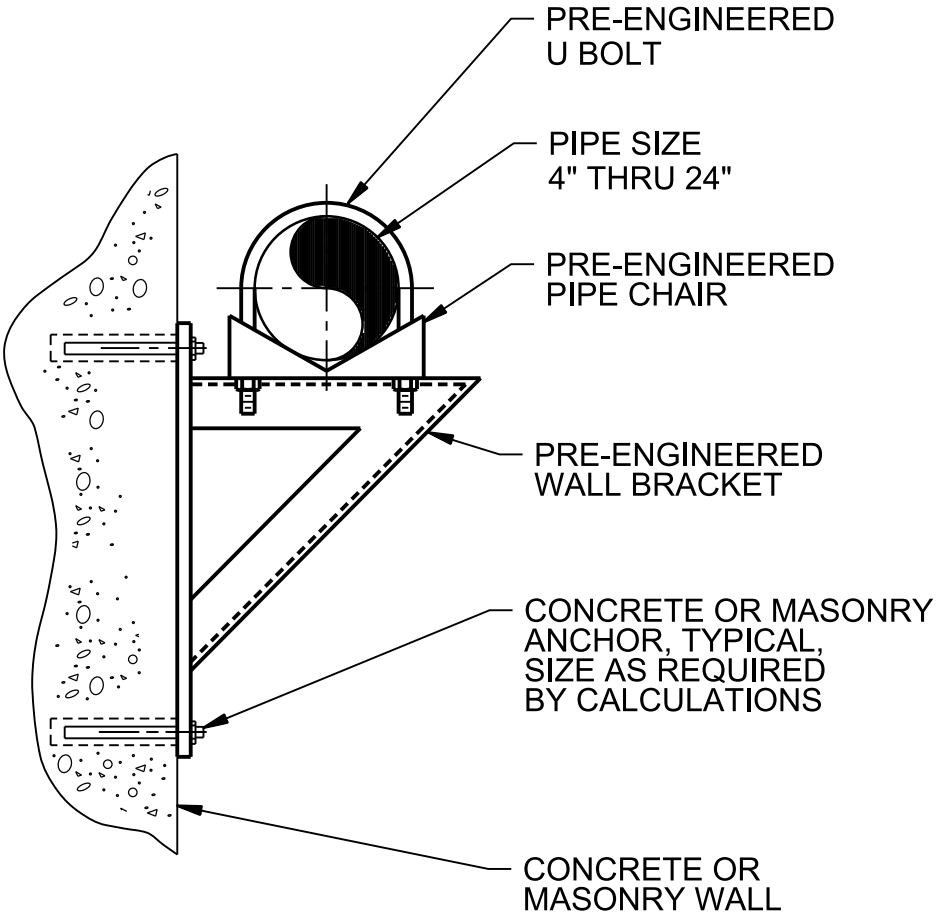

NOTES:

1. WALL BRACKET SHALL BE MEDIUM OR HEAVY DUTY AS REQUIRED BY CALCULATIONS.
2. SUBMIT FINAL DESIGN AND CALCULATIONS FOR SUPPORT AND ANCHORAGE AS SPECIFIED.

PIPE SUPPORT - WALL MOUNTED MEDIUM

NTS

NATIONAL PARK SERVICE
GRAND CANYON NATIONAL PARK
SOUTH RIM

4005-508

© JACOBS

Jacobs

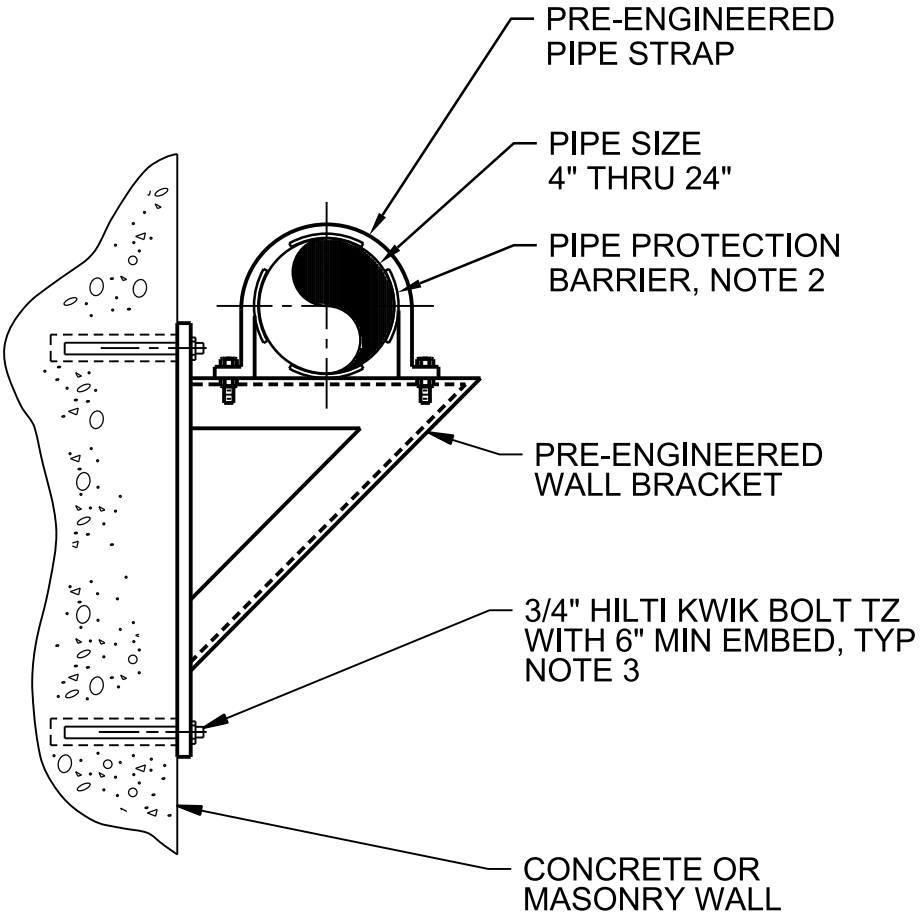

NOTES:

1. WALL BRACKET SHALL BE MEDIUM OR HEAVY DUTY AS REQUIRED BY DISTANCE OF PIPE FROM WALL.

2. PROVIDE PIPE PROTECTION BARRIER. FRP WEAR PAD DESIGNED FOR ADHESIVE BONDING TO PIPE. SECURE 4 PADS CENTERED ON HORIZONTAL AND VERTICAL CENTERLINES OF PIPE WITH EPOXY ADHESIVE.

3. SEE SECTION 05 05 19, POST-INSTALLED ANCHORS.

PIPE SUPPORT - WALL MOUNTED - PROCESS AIR

NTS

NATIONAL PARK SERVICE
GRAND CANYON NATIONAL PARK
SOUTH RIM

4005-509

© JACOBS

Jacobs

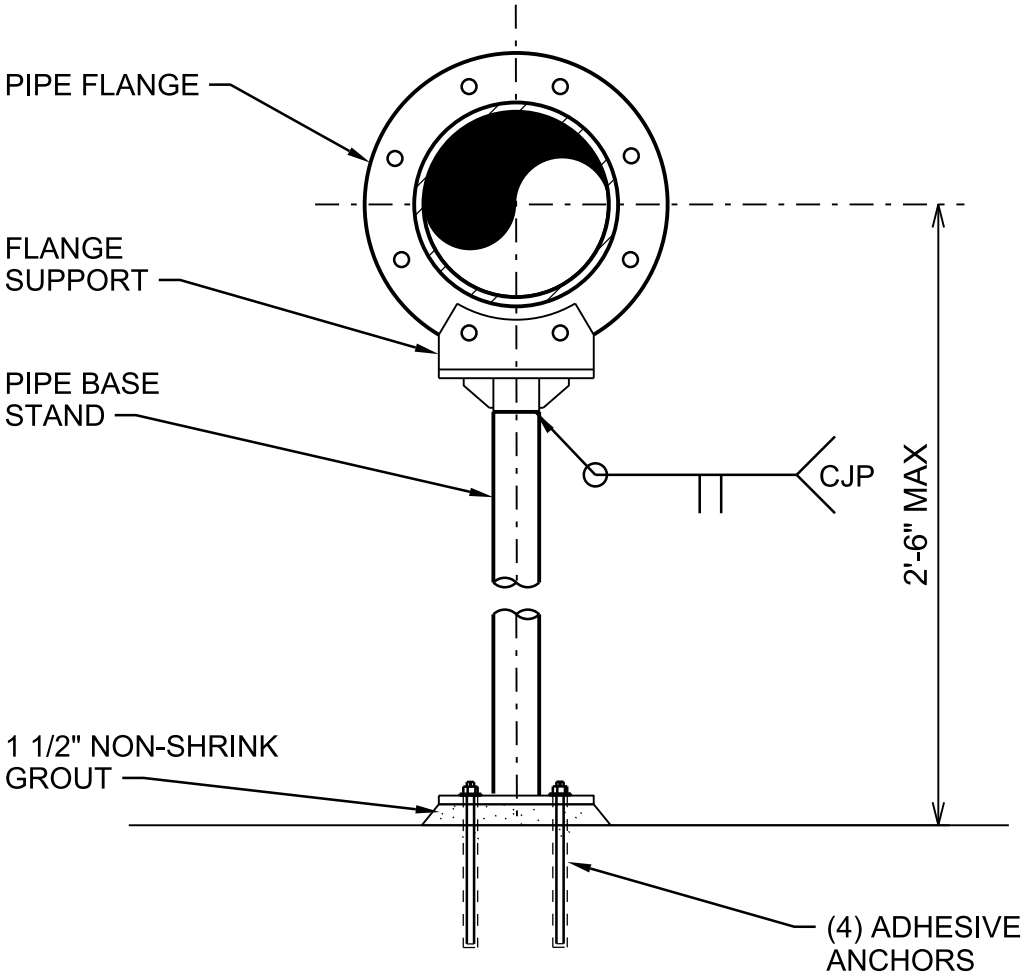

NOTES:

1. SUBMIT FINAL DESIGN AND CALCULATIONS FOR SUPPORT AND ANCHORAGE AS SPECIFIED.

PIPE SUPPORT - FLANGE SUPPORT PEDESTAL

NTS

NATIONAL PARK SERVICE
GRAND CANYON NATIONAL PARK
SOUTH RIM

4005-510

© JACOBS

Jacobs

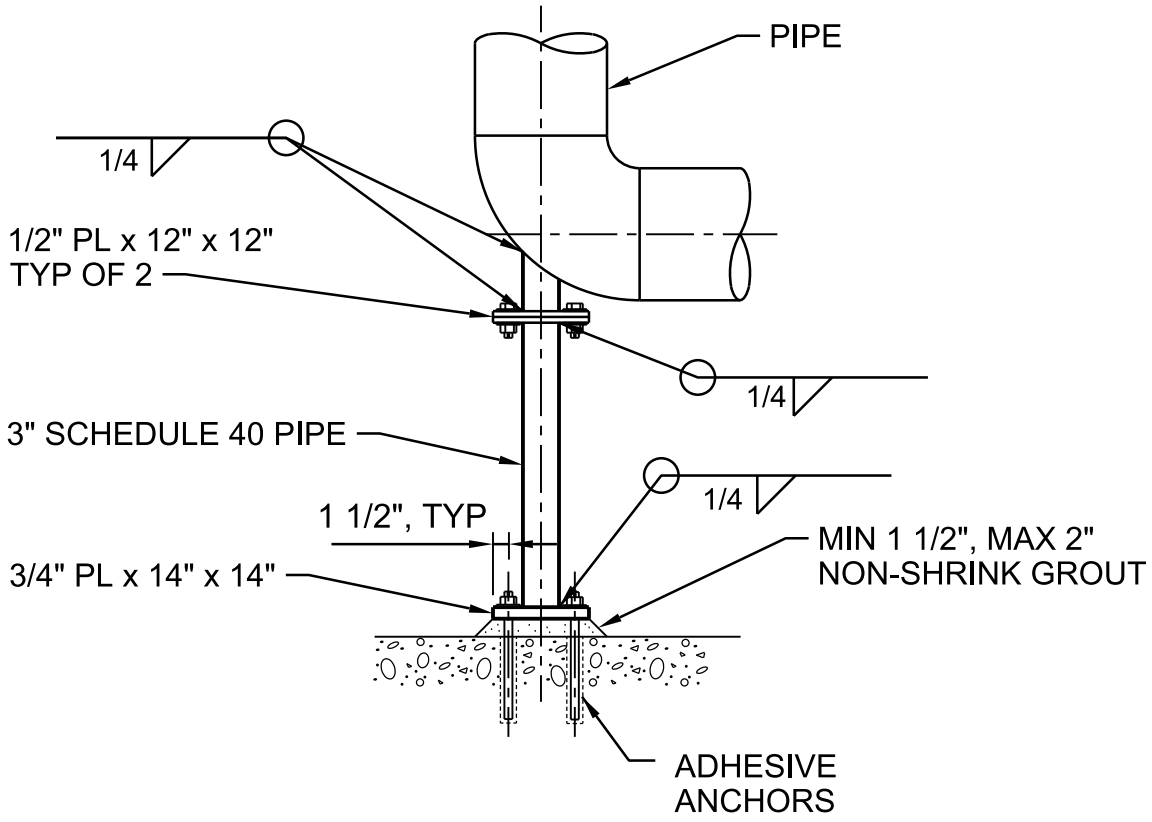

NOTES:

1. SUBMIT FINAL DESIGN AND CALCULATIONS FOR SUPPORT AND ANCHORAGE AS SPECIFIED.

PIPE SUPPORT - VERTICAL BEND SUPPORT

NTS

NATIONAL PARK SERVICE
GRAND CANYON NATIONAL PARK
SOUTH RIM

4005-516

© JACOBS

Jacobs

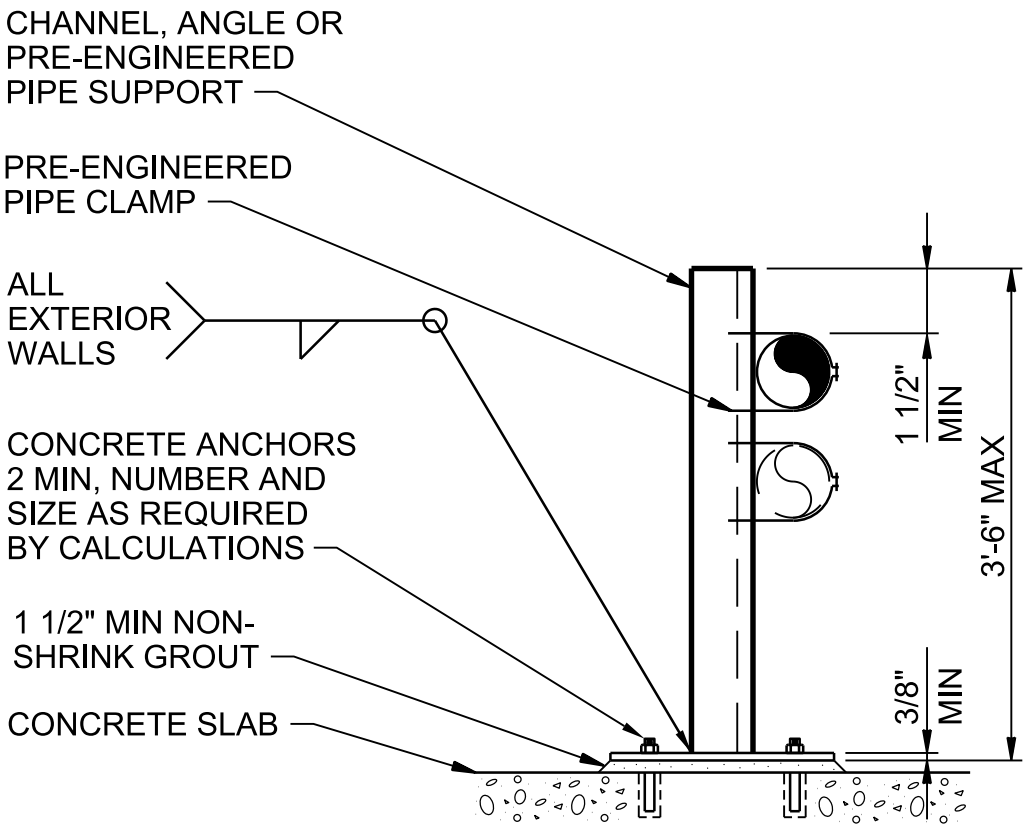

NOTES:

1. SUBMIT FINAL DESIGN DRAWINGS AND CALCULATIONS OF SUPPORTS AND ANCHORAGES AS SPECIFIED.
2. MAXIMUM PIPE SIZE: 2" DIAMETER.
3. MATERIAL TYPE SHALL BE AS SHOWN ON DRAWINGS OR AS SPECIFIED.
4. PROVIDE PIPE PROTECTION BARRIER AS SPECIFIED.

FLOOR PIPE SUPPORT

NTS

NATIONAL PARK SERVICE
GRAND CANYON NATIONAL PARK
SOUTH RIM

4005-524

© JACOBS

Jacobs

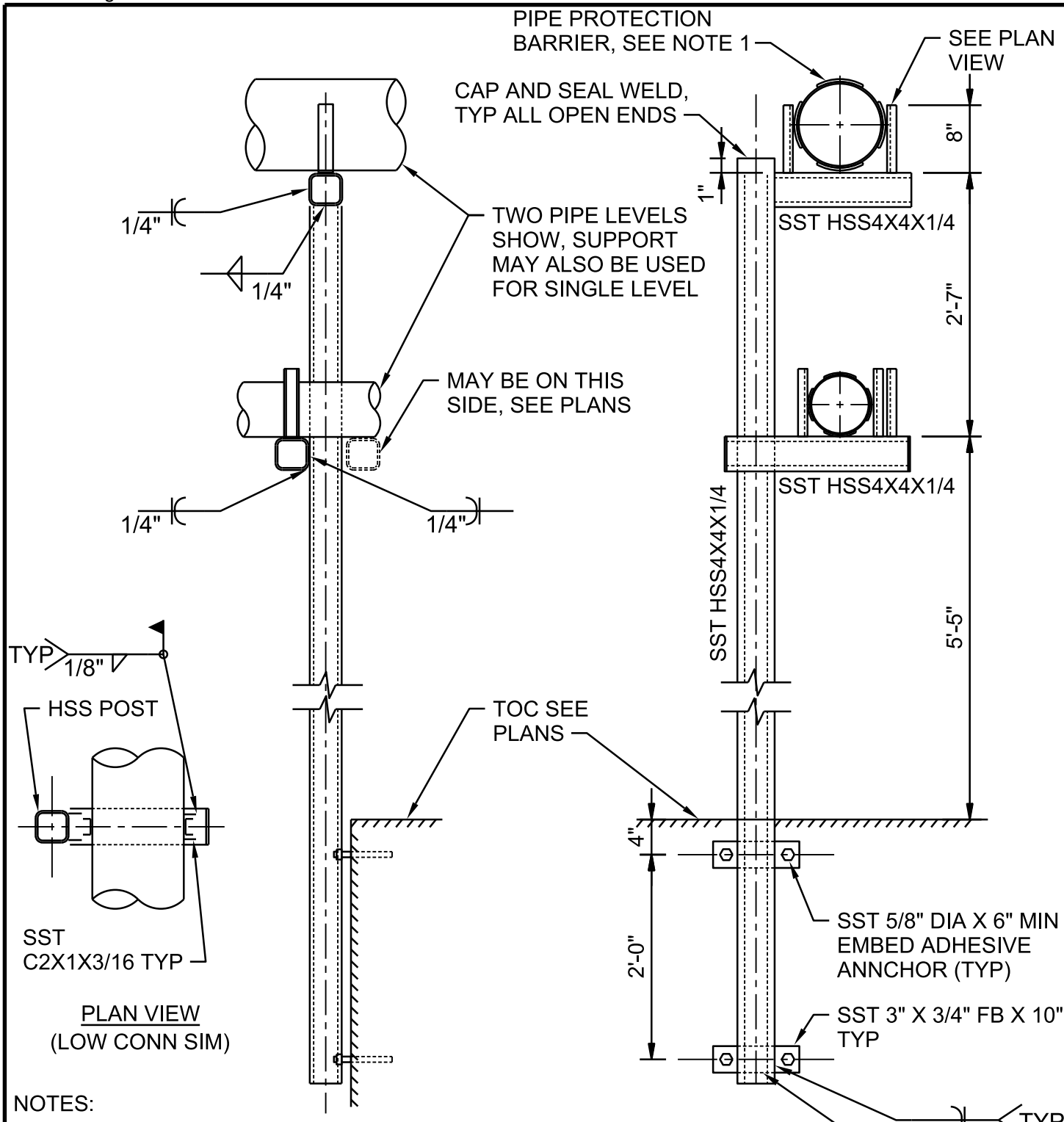

NOTES:

1. PROVIDE PIPE PROTECTION BARRIER. FRP WEAR PAD DESIGNED FOR ADHESIVE BONDING TO PIPE. SECURE 4 PADS CENTERED ON HORIZONTAL AND VERTICAL CENTERLINES OF PIPE WITH EPOXY ADHESIVE.

PIPE SUPPORT - PIPE RACK STYLE A

NTS

NATIONAL PARK SERVICE
GRAND CANYON NATIONAL PARK
SOUTH RIM

4005-537

© JACOBS

Jacobs

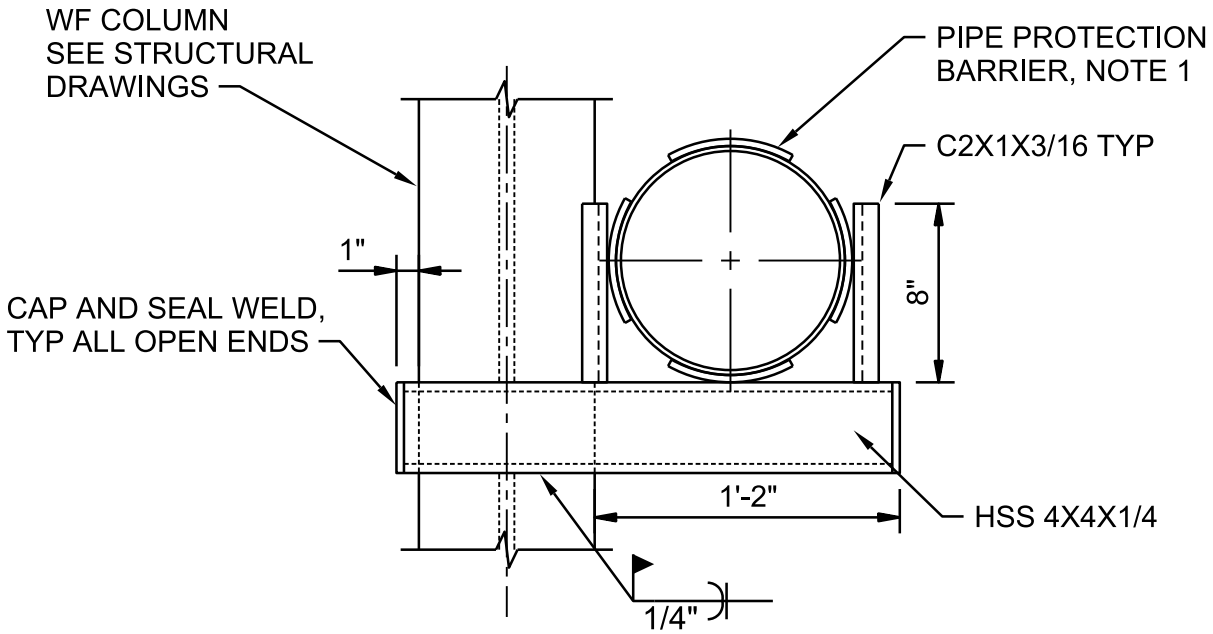

ELEVATION

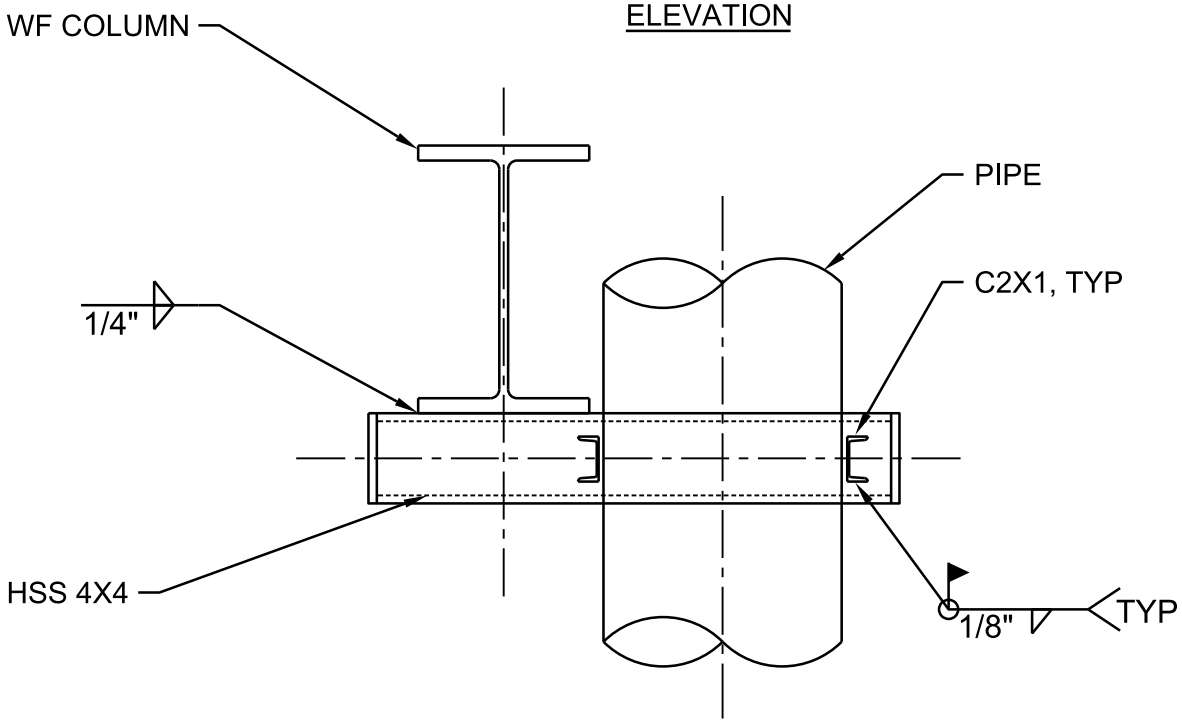

PLAN

NOTES:

1. PROVIDE PIPE PROTECTION BARRIER. FRP WEAR PAD DESIGNED FOR ADHESIVE BONDING TO PIPE. SECURE 4 PADS CENTERED ON HORIZONTAL AND VERTICAL CENTERLINES OF PIPE WITH EPOXY ADHESIVE.

ALP PIPE SUPPORT - CANTILEVER (TYPE "A")

NTS

NATIONAL PARK SERVICE
GRAND CANYON NATIONAL PARK
SOUTH RIM

4005-538

© JACOBS

Jacobs

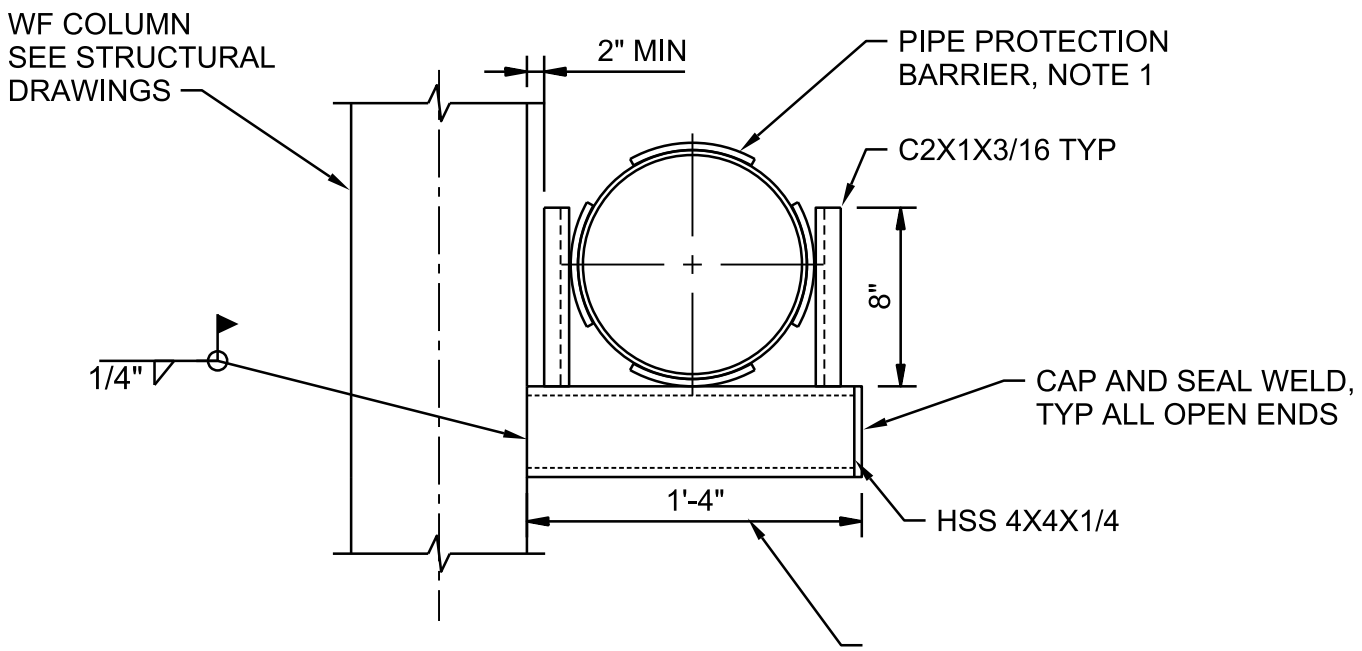

ELEVATION

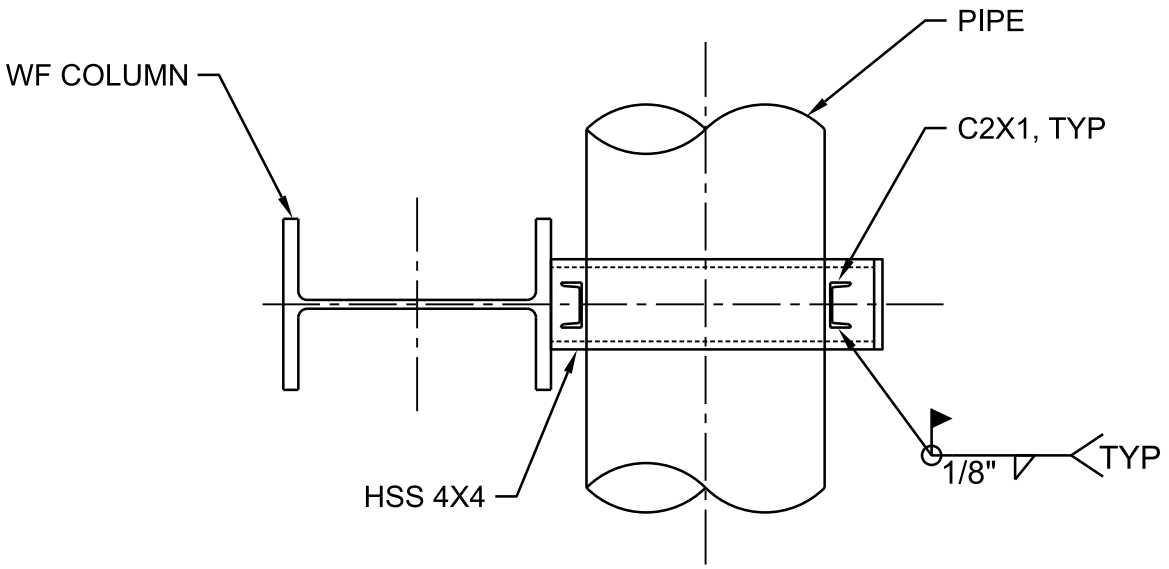

PLAN

NOTES:

1. PROVIDE PIPE PROTECTION BARRIER. FRP WEAR PAD DESIGNED FOR ADHESIVE BONDING TO PIPE. SECURE 4 PADS CENTERED ON HORIZONTAL AND VERTICAL CENTERLINES OF PIPE WITH EPOXY ADHESIVE.

ALP PIPE SUPPORT - CANTILEVER (TYPE "B")

NTS

NATIONAL PARK SERVICE
GRAND CANYON NATIONAL PARK
SOUTH RIM

4005-538

© JACOBS

Jacobs

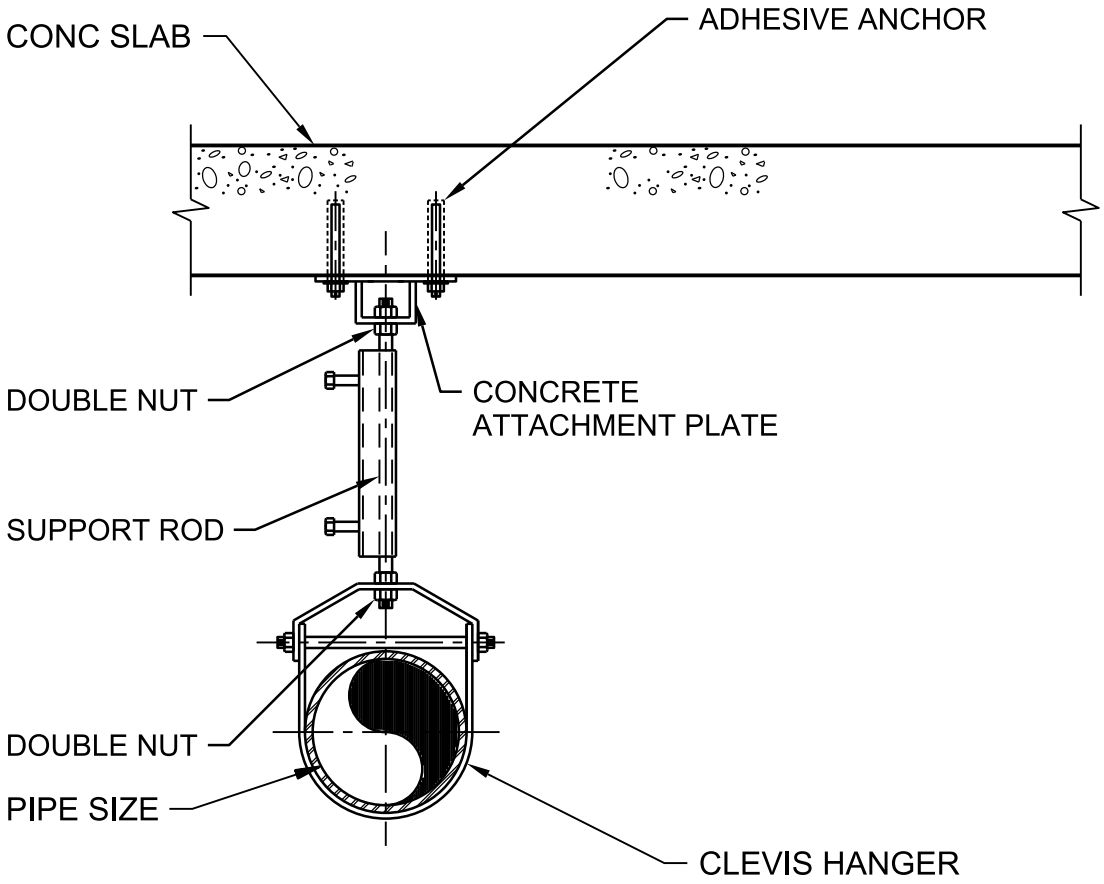

NOTES:

1. SUBMIT FINAL DESIGN DRAWINGS AND CALCULATIONS OF SUPPORTS AND ANCHORS AS SPECIFIED.

2. FOR STEEL APPLICATIONS USE BEAM CLAMPS OR CONTRACTOR DESIGNED METAL STRUT ASSEMBLY FOR ATTACHMENT TO HSS TRUSS MEMBERS AND HSS BEAMS.

OVERHEAD PIPE HANGER

NTS

NATIONAL PARK SERVICE
GRAND CANYON NATIONAL PARK
SOUTH RIM

4005-550

© JACOBS

Jacobs

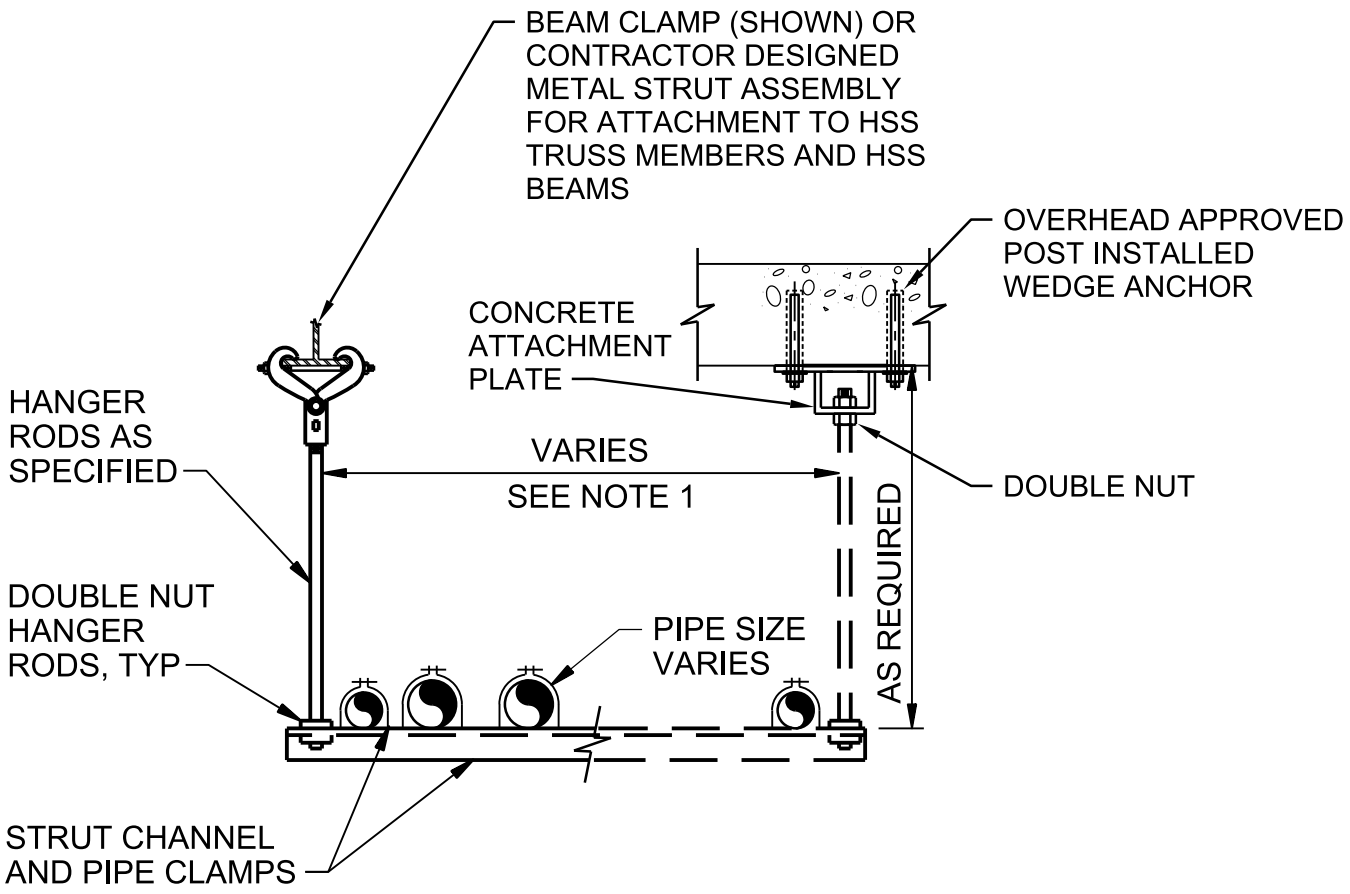

NOTES:

1. LENGTH VARIES WITH NUMBER OF PIPES TO BE SUPPORTED, AND SPACING BETWEEN PIPES.

2. SUBMIT FINAL DESIGN DRAWINGS AND CALCULATIONS OF SUPPORTS AND ANCHORAGES AS SPECIFIED.

TRAPEZE PIPE HANGER

NTS

NATIONAL PARK SERVICE
GRAND CANYON NATIONAL PARK
SOUTH RIM

4005-558

© JACOBS

Jacobs

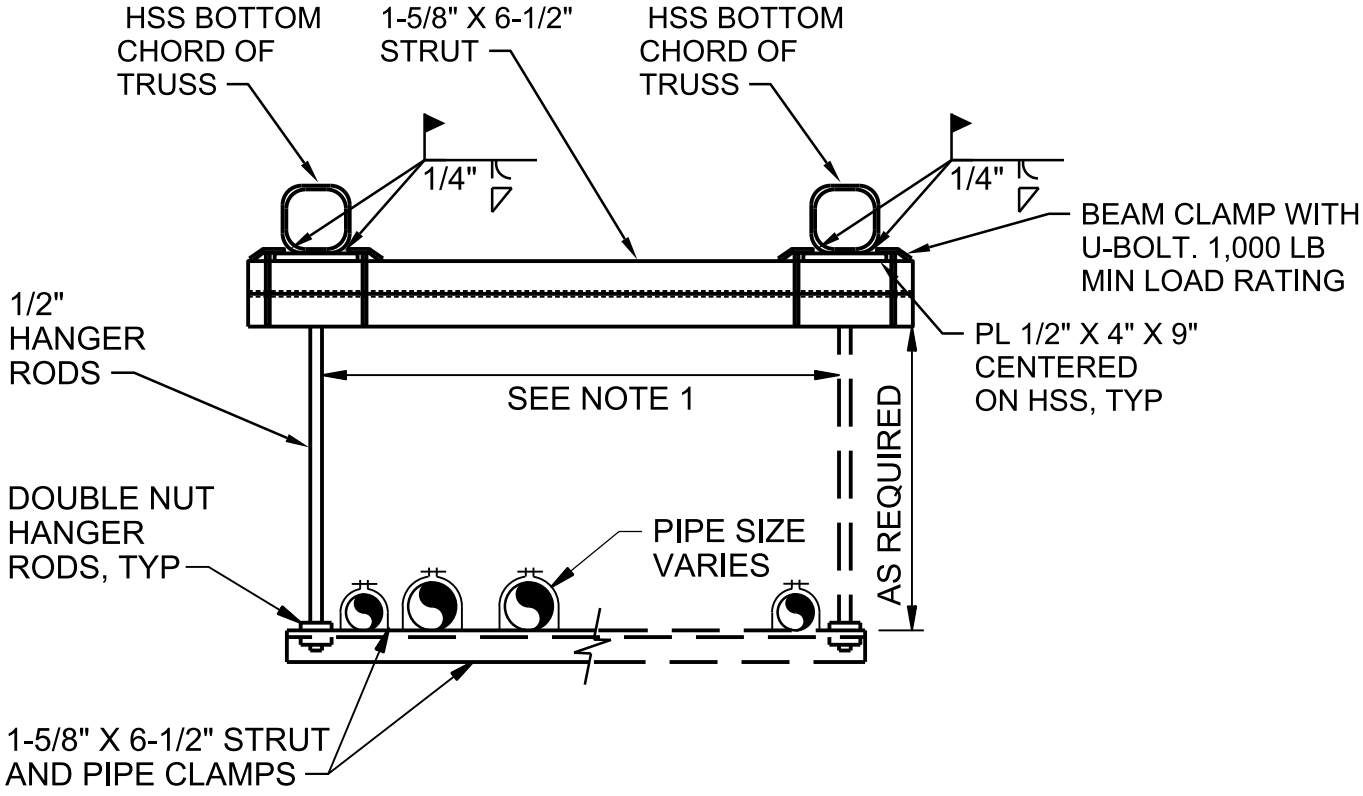

NOTES:

1. LENGTH VARIES WITH NUMBER OF PIPES TO BE SUPPORTED, AND SPACING BETWEEN PIPES.

TRAPEZE PIPE HANGER

NTS

NATIONAL PARK SERVICE
GRAND CANYON NATIONAL PARK
SOUTH RIM

4005-559

© JACOBS

Jacobs

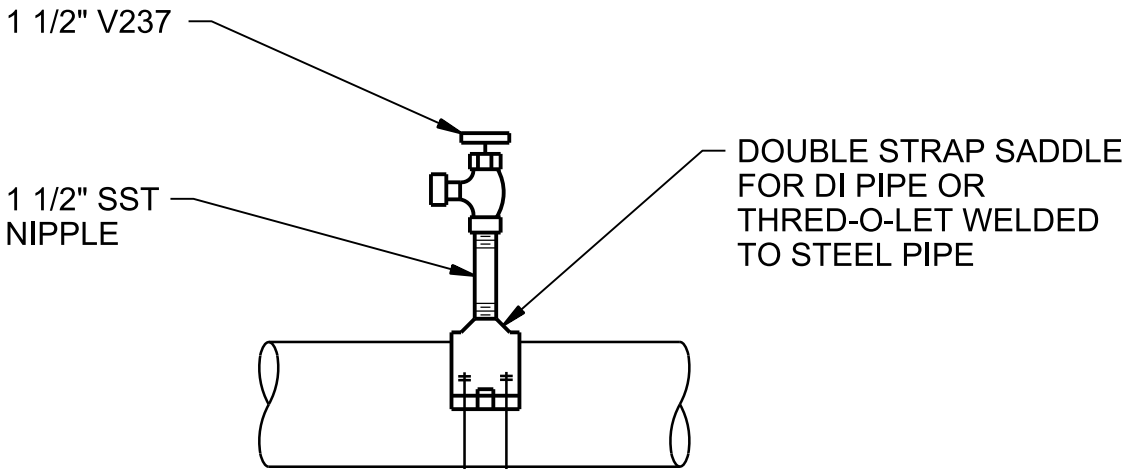

NOTES:

1. TAPPING OF FITTINGS ALLOWED AT BOSS ONLY.

TYPE 1 FLUSHING CONNECTION

NTS

NATIONAL PARK SERVICE
GRAND CANYON NATIONAL PARK
SOUTH RIM

4027-181

© JACOBS

Jacobs

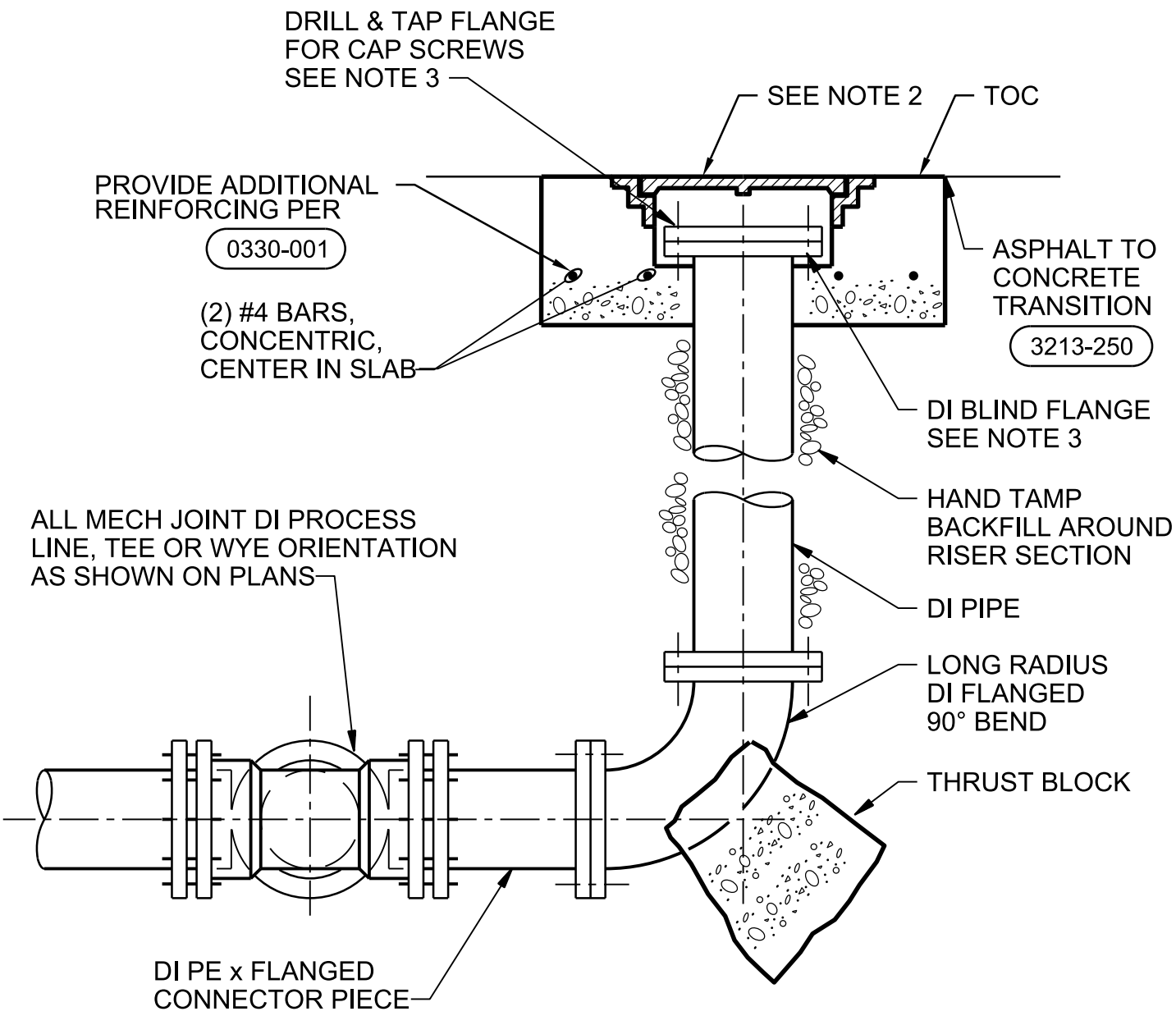

NOTES:

1. RISER SECTION AND ELBOW SAME SIZE AS PROCESS LINE, UNLESS NOTED OTHERWISE.

2. CONFIRM FRAME AND COVER INSIDE DIAMETER FOR SELECTED MODEL IS EQUAL TO OR GREATER THAN THE BLIND FLANGE OD + 2".

3. PROVIDE FORMWORK AS NEEDED TO MAINTAIN BLIND FLANGE AND THREADED BOLTS FREE OF CONCRETE.

PROCESS LINE CLEAN-OUT SETTING

NTS

NOTE TO DESIGNER:

NATIONAL PARK SERVICE
GRAND CANYON NATIONAL PARK
SOUTH RIM

4027-187

© JACOBS

Jacobs

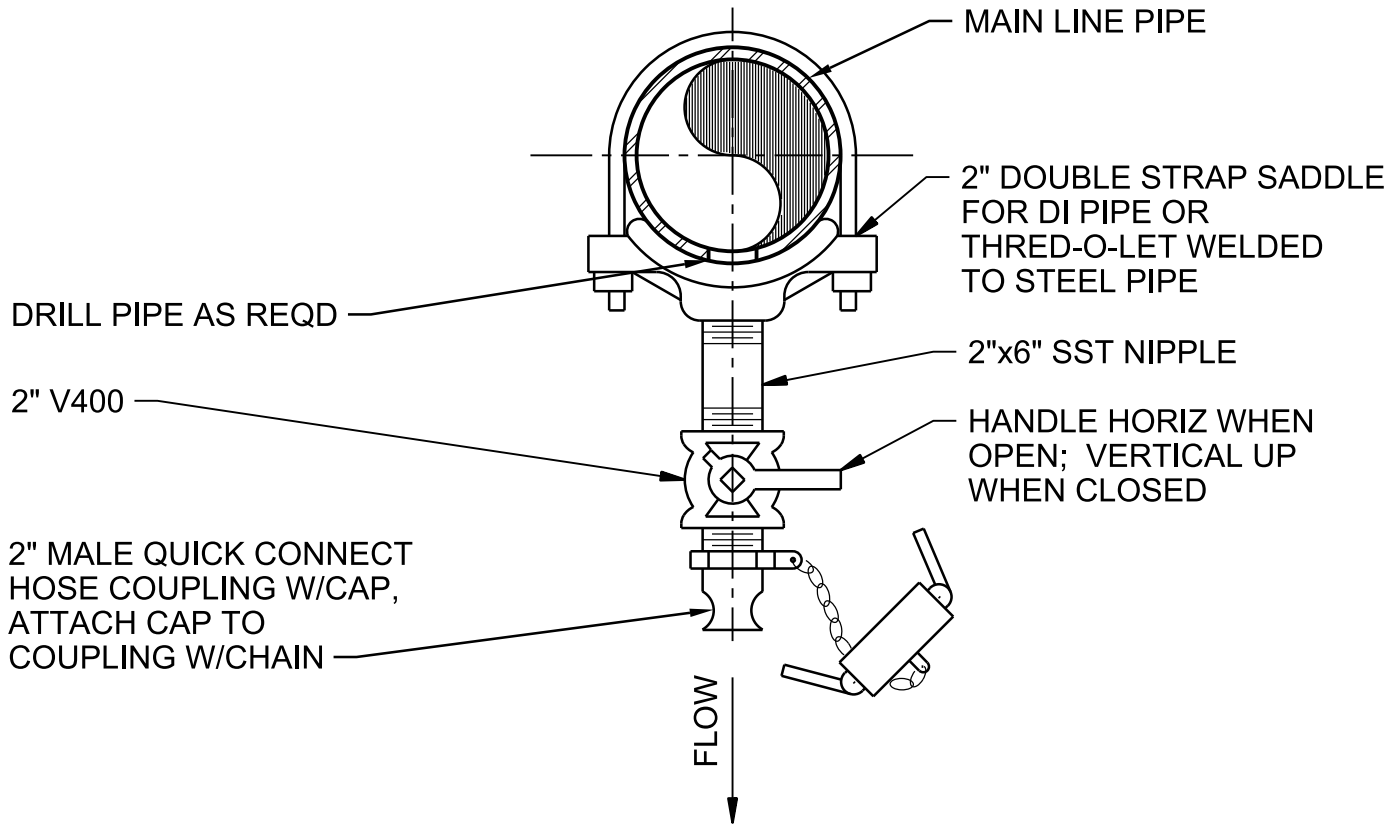

NOTES:

1. FOR LINE SIZE 2" AND SMALLER, FITTINGS AND VALVES SHALL BE SAME SIZE AS LINE.

LINE DRAIN VALVE INSTALLATION

NTS

NATIONAL PARK SERVICE
GRAND CANYON NATIONAL PARK
SOUTH RIM

4027-191

© JACOBS

Jacobs

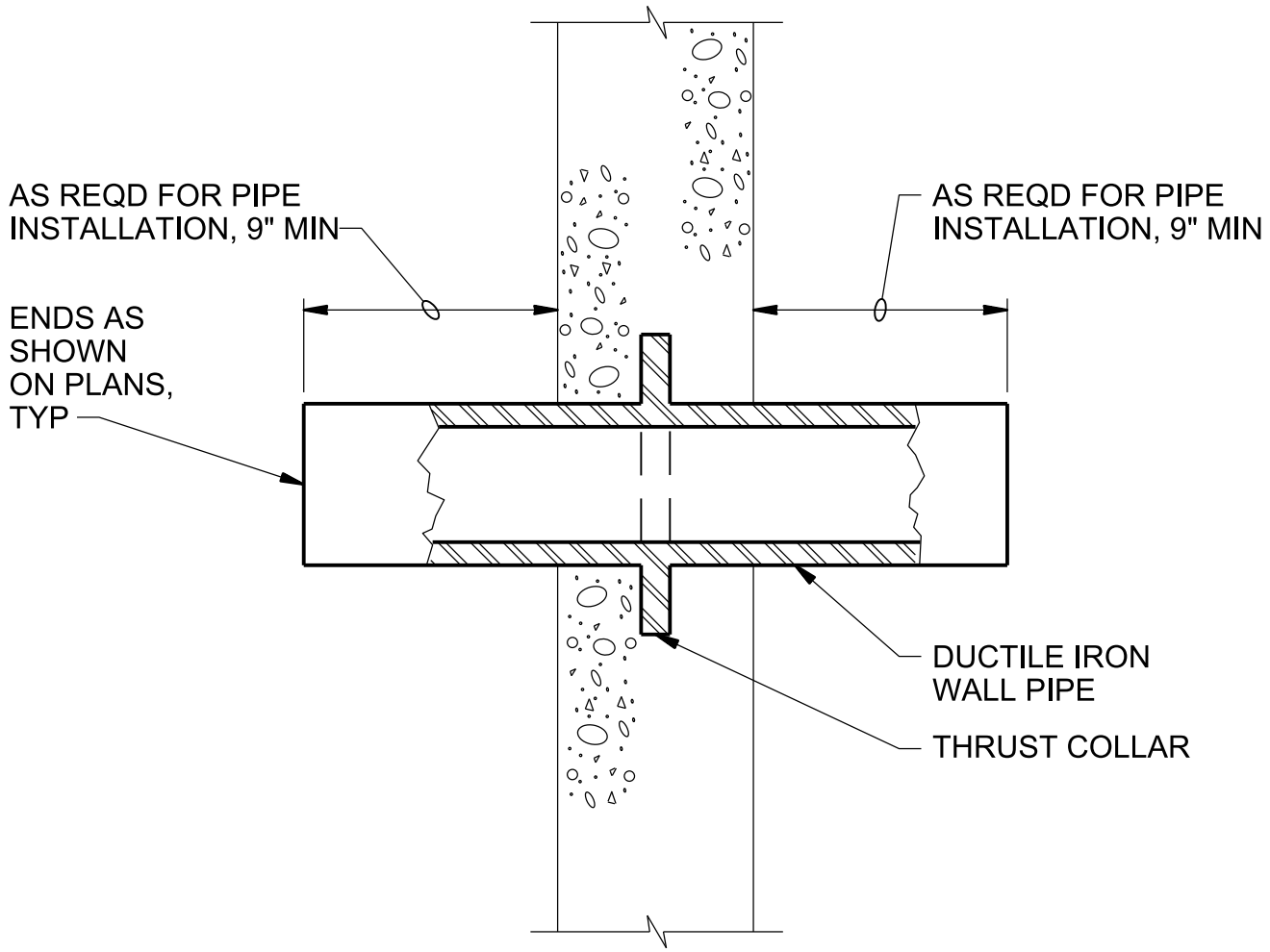

NOTES:

1. COAT WALL PIPE WITH SPECIFIED PAINT SYSTEM PRIOR TO CONCRETE PLACEMENT.

DUCTILE IRON WALL PIPE

NTS

NATIONAL PARK SERVICE
GRAND CANYON NATIONAL PARK
SOUTH RIM

4027-600

© JACOBS

Jacobs

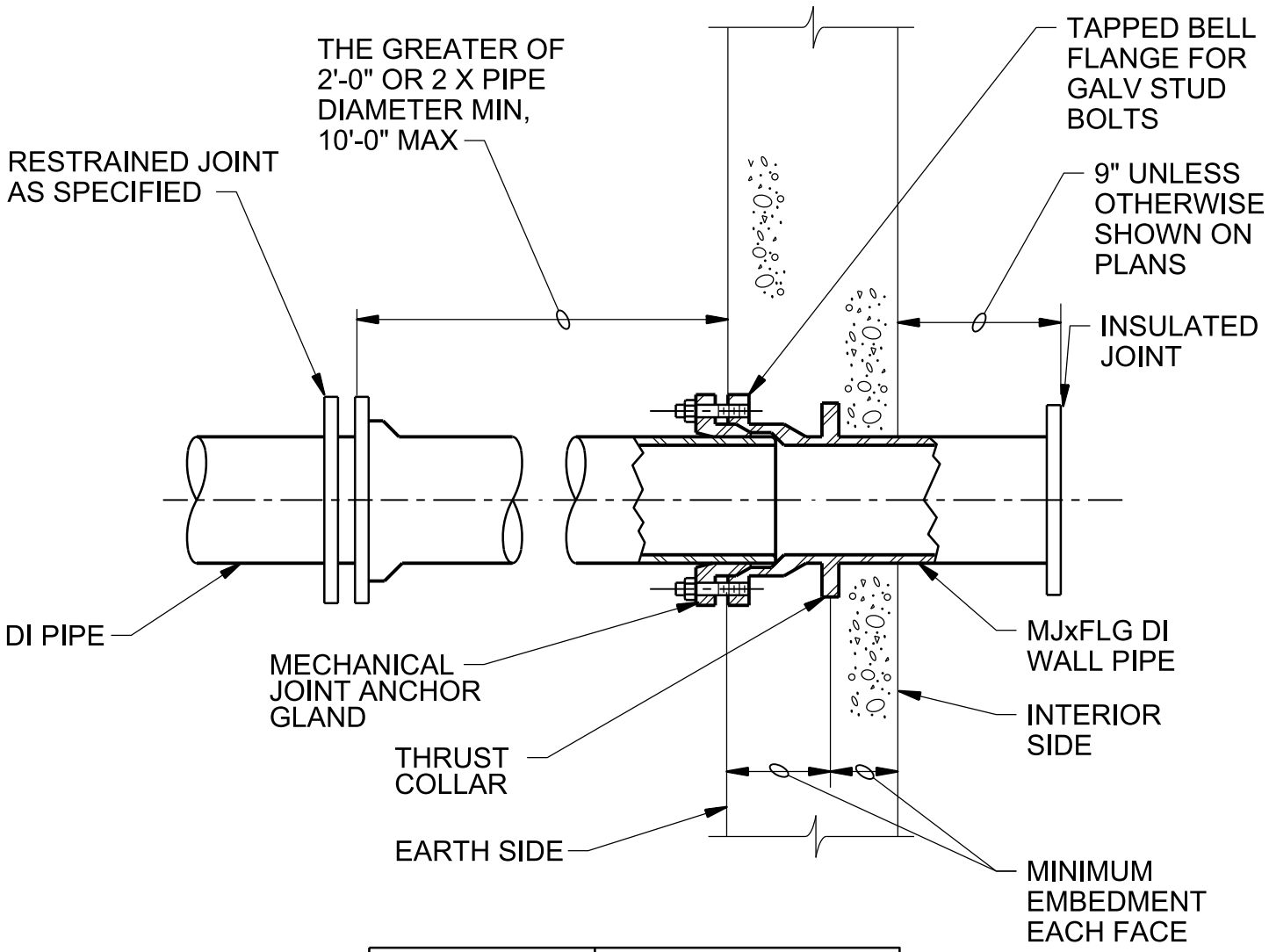

PIPE DIAMETER (IN)	MIN EMBEDMENT EACH FACE (IN)
4-12	4
14-16	6
18-20	8

NOTES:

1. COAT WALL PIPE WITH SPECIFIED PAINT SYSTEM PRIOR TO CONCRETE PLACEMENT.

2. IN LIEU OF MJxFLH WALL PIPE, A MJxFLG OR PExFLG WALL PIPE MAY BE USED WITH THE PIPE JOINT NOT MORE THAN 1'-0" OUTSIDE WALL CONCRETE ENCASEMENT. FLANGE JOINTSHALL BE OMITTED FOR CONCRETE ENCASEMENT APPLICATIONS. PROVIDE (2) RESTRAINED JOINTS IN PIPE OUTSIDE WALL SPACED AS SHOWN ABOVE.

MECHANICAL JOINT WALL PIPE FOR DIP

NTS

NATIONAL PARK SERVICE
GRAND CANYON NATIONAL PARK
SOUTH RIM

4027-601

© JACOBS

Jacobs

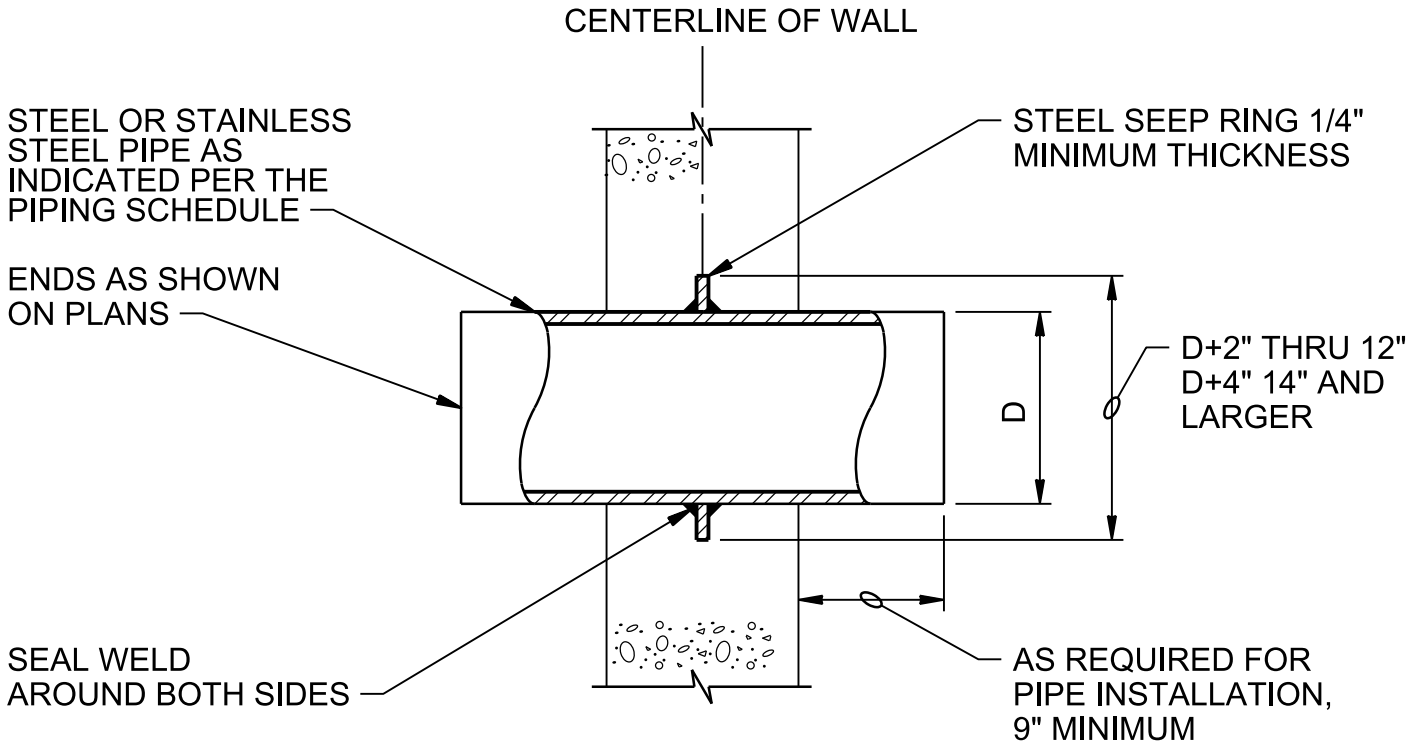

STEEL AND STAINLESS WALL PIPE

NTS

NATIONAL PARK SERVICE
GRAND CANYON NATIONAL PARK
SOUTH RIM

4027-605

© JACOBS

Jacobs

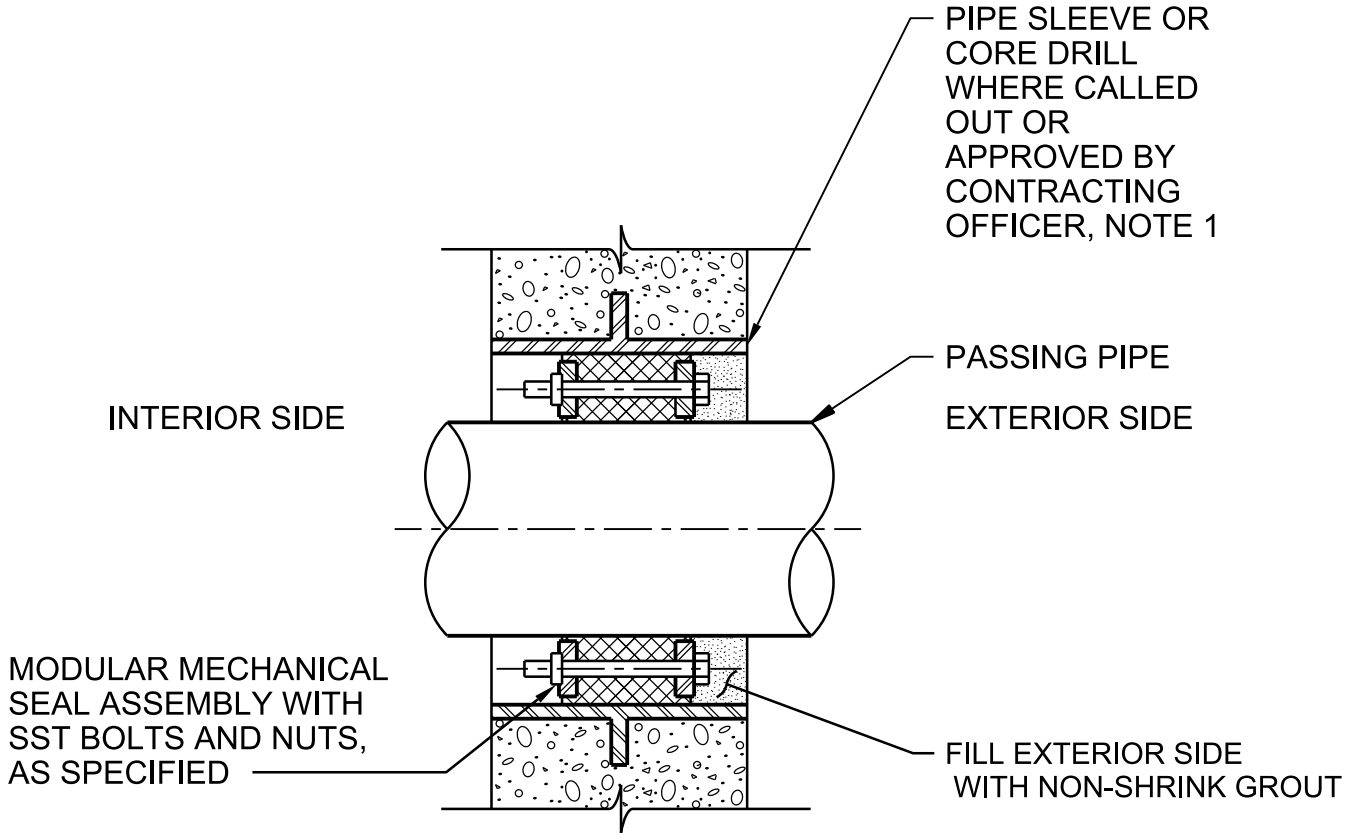

NOTES:

1. COAT PIPE SLEEVE WITH SPECIFIED PAINT SYSTEM BEFORE CONCRETE PLACEMENT.

2. DO NOT ALLOW METALLIC SLEEVE OR SEEP RING TO COME INTO CONTACT WITH REINFORCING STEEL. PROVIDE 2" CLEAR MINIMUM FROM REINFORCING STEEL.

WALL PIPE PENETRATION SEAL

NTS

NATIONAL PARK SERVICE
GRAND CANYON NATIONAL PARK
SOUTH RIM

4027-607

© JACOBS

Jacobs

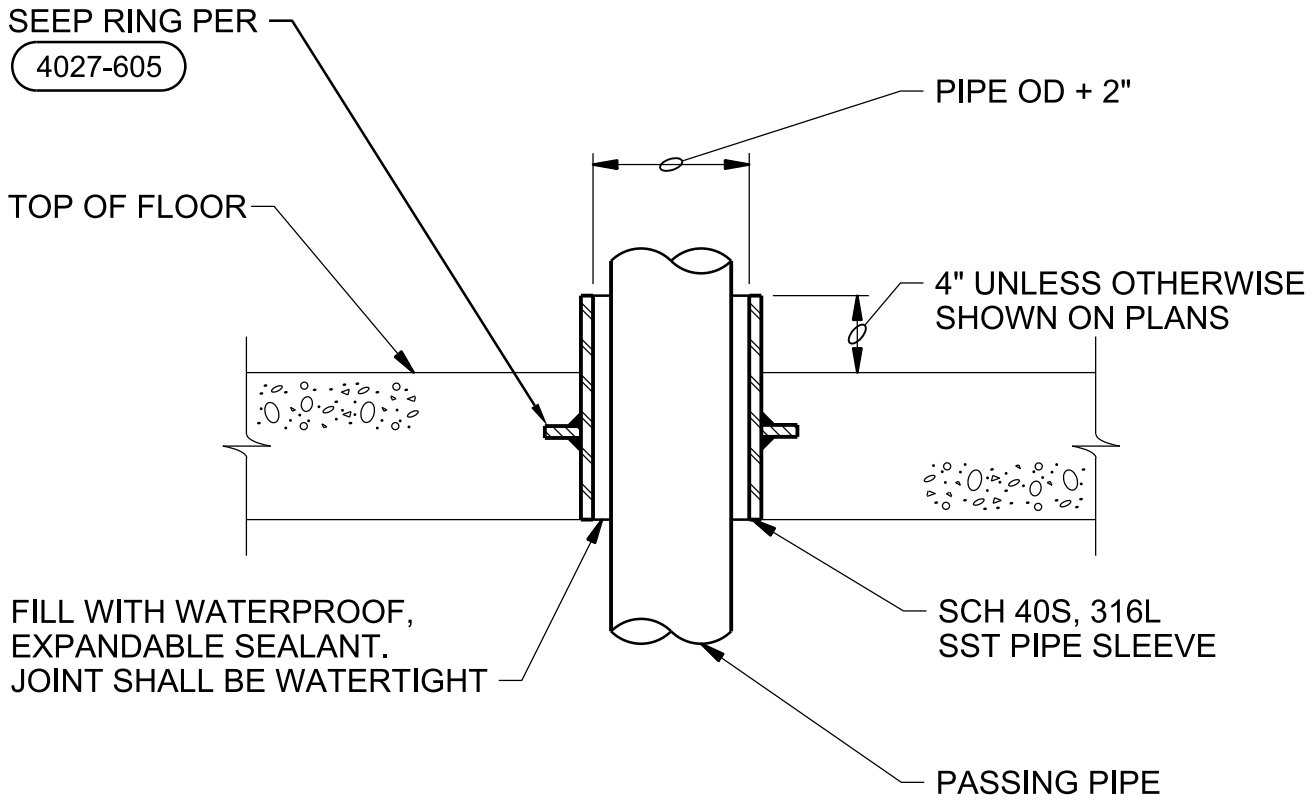

NOTES:

1. COAT FLOOR SLEEVE WITH SPECIFIED PAINT SYSTEM BEFORE CONCRETE PLACEMENT.

FLOOR SLEEVE

NTS

NATIONAL PARK SERVICE
GRAND CANYON NATIONAL PARK
SOUTH RIM

4027-620

© JACOBS

Jacobs

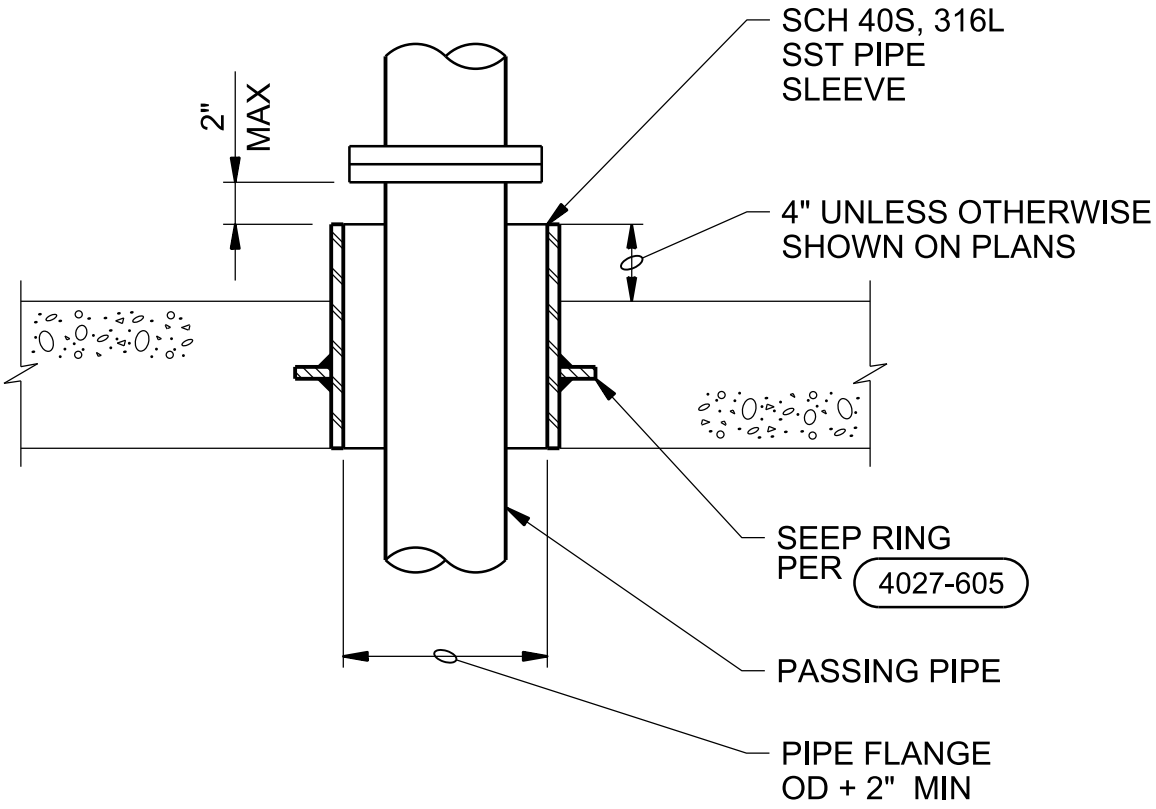

FLOOR SLEEVE

NTS

NATIONAL PARK SERVICE
GRAND CANYON NATIONAL PARK
SOUTH RIM

4027-621

© JACOBS

Jacobs

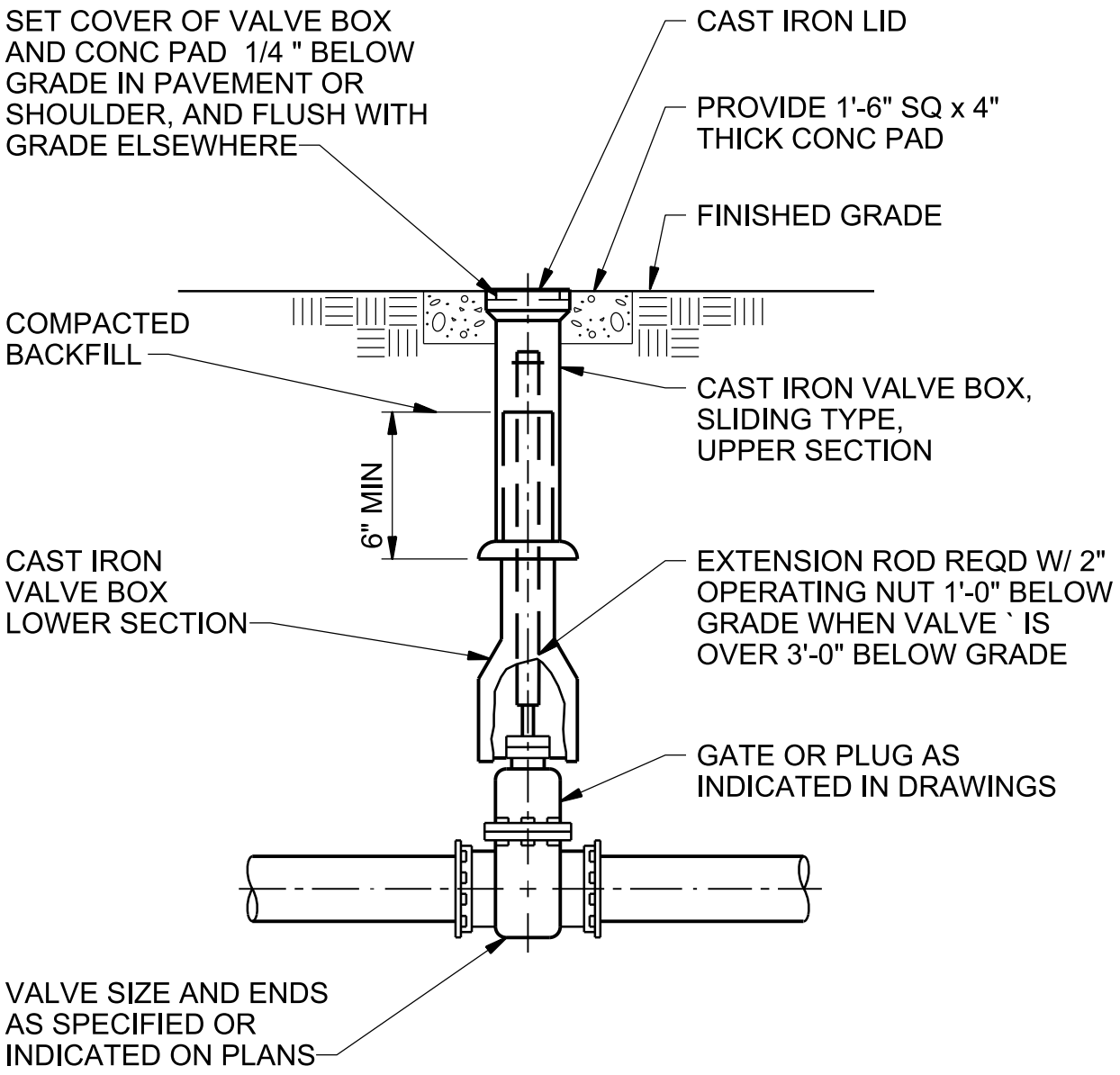

BURIED GATE AND PLUG VALVE BOX

NTS

NATIONAL PARK SERVICE
GRAND CANYON NATIONAL PARK
SOUTH RIM

4027-640

© JACOBS

Jacobs

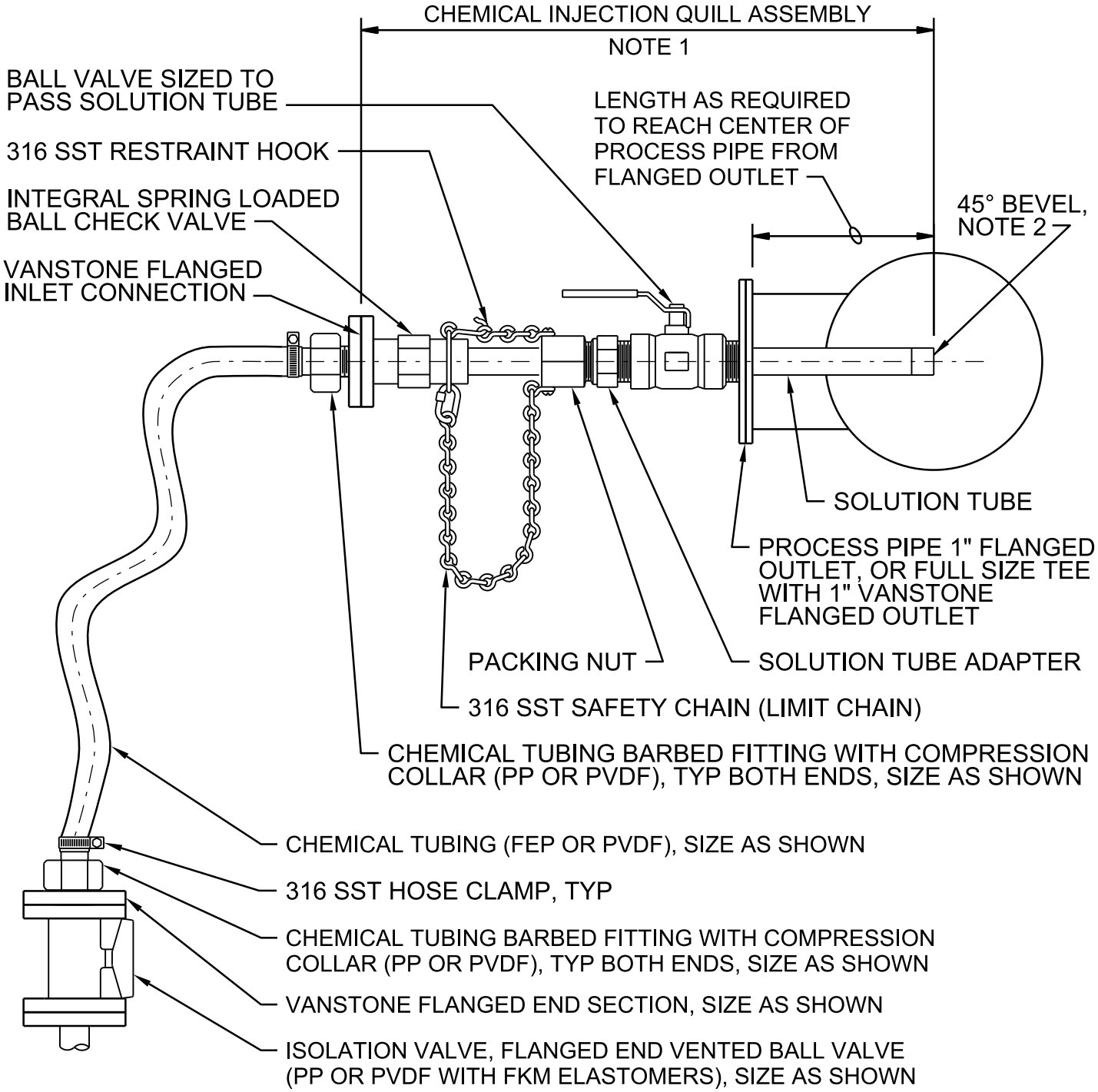

NOTES:

1. ALL COMPONENTS MADE OF HASTELLOY C WITH FKM ELASTOMERS UNLESS INDICATED OTHERWISE, SEE SECTION 40 27 01, PROCESS PIPING SPECIALTIES.
2. ORIENTATION OF BEVEL SHALL BE FACING DIRECTION OF FLOW.

CHEMICAL INJECTION QUILL ASSEMBLY

NTS

NATIONAL PARK SERVICE
GRAND CANYON NATIONAL PARK
SOUTH RIM

4027-957

© JACOBS

Jacobs

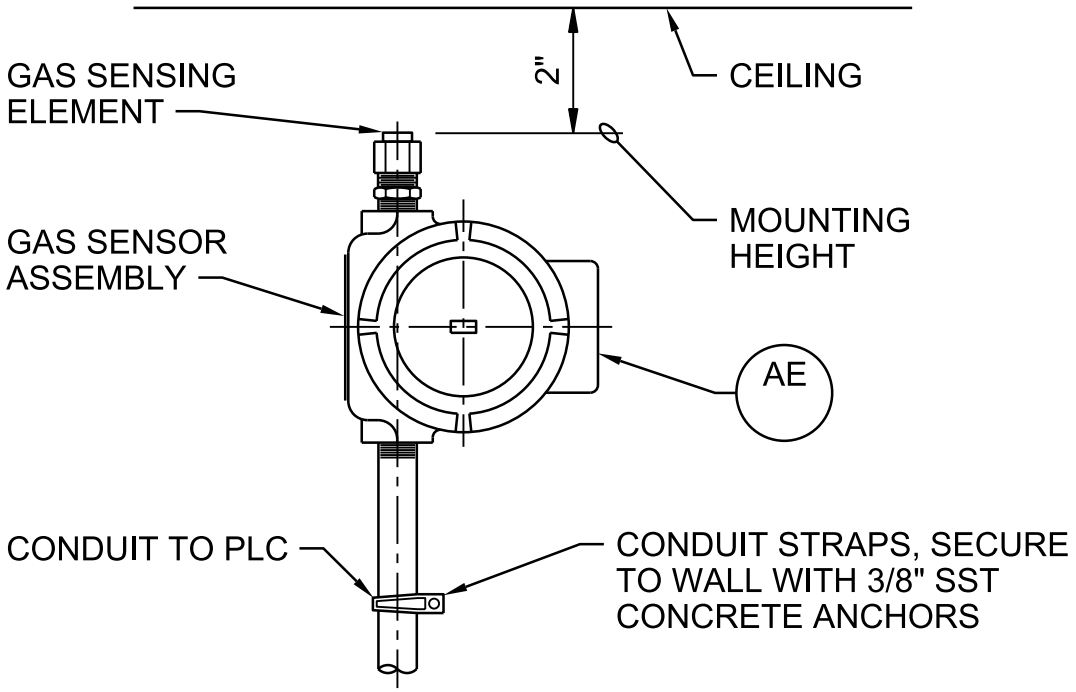

METHANE SENSOR

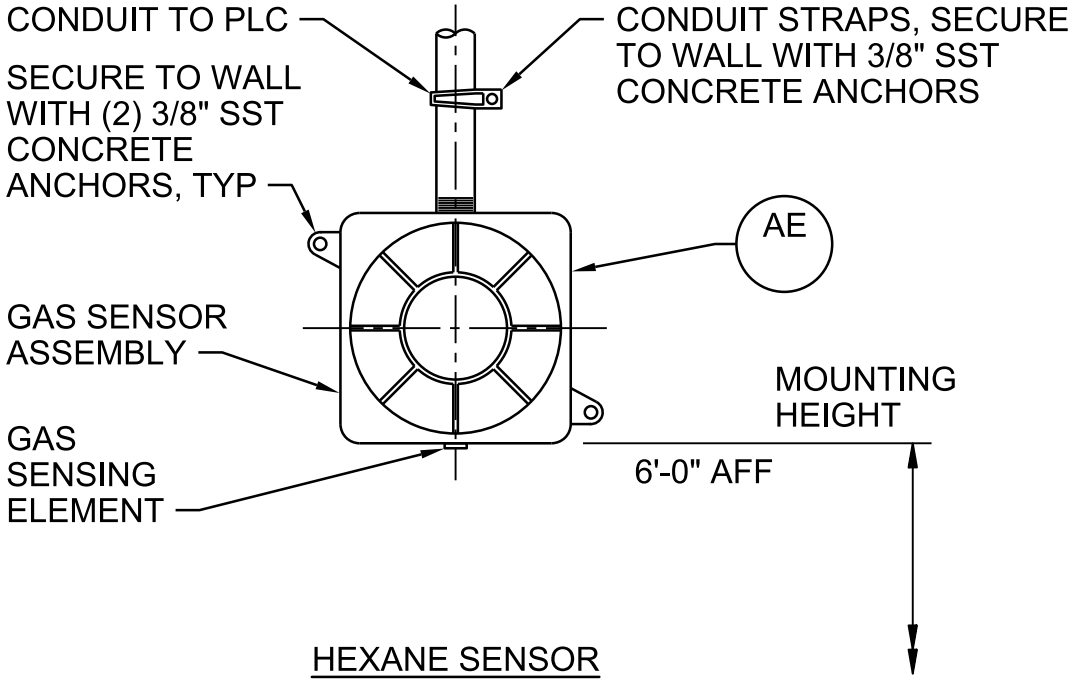

HEXANE SENSOR

CONDUIT MOUNTED GAS SENSOR INSTALLATION

NTS

NATIONAL PARK SERVICE
GRAND CANYON NATIONAL PARK
SOUTH RIM

4091-150

© JACOBS

Jacobs

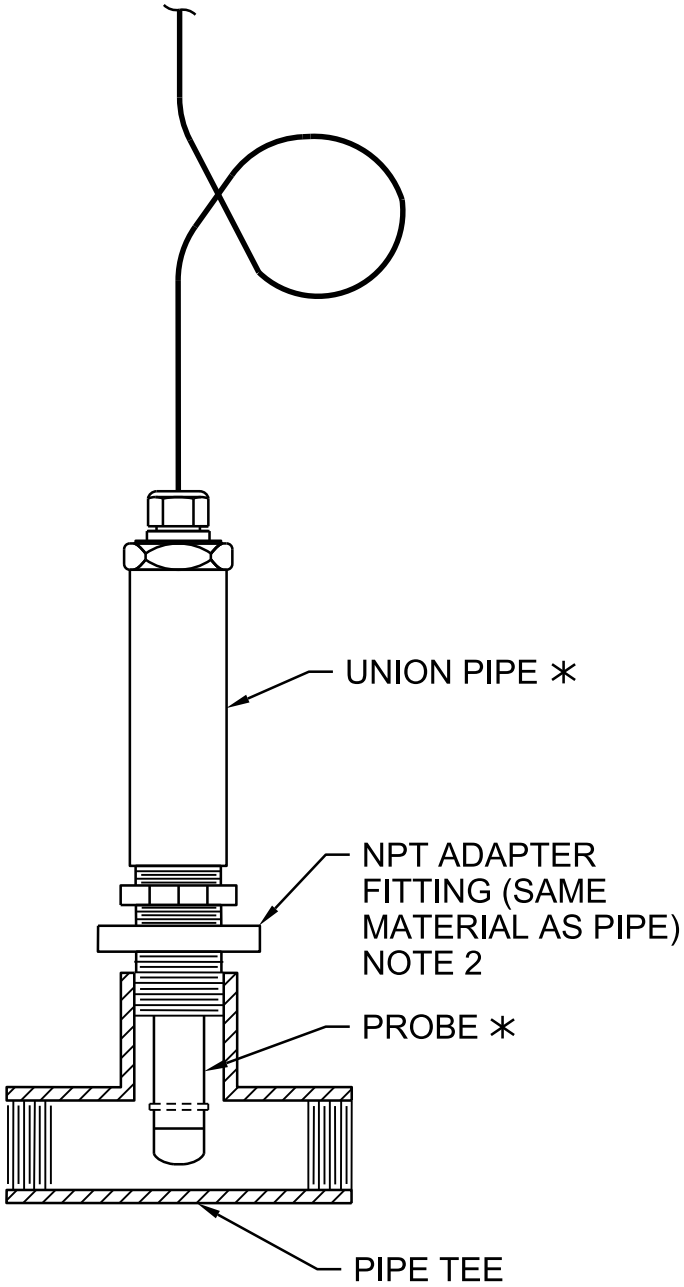

NOTES:

1. COMPONENTS DESIGNATED BY ✳ ARE SUPPLIED BY INSTRUMENT MANUFACTURER.

2. 1 1/2" NPT ADAPTER FOR PH AND ORP SENSORS.
   2" NPT ADAPTER FOR DO SENSOR.

SENSOR INSTALLATION INLINE MOUNTING

NTS

NATIONAL PARK SERVICE
GRAND CANYON NATIONAL PARK
SOUTH RIM

4091-158

© JACOBS

Jacobs

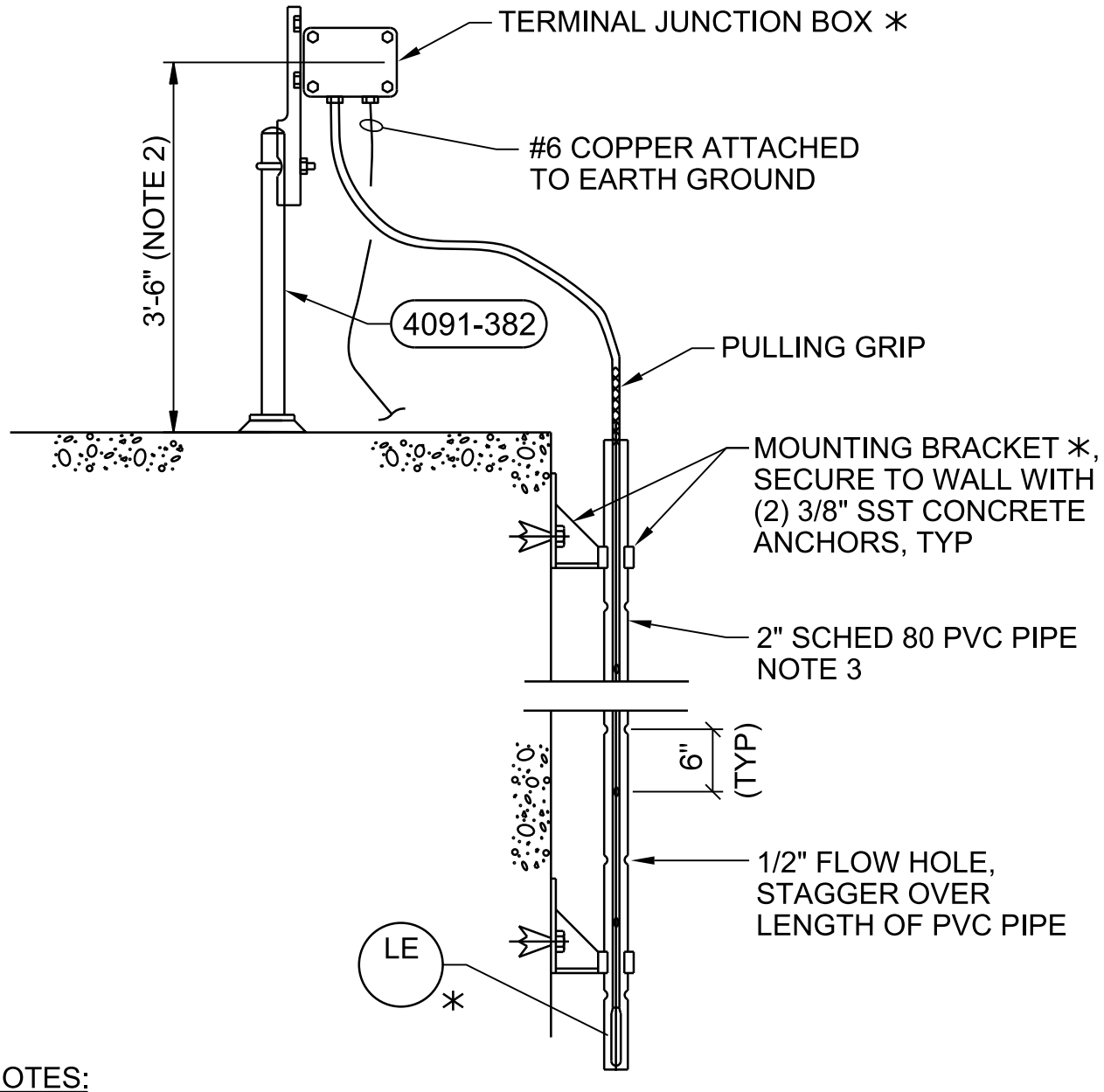

NOTES:

1. LEAVE DESICCANT CAP ON VENTED CABLE UNTIL TERMINATION.

2. COMPONENTS DESIGNATED BY ∗ ARE SUPPLIED BY INSTRUMENT MANUFACTURER.

3. PIPE MUST BE FREE OF ANY OBSTRUCTIONS FOR INSTALLATION/REMOVAL OF LEVEL TRANSMITTER WHILE IN SERVICE.

PRESSURE TRANSDUCER DETAIL

NTS

NATIONAL PARK SERVICE
GRAND CANYON NATIONAL PARK
SOUTH RIM

4091-163

© JACOBS

Jacobs

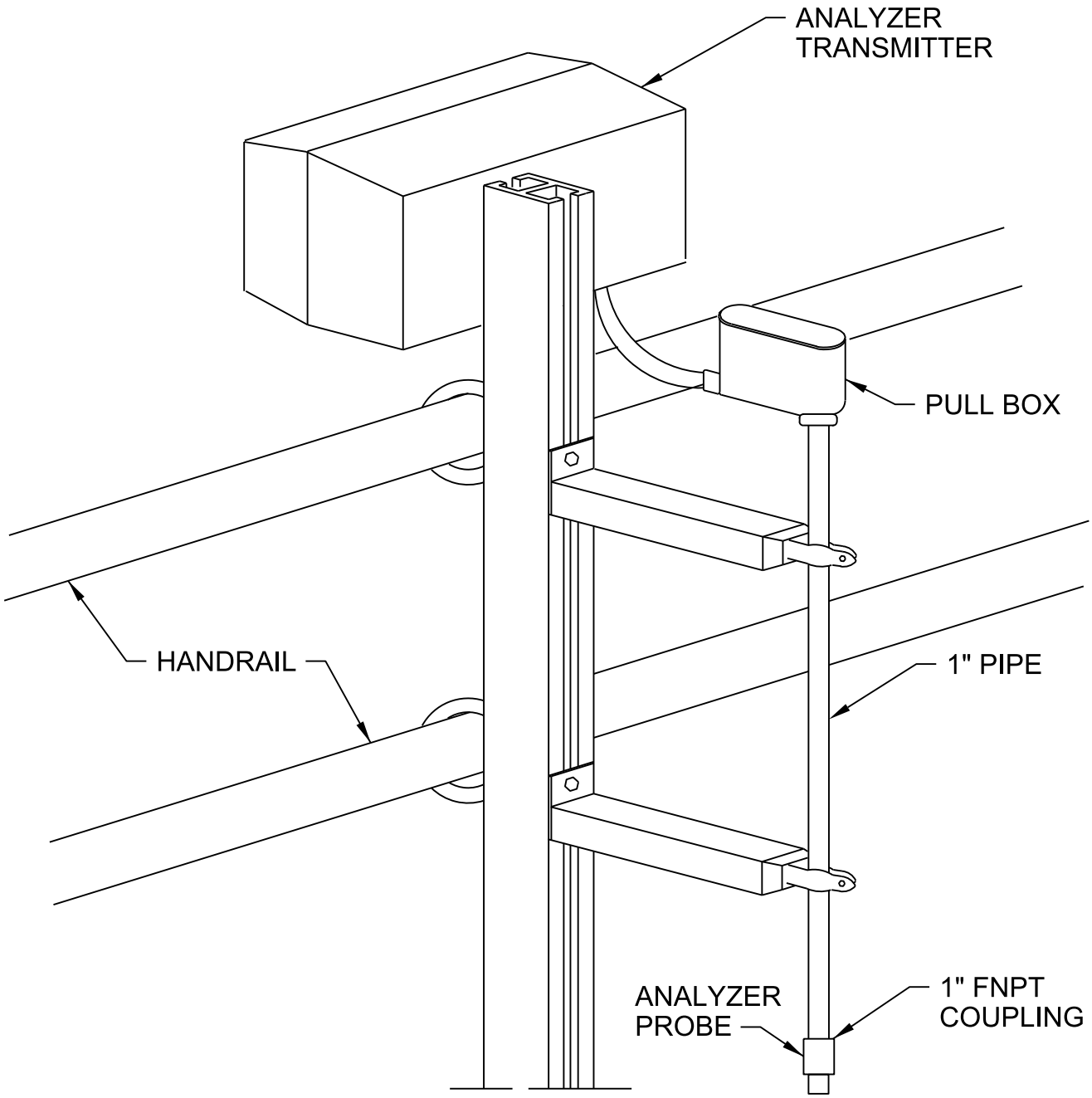

TYPICAL ANALYZER PROBE HANDRAIL MOUNT

NTS

NATIONAL PARK SERVICE
GRAND CANYON NATIONAL PARK
SOUTH RIM

4091-169

© JACOBS

Jacobs

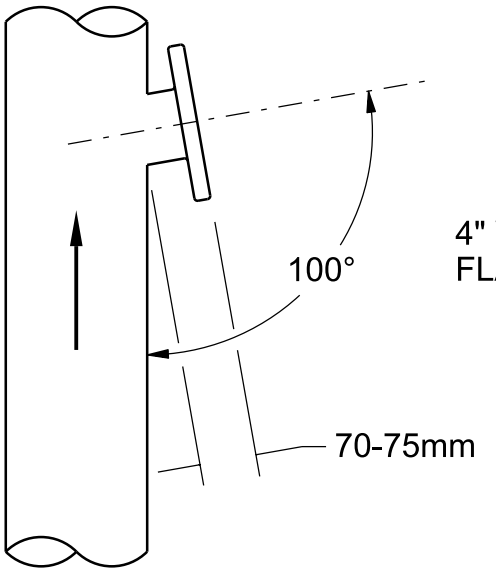

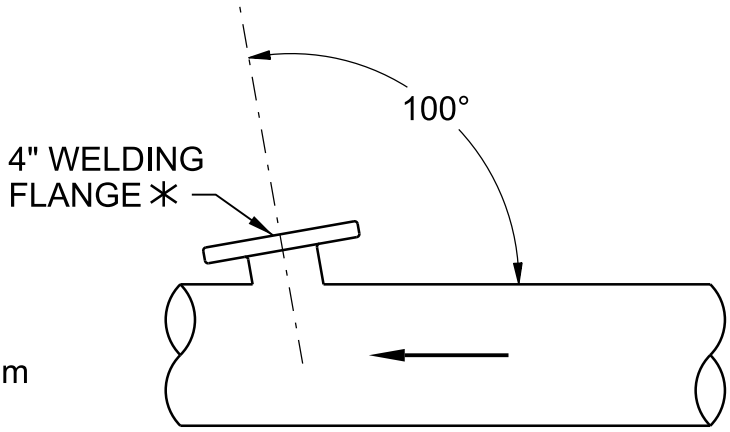

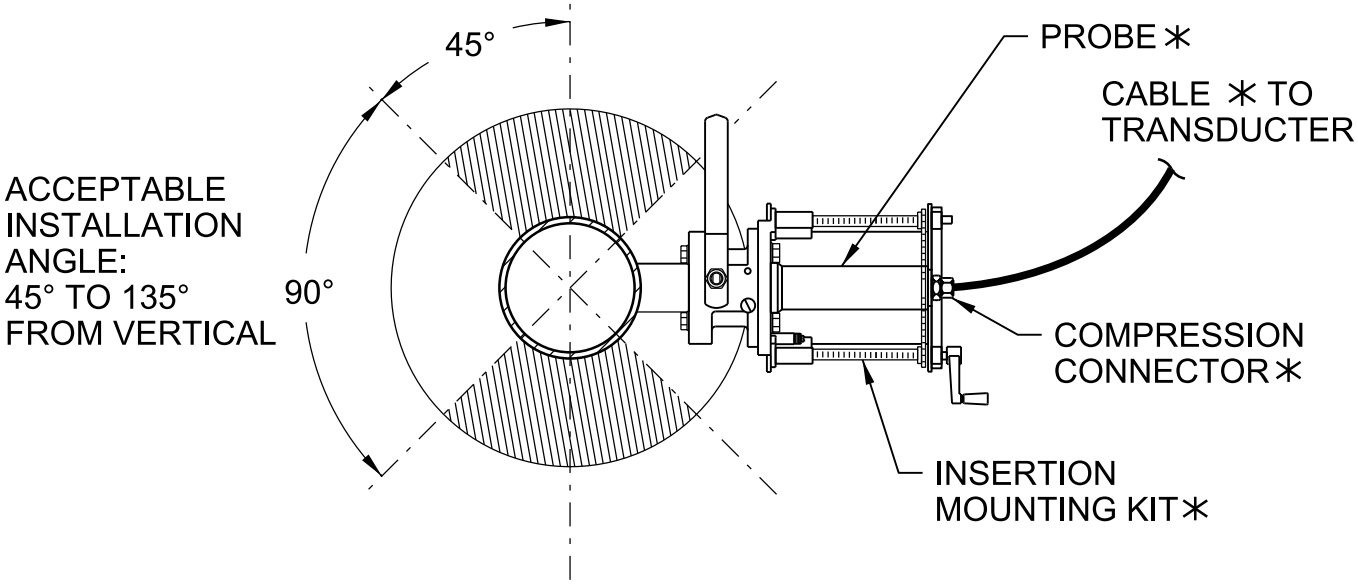

NOTES:

1. COMPONENTS DESIGNATED BY ✳ ARE SUPPLIED BY INSTRUMENT MANUFACTURER.

2. PROVIDE A MINIMUM OF 1'-2" CLEARANCE ABOVE JUNCTION BOX FOR PROBE REMOVAL.

RETRACTABLE TSS SENSOR INSTALLATION - INLINE MOUNTING

NTS

NATIONAL PARK SERVICE
GRAND CANYON NATIONAL PARK
SOUTH RIM

4091-180

© JACOBS

Jacobs

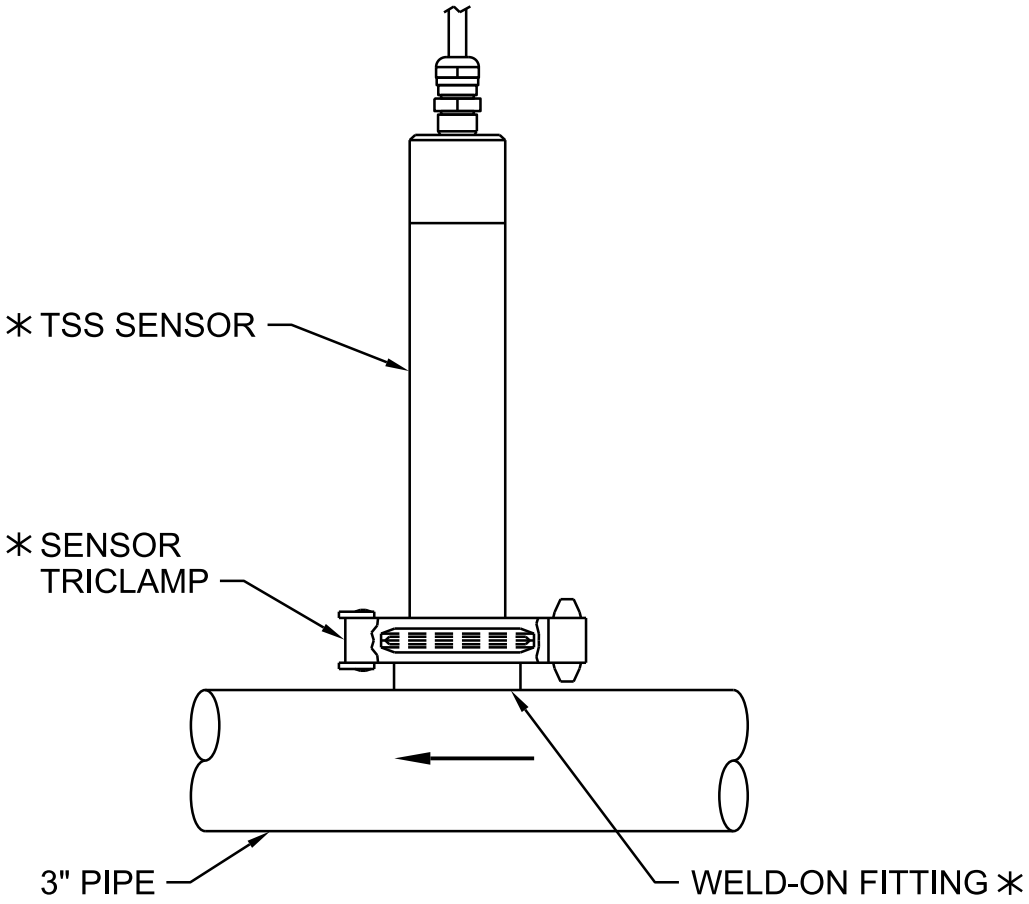

NOTES:

1. COMPONENTS DESIGNATED BY ✳ ARE SUPPLIED BY INSTRUMENT MANUFACTURER.

TSS SENSOR INSTALLATION - INLINE MOUNTING

NTS

NATIONAL PARK SERVICE
GRAND CANYON NATIONAL PARK
SOUTH RIM

4091-181

© JACOBS

Jacobs

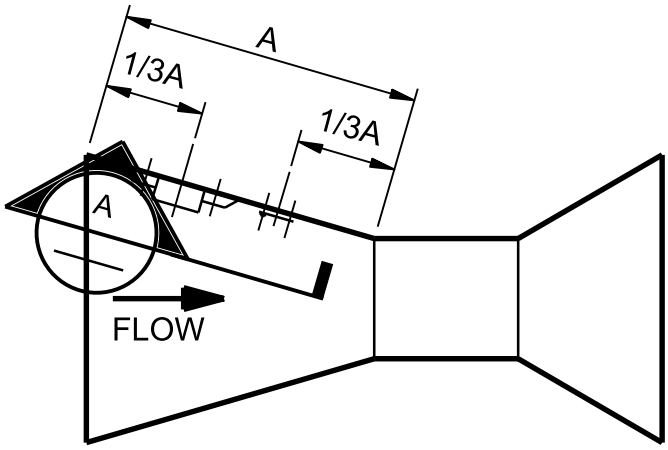

PARSHALL FLUME PLAN

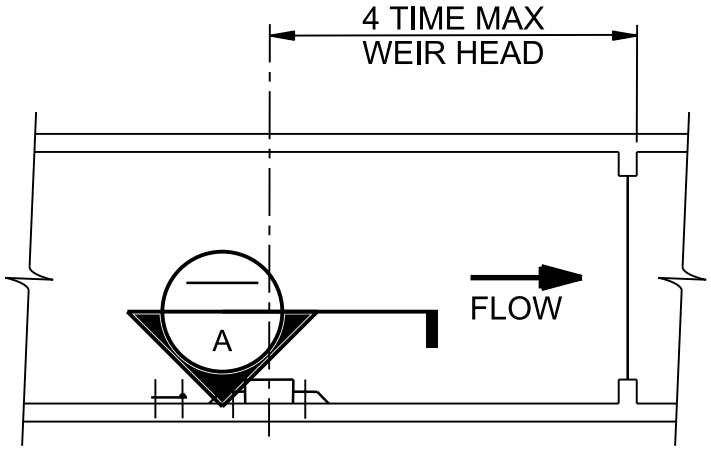

WEIR PLAN

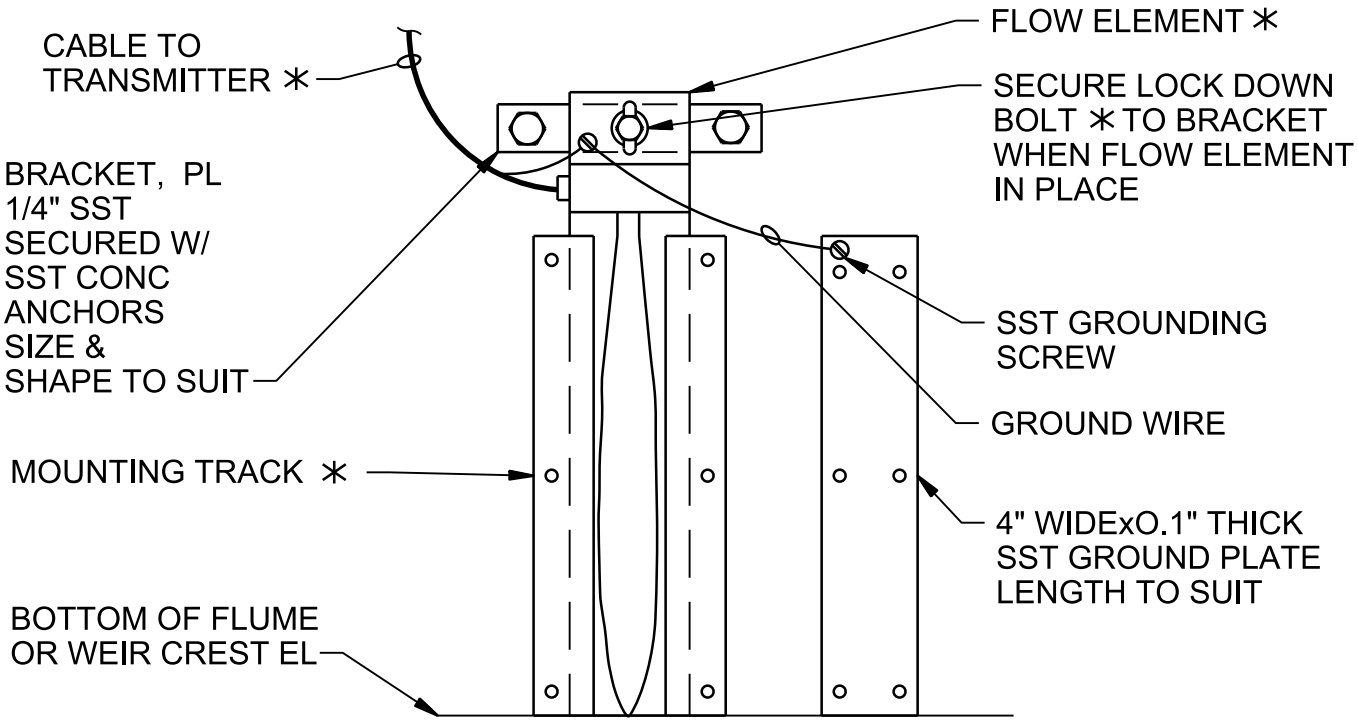

A SECTION

NTS

FLUME OR WEIR FLOW ELEMENT INSTALLATION

NOTES:

1. COMPONENTS DESIGNATED BY ✳ ARE SUPPLIED BY THE INSTRUMENT MANUFACTURER.
2. MOUNT TRACK AND GROUND PLATE IN ACCORDANCE WITH MANUFACTURER RECOMMENDATIONS.

FLUME OR WEIR FLOW ELEMENT INSTALLATION

NTS

NATIONAL PARK SERVICE
GRAND CANYON NATIONAL PARK
SOUTH RIM

4091-203

© JACOBS

Jacobs

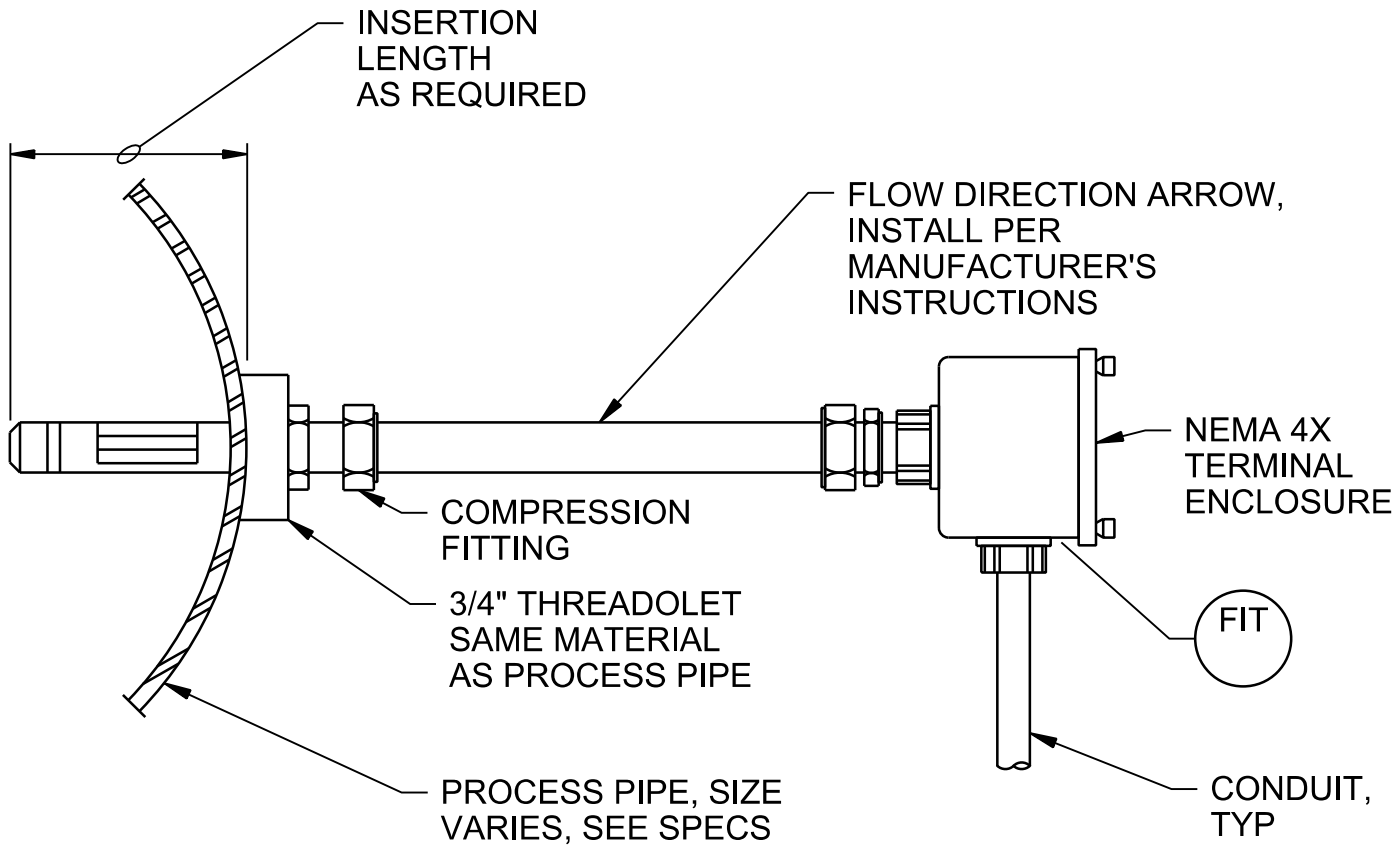

PROCESS AIR SERVICE

THERMAL MASS FLOW ELEMENT INSTALLATION

NTS

NATIONAL PARK SERVICE
GRAND CANYON NATIONAL PARK
SOUTH RIM

4091-217

© JACOBS

Jacobs

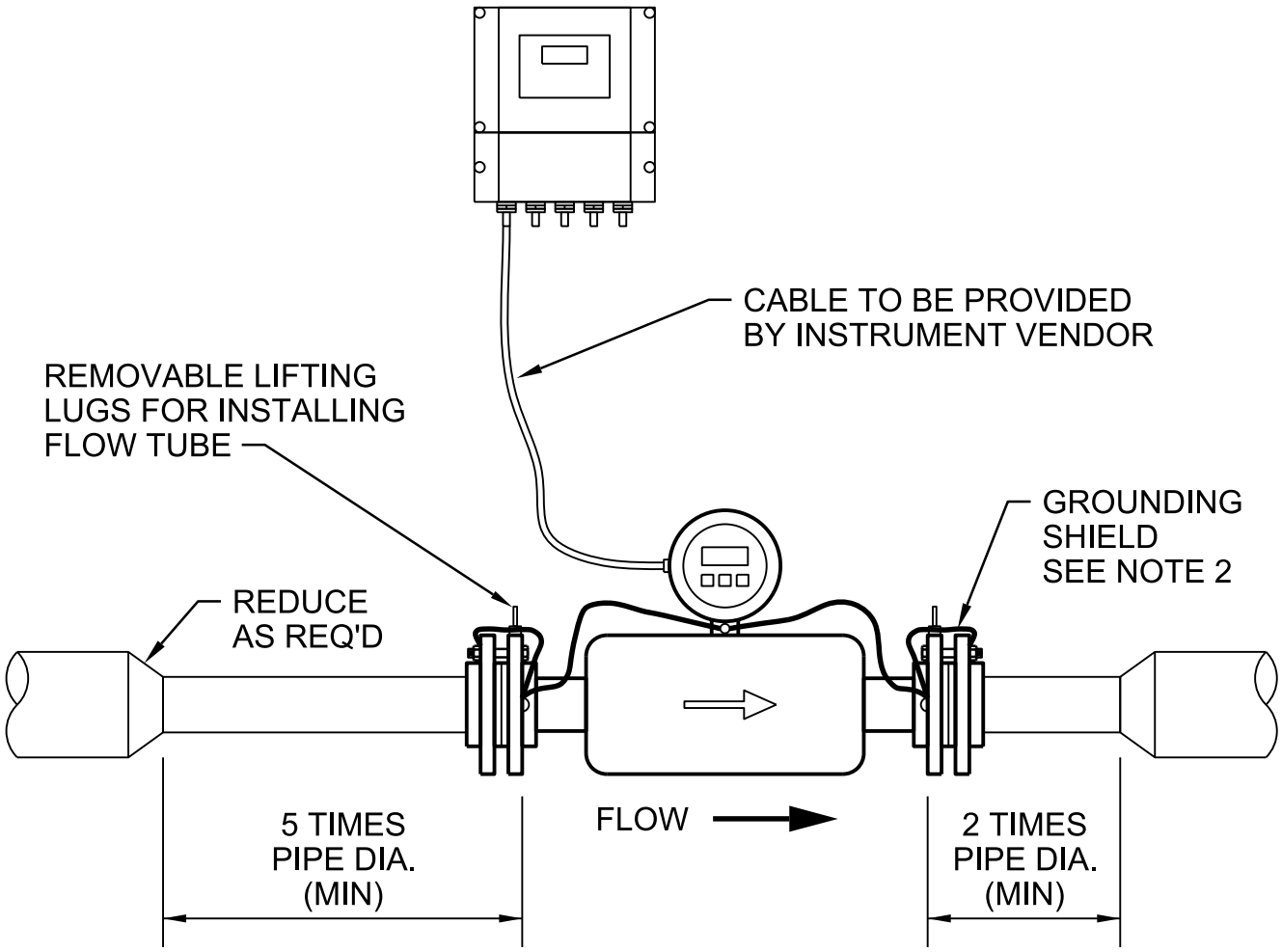

NOTES:

1. MEASURING ELECTRODES MUST BE IN HORIZONTAL PLANE.

2. TIE GROUND RINGS TO TRANSMITTER EQUIPMENT GROUND WITH A MINIMUM OF 12 AWG GROUND WIRE.

FLOW TRANSMITTER - MAGNETIC

NTS

NATIONAL PARK SERVICE
GRAND CANYON NATIONAL PARK
SOUTH RIM

4091-219

© JACOBS

Jacobs

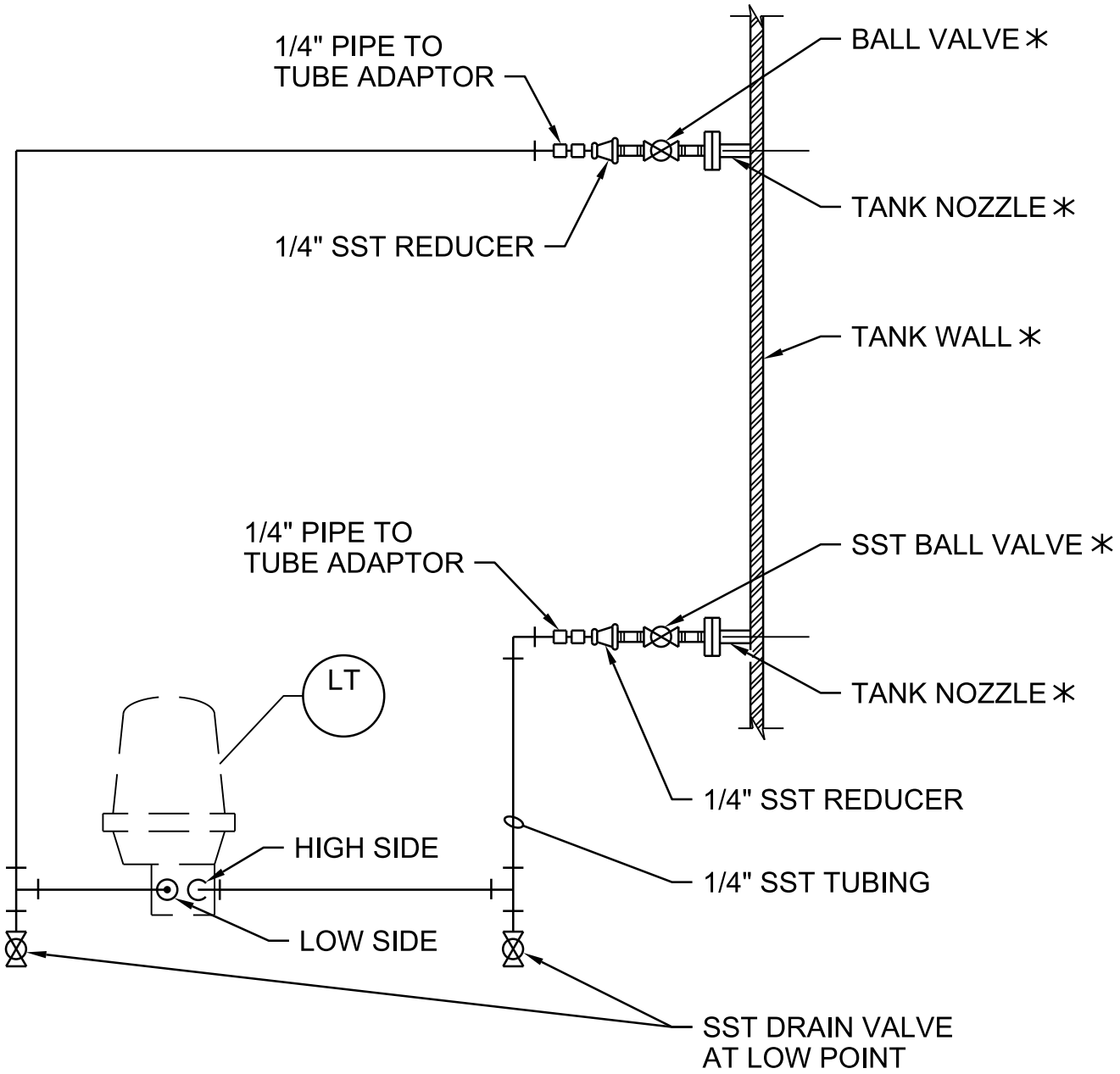

REMOTE MOUNTED

NOTES:

1. MOUNT TRANSMITTER BELOW OR LEVEL WITH BOTTOM LEVEL CONNECTION.
2. COMPONENTS DESIGNATED BY ✳ ARE SUPPLIED BY OTHERS.

PDT INSTALLATION FOR TANK LEVEL MEASUREMENT

NTS

NATIONAL PARK SERVICE
GRAND CANYON NATIONAL PARK
SOUTH RIM

4091-240

© JACOBS

Jacobs

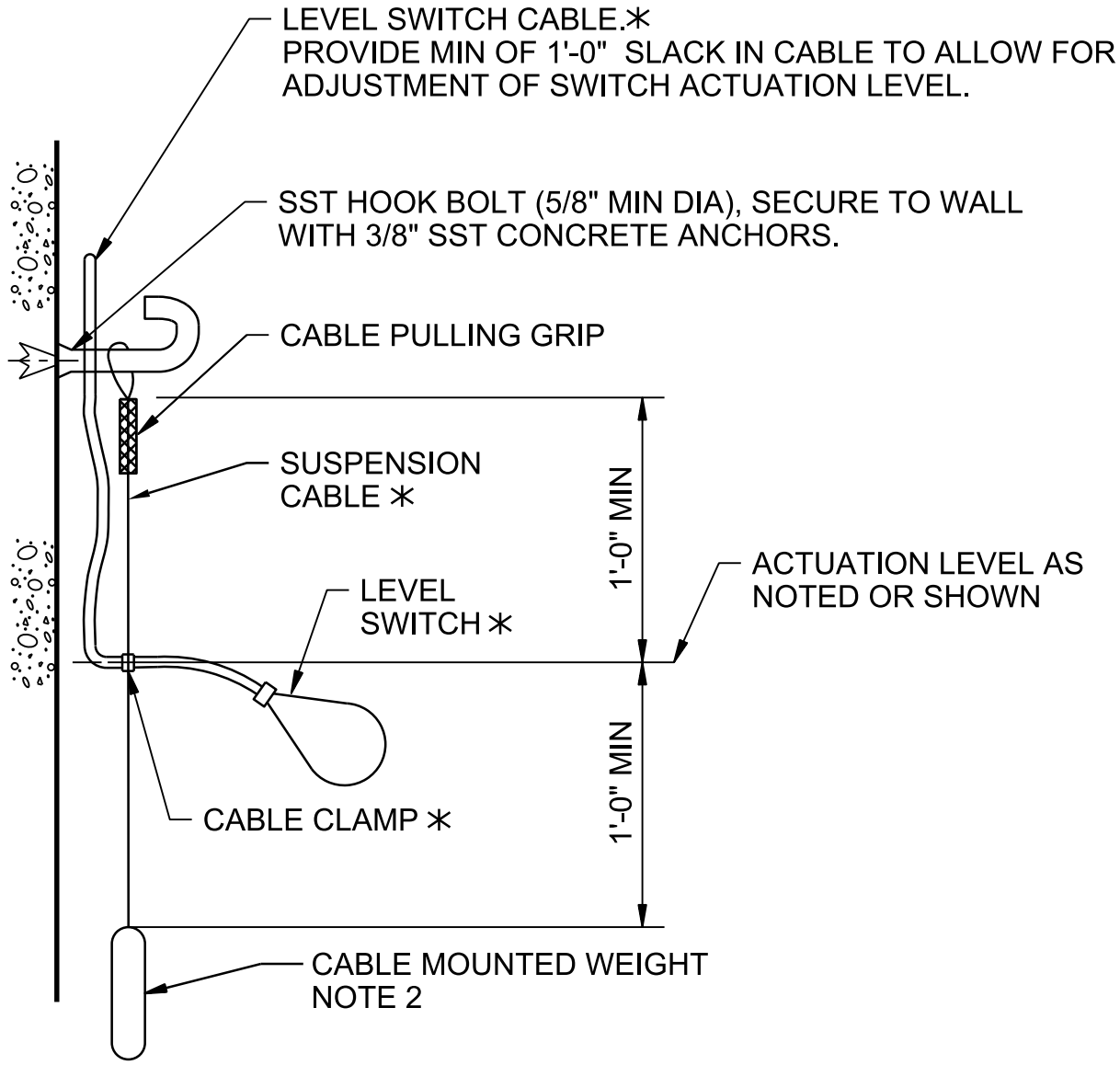

NOTES:

1. COMPONENTS DESIGNATED BY ✳ ARE SUPPLIED BY INSTRUMENT MANUFACTURER.

2. 1 OR 2 FLOATS - 10 LBS
   3 OR 4 FLOATS - 15 LBS

TYPICAL FLOAT TYPE LEVEL SWITCH INSTALLATION

MOUNTING IN TANK WITH OPEN ROOF

NTS

DETAIL 1 OF 2

4091-248

NATIONAL PARK SERVICE
GRAND CANYON NATIONAL PARK
SOUTH RIM

© JACOBS

Jacobs

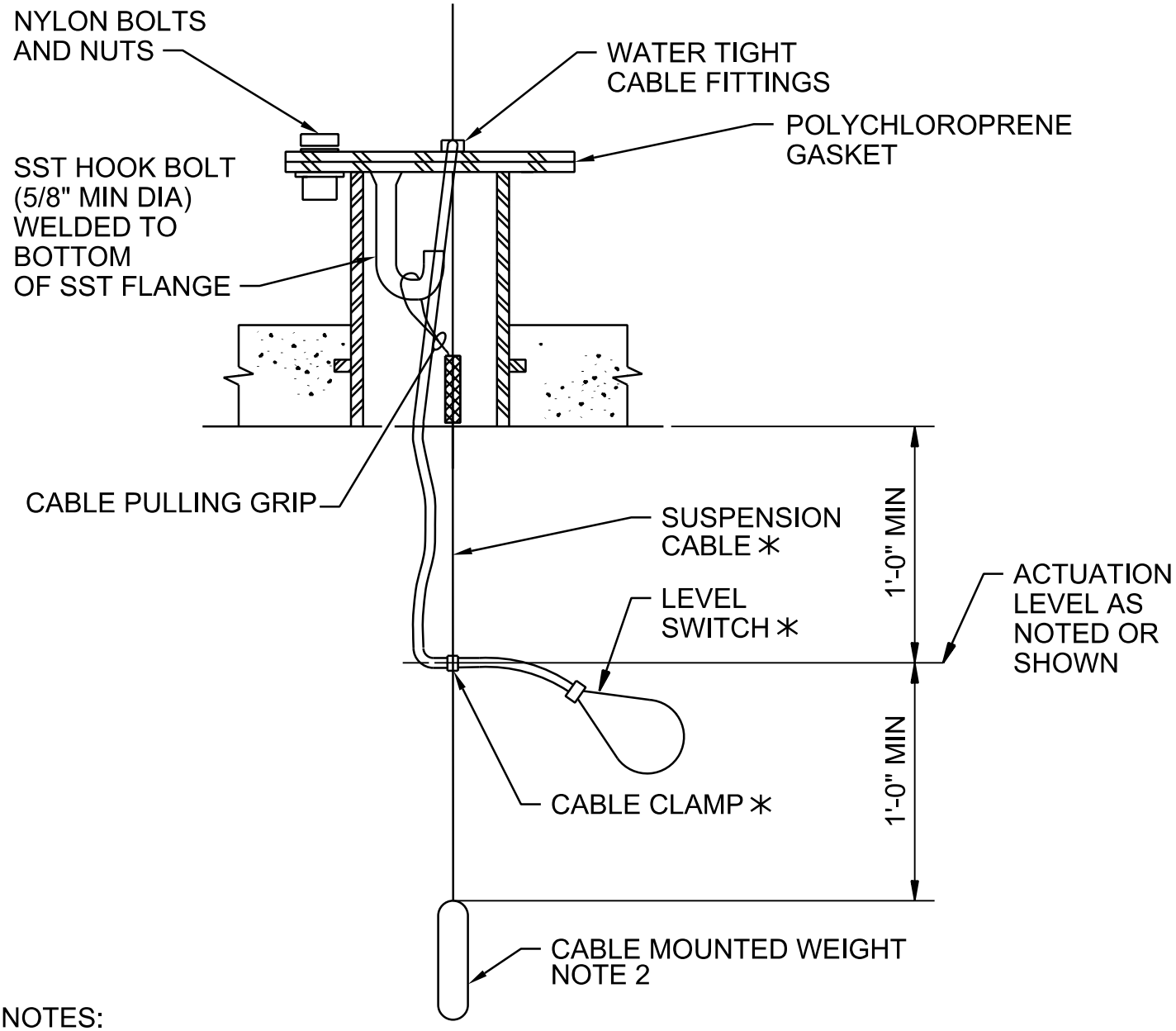

NOTES:

1. COMPONENTS DESIGNATED BY ✳ ARE SUPPLIED BY INSTRUMENT MANUFACTURER.

2. 1 OR 2 FLOATS - 10 LBS
   3 OR 4 FLOATS - 15 LBS

3. MAY BE COMBINED WITH DETAIL 4091-267.

TYPICAL FLOAT TYPE LEVEL SWITCH INSTALLATION

MOUNTING IN TANK WITH CLOSED ROOF

NTS

DETAIL 2 OF 2

4091-248

NATIONAL PARK SERVICE
GRAND CANYON NATIONAL PARK
SOUTH RIM

© JACOBS

Jacobs

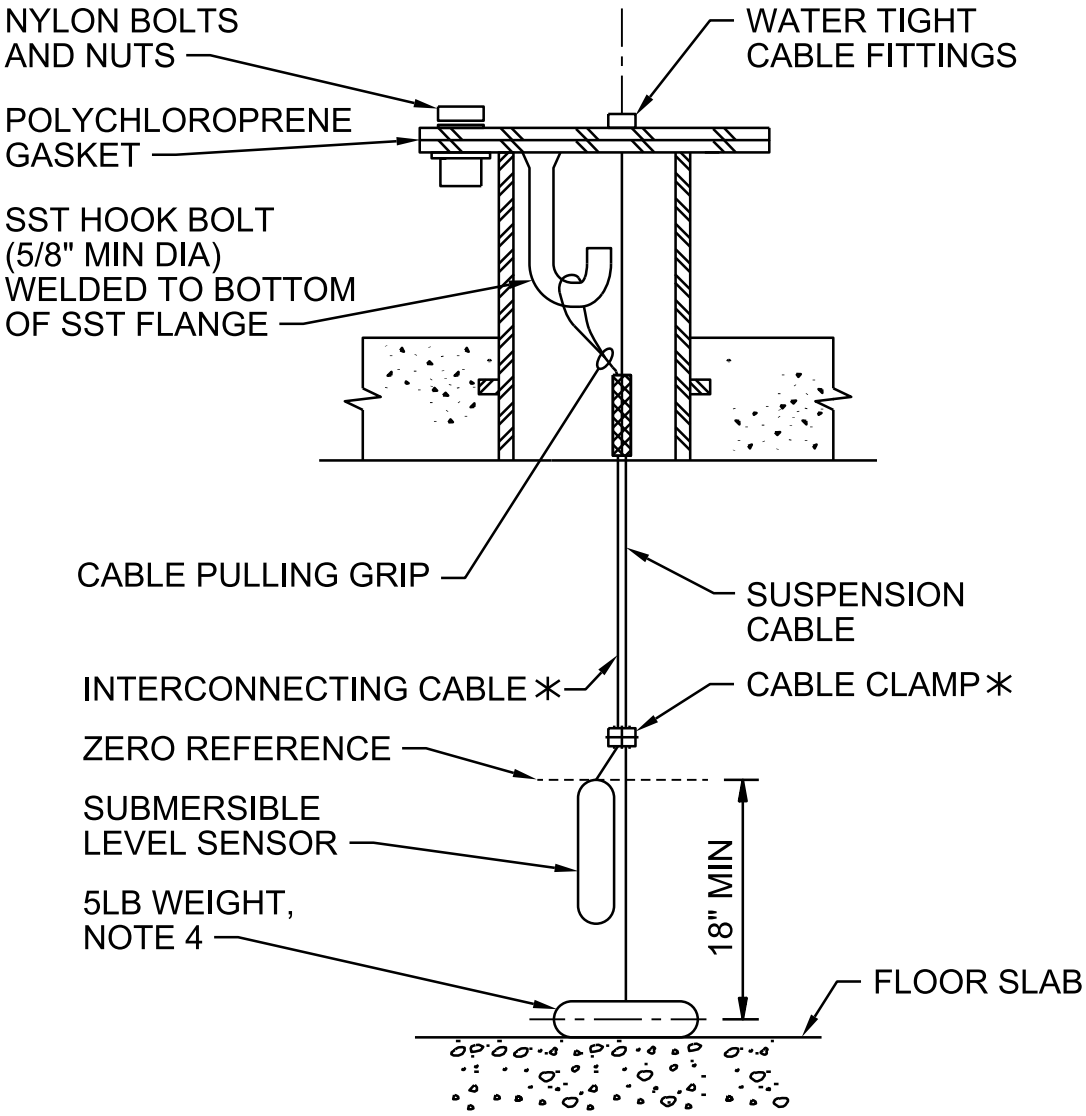

NOTES:

1. COMPONENTS DESIGNATED BY ✳ ARE SUPPLIED BY INSTRUMENT MANUFACTURER.

2. SURGE SUPPRESSOR TYPE 2.

3. MAY BE COMBINED WITH DETAIL 1 ON 4091-248.

4. PLACE WEIGHT AT OR NEAR THE LOWEST POINT OF THE TANK. THIS MAY NOT BE DIRECTLY UNDER THE FLOOR PENETRATION.

SUBMERSIBLE LEVEL TRANSMITTER INSTALLATION

NTS

NATIONAL PARK SERVICE
GRAND CANYON NATIONAL PARK
SOUTH RIM

4091-267

© JACOBS

Jacobs

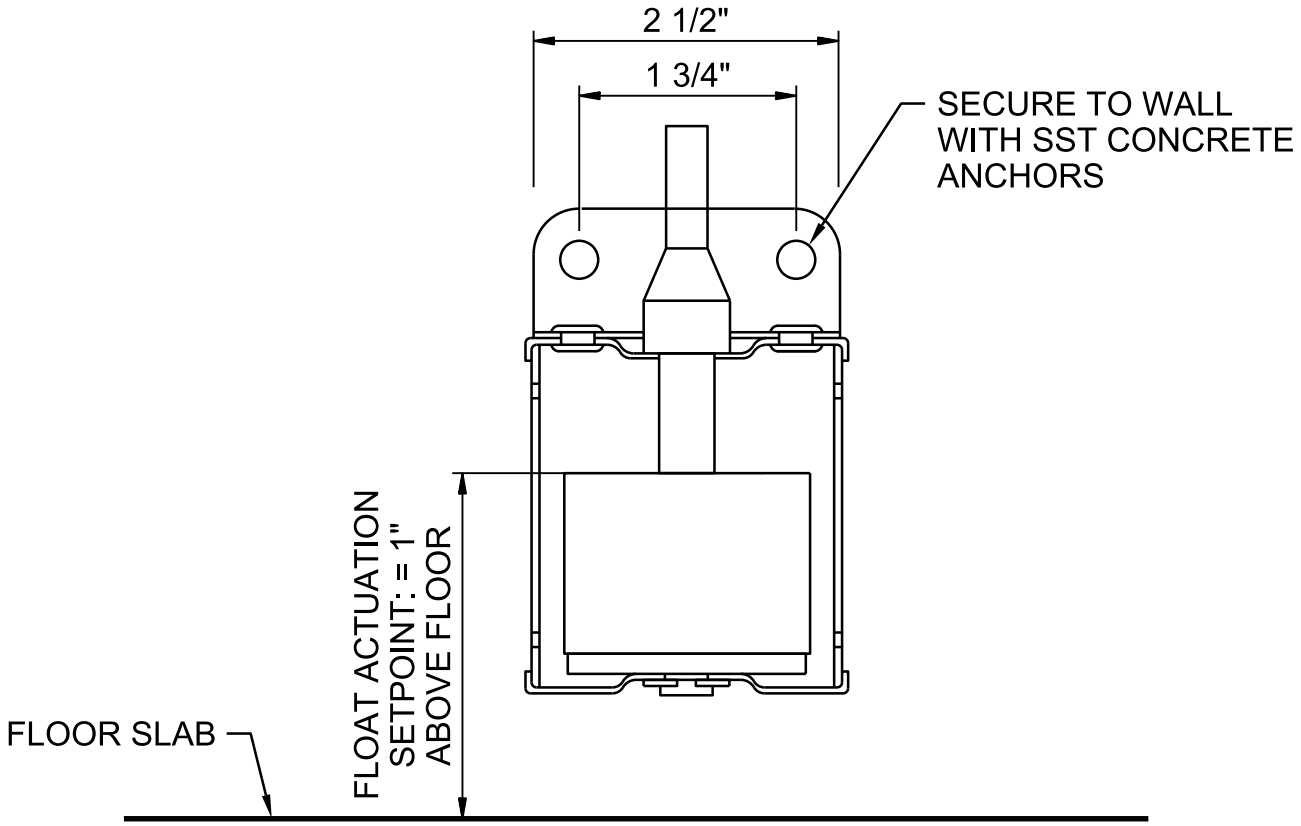

SINGLE FLOAT TYPE LEVEL SWITCH INSTALLATION

NTS

NATIONAL PARK SERVICE
GRAND CANYON NATIONAL PARK
SOUTH RIM

4091-271

© JACOBS

Jacobs

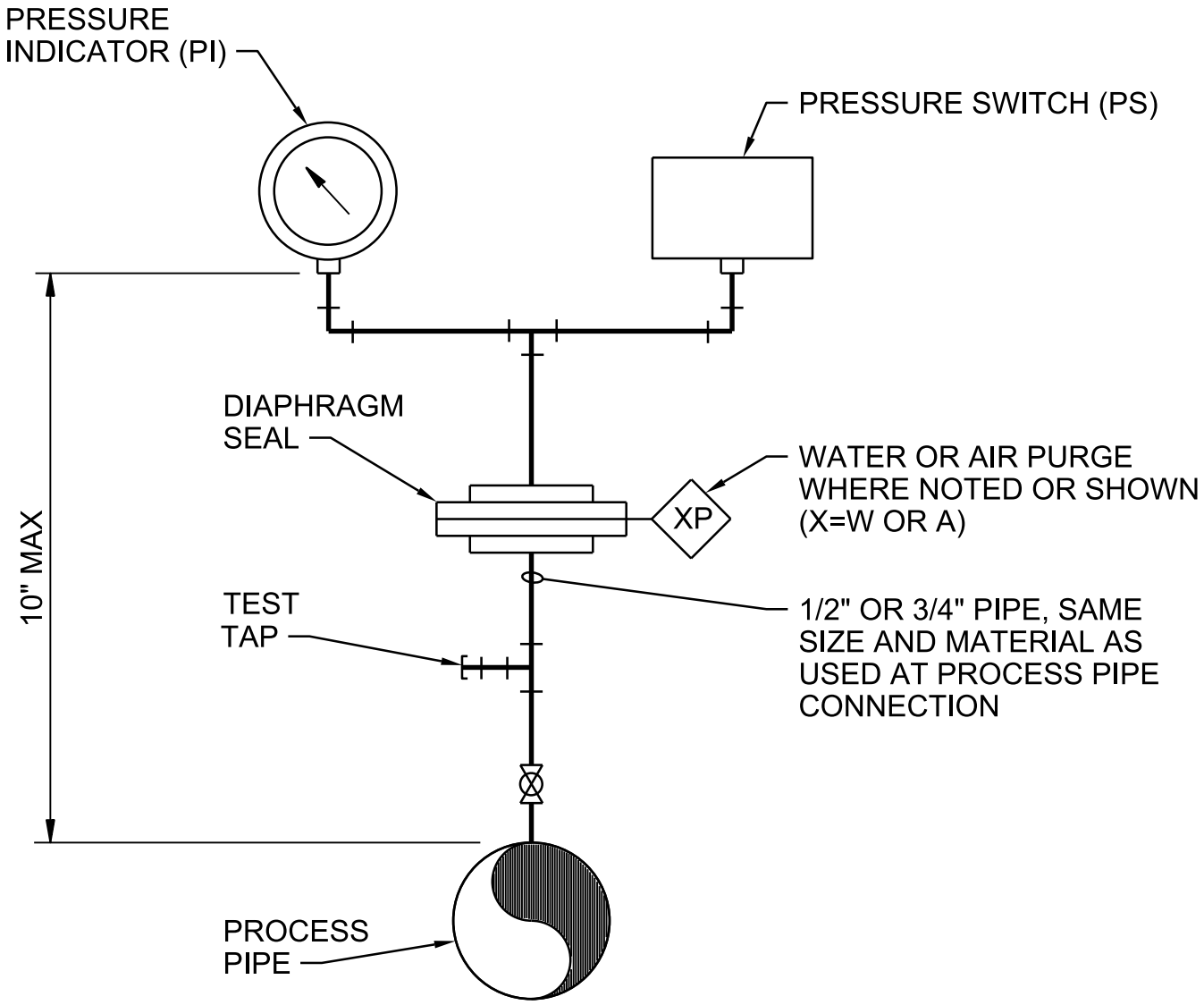

DIRECT MOUNTING WITH DIAPHRAGM SEAL

NOTES:

1. INDICATOR AND SWITCH INSTALLATION SHOWN. FOR SINGLE INSTRUMENT INSTALLATIONS, MOUNT DEVICE DIRECTLY ABOVE DIAPHRAGM SEAL.

PRESSURE SWITCH & INDICATOR INSTALLATION

NTS

DETAIL 1 OF 2

4091-304

NATIONAL PARK SERVICE
GRAND CANYON NATIONAL PARK
SOUTH RIM

© JACOBS

Jacobs

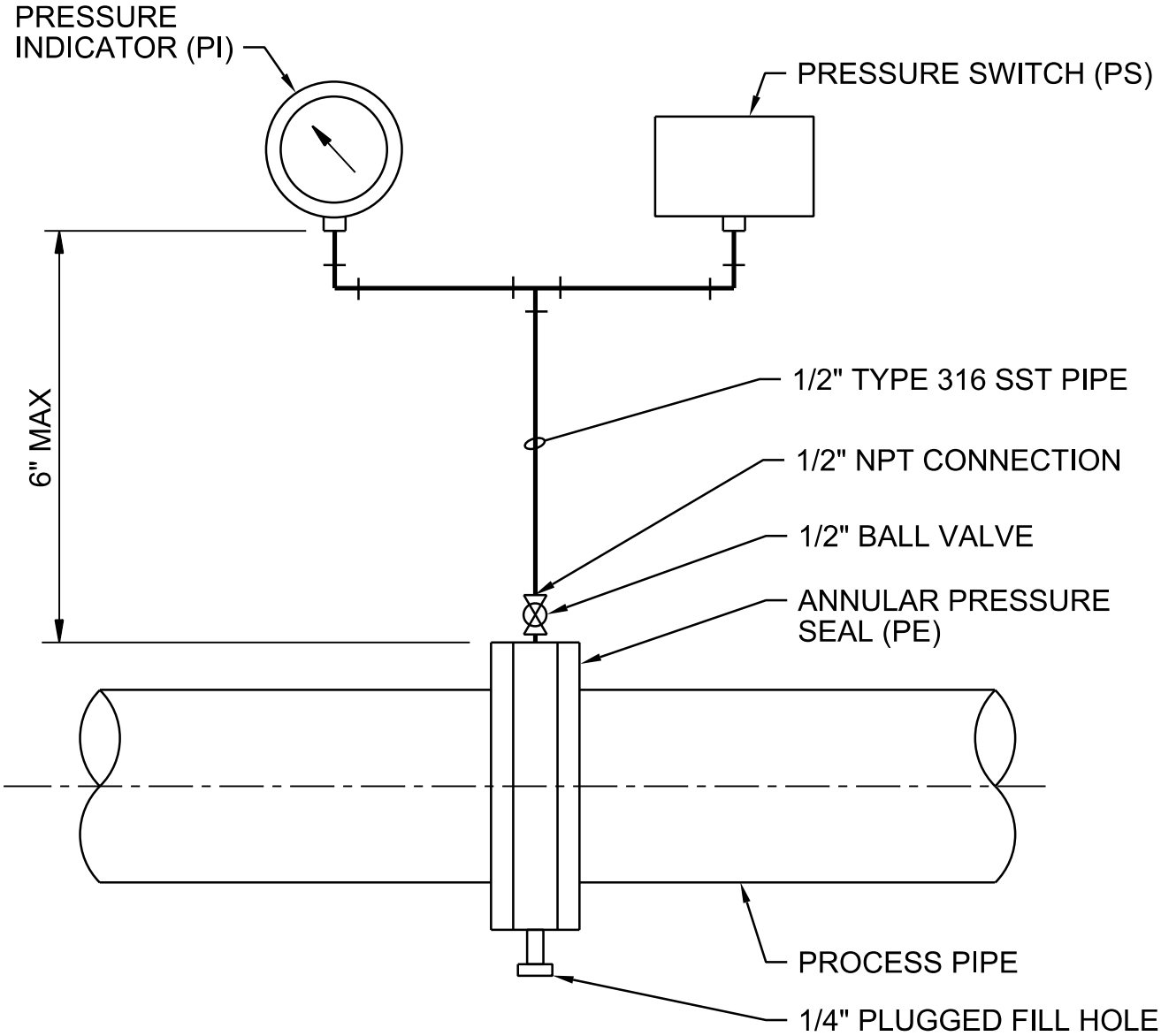

NOTES:

1. INDICATOR AND SWITCH INSTALLATION SHOWN. FOR SINGLE INSTRUMENT INSTALLATIONS, MOUNT DEVICE DIRECTLY TO SEAL.

PRESSURE SWITCH AND INDICATOR WITH ANNULAR SEAL INSTALLALATION

NTS

DETAIL 2 OF 2

4091-304

NATIONAL PARK SERVICE
GRAND CANYON NATIONAL PARK
SOUTH RIM

© JACOBS

Jacobs

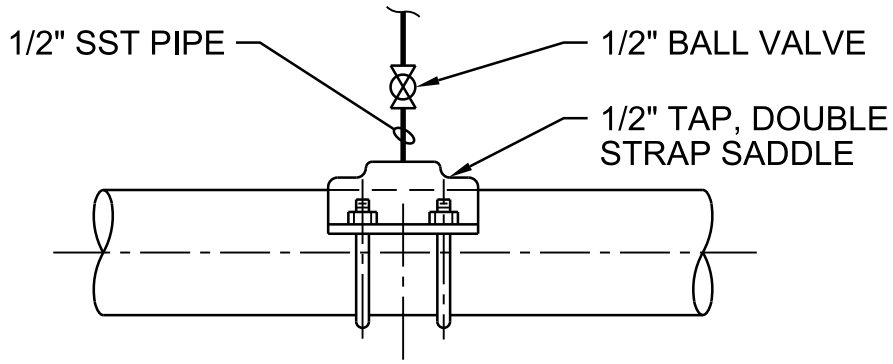

CEMENT LINE STEEL PIPE, CAST IRON PIPE AND DUCTILE IRON PIPE

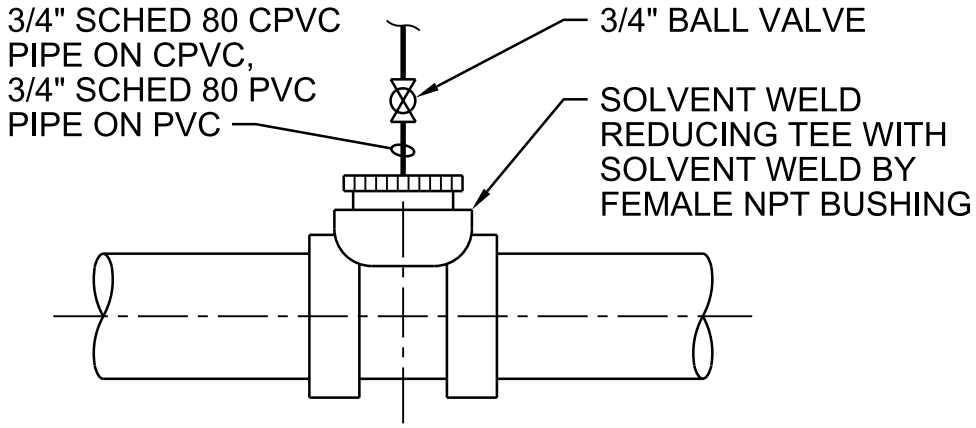

PVC AND CPVC PIPE

PRESSURE CONNECTION INSTALLATION

NTS

DETAIL 1 OF 2

4091-305

NATIONAL PARK SERVICE
GRAND CANYON NATIONAL PARK
SOUTH RIM

© JACOBS

Jacobs

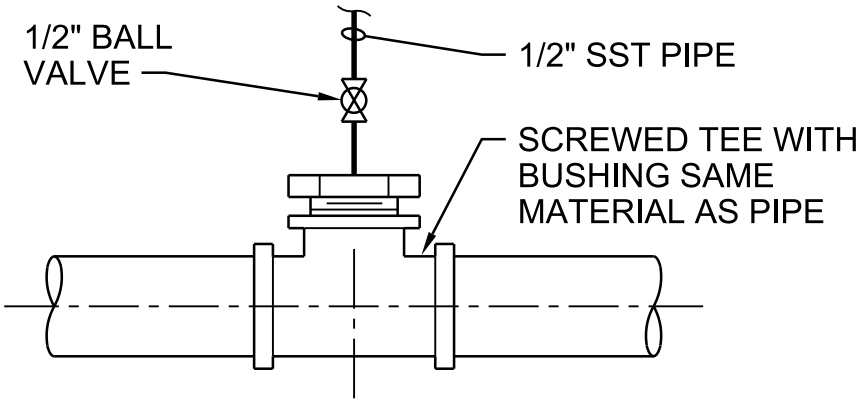

STEEL & SST PIPE 3 1/2" & SMALLER

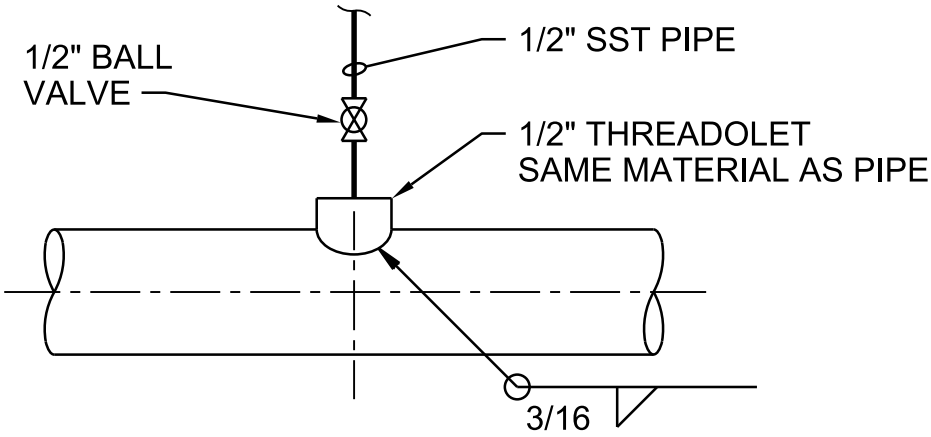

STEEL & SST PIPE 4" & LARGER

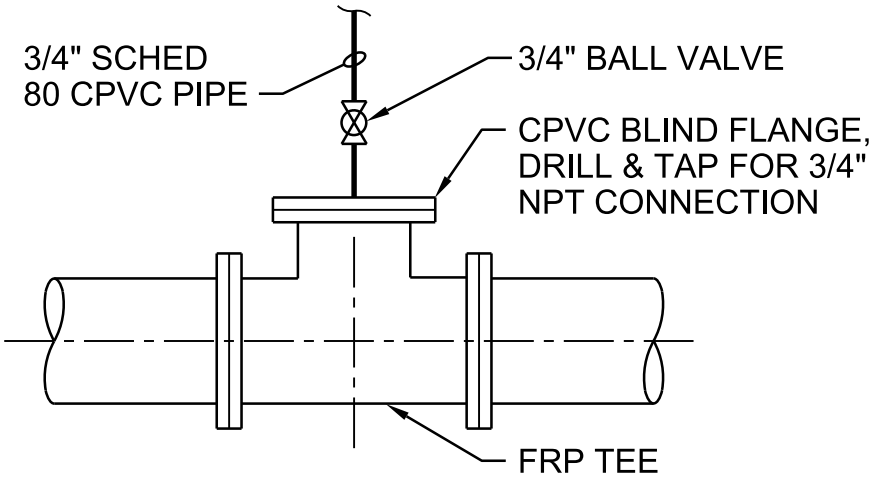

FRP PIPE

PRESSURE CONNECTION INSTALLATION

NTS

DETAIL 2 OF 2

4091-305

NATIONAL PARK SERVICE
GRAND CANYON NATIONAL PARK
SOUTH RIM

© JACOBS

Jacobs

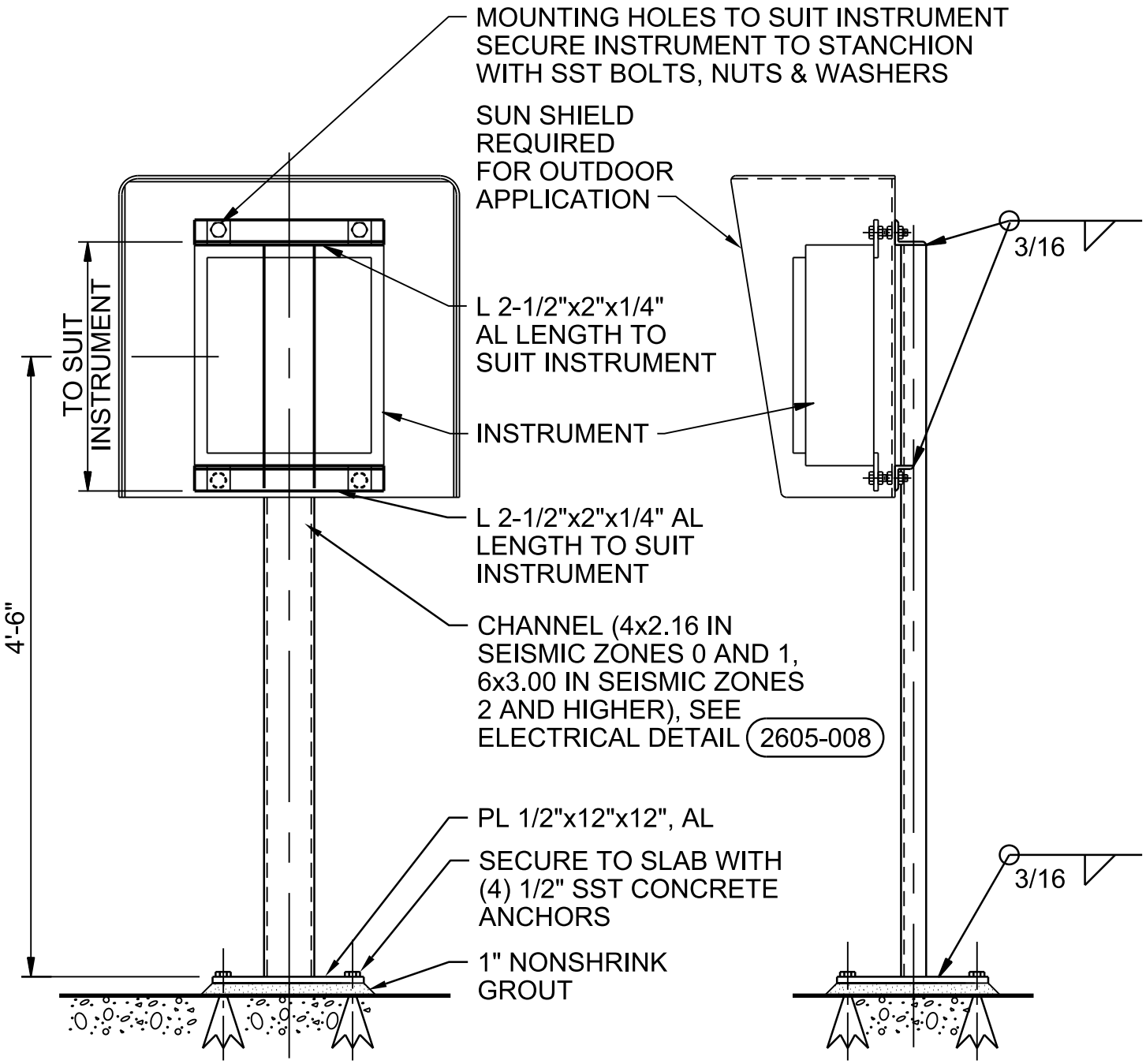

NOTES:

1. ROUND OFF ALL EXPOSED EDGES AND CORNERS.

2. PAINT ALUMINUM IN CONTACT WITH CONCRETE ACCORDING TO SPECIFICATIONS FOR PAINTING.

STANCHION SUPPORT FOR CASE MOUNTED INSTRUMENTS

NTS

DETAIL 1 OF 2

4091-382

NATIONAL PARK SERVICE
GRAND CANYON NATIONAL PARK
SOUTH RIM

© JACOBS

Jacobs

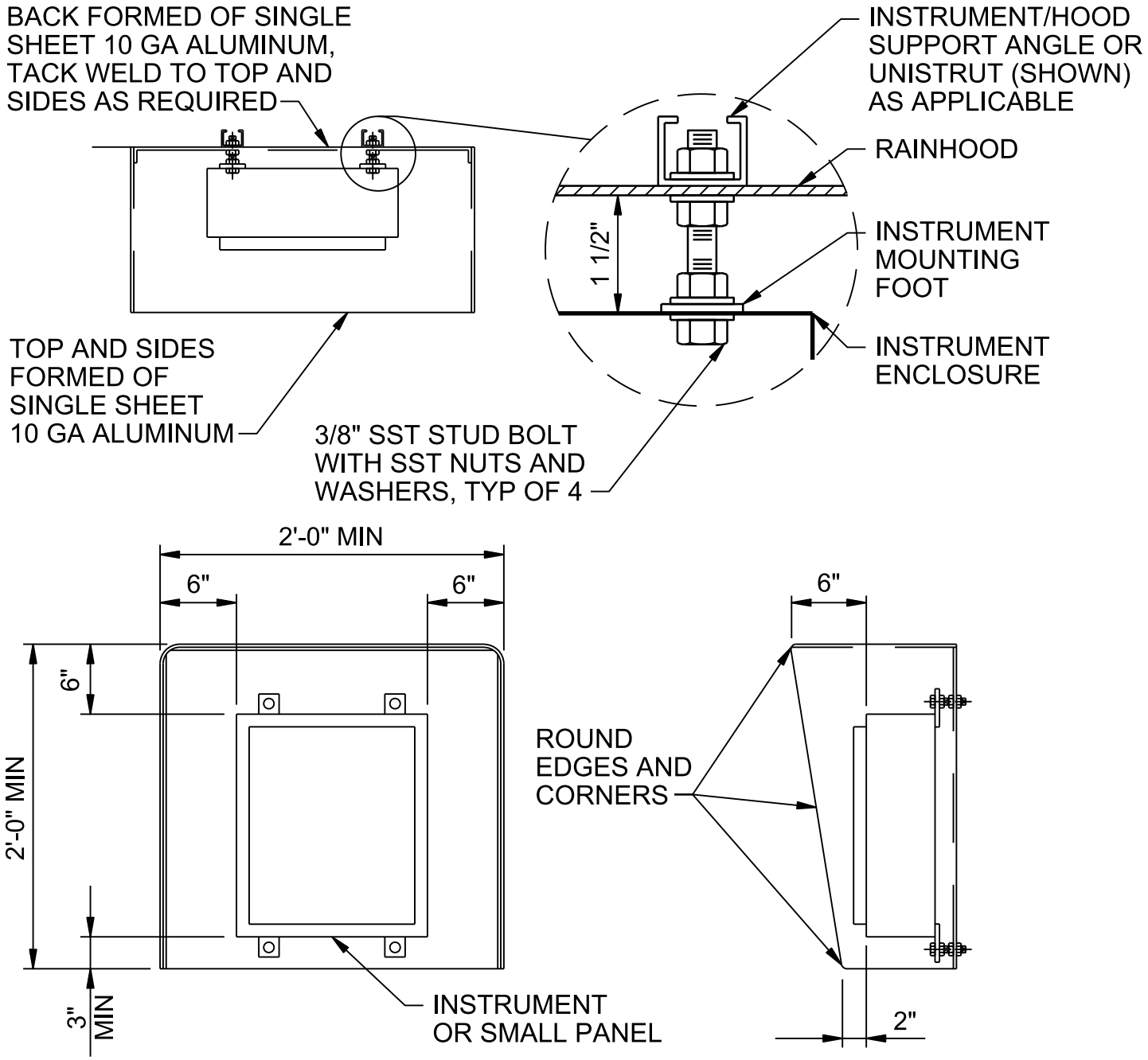

RAIN HOOD INSTALLATION

NTS

DETAIL 2 OF 2

4091-382

NATIONAL PARK SERVICE
GRAND CANYON NATIONAL PARK
SOUTH RIM

© JACOBS

Jacobs

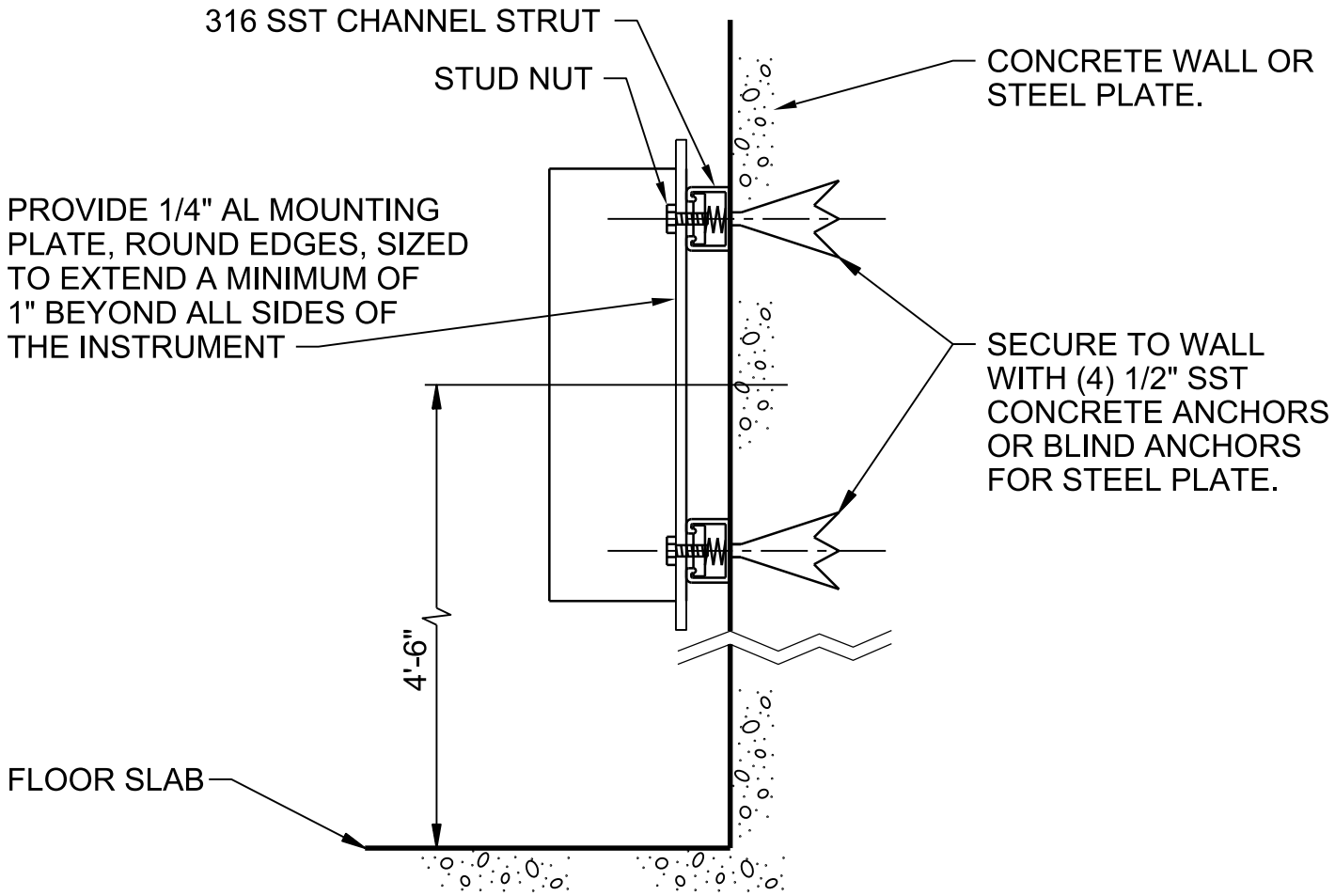

NOTES:

1. ALL INSTRUMENTS AND PANELS LOCATED OUTDOORS SHALL HAVE A SUN SHIELD, SEE 4091-382 .

WALL MOUNTED INSTRUMENT

NTS

NATIONAL PARK SERVICE
GRAND CANYON NATIONAL PARK
SOUTH RIM

4091-384

© JACOBS

Jacobs

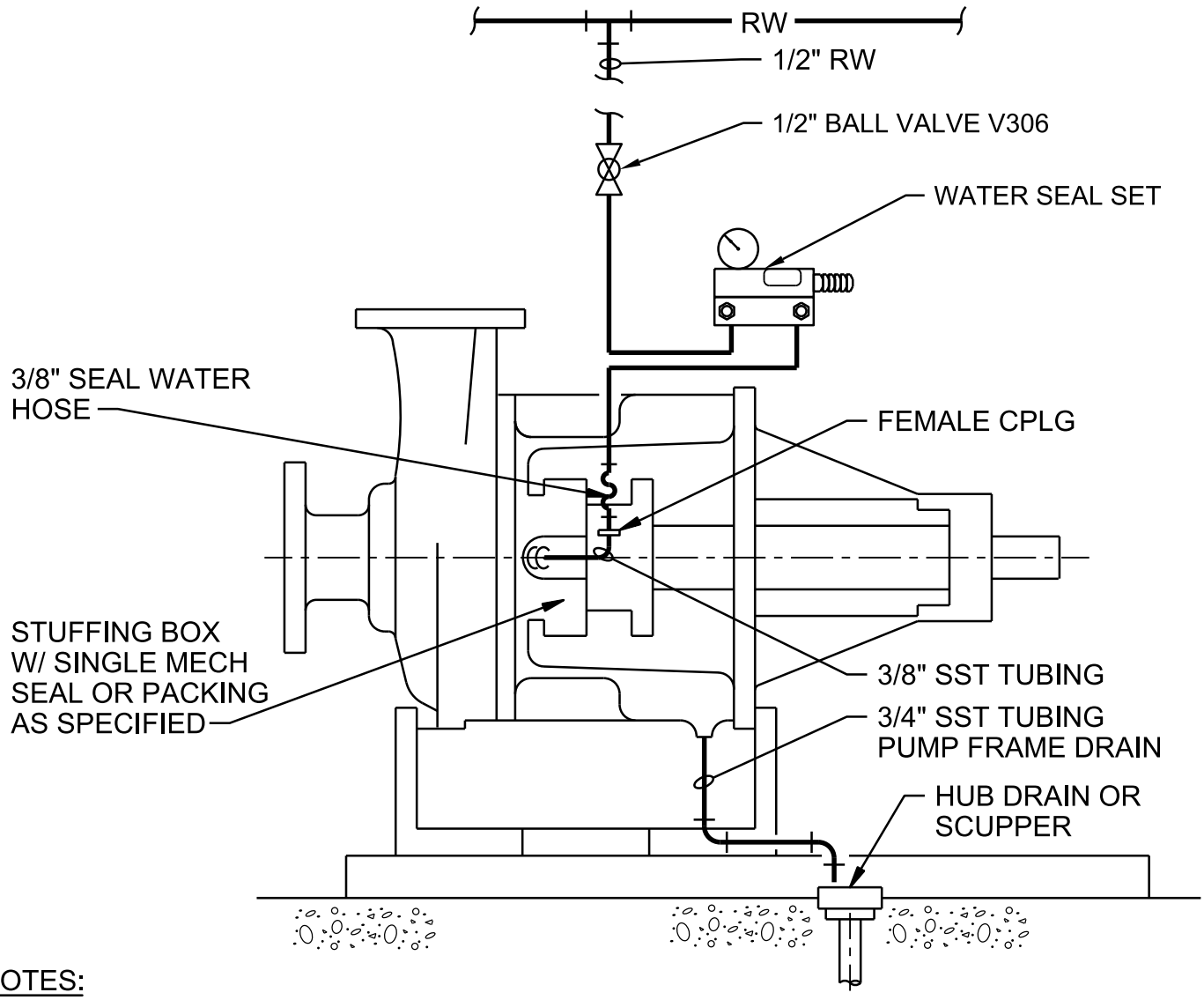

NOTES:

1. USE SST TUBING ADAPTERS AND BUSHINGS AS REQUIRED FOR ALL CONNECTIONS TO PUMP.

2. SEE SECTION 40 27 01, PROCESS PIPING SPECIALITIES FOR THE SEAL WATER SET REQUIREMENTS.

HORIZ CNTFGL END SUCTION PUMP SEAL WATER DETAIL

NTS

NATIONAL PARK SERVICE
GRAND CANYON NATIONAL PARK
SOUTH RIM

4442-664

© JACOBS

Jacobs

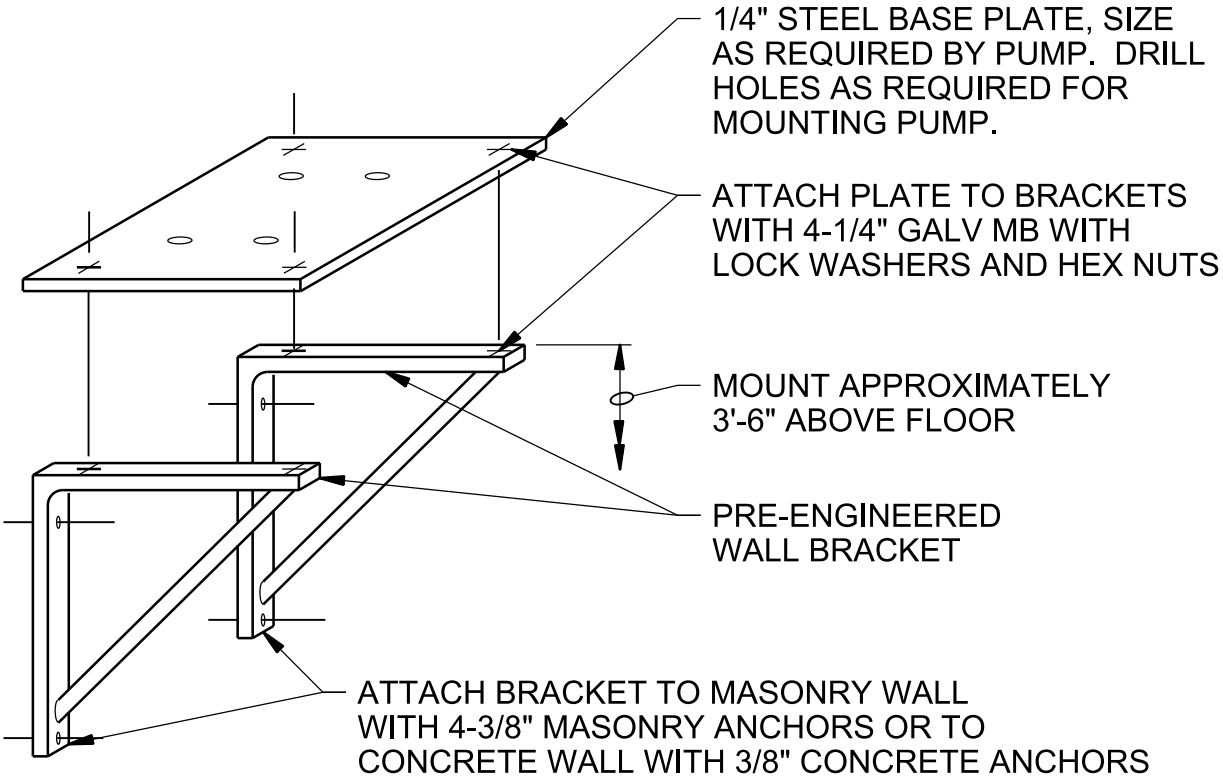

NOTES:

1. HOT DIP GALVANIZE ENTIRE ASSEMBLY AFTER FABRICATION.

SMALL PUMP SUPPORT

NTS

NATIONAL PARK SERVICE
GRAND CANYON NATIONAL PARK
SOUTH RIM

4442-715

© JACOBS

Jacobs

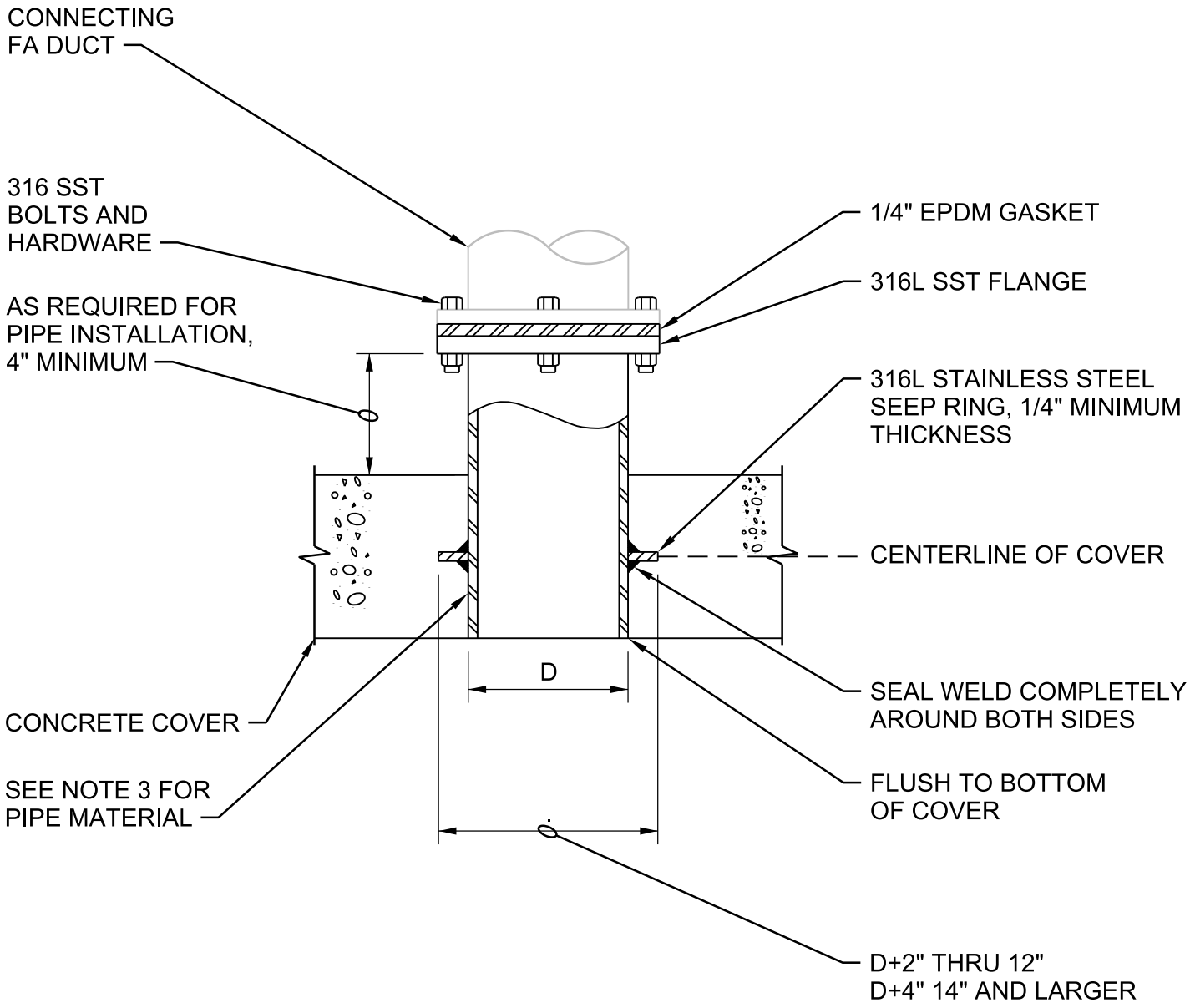

NOTES:

1. DIAMETER OF PIPE TO MATCH THE SIZE AS SHOWN ON DRAWINGS.
2. COORDINATE FLANGE DIMENSIONS AND BOLTING PATTERN TO MATCH CONNECTING DUCTWORK.
3. 316L SCHEDULE 10 FOR PIPE PENETRATIONS FOR AIR INLET

STAINLESS STEEL FA FLOOR PIPE

NTS

NATIONAL PARK SERVICE
GRAND CANYON NATIONAL PARK
SOUTH RIM

4447-898

© JACOBS

Jacobs