VA OKC - DESIGN REPAIR PARKING GARAGE

OKLAHOMA CITY, OKLAHOMA

DATE: 04/23/2026

CONTRACT #: 36C25923N0435

VA PROJECT #: 635-21-139

ADDENDUM 01

DRAWING SYMBOLS

- 98.5 TOC — NEW ELEVATION / EXISTING ELEVATION
- 98.5 E TOC — EXISTING ELEVATION / EXISTING ELEVATION
- 95 — EXISTING CONTOUR
- 95.00 — NEW CONTOUR
- ELEVATION DATUM (SECTIONS, ELEVATIONS ONLY)
- B — TEST BORING (SITE PLANS ONLY)
- PROPERTY LINE
- 1 / A101 — SHT. REFERENCE
- 1 / A101 — MATCHLINE
- PRECAST CONCRETE WALL PANEL TAG
- X / X.X — BUILDING SECTION
- X / X.X — WALL SECTION
- 1 / A101 — DETAIL DRAWING
- A3.1 — BUILDING ELEVATION
- 1 / A6.1 — INTERIOR ELEVATION
- # — PLAN NOTES
- WINDOW ID TAG
- A100 — DOOR NUMBER
- ROOM NAME 101 — ROOM NAME & NUMBER
- A-4 — ALTERNATE TAG
- XXX — PARTITION SYMBOL
- 1 — REVISION TAG
- 0 — COLUMN LINE GRID
- # — DEMOLITION PLAN NOTES
- ? — SITE PLAN NOTES
- EQUIPMENT NUMBER
- PT-XX — PAINT COLOR TAG

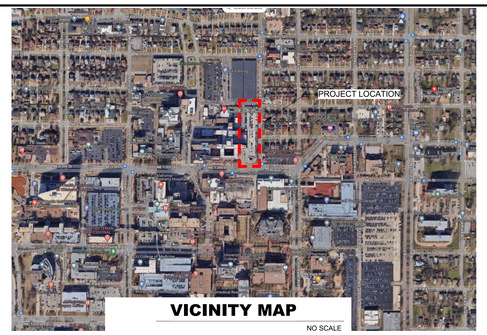

VICINITY MAP

NO SCALE

MATERIAL SYMBOLS

- EARTH
- GRANULAR FILL
- CONCRETE
- CONCRETE MASONRY
- FACE BRICK
- LVC FILL
- CUT STONE
- STEEL
- CONT WD FRAMING
- WOOD BLOCKING
- FINISH WOOD
- PLYWOOD
- RIGID OR TAPERED INSULATION, EIFS
- BATT INSULATION
- GLASS
- ASPHALT
- GYPSUM BOARD
- EXISTING CONSTRUCTION

SHEET INDEX

NO.	SHEET NAME
GENERAL	
G-001	COVER SHEET
CIVIL	
V100	EXISTING CONDITIONS PLAN
CD100	CIVIL DEMOLITION PLAN
CS100	CIVIL SITE PLAN
CG100	CIVIL GRADING PLAN
CS500	CIVIL SITE DETAILS
ARCHITECTURAL	
A100	SITE PLAN - OVERALL
A101	FLOOR PLAN - GROUND FLOOR - AREA A
A102	FLOOR PLAN - LEVEL 1 - AREA A
A103	FLOOR PLAN - LEVEL 1 - AREA B
A104	FLOOR PLAN - LEVEL 2 - AREA A
A105	FLOOR PLAN - LEVEL 2 - AREA B
A106	FLOOR PLAN - LEVEL 3 - AREA A
A107	FLOOR PLAN - LEVEL 3 - AREA B
A108	RAILING ELEVATIONS
A109	SOUTH STAIR ENLARGED PLANS & SECTIONS
A110	SOUTH STAIR ELEVATIONS
A111	SOUTH STAIR DETAILS
A112	NORTHEAST STAIR ENCLOSURE ENLARGED PLANS, SECTIONS & ELEVATIONS
A113	CURTAIN WALL SCHEDULE - STAIR ENCLOSURES
A114	P15 ENCLOSURE ENLARGED PLANS, SECTION & ELEVATIONS
A115	P17 ENCLOSURE ENLARGED PLANS, SECTION & ELEVATIONS
A116	NORTH STAIR, P15 & P17 ENCLOSURES DETAILS
A117	SOUTH STAIR CURTAIN WALL SCHEDULE
C101	SOUTH STAIR CONCEPT DRAWINGS
C102	NORTHEAST STAIR ENCLOSURE CONCEPT DRAWINGS
C103	P15 & P17 ELEVATOR ENCLOSURE CONCEPT DRAWINGS
STRUCTURAL	
S-001	GENERAL STRUCTURAL NOTES, DESIGN LOADS & ABBREVIATIONS
S-002	QA NOTES & TABLES
S-100	FOUNDATION REPAIR PLAN
S-101	STRUCTURAL FRAMING PLANS
S-102	STRUCTURAL FRAMING PLANS
S-103	STRUCTURAL FRAMING PLANS
S-104	VESTIBULE STRUCTURAL FRAMING PLANS
S-201	FRAMING ELEVATIONS
S-301	TYPICAL CONCRETE DETAILS
S-302	TYPICAL FOUNDATION DETAILS
S-501	TYPICAL STRUCTURAL DETAILS
S-502	TYPICAL STRUCTURAL DETAILS
S-503	TYPICAL STRUCTURAL DETAILS
S-551	SHORING AND STRUCTURAL REPAIR DETAILS
ELECTRICAL	
E000	ELECTRICAL SYMBOLS AND ABBREVIATIONS
EP200	GROUND LEVEL - FLOOR PLAN - FIRE ALARM
EP200	GROUND LEVEL - FLOOR PLAN - POWER & LOW VOLTAGE
EP201	LEVEL 01 - FLOOR PLAN - POWER & LOW VOLTAGE
EP202	LEVEL 02 - FLOOR PLAN - POWER & LOW VOLTAGE
EP203	LEVEL 03 - FLOOR PLAN - POWER & LOW VOLTAGE
E300	ELECTRICAL ENLARGED PLANS
E700	ELECTRICAL SCHEDULES

ABBREVIATIONS

+/-	plus or minus
A/C	air conditioning
AB	anchor bolt
AC	acoustical
ACCU	air cooled condensing unit
ADJ	adjustable
AFF	above finish floor
AHJ	authority having jurisdiction
ALT	alternate
ALUM	aluminum
ANOD	anodized
APPROX	approximate
ARCH	architect/ architectural
@	at
BD	board
BLDG	building
BLK	block/blocking
BM	beam
BMRK	benchmark
BOC	back of curb
BRG	bearing
BRK	brick
BRZ	bronze
BO	bottom of
BS	both sides
BTM	bottom
BUR	built-up roof
BW	bottom of wall
CAB	cabinet
CB	chalkboard
CC	center to center
CJ	control joint/ construction joint
CL	center line
CLG	ceiling
CLO	closet
CLR	clear/clearance
CMU	concrete masonery unit
COL	column
CONC	concrete
CONF	conference
CONST	construction
CONT	continuous
CORR	corridor
CPT	carpet
CRS	course
CT	ceramic tile
DBL	double
DF	drinking fountain
DIA	diameter
DIM	dimension
DN	down
DO	ditto
DR	door
DS	downspout
DTL	detail
DWG	drawing
E	east
EA	each
EC	electrical contractor
EG	existing grade
EIFS	exterior insulation finish system
EJ	expansion joint
ELEC	electrical
ELEV	elevation/elevator
EQUIP	equipment
EW	each way
EXIST	existing
EXP	exposed
EPDM	ethylene propylene diene terpolymer
EXT	exterior
FD	floor drain
FDN	foundation
FE	fire extinguisher
FEC	fire extinguisher cabinet
FF	finish floor
FG	finish grade
FIN	finish
FL	flow line
FLDG	folding
FLR	floor
FLUOR	fluorescent
FOE	face of existing
FOF	face of finish
FRP	fiberglass reinforced plastic
FRT	fire retardant
FS	foot scraper
FT()	foot
FTG	footing
FURR	furring
FURN	furnace
FV	field verify
G	gas
GA	gauge
GALV	galvanized
GB	grab bar
GC	general contractor
GL	glass/glazing
GRD	grade
GYP	gypsum
HB	hose bib
HDWD	hardwood
HDWR	hardware
HM	hollow metal
HORZ	horizontal
HPDL	high pressure decorative laminate
HT	height
HVAC	heating, ventilating & air conditioning
HW	hot water
ID	inside diameter
IN(")	inch
INSUL	insulation
INT	interior
JAN	janitor
JT	joint
JST	joist
LAM	laminate
LAV	lavatory
LDR	ladder
LF	lineal feet
LOCN	location
LVC	low volume change
MANUF	manufacturer
MAS	masonry
MATL	material
MAX	maximum
MECH	mechanical
MEMB	membrane
MEP	mechanical, electrical plumbing
MH	manhole
MIN	minimum
MIRR	mirror
MISC	miscellaneous
MO	masonry opening
MTL	metal
MULL	mullion
N	north
NA	not applicable
NIC	not in contract
NO(#)	number
NOM	nominal
NTS	not to scale
OA	overall
OC	on center
OD	outside diameter
OFF	office
OPNG	opening
OVHD	overhead
PART	partition
PLAS	plaster
PL	plate/plastic/ property line
PLBG	plumbing
PLYWD	plywood
PR	pair
PREFIN	prefinished
PROJ(D)	project(ir)(projected)
PT	pressure treated
PTD	painted
QT	quarry tile
R	riser
RAD(R)	radius
RAG	return air grille
RD	roof drain
REF	refer/reference
REFRIG	refrigerator
REINF	reinforcing
REQ'D	required
RESIL	resilient
RM	room
RO	rough opening
ROW	right of way
S	south
SAN	sanitary
SAT	suspended acoustical tile
SB	splash block
SECT	section
SF	square feet
SHT	sheet
SHWR	shower
SIM	similar
SL	solid surface
SND	sanitary napkin dispenser
SPECS	specifications
SQ	square
SRT	studded rubber tile
SS	stainless steel
STD	standard
STL	steel
STOR	storage
STRUCT	structure/structural
SUSP	suspended
T	tread
T&B	top & bottom
T&G	tongue & groove
TB	tackboard
TEL	telephone
TLT	toilet
TO	top of
TOC	top of curb
TPH	toilet paper holder
TV	television
TW	top of wall
TYP	typical
UCL	under cabinet light
UNO	unless noted otherwise
VCT	vinyl composition tile
VERT	vertical
VEST	vestibule
VWC	vinyl wall covering
W	west
W/	with
W/O	with out
WC	water closet
WD	wood
WNDW	window
WH	water heater
WNSCT	wainscot
WP	waterproofing, waterproof
WT	weight
WWF	welded wire fabric
YD	yard

FOR MEDICAL FACILITIES ONLY

CS	central sterile
CT	computed tomography
ER	emergency room
ICU	intensive care unit
LDRP	labor-delivery-recovery-post partum
LTC	long term care
MRI	magnetic resonance imaging
MICU	medical intensive care unit
OR	operating room
OT	occupational therapy
PACU	post anesthetic care unit
PT	physical therapy
RT	respiratory therapy
SICU	surgical intensive care unit

Revisions:	Date:

CONSULTANT

HFG
330 N. Mead St, Suite 100
Wichita, KS 67202
Phone: 316.262.2500
www.hfgarchitecture.com

ARCHITECT/ENGINEER

SES SPECIALIZED ENGINEERING SOLUTIONS
7100 E BELLEVIEW AVE, STE 107
GREENWOOD VILLAGE, CO 80111
Phone: (720) 200-5955
www.specializedeng.com
SES Project : 20114.008

STAMP

4/23/2026

Office of Construction and Facilities Management

VA U.S. Department of Veterans Affairs

Drawing Title	COVER SHEET
Phase	ADDENDUM 01
Project Title	VA OKC - DESIGN REPAIR PARKING GARAGE
Project Number	635-21-139
Building Number	
Approved:	
Location	921 N.E. 13TH STREET OKLAHOMA CITY, OK 73104
Issue Date	04/23/2026
Checked	JW
Drawn	JS
Drawing Number	G-001

NON-SPRINKLERED

VA FORM 08 - 6231

Autodesk Docs://20114.008 - VA Oklahoma City Parking Garage/635-139.A.R22.rvt

4/22/2026 4:19:41 PM

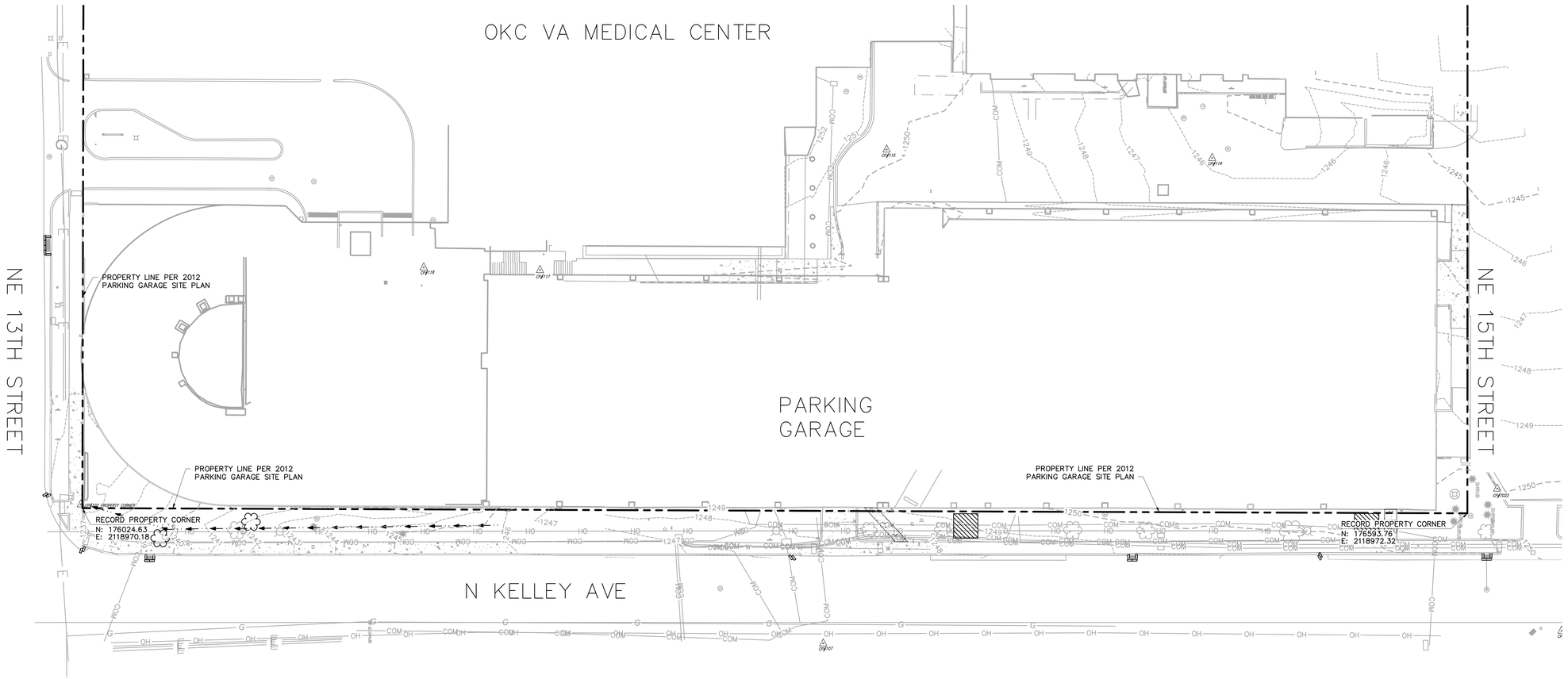

CONSTRUCTION NOTES:

1. CONTRACTOR SHALL FIELD VERIFY EXISTING SITE CONDITIONS. HALT WORK AND NOTIFY THE CONTRACTING OFFICER'S REPRESENTATIVE (C.O.R.) REGARDING ANY INCONSISTENCIES OR VARIATIONS BETWEEN FIELD CONDITIONS AND THESE PLANS. WORK WILL NOT COMMENCE UNTIL APPROVED BY THE C.O.R. ALL FIELD ADJUSTMENTS AND REVISIONS TO THE PLANS MUST BE APPROVED BY THE C.O.R. PRIOR TO INSTALLATION.
2. ALL DIMENSIONS ARE TO BACK OF CURB HEAD MEASURED PERPENDICULARLY, UNLESS OTHERWISE NOTED.
3. LAYOUT OF SITE ELEMENTS SHALL BE APPROVED BY THE C.O.R. PRIOR TO INSTALLATION.
4. CONTRACTOR SHALL NOT PERFORM ANY WORK WITHIN PUBLIC R.O.W. WITHOUT APPROVAL OF C.O.R. AND COORDINATION WITH OKLAHOMA CITY.
5. CONTRACTOR TO SUBMIT SAMPLE OF DECOMPOSED GRANITE MATERIAL FOR APPROVAL TO C.O.R. PRIOR TO PLACEMENT

LEGEND

- EX. PROP LINE – RECORD
- EX. CONTOUR – MAJOR (1300)
- EX. CONTOUR – MINOR (1301)
- FINISHED GRADE CONTOUR – MAJOR (800)
- FINISHED GRADE CONTOUR – MINOR (801)
- EX. CURB AND GUTTER
- EX. GAS MAIN (G)
- EX. WATER MAIN (W)
- EX. WATER VALVE
- EX. FIRE HYDRANT
- EX. SANITARY SEWERS (S)
- EX. STORM DRAIN
- EX. STORM DRAIN INLET
- EX. POWER POLE
- EX. COMMUNICATIONS LINE (COM)
- EX. UNDERGROUND ELECTRIC (E)
- EX. UNDERGROUND TELEPHONE (T)
- EX. OVERHEAD ELECTRIC (OH)
- EX. FENCE (X)
- LIMITS OF DISTURBANCE
- CONTROL POINT

SURVEY CONTROL DATA

1. HORIZONTAL DATUM IS THE OKLAHOMA STATE PLANE COORDINATE SYSTEM, N.A.D. 83(2011) LAMBERT PROJECTION, NORTH ZONE ADJUSTED TO N.G.S. STATE PLANE COORDINATES.
   A. ACCURACY – 3RD ORDER OR BETTER
2. BEARINGS:
   THE BEARINGS SHOWN HEREIN OR HEREON ARE GRID BEARINGS DERIVED FROM THE USC OKLAHOMA PLANE COORDINATE SYSTEM AND ARE NOT ASTRONOMICAL.
3. VERTICAL CONTROLS:
   A. LEVEL DATUM IS NGS, NAVD 88, TAKEN FROM ADJUSTED PRIMARY CONTROL UTILIZING DIFFERENTIAL LEVELING TECHNIQUES.
   B. ACCURACY – 3RD ORDER OR BETTER

GENERAL NOTES:

BENCHMARK NORTHINGS AND EASTINGS ARE FOR LOCATION PURPOSES ONLY AND ARE NOT TO BE USED FOR HORIZONTAL CONTROL.
THIS IS A TOPOGRAPHIC SURVEY ONLY. A BOUNDARY/PROPERTY SURVEY WAS NOT REQUESTED AND NOT COMPLETED AS PART OF THIS SURVEY.
NO EASEMENT RESEARCH WAS CONDUCTED FOR THIS SURVEY AND ANY POSSIBLE EASEMENT LIMITS ARE NOT DEPICTED.

– NO RIGHT–OF–WAY RESEARCH WAS CONDUCTED FOR THIS SURVEY AND ANY POSSIBLE RIGHT–OF–WAY LIMITS ARE NOT DEPICTED.

– GRID NORTH BASED ON GPS OBSERVATION.

UTILITY NOTES:

– PRIOR TO THE FIELD SURVEY CALL OKIE WAS CONTACTED TO MARK UTILITIES. ALL MARKED UTILITIES AND VISIBLE UTILITIES WERE LOCATED DURING SURVEY. HOWEVER, BENCHMARK SURVEYING ASSUMES NO LIABILITY FOR UTILITIES THAT WERE NOT MARKED OR INCORRECTLY MARKED. THE CONTRACTOR FOR CONSTRUCTION IS RESPONSIBLE FOR GETTING THE UTILITIES RE–MARKED BEFORE PERFORMING DIGGING OPERATIONS.

– THERE HAS BEEN NO UNDERGROUND INVESTIGATION PERFORMED ON THE PREMISES IN CONJUNCTION WITH THIS SURVEY. UNDERGROUND FEATURES ARE IDENTIFIED BY THEIR PERTINENT SURFACE MARKINGS. THERE IS NO WARRANTY MADE THAT THIS SURVEY REPRESENTS A COMPLETE INVENTORY OF UNDERGROUND UTILITIES ON OR NEAR THE PREMISES.

–MULTIPLE UTILITIES LIE OUTSIDE OF RIGHT OF WAY, POTENTIAL UTILITY EASEMENTS EXIST FOR THESE UTILITY LINES.

A. MULTIPLE TUG MARKERS AND TELEPHONE VAULTS WERE LOCATED WITHIN THE PROJECT AREA WITH NO LINES MARKED NEARBY. POSSIBLE UNDERGROUND TELEPHONE/CABLE LINES MAY RESIDE NEAR THESE FEATURES.

B. MULTIPLE WATER LINE FEATURES WERE LOCATED WITHIN THE PROJECT AREA WITH NO LINES MARKED NEARBY. POSSIBLE UNDERGROUND WATERLINES RESIDE NEAR THESE FEATURES.

C. MULTIPLE LIGHT POLES WERE LOCATED WITHIN THE PROJECT AREA WITH NO LINES MARKED NEARBY. POSSIBLE UNDERGROUND ELECTRIC LINES RESIDE NEARBY.

D. A FIBER OPTIC MARKER WAS LOCATED WITH NO LINES MARKED NEARBY. POSSIBLE UNDERGROUND FIBER LINES MAY RESIDE NEARBY.

SURVEY CONTROL FOUND ON SITE

NAD 83 / NAVD 88 / US FEET

NAME	NORTHING	EASTING	ELEVATION	DESCRITION
CP#7022	N:176606.03	E:2118962.21	EL:1250.45	CONTROL POINT – MAG NAIL
CP#102	N:176023.95	E:2118968.64	EL:1236.53	CONTROL POINT – MAG NAIL
CP#104	N:175976.51	E:2118789.68	EL:1232.40	CONTROL POINT–60D NAIL
CP#107	N:176329.06	E:2119025.78	EL:1251.08	CONTROL POINT–60D NAIL
CP#109	N:176632.44	E:2119020.58	EL:1251.38	CONTROL POINT–60D NAIL
CP#114	N:176488.88	E:2118826.27	EL:1245.80	CONTROL POINT–60D NAIL
CP#115	N:176355.10	E:2118822.80	EL:1250.01	CONTROL POINT–60D NAIL
CP#117	N:176212.66	E:2118872.33	EL:1245.87	CONTROL POINT–CUT 'X'
CP#118	N:176164.89	E:2118871.22	EL:1237.00	CONTROL POINT–CUT 'X'

N

0 10 20 40
1 inch = 20 ft. Horizontal

Revisions:	Date:

CONSULTANT

Calibre
8822 S. Ridgeline Blevd, Ste310
Highlands Ranch, CO 80129
Phone: 303.730.0434
calibre-engineering.com

ARCHITECT/ENGINEER OF RECORD

SES SPECIALIZED ENGINEERING SOLUTIONS
7100 E Belleview Ave, Ste 107
Greenwood Village, CO 80111
Phone: 720.200.5955
www.specializedeng.com
SES Project .20114.008

STAMP

COLORADO LICENSED
BLAKE L. GUISE
67790
04/23/2026
PROFESSIONAL ENGINEER

Office of Construction and Facilities Management

VA U.S. Department of Veterans Affairs

Drawing Title: EXISTING CONDITIONS PLAN	Phase: ADDENDUM 01	Project Title: VA OKC - REPAIR PARKING GARAGE 1 DEFICIENCIES	Project Number: 635-21-139
Approved:	FULLY SPRINKLERED	Location: 921 N.E. 13TH STREET OKLAHOMA CITY, OK 73104	Building Number
		Issue Date: 04/23/2026 / Checked: RAZ / Drawn: BLG	Drawing Number: V100

VA FORM 08 - 6231

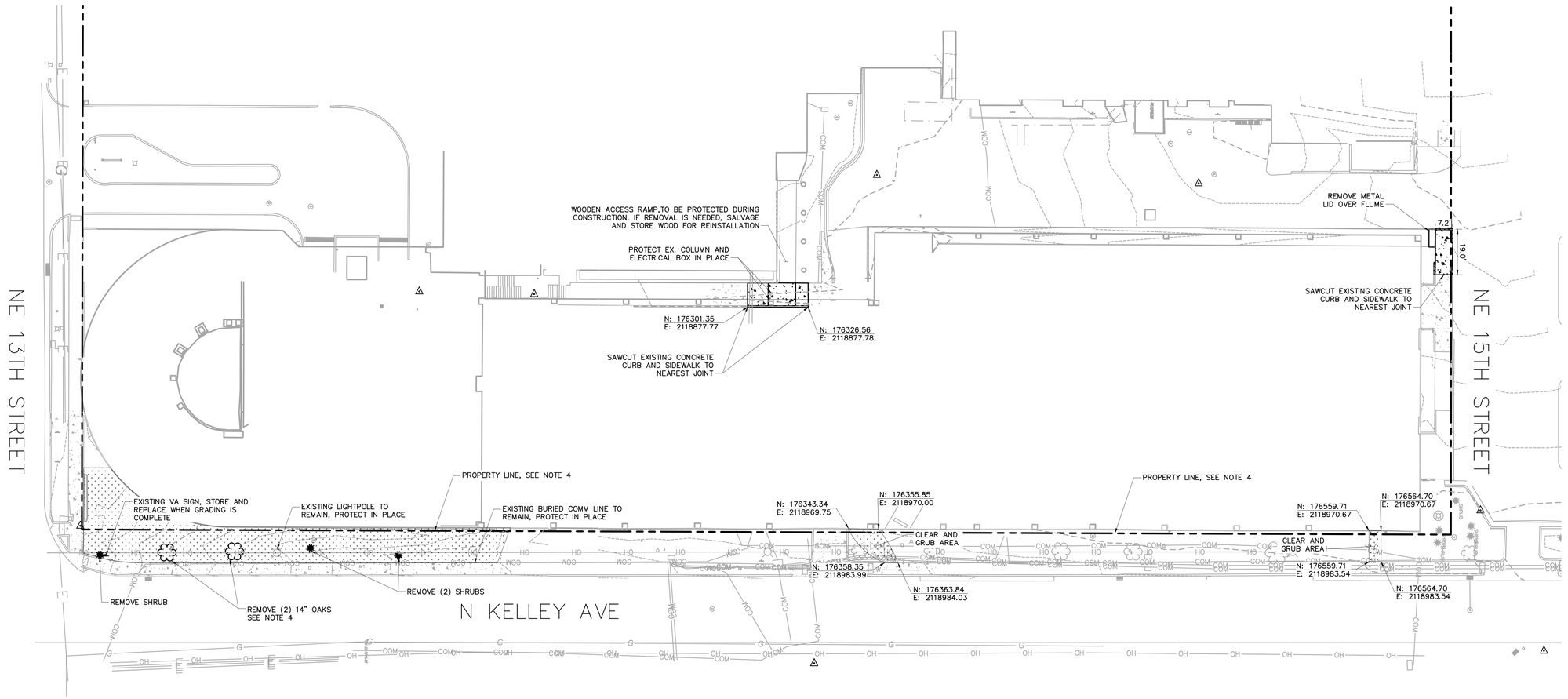

CONSTRUCTION NOTES:

1. CONTRACTOR SHALL FIELD VERIFY EXISTING SITE CONDITIONS. HALT WORK AND NOTIFY THE CONTRACTING OFFICER'S REPRESENTATIVE (C.O.R.) REGARDING ANY INCONSISTENCIES OR VARIATIONS BETWEEN FIELD CONDITIONS AND THESE PLANS. WORK WILL NOT COMMENCE UNTIL APPROVED BY THE R.E. ALL FIELD ADJUSTMENTS AND REVISIONS TO THE PLANS MUST BE APPROVED BY THE C.O.R. PRIOR TO INSTALLATION.
2. ALL DIMENSIONS ARE TO BACK OF CURB HEAD MEASURED PERPENDICULARLY, UNLESS OTHERWISE NOTED.
3. LAYOUT OF SITE ELEMENTS SHALL BE APPROVED BY THE C.O.R.. PRIOR TO INSTALLATION.
4. CONTRACTOR SHALL NOT PERFORM ANY WORK WITHIN PUBLIC R.O.W. WITHOUT APPROVAL OF C.O.R. AND COORDINATION WITH OKLAHOMA CITY.

LEGEND

- EX. PROP LINE – RECORD
- EX. CONTOUR – MAJOR (1300)
- EX. CONTOUR – MINOR (1301)
- FINISHED GRADE CONTOUR – MAJOR (800)
- FINISHED GRADE CONTOUR – MINOR (801)
- EX. CURB AND GUTTER
- EX. GAS MAIN (G)
- EX. WATER MAIN (W)
- EX. WATER VALVE
- EX. FIRE HYDRANT
- EX. SANITARY SEWERS (S)
- EX. STORM DRAIN
- EX. STORM DRAIN INLET
- EX. POWER POLE
- EX. COMMUNICATIONS LINE (COM)
- EX. UNDERGROUND ELECTRIC (E)
- EX. UNDERGROUND TELEPHONE (T)
- EX. OVERHEAD ELECTRIC (OH)
- EX. FENCE (X)
- CONTROL POINT
- DEMO CONCRETE PAVEMENT
- CLEARING AND GRUBBING
- DEMO TREE/SHRUB

N

0 10 20 40
1 inch = 20 ft. Horizontal

Revisions:	Date:

CONSULTANT

Calibre
8822 S. Ridgeline Blevd, Ste310
Highlands Ranch, CO 80129
Phone: 303.730.0434
calibre-engineering.com

ARCHITECT/ENGINEER OF RECORD

SPECIALIZED ENGINEERING SOLUTIONS
7100 E Belleview Ave, Ste 107
Greenwood Village, CO 80111
Phone: 720.200.5955
www.specializedeng.com
SES Project :20114.008

STAMP

COLORADO LICENSED
BLAKE L. GUSE
67790
04/23/2026
PROFESSIONAL ENGINEER

Office of Construction and Facilities Management

VA U.S. Department of Veterans Affairs

Drawing Title: CIVIL DEMOLITION PLAN	Phase: ADDENDUM 01
Approved:	FULLY SPRINKLERED

Project Title	VA OKC - REPAIR PARKING GARAGE 1 DEFICIENCIES
Location	921 N.E. 13TH STREET OKLAHOMA CITY, OK 73104
Issue Date	04/23/2026
Checked	RAZ
Drawn	BLG
Project Number	635-21-139
Building Number	
Drawing Number	CD100

VA FORM 08 - 6231

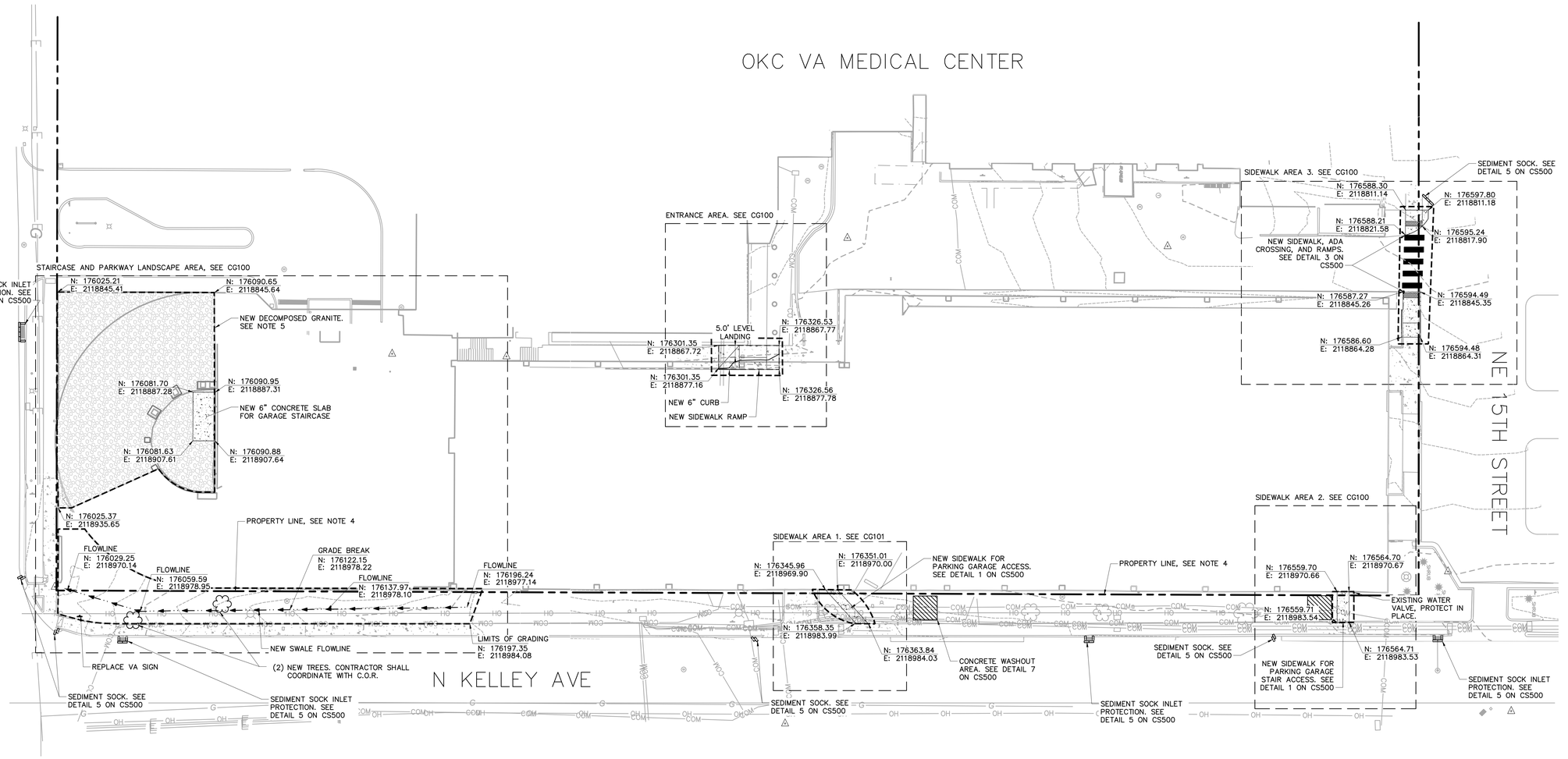

CONSTRUCTION NOTES:

1. CONTRACTOR SHALL FIELD VERIFY EXISTING SITE CONDITIONS. HALT WORK AND NOTIFY THE CONTRACTING OFFICER'S REPRESENTATIVE (C.O.R.) REGARDING ANY INCONSISTENCIES OR VARIATIONS BETWEEN FIELD CONDITIONS AND THESE PLANS. WORK WILL NOT COMMENCE UNTIL APPROVED BY THE C.O.R. ALL FIELD ADJUSTMENTS AND REVISIONS TO THE PLANS MUST BE APPROVED BY THE C.O.R. PRIOR TO INSTALLATION.
2. ALL DIMENSIONS ARE TO BACK OF CURB HEAD MEASURED PERPENDICULARLY, UNLESS OTHERWISE NOTED.
3. LAYOUT OF SITE ELEMENTS SHALL BE APPROVED BY THE C.O.R. PRIOR TO INSTALLATION.
4. CONTRACTOR SHALL NOT PERFORM ANY WORK WITHIN PUBLIC R.O.W. WITHOUT APPROVAL OF C.O.R. AND COORDINATION WITH OKLAHOMA CITY.
5. CONTRACTOR TO SUBMIT SAMPLE OF DECOMPOSED GRANITE MATERIAL FOR APPROVAL TO C.O.R. PRIOR TO PLACEMENT

LEGEND

- EX. PROP LINE – RECORD
- EX. CONTOUR – MAJOR (1300)
- EX. CONTOUR – MINOR (1301)
- FINISHED GRADE CONTOUR – MAJOR (800)
- FINISHED GRADE CONTOUR – MINOR (801)
- EX. CURB AND GUTTER
- EX. GAS MAIN (G)
- EX. WATER MAIN (W)
- EX. WATER VALVE
- EX. FIRE HYDRANT
- EX. SANITARY SEWERS (S)
- EX. STORM DRAIN
- EX. STORM DRAIN INLET
- EX. POWER POLE
- EX. COMMUNICATIONS LINE (COM)
- EX. UNDERGROUND ELECTRIC (E)
- EX. UNDERGROUND TELEPHONE (T)
- EX. OVERHEAD ELECTRIC (OH)
- EX. FENCE (X)
- LIMITS OF DISTURBANCE
- CONTROL POINT
- NEW DECOMPOSED GRANITE
- NEW CONCRETE PAVEMENT
- NEW TRUNCATED DOMES
- CONCRETE WASHOUT AREA
- SEDIMENT SOCK
- GRADE LABEL 1.0%
- NEW GRADED SWALE FLOWLINE

N

0 10 20 40
1 inch = 20 ft. Horizontal

Revisions:	Date:

CONSULTANT

Calibre
8822 S. Ridgeline Blevd, Ste310
Highlands Ranch, CO 80129
Phone: 303.730.0434
calibre-engineering.com

ARCHITECT/ENGINEER OF RECORD

SES SPECIALIZED ENGINEERING SOLUTIONS
7100 E Belleview Ave, Ste 107
Greenwood Village, CO 80111
Phone: 720.200.5955
www.specializedeng.com
SES Project :20114.008

STAMP

COLORADO LICENSED
BLAKE L. GUIE
67790
04/23/2026
PROFESSIONAL ENGINEER

Office of Construction and Facilities Management

VA U.S. Department of Veterans Affairs

Drawing Title	CIVIL SITE PLAN
Approved:	
Phase	ADDENDUM 01
	FULLY SPRINKLERED
Project Title	VA OKC - REPAIR PARKING GARAGE 1 DEFICIENCIES
Location	921 N.E. 13TH STREET OKLAHOMA CITY, OK 73104
Issue Date	04/23/2026
Checked	RAZ
Drawn	BLG
Project Number	635-21-139
Building Number	
Drawing Number	CS100

VA FORM 08 - 6231

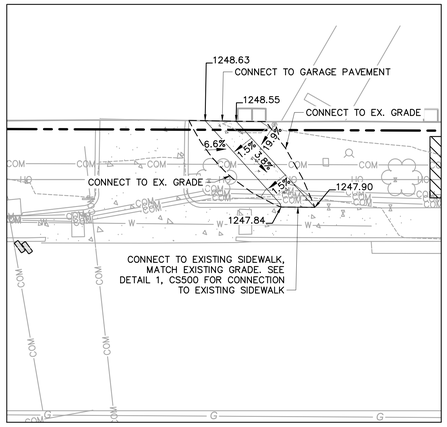

SIDEWALK 1 GRADING PLAN

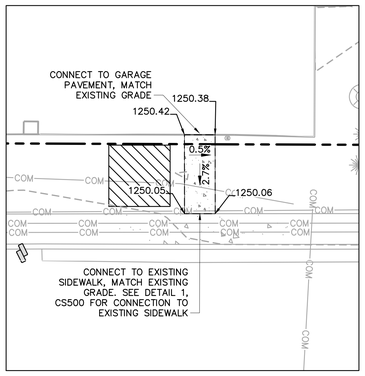

SIDEWALK 2 GRADING PLAN

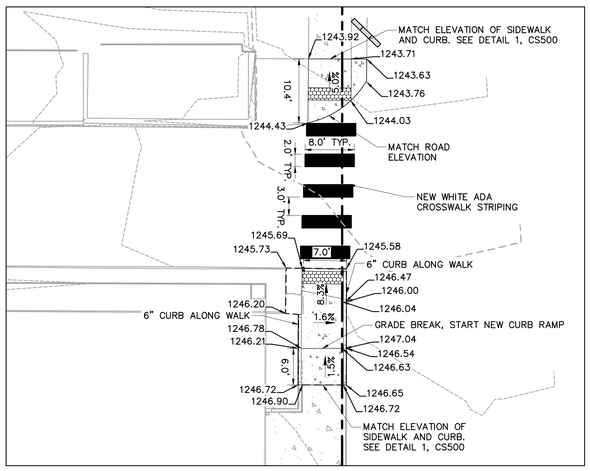

SIDEWALK 3 GRADING PLAN

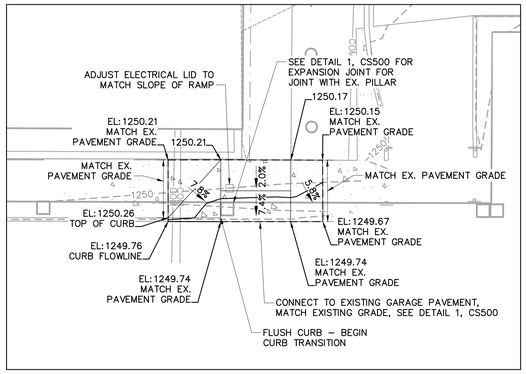

ENTRANCE GRADING PLAN

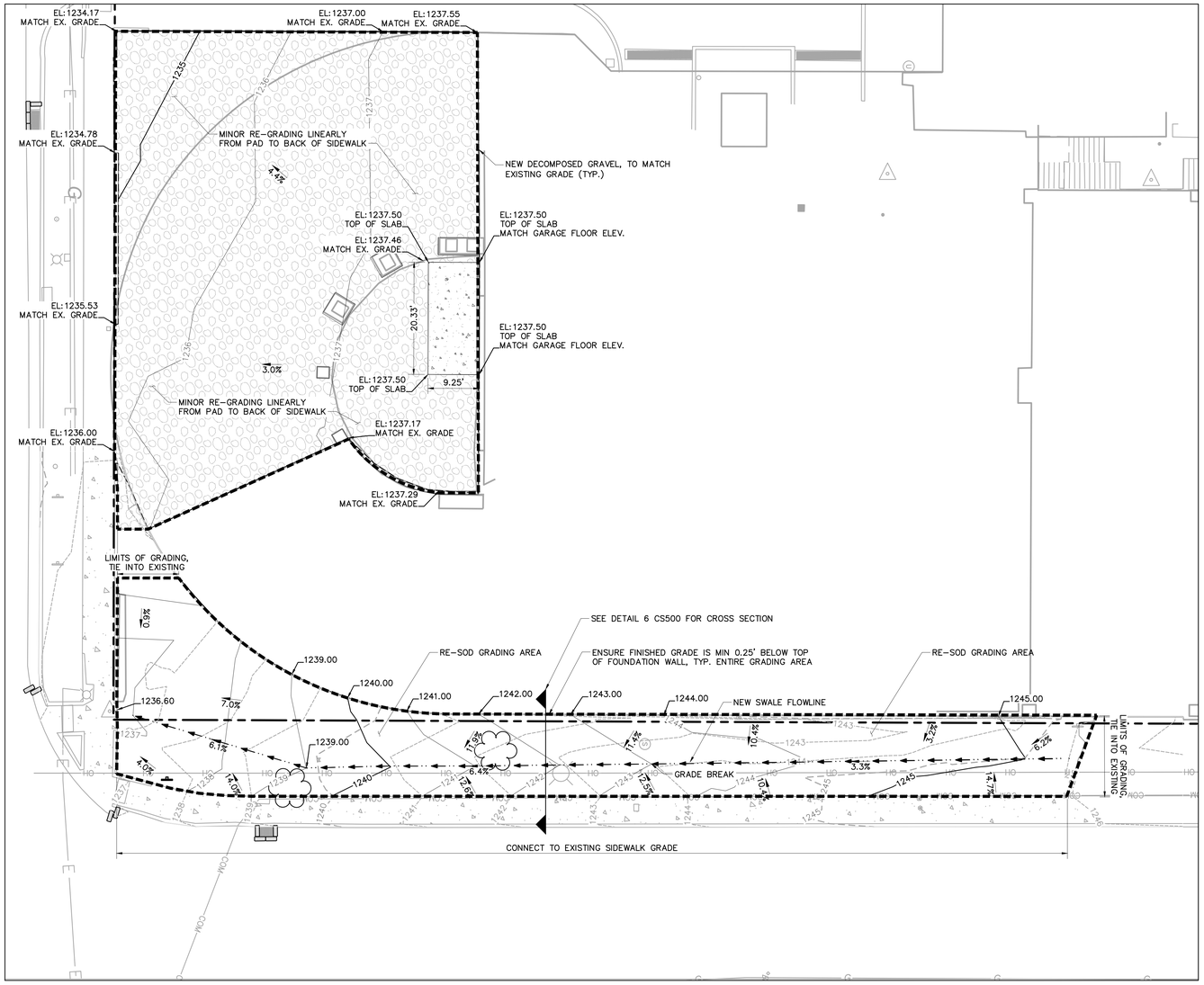

STAIRCASE AND PARKWAY LANDSCAPE GRADING PLAN

CONSTRUCTION NOTES:

1. CONTRACTOR SHALL FIELD VERIFY EXISTING SITE CONDITIONS. HALT WORK AND NOTIFY THE CONTRACTING OFFICER'S REPRESENTATIVE (C.O.R.) REGARDING ANY INCONSISTENCIES OR VARIATIONS BETWEEN FIELD CONDITIONS AND THESE PLANS. WORK WILL NOT COMMENCE UNTIL APPROVED BY THE C.O.R. ALL FIELD ADJUSTMENTS AND REVISIONS TO THE PLANS MUST BE APPROVED BY THE C.O.R. PRIOR TO INSTALLATION.
2. ALL DIMENSIONS ARE TO BACK OF CURB HEAD MEASURED PERPENDICULARLY, UNLESS OTHERWISE NOTED.
3. LAYOUT OF SITE ELEMENTS SHALL BE APPROVED BY THE C.O.R. PRIOR TO INSTALLATION.
4. CONTRACTOR SHALL NOT PERFORM ANY WORK WITHIN PUBLIC R.O.W. WITHOUT APPROVAL OF C.O.R. AND COORDINATION WITH OKLAHOMA CITY.
5. CONTRACTOR TO SUBMIT SAMPLE OF DECOMPOSED GRANITE MATERIAL FOR APPROVAL TO C.O.R. PRIOR TO PLACEMENT

LEGEND

- EX. PROP LINE – RECORD
- EX. CONTOUR – MAJOR (1300)
- EX. CONTOUR – MINOR (1301)
- FINISHED GRADE CONTOUR – MAJOR (800)
- FINISHED GRADE CONTOUR – MINOR (801)
- EX. CURB AND GUTTER
- EX. GAS MAIN (G)
- EX. WATER MAIN (W)
- EX. WATER VALVE
- EX. FIRE HYDRANT
- EX. SANITARY SEWERS (S)
- EX. STORM DRAIN
- EX. STORM DRAIN INLET
- EX. POWER POLE
- EX. COMMUNICATIONS LINE (COM)
- EX. UNDERGROUND ELECTRIC (E)
- EX. UNDERGROUND TELEPHONE (T)
- EX. OVERHEAD ELECTRIC (OH)
- EX. FENCE (X)
- LIMITS OF DISTURBANCE
- CONTROL POINT
- NEW DECOMPOSED GRANITE
- NEW CONCRETE PAVEMENT
- NEW TRUNCATED DOMES
- CONCRETE WASHOUT AREA
- SEDIMENT SOCK
- GRADE LABEL (1.0%)
- NEW GRADED SWALE FLOWLINE

N

0 5 10 20
1 inch = 10 ft. Horizontal

Revisions:	Date:

CONSULTANT

Calibre
8822 S. Ridgeline Blevd, Ste310
Highlands Ranch, CO 80129
Phone: 303.730.0434
calibre-engineering.com

ARCHITECT/ENGINEER OF RECORD

SES SPECIALIZED ENGINEERING SOLUTIONS
7100 E Belleview Ave, Ste 107
Greenwood Village, CO 80111
Phone: 720.200.5955
www.specializedeng.com
SES Project :20114.008

STAMP

COLORADO LICENSED
BLAKE L. GUIDE
67790
04/23/2026
PROFESSIONAL ENGINEER

Office of Construction and Facilities Management

VA U.S. Department of Veterans Affairs

Drawing Title	CIVIL GRADING PLAN
Phase	ADDENDUM 01
Approved:	
	FULLY SPRINKLERED
Project Title	VA OKC - REPAIR PARKING GARAGE 1 DEFICIENCIES
Location	921 N.E. 13TH STREET OKLAHOMA CITY, OK 73104
Project Number	635-21-139
Building Number	
Drawing Number	CG100
Issue Date	04/23/2026
Checked	RAZ
Drawn	BLG

VA FORM 08 - 6231

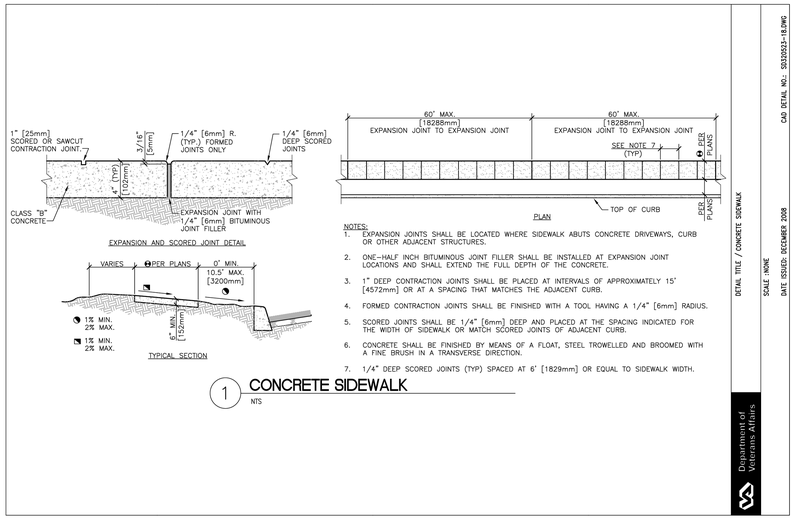

NOTES:
1. EXPANSION JOINTS SHALL BE LOCATED WHERE SIDEWALK ABUTS CONCRETE DRIVEWAYS, CURB OR OTHER ADJACENT STRUCTURES.
2. ONE-HALF INCH BITUMINOUS JOINT FILLER SHALL BE INSTALLED AT EXPANSION JOINT LOCATIONS AND SHALL EXTEND THE FULL DEPTH OF THE CONCRETE.
3. 1" DEEP CONTRACTION JOINTS SHALL BE PLACED AT INTERVALS OF APPROXIMATELY 15' [4572mm] OR AT A SPACING THAT MATCHES THE ADJACENT CURB.
4. FORMED CONTRACTION JOINTS SHALL BE FINISHED WITH A TOOL HAVING A 1/4" [6mm] RADIUS.
5. SCORED JOINTS SHALL BE 1/4" [6mm] DEEP AND PLACED AT THE SPACING INDICATED FOR THE WIDTH OF SIDEWALK OR MATCH SCORED JOINTS OF ADJACENT CURB.
6. CONCRETE SHALL BE FINISHED BY MEANS OF A FLOAT, STEEL TROWELLED AND BROOMED WITH A FINE BRUSH IN A TRANSVERSE DIRECTION.
7. 1/4" DEEP SCORED JOINTS (TYP) SPACED AT 6' [1829mm] OR EQUAL TO SIDEWALK WIDTH.

1 CONCRETE SIDEWALK
NTS

DETAIL TITLE / CONCRETE SIDEWALK
SCALE :NONE
DATE ISSUED: DECEMBER 2008
CAD DETAIL NO.: SD320523-18.DWG
Department of Veterans Affairs

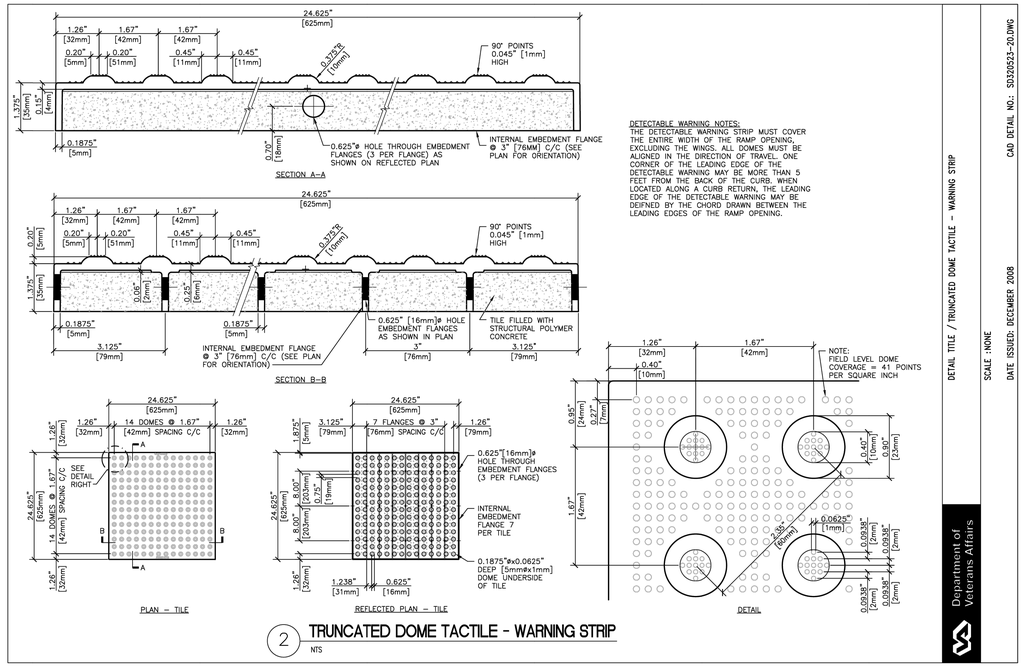

DETECTABLE WARNING NOTES:
THE DETECTABLE WARNING STRIP MUST COVER THE ENTIRE WIDTH OF THE RAMP OPENING, EXCLUDING THE WINGS. ALL DOMES MUST BE ALIGNED IN THE DIRECTION OF TRAVEL. ONE CORNER OF THE LEADING EDGE OF THE DETECTABLE WARNING MAY BE MORE THAN 5 FEET FROM THE BACK OF THE CURB. WHEN LOCATED ALONG A CURB RETURN, THE LEADING EDGE OF THE DETECTABLE WARNING MAY BE DEIFNED BY THE CHORD DRAWN BETWEEN THE LEADING EDGES OF THE RAMP OPENING.

2 TRUNCATED DOME TACTILE - WARNING STRIP
NTS

DETAIL TITLE / TRUNCATED DOME TACTILE - WARNING STRIP
SCALE :NONE
DATE ISSUED: DECEMBER 2008
CAD DETAIL NO.: SD320523-20.DWG
Department of Veterans Affairs

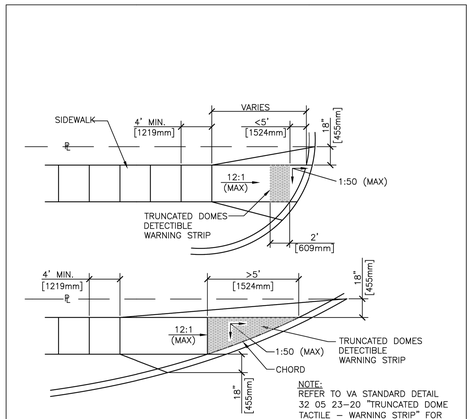

3 CURB ACCESS RAMP ALTERNATIVES
NTS

DETAIL TITLE / CONCRETE HEADER
SCALE :NONE
DATE ISSUED: DECEMBER 2008
CAD DETAIL NO.: SD320523-02.DWG
Department of Veterans Affairs

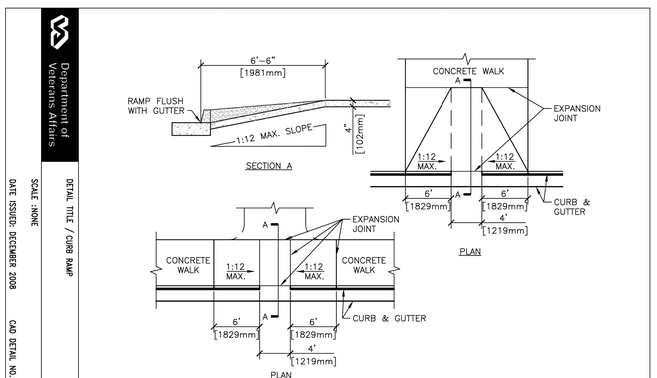

4 CURB RAMP
NTS

DETAIL TITLE / CURB RAMP
SCALE :NONE
DATE ISSUED: DECEMBER 2008
CAD DETAIL NO.: SD320523-03.DWG
Department of Veterans Affairs

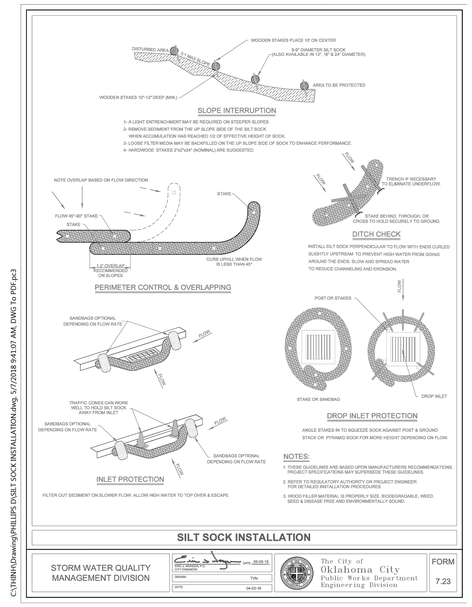

C:\THINH\Drawing\PHILLIPS DS\SILT SOCK INSTALLATION.dwg, 5/7/2018 9:41:07 AM, DWG To PDF.pc3

5 OKC SILT SOCK
SCALE: NTS

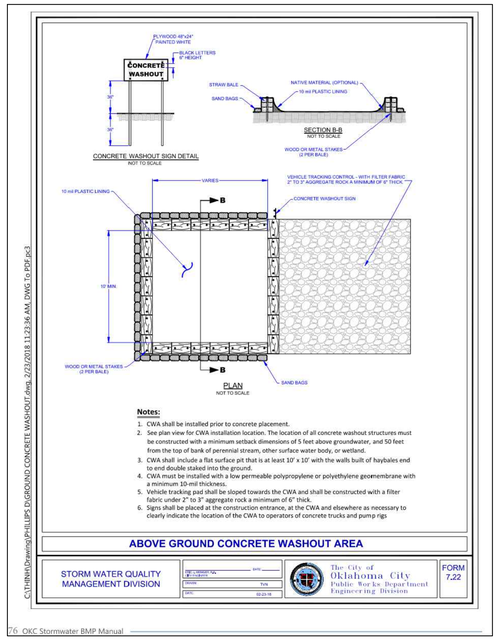

Notes:
1. CWA shall be installed prior to concrete placement.
2. See plan view for CWA installation location. The location of all concrete washout structures must be constructed with a minimum setback dimensions of 5 feet above groundwater, and 50 feet from the top of bank of perennial stream, other surface water body, or wetland.
3. CWA shall include a flat surface pit that is at least 10' x 10' with the walls built of haybales end to end double staked into the ground.
4. CWA must be installed with a low permeable polypropylene or polyethylene geomembrane with a minimum 10-mil thickness.
5. Vehicle tracking pad shall be sloped towards the CWA and shall be constructed with a filter fabric under 2" to 3" aggregate rock a minimum of 6" thick.
6. Signs shall be placed at the construction entrance, at the CWA and elsewhere as necessary to clearly indicate the location of the CWA to operators of concrete trucks and pump rigs

ABOVE GROUND CONCRETE WASHOUT AREA

STORM WATER QUALITY MANAGEMENT DIVISION
The City of Oklahoma City Public Works Department Engineering Division
FORM 7.22

C:\THINH\Drawing\PHILLIPS DS\GROUND CONCRETE WASHOUT.dwg, 2/3/2018 11:23:36 AM, DWG To PDF.pc3

7 OKC CONCRETE WASHOUT AREA
SCALE: NTS

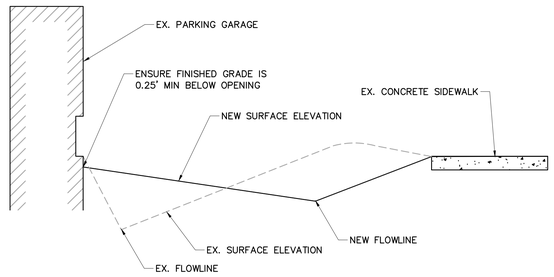

6 GRADING CROSS SECTION
SCALE: NTS

Revisions:	Date:

CONSULTANT
Calibre
8822 S. Ridgeline Blevd, Ste310
Highlands Ranch, CO 80129
Phone: 303.730.0434
calibre-engineering.com

ARCHITECT/ENGINEER OF RECORD
SES Specialized Engineering Solutions
7100 E Belleview Ave, Ste 107
Greenwood Village, CO 80111
Phone: 720.200.5955
www.specializedeng.com
SES Project :20114.008

STAMP
COLORADO LICENSED
BLAKE L. GUDE
67790
04/23/2026
PROFESSIONAL ENGINEER

Office of Construction and Facilities Management
VA U.S. Department of Veterans Affairs

Drawing Title: CIVIL SITE DETAILS	Phase: ADDENDUM 01
Approved:	FULLY SPRINKLERED

Project Title: VA OKC - REPAIR PARKING GARAGE 1 DEFICIENCIES	Project Number: 635-21-139
Location: 921 N.E. 13TH STREET OKLAHOMA CITY, OK 73104	Building Number:
Issue Date: 04/23/2026 / Checked: RAZ / Drawn: BLG	Drawing Number: CS500

VA FORM 08 - 6231

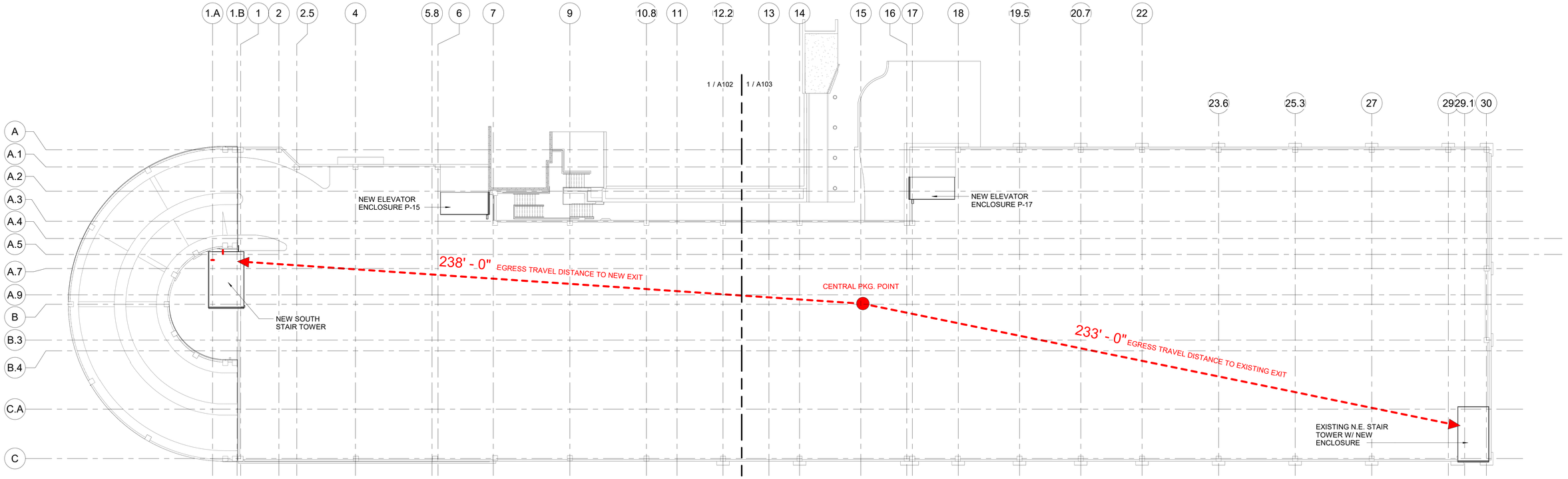

N

1 SITE PLAN - OVERALL
1/16" = 1'-0"

0' 8' 16' 32'
1/16" = 1'-0"

PER 2024 NFPA 101: TABLE 42.8.2.6.1 - NON-SPRINKLED OPEN PARKING STRUCTURES ALLOW FOR 300FT OF TRAVEL DISTANCE BETWEEN EXITS.

Revisions:	Date:

CONSULTANT

HFG
330 N. Mead St, Suite 100
Wichita, KS 67202
Phone: 316.262.2500
www.hfgarchitecture.com

ARCHITECT/ENGINEER

SES SPECIALIZED ENGINEERING SOLUTIONS
7100 E BELLEVIEW AVE, STE 107
GREENWOOD VILLAGE, CO 80111
Phone: (720) 200-5955
www.specializedeng.com
SES Project : 20114.008

STAMP

4/23/2026

Office of Construction and Facilities Management

VA U.S. Department of Veterans Affairs

Drawing Title
SITE PLAN - OVERALL

Approved:

Phase
ADDENDUM 01

NON-SPRINKLERED

Project Title
VA OKC - DESIGN REPAIR PARKING GARAGE

Location
921 N.E. 13TH STREET OKLAHOMA CITY, OK 73104

Issue Date 04/23/2026
Checked JW
Drawn JS

Project Number 635-21-139
Building Number
Drawing Number A100

4/22/2026 4:19:42 PM
Autodesk Docs://20114.008 - VA Oklahoma City Parking Garage/635-139A-R22.rvt

VA FORM 08 - 6231

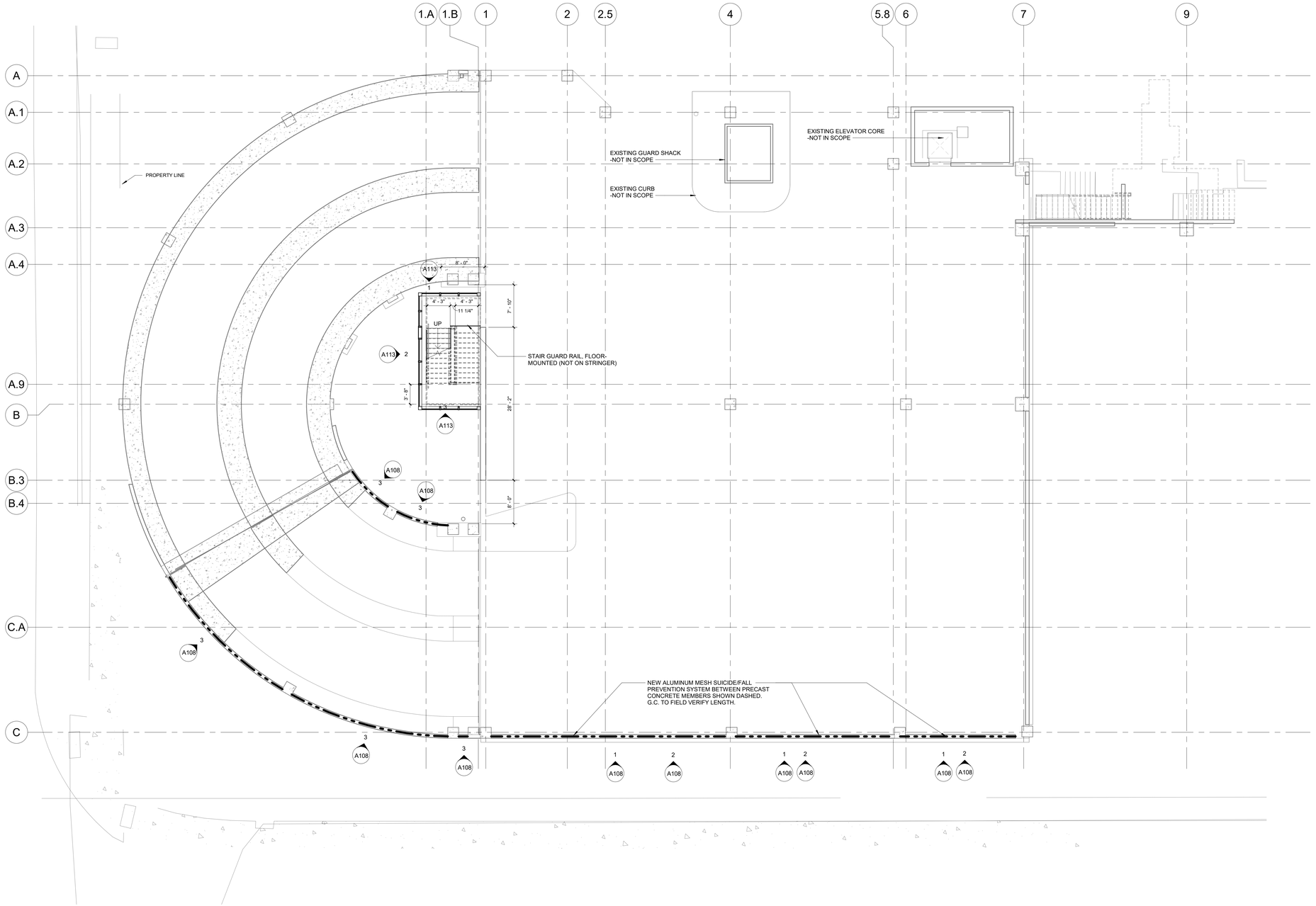

N 1 FLOOR PLAN - GROUND FLOOR - AREA A
1/8" = 1'-0"

0' 4' 8' 16'
1/8" = 1'-0"

RAILING LEGEND
GENERAL NOTES: 1. NEW SUICIDE/FALL PREVENTION RAILING TO MATCH STYLE OF FUTURE NORTH PARKING GARAGE. 2. G.C. TO FIELD VERIFY RAILING DIMENSIONS BETWEEN PRE-CAST COLUMNS. PRIOR TO FABRICATION AND INSTALL. 3. TOP OF GUARDRAILS AT 42" ABOVE PAVING.
NEW SUICIDE/FALL PREVENTION RAILING
NEW GUARDRAIL

Revisions:	Date:

CONSULTANT

HFG
330 N. Mead St, Suite 100
Wichita, KS 67202
Phone: 316.262.2500
www.hfgarchitecture.com

ARCHITECT/ENGINEER

SES SPECIALIZED ENGINEERING SOLUTIONS
7100 E BELLEVIEW AVE, STE 107
GREENWOOD VILLAGE, CO 80111
Phone: (720) 200-5955
www.specializedeng.com
SES Project : 20114.008

STAMP

4/23/2026

Office of Construction and Facilities Management

VA U.S. Department of Veterans Affairs

Drawing Title FLOOR PLAN - GROUND FLOOR - AREA A	**Phase** ADDENDUM 01	**Project Title** VA OKC - DESIGN REPAIR PARKING GARAGE	**Project Number** 635-21-139
Approved:	NON-SPRINKLERED	**Location** 921 N.E. 13TH STREET OKLAHOMA CITY, OK 73104	**Building Number**
		Issue Date 04/23/2026 / **Checked** JW / **Drawn** JS	**Drawing Number** A101

4/22/2026 4:19:44 PM

Autodesk Docs://20114.008 - VA Oklahoma City Parking Garage/635-139.A R22.rvt

VA FORM 08 - 6231

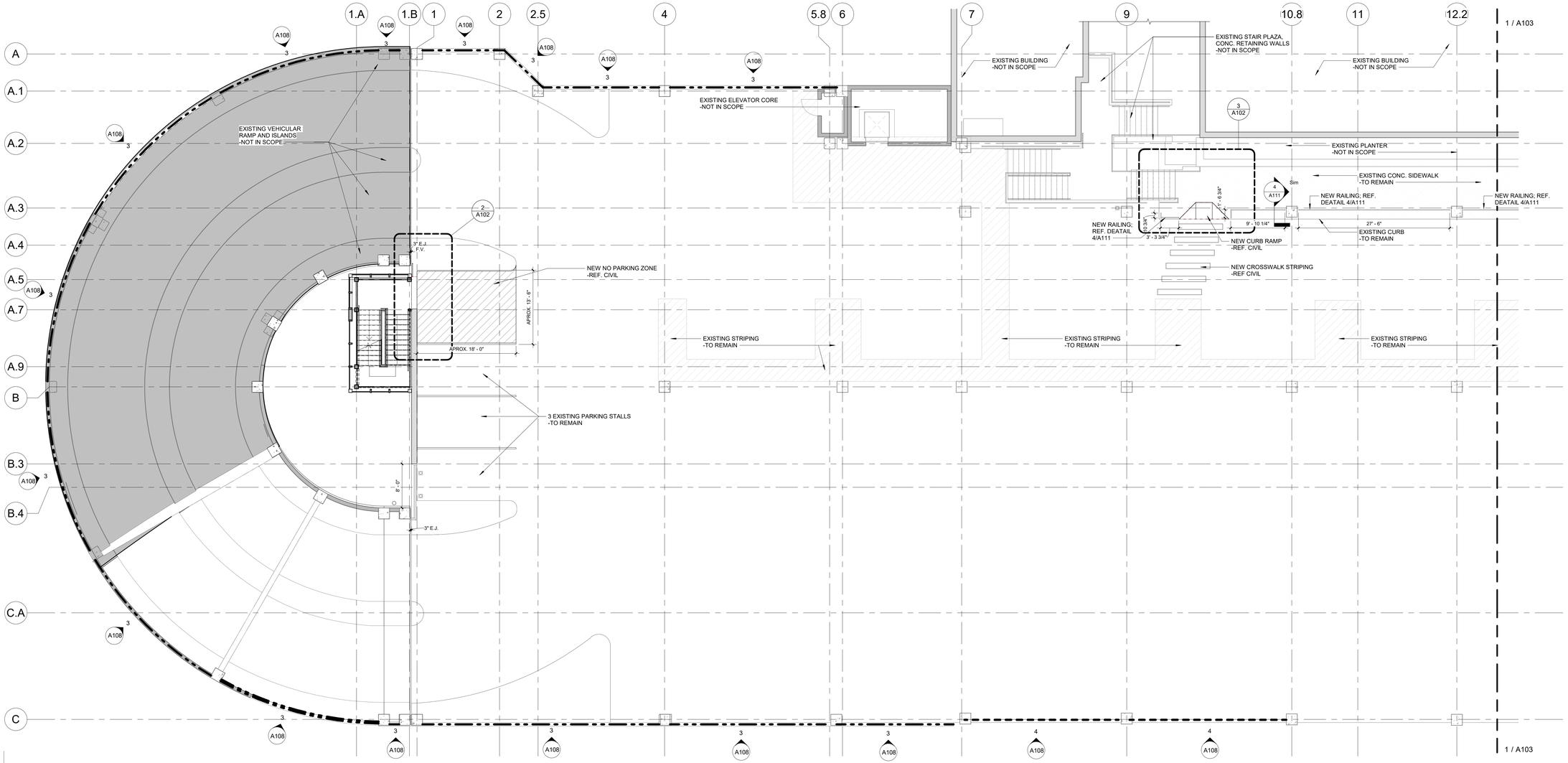

N

1 FLOOR PLAN - LEVEL 1 - AREA A
1/8" = 1'-0"

0' 4' 8' 16'
1/8" = 1'-0"

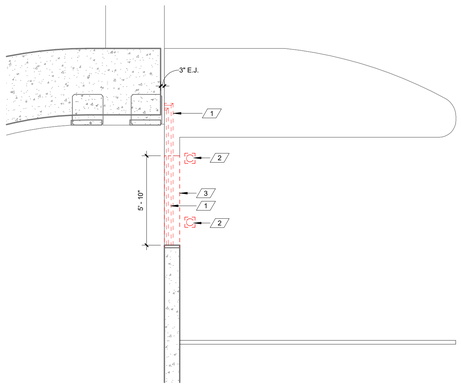

2 PARKING DEMOLITION PLAN - LEVEL 1 - AREA A
1/4" = 1'-0"

0' 2' 4' 8'
1/4" = 1'-0"

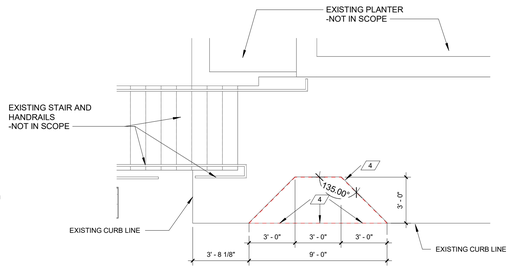

3 EXISTING SIDEWALK DEMOLITION PLAN - LEVEL 1 - AREA B
1/4" = 1'-0"

0' 2' 4' 8'
1/4" = 1'-0"

RAILING LEGEND

GENERAL NOTES:

1. NEW SUICIDE/FALL PREVENTION RAILING TO MATCH STYLE OF FUTURE NORTH PARKING GARAGE.
2. G.C. TO FIELD VERIFY RAILING DIMENSIONS BETWEEN PRE-CAST COLUMNS. PRIOR TO FABRICATION AND INSTALL.
3. TOP OF GUARDRAILS AT 42" ABOVE PAVING.

NEW SUICIDE/FALL PREVENTION RAILING

NEW GUARDRAIL

DEMO SCHEDULE

#	DESCRIPTION
1	REMOVE EXISTING RAILING.
2	REMOVE EXISTING BOLLARDS. SALVAGE FOR OWNER.
3	DEMO PORTION OF EXISTING CONCRETE CURB. PREP CONCRETE FOR NEW STAIR LANDING.
4	DEMO PORTION OF EXISTING CONCRETE CURB AND SIDEWALK. PREP FOR NEW CONCRETE CURB RAMP. -REF. CIVIL
6	REMOVE EXISTING METAL COLUMNS.
7	REMOVE EXISTING METAL ROOF.
8	REMOVE EXISTING METAL DOWNSPOUT.
9	REMOVE EXISTING CURTAIN WALL PLEXIGLASS.

Revisions:	Date:

CONSULTANT

HFG
330 N. Mead St, Suite 100
Wichita, KS 67202
Phone: 316.262.2500
www.hfgarchitecture.com

ARCHITECT/ENGINEER

SES SPECIALIZED ENGINEERING SOLUTIONS
7100 E BELLEVIEW AVE, STE 107
GREENWOOD VILLAGE, CO 80111
Phone: (720) 200-5955
www.specializedeng.com
SES Project : 20114.008

STAMP

4/23/2026

Office of Construction and Facilities Management

VA U.S. Department of Veterans Affairs

Drawing Title	FLOOR PLAN - LEVEL 1 - AREA A
Approved:	
Phase	ADDENDUM 01
	NON-SPRINKLERED
Project Title	VA OKC - DESIGN REPAIR PARKING GARAGE
Location	921 N.E. 13TH STREET OKLAHOMA CITY , OK 73104
Issue Date	04/23/2026
Checked	JW
Drawn	JS
Project Number	635-21-139
Building Number	
Drawing Number	A102

Autodesk Docs://20114.008 - VA Oklahoma City Parking Garage/635-139.A.R22.rvt
4/22/2026 4:19:45 PM

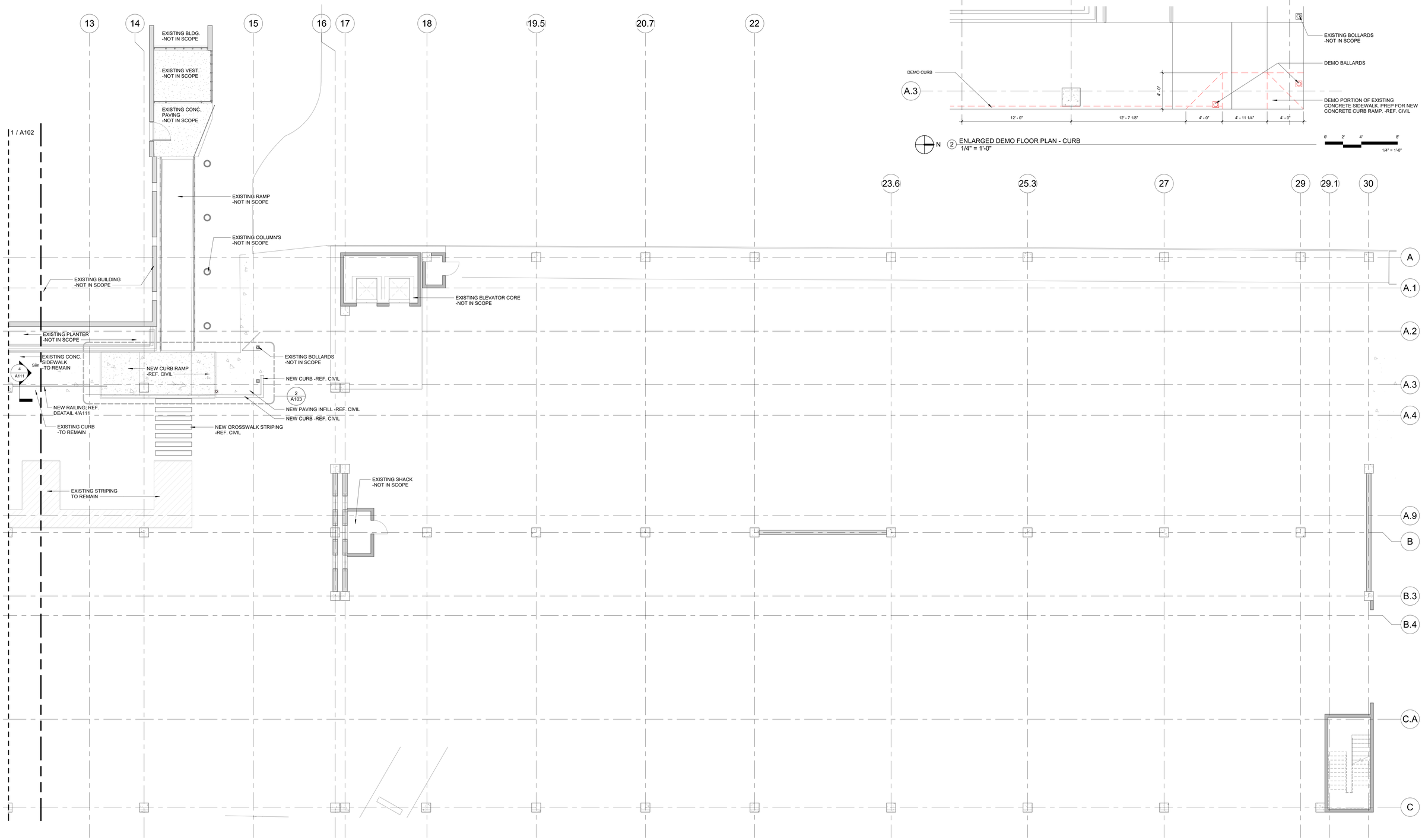

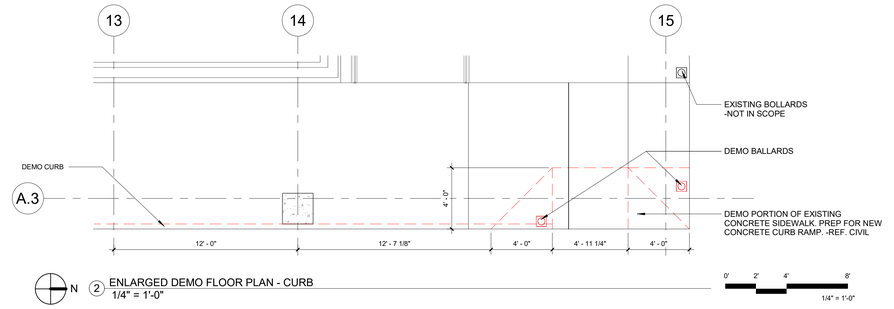

1 / A102

N 1 FLOOR PLAN - LEVEL 1 - AREA B
1/8" = 1'-0"

0' 4' 8' 16'
1/8" = 1'-0"

Revisions:	Date:

CONSULTANT

HFG
330 N. Mead St, Suite 100
Wichita, KS 67202
Phone: 316.262.2500
www.hfgarchitecture.com

ARCHITECT/ENGINEER

SES SPECIALIZED ENGINEERING SOLUTIONS
7100 E BELLEVIEW AVE, STE 107
GREENWOOD VILLAGE, CO 80111
Phone: (720) 200-5955
www.specializedeng.com
SES Project : 20114.008

STAMP

4/23/2026

Office of Construction and Facilities Management

VA U.S. Department of Veterans Affairs

Drawing Title FLOOR PLAN - LEVEL 1 - AREA B	**Phase** ADDENDUM 01	**Project Title** VA OKC - DESIGN REPAIR PARKING GARAGE	**Project Number** 635-21-139
			Building Number
Approved:	NON-SPRINKLERED	**Location** 921 N.E. 13TH STREET OKLAHOMA CITY, OK 73104	**Drawing Number** A103
		Issue Date 04/23/2026 · **Checked** JW · **Drawn** JS	

4/22/2026 4:19:46 PM
Autodesk Docs://20114.008 - VA Oklahoma City Parking Garage/635-139-A-R22.rvt

VA FORM 08 - 6231

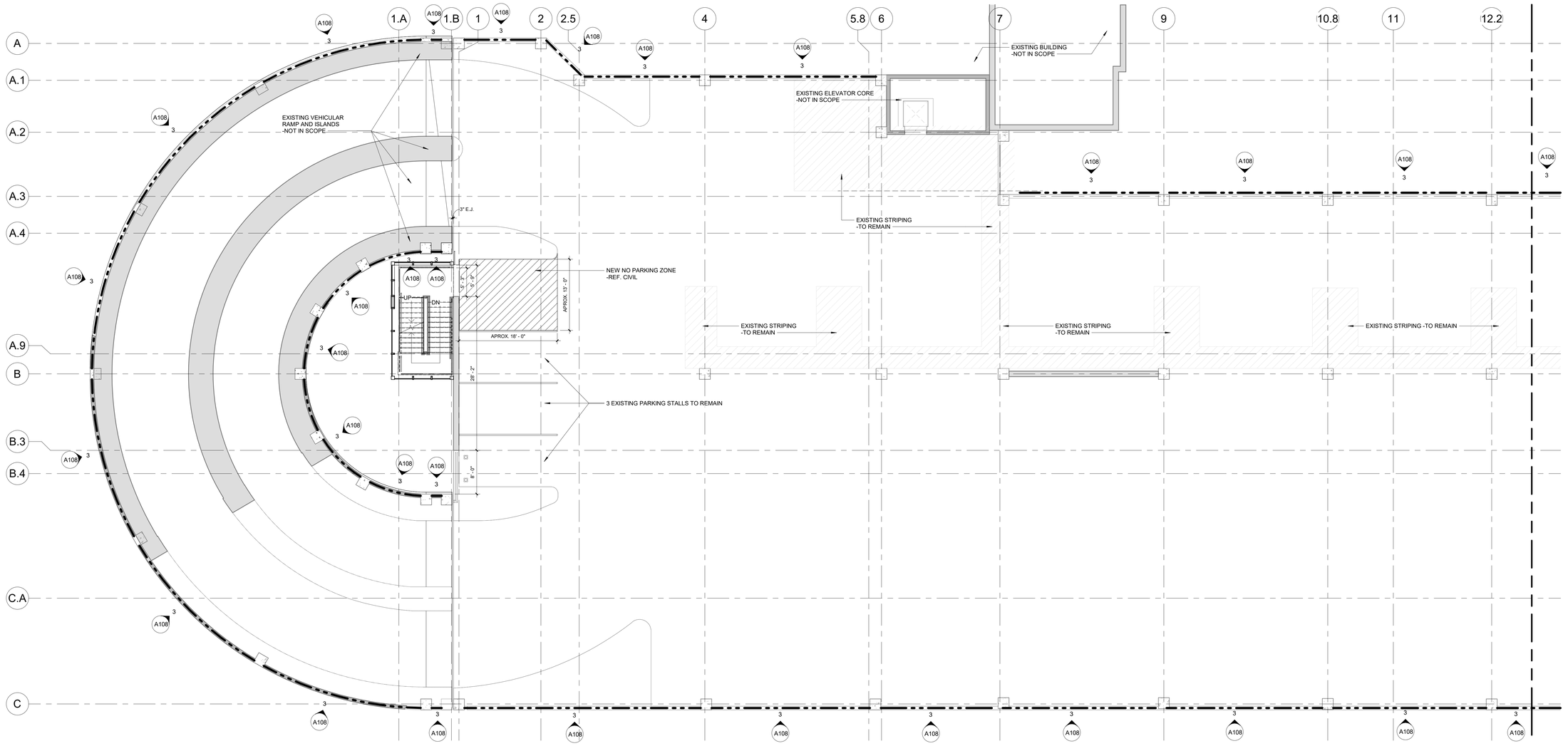

N 1 FLOOR PLAN - LEVEL 2 - AREA A
1/8" = 1'-0"

0' 4' 8' 16'
1/8" = 1'-0"

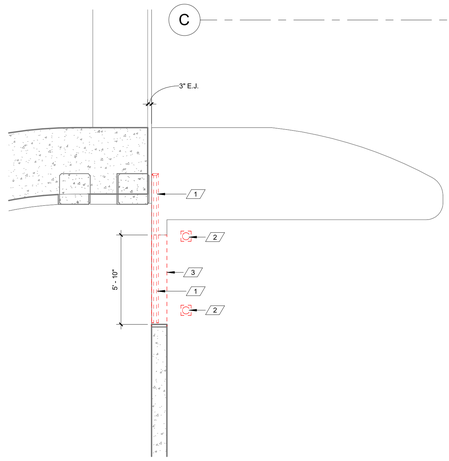

N 2 PARKING DEMOLITION PLAN - LEVEL 2 - AREA A
1/4" = 1'-0"

0' 2' 4' 8'
1/4" = 1'-0"

RAILING LEGEND
GENERAL NOTES: 1. NEW SUICIDE/FALL PREVENTION RAILING TO MATCH STYLE OF FUTURE NORTH PARKING GARAGE. 2. G.C. TO FIELD VERIFY RAILING DIMENSIONS BETWEEN PRE-CAST COLUMNS. PRIOR TO FABRICATION AND INSTALL. 3. TOP OF GUARDRAILS AT 42" ABOVE PAVING.
NEW SUICIDE/FALL PREVENTION RAILING
NEW GUARDRAIL

DEMO SCHEDULE

#	DESCRIPTION
1	REMOVE EXISTING RAILING.
2	REMOVE EXISTING BOLLARDS. SALVAGE FOR OWNER.
3	DEMO PORTION OF EXISTING CONCRETE CURB. PREP CONCRETE FOR NEW STAIR LANDING.
4	DEMO PORTION OF EXISTING CONCRETE CURB AND SIDEWALK. PREP FOR NEW CONCRETE CURB RAMP. -REF. CIVIL
6	REMOVE EXISTING METAL COLUMNS.
7	REMOVE EXISTING METAL ROOF.
8	REMOVE EXISTING METAL DOWNSPOUT.
9	REMOVE EXISTING CURTAIN WALL PLEXIGLASS.

Revisions:	Date:

CONSULTANT

HFG
330 N. Mead St, Suite 100
Wichita, KS 67202
Phone: 316.262.2500
www.hfgarchitecture.com

ARCHITECT/ENGINEER

SES SPECIALIZED ENGINEERING SOLUTIONS
7100 E BELLEVIEW AVE, STE 107
GREENWOOD VILLAGE, CO 80111
Phone: (720) 200-5955
www.specializedeng.com
SES Project : 20114.008

STAMP

4/23/2026

Office of Construction and Facilities Management

VA U.S. Department of Veterans Affairs

Drawing Title FLOOR PLAN - LEVEL 2 - AREA A	**Phase** ADDENDUM 01	**Project Title** VA OKC - DESIGN REPAIR PARKING GARAGE	**Project Number** 635-21-139
Approved:	NON-SPRINKLERED	**Location** 921 N.E. 13TH STREET OKLAHOMA CITY, OK 73104	**Building Number**
		Issue Date 04/23/2026 / **Checked** JW / **Drawn** JS	**Drawing Number** A104

Autodesk Docs://20114.008 - VA Oklahoma City Parking Garage/635-139-A-R22.rvt
4/22/2026 4:19:47 PM

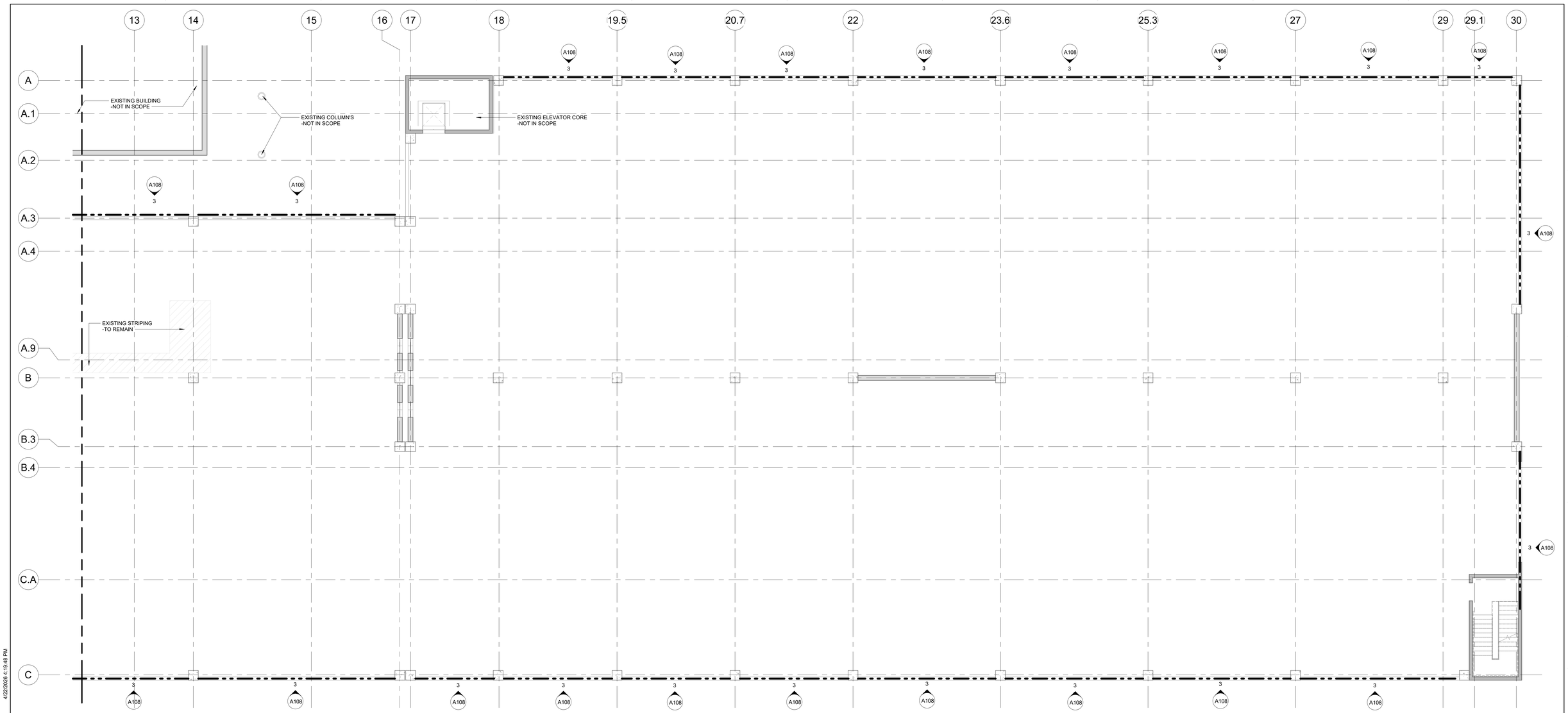

N ① FLOOR PLAN - LEVEL 2 - AREA B
1/8" = 1'-0"

0' 4' 8' 16'
1/8" = 1'-0"

RAILING LEGEND

GENERAL NOTES:

1. NEW SUICIDE/FALL PREVENTION RAILING TO MATCH STYLE OF FUTURE NORTH PARKING GARAGE.
2. G.C. TO FIELD VERIFY RAILING DIMENSIONS BETWEEN PRE-CAST COLUMNS. PRIOR TO FABRICATION AND INSTALL.
3. TOP OF GUARDRAILS AT 42" ABOVE PAVING.

NEW SUICIDE/FALL PREVENTION RAILING

NEW GUARDRAIL

Revisions:	Date:

CONSULTANT

HFG
330 N. Mead St, Suite 100
Wichita, KS 67202
Phone: 316.262.2500
www.hfgarchitecture.com

ARCHITECT/ENGINEER

SES SPECIALIZED ENGINEERING SOLUTIONS
7100 E BELLEVIEW AVE, STE 107
GREENWOOD VILLAGE, CO 80111
Phone: (720) 200-5955
www.specializedeng.com
SES Project : 20114.008

STAMP

4/23/2026

Office of Construction and Facilities Management

VA U.S. Department of Veterans Affairs

Drawing Title	FLOOR PLAN - LEVEL 2 - AREA B
Approved:	
Phase	ADDENDUM 01
	NON-SPRINKLERED
Project Title	VA OKC - DESIGN REPAIR PARKING GARAGE
Location	921 N.E. 13TH STREET OKLAHOMA CITY, OK 73104
Issue Date	04/23/2026
Checked	JW
Drawn	JS
Project Number	635-21-139
Building Number	
Drawing Number	A105

Autodesk Docs://20114.008 - VA Oklahoma City Parking Garage/635-139-A R22.rvt
4/22/2026 4:19:48 PM

VA FORM 08 - 6231

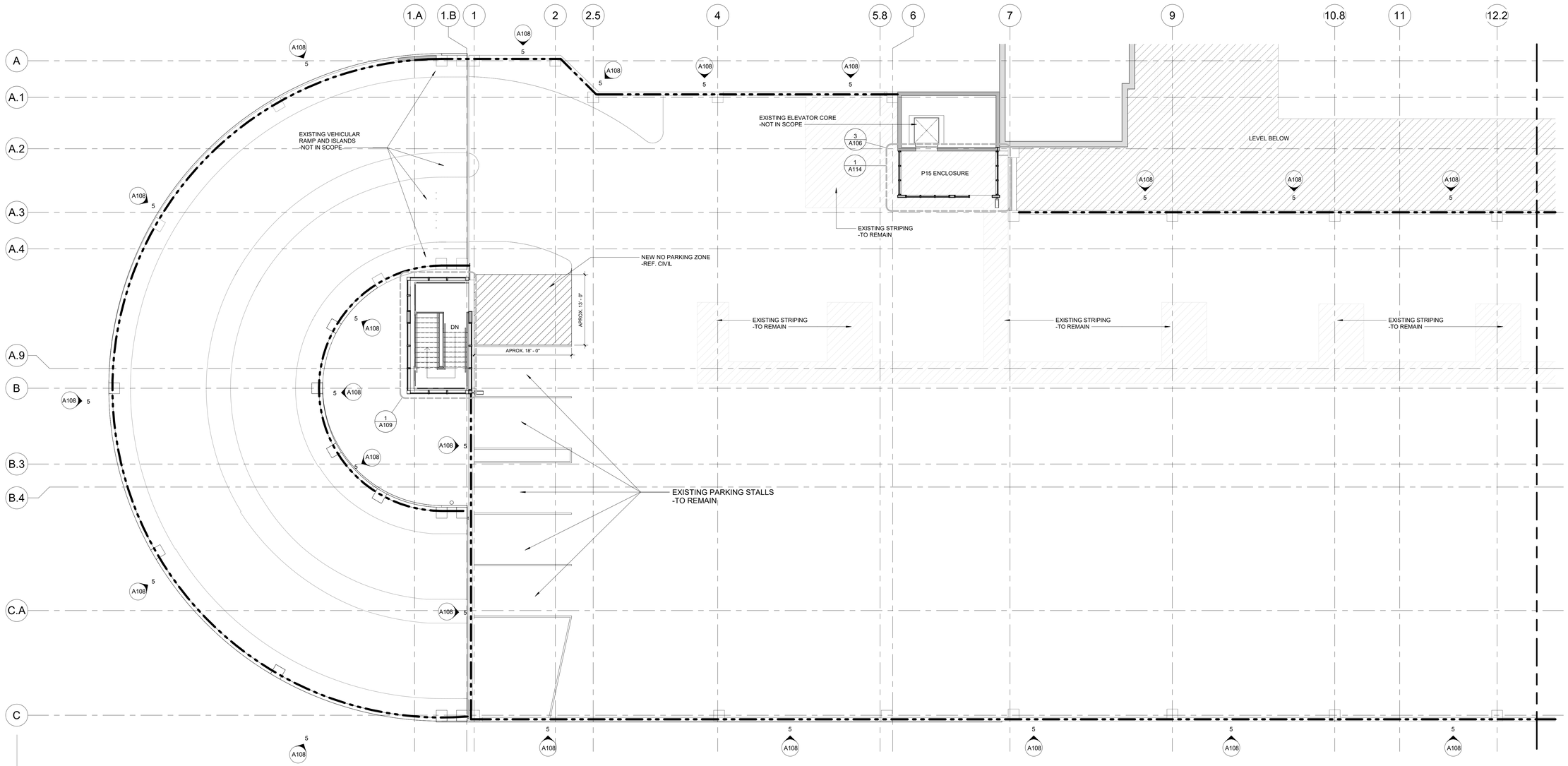

N (1) FLOOR PLAN - LEVEL 3 - AREA A
1/8" = 1'-0"

0' 4' 8' 16'
1/8" = 1'-0"

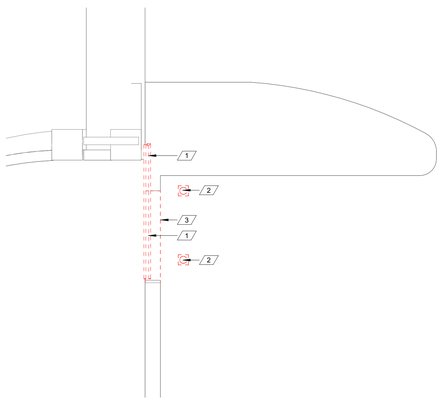

N (2) PARKING DEMOLITION PLAN - LEVEL 3 - AREA A
1/4" = 1'-0"

0' 2' 4' 8'
1/4" = 1'-0"

RAILING LEGEND

GENERAL NOTES:

1. NEW SUICIDE/FALL PREVENTION RAILING TO MATCH STYLE OF FUTURE NORTH PARKING GARAGE.
2. G.C. TO FIELD VERIFY RAILING DIMENSIONS BETWEEN PRE-CAST COLUMNS. PRIOR TO FABRICATION AND INSTALL.
3. TOP OF GUARDRAILS AT 42" ABOVE PAVING.

NEW SUICIDE/FALL PREVENTION RAILING

NEW GUARDRAIL

DEMO SCHEDULE

#	DESCRIPTION
1	REMOVE EXISTING RAILING.
2	REMOVE EXISTING BOLLARDS. SALVAGE FOR OWNER.
3	DEMO PORTION OF EXISTING CONCRETE CURB. PREP CONCRETE FOR NEW STAIR LANDING.
4	DEMO PORTION OF EXISTING CONCRETE CURB AND SIDEWALK. PREP FOR NEW CONCRETE CURB RAMP. -REF. CIVIL
6	REMOVE EXISTING METAL COLUMNS.
7	REMOVE EXISTING METAL ROOF.
8	REMOVE EXISTING METAL DOWNSPOUT.
9	REMOVE EXISTING CURTAIN WALL PLEXIGLASS.

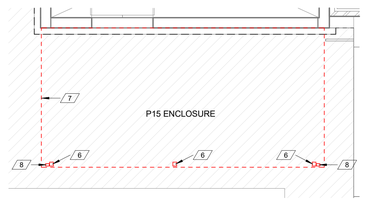

N (3) FLOOR PLAN - LEVEL 3 - AREA B - P15 DEMO PLAN
1/4" = 1'-0"

0' 2' 4' 8'
1/4" = 1'-0"

Revisions:	Date:

CONSULTANT

HFG
330 N. Mead St, Suite 100
Wichita, KS 67202
Phone: 316.262.2500
www.hfgarchitecture.com

ARCHITECT/ENGINEER

SES SPECIALIZED ENGINEERING SOLUTIONS
7100 E BELLEVIEW AVE, STE 107
GREENWOOD VILLAGE, CO 80111
Phone: (720) 200-5955
www.specializedeng.com
SES Project : 20114.008

STAMP

4/23/2026

Office of Construction and Facilities Management

VA U.S. Department of Veterans Affairs

Drawing Title FLOOR PLAN - LEVEL 3 - AREA A	**Phase** ADDENDUM 01	**Project Title** VA OKC - DESIGN REPAIR PARKING GARAGE	**Project Number** 635-21-139
			Building Number
Approved:	NON-SPRINKLERED	**Location** 921 N.E. 13TH STREET OKLAHOMA CITY, OK 73104	**Drawing Number** A106
		Issue Date 04/23/2026 · **Checked** JW · **Drawn** JS	

4/22/2026 4:19:49 PM

Autodesk Docs://20114.008 - VA Oklahoma City Parking Garage/635-139.A R22.rvt

VA FORM 08 - 6231

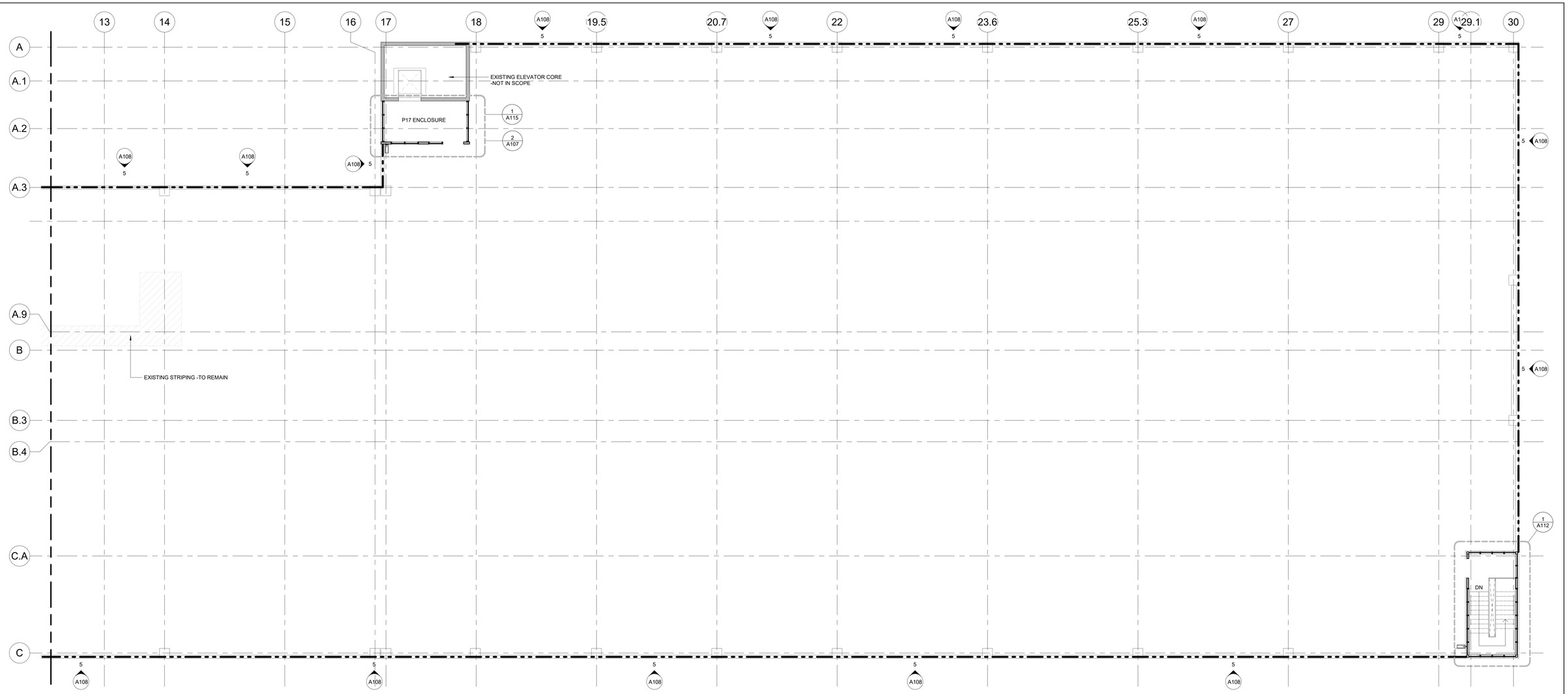

N 1 FLOOR PLAN - LEVEL 3 - AREA B
1/8" = 1'-0"

0' 4' 8' 16'
1/8" = 1'-0"

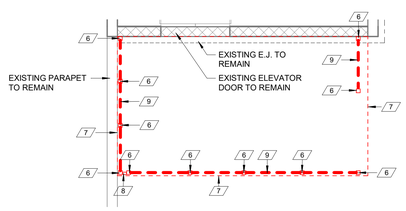

N 2 FLOOR PLAN - LEVEL 3 - AREA B - P17 DEMO PLAN
1/4" = 1'-0"

0' 2' 4' 8'
1/4" = 1'-0"

RAILING LEGEND
GENERAL NOTES: 1. NEW SUICIDE/FALL PREVENTION RAILING TO MATCH STYLE OF FUTURE NORTH PARKING GARAGE. 2. G.C. TO FIELD VERIFY RAILING DIMENSIONS BETWEEN PRE-CAST COLUMNS. PRIOR TO FABRICATION AND INSTALL. 3. TOP OF GUARDRAILS AT 42" ABOVE PAVING.
NEW SUICIDE/FALL PREVENTION RAILING
NEW GUARDRAIL

DEMO SCHEDULE

#	DESCRIPTION
1	REMOVE EXISTING RAILING.
2	REMOVE EXISTING BOLLARDS. SALVAGE FOR OWNER.
3	DEMO PORTION OF EXISTING CONCRETE CURB. PREP CONCRETE FOR NEW STAIR LANDING.
4	DEMO PORTION OF EXISTING CONCRETE CURB AND SIDEWALK. PREP FOR NEW CONCRETE CURB RAMP. -REF. CIVIL
6	REMOVE EXISTING METAL COLUMNS.
7	REMOVE EXISTING METAL ROOF.
8	REMOVE EXISTING METAL DOWNSPOUT.
9	REMOVE EXISTING CURTAIN WALL PLEXIGLASS.

Revisions:	Date:

CONSULTANT

HFG
330 N. Mead St, Suite 100
Wichita, KS 67202
Phone: 316.262.2500
www.hfgarchitecture.com

ARCHITECT/ENGINEER

SES SPECIALIZED ENGINEERING SOLUTIONS
7100 E BELLEVIEW AVE, STE 107
GREENWOOD VILLAGE, CO 80111
Phone: (720) 200-5955
www.specializedeng.com
SES Project : 20114.008

STAMP

4/23/2026

Office of Construction and Facilities Management

VA U.S. Department of Veterans Affairs

Drawing Title FLOOR PLAN - LEVEL 3 - AREA B	**Phase** ADDENDUM 01	**Project Title** VA OKC - DESIGN REPAIR PARKING GARAGE	**Project Number** 635-21-139
			Building Number
Approved:	NON-SPRINKLERED	**Location** 921 N.E. 13TH STREET OKLAHOMA CITY, OK 73104	**Drawing Number** A107
		Issue Date 04/23/2026 · **Checked** JW · **Drawn** JS	

Autodesk Docs://20114.008 - VA Oklahoma City Parking Garage/635-139-A R22.rvt
4/22/2026 4:19:50 PM

VA FORM 08 - 6231

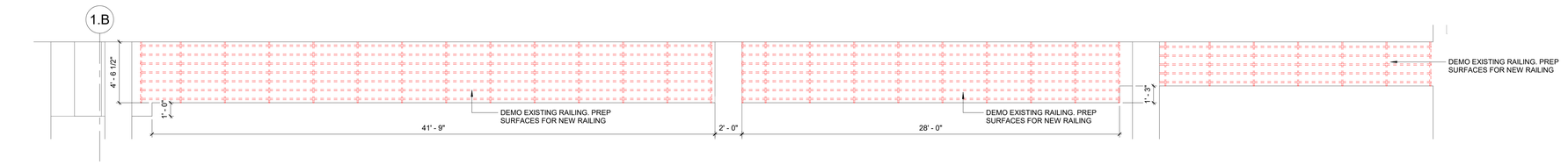

1 EAST SIDE RAILING - GROUND FLOOR - DEMO
1/4" = 1'-0"

0' 2' 4' 8'
1/4" = 1'-0"

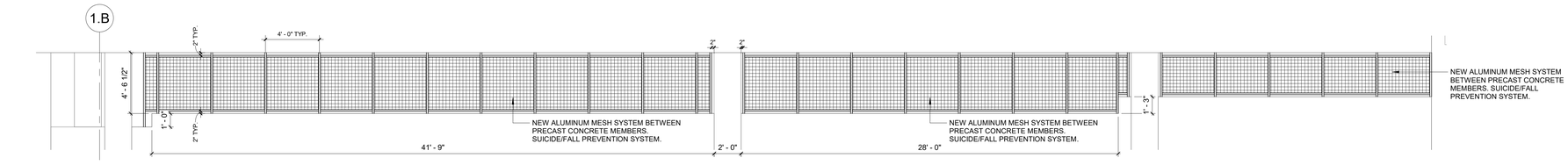

2 EAST SIDE RAILING - GROUND FLOOR - NEW
1/4" = 1'-0"

0' 2' 4' 8'
1/4" = 1'-0"

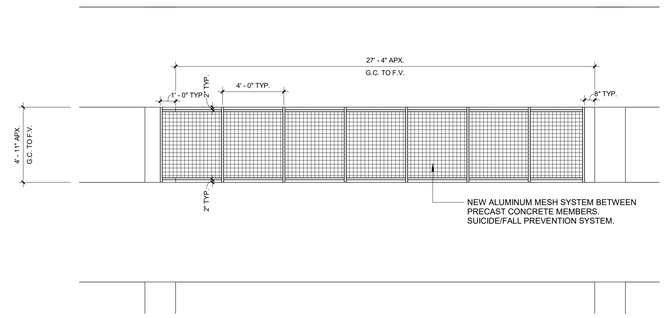

3 NEW SUICIDE RAILING - TYPICAL 1ST & 2ND LEVEL
1/4" = 1'-0"

0' 2' 4' 8'
1/4" = 1'-0"

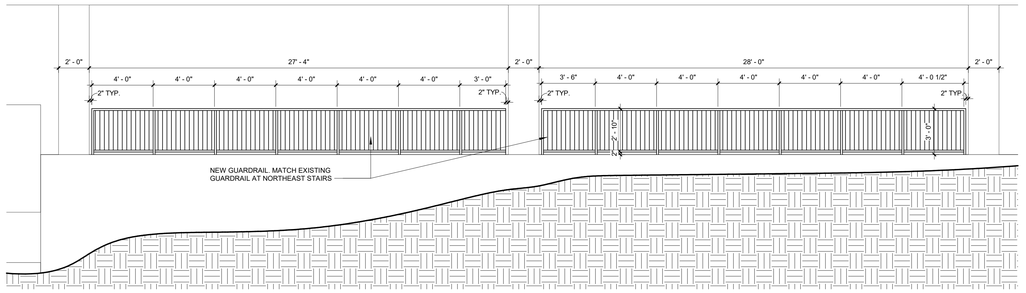

4 ELEVATION - EAST GUARDRAIL
1/4" = 1'-0"

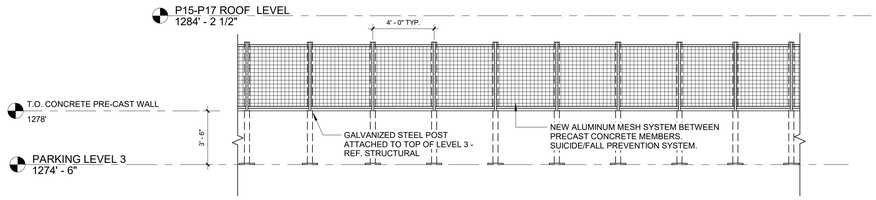

5 NEW SUICIDE PREVENTION RAILING - TYPICAL LEVEL 3
1/4" = 1'-0"

0' 2' 4' 8'
1/4" = 1'-0"

Revisions:	Date:

CONSULTANT

HFG
330 N. Mead St, Suite 100
Wichita, KS 67202
Phone: 316.262.2500
www.hfgarchitecture.com

ARCHITECT/ENGINEER

SES SPECIALIZED ENGINEERING SOLUTIONS
7100 E BELLEVIEW AVE, STE 107
GREENWOOD VILLAGE, CO 80111
Phone: (720) 200-5955
www.specializedeng.com
SES Project : 20114.008

STAMP

4/23/2026

Office of Construction and Facilities Management

VA U.S. Department of Veterans Affairs

Drawing Title RAILING ELEVATIONS	**Phase** ADDENDUM 01	**Project Title** VA OKC - DESIGN REPAIR PARKING GARAGE	**Project Number** 635-21-139
Approved:			**Building Number**
	NON-SPRINKLERED	**Location** 921 N.E. 13TH STREET OKLAHOMA CITY, OK 73104	**Drawing Number** A108
		Issue Date 04/23/2026 / **Checked** JW / **Drawn** JS	

Autodesk Docs://20114.008 - VA Oklahoma City Parking Garage/635-139A-R22.rvt
4/22/2026 4:19:51 PM

VA FORM 08 - 6231

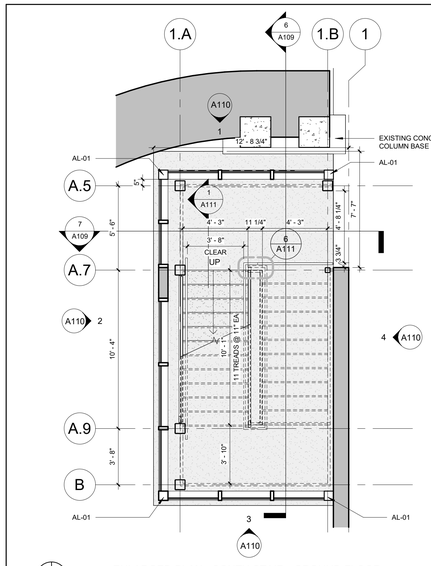

N ① ENLARGED PLAN - SOUTH STAIR - GROUND FLOOR
1/4" = 1'-0"

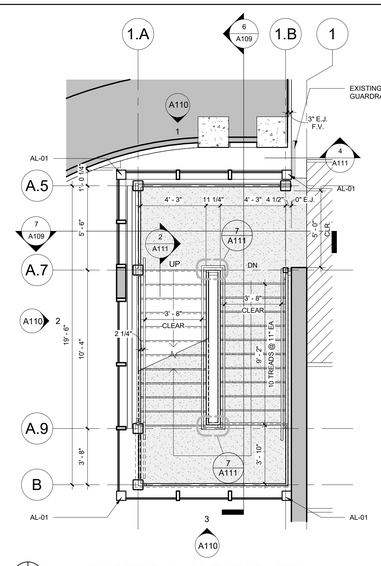

N ② ENLARGED PLAN - SOUTH STAIR - LEVEL 1
1/4" = 1'-0"

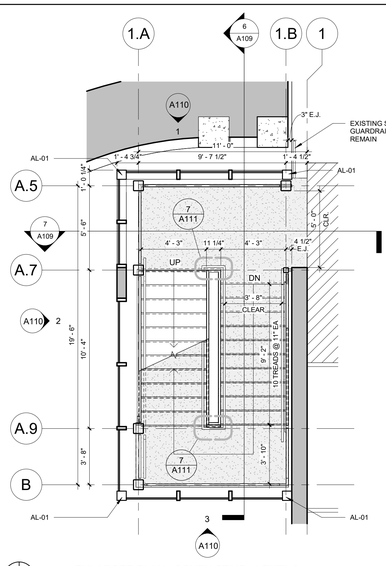

N ③ ENLARGED PLAN - SOUTH STAIR - LEVEL 2
1/4" = 1'-0"

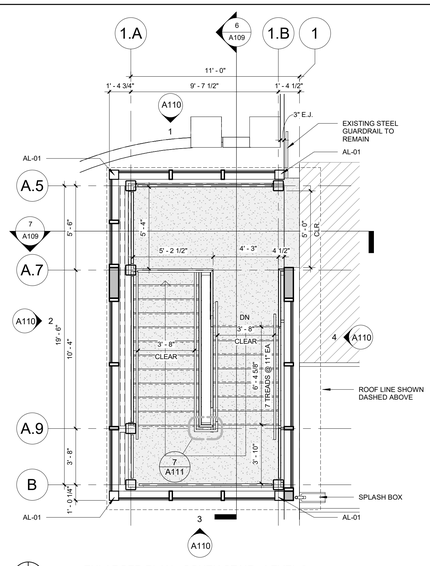

N ④ ENLARGED PLAN - SOUTH STAIR - LEVEL 3
1/4" = 1'-0"

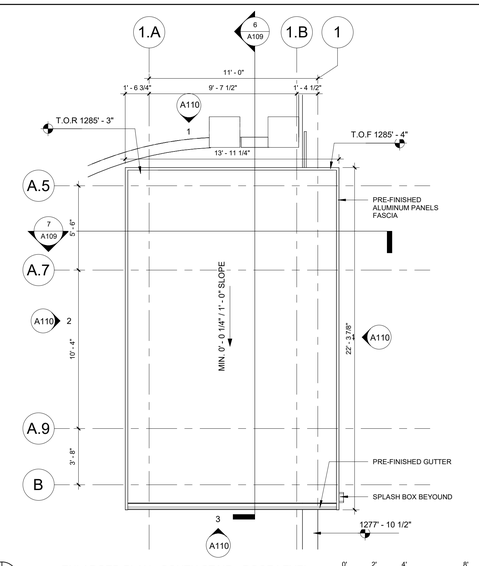

N ⑤ ENLARGED PLAN - SOUTH STAIR - ROOF LEVEL
1/4" = 1'-0"

0' 2' 4' 8'
1/4" = 1'-0"

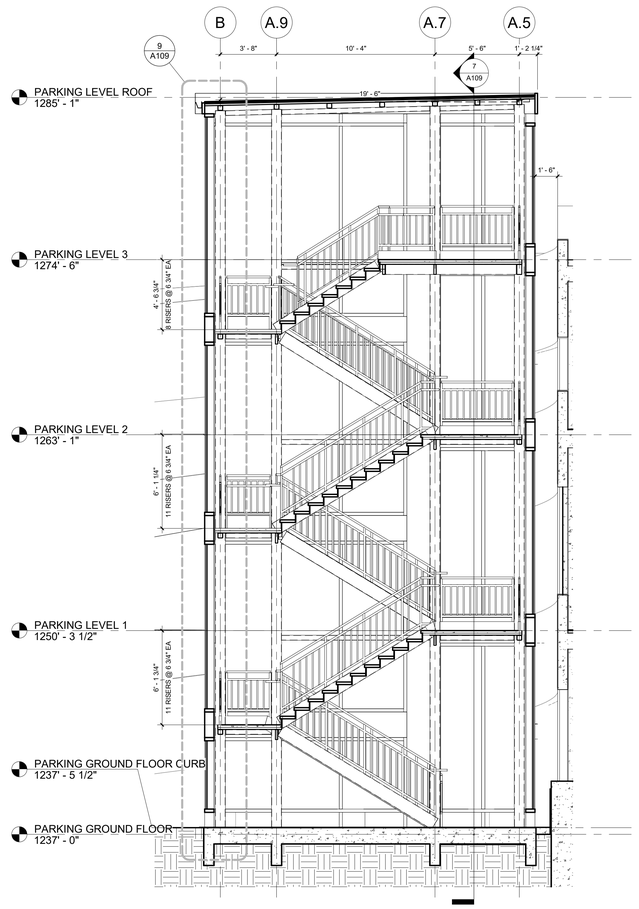

⑥ E/W SECTION - SOUTH STAIR TOWER
1/4" = 1'-0"

0' 2' 4' 8'
1/4" = 1'-0"

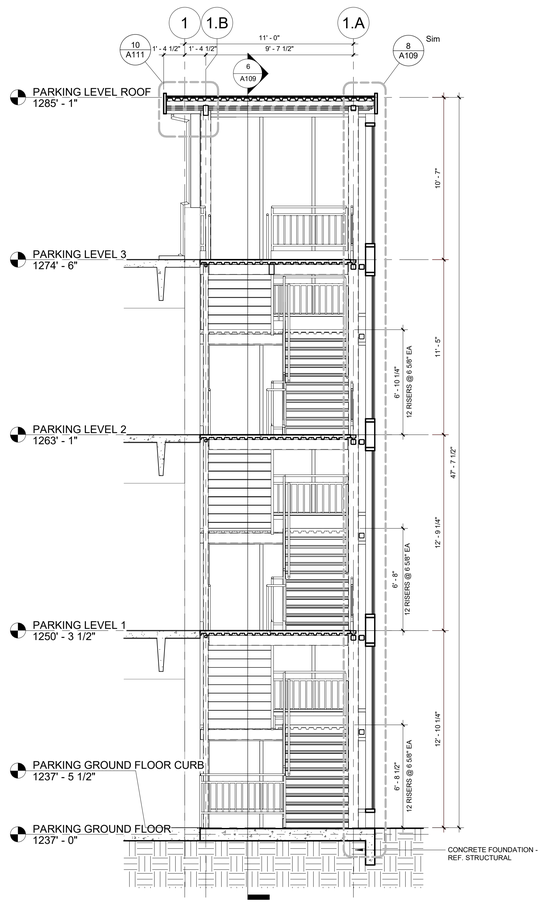

⑦ N/S SECTION - SOUTH STAIR TOWER
1/4" = 1'-0"

0' 2' 4' 8'
1/4" = 1'-0"

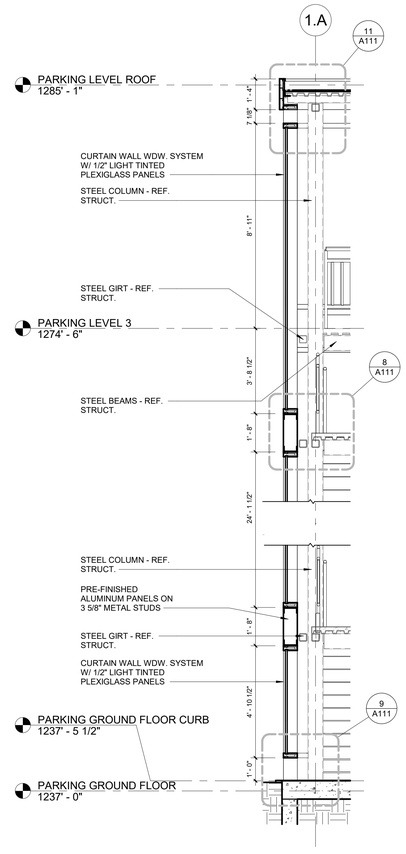

⑧ WALL SECTION - SOUTH STAIR N/S
3/8" = 1'-0"

0' 1' 2' 4'
3/8" = 1'

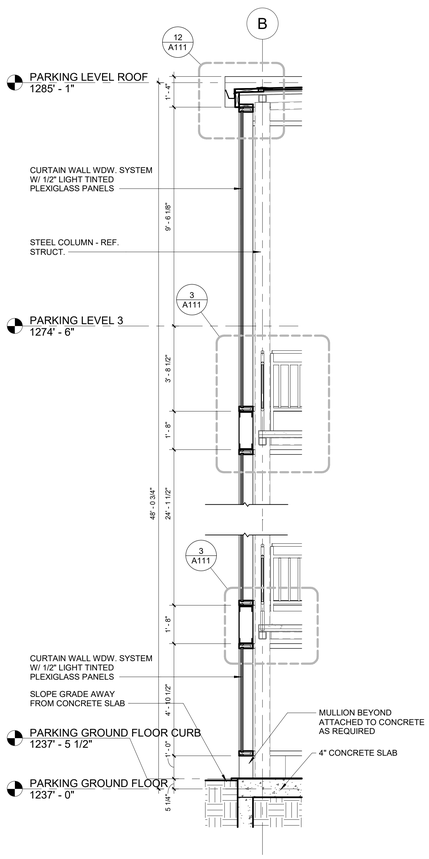

⑨ WALL SECTION - SOUTH STAIR E/W
3/8" = 1'-0"

0' 1' 2' 4'
3/8" = 1'

Revisions:	Date:

CONSULTANT

HFG
330 N. Mead St. Suite 100
Wichita, KS 67202
Phone: 316.262.2500
www.hfgarchitecture.com

ARCHITECT/ENGINEER

SES SPECIALIZED ENGINEERING SOLUTIONS
7100 E BELLEVIEW AVE, STE 107
GREENWOOD VILLAGE, CO 80111
Phone: (720) 200-5955
www.specializedeng.com
SES Project : 20114.008

STAMP

4/23/2026

Office of Construction and Facilities Management

VA U.S. Department of Veterans Affairs

Drawing Title	SOUTH STAIR ENLARGED PLANS & SECTIONS
Approved:	
Phase	ADDENDUM 01
	NON-SPRINKLERED
Project Title	VA OKC - DESIGN REPAIR PARKING GARAGE
Location	921 N.E. 13TH STREET OKLAHOMA CITY , OK 73104
Issue Date	04/23/2026
Checked	JW
Drawn	JS
Project Number	635-21-139
Building Number	
Drawing Number	A109

4/22/2026 4:19:55 PM
Autodesk Docs://20114.008 - VA Oklahoma City Parking Garage/635-139-A R22.rvt

VA FORM 08 - 6231

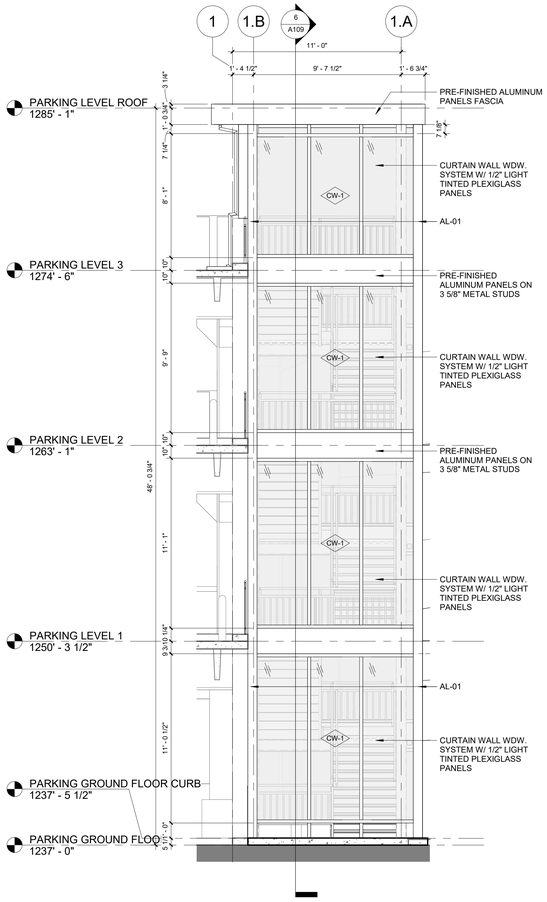

1 WEST ELEVATION - SOUTH STAIR TOWER
1/4" = 1'-0"

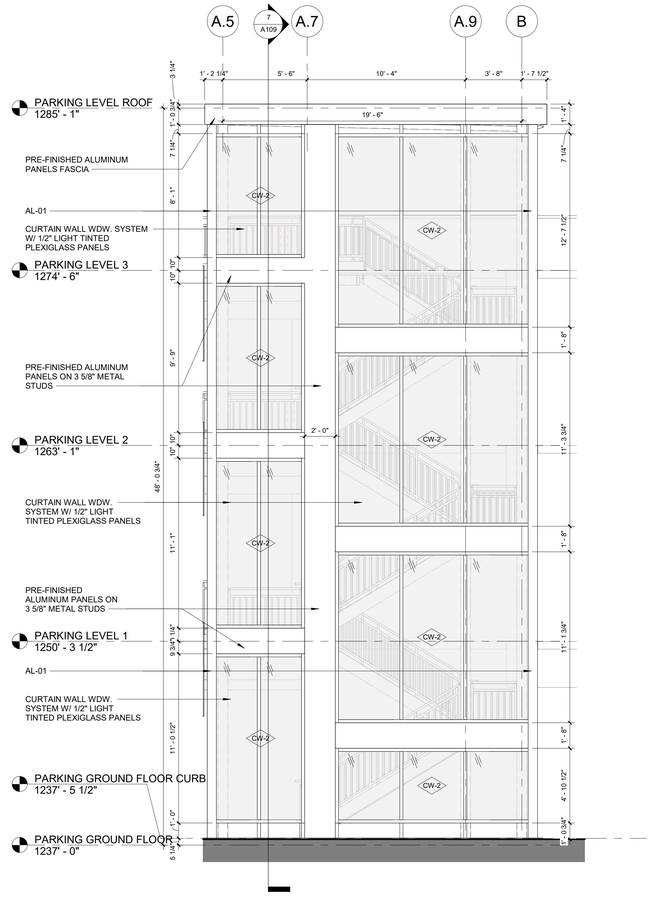

2 SOUTH ELEVATION - SOUTH STAIR TOWER
1/4" = 1'-0"

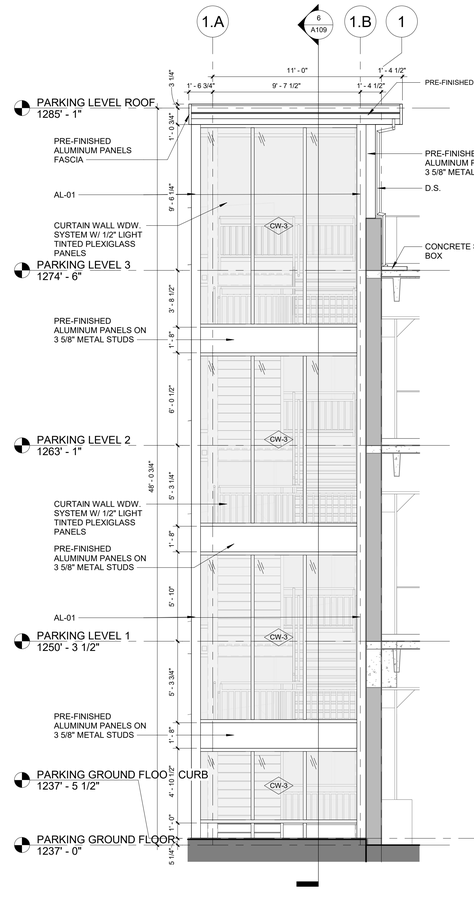

3 EAST ELEVATION - SOUTH STAIR TOWER
1/4" = 1'-0"

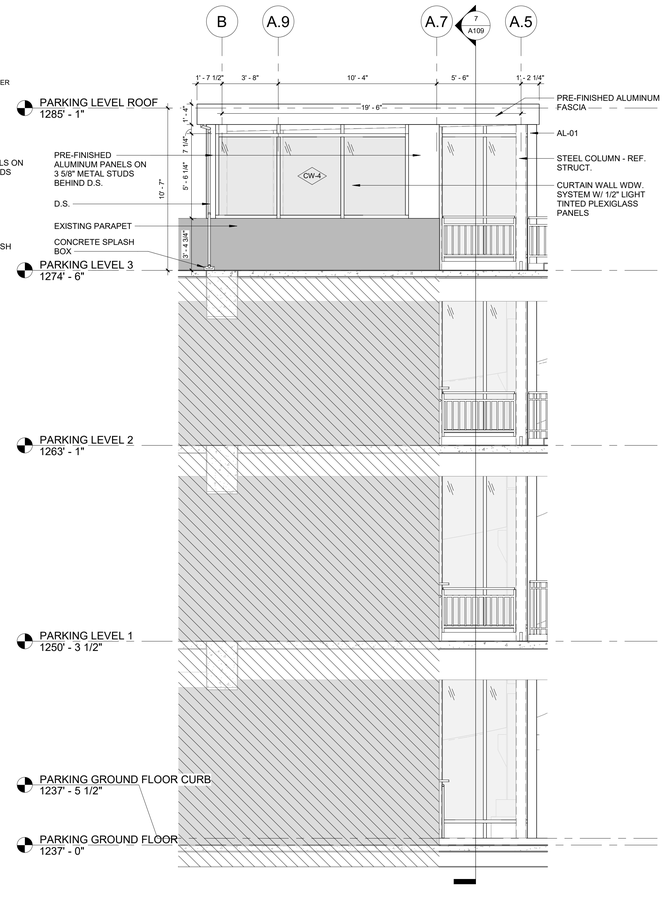

4 NORTH ELEVATION - SOUTH STAIR TOWER
1/4" = 1'-0"

0' 2' 4' 8'
1/4" = 1'-0"

Revisions:	Date:

CONSULTANT

HFG
330 N. Mead St, Suite 100
Wichita, KS 67202
Phone: 316.262.2500
www.hfgarchitecture.com

ARCHITECT/ENGINEER

SES SPECIALIZED ENGINEERING SOLUTIONS
7100 E BELLEVIEW AVE, STE 107
GREENWOOD VILLAGE, CO 80111
Phone: (720) 200-5955
www.specializedeng.com
SES Project : 20114.008

STAMP

4/23/2026

Office of Construction and Facilities Management

VA U.S. Department of Veterans Affairs

Drawing Title
SOUTH STAIR ELEVATIONS

Approved:

Phase
ADDENDUM 01

NON-SPRINKLERED

Project Title
VA OKC - DESIGN REPAIR PARKING GARAGE

Location
921 N.E. 13TH STREET OKLAHOMA CITY, OK 73104

Issue Date 04/23/2026
Checked JW
Drawn JS

Project Number 635-21-139
Building Number
Drawing Number A110

4/22/2026 4:20:00 PM
Autodesk Docs://20114.008 - VA Oklahoma City Parking Garage/635-139-A-R22.rvt

VA FORM 08 - 6231

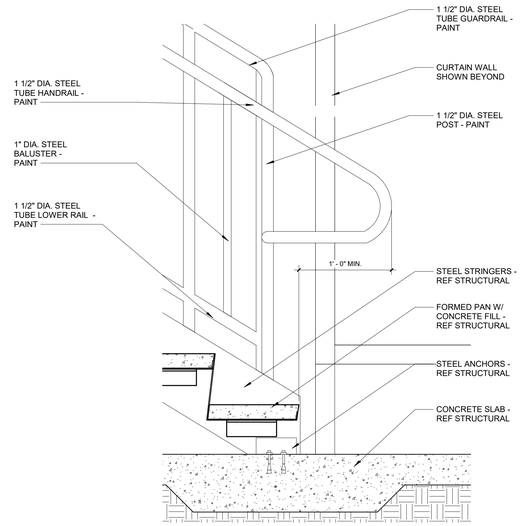

1 SECTION DETAIL - RAILING AT GROUND FLOOR
1 1/2" = 1'-0"

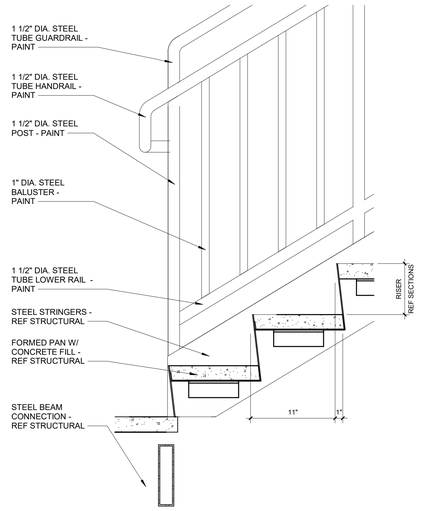

2 RAILING AT MID LANDING
1 1/2" = 1'-0"

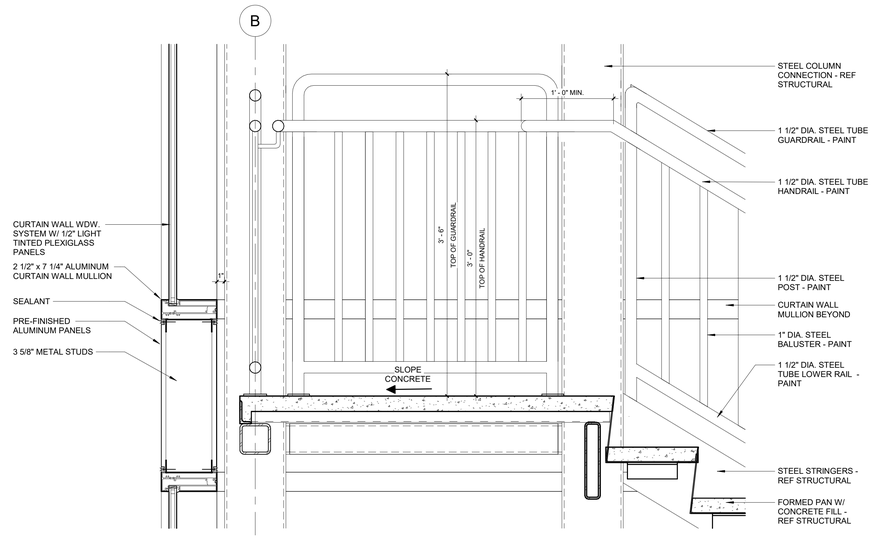

3 RAILING @ LANDING
1 1/2" = 1'-0"

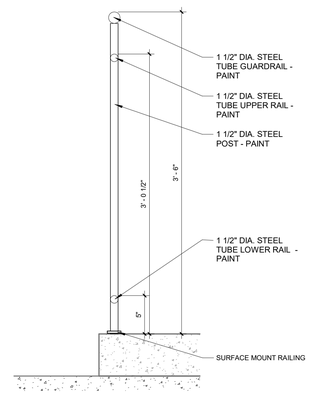

4 RAILING IN PARKING GARAGE
1 1/2" = 1'-0"

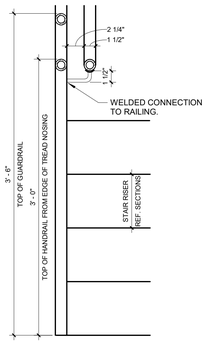

5 HANDRAIL DETAIL
1 1/2" = 1'-0"

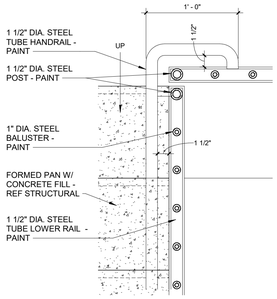

6 HANDRAIL DETAIL @ GROUND FLOOR
1 1/2" = 1'-0"

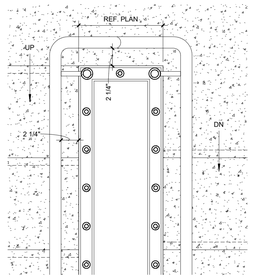

7 HANDRAIL DETAIL @ MID LANDING
1 1/2" = 1'-0"

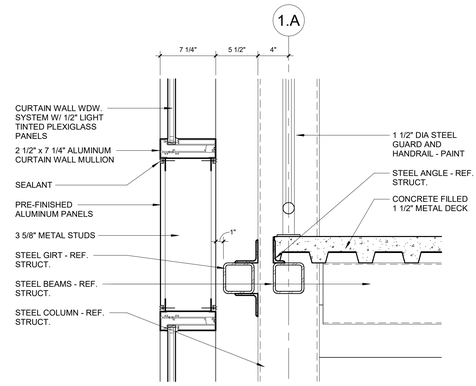

8 HANDRIL DETAIL @ PANEL ABOVE GURT
1 1/2" = 1'-0"

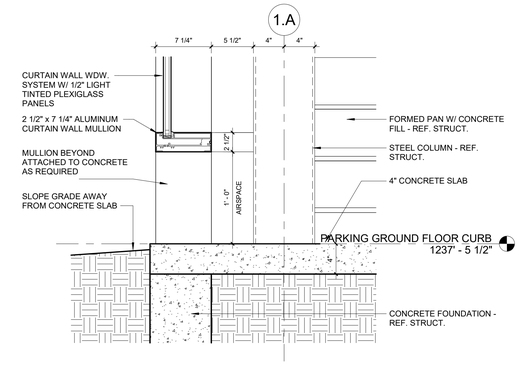

9 CURTAIN WALL DETAIL @ GROUND FLOOR
1 1/2" = 1'-0"

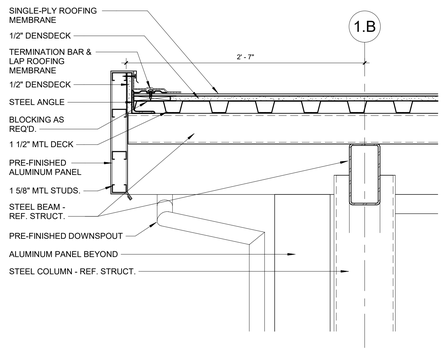

10 ROOF EDGE DETAIL
1 1/2" = 1'-0"

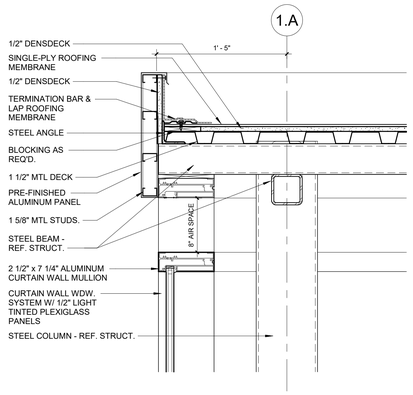

11 CURTAIN WALL ROOF EDGE DETAIL
1 1/2" = 1'-0"

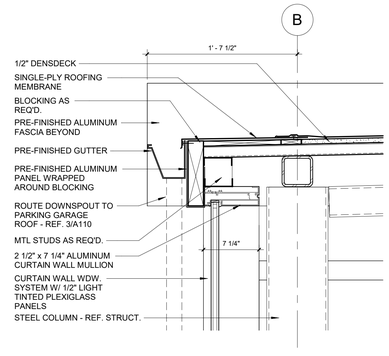

12 ROOF GUTTER DETAIL
1 1/2" = 1'-0"

0' 6" 1' 2'
1 1/2" = 1'

Revisions:	Date:

CONSULTANT

HFG
330 N. Mead St, Suite 100
Wichita, KS 67202
Phone: 316.262.2500
www.hfgarchitecture.com

ARCHITECT/ENGINEER

SES SPECIALIZED ENGINEERING SOLUTIONS
7100 E BELLEVIEW AVE, STE 107
GREENWOOD VILLAGE, CO 80111
Phone: (720) 200-5955
www.specializedeng.com
SES Project : 20114.008

STAMP

4/23/2026

Office of Construction and Facilities Management

VA U.S. Department of Veterans Affairs

Drawing Title: SOUTH STAIR DETAILS	Phase: ADDENDUM 01	Project Title: VA OKC - DESIGN REPAIR PARKING GARAGE	Project Number: 635-21-139
Approved:	NON-SPRINKLERED	Location: 921 N.E. 13TH STREET OKLAHOMA CITY, OK 73104	Building Number
		Issue Date: 04/23/2026 / Checked: JW / Drawn: JS	Drawing Number: A111

Autodesk Docs://20114.008 - VA Oklahoma City Parking Garage/635-139_A R22.rvt
4/22/2026 4:20:03 PM

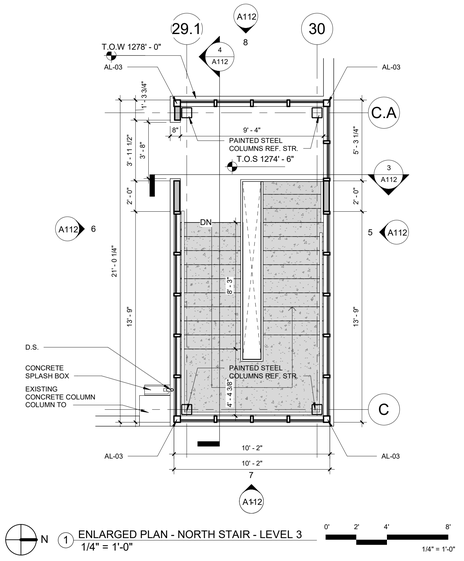

N 1 ENLARGED PLAN - NORTH STAIR - LEVEL 3
1/4" = 1'-0"

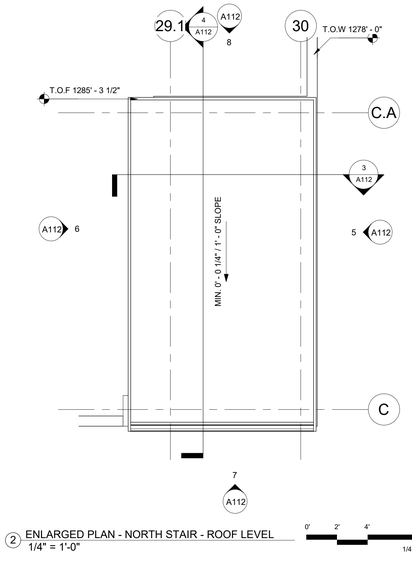

N 2 ENLARGED PLAN - NORTH STAIR - ROOF LEVEL
1/4" = 1'-0"

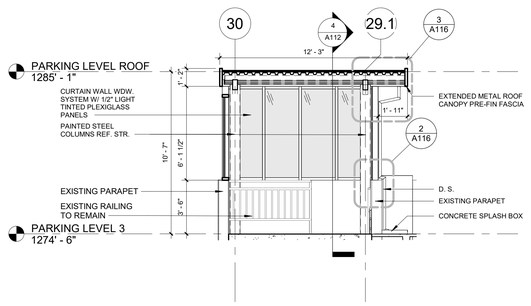

3 E/W SECTION - NORTH STAIR
1/4" = 1'-0"

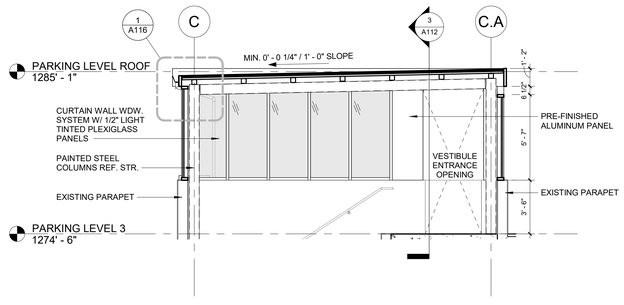

4 N/S SECTION - NORTH STAIR
1/4" = 1'-0"

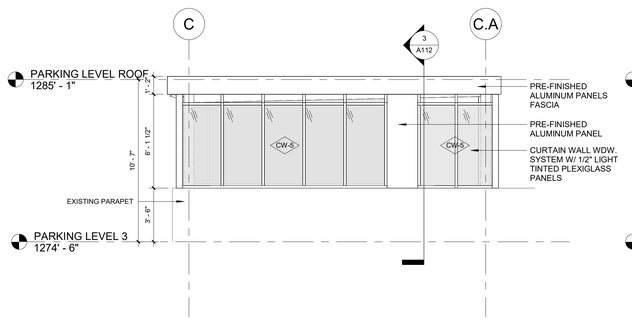

5 NORTH ELEVATION - NORTH STAIR
1/4" = 1'-0"

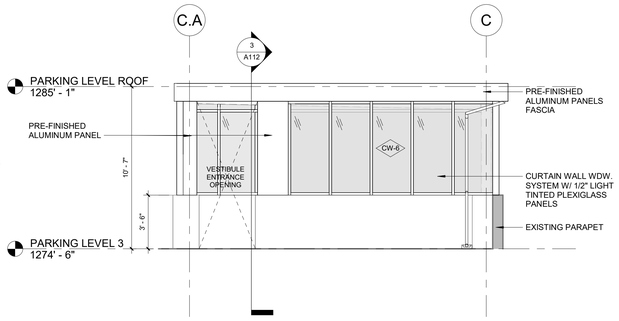

6 SOUTH ELEVATION - NORTH STAIR
1/4" = 1'-0"

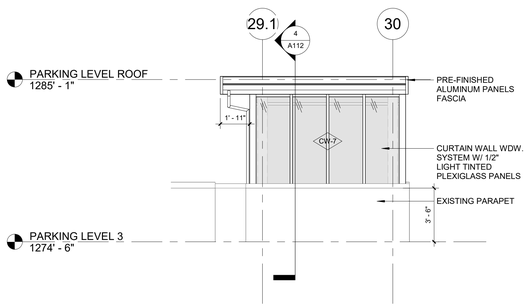

7 EAST ELEVATION - NORTH STAIR
1/4" = 1'-0"

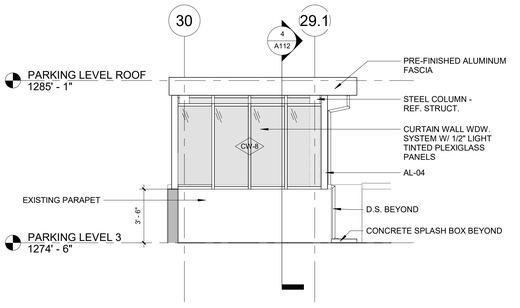

8 WEST ELEVATION - NORTH STAIR
1/4" = 1'-0"

Revisions:	Date:

CONSULTANT

HFG
330 N. Mead St, Suite 100
Wichita, KS 67202
Phone: 316.262.2500
www.hfgarchitecture.com

ARCHITECT/ENGINEER

SES Specialized Engineering Solutions
7100 E BELLEVIEW AVE, STE 107
GREENWOOD VILLAGE, CO 80111
Phone: (720) 200-5955
www.specializedeng.com
SES Project : 20114.008

STAMP

4/23/2026

Office of Construction and Facilities Management

VA U.S. Department of Veterans Affairs

Drawing Title
NORTHEAST STAIR ENCLOSURE ENLARGED PLANS, SECTIONS & ELEVATIONS

Phase
ADDENDUM 01

Project Title
VA OKC - DESIGN REPAIR PARKING GARAGE

Project Number
635-21-139

Building Number

Approved:

NON-SPRINKLERED

Location
921 N.E. 13TH STREET OKLAHOMA CITY, OK 73104

Issue Date 04/23/2026 | **Checked** JW | **Drawn** JS

Drawing Number
A112

VA FORM 08 - 6231

Autodesk Docs://20114.008 - VA Oklahoma City Parking Garage/635-139-A-R22.rvt
4/22/2026 4:20:04 PM

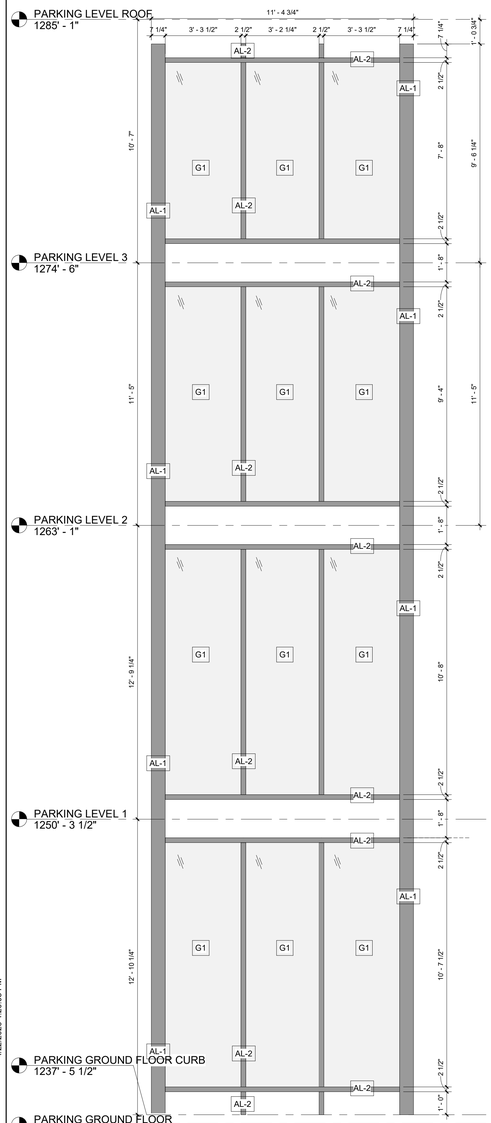

1 CW-1
3/8" = 1'-0"

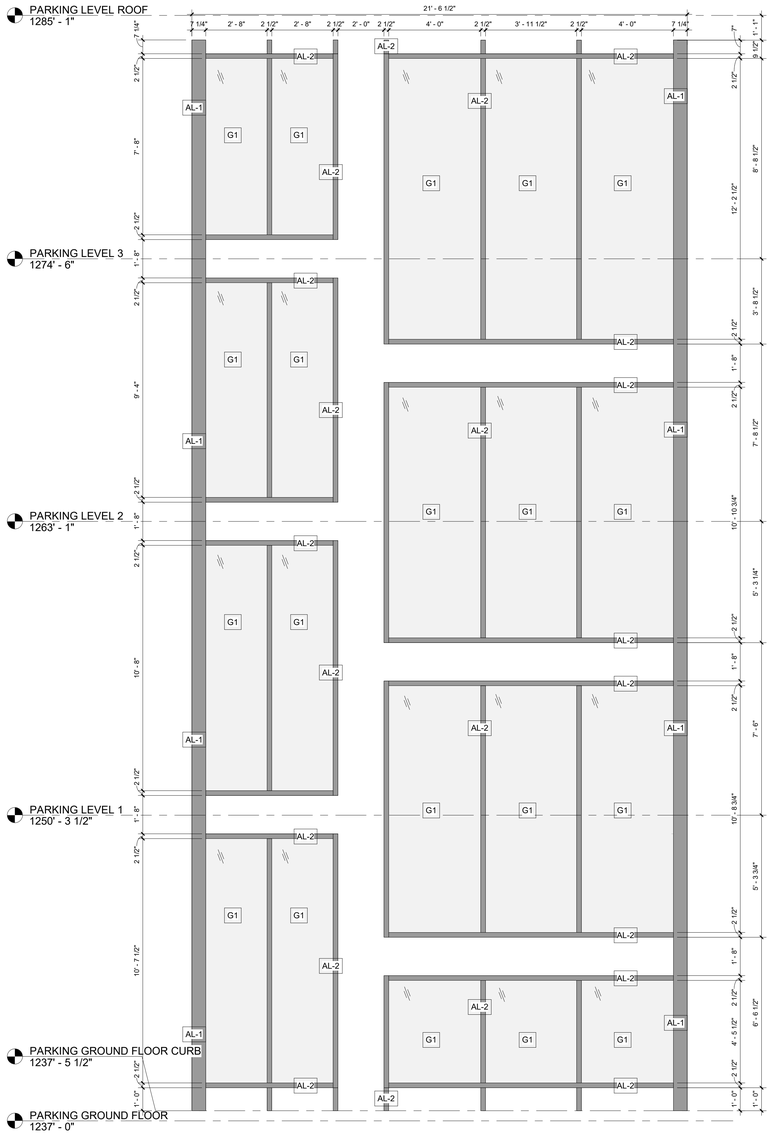

2 CW-2
3/8" = 1'-0"

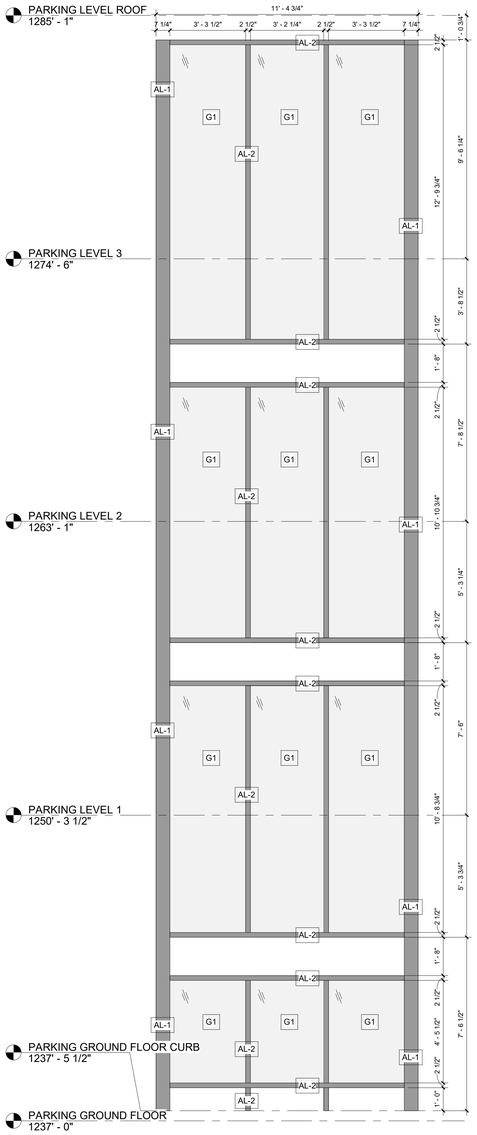

3 CW-3
3/8" = 1'-0"

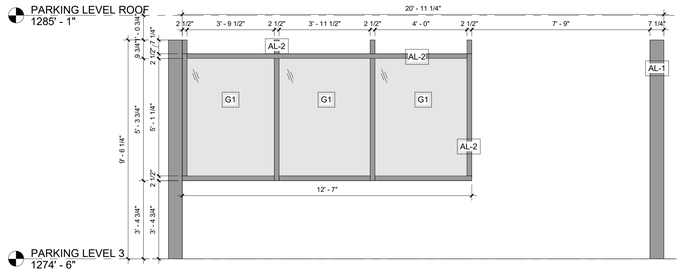

4 CW-4
3/8" = 1'-0"

AL-1	7 1/4" x 7 1/4" ALUMINUM CORNER CURTAIN WALL MULLION
AL-2	2 1/2" x 7 1/4" ALUMINUM CURTAIN WALL MULLION
AL-3	5" x 5" ALUMINUM CORNER CURTAIN WALL MULLION
AL-4	2 1/2" x 5" ALUMINUM CURTAIN WALL MULLION
G-1	CURTAIN WALL WDW. SYSTEM W/ 1/2" LIGHT TINTED PLEXIGLASS PANELS

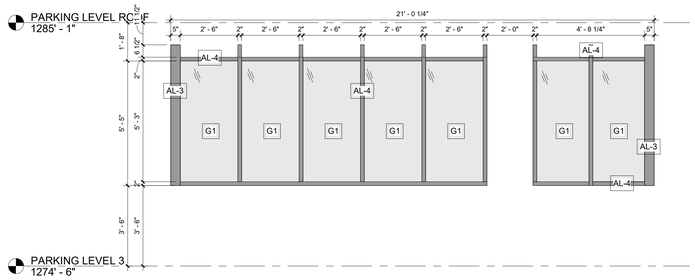

5 CW-5
3/8" = 1'-0"

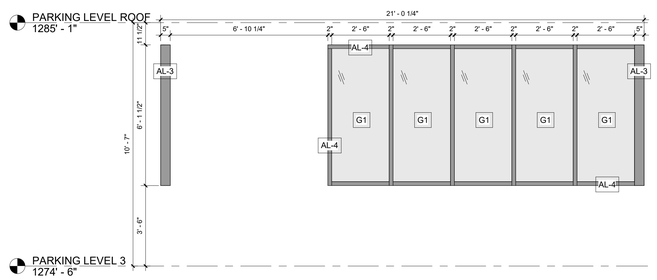

6 CW-6
3/8" = 1'-0"

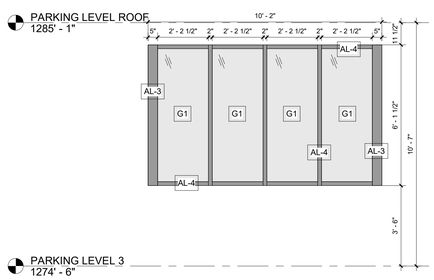

7 CW-7
3/8" = 1'-0"

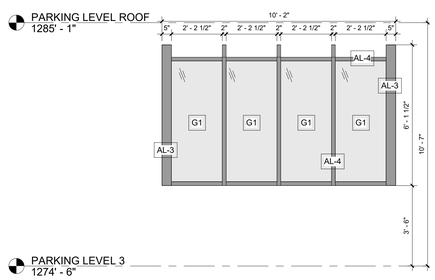

8 CW-8
3/8" = 1'-0"

0' 1' 2' 4'
3/8" = 1'

Revisions:	Date:

CONSULTANT

HFG
330 N. Mead St, Suite 100
Wichita, KS 67202
Phone: 316.262.2500
www.hfgarchitecture.com

ARCHITECT/ENGINEER

SES SPECIALIZED ENGINEERING SOLUTIONS
7100 E BELLEVIEW AVE, STE 107
GREENWOOD VILLAGE, CO 80111
Phone: (720) 200-5955
www.specializedeng.com
SES Project : 20114.008

STAMP

4/23/2026

Office of Construction and Facilities Management

VA U.S. Department of Veterans Affairs

Drawing Title
CURTAIN WALL SCHEDULE - STAIR ENCLOSURES

Phase
ADDENDUM 01

Project Title
VA OKC - DESIGN REPAIR PARKING GARAGE

Project Number
635-21-139

Building Number

Approved:

Location
921 N.E. 13TH STREET OKLAHOMA CITY, OK 73104

NON-SPRINKLERED

Issue Date 04/23/2026 | **Checked** JW | **Drawn** JS

Drawing Number
A113

4/22/2026 4:20:05 PM
Autodesk Docs://20114.008 - VA Oklahoma City Parking Garage/635-139 A R22.rvt

VA FORM 08 - 6231

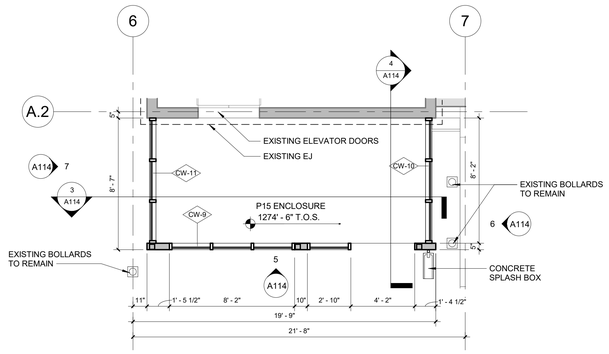

N 1 ENLARGED PLAN - P15 - LEVEL 3
1/4" = 1'-0"

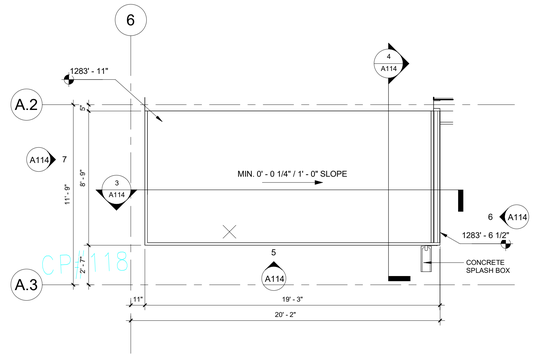

N 2 ENLARGED PLAN - ROOF P15
1/4" = 1'-0"

0' 2' 4' 8'
1/4" = 1'-0"

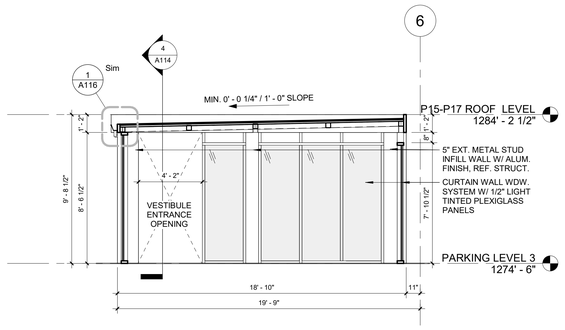

3 E/W SECTION - P15
1/4" = 1'-0"

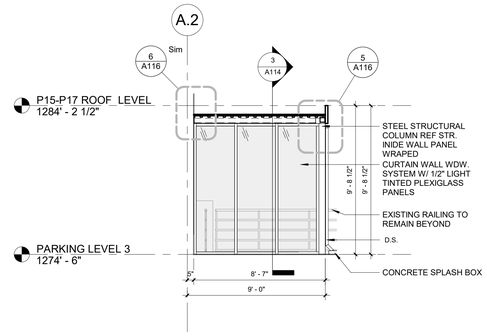

4 N/S SECTION - P15
1/4" = 1'-0"

0' 2' 4' 8'
1/4" = 1'-0"

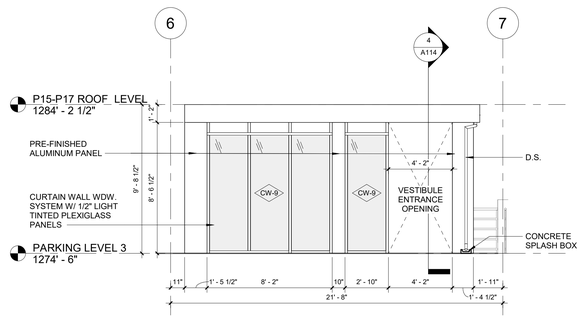

5 EAST ELEVATION - P15
1/4" = 1'-0"

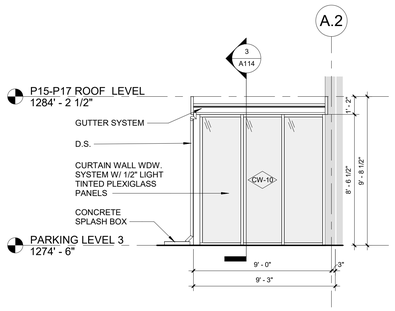

6 NORTH ELEVATION - P15
1/4" = 1'-0"

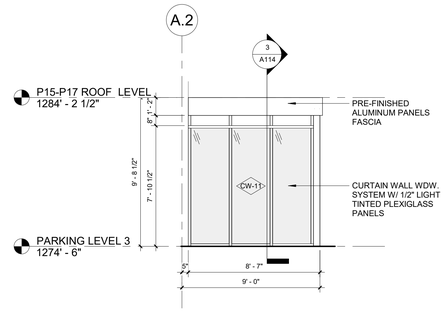

7 SOUTH ELEVATION - P15
1/4" = 1'-0"

0' 2' 4' 8'
1/4" = 1'-0"

Revisions:	Date:

CONSULTANT

HFG
330 N. Mead St, Suite 100
Wichita, KS 67202
Phone: 316.262.2500
www.hfgarchitecture.com

ARCHITECT/ENGINEER

SES SPECIALIZED ENGINEERING SOLUTIONS
7100 E BELLEVIEW AVE, STE 107
GREENWOOD VILLAGE, CO 80111
Phone: (720) 200-5955
www.specializedeng.com
SES Project : 20114.008

STAMP

4/23/2026

Office of Construction and Facilities Management

VA U.S. Department of Veterans Affairs

Drawing Title	P15 ENCLOSURE ENLARGED PLANS, SECTION & ELEVATIONS
Phase	ADDENDUM 01
Project Title	VA OKC - DESIGN REPAIR PARKING GARAGE
Project Number	635-21-139
Building Number	
Approved:	
Location	921 N.E. 13TH STREET OKLAHOMA CITY, OK 73104
Drawing Number	A114
Issue Date	04/23/2026
Checked	JW
Drawn	JS

4/22/2026 4:20:06 PM
Autodesk Docs://20114.008 - VA Oklahoma City Parking Garage/635-139.A.R22.rvt
VA FORM 08 - 6231

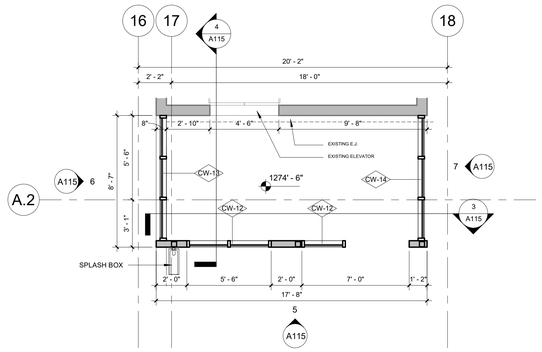

N 1 FLOOR PLAN - LEVEL 3 - AREA B - P17
1/4" = 1'-0"

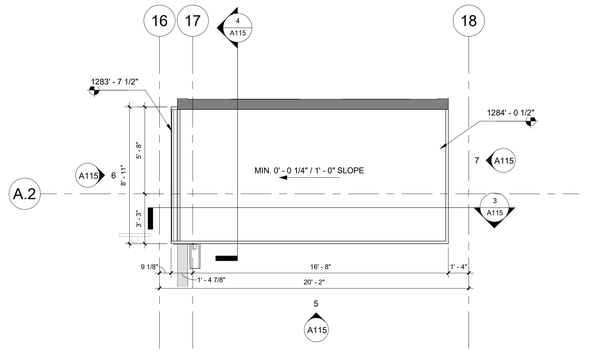

N 2 ENLARGED PLAN - ROOF P17
1/4" = 1'-0"

0' 2' 4' 8'
1/4" = 1'-0"

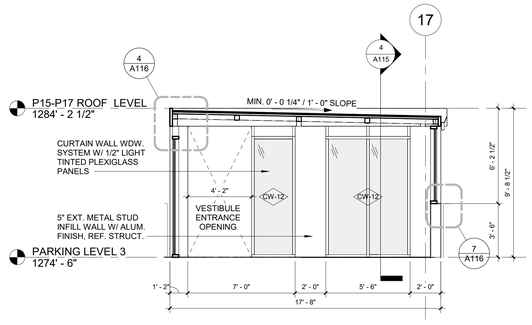

3 E/W SECTION - P17
1/4" = 1'-0"

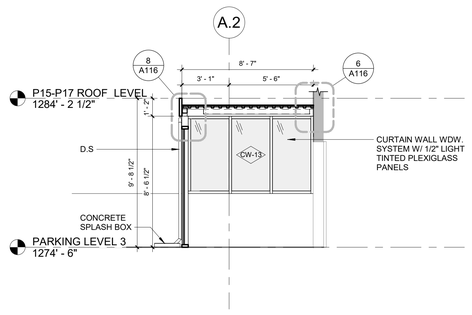

4 N/S SECTION - P17
1/4" = 1'-0"

0' 2' 4' 8'
1/4" = 1'-0"

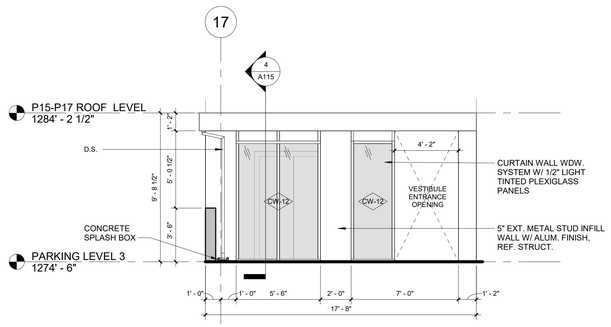

5 EAST ELEVATION - P17
1/4" = 1'-0"

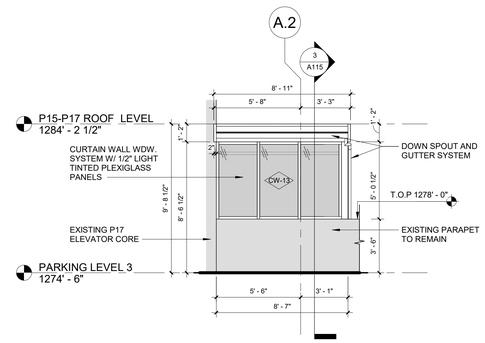

6 SOUTH ELEVATION - P17
1/4" = 1'-0"

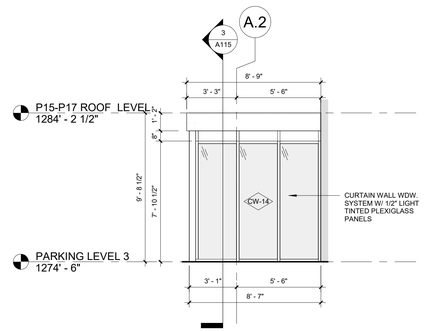

7 NORTH ELEVATION - P17
1/4" = 1'-0"

0' 2' 4' 8'
1/4" = 1'-0"

Revisions:	Date:

CONSULTANT

HFG
330 N. Mead St, Suite 100
Wichita, KS 67202
Phone: 316.262.2500
www.hfgarchitecture.com

ARCHITECT/ENGINEER

SES SPECIALIZED ENGINEERING SOLUTIONS
7100 E BELLEVIEW AVE, STE 107
GREENWOOD VILLAGE, CO 80111
Phone: (720) 200-5955
www.specializedeng.com
SES Project : 20114.008

STAMP

4/23/2026

Office of Construction and Facilities Management

VA U.S. Department of Veterans Affairs

Drawing Title	P17 ENCLOSURE ENLARGED PLANS, SECTION & ELEVATIONS
Approved:	
Phase	ADDENDUM 01
	NON-SPRINKLERED
Project Title	VA OKC - DESIGN REPAIR PARKING GARAGE
Location	921 N.E. 13TH STREET OKLAHOMA CITY, OK 73104
Issue Date	04/23/2026
Checked	JW
Drawn	JS
Project Number	635-21-139
Building Number	
Drawing Number	A115

Autodesk Docs://20114.008 - VA Oklahoma City Parking Garage/635-139-A R22.rvt
4/22/2026 4:20:07 PM

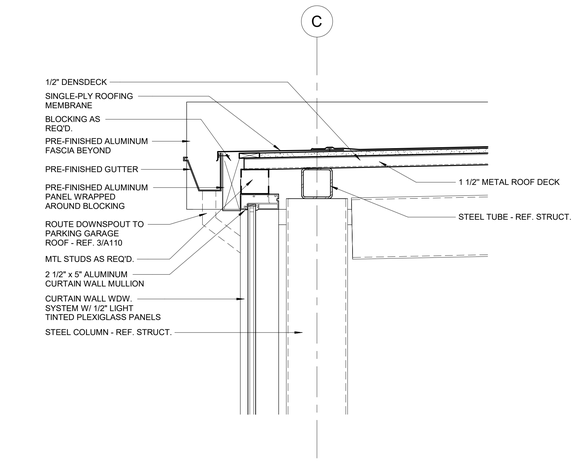

1 N/S SECTION - NORTH STAIR - ROOF DETAIL
1 1/2" = 1'-0"

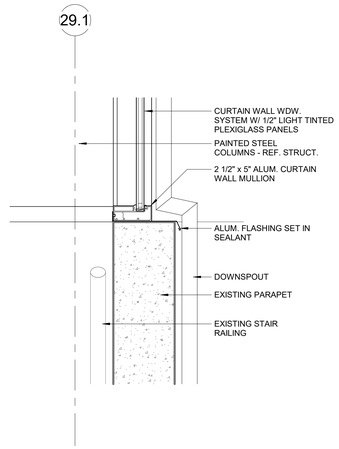

2 E/W SECTION - NORTH STAIR - WALL DETAIL
1 1/2" = 1'-0"

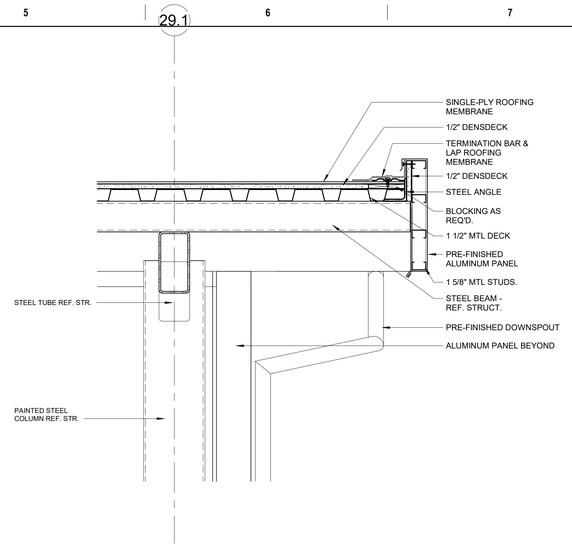

3 E/W SECTION - NORTH STAIR - ROOF DETAIL
1 1/2" = 1'-0"

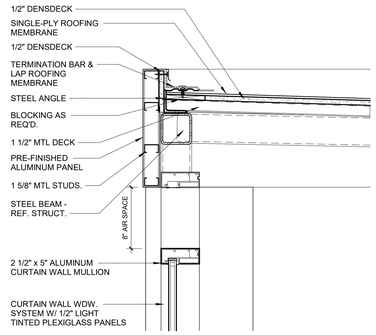

4 E/W SECTION - P17 - ROOF DETAIL
1 1/2" = 1'-0"

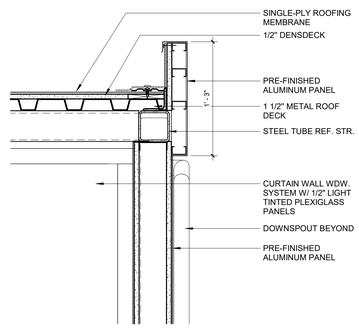

5 N/S SECTION - P15 - ROOF DETAIL
1 1/2" = 1'-0"

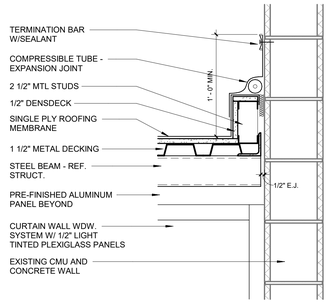

6 N/S SECTION - P17 - ROOF DETAIL1
1 1/2" = 1'-0"

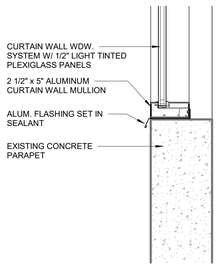

7 E/W SECTION - P17 - WALL DETAIL
1 1/2" = 1'-0"

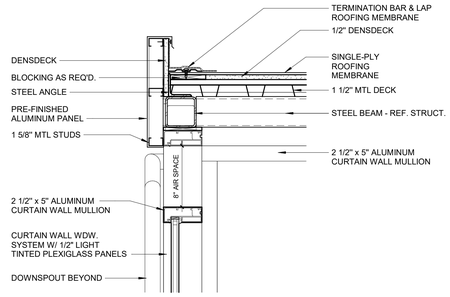

8 N/S SECTION - P17 - ROOF DETAIL
1 1/2" = 1'-0"

0' 6" 1' 2'
1 1/2" = 1'

Revisions:	Date:

CONSULTANT

HFG
330 N. Mead St, Suite 100
Wichita, KS 67202
Phone: 316.262.2500
www.hfgarchitecture.com

ARCHITECT/ENGINEER

SES SPECIALIZED ENGINEERING SOLUTIONS
7100 E BELLEVIEW AVE, STE 107
GREENWOOD VILLAGE, CO 80111
Phone: (720) 200-5955
www.specializedeng.com
SES Project : 20114.008

STAMP

4/23/2026

Office of Construction and Facilities Management

VA U.S. Department of Veterans Affairs

Drawing Title NORTH STAIR, P15 & P17 ENCLOSURES DETAILS	**Phase** ADDENDUM 01	**Project Title** VA OKC - DESIGN REPAIR PARKING GARAGE	**Project Number** 635-21-139
			Building Number
Approved:	NON-SPRINKLERED	**Location** 921 N.E. 13TH STREET OKLAHOMA CITY, OK 73104	**Drawing Number** A116
		Issue Date 04/23/2026 / **Checked** JW / **Drawn** JS	

4/22/2026 4:20:08 PM
Autodesk Docs://20114.008 - VA Oklahoma City Parking Garage/635-139 A R22.rvt

VA FORM 08 - 6231

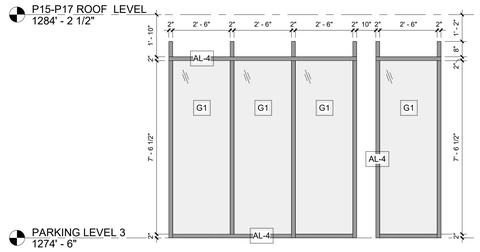

1 CW-9
3/8" = 1'-0"

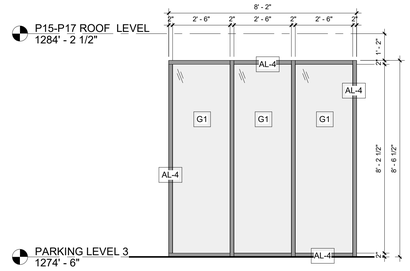

2 CW-10
3/8" = 1'-0"

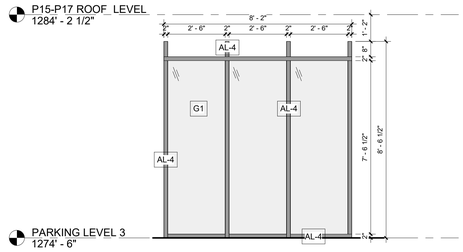

3 CW-11
3/8" = 1'-0"

AL-1	7 1/4" x 7 1/4" ALUMINUM CORNER CURTAIN WALL MULLION
AL-2	2 1/2" x 7 1/4" ALUMINUM CURTAIN WALL MULLION
AL-3	5" x 5" ALUMINUM CORNER CURTAIN WALL MULLION
AL-4	2 1/2" x 5" ALUMINUM CURTAIN WALL MULLION
G-1	CURTAIN WALL WDW. SYSTEM W/ 1/2" LIGHT TINTED PLEXIGLASS PANELS

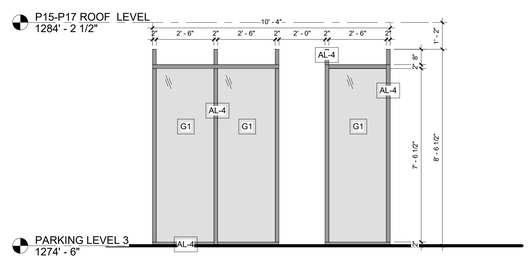

4 CW-12
3/8" = 1'-0"

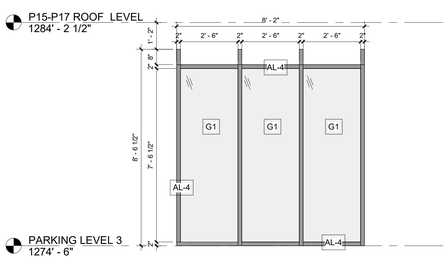

5 CW-13
3/8" = 1'-0"

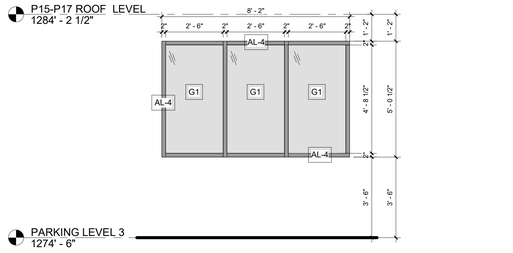

6 CW-15
3/8" = 1'-0"

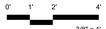

Revisions:	Date:

CONSULTANT

HFG
330 N. Mead St, Suite 100
Wichita, KS 67202
Phone: 316.262.2500
www.hfgarchitecture.com

ARCHITECT/ENGINEER

SES SPECIALIZED ENGINEERING SOLUTIONS
7100 E BELLEVIEW AVE, STE 107
GREENWOOD VILLAGE, CO 80111
Phone: (720) 200-5955
www.specializedeng.com
SES Project : 20114.008

STAMP

4/23/2026

Office of Construction and Facilities Management

VA U.S. Department of Veterans Affairs

Drawing Title
SOUTH STAIR CURTAIN WALL SCHEDULE

Approved:

Phase
ADDENDUM 01

NON-SPRINKLERED

Project Title
VA OKC - DESIGN REPAIR PARKING GARAGE

Location
921 N.E. 13TH STREET OKLAHOMA CITY, OK 73104

Issue Date 04/23/2026
Checked JW
Drawn JS

Project Number 635-21-139
Building Number
Drawing Number A117

Autodesk Docs://20114.008 - VA Oklahoma City Parking Garage/635-139-A-R22.rvt
4/22/2026 4:20:09 PM

VA FORM 08 - 6231

1 SOUTH STAIR CONCEPT 3D VIEW

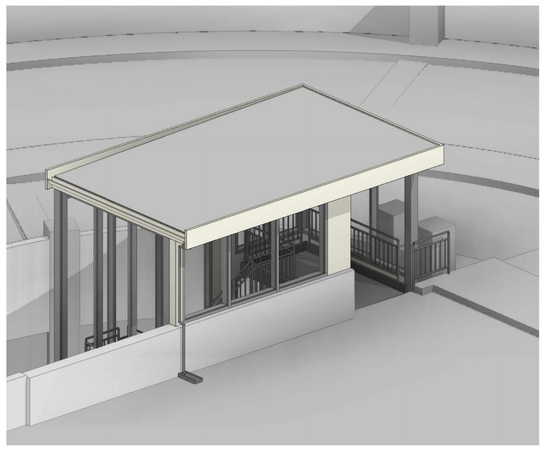

2 SOUTH STAIR CONCEPT 3D VIEW TOP

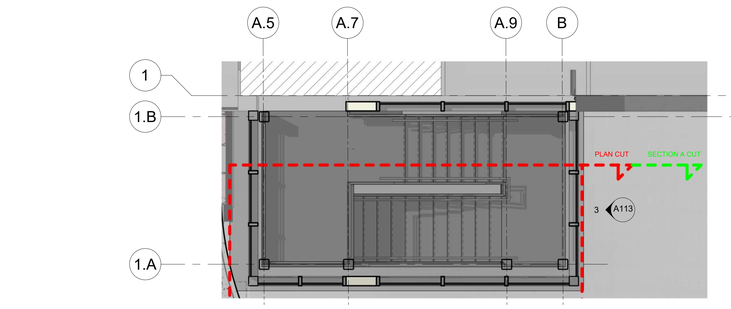

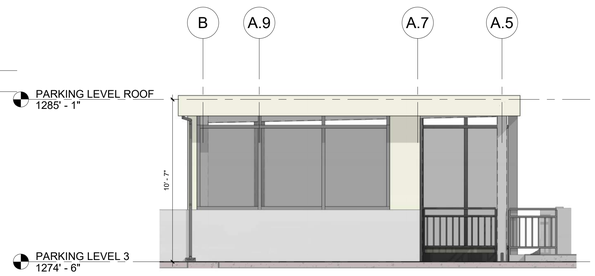

N

3 SOUTH STAIR PLAN
1/4" = 1'-0"

0' 2' 4' 8'
1/4" = 1'-0"

4 SOUTH STAIR TOP ENTRANCE NORTH ELEVATION
1/4" = 1'-0"

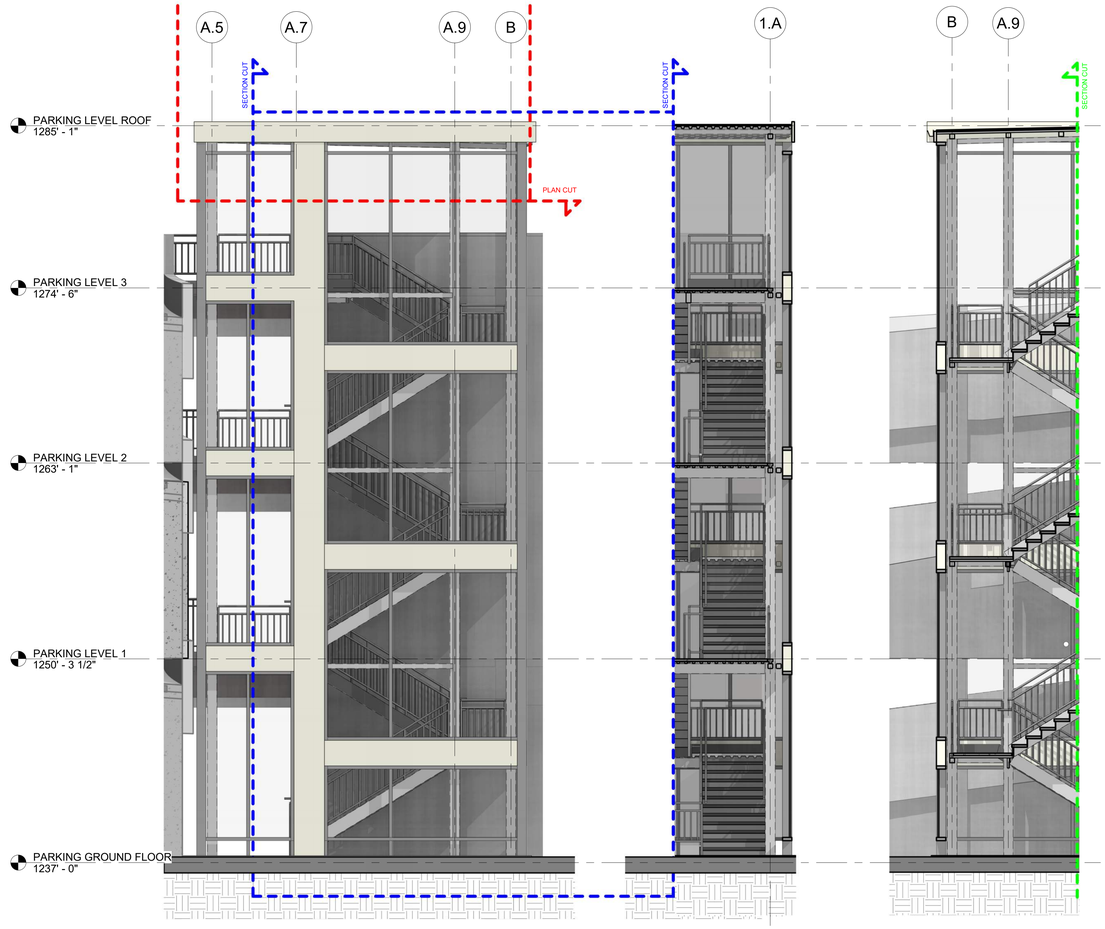

5 SOUTH STAIR BOTTOM SOUTH ELEVATION
1/4" = 1'-0"

0' 2' 4' 8'
1/4" = 1'-0"

6 SOUTH STAIR SECTION A
1/4" = 1'-0"

7 SOUTH STAIR SECTION B
1/4" = 1'-0"

Revisions:	Date:

CONSULTANT

HFG
330 N. Mead St, Suite 100
Wichita, KS 67202
Phone: 316.262.2500
www.hfgarchitecture.com

ARCHITECT/ENGINEER

SES SPECIALIZED ENGINEERING SOLUTIONS
7100 E BELLEVIEW AVE, STE 107
GREENWOOD VILLAGE, CO 80111
Phone: (720) 200-5955
www.specializedeng.com
SES Project : 20114.008

STAMP

4/23/2026

Office of Construction and Facilities Management

VA U.S. Department of Veterans Affairs

Drawing Title
SOUTH STAIR CONCEPT DRAWINGS

Approved:

Phase
ADDENDUM 01

NON-SPRINKLERED

Project Title
VA OKC - DESIGN REPAIR PARKING GARAGE

Location
921 N.E. 13TH STREET OKLAHOMA CITY, OK 73104

Issue Date 04/23/2026
Checked JW
Drawn JS

Project Number 635-21-139
Building Number
Drawing Number C101

4/22/2026 4:21:23 PM
Autodesk Docs://20114.008 - VA Oklahoma City Parking Garage/635-139-A-R22.rvt

VA FORM 08 - 6231

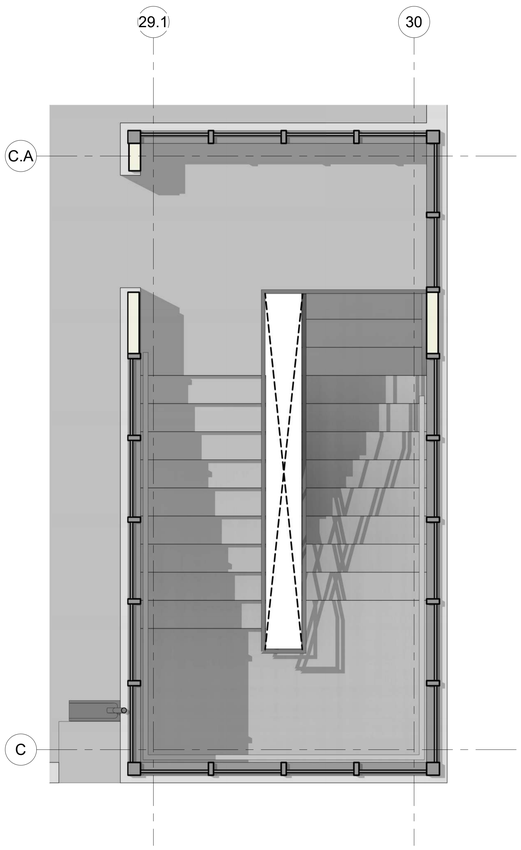

1 NORTHEAST STAIR ENCLOSURE PLAN
1/2" = 1'-0"

0' 1' 2' 4'
1/2" = 1'-0"

N

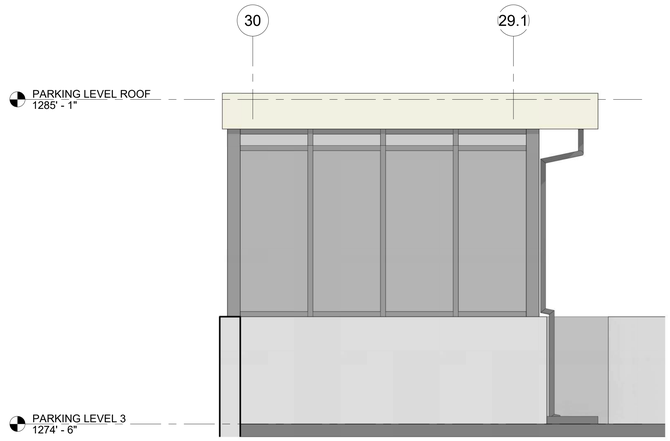

2 NORTHEAST STAIR ENCLOSURE TOP ENTRANCE - WEST ELEVATION
1/2" = 1'-0"

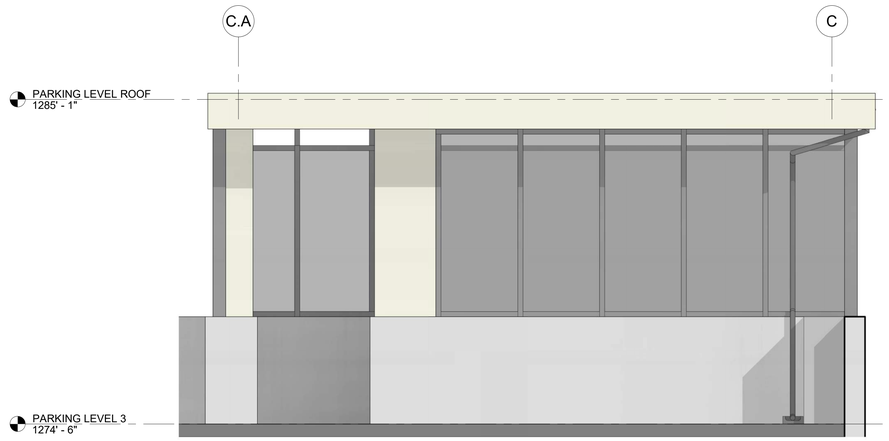

3 NORTHEAST STAIR ENCLOSURE TOP ENTRANCE - SOUTH ELEVATION
1/2" = 1'-0"

0' 1' 2' 4'
1/2" = 1'-0"

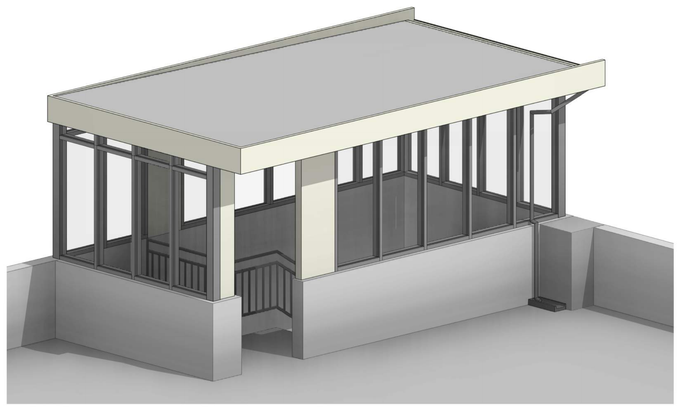

4 NORTHEAST STAIR ENCLOSURE 3D TOP VIEW 1

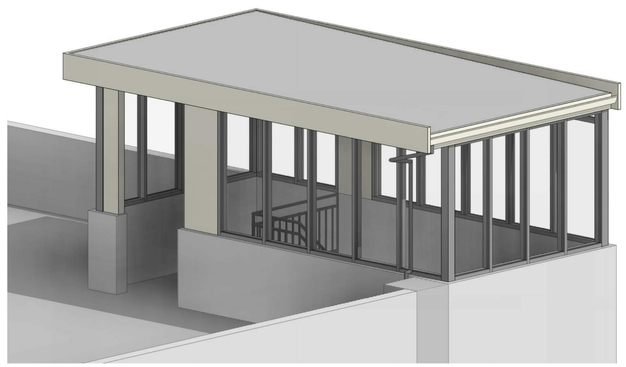

5 NORTHEAST STAIR ENCLOSURE 3D TOP VIEW 2

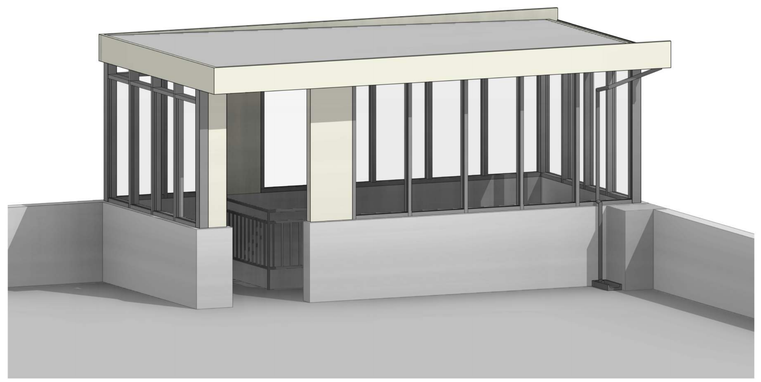

6 NORTHEAST STAIR ENCLOSURE 3D TOP VIEW 3

Revisions:	Date:

CONSULTANT

HFG
330 N. Mead St, Suite 100
Wichita, KS 67202
Phone: 316.262.2500
www.hfgarchitecture.com

ARCHITECT/ENGINEER

SES SPECIALIZED ENGINEERING SOLUTIONS
7100 E BELLEVIEW AVE, STE 107
GREENWOOD VILLAGE, CO 80111
Phone: (720) 200-5955
www.specializedeng.com
SES Project : 20114.008

STAMP

4/23/2026

Office of Construction and Facilities Management

VA U.S. Department of Veterans Affairs

Drawing Title NORTHEAST STAIR ENCLOSURE CONCEPT DRAWINGS	**Phase** ADDENDUM 01	**Project Title** VA OKC - DESIGN REPAIR PARKING GARAGE	**Project Number** 635-21-139
			Building Number
Approved:	NON-SPRINKLERED	**Location** 921 N.E. 13TH STREET OKLAHOMA CITY, OK 73104	**Drawing Number** C102
		Issue Date 04/23/2026 · **Checked** JW · **Drawn** JS	

Autodesk Docs://20114.008 - VA Oklahoma City Parking Garage/635-139-A-R22.rvt
4/22/2026 4:21:39 PM

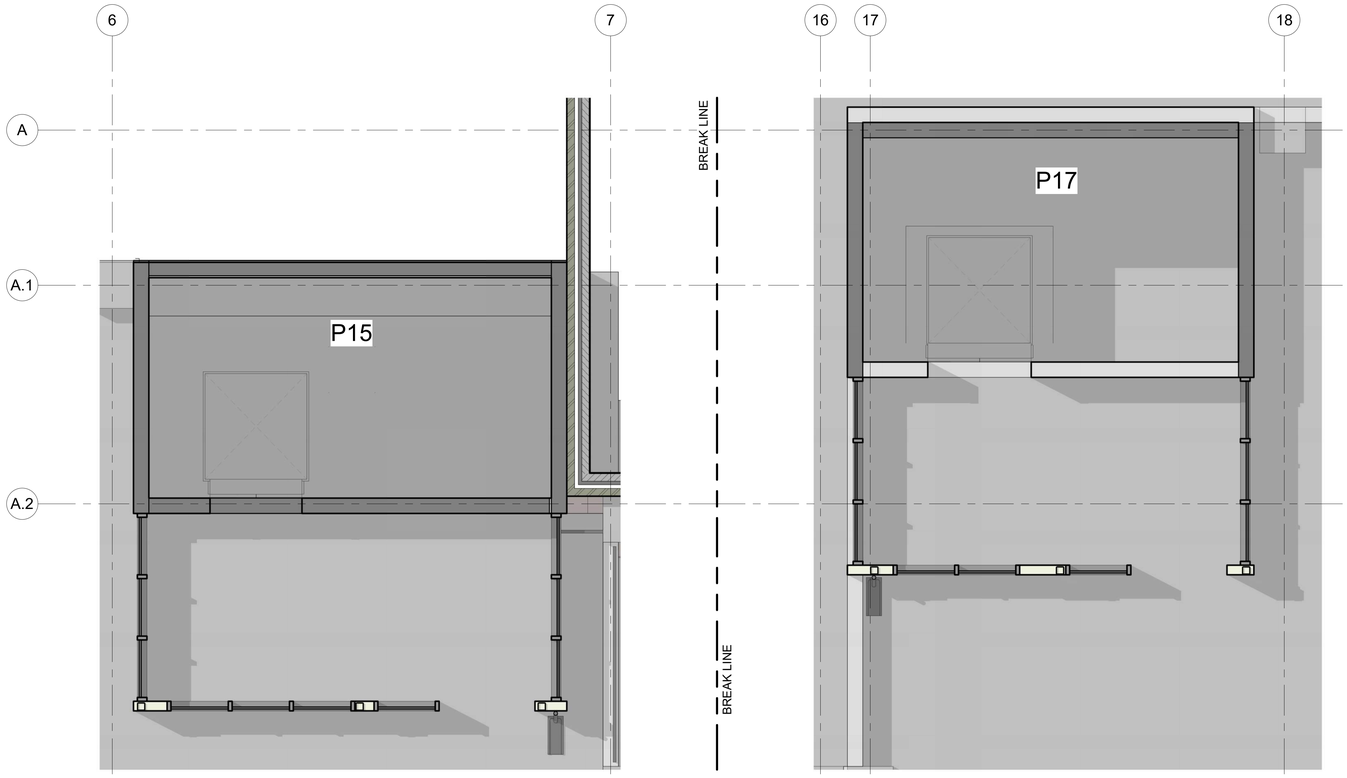

1 P15 & P17 ELEVATOR ENCLOSURE CONCEPT FLOOR PLANS
3/8" = 1'-0"

0' 1' 2' 4'
3/8" = 1'

N

ROOF-TOP ELEVATOR ENCLOSURE – (P15 & P17)

To maintain a consistent architectural language with the roof stair-tower enclosures, the roof elevator enclosures (P15 and P17) will be enclosed using a light, transparent system with clear plexi / polycarbonate glazing panels and a small solid side panel. The intent is to create a clean, modern rooftop element that maintains openness and daylight while defining the elevator presence at the roof level.

A key feature of the enclosure is a continuous 1'-0" gap at the top, with the glazing stopping below the roof fascia line. This gap keeps the enclosure visually light, avoids a "boxed-in" appearance, and supports ventilation and clean termination detailing.

Above the glazing, a continuous roof fascia element will be provided to visually "cap" the enclosure. This fascia is intended to conceal roof-level components from view and present a clean, simplified appearance—so the primary view is the fascia line and the clear glazing below, rather than exposed roof elements.

The solid side panel is also used as a compositional and finishing element, allowing the design to blend and coordinate with the gutter/roof fascia color for a cohesive overall appearance. By aligning these colors and edges, the enclosure reads as an intentional architectural feature rather than a purely functional element, reinforcing the design language established at the stair-tower enclosures.

This approach will be applied consistently to both P15 and P17, with minor adjustments only where existing parapet conditions require the glazed portion to align with the parapet line.

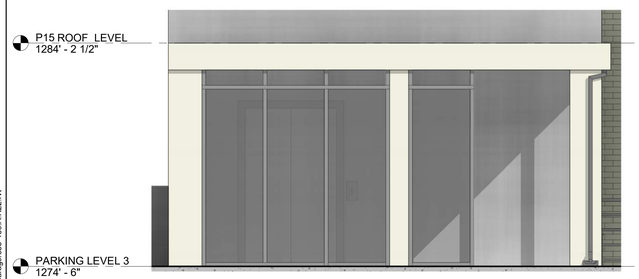

2 P15 ENCLOSURE CONCEPT (EAST) ELEVATION
3/8" = 1'-0"

3 P17 ENCLOSURE CONCEPT (EAST) ELEVATION
3/8" = 1'-0"

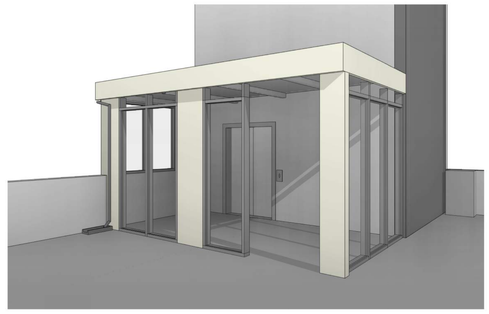

A1 P17 ELEVATOR ENCLOSURE VIEW 1

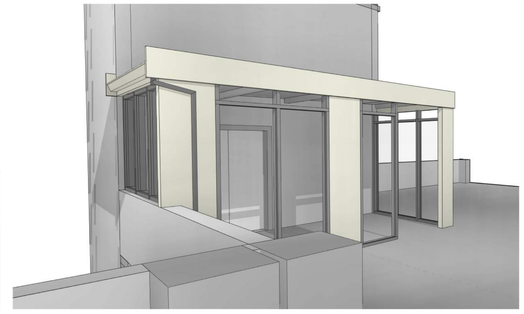

A2 P17 ELEVATOR ENCLOSURE VIEW 2

A3 P17 ELEVATOR ENCLOSURE VIEW 3

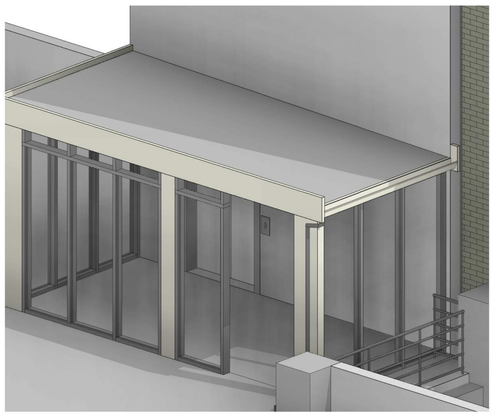

B1 P15 ELEVATOR ENCLOSURE VIEW 1

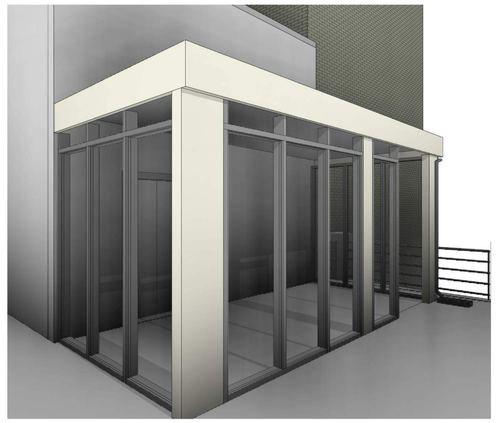

B2 P15 ELEVATOR ENCLOSURE VIEW 2

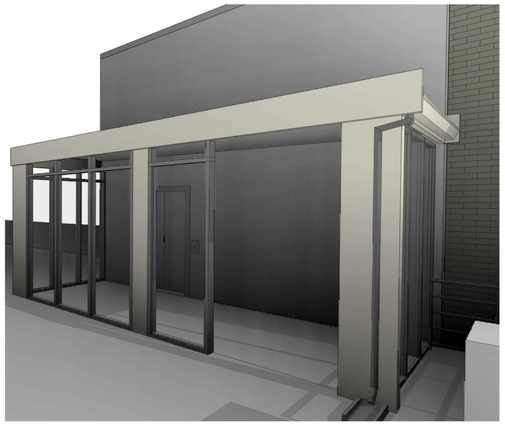

B3 P15 ELEVATOR ENCLOSURE VIEW 3

Revisions:	Date:

CONSULTANT

HFG
330 N. Mead St, Suite 100
Wichita, KS 67202
Phone: 316.262.2500
www.hfgarchitecture.com

ARCHITECT/ENGINEER

SES SPECIALIZED ENGINEERING SOLUTIONS
7100 E BELLEVIEW AVE, STE 107
GREENWOOD VILLAGE, CO 80111
Phone: (720) 200-5955
www.specializedeng.com
SES Project : 20114.008

STAMP

4/23/2026

Office of Construction and Facilities Management

VA U.S. Department of Veterans Affairs

Drawing Title: P15 & P17 ELEVATOR ENCLOSURE CONCEPT DRAWINGS	Phase: ADDENDUM 01	Project Title: VA OKC - DESIGN REPAIR PARKING GARAGE	Project Number: 635-21-139
Approved:	NON-SPRINKLERED	Location: 921 N.E. 13TH STREET OKLAHOMA CITY , OK 73104	Building Number
		Issue Date: 04/23/2026 / Checked: JW / Drawn: JS	Drawing Number: C103

VA FORM 08 - 6231

3 P17 ENCLOSURE CONCEPT (EAST) ELEVATION
3/8" = 1'-0"

Autodesk Docs://20114.008 - VA Oklahoma City Parking Garage/635-139-A R22.rvt
4/22/2026 4:21:02 PM

STRUCTURAL ABBREVIATIONS

#	NUMBER
&	AND
@	AT
A/E	ARCHITECT / ENGINEER
AB	ANCHOR BOLT
ACI	AMERICAN CONCRETE INSTITUTE
ADDL	ADDITIONAL
ADJ	ADJACENT
AFF	ABOVE FINISHED FLOOR
AGG	AGGREGATE
AH, AHU	AIR HANDLING UNIT
AISC	AMERICAN INSTITUTE OF STEEL CONSTRUCTION
ALT	ALTERNATE
APA	AMERICAN PLYWOOD ASSOCIATION
APPROX	APPROXIMATELY
ARCH	ARCHITECTURAL
ASTM	AMERICAN SOCIETY FOR TESTING AND MATERIALS
AT/FP	ANTI-TERRORISM/ FORCE PROTECTION
AWS	AMERICAN WELDING SOCIETY
BET	BETWEEN
BLDG	BUILDING
BLW	BELOW
BM	BEAM
BN	BOUNDARY NAIL
BOF	BOTTOM OF FOOTING
BOS	BOTTOM OF STEEL
BOT	BOTTOM
BRG	BEARING
BTWN	BETWEEN
C	CHANNEL
CD	CONSTRUCTION DOCUMENTS
CE	CARBON EQUIVALENT
CENT	CENTERED
CFMF	COLD-FORMED METAL FRAMING
CFS	COLD-FORMED STEEL
CIP	CAST IN PLACE
CJ	CONTROL JOINT/CEILING JOIST
CJP	COMPLETE JOINT PENETRATION
CL	CENTERLINE
CLR	CLEAR
CMU	CONCRETE MASONRY UNIT
CO	CONTRACTING OFFICER
COL	COLUMN
CONC	CONCRETE
COND	CONDITION
CONN	CONNECT, CONNECTION
CONST	CONSTRUCTION
CONT	CONTINUOUS
CONTR	CONTRACTOR
COORD	COORDINATE
COR	CORNER, CONTRACTING OFFICER'S REPRESENTATIVE
CTR	CENTER
CU FT	CUBIC FEET
CW	CURTAIN WALL
CY	CUBIC YARD
D	DEEP, DEPTH
DAS	DEFORMED ANCHOR STUD
DBL	DOUBLE
DEG	DEGREE
DEMO	DEMOLISH, DEMOLITION
DEP	DEPRESSED
DIA, Ø	DIAMETER
DIAG	DIAGONAL
DIM	DIMENSION
DIR	DIRECTION
DL	DEAD LOAD
DO	DITTO
DT	DRAG TRUSS
DTL	DETAIL
DWG(S)	DRAWINGS
DWL	DOWEL
EA	EACH
EF	EACH FACE
ELEC	ELECTRICAL
ELEV	ELEVATION
EN	EDGE NAIL
EOR	ENGINEER OF RECORD
EQ, =	EQUAL, EQUALS
EQN	EQUATION
EQUIP	EQUIPMENT
ES	EACH SIDE
EW	EACH WAY
EXIST, (E)	EXISTING
EXP	EXPANSION
EXT	EXTERNAL, EXTERIOR
FF	FAR FACE, FINISH FACE
FFE	FINISH FLOOR ELEVATION
FG	FINISH GRADE
FJ	FLOOR JOIST
FN	FIELD NAIL
FND	FOUNDATION
FOC	FACE OF CONCRETE
FOM	FACE OF MASONRY
FOS	FACE OF STUD
FRMG	FRAMING
FS	FAR SIDE
FT, '	FOOT
FTG	FOOTING
Fy	YIELD STRESS
GA	GAUGE
GALV	GALVANIZED
GC	GENERAL CONTRACTOR
GLB	GLUED LAMINATED BEAM
GT	GIRDER TRUSS
GUSS	GUSSET
GYP BD	GYPSUM BOARD
HAS	HEADED ANCHOR STUD
HD	HOLD DOWN
HDR	HEADER
HGR	HANGER
HK	HOOK
HORIZ	HORIZONTAL
HP	HIGH POINT
HSS	HOLLOW STRUCTURAL SECTION
HT	HEIGHT
HVAC	HEATNG/ VENTILATING/ AIR CONDITIONING
I	MOMENT OF INERTIA
IBC	INTERNATIONAL BUILDING CODE
ICF	INSULATED CONCRETE FORM

ID	INSIDE DIAMETER
IN, "	INCH
INCL	INCLUDE
INFO	INFORMATION
INS	INSULATED, INSULATION
INT	INTERIOR
JST	JOIST
JT	JOINT
K, KIPS	THOUSAND POUNDS
KLF	KIPS PER LINEAR FOOT
KSF	KIPS PER SQUARE FOOT
L	LENGTH, ANGLE
LB	POUND
LF	LINEAR FOOT
LG	LONG, LIGHT GUAGE
LL	LIVE LOAD
LLH	LONG LEG HORIZONTAL
LLR	ROOF LIVE LOAD
LLV	LONG LEG VERTICAL
LOC	LOCATE, LOCATION
LONG	LONGITUDINAL
LTE	TENSION EMBEDMENT
LTS	LAP TENSION SPLICE
LW	LIGHT WEIGHT
MAS	MASONRY
MAX	MAXIMUM
MB	MACHINE BOLT
MBR	MEMBER
MECH	MECHANICAL
MED	MEDIUM
MEZZ	MEZZANINE
MF	MOMENT FRAME
MFG	MANUFACTURING
MID	MIDDLE
MIN	MINIMUM
MISC	MISCELLANEOUS
MLS	MASONRY LAP SPLICE
MO	MASONRY OPENING
MOD	MODIFY, MODIFIED
MPH	MILES PER HOUR
MRF	MANUFACTURER
N	NORTH
NA	NOT APPLICABLE
NIC	NOT IN CONTRACT
NS	NEAR SIDE
NTS	NOT TO SCALE
NW	NORMAL WEIGHT
OC	ON CENTER
OD	OUTSIDE DIAMETER
OH	OPPOSITE HAND, OVERHEAD
OPP	OPPOSITE
OSB	ORIENTED STRAND BOARD
OWSJ	OPEN WEB STEEL JOIST
P/C	PIN CONNECTED
PAF	POWDER ACTUATED FASTENER
PAR	PARALLEL
PCC	PRECAST CONCRETE
PCF	POUNDS PER CUBIC FOOT
PERIM	PERIMETER
PL	PLATE
PLUMB	PLUMBING
PLYWD	PLYWOOD
PNL	PANEL
PSF	POUNDS PER SQUARE FOOT
PSI	POUNDS PER SQUARE INCH
PT	PRESSURE TREATED, POINT, PRETENSIONED
REINF	REINFORCING, REINFORCED
REQ	REQUIRED
RET	RETURN, RETAINING
REV	REVISION, REVISED
RF	ROOF
RFT	RAFTERS
RS	ROUGH SAWN
RT	ROOF TRUSS
S	SECTION MODULUS
SC	SLIP CRITICAL
SCHED	SCHEDULE
SDC	SEISMIC DESIGN CATEGORY
SDI	STEEL DECK INSTITUTE
SECT	SECTION
SEIS	SEISMIC
SEOR	STRUCTURAL ENGINEER OF RECORD
SEP	SEPARATION
SF	SQUARE FEET
SHT	SHEET
SIM	SIMILAR
SJI	STEEL JOIST INSTITUTE
SL	SNOW LOAD
SMS	SHEET METAL SCREW
SPEC(S)	SPECIFICATION(S)
SPRT	SUPPORT
SQ	SQUARE
SS	STAINLESS STEEL
ST	SNUG TIGHT
STD	STANDARD
STIF/STIFF	STIFFENER
STL	STEEL
STRUCT	STRUCTURAL, STRUCTURE
SUSP	SUSPENDED
SYM	SYMMETRICAL
T&B	TOP AND BOTTOM
TGB	TOP OF GRADE BEAM
THK	THICK, THICKNESS
TL	TOTAL LOAD
TN	TOE NAIL
TOB	TOP OF BEAM
TOC	TOP OF CONCRETE
TOF	TOP OF FOOTING
TOS	TOP OF STEEL
TOW	TOP OF WALL
TYP	TYPICAL
UFC	UNITED FACILITES CRITERIA
UNO	UNLESS NOTED OTHERWISE
V	SHEAR
VB	VAPOR BARRIER
VERT	VERTICAL
VIF	VIF
W	WIDTH, WEST, WIDE FLANGE
W/	WITH
W/C	WATER CONTENT
W/O	WITHOUT
WL	WIND LOAD
WPT	WORKING POINT
WWF	WELDED WIRE FABRIC
WWM	WELDED WIRE MESH
x, *	BY, TIMES

CODE AND DESIGN CRITERIA

1. BUILDING CODES:
   a. LATEST EDITION OF U.S. DEPARTMENT OF VETERANS AFFAIRS DESIGN GUIDES, STANDARDS AND MANUALS
   b. INTERNATIONAL BUILDING CODE (IBC) - 2024
   c. AMERICAN INSTITUTE OF STEEL CONSTRUCTION (AISC), STEEL CONSTRUCTION MANUAL - 15th EDITION
   d. AISC, SEISMIC DESIGN MANUAL - 3rd EDITION
   e. AMERICAN SOCIETY OF CIVIL ENGINEERS (ASCE) 7, MINIMUM DESIGN LOADS AND ASSOCIATED CRITERIA FOR BUILDINGS AND OTHER STRUCTURES - 2022
   f. AMERICAN CONCRETE INSTITUTE (ACI) 318, BUILDING CODE REQUIREMENTS FOR STRUCTURAL CONCRETE - 2019
2. DESIGN CRITERIA
   a. RISK CATEGORY: II
3. DESIGN LOADS
   a. FLOOR
      1. SUPERIMPOSED DEAD LOAD: 5 PSF
      2. LIVE LOAD: 100 PSF
   b. ROOF
      1. SUPERIMPOSED DEAD LOAD: 5 PSF
      2. LIVE LOAD: 100 PSF
4. WIND DESIGN DATA
   a. BASIC WIND SPEED: 109 MPH (ULTIMATE) 84.4 MPH (ALLOWABLE)
   b. EXPOSURE: B
   c. SURFACE ROUGHNESS: B
   d. INTERNAL PRESSURE COEFFICIENT (GCpi): ± 0.18
   e. DESIGN WIND PRESSURES FOR COMPONENTS AND CLADDING DESIGNED BY THE CONTRACTOR:
      1. LISTED PRESSURES ARE INCLUDED FOR REFERENCE ONLY BASED ON A TRIBUTARY AREA OF 10 SF. FINAL CALCULATIONS SHALL BE COMPLETED BY THE CONTRACTOR.
      2. EDGE ZONE a = 12.3'
      3. WALL PRESSURES
         1. INTERIOR ZONE (4) = -17 PSF, +17 PSF
         2. CORNER ZONE (5) = -32 PSF, +17 PSF
      4. ROOF PRESSURES
         1. POSITIVE ALL ZONES = 16 PSF
         2. INTERIOR ZONE 1 = -38 PSF
         3. EDGE ZONE 2 = -50 PSF
         4. CORNER ZONE 3 = -50 PSF
5. SEISMIC DESIGN DATA
   a. ANALYSIS PROCEDURE: EQUIVALENT LATERAL FORCE
   b. SEISMIC IMPORTANCE FACTOR (Ie): 1.0
   c. Ss: 0.340g
   d. S1: 0.080g
   e. SITE CLASS: C
   f. Sds: 0.247g
   g. Sd1: 0.113g
   h. SEISMIC DESIGN CATEGORY: B
   i. SEISMIC FORCE RESISTING SYSTEM: INTERMEDIATE PRE-CAST CONCRETE SHEAR WALLS
      1. RESPONSE MODIFICATION FACTOR (R): 5
      2. OVERSTRENGTH FACTOR (Ω): 2.5
      3. DEFLECTION AMPLIFICATION FACTOR (C_d): 4.5
      4. SEISMIC RESPONSE COEFFICIENT (C_s) = 0.045
6. SNOW DESIGN DATA
   a. GROUND SNOW LOAD: 17 PSF
   b. SNOW IMPORTANCE FACTOR (Is): 1.0
   c. SNOW EXPOSURE FACTOR (Ce) = 1.0
   d. THERMAL FACTOR (Ct) = 1.2
   e. SLOPED ROOF FACTOR (Cs) = 1.0
   f. RAIN ON SNOW LOAD = 8 PSF
   g. FLAT ROOF SNOW LOAD = 14 PSF
   h. MIN UNIFORM ROOF SNOW LOAD = 22 PSF

GENERAL NOTES

1. THE PROJECT SPECIFICATIONS ARE A PART OF THE CONTRACT DOCUMENTS.
2. THE CONTRACTOR SHALL EXAMINE THE STRUCTURAL DRAWINGS, ARCHITECTURAL DRAWINGS, AND EXISTING CONDITIONS/DIMENSIONS. THE CONTRACTOR SHALL NOTIFY THE COR OF ANY DISCREPANCIES BEFORE PROCEEDING WITH ANY WORK.
3. THE DRAWINGS AND SPECIFICATIONS REPRESENT THE COMPLETED STRUCTURE. THEY DO NOT INDICATE THE METHOD OF CONSTRUCTION. THE CONTRACTOR SHALL PROVIDE ALL MEASURES AND MEANS NECESSARY TO PROTECT PERSONS AND STRUCTURES DURING CONSTRUCTION. SUCH MEASURES SHALL INCLUDE, BUT NOT BE LIMITED TO, BRACING, SHORING, ETC. OBSERVATION BY THE ARCHITECT, ENGINEER OR COR DOES NOT INCLUDE REVIEW OF THESE MEASURES.
4. NOTES AND DETAILS ON THE STRUCTURAL DRAWINGS TAKE PRECEDENCE OVER GENERAL NOTES. TYPICAL DETAILS SHALL BE USED WHENEVER APPLICABLE. REFER TO SPECIFICATIONS FOR ADDITIONAL INFORMATION.
5. ALL WORK NOT DETAILED OR NOTED SHALL BE CONSTRUCTED IN ACCORDANCE WITH OTHER SIMILAR WORK SHOWN ON THE DRAWINGS AND TYPICAL DETAILS.
6. DRAWINGS SHALL NOT BE SCALED FOR CONSTRUCTION PURPOSES.
7. NO PIPES OR DUCTS SHALL BE PLACED IN OR PENETRATE STRUCTURAL MEMBERS UNLESS SPECIFICALLY DESIGNED AND DETAILED.
8. STRUCTURAL DRAWINGS TO BE USED IN CONJUNCTION WITH ARCHITECTURAL, MECHANICAL, PLUMBING, ELECTRICAL, AND CIVIL DRAWINGS HEREIN.
9. REFER TO ARCHITECTURAL DRAWINGS FOR THE FOLLOWING:
   a. SIZE AND LOCATION OF CURBS, FLOOR DRAINS, SLOPES, DEPRESSED AREAS, CHANGES IN LEVEL, RAMPS, CHAMFERS, GROOVES, INSERTS, ETC.
   b. SIZE AND LOCATION OF FLOOR AND ROOF OPENINGS, IF NOT DIMENSIONED ON THESE DRAWINGS.
   c. FLOOR AND ROOF FINISHES.
   d. STAIR FRAMING AND DETAILS, EXCEPT AS NOTED.
   e. DIMENSIONS NOT SHOWN ON STRUCT DWGS.
10. REFER TO MECHANICAL, PLUMBING, AND ELECTRICAL DRAWINGS FOR THE FOLLOWING:
    a. PIPE RUNS, SLEEVES, HANGERS, EQUIPMENT, SLAB OPENINGS, NOT SHOWN OR NOTED ON STRUCTURAL DRAWINGS
    b. ELECTRICAL CONDUIT, BOXES, OUTLETS.
    c. CONCRETE INSERTS FOR ELECTRICAL, MECHANICAL, AND PLUMBING FIXTURES.
    d. SIZE AND LOCATION OF MACHINE AND EQUIPMENT BASES. CONTRACTOR'S ENGINEER SHALL DESIGN SEISMIC ANCHORAGE FOR MECHANICAL AND ELECTRICAL EQUIPMENT PER SPEC.
11. ASTM REFERENCES ARE FOR LATEST REVISIONS AND ISSUE, UNO.
12. CONTRACTOR SHALL INVESTIGATE THE SITE DURING CLEARING AND EXCAVATION FOR UNSUITABLE CONDITIONS, UNCONSOLIDATED AND UNDOCUMENTED FILLS, BURIED STRUCTURES, UTILITIES, ETC., SHALL IMMEDIATELY NOTIFY THE COR OF ANY SITE CONDITIONS NOT REFLECTED ON THE DRAWINGS OR DIFFERENT FROM MAXIMUM OR MINIMUM DIMENSIONS INDICATED, INCLUDING CONFLICT IN GRADES, ADVERSE SOIL CONDITIONS, GROUND WATER PRESENT, DEEPENED FOOTINGS, UNCOVERED AND UNEXPECTED UTILITY LINES, ETC.
13. CONSTRUCTION MATERIALS SHALL BE SPREAD OUT IF PLACED ON STRUCTURAL FRAME SUCH THAT THE LOADING DOES NOT EXCEED THE DESIGN LIVE LOADS. PROVIDE SHORING AND BRACING WHERE DESIGN STRENGTH HAS NOT BEEN ATTAINED OR STRUCTURE IS NOT COMPLETE.
14. THE CONTRACTOR SHALL DETERMINE THE LOCATION OF UTILITY SERVICES IN AREAS TO BE EXCAVATED BEFORE BEGINNING EXCAVATION. EXERCISE CAUTION IN EXCAVATING AND TRENCHING.
15. THE STRUCTURAL ENGINEER SHALL NOT HAVE CONTROL OR CHARGE OF, AND SHALL NOT BE RESPONSIBLE FOR, CONSTRUCTION MEANS, METHODS, TECHNIQUES, SEQUENCES OR PROCEDURES, FOR SAFETY PRECAUTIONS AND PROGRAMS IN CONNECTION WITH THE WORK, FOR THE ACT OF OMISSIONS OF THE CONTRACTOR, SUB-CONTRACTORS OR ANY OTHER PERSONS PERFORMING ANY OF THE WORK, OR FOR THE FAILURE OF ANY OF THEM TO CARRY OUT THE WORK IN ACCORDANCE WITH THE CONTRACT DOCUMENTS.
16. CONTRACTOR'S CONSTRUCTION AND ERECTION SEQUENCE SHALL CONSIDER THE EFFECTS OF THERMAL MOVEMENTS OF STRUCTURAL ELEMENTS DURING THE CONSTRUCTION PERIOD.
17. VERIFY ALL OPENING DIMENSIONS THROUGH FLOOR, ROOF, AND WALLS WITH MECHANICAL AND ELECTRICAL CONTRACTORS.
18. STRUCTURAL ELEMENTS ARE CENTERED ON GRID LINES AND GRID LINE INTERSECTIONS, UNLESS DIMENSIONED OTHERWISE.
19. NOTIFY ARCHITECT OF ANY CONDITIONS NOT CONSTRUCTED PER THE CONTRACT DOCUMENTS PRIOR TO PROCEEDING WITH CORRECTIVE WORK. SUBMIT PROPOSED REPAIR TO THE ARCHITECT FOR ACCEPTANCE.
20. NOTHING SHOWN ON THE STRUCTURAL DRAWINGS SHALL BE CONSTRUED AS ELIMINATING THE NEED FOR THE CONTRACTOR TO COMPLY WITH ALL OSHA REQUIREMENTS. WHERE THE STRUCTURAL DRAWINGS APPEAR TO CONFLICT WITH OSHA REQUIREMENTS, THE STRUCTURAL DRAWINGS REPRESENT FINAL CONDITIONS ONLY.
21. THE CONTRACT DOCUMENTS HAVE BEEN PREPARED USING AVAILABLE DRAWINGS AND SITE OBSERVATION AS PERMITTED BY ACCESS RESTRICTIONS DURING DESIGN. DURING CONSTRUCTION, THE CONTRACTOR MAY ENCOUNTER EXISTING CONDITIONS WHICH ARE NOT KNOWN OR ARE AT VARIANCE WITH PROJECT DOCUMENTATION. CONTRACTOR SHALL NOTIFY THE ARCHITECT OF ALL CONDITIONS NOT PER THE CONTRACT DOCUMENTS.
22. CONTRACTOR SHALL FIELD VERIFY ALL EXISTING STRUCTURAL CONDITIONS PRIOR TO SUBMITTING SHOP DRAWINGS.
    a. CONTRACTOR SHALL MAKE ALLOWANCE FOR THE RESOLUTION OF SUCH DISCOVERIES IN THE CONSTRUCTION SCHEDULE.

SUBMITTAL NOTES

1. SEE THE PROJECT SPECIFICATIONS FOR DETAILED REQUIREMENTS.
2. SUBMITTALS SHALL NOT CONTAIN SUBSTITUTION REQUESTS WITHOUT PRIOR AUTHORIZATION. SUBSTITUTION REQUESTS ARE FOR CONTRACTOR'S CONVENIENCE. THE CONTRACTOR SHALL BE RESPONSIBLE FOR ALL CHANGES NECESSARY IF THEY CHOOSE TO SUBSTITUTE AND SHALL COORDINATE ALL DETAILS. COST OF ADDITIONAL FIELD AND OFFICE WORK NECESSITATED BY REQUESTS BY THE CONTRACTOR FOR A SUBSTITUTION REQUEST OR DUE TO ERRORS OR OMISSIONS IN CONSTRUCTION SHALL BE BORNE BY THE CONTRACTOR.
3. DELEGATED DESIGN SUBMITTALS:
   a. THE CONTRACTOR SHALL EMPLOY OR RETAIN A PROFESSIONAL ENGINEER LICENSED IN THE STATE WHERE THE PROJECT IS LOCATED TO DESIGN AND DETAIL DELEGATED DESIGN ITEMS TO MEET THE PERFORMANCE AND DESIGN CRITERIA ESTABLISHED AS PART OF THE BASE BUILDING STRUCTURE. DELEGATED DESIGN ITEMS INCLUDE:
      1. RAILINGS AND HANDRAILS
      2. FALL PROTECTION BARRIERS
      3. BOLLARDS
      4. HELICAL PIERS
      5. STAIRS
   b. CONNECTION OF DEFERRED SUBMITTAL ITEMS TO PRIMARY STRUCTURE BY DEFERRED SUBMITTAL SUPPLIER. DEFERRED SUBMITTAL SUPPLIER TO PROVIDE CONNECTIONS AND FRAMING ARRANGEMENT TO AVOID LOADING WHICH EXCEEDS THE CAPACITY OF THE ELEMENT BEING ATTACHED TO.
   c. ALL DEFERRED SUBMITTALS TO BE ATTACHED TO PRIMARY STRUCTURE WITH A PINNED CONNECTION. MOMENT CONNECTIONS TO PRIMARY STRUCTURE NOT PERMITTED UNLESS NOTED ON DRAWINGS OR APPROVED BY ENGINEER IN WRITING PRIOR TO SUBMITTAL OF DRAWINGS OR CALCULATIONS.
   d. LOADING AND LOCATION FOR ATTACHMENT OF DEFERRED SUBMITTAL ITEMS ARE NOTED ON DRAWINGS AND ARE NOT TO BE RE-LOCATED OR INCREASED WITHOUT WRITTEN APPROVAL.
   e. WALLS, GRADE BEAMS AND THE UNDERSIDE OF CONCRETE ON METAL DECK SHALL BE CONSIDERED CRACKED FOR THE PURPOSE OF DESIGNING ANCHORS FOR ATTACHMENT OF DEFERRED SUBMITTAL ITEMS.
   f. POWDER ACTUATED FASTENERS (PAF) INTO CONCRETE OR CMU SHALL NOT BE USED TO RESIST TENSION LOADS. PAF SHALL NOT BE USED TO RESIST GRAVITY LOADS WHICH INCLUDE BRICK VENEER.

FOUNDATION NOTES

1. FOUNDATION DESIGN IS BASED ON THE GEOTECHNICAL EVALUATION REPORT PREPARED BY TERRACON DATED DECEMBER 19, 2024 (PROJECT # 03235201)
   A. HELICAL PIERS - SEE SECTION BELOW
   B. MIN DEPTH TO BOTTOM OF FOUNDATION = 24"
2. SOIL BEARING PREPARATIONS FOR FOOTINGS SHALL BE APPROVED BY THE GEOTECHNICAL ENGINEER PRIOR TO PLACING THE CONCRETE AND REINFORCING. THE CONTRACTOR SHALL NOTIFY THE GEOTECHNICAL ENGINEER WHEN THE EXCAVATIONS ARE READY FOR INSPECTION. THE GEOTECHNICAL ENGINEER SHALL SUBMIT A LETTER OF COMPLIANCE TO THE OWNER.
3. ALL EARTHWORK, FOOTING DEPTHS, AND EXCAVATIONS FOR FOUNDATIONS SHALL BE INSPECTED BY THE SOILS ENGINEER TO VERIFY ASSUMED ALLOWABLE SOIL BEARING PRESSURE AND TO MAKE ANY ADDITIONAL RECOMMENDATIONS.
4. CONTRACTOR SHALL PROVIDE FOR PROPER DEWATERING OF EXCAVATIONS FROM SURFACE WATER, GROUND WATER, SEEPAGE, ETC.
5. ALL EXCAVATIONS SHALL BE PROPERLY BACKFILLED. DO NOT PLACE BACKFILL BEHIND RETAINING WALLS BEFORE CONCRETE OR MASONRY HAS ATTAINED FULL DESIGN STRENGTH. CONTRACTOR SHALL BRACE OR PROTECT ALL BUILDING AND PIT WALLS BELOW GRADE FROM LATERAL LOADS UNTIL ATTACHING FLOORS ARE COMPLETELY IN PLACE AND HAVE ACHIEVED FULL DESIGN STRENGTH. CONTRACTOR SHALL PROVIDE FOR DESIGN, PERMITS, AND INSTALLATION OF SUCH BRACING AND PROTECTION.
6. FOOTING BACKFILL AND UTILITY TRENCH BACKFILL WITHIN THE BUILDING PERIMETER SHALL BE MECHANICALLY COMPACTED IN LAYERS, TO THE APPROVAL OF THE GEOTECHNICAL ENGINEER. FLOODING WILL NOT BE PERMITTED.
7. ALL ABANDONED FOOTINGS, UTILITIES, ETC., THAT INTERFERE WITH NEW CONSTRUCTION SHALL BE REMOVED.
8. SEE PLAN FOR TOP OF FOOTING ELEVATIONS. CONTRACTOR SHALL VERIFY AND LOWER FOOTINGS AS REQUIRED TO BEAR ON PROPER BEARING STRATUM.

HELICAL PIER NOTES

1. CONTRACTOR TO DESIGN HELICAL PIERS TO RESIST THE FOLLOWING LOADS:
   a. HELICAL PIER VERTICAL CAPACITY: 50 KIPS
   b. HELICAP PIER UPLIFT CAPACITY: 5 KIPS
   c. MINIMUM SAFETY FACTOR: 2.0
   d. SEE PROJECT GEOTECH REPORT AND BORING LOGS FOR EXPECTED SUBSURFACE CONDITIONS.
2. CONNECTION OF HELICAL PILE TO CONCRETE SHALL BE CAPABLE OF DELIVERING 120% OF THE PILE DESIGN FORCE
3. PROVIDE SHOP DRAWINGS SHOWING:
   a. HELICAL PILE/ ANCHOR IDENTIFICATION NUMBER AND LOCATION
   b. HELICAL PILE/ ANCHOR DESIGN LOAD
   c. TYPE AND SIZE OF HELICAL PILE/ ANCHOR SHAFT
   d. HELICAL CONFIGURATION (NUMBER AND DIAMETER OF HELICAL PLATES)
   e. MINIMUM EFFECTIVE TORQUE REQUIRED
   f. CONNECTION DETAILS
4. SHOP DRAWINGS AND CALCULATIONS SHALL BE STAMPED BY AN ENGINEER REGISTERED IN THE STATE OF OKLAHOMA.
   a. ENGINEER SHALL HAVE A MINIMUM OF 7 YEARS OF EXPERIENCE IN DESIGNING HELICAL PILES.
5. THE HELICAL PILE SHALL BE RECOGNIZED BY THE INTERNATIONAL CODE COUNCIL (ICC) AND THE MANUFACTURER SHALL HOLD A CURRENT ICC-ES ISSUED ESR REPORT SHOWING COMPLIANCE WITH AC358 AND THE CURRENT INTERNATIONAL BUILDING CODE (IBC).
6. DESIGN HELICAL PIER FOR MINIMUM 100 YEAR DESIGN LIFE.
7. A THIRD PARTY INSPECTOR SHALL BE RETAINED TO OVERSEE ALL ASPECTS OF INSTALLATION OF THE HELICAL PILES/ ANCHORS. THE ITEMS TO BE INSPECTED INCLUDE, BUT NOT LIMITED TO THE FOLLOWING:
   a. VERIFY THE TYPE OF HELICAL PILE/ ANCHOR BEING INSTALLED IS AS SPECIFIED ON THE SHOP DRAWINGS.
   b. VERIFY FINAL EMBEDMENT DEPTH OF HELICAL PILE/ ANCHOR.
   c. VERIFY FINAL INSTALLATION TORQUE READINGS AS SPECIFIED ON THE SHOP DRAWINGS.
   d. THE HELICAL PILE CONTRACTOR SHALL PROVIDE THE INSPECTOR WITH RECENT CALIBRATION INFORMATION FOR THE INSTRUMENT USED TO MEASURE TORQUE.
8. SUBMIT RECORDS OF ALL INSTALLED PILES WITH 7 DAYS IN CONSTRUCTION.
9. HELICAL PILE COMPRESSION TEST:
   a. PERFORM 1 MINIMUM COMPRESSION TEST AND 1 MINIMUM TENSION TEST
   b. COMPRESSION TESTS SHALL BE PERFORMED FOLLOWING THE "QUICK TEST" PROCEDURE DESCRIBED IN ASTM D1143 SPECIFICATIONS.
   c. UNLESS OTHERWISE SPECIFIED BY PILE ENGINEER, THE MAXIMUM TEST LOAD SHALL BE 200% OF THE ALLOWABLE LOAD SHOWN ON THE DRAWINGS.
   d. THE LOCATIONS OF HELICAL PLIES TO BE TESTED SHALL BE DETERMINED BY THE CONTRACTOR.
   e. INSTALLATION METHODS, PROCEDURES, EQUIPMENT, PRODUCTS, AND FINAL INSTALLATION TORQUE SHALL BE IDENTICAL TO THE PRODUCTION HELICAL PILES TO THE EXTENT PRACTICAL.
   f. A LOAD TEST SHALL BE DEEMED ACCEPTABLE PROVIDED THE MAXIMUM TEST LOAD IS APPLIED WITHOUT HELICAL PILE FAILURE AND THE DEFLECTION OF THE PILE HEAD AT THE DESIGN LOAD LESS THAN 1/2- INCH. FAILURE IS DEFINED WHEN CONTINUOUS JACKING IS REQUIRED TO MAINTAIN THE LOAD.

REINFORCING STEEL NOTES

1. ALL REINFORCING STEEL SHALL BE DETAILED AND PLACED IN ACCORDANCE WITH THE "BUILDING CODE REQUIREMENTS FOR REINFORCED CONCRETE" (ACI 318) AND THE "MANUAL OF STANDARD PRACTICE FOR REINFORCED CONCRETE CONSTRUCTION" CRSI AND WCRSI AS MODIFIED BY THE PROJECT DRAWINGS AND SPECIFICATIONS.
2. DEFORMED REINFORCING BARS SHALL CONFORM TO THE REQUIREMENTS OF ASTM A615 GRADE 60.
3. WELDING OF REINFORCING SHALL BE WITH LOW HYDROGEN ELECTRODES IN CONFORMANCE WITH "RECOMMENDED PRACTICES FOR WELDING REINFORCING STEEL, ETC." AMERICAN WELDING SOCIETY (AWS) AWS D1.4 WELDING OF REINFORCING STEEL IS LIMITED TO A706 REBAR.
4. NO REINFORCING BAR BENDS SHALL BE MADE UNLESS A706 REBAR.
5. WELDED WIRE FABRIC SHALL CONFORM TO ASTM A1064 GR. 65.
6. MINIMUM LAP OF WELDED WIRE FABRIC SHALL BE 6" OR TWO MESH PANELS, WHICHEVER IS GREATER.
7. SPLICES SHALL BE MADE WHERE INDICATED ON THE STRUCTURAL DRAWINGS. IF NOT INDICATED, SPLICE BEAM BOTTOM BARS OVER SUPPORTS AND TOP BARS AT MIDSPAN. MAKE BAR CONTINUOUS AROUND CORNERS UNO. ALL SPLICES TO BE CONTACT TENSION SPLICE (CLASS B) UNO.
8. DOWELS BETWEEN FOOTINGS AND WALLS OR COLUMNS SHALL BE THE SAME GRADE, SIZE, SPACING, AND NUMBER AS THE SPECIFIED VERTICAL REINFORCING, UNO.
9. WHERE A 90°, 135°, OR 180° HOOK IS GRAPHICALLY INDICATED, PROVIDE CORRESPONDING ACI STANDARD HOOKS UNO.

CONCRETE NOTES

1. ALL PHASES OF WORK PERTAINING TO THE CONCRETE CONSTRUCTION SHALL CONFORM TO THE "BUILDING CODE FOR REINFORCED CONCRETE" ACI 318, AND THE "SPECIFICATIONS FOR STRUCTURAL CONCRETE FOR BUILDINGS", ACI 301, LATEST EDITIONS, WITH MODIFICATIONS AS NOTED ON THE DESIGN DRAWINGS OR SPECIFICATIONS.
2. CONCRETE MIXES SHALL BE SUBMITTED FOR REVIEW, DESIGNED BY A QUALIFIED TESTING LABORATORY AND SHALL BEAR THE SEAL OF AN ENGINEER LICENSED IN THE UNITED STATES. SEE CONCRETE MIX TABLE FOR MIX REQUIREMENTS.

CONCRETE MIX TABLE

USE	f'c (KSI)	CONCRETE WEIGHT	MAX. W/C RATIO	MAX. AGG. (IN)	AIR CONTENT (%)	EXPOSURE CLASS	OTHER NOTES
STEM WALLS, GRADE BEAMS	4	NWT	0.55	3/4	5	F1, S0, W0, C0	-
CONCRETE EXPOSED TO WEATHER OR DEICERS	4.5	NWT	0.4	3/4	6	F3, S0, W0, C2	-
CONCRETE REPAIR	-	-	-	-	-	-	SEE SPEC 030130

MIX TABLE NOTES:
1. CEMENT TYPE TO BE TYPE ASTM C150 I/II OR ASTM C595 TYPE IL UNLESS OTHERWISE NOTED.
2. CONTRACTOR TO PROVIDE SLUMP AS NEEDED FOR WORKABILITY AND CONSISTENCY TO BE PLACED INTO FORMS AND AROUND REINFORCEMENT WITHOUT SEGREGATION OR EXCESS BLEEDING. USE ADMIXTURES AS REQUIRED TO OBTAIN DESIRED RESULTS.
3. NORMAL WEIGHT (NWT) CONCRETE SHALL HAVE A DRY DENSITY OF 145 ± 5 PCF
4. AIR CONTENT SHALL BE ± 1 1/2% FROM REQUIRED VALUES. DO NOT PROVIDE AIR ENTRAINING ADMIXTURES TO ANY INTERIOR SLABS UNLESS CONTRACTOR CAN DEMONSTRATE TO ARCHITECT THAT SLABS WITH ENTRAINED AIR WILL HAVE ACCEPTABLE FINISH.
5. EXPOSURE CLASS DEFINITION PER ACI301/318. CONTRACTOR TO PROVIDE MIXES THAT MEET THESE REQUIREMENTS. FOR CORROSION PROTECTION OF REINFORCING (C0, C1, C2) PROVIDE MAXIMUM CHLORIDE ION CONTENT IN CONCRETE (%/WT) OF C0 = 1.0, C1 = 0.3, C2 = 0.15).

3. AGGREGATE FOR HARD ROCK CONCRETE SHALL CONFORM TO ALL REQUIREMENTS AND TESTS OF ASTM C33 AND PROJECT SPECIFICATIONS. EXCEPTIONS MAY BE USED ONLY WITH PERMISSION OF THE STRUCTURAL ENGINEER THROUGH THE COR.
4. CONCRETE MIXING OPERATIONS, ETC. SHALL CONFORM TO ASTM C94.
5. PLACEMENT OF CONCRETE SHALL CONFORM TO ACI 305 "HOT WEATHER CONCRETING" AND ACI 306 " COLD WEATHER CONCRETING" WHEN APPLICABLE
6. CLEAR COVERAGE OF CONCRETE OVER REINFORCING BARS TO BE AS FOLLOWS:

CONCRETE PLACEMENT CONDITION:	CONCRETE COVER
CAST AGAINST AND PERMANENTLY EXPOSED TO EARTH	3"
CONCRETE EXPOSED TO EARTH OR WEATHER, #6 THROUGH #18 BAR	2"
CONCRETE EXPOSED TO EARTH OR WEATHER, #5 BAR AND SMALLER	1 1/2"
CONCRETE NOT EXPOSED: SLABS, WALLS, AND JOISTS, #14 AND #18 BAR	1 1/2"
CONCRETE NOT EXPOSED: SLABS, WALLS, AND JOISTS, #11 BAR AND SMALLER	3/4"
CONCRETE NOT EXPOSED: BEAMS, COLUMNS (PRIMARY REINF., TIES, STIRRUPS, SPIRALS)	1 1/2"
SLABS ON GRADE (FROM TOP)	1 1/2"

7. ALL REINFORCING BARS, ANCHOR BOLTS, AND OTHER CONCRETE INSERTS SHALL BE WELL SECURED IN POSITION PRIOR TO PLACING CONCRETE
8. MECHANICAL PIPES AND ELECTRICAL CONDUITS WHICH PASS THROUGH SLAB ON GRADE, CONCRETE ON STEEL DECK, FRAMED CONCRETE FLOORS, AND WALLS DO NOT REQUIRE SLEEVES, UNLESS OTHERWISE INDICATED IN THE PROJECT SPECIFICATIONS, MECHANICAL OR ELECTRICAL DRAWINGS. IF SLEEVES ARE REQUIRED, INSTALL SLEEVES BEFORE PLACING CONCRETE. DO NOT CUT ANY REINFORCING WHICH MAY INTERFERE WITH SLEEVE PLACEMENT. CORING OPENINGS IN CONCRETE IS NOT PERMITTED. NOTIFY THE STRUCTURAL ENGINEER IN ADVANCE OF CONDITIONS NOT SHOWN ON THE STRUCTURAL DRAWINGS. NO PIPES OR ELECTRICAL CONDUIT SHALL PASS THROUGH CONCRETE BEAMS OR COLUMNS UNLESS SPECIFICALLY DETAILED.
9. ANY CONDUIT, INCLUDING JUNCTION BOXES, INTENDED TO RUN WITHIN STRUCTURAL ELEMENTS, INCLUDING SLABS, BEAM, & COLUMNS, MUST BE SUBMITTED TO ENGINEER FOR APPROVAL PRIOR TO PLACING IN THE FIELD. CONTRACTOR SHALL ACCOUNT FOR ADDITIONAL REINFORCING NEEDED IF CONDUIT AND RECESSED BOXES ARE USED.
10. PROJECTING CORNERS OF BEAMS, WALLS, COLUMNS, ETC., SHALL BE FORMED WITH A ¾" CHAMFER, UNLESS OTHERWISE NOTED ON ARCHITECTURAL DRAWINGS.
11. MINIMUM STRENGTH FOR REMOVAL OF FORMS AND SHORING SHALL BE 75% OF SPECIFIED STRENGTH AT 28 DAYS. MINIMUM TIME IS 7 DAYS FROM PLACEMENT.
12. ALL CONCRETE NOT SPECIFICALLY SHOWN WITH REINFORCEMENT SHALL BE REINFORCED IN THE SAME MANNER AS SIMILAR CONDITIONS OR WITH REINFORCEMENT MEETING THE MINIMUM REQUIREMENTS OF ACI-318.
13. CONCRETE SLAB SHALL BE WET MAT, MOIST CURED FOR A MINIMUM OF 7 DAYS.
14. VERIFY ALKALINITY OF CONCRETE SURFACE, SLAB VAPOR TRANSMISSION, AND SLAB FLATNESS/LEVELNESS ARE COMPATIBLE WITH FLOORING SYSTEM AND ADHESIVES PRIOR TO INSTALLING FLOORING.
15. CURING COMPOUNDS USED ON CONCRETE THAT IS TO RECEIVE A RESILIENT FINISH SHALL BE APPROVED BY THE FINISH APPLICATOR BEFORE USE.
16. TAKE PRECAUTIONS TO MINIMIZE SLAB CURLING. GRIND SLAB OR USE LEVELING COMPOUND IF FLOOR FLATNESS AND LEVELNESS VALUES ARE NOT ACCEPTABLE TO THE ARCHITECT.
17. CONCRETE CONSTRUCTION JOINT SURFACE SHALL BE CLEANED AND ALL LAITANCE AND LOOSE MATERIAL REMOVED PRIOR TO SECOND CONCRETE PLACEMENT.

POST-INSTALLED ANCHOR NOTES

1. POST-INSTALLED ANCHORS BASIS OF DESIGN:

POST-INSTALLED ANCHORS

TYPE	USE	ANCHOR
ADHESIVE ANCHOR:		
	CONCRETE:	HILTI HIT-HY 200 V3
MECHANICAL ANCHORS:		
	SCREW ANCHOR:	HILTI KWIK HUS-EZ CRC
	EXPANSION ANCHOR:	HILTI KWIK BOLT TZ2 SS

2. CONTRACTOR SHALL PROVIDED ENGINEERING BACKUP FOR ANY ANCHOR SUBSTITUTION REQUEST OR COMPENSATE CALIBRE TO PERFORM ENGINEERING VALIDATION THAT SUBSTITUTED ANCHOR IS ACCEPTABLE.
3. CONTRACTOR SHALL ARRANGE AN ANCHOR MANUFACTURER'S REPRESENTATIVE TO PROVIDE ONSITE INSTALLATION TRAINING FOR ALL OF THEIR ANCHORING PRODUCTS SPECIFIED. SUBMIT DOCUMENTED CONFIRMATION THAT ALL OF THE CONTRACTOR'S PERSONNEL WHO INSTALL ANCHORS HAVE PASSED THE TRAINING COURSE PRIOR TO THE COMMENCEMENT OF INSTALLING ANCHORS.
4. PROOF TENSION TEST FIRST 3 ADHESIVE ANCHORS AND 1% OF TOTAL ANCHORS PER ASTM E488. TEST 10% TOTAL OF OVERHEAD ADHESIVE ANCHORS.
5. TORQUE TEST 100% OF EXPANSION, SLEEVE, AND SCREW ANCHORS TO 100% OF INSTALLATION TORQUE SHOWN IN PRODUCT ICC REPORT.
6. INSTALL ANCHORS IN ACCORDANCE WITH CONTRACT DOCUMENTS AND THE CURRENT MANUFACTURER'S PUBLISHED INSTALLATION INSTRUCTIONS.
7. LOCATE ,THROUGH NON-DESTRUCTIVE MEANS, AND AVOID ALL EXISTING REINFORCING PRIOR TO INSTALLATION OF ANCHORS. IF EXISTING LAYOUT CONFLICTS WITH PROPOSED ANCHORS, CONTACT EOR FOR REVISED LAYOUT.

STRUCTURAL STEEL NOTES

1. STRUCTURAL STEEL SHALL BE DESIGNED, DETAILED, FABRICATED, AND ERECTED IN ACCORDANCE WITH THE AISC "SPECIFICATION FOR STRUCTURAL STEEL BUILDINGS" AND "CODE OF STANDARD PRACTICE FOR STEEL BUILDINGS AND BRIDGES" (LATEST EDITION AND SUPPLEMENTS).

STEEL SHAPES	ASTM REQUIREMENTS
WIDE FLANGE SHAPES, CHANNELS	A992
ANGLES	A572 GR 50
PLATES AND BARS	A36, UNO
PIPE	A53 GRADE B
HSS	ASTM A500 GRADE C
HAS	A108
DAS	A1064
BOLTS	F3125-TYPE A325
ANCHOR RODS	F1554 GR 55 W/ SUPPLEMENT 1

2. CONNECTING OR SPLICING OF STRUCTURAL STEEL NOT SHOWN ON THE DRAWINGS IS PROHIBITED WITHOUT PRIOR WRITTEN APPROVAL OF THE SEOR.
3. THE STRUCTURAL STEEL FABRICATOR SHALL FURNISH SHOP DRAWINGS OF ALL STRUCTURAL STEEL FOR REVIEW BEFORE FABRICATION. SHOP DRAWINGS SHALL SHOW THE ERECTION PROCEDURES AND DETAILS.
4. SEE SPECIFICATIONS FOR FINISH / PAINTING REQUIREMENTS FOR STRUCTURAL STEEL SURFACES. VERIFY WITH ARCHITECTURAL DRAWINGS AND SPECIFICATIONS FOR ADDITIONAL REQUIREMENTS.
5. WELDED JOINTS SHALL CONFORM TO THE PRE-QUALIFIED JOINT DETAILS AS INDICATED IN THE STRUCTURAL WELDING CODE (AWS D1.1) BY THE AMERICAN WELDING SOCIETY.
6. ALL WELDING SHALL BE BY WELDERS HOLDING CURRENT VALID CERTIFICATES AND HAVING CURRENT EXPERIENCE IN TYPE OF WELD CALLED FOR. WELDING RODS TO BE LOW HYDROGEN TYPE, E70.
7. ALL GROOVE WELDS TO BE FULL PENETRATION, UNO.
8. ALL FILLET WELDS TO BE 5/16", CONTINUOUS, UNO.
9. WELD LENGTHS CALLED FOR ON PLANS ARE THE NET EFFECTIVE LENGTH REQUIRED. WELD SIZE SHALL BE AISC MINIMUM PER AISC SECTION J2.1b AND J2.2b, UNLESS A LARGER SIZE IS NOTED.
10. WELDS SHOWN AS FIELD WELDS MUST BE MADE IN THE FIELD UNLESS A SUBSTITUTION REQUEST IS MADE. ALL OTHER WELDS MAY BE MADE IN SHOP OR FIELD AT CONTRACTOR'S OPTION.
11. EXCEPT AS SUBSEQUENTLY NOTED, HIGH STRENGTH BOLTS NEED NOT BE TIGHTENED BEYOND THE SNUG-TIGHT CONDITION, AS DEFINED IN SECTION 8.(c) OF THE SPECIFICATIONS FOR STRUCTURAL JOINTS USING TYPE A325 OR A490 BOLTS. FOR CONNECTIONS SUBJECT TO DIRECT TENSION, CONNECTIONS FOR BRACED FRAMES, AND OTHER CONNECTIONS SHOWN OR NOTED ON THE PLANS AS SLIP CRITICAL (SC) OR FULLY TENSIONED, BOLTS SHALL BE TIGHTENED BY ONE OF THE METHODS DESCRIBED IN SECTION 8.(d) AND TO THE MINIMUM TENSION SPECIFIED IN SECTION 8.(d), TABLE 4.
12. ALL BOLTS NOTED AS SLIP CRITICAL (SC) SHALL BE WITH A CLASS B FAYING SURFACE, UNO.
13. ALL CONNECTION AND MEMBER FORCES SHOWN ARE ULTIMATE, UNO.
14. DETAILS INDICATED ON DRAWINGS DO NOT SHOW ERECTION AIDS. PROVIDE ERECTION AIDS AS REQUIRED AND REMOVE THEM AFTER WORK IS COMPLETE.
15. WHERE NO CAMBER IS INDICATED, FABRICATE BEAMS SO THAT ROLLING CAMBER IS UPWARD AFTER ERECTION.
16. FOR STEEL MEMBERS AND EMBEDMENTS EXPOSED TO WEATHER OR HIGH HUMIDITY ENVIRONMENTS, PROVIDE HOT-DIPPED GALVANIZED FINISH OR APPROVED ZINC RICH EXTERIOR COATING SYSTEM.
17. PROVIDE HOLES IN ALL STEEL ELEMENTS AS REQUIRED TO PREVENT ANY ACCUMULATION OF WATER. ALL PENETRATIONS ADDED SHALL BE 1 1/8"Ø MAX AND GROUND SMOOTH.

STEEL DECK NOTES

1. THE STEEL DECK SHALL BE THE TYPE AND GAUGE AS CALLED FOR ON DRAWINGS. DECK AND ALL ACCESSORIES SHALL BE FORMED FROM STEEL SHEETS CONFORMING TO ASTM STANDARDS AS SHOWN BELOW. GALVANIZED DECK SHALL BE COATED IN ACCORDANCE WITH ASTM A924 WITH A MINIMUM G60 COATING AS DEFINED IN ASTM A653.
   a. GALVANIZED DECK: ASTM A653, GRADE 50 (MIN)
   b. PAINTED DECK: ASTM A1008, GRADE 50 (MIN)
2. STEEL DECK UNITS WITH CONCRETE FILL SHALL BE CONTINUOUS OVER TWO OR MORE SPANS. IF STEEL DECK UNITS WITH CONCRETE FILL SPAN LESS THAN 2 SPANS, THE DECK UNITS SHALL BE SHORED, UNO.
3. STEEL ROOF DECK UNITS SHALL BE CONTINUOUS OVER TWO OR MORE SPANS, UNO.
4. MINIMUM BEARING OF STEEL DECK ON SUPPORTS SHALL BE 4" AT INTERIOR SUPPORTS AND 2" AT EXTERIOR SUPPORTS UNO.
5. SHEETS SHALL BE ATTACHED TO ALL SUPPORTING STEEL MEMBERS AS INDICATED ON DRAWINGS AND IN ACCORDANCE WITH MANUFACTURER'S RECOMMENDATIONS. UPON COMPLETION OF ERECTION, ALL WELDS ON STEEL DECK AREAS EXPOSED TO WEATHER SHALL BE DE-SLAGGED, CLEANED AND TOUCHED-UP WITH A ZINC RICH PRIMER.

EXISTING BUILDING DEMOLITION NOTES

1. THE CONTRACTOR IS FULLY RESPONSIBLE FOR THE MEANS AND METHODS OF DEMOLITION AND THE INTEGRITY AND STABILITY OF THE EXISTING STRUCTURE DURING DEMOLITION. THE CONTRACTOR SHALL PROVIDE SHORING IN REQUIRED LOCATIONS WHERE EXISTING STRUCTURE TO REMAIN WILL BE AFFECTED BY DEMOLITION ACTIVITIES.
2. CONTRACTOR'S SHORING ENGINEER SHALL BE A PROFESSIONAL ENGINEER LICENSED IN THE STATE WHERE THE PROJECT IS LOCATED.
3. THE CONTRACTOR IS RESPONSIBLE FOR REPAIRS TO ANY STRUCTURE DAMAGED DURING THE DEMOLITION PROCESS. THE REPAIR WORK SHALL BE DESIGNED BY AN ENGINEER LICENSED IN THE STATE WHERE THE PROJECT IS LOCATED. COSTS FOR THESE REPAIRS AND ENGINEERING SHALL BE BORNE BY THE CONTRACTOR.
4. ALL EXISTING FRAMING SHOWN IS "FOR REFERENCE," BASED ON THE PROVIDED AS-BUILT DRAWINGS OR SITE ACCESS. CONTRACTOR TO FIELD VERIFY ALL ELEMENTS AND MORE DETAILED LOCATIONS. IMMEDIATELY NOTIFY DESIGN TEAM OF INCONSISTENCIES WITH EXISTING CONDITIONS VERSES THE CONTRACT DOCUMENTS.
5. DO NOT REMOVE MORE OF THE EXISTING STRUCTURE THAN SHOWN. DO NOT DAMAGE, MAR, CUT, OR DEFACE THE REMAINING STRUCTURE OR MATERIALS TO BE RE-USED.
6. FOR LARGER OPENINGS IN CONCRETE STRUCTURES, CORE DRILL CORNERS. DO NOT OVERCUT CORNERS.

CONCRETE REPAIR NOTES:

1. SEE PROJECT SPECIFICATIONS SECTION 030130 STRUCTURAL CONCRETE REPAIRS FOR REQUIREMENTS

Revisions:	Date:

CONSULTANT

Calibre

Calibre Engineering, Inc.
8822 South Ridgeline Boulevard, Suite 310
Highlands Ranch, CO 80129 (303) 730-0434
www.calibre-engineering.com
CIVIL | STRUCTURAL

ARCHITECT/ENGINEER OF RECORD

SES SPECIALIZED ENGINEERING SOLUTIONS

7100 E BELLEVIEW AVE, STE 107
GREENWOOD VILLAGE, CO 80111
Phone: (720) 200-5955
www.specializedeng.com
SES Project : 20114.008

STAMP

LICENSED PROFESSIONAL ENGINEER EDWARD SABIA 35268 OKLAHOMA
4/23/26

Office of Construction and Facilities Management

VA U.S. Department of Veterans Affairs

Drawing Title: GENERAL STRUCTURAL NOTES, DESIGN LOADS & ABBREVIATIONS

Approved: Project Director

Phase: ADDENDUM 01

NON-SPRINKLERED

Project Title: VA OKC - DESIGN REPAIR PARKING GARAGE

Location: 921 N.E. 13TH STREET OKLAHOMA CITY, OK 73104

Issue Date: 04/23/2026 | Checked: ES | Drawn: EM

Project Number: 635-21-139

Building Number:

Drawing Number: S-001

VA FORM 08 - 6231

Autodesk Docs://20114.008 - VA Oklahoma City Parking Garage/OKC PARKING GARAGE REPAIRS_STRU_R22.rvt
4/23/2026 9:25:13 AM

QUALITY ASSURANCE PLAN AND STATEMENT OF SPECIAL INSPECTION NOTES

1. SPECIAL INSPECTIONS FOR THIS PROJECT ARE REQUIRED PER THE 2024 INTERNATIONAL BUILDING CODE CHAPTER 17, SECTION 1704 AND 1705. SEE PROJECT SPECIFICATIONS AND STATEMENT OF SPECIAL INSPECTIONS BELOW FOR SPECIFIED REQUIREMENTS.
2. THE OWNER SHALL ENGAGE A QUALIFIED INSPECTION AND TESTING AGENCY TO PERFORM SPECIAL INSPECTION SERVICES FOR ALL STRUCTURAL MEMBERS AND ASSEMBLIES. SPECIAL INSPECTORS' INSPECTIONS ARE IN ADDITION TO ANY INSPECTION PERFORMED BY THE AUTHORITY HAVING JURISDICTION.
3. THE SPECIAL INSPECTOR OR INSPECTION AGENCY RETAINED FOR CONDUCTING INSPECTIONS SHALL NOT BE EMPLOYED DIRECTLY OR INDIRECTLY BY THE CONTRACTOR, UNLESS APPROVED BY THE AUTHORITY HAVING JURISDICTION.
4. SPECIAL INSPECTION IS REQUIRED FOR THE FOLLOWING:
   a. STEEL CONSTRUCTION (IBC 1705.2, AISC 360-16)
      1. WELDING
      2. HIGH STRENGTH BOLTS
      3. STEEL JOIST AND JOIST GIRDERS
   b. STEEL DECK (ANSI-SDI-QAQC-2017)
   c. CONCRETE CONSTRUCTION (IBC 1705.3, ACI 318)
   d. SOILS (IBC 1705.6)
   e. HELICAL PILE FOUNDATIONS (IBC 1705.9)
5. SEE INSPECTION TABLES AND REFERENCED DOCUMENTS FOR MORE IN-DEPTH INSPECTION REQUIREMENTS.
   a. 'O' = OBSERVE, INSPECTOR SHALL OBSERVE THESE ITEMS ON A RANDOM BASIS
   b. 'P' = PERFORM, INSPECTOR SHALL PERFORM TASKS FOR EACH MEMBER
6. FOR SHOP FABRICATED MEMBERS AND ASSEMBLIES, INSPECTIONS SHALL OCCUR UNLESS THE FABRICATOR IS REGISTERED AND APPROVED BY THE AUTHORITY HAVING JURISDICTION TO PERFORM SUCH WORK WITHOUT SPECIAL INSPECTION OR HAS A CURRENT ICC-ES EVALUATION REPORT.
   a. AT COMPLETION OF FABRICATION BY AN APPROVED FABRICATOR, THE FABRICATOR SHALL SUBMIT A CERTIFICATE OF COMPLIANCE THAT THE WORK WAS COMPLETED IN COMPLIANCE WITH CONTRACT DOCUMENTS.
7. THE SPECIAL INSPECTOR FOR EACH MATERIAL SHALL SUBMIT SPECIAL INSPECTOR QUALIFICATIONS TO THE AUTHORITY HAVING JURISDICTION PRIOR TO START OF WORK.
8. A FINAL REPORT OF SPECIAL INSPECTIONS, DOCUMENTING COMPLETION OF ALL REQUIRED SPECIAL INSPECTIONS, INCLUDING TESTING AND CORRECTION OF ANY DISCREPANCIES NOTED IN THE INSPECTIONS, SHALL BE SUBMITTED TO THE AUTHORITY HAVING JURISDICTION STATING THAT THE WORK WAS COMPLETED IN SUBSTANTIAL CONFORMANCE TO THE APPROVED PLANS, SPECIFICATIONS, AND THE APPLICABLE PROVISIONS OF THE CODE. ANY WORK NOT IN COMPLIANCE SHALL BE DESCRIBED IN THE REPORT.
9. THE CONTRACTOR IS RESPONSIBLE FOR SCHEDULING AND COORDINATING THE WORK WITH THE INSPECTOR (WITH UPDATES AS NEEDED) TO FACILITATE PROPER INSPECTION PER THE CODE. CONTRACTOR SHALL KEEP WORK EXPOSED AND ACCESSIBLE UNTIL REQUIRED SPECIAL INSPECTIONS ARE COMPLETE. ANY COSTS TO RE-EXPOSE AREAS NOT INSPECTED SHALL BE BORNE BY THE CONTRACTOR.
10. DISCREPANCIES SHALL BE BROUGHT TO THE IMMEDIATE ATTENTION OF THE CONTRACTOR FOR CORRECTION. INSPECTOR SHALL SUBMIT TIMELY REPORTS OF NON-CONFORMANCE TO SEOR.
11. STRUCTURAL OBSERVATION BY THE ENGINEER DOES NOT CONSTITUTE SPECIAL INSPECTIONS.
12. SEE SPECIFICATION SECTION 030130 STRUCTURAL CONCRETE REPAIRS FOR ADDITIONAL QUALITY ASSURANCE AND TESTING REQUIREMENTS

REQUIRED SPECIAL INSPECTIONS AND TESTS OF SOILS - REFERENCE 2024 IBC 1705.6

TYPE	CONTINUOUS SPECIAL INSPECTION	PERIODIC SPECIAL INSPECTION
VERIFY MATERIALS BELOW SHALLOW FOUNDATIONS ARE ADEQUATE TO ACHIEVE THE DESIGN CAPACITY	-	X
VERIFY EXCAVATIONS ARE EXTENDED TO PROPER DEPTH AND HAVE REACHED PROPER MATERIAL	-	X
PERFORM CLASSIFICATION AND TESTING OF COMPACTED FILL MATERIALS	-	X
DURING FILL PLACEMENT USE OF PROPER MATERIALS AND PROCEDURES IN ACCORDANCE WITH THE PROVISIONS OF THE APPROVED GEOTECHNICAL REPORT. VERIFY DENSITIES AND LIFT THICKNESSES DURING PLACEMENT AND COMPACTION OF COMPACTED FILL	X	-
PRIOR TO PLACEMENT OF COMPACTED FILL, INSPECT SUBGRADE AND VERIFY THAT SITE HAS BEEN PREPARED PROPERLY	-	X

REQUIRED SPECIAL INSPECTIONS AND TESTS OF STRUCTURAL STEEL - REFERENCE 2024 IBC 1705.2
INSPECTION TASKS PRIOR TO WELDING - REFERENCE AISC 360-16 SPECIFICATION, TABLE N5.4-1

INSPECTION TASKS PRIOR TO WELDING	QC	QA
WELDER QUALIFICATION RECORDS AND CONTINUITY RECORDS	PERFORM	OBSERVE
WPS AVAILABLE	PERFORM	OBSERVE
MANUFACTURER CERTIFICATIONS FOR WELDING CONSUMABLES AVAILABLE	PERFORM	PERFORM
MATERIAL IDENTIFICATION (TYPE / GRADE)	OBSERVE	OBSERVE
WELDER IDENTIFICATION SYSTEM	OBSERVE	OBSERVE
FIT-UP OF GROOVE WELDS (INCLUDING JOINT GEOMETRY)	OBSERVE	OBSERVE
FIT-UP OF CJP GROVE WELDS OF HSS T-, Y-, AND K-JOINTS WITHOUT BACKING (INCLUDING JOINT GEOMETRY)	PERFORM	OBSERVE
CONFIGURATION AND FINISH OF ACCESS HOLES	OBSERVE	OBSERVE
FIT-UP OF FILLET WELDS	OBSERVE	OBSERVE
CHECK WELDING EQUIPMENT	OBSERVE	-

REQUIRED SPECIAL INSPECTIONS AND TESTS OF STRUCTURAL STEEL - REFERENCE 2024 IBC 1705.2
INSPECTION TASKS DURING WELDING - REFERENCE AISC 360-16 SPECIFICATION, TABLE N5.4-2

INSPECTION TASKS DURING WELDING	QC	QA
CONTROL AND HANDLING OF WELDING CONSUMABLES	OBSERVE	OBSERVE
NO WELDING OVER CRACKED TACK WELDS	OBSERVE	OBSERVE
ENVIRONMENTAL CONDITIONS	OBSERVE	OBSERVE
WPS FOLLOWED	OBSERVE	OBSERVE
WELDING TECHNIQUES	OBSERVE	OBSERVE
PLACEMENT AND INSTALLATION OF STEEL HEADED STUD ANCHORS	PERFORM	PERFORM

REQUIRED SPECIAL INSPECTIONS AND TESTS OF STRUCTURAL STEEL - REFERENCE 2024 IBC 1705.2
INSPECTION TASKS AFTER WELDING - REFERENCE AISC 360-16 SPECIFICATION, TABLE N5.4-3

INSPECTION TASKS AFTER WELDING	QC	QA
WELDS CLEANED	OBSERVE	OBSERVE
SIZE, LENGTH, AND LOCATION OF WELDS	PERFORM	PERFORM
WELDS MEET VISUAL ACCEPTANCE CRITERIA	PERFORM	PERFORM
ARC STRIKES	PERFORM	PERFORM
K-AREA	PERFORM	PERFORM
WELD ACCESS HOLES IN ROLLED HEAVY SHAPES AND BUILT-UP HEAVY SHAPES	PERFORM	PERFORM
BACKING REMOVED AND WELD TABS REMOVED (IF REQUIRED)	PERFORM	PERFORM
REPAIR ACTIVES	PERFORM	PERFORM
DOCUMENT ACCEPTANCE OR REJECTION OF WELDED JOINT OR MEMBER	PERFORM	PERFORM
NO PROHIBITED WELDS HAVE BEEN ADDED WITHOUT THE APPROVAL OF EOR	OBSERVE	OBSERVE

REQUIRED SPECIAL INSPECTIONS AND TESTS OF STRUCTURAL STEEL - REFERENCE 2024 IBC 1705.2
INSPECTION TASKS PRIOR TO BOLTING - REFERENCE AISC 360-16 SPECIFICATION, TABLE N5.6-1

INSPECTION TASKS PRIOR TO BOLTING	QC	QA
MANUFACTURER'S CERTIFICATIONS AVAILABLE FOR FASTENER MATERIALS	OBSERVE	PERFORM
FASTENERS MARKED IN ACCORDANCE WITH ASTM REQUIREMENTS	OBSERVE	OBSERVE
CORRECT FASTENERS SELECTED FOR THE JOINT DETAIL	OBSERVE	OBSERVE
CORRECT BOLTING PROCEDURE SELECTED FOR JOINT DETAIL	OBSERVE	OBSERVE
CONNECTION ELEMENTS, INCLUDING THE APPROPRIATE FAYING SURFACE CONDITIONS AND HOLE PREPARATION, IF SPECIFIED, MEET APPLICABLE REQUIREMENTS	OBSERVE	OBSERVE
PRE-INSTALLATION VERIFICATION TESTING	PERFORM	OBSERVE
PROTECTED STORAGE PROVIDED FOR BOLTS, NUTS, WASHERS, AND OTHER FASTENER COMPONENTS	OBSERVE	OBSERVE

REQUIRED SPECIAL INSPECTIONS AND TESTS OF STRUCTURAL STEEL - REFERENCE 2024 IBC 1705.2
INSPECTION TASKS DURING BOLTING - REFERENCE AISC 360-16 SPECIFICATION, TABLE N5.6-2

INSPECTION TASKS DURING BOLTING	QC	QA
FASTENER ASSEMBLIES PLACED IN ALL HOLES AND WASHERS AND NUTS ARE POSITIONED AS REQUIRED	OBSERVE	OBSERVE
JOINT BROUGHT TO THE SNUG-TIGHT CONDITION PRIOR TO THE PRE-TENSIONING OPERATION	OBSERVE	OBSERVE
FASTENER COMPONENT NOT TURNED BY THE WRENCH PREVENTED FROM ROTATING	OBSERVE	OBSERVE
FASTENERS ARE PRETENSIONED IN ACCORDANCE WITH THE RCSC SPECIFICATION, PROGRESSING SYSTEMATICALLY FROM THE MOST RIGID POINT TOWARDS THE FREE EDGES	OBSERVE	OBSERVE

REQUIRED SPECIAL INSPECTIONS AND TESTS OF STRUCTURAL STEEL - REFERENCE 2024 IBC 1705.2
INSPECTION TASKS AFTER BOLTING - REFERENCE AISC 360-16 SPECIFICATION, TABLE N5.6-3

INSPECTION TASKS AFTER BOLTING	QC	QA
DOCUMENT ACCEPTANCE OR REJECTION OF BOLTED CONNECTIONS	PERFORM	PERFORM

REQUIRED SPECIAL INSPECTIONS AND TESTS OF CONCRETE CONSTRUCTION - REFERENCE 2024 IBC 1705.3

TYPE	CONTINUOUS SPECIAL INSPECTION	PERIODIC SPECIAL INSPECTION
INSPECT REINFORCEMENT AND VERIFY PLACEMENT.	-	X
REINFORCING BAR WELDING: a. VERIFY WELDABILITY OF REINFORCING BARS OTHER THAN ASTM A706: b. INSPECT SINGLE-PASS FILLET WELDS, MAXIMUM 5/16"; AND c. INSPECT ALL OTHER WELDS.	 - X	 X X
INSPECT ANCHORS CAST IN CONCRETE.	-	X
INSPECT ANCHORS POST-INSTALLED IN HARDENED CONCRETE MEMBERS. a. ADHESIVE ANCHORS INSTALLED IN HORIZONTALLY OR UPWARDLY INCLINED ORIENTATIONS TO RESIST SUSTAINED TENSION LOADS. b. MECHANICAL ANCHORS AND ADHESIVE ANCHORS NOT DEFINED ABOVE.	 X -	 - X
VERIFY USE OF REQUIRED DESIGN MIX.	-	X
PRIOR TO CONCRETE PLACEMENT, FABRICATE SPECIMENS FOR STRENGTH TESTS, PERFORM SLUMP AND AIR TESTS AND DETERMINE THE TEMPERATURE OF THE CONCRETE.	X	-
INSPECT CONCRETE AND SHOTCRETE PLACEMENT FOR PROPER APPLICATION TECHNIQUES.	X	-
VERIFY MAINTENANCE OF SPECIFIED CURING TEMPERATURE AND TECHNIQUES.	-	X
INSPECT FORMWORK FOR SHAPE, LOCATION AND DIMENSIONS OF THE CONCRETE MEMBER BEING FORMED.	-	X

DECK QUALITY ASSURANCE TABLES (SDI TABLE 1.1 THRU 1.8)

INSPECTION OR EXECUTION TASKS PRIOR TO DECK PLACEMENT

TYPE	QA
VERIFY COMPLIANCE OF MATERIALS (DECK AND ALL DECK ACCESSORIES) WITH CONSTRUCTION DOCUMENTS, INCLUDING PROFILES, MATERIAL PROPERTIES AND BASE METAL THICKNESS	PERFORM
DOCUMENT ACCEPTANCE OR REJECTION OF DECK AND DECK ACCESSORIES	PERFORM

INSPECTION OR EXECUTION TASKS AFTER DECK PLACEMENT

TYPE	QA
VERIFY COMPLIANCE OF DECK AND ALL DECK ACCESSORIES INSTALLATION WITH CONSTRUCTION DOCUMENTS	PERFORM
VERIFY DECK MATERIALS ARE REPRESENTED BY THE MILL CERTIFICATIONS THAT COMPLY WITH THE CONSTRUCTION DOCUMENTS	PERFORM
DOCUMENT ACCEPTANCE OR REJECTION OF INSTALLATION OF DECK AND DECK ACCESSORIES	PERFORM

INSPECTION OR EXECUTION TASKS PRIOR TO WELDING

TYPE	QA
WELDING PROCEDURE SPECIFICATIONS (WPS) AVAILABLE	OBSERVE
MANUFACTURER CERTIFICATIONS FOR WELDING CONSUMABLES AVAILABLE	OBSERVE
MATERIAL IDENTIFICATION (TYPE / GRADE)	OBSERVE
CHECK WELDING EQUIPMENT	OBSERVE

INSPECTION OR EXECUTION TASKS DURING WELDING

TYPE	QA
USE OF QUALIFIED WELDERS	OBSERVE
CONTROL AND HANDLING OF WELDING CONSUMABLES	OBSERVE
ENVIRONMENTAL CONDITIONS (WIND SPEED, MOISTURE AND TEMPERATURE)	OBSERVE
WPS FOLLOWED	OBSERVE

INSPECTION OR EXECUTION TASKS AFTER WELDING

TYPE	QA
VERIFY SIZE AND LOCATION OF WELDS, INCLUDING SUPPORT, SIDELAP AND PERIMETER WELDS.	PERFORM
WELDS MEET VISUAL ACCEPTANCE CRITERIA	PERFORM
VERIFY REPAIR ACTIVITIES	PERFORM
DOCUMENT ACCEPTANCE OR REJECTION OF WELDS	PERFORM

INSPECTION OR EXECUTION TASKS TO MECHANICAL FASTENING

TYPE	QA
MANUFACTURER INSTALLATION INSTRUCTIONS AVAILABLE FOR MECHANICAL FASTENERS	OBSERVE
PROPER TOOLS AVAILABLE FOR FASTENER INSTALLATION	OBSERVE
PROPER STORAGE FOR MECHANICAL FASTENERS	OBSERVE

INSPECTION OR EXECUTION TASKS DURING MECHANICAL FASTENING

TYPE	QA
FASTENERS ARE POSITIONED AS REQUIRED	OBSERVE
FASTENERS ARE INSTALLED IN ACCORDANCE WITH MANUFACTURER'S INSTRUCTIONS	OBSERVE

INSPECTION OR EXECUTION TASKS AFTER MECHANICAL FASTENING

TYPE	QA
CHECK SPACING, TYPE AND INSTALLATION OF SUPPORT FASTENERS	PERFORM
CHECK SPACING, TYPE AND INSTALLATION OF SIDELAP FASTENERS	PERFORM
CHECK SPACING, TYPE AND INSTALLATION OF PERIMETER FASTENERS	PERFORM
VERIFY REPAIR ACTIVITIES	PERFORM
DOCUMENT ACCEPTANCE OR REJECTION OF MECHANICAL FASTENERS	PERFORM

Revisions:	Date:

CONSULTANT

Calibre Engineering, Inc.
8822 South Ridgeline Boulevard, Suite 310
Highlands Ranch, CO 80129 (303) 730-0434
www.calibre-engineering.com
CIVIL | STRUCTURAL

ARCHITECT/ENGINEER OF RECORD

SPECIALIZED ENGINEERING SOLUTIONS
7100 E BELLEVIEW AVE, STE 107
GREENWOOD VILLAGE, CO 80111
Phone: (720) 200-5955
www.specializedeng.com
SES Project : 20114.008

STAMP

LICENSED PROFESSIONAL ENGINEER
EDWARD SABIA
35268
OKLAHOMA
Edward Sabia
4/23/26

Office of Construction and Facilities Management

VA U.S. Department of Veterans Affairs

Drawing Title: QA NOTES & TABLES
Phase: ADDENDUM 01
Project Title: VA OKC - DESIGN REPAIR PARKING GARAGE
Project Number: 635-21-139
Building Number:
Approved: Project Director
NON-SPRINKLERED
Location: 921 N.E. 13TH STREET OKLAHOMA CITY, OK 73104
Issue Date: 04/23/2026
Checked: ES
Drawn: EM
Drawing Number: S-002

Autodesk Docs://20114.008 - VA Oklahoma City Parking Garage/OKC PARKING GARAGE REPAIRS_STRU_R22.rvt
4/23/2026 9:25:13 AM

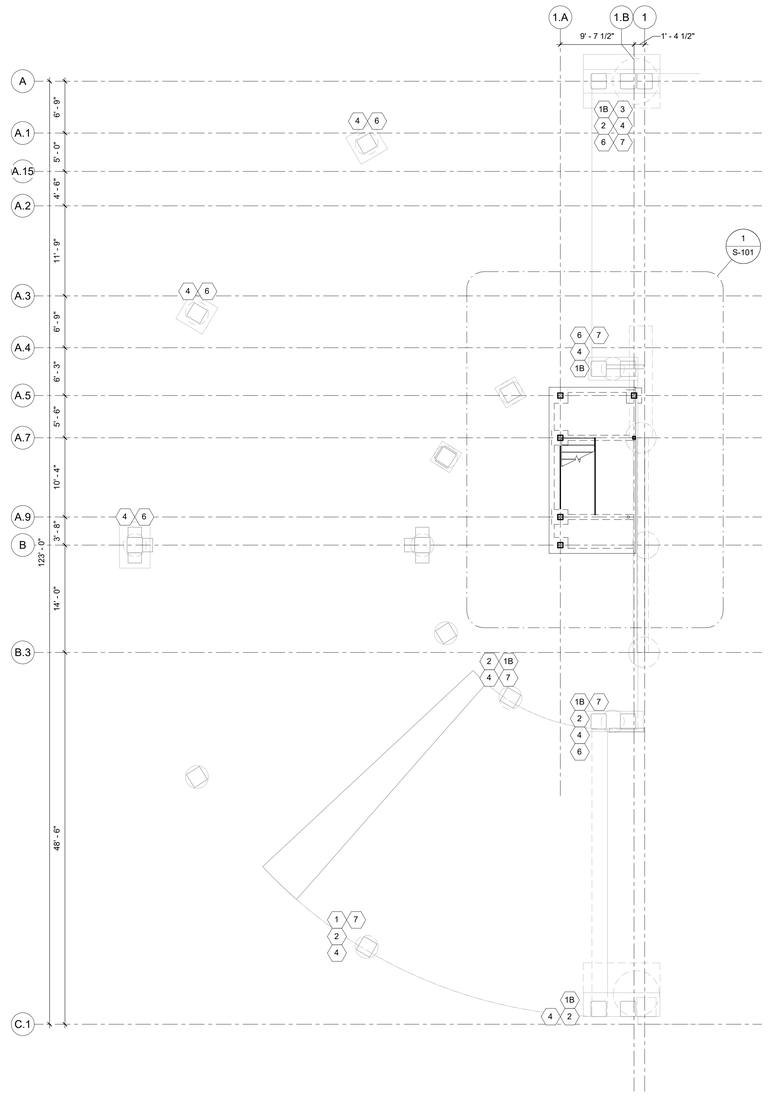

1 FOUNDATION PLAN
1/8" = 1'-0"

0' 4' 8' 16'
1/8" = 1'-0"

WORK LIST			
DESCRIPTION	WORK ITEM	REFERENCE DETAIL	ESTIMATED QUANTITY
PROVIDE TEMPORARY SHORING OF COLUMN DURING REPAIRS.	1	1/S-551	1 LOCS
IF DURING INITIAL REMOVAL OF SPALLED CONCRETE, DAMAGED CONCRETE DEPTHS GET WITHIN 1" OF COLUMN EDGE ABOVE, CONTRACTOR SHALL INSTALL SHORING BEFORE PROCEEDING.	1B	1/S-551	5 LOCS
REPAIR DELAMINATED OR SPALLED VERTICAL CONCRETE AND CORRODED REINFORCING STEEL ON CONCRETE PILASTERS. ASSUME AN AVERAGE DEPTH OF REPAIR TO BE 3 INCHES.	2	2/S-551	75 SF
REMOVE PRIOR FAILED REPAIR AND REPAIR PER WORK ITEM 2	3	2/S-551	10 SF
APPLY ALL SIDES OF PILASTERS WITH SRS 4100 STEEL GUARD AND SRS 4000 CONCRETE GUARD. FOLLOW MANUFACTURER'S RECOMMENDATIONS FOR APPLICATION.	4	NA	9 LOCS
INSTALL GALVANIC ANODES AT PERIMETER OF CONCRETE REPAIR AREAS EXCEEDING 4 SQUARE FEET. ASSUME VECTOR CORROSION SERVICES GALVASHIELD XP4 AS BASIS OF DESIGN PRODUCT AT 18" ON CENTER	5	5/S-551	4 LOCS
EPOXY INJECT CRACKS GREATER THAN 0.035 INCHES OR WHERE VISIBLE CHLORIDE STAINING EXISTS WITH SIKADUR-31 HI MODEL GEL.	6	NA	40 LF
REMOVE SPALLED NON-SHRINK GROUT AROUND PRECAST COLUMN BASES. WIRE BRUSH CLEAN STEEL PLATE CORROSION AND COAT W/ ZINC RICH PRIMER. COVER WITH 1 1/2" MIN NON-SHRINK GROUT.	7	NA	8 LOCS

WORK LIST NOTES:

1. THE VALUES IN THE "ESTIMATED QUANTITY" COLUMN OF THE WORK LISTS MAY BE GREATER THAN OR LESS THAN THE AMOUNTS SHOWN ON PLAN. USE THE QUANTITIES LISTED IN THE WORK LIST FOR BID PURPOSES AND PROVIDE UNIT COSTS. CONTRACTOR SHALL FIELD VERIFY QUANTITIES AND LOCATIONS PRIOR TO WORK. NOT ALL LOCATIONS OF WORK ITEMS MAY BE SHOWN ON PLANS. ADDITIONAL LOCATIONS MAY BE DISCOVERED DURING REPAIRS.
2. BID PRICING SHALL REFLECT THE PRODUCTS SPECIFIED IN THIS DOCUMENT. SUBSTITUTIONS AND ASSOCIATED PRICING MAY BE SUBMITTED IN ADDITION TO THE UNIT COST PRICES FOR THE SPECIFIED MATERIALS. THE ENGINEER SHALL REVIEW AND DETERMINE IF THE ALTERNATE PRODUCT IS CONSIDERED "EQUAL" AND IF IT WILL BE ALLOWED AS A SUBSTITUTION.
3. CONTRACTOR SHALL KEEP A CURRENT SCHEDULE OF VALUES FOR ALL WORK ITEMS BEING PERFORMED WITH QUANTITIES COMPLETED TO DATE. ANY ANTICIPATED OVERAGES OR SHORTAGES TO THE BID QUANTITIES LISTED ABOVE SHOULD BE PRESENTED AS WELL.
4. REPAIRS AREAS GREATER THAN 2 SQUARE FEET IN SIZE SHALL USE FORM AND POUR OR FORM AND PUMP PACKAGED REPAIR MATERIALS.

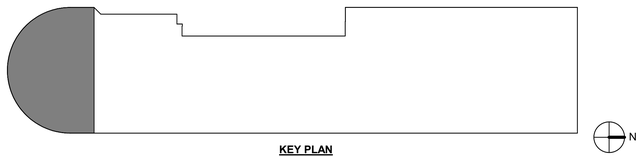

KEY PLAN

Revisions:	Date:

CONSULTANT

Calibre

Calibre Engineering, Inc.
8822 South Ridgeline Boulevard, Suite 310
Highlands Ranch, CO 80129 (303) 730-0434
www.calibre-engineering.com
CIVIL | STRUCTURAL

ARCHITECT/ENGINEER OF RECORD

SES SPECIALIZED ENGINEERING SOLUTIONS

7100 E BELLEVIEW AVE, STE 107
GREENWOOD VILLAGE, CO 80111
Phone: (720) 200-5955

www.specializedeng.com

SES Project : 20114.008

STAMP

LICENSED PROFESSIONAL ENGINEER
EDWARD SABIA
35268
OKLAHOMA
4/23/26

Office of Construction and Facilities Management

VA U.S. Department of Veterans Affairs

Drawing Title: FOUNDATION REPAIR PLAN	Phase: ADDENDUM 01	Project Title: VA OKC - DESIGN REPAIR PARKING GARAGE	Project Number: 635-21-139
Approved: Project Director	NON-SPRINKLERED	Location: 921 N.E. 13TH STREET OKLAHOMA CITY, OK 73104	Building Number
		Issue Date: 04/23/2026 / Checked: ES / Drawn: EM	Drawing Number: S-100

Autodesk Docs://20114.008 - VA Oklahoma City Parking Garage/OKC PARKING GARAGE REPAIRS_STRU_R22.rvt
4/23/2026 9:25:14 AM

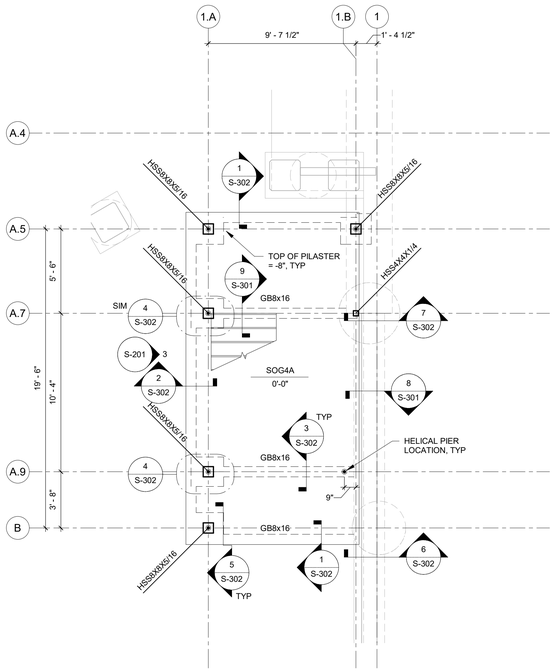

N

1 FOUNDATION PLAN

1/4" = 1'-0"

0' 4' 8' 16'

1/8" = 1'-0"

FOUNDATION PLAN NOTES:

1. SEE GENERAL NOTES, SPECIFICATIONS, AND DETAILS FOR ADDITIONAL INFORMATION.
2. TOP OF SLAB = 0'-0" WHICH IS 1237.5' IN CIVIL ELEVATION. SEE CIVIL AND ARCHITECTURAL DRAWINGS FOR LAYOUT IN SPACE.
3. SEE ARCHITECTURAL DRAWINGS FOR SLAB ON GRADE SLOPES, STEPS, AND DEPRESSIONS NOT SHOWN ON STRUCTURAL.
4. ALL COLUMNS ARE CENTERED ON GRIDS UNLESS NOTED OTHERWISE.
5. SLABS NOTATED AS SOG4A IS 4" NW CONCRETE SLAB ON GRADE, UNREINFORCED. PROVIDE JOINTS AT 10'-0" OC MAX WITH MAX ASPECT RATIO OF 1:1-1/2.
6. SEE S/S-302 FOR COLUMN BASE PLATE DETAIL

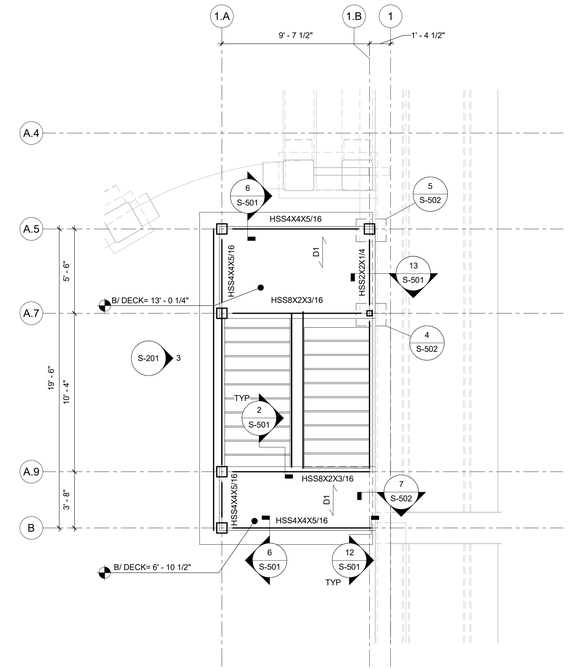

N

2 PARKING LEVEL 1 STAIR FRAMING PLAN

1/4" = 1'-0"

0' 4' 8' 16'

1/8" = 1'-0"

TYP STAIR FRAMING PLAN NOTES:

1. SEE GENERAL NOTES, SPECIFICATIONS, AND DETAILS FOR ADDITIONAL INFORMATION.
2. ALL COLUMNS ARE CENTERED ON GRIDS UNLESS NOTED OTHERWISE.
3. STEEL BEAMS SHALL BE EQUALLY SPACED BETWEEN GRID/COLUMN/GIRDER LINES UNO.
4. TOP OF STEEL BEAM SHALL EQUAL BOTTOM OF METAL DECK UNO.
5. SEE ARCH FOR ALL DECK EDGE DIMENSIONS
6. DECK NOTATED AS D1 IS 2" NW CONCRETE ON TOP OF 1.5" COMPOSITE VLI DECK, 20 GAGE. 3.5" TOTAL THICKNESS
   a. DECK CONNECTION OPTIONS:
      1. 5/8" PUDDLE WELD IN 36/4 PATTERN TO PERP SUPPORTS, @ 9" OC TO PARALLEL SUPPORTS, & #8 SCREWS @ 20" OC FOR SIDELAPS
      2. HILTI X-HSN 24 (OR APPROVED EQUAL PAF) IN 36/7 PATTERN TO PERP SUPPORTS, @ 9" OC TO PARALLEL SUPPORTS, & #10 SCREW @ 18" OC FOR SIDELAPS

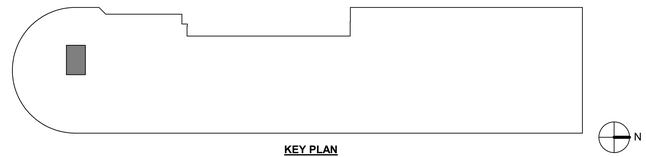

N

KEY PLAN

Revisions:	Date:

CONSULTANT

Calibre

Calibre Engineering, Inc.
8822 South Ridgeline Boulevard, Suite 310
Highlands Ranch, CO 80129 (303) 730-0434
www.calibre-engineering.com
CIVIL | STRUCTURAL

ARCHITECT/ENGINEER OF RECORD

SES SPECIALIZED ENGINEERING SOLUTIONS

7100 E BELLEVIEW AVE, STE 107
GREENWOOD VILLAGE, CO 80111
Phone: (720) 200-5955

www.specializedeng.com

SES Project : 20114.008

STAMP

LICENSED PROFESSIONAL ENGINEER
EDWARD SABIA
35268
OKLAHOMA
4/23/26

Office of Construction and Facilities Management

VA U.S. Department of Veterans Affairs

Drawing Title STRUCTURAL FRAMING PLANS	**Phase** ADDENDUM 01	**Project Title** VA OKC - DESIGN REPAIR PARKING GARAGE	**Project Number** 635-21-139
			Building Number
Approved: Project Director	NON-SPRINKLERED	**Location** 921 N.E. 13TH STREET OKLAHOMA CITY, OK 73104	**Drawing Number** S-101
		Issue Date 04/23/2026 / **Checked** ES / **Drawn** EM	

Autodesk Docs://20114.008 - VA Oklahoma City Parking Garage/OKC-PARKING GARAGE REPAIRS_STRU_R22.rvt
4/23/2026 9:25:14 AM

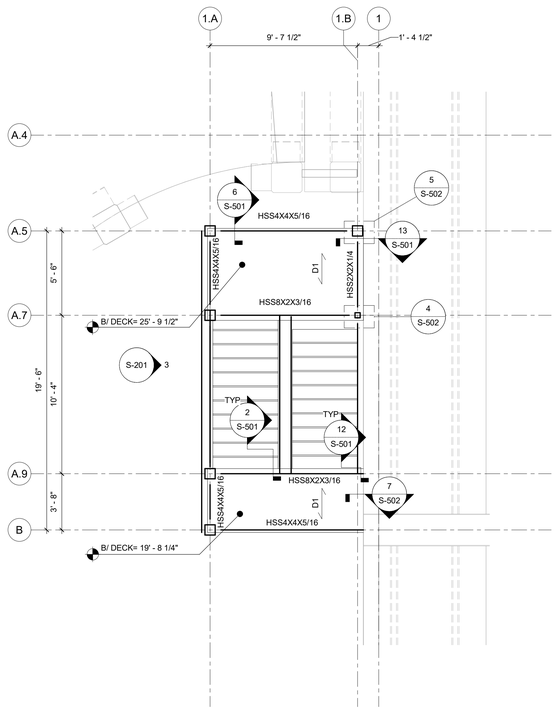

N 1 PARKING LEVEL 2 STAIR FRAMING PLAN
1/4" = 1'-0"

0' 2' 4' 8'
1/4" = 1'-0"

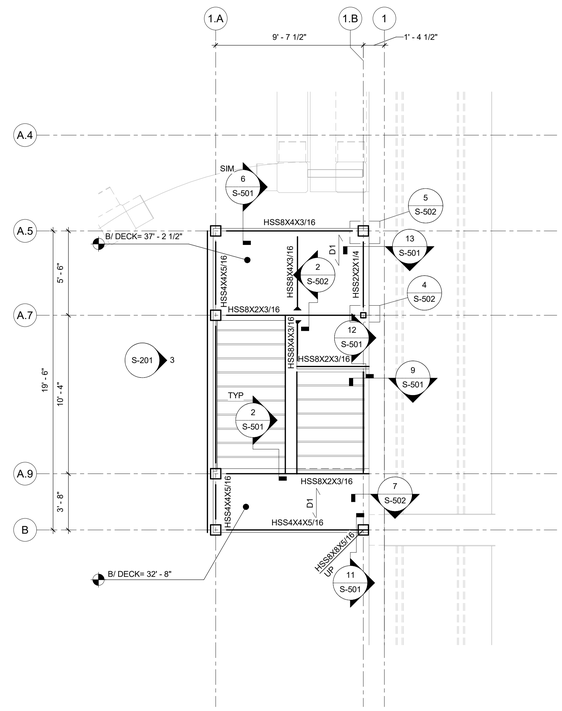

N 2 PARKING LEVEL 3 STAIR FRAMING PLAN
1/4" = 1'-0"

0' 2' 4' 8'
1/4" = 1'-0"

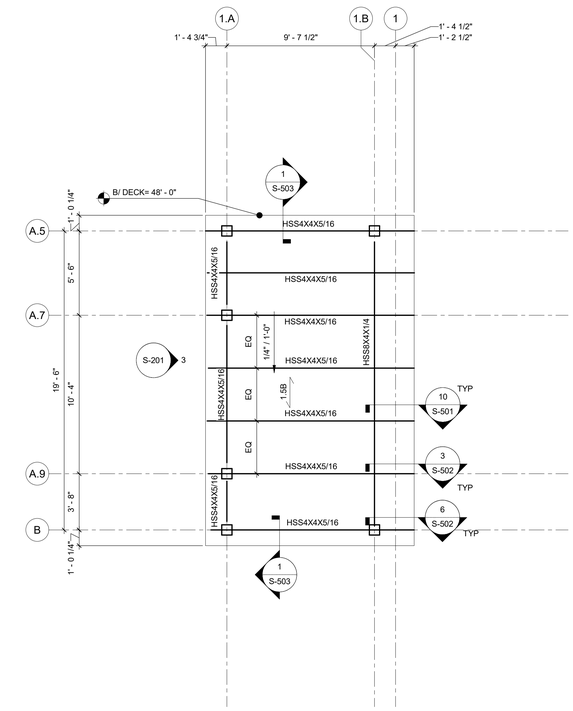

N 3 ROOF FRAMING PLAN
1/4" = 1'-0"

0' 2' 4' 8'
1/4" = 1'-0"

TYP STAIR FRAMING PLAN NOTES:

1. SEE GENERAL NOTES, SPECIFICATIONS, AND DETAILS FOR ADDITIONAL INFORMATION.
2. ALL COLUMNS ARE CENTERED ON GRIDS UNLESS NOTED OTHERWISE.
3. STEEL BEAMS SHALL BE EQUALLY SPACED BETWEEN GRID/COLUMN/GIRDER LINES UNO.
4. TOP OF STEEL BEAM SHALL EQUAL BOTTOM OF METAL DECK UNO.
5. SEE ARCH FOR ALL DECK EDGE DIMENSIONS
6. DECK NOTATED AS D1 IS 2" NW CONCRETE ON TOP OF 1.5" COMPOSITE VLI DECK, 20 GAGE. 3.5" TOTAL THICKNESS
   a. DECK CONNECTION OPTIONS:
      1. 5/8" PUDDLE WELD IN 36/4 PATTERN TO PERP SUPPORTS, @ 9" OC TO PARALLEL SUPPORTS, & #8 SCREWS @ 20" OC FOR SIDELAPS
      2. HILTI X-HSN 24 (OR APPROVED EQUAL PAF) IN 36/7 PATTERN TO PERP SUPPORTS, @ 9" OC TO PARALLEL SUPPORTS, & #10 SCREW @ 18" OC FOR SIDELAPS

TYP ROOF PLAN NOTES:

1. SEE GENERAL NOTES, SPECIFICATIONS, AND DETAILS FOR ADDITIONAL INFORMATION.
2. ALL COLUMNS ARE CENTERED ON GRIDS UNLESS NOTED OTHERWISE.
3. STEEL BEAMS SHALL BE EQUALLY SPACED BETWEEN GRID/COLUMN/GIRDER LINES UNO.
4. DECK ELEVATIONS SHOWN ARE BOTTOM OF DECK UNLESS OTHERWISE NOTED. STEEL GIRDERS TOP TO BE BOTTOM OF METAL DECK.
5. SEE ARCH FOR ALL DECK EDGE DIMENSIONS
6. DECK NOTATED AS 1.5B IS 1.5" DEEP WIDE RIB DECK, 20 GAGE MINIMUM:
   a. MINIMUM PROPERTIES:
      1. I_P = 0.197 IN⁴/FT
      2. S_P = 0.224 IN³/FT
      3. S_N = 0.229 IN³/FT
   b. DECK CONNECTION OPTIONS:
      1. 5/8" PUDDLE WELD IN 36/4 PATTERN TO PERP SUPPORTS, @ 12" OC TO PARALLEL SUPPORTS, & #8 SCREWS @ 24" OC FOR SIDELAPS
      2. HILTI X-HSN 24 (OR APPROVED EQUAL PAF) IN 36/4 PATTERN TO PERP SUPPORTS, @ 12" OC TO PARALLEL SUPPORTS, & #10 SCREW @ 24" OC FOR SIDELAPS

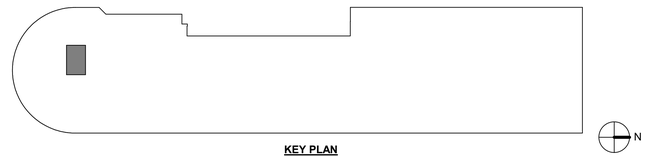

KEY PLAN

N

Revisions:	Date:

CONSULTANT

Calibre

Calibre Engineering, Inc.
8822 South Ridgeline Boulevard, Suite 310
Highlands Ranch, CO 80129 (303) 730-0434
www.calibre-engineering.com
CIVIL | STRUCTURAL

ARCHITECT/ENGINEER OF RECORD

SES SPECIALIZED ENGINEERING SOLUTIONS

7100 E BELLEVIEW AVE, STE 107
GREENWOOD VILLAGE, CO 80111
Phone: (720) 200-5955

www.specializedeng.com

SES Project : 20114.008

STAMP

LICENSED PROFESSIONAL ENGINEER
EDWARD SABIA
35268
OKLAHOMA
4/23/26

Office of Construction and Facilities Management

VA U.S. Department of Veterans Affairs

Drawing Title STRUCTURAL FRAMING PLANS	**Phase** ADDENDUM 01	**Project Title** VA OKC - DESIGN REPAIR PARKING GARAGE	**Project Number** 635-21-139
			Building Number
Approved: Project Director	NON-SPRINKLERED	**Location** 921 N.E. 13TH STREET OKLAHOMA CITY, OK 73104	**Drawing Number** S-102
		Issue Date 04/23/2026 / **Checked** ES / **Drawn** EM	

VA FORM 08 - 6231

Autodesk Docs://20114.008 - VA Oklahoma City Parking Garage/OKC-PARKING GARAGE REPAIRS_STRU_R22.rvt
4/23/2026 9:25:15 AM

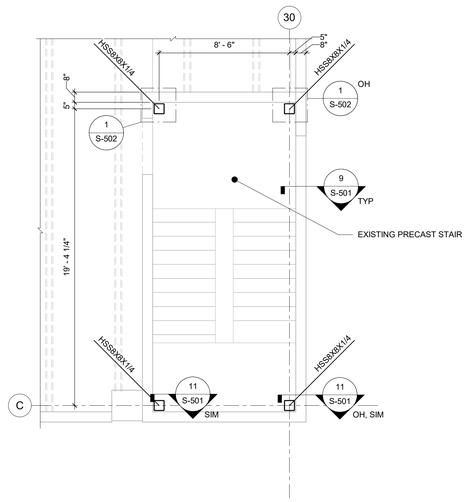

N 1 NORTH STAIR PARKING LEVEL 3
1/4" = 1'-0"

0' 2' 4' 8'
1/4" = 1'-0"

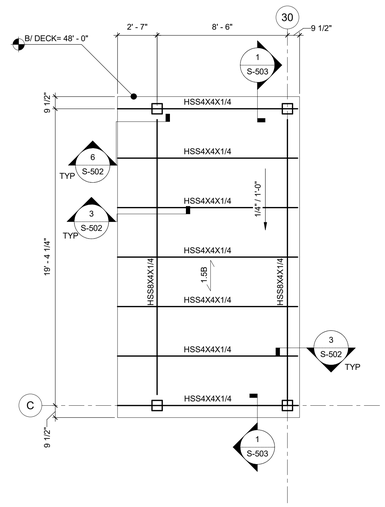

N 2 NORTH STAIR ROOF PLAN
1/4" = 1'-0"

0' 2' 4' 8'
1/4" = 1'-0"

NOTES:
1. SEE GENERAL NOTES, SPECIFICATIONS, AND DETAILS FOR ADDITIONAL INFORMATION.
2. CONTRACTOR TO VERIFY IN FIELD ALL EXISTING DIMENSIONS PRIOR TO SUBMITTING STEEL SHOP DRAWINGS.

TYP ROOF PLAN NOTES:
1. SEE GENERAL NOTES, SPECIFICATIONS, AND DETAILS FOR ADDITIONAL INFORMATION.
2. ALL COLUMNS ARE CENTERED ON GRIDS UNLESS NOTED OTHERWISE.
3. STEEL BEAMS SHALL BE EQUALLY SPACED BETWEEN GRID/COLUMN/GIRDER LINES UNO.
4. DECK ELEVATIONS SHOWN ARE BOTTOM OF DECK UNLESS OTHERWISE NOTED. STEEL GIRDERS TOP TO BE BOTTOM OF METAL DECK.
5. SEE ARCH FOR ALL DECK EDGE DIMENSIONS
6. DECK NOTATED AS 1.5B IS 1.5" DEEP WIDE RIB DECK, 20 GAGE MINIMUM:
   a. MINIMUM PROPERTIES:
      1. I_P = 0.197 IN^4/FT
      2. S_P = 0.224 IN^3/FT
      3. S_N = 0.229 IN^3/FT
   b. DECK CONNECTION OPTIONS:
      1. 5/8" PUDDLE WELD IN 36/4 PATTERN TO PERP SUPPORTS, @ 12" OC TO PARALLEL SUPPORTS, & #8 SCREWS @ 24" OC FOR SIDELAPS
      2. HILTI X-HSN 24 (OR APPROVED EQUAL PAF) IN 36/4 PATTERN TO PERP SUPPORTS, @ 12" OC TO PARALLEL SUPPORTS, & #10 SCREW @ 24" OC FOR SIDELAPS

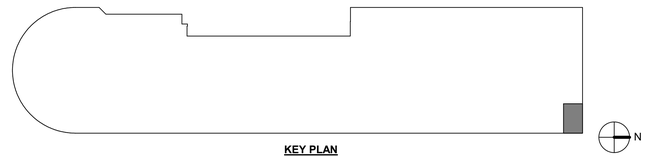

N

KEY PLAN

Revisions:	Date:

CONSULTANT

Calibre

Calibre Engineering, Inc.
8822 South Ridgeline Boulevard, Suite 310
Highlands Ranch, CO 80129 (303) 730-0434
www.calibre-engineering.com
CIVIL | STRUCTURAL

ARCHITECT/ENGINEER OF RECORD

SES SPECIALIZED ENGINEERING SOLUTIONS

7100 E BELLEVIEW AVE, STE 107
GREENWOOD VILLAGE, CO 80111
Phone: (720) 200-5955

www.specializedeng.com

SES Project : 20114.008

STAMP

LICENSED PROFESSIONAL ENGINEER
EDWARD SABIA
35268
OKLAHOMA
4/23/26

Office of Construction and Facilities Management

VA U.S. Department of Veterans Affairs

Drawing Title STRUCTURAL FRAMING PLANS	**Phase** ADDENDUM 01	**Project Title** VA OKC - DESIGN REPAIR PARKING GARAGE	**Project Number** 635-21-139
			Building Number
Approved: Project Director	NON-SPRINKLERED	**Location** 921 N.E. 13TH STREET OKLAHOMA CITY, OK 73104	**Drawing Number** S-103
		Issue Date 04/23/2026 · **Checked** ES · **Drawn** EM	

Autodesk Docs://20114.008 - VA Oklahoma City Parking Garage/OKC PARKING GARAGE REPAIRS_STRU_R22.rvt
4/23/2026 9:25:15 AM

VA FORM 08 - 6231

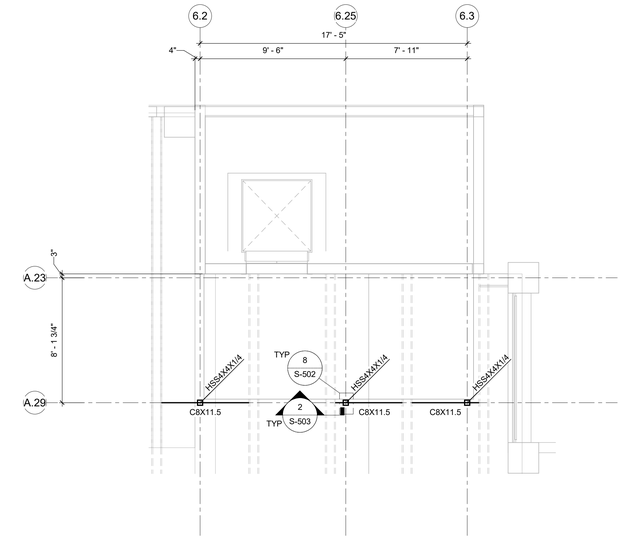

N 1 P15 PARKING LEVEL 3
1/4" = 1'-0"

0' 2' 4' 8'
1/4" = 1'-0"

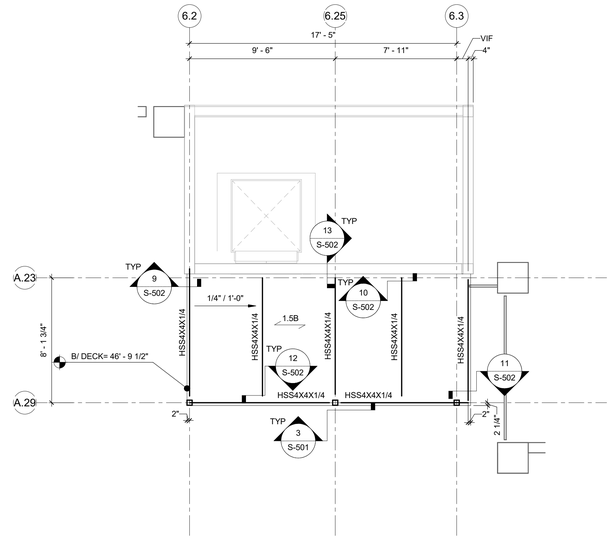

N 3 P15 ROOF PLAN
1/4" = 1'-0"

0' 2' 4' 8'
1/4" = 1'-0"

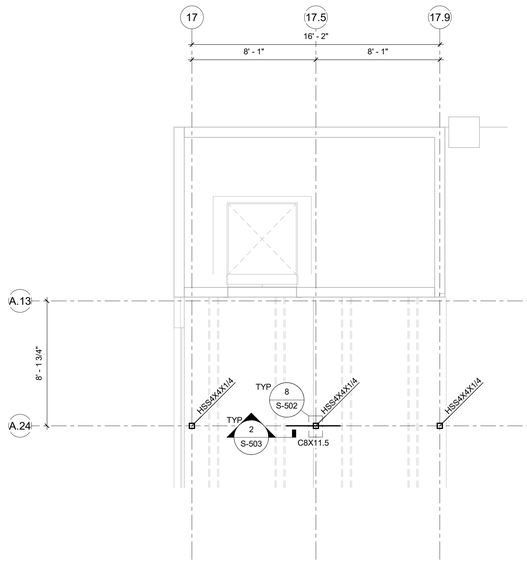

N 2 P17 PARKING LEVEL 3
1/4" = 1'-0"

0' 2' 4' 8'
1/4" = 1'-0"

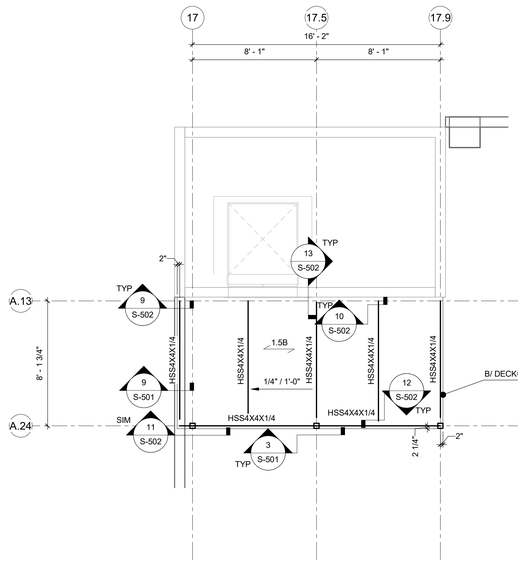

N 4 P17 PARKING ROOF PLAN
1/4" = 1'-0"

0' 2' 4' 8'
1/4" = 1'-0"

NOTES:
1. SEE GENERAL NOTES, SPECIFICATIONS, AND DETAILS FOR ADDITIONAL INFORMATION.
2. CONTRACTOR TO VERIFY IN FIELD ALL EXISTING DIMENSIONS PRIOR TO SUBMITTING STEEL SHOP DRAWINGS.

TYP ROOF PLAN NOTES:
1. SEE GENERAL NOTES, SPECIFICATIONS, AND DETAILS FOR ADDITIONAL INFORMATION.
2. ALL COLUMNS ARE CENTERED ON GRIDS UNLESS NOTED OTHERWISE.
3. STEEL BEAMS SHALL BE EQUALLY SPACED BETWEEN GRID/COLUMN/GIRDER LINES UNO.
4. DECK ELEVATIONS SHOWN ARE BOTTOM OF DECK UNLESS OTHERWISE NOTED. STEEL GIRDERS TOP TO BE BOTTOM OF METAL DECK.
5. SEE ARCH FOR ALL DECK EDGE DIMENSIONS
6. DECK NOTATED AS 1.5B IS 1.5" DEEP WIDE RIB DECK, 20 GAGE MINIMUM:
   a. MINIMUM PROPERTIES:
      1. I_P = 0.197 IN^4/FT
      2. S_P = 0.224 IN^3/FT
      3. S_N = 0.229 IN^3/FT
   b. DECK CONNECTION OPTIONS:
      1. 5/8" PUDDLE WELD IN 36/4 PATTERN TO PERP SUPPORTS, @ 12" OC TO PARALLEL SUPPORTS, & #8 SCREWS @ 24" OC FOR SIDELAPS
      2. HILTI X-HSN 24 (OR APPROVED EQUAL PAF) IN 36/4 PATTERN TO PERP SUPPORTS, @ 12" OC TO PARALLEL SUPPORTS, & #10 SCREW @ 24" OC FOR SIDELAPS

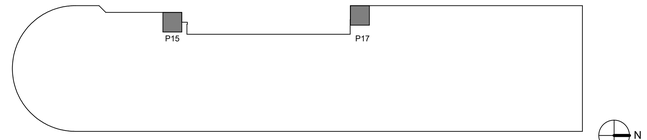

KEY PLAN

Revisions:	Date:

CONSULTANT

Calibre

Calibre Engineering, Inc.
8822 South Ridgeline Boulevard, Suite 310
Highlands Ranch, CO 80129 (303) 730-0434
www.calibre-engineering.com
CIVIL | STRUCTURAL

ARCHITECT/ENGINEER OF RECORD

SES SPECIALIZED ENGINEERING SOLUTIONS

7100 E BELLEVIEW AVE, STE 107
GREENWOOD VILLAGE, CO 80111
Phone: (720) 200-5955
www.specializedeng.com
SES Project : 20114.008

STAMP

LICENSED PROFESSIONAL ENGINEER
EDWARD SABIA
35268
OKLAHOMA
Edward Sabia
4/23/26

Office of Construction and Facilities Management

VA U.S. Department of Veterans Affairs

Drawing Title VESTIBULE STRUCTURAL FRAMING PLANS	**Phase** ADDENDUM 01	**Project Title** VA OKC - DESIGN REPAIR PARKING GARAGE	**Project Number** 635-21-139
Approved: Project Director	NON-SPRINKLERED	**Location** 921 N.E. 13TH STREET OKLAHOMA CITY, OK 73104	**Building Number**
		Issue Date 04/23/2026 / **Checked** ES / **Drawn** EM	**Drawing Number** S-104

Autodesk Docs://20114.008 - VA Oklahoma City Parking Garage/OKC PARKING GARAGE REPAIRS_STRU_R22.rvt
4/23/2026 9:25:15 AM

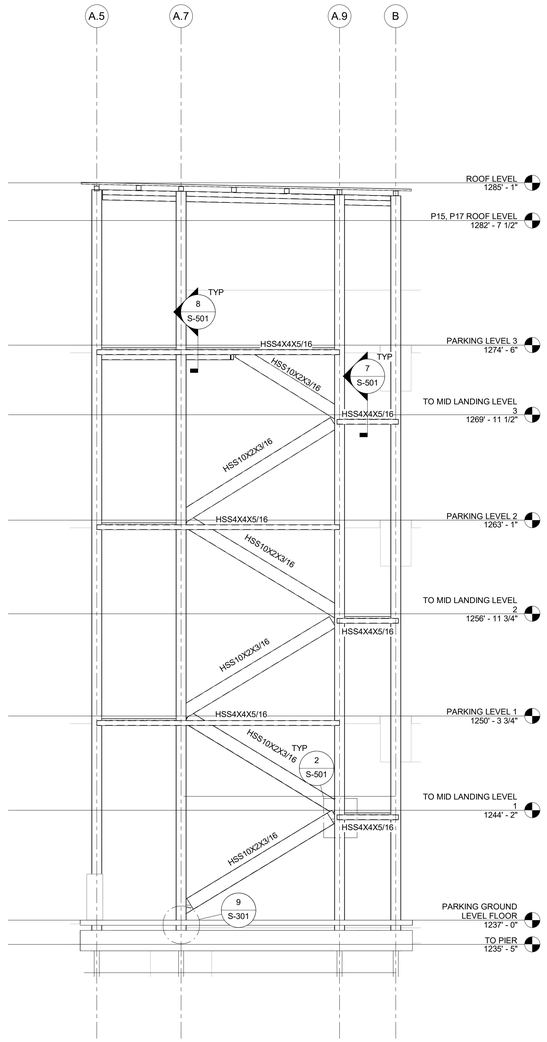

3 WEST ELEVATION
1/4" = 1'-0"

0' 2' 4' 8'
1/4" = 1'-0"

Revisions:	Date:

CONSULTANT

Calibre

Calibre Engineering, Inc.
8822 South Ridgeline Boulevard, Suite 310
Highlands Ranch, CO 80129 (303) 730-0434
www.calibre-engineering.com
CIVIL | STRUCTURAL

ARCHITECT/ENGINEER OF RECORD

SES SPECIALIZED ENGINEERING SOLUTIONS

7100 E BELLEVIEW AVE, STE 107
GREENWOOD VILLAGE, CO 80111
Phone: (720) 200-5955

www.specializedeng.com

SES Project : 20114.008

STAMP

LICENSED PROFESSIONAL ENGINEER
EDWARD SABIA
35268
OKLAHOMA
4/23/26

Office of Construction and Facilities Management

VA U.S. Department of Veterans Affairs

Drawing Title FRAMING ELEVATIONS	**Phase** ADDENDUM 01	**Project Title** VA OKC - DESIGN REPAIR PARKING GARAGE	**Project Number** 635-21-139
			Building Number
Approved: Project Director	NON-SPRINKLERED	**Location** 921 N.E. 13TH STREET OKLAHOMA CITY, OK 73104	**Drawing Number** S-201
		Issue Date 04/23/2026 · **Checked** ES · **Drawn** EM	

Autodesk Docs://20114.008 - VA Oklahoma City Parking Garage/OKC-PARKING GARAGE REPAIRS_STRU_R22.rvt
4/23/2026 9:25:16 AM

LAP SPLICE & DEVELOPMENT LENGTHS (INCHES) F'c=4,000 PSI, Fy=60,000 PSI										
CLEAR COVER		0.75"	1"	>2"	0.75"	1"	>2"	0.75"	1"	>2"
BAR SIZE	LDH	LTE			LTE TOP & LTS			LTS TOP		
#3	6	12	12	12	12	12	12	15	15	15
#4	7	15	12	12	19	15	15	25	20	20
#5	10	21	17	15	28	23	29	36	29	25
#6	10	29	24	18	37	31	23	49	40	29
#7	13	46	38	25	60	50	33	78	65	43
#8	15	57	48	29	74	62	37	97	81	49
#9	18	69	58	36	90	76	46	117	98	60
#10	22	83	71	44	108	92	57	141	119	74
#11	26	98	83	53	127	108	68	165	141	89

LAP SPLICE & DEVELOPMENT LENGTHS (INCHES) F'c=4,500 PSI, Fy=60,000 PSI										
CLEAR COVER		0.75"	1"	>2"	0.75"	1"	>2"	0.75"	1"	>2"
BAR SIZE	LDH	LTE			LTE TOP & LTS			LTS TOP		
#3	6	12	12	12	12	12	12	14	14	14
#4	7	14	12	12	18	14	14	23	19	19
#5	10	20	16	14	26	21	18	34	27	23
#6	10	27	22	17	35	29	21	46	38	28
#7	12	44	36	24	57	47	31	74	61	40
#8	15	54	45	27	70	59	35	91	76	46
#9	18	65	55	34	85	71	44	110	93	57
#10	21	79	67	42	102	87	54	133	112	70
#11	25	92	79	50	120	102	65	155	133	84

TYPICAL REINFORCING BENDS

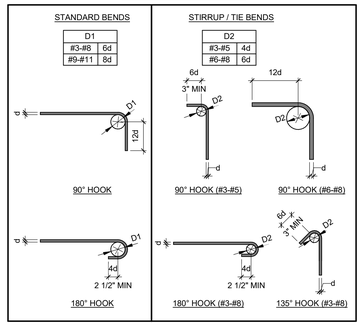

MAX OFFSET BEND

NOTES:
1. ALL BENDS SHALL BE MADE COLD.
2. #14 & #18 BARS SHALL BE BEND TESTED AND LAB APPROVED PRIOR TO BENDING

GENERAL NOTES:
1. LENGTHS SPECIFIALLY DETAILED ON DRAWINGS SHALL GOVERN IN LIEU OF LAP LENGTHS SCHEDULED
2. ABBREVIATIONS:
   a. 'LDH'= HOOK DEVELOPMENT LENGTH
   b. 'LTE'= TENSION EMBEDMENT LENGTH
   c. 'LTS'= TENSION LAP SLICE LENGTH
3. "TOP BARS' BARS ARE HORIZONTAL BARS PLACED SUCH THAT MORE THAN 12" OF FRESH CONCRETE IS CAST BELOW THE BAR
4. CLEAR COVER IS DEFINED FROM THE NEAREST FACE OF CONCRETE TO THE BAR BEING DEVELOPED OR SPLICED
5. UNLESS NOTED OTHERWISE, ALL HOOK BARS SHALL EXTEND TO THE FAR FACE LESS 2" COVER
6. IF A NOTE OR DETAIL CALLS FOR A BAR TO BE EMBEDDED Ld (DEVELOPMENT LENGTH) INTO CONCRETE, THIS SHALL CORRESPOND TO A 'LTE' LENGTH
7. IF A NOTE OR DETAIL REQUIRES A BAR TO HAVE A DEVELOPMENT OR LAP LENGTH BUT INSUFFICIENT DIMENSION IS AVAILABLE FOR THE LENGTH SCHEDULED, EXTEND BAR TO FAR FACE OF CONCRETE LESS 2" COVER AND HOOK

ADJUSTMENTS TO GIVEN LENGTHS:
1. IF REINFORCING IS SPECIED AS EXPOXY COATED, INCREASE SCHEDULED LENGTHS BY 50%
2. IF LIGHTWEIGHT AGGREGATE IS SPECIFIED, INCREASE SCHEDULED LAP BY LENGTHS 30%
3. SCHEDULED LENGTHS ASSUME:
   A. CLEAR COVER IS AS INDICATED IN SCHEDULE
   B. CLEAR SPACING BETWEEN BARS IS GREATER THAN 2xCLEAR COVER
   C. IF EITHER CONDITION A OR B IS NOT MET FOR A GIVEN BAR, INCREASE LENGTHS BY 50%
   D. LENGTHS NOTED BASED ON Fy=60,000 PSI.
      A. FOR OTHER YIELD STRENGTHS, MULTIPLY LENGTHS NOTED BY Fy/60,000

LAP SPLICE NOTES:
1. ALLSPLICES SHALL BE WIRED IN CONTACT
2. ALL SPLICES ARE 'LTS' UNLESS NOTED OTHERWISE
3. SMALLER BAR LAP LENGTH SHALL BE USED WHEN SPLICING DIFFERENT SIZED BARS
   A. COMPRESSION LAP LENGTH SHALL NOT BE LESS THAN 'LCE' OF THE LARGER BAR
   B. TENSION LAP LENGTH SHALL NOT BE LESS THAN 'LTE' OF THE LARGER BAR
4. BUNDLED BAR SPLICES:
   A. INDIVIDUAL BAR SPLICES WITHIN THE BUNDLE SHALL BE STAGGERED
   B. INCREASE LAP LENGTH 20% FOR A 3 BAR BUNDLE
   C. INCREASE LAP LENGTH 33% FOR A 4 BAR BUNDLE
5. TOP AND BOTTOM BEAM SPLICES SHALL BE STACKED VERTICALLY

HOOK EMBEDMENT NOTES:
1. SCHEDULED HOOK EMBEDMENT LENGTHS ASSUME:
   A. SIDE COVER IS 2 1/2 INCHES OR GREATER
   B. COVER BEYOND IS 2 INCHES OR GREATER
   C. IF REINFORCING IS SPECIED AS EPOXY COATED, INCREASE SCHEDULED LENGTHS BY 20%
   D. IF LIGHTWEIGHT AGGREAGATE IS SPECIFIED, INCREASE SCHEDULED LENGTHS BY 30%
   E. IF SIDE COVER IS LESS THAN 2 1/2 INCHES, INCREASE LENGTHS BY 40%

1 REINFORCING DEVELOPMENT, PLACEMENT, AND BEND INFO
3/4" = 1'-0"

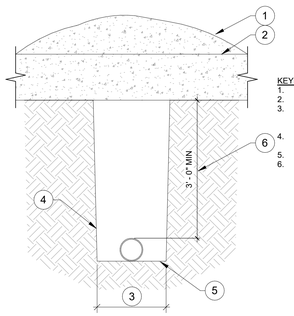

KEYNOTES:
1. STEM WALL, AS OCCURS
2. CONCRETE FOOTING OR FOUNDATION
3. 1'-6" MAX WHERE TRENCH EXCEEDS 1'-6" NOTIFY STRUCTURAL ENGINEER PRIOR TO PLACEMENT OF FOOTING
4. BACKFILL AND RECOMPACT TRENCH PER SOILS REPORT AND SPECIFICATIONS
5. BOTTOM OF TRENCH
6. SEE DETAIL 3/S-301 FOR DEPTHS 3'-0" AND LESS

KEYNOTES:
1. TRENCH EXCAVATION. SEE GENERAL NOTES AND SOILS REPORT FOR BACKFILL REQUIREMENTS, TYP.
2. FINISH GRADE
3. FOOTING, MAY VARY SEE PLAN
4. BOTTOM OF TRENCH SHALL NOT EXTEND BELOW THIS LINE
5. PIPE SLEEVE - 2" LARGER THAN PIPE PASSING THROUGH FOOTING STEM (GROUT ANNULAR SPACE AROUND PIPE)
6. NO PIPE TO PASS THROUGH THIS PORTION OF FOOTING
7. PIPE, SEE PLAN TYP

PARALLEL TO FOUNDATION

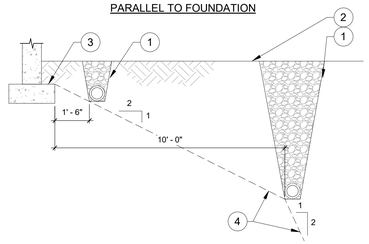

PERPENDICULAR TO FOUNDATION

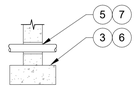

NOTES:
1. THE CONTRACTOR SHALL COORDINATE ALL EXCAVATION OPERATIONS WITH BUILDING FOUNDATION REQUIREMENTS
2. SEE DETAILS 3/S-301 AND 5/S-301 FOR ADDITIONAL INFORMATION FOR UTILITIES PASSING BELOW FOUNDATION

3 PIPE PASSING BELOW CONT. FOOTING - SHALLOW
NTS

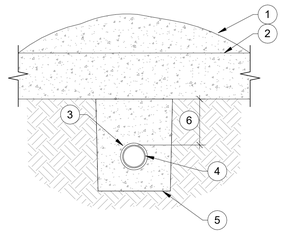

KEYNOTES:
1. STEM WALL, AS OCCURS
2. CONCRETE FOOTING OR FOUNDATION
3. PIPE SLEEVE, PROVIDE 1/2" MIN CLEARANCE AROUND PIPE
4. PIPE
5. CONCRETE FILL TO BE PLACE BEFORE FOOTING IS POURED AND POUR FULL WIDTH OF PIPE TRENCH
6. 8" MIN, 3'-0" MAX WHERE DEPTH IS GREATER THAN 3'-0" SEE DETAIL 5/S-301

NOTES:
1. PIPES SHALL NOT PASS THRU FOOTINGS NOR BE LOCATED BELOW ISOLATED COLUMN FOOTINGS.

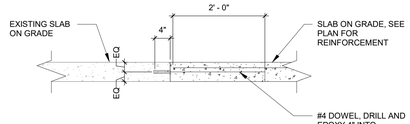

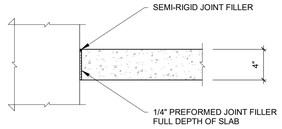

5 PIPE PASSING BELOW CONT. FOOTING - DEEP
NTS

6 TYP TRENCH DETAIL
NTS

7 NEW SOG TO EXISTING
3/4" = 1'-0"

8 TYP SOG ISOLATION JOINT
1 1/2" = 1'-0"

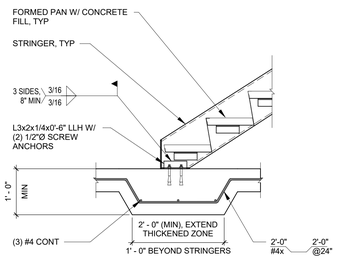

9 SOG SUPPORTING METAL PAN STAIR
NTS

Revisions:	Date:

CONSULTANT

Calibre

Calibre Engineering, Inc.
8822 South Ridgeline Boulevard, Suite 310
Highlands Ranch, CO 80129 (303) 730-0434
www.calibre-engineering.com
CIVIL | STRUCTURAL

ARCHITECT/ENGINEER OF RECORD

SES SPECIALIZED ENGINEERING SOLUTIONS

7100 E BELLEVIEW AVE, STE 107
GREENWOOD VILLAGE, CO 80111
Phone: (720) 200-5955

www.specializedeng.com

SES Project : 20114.008

STAMP

LICENSED PROFESSIONAL ENGINEER
EDWARD SABIA
35268
OKLAHOMA
4/23/26

Office of Construction and Facilities Management

VA U.S. Department of Veterans Affairs

Drawing Title: TYPICAL CONCRETE DETAILS	Phase: ADDENDUM 01
Approved: Project Director	NON-SPRINKLERED

Project Title: VA OKC - DESIGN REPAIR PARKING GARAGE		Project Number: 635-21-139
		Building Number
Location: 921 N.E. 13TH STREET OKLAHOMA CITY, OK 73104		Drawing Number: S-301
Issue Date: 04/23/2026	Checked: ES	Drawn: EM

VA FORM 08 - 6231

Autodesk Docs://20114.008 - VA Oklahoma City Parking Garage/OKC PARKING GARAGE REPAIRS_STRU_R22.rvt
4/23/2026 9:25:16 AM

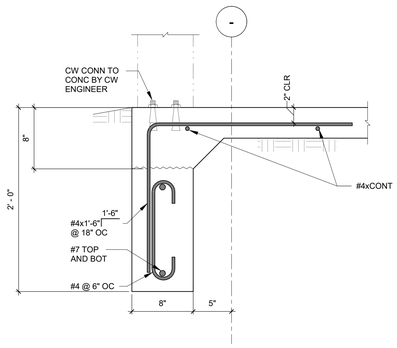

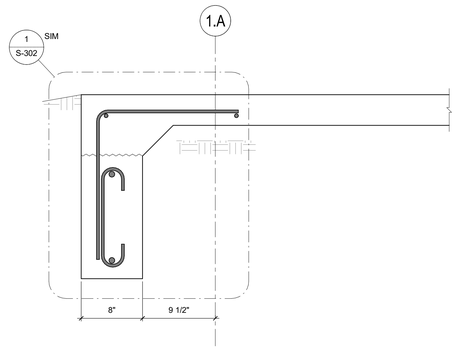

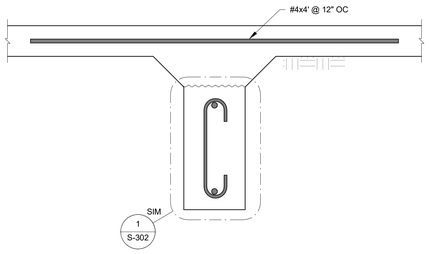

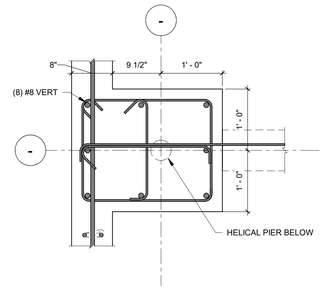

NOTE:
1. FOR ADDITIONAL INFO SEE 5/S-302

1 TYP GRADE BEAM EAST AND WEST
1 1/2" = 1'-0"

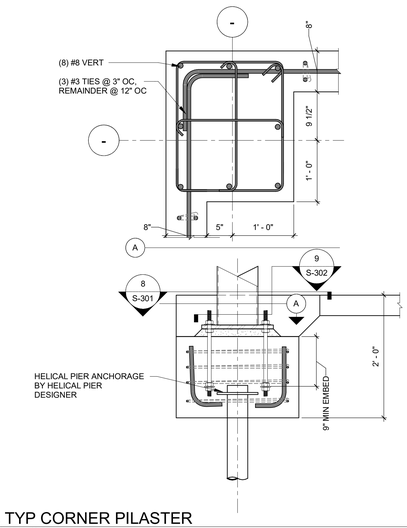

2 SOUTH GRADE BEAM
1 1/2" = 1'-0"

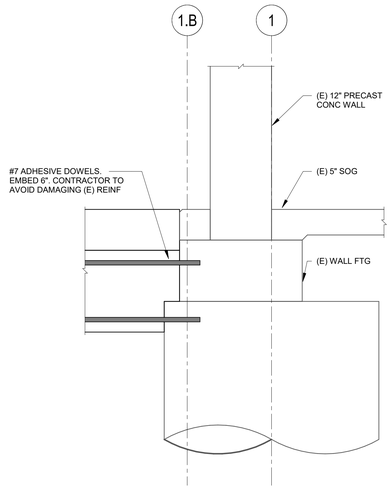

3 TYP GRADE BEAM AT THICKENED SLAB
1 1/2" = 1'-0"

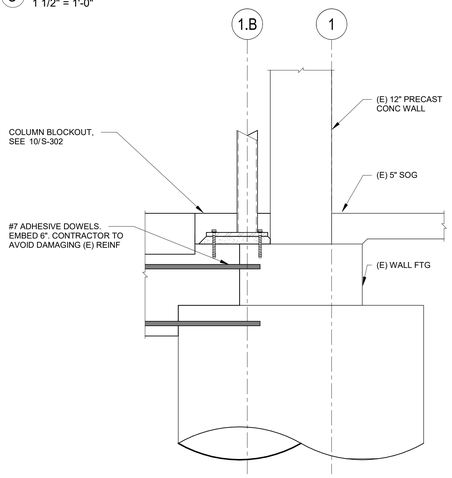

NOTES:
1. CONTRACTOR TO LOCATE EXISTING REINFORCING AND SUBMIT PROPOSED MODIFICATIONS TO BOLT LAYOUT TO AVOID REINFORCING.

4 TYP PILASTER
1" = 1'-0"

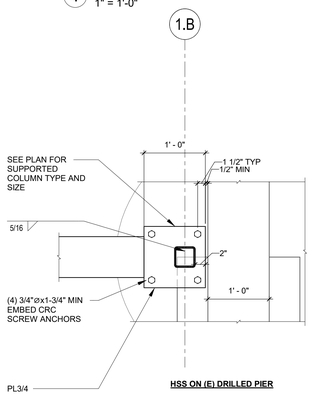

HSS ON (E) DRILLED PIER

5 TYP CORNER PILASTER
1" = 1'-0"

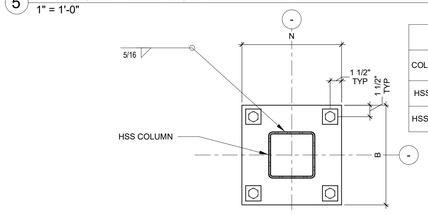

GRAVITY COLUMN BASE PLATE SCHEDULE				
COLUMN SIZE	PLATE THICKNESS, T (in.)	N (in.)	B (in.)	COMMENTS
HSS 4X4X1/4	3/4	12	12	-
HSS 8X8X5/16	3/4	14	14	-

HSS

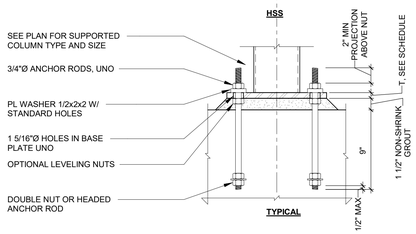

TYPICAL

NOTES:
1. ALL AROUND WELD MAY BE USED IN LIEU OF THE WELD SHOWN
2. 2"Ø MAXIMUM GROUT HOLE AT CONTRACTOR'S OPTION. ONE OR TWO GROUT HOLES RECOMMENDED FOR BASE PLATES LARGER THAN 24" IN WIDTH

6 TYP GRADE BEAM TO (E)
1" = 1'-0"

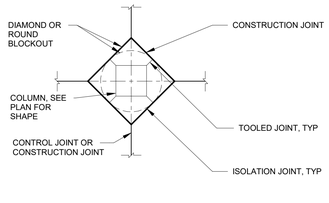

7 HSS ON (E) DRILLED PIER
1" = 1'-0"

9 TYP GRAVITY COLUMN BASE PLATE
1 1/2" = 1'-0"

10 SOG BLOCKOUT AT COLUMN
NTS

Revisions:	Date:

CONSULTANT

Calibre

Calibre Engineering, Inc.
8822 South Ridgeline Boulevard, Suite 310
Highlands Ranch, CO 80129 (303) 730-0434
www.calibre-engineering.com
CIVIL | STRUCTURAL

ARCHITECT/ENGINEER OF RECORD

SPECIALIZED ENGINEERING SOLUTIONS

7100 E BELLEVIEW AVE, STE 107
GREENWOOD VILLAGE, CO 80111
Phone: (720) 200-5955
www.specializedeng.com
SES Project : 20114.008

STAMP

LICENSED PROFESSIONAL ENGINEER
EDWARD SABIA
35268
OKLAHOMA
4/23/26

Office of Construction and Facilities Management

VA U.S. Department of Veterans Affairs

Drawing Title TYPICAL FOUNDATION DETAILS	**Phase** ADDENDUM 01	**Project Title** VA OKC - DESIGN REPAIR PARKING GARAGE	**Project Number** 635-21-139
Approved: Project Director	NON-SPRINKLERED	**Location** 921 N.E. 13TH STREET OKLAHOMA CITY, OK 73104	**Building Number**
		Issue Date 04/23/2026 / **Checked** ES / **Drawn** EM	**Drawing Number** S-302

Autodesk Docs://20114.008 - VA Oklahoma City Parking Garage/OKC PARKING GARAGE REPAIRS_STRU_R22.rvt
4/23/2026 9:25:17 AM

VA FORM 08 - 6231

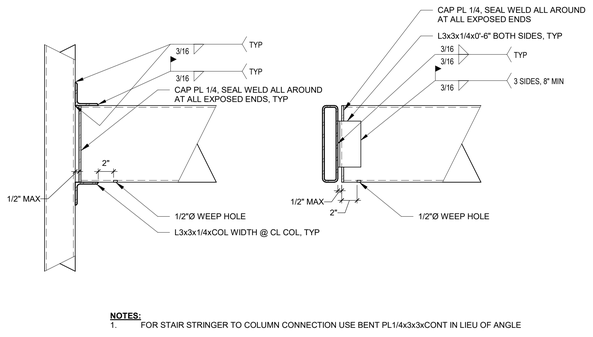

NOTES:
1. FOR STAIR STRINGER TO COLUMN CONNECTION USE BENT PL1/4x3x3xCONT IN LIEU OF ANGLE

1 TYP HSS CONNECTIONS
1 1/2" = 1'-0"

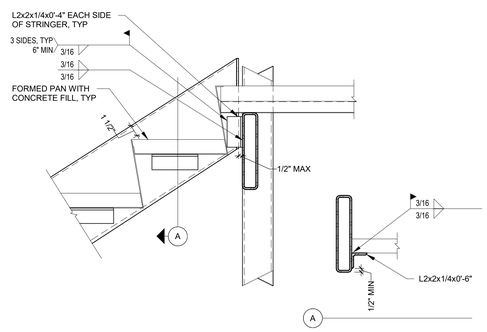

2 TYP STRINGER TO BEAM CONN
1 1/2" = 1'-0"

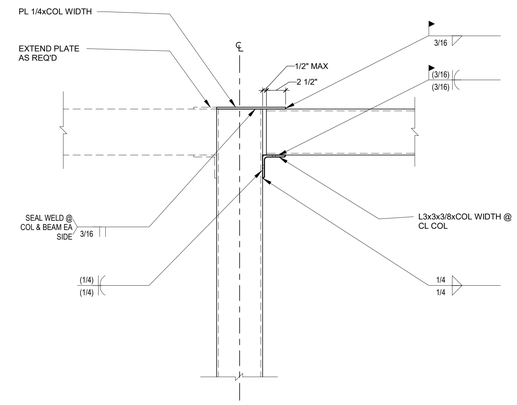

3 TYP HSS BEAM TO COL AT ROOF
1 1/2" = 1'-0"

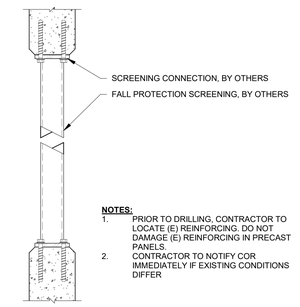

NOTES:
1. PRIOR TO DRILLING, CONTRACTOR TO LOCATE (E) REINFORCING. DO NOT DAMAGE (E) REINFORCING IN PRECAST PANELS.
2. CONTRACTOR TO NOTIFY COR IMMEDIATELY IF EXISTING CONDITIONS DIFFER

4 FALL PROTECTION SCREENING
1 1/2" = 1'-0"

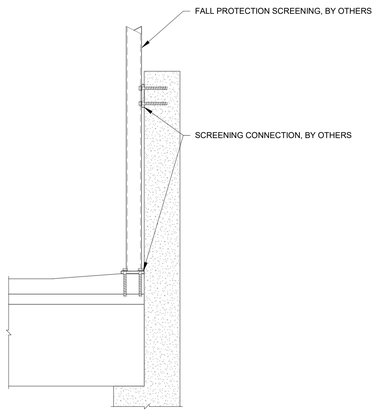

NOTES:
1. PRIOR TO DRILLING, CONTRACTOR TO LOCATE (E) REINFORCING. DO NOT DAMAGE (E) REINFORCING IN PRECAST PANELS.
2. CONTRACTOR TO NOTIFY COR IMMEDIATELY IF EXISTING CONDITIONS DIFFER

5 FALL PROTECTION AT ROOF
1" = 1'-0"

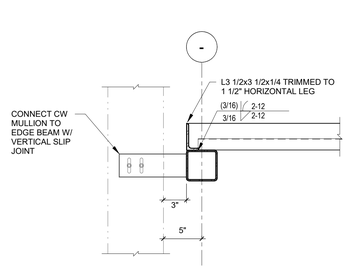

6 TYP CW TO LANDING
1 1/2" = 1'-0"

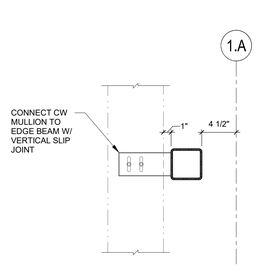

7 TYP CW TO GIRT
1 1/2" = 1'-0"

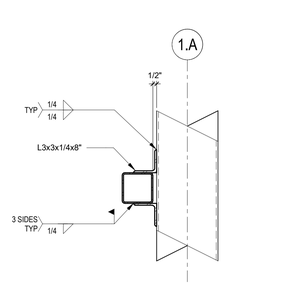

8 TYP GIRT TO COLLUMN
1 1/2" = 1'-0"

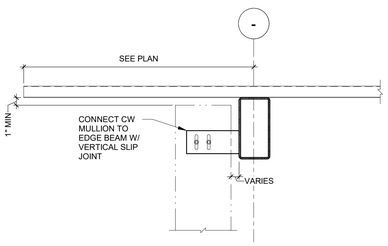

10 TYP CW TO ROOF CONN
1 1/2" = 1'-0"

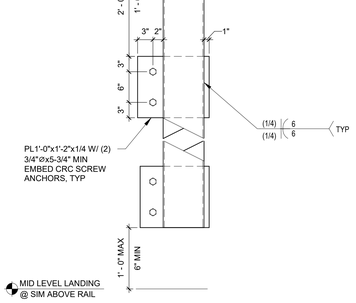

11 B/B.1 COLUMN TO (E) WALL
1" = 1'-0"

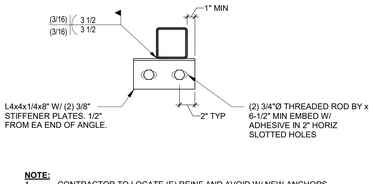

NOTE:
1. CONTRACTOR TO LOCATE (E) REINF AND AVOID W/ NEW ANCHORS

12 TYP LANDING BEAM TO (E)
1 1/2" = 1'-0"

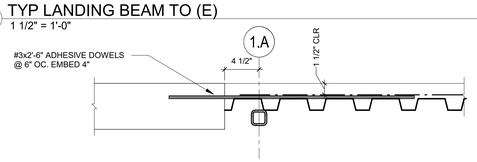

13 TYP LANDING TO (E) GARAGE
1 1/2" = 1'-0"

9 CW TO (E) CONC WALL
1" = 1'-0"

Revisions:	Date:

CONSULTANT

Calibre

Calibre Engineering, Inc.
8822 South Ridgeline Boulevard, Suite 310
Highlands Ranch, CO 80129 (303) 730-0434
www.calibre-engineering.com
CIVIL | STRUCTURAL

ARCHITECT/ENGINEER OF RECORD

SPECIALIZED ENGINEERING SOLUTIONS

7100 E BELLEVIEW AVE, STE 107
GREENWOOD VILLAGE, CO 80111
Phone: (720) 200-5955

www.specializedeng.com

SES Project : 20114.008

STAMP

LICENSED PROFESSIONAL ENGINEER
EDWARD SABIA
35268
OKLAHOMA
4/23/26

Office of Construction and Facilities Management

VA U.S. Department of Veterans Affairs

Drawing Title TYPICAL STRUCTURAL DETAILS	**Phase** ADDENDUM 01	**Project Title** VA OKC - DESIGN REPAIR PARKING GARAGE	**Project Number** 635-21-139
			Building Number
Approved: Project Director	NON-SPRINKLERED	**Location** 921 N.E. 13TH STREET OKLAHOMA CITY, OK 73104	**Drawing Number** S-501
		Issue Date 04/23/2026 / **Checked** ES / **Drawn** EM	

VA FORM 08 - 6231

Autodesk Docs://20114.008 - VA Oklahoma City Parking Garage/OKC-PARKING GARAGE REPAIRS_STRU_R22.rvt
4/23/2026 9:25:17 AM

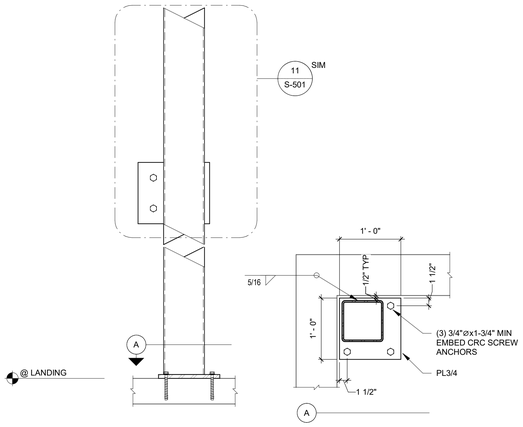

NOTE:
1. CONTRACTOR TO LOCATE (E) REINF AND AVOID W/ NEW ANCHORS

1 FLOOR MOUNT FOR (E) NE STAIR
1" = 1'-0"

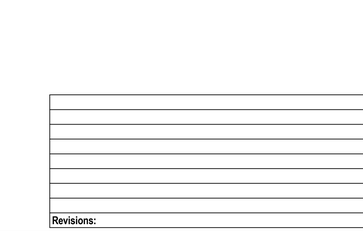

NOTES:
1. FIELD LOCATE (E) REINF AND AVOID W/ NEW ANCHORS

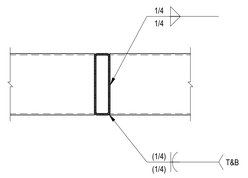

NOTE:
1. SEAL WELD ALL AROUND

2 HSS BEAM TO BEAM CONNECTION
1 1/2" = 1'-0"

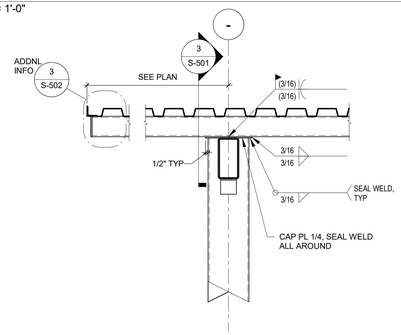

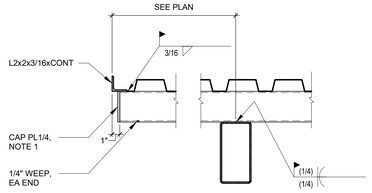

NOTE:
1. SEAL WELD ALL AROUND

3 BEAM OVERHANG
1 1/2" = 1'-0"

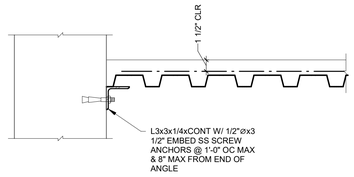

NOTE:
1. ANCHOR LOCS CAN ADJUST UP TO 6" BASED ON LOCATED REINF IN THE (E) WALL

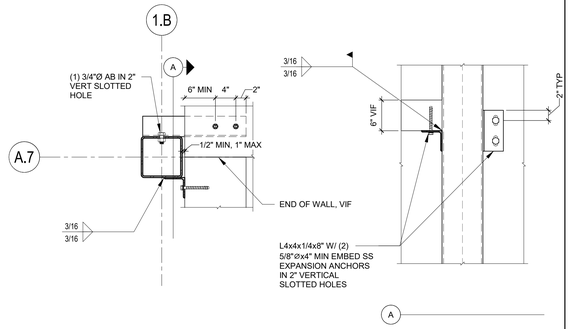

NOTE:
1. SEE 5/S-502 FOR ADDITIONAL INFORMATION
2. FIELD LOCATE (E) REINF AND AVOID W/ NEW ANCHORS
3. ISOLATE STAINLESS STEEL ANCHORS FROM HDG PLATES USING NON-CONDUCTIVE WASHERS AND SLEEVES/BUSHINGS (HDPE, PTFE, OR NEOPRENE) TO AVOID GALVANIC CONTACT. MINIMUM ISOLATOR THICKNESS 1/16". PROVIDE 1/4"+BOLT Ø OPENING IN PLATE TO MAINTAIN CLEARANCE AROUND ANCHOR.

4 HSS 4X4 COLUMN ATTACHEMENT AT (E) FLOOR
1" = 1'-0"

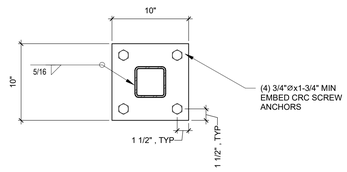

5 HSS8x8 COLUMN ATTACHMENT AT (E) FLOOR
1" = 1'-0"

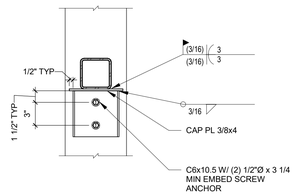

NOTES:
1. CONTRACTOR TO LOCATE (E) REINF AND AVOID W/ NEW ANCHORS
2. WELDS PER 3/S-501

6 TYP HSS BEAM OVER HSS COL
1" = 1'-0"

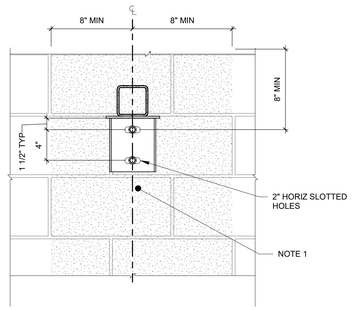

NOTES:
1. CONTRACTOR TO GROUT CELL SOLID TO BOTTOM OF WALL IF NOT ALREADY GROUTED. VIF
2. SEE 9/S-502 FOR ADDITIONAL INFORMATION

7 TYP MID LANDING TO (E) GARAGE
1 1/2" = 1'-0"

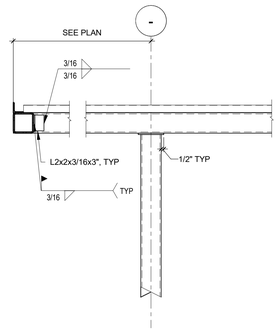

NOTE:
1. SEE 6/S-502 FOR ADDITIONAL INFORMATION

8 P15, P17 BASE PLATE CONN
1 1/2" = 1'-0"

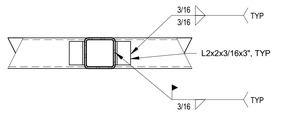

12 P15, P17 BEAM TO BEAM CONNECTION
1 1/2" = 1'-0"

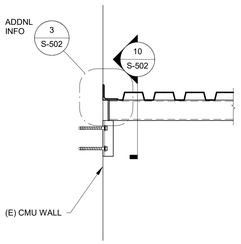

9 P15, P17 CONN TO (E) 8" PRECAST WALL
1 1/2" = 1'-0"

10 P15, P17 CONN TO (E) MASONRY
1 1/2" = 1'-0"

11 P15, P17 BEAM OVER COLUMN
1" = 1'-0"

13 ROOF EDGE AT (E) CMU WALL
1" = 1'-0"

Revisions:	Date:

CONSULTANT

Calibre

Calibre Engineering, Inc.
8822 South Ridgeline Boulevard, Suite 310
Highlands Ranch, CO 80129 (303) 730-0434
www.calibre-engineering.com
CIVIL | STRUCTURAL

ARCHITECT/ENGINEER OF RECORD

SES SPECIALIZED ENGINEERING SOLUTIONS

7100 E BELLEVIEW AVE, STE 107
GREENWOOD VILLAGE, CO 80111
Phone: (720) 200-5955
www.specializedeng.com
SES Project : 20114.008

STAMP

LICENSED PROFESSIONAL ENGINEER
EDWARD SABIA
35268
OKLAHOMA
4/23/26

Office of Construction and Facilities Management

VA U.S. Department of Veterans Affairs

Drawing Title TYPICAL STRUCTURAL DETAILS	**Phase** ADDENDUM 01
Approved: Project Director	NON-SPRINKLERED

Project Title VA OKC - DESIGN REPAIR PARKING GARAGE			**Project Number** 635-21-139
			Building Number
Location 921 N.E. 13TH STREET OKLAHOMA CITY, OK 73104			**Drawing Number** S-502
Issue Date 04/23/2026	**Checked** ES	**Drawn** EM	

Autodesk Docs://20114.008 - VA Oklahoma City Parking Garage/OKC PARKING GARAGE REPAIRS_STRU_R22.rvt
4/23/2026 9:25:18 AM

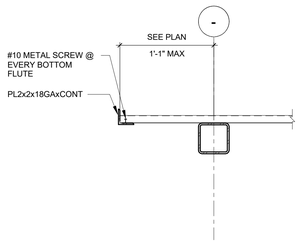

1 TYP ROOF EDGE DECK
1 1/2" = 1'-0"

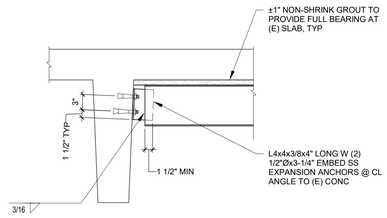

NOTE:
1. CONTRACTOR TO LOCATE (E) REINF AND AVOID W/ NEW ANCHORS

2 TYP CHANNEL BELOW DOUBLE TEES AT BASE PLATES
1" = 1'-0"

Revisions:	Date:

CONSULTANT

Calibre Engineering, Inc.
8822 South Ridgeline Boulevard, Suite 310
Highlands Ranch, CO 80129 (303) 730-0434
www.calibre-engineering.com
CIVIL | STRUCTURAL

ARCHITECT/ENGINEER OF RECORD

SPECIALIZED ENGINEERING SOLUTIONS
7100 E BELLEVIEW AVE, STE 107
GREENWOOD VILLAGE, CO 80111
Phone: (720) 200-5955
www.specializedeng.com
SES Project : 20114.008

STAMP

LICENSED PROFESSIONAL ENGINEER
EDWARD SABIA
35268
OKLAHOMA
4/23/26

Office of Construction and Facilities Management

VA U.S. Department of Veterans Affairs

Drawing Title TYPICAL STRUCTURAL DETAILS	**Phase** ADDENDUM 01	**Project Title** VA OKC - DESIGN REPAIR PARKING GARAGE		**Project Number** 635-21-139
				Building Number
Approved: Project Director	NON-SPRINKLERED	**Location** 921 N.E. 13TH STREET OKLAHOMA CITY, OK 73104		**Drawing Number** S-503
		Issue Date 04/23/2026	**Checked** ES / **Drawn** EM	

Autodesk Docs://20114.008 - VA Oklahoma City Parking Garage/OKC-PARKING GARAGE REPAIRS_STRU_R22.rvt
4/23/2026 9:25:18 AM

SHORING NOTES:

1. EMPLOY A SPECIALTY ENGINEER TO DESIGN ALL SHORING AND BRACING NECESSARY TO COMPLETE THE REPAIR WORK. DESIGN LOADS SHALL BE IN ACCORDANCE WITH THE DESIGN-BASIS CODE REQUIREMENTS, OR IF THE AREA IS BLOCKED FROM PUBLIC ACCESS IT IS ACCEPTABLE TO USE ASCE 37-14 LOADS.
2. SHORING TOTAL SERVICE LOADS SHALL BE DETERMINED BY SHORING ENGINEER.
3. LOCATE ALL EXISTING BURIED UTILITIES/DRAIN PIPING AND NOTIFY ENGINEER IF LOCATIONS CONFLICT WITH PROPOSED SHORING.
4. JACKING LOADS APPLIED TO THE EXISTING STRUCTURED FRAMING ABOVE THE FIRST LEVEL IS NOT PERMITTED.
5. SHORING SHALL BE PUT IN PLACE PRIOR TO PERFORMING THE REPAIRS INDICATED IN THE DRAWINGS. SHORING SHALL REMAIN IN PLACE UNTIL COMPLETION OF THE REPAIRS AND FULL CURE OF CONCRETE OR CONCRETE REPAIR MATERIALS.
6. PROVIDE APPROPRIATE ANCHORAGE AT THE TOP AND BOTTOM OF SHORING ELEMENTS TO PREVENT OVERTURNING OR TIPPING OVER OF SHORE POSTS OR TOWERS.
7. SHORED AREAS SHALL BE COMPLETELY BARRICADED TO PROTECT SHORE POSTS FROM VEHICULAR TRAFFIC OR PEDESTRIANS.
8. USE COMMERCIALLY MANUFACTURED AND PRE-ENGINEERED SHORING AND BRACING SYSTEMS AND COMPONENTS WHENEVER POSSIBLE.
   A. COMMERCIALLY AVAILABLE REUSABLE SHORING EQUIPMENT SHALL INCLUDE A MINIMUM SAFETY FACTOR OF 2.5:1.
   B. DO NOT INSTALL STEEL SHORING PRODUCTS WITH EXCESSIVE CORROSION, BENT OR BROKEN FLANGES OR WEBS, DENTED TUBE WALLS, OR OTHER DETERIORATION WHICH MAY AFFECT MEMBER CAPACITY.
9. DESIGN MEMBERS OF SHORING SYSTEMS THAT ARE NOT PRE-ENGINEERED IN ACCORDANCE WITH THE DESIGN-BASIS CODE.
10. SUBMIT SHORING LAYOUT SHOP DRAWINGS DEPICTING THE ARRANGEMENT OF EQUIPMENT FOR SHORING, INCLUSIVE OF INSTALLATION DETAILS, TIGHTENING PROCEDURE, AND MAINTENANCE REQUIREMENTS SEALED BY THE DEFERRED DESIGNER.
11. SUBMIT DEFERRED SUBMITTAL STRUCTURAL CALCULATIONS SEALED BY THE DEFERRED DESIGNER.
12. INSTALL SHORING AND BRACING IN ACCORDANCE WITH SEQUENCING DOCUMENTATION.
13. THE SPECIALTY ENGINEER WHO DESIGNED THE SHORING SHALL INSPECT THE INSTALLATION AND CERTIFY THAT THE SHORING AND BRACING, AS INSTALLED, MEETS THE INTENT OF THEIR DESIGN.
14. UNLESS OTHERWISE SPECIFIED, REMOVE SHORING AND BRACING ONLY AFTER ALL CONCRETE REPAIRS ACHIEVE SPECIFIED STRENGTH 4,000PSI MINIMUM. ENGINEER REVIEWS AND ACCEPTS TEST RESULTS, AND AFTER COMPLETION OF ALL APPLICABLE STRESSING OPERATIONS.

1 SHORING NOTES
12" = 1'-0"

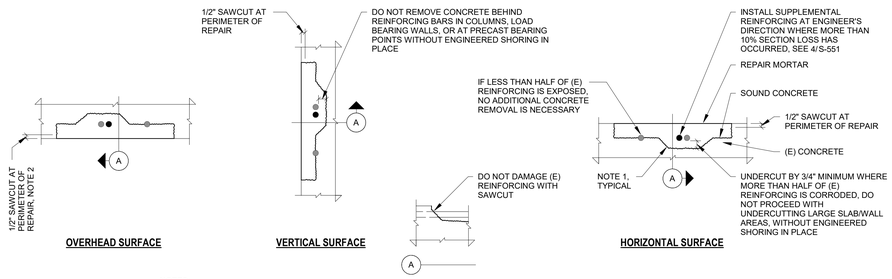

NOTES:
1. ROUGHEN SURFACE TO MEET THE REQUIREMENTS OF ICRI CSP-9.
2. SEE CONCRETE REPAIR NOTES FOR ADDITIONAL REQUIREMENTS. CLEAN RUST OFF REINFORCING PER SPEC 030130
3. VERIFY WITH GPR THAT OVERHEAD REINFORCING WILL NOT BE DAMAGED WITH 1/2" SAW CUT, DO NOT DAMAGE EXISTING REINFORCING.
4. GRADUALLY BUILD UP REPAIR AREA TO PROVIDE MINIMUM CONCRETE COVER OVER REINFORCING BARS AND/OR COUPLERS PER COVER TABLE.

2 PARTIAL DEPTH CONCRETE REPAIR
1 1/2" = 1'-0"

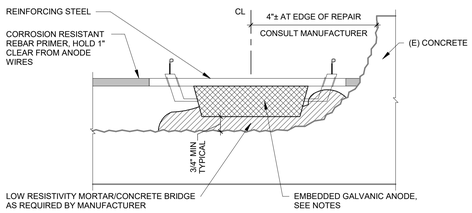

NOTES:
1. INSTALL ANODES WITH TYPE AND SPACING DETERMINED BY MANUFACTURER OR CONTRACTORS ENGINEER. SUBMIT DESIGN OF GALVANIC ANODE TYPE, SIZE AND SPACING PER EACH TYPE OF ELEMENT BEING REPAIRED BASED ON DENSITY OF REINFORCING STEEL PRESENT AS FUNCTION OF CONCRETE AREA BEING PROTECTED AND ANODE TYPE.
2. STEEL WIRE TIE ALL CROSSING REINFORCING FOR ELECTRICAL CONTINUITY PER MANUFACTURER.
3. INSTALL ANODES IN EVERY REPAIR AREA EXCEEDING 4 SF.
4. USE NON-POLYMER MODIFIED GALVANIC ANODE COMPATIBLE REPAIR MORTARS FOR CONCRETE REPAIRS WHERE GALVANIC ANODES WILL BE USED.
5. PRIOR TO PLACING CONCRETE, CONFIRM ELECTRICAL CONNECTION BETWEEN ANODE TIE WIRE AND REINFORCING STEEL BY MEASURING DC RESISTANCE (OHM) WITH A MULTI-METER. CONNECTION IS ACCEPTABLE IF DC RESISTANCE IS LESS THAN 1 OHM OR AS SPECIFIED BY MANUFACTURER.
6. PRIOR TO PLACING CONCRETE, CONFIRM ELECTRICAL CONTINUITY OF EXPOSED REINFORCING STEEL WITHIN REPAIR AREA USING A MULTI-METER ON THE MV SCALE. ELECTRICAL CONTINUITY IS ACCEPTABLE IF MV DIFFERENCE BETWEEN REINFORCING BARS IS EQUAL TO OR LESS THAN 1 MV OR AS SPECIFIED BY MANUFACTURER. IF NECESSARY, ELECTRICAL CONTINUITY SHALL BE ESTABLISHED BY WRAPPING TIGHTLY WITH STEEL TIE WIRE.

5 GALVANIC ANODE INSTALLATION
1 1/2" = 1'-0"

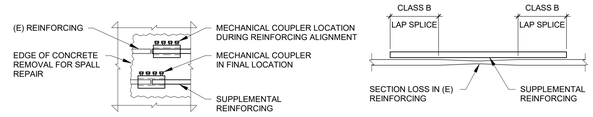

TYPICAL MECHANICAL COUPLER SPLICE

TYPICAL LAP SPLICE AT DAMAGED REINFORCING

NOTES:
1. INSTALL SUPPLEMENTAL BARS WHERE EXISTING STEEL HAS LOST MORE THAN 10% OF CROSS SECTIONAL AREA.
2. AT CONTRACTOR'S OPTION IN LIEU OF PROVIDING CLASS B LAP SPLICE, INSTALL MECHANICAL COUPLERS. SUBMIT PRODUCT DATA SHEET FOR ENGINEER'S REVIEW.
3. MECHANICAL SPLICE COUPLERS SHALL CONFORM TO ACI 318 TYPE 2 IN TENSION AND COMPRESSION. MECHANICAL SPLICE COUPLERS SHALL COMPLY WITH ICC-ES ACCEPTANCE CRITERIA ACI 133. SEE SPECIFICATION 033053 FOR ADDITIONAL REQUIREMENTS.

4 SUPPLEMENTAL REINFORCING STEEL
6" = 1'-0"

Revisions:	Date:

CONSULTANT

Calibre

Calibre Engineering, Inc.
8822 South Ridgeline Boulevard, Suite 310
Highlands Ranch, CO 80129 (303) 730-0434
www.calibre-engineering.com
CIVIL | STRUCTURAL

ARCHITECT/ENGINEER OF RECORD

SES SPECIALIZED ENGINEERING SOLUTIONS

7100 E BELLEVIEW AVE, STE 107
GREENWOOD VILLAGE, CO 80111
Phone: (720) 200-5955

www.specializedeng.com

SES Project : 20114.008

STAMP

LICENSED PROFESSIONAL ENGINEER
EDWARD SABIA
35268
OKLAHOMA
4/23/26

Office of Construction and Facilities Management

VA U.S. Department of Veterans Affairs

Drawing Title: SHORING AND STRUCTURAL REPAIR DETAILS

Phase: ADDENDUM 01

Project Title: VA OKC - DESIGN REPAIR PARKING GARAGE

Project Number: 635-21-139

Building Number:

Approved: Project Director:

NON-SPRINKLERED

Location: 921 N.E. 13TH STREET OKLAHOMA CITY, OK 73104

Issue Date: 04/23/2026 | **Checked:** ES | **Drawn:** EM

Drawing Number: S-551

VA FORM 08 - 6231

Autodesk Docs://20114.008 - VA Oklahoma City Parking Garage/OKC PARKING GARAGE REPAIRS_STRU_R22.rvt
4/23/2026 9:25:18 AM

ELECTRICAL FIXTURE SYMBOL LEGEND

PLAN SYMBOL	NAME	DESCRIPTION
LPR.NAV ②	JUNCTION BOX - CEILING	GENERAL: PROVIDE JUNCTION BOX AS DESCRIBED IN THESE GENERAL NOTES AND NOTES BELOW FOR EACH JUNCTION BOX TYPE. REFER TO PLANS FOR JUNCTION BOX DESIGNATION. PROVIDE ONE (1) 4" SQUARE, 2-1/8" DEEP, JUNCTION BOX WITH BLANK COVER/PLATE AND WITH ONE (1) 1" CONDUIT FROM LOCATION INDICATED TO GARAGE CEILING. ROUTE TIGHT TO STRUCTURE. WHERE SHOWN AS PART OF BRANCH CIRCUIT, PROVIDE CONDUCTORS WITHIN CONDUIT TO SOURCE INDICATED ON FLOOR PLANS. PROVIDE ALL COMPONENTS REQUIRED FOR A COMPLETE SYSTEM, INCLUDING BUT NOT LIMITED TO INSTALLATION, CONFIGURATION, USER INTERFACES, DEVICES, AND CABLING. DEVICES AND COMPONENTS ARE SHOWN TO PROVIDE LPR SYSTEM DESIGNER WITH THE INTENT AND EXTENT OF SPECIFIED PARKING LOT COUNTER SYSTEM DESIGN. LPR VENDER IS RESPONSIBLE FOR CALCULATING AND PROVIDING FINAL QUANTITY, LOCATION, AND ORIENTATION OF CAMERAS REQUIRED TO ACHIEVE FULL COVERAGE AND FUNCTION OF A COMPLETE LICENSE PLATE READER PARKING SPACE COUNTER SYSTEM. FINAL LPR SYSTEM PARKING LOT COUNTER DESIGN AND LAYOUT SHALL BE PROVIDED BY LPR VENDOR. SUBMIT SHOP DRAWINGS AND PRODUCT DATA FOR APPROVAL. COORDINATE EXACT MOUNTING LOCATION WITH OWNER PRIOR TO INSTALLATION. TYPE 'LPR.NAV', RGB MATRIX PARKING SPACE INDICATOR SIGN: PROVIDE LED-RGB, 24-BIT COLOR MATRIX, OUTDOOR RATED MESSAGE AND GRAPHIC BOARD. IGN SHALL DISPLAY PARKING SPACE AVAILABILITY ON EACH LEVEL. DISPLAY SHALL UPDATE AUTOMATICALLY IN REAL TIME AS SPACE COUNT CHANGES ON EACH LEVEL. PROVIDE BRANCH CIRCUIT TO SIGN AS INDICATED. COORDINATE ROUGH-IN AND ELECTRICAL CONNECTION WITH FINAL LPR SYSTEM DESIGNER PLANS. LPR SYSTEM VENDOR, COR, ARCHITECT, AND ENGINEER. PROVIDE ONE (1) 1" CONDUIT FOR COMMUNICATIONS CONNECTION. PROVIDE ONE (1) NETWORK DATA CABLE FROM LPR SYSTEM HEAD END.
LPR.LCD ②	JUNCTION BOX - FLOOR	GENERAL: PROVIDE JUNCTION BOX AS DESCRIBED IN THESE GENERAL NOTES AND NOTES BELOW FOR EACH JUNCTION BOX TYPE. REFER TO PLANS FOR JUNCTION BOX DESIGNATION. PROVIDE ONE (1) 4" SQUARE, 2-1/8" DEEP, WET RATED JUNCTION BOX WITH BLANK COVER/PLATE AND WITH ONE (1) 1" CONDUIT FROM LOCATION INDICATED TO GARAGE CEILING. ROUTE TIGHT TO STRUCTURE AND AVOID WALKING PATHS. WHERE SHOWN AS PART OF BRANCH CIRCUIT, PROVIDE CONDUCTORS WITHIN CONDUIT TO SOURCE INDICATED ON FLOOR PLANS. PROVIDE ALL COMPONENTS REQUIRED FOR A COMPLETE SYSTEM, INCLUDING BUT NOT LIMITED TO INSTALLATION, CONFIGURATION, USER INTERFACES, DEVICES, AND CABLING. DEVICES AND COMPONANTS ARE SHOWN TO PROVIDE LPR SYSTEM DESIGNER WITH THE INTENT AND EXTENT OF SPECIFIED PARKING LOT COUNTER SYSTEM DESIGN. LPR VENDER IS RESPONSIBLE FOR CALCULATING AND PROVIDING FINAL QUANTITY, LOCATION, AND ORIENTATION OF CAMERAS REQUIRED TO ACHIEVE FULL COVERAGE AND FUNCTION OF A COMPLETE LICENSE PLATE READER PARKING SPACE COUNTER SYSTEM. FINAL LPR SYSTEM PARKING LOT COUNTER DESIGN AND LAYOUT SHALL BE PROVIDED BY LPR VENDOR. SUBMIT SHOP DRAWINGS AND PRODUCT DATA FOR APPROVAL. COORDINATE EXACT MOUNTING LOCATION WITH OWNER PRIOR TO INSTALLATION. TYPE 'LPR.LCD', LCD PARKING SPACE INFO BOARD: PROVIDE LICENSE PLATE READER SYSTEM 49" OUTDOOR WEATHER RATED, COMMERCIAL-GRADE, LCD-COLOR PARKING SPACE INDICATOR DISPLAY. SIGN SHALL DISPLAY PARKING SPACE AVAILABILITY ON EACH LEVEL. DISPLAY SHALL UPDATE AUTOMATICALLY IN REAL TIME AS SPACE COUNT CHANGES ON EACH LEVEL. PROVIDE BRANCH CIRCUIT TO SCREEN AS INDICATED. COORDINATE ROUGH-IN AND ELECTRICAL CONNECTION WITH FINAL LPR SYSTEM DESIGNER PLANS, LPR SYSTEM VENDOR, COR, ARCHITECT, AND ENGINEER. PROVIDE ONE (1) 1" CONDUIT FOR COMMUNICATIONS CONNECTION. PROVIDE ONE (1) NETWORK DATA CABLE FROM LPR SYSTEM HEAD END.

ELECTRICAL MISC SYMBOL LEGEND

PLAN SYMBOL	NAME	DESCRIPTION
XXX	LIGHTING CONTROL TAG	REFER TO LIGHTING CONTROL SCHEDULE FOR ADDITIONAL INFORMATION.

ELECTRICAL EQUIPMENT SYMBOL LEGEND

PLAN SYMBOL	NAME	DESCRIPTION
	LOW VOLTAGE PANEL - SURFACE	FIBER ENCLOSURE AND FIBER SWITCH WITH POWER INJECTOR. PROVIDE WITH LOCKABLE, WEATHER RATED ENCLOSURE FOR OUTDOOR USE. MOUNT AT 8' AFF. CIRCUIT SURVEILLENCE SECURITY CAMERA EQUIPMENT TO 20A 120V BRANCH CIRCUIT INDICATED. REFER TO FLOOR PLANS FOR BRANCH CIRCUIT DESIGNATIONS. COORDINATE CONNECTION REQUIREMENTS WITH FINAL EQUIPMENT SELECTION. PROVIDE FIBER OPTIC CABLE IN CONDUIT SERVED FROM HEAD END EQUIPMENT LOCATED IN GROUND LEVEL ROOM TELE/DATA GE100 AS REQUITED FOR SYSTEM FUNCTION. PROVIDE MEANS TO CONVERT FIBER SIGNAL INTO CATEGORY 6 WITH POWER OVER ETHERNET (POE) FOR CAMERA USE.

ELECTRICAL EQUIPMENT SYMBOLS

PLAN SYMBOL	NAME
	INVERTER
	PANELBOARD - SURFACE

ELECTRICAL MISC SYMBOLS

PLAN SYMBOL	NAME
	BRANCH CIRCUIT CONCEALED IN CEILING OR WALL
	BRANCH CIRCUIT CONCEALED IN FLOOR OR BELOW GRADE
	CLEARANCE SPACE
	CONDUIT BREAK
	CONDUIT DOWN
	CONDUIT STUB-OUT
	CONDUIT UP
	HOMERUN TO PANEL G = GFCI CIRCUIT (PART) = PARTIAL CIRCUIT
	SWITCHED RECEPTACLE

ONE LINE SYMBOL

PLAN SYMBOL	NAME
	CONTINUATION
	GROUND BAR
	GROUNDING ELECTRODE
	PANEL BOARD
	SWITCHBOARD/SWITCHGEAR
	TRANSFORMER

FIRE ALARM SYMBOLS

PLAN SYMBOL	NAME
	DETECTOR - SYSTEM SMOKE - CEILING
FACP	FIRE ALARM CONTROL PANEL - SURFACE MOUNT
F W	HORN AND STROBE COMBINATION - WALL
F	MANUAL PULL STATION

SECURITY SYMBOL LEGEND

PLAN SYMBOL	NAME	DESCRIPTION
EP	EMERGENCY PHONE - POLE	PROVIDE CODE BLUE CORPORATION MODEL CB1-S EMERGENCY PHONE POLE (OR PRIOR APPROVED EQUIVALENT) AT APPROXIMATE LOCATION INDICATED. COORDINATE PHONE OPTIONS WITH NETWORK CONFIGURATION AND SELECTED OPTIONS. EMERGENCY PHONE SHALL DIAL VA POLICE DIRECTLY. COORDINATE EXACT LOCATION WITH OWNER PRIOR TO INSTALLATION. PROVIDE CONCRETE BASE PER EMERGENCY PHONE POLE BASE DETAIL. ORIENT POLE WITH PHONE FACING ASSOCIATED WALKWAY. INSTALL CONCRETE BASE ADJACENT TO ASSOCIATED WALKWAY. PROVIDE WITH BLUE FINISH AND "EMERGENCY" GRAPHICS TEXT IN REFLECTIVE WHITE FINISH. PROVIDE ONE (1) 20A 120V BRANCH CIRCUIT. REFER TO FLOOR PLANS FOR BRANCH CIRCUIT DESIGNATION. PROVIDE ONE (1) SHIELDED CATEGORY 6A NETWORK VOIP CABLE INSTALLED WITHIN ONE (1) 1" CONDUIT FOR PHONE CONNECTION. COORDINATE ROUTING OF CONDUITS WITH OTHER TRADES. SUBMIT SHOP DRAWINGS FOR APPROVAL.
LPR Ⓒ	LPR CAMERA - CEILING	GENERAL: DEVICE SHALL INDICATE SPACE OCCUPANCY STATUS USING MULTIPLE COLOR ILLUMINATED INDICATOR. CAMERAS SHALL FUNCTION AS PART OF COMPLETE LICENSE PLATE READER (LPR) PARKING LOT COUNTER SYSTEM. CAMERAS SHALL BE INTERCONNECTED TO LPR SYSTEM HEAD END AND SHALL TRANSMIT PARKING SPACE OCCUPANCY DATA FOR EACH PARKING SPACE, SHOWING AVAILABLE PARKING SPACES PER LEVEL TO ALL LCD PARKING SPACE INFO BOARD AND RGB MATRIX PARKING SPACE INDICATOR SIGNS IN REAL TIME. EACH CAMERA SHALL UTILIZE HD VIDEO TO IDENTIFY LICENSE PLATE NUMBERS PER SPECIFICATION SECTION 28 23 19. EACH CAMERA SHALL INDICATE OCCUPANCY/VACANCY WITH BUILT-IN LED RGB-COLOR INDICATING DOME LIGHT. PROVIDE ONE-CAMERA OR TWO-CAMERA MODEL AS REQUIRED TO PROVIDE COVERAGE OF ALL PARKING SPACES. EACH SENSOR/CAMERA SHALL HOUSE AN INDEPENDANT PROCESSING UNIT FOR VEHICLE DETECTION AND MEMORY FOR DATA STORAGE TO ALLOW FOR CONTINUED OCCUPANCY/VACENCY DETECTION, COLOR INDICATION, AND PARKING DATA STORAGE DURING NETWORK OR SERVER INTERRUPTION. SENSOR/CAMERAS SHALL BE SUITABLE FOR EXTERIOR USE. PROVIDE ALL COMPONENTS REQUIRED FOR A COMPLETE SYSTEM PER SPECIFICATION SECTION 28231919 INCLUDING BUT NOT LIMITED TO DEVICE, CABLING, INSTALLATION, CONFIGURATION, HEAD-END EQUIPMENT, NETWORKING DEVICES, LICENSING. COORDINATE ROUGH-IN REQUIREMENTS, MOUNTING HARDWARE, PENDANT MOUNTS, PROTECTIVE DOMES, AND OTHER REQUIRED ACCESSORIES FOR EXTERIOR CAMERA LOCATIONS WITH SELECTED MANUFACTURER. DEVICES AND COMPONANTS ARE SHOWN TO PROVIDE LPR SYSTEM DESIGNER WITH THE INTENT AND EXTENT OF SPECIFIED PARKING LOT COUNTER SYSTEM DESIGN. LPR VENDER IS RESPONSIBLE FOR CALCULATING AND PROVIDING FINAL QUANTITY, LOCATION, AND ORIENTATION OF CAMERAS REQUIRED TO ACHIEVE FULL COVERAGE AND FUNCTION OF A COMPLETE LICENSE PLATE READER PARKING SPACE COUNTER SYSTEM. FINAL LPR SYSTEM PARKING LOT COUNTER DESIGN AND LAYOUT SHALL BE PROVIDED BY LPR VENDOR. SUBMIT SHOP DRAWINGS AND PRODUCT DATA FOR APPROVAL. COORDINATE EXACT MOUNTING LOCATION WITH OWNER PRIOR TO INSTALLATION.
LPR-COMP TV	LPR HEAD END COMPUTER	GENERAL: PROVIDE LICENSE PLATE READER (LPR) SYSTEM PARKING LOT COUNTER HEAD END COMPUTER. COMPUTER SHALL BE CAPABLE OF VIEWING AND INTERACTING WITH LICENSE PLATE READER (LPR) CAMERA FEEDS AND MONITORING REAL-TIME GARAGE PARKING SPACE OCCUPANCY. SYSTEM HEAD END SHALL BE CAPABLE OF EXPANSION. HEAD END SHALL INCLUDE AUTOMATED PARKING GUIDANCE SYSTEM TO DIRECT DRIVER TO AVAILABLE PARKING SPACES VIA LCD SCREENS, RGB MATRIX NAV DISPLAYS, AND INDIVIDUAL PARKING SPACE CAMERA INDICATOR LIGHTS. PROVIDE FIBER CABLE FROM ASSOCIATED COMMUNICATIONS ROOM HOUSING SECURITY HEADEND EQUIPMENT, GROUND LEVEL ROOM TELE/DATA GE100, APPROXIMATELY 300' WEST AND SOUTH OF THIS GUARD SHACK. LPR SYSTEM FIBER CABLING SHALL BE ROUTED WITHIN CONDUIT IN UNFINISHED AND PARKING AREAS, AND IN CABLE TRAY WHERE ABOVE INTERIOR ACCESSIBLE CEILINGS AND WITHIN CONDUIT WHERE ABOVE INTERIOR INACCESSIBLE CEILINGS. PROVIDE ROUGH-IN AND CABLING FOR ALL LPR SYSTEM NETWORK DATA CABLES, JACKS, INSERTS, AND FACEPLATES AS REQUIRED FOR A COMPLETE SYSTEM. PROVIDE ALL COMPONENTS REQUIRED FOR A COMPLETE SYSTEM, INCLUDING BUT NOT LIMITED TO INSTALLATION, CONFIGURATION, USER INTERFACES, DEVICES, AND CABLING. DEVICES AND COMPONANTS ARE SHOWN TO PROVIDE LPR SYSTEM DESIGNER WITH THE INTENT AND EXTENT OF SPECIFIED PARKING LOT COUNTER SYSTEM DESIGN. LPR VENDER IS RESPONSIBLE FOR CALCULATING AND PROVIDING FINAL QUANTITY, LOCATION, AND ORIENTATION OF CAMERAS REQUIRED TO ACHIEVE FULL COVERAGE AND FUNCTION OF A COMPLETE LICENSE PLATE READER PARKING SPACE COUNTER SYSTEM. FINAL LPR SYSTEM PARKING LOT COUNTER DESIGN AND LAYOUT SHALL BE PROVIDED BY LPR VENDOR. SUBMIT SHOP DRAWINGS AND PRODUCT DATA FOR APPROVAL. COORDINATE EXACT MOUNTING LOCATION WITH OWNER PRIOR TO INSTALLATION.
Ⓒ	SECURITY SURVEILLANCE CAMERA - CEILING	GENERAL: CAMERAS SHALL FUNCTION AS PART OF AN EXISTING VA POLICE SURVEILLANCE SECURITY CAMERA SYSTEM. PROVIDE POWER OVER ETHERNET (POE) SECURITY SURVEILLANCE CAMERA AS DESCRIBED IN THESE GENERAL NOTES AND NOTES BELOW FOR EACH CAMERA TYPE AT LOCATIONS INDICATED. REFER TO FLOOR PLANS FOR CAMERA DESIGNATION. LOCATIONS ON PLAN ARE APPROXIMATE. SECURITY CAMERA VENDER IS RESPONSIBLE FOR CALCULATING AND PROVIDING FINAL QUANTITY, LOCATION, AND ORIENTATION OF CAMERAS REQUIRED TO ACHIEVE THE FUNCTION OF A COMPLETE SURVEILLANCE SECURITY CAMERA SYSTEM. SECURITY SURVEILLANCE COMPONENTS SHALL BE RATED FOR CONTINUOUS OPERATION IN THEIR INSTALLED PROJECT CONDITIONS AS REQUIRED IN SPECIFICATION SECTION 282300. PROVIDE ALL COMPONENTS REQUIRED FOR A COMPLETE SYSTEM PER SPECIFICATION SECTION 282300 INCLUDING BUT NOT LIMITED TO DEVICE, CABLING, INSTALLATION, CONFIGURATION, HEAD-END EQUIPMENT, NETWORKING DEVICES, LICENSING. COORDINATE ROUGH-IN REQUIREMENTS, MOUNTING HARDWARE, PENDANT MOUNTS, PROTECTIVE DOMES, AND OTHER REQUIRED ACCESSORIES FOR EXTERIOR CAMERA LOCATIONS WITH SELECTED MANUFACTURER. COORDINATE EXACT MOUNTING LOCATION WITH OWNER PRIOR TO INSTALLATION. SUBMIT SHOP DRAWINGS FOR APPROVAL. PROVIDE ONE (1) CATEGORY 6 (POE) NETWORK DATA CABLE FROM ASSOCIATED COMMUNICATIONS DISTRIBUTION FIBER BOX TO APPROXIMATE LOCATION INDICATED ON FLOOR PLANS. TERMINATE CABLE WITH RJ45 CONNECTOR. PROVIDE 4" SQUARE BACK BOX WITH SINGLE GANG TRIM RING. PROVIDE WITH 10' OF CABLE SLACK AT LOCATION INDICATED. PROVIDE SURFACE MOUNTED CONDUIT AND BACK BOX IN UNFINISHED AREAS. PROVIDE 20A 120V BRANCH CIRCUIT TO CAMERA LOCATIONS AS REQUIRED BY SELECTED MANUFACTURER FOR HEATED ENCLOSURES, PAN-TILT-ZOOM FUNCTIONS, AND ACCESSORIES. COORDINATE CABLING, POWER, AND ROUGH-IN REQUIREMENTS WITH SELECTED MANUFACTURER FOR CAMERA LOCATIONS WITH NETWORK DATA CABLE LENGTHS EXCEEDING 100 METERS. PROVIDE 24-STRAND SINGLEMODE FIBER OPTIC CABLE PER SPECIFICATION FROM FIBER ENCLOSURE TO VA POLICE MONITORING ROOM 1A113c. PROVIDE CONDUIT ROUTING AS DESCRIBED ON PLANS FROM DEVICES TO FIBER ENCLOSURES (CAT6) AND FROM FIBER ENCLOSURES TO VA POLICE MONITORING ROOM 1A113c (FIBER). ROOM 1A113 IS LOCATED APPROXIMATELY 250' WEST INTO THE HOSPITAL ON LEVEL 1 (ABOVE). CABLE SHALL BE ROUTED WITHIN CONDUIT WHERE ABOVE ACCESSIBLE CEILINGS AND IN UNFINISHED AREAS (THROUGHOUT). PROVIDE NETWORK DATA CABLES AND JACKS, FIBER CABLES AND TERMINATIONS PER SPECIFICATIONS. TYPE '360°- QUAD-LENS CAMERA: CONTRACTOR SHALL PROVIDE CAMERA TYPE AXIS Q6010-E MULTI-SENSOR CAMERAS WITH MOUNTS OR V.A. OKC APPROVED EQUIVALENT. CONTRACTOR SHALL PROVIDE EACH CAMERA WITH 'GUNSHOT DETECTION' SOUND MONITORING COVERAGE. TYPE '360 PTZ'- QUAD-LENS CAMERA + PAN TILT ZOOM CAMERA ATTACHMENT: CONTRACTOR SHALL PROVIDE CAMERA TYPE AXIS Q6100+Q6135 MULTI-SENSOR CAMERA WITH PTZ WITH STRONGPOLES AND MOUNTS OR V.A. OKC APPROVED EQUIVALENT. CONTRACTOR SHALL PROVIDE EACH CAMERA WITH 'GUNSHOT DETECTION' SOUND MONITORING COVERAGE. TYPE 'PTZ' - PAN TILT ZOOM ATTACHMENT CAMERA: CONTRACTOR SHALL PROVIDE CAMERA TYPE AXIS P3827-PVE 180 CAMERA WITH MOUNTS OR V.A. OKC APPROVED EQUIVALENT. CONTRACTOR SHALL PROVIDE EACH CAMERA WITH 'GUNSHOT DETECTION' SOUND MONITORING COVERAGE. TYPE '180' - 180 DEGREE COVERAGE: CONTRACTOR SHALL PROVIDE CAMERA TYPE AXIS P3265 2MP CAMERA WITH MOUNTS OR V.A. OKC APPROVED EQUIVALENT. CONTRACTOR SHALL PROVIDE EACH CAMERA WITH 'GUNSHOT DETECTION' SOUND MONITORING COVERAGE. TYPE 'DOME' - 2 MEGA-PIXEL CEILING MOUNTED DOME CAMERA: CONTRACTOR SHALL PROVIDE CAMERA TYPE AXIS Q6135 PTZ CAMERAS WITH STRONGPOLES AND MOUNTS OR V.A. OKC APPROVED EQUIVALENT. CONTRACTOR SHALL PROVIDE EACH CAMERA WITH 'GUNSHOT DETECTION' SOUND MONITORING COVERAGE.
	SECURITY SURVEILLANCE CAMERA - WALL	GENERAL: CAMERAS SHALL FUNCTION AS PART OF AN EXISTING VA POLICE SURVEILLANCE SECURITY CAMERA SYSTEM. PROVIDE POWER OVER ETHERNET (POE) SECURITY SURVEILLANCE CAMERA AS DESCRIBED IN THESE GENERAL NOTES AND NOTES BELOW FOR EACH CAMERA TYPE AT LOCATIONS INDICATED. REFER TO FLOOR PLANS FOR CAMERA DESIGNATION. LOCATIONS ON PLAN ARE APPROXIMATE. SECURITY CAMERA VENDER IS RESPONSIBLE FOR CALCULATING AND PROVIDING FINAL QUANTITY, LOCATION, AND ORIENTATION OF CAMERAS REQUIRED TO ACHIEVE THE FUNCTION OF A COMPLETE SURVEILLANCE SECURITY CAMERA SYSTEM. SECURITY SURVEILLANCE COMPONENTS SHALL BE RATED FOR CONTINUOUS OPERATION IN THEIR INSTALLED PROJECT CONDITIONS AS REQUIRED IN SPECIFICATION SECTION 282300. PROVIDE ALL COMPONENTS REQUIRED FOR A COMPLETE SYSTEM PER SPECIFICATION SECTION 282300 INCLUDING BUT NOT LIMITED TO DEVICE, CABLING, INSTALLATION, CONFIGURATION, HEAD-END EQUIPMENT, NETWORKING DEVICES, LICENSING. COORDINATE ROUGH-IN REQUIREMENTS, MOUNTING HARDWARE, PENDANT MOUNTS, PROTECTIVE DOMES, AND OTHER REQUIRED ACCESSORIES FOR EXTERIOR CAMERA LOCATIONS WITH SELECTED MANUFACTURER. COORDINATE EXACT MOUNTING LOCATION WITH OWNER PRIOR TO INSTALLATION. SUBMIT SHOP DRAWINGS FOR APPROVAL. PROVIDE ONE (1) CATEGORY 6 (POE) NETWORK DATA CABLE FROM ASSOCIATED COMMUNICATIONS DISTRIBUTION FIBER BOX TO APPROXIMATE LOCATION INDICATED ON FLOOR PLANS. TERMINATE CABLE WITH RJ45 CONNECTOR. PROVIDE 4" SQUARE BACK BOX WITH SINGLE GANG TRIM RING. PROVIDE WITH 10' OF CABLE SLACK AT LOCATION INDICATED. PROVIDE SURFACE MOUNTED CONDUIT AND BACK BOX IN UNFINISHED AREAS. PROVIDE 20A 120V BRANCH CIRCUIT TO CAMERA LOCATIONS AS REQUIRED BY SELECTED MANUFACTURER FOR HEATED ENCLOSURES, PAN-TILT-ZOOM FUNCTIONS, AND ACCESSORIES. COORDINATE CABLING, POWER, AND ROUGH-IN REQUIREMENTS WITH SELECTED MANUFACTURER FOR CAMERA LOCATIONS WITH NETWORK DATA CABLE LENGTHS EXCEEDING 100 METERS. PROVIDE 24-STRAND SINGLEMODE FIBER OPTIC CABLE PER SPECIFICATION FROM FIBER ENCLOSURE TO VA POLICE MONITORING ROOM 1A113c. PROVIDE CONDUIT ROUTING AS DESCRIBED ON PLANS FROM DEVICES TO FIBER ENCLOSURES (CAT6) AND FROM FIBER ENCLOSURES TO VA POLICE MONITORING ROOM 1A113c (FIBER). ROOM 1A113 IS LOCATED APPROXIMATELY 250' WEST INTO THE HOSPITAL ON LEVEL 1 (ABOVE). CABLE SHALL BE ROUTED WITHIN CONDUIT WHERE ABOVE ACCESSIBLE CEILINGS AND IN UNFINISHED AREAS (THROUGHOUT). PROVIDE NETWORK DATA CABLES AND JACKS, FIBER CABLES AND TERMINATIONS PER SPECIFICATIONS. TYPE '360°- QUAD-LENS CAMERA: CONTRACTOR SHALL PROVIDE CAMERA TYPE AXIS Q6010-E MULTI-SENSOR CAMERAS WITH MOUNTS OR V.A. OKC APPROVED EQUIVALENT. CONTRACTOR SHALL PROVIDE EACH CAMERA WITH 'GUNSHOT DETECTION' SOUND MONITORING COVERAGE. TYPE '360 PTZ'- QUAD-LENS CAMERA + PAN TILT ZOOM CAMERA ATTACHMENT: CONTRACTOR SHALL PROVIDE CAMERA TYPE AXIS Q6100+Q6135 MULTI-SENSOR CAMERA WITH PTZ WITH STRONGPOLES AND MOUNTS OR V.A. OKC APPROVED EQUIVALENT. CONTRACTOR SHALL PROVIDE EACH CAMERA WITH 'GUNSHOT DETECTION' SOUND MONITORING COVERAGE. TYPE 'PTZ' - PAN TILT ZOOM ATTACHMENT CAMERA: CONTRACTOR SHALL PROVIDE CAMERA TYPE AXIS P3827-PVE 180 CAMERA WITH MOUNTS OR V.A. OKC APPROVED EQUIVALENT. CONTRACTOR SHALL PROVIDE EACH CAMERA WITH 'GUNSHOT DETECTION' SOUND MONITORING COVERAGE. TYPE '180' - 180 DEGREE COVERAGE: CONTRACTOR SHALL PROVIDE CAMERA TYPE AXIS P3265 2MP CAMERA WITH MOUNTS OR V.A. OKC APPROVED EQUIVALENT. CONTRACTOR SHALL PROVIDE EACH CAMERA WITH 'GUNSHOT DETECTION' SOUND MONITORING COVERAGE. TYPE 'DOME' - 2 MEGA-PIXEL CEILING MOUNTED DOME CAMERA: CONTRACTOR SHALL PROVIDE CAMERA TYPE AXIS Q6135 PTZ CAMERAS WITH STRONGPOLES AND MOUNTS OR V.A. OKC APPROVED EQUIVALENT. CONTRACTOR SHALL PROVIDE EACH CAMERA WITH 'GUNSHOT DETECTION' SOUND MONITORING COVERAGE.

ELECTRICAL GENERAL NOTES:

(GENERAL NOTES SHALL APPLY TO ALL SHEETS)

A. BRANCH CIRCUITS WITH A TOTAL LENGTH LONGER THAN 75' SHALL UTILIZE #10 AWG CONDUCTORS. RECEPTACLE BRANCH CIRCUITS WITH A TOTAL LENGTH LONGER THAN 150' SHALL UTILIZE #8 AWG CONDUCTORS.
B. FOR ALL CONDUIT AND OTHER ITEMS PENETRATING A FIRE RATED WALL, PROVIDE UL LISTED THROUGH PENETRATION FIRE STOPPING SYSTEM THAT IS SPECIFIC TO THE WALL CONSTRUCTION ASSEMBLY AND COMPLIANT WITH ASTM E814. INSTALL SYSTEM IN STRICT COMPLIANCE WITH THE FIRE STOPPING MANUFACTURER'S U.L. APPROVED DETAIL. WHERE EXISTING WALLS ARE BEING UPGRADED TO FIRE RATED WALLS OR THE FIRE RATING IS BEING MODIFIED, PROVIDE U.L. LISTED THROUGH PENETRATION FIRE STOPPING SYSTEM FOR ALL NEW AND EXISTING PENETRATIONS. REFER TO THE ARCHITECTURAL LIFE SAFETY PLANS FOR LOCATIONS OF FIRE RATED WALLS.
C. ANY ITEMS DAMAGED BY THE CONTRACTOR SHALL BE REPLACED BY THE CONTRACTOR, AT NO ADDITIONAL COST TO THE OWNER.
D. NEW WIRING DEVICES AND ASSOCIATED COVERPLATES SHALL MATCH EXISTING FINISH OF SIMILAR INSTALLED DEVICES.
E. PROVIDE ADDITIONAL SUPPORTS AS REQUIRED TO INDEPENDENTLY SUPPORT ALL EXISTING TO REMAIN CABLING.

ELECTRICAL ABBREVIATIONS

ABBREVIATION	DESCRIPTION
##'	MOUNTING HEIGHT TO CENTERLINE (ABOVE FINISHED FLOOR)
A	AMPERE
AF	AMPERE FRAME
AFF	ABOVE FINISHED FLOOR
AL	ALUMINUM
AT	AMPERE TRIP
C	CEILING
CB	CIRCUIT BREAKER
CCT	CORRELATED COLOR TEMPERATURE
CU	COPPER
D	DATA (WHEN APPLIED TO COMMUNICATIONS OUTLET)
D	DEMO (WHEN APPLIED TO EXISTING/DEMO ITEMS)
E	EXISTING
EO	ELECTRICALLY OPERATED
ERMS	ENERGY REDUCING MAINTENANCE SWITCH
F	FUSE
FLA	FULL LOAD AMPS
G, GFCI	GROUND FAULT CIRCUIT INTERRUPTER
GFA	GROUND FAULT ALARM
GFP	GROUND FAULT PROTECTION
HP	HORSEPOWER
KAIC	KILOAMPERE INTERRUPTING CAPACITY
KVA	KILOVOLT AMPERE
KW	KILOWATT
MAX	MAXIMUM
MCA	MINIMUM CIRCUIT AMPS
MCB	MAIN CIRCUIT BREAKER
MIN	MINIMUM
MLO	MAIN LUGS ONLY
MO	MANUALLY OPERATED
NC	NORMALLY CLOSED
NF	NON-FUSED
NIC	NOT IN CONTRACT
NO	NORMALLY OPEN
P	POLES
PART	PARTIAL
R	RELOCATE
SCCR	SHORT CIRCUIT CURRENT RATING
SPD	SURGE PROTECTIVE DEVICE
ST	SHUNT TRIP
TYP	TYPICAL
UNO	UNLESS NOTED OTHERWISE
V	VOICE
W	WALL PHONE
W	WIRE
WR	WEATHER RESISTANT
XFMR	TRANSFORMER
ZSI	ZONE SELECTIVE INTERLOCKING

REFER TO OTHER SCHEDULES AND NOTES FOR ADDITIONAL ABBREVIATIONS.

Revisions:	Date:

CONSULTANT

HFG architecture
330 N. Mead St, Suite 100
Wichita, KS 67202
Phone: 316.262.2500
www.hfgarchitecture.com

ARCHITECT/ENGINEER OF RECORD

SES Specialized Engineering Solutions
7100 E BELLEVIEW AVE, STE 107
GREENWOOD VILLAGE, CO 80111
Phone: (720) 200-5955
www.specializedeng.com
SES Project : 20114.008

STAMP

LICENSED PROFESSIONAL ENGINEER
TRACY HAUSER
34981
04/23/2026
OKLAHOMA

Office of Construction and Facilities Management

VA U.S. Department of Veterans Affairs

Drawing Title ELECTRICAL SYMBOLS AND ABBREVIATIONS	**Phase** ADDENDUM 01	**Project Title** VA OKC - DESIGN REPAIR PARKING GARAGE	**Project Number** 635-21-139
			Building Number PG
Approved:	NON-SPRINKLERED	**Location** 921 N.E. 13th St. Oklahoma City, OK	**Drawing Number** E000
		Issue Date 04/23/2026 **Checked** ZTR **Drawn** ACC	

4/23/2026 2:03:40 PM
Autodesk Docs://20114.008 - VA Oklahoma City Parking Garage/635-139_ME_R25.rvt

VA FORM 08 - 6231

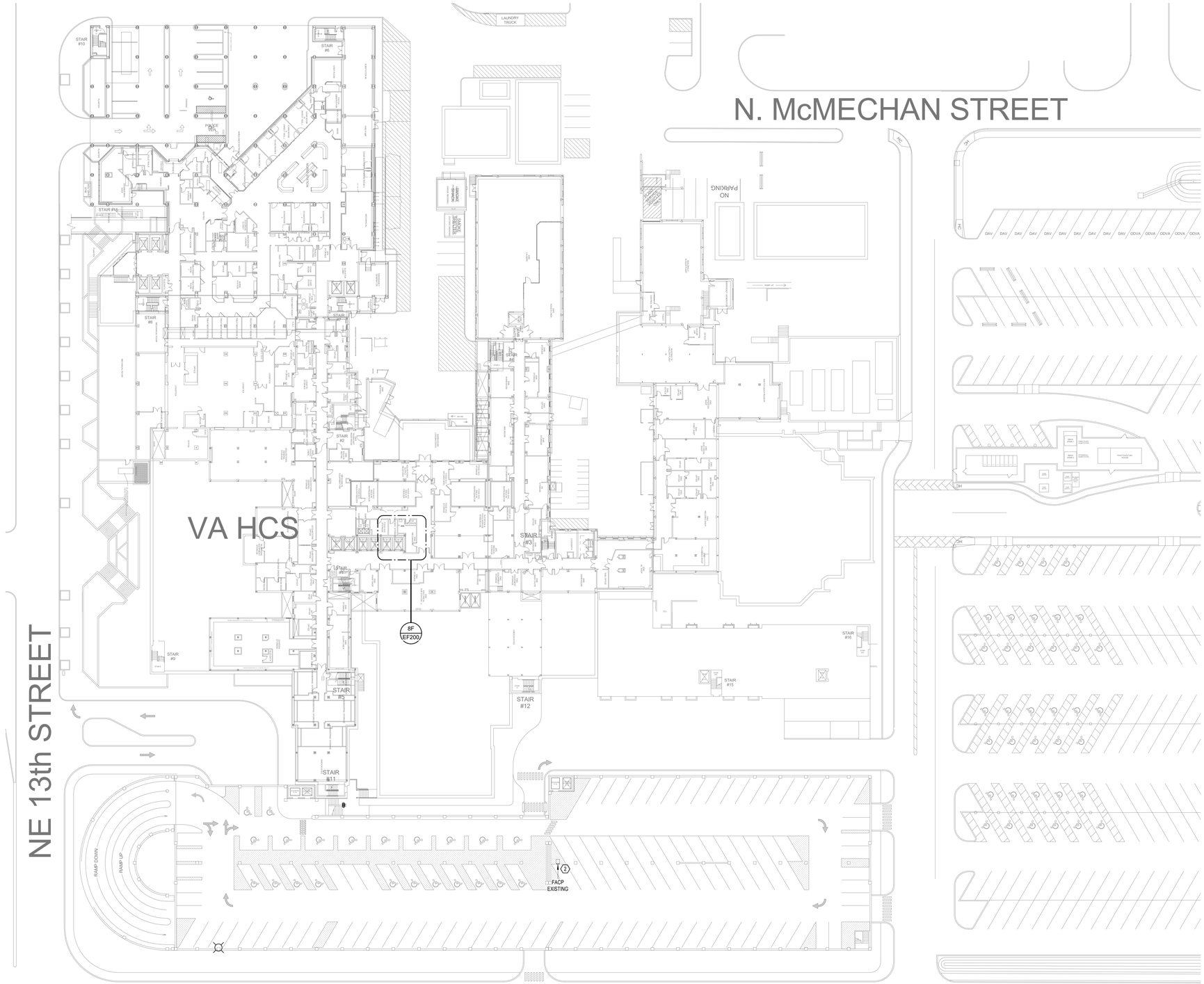

1F FLOOR PLAN - GROUND LEVEL - FIRE ALARM
1" = 30'-0"

30' 0 30' 60'

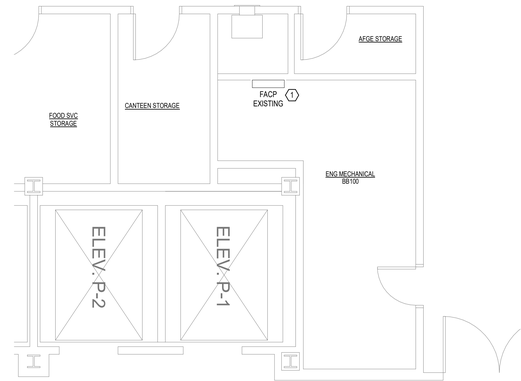

8F GROUND LEVEL - ENLARGED PLAN - FIRE ALARM
1/4" = 1'-0"

0' 2' 4' 8'
1/4" = 1'-0"

FIRE ALARM GENERAL NOTES:

1. PROVIDE ELECTRICAL COMPONENTS, DEVICES, AND ACCESSORIES THAT ARE LISTED AND LABELED AS DEFINED IN NFPA 70 BY A QUALIFIED TESTING AGENCY, AND MARKED FOR INTENDED LOCATION AND APPLICATION. OBTAIN CERTIFICATION ACCORDING TO NFPA 72 BY A UL-LISTED ALARM COMPANY.
2. PERSONNEL SHALL BE TRAINED AND CERTIFIED BY MANUFACTURER FOR INSTALLATION OF UNITS REQUIRED FOR THIS PROJECT, AND SHALL BE DIRECTLY SUPERVISED BY A NICET LEVEL III TECHNICIAN. COMPLY WITH NFPA 72 FOR INSTALLATION OF FIRE-ALARM EQUIPMENT.
3. MAINTAIN EXISTING EQUIPMENT FULLY OPERATIONAL UNTIL NEW EQUIPMENT HAS BEEN TESTED AND ACCEPTED. IF EXISTING EQUIPMENT CANNOT BE MAINTAINED IN OPERATION OR REQUIRES INTERRUPTION OF FOUR HOURS OR LONGER, PROVIDE TEMPORARY PROVISIONS OR GUARD SERVICE IN A MANNER ACCEPTABLE TO AUTHORITIES HAVING JURISDICTION. NOTIFY OWNER NO FEWER THAN SEVEN DAYS IN ADVANCE OF PROPOSED INTERRUPTIONS, AND ONLY AFTER RECEIVING WRITTEN PERMISSION FROM OWNER. LABEL INACTIVE EQUIPMENT AS "NOT IN SERVICE" UNTIL ACTIVATED OR REMOVED. AFTER ACCEPTANCE OF NEW FIRE-ALARMSYSTEM, REMOVE EXISTING DISCONNECTED FIRE-ALARM EQUIPMENT AND WIRING.
4. PERFORM FIELD TESTS, WITNESSED BY AUTHORITIES HAVING JURISDICTION. ENGAGE A FACTORY-AUTHORIZEDSERVICE REPRESENTATIVE TO INSPECT COMPONENTS, ASSEMBLIES, AND EQUIPMENT INSTALLATIONS, INCLUDING CONNECTIONS, AND TO ASSIST IN TESTING. CONDUCT VISUAL INSPECTION PRIOR TO TESTING. COMPLY WITH ALL TESTING PROCEDURES REQUIRED BY NFPA 72. TESTING SHALL INCLUDE NEW SYSTEM EQUIPMENT/FUNCTIONS AND REQUIRED EXISTING SYSTEM EQUIPMENT/FUNCTIONS. FIRE-ALARM SYSTEM WILL BE CONSIDERED DEFECTIVE IF IT DOES NOT PASS TESTS AND INSPECTIONS. ENGAGE A FACTORY-AUTHORIZEDSERVICE REPRESENTATIVE TO TRAIN OWNER'S MAINTENANCE PERSONNEL TO ADJUST, OPERATE, AND MAINTAIN FIRE-ALARM SYSTEM.
5. INSTALL CABLES IN EMT CONDUIT.
6. DELEGATED DESIGN SUBMITTAL SHALL BE PERFORMED BY A NICET CERTIFIED AND LICENSED PROFESSIONAL ENGINEER. ENGINEER SHALL VISIT THE SITE TO SURVEY AND DESIGN THE SYSTEM. SHOP DRAWINGS SHALL BE STAMPED BY A PE IN THE STATE WHERE THE PROJECT IS LOCATED. A. SHOP DRAWINGS SHALL INCLUDE DETAILED CALCULATIONS FOR THE ENTIRE SYSTEM, INCLUDING VOLTAGE DROP CALCULATIONS, DETECTOR COVERAGE, SOUND-PRESSURE LEVELS, STROBE LIGHT LEVELS, BATTERY SIZING CALCULATIONS, ETC.
7. BASIC ALARM PERFORMANCE REQUIREMENTS: UNLESS OTHERWISE INDICATED, MANUAL OPERATION OF A PULL STATION, AUTOMATIC ALARM OPERATION OF A HEAT DETECTOR. OPERATION OF B. IDENTIFICATION AT THE FACP AND IF REQUIRED THE REMOTE ANNUNCIATOR OF THE ZONE ORIGINATING THE ALARM.
8. ALARM SILENCING, SYSTEM RESET AND INDICATION: CONTROLLED BY SWITCHES IN THE FACP AND IF APPLICABLE THE REMOTE ANNUNCIATOR.
9. UPGRADE AND REPROGRAM EXISTING ANNUNCIATOR AND GRAPHIC MAPS TO REFLECT ADDITION OF THE PARKING GARAGE TO THE ENTIRE SYSTEM.
10. PROVIDE WIRING AS DIRECTION BY EXISTING FIRE ALARM SYSTEM MANUFACTURER.
11. MIN CONDUIT SIZE IS 1", OR AS REQUIRED TO MEET CODE.
12. UPDATE AND REPROGRAM EXISTING FACP SOFTWARE TO REFLECT NEW CONDITIONS AS REQUIRED.

SHEET NOTES:⬡

1. LOCATION OF EXISTING MAIN HOSPITAL FIRE ALARM CONTROL PANEL.
2. PROVIDE TIE IN CONNECTION TO THE MAIN HOSPITAL FACP TO INCORPORATE THE GARAGE FACP CONTROL PANEL INTO THE SYSTEM. PROVIDE UPDATE ANNUNCIATION PANELS AS NEEDED. PROVIDE CODE COMPLIANT PATHWAY FOR FIRE ALARM CABLES REQUIRED.

Revisions:	Date:

CONSULTANT
HFG architecture
330 N. Mead St, Suite 100
Wichita, KS 67202
Phone: 316.262.2500
www.hfgarchitecture.com

ARCHITECT/ENGINEER OF RECORD
SES SPECIALIZED ENGINEERING SOLUTIONS
7100 E BELLEVIEW AVE, STE 107
GREENWOOD VILLAGE, CO 80111
Phone: (720) 200-5955
www.specializedeng.com
SES Project : 20114.008

STAMP
LICENSED PROFESSIONAL ENGINEER — TRACY HAUSER — 34981 — 04/23/2026 — OKLAHOMA

Office of Construction and Facilities Management
VA U.S. Department of Veterans Affairs

Drawing Title: GROUND LEVEL - FLOOR PLAN - FIRE ALARM	Phase: ADDENDUM 01	Project Title: VA OKC - DESIGN REPAIR PARKING GARAGE	Project Number: 635-21-139
			Building Number: PG
Approved:	NON-SPRINKLERED	Location: 921 N.E. 13th St. Oklahoma City, OK	Drawing Number: EF200
		Issue Date: 04/23/2026 / Checked: ZTR / Drawn: ACC	

4/23/2026 2:03:41 PM
Autodesk Docs://20114.008 - VA Oklahoma City Parking Garage/635-139-ME R25.rvt

VA FORM 08 - 6231

POWER GENERAL NOTES:

(POWER GENERAL NOTES SHALL APPLY TO ALL SHEETS)

A. ELECTRICAL DEVICE MOUNTING HEIGHTS ARE NOT INDICATED ON ELECTRICAL FLOOR PLANS. CONTRACTOR SHALL COORDINATE EXACT DEVICE LOCATIONS AND MOUNTING HEIGHTS WITH ARCHITECTURAL INTERIOR ELEVATIONS. WHERE DEVICE MOUNTING HEIGHTS ARE NOT INDICATED PER ARCHITECT, MOUNT DEVICES AT HEIGHT INDICATED IN ELECTRICAL PROJECT SPECIFICATIONS.

B. CONTRACTOR SHALL COORDINATE ALL ELECTRICAL DEVICE ROUGH-IN LOCATIONS AND ELEVATIONS WITH ARCHITECTURAL DRAWINGS TO ASSURE COMPATIBILITY WITH FINISHES SPECIFIED ON THE ARCHITECTURAL DRAWINGS. ROUTE ALL ELECTRICAL BRANCH CIRCUITS AND CONDUITS SPECIFIED, TO COORDINATE WITH OTHER TRADES AND TO ALLOW FOR SERVICE AND MAINTENANCE AND TO MINIMIZE THE USE OF ACCESS PANELS. WHERE ACCESS PANELS CANNOT BE AVOIDED, ARRANGE WORK TO INSTALL PANELS IN LOCATIONS ACCEPTABLE TO ARCHITECT.

C. REFER TO DETAILS, SCHEDULES, AND SYMBOL LEGENDS FOR ADDITIONAL REQUIREMENTS.

SHEET NOTES:

1. CATEGORY 6 (POE) CABLING IN CONDUIT FOR SURVEILLANCE SECURITY CAMERAS IN THIS AREA SHALL BE SERVED FROM FIBER BOX-1 ON THIS LEVEL.
2. PROVIDE NEW SURVEILLANCE SECURITY CAMERA SYSTEM AS AN EXTENSION OF AN EXISTING SYSTEM. EXISTING HEAD END AND MONITORING EQUIPMENT IS LOCATED IN FIRST LEVEL VA POLICE MONITORING ROOM 1A113c, APPROXIMATELY 200' WEST OF THIS STAIR TOWER 11 (LEVEL ABOVE). FIBER FEEDS FROM PARKING GARAGE TO ROOM 1A113c SHALL BE IN CONDUIT THROUGHOUT ALL EXTERIOR AND INTERIOR LOCATIONS.
3. LICENSE PLATE READER (LPR) PARKING SPACE OCCUPANCY SYSTEM:
   A. LPR SYSTEM COMPONENTS SHOWN ON THIS PLAN SHALL NOT BE USED FOR TAKE OFF PURPOSES. COMPONENTS ARE SHOWN TO PROVIDE LPR SYSTEM DESIGNER WITH THE INTENT AND EXTENT OF SPECIFIED PARKING LOT COUNTER DESIGN. FINAL LPR SYSTEM PARKING LOT COUNTER DESIGN AND LAYOUT SHALL BE PROVIDED BY LPR SYSTEM DESIGNER. SUBMIT SHOP DRAWINGS FOR APPROVAL. COMPLETE LPR SYSTEM SHALL HAVE THE FOLLOWING FUNCTIONALITY:
      a. PROVIDE COUNT OF OCCUPIED AND UNOCCUPIED PARKING SPACES THROUGHOUT ENTIRE PARKING GARAGE.
      b. MONITOR VEHICLES ENTERING AND EXITING PARKING GARAGE AT ALL ENTRANCES/EXITS.
      c. RECOGNIZE AND MONITOR LICENSE PLATE INFORMATION OF VEHICLES IN THE PARKING GARAGE.
      d. ACCESS AND MONITOR CAMERA OUTPUTS AND SYSTEM INFORMATION FROM A REMOTE LOCATION.
      e. REMOTELY ACCESS USER INTERFACE VIA SECURITY MONITOR WORKSTATION IN GUARD SHACK ACCESSIBLE OVER NETWORK.
      f. REMOTELY ACCESS USER INTERFACE VIA FUTURE LOCATION SECURITY MONITOR WORKSTATION UNDER CONSTRUCTION, ACCESSIBLE OVER NETWORK.
      g. ABILITY TO RELOCATE COMPUTER HEAD END TO NOW LOCATION UNDER CONSTRUCTION. APPROXIMATELY 500' NORTH CURRENT GUARD SHACK.
   B. PROVIDE NEW LICENSE PLATE READER (LPR) CAMERA SYSTEM HEAD END DESKTOP COMPUTER EQUIPMENT IN GUARD SHACK AT LOCATION INDICATED. CONFIRM FINAL LOCATION OF COMPUTER WITH OWNER PRIOR TO ROUGH-IN. PROVIDE ALL EQUIPMENT, COMPONENTS, AND SOFTWARE REQUIRED FOR A COMPLETE SYSTEM.

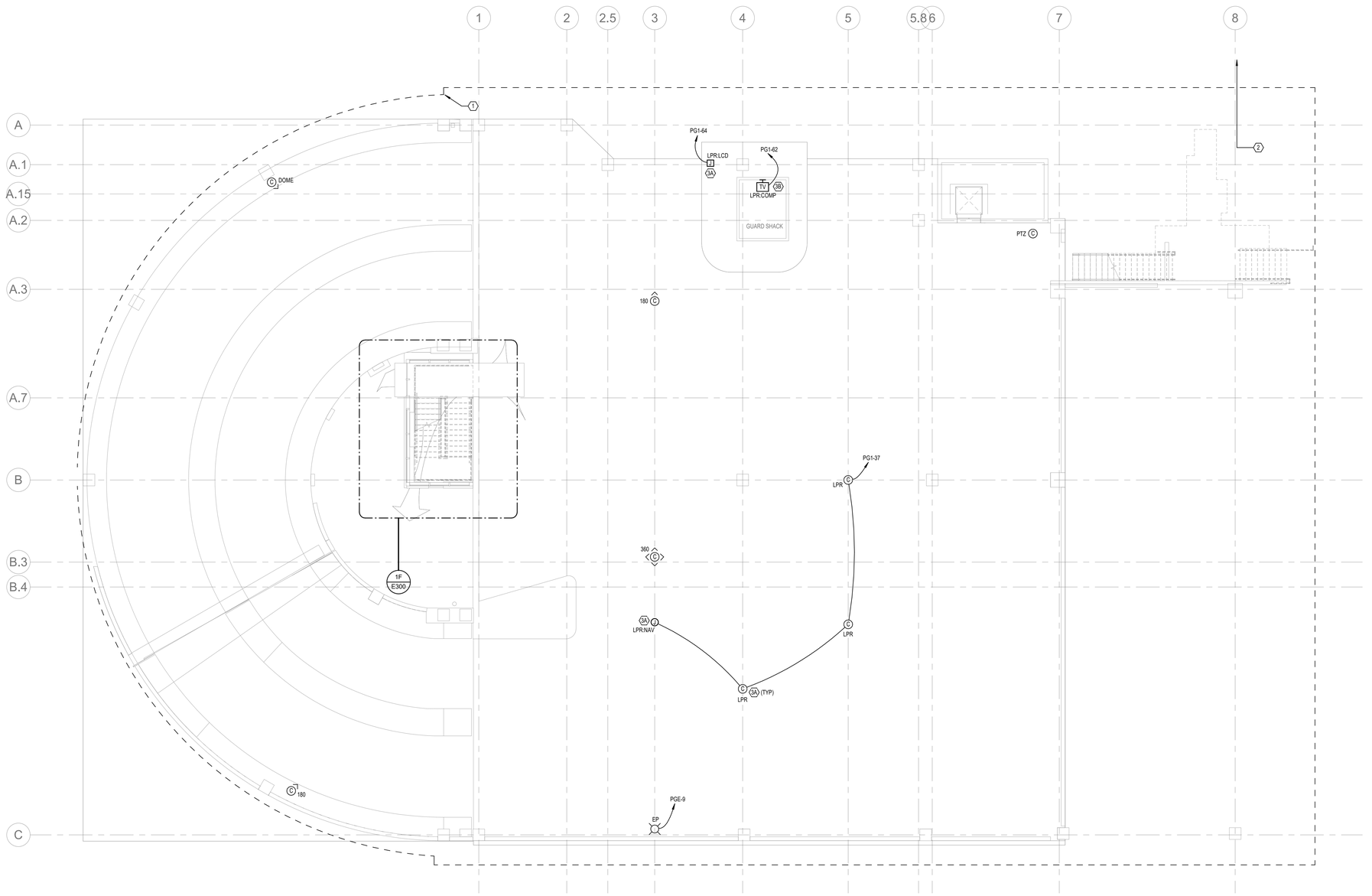

1F FLOOR PLAN - GROUND LEVEL - ELECTRICAL

1/8" = 1'-0"

0' 4' 8' 16'

1/8" = 1'-0"

Revisions:	Date:

CONSULTANT

HFG architecture
330 N. Mead St, Suite 100
Wichita, KS 67202
Phone: 316.262.2500
www.hfgarchitecture.com

ARCHITECT/ENGINEER OF RECORD

SES Specialized Engineering Solutions
7100 E BELLEVIEW AVE, STE 107
GREENWOOD VILLAGE, CO 80111
Phone: (720) 200-5955
www.specializedeng.com
SES Project : 20114.008

STAMP

LICENSED PROFESSIONAL ENGINEER
TRACY HAUSER
34981
04/23/2026
OKLAHOMA

Office of Construction and Facilities Management

VA U.S. Department of Veterans Affairs

Drawing Title: GROUND LEVEL - FLOOR PLAN - POWER & LOW VOLTAGE	Phase: ADDENDUM 01	Project Title: VA OKC - DESIGN REPAIR PARKING GARAGE	Project Number: 635-21-139
			Building Number: PG
Approved:	NON-SPRINKLERED	Location: 921 N.E. 13th St. Oklahoma City, OK	Drawing Number: EP200
		Issue Date: 04/23/2026 / Checked: ZTR / Drawn: ACC	

4/23/2026 2:03:42 PM
Autodesk Docs://20114.008 - VA Oklahoma City Parking Garage/635-139 ME R25.rvt

VA FORM 08 - 6231

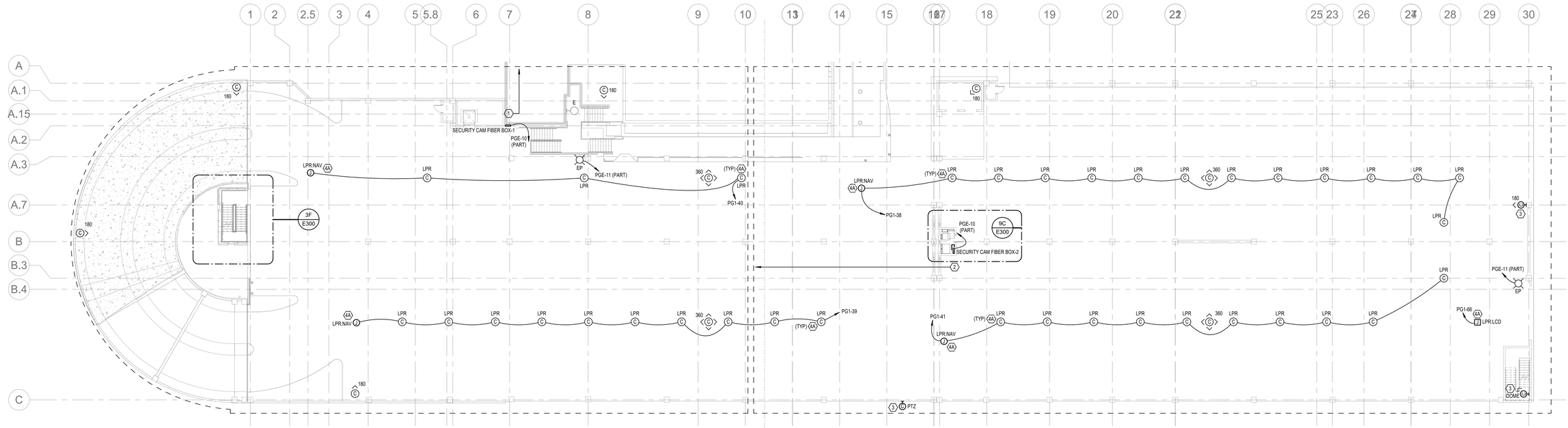

FLOOR PLAN - LEVEL 01 - ELECTRICAL

1C

1/16" = 1'-0"

16' 0 16' 32'

SHEET NOTES:

1. CATEGORY 6 (POE) CABLING IN CONDUIT FOR SURVEILLANCE SECURITY CAMERAS IN THIS AREA SHALL BE SERVED FROM FIBER BOX-1 ON THIS LEVEL.
2. CATEGORY 6 (POE) CABLING IN CONDUIT FOR SURVEILLANCE SECURITY CAMERAS IN THIS AREA SHALL BE SERVED FROM FIBER BOX-2 ON THIS LEVEL.
3. PROVIDE ARM MOUNTING ACCESSORY TO MOUNT CAMERA TO EXTERIOR WALL.
4. LICENSE PLATE READER (LPR) PARKING SPACE OCCUPANCY SYSTEM.
   A. LPR SYSTEM COMPONENTS SHOWN ON THIS PLAN SHALL NOT BE USED FOR TAKE OFF PURPOSES. COMPONENTS ARE SHOWN TO PROVIDE LPR SYSTEM DESIGNER WITH THE INTENT AND EXTENT OF SPECIFIED PARKING LOT COUNTER DESIGN. FINAL LPR SYSTEM PARKING LOT COUNTER DESIGN AND LAYOUT SHALL BE PROVIDED BY LPR SYSTEM DESIGNER. SUBMIT SHOP DRAWINGS FOR APPROVAL. COMPLETE LPR SYSTEM SHALL HAVE THE FOLLOWING FUNCTIONALITY:
      a. PROVIDE COUNT OF OCCUPIED AND UNOCCUPIED PARKING SPACES THROUGHOUT ENTIRE PARKING GARAGE.
      b. MONITOR VEHICLES ENTERING AND EXITING PARKING GARAGE AT ALL ENTRANCES/EXITS.
      c. RECOGNIZE AND MONITOR LICENSE PLATE INFORMATION OF VEHICLES IN THE PARKING GARAGE.
      d. ACCESS AND MONITOR CAMERA OUTPUTS AND SYSTEM INFORMATION FROM A REMOTE LOCATION.
      e. REMOTELY ACCESS USER INTERFACE VIA SECURITY MONITOR WORKSTATION IN GUARD SHACK ACCESSIBLE OVER NETWORK.
      f. REMOTELY ACCESS USER INTERFACE VIA FUTURE LOCATION SECURITY MONITOR WORKSTATION UNDER CONSTRUCTION. ACCESSIBLE OVER NETWORK.
      g. ABILITY TO RELOCATE COMPUTER HEAD END TO NOW LOCATION UNDER CONSTRUCTION. APPROXIMATELY 500' NORTH CURRENT GUARD SHACK.

Revisions:	Date:

CONSULTANT

HFG architecture
330 N. Mead St, Suite 100
Wichita, KS 67202
Phone: 316.262.2500
www.hfgarchitecture.com

ARCHITECT/ENGINEER OF RECORD

SES SPECIALIZED ENGINEERING SOLUTIONS
7100 E BELLEVIEW AVE, STE 107
GREENWOOD VILLAGE, CO 80111
Phone: (720) 200-5955
www.specializedeng.com
SES Project : 20114.008

STAMP

LICENSED PROFESSIONAL ENGINEER — TRACY HAUSER — 34981 — 04/23/2026 — OKLAHOMA

Office of Construction and Facilities Management

VA U.S. Department of Veterans Affairs

Drawing Title	LEVEL 01 - FLOOR PLAN - POWER & LOW VOLTAGE
Phase	ADDENDUM 01
Project Title	VA OKC - DESIGN REPAIR PARKING GARAGE
Project Number	635-21-139
Building Number	PG
Approved:	
	NON-SPRINKLERED
Location	921 N.E. 13th St. Oklahoma City, OK
Issue Date	04/23/2026
Checked	ZTR
Drawn	ACC
Drawing Number	EP201

4/23/2026 2:03:43 PM
Autodesk Docs://20114.008 - VA Oklahoma City Parking Garage/635-139.ME.R25.rvt

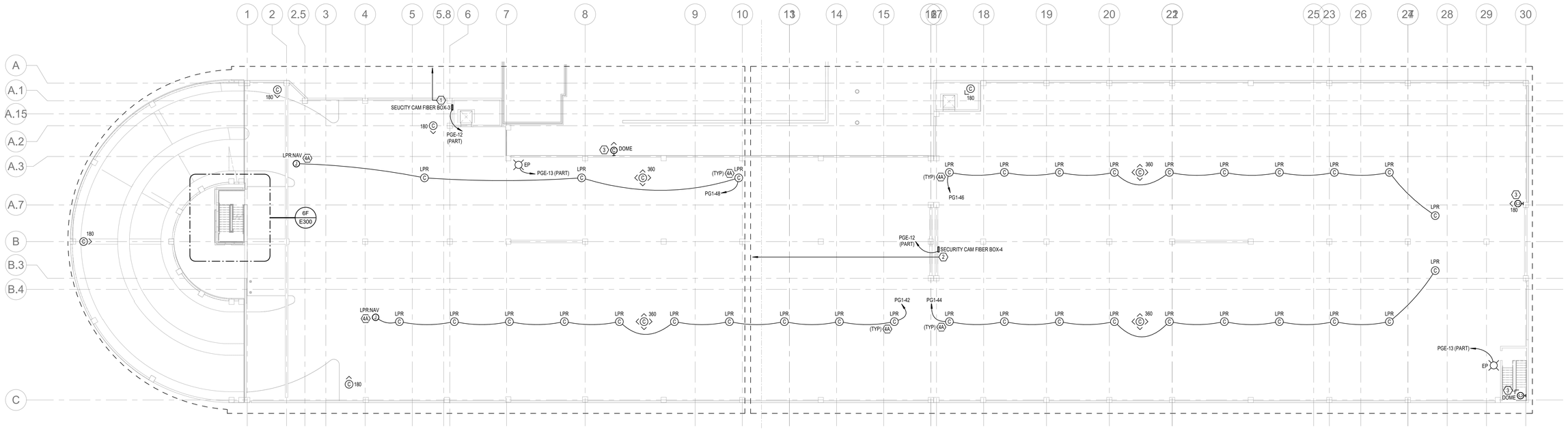

FLOOR PLAN - LEVEL 02 - ELECTRICAL

1/16" = 1'-0"

16' 0 16' 32'

SHEET NOTES:

1. CATEGORY 6 (POE) CABLING IN CONDUIT FOR SURVEILLANCE SECURITY CAMERAS IN THIS AREA SHALL BE SERVED FROM FIBER BOX-3 ON THIS LEVEL.
2. CATEGORY 6 (POE) CABLING IN CONDUIT FOR SURVEILLANCE SECURITY CAMERAS IN THIS AREA SHALL BE SERVED FROM FIBER BOX-4 ON THIS LEVEL.
3. PROVIDE ARM MOUNTING ACCESSORY TO MOUNT CAMERA TO EXTERIOR WALL.
4. LICENSE PLATE READER (LPR) PARKING SPACE OCCUPANCY SYSTEM.
   A. LPR SYSTEM COMPONENTS SHOWN ON THIS PLAN SHALL NOT BE USED FOR TAKE OFF PURPOSES. COMPONENTS ARE SHOWN TO PROVIDE LPR SYSTEM DESIGNER WITH THE INTENT AND EXTENT OF SPECIFIED PARKING LOT COUNTER DESIGN. FINAL LPR SYSTEM PARKING LOT COUNTER DESIGN AND LAYOUT SHALL BE PROVIDED BY LPR SYSTEM DESIGNER. SUBMIT SHOP DRAWINGS FOR APPROVAL. COMPLETE LPR SYSTEM SHALL HAVE THE FOLLOWING FUNCTIONALITY:
      a. PROVIDE COUNT OF OCCUPIED AND UNOCCUPIED PARKING SPACES THROUGHOUT ENTIRE PARKING GARAGE.
      b. MONITOR VEHICLES ENTERING AND EXITING PARKING GARAGE AT ALL ENTRANCES/EXITS.
      c. RECOGNIZE AND MONITOR LICENSE PLATE INFORMATION OF VEHICLES IN THE PARKING GARAGE.
      d. ACCESS AND MONITOR CAMERA OUTPUTS AND SYSTEM INFORMATION FROM A REMOTE LOCATION.
      e. REMOTELY ACCESS USER INTERFACE VIA SECURITY MONITOR WORKSTATION IN GUARD SHACK ACCESSIBLE OVER NETWORK.
      f. REMOTELY ACCESS USER INTERFACE VIA FUTURE LOCATION SECURITY MONITOR WORKSTATION UNDER CONSTRUCTION, ACCESSIBLE OVER NETWORK.
      g. ABILITY TO RELOCATE COMPUTER HEAD END TO NOW LOCATION UNDER CONSTRUCTION. APPROXIMATELY 500' NORTH CURRENT GUARD SHACK.

Revisions:	Date:

CONSULTANT

HFG architecture
330 N. Mead St, Suite 100
Wichita, KS 67202
Phone: 316.262.2500
www.hfgarchitecture.com

ARCHITECT/ENGINEER OF RECORD

SES SPECIALIZED ENGINEERING SOLUTIONS
7100 E BELLEVIEW AVE, STE 107
GREENWOOD VILLAGE, CO 80111
Phone: (720) 200-5955
www.specializedeng.com
SES Project : 20114.008

STAMP

LICENSED PROFESSIONAL ENGINEER TRACY HAUSER 34981 04/23/2026 OKLAHOMA

Office of Construction and Facilities Management

VA U.S. Department of Veterans Affairs

Drawing Title: LEVEL 02 - FLOOR PLAN - POWER & LOW VOLTAGE	Phase: ADDENDUM 01	Project Title: VA OKC - DESIGN REPAIR PARKING GARAGE	Project Number: 635-21-139
			Building Number: PG
Approved:	NON-SPRINKLERED	Location: 921 N.E. 13th St. Oklahoma City, OK	Drawing Number: EP202
		Issue Date: 04/23/2026 / Checked: ZTR / Drawn: ACC	

4/23/2026 2:03:44 PM
Autodesk Docs://20114.008 - VA Oklahoma City Parking Garage/635-139.ME.R25.rvt

VA FORM 08 - 6231

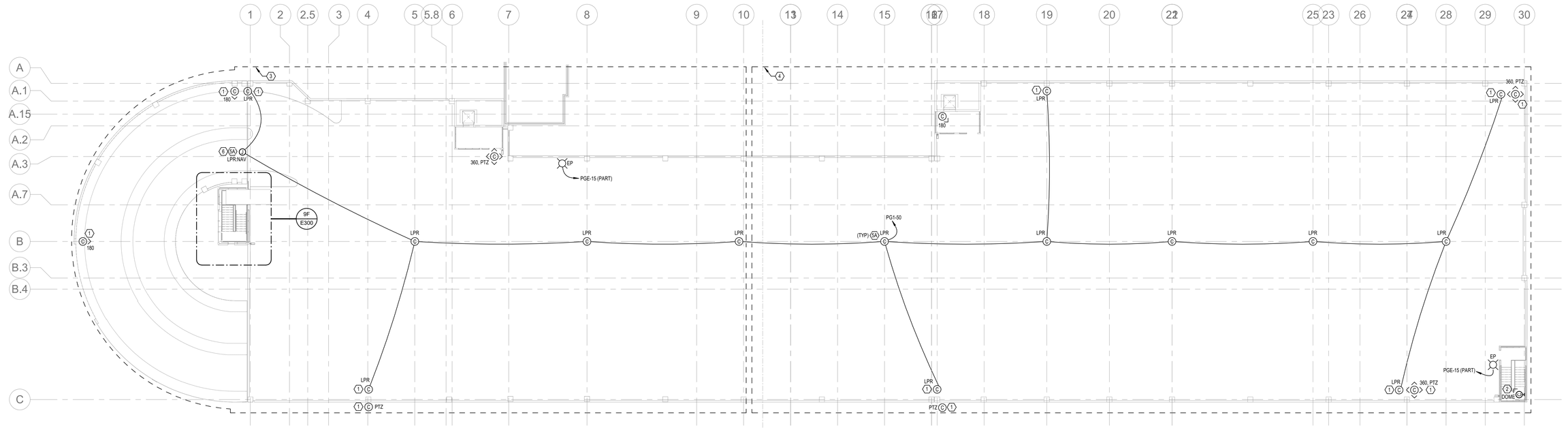

FLOOR PLAN - LEVEL 03 - ELECTRICAL

N 1C

1/16" = 1'-0"

16' 0 16' 32'

SHEET NOTES:

1. PROVIDE ARM MOUNTING ACCESSORY TO MOUNT CAMERA TO EXISTING AREA LIGHT POLE.
2. PROVIDE ARM MOUNTING ACCESSORY TO MOUNT CAMERA TO EXTERIOR WALL.
3. 1. CATEGORY 6 (POE) CABLING IN CONDUIT FOR SURVEILLANCE SECURITY CAMERAS IN THIS AREA SHALL BE SERVED FROM FIBER BOX-3 ON THIS LEVEL.
4. 2. CATEGORY 6 (POE) CABLING IN CONDUIT FOR SURVEILLANCE SECURITY CAMERAS IN THIS AREA SHALL BE SERVED FROM FIBER BOX-4 ON THIS LEVEL.
5. LICENSE PLATE READER (LPR) PARKING SPACE OCCUPANCY SYSTEM:
   A. LPR SYSTEM COMPONENTS SHOWN ON THIS PLAN SHALL NOT BE USED FOR TAKE OFF PURPOSES. COMPONENTS ARE SHOWN TO PROVIDE LPR SYSTEM DESIGNER WITH THE INTENT AND EXTENT OF SPECIFIED PARKING LOT COUNTER DESIGN. FINAL LPR SYSTEM PARKING LOT COUNTER DESIGN AND LAYOUT SHALL BE PROVIDED BY LPR SYSTEM DESIGNER. SUBMIT SHOP DRAWINGS FOR APPROVAL. COMPLETE LPR SYSTEM SHALL HAVE THE FOLLOWING FUNCTIONALITY:
      a. PROVIDE COUNT OF OCCUPIED AND UNOCCUPIED PARKING SPACES THROUGHOUT ENTIRE PARKING GARAGE.
      b. MONITOR VEHICLES ENTERING AND EXITING PARKING GARAGE AT ALL ENTRANCES/EXITS.
      c. RECOGNIZE AND MONITOR LICENSE PLATE INFORMATION OF VEHICLES IN THE PARKING GARAGE.
      d. ACCESS AND MONITOR CAMERA OUTPUTS AND SYSTEM INFORMATION FROM A REMOTE LOCATION.
      e. REMOTELY ACCESS USER INTERFACE VIA SECURITY MONITOR WORKSTATION IN GUARD SHACK ACCESSIBLE OVER NETWORK.
      f. REMOTELY ACCESS USER INTERFACE VIA FUTURE LOCATION SECURITY MONITOR WORKSTATION UNDER CONSTRUCTION, ACCESSIBLE OVER NETWORK.
      g. ABILITY TO RELOCATE COMPUTER HEAD END TO NOW LOCATION UNDER CONSTRUCTION. APPROXIMATELY 500' NORTH CURRENT GUARD SHACK.
6. PROVIDE ARM MOUNT ACCESSORY TO MOUNT LPR-NAV DISPLAY BOARD TO EXISTING EXTERIOR WALL.

Revisions:	Date:

CONSULTANT

HFG architecture

330 N. Mead St, Suite 100
Wichita, KS 67202
Phone: 316.262.2500

www.hfgarchitecture.com

ARCHITECT/ENGINEER OF RECORD

SES SPECIALIZED ENGINEERING SOLUTIONS

7100 E BELLEVIEW AVE, STE 107
GREENWOOD VILLAGE, CO 80111
Phone: (720) 200-5955

www.specializedeng.com

SES Project : 20114.008

STAMP

LICENSED PROFESSIONAL ENGINEER
TRACY HAUSER
34981
04/23/2026
OKLAHOMA

Office of Construction and Facilities Management

VA U.S. Department of Veterans Affairs

Drawing Title: LEVEL 03 - FLOOR PLAN - POWER & LOW VOLTAGE	Phase: ADDENDUM 01	Project Title: VA OKC - DESIGN REPAIR PARKING GARAGE	Project Number: 635-21-139
			Building Number: PG
Approved:	NON-SPRINKLERED	Location: 921 N.E. 13th St. Oklahoma City, OK	Drawing Number: EP203
		Issue Date: 04/23/2026 / Checked: ZTR / Drawn: ACC	

4/23/2026 2:03:44 PM
Autodesk Docs://20114.008 - VA Oklahoma City Parking Garage/635-139.ME.R25.rvt
4/23/2026 2:03:44 PM

VA FORM 08 - 6231

SHEET NOTES:

1. PROVIDE 350VA BATTERY INVERTER FOR EM (SHADED LIGHTS AND EXIT SIGNS) BASIS OF DESIGN MYERS LV-2-R-2-8-02-10-DR-TR. INVERTER TO COMPLY WITH BAA.
2. LIGHT SHALL BE CIRCUITED TO NEW INV2.
3. EXIT SIGN SHALL BE CIRCUITED TO NEW INV2.

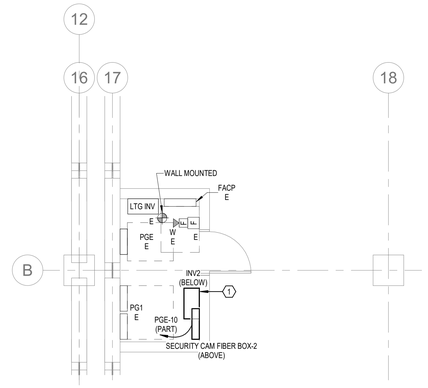

9C ELECTRICAL ENLARGED PLAN - EXISTING ELECTRICAL ROOM - LEVEL 2
1/4" = 1'-0"

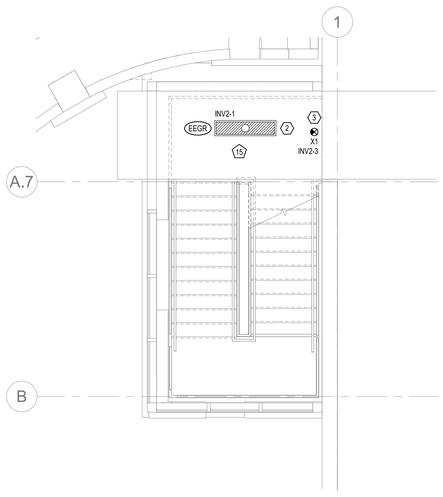

1F ENLARGED PLAN - GROUND LEVEL - STAIR
1/4" = 1'-0"

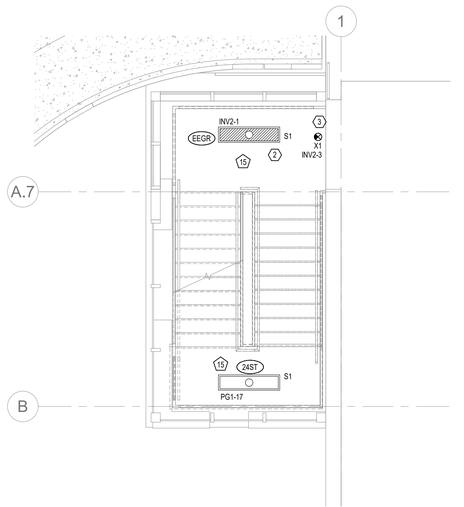

3F ENLARGED PLAN - LEVEL 01 - STAIR
1/4" = 1'-0"

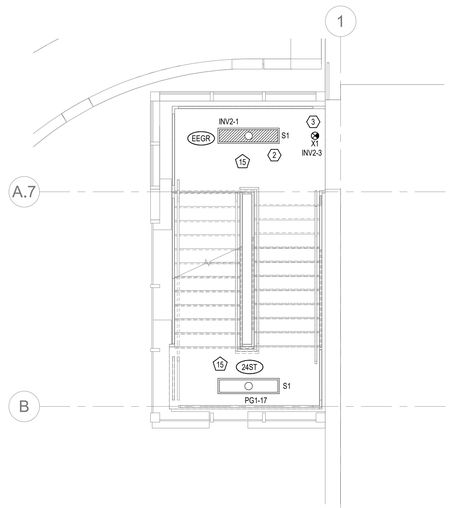

6F ENLARGED PLAN - LEVEL 02 - STAIR
1/4" = 1'-0"

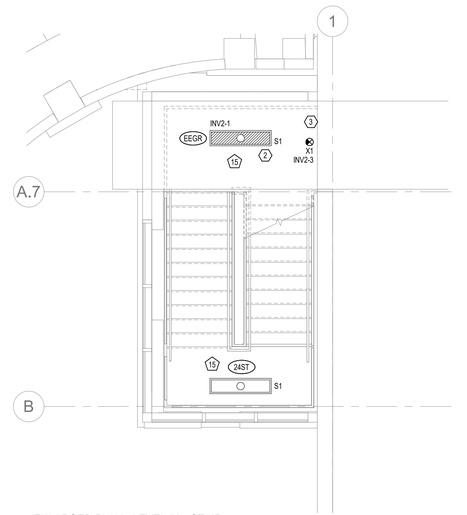

9F ENLARGED PLAN - LEVEL 03 - STAIR
1/4" = 1'-0"

Revisions:	Date:

CONSULTANT

HFG architecture
330 N. Mead St, Suite 100
Wichita, KS 67202
Phone: 316.262.2500
www.hfgarchitecture.com

ARCHITECT/ENGINEER OF RECORD

SES SPECIALIZED ENGINEERING SOLUTIONS
7100 E BELLEVIEW AVE, STE 107
GREENWOOD VILLAGE, CO 80111
Phone: (720) 200-5955
www.specializedeng.com
SES Project : 20114.008

STAMP

LICENSED PROFESSIONAL ENGINEER
TRACY HAUSER
34981
04/23/2026
OKLAHOMA

Office of Construction and Facilities Management

VA U.S. Department of Veterans Affairs

Drawing Title ELECTRICAL ENLARGED PLANS	**Phase** ADDENDUM 01	**Project Title** VA OKC - DESIGN REPAIR PARKING GARAGE	**Project Number** 635-21-139
Approved:	NON-SPRINKLERED	**Location** 921 N.E. 13th St. Oklahoma City, OK	**Building Number** PG
		Issue Date 04/23/2026 / **Checked** RJA / **Drawn** ZTR	**Drawing Number** E300

4/23/2026 2:03:45 PM
Autodesk Docs://20114.008 - VA Oklahoma City Parking Garage/635-139-ME R25.rvt

VA FORM 08 - 6231

EXISTING PANEL: PG1

LOCATION: GARAGE ELEC RM
SUPPLY FROM: SUB STATION #1
BRANCH: EMS
SERVICE RATED: No
MOUNTING: SURFACE
NEMA ENCLOSURE: TYPE 1

VOLTS: 208/120 WYE
PHASES: 3
WIRES: 4
INTEGRAL SPD: No
AVAILABLE SCC (kA): 22

MAINS TYPE: MCB
MCB/MLO RATING: 225 A
MCB OPTIONS: -
SECTIONS: 2
PANEL POLES: 84

CKT	CIRCUIT DESCRIPTION	OPT	RATING	POLES	A		B		C		POLES	RATING	OPT	CIRCUIT DESCRIPTION	CKT
1	EX. 1ST LEVEL LED LIGHTS	--	20 A	1	0 VA	0 VA					1	20 A	--	EX. 3RD LEVEL LED LIGHTS	2
3	EX. 2ND LEVEL LED LIGHTS	--	20 A	1			0 VA	0 VA			1	20 A	--	EX. 3RD LEVEL LED LIGHTS	4
5	EX. RAMP LED LIGHTS	--	20 A	1					0 VA	0 VA	1	20 A	--	EX. 4TH LEVEL LED LIGHTS	6
7	EX. 2ND & 3RD LEVEL WALL...	--	20 A	1	0 VA	0 VA					1	20 A	--	EX. 4TH LEVEL LED LIGHTS	8
9	EX. 2ND LEVEL LED LIGHTS	--	20 A	1			0 VA	0 VA			1	20 A	--	EX. 5TH LEVEL LED LIGHTS	10
11	EX. 4TH LEVEL WALL MTD	--	20 A	1					0 VA	0 VA	1	20 A	--	EX. 5TH LEVEL LED LIGHTS	12
13	EX. DRIVE POLE LIGHT GUARD	--	20 A	1	0 VA	0 VA					1	20 A	--	EX. 5TH LEVEL LED LIGHTS	14
15	EX. DUSK TO DAWN...	--	20 A	1			0 VA	0 VA			1	20 A	--	EX. 3RD LEVEL LED LIGHTS	16
(1) 17	**NEW STAIR LIGHTING**		20 A	1					80 VA	141 VA	1	20 A		**INV2**	18 (1)
19	EX. ELEV. P-15 & P-16 PIT...	--	20 A	1	0 VA	0 VA					1	20 A	--	EX. ELEV P-17 & P-18 LIGHTS	20
21	SPARE	--	20 A	1			0 VA	0 VA			1	20 A	--	EX. ELEV P-17 & P-18 SUMP...	22
23	EX. ELEV P-15 & P-16 SUMP...	--	20 A	1					0 VA	0 VA	1	20 A	--	SPARE	24
25	EX. CU-1/AC-1	--	20 A	2	0 VA	0 VA					2	20 A	--	EX. CU-2/AC-2	26
27							0 VA	0 VA							28
29	EX. BARRIER GATE SW	--	20 A	1					0 VA	0 VA	1	20 A	--	EX. BARRIER GATE 2ND LEVEL	30
31	EX. BARRIER GATE 4TH LVL	--	20 A	1	0 VA	0 VA					1	20 A	--	EX. BARRIER GATE 2ND LEVEL	32
33	EX. RECEPT 1ST & 2ND LVL	--	20 A	1			0 VA	0 VA			1	20 A	--	EX. RECEPT 1ST & 2ND LVL	34
35	EX. RECEPT 3RD & 4TH LVL	--	20 A	1					0 VA	0 VA	1	20 A	--	EX. RECEPT 3RD & 4TH LVL	36
(1) 37	**LPR SYS - Ground Level A**		20 A	1	400 VA	400 VA					1	20 A		**LPR SYS - First Level C**	38 (1)
(1) 39	**LPR SYS - First Level A**		20 A	1			400 VA	400 VA			1	20 A		**LPR SYS - First Level D**	40 (1)
(1) 41	**LPR SYS - First Level B**		20 A	1					400 VA	400 VA	1	20 A		**LPR SYS - Second Level A**	42 (1)
43	RECEPTS LVL 5	--	20 A	1	0 VA	0 VA					1	20 A		**LPR SYS - Second Level B**	44 (1)
45	EX. PANIC STATIONS	--	20 A	1			0 VA	0 VA			1	20 A		**LPR SYS - Second Level C**	46 (1)
47	EX. LANDSCAPE J-BOX	--	20 A	1					0 VA	400 VA	1	20 A		**LPR SYS - Second Level D**	48 (1)
49	EX. SIGN KELLY ANVE	--	20 A	1	0 VA	400 VA					1	20 A		**LPR SYS - Third Level**	50 (1)
51	EX. HEAT TRACE J-BOX	--	20 A	1			0 VA	0 VA			1	20 A	--	EX. HEAT TRACE J- BOX	52
53	EX. HEAT TRACE J-BOX	--	20 A	1					0 VA	0 VA	1	20 A	--	EX. HEAT TRACE J- BOX	54
55	EX. HEAT TRACE J-BOX	--	20 A	1	0 VA	0 VA					1	20 A	--	EX. HEAT TRACE J- BOX	56
57	EX. GUARD STATION POLE	--	20 A	1			0 VA	0 VA			1	20 A	--	EX. LED PARKING SIGNAGE...	58
59	EX. COUNT SYST. CNRL PWR	--	15 A	1					0 VA	0 VA	1	20 A	--	EX. LED COUNT SYSTEM	60
61	EX. COUNT SYST. CNRL PWR	--	15 A	1	0 VA	350 VA					1	20 A		**LPR SYS - Computer**	62 (1)
63	EX. COUNT SYST. CNRL PWR	--	20 A	1			0 VA	500 VA			1	20 A		**LPR SYS - LCD Screen Level G**	64 (1)
65	EX. HEAT TRACE J- BOX	--	30 A	1					0 VA	500 VA	1	20 A		**LPR SYS - LCD Screen Level 1**	66 (1)
67	EX. GUARD BOOTH	--	125 A	2	0 VA	--					1	--	--	SPACE	68
69							0 VA	--			1	--	--	SPACE	70
71	SPARE	--	20 A	1					0 VA	--	1	--	--	SPACE	72
73	SPACE	--	--	1	--	--					1	--	--	SPACE	74
75	SPACE	--	--	1			--	--			1	--	--	SPACE	76
77	SPACE	--	--	1					--	--	1	--	--	SPACE	78
79	SPACE	--	--	1	--	--					1	--	--	SPACE	80
81	SPACE	--	--	1			--	--			1	--	--	SPACE	82
83	SPACE	--	--	1					--	--	1	--	--	SPACE	84

OPTIONS:

CIRCUIT BREAKER OPTIONS SUFFIX: 'S' OR 'ST' - PROVIDE SHUNT TRIP CIRCUIT BREAKER / 'G' OR 'GFCI' - PROVIDE GFCI CIRCUIT BREAKER / 'GFP' - PROVIDE GFP CIRCUIT BREAKER / 'ERMS' - ENERGY REDUCING MAINTENANCE SWITCH / 'ZSI' - ZONE SELECTIVE INTERLOCKING / 'L' - PROVIDE CIRCUIT BREAKER WITH LOCKING PROVISIONS / 'R' - PROVIDE CIRCUIT BREAKER WITH RED MARKING

GENERAL REMARKS:

A. PANEL AIC (INTERRUPTING) RATING SHALL BE MINIMUM 120% OF THE AVAILABLE SCC (SHORT CIRCUIT CURRENT).

(1) UTILIZE EXISTING SPARE 20A/1P CIRCUIT BREAKER FOR NEW LOAD.

EXISTING PANEL: PGE

LOCATION: GARAGE ELEC RM
SUPPLY FROM: SUB STATION #1
BRANCH: EMS
SERVICE RATED: No
MOUNTING: SURFACE
NEMA ENCLOSURE: TYPE 1

VOLTS: 208/120 WYE
PHASES: 3
WIRES: 4
INTEGRAL SPD: No
AVAILABLE SCC (kA):

MAINS TYPE: MCB
MCB/MLO RATING: 400 A
MCB OPTIONS: -
SECTIONS: 1
PANEL POLES: 30

CKT	CIRCUIT DESCRIPTION	OPT	RATING	POLES	A		B		C		POLES	RATING	OPT	CIRCUIT DESCRIPTION	CKT
1					9420 VA	9420 VA									2
3	EX. ELEV 15	--	80 A	3			9420 VA	9420 VA			3	80 A	--	EX. ELEV 15	4
5									9420 VA	9420 VA					6
7	EX. ELEV SHUNT TRIP	--	--	1	--	--					1	--	--	EX. ELEV SHUNT TRIP	8
(1) 9	**Em Call Box - Ground Level**		20 A	1			400 VA	2000 VA			1	20 A		**SEC. CAM SYS - FIBER BOX 1,2**	10 (1)
(1) 11	**Em Call Box - First Level**		20 A	1					800 VA	2000 VA	1	20 A		**SEC. CAM SYS - FIBER BOX 3,4**	12 (1)
(1) 13	**Em Call Box - Second Level**		20 A	1	800 VA	0 VA					1	20 A	--	EX SHUNT POWER	14
(1) 15	**Em Call Box - Third Level**		20 A	1			800 VA	1000 VA			1	20 A	--	EX. FIRE ALARM	16
17	SPACE	--	--	1					--	--	1	--	--	SPACE	18
19					13680...	0 VA									20
21	EX. ELEV 17	--	125 A	3			13980...	0 VA			3	125 A	--	SPARE FOR FUT. ELEV 18	22
23									13680...	0 VA					24
25	EX. ELEV SHUNT TRIP	--	--	1	--	--					1	--	--	EX. ELEV SHUNT TRIP	26
27	SPACE	--	--	1			--	--			1	--	--	SPACE	28
29	SPACE	--	--	1					--	--	1	--	--	SPACE	30

OPTIONS:

CIRCUIT BREAKER OPTIONS SUFFIX: 'S' OR 'ST' - PROVIDE SHUNT TRIP CIRCUIT BREAKER / 'G' OR 'GFCI' - PROVIDE GFCI CIRCUIT BREAKER / 'GFP' - PROVIDE GFP CIRCUIT BREAKER / 'ERMS' - ENERGY REDUCING MAINTENANCE SWITCH / 'ZSI' - ZONE SELECTIVE INTERLOCKING / 'L' - PROVIDE CIRCUIT BREAKER WITH LOCKING PROVISIONS / 'R' - PROVIDE CIRCUIT BREAKER WITH RED MARKING

GENERAL REMARKS:

A. PANEL AIC (INTERRUPTING) RATING SHALL BE MINIMUM 120% OF THE AVAILABLE SCC (SHORT CIRCUIT CURRENT).

(1) UTILIZE EXISTING SPARE 20A/1P CIRCUIT BREAKER FOR NEW LOAD.

LUMINAIRE SCHEDULE

MARK	DESCRIPTION	SUBS	MANUFACTURER	CATALOG # (NOTE A)	LUMENS	CCT (K)	MIN.CRI	VOLTAGE	INPUT WATTS	MOUNTING	REMARKS
S1	SURFACE MOUNTED LED LINEAR LENSED VANDEL RESISTANT FIXTURE - INTEGRAL PC AND OS	Y	LUMINAIRE LED BEGHELLI	VPF4-4FT-MIN10-40W-40K-MVOLT-OP-TBD-WL-PC-OCCBT (30%)-BAA BS100LED-PG-HT-HO-WT40-120-277V-IOS-TPS	2775	4000K	80	120 V	40	SURFACE	2
X1	WET LISTED LED EXIT SIGN -20DEG C TO 50 DEG C	Y	EVENLITE	SWL-AC-R-U-A-B-CN-CT-BAA	N/A	N/A	N/A	120 V	7	SURFACE	1,2

REMARKS: (LIGHTING FIXTURE SCHEDULE)
1. EXIT SIGNS - REFER TO ELECTRICAL PLANS FOR DIRECTION INDICATORS AND MOUNTING TYPE.
2. PROVIDE BAA COMPLIANT FIXTURE.
3. WALL MOUNTING - COORDINATE EXACT LOCATION WITH ARCHITECT AND ARCHITECTURAL DETAILS. COORDINATE FRAMING AND BOX SUPPORTS PRIOR TO ROUGH-IN FOR EXACT PLACEMENT OF BOX TO ACHIEVE CENTERING AND ALIGNMENT WITH FINAL ARCHITECTURAL FINISHES.

GENERAL NOTES: (LIGHTING FIXTURE SCHEDULE)
A. CATALOG NUMBER VERIFICATION - CONTRACTOR SHALL VERIFY LIGHTING FIXTURE INSTALLATION REQUIREMENTS AND CATALOG NUMBER PRIOR TO ORDERING.
B. SUBSTITUTIONS - WHERE INDICATED WITH 'N' (NO), NO SUBSTITUTIONS WILL BE ACCEPTED. WHERE INDICATED WITH 'P' (PRIOR APPROVAL), SUBSTITUTIONS MUST BE APPROVED PRIOR TO BID WITH ACCEPTANCE ISSUED BY ADDENDUM. WHERE INDICATED WITH 'Y' (YES), THE FOLLOWING MANUFACTURER'S ARE CONSIDERED ACCEPTABLE EQUIVALENT MANUFACTURER'S, PROVIDED THE EQUIVALENT FIXTURE IS OF THE SAME QUALITY, EFFICIENCY, PERFORMANCE AND CHARACTERISTICS AS THAT SCHEDULED:
   1. ACUITY BRANDS
   2. COOPER BRANDS
   3. HUBBELL
   4. HE WILLIAMS
   5. SIGNIFY BRANDS

LIGHTING CONTROL SEQUENCE OF OPERATIONS

TAG	SPACE TYPE	OCCUPANCY SENSOR TYPE	OCCUPANCY SENSOR TIME DELAY	AUTO ON %	AUTO % REDUCED	NETWORK	DAYLIGHT CONTROL	REMARKS
24ST	24 HOUR EXIT STAIR	DT-F	20	100	50	N	Y	NOTE X
EEGR	EXTERIOR EGRESS STAIR	DT-F	20	100	50	N	Y	NOTE X

REMARKS: (LIGHTING CONTROL SEQUENCE OF OPERATIONS)
1. PROVIDE ALL NECESSARY PARTS AND ACCESSORIES TO MEET THE 'OCCUPANT SENSOR CONTROL FUNCTION REQUIREMENTS SET FORTH IN IECC 2021 – C405.2.1.1

GENERAL NOTES: (LIGHTING CONTROL SEQUENCE OF OPERATIONS)
A. WHERE MULTIPLE CONTROL ZONES ARE INDICATED WITHIN A SPACE, THE 'AUTO ON' AND 'AUTO OFF' FUNCTIONS SHALL INCLUDE ALL CONTROL ZONES WITHIN THE SPACE UNLESS NOTED OTHERWISE.
B. DAYLIGHT HARVESTING - REFER TO LIGHTING CONTROL PLAN FOR DAYLIGHT ZONES REQUIRING PHOTOCELL CONTROL AND THEIR ASSOCIATED LIGHTING SET POINTS. TARGET ILLUMINANCE LEVELS SHALL BE MEASURED AT THE WORK PLANE OF THE PRIMARY TASK WITHIN THE SPACE.
   1. OCCUPANCY SENSOR - PROVIDE INTEGRATED OCCUPANCY SENSOR IN THE LIGHT FIXTURES TYPE AS INDICATED BELOW.
      - N = NO OCCUPANCY SENSOR(S)
      - IR = PASSIVE INFRARED
      - DT = DUAL-TECHNOLOGY
   2. SENSOR OPTIONS:
      - F = FINE MOTION - CAPABLE OF DETECTING HAND MOTION
      - L = LARGE MOTION - CAPABLE OF DETECTING WALKING MOTION
      - LTHH = LOW TEMPERATURE/HIGH HUMIDITY
      - HB = HIGH BAY
      - O = OUTDOOR
C. AUTO ON % - WHEN OCCUPANCY IS DETECTED WITHIN SPACE, ROOM LIGHTING SHALL BE TURNED ON TO SPECIFIED LIGHT LEVEL. WHERE INDICATED WITH 'M', ROOM SHALL BE MANUAL ON.
D. AUTO % REDUCED - WHEN SPECIFIED SENSOR TIME DELAY IS REACHED, ROOM LIGHTING SHALL BE REDUCED TO SPECIFIED LIGHT LEVEL AT NO TIME SHOULD THE LIGHTS BE AT 0%.
E. NETWORK – NETWORKED LIGHTING CONTROL SYSTEM INTERCOMMUNICATION
   1. Y = PROVIDE NETWORK COMMUNICATIONS BETWEEN CONTROL DEVICES LIGHTING CONTROL SYSTEM HEAD END
   2. N = CONNECTION TO SYSTEM HEAD END NOT REQUIRED

LIGHTING CONTROL SEQUENCE OF OPERATIONS GUIDE:

- TAGS WILL RANGE FROM 3 CHARACTERS (<10 MINUTE DELAY, NO SPECIAL OPTIONS) TO 5 CHARACTERS (UP TO 20 MINUTE DELAY + SPECIAL):

- F - FINE MOTION
  L - LARGE MOTION
- A - AUTO ON TO 100%
  P - PARTIAL AUTO ON
  M - MANUAL ON
- # - OCC. SENSOR DELAY (MINUTES)
- - NO SPECIAL
  T - TASK TUNING
  W - WHITE TUNING
  G - GERMICIDAL
  C - CIRCADIAN LIGHTING
  R – RECEPTACLE CONTROL

LOAD JUSTIFICATION SCHEDULE

EQUIPMENT DATA					LOADS ADDED				NET CHANGE		CAPACITY ANALYSIS			
PANEL NAME	VOLTAGE	AMPS CAPACITY	# OF PHASES	# OF WIRES	RECEPTACLE LOAD ADDED	LIGHTING LOAD ADDED	LIGHTING DEMAND FACTOR	TOTAL LOAD ADDED	NET LOAD CHANGE	NET AMPS AT 3PH VOLTAGE	PEAK DEMAND AMPS METERING	METERING DEMAND FACTOR	METERING DESCRIPTION	REMAINING CAPACITY
PG1	208 V	225 A	3	4	540 VA	123 VA	1.25	694 VA	694 VA	2 A	110 A	1.25	30 DAY METERING	86 A
PGE	208 V	400 A	3	4	0 VA	20 VA	1.25	25 VA	25 VA	0 A	57 A	1.25	30 DAY METERING	329 A

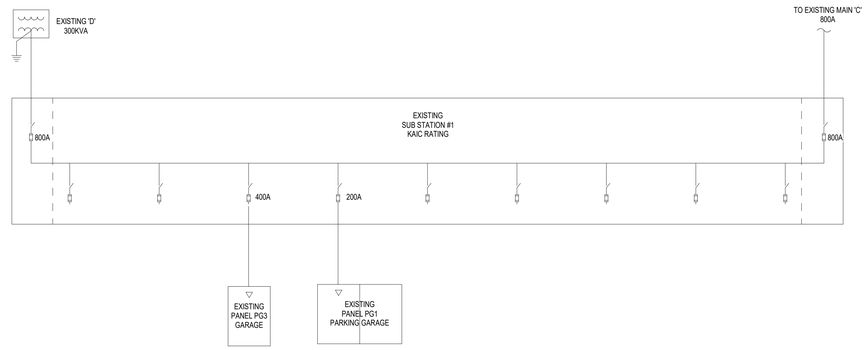

6F / E700 ELECTRICAL ONE-LINE
NO SCALE

Revisions:	Date:

CONSULTANT

HFG architecture
330 N. Mead St, Suite 100
Wichita, KS 67202
Phone: 316.262.2500
www.hfgarchitecture.com

ARCHITECT/ENGINEER OF RECORD

SPECIALIZED ENGINEERING SOLUTIONS
7100 E BELLEVIEW AVE, STE 107
GREENWOOD VILLAGE, CO 80111
Phone: (720) 200-5955
www.specializedeng.com
SES Project : 20114.008

STAMP

LICENSED PROFESSIONAL ENGINEER
TRACY HAUSER
34981
04/23/2026
OKLAHOMA

Office of Construction and Facilities Management

VA U.S. Department of Veterans Affairs

Drawing Title: ELECTRICAL SCHEDULES	Phase: ADDENDUM 01	Project Title: VA OKC - DESIGN REPAIR PARKING GARAGE	Project Number: 635-21-139
Approved:	NON-SPRINKLERED	Location: 921 N.E. 13th St. Oklahoma City, OK	Building Number: PG
		Issue Date: 04/23/2026 / Checked / Drawn	Drawing Number: E700

4/23/2026 2:03:46 PM
Autodesk Docs://20114.008 - VA Oklahoma City Parking Garage/635-139-ME R25.rvt
4/23/2026 2:03:46 PM

VA FORM 08 - 6231