CIM Med part number
DR-73113F-4S-03R.bl1_130_58

Description:

Extended Height adjustable arm VESA 75/100 W-bracket with keyboard tray (Atlan Right Side) Keyboard tray: 500 x 200 mm, 19.7" x 7.9”

Product Weight: 7.1 kg / 11.5 lbs

Max. Monitor load capacity: 8.5 kg / 18.7 lbs
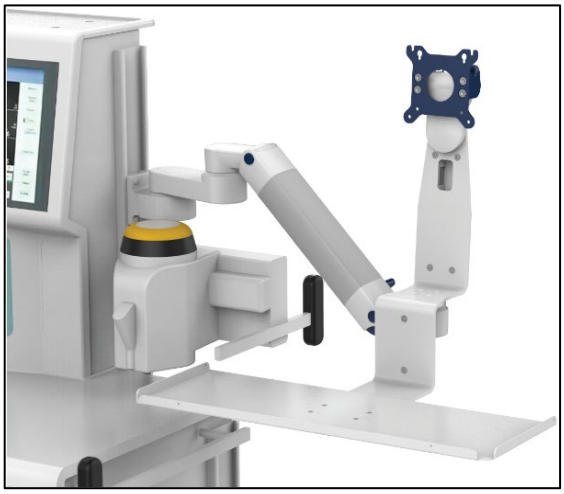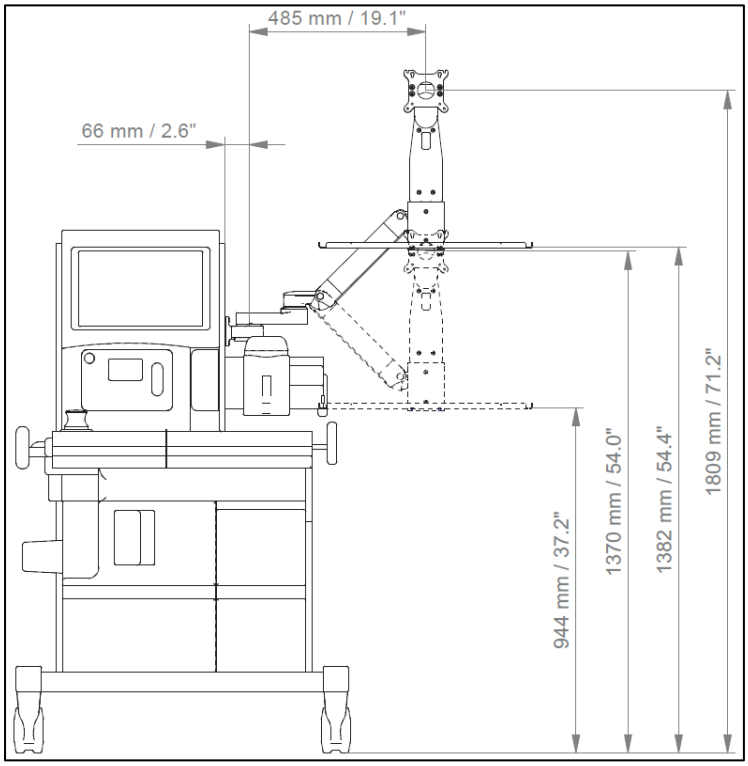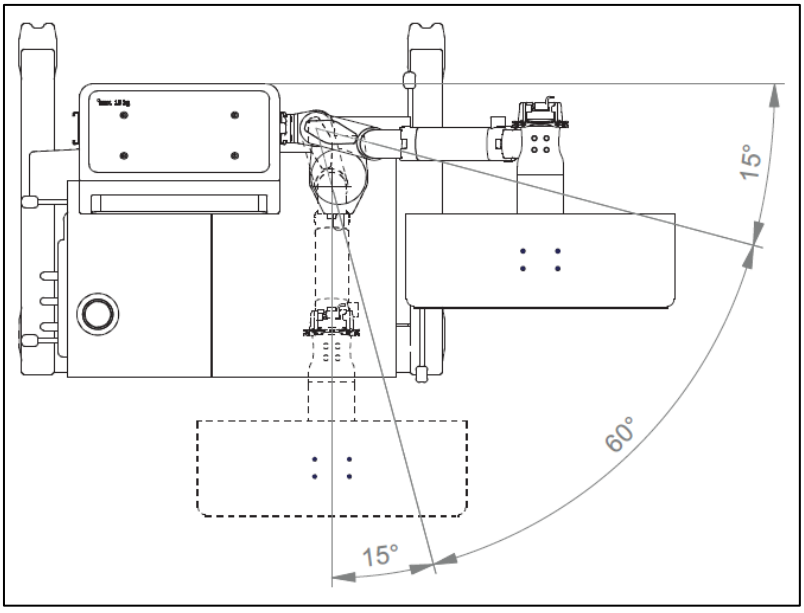
1300N spring tension (6 - 8.5 kg / 13.2 - 18.7 lbs)