ABBREVIATIONS

A	
∠	ANGLE (GEOMETRY)
L	ANGLE (STEEL)
A	AMP
A/C	AIR CONDITIONED
ACT	ACOUSTICAL CEILING TILE
ACU	AIR CONDITION UNIT
ADDM	ADDENDUM
ADH	ADHESIVE
ADJ	ADJACENT
A/E	ARCHITECTURE/ENGINEERING
AFF	ABOVE FINISH FLOOR
AG	ABOVE GRADE
AGG	AGGREGATE
AHU	AIR HANDLING UNIT
AL	ALUMINUM
ALT	ALTERNATE
ANOD	ANODIZED
APPD	APPROVED
APPROX	APPROXIMATE
ARCH	ARCHITECTURE
ASPH	ASPHALT
AUTO	AUTOMATIC
B	
BIT	BITUMINOUS
BD	BOARD
B/L	BUILDING LINE
BLDG	BUILDING
BLK	BLOCK
BM	BEAM
B.M.	BENCH MARK
BOT	BOTTOM
BP	BASE PLATE
BRG	BEARING
BRIDG	BRIDGING
BRKT	BRACKET
BS	BOTH SIDES
BTWN	BETWEEN
BVL	BEVELED
C	
C	CHANNEL
CAB	CABINET
CF	CUBIC FEET
CFM	CUBIC FEET PER MINUTE
CG	CORNER GUARD
CIR	CIRCLE
CJ	CONTROL JOINT
CL	CENTER LINE
CLG	CEILING
CLR	CLEAR
CMU	CONCRETE MASONRY UNIT
CO	CLEAN OUT
COL	COLUMN
CONC	CONCRETE
COND	CONDENSER
CONST	CONSTRUCTION
CJ	CONSTRUCTION JOINT
CONT	CONTINUOUS
CPT	CARPET
CTD	COATED
CTR	CENTER
CTRD	CENTERED
CU	CONDENSING UNIT
CU. IN.	CUBIC INCH
CW	COLD WATER
CT	CERAMIC TILE

D	
DBL	DOUBLE
DEG	DEGREE
DEPT	DEPARTMENT
DIA OR D	DIAMETER
DIM	DIMENSION
DIV	DIVISION
DN	DOWN
DR	DRAIN
DS	DOWNSPOUT
DWG	DRAWING
E	
E	EAST
EA	EACH
EC	ELECTRICAL CONTRACTOR
EF	EXHAUST FAN
EL	ELEVATION (HT)
ELEC	ELECTRIC OR ELECTRICAL
ELEV	ELEVATION (GEOM. PROJ)
ENGR	ENGINEER
ENT	ENTRANCE
EOS	EDGE OF SLAB
EQ OR =	EQUAL
EQUIP	EQUIPMENT
EW	EACH WAY
EWC	ELECTRIC WATER COOLER
EXH	EXHAUST
EXIST	EXISTING
EXP	EXPANSION
EJ	EXPANSION JOINT
EXT	EXTERIOR
F	
F TO F	FACE TO FACE
FA	FIRE ALARM
FAB	FABRICATE
FD	FLOOD DRAIN
FDN	FOUNDATION
FE	FIRE EXTINGUISHER
FEC	FIRE EXTINGUISHER CABINET
FF	FINISH FLOOR
FHC	FIRE HOSE CABINET
FIG	FIGURE
FIN	FINISH
FLR	FLOOR
FLUOR	FLOURESCENT
FM	FACTORY MUTUAL
FOM	FACE OF MASONRY
FOS	FACE OF STUD
FRT	FIRE RETARDANT
FS	FAR SIDE
FT	FOOT/FEET
FTG	FOOTING
FUR	FURNISH
FUT	FUTURE
FW	FIREWALL
G	
GA	GAGE/GAUGE
GALV	GALVANIZED
GC	GENERAL CONTRACTOR
GEN	GENERAL
GFI	GROUND FAULT INTERRUPT
GL	GLASS
GND	GROUND
GR	GRADE
GWB	GYPSUM WALL BOARD
GYP	GYPSUM

H-I	
HB	HOSE BIBB
HC	HOLLOW CORE
HDW	HARDWARE
HORZ	HORIZONTAL
HP	HIGH POINT
HR	HOUR
HT OR H	HEIGHT/HIGH
HW	HOT WATER
IN	INCH
INCL	INCLUDED
INSUL	INSULATION
INV	INVERT
I.B.O.	INSTALLED BY OWNER
K-L	
KIT	KITCHEN
LAM	LAMINATE
LAV	LAVATORY
LF	LINEAR FEET
LH	LEFT HAND
LKR	LOCKER
LVR	LOUVER
M	
MATL	MATERIAL
MAX	MAXIMUM
MDP	MAIN DISTRIBUTION PANEL
MECH	MECHANICAL
MEZZ	MEZZANINE
MFR	MANUFACTURER
MH	MANHOLE
MIN	MINIMUM
MIR	MIRROR
MISC	MISCELLANEOUS
ML	MATCH LINE
MO	MASONRY OPENING
MTD	MOUNTED
MTG	MOUNTING
MTL	METAL
N	
N	NORTH
N/A	NOT APPLICABLE
NIC	NOT IN CONTRACT
N/L	NIGHT LIGHT
NO	NUMBER
NOM	NOMINAL
NS	NEAR SIDE
NTS	NOT TO SCALE
O	
OA	OVERALL
OC	ON CENTER
OD	OUTSIDE DIAMETER
OFF	OFFICE
OPNG	OPENING
OPP	OPPOSITE
OVHD	OVERHEAD
OF	OVERFLOW DRAIN
P	
PART	PARTITION
PFN	PRE-FINISHED
PL	PLATE
PLMB	PLUMBING
PLYWD	PLYWOOD
PNL	PANEL
PR	PAIR
PRE FAB	PRE-FABRICATED
PSF	POUNDS/SQUARE FEET
PSI	POUNDS/SQUARE INCH
PT	PAINT
PVC	POLY VINYL CHLORIDE
PVMT	PAVEMENT

R	
R	RISER
RCP	REFLECTED CEILING PLAN
RD	ROOF DRAIN
RECPT	RECEPTACLE
REINF	REINFORCE
REQD	REQUIRED
REV	REVISION
RH	RIGHT HAND
RL	RAIN LEADER
RM	ROOM
RO	ROUGH OPENING
RTU	ROOF UNIT
S	
S	SOUTH
SAN	SANITARY
SF	SUPPLY FAN
SHT	SHEET
SIM	SIMILAR
SL	SLOPE
SM	SHEET METAL
SPEC	SPECIFICATION
SQ	SQUARE
SS	SERVICE SINK
SSTL	STAINLESS STEEL
ST	STREET
STC	SOUND TRANSMISSION CLASS
STD	STANDARD
STL	STEEL
STR	STRAIGHT
STRUC	STRUCTURAL, STRUCTURE
SUSP	SUSPENDED
SYM	SYMMETRICAL
SYS	SYSTEM
T	
T&B	TOP AND BOTTOM
TEL	TELEPHONE
TEMP	TEMPERATURE
TERR	TERRAZZO
THRU	THROUGH
THK	THICK
TOC	TOP OF CURB
TOF	TOP OF FOOTING
TOJ	TOP OF JOIST
TOP	TOP OF PIER
TOS	TOP OF STEEL OR SLAB
TRANSF	TRANSFORMER
TRD OR T	TREAD
TYP	TYPICAL
U	
UL	UNDERWRITER'S LABORATORY
UNF	UNFINISHED
UON	UNLESS OTHERWISE NOTED
V	
V	VOLT
VAV	VARIABLE AIR UNIT
VCT	VINYL COMPOSITION TILE
VERT	VERTICAL
VEST	VESTIBULE
VTR	VENT THROUGH ROOF
VOL	VOLUME
VWC	VINYL WALL COVERING
W	
W	WEST
WDTH	WIDTH
W/	WITH
W/O	WITHOUT
WC	WATER CLOSET
WD	WOOD
WH	WATER HEATER
WP	WATERPROOF(ING)
WSCT	WAINSCOT
WT	WEIGHT

SYMBOL LEGEND

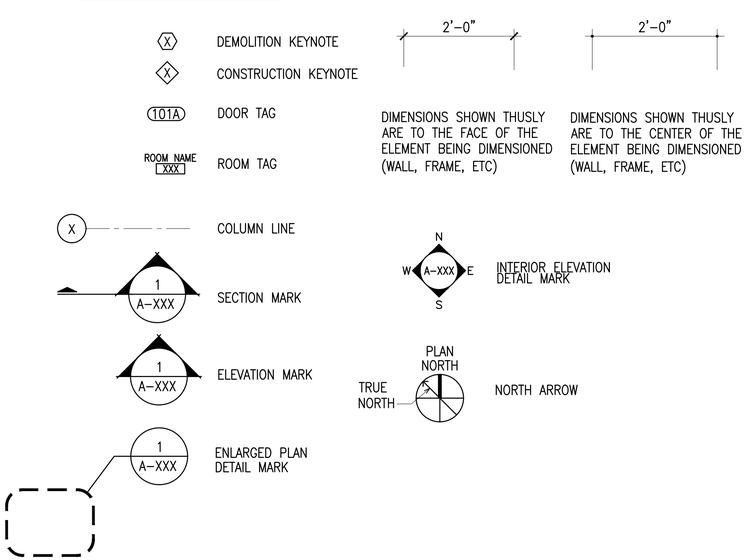

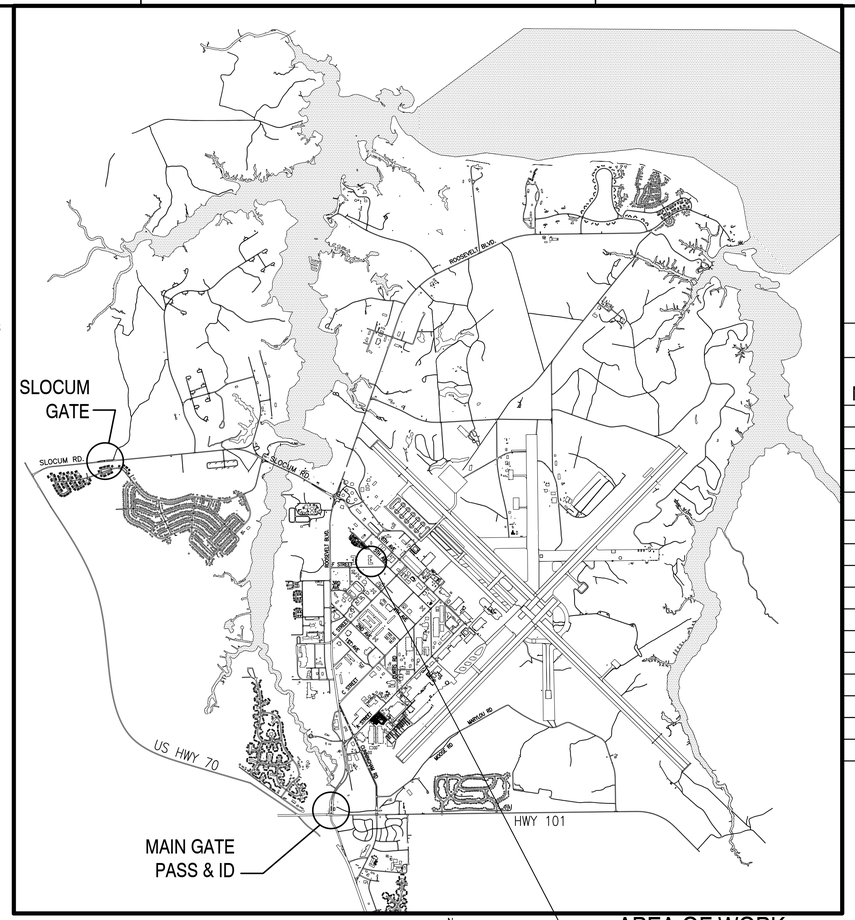

CHERRY POINT AIR STATION MAP

NOT TO SCALE

AREA OF WORK BUILDING 3673

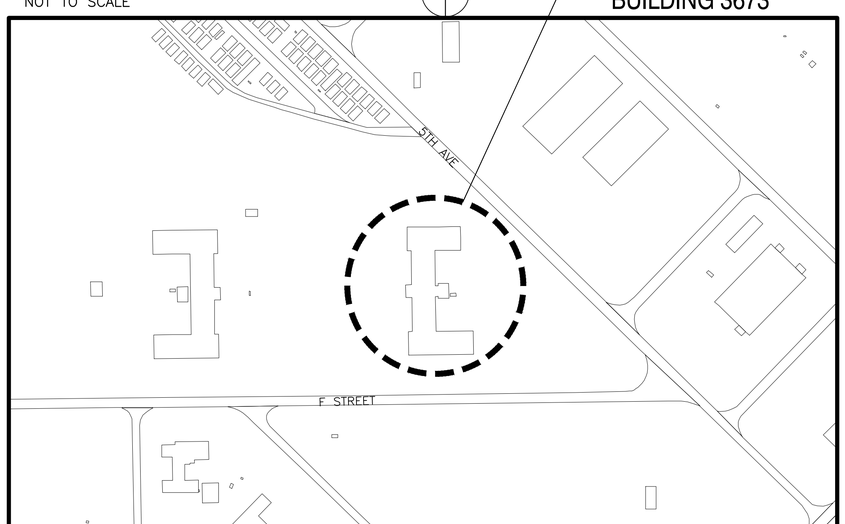

VICINITY MAP

NOT TO SCALE

RENOVATE 1ST FLOOR ROOMS STATION, B3673

MARINE CORPS AIR STATION CHERRY POINT, NORTH CAROLINA

PW WO.# 7406703

INDEX OF DRAWINGS

SHEET NUMBER	NAVFAC NUMBER	PLATE NUMBER	SHEET TITLE
1	12912777	G-001	COVER SHEET
2	12912778	A-101	OVERALL 1ST FLOOR PLAN
3	12912779	A-401	ENLARGED FLOOR PLANS
4	12912780	A-402	ENLARGED FLOOR PLANS
5	12912781	A-403	ENLARGED FLOOR PLANS
6	12912782	A-601	DOOR SCHEDULES, ELEVATIONS AND DETAILS
7	12912783	A-602	ROOM FINISH SCHEDULES, CASEWORK ELEVATION & SECTIONS
REFERENCE DRAWINGS			
1	12561583	P-105	ENLARGED NEW WORK PLANS, SCHEDULE & NOTES
2	12561596	M-106	ENLARGED NEW WORK PLANS & NOTES
3	12561597	M-501	SCHEDULES AND DETAILS
4	12561632	FS-001	LEGEND, NOTES AND ABBREVIATIONS
5	12561633	FS-002	FIRE PROTECTION RISER DIAGRAM
6	12561634	FS-101	FIRE SPRINKLER FIRST FLOOR PLAN A
7	12561635	FS-102	FIRE SPRINKLER FIRST FLOOR PLAN B

SYM	DESCRIPTION	DATE	APPR

DESIGNED & ENGINEERED BY: FACILITIES ENGINEERING

FINAL

02.14.2025

SEAL

APPROVED

ACTIVITY – SATISFACTORY TO

DATE

PERRY.HEATHER.MELYNN.1388599614 Digitally signed by PERRY.HEATHER.MELYNN.1388599614 Date: 2026.06.17 09:18:23 -04'00'

FOR EFD FOR COMMANDER NAVFAC

DATE

A/E		EFD
	DESIGN	SRP
	DRAWN	SRP
	REVIEW	HMP
	QC	
	CHIEF ARCH./ ENGR.	
	PROJECT MANAGER	SRP
	FIRE PROTECTION	XXX
	BRANCH MANAGER	#####
	DESIGN DIRECTOR	LPF

DEPARTMENT OF THE NAVY
NAVAL FACILITIES ENGINEERING COMMAND
MARINE CORPS AIR STATION, CHERRY POINT, N.C.
MCAS CHERRY POINT HAVELOCK, NC
RENOVATE 1ST FLOOR ROOMS STATION, B3673
COVER SHEET

CODE ID. NO. 80091 SIZE D

SCALE: AS NOTED

FED NO.

STA. PROJ. NO. 7406703

SPEC. NO.

CONSTR. CONTR. NO. #####-##-#-####

NAVFAC DRAWING NO. 12912777

SHEET 1 OF 7

G-001

DRAWFORM REVISION: 07 AUG 2018

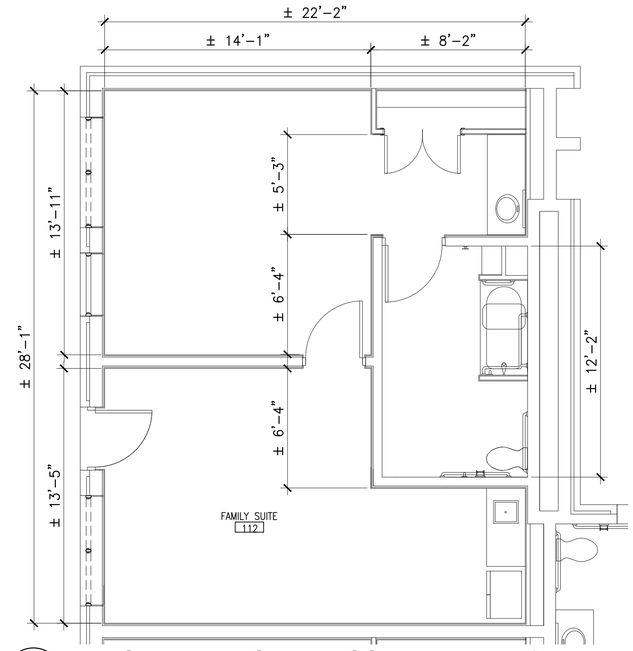

C1 TYPICAL FAMILY SUITE FLOOR PLAN
SCALE: 1/4"=1'-0"

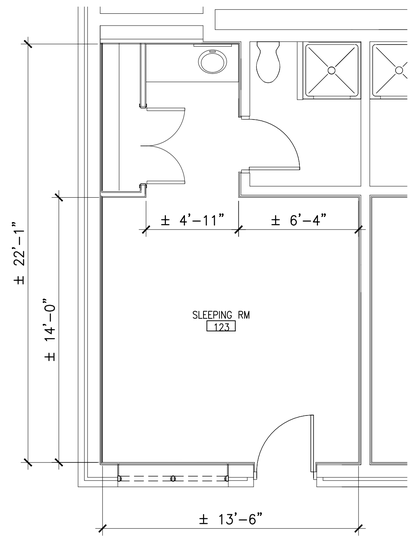

C2 TYPICAL SLEEPING ROOM FLOOR PLAN
SCALE: 1/4"=1'-0"

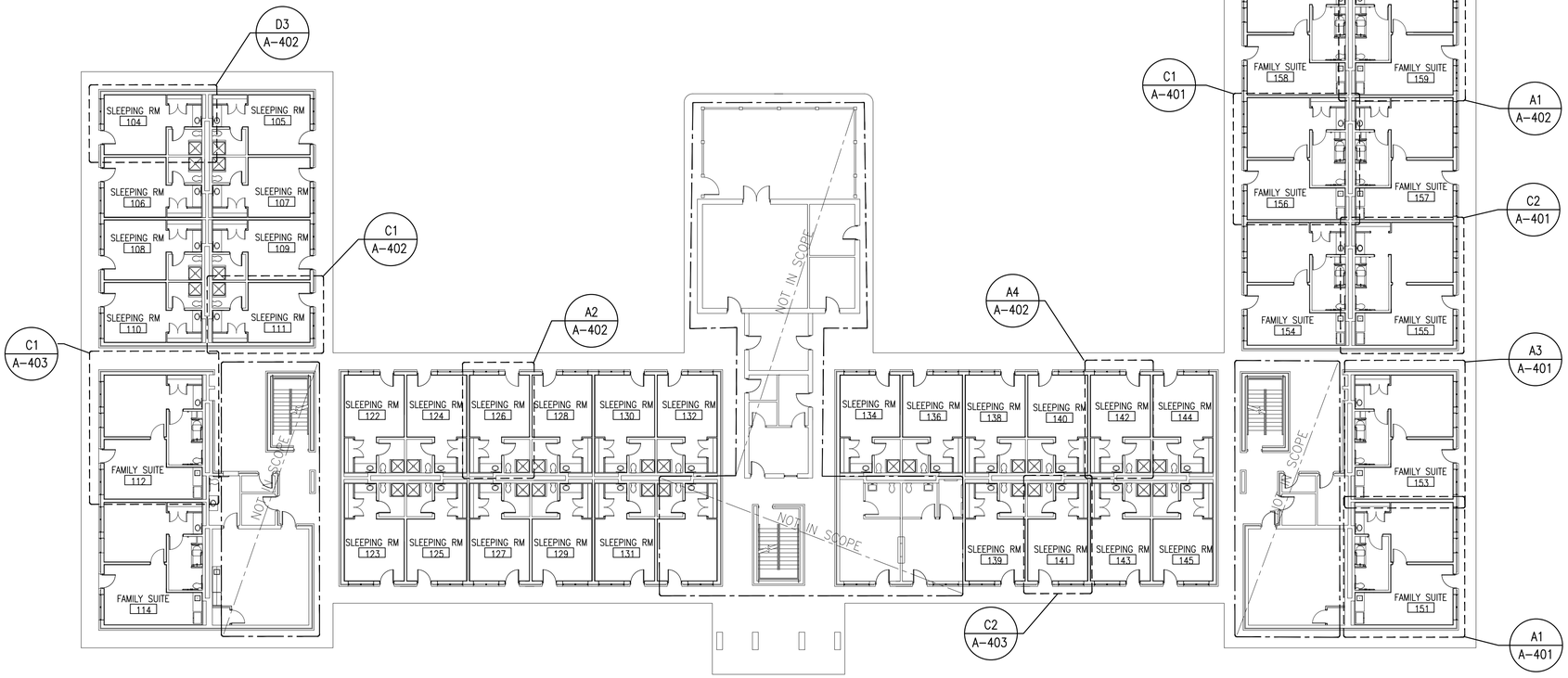

A1 OVERALL 1ST FLOOR PLAN
SCALE: 1/16"=1'-0"

GENERAL NOTES – DEMOLITION

1. ASBESTOS MATERIAL AND LEAD–BASED PAINT TESTING HAS BEEN PERFORMED ON EXISTING AREAS OF WORK. SEE THE SPECIFICATION FOR ASBESTOS MATERIAL AND LEAD–BASED PAINT REPORT RESULTS. CONTRACTOR SHALL BE RESPONSIBLE FOR THE APPROPRIATE STANDARD OF CARE REGARDING THE HANDLING OF ANY MATERIALS FOUND TO BE HAZARDOUS AND THE PROTECTION OF PERSONS FROM EXPOSURE.
2. CLEAN AND PREPARE ALL EXISTING PREVIOUSLY PAINTED INTERIOR SURFACES, WITHIN THE LIMITS OF CONSTRUCTION, FOR NEW PAINT FINISHES.
4. EXISTING DOOR FRAMES THAT ARE TO REMAIN ARE STEEL. CLEAN AND PREPARE (BOTH SIDES) OF ALL FRAMES WITHIN PROJECT LIMITS FOR NEW PAINT FINISHES. CONTRACTOR SHALL WIRE BRUSH, CLEAN, AND REMOVE ALL RUST FROM EXISTING STEEL DOOR FRAMES AT SLEEPING ROOM BATHROOMS AND CLOSETS AS DIRECTING BY THE CONTRACTING OFFICER. EXISTING STEEL DOOR FRAMES SHALL BE PREPARED AND MODIFIED FOR NEW HARDWARE. ALL EXISTING STEEL DOOR FRAMES WILL NEED TO BE REPAIRED. TYPICAL REPAIR LOCATIONS WILL BE WHERE HARDWARE ITEMS ARE BEING REMOVED AND NOT REINSTALLED OR DIFFERENT INSTALLATIONS OF SIMILAR HARDWARE. PROVIDE COMPOUND FILLER FOR GALVANIZED METAL REPAIR AND SAND SO THAT REPAIRED AREA IS SMOOTH AND MATCHES THE PLANE OF THE ADJACENT AREA.
5. EXISTING WINDOWS ARE ALUMINUM AND ARE MOUNTED IN STEEL FRAMES.
6. EXISTING INTERIOR WALLS ARE PAINTED CONCRETE MASONRY OR CONCRETE MASONRY WITH PAINTED CEMENTITIOUS COATING. FIELD VERIFY.

GENERAL NOTES – CONSTRUCTION

1. SEE SYMBOL LEGEND ON SHEET G–001.
2. SEE FINISH SCHEDULE ON SHEET A–403 FOR ALL MATERIAL AND COLOR SELECTIONS
3. ALL MATERIALS ARE TO BE CONSIDERED NEW UNLESS SPECIFICALLY REFERRED TO AS "EXISTING".
4. DOORS INDICATED WITH A NUMBER IN THE CONSTRUCTION PLAN SHALL BE NEW DOORS AND NEW FRAMES UNLESS OTHERWISE NOTED. REFER TO THE DOOR SCHEDULE SHEET A–601 FOR NEW DOOR DESCRIPTIONS.

1/4" = 1'-0" 0 5' 10'
1/16" = 1'-0" 0 10' 20' 40'

SYM	DESCRIPTION	DATE	APPR

DESIGNED & ENGINEERED BY: FACILITIES ENGINEERING

FINAL
02.14.2025
SEAL

APPROVED
ACTIVITY – SATISFACTORY TO
DATE
APPROVED
FOR EFD FOR COMMANDER NAVFAC
DATE

A/E	EFD
DESIGN	SRP
DRAWN	SRP
REVIEW	HMP
QC	
CHIEF ARCH/ ENGR.	
PROJECT MANAGER	SRP
FIRE PROTECTION	XXX
BRANCH MANAGER	#####
DESIGN DIRECTOR	LPF

DEPARTMENT OF THE NAVY
NAVAL FACILITIES ENGINEERING COMMAND
MARINE CORPS AIR STATION, CHERRY POINT, N.C.
MCAS CHERRY POINT
HAVELOCK, NC
RENOVATE 1ST FLOOR ROOMS
STATION, B3673
OVERALL 1ST FLOOR PLAN

CODE ID. NO. 80091 SIZE D
SCALE: AS NOTED
FED NO.
STA. PROJ. NO. 7406703
SPEC. NO.
CONSTR. CONTR. NO. ##### – ## – # – ####
NAVFAC DRAWING NO. 12912778
SHEET 2 OF 7
A-101

DRAWFORM REVISION: 07 AUG 2018

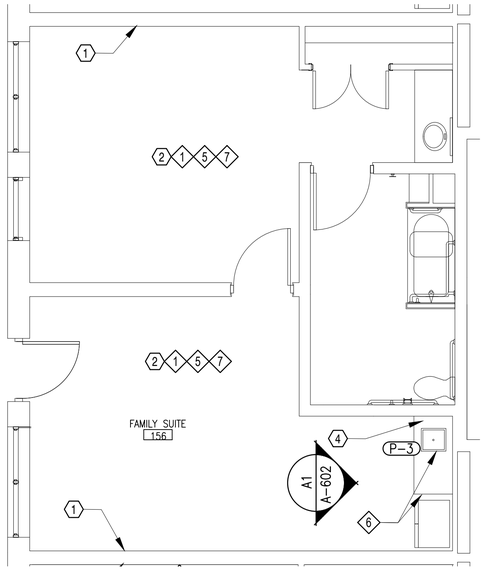

C1 PLAN - FAMILY SUITES 156, 158
SCALE: 1/4"=1'-0"

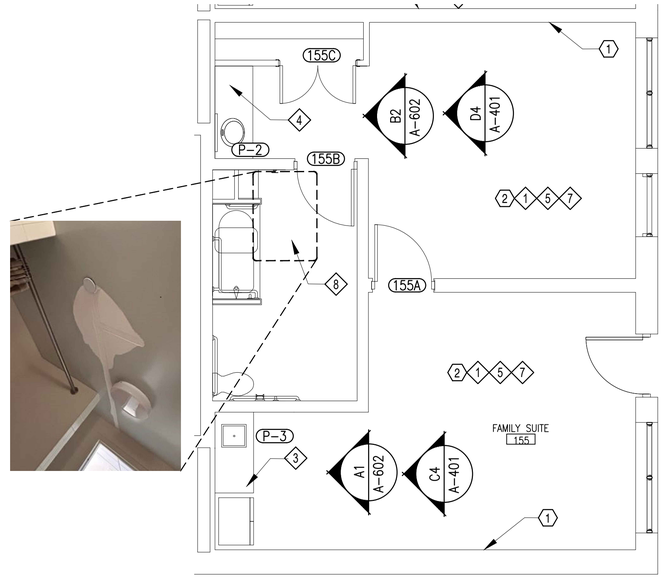

C2 PLAN - FAMILY SUITE 155
SCALE: 1/4"=1'-0"

D4 EXISTING VANITY BACKWALL - FAMILY SUITE 155
SCALE: N/A

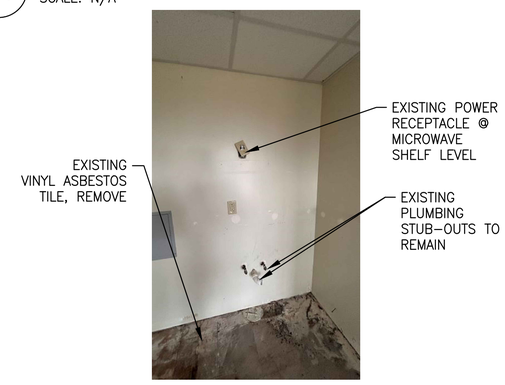

C4 EXTG. KITCHEN BACKWALL - FAMILY SUITE 155
SCALE: N/A

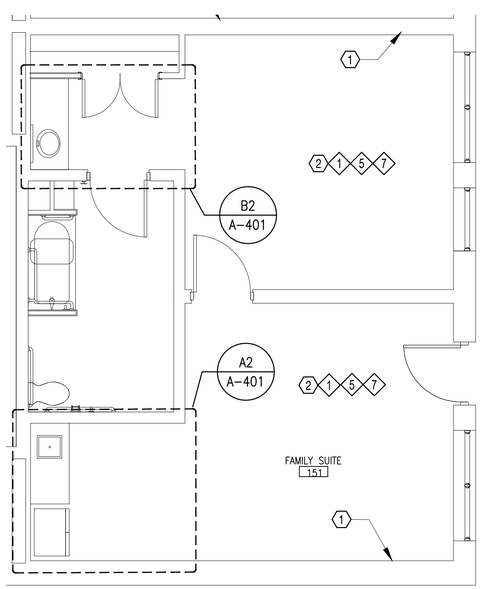

A1 PLAN - FAMILY SUITE 151
SCALE: 1/4"=1'-0"

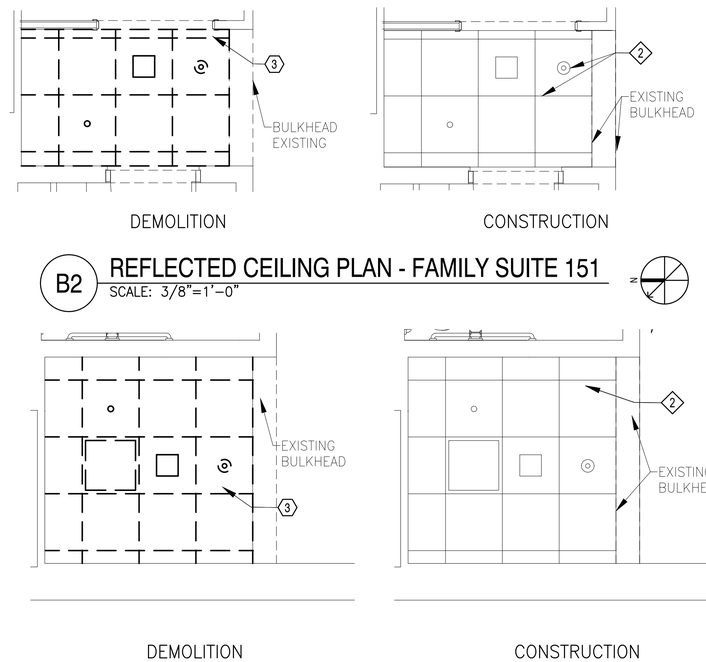

B2 REFLECTED CEILING PLAN - FAMILY SUITE 151
SCALE: 3/8"=1'-0"

A2 REFLECTED CEILING PLAN - FAMILY SUITE 151
SCALE: 3/8"=1'-0"

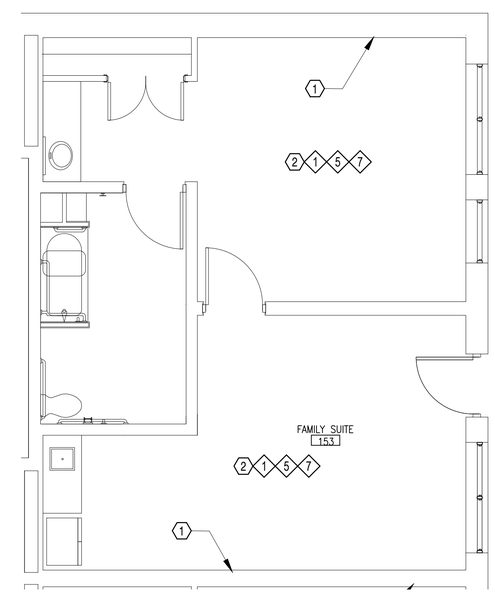

A3 PLAN - FAMILY SUITES 153, 154, 157
SCALE: 1/4"=1'-0"

GENERAL DEMOLITION NOTES

1. ASBESTOS MATERIAL AND LEAD-BASED PAINT TESTING HAS BEEN PERFORMED ON EXISTING AREAS OF WORK. SEE THE SPECIFICATION FOR ASBESTOS MATERIAL AND LEAD-BASED PAINT REPORT RESULTS. CONTRACTOR SHALL BE RESPONSIBLE FOR THE APPROPRIATE STANDARD OF CARE REGARDING THE HANDLING OF ANY MATERIALS FOUND TO BE HAZARDOUS AND THE PROTECTION OF PERSONS FROM EXPOSURE.
2. CLEAN AND PREPARE EXISTING PAINTED INTERIOR WALL SURFACES, WITHIN THE LIMITS OF CONSTRUCTION, FOR NEW PAINT FINISHES.
3. EXISTING INTERIOR WALLS ARE PAINTED CONCRETE MASONRY OR CONCRETE MASONRY WITH PAINTED CEMENTITIOUS COATING. FIELD VERIFY.
4. REFER TO PLAN C1/A-101 FOR FAMILY SUITE DIMENSIONS.
5. REFER TO PLAN C2/A-101 FOR SLEEPING ROOM DIMENSIONS.

GENERAL CONSTRUCTION NOTES

1. SEE SYMBOL LEGEND ON SHEET G-001.
2. SEE FINISH SCHEDULE ON SHEET A-602 FOR MATERIAL AND COLOR SELECTIONS.
3. ALL MATERIALS ARE TO BE CONSIDERED NEW UNLESS SPECIFICALLY REFERRED TO AS "EXISTING".
4. DOORS INDICATED WITH A NUMBER IN THE CONSTRUCTION PLAN SHALL BE NEW DOORS IN EXISTING FRAMES UNLESS OTHERWISE NOTED. REFER TO SHEET A-601 FOR NEW DOOR AND FRAME SCHEDULE.
5. EXISTING CEILING IN LIVING AND SLEEPING AREAS IS +/- 8'-8" ABOVE FINISH FLOOR UNLESS OTHERWISE NOTED.

KEYNOTES – DEMOLITION

APPLIES TO THIS SHEET ONLY

1. REMOVE EXISTING WALL MOUNTED BRACKETS, 4 PER LIVING AREA, AND EXISTING WALL MOUNTED LINEAR ANGLE SUPPORTS, 3 PER SLEEPING AREA. PREPARE WALL FOR PAINT.
2. REMOVE EXISTING WALL BASE AND RESILIENT FLOORING DOWN TO CONCRETE SLAB ON GRADE. PREPARE CONCRETE SLAB FOR NEW FLOOR FINISH.
3. REMOVE EXISTING ACOUSTICAL CEILING TILES AT +/- 7'-7" ABOVE FINISH FLOOR. PROTECT CONCEALED SPRINKLER HEAD, SMOKE/CO DETECTOR, AND LIGHTING TO REMAIN. REMOVE HVAC COMPONENTS THAT DO NOT WORK. PROTECT SUPPLY CEILING DIFFUSER IF REUSABLE.
4. REMOVE EXISTING BASE CASEWORK, COUNTERTOP AND SINK.

KEYNOTES – CONSTRUCTION

APPLIES TO THIS SHEET ONLY

1. PROVIDE LUXURY VINYL PLANK FLOORING.
2. PROVIDE ACOUSTICAL CEILING TILES. PROVIDE NEW HVAC SYSTEM COMPONENTS INCLUDING DIFFUSERS IF NEEDED. REFER AS-BUILT NAVFAC SHEET NOS. 12561596, 12561597.
3. PROVIDE UPPER AND BASE CASEWORK, SINK, COUNTERTOP.
4. PROVIDE LAVATORY COUNTERTOP AND LAVATORY. CONNECT SINK TO EXISTING ROUGH-IN. PROTECT EXISTING MIRROR.
5. PROVIDE WALL BASE AND PAINT ON WALLS.
6. PROVIDE BASE CASEWORK, SINK, COUNTERTOP. CONNECT SINK TO EXISTING ROUGH-IN.
7. PROVIDE DUPLEX RECEPTACLE COVERS, 11 PER SUITE; DUPLEX LIGHTING SWITCHES, 2 PER SUITE; SINGLE LIGHTING SWITCH, 3 PER SUITE; DATA COVERS, 2 PER SUITE; THERMOSTATS, 2 PER SUITE.
8. PATCH AND PAINT +/- 6 SQUARE FEET OF EXISTING SUSPENDED MOISTURE/MOLD RESISTANT GYPSUM BOARD CEILING.

3/8" = 1'-0" 0 1' 5'
1/4" = 1'-0" 0 5' 10'

SYM	DESCRIPTION	DATE	APPR

DESIGNED & ENGINEERED BY: FACILITIES ENGINEERING

FINAL
02.14.2025

SEAL

APPROVED
ACTIVITY – SATISFACTORY TO
DATE
APPROVED
FOR EFD FOR COMMANDER NAVFAC
DATE

A/E	EFD
DESIGN	SRP
DRAWN	SRP
REVIEW	HMP
QC	
CHIEF ARCH./ ENGR.	
PROJECT MANAGER	SRP
FIRE PROTECTION	XXX
BRANCH MANAGER	#####
DESIGN DIRECTOR	LPF

DEPARTMENT OF THE NAVY
NAVAL FACILITIES ENGINEERING COMMAND
MARINE CORPS AIR STATION, CHERRY POINT, N.C.
MCAS CHERRY POINT
HAVELOCK, NC
RENOVATE 1ST FLOOR ROOMS
STATION, B3673
ENLARGED FLOOR PLANS

CODE ID. NO. 80091 SIZE D
SCALE: AS NOTED
FED NO.
STA. PROJ. NO. 7406703
SPEC. NO.
CONSTR. CONTR. NO. ##### -# -# -#####
NAVFAC DRAWING NO. 12912779
SHEET 3 OF 7

A-401

DRAWFORM REVISION: 07 AUG 2018

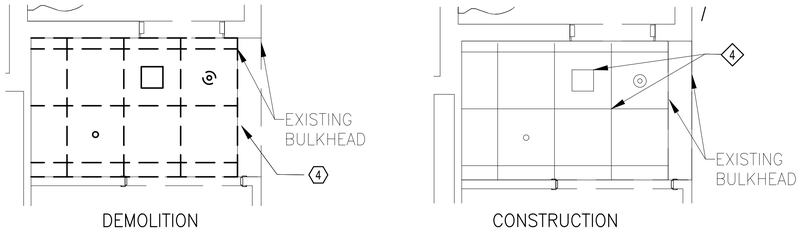

D1 REFLECTED CEILING PLANS - SLEEPING ROOMS 106, 109, 111
SCALE: 3/8"=1'-0"

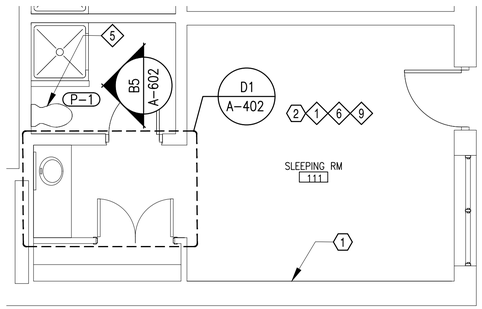

C1 PLAN - SLEEPING ROOMS 106, 109, 111
SCALE: 1/4"=1'-0"

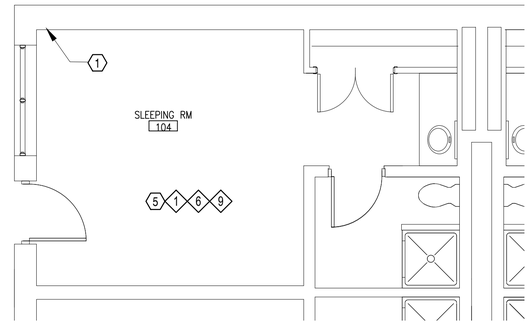

D3 PLAN - SLEEPING ROOM 104
SCALE: 1/4"=1'-0"

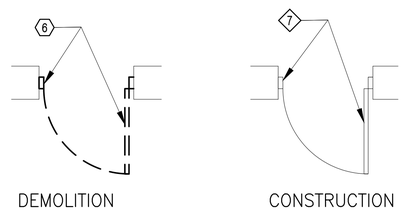

B2 ENLARGED PLAN - ENTRY DOOR
SCALE: 3/8"=1'-0"

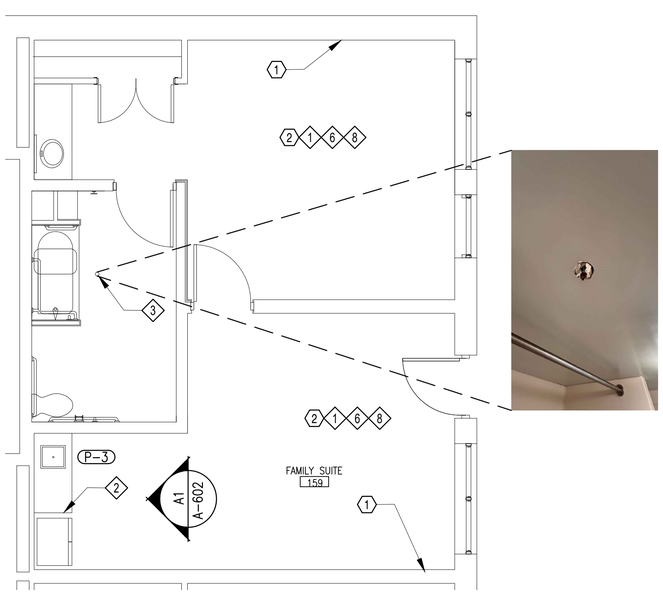

A1 PLAN - FAMILY SUITE 114, 159
SCALE: 1/4"=1'-0"

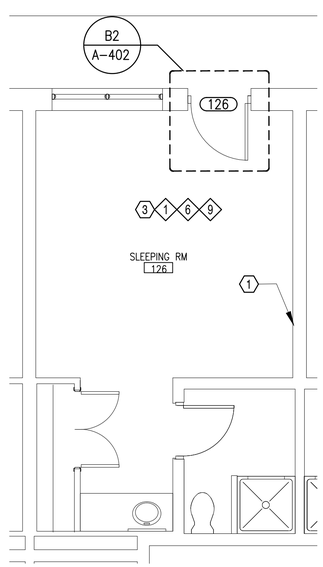

A2 PLAN - SLEEPING ROOM 126
SCALE: 1/4"=1'-0"

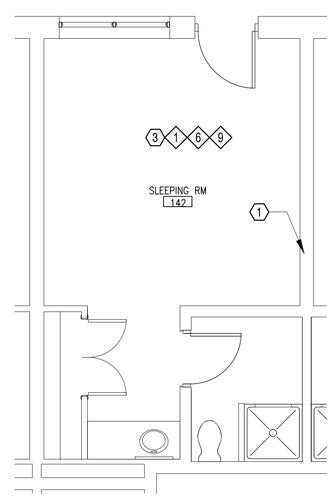

A4 PLAN - SLEEPING ROOMS 142, 144
SCALE: 1/4"=1'-0"

1/4" = 1'-0" 0 5' 10'

GENERAL NOTES – DEMOLITION

1. ASBESTOS MATERIAL AND LEAD-BASED PAINT TESTING HAS BEEN PERFORMED ON EXISTING AREAS OF WORK. SEE THE SPECIFICATION FOR ASBESTOS MATERIAL AND LEAD-BASED PAINT REPORT RESULTS. CONTRACTOR SHALL BE RESPONSIBLE FOR THE APPROPRIATE STANDARD OF CARE REGARDING THE HANDLING OF ANY MATERIALS FOUND TO BE HAZARDOUS AND THE PROTECTION OF PERSONS FROM EXPOSURE.
2. CLEAN AND PREPARE EXISTING PAINTED INTERIOR WALL SURFACES, WITHIN THE LIMITS OF CONSTRUCTION, FOR NEW PAINT FINISHES.
3. EXISTING INTERIOR WALLS ARE PAINTED CONCRETE MASONRY OR CONCRETE MASONRY WITH PAINTED CEMENTITIOUS COATING. FIELD VERIFY.
4. REFER TO PLAN C1/A-101 FOR FAMILY SUITE DIMENSIONS.
5. REFER TO PLAN C2/A-101 FOR SLEEPING ROOM DIMENSIONS.

GENERAL NOTES – CONSTRUCTION

1. SEE SYMBOL LEGEND ON SHEET G-001.
2. SEE FINISH SCHEDULE ON SHEET A-602 FOR MATERIAL AND COLOR SELECTIONS
3. ALL MATERIALS ARE TO BE CONSIDERED NEW UNLESS SPECIFICALLY REFERRED TO AS "EXISTING".
4. DOORS INDICATED WITH A NUMBER IN THE CONSTRUCTION PLAN SHALL BE NEW DOORS IN EXISTING FRAMES UNLESS OTHERWISE NOTED. REFER TO SHEET A-601 FOR NEW DOOR AND FRAME SCHEDULE.
5. EXISTING CEILING IN LIVING AND SLEEPING AREAS IS +/- 8'-8" ABOVE FINISH FLOOR UNLESS OTHERWISE NOTED.

KEYNOTES – DEMOLITION

APPLIES TO THIS SHEET ONLY

1. REMOVE EXISTING WALL MOUNTED BRACKETS, 4 PER LIVING AREA, AND EXISTING WALL MOUNTED LINEAR ANGLE SUPPORTS, 3 PER SLEEPING AREA. PREPARE WALL FOR PAINT.
2. REMOVE EXISTING WALL BASE AND RESILIENT FLOORING DOWN TO CONCRETE SLAB ON GRADE. PREPARE EXISTING CONCRETE SLAB FOR NEW FLOOR FINISH.
3. REMOVE EXISTING WALL BASE AND CARPET AND RESILIENT FLOORING BELOW CARPET, DOWN TO CONCRETE SLAB ON GRADE. PREPARE EXISTING CONCRETE SLAB FOR NEW FLOOR FINISH.
4. REMOVE EXISTING ACOUSTICAL CEILING TILES AT +/- 7'-7" ABOVE FINISH FLOOR. PROTECT CONCEALED SPRINKLER HEAD, SMOKE/CO DETECTOR, SUPPLY AIR DIFFUSER AND LIGHTING TO REMAIN.
5. REMOVE WALL BASE AND EXISTING SNAP-ON LVP, CARPET AND RESILIENT FLOORING DOWN TO CONCRETE SLAB ON GRADE. PREPARE EXISTING CONCRETE SLAB FOR NEW FLOOR FINISH.
6. REMOVE EXISTING HOLLOW METAL DOOR AND STEEL DOOR FRAME.

KEYNOTES – CONSTRUCTION

APPLIES TO THIS SHEET ONLY

1. PROVIDE LUXURY VINYL PLANK FLOORING.
2. PROVIDE BASE CASEWORK, SINK, COUNTEROP. CONNECT SINK TO EXISTING ROUGH-INS.
3. PROVIDE CONCEALED SPRINKLER HEAD COVER PLATE IN ROOM 159 ONLY. REFER AS-BUILT NAVFAC SHEET NOS. 12561632, 12561634, 12561635.
4. PROVIDE ACOUSTICAL CEILING TILES.
5. PROVIDE WATER CLOSET IN ROOM 111 ONLY.
6. PROVIDE WALL BASE AND PAINT ON WALLS.
7. PROVIDE DOOR AND DOOR FRAME. SEE SCHEDULE ON SHEET A-601.
8. PROVIDE DUPLEX RECEPTACLE COVERS, 11 PER SUITE, DUOPLEX LIGHTING SWITCHES, 2 PER SUITE, SINGLE LIGHTING SWITCH, 3 PER SUITE, DATA COVERS, 2 PER SUITE, THERMOSTATS, 2 PER SUITE.
9. PROVIDE DUPLEX RECEPTACLE COVERS, 6 PER ROOM, SINGLE LIGHTING SWITCH, 2 PER ROOM, DATA COVER, 1 PER ROOM, THERMOSTAT, 1 PER ROOM.

SYM	DESCRIPTION	DATE	APPR

DESIGNED & ENGINEERED BY: FACILITIES ENGINEERING

FINAL
02.14.2025
SEAL

APPROVED
ACTIVITY – SATISFACTORY TO
DATE
APPROVED
FOR EFD FOR COMMANDER NAVFAC
DATE

A/E	EFD
DESIGN	SRP
DRAWN	SRP
REVIEW	HMP
QC	
CHIEF ARCH/ ENGR.	
PROJECT MANAGER	SRP
FIRE PROTECTION	XXX
BRANCH MANAGER	#####
DESIGN DIRECTOR	LPF

DEPARTMENT OF THE NAVY
NAVAL FACILITIES ENGINEERING COMMAND
MARINE CORPS AIR STATION, CHERRY POINT, N.C.
MCAS CHERRY POINT HAVELOCK, NC
RENOVATE 1ST FLOOR ROOMS
STATION, B3673
ENLARGED FLOOR PLANS

CODE ID. NO. 80091 SIZE D
SCALE: AS NOTED
FED NO.
STA. PROJ. NO. 7406703
SPEC. NO.
CONSTR. CONTR. NO.
- ## - # -
NAVFAC DRAWING NO.
12912780
SHEET 4 OF 7
A-402

DRAWFORM REVISION: 07 AUG 2018

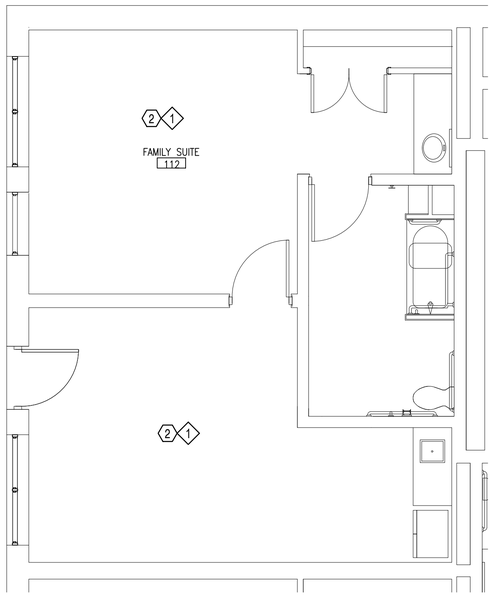

C1 PLAN - FAMILY SUITE 112
SCALE: 1/4"=1'-0"

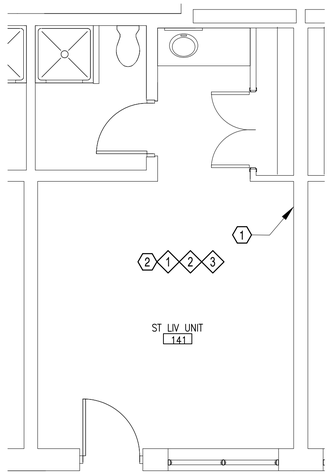

C2 PLAN - SLEEPING ROOM
SCALE: 1/4"=1'-0"

NOTE: APPLIES TO ROOMS 105, 107, 108, 110, 122, 123, 124, 125, 127, 128, 129, 130, 131, 132, 134, 136, 138, 139, 140, 141, 143, 145

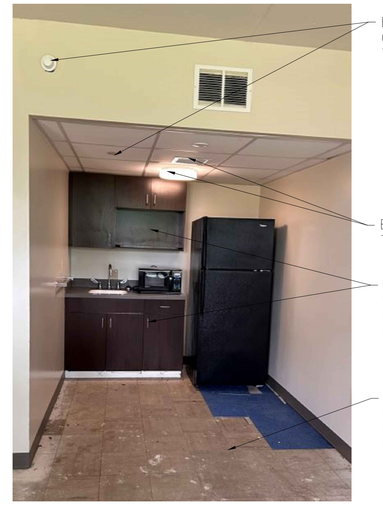

C3 KITCHEN
SCALE: N/A

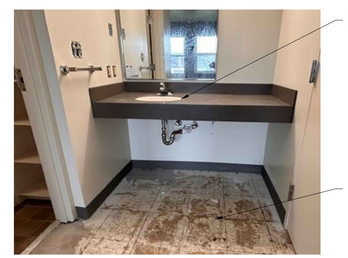

B3 VANITY
SCALE: N/A

GENERAL NOTES – DEMOLITION

1. ASBESTOS MATERIAL AND LEAD–BASED PAINT TESTING HAS BEEN PERFORMED ON EXISTING AREAS OF WORK. SEE THE SPECIFICATION FOR ASBESTOS MATERIAL AND LEAD–BASED PAINT REPORT RESULTS. CONTRACTOR SHALL BE RESPONSIBLE FOR THE APPROPRIATE STANDARD OF CARE REGARDING THE HANDLING OF ANY MATERIALS FOUND TO BE HAZARDOUS AND THE PROTECTION OF PERSONS FROM EXPOSURE.
2. CLEAN AND PREPARE EXISTING PAINTED INTERIOR WALL SURFACES, WITHIN THE LIMITS OF CONSTRUCTION, FOR NEW PAINT FINISHES.
3. EXISTING INTERIOR WALLS ARE PAINTED CONCRETE MASONRY OR CONCRETE MASONRY WITH PAINTED CEMENTITIOUS COATING. FIELD VERIFY.
4. REFER TO PLAN C1/A–101 FOR FAMILY SUITE DIMENSIONS.
5. REFER TO PLAN C2/A–101 FOR SLEEPING ROOM DIMENSIONS.

GENERAL NOTES – CONSTRUCTION

1. SEE SYMBOL LEGEND ON SHEET G–001.
2. SEE FINISH SCHEDULE ON SHEET A–602 FOR MATERIAL AND COLOR SELECTIONS.
3. ALL MATERIALS ARE TO BE CONSIDERED NEW UNLESS SPECIFICALLY REFERRED TO AS "EXISTING".
4. DOORS INDICATED WITH A NUMBER IN THE CONSTRUCTION PLAN SHALL BE NEW DOORS AND NEW FRAMES UNLESS OTHERWISE NOTED. REFER TO SHEET A–601 FOR NEW DOOR SCHEDULE.
5. EXISTING CEILING IN LIVING AND SLEEPING AREAS IS +/– 8'–8" ABOVE FINISH FLOOR UNLESS OTHERWISE NOTED.

KEYNOTES – DEMOLITION

APPLIES TO THIS SHEET ONLY

1. REMOVE EXISTING WALL MOUNTED BRACKETS, 4 PER LIVING AREA, AND EXISTING WALL MOUNTED LINEAR ANGLE SUPPORTS, 3 PER SLEEPING AREA. PREPARE WALL FOR PAINT.
2. REMOVE EXISTING WALL BASE AND RESILIENT FLOORING DOWN TO CONCRETE SLAB ON GRADE. PREPARE CONCRETE SLAB FOR NEW FLOOR FINISH.

KEYNOTES – CONSTRUCTION

APPLIES TO THIS SHEET ONLY

1. PROVIDE LUXURY VINYL PLANK FLOORING.
2. PROVIDE WALL BASE AND PAINT ON WALLS.
3. PROVIDE DUPLEX RECEPTACLE COVERS, 6 PER ROOM, SINGLE LIGHTING SWITCH, 2 PER ROOM, DATA COVER, 1 PER ROOM, THERMOSTAT, 1 PER ROOM.

1/4" = 1'–0" 0 5' 10'

SYM	DESCRIPTION	DATE	APPR

DESIGNED & ENGINEERED BY: FACILITIES ENGINEERING

FINAL

02.14.2025

SEAL

APPROVED

ACTIVITY – SATISFACTORY TO

DATE

APPROVED

FOR EFD FOR COMMANDER NAVFAC

DATE

A/E		EFD
	DESIGN	SRP
	DRAWN	SRP
	REVIEW	HMP
	QC	
	CHIEF ARCH./ ENGR.	
	PROJECT MANAGER	SRP
	FIRE PROTECTION	XXX
	BRANCH MANAGER	#####
	DESIGN DIRECTOR	LPF

DEPARTMENT OF THE NAVY
NAVAL FACILITIES ENGINEERING COMMAND
MARINE CORPS AIR STATION, CHERRY POINT, N.C.
MCAS CHERRY POINT HAVELOCK, NC
RENOVATE 1ST FLOOR ROOMS STATION, B3673
ENLARGED FLOOR PLANS

CODE ID. NO. 80091 SIZE D
SCALE: AS NOTED
FED NO.
STA. PROJ. NO. 7406703
SPEC. NO.
CONSTR. CONTR. NO.
#####-##-#-####
NAVFAC DRAWING NO.
12912781
SHEET 5 OF 7

A-403

DRAWFORM REVISION: 07 AUG 2018

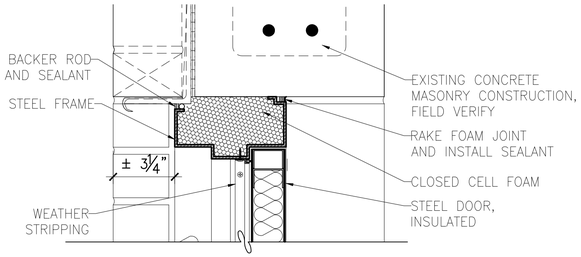

D1 EXTERIOR DOOR HEAD DETAIL
SCALE: 3"=1'-0"

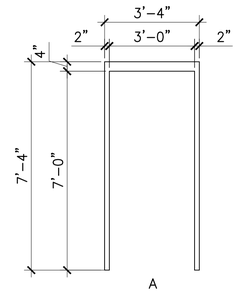

D2 ELEVATIONS - FRAME TYPES
SCALE: 3/8" = 1'-0"

DOOR AND FRAME SCHEDULES

DOOR				FRAME						HDW	NOTES
						DETAIL					
NO.	SIZE	MATL	TYPE	MATL	TYPE	HEAD	STRIKE	SILL	HINGE		
126	3'-0" X 7'-0" X 1 3/4"	STL	A	STL	A	D1/A-601	A2/A-601	C1/A-601	A1/A-601	HW-1	INSULATED, PAINTED*
155A	3'-0" X 6'-8" X 1 3/8"	WD	B	N/A						HW-2	SOLID CORE, PAINTED*
155B	3'-0" X 6'-8" X 1 3/8"	WD	B	N/A						HW-3	SOLID CORE, PAINTED*
155C	2'-0" X 6'-8" X 1 3/8"	WD	C	N/A						HW-4	SOLID CORE, DOUBLE DOOR, PAINTED*

DOOR AND FRAME SCHEDULE KEY

WD = WOOD	STL = STEEL	HDW = REFER SPECS FOR HARDWARE SETS	PAINTED* = REFER TO SHEET A-602 FOR COLORS

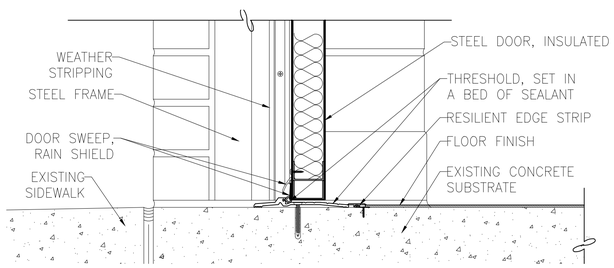

C1 EXTERIOR DOOR SILL DETAIL
SCALE: 3"=1'-0"

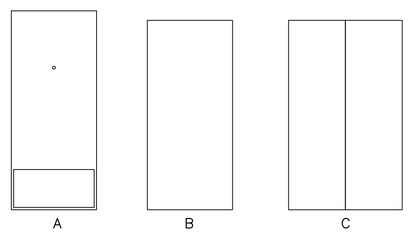

C2 ELEVATIONS - DOOR TYPES
SCALE: 3/8" = 1'-0"

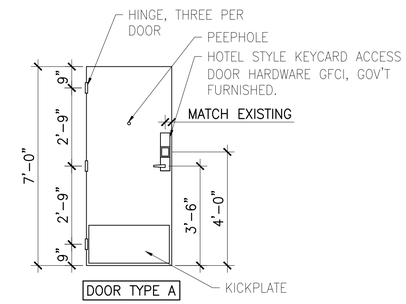

C4 HARDWARE MOUNTING DIMENSIONS
SCALE: 3/8" = 1'-0"

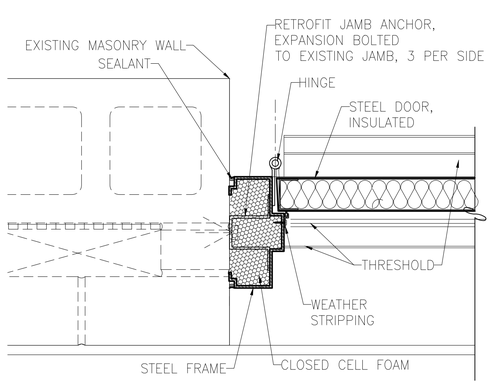

A1 EXTERIOR DOOR JAMB, HINGE
SCALE: 3"=1'-0"

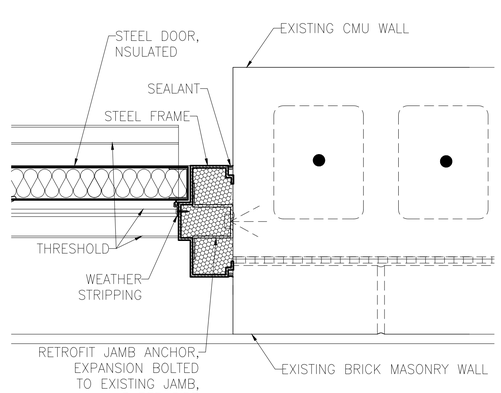

A2 EXTERIOR DOOR JAMB, STRIKE
SCALE: 3"=1'-0"

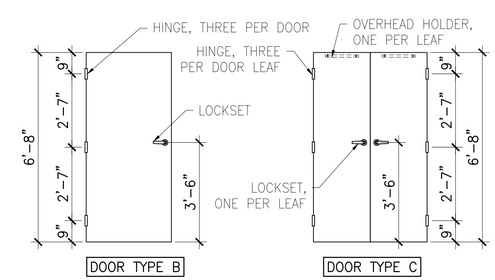

B4 HARDWARE MOUNTING DIMENSIONS
SCALE: 3/8" = 1'-0"

GENERAL DEMOLITION NOTES

1. ASBESTOS MATERIAL AND LEAD-BASED PAINT TESTING HAS BEEN PERFORMED ON EXISTING AREAS OF WORK. SEE THE SPECIFICATION FOR ASBESTOS MATERIAL AND LEAD-BASED PAINT REPORT RESULTS. CONTRACTOR SHALL BE RESPONSIBLE FOR THE APPROPRIATE STANDARD OF CARE REGARDING THE HANDLING OF ANY MATERIALS FOUND TO BE HAZARDOUS AND THE PROTECTION OF PERSONS FROM EXPOSURE.
2. EXISTING INTERIOR WALLS ARE PAINTED CONCRETE MASONRY OR CONCRETE MASONRY WITH PAINTED CEMENTITIOUS COATING. FIELD VERIFY.
3. REFER PLAN C1/A-101 FOR DIMENSIONS INSIDE FAMILY SUITES.
4. REFER PLAN C2/A-101 FOR DIMENSIONS INSIDE SLEEPING ROOMS.

GENERAL CONSTRUCTION NOTES

1. SEE SYMBOL LEGEND ON SHEET G-001.
2. ALL MATERIALS ARE TO BE CONSIDERED NEW UNLESS SPECIFICALLY REFERRED TO AS "EXISTING".

3" = 1'-0" 0 3" 6" 1'

3/8" = 1'-0" 0 1' 5'

APPR	DATE	DESCRIPTION	SYM

DESIGNED & ENGINEERED BY: FACILITIES ENGINEERING

FINAL

02.14.2025

SEAL

APPROVED

ACTIVITY – SATISFACTORY TO

DATE

APPROVED

FOR EFD FOR COMMANDER NAVFAC

DATE

A/E	EFD
DESIGN	SRP
DRAWN	SRP
REVIEW	HMP
QC	
CHIEF ARCH./ ENGR.	
PROJECT MANAGER	SRP
FIRE PROTECTION	XXX
BRANCH MANAGER	#####
DESIGN DIRECTOR	LPF

NAVAL FACILITIES ENGINEERING COMMAND

DEPARTMENT OF THE NAVY

MARINE CORPS AIR STATION, CHERRY POINT, N.C.

MCAS CHERRY POINT

HAVELOCK, NC

RENOVATE 1ST FLOOR ROOMS STATION, B3673

DOOR SCHEDULES, ELEVATIONS AND DETAILS

CODE ID. NO. 80091 SIZE D

SCALE: AS NOTED

FED NO.

STA. PROJ. NO. 7406703

SPEC. NO.

CONSTR. CONTR. NO. ##### - ## - # - ####

NAVFAC DRAWING NO. 12912782

SHEET 6 OF 7

A-601

DRAWFORM REVISION: 07 AUG 2018

ROOM FINISH SCHEDULE

ROOM TYPE	FLOOR		WALL BASE		WALLS		WALLS		BATHROOM CEILING		KITCHEN / VANITY CEILING		LIVING / SLEEPING AREA CEILING		CASEWORK	
	MATERIAL	FINISH	MATERIAL	FINISH	MATERIAL	FINISH	MATERIAL	FINISH	MATERIAL	FINISH	MATERIAL	FINISH	MATERIAL	FINISH	MATERIAL	FINISH
TYP. SLEEPING RM	CONCRETE SLAB	LVP-1	EXISTING CEMENTITIOUS COATING	RB-1	EXISTING CEMENTITIOUS COATING	PNT-2	EXISTING CONCRETE MASONRY	PNT-1	N/A	N/A	ACOUSTICAL CEILING TILE	ACT-1	EXISTING PRECAST CONCRETE PLANK	PNT-5	PLASTIC LAMINATE	PL-1
TYP. FAMILY SUITE	CONCRETE SLAB	LVP-1	EXISTING CEMENTITIOUS COATING	RB-1	EXISTING CEMENTITIOUS COATING	SLEEPING,VANITY - PNT-2 LIVING, KITCHEN - PNT-3	EXISTING CONCRETE MASONRY	PNT-1	EXISTING MOISTURE / MOLD RESISTANT GYPSUM BOARD	PNT-3	ACOUSTICAL CEILING TILE	ACT-1	EXISTING PRECAST CONCRETE PLANK	PNT-5	PLASTIC LAMINATE	PL-1

FINISH LEGEND

MRK	NAME	MANUFACTURER	MODEL	COLOR	SIZE
LVP-1	LUXURY VINYL PLANK	TARKETT	EVENT+ WOOD HERITAGE PLANK	COVE PEHP 11219 RU	6" X 48"
RB-1	RESILIENT BASE	JOHNSONITE	TRADITIONAL WALL BASE	29 MOON ROCK WG	0'-4"
PNT-1	PAINT	SHERWIN WILLIAMS	SEMI-GLOSS	SW 0024 CURIO GRAY	
PNT-2	PAINT	SHERWIN WILLIAMS	SEMI-GLOSS	SW 0049 SILVER GRAY	
PNT-3	PAINT	SHERWIN WILLIAMS	SEMI-GLOSS	SW 0052 PEARL GRAY	
PNT-4	PAINT	SHERWIN WILLIAMS	SEMI-GLOSS	SW 0066 CASCADE GREEN	
PNT-5	PAINT	BENJAMIN MOORE	SEMI-GLOSS	OC-43 OVERCAST	
ACT-1	ACOUSTICAL CEILING TILE	ARMSTRONG	DUNE, #1772	WHITE	24" X 24"
PL-1	PLASTIC LAMINATE	WILSONART		7942-07 COCOBALA	
SS-1	SOLID SURFACE	CORIAN		SILT	
SS-2	SOLID SURFACE	CORIAN		BISQUE	

NOTES:
1. ALL NEW DOORS AND FRAMES ARE TO BE PAINTED.
2. NAMES INDICATED FOR COLORS, TEXTURES, AND PATTERNS OF MATERIALS ARE FOR THE PURPOSE OF SELECTION ONLY. OTHER MANUFACTURER'S MATERIALS MAY BE ACCEPTABLE PROVIDED MATERIALS CLOSELY APPROXIMATE COLORS, TEXTURES, AND PATTERNS INDICATED AND CONFORM TO ALL SPECIFICATION REQUIREMENTS.
3. COUNTERTOPS ARE SS-1, MINIMUM ½" THICKNESS.
4. LAVATORIES AND KITCHEN SINKS ARE SS-2, MINIMUM ½" THICKNESS.
5. DOOR 126 EXTERIOR STEEL DOOR AND FRAME PAINT, PNT-4.
6. DOOR 126 INTERIOR STEEL DOOR AND FRAME PAINT, PNT-1.
7. DOORS 155B, 155C WOOD DOORS FOR CLOSET, BATHROOM, EXISTING FRAMES, PNT-2.
8. PAINT FOR DOOR 155A, WOOD DOOR BETWEEN LIVING AND SLEEPING AREA, EXISTING FRAME, IN FAMILY SUITE #155 MATCHES ADJOINING WALL COLOR, NAMELY, PNT-2 IN SLEEPING AREA, PNT-3 IN LIVING AREA.

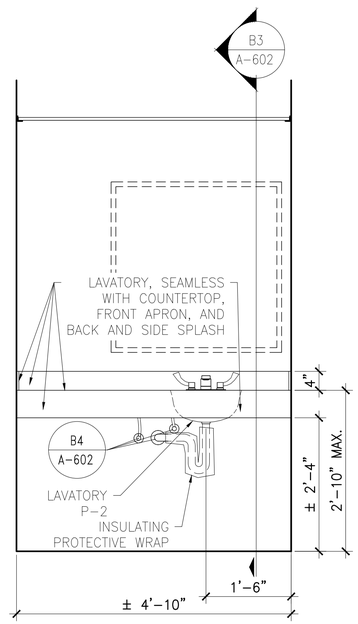

B2 ELEVATION - VANITY @ ALL ROOMS
SCALE: 3/4" = 1'-0"

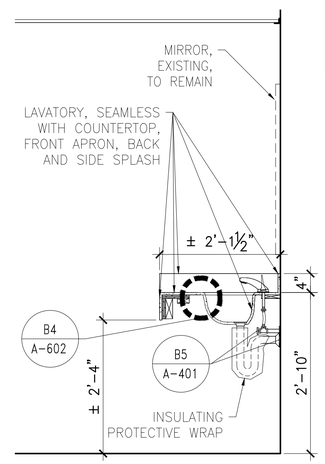

B3 SECTION - VANITY
SCALE: 3/4" = 1'-0"

PLUMBING FIXTURE CONNECTION SCHEDULE (*REFER TO AS-BUILT NAVFAC SHEET # 12561583)

MRK	FIXTURE	*EXISTING				MOUNTING	REMARKS
		SAN.	VENT	C.W.	H.W.		
P-1	WATER CLOSET	4"	2"	1/2"		FLOOR	WATER SENSE LABELED HIGH EFFICIENCY TOILET (HET) - REAR OUTLET, FLUSH ASSIST (LOW FLOW)
P-2	LAVATORY	1 1/4"	1 1/4"	1/2"	1/2"	UNDERMOUNT	10" x 15" OVAL BOWL, SEAMLESS WITH COUNTER, FAUCET WITH LEVER HANDLES
P-3	KITCHEN SINK	2"	1 1/2"	1/2"	1/2"	UNDERMOUNT	13" X 17" SINGLE COMPARTMENT SINK, SEAMLESS WITH COUNTER, WITH GOOSE NECK SPOUT AND WRIST BLADE HANDLES

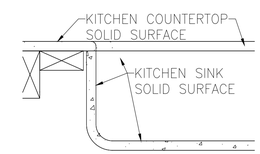

C4 DETAIL - SINK EDGE
SCALE: 3" = 1'-0"

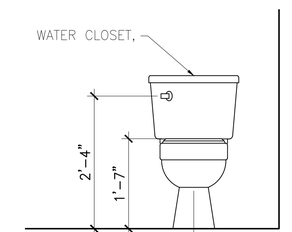

B5 TOILET ELEVATION
SCALE: 3/4" = 1'-0"

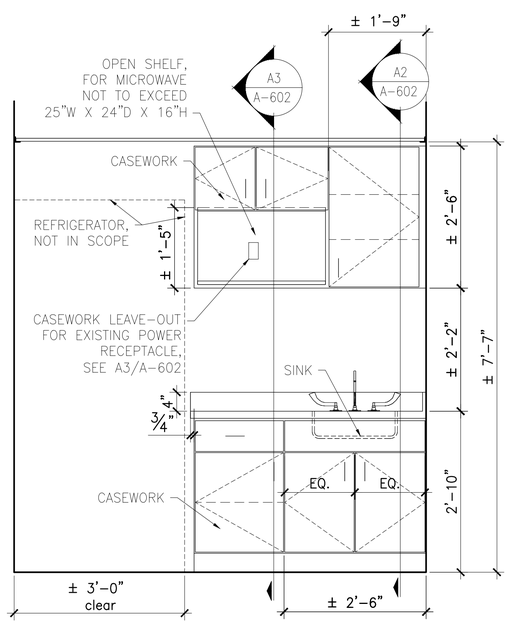

A1 ELEVATION - KITCHEN @ FAMILY SUITE
SCALE: 3/4" = 1'-0"

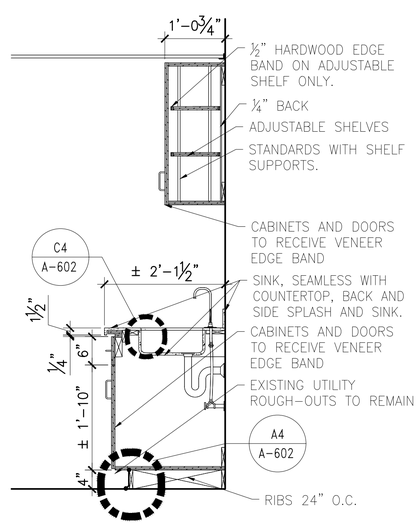

A2 SECTION - SINK & UPPER CABINET
SCALE: 3/4" = 1'-0"

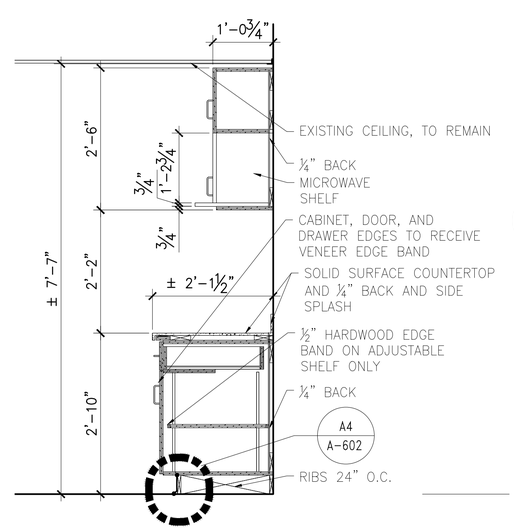

A3 SECTION - BASE & UPPER CABINETS
SCALE: 3/4" = 1'-0"

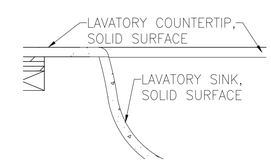

B4 DETAIL - SINK EDGE
SCALE: 3" = 1'-0"

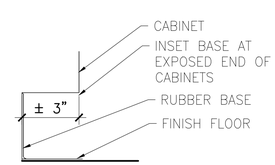

A4 DETAIL - TOE KICK
SCALE: 3" = 1'-0"

GENERAL DEMOLITION NOTES

1. ASBESTOS MATERIAL AND LEAD–BASED PAINT TESTING HAS BEEN PERFORMED ON EXISTING AREAS OF WORK. SEE THE SPECIFICATION FOR ASBESTOS MATERIAL AND LEAD–BASED PAINT REPORT RESULTS. CONTRACTOR SHALL BE RESPONSIBLE FOR THE APPROPRIATE STANDARD OF CARE REGARDING THE HANDLING OF ANY MATERIALS FOUND TO BE HAZARDOUS AND THE PROTECTION OF PERSONS FROM EXPOSURE.
2. EXISTING INTERIOR WALLS ARE PAINTED CONCRETE MASONRY OR CONCRETE MASONRY WITH PAINTED CEMENTITIOUS COATING. FIELD VERIFY.
3. REFER PLAN C1/A–101 FOR DIMENSIONS INSIDE FAMILY SUITES.
4. REFER PLAN C2/A–101 FOR DIMENSIONS INSIDE SLEEPING ROOMS.

GENERAL CONSTRUCTION NOTES

1. SEE SYMBOL LEGEND ON SHEET G–001.
2. ALL MATERIALS ARE TO BE CONSIDERED NEW UNLESS SPECIFICALLY REFERRED TO AS "EXISTING".

3" = 1'-0" 0 3" 6" 1'

3/4" = 1'-0" 0 1' 2' 3'

SYM	DESCRIPTION	DATE	APPR

DESIGNED & ENGINEERED BY: FACILITIES ENGINEERING

FINAL
02.14.2025
SEAL

APPROVED
ACTIVITY – SATISFACTORY TO
DATE
APPROVED
FOR EFD FOR COMMANDER NAVFAC
DATE

A/E		EFD
	DESIGN	SRP
	DRAWN	SRP
	REVIEW	HMP
	QC	
	CHIEF ARCH./ ENGR.	
PROJECT MANAGER		SRP
FIRE PROTECTION		XXX
BRANCH MANAGER		#####
DESIGN DIRECTOR		LPF

DEPARTMENT OF THE NAVY
NAVAL FACILITIES ENGINEERING COMMAND
MARINE CORPS AIR STATION, CHERRY POINT, N.C.
MCAS CHERRY POINT
HAVELOCK, NC
RENOVATE 1ST FLOOR ROOMS
STATION, B3673
ROOM FINISH SCHEDULES, CASEWORK ELEVATION & SECTIONS

CODE ID. NO. 80091 SIZE D
SCALE: AS NOTED
FED NO.
STA. PROJ. NO. 7406703
SPEC. NO.
CONSTR. CONTR. NO. ##### – # – # – #####
NAVFAC DRAWING NO. 12912783
SHEET 7 OF 7
A-602

DRAWFORM REVISION: 07 AUG 2018

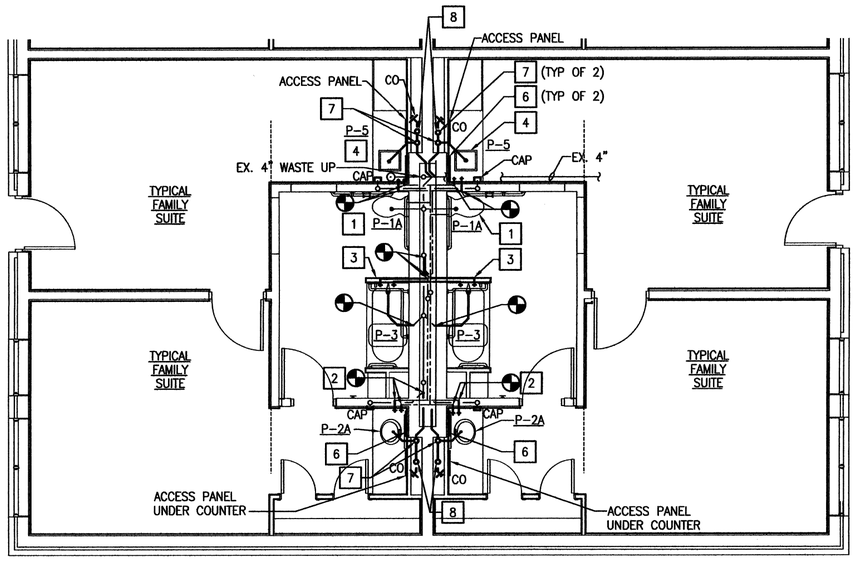

TYPICAL FAMILY SUITE NEW WORK PLAN

1/4" = 1'-0" P-101 (C2)

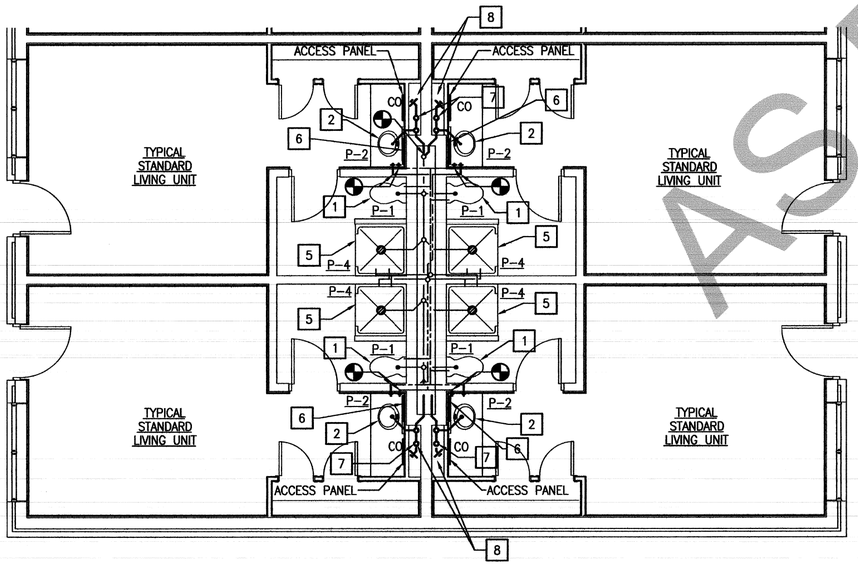

TYPICAL STANDARD LIVING UNIT NEW WORK PLAN

1/4" = 1'-0" P-102, P-103, P-104 (A2)

NEW WORK NOTES:

1. PROVIDE NEW WATER CLOSET (P-1A) AT EXISTING WATER CLOSET LOCATION. PROVIDE TWO WAX SEALS FOR PROPER SEAL AND FIT.
2. REMOVE EXISTING HOT AND COLD WATER PIPING BACK WITH-IN WALL FROM REMOVED LAVATORY. EXTEND NEW 1/2" HOT AND COLD WATER PIPING FROM NEW LAVATORY TO EXISTING PIPING AS SHOWN UNDER COUNTER. EXTEND 2" WASTE PIPING FROM NEW LAVATORY TO NEW CHASE WALL. CONNECT TO NEW WASTE PIPE RUNNING IN CHASE WALL.
3. EXTEND 1/2" HOT AND COLD WATER PIPING FROM WITH-IN EXISTING PIPING CHASE TO SEPARATING WALL AT TUB. CONNECT TUB DRAIN TO PREVIOUS SHOWER DRAIN BELOW SLAB.
4. REMOVE EXISTING HOT AND COLD WATER PIPING BACK WITH-IN WALL FROM REMOVED LAVATORY. EXTEND NEW 1/2" HOT AND COLD WATER PIPING FROM NEW KITCHEN TO EXISTING PIPING AS SHOWN UNDER COUNTER. EXTEND 2" WASTE PIPING FROM NEW KITCHEN SINK TO NEW CHASE WALL. CONNECT TO NEW WASTE PIPE RUNNING IN CHASE WALL.
5. PROVIDE DRAIN, SHOWER VALVE, PIPING AND SHOWER HEAD AT SHOWER. COORDINATE WITH NEW PAN AND TILE WALLS.
6. ACCESS DOOR LOCATION INTO EXISTING PLUMBING CHASE FOR VISUAL INSPECTION. LOCATE DOOR ABOVE NEW CEILING.
7. EXTEND NEW VENT PIPING FROM NEW AIR GAP UP TO ABOVE CEILING. EXTEND TO NEAREST EXISTING VENT PIPING.
8. INSTALL AIR GAP FITTING WITH DEEP SEAL TRAP AT NEW LOCATION IN FIRST FLOOR CHASE ONLY. COORDINATE LOCATION WITH MECHANICAL CONTRACTOR.

AS BUILTS

PLUMBING FIXTURE CONNECTION SCHEDULE

MARK	FIXTURE	SAN.	VENT	C.W.	H.W.	MOUNTING	REMARKS
P-1	WATER CLOSET	4"	2"	1/2"	–	FLOOR	FLOOR MOUNTED, WATER SENSE LABELED HIGH EFFIENCY TOILET (HET) – REAR OUTLET, FLUSH ASSIST (LOW FLOW) (4)
P-1A	WATER CLOSET HANDICAPPED	4"	2"	1/2"	–	FLOOR	FLOOR MOUNTED, WATER SENSE LABELED HIGH EFFIENCY TOILET (HET) – FLUSH ASSIST (LOW FLOW) (4)
P-2	LAVATORY	1 1/4"	1 1/4"	1/2"	1/2"	COUNTER	BOWL INTEGRAL WITH COUNTER
P-2A	LAVATORY HANDICAPPED	1 1/4"	1 1/4"	1/2"	1/2"	COUNTER	BOWL INTEGRAL WITH COUNTER (2)
P-3	SHOWER /TUB	2"	1 1/2"	1/2"	1/2"	FLOOR	(1)
P-4	SHOWER	–	–	–	–	FLOOR	PROVIDE LOW FLOW SHOWER HEAD. MAXIMUM FLOW AT 1.5 GPM RATED AT 60 PSI.
P-5	KITCHEN SINK	2"	1 1/2"	1/2"	1/2"	COUNTER	(2) (3) 20"x17" SINGLE COMPARTMENT SINK
P-6	WATER COOLER	1 1/4"	1 1/4"	1/2"	–	WALL	BARRIER FREE
P-7	LAVATORY	1 1/4"	1 1/4"	1/2"	1/2"	WALL	(2)

(1) PROVIDE WITH WRAP BAR AND GRAB BAR, HAND HELD SHOWER HAND SET, 69" LONG STAINLESS STEEL FLEX HOSE, SWIVEL CONNECTOR, VACUUM BREAKER, SINGLE LEVER PRESSURE BALANCING VALVE AND 24" SLIDE BAR. PROVIDE WITH HAVE HELD SHOWER HEAD, CHROME FINISH AT 1.11 GPM.

(2) PROVIDE INSULATING PROTECTIVE WRAP ON DRAIN LINES AND HOT AND COLD WATER LINES OF FIXTURES FOR HANDICAPPED.

(3) PROVIDE 20"x17" SINGLE COMPARTMENT KITCHEN SINK WITH GOOSE NECK SPOUT AND WRIST BLADE HANDLES.

(4) PROVIDE FLUSH ASSIST TOILETS. PROVIDE 2 WAX SEALS PER TOILET FOR INSTALLATION.

NOTE: IF THIS DRAWING IS A REDUCTION, GRAPHIC SCALE MUST BE USED.

GRAPHIC SCALE:

1/4" = 1'-0" 5' 0 5' 10'

CHERWA-EHING ENGINEERING, PC CONSULTING ENGINEERS

MARK	DATE	DESCRIPTION	BY/A

KROSKIN PC ARCHITECTS
6160 Kempsville Circle Suite 316A Norfolk, VA 23502

COMMONWEALTH OF VIRGINIA ROBIN A. EHING No. 019292 08/04/10 PROFESSIONAL ENGINEER SEAL

APPROVED
ACTIVITY – SATISFACTORY TO
DATE
APPROVED
FOR EFD FOR COMMANDER NAVFAC
DATE

A/E	EFD
DESIGN	PJD
DRAWN	JLL
REVIEW	PJD
QC	
CHIEF ARCH./ ENGR.	
PROJECT MANAGER	
FIRE PROTECTION	
BRANCH MANAGER	
DESIGN DIRECTOR	

DEPARTMENT OF THE NAVY
NAVAL FACILITIES ENGINEERING COMMAND
MARINE CORPS AIR STATION, CHERRY POINT, N.C.

REPAIR AND IMPROVEMENTS TO TEQ, BUILDING 3673

ENLARGED NEW WORK PLANS, SCHEDULE & NOTES

CODE ID. NO. 80091 | SIZE D
SCALE: AS SHOWN
FED NO. W04849948/W04849972
STA. PROJ. NO. CP0913M/LP0926R
SPEC. NO. 00-0-0000
CONSTR. CONTR. NO.
NAVFAC DRAWING NO. 12561583
SHEET 48 OF 106
P-105

DRAWFORM REVISION JULY 2003

2nd phase
Build soffit
For Exhaust
over Toilet to
Force Air into old (Existing)
Duct

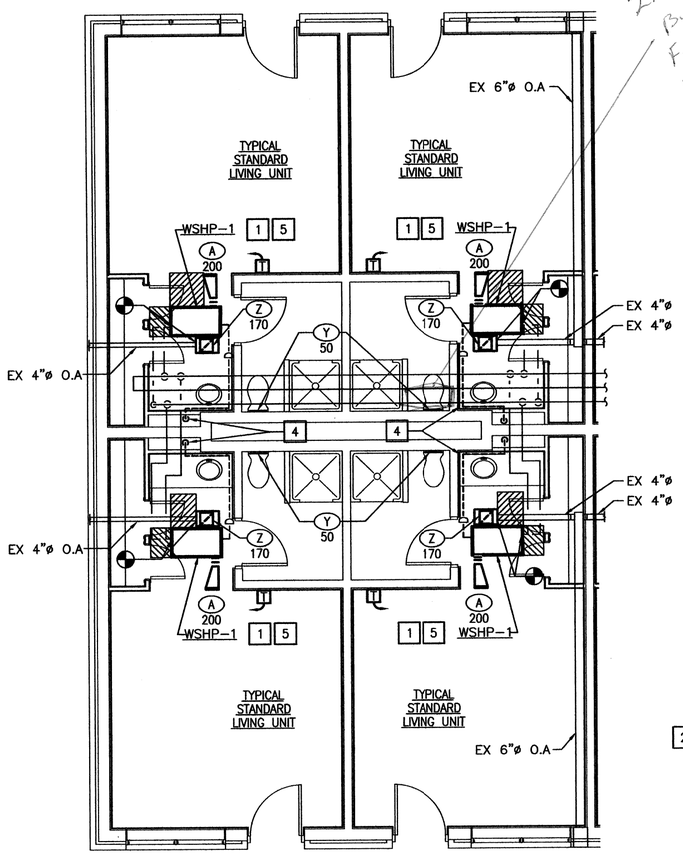

TYPICAL STANDARD LIVING UNIT NEW WORK PLAN

1/4" = 1'-0" M-101, M-102, M-103, M-104 (C1)

TYPICAL FAMILY SUITE NEW WORK PLAN

1/4" = 1'-0" M-101 (C2)

MAIN OFFICE / STORAGE NEW WORK PLAN

1/4" = 1'-0" M-101, M-103 (C5)

HOUSEKEEPING NEW WORK PLAN

1/4" = 1'-0" M-101, M-103 (A2)

NEW WORK NOTES:

1. PROVIDE SCHEDULED HORIZONTAL WATER SOURCE HEAT PUMP AND CONNECT TO EXISTING WATER PIPING. PROVIDE DUCTWORK NECESSARY TO CONNECT GRILLES TO HEAT PUMP AND EXISTING OUTDOOR AIR DUCT TO RETURN SIDE OF UNIT.
2. PROVIDE SCHEDULED VERTICAL WATER SOURCE HEAT PUMP AND CONNECT TO EXISTING WATER PIPING, CONDENSATE DRAIN PIPING, AND DUCTWORK. PROVIDE CONTROL INTERLOCK BETWEEN HEAT PUMP FAN MOTOR AND EXISTING MOTORIZED DAMPER ON OUTDOOR AIR INTAKE. ADJUST EXISTING SUPPLY DIFFUSERS TO INDICATED AIRFLOW. VERIFY WATER BALANCE TO FLOWS INDICATED IN SCHEDULE.
3. ADJUST EXISTING EXHAUST REGISTER TO AIR FLOW SHOWN.
4. PROVIDE 1" CONDENSATE DRAIN WITH TRAP OFF WATER SOURCE HEAT PUMP AS SHOWN TO EXTEND DOWN IN CHASE TO FIRST FLOOR. EXTEND TO HUB DRAIN IN FIRST FLOOR CHASE.
5. PROVIDE HEAT PUMPS UNIT WITH TERMINAL EQUIPMENT CONTROLLER (TEC), UNIT MOUNTED. PROVIDE THERMOSTAT WITH HEATING/COOLING CHANGEROVER CAPACITY WITH TEMPERATURE LIMITS TO +/- PRESET TEMPERATURE FOR HEATING AND COOLING. TEMPERATURE LIMITS SHALL BE SET AT THERMOSTAT MANUALLY OR THROUGH THE EXISTING ENERGY MANAGEMENT SYSTEM. PROVIDE TWISTED PAIR WIRING FROM TEC BACK TO EXISTING JOHNSON CONTROLS NETWORK AUTOMATION ENGINE (NAE) FOR COMMUNICATION BACK TO CENTRAL ENERGY MANAGEMENT SYSTEM.

NOTE: IF THIS DRAWING IS A REDUCTION, GRAPHIC SCALE MUST BE USED.

GRAPHIC SCALE:

1/4" = 1'-0" 5' 0 5' 10'

CHERMA-EWING ENGINEERING, PC CONSULTING ENGINEERS

AS BUILTS

DATE	APPR	DESCRIPTION	SYM

KDG KROSKIN
6160 Campindia Circle Suite 316A Norfolk, VA 23502

COMMONWEALTH OF VIRGINIA ROBIN A. EWING No. 019292 08/04/10 PROFESSIONAL ENGINEER SEAL

APPROVED
ACTIVITY – SATISFACTORY TO
DATE
APPROVED
FOR EFD FOR COMMANDER NAVFAC
DATE

A/E	EFD
DESIGN	PJD
DRAWN	CWA
REVIEW	PJD
QC	
CHIEF ARCH./ ENGR.	
PROJECT MANAGER	
FIRE PROTECTION	
BRANCH MANAGER	
DESIGN DIRECTOR	

DEPARTMENT OF THE NAVY
MARINE CORPS AIR STATION, CHERRY POINT, N.C.
NAVAL FACILITIES ENGINEERING COMMAND

REPAIR AND IMPROVEMENTS TO TEQ, BUILDING 3673

ENLARGED NEW WORK PLANS & NOTES

CODE ID. NO. 60091 SIZE D
SCALE: AS SHOWN
FED NO. W04849948/W04849972
STA. PROJ. NO. CP0913M/LP0926R
SPEC. NO. 00-0-0000
CONSTR. CONTR. NO.
NAVFAC DRAWING NO. 12561596
SHEET 61 OF 106
M-106

DRAWFORM REVISION JULY 2003

WATER SOURCE HEAT PUMP

MARK	BASIC UNIT DATA								COOLING PERFORMANCE						HEATING PERFORMANCE				LOCATION	REMARKS
	S.A. CFM	O.A. CFM	E.S.P. (IN WG)	FAN HP	VOLTS/PH	GPM	WATER PD (FT HD)	STYLE	TOTAL (B.T.U.H.)	SENSIBLE (B.T.U.H.)	E.A.T. °FDB	E.A.T. °FWB	E.W.T. (°F)	MIN. EER	BTUH	L.A.T. (°FDB)	E.W.T. (°F)	MIN. COP		
WSHP-1	200	30	0.45	1/10	208/1	2.0	3.6	HORIZONTAL	8,000	5,400	79.0	67.0	90	11.6	11,300	111.9	70	3.83	SLEEPING ROOMS	1,2,4
WSHP-2	300	30	0.40	1/10	208/1	2.0	3.7	HORIZONTAL	10,600	6,700	77.5	65.8	90	11.1	15,100	115.2	70	3.75	SLEEPING ROOMS	1,2,4
WSHP-3	400	75	0.50	1/6	208/1	3.5	4.2	VERTICAL	14,200	9,700	79.0	67.0	90	13.4	18,400	107.8	70	4.47	LOUNGE	1,2,4
WSHP-4	210	30	0.00	1/20	208/1	1.9	6.2	CONSOLE	8,000	6,000	78.8	67.1	90	11.5	11,500	103.3	70	4.35	OFFICE / SPRINKLER RM.	3,4

1. PROVIDE WITH ACCESSORY MANUAL CHANGEOVER THERMOSTAT AND FAN SWITCH.
2. PROVIDE WITH FILTER RACK AND 2" DISPOSABLE FILTER.
3. PROVIDE WITH INTEGRAL MANUAL CHANGEOVER THERMOSTAT, 2 SPEED FAN CONTROL, AND MOTORIZED FRESH AIR DAMPER.
4. PROVIDE EXTENDED OPERATING RANGE MODEL CAPABLE OF OPERATING UP TO 110°F E.W.T.

CIRCULATING PUMP SCHEDULE

MARK	GPM	HEAD FT. OF H_2O	HP	RPM	MINIMUM % EFFICIENCY	TYPE	SERVICE	VOLTS/PHASE	REMARKS
P-1	337	80.14	15	1750	75	END SUCTION BASE MTD	BUILDING WATER LOOP	208/3	PROVIDE W/ SCREENED SUCTION DIFFUSER
P-2	352	51.17	7 1/2	1750	77	END SUCTION BASE MTD	COOLING TOWER	208/3	PROVIDE W/ SCREENED SUCTION DIFFUSER

EXHAUST FAN SCHEDULE

MARK	APPLICATION	TYPE	CFM	S.P.	FAN DATA			MOTOR DATA			REMARKS
					APPROX. RPM	FPM TIP SPEED	MAX. SONES	HP	WATTS	VOLTAGE/ PHASE	
EF-1	TOILET EXHAUST	IN-LINE	600	0.59	1450	–	7.0	–	822	120/1	
EF-2	GENERAL EXHAUST	IN-LINE	225	0.114	1050	–	2.6	–	80	120/1	
EF-3	TOILET EXHAUST	IN-LINE	720	0.55	1095	–	6.0	–	455	120/1	
EF-4	JANITOR EXHAUST	IN-LINE	180	0.165	1400	–	2.7	–	100	120/1	
EF-5	LAUNDRY	WALL PROPELLER	325/ 625	0.25	1175	–	13.3	1/6	–	120/1	1

1 PROVIDE PAN WITH TWO SPEED OPERATION BASED ON CONTROL THROUGH EXISTING THERMOSTAT.

EXHAUST HOOD SCHEDULE

MARK	MAXIMUM CFM	FREE AREA	THROAT SIZE	P.D. IN WG	REMARKS
EH-1	960	1.12 S.F.	14 5/16"ø	0.09	PROVIDE WITH ROOF CURB FOR SLOPED ROOF
EH-2	225	0.37 S.F.	8 1/2"ø	0.05	PROVIDE WITH ROOF CURB FOR SLOPED ROOF

ELECTRIC UNIT HEATER SCHEDULE

MARK	NO. OF STAGES	HEATER TYPE	MBH OUTPUT	CFM	ELECTRICAL DATA			MOUNTING	REMARKS
					KW	VOLTAGE	PHASE		
UH-1	1	HORIZONTAL	10,239	400	3	208	1	WALL BRACKET	PROVIDE WITH INTEGRAL THERMOSTAT UNIT MOUNTED

EXHAUST LOUVER SCHEDULE

MARK	CFM	SERVICE	SIZE (IN.)			MIN. FREE AREA (FT.)	P.D. (INCHES W.C.)	REMARKS
			WIDTH	HEIGHT	DEPTH			
LV-1	625	EF-5	26"	26"	4"	1.93	0.02	PROVIDE COMBINATION LOUVER/DAMPER

GRILLE, REGISTER, & DIFFUSER SCHEDULE

MARK	APPLICATION	NECK SIZE	DAMPER	REMARKS
A	SIDEWALL SUPPLY REGISTER	12x6	YES	
X	EXHAUST GRILLE	8x6	NO	
Y	EXHAUST REGISTER	6x6	YES	ADJUSTABLE THROUGH REGISTER FACE
Z	RETURN GRILLE	10x10	NO	

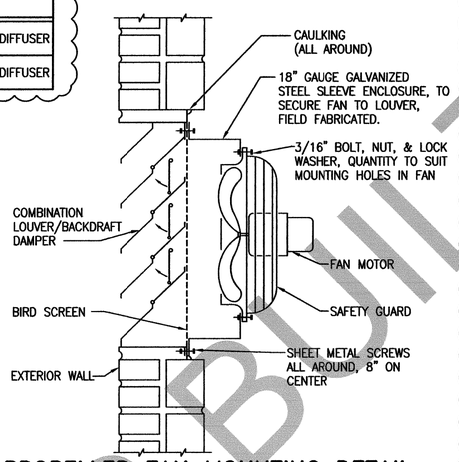

PROPELLER FAN MOUNTING DETAIL

NO SCALE

SEQUENCE OF OPERATION

HEAT PUMP (WSHP-1 AND WSHP-2)
WITH FAN SWITCH IN "OFF" POSITION, COMPRESSOR SHALL BE DISABLED. WITH FAN SWITCH IN THE "ON" POSITION, FAN SHALL RUN CONTINUOUSLY AND COMPRESSOR SHALL CYCLE UNDER THERMOSTAT CONTROL. HEATING AND COOLING SHALL BE MANUALLY SELECTABLE. IN THE COOLING MODE, ON A RISE IN SPACE TEMPERATURE, THE COMPRESSOR SHALL BE ENERGIZED. ON A FALL IN SPACE TEMPERATURE, THE REVERSE SHALL OCCUR. IN THE HEATING MODE, REFRIGERANT FLOW SHALL BE INTERNALLY REVERSED AND THERMOSTAT OPERATION REVERSED. ON A FALL IN SPACE TEMPERATURE, THE COMPRESSOR SHALL CYCLE ON. ON A RISE IN SPACE TEMPERATURE, THE REVERSE SHALL OCCUR. SEE NOTE#5 ON SHEET M-106.

HEAT PUMP (WSHP-3 AND WSHP-4)
UNITS SHALL OPERATE AS DESCRIBED FOR WSHP-1 EXCEPT THAT WHEN SUPPLY FAN IS ON, THE OUTSIDE AIR DAMPER SHALL BE OPEN. WHEN SUPPLY FAN IS OFF, THE OUTSIDE AIR DAMPER SHALL BE CLOSED. SEE NOTE#5 ON SHEET M-106.

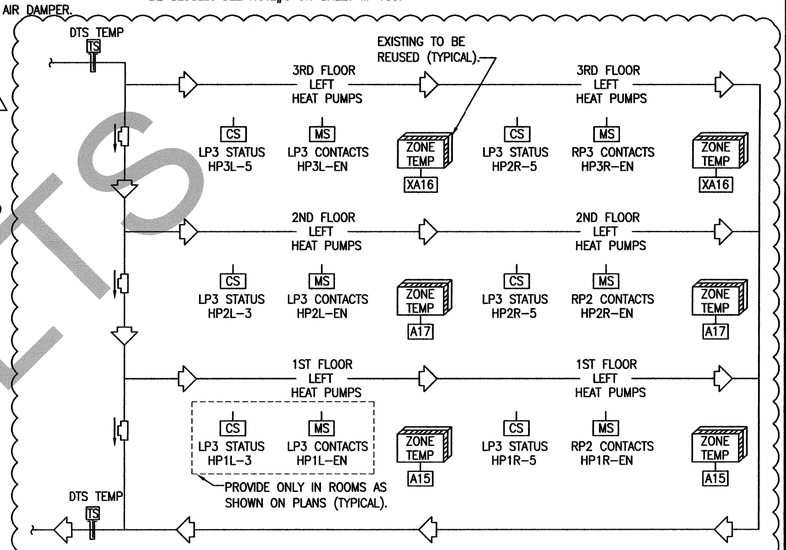

CONTROL SYSTEM ARCHITECTURE

NO SCALE

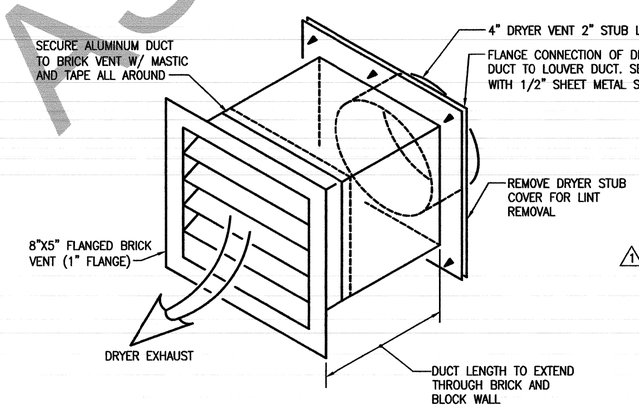

DRYER VENT

NO SCALE

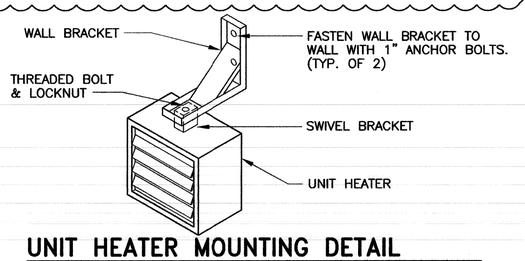

UNIT HEATER MOUNTING DETAIL

NO SCALE

HEAT EXCHANGER

MARK	COOLING TOWER SIDE				WATER LOAD SIDE				TYPE	REMARKS
	TEMPERATURE IN(°F)	TEMPERATURE OUT(°F)	GPM	MAX PD (FT H20)	TEMPERATURE IN(°F)	TEMPERATURE OUT(°F)	GPM	MAX PD (FT H20)		
HX-1	85	95	176	11.5	86.6	97	169	11.5	PLATE AND FRAME	
HX-2	85	95	176	11.5	86.6	97	169	11.5	PLATE AND FRAME	

HEAT EXCHANGER SIZED AT 66% TOTAL LOAD OF 1,753,000 BTUh. SINGLE UNIT OPERATING SHALL ALLOW 222 GPM FLOW AT 11.5 FT PD.

AS BUILTS

SYM.	DESCRIPTION	DATE	APPR.
1	CONTROLS, HEAT EXCHANGERS, & PUMPS	8/10	

KRG KROSKIN GROUP
6160 Kempsville Circle Suite 316A Norfolk, VA 23502

COMMONWEALTH OF VIRGINIA
ROBIN A. EWING
019292
08/25/10
PROFESSIONAL ENGINEER
SEAL

APPROVED
ACTIVITY – SATISFACTORY TO
DATE
APPROVED
FOR EFD FOR COMMANDER NAVFAC
DATE

A/E	EFD
PJD	DESIGN
CWA	DRAWN
PJD	REVIEW
	QC
	CHIEF ARCH./ ENGR.
	PROJECT MANAGER
	FIRE PROTECTION
	BRANCH MANAGER
	DESIGN DIRECTOR

DEPARTMENT OF THE NAVY
NAVAL FACILITIES ENGINEERING COMMAND
MARINE CORPS AIR STATION, CHERRY POINT, N.C.

REPAIR AND IMPROVEMENTS TO TEQ, BUILDING 3673

SCHEDULES AND DETAILS

CODE ID. NO. 80091 | SIZE D
SCALE: AS SHOWN
FED NO. W04849948/W04849972
STA. PROJ. NO. CP0913M/CP0926R
SPEC. NO.
CONSTR. CONTR. NO.
NAVFAC DRAWING NO. 12561597
SHEET 62 OF 106

M-501

CHERINA-EWING ENGINEERING, P.C. CONSULTING ENGINEERS

DRAWFORM REVISION JULY 2003

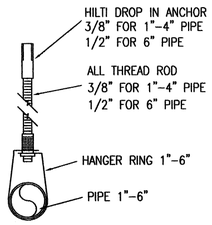

HILTI HANGER DETAIL

SCALE: N.T.S

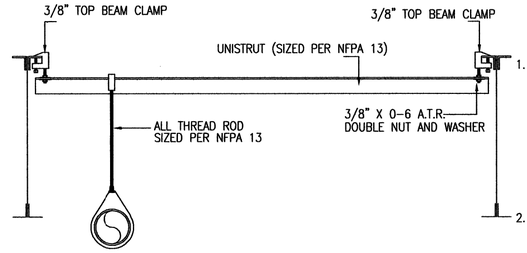

TRAPEZE HANGER DETAIL

SCALE: N.T.S

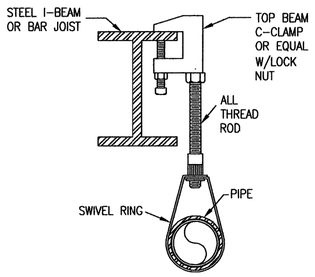

TOP BEAM CLAMP HANGER DETAIL

SCALE: N.T.S

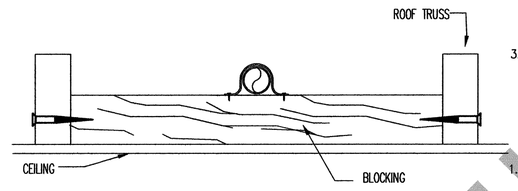

WET PIPING BETWEEN TRUSSES BEFORE REQUIRED INSULATION

SCALE: N.T.S

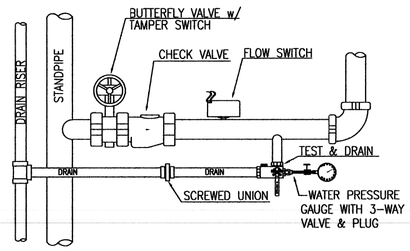

ZONE CONTROL ASSEMBLY

SCALE: N.T.S.

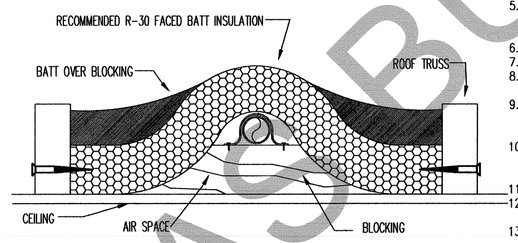

INSULATION OVER WET PIPING BETWEEN TRUSSES

SCALE: N.T.S

GENERAL NOTES

1. INTENT OF THE DRAWINGS

THE DRAWINGS AND CALCULATIONS ARE DIAGRAMMATIC IN NATURE FOR DESIGN PURPOSES ONLY AND SHOW THE GENERAL LOCATION OF PIPING AND EQUIPMENT. THE DRAWINGS DO NOT SHOW ALL NECESSARY OFFSETS, TRANSITIONS, AND ADJUSTMENTS NECESSITATED BY COORDINATION WITH OTHER TRADES. THE COST OF ALL OFFSETS, TRANSITIONS, AND ADJUSTMENTS NECESSITATED BY COORDINATION WITH OTHER TRADES SHALL BE INCLUDED IN THE CONTRACTOR'S BID. THE CONTRACTOR SHALL PROVIDE SHOP DRAWINGS INDICATING SPRINKLER LAYOUT AND HYDRAULIC CALCULATION NODES WITH ACCOMPANYING CALCULATIONS IN ACCORDANCE WITH THE CONTRACT REQUIREMENTS.

2. COORDINATION WITH OTHER TRADES

EXAMINE AND REVIEW THE CONTRACT DOCUMENTS OF ALL DIVISIONS OF THE SPECIFICATIONS IN ORDER TO COORDINATE THE INSTALLATION OF WORK.

USE DIMENSIONED ARCHITECTURAL AND STRUCTURAL CONTRACT DRAWINGS TO VERIFY THE SPACE NECESSARY FOR LOCATING PIPING, DUCTWORK, AND EQUIPMENT. USE FIELD MEASUREMENTS TO VERIFY DIMENSIONS WHERE AREAS ARE CONGESTED, AND EXACT LOCATION IS CRITICAL TO ASSURE PROPER INSTALLATION.

COORDINATION SHALL INCLUDE, BUT SHALL NOT BE LIMITED TO, VERIFYING THE LOCATION AND SIZE OF OPENINGS IN FLOORS, WALLS, PARTITIONS, CEILINGS, AND ROOFS WITH THE INSTALLING TRADES; ALLOCATION OF SPACE WITH OTHER TRADES INSTALLING WORK IN CHASES, SHAFTS, CEILING INTERSTITIAL SPACES, AND EQUIPMENT SPACES; AND THE PHASING OF INSTALLATION WORK WITH THAT OF OTHER TRADES.

3. WORKMANSHIP

PERFORM ALL WORK IN A WORKMANLIKE MANNER THAT PROVIDES A PROFESSIONAL, COMPLETED INSTALLATION.

SPRINKLER NOTES

1. FIRE SPRINKLER SYSTEMS AND MATERIALS SHALL BE PROVIDED IN ACCORDANCE WITH THE REQUIREMENTS OF NFPA 13, 2007, NFPA 13R, 2007, UFC 3-600-01 26 SEPTEMBER 2006, AND UFC 3-600-10N FINAL DRAFT AUGUST 2007.
2. HYDRAULIC CALCULATIONS SHALL INCLUDE AT LEAST A 12-PSI LOSS FOR THE BACKFLOW PREVENTER, REGARDLESS OF MAKE/MODEL.
3. ALL PENETRATIONS SHALL BE SEALED TO MATCH THAT OF FIRE RATING OF WALL BEING PENETRATED.
4. FIRE SPRINKLERS SHALL BE CENTER OF TILE IN ALL FINISHED CEILINGS.
5. SPRINKLERS SHALL BE LOCATED IN CENTER OF ROOMS WHERE EVER POSSIBLE TO REDUCE POSSIBILITY OF DAMAGE OR OBSTRUCTION. CONCEALED INSTITUTIONAL SIDEWALL SPRINKLERS SHALL BE USED IN DWELLING UNITS WHERE POSSIBLE.
6. FLEXIBLE ARM-OVERS ARE NOT PERMITTED.
7. ALL SPRINKLER PIPE SHALL BE METAL. SPRINKLER MAINS SHALL BE SCHEDULE 40.
8. FIRE SPRINKLER CONTRACTOR SHALL BE RESPONSIBLE FOR THE DESIGN AND INSTALLATION OF FIRE SPRINKLER SYSTEM.
9. SPRINKLER CONTRACTOR SHALL USE THEIR OWN SPRINKLER SPACING AND PIPE LAYOUT FOR BIDDING AND INSTALLATION. ENGINEERING DRAWINGS ARE FOR REFERENCE ONLY; FIELD CONDITIONS MAY VARY.
10. REDUCED PRESSURE ZONE BACKFLOW PREVENTER SHALL BE TURNED SUCH THAT THE VALVE STEMS ARE ORIENTED TO PROVIDE CLEAR ACCESS FOR FUTURE FIRE PROTECTION ROOM EQUIPMENT INSTALLATION AND REMOVAL.
11. BACKFLOW PREVENTER SHALL BE INSTALLED ON THE DISCHARGE SIDE OF THE FIRE PUMP.
12. PROVIDE SLEEVE ASSEMBLY AS REQUIRED BY NFPA 13 AND NFPA 13R TO PASS SPRINKLER SUPPLY PIPE AND FDC CONNECTION PIPE UNDER FOUNDATION.
13. PROVIDE THRUST BLOCKS AS REQUIRED BY NFPA 13, NFPA 13R, AND UNDERGROUND PIPING SPECIFICATIONS FOR ALL UNDERGROUND PIPE BENDS.
14. WHERE SPRINKLER PIPE CROSSES EXTERIOR CORRIDORS, SPRINKLER PIPE SHALL BE BOXED OUT AS SHOWN ON SHEET A-108. INSTALL FOAM INSULATION INSIDE PIPE ENCLOSURE WHERE SPRINKLER PIPE CROSSES UNHEATED AREAS (EXCEPT IN ATTIC).

SYMBOLS / ABBREVIATIONS

- UPRIGHT QUICK RESPONSE SPRINKLER
- UPRIGHT QUICK RESPONSE SPRINKLER WITH GUARD
- RECESSED QUICK RESPONSE SPRINKLER
- RISER SYMBOL
- ZCA — ZONE CONTROL ASSEMBLY
- CHECK VALVE
- FLOW SWITCH WITH MONITOR MODULE
- TEST N DRAIN ASSEMBLY
- UP/DOWN PIPE
- VALVE TAMPER SWITCH WITH TAMPER PROOF COVER AND MONITOR MODULE
- FIRE DEPARTMENT CONNECTION
- QR — QUICK-RESPONSE
- SPRINKLER DESIGN AREA
- A — SPRINKLER DESIGN SCHEDULE INDICATOR, SEE SCHEDULE THIS SHEET
- MAIN SPRINKLER PIPE ABOVE GROUND
- UNDERGROUND PIPING

WATER SUPPLY DATA

DATE: 20 AUGUST 2009

STATIC PRESSURE: 60 PSI
RESIDUAL PRESSURE: 47 PSI
FLOW GPM: 524 GPM

LOCATION: THE FLOW HYDRANT (FH1022) IS LOCATED BEHIND THE TEQ. THE PRESSURE HYDRANT (FH179) IS LOCATED ON F STREET ACROSS FROM THE TEQ. TEST WAS PERFORMED BETWEEN 1:15 AND 1:35 PM.

SEISMIC LOADS ANALYSIS

SEISMIC BRACING IS NOT REQUIRED BASED ON EXISTING CONDITIONS

SPRINKLER SCHEDULE

	TYPE	RESPONSE / TEMPERATURE	FINISH
DWELLING UNITS	RESIDENTIAL CONCEALED PENDENT	QUICK	WHITE
		ORDINARY	
CEMENT AND UNFINISHED AREAS	UPRIGHT	QUICK	BRASS
		ORDINARY	
CORRIDORS, STAIRS (OPEN TO EXTERIOR)	SIDEWALL - DRY BARREL	QUICK	BRASS
		ORDINARY	
DRYWALL AND SUSPENDED CEILINGS	INSTITUTIONAL CONCEALED PENDENT	QUICK	WHITE
		ORDINARY	

SPRINKLER DESIGN SCHEDULE

	CLASSIFICATION	TYPE	DENSITY (GPM/FT^2)	AREA (FT^2)	HOSE (GPM)	NOTES
A	LIGHT HAZARD	WET PIPE	0.10	3,000*	250	LIGHT HAZARD AS DEFINED BY NFPA 13. LOUNGES, TOP OF STAIRWELLS
B	ORDINARY HAZARD, GROUP 1	WET PIPE	0.15	3,000*	500	STORAGE, MECHANICAL/ELECTRICAL EQUIPMENT AREAS: ORDINARY HAZARD, GROUP 1 AS DEFINED BY NFPA 13.
C	ORDINARY HAZARD, GROUP 2	WET PIPE	0.20	ENTIRE*	500	BOILER ROOM
D	RESIDENTIAL, LIGHT HAZARD	RESIDENTIAL	0.10	4 RESIDENTIAL SPRINKLERS IN A DWELLING UNIT	250	DWELLING UNITS: 4 SPRINKLERS AT 7 PSI MINIMUM AND FLOWING AT LEAST 13 GPM PER SPRINKLER AS DEFINED BY NFPA 13R

* AREA CAN BE REDUCED WITH RESPECT TO QUICK-RESPONSE SPRINKLERS AND CEILING HEIGHT AS PERMITTED BY NFPA 13, NFPA

AS BUILT

SYM.	DESCRIPTION	DATE	APPR.

DESIGNED & ENGINEERED BY: FACILITIES ENGINEERING

A/E'S USE THIS SPACE FOR YOUR ADDRESS INFO.

COMMONWEALTH OF VIRGINIA
CHRISTINE A. SWANSON
Lic. No. 044005
08-03-2010
PROFESSIONAL ENGINEER

APPROVED

ACTIVITY - SATISFACTORY TO

DATE

APPROVED

FOR EFD FOR COMMANDER NAVFAC

DATE

A/E		EFD
	DESIGN	CAS
	DRAWN	CAS
	REVIEW	
	QC	DPL
	CHIEF ARCH./ ENGR.	

PROJECT MANAGER
FIRE PROTECTION
BRANCH MANAGER
DESIGN DIRECTOR

DEPARTMENT OF THE NAVY
NAVAL FACILITIES ENGINEERING COMMAND
MARINE CORPS AIR STATION, CHERRY POINT, N.C.

REPAIR AND IMPROVEMENTS TO TEQ, BUILDING 3673

LEGEND NOTES AND ABBREVIATIONS

CODE ID. NO. 80091 | SIZE D
SCALE: AS SHOWN
FED NO. W04849948/W04849972
STA. PROJ. NO. CP0913M/LP0926R
SPEC. NO. 00000
CONSTR. CONTR. NO. N62470-02-M-0000
NAVFAC DRAWING NO. 12561632
SHEET 97 OF 106
FS001

DRAWFORM REVISION JULY 2003

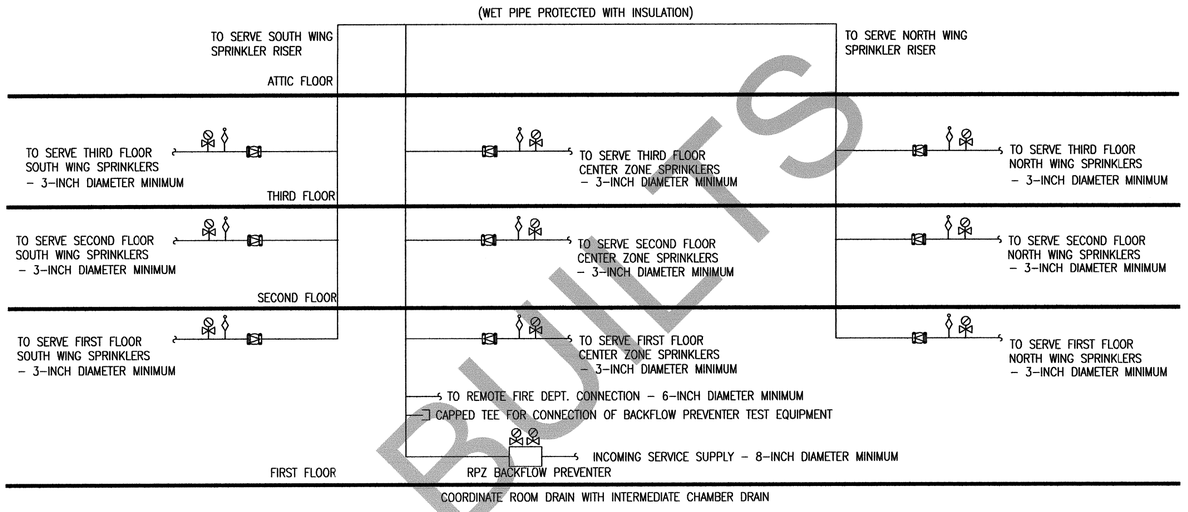

FIRE PROTECTION RISER DIAGRAM

SCALE: NONE

AS BUILTS

SYM.	DESCRIPTION	DATE	APPR.

DESIGNED & ENGINEERED BY: FACILITIES ENGINEERING

A/E'S USE THIS SPACE FOR YOUR ADDRESS INFO.

COMMONWEALTH OF VIRGINIA
CHRISTINE A. SWANSON
Lic. No. 044005
08-03-2010
PROFESSIONAL ENGINEER

APPROVED

ACTIVITY – SATISFACTORY TO

DATE

APPROVED

FOR EFD FOR COMMANDER NAVFAC

DATE

A/E		EFD
	DESIGN	CAS
	DRAWN	CAS
	REVIEW	
	QC	DPL
	CHIEF ARCH./ ENGR.	

PROJECT MANAGER

FIRE PROTECTION

BRANCH MANAGER

DESIGN DIRECTOR

DEPARTMENT OF THE NAVY
NAVAL FACILITIES ENGINEERING COMMAND
MARINE CORPS AIR STATION, CHERRY POINT, N.C.

REPAIR AND IMPROVEMENTS TO TEQ, BUILDING 3673

FIRE PROTECTION RISER DIAGRAM

CODE ID. NO. 80091 | SIZE D

SCALE: AS SHOWN

FED. NO. W04849948/W04849972

STA. PROJ. NO. CP0913M/LP0926R

SPEC. NO. 00000

CONSTR. CONTR. NO. N62470-02-M-0000

NAVFAC DRAWING NO. 12561633

SHEET 98 OF 106

FS002

DRAWFORM REVISION JULY 2001

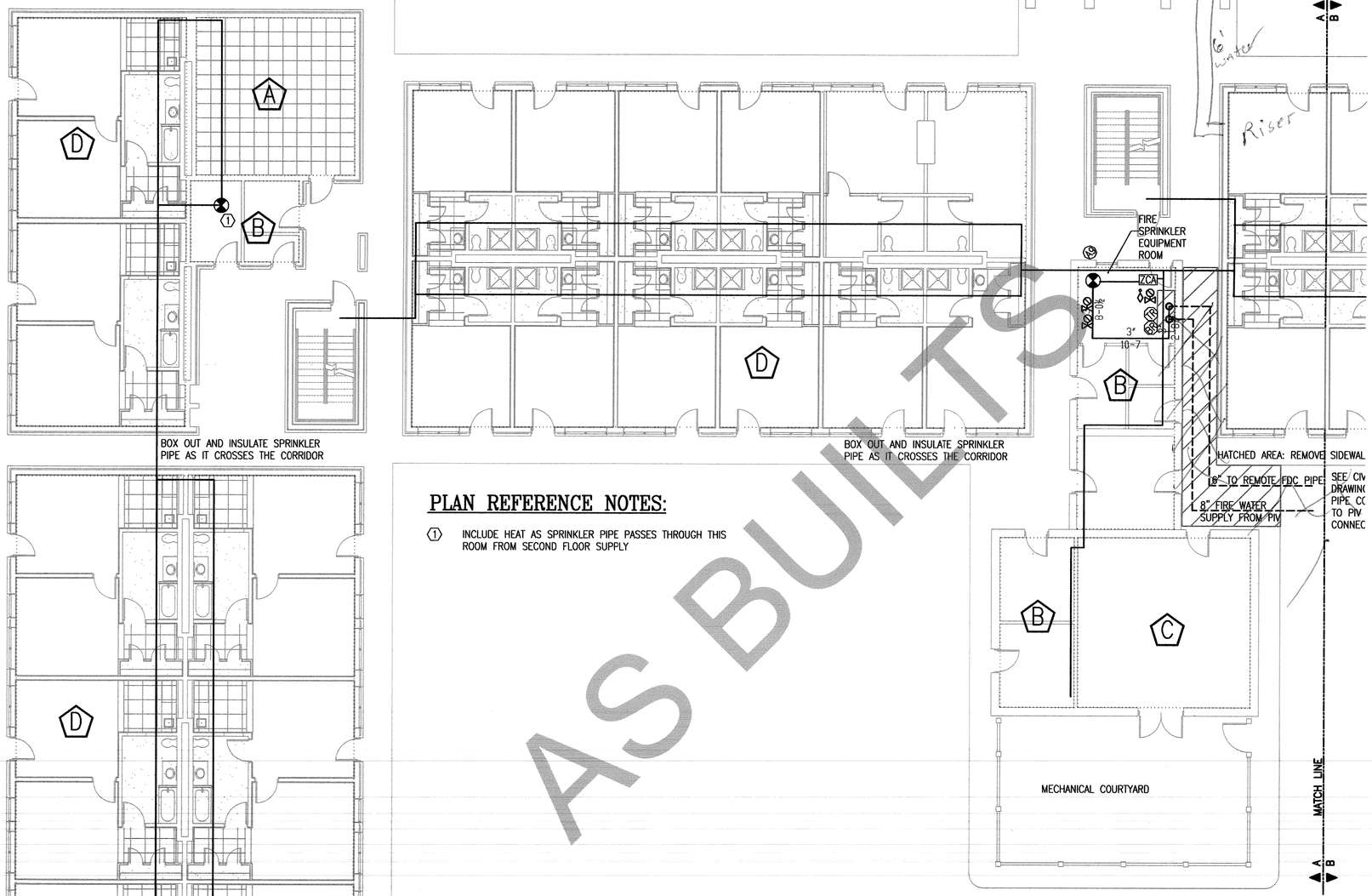

PLAN REFERENCE NOTES:

(1) INCLUDE HEAT AS SPRINKLER PIPE PASSES THROUGH THIS ROOM FROM SECOND FLOOR SUPPLY

FIRE SPRINKLER FIRST FLOOR PLAN A

SCALE: 1/8" = 1'-0"

PLAN NORTH

Scale: 1/8"=1'-0"

48" 24" 0 2' 4' 8' 12' 20'

AS BUILTS

DATE	APPR.	DESCRIPTION	BY

DESIGNED & ENGINEERED BY: FACILITIES ENGINEERING

A/E'S USE THIS SPACE FOR YOUR ARCHIVES INFO.

COMMONWEALTH OF VIRGINIA
CHRISTINE A. SWANSON
Lic. No. 044005
08-03-2016
PROFESSIONAL ENGINEER

APPROVED

ACTIVITY – SATISFACTORY TO

DATE

APPROVED

FOR EFD FOR COMMANDER NAVFAC

DATE

A/E		EFD
	DESIGN	CAS
	DRAWN	CAS
	REVIEW	
	QC	DPL
	CHIEF ARCH./ ENGR.	

PROJECT MANAGER
FIRE PROTECTION
BRANCH MANAGER
DESIGN DIRECTOR

DEPARTMENT OF THE NAVY
NAVAL FACILITIES ENGINEERING COMMAND
MARINE CORPS AIR STATION, CHERRY POINT, N.C.

REPAIR AND IMPROVEMENTS TO TEQ, BUILDING 3673

FIRE SPRINKLER FIRST FLOOR PLAN A

CODE ID. NO. 80091 | SIZE D

SCALE: AS SHOWN

FED NO. W04849948/W04849972

STA. PROJ. NO. CP0913M/LP0926R

SPEC. NO. 00000

CONSTR. CONTR. NO. N62470-02-M-0000

NAVFAC DRAWING NO. 12561634

SHEET 99 OF 106

FS101

DRAWFORM REVISION JULY 2003

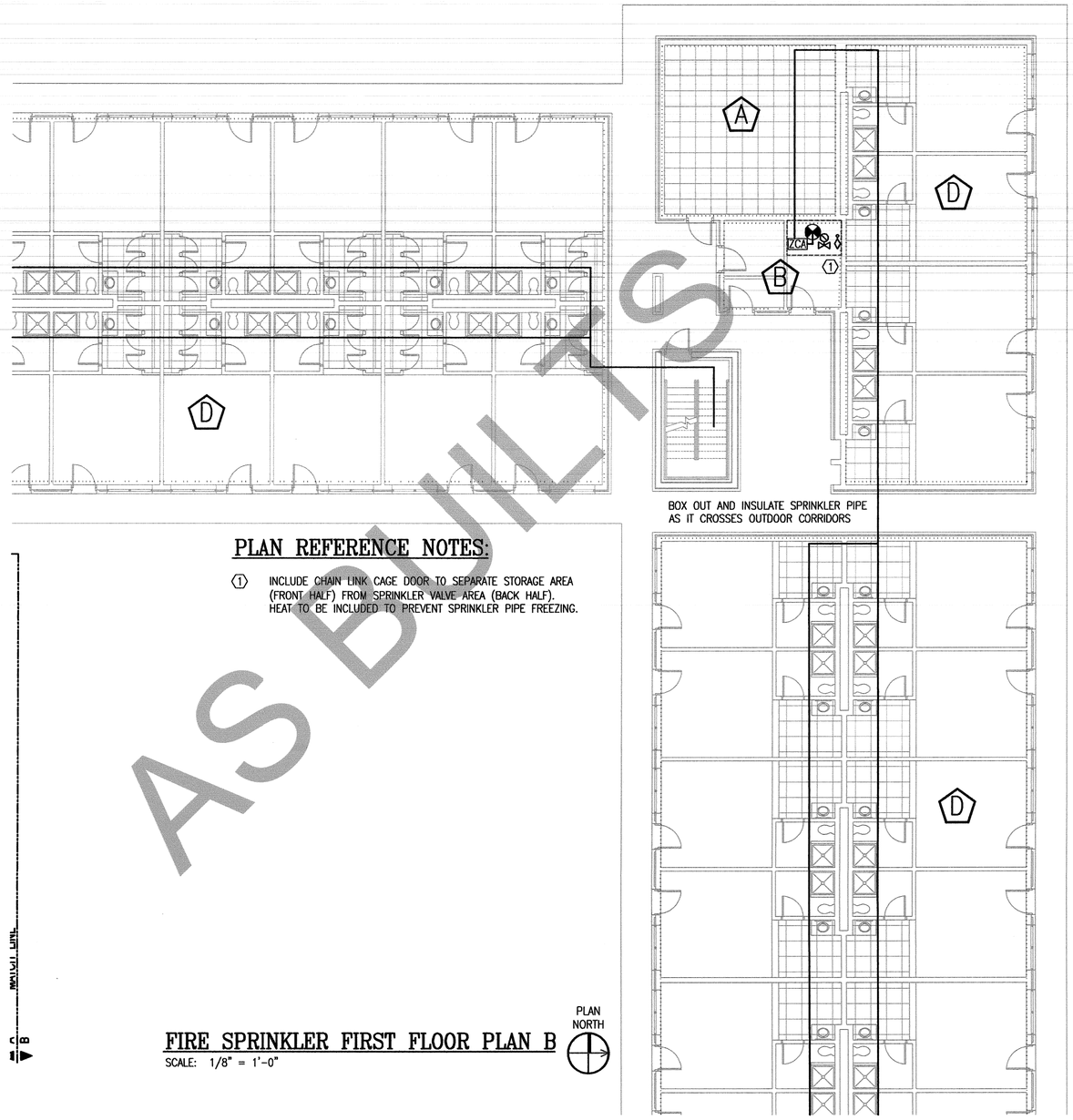

PLAN REFERENCE NOTES:

1. INCLUDE CHAIN LINK CAGE DOOR TO SEPARATE STORAGE AREA (FRONT HALF) FROM SPRINKLER VALVE AREA (BACK HALF). HEAT TO BE INCLUDED TO PREVENT SPRINKLER PIPE FREEZING.

FIRE SPRINKLER FIRST FLOOR PLAN B

SCALE: 1/8" = 1'-0"

PLAN NORTH

Scale: 1/8"=1'-0"

48" 24" 0 2' 4' 8' 12' 20'

AS BUILTS

							DATE	APPR.
							DESCRIPTION	
							BY/A.	

DESIGNED & ENGINEERED BY:
FACILITIES ENGINEERING

A/E'S USE THIS SPACE FOR YOUR ADDRESS INFO.

COMMONWEALTH OF VIRGINIA
CHRISTINE A. SWANSON
Lic. No. 044005
08-03-2010
PROFESSIONAL ENGINEER

APPROVED

ACTIVITY – SATISFACTORY TO

DATE

APPROVED

FOR EFD FOR COMMANDER NAVFAC

DATE

A/E		EFD
	DESIGN	CAS
	DRAWN	CAS
	REVIEW	
	QC	DPL
	CHIEF ARCH./ ENGR.	

PROJECT MANAGER
FIRE PROTECTION
BRANCH MANAGER
DESIGN DIRECTOR

DEPARTMENT OF THE NAVY
NAVAL FACILITIES ENGINEERING COMMAND
MARINE CORPS AIR STATION, CHERRY POINT, N.C.

REPAIR AND IMPROVEMENTS TO TEQ, BUILDING 3673

FIRE SPRINKLER FIRST FLOOR PLAN B

CODE ID. NO. 80091 | SIZE D

SCALE: AS SHOWN

FED NO. W04849948/W04849972

STA. PROJ. NO. CP0913M/LP0926R

SPEC. NO. 00000

CONSTR. CONTR. NO. N62470-02-M-0000

NAVFAC DRAWING NO. 12561635

SHEET 100 OF 106

FS102

DRAWFORM REVISION JULY 2003