Nome Bunkhouse Interior Window Photos

Shows interior finishes details at existing windows

Seventh
GENERATION
ALL PURPOSE
Softsoap

Nome Bunkhouse 2019 Siding Installation Photos

Shows flashing details at existing windows

HUTTIG-GRIP
FASTENERS

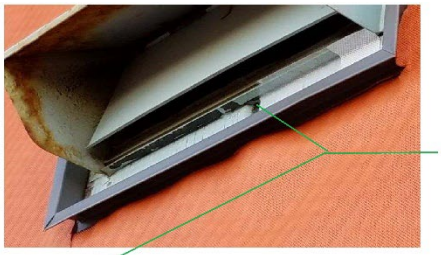

Can't have T-111 joints exposed to weather -- don't want wood surfaces for future paint paintenance...also need flat stock to cover wood so there is a flat surface to caulk against at J-chanel.

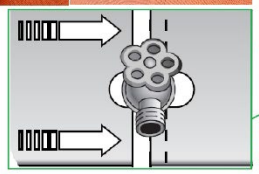

Slide flat stock flashing around penetrations per manufacturer's flashing details below:

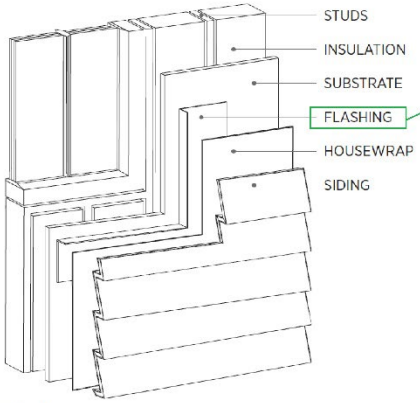

FIG 6.1

PSHIELD SA®
able, Permeable, Self-Adhered
Vater Resistive Air Barrier
Part No. 24109090
y 164' (50m) 807 Sq.Ft. Roll (75m²)
h: 1.866.731.7663
ww.VaproShield.com
abaa

MUCHO CUIDADO
WARNING

LD S
Self-Adhe
Self-Adhe
ir Barrier
90
Sq.Ft. Roll (7

Frog
Buil
LD S
Self-Adhe
ir Barrier
90
Sq.Ft. Roll (7
663
d.com
2-50

DANGER
KEEP OUT
DANGER
KEEP OUT

MMM GROUP

ANSI/NFRC 100

Procedure for Determining Fenestration Product U-factors

ANSI/NFRC 200

Procedure for Determining Fenestration Product Solar Heat Gain Coefficient and Visible Transmittance at Normal Incidence

NFRC 500

Procedure for Determining Fenestration Product Condensation Resistance Values

Fenestration Simulation Report

300 Tilt & Turn

Report Number

GLW17M00444-d

Friday, May 26, 2017

Prepared For

Chip Vaughan

Great Land Windows

2401 College Rd.

Fairbanks, Alaska

99709

(907) 479-8437

Prepared By

MMM Group, Ltd.

582 Lancaster, West

Kitchener, Ontario, N2R 1L5

519-743-8777

TABLE OF CONTENTS

PG.	TITLE
3	Product Line Description
4	Report Information
5	Simulation Notes
6	Baseline Product
7	Glazing Library for Manufacturer
8	NFRC Simulation Data
9	Appendix A Group Leader Calculation
11	Appendix B Product Drawings

Manufacturer:	Great Land Windows
Report Number:	GLW17M00444-d
Product Line:	300 Tilt & Turn
Frame:	Fiberglass with Foam Fill
Sash:	Fiberglass with Foam Fill
Thermal Break:	N
Edge of Glass:	Exterior edges are held by foam glazing tape. Interior edges are held by silicone gasket or EPDM gasket.
Glazing:	Cardinal Glass Industries Float Glass 3mm (CCL), Cardinal Glass Industries LoE 180 on 3mm Clear (180), Cardinal Glass Industries LoE 270 on 3mm Clear (270), Cardinal Glass Industries LoE 272 on 3mm Clear (272), Cardinal Glass Industries LoE 340 on 3mm Clear (340), Cardinal Glass Industries LoE 366 on 3mm Clear (366), Cardinal Glass Industries i89 on 4mm Clear (i89).
Spacer:	Cardinal Endur with PiB Primary Sealant and Silicone Secondary Sealant (SS-D), Superspacer S-Class with integral primary sealant and Butyl Secondary Sealant (Validation Only)(ZF-D)
Weatherstripping	Silicone gasket on the frame and sash.
General:	This product line includes the 300 Tilt & Turn manufactured by Great Land Windows. Group leader calculations were performed for different center of glazing Low E coatings. They are groupable per ANSI/NFRC 100-2014 section 4.2.4.1. See group leader section for group leaders.

Zeljka Lazarevic

Digitally signed by Zeljka Lazarevic
DN: dc=ca, dc=mmm, ou=MMMGROUP, ou=Kitchener, cn=Zeljka Lazarevic, email=LazarevicZ@mmm.ca
Date: 2017.06.02 12:53:14 -04'00'

Ian Franklin

Simulator

Simulator in Responsible Charge

The windows documented in this report were simulated in accordance with the ANSI/NFRC 100: Procedure for Determining Fenestration Product U-Factors (2014), ANSI/NFRC 200: Procedure for Determining Fenestration Product Solar Heat Gain Coefficient and Visible Transmittance at Normal Incidence (2014) and NFRC 500: Procedure for Determining Fenestration Product Condensation Resistance Values (2014).

The windows were simulated using WINDOW 7 and THERM 7 computer programs as specified in ANSI/NFRC 100 and ANSI/NFRC 200. The most currently approved spectral data files from NFRC were also used. The WINDOW program models the one-dimensional heat flow through the center-of-glass portion of the window. The THERM program models the two-dimensional heat flow through the frame, edge-of-glass, divider, and divider-edge portions of the window. The input data for both programs is based on manufacturer's specifications. Defaults for material thermal and optical properties are given in the computer programs. When values other than defaults were used, they are

Ratings values included in this report are for submittal to an NFRC-licenced IA and are not meant to be used directly for labeling purposes. Only those values identified on a valid Certification Authorization Report (CAR) by an NFRC accredited Inspection Agency (IA) are to be used for labeling purposes.

The values included in this report are not considered in compliance with ANSI/NFRC 100, ANSI/NFRC 200, and/or NFRC 500 unless the associated validation test requirements have been satisfied, as applicable.

DISCLAIMER:

This window simulation report was generated by MMM Group Ltd. of Kitchener, ON. The report relates only to the items specified.

No part of this report may be reproduced except in full, without the written consent of MMM Group Ltd.

MMM Group Ltd. and its employees neither endorse nor warrant the suitability of the product simulated. Every effort was taken to accurately model the performance of the windows documented in this report. Because of the large amount of input data and analyses, it is possible that errors or omissions could occur.

Neither MMM Group Ltd. nor any of its employees shall be responsible for any loss or damage resulting directly or indirectly from any default, error, or omission.

SIMULATION NOTES

1. This is an "ANSI/NFRC 100: Procedure for Determining Fenestration Product U-Factors" Certification Report.

2. This is an "ANSI/NFRC 200: Procedure for Determining Fenestration Product Solar Heat Gain Coefficient and Visible Transmittance at Normal Incidence" Certification Report.

3. This is an "NFRC 500: Procedure for Determining Fenestration Product Condensation Resistance Values" Certification Report.

4. Unit conversions and rounding are performed according to NFRC 601.

5. All glazing surface emissivities are assumed to be 0.84 unless otherwise stated.

6. The gas fill method is single probe with 90% argon (arg90).

7. Unless otherwise stated. All non-continuous hardware that does not create a thermal bridge such as hinges, balances, locks etc. are not modeled.

8. Where applicable, the following materials are used (Conductivity in W/mK): ADCO PIB-8 HSNB Gray (0.155), Cardinal Stainless Steel (14.187), Superspacer Silicone Foam S1 (0.178), Superspacer S2 Premium (0.125), Superspacer S2 Premium Plus (0.127), Superspacer nXt (0.114), Superspacer Standard EPDM (0.179), Superspacer TriSeal (0.141), Superspacer T-Spacer (0.130), GED Intercept Ultra Stainless Steel (13.63), Quanex Butyl 761-71X (0.177), San Gobain SAN 35% Glass Fiber (0.142).

NFRC - U-Value Baseline Product

Manufacturer: Great Land Windows
Mfr contact: Chip Vaughan

Product line: 300 Tilt & Turn

Product Type: DATT
Frame: Fiberglass with Foam Fill

Report number: GLW17M00444-d

Date: 5/26/2017

Revised date:

Product Description	366-kry-Cl-kry-366 Validation, vss
Glass Thick 1 (in)	0.153
Glass Thick 2 (in)	0.154
Glass Thick 3 (in)	0.153
Glass Thick 4 (in)	
Glass Thick 5 (in)	
# of Glazing Layers	3
Surface #2 Emissivity	0.02
Surface #3 Emissivity	
Surface #4 Emissivity	
Surface #5 Emissivity	0.02
Surface #6 Emissivity	
Surface #7 Emissivity	
Surface #8 Emissivity	
Gap 1	0.453
Gap 2	0.453
Gap 3	
Gap 4	
Validation Size	1200 x 1500 mm
	47.244 x 59.055 in
Spacer Type	ZF-D
Grid	N
Gap Fill	Air (10%) / krypton (90%) Mix
U-Value	0.16

ID	Name	No. of Layers	Mode	Tilt	Environmental Conditions	Keff (Btu/h*ft*F)	Overall Thickness (in)	Uval (Btu/h*ft²F)	SHGC	Visible Transmittance
1	CCL-arg90-180	2	#	90	NFRC 100-2010	0.027	0.876	0.269	0.687	0.793
2	270-arg90-CCL	2	#	90	NFRC 100-2010	0.025	0.876	0.257	0.366	0.702
3	272-arg90-CCL	2	#	90	NFRC 100-2010	0.026	0.876	0.259	0.412	0.720
4	340-arg90-CCL	2	#	90	NFRC 100-2010	0.025	0.876	0.254	0.177	0.389
5	366-arg90-CCL	2	#	90	NFRC 100-2010	0.025	0.876	0.251	0.271	0.648
6	180-arg90-CCL-arg90-180	3	#	90	NFRC 100-2010	0.018	1.398	0.132	0.561	0.699
7	270-arg90-CCL-arg90-180	3	#	90	NFRC 100-2010	0.017	1.398	0.128	0.331	0.617
8	272-arg90-CCL-arg90-180	3	#	90	NFRC 100-2010	0.017	1.398	0.129	0.372	0.633
9	340-arg90-CCL-arg90-180	3	#	90	NFRC 100-2010	0.017	1.398	0.127	0.155	0.343
10	366-arg90-CCL-arg90-180	3	#	90	NFRC 100-2010	0.017	1.398	0.126	0.244	0.569
11	180-arg90-180-arg90-i89	3	#	90	NFRC 100-2010	0.017	1.398	0.116	0.533	0.683
12	270-arg90-180-arg90-i89	3	#	90	NFRC 100-2010	0.017	1.398	0.112	0.319	0.603
13	272-arg90-180-arg90-i89	3	#	90	NFRC 100-2010	0.017	1.398	0.113	0.357	0.619
14	340-arg90-180-arg90-i89	3	#	90	NFRC 100-2010	0.017	1.398	0.111	0.149	0.335
15	366-arg90-180-arg90-i89	3	#	90	NFRC 100-2010	0.016	1.398	0.111	0.236	0.556
16	366-kry-Cl-kry-366 Validation	3	#	90	NFRC 100-2010	0.010	1.378	0.104	0.234	0.460

NFRC Simulation Data – Summary

Manufacturer: Great Land Windows

Series/Model #: 300 Tilt & Turn

Spacer: Cardinal Endur with PiB Primary Sealant and Silicone Secondary Sealant (SS-D), Superspacer S-Class with integral primary sealant and Butyl Secondary Sealant (Validation Only)(ZF-D)

Operator Type:	DATT	Sim Lab Code:	SEEL
Model Size:	1200 x 1500	Report number:	GLW17M00444-d
Thermal Break:	N	Date:	5/26/2017
		Revised Date:	
		Rating Procedure:	2014

Mfr Product Code	Product Number	Gap 1 (in)	Gap 2 (in)	Gap Fill 1	Gap Fill 2	Emissivity Surface 2	Emissivity Surface 3	Emissivity Surface 4	Emissivity Surface 5	Tint	Spacer	Grid Type	Grid Size	U-Factor (Btu/h*ft²F)	SHGC	VT	*CR
CCL-arg90-180, en	0001	0.64		ARG			0.07			CL	SS-D	N		0.27	0.46	0.53	62
272-arg90-CCL, en	0002	0.64		ARG		0.04				CL	SS-D	N		0.26	0.28	0.48	62
270-arg90-CCL, en		0.64		ARG		0.04				CL	SS-D	N		0.26	0.25	0.47	62
340-arg90-CCL, en	0003	0.64		ARG		0.03				CL	SS-D	N		0.26	0.12	0.26	63
366-arg90-CCL, en		0.64		ARG		0.02				CL	SS-D	N		0.26	0.19	0.43	63
180-arg90-CCL-arg90-180, en	0004	0.52	0.52	ARG	ARG	0.07			0.07	CL	SS-D	N		0.18	0.38	0.47	73
272-arg90-CCL-arg90-180, en	0005	0.52	0.52	ARG	ARG	0.04			0.07	CL	SS-D	N		0.18	0.25	0.42	73
270-arg90-CCL-arg90-180, en		0.52	0.52	ARG	ARG	0.04			0.07	CL	SS-D	N		0.18	0.23	0.41	73
340-arg90-CCL-arg90-180, en	0006	0.52	0.52	ARG	ARG	0.03			0.07	CL	SS-D	N		0.18	0.11	0.23	73
366-arg90-CCL-arg90-180, en		0.52	0.52	ARG	ARG	0.02			0.07	CL	SS-D	N		0.18	0.17	0.38	73
180-arg90-180-arg90-i89, en	0007	0.52	0.52	ARG	ARG	0.07		0.07		CL	SS-D	N		0.17	0.36	0.45	66
272-arg90-180-arg90-i89, en	0008	0.52	0.52	ARG	ARG	0.04		0.07		CL	SS-D	N		0.17	0.24	0.41	67
270-arg90-180-arg90-i89, en		0.52	0.52	ARG	ARG	0.04		0.07		CL	SS-D	N		0.17	0.22	0.40	67
340-arg90-180-arg90-i89, en	0009	0.52	0.52	ARG	ARG	0.03		0.07		CL	SS-D	N		0.17	0.10	0.22	67
366-arg90-180-arg90-i89, en		0.52	0.52	ARG	ARG	0.02		0.07		CL	SS-D	N		0.17	0.16	0.37	67

*Note: The Condensation Resistance results obtained from this procedure are for controlled laboratory conditions and do not include the effects of air movement through the specimen, solar radiation, and the thermal bridging that may occur due to the specific design and construction of the fenestration system opening.

INLINE FIBERGLASS WINDOWS

TILT & TURN, CASEMENT, and HOPPER DETAILS

SERIES 300A

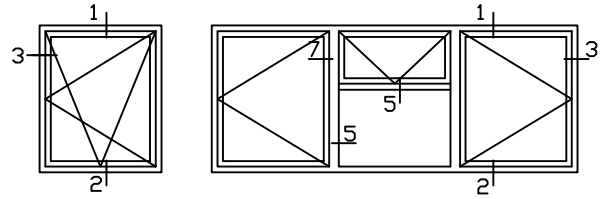

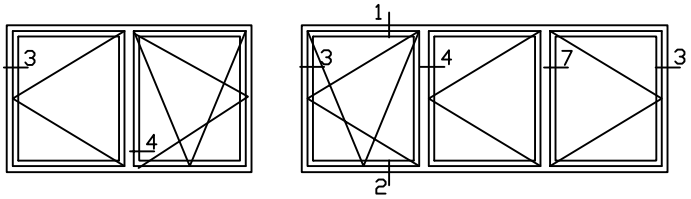

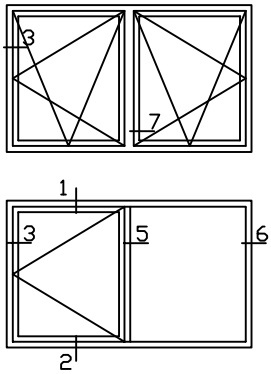

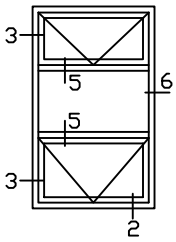

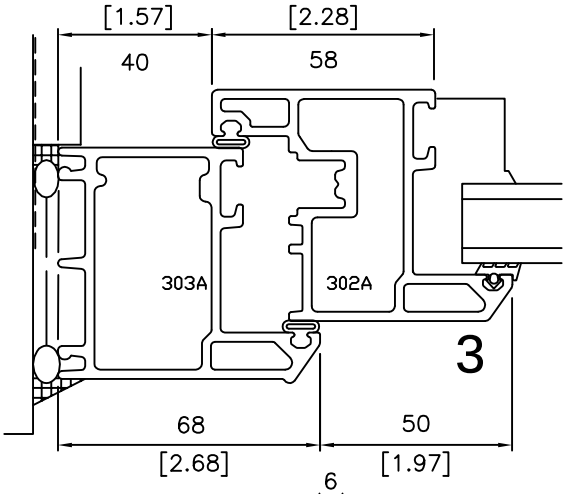

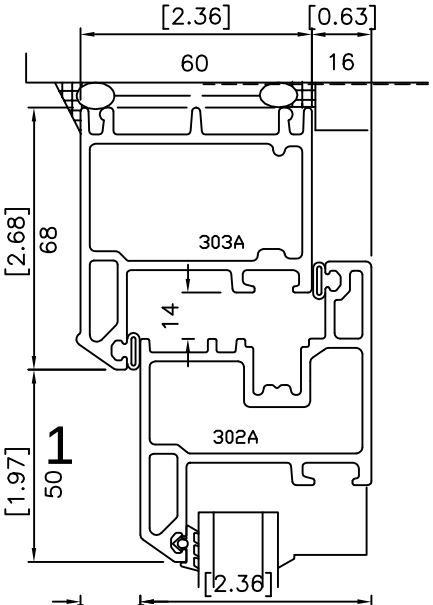

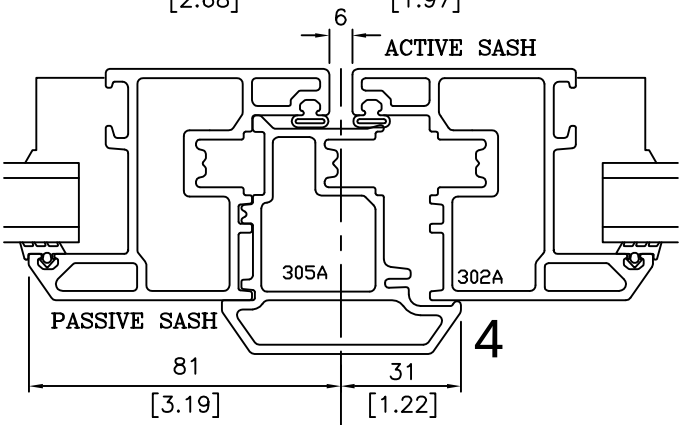

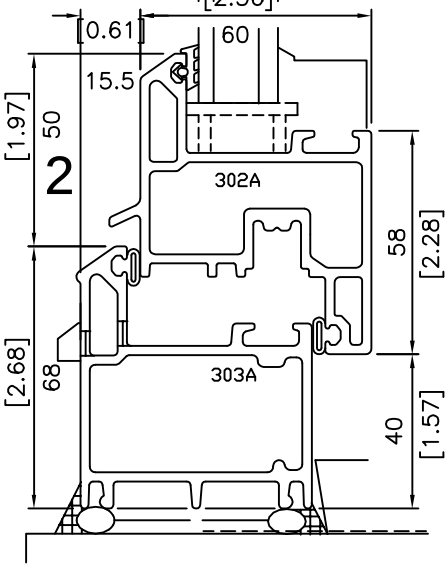

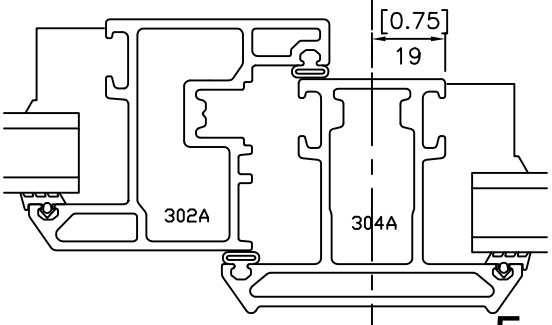

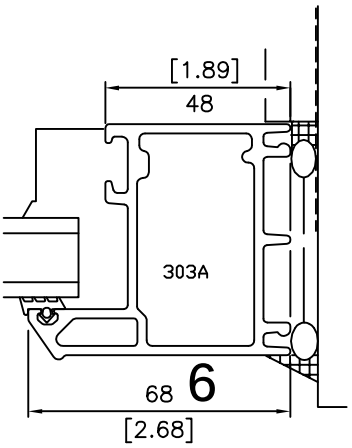

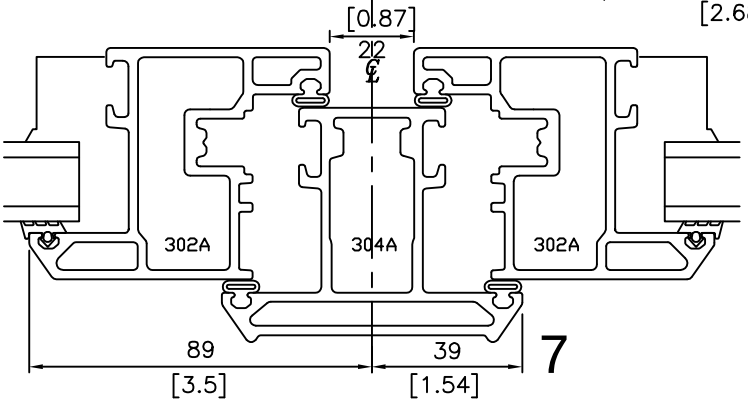

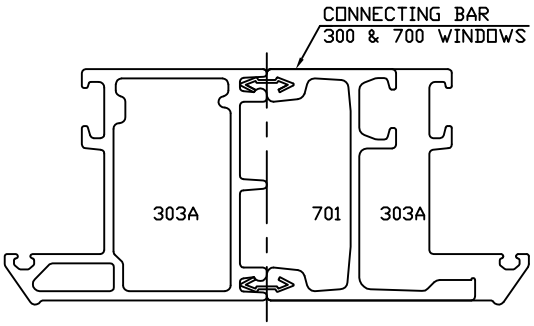

300A1
\300 DEC./97

INSTALLATION INSTRUCTION
300 tilt'n turn window & 301 tilt'n turn door

A GOOD INSTALLATION ENSURES LASTING WINDOW PERFORMANCE.

BUILDING CODES, ENVIRONMENTAL CONDITIONS, APPROVED SHOP DRAWINGS MAY VARY & SUPERSEDE THE PROCEDURES CONTAINED BELOW. THE RESPONSIBILITY FOR COMPLIANCE IS THE PROJECT'S OWNER(S), INSTALLERS, ARCHITECT, INSPECTORS, & BUILDING SCIENTISTS.

1. HANDLE CAREFULLY
2. STORE WITH NON–ABRASIVE SEPARATORS BETWEEN FRAMES. WINDOWS SHOULD BE STORED IN A PLACE PROTECTED FROM WEATHER.
3. ALTERATIONS – WINDOWS SHOULD NOT BE LOAD BEARING AFTER INSTALLATION. WINDOWS SHOULD NOT BE MODIFIED TO ACCOMMODATE AIR CONDITIONERS, EXHAUST FANS, ETC.
4. R.O. – PRODUCT WAS DEVELOPED & TESTED IN A WINDOW WALL INTERFACE SYSTEM DESIGNED TO MANAGE WATER. SEE BRICK VENEER SILL EXAMPLE 4) BELOW FOR LOW TO MODERATE DESIGN PRESSURE REQUIREMENTS.
5. ANCHORAGE – WINDOW FRAMES SHOULD BE SET PLUMB, SQUARE, SHIMMED AND SECURED TO SURROUNDING STRUCTURE. WINDOW ANCHORAGE MUST BE SUFFICIENT TO MEET STRUCTURAL REQUIREMENTS OF LOCAL BUILDING CODES. ALLOW AT LEAST 6mm (+1/4")SPACE BETWEEN THE FRAME AND ROUGH OPENING FOR SHIMMING AND ADJUSTMENT. ALWAYS ADJUST ANCHOR POSITION, SHIMMING THICKNESS TO MAINTAIN STRAIGHT AND PARALLEL LINES BETWEEN SASH AND FRAME. ENSURE ADEQUATE AND LEVEL SUPPORT OF THE SILL.

* ANCHORING METHOD FOR SINGLE OPERATOR – a) SET WINDOW/DOOR LEVEL IN SUBSTRATE, b) ANCHOR WINDOW/DOOR IN TWO OPPOSITE OR DIAGONAL CORNERS, c) OPEN SASH SMALL DISTANCE FROM FRAME, d) MOVE UNANCHORED CORNERS OF WINDOW /DOOR INWARD OR OUTWARD UNTIL GAP BETWEEN SASH & FRAME IS EQUIDISTANT ON OPENING EDGE, e) APPLY ANCHORS IN REMAINING CORNERS. f) MEASURE FRAME DIAGONALS TO CHECK FOR SQUARENESS g) CLOSE WINDOW/DOOR & CHECK THAT LOCK ENGAGES EASILY, h) APPLY REST OF ANCHOR AS PER RECOMMENDED ANCHOR LOCATIONS.

SHIMS REQUIRED TO SUPPORT INTERIOR & EXTERIOR OF WINDOW FRAME AT ALL ANCHORS & ESPECIALLY AT SILL.

6a. CORNER ANCHORS – SECURE WITHIN 100mm (4") FROM THE CORNERS.

6b. PERIMETER ANCHORS – SPACING SHOULD NOT EXCEED 450mm (18") ON CENTER.

6c. MULLION AND TRANSOM ANCHORS – ALWAYS ANCHOR WITHIN 100mm (4") FROM MULLION OR TRANSOM (IT IS ALWAYS A CRITICAL AREA FOR ANCHORAGE).

NOTE:1) IF ANCHORAGE IS PROVIDED BY DIRECT FASTENING USE WASHER TYPE OF FASTENERS, FULLY SUPPORT FRAME AT FASTENER LOCATION.
2) SEAL ALL FASTENER PENETRATIONS THROUGH WINDOW SILL

7. PERIMETER CAVITIES – BETWEEN WINDOW FRAMES AND ROUGH OPENING (R.O.) SHOULD BE FILLED WITH LOOSE INSULATION OR LOW EXPANSION FOAM. DO NOT DISTORT FRAME BY OVER PACKING. NOTE THAT AN INSULATED CAVITY IMPROVES THERMAL PERFORMANCE.
8. CAULK THE EXTERIOR PERIMETER TO PROVIDE SEAL BETWEEN WALL AND RAIN SCREEN TO ENSURE CONTINUITY OF WEATHER TIGHTNESS.
9. CAULK AND/OR TAPE THE INTERIOR PERIMETER TO PROMOTE CONTINUITY OF AIR BARRIER TO MINIMIZE RISK OF CONDENSATION WITHIN THE CAVITY & TO MEET TESTED AIR & WATER RESISTANCE LEVELS.
10. DOOR FRAME TO BE MOUNTED FLUSH TO INTERIOR WALL SEE #303 BELOW (EXTERIOR ALUM. EXTENSORS AND BRICKMOULD AVAILABLE FOR FINISHING OF OUTSIDE SUBSTRATE).
11. WHERE FLUSH MOUNTING TO INTERIOR WALL IS NOT POSSIBLE: INTERIOR (ON OR OFF SYSTEM WINDOW & DOOR) STOPS MUST BE USED TO PREVENT DOOR OR WINDOW SASH FROM COMING IN CONTACT WITH INTERIOR EDGE OF ROUGH OPENING. CAUTION HARDWARE CAN BE DAMAGED IF ON OPENING, SASH COMES IN CONTACT WITH INTERIOR JAMB.
12. MAINTANANCE – WASH GLASS & FRAME WITH NON–ABRASIVE CLEANER & WATER. LUBRICATE WITH ONLY SILICONE LUBRICANT SPRAY – HARDWARE & ALL WEATHERSTRIP EVERY SIX MONTHS MIN. TO MAINTAIN EASE OF OPERATION.

RECOMMENDED MINIMUM ANCHOR LOCATIONS (SCREW OR STRAP ANCHOR)

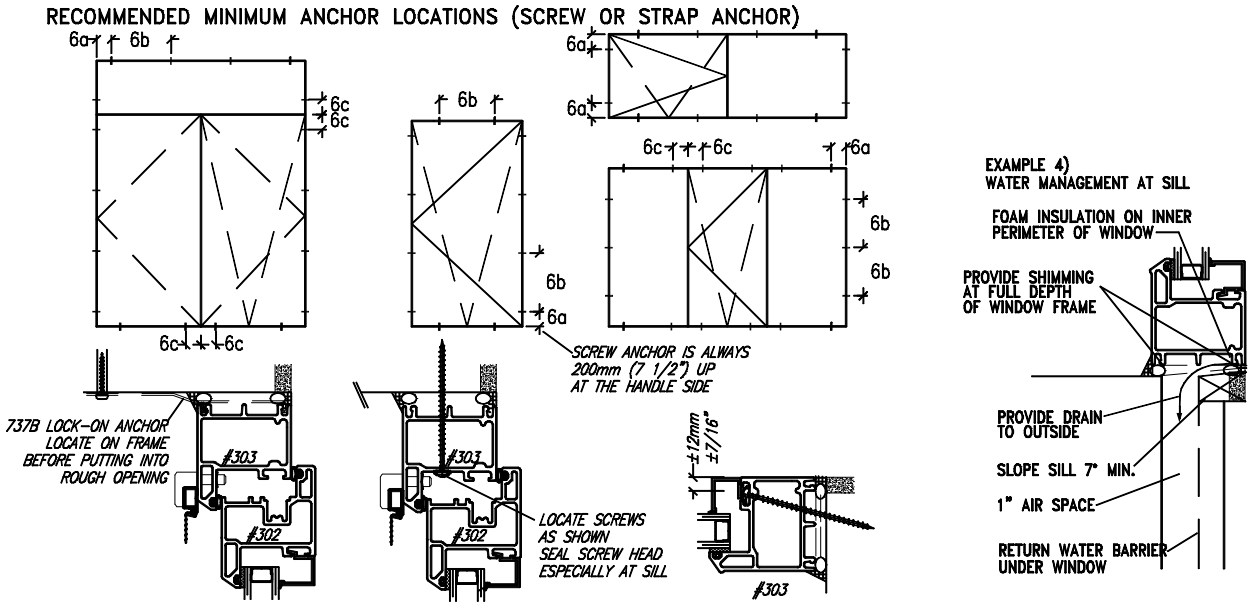

ITEM.	QTY.	DWG.NO./CAT.NO.	DESCRIPTION	MATERIAL

SHEET 1 / 2

NO.	REVISION	DATE
1.	K.C.	Mar.07

INLINE FIBERGLASS
30 Constellation Court
Toronto, Ontario M9W 1K1

INSTALLATION INSTRUCTION
300 TILT'N TURN WINDOW
& 301 TILT'N TURN DOOR

DR. BY.	G.R.
DATE	Apr. 06
SCALE	

300-000

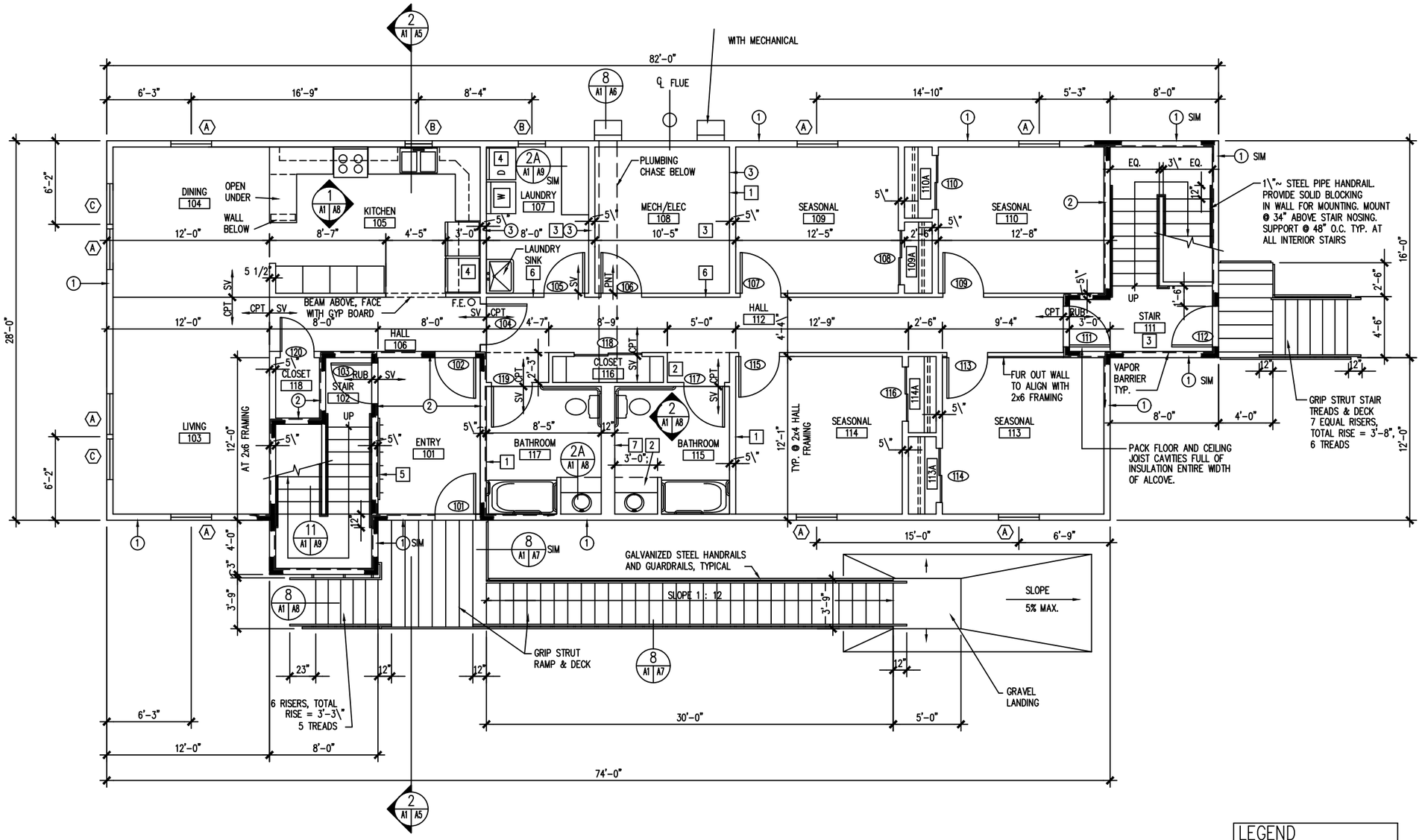

FIRST FLOOR PLAN

GENERAL NOTES:

1. ALL EXTERIOR DIMENSIONS TO FACE OF STUD UNLESS NOTED OTHERWISE.
2. INTERIOR DIMENSIONS ARE TO FACE OF STUD ULESS NOTED OTHERWISE.
3. SEE CIVIL DRAWINGS FOR FLOOR ELEVATIONS, FINISH GRADING, UTILITIES AND BUILDING PLACEMENT.
4. ALL VERTICAL DIMENSIONS ARE FROM TOP OF PLYWOOD FLOOR.
5. UNLESS SPECIFICALLY DIMENSIONED, DOOR OPENINGS SHALL BE LOCATED 4\" FROM FACE OF WALL FRAMING AT THE HINGE SIDE OF THE DOOR. CONTRACTOR TO VERIFY LOCATIONS IN THE FIELD.
6. SEE WALL TYPES LIST FOR TYPICAL WALL CONSTRUCTION.
7. AT CLOSETS #113A, 114A, 212A, 213A PROVIDE CONTINUOUS [" x 14" WOOD SHELF & FULL LENGTH CLOSET ROD. MOUNT RODS AT 5'-0" A.F.F. TYPICAL. MOUNT SHELF AT 5'-6" A.F.F. TYPICAL. AT CLOSETS #109A AND 110A PROVIDE SAME HARDWARE BUT MOUNT RODS AT 54" AND SHELVES AT 60".
8. AT CLOSET 116 PROVIDE FIVE ADJUSTABLE WOOD SHELVES EACH END WITH STANDARDS. SHELVES TO [" x 18" WOOD – PAINTED. STANDARDS TO ALLOW SHELVING FROM 2'-6" A.F.F. TO CEILING TYPICAL.

WALL TYPES:

(1) SEE WALL SECTION 1/A5 FOR WALL CONSTRUCTION

(1) SIM SAME AS (1) BUT USE }" TYPE-X GYP. BOARD ON INTERIOR FACE.

(2)
- }" TYPE-X GYP. BOARD
- R-21 BATT INSULATION ON 2x6 STUDS @ 16" O.C.
- 6 MIL VAPOR BARRIER SEE PLANS FOR LOCATIONS
- }" TYPE-X GYP. BOARD

(3) USE }" TYPE-X GYP. BOARD BOTH SIDES OF WALL. SEE PLAN FOR FRAMING SIZE. SEE STRUCTURAL FOR SHEAR WALL LOCATIONS

GENERAL WALL NOTES:

1. TYPICAL INTERIOR PARTITION TO BE \" GYP. BOARD ON 2x4 STUDS AT 16" O.C. UNLESS NOTED OTHERWISE.
2. SEE STRUCTURAL FOR WALLS TO RECIEVE PLYWOOD.
3. SEE PLANS FOR CLARIFICATION OF VAPOR BARRIER LOCATION.
4. NO WATER OR SEWER IN EXTERIOR WALLS OR FLOOR EXCEPT 4" DIAMETER WASTE IN FLOOR CHASE.

KEYED NOTES

1. MOUNT GYP. BD ON RESILIENT CHANNELS. PROVIDE SOUND INSULATION BATTS FULL LENGTH OF WALL.
2. SOFFIT @ 7'-3"
3. 2 LAYERS [" TYPE-X GYP. BD ON CEILING
4. REFRIGERATORS, WASHERS AND DRYERS NOT IN CONTRACT
5. PAINTED COAT RACK: 1"x4"x7'-0" WITH 3" WOOD DOWELS @ 12" O.C. ANGLE DOWELS 30^ ABOVE HORIZONTAL. MOUNT @ 5'-6" ABOVE FLOOR.
6. OFFSET FRAMING _" AND PROVIDE }" TYPE-X GYP. BOARD BOTH SIDES OF WALL
7. FRAME WITH TWO ROWS OF 2x4 STUDS AT 24" O.C. EACH SIDE, STAGGERED. LOCATE TJI FLOOR JOISTS UNDER BOTH SETS OF STUDS. PROVIDE SOUND INSULATION FULL LENGTH OF WALL.

LEGEND

F.E. FIRE EXTINGUISHER

4 0 4 8
SCALE OF FEET

PLAN TRUE

STATE OF ALASKA 49th Charles Bettisworth No. 3019-A REGISTERED PROFESSIONAL ARCHITECT

DESIGNED:	SUB SHEET NO.	TITLE OF SHEET	DRAWING NO.
DRAWN: JP	A1	FIRST FLOOR PLAN	182 41,023
TECH. REVIEW: PMN			PKG. NO. ARO 130B
DATE: 2/24/95			SHEET 4 OF 31

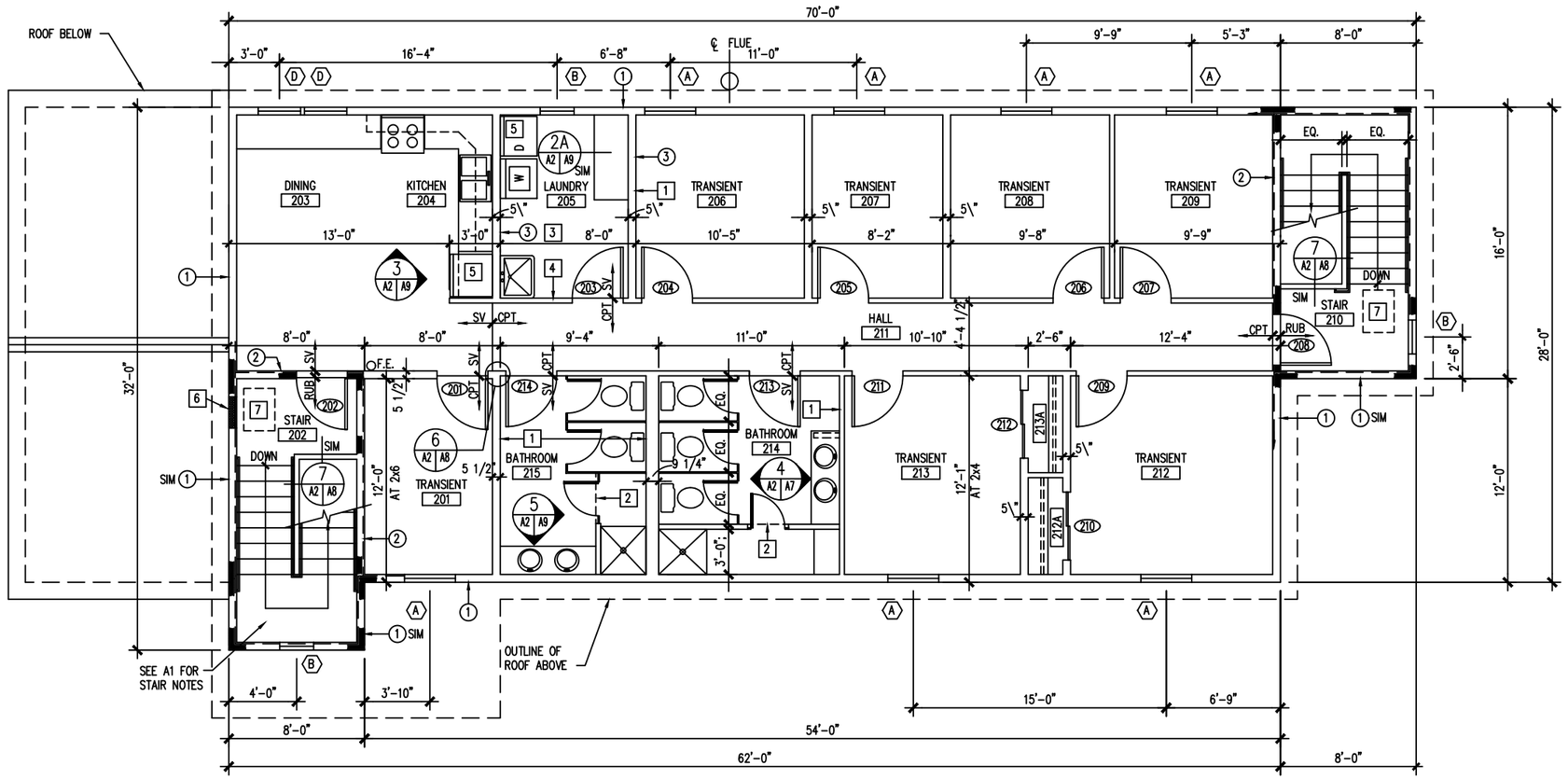

SECOND FLOOR PLAN

WALL TYPES:

(1) SEE WALL SECTION 1/A5 FOR WALL CONSTRUCTION

(1) SIM SAME AS (1) BUT USE ⅝" TYPE-X GYP. BOARD ON INTERIOR FACE.

(2)

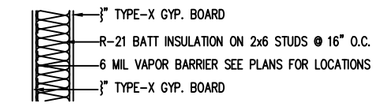

(3) USE ⅝" TYPE-X GYP. BOARD BOTH SIDES OF WALL. SEE PLAN FOR FRAMING SIZE. SEE STRUCTURAL FOR SHEAR WALL LOCATIONS

GENERAL WALL NOTES:

1. TYPICAL INTERIOR PARTITION TO BE ½" GYP. BOARD ON 2x4 STUDS AT 16" O.C. UNLESS NOTED OTHERWISE.
2. SEE STRUCTURAL FOR WALLS TO RECIEVE PLYWOOD.
3. SEE PLANS FOR CLARIFICATION OF VAPOR BARRIER LOCATION.
4. NO PLUMBING IS TO BE LOCATED IN EXTERIOR WALLS OR WITHIN 15" OF THE RIM JOIST

KEYED NOTES

1. MOUNT GYP. BD ON RESILIENT CHANNELS. PROVIDE SOUND INSULATION BATT FULL LENGTH OF WALL.
2. SOFFIT @ 7'-3"
3. 2 LAYERS [" TYPE-X GYP. BD ON CEILING
4. OFFSET WALL FRAMING _" AND PROVIDE ⅝" TYPE-X GYP. BOARD BOTH SIDES OF WALL
5. REFRIGERATOR, WASHER AND DRYER NOT IN CONTRACT.
6. 30"x30" LOWER ATTIC ACESS PANEL. TIGHT FITTING PLYWOOD PANEL WITH 3" RIGID INSULATION GLUED TO BACK SIDE. SCREW SHUT. PROVIDE TRIM AT OPENING PERIMETER.
7. 22"x30" UPPER ATTIC ACESS PANEL IN CEILING. TIGHT FITTING 3/4" PAINTED PLYWOOD PANEL WITH 3" RIGID INSULATION GLUED TO BACK SIDE. PROVIDE PEMKO S-88 WEATHER STRIP AT PERIMETER. COORDINATE OPENING WITH TRUSS PLACEMENT.

LEGEND

O.F.E. FIRE EXTINGUISHER

4 0 4 8
SCALE OF FEET

PLAN TRUE

STATE OF ALASKA 49th Charles Bettisworth No. 3019-A REGISTERED PROFESSIONAL ARCHITECT

DESIGNED:	SUB SHEET NO.	TITLE OF SHEET	DRAWING NO.
DRAWN: JP	A2	SECOND FLOOR PLAN	182 / 41,023
TECH. REVIEW: PMN			PKG. NO. ARO 130B
DATE: 2/24/95			SHEET 5 OF 31

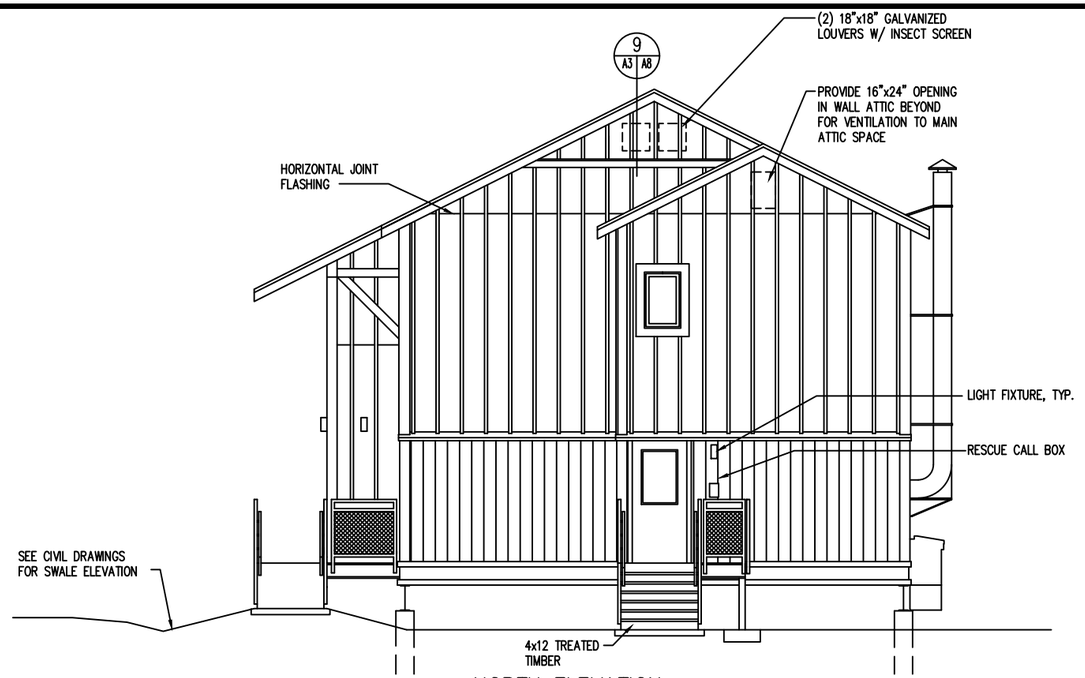

NORTH ELEVATION

1 A3

FILE NAME: NORTH

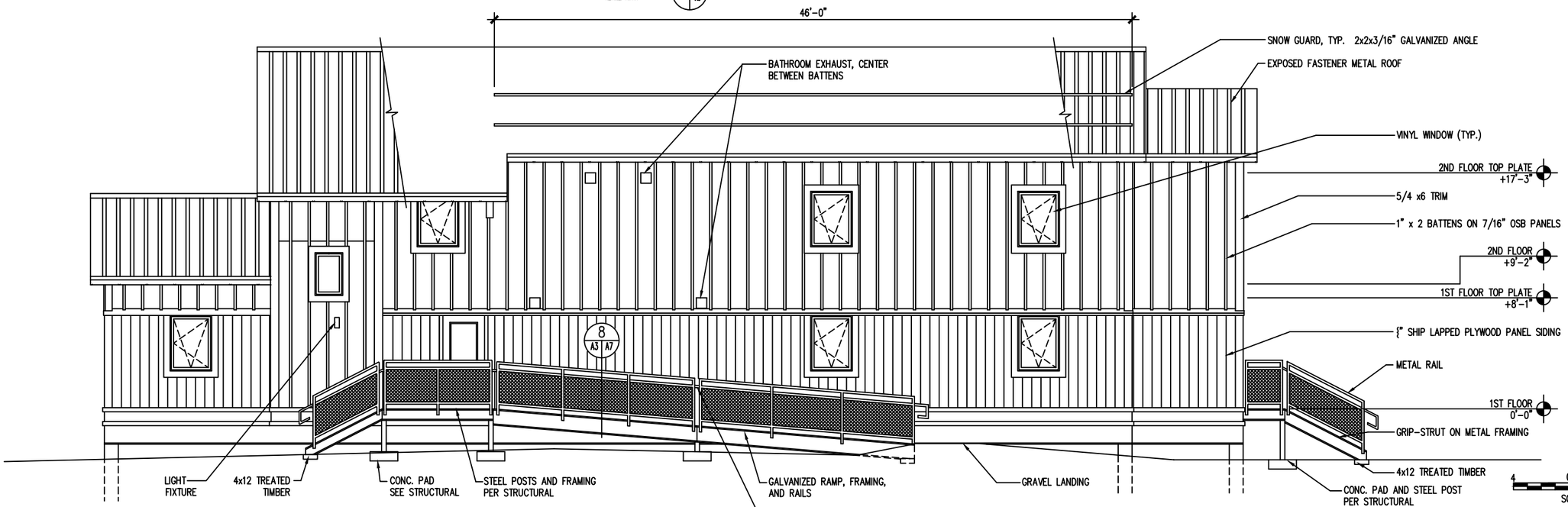

EAST ELEVATION

2 A3

FILE NAME: EAST

STATE OF ALASKA 49th Charles Bettisworth No. 3019-A REGISTERED PROFESSIONAL ARCHITECT

DESIGNED:	SUB SHEET NO.	TITLE OF SHEET	DRAWING NO.
DRAWN: JP	A3	EXTERIOR ELEVATIONS	182 41,023
TECH. REVIEW: PMN			PKG. NO. ARO 130B
DATE: 2/24/95			SHEET 6 OF 31

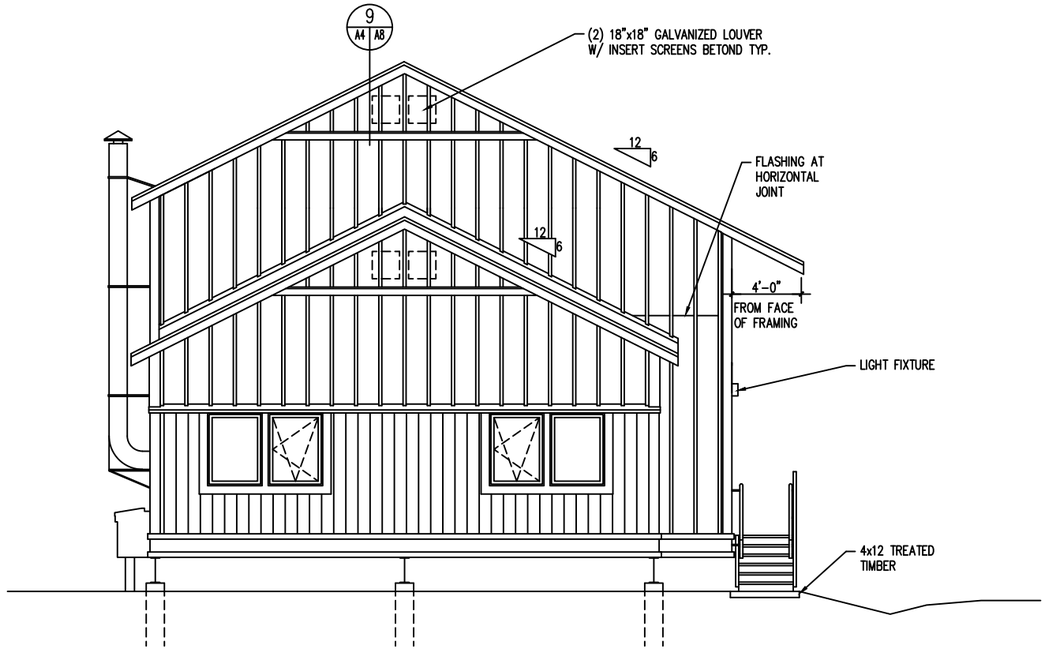

SOUTH ELEVATION

1
A4

FILE NAME: SOUTH

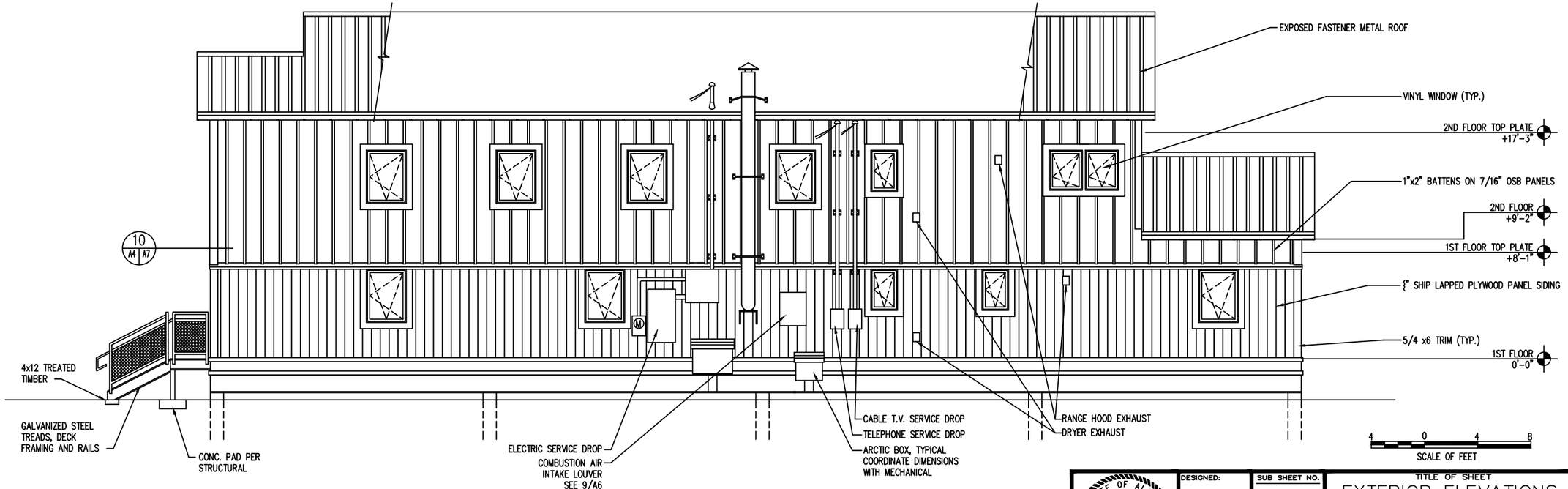

WEST ELEVATION

2
M

FILE NAME: WEST

STATE OF ALASKA 49th Charles Bettisworth No. 3019-A REGISTERED PROFESSIONAL ARCHITECT

DESIGNED:	SUB SHEET NO.	TITLE OF SHEET	DRAWING NO.
DRAWN: JP	A4	EXTERIOR ELEVATIONS	182 41,023
TECH. REVIEW: PMN			PKG. NO. ARO 130B
DATE: 2/24/95			SHEET 7 OF 31

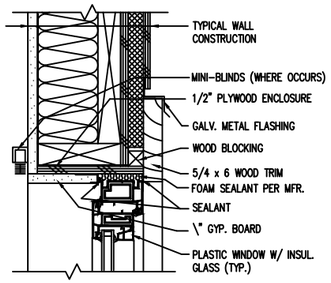

WINDOW HEAD (2ND FLOOR) — 1 (A8 | A7)
SCALE: A

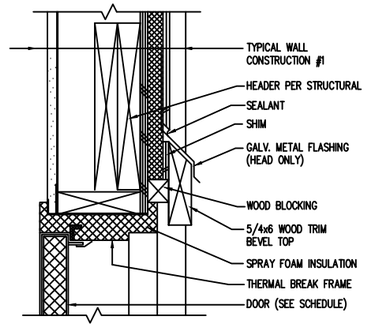

DOOR HEAD — 4 (A8 | A7)
SCALE: A

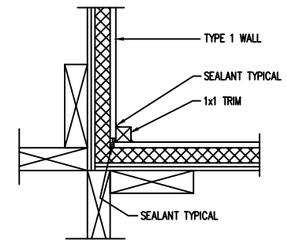

INSIDE CORNER — 7 (A4 | A7)
SCALE: A

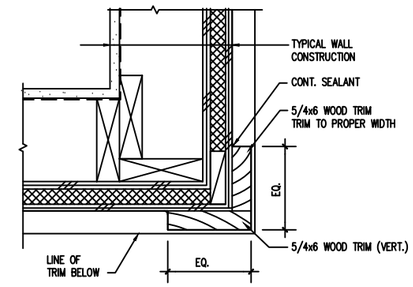

OUTSIDE CORNER — 10 (A4 | A7)
SCALE: A

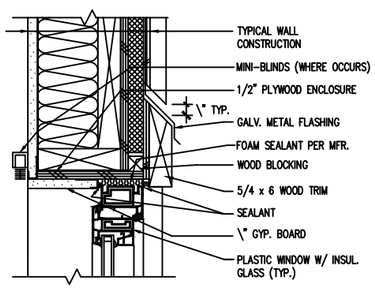

WINDOW HEAD (1ST FLOOR) — 2 (A8 | A7)
SCALE: A

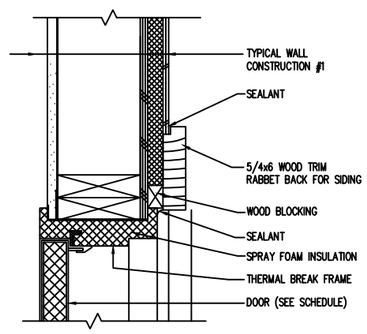

DOOR JAMB — 5 (A8 | A7)
SCALE: A

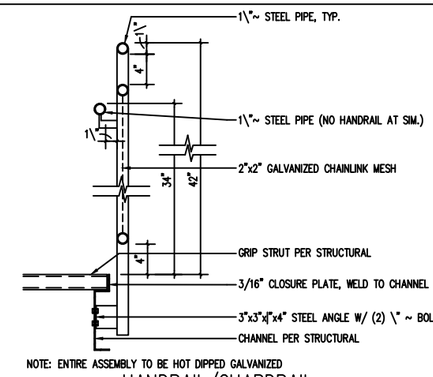

HANDRAIL/GUARDRAIL — 8 (A3 | A7)
SCALE: A

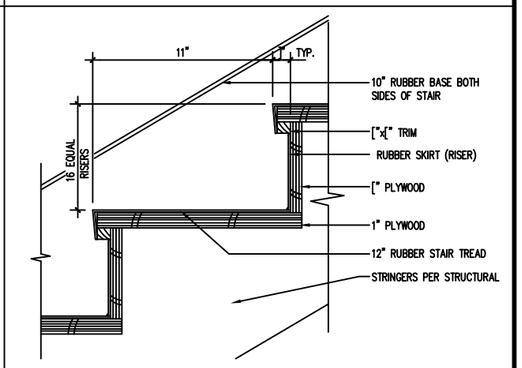

STAIR TREAD — 11 (A7)
SCALE: A

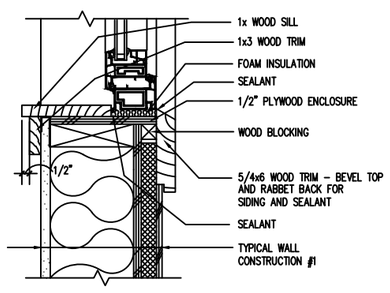

WINDOW SILL — 3 (A8 | A7)
SCALE: A

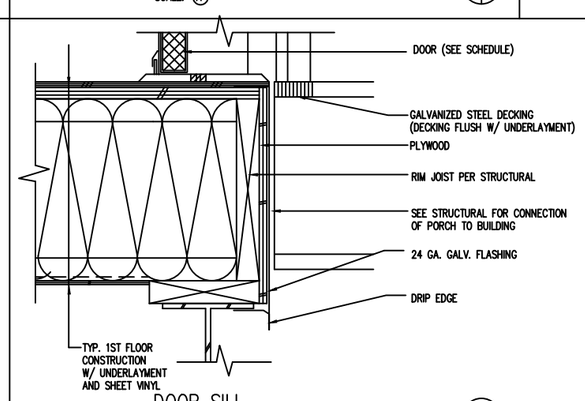

DOOR SILL — 6 (A8 | A7)
SCALE: A

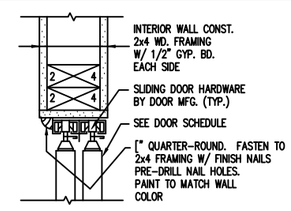

BI-FOLD DOOR HEAD — 9 (A7)
SCALE: A

SCALE: A — 12 6 0 12 — SCALE OF INCHES
SCALE: B — 6 3 0 6 — SCALE OF INCHES

STATE OF ALASKA 49th — Charles Bettisworth No. 3019-A — REGISTERED PROFESSIONAL ARCHITECT

DESIGNED: PMN	SUB SHEET NO.	TITLE OF SHEET	DRAWING NO. 182 41023
DRAWN: JP	A7	DETAILS	PKG. NO. ARO 130B
TECH. REVIEW: PMN			SHEET 10 OF 31
DATE: 2/24/95			

DOOR SCHEDULE

NO.	SIZE	DOOR TYPE	DOOR MAT.	DOOR FIN.	FRAME TYPE	FRAME MAT.	FRAME FIN.	HDW. GRP.	REMARKS
101	3'–0" x 6'–8"	D	MTL	PAINT	B	MTL	PAINT	1	
102	3'–0" x 6'–8"	D	MTL	PAINT	A	MTL	PAINT	2A	
103	3'–0" x 6'–8"	D	MTL	PAINT	B	MTL	PAINT	2	
104	3'–0" x 6'–8"	F	WOOD	PREFIN	–	WOOD	PAINT	4	
105	3'–0" x 6'–8"	A	MTL	PAINT	A	MTL	PAINT	6	NOTE 1
106	3'–0" x 6'–8"	A	MTL	PAINT	A	MTL	PAINT	6	NOTE 1
107	3'–0" x 6'–8"	B	WOOD	PREFIN	–	WOOD	PAINT	3	
108	4'–0" x 6'–8"	C	WOOD	PREFIN	–	–	–	–	NOTE 2
109	3'–0" x 6'–8"	B	WOOD	PREFIN	–	WOOD	PAINT	3	
110	4'–0" x 6'–8"	C	WOOD	PREFIN	–	–	–	–	NOTE 2
111	3'–0" x 6'–8"	D	MTL	PAINT	B	MTL	PAINT	2	
112	3'–0" x 6'–8"	D	MTL	PAINT	B	MTL	PAINT	1	
113	3'–0" x 6'–8"	B	WOOD	PREFIN	–	WOOD	PAINT	3	
114	4'–0" x 6'–8"	C	WOOD	PREFIN	–	–	–	–	NOTE 2
115	3'–0" x 6'–8"	B	WOOD	PREFIN	–	WOOD	PAINT	3	
116	4'–0" x 6'–8"	C	WOOD	PREFIN	–	–	–	–	NOTE 2
117	3'–0" x 6'–8"	B	WOOD	PREFIN	–	WOOD	PAINT	5	
118	5'–0" x 6'–8"	C	WOOD	PREFIN	–	–	–	–	NOTE 2
119	3'–0" x 6'–8"	B	WOOD	PREFIN	–	WOOD	PAINT	5	
120	2'–6" x 6'–8"	B	WOOD	PREFIN	–	WOOD	PAINT	4	
201	3'–0" x 6'–8"	B	WOOD	PREFIN	–	WOOD	PAINT	3	
202	3'–0" x 6'–8"	D	MTL	PAINT	B	MTL	PAINT	2	
203	3'–0" x 6'–8"	A	MTL	PAINT	A	MTL	PAINT	6	NOTE 1
204	3'–0" x 6'–8"	B	WOOD	PREFIN	–	WOOD	PAINT	3	
205	3'–0" x 6'–8"	B	WOOD	PREFIN	–	WOOD	PAINT	3	
206	3'–0" x 6'–8"	B	WOOD	PREFIN	–	WOOD	PAINT	3	
207	3'–0" x 6'–8"	B	WOOD	PREFIN	–	WOOD	PAINT	3	
208	3'–0" x 6'–8"	D	MTL	PAINT	B	MTL	PAINT	2	
209	3'–0" x 6'–8"	B	WOOD	PREFIN	–	WOOD	PAINT	3	
210	4'–0" x 6'–8"	C	WOOD	PREFIN	–	–	–	–	NOTE 2
211	3'–0" x 6'–8"	B	WOOD	PREFIN	–	WOOD	PAINT	3	
212	4'–0" x 6'–8"	C	WOOD	PREFIN	–	–	–	–	NOTE 2
213	3'–0" x 6'–8"	B	WOOD	PREFIN	–	WOOD	PAINT	4	
214	3'–0" x 6'–8"	B	WOOD	PREFIN	–	WOOD	PAINT	4	

ROOM FINISH SCHEDULE

NO.	ROOM NAME	MATERIAL FLOOR	MATERIAL BASE	WALL/FINISH NORTH	WALL/FINISH EAST	WALL/FINISH SOUTH	WALL/FINISH WEST	CEILING MAT.	CEILING HGT.	REMARKS
101	ENTRY	SV	RUB	PAINT	PAINT	PAINT	PAINT		8'–0"	
102	STAIR	RUB	RUB						VARIES	NOTE 1
103	LIVING	CPT	WOOD						8'–0"	
104	DINING	SV	WOOD							
105	KITCHEN	SV	RUB							
106	HALL	SV	RUB							
107	LAUNDRY	SV	RUB							
108	MECHANICAL	PAINT	RUB							
109	SEASONAL	CPT	WOOD							NOTE 5
109A	CLOSET	CPT	NONE							
110	SEASONAL	CPT	WOOD							NOTE 5
110A	CLOSET	CPT	NONE							
111	STAIR	RUB	RUB						VARIES	NOTE 3
112	HALL	CPT	WOOD						8'–0"	
113	SEASONAL	CPT	WOOD							NOTE 5
113A	CLOSET	CPT	NONE							
114	SEASONAL	CPT	WOOD							NOTE 5
114A	CLOSET	CPT	NONE							
115	BATH	SV	RUB							NOTES 2 & 4
116	CLOSET	SV	RUB							
117	BATH	SV	RUB							NOTES 2 & 4
118	CLOSET	SV	RUB							
201	TRANSIENT	CPT	WOOD	PAINT	PAINT	PAINT	PAINT		8'–0"	
202	STAIR	RUB	RUB						VARIES	NOTE 1
203	DINING	SV	RUB						8'–0"	
204	KITCHEN	SV	RUB							
205	LAUNDRY	SV	RUB							
206	TRANSIENT	CPT	WOOD							
207	TRANSIENT	CPT	WOOD							
208	TRANSIENT	CPT	WOOD							
209	TRANSIENT	CPT	WOOD							
210	STAIR	RUB	RUB						VARIES	
211	HALL	CPT	WOOD						8'–0"	
212	TRANSIENT	CPT	WOOD							
212A	CLOSET	CPT	NONE							
213	TRANSIENT	CPT	WOOD							
213A	CLOSET	CPT	NONE							
214	BATHROOM	SV	RUB							NOTE 2
215	BATHROOM	SV	RUB							NOTE 2

DOOR SCHEDULE NOTES:

1. 1–HOUR RATED DOOR AND FRAME WITH SMOKE GASKETS.
2. DOOR HARDWARE BY DOOR MANUFACTURER.

ABBREVIATIONS

CPT	CARPET
FLR	FLOOR
MTL	METAL
PREFIN	PREFINISHED
SV	SHEET VINYL
RUB	RUBBER

ROOM FINISH NOTES:

TYPICAL NOTE: COORDINATE WALL FINISHES WITH SHEAR WALL REQUIREMENTS. ALL WALL TO HAVE CONTUOUS FLUSH SURFACES ENTIRE LENGTH OF WALL.

1. FRAME STAIR CEILING PARALLEL TO UPPER FLIGHT OF STAIRS, 8'–0" ABOVE NOSING. CEILING HEIGHTS AT MID FLOOR LANDING TO BE 9'–0". CEILING HEIGHTS AT 1ST & 2ND FLOOR LANDING TO BE 8'–0"
2. USE MOISTURE RESISTANT GYP. BOARD AT BATHROOM WALLS AND CEILINGS.
3. USE 2 LAYERS 5/8" GYP. BOARD ON UNDERSIDE OF SECOND FLOOR FRAMING AT STAIRWELL AND ALCOVE.
4. USE 6 INCH BASE AT BATHS 115 AND 117.
5. MOUNT SEASONAL ROOM CEILINGS ON RESILIENT CHANNELS

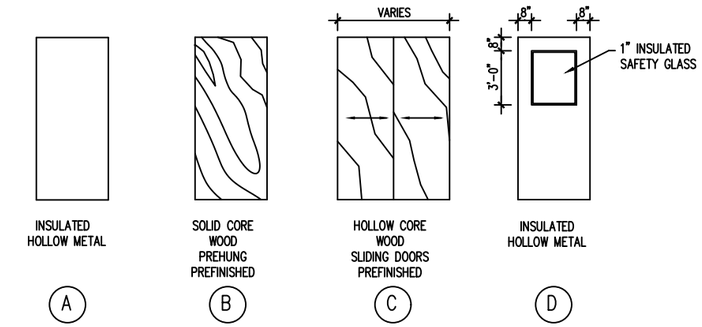

DOOR TYPES

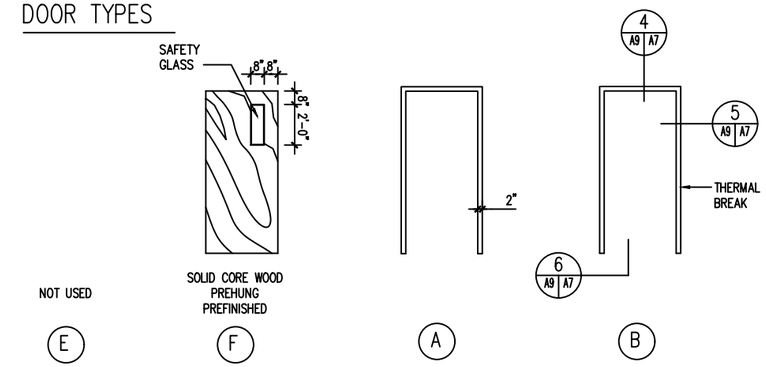

DOOR TYPES

FRAME TYPES

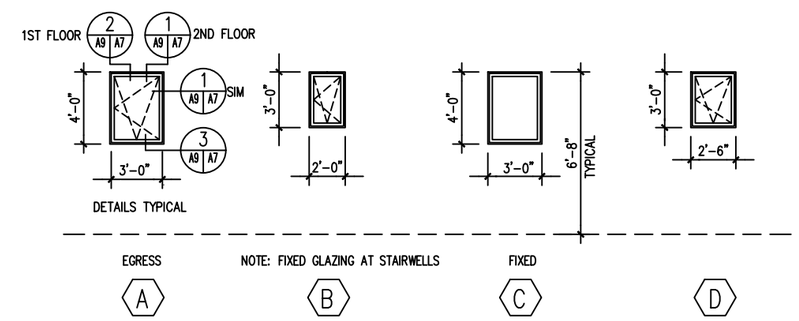

WINDOW TYPES

WINDOW NOTES

1. ALL WINDOWS EXCEPTING STAIRWELL WINDOWS TO RECIVE BLINDS PER SPECIFICATIONS

STATE OF ALASKA 49th Charles Bettisworth No. 3019-A REGISTERED PROFESSIONAL ARCHITECT

DESIGNED:
DRAWN: JP
TECH. REVIEW: PMN
DATE: 2/24/95

SUB SHEET NO. A9

TITLE OF SHEET
SCHEDULES
DOOR TYPES
WINDOW TYPES

DRAWING NO. 182 41,023
PKG. NO. ARO 130B
SHEET 12 OF 31