Kotzebue Housing Locations Photos

Duplex 297 (next 5 photos)

Four-Plex (next 9 photos)

STATES LINE

Residence 297 (next 5 photos)

EZ LOADER

(end)

DUNN LUMBER Building success together.	**DUNN LUMBER COMPANY - Bellevue 08** **2350 140th Ave NE** **Bellevue, WA 98005** **4258234455**	Project Name: Contact Name: Contact Phone: Contact E-Mail: Builder / GC: Project Address:	MILGARD® WINDOWS and DOORS

Line No:	1
Location/Label:	154 A - Front Storage Room
Quantity:	1
Product Line:	V400 Tuscany
Model:	Slider Picture
Size:	Net Frame: 48 1/4" x 24"
Finishes:	Ext White / Int White
Fin Type:	1 3/8" Setback
Glass:	3/32" SunCoat (Low-E) over 3/32" 4th Surface HP Coating, Center Lite: 3/32" SunCoat (Low-E) with Gray Foam Spacer
U-Factor / SHGC / VT:	.16 / .22 / .43
Calculations:	Unit Area (Sq. Ft.): 8, Unit Perimeter (nominal in lineal ft): 13'
Ratings:	STC: No Rating, OITC: No Rating, PG: LC-PG50

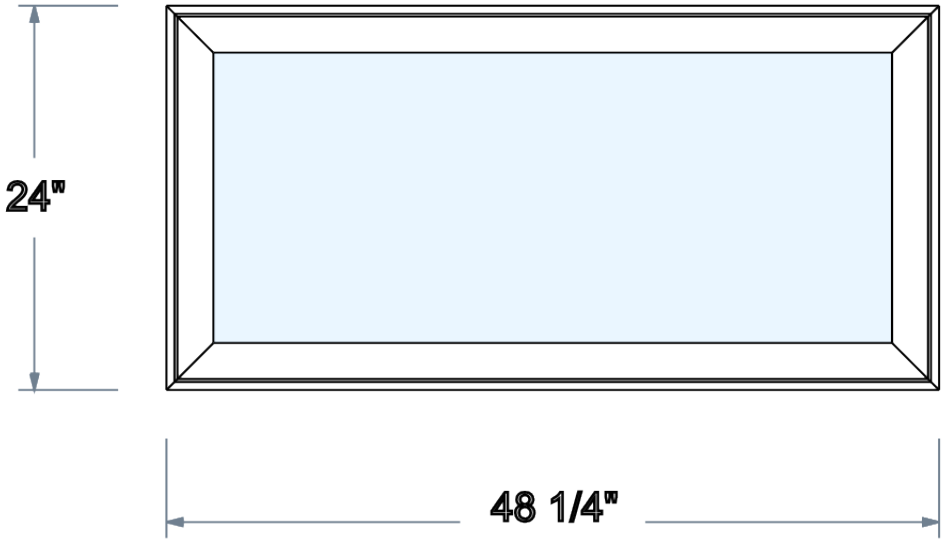

Viewed from Exterior (Net Frame) - Image scaled 1" = 1' 0"

Customer Approval: _____

Sales Rep: Name: Eric Kennedy Email: erick@dunnlumber.com Phone:	**Legend:** O = Obscure T = Tempered E = Meets Egress per IBC (International Building Code) for above grade application. Validate against local codes.	Quote Number: SQPCZK009910_1 Last Modified Date: 12/2/2025 3:16 PM	

DUNN LUMBER Building success together.	**DUNN LUMBER COMPANY - Bellevue 08** **2350 140th Ave NE** **Bellevue, WA 98005** **4258234455**	Project Name: Contact Name: Contact Phone: Contact E-Mail: Builder / GC: Project Address:	MILGARD® WINDOWS and DOORS

Line No:	2
Location/Label:	154 A - Living Room
Quantity:	1
Product Line:	V400 Tuscany
Model:	Half Vent
Size:	Net Frame: 55 3/8" x 46 5/8"
Finishes:	Ext White / Int White
Fin Type:	1 3/8" Setback
Glass:	3/32" SunCoat (Low-E) over 3/32" 4th Surface HP Coating, Center Lite: 3/32" SunCoat (Low-E) with Gray Foam Spacer
Hardware:	SmartTouch Lock
Screen:	Standard with Fiberglass Mesh
U-Factor / SHGC / VT:	.18 / .21 / .41
Clear Opening:	W 25" x H 43 5/8" Sq. Ft. 7.57
Calculations:	Unit Area (Sq. Ft.): 18, Unit Perimeter (nominal in lineal ft): 18'
Ratings:	STC: No Rating, OITC: No Rating, PG: LC-PG40

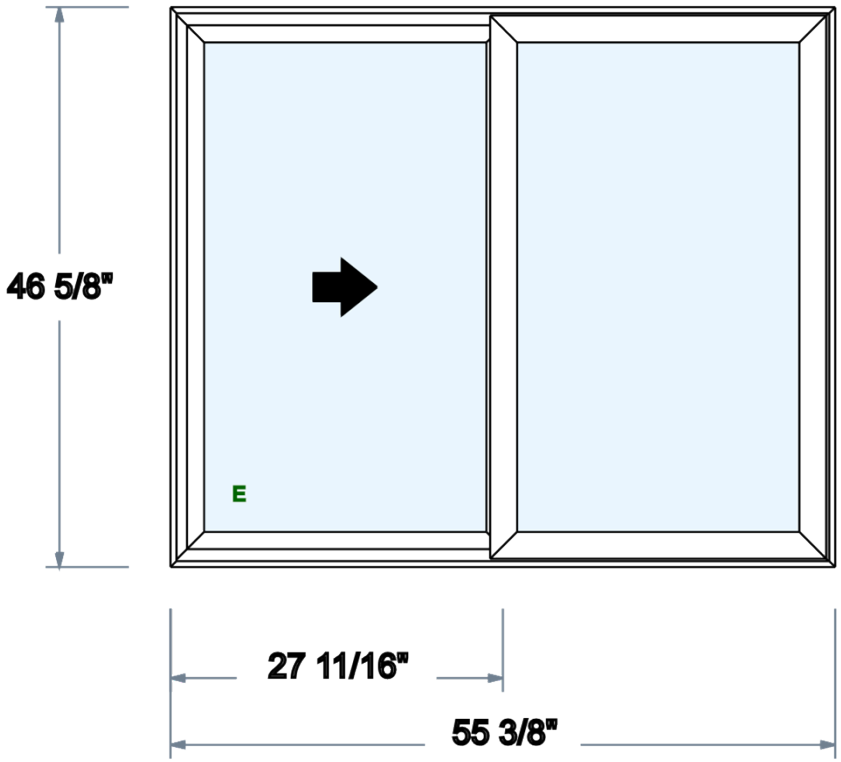

Viewed from Exterior (Net Frame) - Image scaled 3/4" = 1' 0"

Customer Approval: _____

Sales Rep: Name: Eric Kennedy Email: erick@dunnlumber.com Phone:	**Legend:** O = Obscure T = Tempered E = Meets Egress per IBC (International Building Code) for above grade application. Validate against local codes.	Quote Number: SQPCZK009910_1 Last Modified Date: 12/2/2025 3:16 PM	

DUNN LUMBER Building success together.	**DUNN LUMBER COMPANY - Bellevue 08** **2350 140th Ave NE** **Bellevue, WA 98005** **4258234455**	Project Name: Contact Name: Contact Phone: Contact E-Mail: Builder / GC: Project Address:	MILGARD® WINDOWS and DOORS

Line No:	3
Location/Label:	154 A - Living Room Short
Quantity:	1
Product Line:	V400 Tuscany
Model:	Slider Picture
Size:	Net Frame: 93 1/2" x 23 3/8"
Finishes:	Ext White / Int White
Fin Type:	1 3/8" Setback
Glass:	1/8" SunCoat (Low-E) over 1/8" 4th Surface HP Coating, Center Lite: 1/8" SunCoat (Low-E) with Gray Foam Spacer
U-Factor / SHGC / VT:	.17 / .22 / .42
Calculations:	Unit Area (Sq. Ft.): 16, Unit Perimeter (nominal in lineal ft): 20'
Ratings:	STC: No Rating, OITC: No Rating, PG: CW-PG30

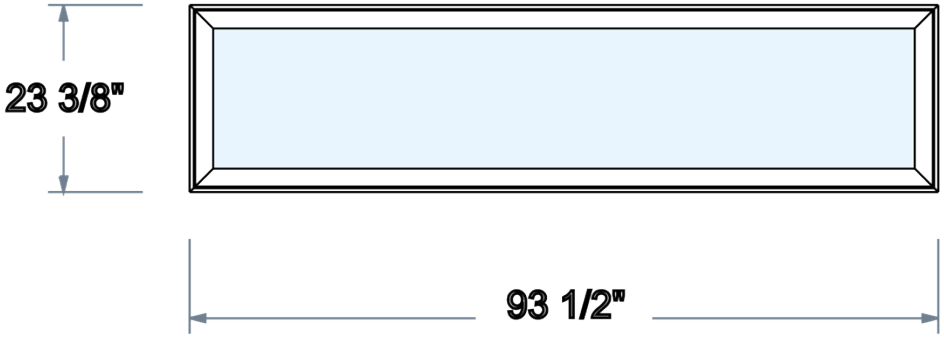

Viewed from Exterior (Net Frame) - Image scaled 1/2" = 1' 0"

Customer Approval: _____

Sales Rep: Name: Eric Kennedy Email: erick@dunnlumber.com Phone:	**Legend:** O = Obscure T = Tempered E = Meets Egress per IBC (International Building Code) for above grade application. Validate against local codes.	Quote Number: SQPCZK009910_1 Last Modified Date: 12/2/2025 3:16 PM	

DUNN LUMBER Building success together.	**DUNN LUMBER COMPANY - Bellevue 08** **2350 140th Ave NE** **Bellevue, WA 98005** **4258234455**	Project Name: Contact Name: Contact Phone: Contact E-Mail: Builder / GC: Project Address:	MILGARD® WINDOWS and DOORS

Line No:	4
Location/Label:	154 A - Bedroom 1
Quantity:	1
Product Line:	V400 Tuscany
Model:	Half Vent
Size:	Net Frame: 55 3/8" x 46 5/8"
Finishes:	Ext White / Int White
Fin Type:	1 3/8" Setback
Glass:	3/32" SunCoat (Low-E) over 3/32" 4th Surface HP Coating, Center Lite: 3/32" SunCoat (Low-E) with Gray Foam Spacer
Hardware:	SmartTouch Lock
Screen:	Standard with Fiberglass Mesh
U-Factor / SHGC / VT:	.18 / .21 / .41
Clear Opening:	W 25" x H 43 5/8" Sq. Ft. 7.57
Calculations:	Unit Area (Sq. Ft.): 18, Unit Perimeter (nominal in lineal ft): 18'
Ratings:	STC: No Rating, OITC: No Rating, PG: LC-PG40

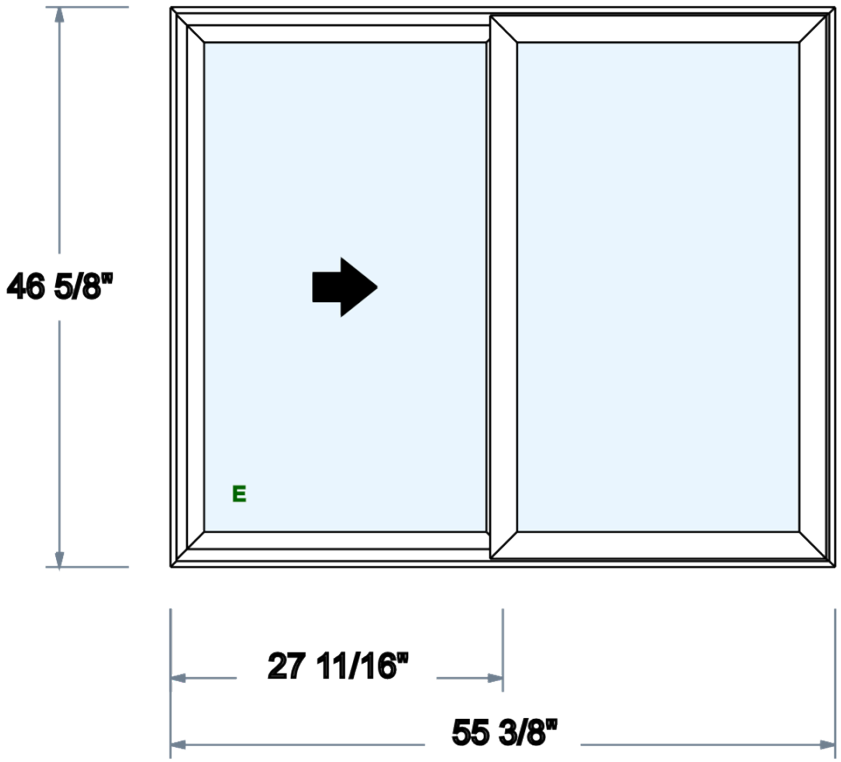

Viewed from Exterior (Net Frame) - Image scaled 3/4" = 1' 0"

Customer Approval: _____

Sales Rep: Name: Eric Kennedy Email: erick@dunnlumber.com Phone:	**Legend:** O = Obscure T = Tempered E = Meets Egress per IBC (International Building Code) for above grade application. Validate against local codes.	Quote Number: SQPCZK009910_1 Last Modified Date: 12/2/2025 3:16 PM	

DUNN LUMBER Building success together.	**DUNN LUMBER COMPANY - Bellevue 08** **2350 140th Ave NE** **Bellevue, WA 98005** **4258234455**	Project Name: Contact Name: Contact Phone: Contact E-Mail: Builder / GC: Project Address:	MILGARD® WINDOWS and DOORS

Line No:	5
Location/Label:	154 A - Bedroom 2
Quantity:	1
Product Line:	V400 Tuscany
Model:	Half Vent
Size:	Net Frame: 55 3/8" x 46 5/8"
Finishes:	Ext White / Int White
Fin Type:	1 3/8" Setback
Glass:	3/32" SunCoat (Low-E) over 3/32" 4th Surface HP Coating, Center Lite: 3/32" SunCoat (Low-E) with Gray Foam Spacer
Hardware:	SmartTouch Lock
Screen:	Standard with Fiberglass Mesh
U-Factor / SHGC / VT:	.18 / .21 / .41
Clear Opening:	W 25" x H 43 5/8" Sq. Ft. 7.57
Calculations:	Unit Area (Sq. Ft.): 18, Unit Perimeter (nominal in lineal ft): 18'
Ratings:	STC: No Rating, OITC: No Rating, PG: LC-PG40

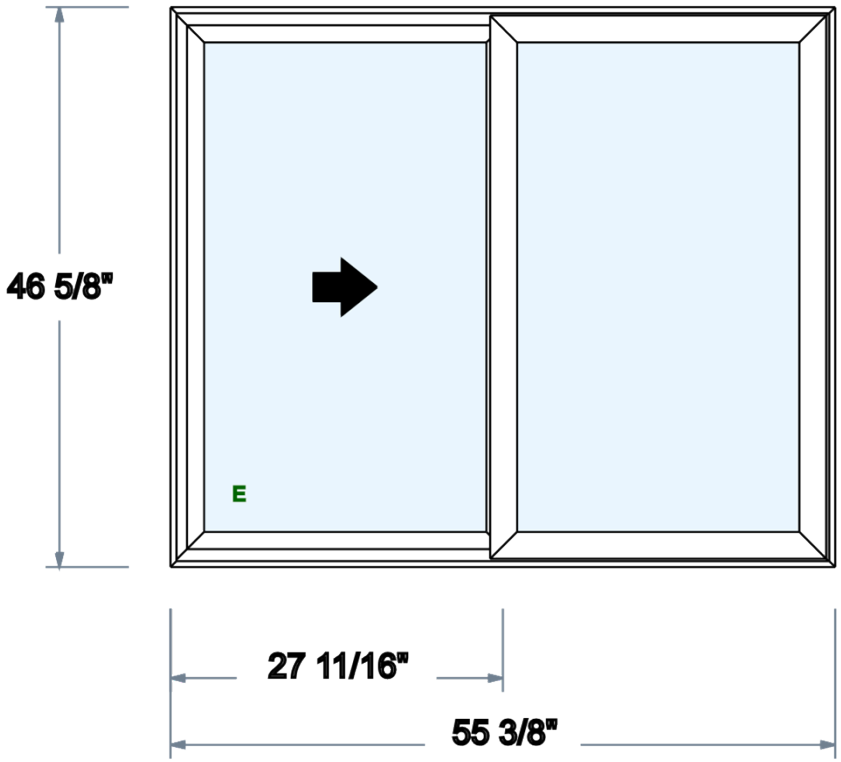

Viewed from Exterior (Net Frame) - Image scaled 3/4" = 1' 0"

Customer Approval: _____

Sales Rep: Name: Eric Kennedy Email: erick@dunnlumber.com Phone:	**Legend:** O = Obscure T = Tempered E = Meets Egress per IBC (International Building Code) for above grade application. Validate against local codes.	Quote Number: SQPCZK009910_1 Last Modified Date: 12/2/2025 3:16 PM	

DUNN LUMBER Building success together.	**DUNN LUMBER COMPANY -** **Bellevue 08** **2350 140th Ave NE** **Bellevue, WA 98005** **4258234455**	Project Name: Contact Name: Contact Phone: Contact E-Mail: Builder / GC: Project Address:	MILGARD® WINDOWS and DOORS

Line No:	6
Location/Label:	154 B - Front Storage Room
Quantity:	1
Product Line:	V400 Tuscany
Model:	Slider Picture
Size:	Net Frame: 48 1/4" x 24"
Finishes:	Ext White / Int White
Fin Type:	1 3/8" Setback
Glass:	3/32" SunCoat (Low-E) over 3/32" 4th Surface HP Coating, Center Lite: 3/32" SunCoat (Low-E) with Gray Foam Spacer
U-Factor / SHGC / VT:	.16 / .22 / .43
Calculations:	Unit Area (Sq. Ft.): 8, Unit Perimeter (nominal in lineal ft): 13'
Ratings:	STC: No Rating, OITC: No Rating, PG: LC-PG50

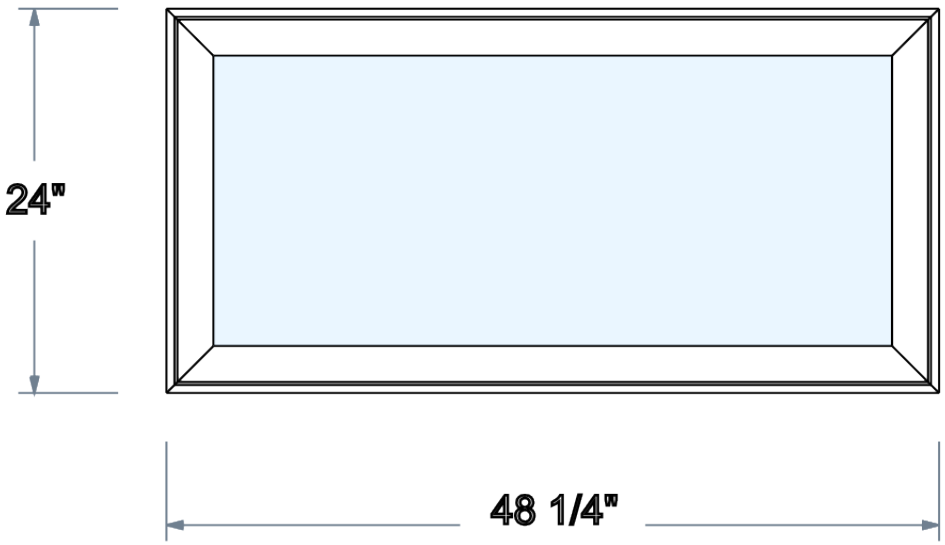

Viewed from Exterior (Net Frame) - Image scaled 1" = 1' 0"

Customer Approval: _____

Sales Rep: Name: Eric Kennedy Email: erick@dunnlumber.com Phone:	**Legend:** O = Obscure T = Tempered E = Meets Egress per IBC (International Building Code) for above grade application. Validate against local codes.	Quote Number: SQPCZK009910_1 Last Modified Date: 12/2/2025 3:16 PM **Page: 6 of 44**

DUNN LUMBER Building success together.	**DUNN LUMBER COMPANY - Bellevue 08** **2350 140th Ave NE** **Bellevue, WA 98005** **4258234455**	Project Name: Contact Name: Contact Phone: Contact E-Mail: Builder / GC: Project Address:	MILGARD® WINDOWS and DOORS

Line No:	7
Location/Label:	154 B - Living Room
Quantity:	1
Product Line:	V400 Tuscany
Model:	Half Vent
Size:	Net Frame: 55 3/8" x 46 5/8"
Finishes:	Ext White / Int White
Fin Type:	1 3/8" Setback
Glass:	3/32" SunCoat (Low-E) over 3/32" 4th Surface HP Coating, Center Lite: 3/32" SunCoat (Low-E) with Gray Foam Spacer
Hardware:	SmartTouch Lock
Screen:	Standard with Fiberglass Mesh
U-Factor / SHGC / VT:	.18 / .21 / .41
Clear Opening:	W 25" x H 43 5/8" Sq. Ft. 7.57
Calculations:	Unit Area (Sq. Ft.): 18, Unit Perimeter (nominal in lineal ft): 18'
Ratings:	STC: No Rating, OITC: No Rating, PG: LC-PG40

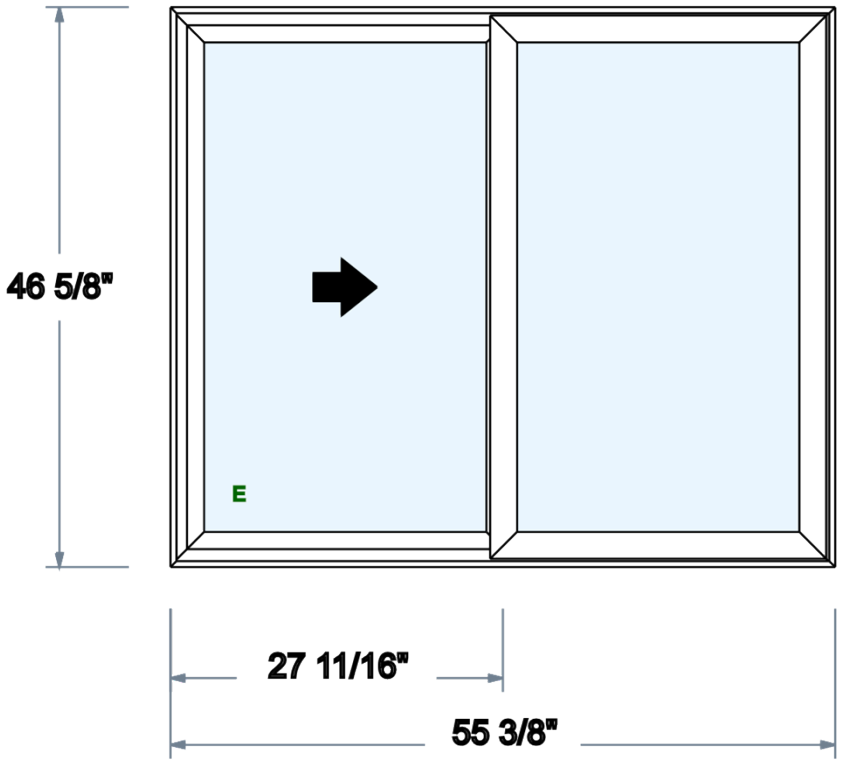

Viewed from Exterior (Net Frame) - Image scaled 3/4" = 1' 0"

Customer Approval: _____

Sales Rep: Name: Eric Kennedy Email: erick@dunnlumber.com Phone:	**Legend:** O = Obscure T = Tempered E = Meets Egress per IBC (International Building Code) for above grade application. Validate against local codes.	Quote Number: SQPCZK009910_1 Last Modified Date: 12/2/2025 3:16 PM	

DUNN LUMBER Building success together.	**DUNN LUMBER COMPANY -** **Bellevue 08** **2350 140th Ave NE** **Bellevue, WA 98005** **4258234455**	Project Name: Contact Name: Contact Phone: Contact E-Mail: Builder / GC: Project Address:	MILGARD WINDOWS and DOORS

Line No:	8
Location/Label:	154 B - Living Room Short
Quantity:	1
Product Line:	V400 Tuscany
Model:	Slider Picture
Size:	Net Frame: 93 1/2" x 23 3/8"
Finishes:	Ext White / Int White
Fin Type:	1 3/8" Setback
Glass:	1/8" SunCoat (Low-E) over 1/8" 4th Surface HP Coating, Center Lite: 1/8" SunCoat (Low-E) with Gray Foam Spacer
U-Factor / SHGC / VT:	.17 / .22 / .42
Calculations:	Unit Area (Sq. Ft.): 16, Unit Perimeter (nominal in lineal ft): 20'
Ratings:	STC: No Rating, OITC: No Rating, PG: CW-PG30

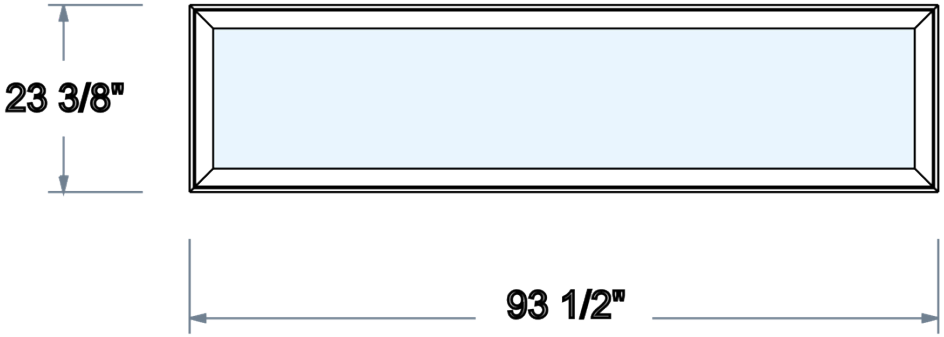

Viewed from Exterior (Net Frame) - Image scaled 1/2" = 1' 0"

Customer Approval: _____

Sales Rep: Name: Eric Kennedy Email: erick@dunnlumber.com Phone:	**Legend:** O = Obscure T = Tempered E = Meets Egress per IBC (International Building Code) for above grade application. Validate against local codes.	Quote Number: SQPCZK009910_1 Last Modified Date: 12/2/2025 3:16 PM	

DUNN LUMBER Building success together.	**DUNN LUMBER COMPANY - Bellevue 08** **2350 140th Ave NE** **Bellevue, WA 98005** **4258234455**	Project Name: Contact Name: Contact Phone: Contact E-Mail: Builder / GC: Project Address:	MILGARD® WINDOWS and DOORS

Line No:	9
Location/Label:	154 B - Bedroom 1
Quantity:	1
Product Line:	V400 Tuscany
Model:	Half Vent
Size:	Net Frame: 55 3/8" x 46 5/8"
Finishes:	Ext White / Int White
Fin Type:	1 3/8" Setback
Glass:	3/32" SunCoat (Low-E) over 3/32" 4th Surface HP Coating, Center Lite: 3/32" SunCoat (Low-E) with Gray Foam Spacer
Hardware:	SmartTouch Lock
Screen:	Standard with Fiberglass Mesh
U-Factor / SHGC / VT:	.18 / .21 / .41
Clear Opening:	W 25" x H 43 5/8" Sq. Ft. 7.57
Calculations:	Unit Area (Sq. Ft.): 18, Unit Perimeter (nominal in lineal ft): 18'
Ratings:	STC: No Rating, OITC: No Rating, PG: LC-PG40

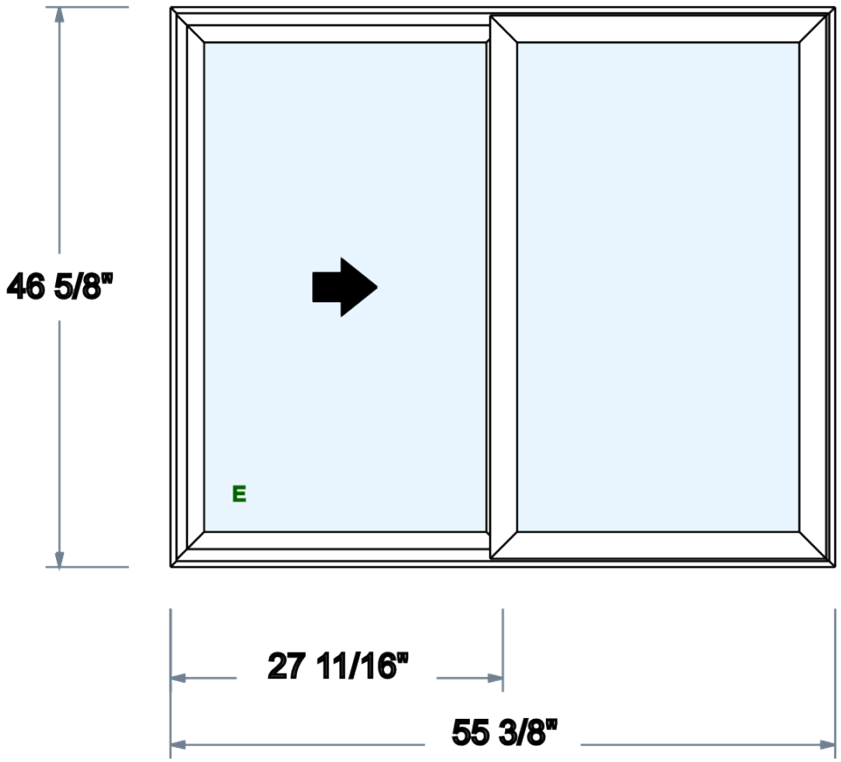

Viewed from Exterior (Net Frame) - Image scaled 3/4" = 1' 0"

Customer Approval: _____

Sales Rep: Name: Eric Kennedy Email: erick@dunnlumber.com Phone:	**Legend:** O = Obscure T = Tempered E = Meets Egress per IBC (International Building Code) for above grade application. Validate against local codes.	Quote Number: SQPCZK009910_1 Last Modified Date: 12/2/2025 3:16 PM	
		Page: 9 of 44	

DUNN LUMBER Building success together.	**DUNN LUMBER COMPANY - Bellevue 08** **2350 140th Ave NE** **Bellevue, WA 98005** **4258234455**	Project Name: Contact Name: Contact Phone: Contact E-Mail: Builder / GC: Project Address:	MILGARD® WINDOWS and DOORS

Line No:	10
Location/Label:	154 B - Bedroom 2
Quantity:	1
Product Line:	V400 Tuscany
Model:	Half Vent
Size:	Net Frame: 55 3/8" x 46 5/8"
Finishes:	Ext White / Int White
Fin Type:	1 3/8" Setback
Glass:	3/32" SunCoat (Low-E) over 3/32" 4th Surface HP Coating, Center Lite: 3/32" SunCoat (Low-E) with Gray Foam Spacer
Hardware:	SmartTouch Lock
Screen:	Standard with Fiberglass Mesh
U-Factor / SHGC / VT:	.18 / .21 / .41
Clear Opening:	W 25" x H 43 5/8" Sq. Ft. 7.57
Calculations:	Unit Area (Sq. Ft.): 18, Unit Perimeter (nominal in lineal ft): 18'
Ratings:	STC: No Rating, OITC: No Rating, PG: LC-PG40

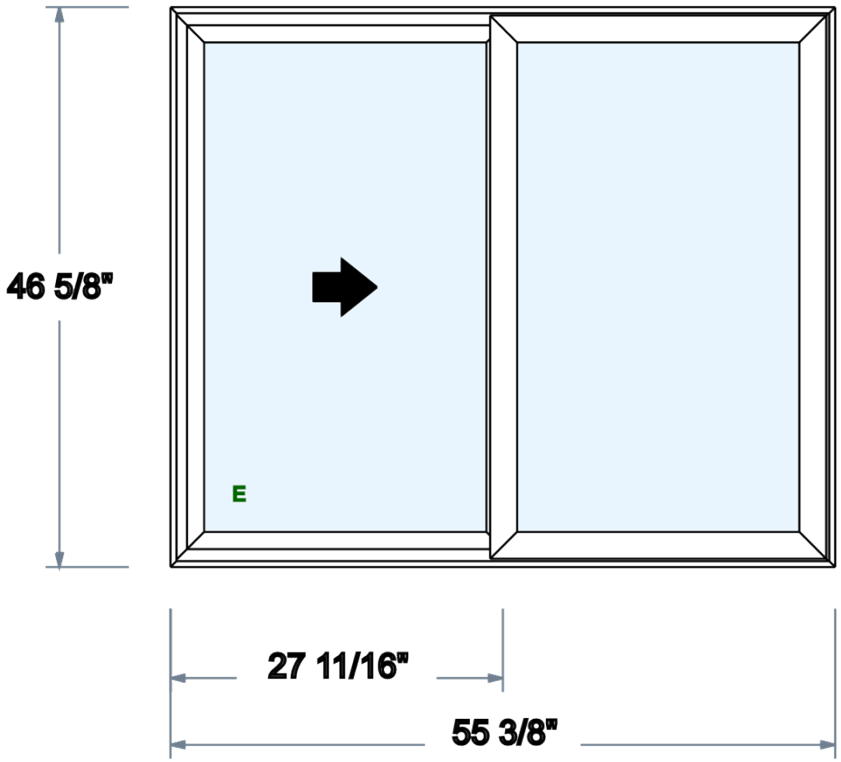

Viewed from Exterior (Net Frame) - Image scaled 3/4" = 1' 0"

Customer Approval: _____

Sales Rep: Name: Eric Kennedy Email: erick@dunnlumber.com Phone:	**Legend:** O = Obscure T = Tempered E = Meets Egress per IBC (International Building Code) for above grade application. Validate against local codes.	Quote Number: SQPCZK009910_1 Last Modified Date: 12/2/2025 3:16 PM	

DUNN LUMBER Building success together.	**DUNN LUMBER COMPANY - Bellevue 08** **2350 140th Ave NE** **Bellevue, WA 98005** **4258234455**	Project Name: Contact Name: Contact Phone: Contact E-Mail: Builder / GC: Project Address:	MILGARD® WINDOWS and DOORS

Line No:	11
Location/Label:	154 B - Bedroom 3
Quantity:	1
Product Line:	V400 Tuscany
Model:	Half Vent
Size:	Net Frame: 55 3/8" x 46 5/8"
Finishes:	Ext White / Int White
Fin Type:	1 3/8" Setback
Glass:	3/32" SunCoat (Low-E) over 3/32" 4th Surface HP Coating, Center Lite: 3/32" SunCoat (Low-E) with Gray Foam Spacer
Hardware:	SmartTouch Lock
Screen:	Standard with Fiberglass Mesh
U-Factor / SHGC / VT:	.18 / .21 / .41
Clear Opening:	W 25" x H 43 5/8" Sq. Ft. 7.57
Calculations:	Unit Area (Sq. Ft.): 18, Unit Perimeter (nominal in lineal ft): 18'
Ratings:	STC: No Rating, OITC: No Rating, PG: LC-PG40

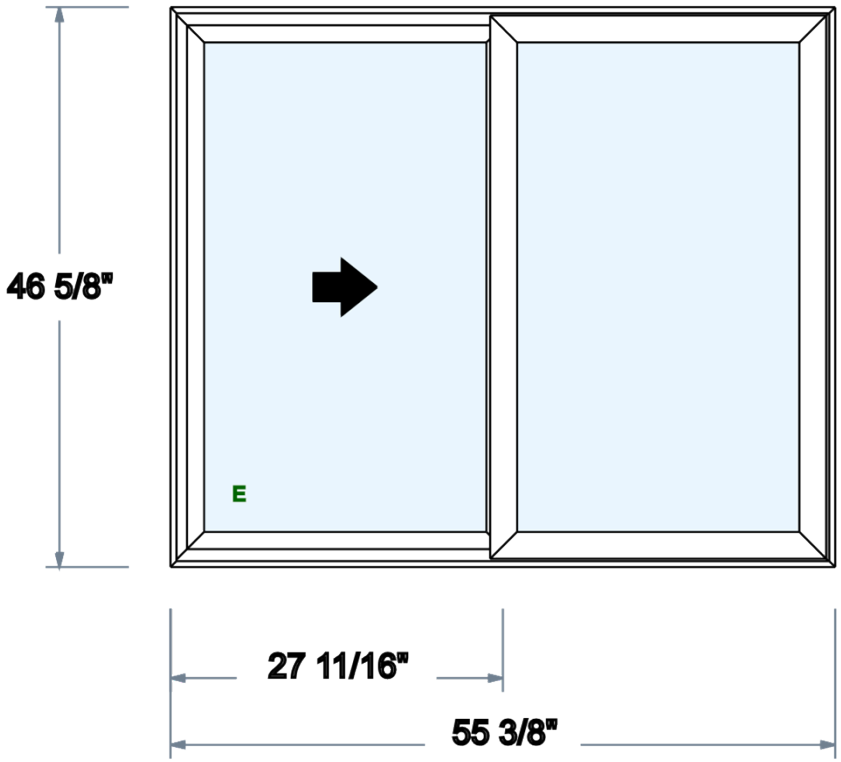

Viewed from Exterior (Net Frame) - Image scaled 3/4" = 1' 0"

Customer Approval: _____

Sales Rep: Name: Eric Kennedy Email: erick@dunnlumber.com Phone:	**Legend:** O = Obscure T = Tempered E = Meets Egress per IBC (International Building Code) for above grade application. Validate against local codes.	Quote Number: SQPCZK009910_1 Last Modified Date: 12/2/2025 3:16 PM	

DUNN LUMBER Building success together.	**DUNN LUMBER COMPANY -** **Bellevue 08** **2350 140th Ave NE** **Bellevue, WA 98005** **4258234455**	Project Name: Contact Name: Contact Phone: Contact E-Mail: Builder / GC: Project Address:	MILGARD® WINDOWS and DOORS

Line No:	12
Location/Label:	154 C - Front Storage Room
Quantity:	1
Product Line:	V400 Tuscany
Model:	Slider Picture
Size:	Net Frame: 48 1/4" x 24"
Finishes:	Ext White / Int White
Fin Type:	1 3/8" Setback
Glass:	3/32" SunCoat (Low-E) over 3/32" 4th Surface HP Coating, Center Lite: 3/32" SunCoat (Low-E) with Gray Foam Spacer
U-Factor / SHGC / VT:	.16 / .22 / .43
Calculations:	Unit Area (Sq. Ft.): 8, Unit Perimeter (nominal in lineal ft): 13'
Ratings:	STC: No Rating, OITC: No Rating, PG: LC-PG50

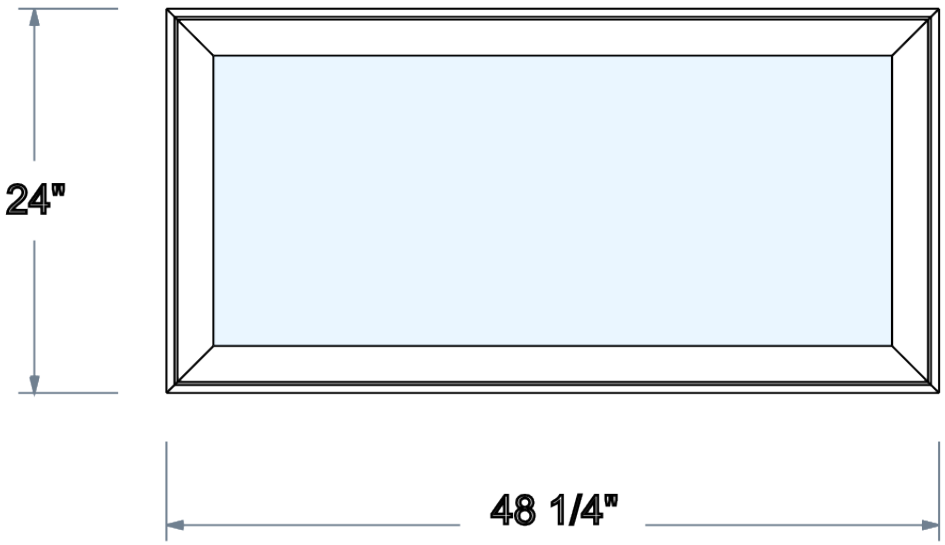

Viewed from Exterior (Net Frame) - Image scaled 1" = 1' 0"

Customer Approval: _____

Sales Rep: Name: Eric Kennedy Email: erick@dunnlumber.com Phone:	**Legend:** O = Obscure T = Tempered E = Meets Egress per IBC (International Building Code) for above grade application. Validate against local codes.	Quote Number: SQPCZK009910_1 Last Modified Date: 12/2/2025 3:16 PM	

DUNN LUMBER Building success together.	**DUNN LUMBER COMPANY - Bellevue 08** **2350 140th Ave NE** **Bellevue, WA 98005** **4258234455**	Project Name: Contact Name: Contact Phone: Contact E-Mail: Builder / GC: Project Address:	MILGARD® WINDOWS and DOORS

Line No:	13
Location/Label:	154 C -Dining Room
Quantity:	1
Product Line:	V400 Tuscany
Model:	Half Vent
Size:	Net Frame: 77" x 41"
Finishes:	Ext White / Int White
Fin Type:	1 3/8" Setback
Glass:	3/32" SunCoat (Low-E) over 3/32" 4th Surface HP Coating, Center Lite: 3/32" SunCoat (Low-E) with Gray Foam Spacer
Hardware:	SmartTouch Lock
Screen:	Standard with Fiberglass Mesh
U-Factor / SHGC / VT:	.18 / .21 / .41
Clear Opening:	W 35 13/16" x H 38" Sq. Ft. 9.45
Calculations:	Unit Area (Sq. Ft.): 22, Unit Perimeter (nominal in lineal ft): 21'
Ratings:	STC: No Rating, OITC: No Rating, PG: R-PG20

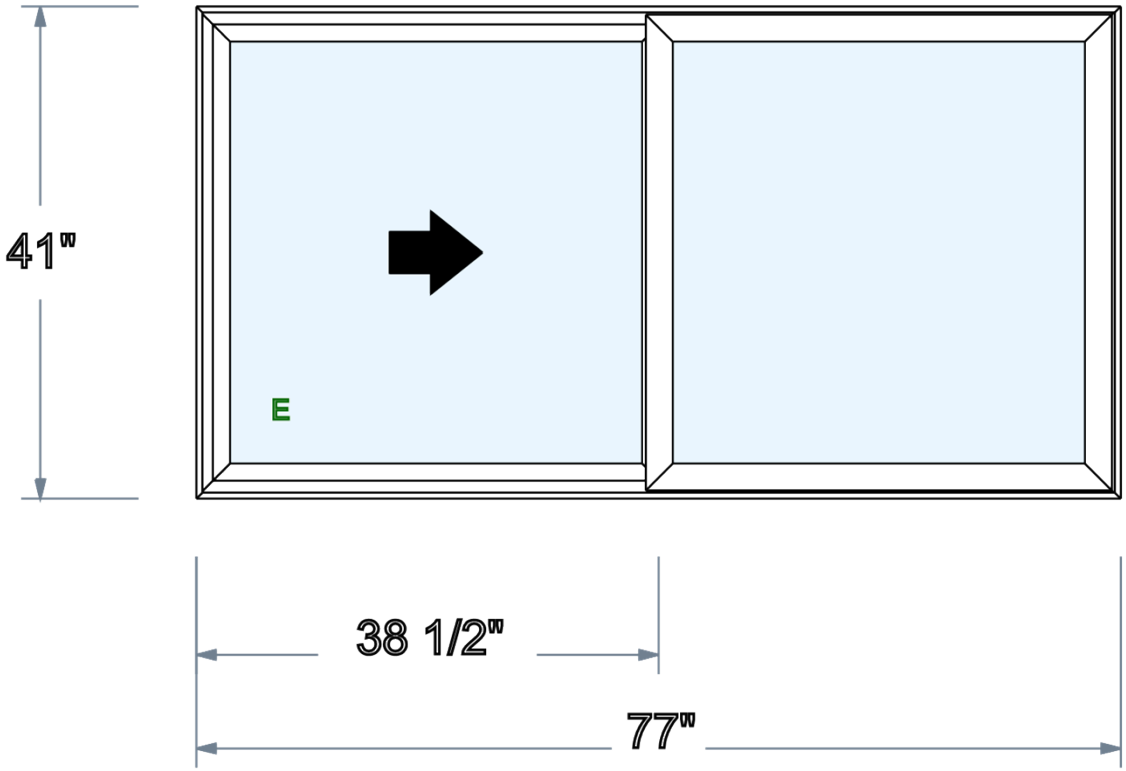

Viewed from Exterior (Net Frame) - Image scaled 3/4" = 1' 0"

Customer Approval: _____

Sales Rep: Name: Eric Kennedy Email: erick@dunnlumber.com Phone:	**Legend:** O = Obscure T = Tempered E = Meets Egress per IBC (International Building Code) for above grade application. Validate against local codes.	Quote Number: SQPCZK009910_1 Last Modified Date: 12/2/2025 3:16 PM **Page: 13 of 44**

DUNN LUMBER Building success together.	**DUNN LUMBER COMPANY - Bellevue 08** **2350 140th Ave NE** **Bellevue, WA 98005** **4258234455**	Project Name: Contact Name: Contact Phone: Contact E-Mail: Builder / GC: Project Address:	MILGARD® WINDOWS and DOORS

Line No:	14
Location/Label:	154 C - Living Room Front
Quantity:	1
Product Line:	V400 Tuscany
Model:	Half Vent
Size:	Net Frame: 77" x 41"
Finishes:	Ext White / Int White
Fin Type:	1 3/8" Setback
Glass:	3/32" SunCoat (Low-E) over 3/32" 4th Surface HP Coating, Center Lite: 3/32" SunCoat (Low-E) with Gray Foam Spacer
Hardware:	SmartTouch Lock
Screen:	Standard with Fiberglass Mesh
U-Factor / SHGC / VT:	.18 / .21 / .41
Clear Opening:	W 35 13/16" x H 38" Sq. Ft. 9.45
Calculations:	Unit Area (Sq. Ft.): 22, Unit Perimeter (nominal in lineal ft): 21'
Ratings:	STC: No Rating, OITC: No Rating, PG: R-PG20

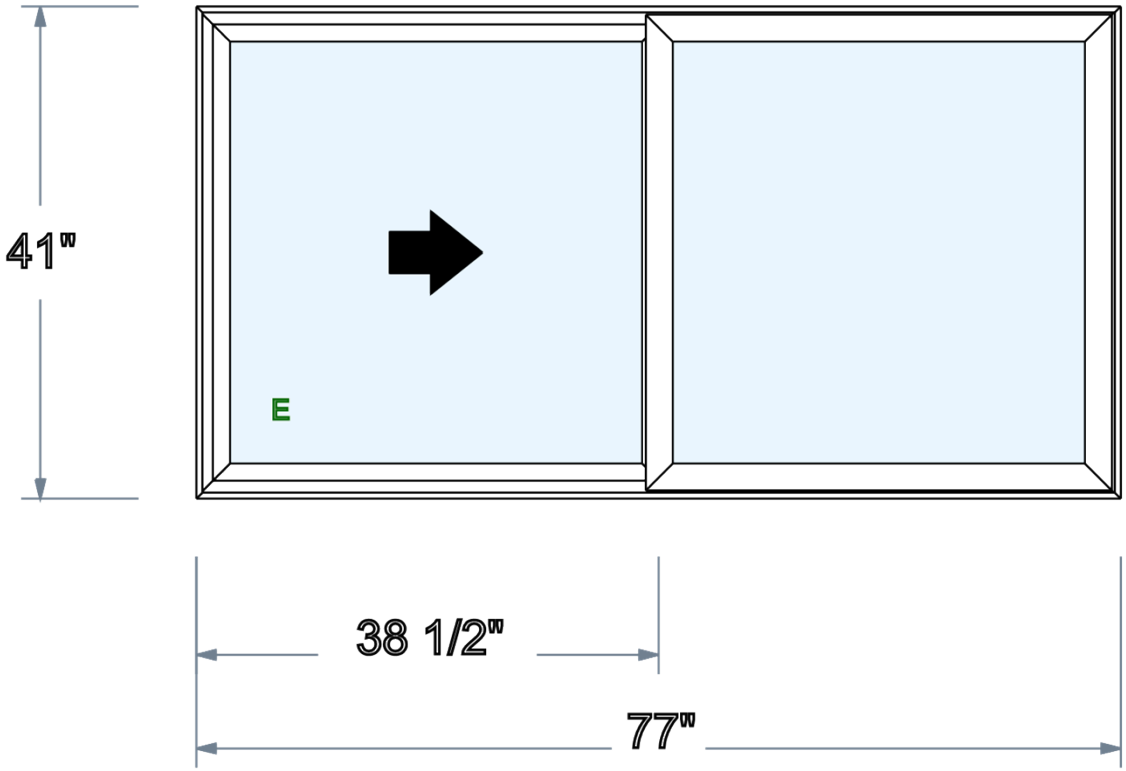

Viewed from Exterior (Net Frame) - Image scaled 3/4" = 1' 0"

Customer Approval: _____

Sales Rep: Name: Eric Kennedy Email: erick@dunnlumber.com Phone:	**Legend:** O = Obscure T = Tempered E = Meets Egress per IBC (International Building Code) for above grade application. Validate against local codes.	Quote Number: SQPCZK009910_1 Last Modified Date: 12/2/2025 3:16 PM	

DUNN LUMBER Building success together.	**DUNN LUMBER COMPANY - Bellevue 08** **2350 140th Ave NE** **Bellevue, WA 98005** **4258234455**	Project Name: Contact Name: Contact Phone: Contact E-Mail: Builder / GC: Project Address:	MILGARD® WINDOWS and DOORS

Line No:	15
Location/Label:	154 C - Living Room Short
Quantity:	1
Product Line:	V400 Tuscany
Model:	Slider Picture
Size:	Net Frame: 47 1/4" x 23 3/8"
Finishes:	Ext White / Int White
Fin Type:	1 3/8" Setback
Glass:	3/32" SunCoat (Low-E) over 3/32" 4th Surface HP Coating, Center Lite: 3/32" SunCoat (Low-E) with Gray Foam Spacer
U-Factor / SHGC / VT:	.16 / .22 / .43
Calculations:	Unit Area (Sq. Ft.): 8, Unit Perimeter (nominal in lineal ft): 12'
Ratings:	STC: No Rating, OITC: No Rating, PG: LC-PG50

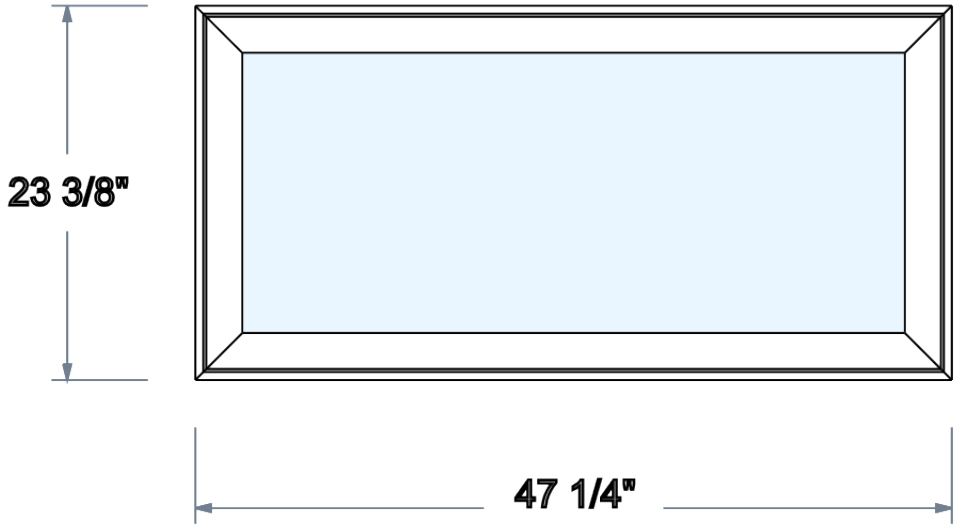

Viewed from Exterior (Net Frame) - Image scaled 1" = 1' 0"

Customer Approval: _____

Sales Rep: Name: Eric Kennedy Email: erick@dunnlumber.com Phone:	**Legend:** O = Obscure T = Tempered E = Meets Egress per IBC (International Building Code) for above grade application. Validate against local codes.	Quote Number: SQPCZK009910_1 Last Modified Date: 12/2/2025 3:16 PM	

DUNN LUMBER Building success together.	**DUNN LUMBER COMPANY - Bellevue 08** **2350 140th Ave NE** **Bellevue, WA 98005** **4258234455**	Project Name: Contact Name: Contact Phone: Contact E-Mail: Builder / GC: Project Address:	MILGARD® WINDOWS and DOORS

Line No:	16
Location/Label:	154 C - Bedroom 1
Quantity:	1
Product Line:	V400 Tuscany
Model:	Half Vent
Size:	Net Frame: 55 3/8" x 46 5/8"
Finishes:	Ext White / Int White
Fin Type:	1 3/8" Setback
Glass:	3/32" SunCoat (Low-E) over 3/32" 4th Surface HP Coating, Center Lite: 3/32" SunCoat (Low-E) with Gray Foam Spacer
Hardware:	SmartTouch Lock
Screen:	Standard with Fiberglass Mesh
U-Factor / SHGC / VT:	.18 / .21 / .41
Clear Opening:	W 25" x H 43 5/8" Sq. Ft. 7.57
Calculations:	Unit Area (Sq. Ft.): 18, Unit Perimeter (nominal in lineal ft): 18'
Ratings:	STC: No Rating, OITC: No Rating, PG: LC-PG40

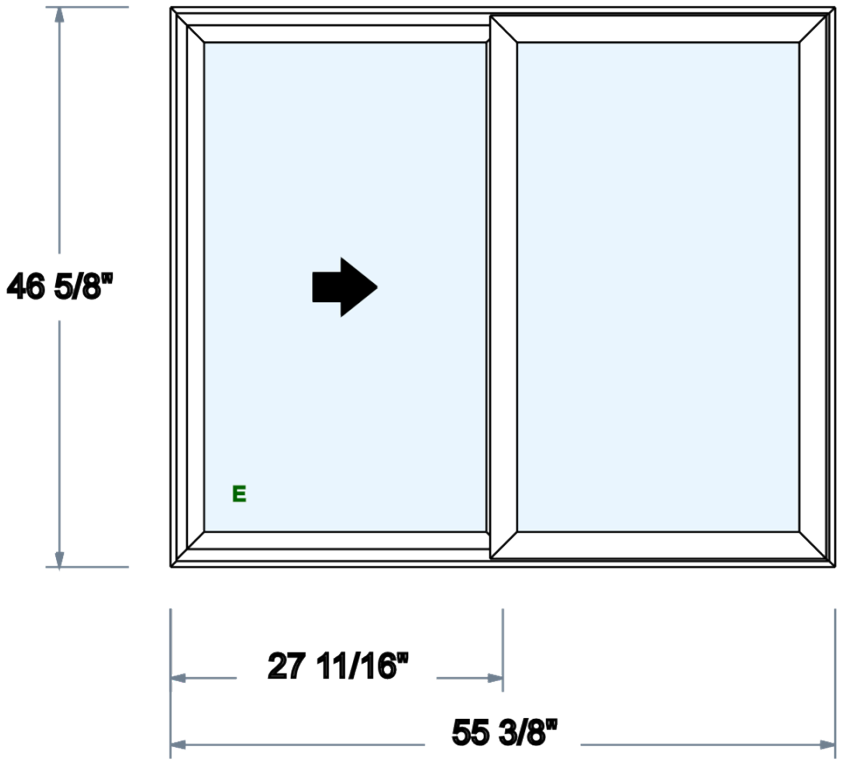

Viewed from Exterior (Net Frame) - Image scaled 3/4" = 1' 0"

Customer Approval: _____

Sales Rep: Name: Eric Kennedy Email: erick@dunnlumber.com Phone:	**Legend:** O = Obscure T = Tempered E = Meets Egress per IBC (International Building Code) for above grade application. Validate against local codes.	Quote Number: SQPCZK009910_1 Last Modified Date: 12/2/2025 3:16 PM	

DUNN LUMBER Building success together.	**DUNN LUMBER COMPANY - Bellevue 08** **2350 140th Ave NE** **Bellevue, WA 98005** **4258234455**	Project Name: Contact Name: Contact Phone: Contact E-Mail: Builder / GC: Project Address:	MILGARD® WINDOWS and DOORS

Line No:	17
Location/Label:	154 C - Bedroom 2
Quantity:	1
Product Line:	V400 Tuscany
Model:	Half Vent
Size:	Net Frame: 55 3/8" x 46 5/8"
Finishes:	Ext White / Int White
Fin Type:	1 3/8" Setback
Glass:	3/32" SunCoat (Low-E) over 3/32" 4th Surface HP Coating, Center Lite: 3/32" SunCoat (Low-E) with Gray Foam Spacer
Hardware:	SmartTouch Lock
Screen:	Standard with Fiberglass Mesh
U-Factor / SHGC / VT:	.18 / .21 / .41
Clear Opening:	W 25" x H 43 5/8" Sq. Ft. 7.57
Calculations:	Unit Area (Sq. Ft.): 18, Unit Perimeter (nominal in lineal ft): 18'
Ratings:	STC: No Rating, OITC: No Rating, PG: LC-PG40

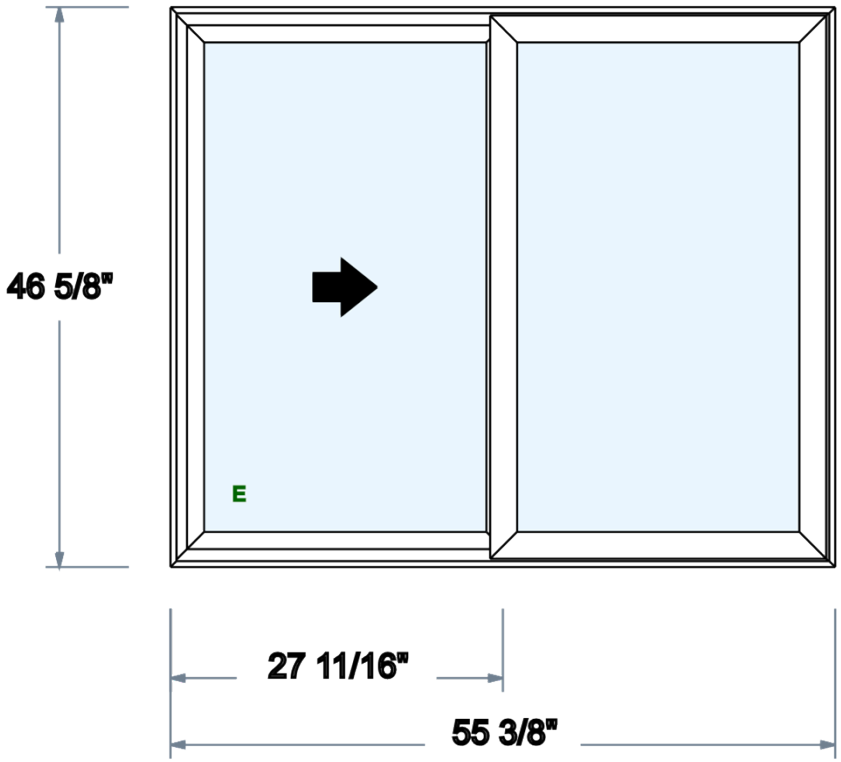

Viewed from Exterior (Net Frame) - Image scaled 3/4" = 1' 0"

Customer Approval: _____

Sales Rep: Name: Eric Kennedy Email: erick@dunnlumber.com Phone:	**Legend:** O = Obscure T = Tempered E = Meets Egress per IBC (International Building Code) for above grade application. Validate against local codes.	Quote Number: SQPCZK009910_1 Last Modified Date: 12/2/2025 3:16 PM	

DUNN LUMBER Building success together.	**DUNN LUMBER COMPANY - Bellevue 08** **2350 140th Ave NE** **Bellevue, WA 98005** **4258234455**	Project Name: Contact Name: Contact Phone: Contact E-Mail: Builder / GC: Project Address:	MILGARD® WINDOWS and DOORS

Line No:	18
Location/Label:	154 C - Bedroom 3
Quantity:	1
Product Line:	V400 Tuscany
Model:	Half Vent
Size:	Net Frame: 55 3/8" x 46 5/8"
Finishes:	Ext White / Int White
Fin Type:	1 3/8" Setback
Glass:	3/32" SunCoat (Low-E) over 3/32" 4th Surface HP Coating, Center Lite: 3/32" SunCoat (Low-E) with Gray Foam Spacer
Hardware:	SmartTouch Lock
Screen:	Standard with Fiberglass Mesh
U-Factor / SHGC / VT:	.18 / .21 / .41
Clear Opening:	W 25" x H 43 5/8" Sq. Ft. 7.57
Calculations:	Unit Area (Sq. Ft.): 18, Unit Perimeter (nominal in lineal ft): 18'
Ratings:	STC: No Rating, OITC: No Rating, PG: LC-PG40

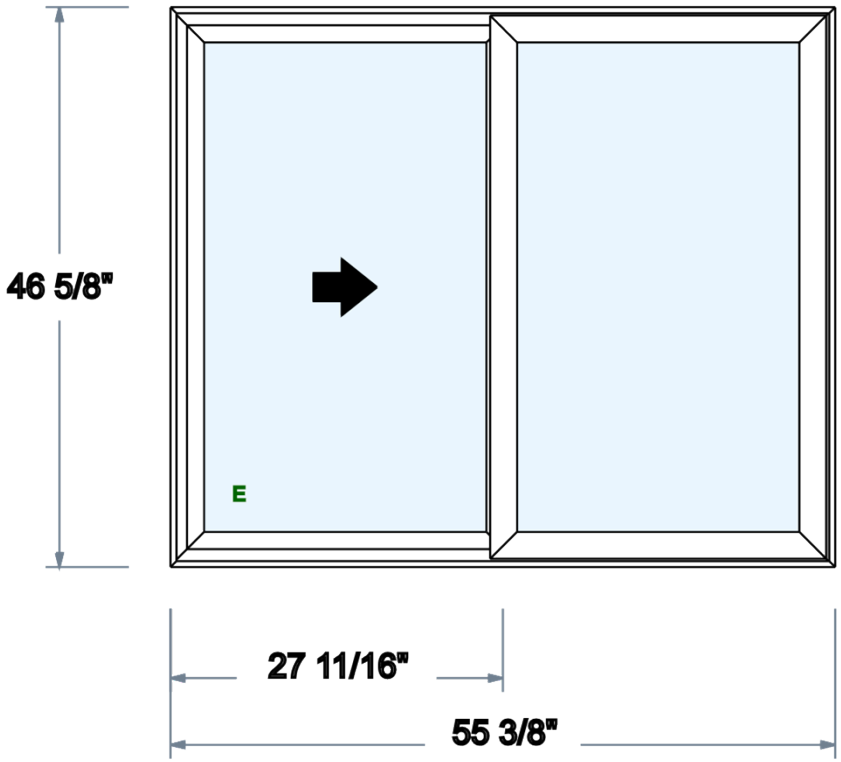

Viewed from Exterior (Net Frame) - Image scaled 3/4" = 1' 0"

Customer Approval: _____

Sales Rep: Name: Eric Kennedy Email: erick@dunnlumber.com Phone:	**Legend:** O = Obscure T = Tempered E = Meets Egress per IBC (International Building Code) for above grade application. Validate against local codes.	Quote Number: SQPCZK009910_1 Last Modified Date: 12/2/2025 3:16 PM	

DUNN LUMBER Building success together.	**DUNN LUMBER COMPANY -** **Bellevue 08** **2350 140th Ave NE** **Bellevue, WA 98005** **4258234455**	Project Name: Contact Name: Contact Phone: Contact E-Mail: Builder / GC: Project Address:	MILGARD® WINDOWS and DOORS

Line No:	19
Location/Label:	154 D - Front Storage Room
Quantity:	1
Product Line:	V400 Tuscany
Model:	Slider Picture
Size:	Net Frame: 48 1/4" x 24"
Finishes:	Ext White / Int White
Fin Type:	1 3/8" Setback
Glass:	3/32" SunCoat (Low-E) over 3/32" 4th Surface HP Coating, Center Lite: 3/32" SunCoat (Low-E) with Gray Foam Spacer
U-Factor / SHGC / VT:	.16 / .22 / .43
Calculations:	Unit Area (Sq. Ft.): 8, Unit Perimeter (nominal in lineal ft): 13'
Ratings:	STC: No Rating, OITC: No Rating, PG: LC-PG50

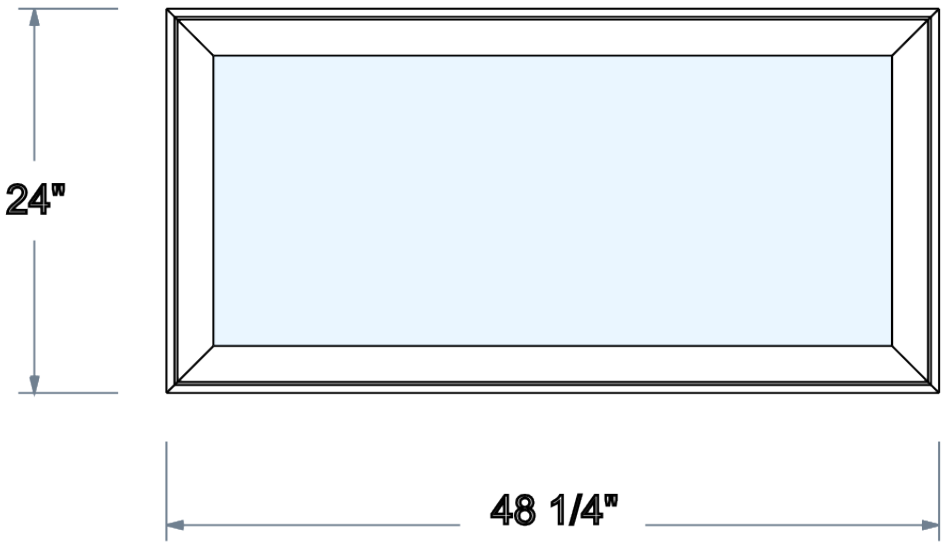

Viewed from Exterior (Net Frame) - Image scaled 1" = 1' 0"

Customer Approval: _____

Sales Rep: Name: Eric Kennedy Email: erick@dunnlumber.com Phone:	**Legend:** O = Obscure T = Tempered E = Meets Egress per IBC (International Building Code) for above grade application. Validate against local codes.	Quote Number: SQPCZK009910_1 Last Modified Date: 12/2/2025 3:16 PM **Page: 19 of 44**

DUNN LUMBER Building success together.	**DUNN LUMBER COMPANY - Bellevue 08** **2350 140th Ave NE** **Bellevue, WA 98005** **4258234455**	Project Name: Contact Name: Contact Phone: Contact E-Mail: Builder / GC: Project Address:	MILGARD® WINDOWS and DOORS

Line No:	20
Location/Label:	154 D - Dining Room
Quantity:	1
Product Line:	V400 Tuscany
Model:	Half Vent
Size:	Net Frame: 77" x 41"
Finishes:	Ext White / Int White
Fin Type:	1 3/8" Setback
Glass:	3/32" SunCoat (Low-E) over 3/32" 4th Surface HP Coating, Center Lite: 3/32" SunCoat (Low-E) with Gray Foam Spacer
Hardware:	SmartTouch Lock
Screen:	Standard with Fiberglass Mesh
U-Factor / SHGC / VT:	.18 / .21 / .41
Clear Opening:	W 35 13/16" x H 38" Sq. Ft. 9.45
Calculations:	Unit Area (Sq. Ft.): 22, Unit Perimeter (nominal in lineal ft): 21'
Ratings:	STC: No Rating, OITC: No Rating, PG: R-PG20

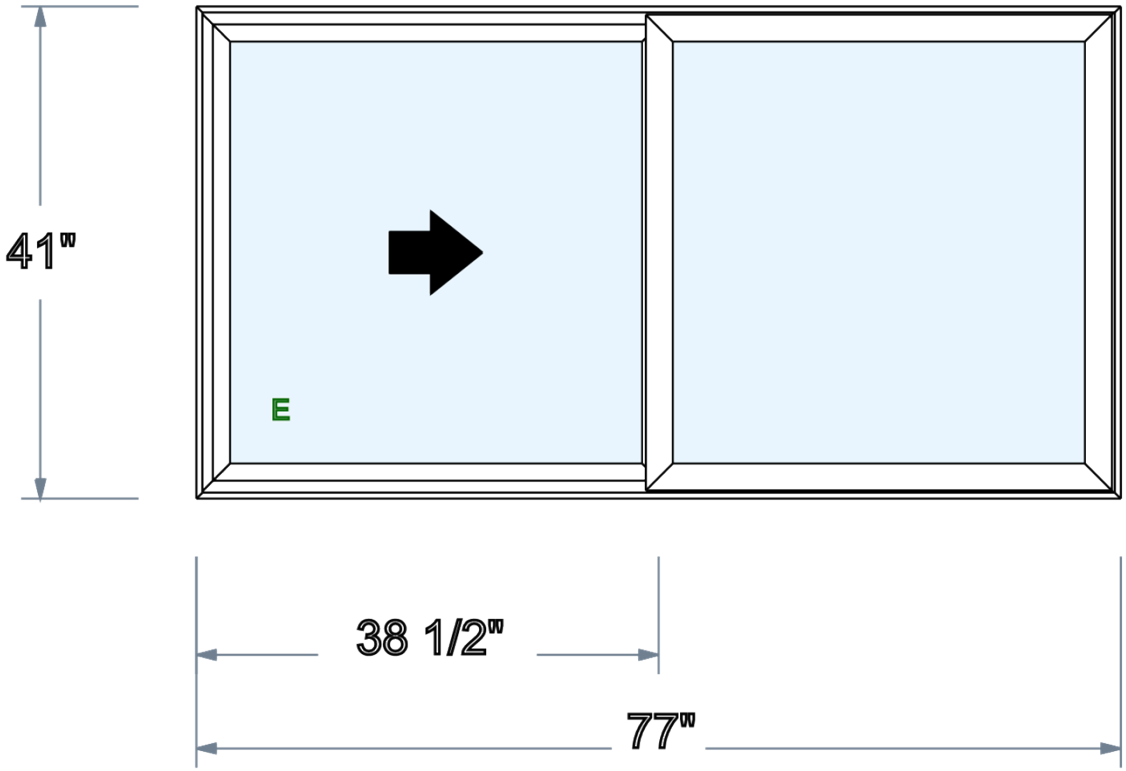

Viewed from Exterior (Net Frame) - Image scaled 3/4" = 1' 0"

Customer Approval: _____

Sales Rep: Name: Eric Kennedy Email: erick@dunnlumber.com Phone:	**Legend:** O = Obscure T = Tempered E = Meets Egress per IBC (International Building Code) for above grade application. Validate against local codes.	Quote Number: SQPCZK009910_1 Last Modified Date: 12/2/2025 3:16 PM	

DUNN LUMBER Building success together.	**DUNN LUMBER COMPANY -** **Bellevue 08** **2350 140th Ave NE** **Bellevue, WA 98005** **4258234455**	Project Name: Contact Name: Contact Phone: Contact E-Mail: Builder / GC: Project Address:	MILGARD® WINDOWS and DOORS

Line No:	21
Location/Label:	154 D - Living Room Front
Quantity:	1
Product Line:	V400 Tuscany
Model:	Half Vent
Size:	Net Frame: 77" x 41"
Finishes:	Ext White / Int White
Fin Type:	1 3/8" Setback
Glass:	3/32" SunCoat (Low-E) over 3/32" 4th Surface HP Coating, Center Lite: 3/32" SunCoat (Low-E) with Gray Foam Spacer
Hardware:	SmartTouch Lock
Screen:	Standard with Fiberglass Mesh
U-Factor / SHGC / VT:	.18 / .21 / .41
Clear Opening:	W 35 13/16" x H 38" Sq. Ft. 9.45
Calculations:	Unit Area (Sq. Ft.): 22, Unit Perimeter (nominal in lineal ft): 21'
Ratings:	STC: No Rating, OITC: No Rating, PG: R-PG20

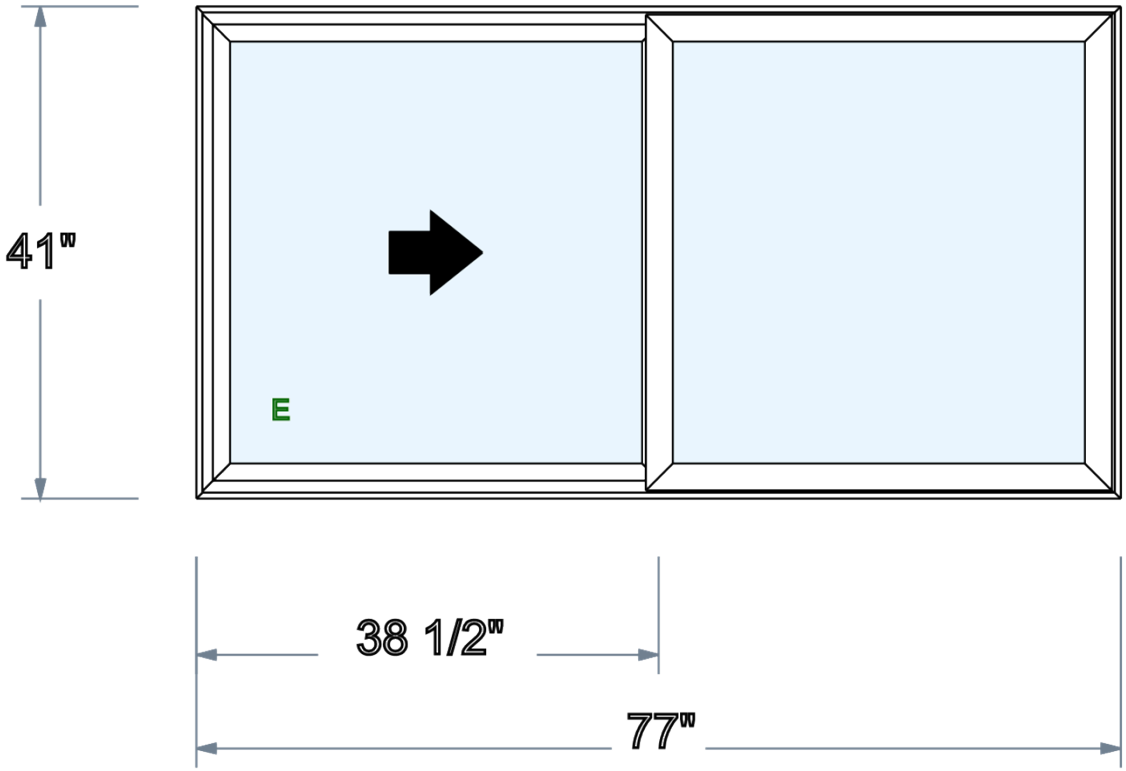

Viewed from Exterior (Net Frame) - Image scaled 3/4" = 1' 0"

Customer Approval: _____

Sales Rep: Name: Eric Kennedy Email: erick@dunnlumber.com Phone:	**Legend:** O = Obscure T = Tempered E = Meets Egress per IBC (International Building Code) for above grade application. Validate against local codes.	Quote Number: SQPCZK009910_1 Last Modified Date: 12/2/2025 3:16 PM **Page: 21 of 44**

DUNN LUMBER Building success together.	**DUNN LUMBER COMPANY - Bellevue 08** **2350 140th Ave NE** **Bellevue, WA 98005** **4258234455**	Project Name: Contact Name: Contact Phone: Contact E-Mail: Builder / GC: Project Address:	MILGARD® WINDOWS and DOORS

Line No:	22
Location/Label:	154 D - Living Room Side
Quantity:	1
Product Line:	V400 Tuscany
Model:	Half Vent
Size:	Net Frame: 55 3/8" x 46 5/8"
Finishes:	Ext White / Int White
Fin Type:	1 3/8" Setback
Glass:	3/32" SunCoat (Low-E) over 3/32" 4th Surface HP Coating, Center Lite: 3/32" SunCoat (Low-E) with Gray Foam Spacer
Hardware:	SmartTouch Lock
Screen:	Standard with Fiberglass Mesh
U-Factor / SHGC / VT:	.18 / .21 / .41
Clear Opening:	W 25" x H 43 5/8" Sq. Ft. 7.57
Calculations:	Unit Area (Sq. Ft.): 18, Unit Perimeter (nominal in lineal ft): 18'
Ratings:	STC: No Rating, OITC: No Rating, PG: LC-PG40

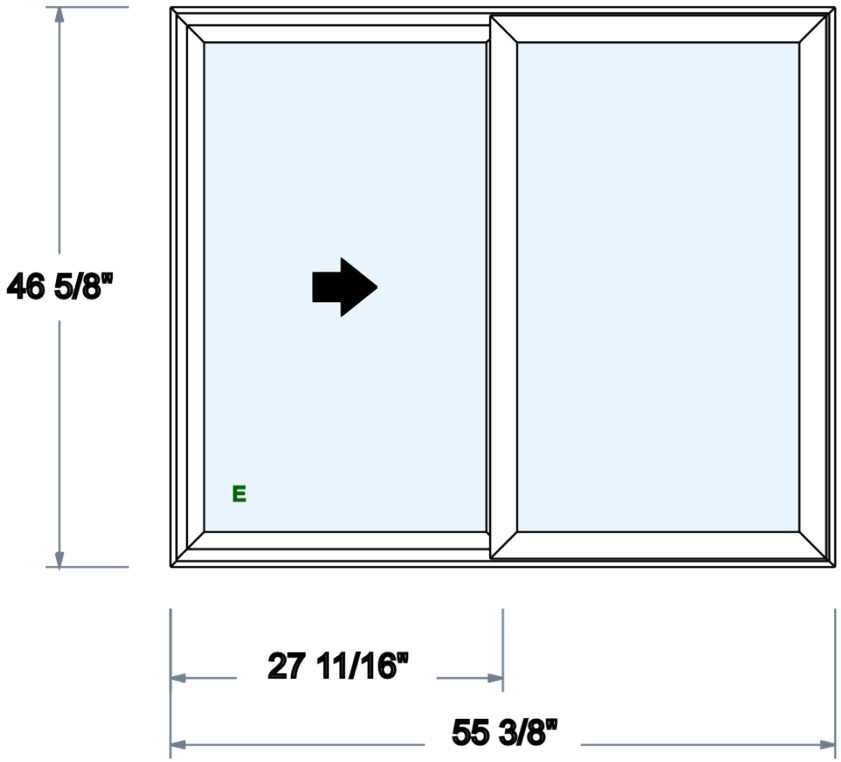

Viewed from Exterior (Net Frame) - Image scaled 3/4" = 1' 0"

Customer Approval: _____

Sales Rep: Name: Eric Kennedy Email: erick@dunnlumber.com Phone:	**Legend:** O = Obscure T = Tempered E = Meets Egress per IBC (International Building Code) for above grade application. Validate against local codes.	Quote Number: SQPCZK009910_1 Last Modified Date: 12/2/2025 3:16 PM	

DUNN LUMBER Building success together.	**DUNN LUMBER COMPANY - Bellevue 08** **2350 140th Ave NE** **Bellevue, WA 98005** **4258234455**	Project Name: Contact Name: Contact Phone: Contact E-Mail: Builder / GC: Project Address:	MILGARD® WINDOWS and DOORS

Line No:	23
Location/Label:	154 D - Living Room Short
Quantity:	1
Product Line:	V400 Tuscany
Model:	Slider Picture
Size:	Net Frame: 47 1/4" x 23 3/8"
Finishes:	Ext White / Int White
Fin Type:	1 3/8" Setback
Glass:	3/32" SunCoat (Low-E) over 3/32" 4th Surface HP Coating, Center Lite: 3/32" SunCoat (Low-E) with Gray Foam Spacer
U-Factor / SHGC / VT:	.16 / .22 / .43
Calculations:	Unit Area (Sq. Ft.): 8, Unit Perimeter (nominal in lineal ft): 12'
Ratings:	STC: No Rating, OITC: No Rating, PG: LC-PG50

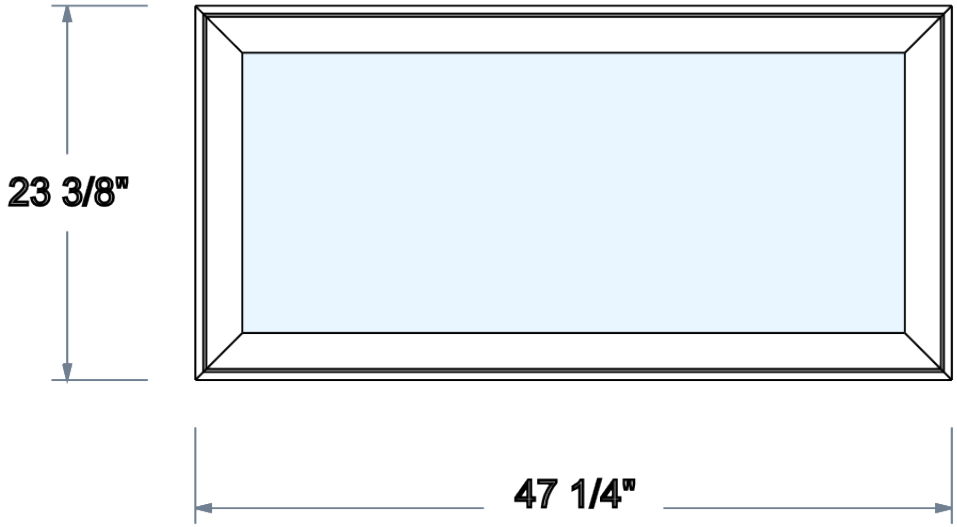

Viewed from Exterior (Net Frame) - Image scaled 1" = 1' 0"

Customer Approval: _____

Sales Rep: Name: Eric Kennedy Email: erick@dunnlumber.com Phone:	**Legend:** O = Obscure T = Tempered E = Meets Egress per IBC (International Building Code) for above grade application. Validate against local codes.	Quote Number: SQPCZK009910_1 Last Modified Date: 12/2/2025 3:16 PM	

DUNN LUMBER Building success together.	**DUNN LUMBER COMPANY - Bellevue 08** **2350 140th Ave NE** **Bellevue, WA 98005** **4258234455**	Project Name: Contact Name: Contact Phone: Contact E-Mail: Builder / GC: Project Address:	MILGARD® WINDOWS and DOORS

Line No:	24
Location/Label:	154 D - Bedroom 1
Quantity:	1
Product Line:	V400 Tuscany
Model:	Half Vent
Size:	Net Frame: 55 3/8" x 46 5/8"
Finishes:	Ext White / Int White
Fin Type:	1 3/8" Setback
Glass:	3/32" SunCoat (Low-E) over 3/32" 4th Surface HP Coating, Center Lite: 3/32" SunCoat (Low-E) with Gray Foam Spacer
Hardware:	SmartTouch Lock
Screen:	Standard with Fiberglass Mesh
U-Factor / SHGC / VT:	.18 / .21 / .41
Clear Opening:	W 25" x H 43 5/8" Sq. Ft. 7.57
Calculations:	Unit Area (Sq. Ft.): 18, Unit Perimeter (nominal in lineal ft): 18'
Ratings:	STC: No Rating, OITC: No Rating, PG: LC-PG40

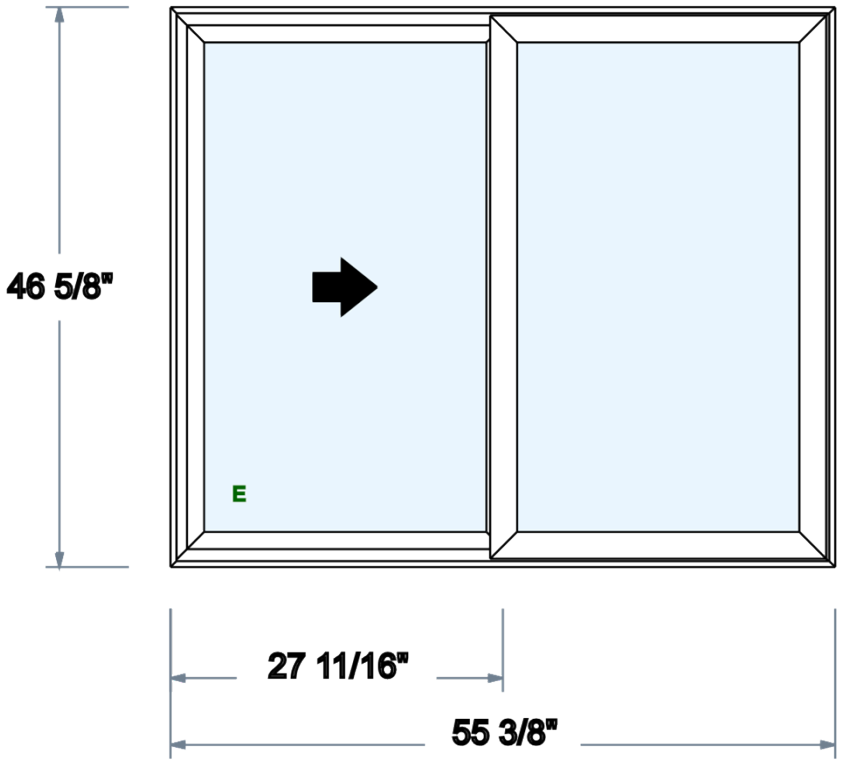

Viewed from Exterior (Net Frame) - Image scaled 3/4" = 1' 0"

Customer Approval: _____

Sales Rep: Name: Eric Kennedy Email: erick@dunnlumber.com Phone:	**Legend:** O = Obscure T = Tempered E = Meets Egress per IBC (International Building Code) for above grade application. Validate against local codes.	Quote Number: SQPCZK009910_1 Last Modified Date: 12/2/2025 3:16 PM	
		Page: 24 of 44	

DUNN LUMBER Building success together.	**DUNN LUMBER COMPANY - Bellevue 08** **2350 140th Ave NE** **Bellevue, WA 98005** **4258234455**	Project Name: Contact Name: Contact Phone: Contact E-Mail: Builder / GC: Project Address:	MILGARD® WINDOWS and DOORS

Line No:	25
Location/Label:	154 D - Bedroom 2
Quantity:	1
Product Line:	V400 Tuscany
Model:	Half Vent
Size:	Net Frame: 55 3/8" x 46 5/8"
Finishes:	Ext White / Int White
Fin Type:	1 3/8" Setback
Glass:	3/32" SunCoat (Low-E) over 3/32" 4th Surface HP Coating, Center Lite: 3/32" SunCoat (Low-E) with Gray Foam Spacer
Hardware:	SmartTouch Lock
Screen:	Standard with Fiberglass Mesh
U-Factor / SHGC / VT:	.18 / .21 / .41
Clear Opening:	W 25" x H 43 5/8" Sq. Ft. 7.57
Calculations:	Unit Area (Sq. Ft.): 18, Unit Perimeter (nominal in lineal ft): 18'
Ratings:	STC: No Rating, OITC: No Rating, PG: LC-PG40

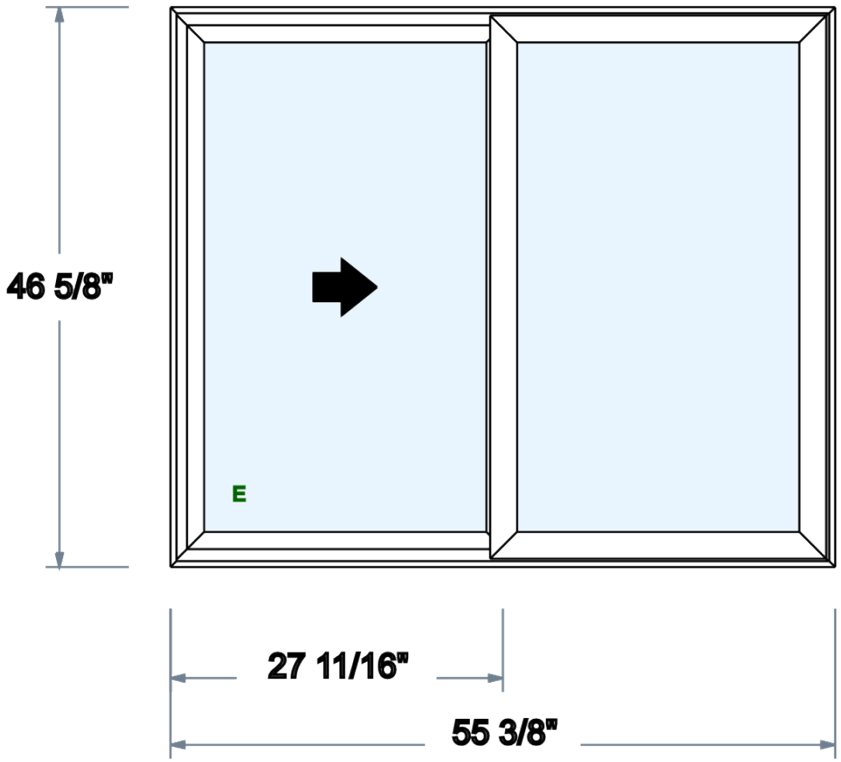

Viewed from Exterior (Net Frame) - Image scaled 3/4" = 1' 0"

Customer Approval: _____

Sales Rep: Name: Eric Kennedy Email: erick@dunnlumber.com Phone:	**Legend:** O = Obscure T = Tempered E = Meets Egress per IBC (International Building Code) for above grade application. Validate against local codes.	Quote Number: SQPCZK009910_1 Last Modified Date: 12/2/2025 3:16 PM	
		Page: 25 of 44	

DUNN LUMBER Building success together.	**DUNN LUMBER COMPANY - Bellevue 08** **2350 140th Ave NE** **Bellevue, WA 98005** **4258234455**	Project Name: Contact Name: Contact Phone: Contact E-Mail: Builder / GC: Project Address:	MILGARD® WINDOWS and DOORS

Line No:	26
Location/Label:	154 D - Bedroom 3
Quantity:	1
Product Line:	V400 Tuscany
Model:	Half Vent
Size:	Net Frame: 55 3/8" x 46 5/8"
Finishes:	Ext White / Int White
Fin Type:	1 3/8" Setback
Glass:	3/32" SunCoat (Low-E) over 3/32" 4th Surface HP Coating, Center Lite: 3/32" SunCoat (Low-E) with Gray Foam Spacer
Hardware:	SmartTouch Lock
Screen:	Standard with Fiberglass Mesh
U-Factor / SHGC / VT:	.18 / .21 / .41
Clear Opening:	W 25" x H 43 5/8" Sq. Ft. 7.57
Calculations:	Unit Area (Sq. Ft.): 18, Unit Perimeter (nominal in lineal ft): 18'
Ratings:	STC: No Rating, OITC: No Rating, PG: LC-PG40

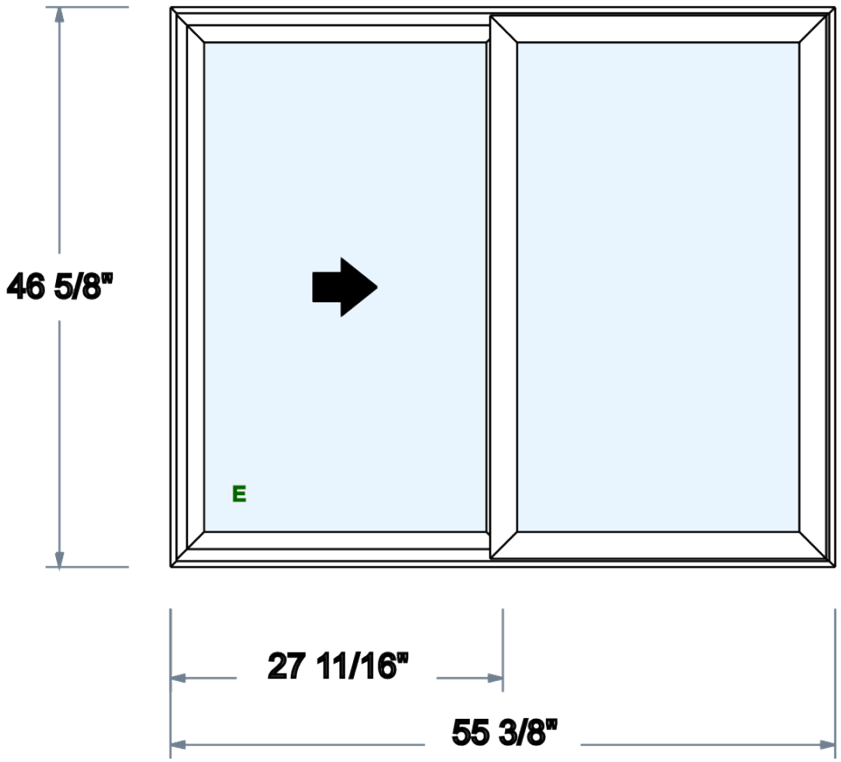

Viewed from Exterior (Net Frame) - Image scaled 3/4" = 1' 0"

Customer Approval: _____

Sales Rep: Name: Eric Kennedy Email: erick@dunnlumber.com Phone:	**Legend:** O = Obscure T = Tempered E = Meets Egress per IBC (International Building Code) for above grade application. Validate against local codes.	Quote Number: SQPCZK009910_1 Last Modified Date: 12/2/2025 3:16 PM	

DUNN LUMBER Building success together.	**DUNN LUMBER COMPANY - Bellevue 08** **2350 140th Ave NE** **Bellevue, WA 98005** **4258234455**	Project Name: Contact Name: Contact Phone: Contact E-Mail: Builder / GC: Project Address:	MILGARD® WINDOWS and DOORS

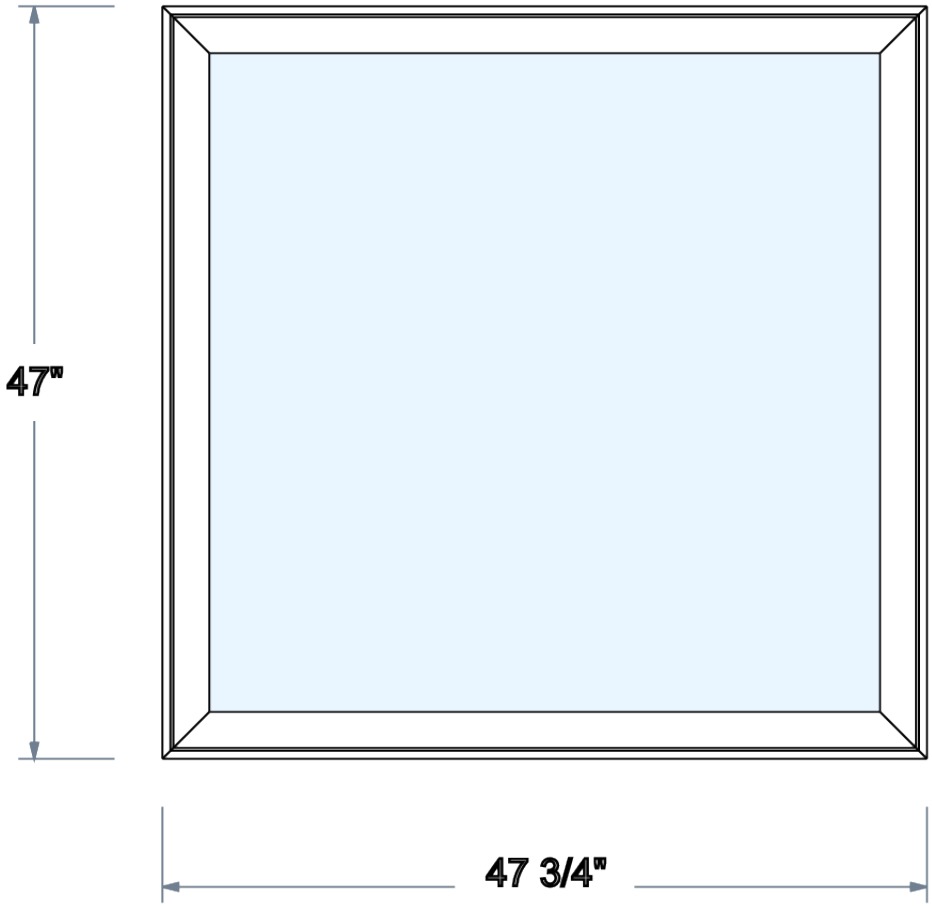

Viewed from Exterior (Net Frame) - Image scaled 1" = 1' 0"

Line No:	27
Location/Label:	297 B - Front Storage Room
Quantity:	1
Product Line:	V400 Tuscany
Model:	Slider Picture
Size:	Net Frame: 47 3/4" x 47"
Finishes:	Ext White / Int White
Fin Type:	1 3/8" Setback
Glass:	1/8" SunCoat (Low-E) over 1/8" 4th Surface HP Coating, Center Lite: 1/8" SunCoat (Low-E) with Gray Foam Spacer
U-Factor / SHGC / VT:	.17 / .22 / .42
Calculations:	Unit Area (Sq. Ft.): 16, Unit Perimeter (nominal in lineal ft): 17'
Ratings:	STC: No Rating, OITC: No Rating, PG: LC-PG50

Customer Approval: _____

Sales Rep: Name: Eric Kennedy Email: erick@dunnlumber.com Phone:	**Legend:** O = Obscure T = Tempered E = Meets Egress per IBC (International Building Code) for above grade application. Validate against local codes.	Quote Number: SQPCZK009910_1 Last Modified Date: 12/2/2025 3:16 PM **Page: 27 of 44**

DUNN LUMBER Building success together.	**DUNN LUMBER COMPANY - Bellevue 08** **2350 140th Ave NE** **Bellevue, WA 98005** **4258234455**	Project Name: Contact Name: Contact Phone: Contact E-Mail: Builder / GC: Project Address:	MILGARD® WINDOWS and DOORS

Line No:	28
Location/Label:	297 B - Living Room Small
Quantity:	2
Product Line:	V400 Tuscany
Model:	Slider Picture
Size:	Net Frame: 17 5/8" x 59"
Finishes:	Ext White / Int White
Fin Type:	1 3/8" Setback
Glass:	3/32" SunCoat (Low-E) over 3/32" 4th Surface HP Coating, Center Lite: 3/32" SunCoat (Low-E) with Gray Foam Spacer
U-Factor / SHGC / VT:	.16 / .22 / .43
Calculations:	Unit Area (Sq. Ft.): 7, Unit Perimeter (nominal in lineal ft): 13'
Ratings:	STC: No Rating, OITC: No Rating, PG: LC-PG50

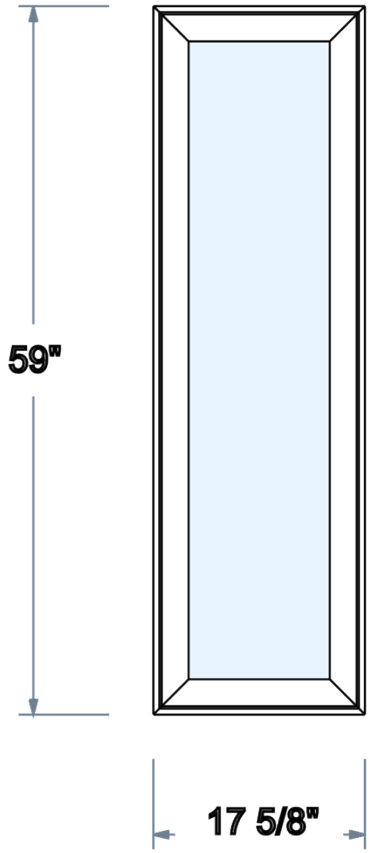

Viewed from Exterior (Net Frame) - Image scaled 3/4" = 1' 0"

Customer Approval: _____

Sales Rep: Name: Eric Kennedy Email: erick@dunnlumber.com Phone:	**Legend:** O = Obscure T = Tempered E = Meets Egress per IBC (International Building Code) for above grade application. Validate against local codes.	Quote Number: SQPCZK009910_1 Last Modified Date: 12/2/2025 3:16 PM	

DUNN LUMBER Building success together.	**DUNN LUMBER COMPANY - Bellevue 08** **2350 140th Ave NE** **Bellevue, WA 98005** **4258234455**	Project Name: Contact Name: Contact Phone: Contact E-Mail: Builder / GC: Project Address:	MILGARD® WINDOWS and DOORS

Line No:	29
Location/Label:	297 B - Living Room Bay
Quantity:	1
Product Line:	V400 Tuscany
Model:	Slider Picture
Size:	Net Frame: 47 1/2" x 59"
Finishes:	Ext White / Int White
Fin Type:	1 3/8" Setback
Glass:	1/8" SunCoat (Low-E) over 1/8" 4th Surface HP Coating, Center Lite: 1/8" SunCoat (Low-E) with Gray Foam Spacer
U-Factor / SHGC / VT:	.17 / .22 / .42
Calculations:	Unit Area (Sq. Ft.): 20, Unit Perimeter (nominal in lineal ft): 19'
Ratings:	STC: No Rating, OITC: No Rating, PG: DP-PG45

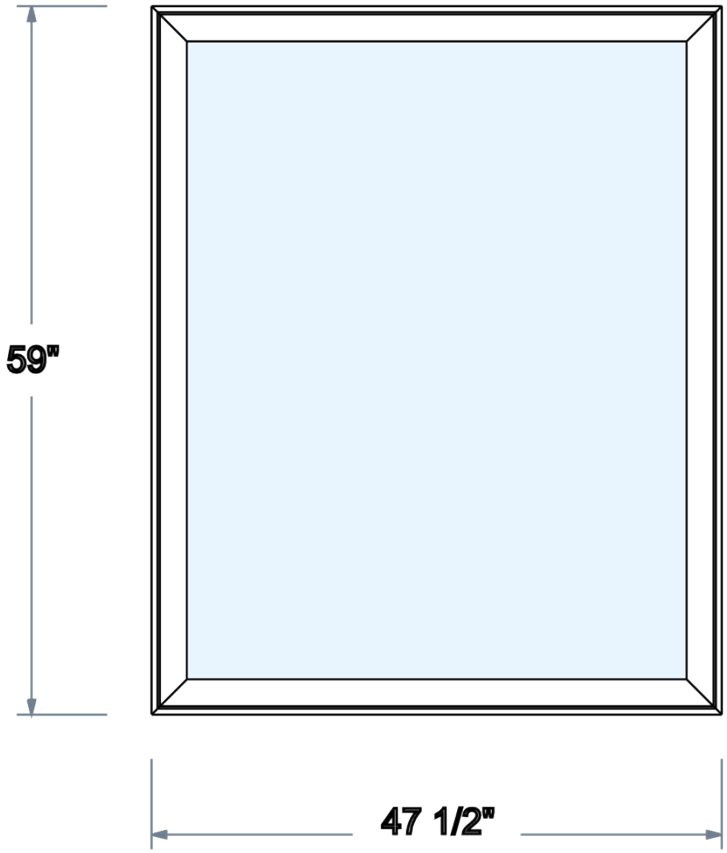

Viewed from Exterior (Net Frame) - Image scaled 3/4" = 1' 0"

Customer Approval: _____

Sales Rep: Name: Eric Kennedy Email: erick@dunnlumber.com Phone:	**Legend:** O = Obscure T = Tempered E = Meets Egress per IBC (International Building Code) for above grade application. Validate against local codes.	Quote Number: SQPCZK009910_1 Last Modified Date: 12/2/2025 3:16 PM	

DUNN LUMBER Building success together.	**DUNN LUMBER COMPANY - Bellevue 08** **2350 140th Ave NE** **Bellevue, WA 98005** **4258234455**	Project Name: Contact Name: Contact Phone: Contact E-Mail: Builder / GC: Project Address:	MILGARD® WINDOWS and DOORS

Line No:	30
Location/Label:	297 B - Living Room Side
Quantity:	1
Product Line:	V400 Tuscany
Model:	Half Vent
Size:	Net Frame: 95 1/2" x 59"
Finishes:	Ext White / Int White
Fin Type:	1 3/8" Setback
Glass:	1/8" SunCoat (Low-E) over 1/8" 4th Surface HP Coating, Center Lite: 1/8" SunCoat (Low-E) with Gray Foam Spacer
Hardware:	SmartTouch Lock
Screen:	Standard with Fiberglass Mesh
U-Factor / SHGC / VT:	.19 / .21 / .40
Clear Opening:	W 45 1/16" x H 56" Sq. Ft. 17.52
Calculations:	Unit Area (Sq. Ft.): 40, Unit Perimeter (nominal in lineal ft): 27'
Ratings:	STC: No Rating, OITC: No Rating, PG: R-PG20

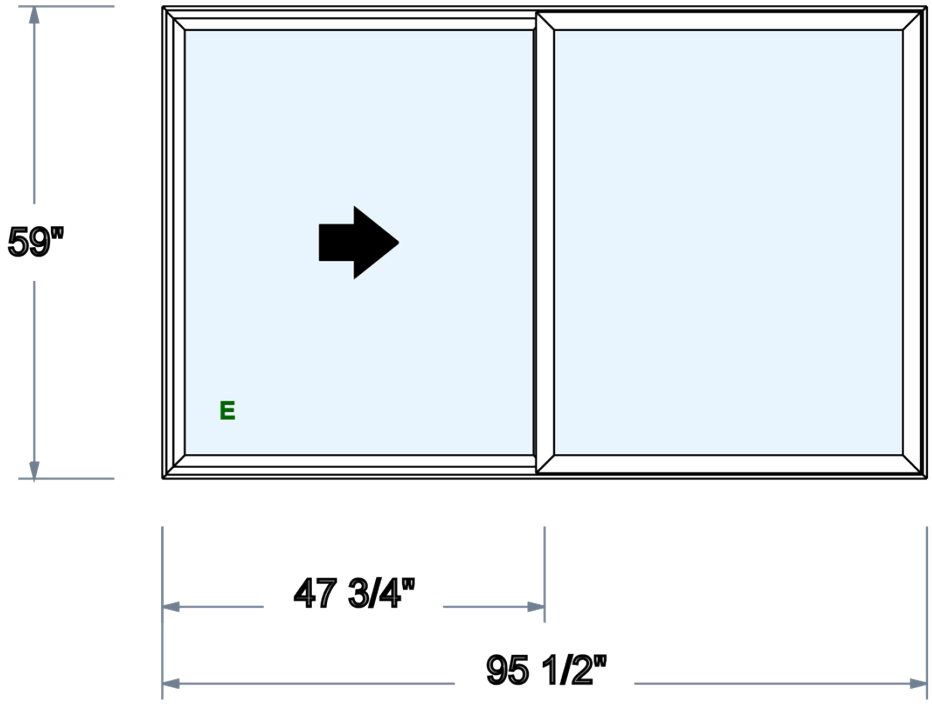

Viewed from Exterior (Net Frame) - Image scaled 1/2" = 1' 0"

Customer Approval: _____

Sales Rep: Name: Eric Kennedy Email: erick@dunnlumber.com Phone:	**Legend:** O = Obscure T = Tempered E = Meets Egress per IBC (International Building Code) for above grade application. Validate against local codes.	Quote Number: SQPCZK009910_1 Last Modified Date: 12/2/2025 3:16 PM	

DUNN LUMBER Building success together.	**DUNN LUMBER COMPANY - Bellevue 08** **2350 140th Ave NE** **Bellevue, WA 98005** **4258234455**	Project Name: Contact Name: Contact Phone: Contact E-Mail: Builder / GC: Project Address:	MILGARD® WINDOWS and DOORS

Line No:	31
Location/Label:	297 B - Dining Room Side
Quantity:	1
Product Line:	V400 Tuscany
Model:	Half Vent
Size:	Net Frame: 59 1/2" x 47"
Finishes:	Ext White / Int White
Fin Type:	1 3/8" Setback
Glass:	3/32" SunCoat (Low-E) over 3/32" 4th Surface HP Coating, Center Lite: 3/32" SunCoat (Low-E) with Gray Foam Spacer
Hardware:	SmartTouch Lock
Screen:	Standard with Fiberglass Mesh
U-Factor / SHGC / VT:	.18 / .21 / .41
Clear Opening:	W 27 1/16" x H 44" Sq. Ft. 8.27
Calculations:	Unit Area (Sq. Ft.): 20, Unit Perimeter (nominal in lineal ft): 19'
Ratings:	STC: No Rating, OITC: No Rating, PG: LC-PG40

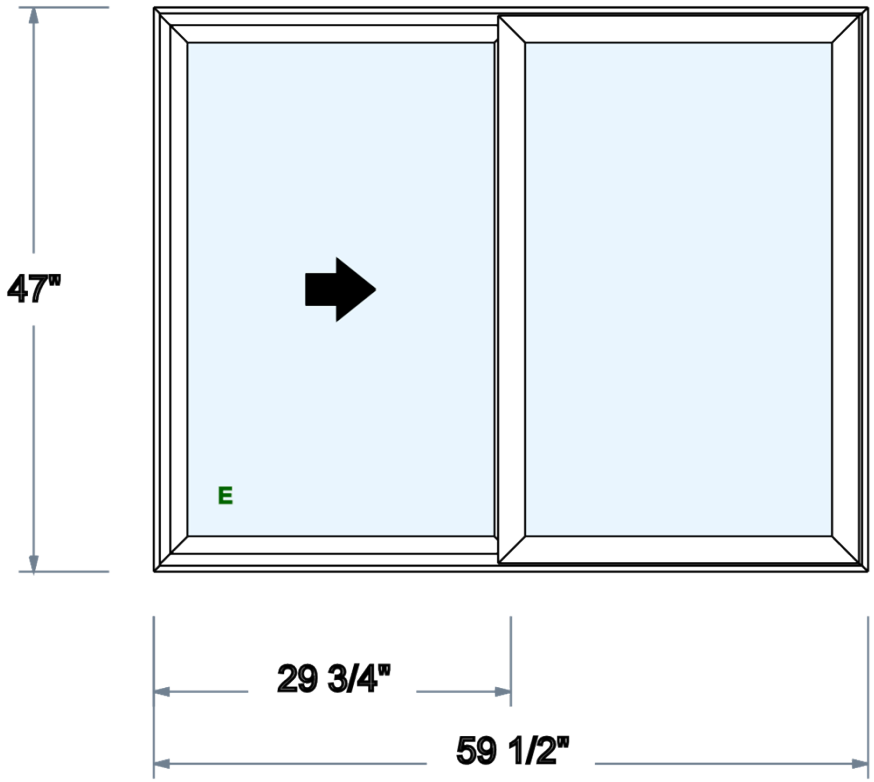

Viewed from Exterior (Net Frame) - Image scaled 3/4" = 1' 0"

Customer Approval: _____

Sales Rep: Name: Eric Kennedy Email: erick@dunnlumber.com Phone:	**Legend:** O = Obscure T = Tempered E = Meets Egress per IBC (International Building Code) for above grade application. Validate against local codes.	Quote Number: SQPCZK009910_1 Last Modified Date: 12/2/2025 3:16 PM	

DUNN LUMBER Building success together.	**DUNN LUMBER COMPANY - Bellevue 08** **2350 140th Ave NE** **Bellevue, WA 98005** **4258234455**	Project Name: Contact Name: Contact Phone: Contact E-Mail: Builder / GC: Project Address:	MILGARD® WINDOWS and DOORS

Line No:	32
Location/Label:	297 B - Dining Room Small
Quantity:	2
Product Line:	V400 Tuscany
Model:	Slider Picture
Size:	Net Frame: 17 5/8" x 59"
Finishes:	Ext White / Int White
Fin Type:	1 3/8" Setback
Glass:	3/32" SunCoat (Low-E) over 3/32" 4th Surface HP Coating, Center Lite: 3/32" SunCoat (Low-E) with Gray Foam Spacer
U-Factor / SHGC / VT:	.16 / .22 / .43
Calculations:	Unit Area (Sq. Ft.): 7, Unit Perimeter (nominal in lineal ft): 13'
Ratings:	STC: No Rating, OITC: No Rating, PG: LC-PG50

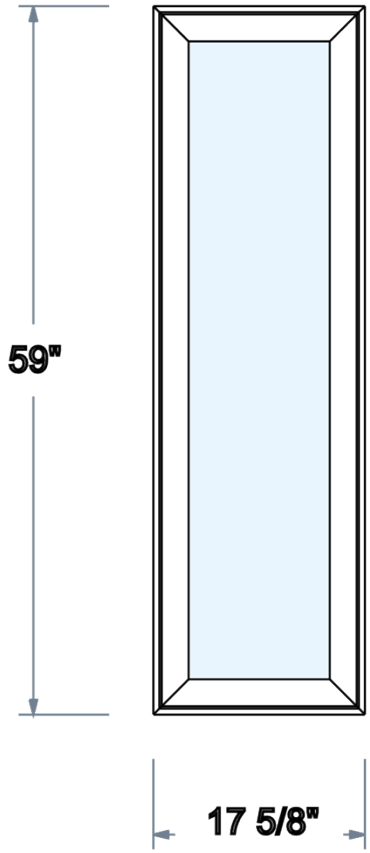

Viewed from Exterior (Net Frame) - Image scaled 3/4" = 1' 0"

Customer Approval: _____

Sales Rep: Name: Eric Kennedy Email: erick@dunnlumber.com Phone:	**Legend:** O = Obscure T = Tempered E = Meets Egress per IBC (International Building Code) for above grade application. Validate against local codes.	Quote Number: SQPCZK009910_1 Last Modified Date: 12/2/2025 3:16 PM	

DUNN LUMBER Building success together.	**DUNN LUMBER COMPANY - Bellevue 08** **2350 140th Ave NE** **Bellevue, WA 98005** **4258234455**	Project Name: Contact Name: Contact Phone: Contact E-Mail: Builder / GC: Project Address:	MILGARD® WINDOWS and DOORS

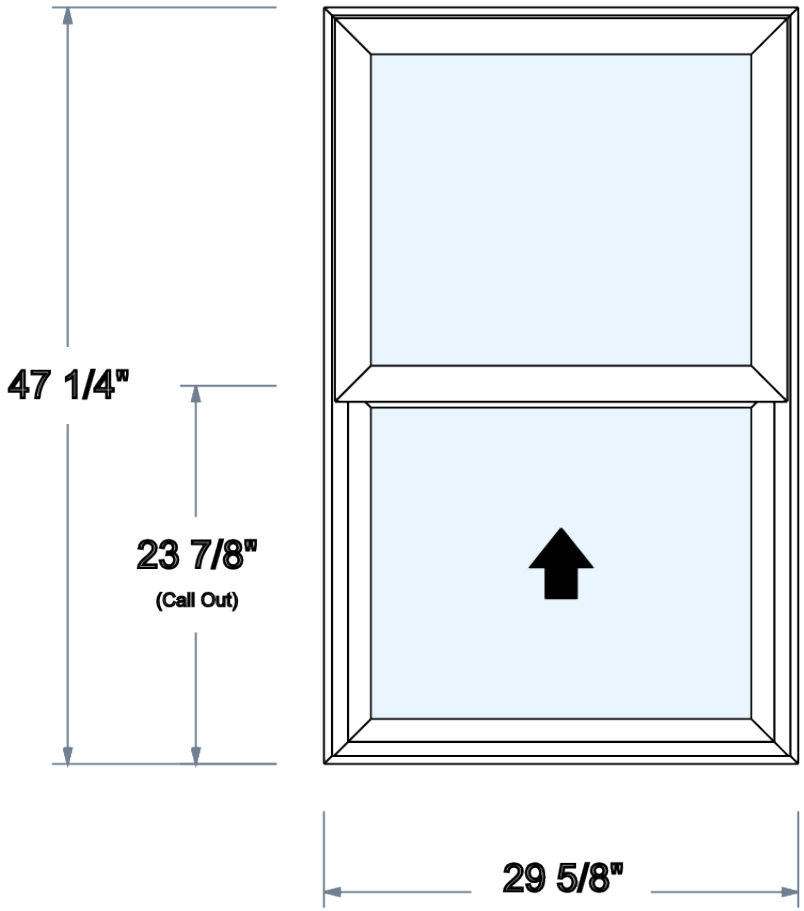

Viewed from Exterior (Net Frame) - Image scaled 1" = 1' 0"

Line No:	33
Location/Label:	297 B - Dining Room Bay
Quantity:	1
Product Line:	V400 Tuscany
Model:	Single Hung
Size:	Net Frame: 29 5/8" x 47 1/4"
Dimensions:	Sash Height: One Half
Finishes:	Ext White / Int White
Fin Type:	1 3/8" Setback
Glass:	3/32" SunCoat (Low-E) over 3/32" 4th Surface HP Coating, Center Lite: 3/32" SunCoat (Low-E) with Gray Foam Spacer
Hardware:	SmartTouch Lock
Screen:	Standard with Fiberglass Mesh
U-Factor / SHGC / VT:	.18 / .21 / .41
Clear Opening:	W 26 5/8" x H 19 3/4" Sq. Ft. 3.65
Calculations:	Unit Area (Sq. Ft.): 10, Unit Perimeter (nominal in lineal ft): 13'
Ratings:	STC: No Rating, OITC: No Rating, PG: LC-PG40

Customer Approval: _____

DUNN LUMBER Building success together.	**DUNN LUMBER COMPANY - Bellevue 08** **2350 140th Ave NE** **Bellevue, WA 98005** **4258234455**	Project Name: Contact Name: Contact Phone: Contact E-Mail: Builder / GC: Project Address:	MILGARD® WINDOWS and DOORS

Line No:	34
Location/Label:	297 B - Kitchen
Quantity:	1
Product Line:	V400 Tuscany
Model:	Half Vent
Size:	Net Frame: 47 5/8" x 35"
Finishes:	Ext White / Int White
Fin Type:	1 3/8" Setback
Glass:	3/32" SunCoat (Low-E) over 3/32" 4th Surface HP Coating, Center Lite: 3/32" SunCoat (Low-E) with Gray Foam Spacer
Hardware:	SmartTouch Lock
Screen:	Standard with Fiberglass Mesh
U-Factor / SHGC / VT:	.18 / .21 / .41
Clear Opening:	W 21 1/8" x H 32" Sq. Ft. 4.69
Calculations:	Unit Area (Sq. Ft.): 12, Unit Perimeter (nominal in lineal ft): 14'
Ratings:	STC: No Rating, OITC: No Rating, PG: LC-PG40

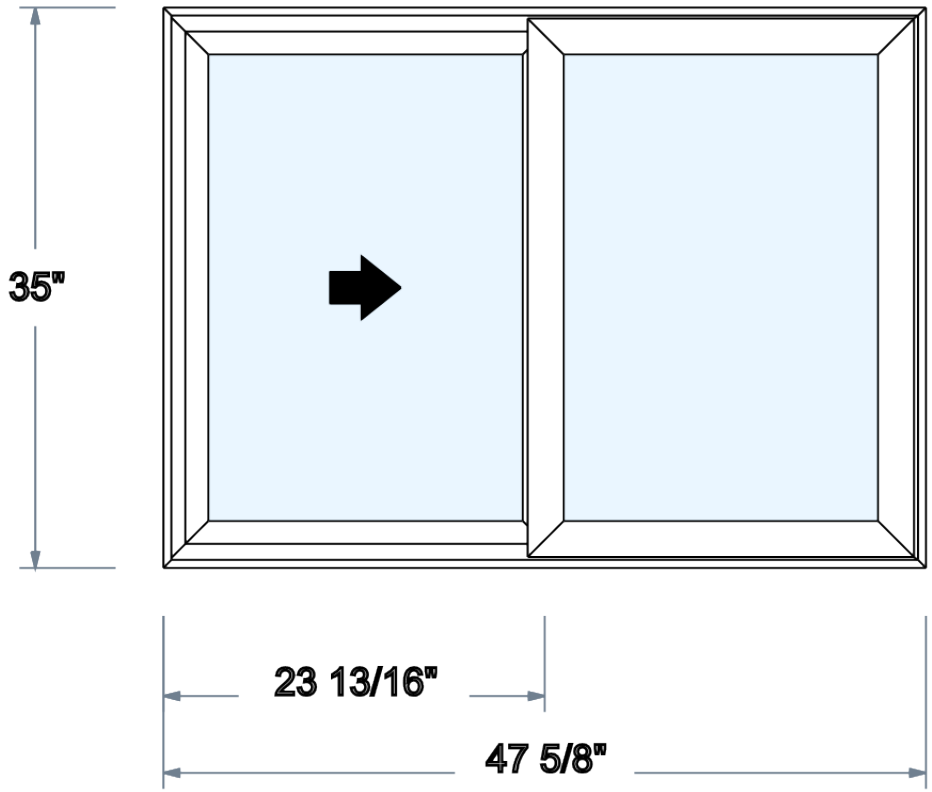

Viewed from Exterior (Net Frame) - Image scaled 1" = 1' 0"

Customer Approval: _____

Sales Rep: Name: Eric Kennedy Email: erick@dunnlumber.com Phone:	**Legend:** O = Obscure T = Tempered E = Meets Egress per IBC (International Building Code) for above grade application. Validate against local codes.	Quote Number: SQPCZK009910_1 Last Modified Date: 12/2/2025 3:16 PM	
		Page: 34 of 44	

DUNN LUMBER Building success together.	**DUNN LUMBER COMPANY - Bellevue 08** **2350 140th Ave NE** **Bellevue, WA 98005** **4258234455**	Project Name: Contact Name: Contact Phone: Contact E-Mail: Builder / GC: Project Address:	MILGARD® WINDOWS and DOORS

Line No:	35
Location/Label:	297 B - Bedroom 1
Quantity:	1
Product Line:	V400 Tuscany
Model:	Half Vent
Size:	Net Frame: 59 5/8" x 41"
Finishes:	Ext White / Int White
Fin Type:	1 3/8" Setback
Glass:	3/32" SunCoat (Low-E) over 3/32" 4th Surface HP Coating, Center Lite: 3/32" SunCoat (Low-E) with Gray Foam Spacer
Hardware:	SmartTouch Lock
Screen:	Standard with Fiberglass Mesh
U-Factor / SHGC / VT:	.18 / .21 / .41
Clear Opening:	W 27 1/8" x H 38" Sq. Ft. 7.16
Calculations:	Unit Area (Sq. Ft.): 17, Unit Perimeter (nominal in lineal ft): 18'
Ratings:	STC: No Rating, OITC: No Rating, PG: LC-PG40

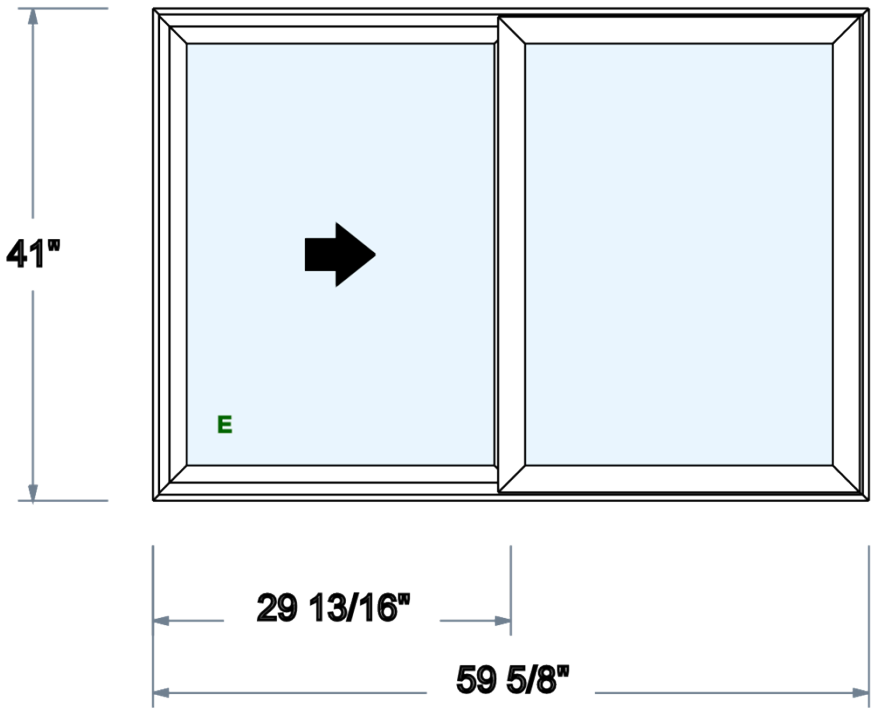

Viewed from Exterior (Net Frame) - Image scaled 3/4" = 1' 0"

Customer Approval: _____

Sales Rep: Name: Eric Kennedy Email: erick@dunnlumber.com Phone:	**Legend:** O = Obscure T = Tempered E = Meets Egress per IBC (International Building Code) for above grade application. Validate against local codes.	Quote Number: SQPCZK009910_1 Last Modified Date: 12/2/2025 3:16 PM	

DUNN LUMBER Building success together.	**DUNN LUMBER COMPANY - Bellevue 08** **2350 140th Ave NE** **Bellevue, WA 98005** **4258234455**	Project Name: Contact Name: Contact Phone: Contact E-Mail: Builder / GC: Project Address:	MILGARD® WINDOWS and DOORS

Line No:	36
Location/Label:	297 B - Bedroom 2
Quantity:	1
Product Line:	V400 Tuscany
Model:	Half Vent
Size:	Net Frame: 59 5/8" x 41"
Finishes:	Ext White / Int White
Fin Type:	1 3/8" Setback
Glass:	3/32" SunCoat (Low-E) over 3/32" 4th Surface HP Coating, Center Lite: 3/32" SunCoat (Low-E) with Gray Foam Spacer
Hardware:	SmartTouch Lock
Screen:	Standard with Fiberglass Mesh
U-Factor / SHGC / VT:	.18 / .21 / .41
Clear Opening:	W 27 1/8" x H 38" Sq. Ft. 7.16
Calculations:	Unit Area (Sq. Ft.): 17, Unit Perimeter (nominal in lineal ft): 18'
Ratings:	STC: No Rating, OITC: No Rating, PG: LC-PG40

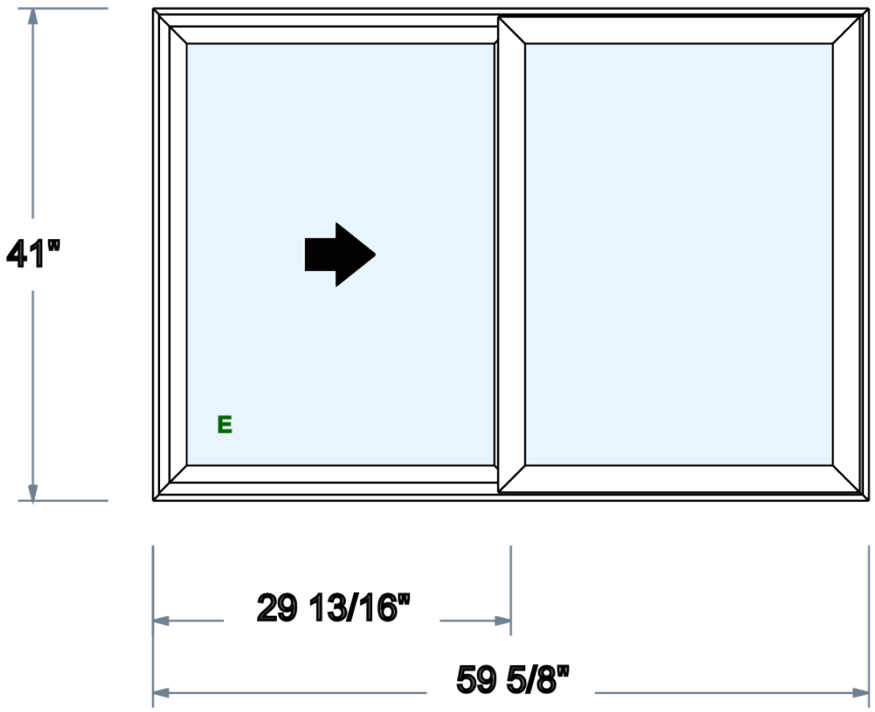

Viewed from Exterior (Net Frame) - Image scaled 3/4" = 1' 0"

Customer Approval: _____

Sales Rep: Name: Eric Kennedy Email: erick@dunnlumber.com Phone:	**Legend:** O = Obscure T = Tempered E = Meets Egress per IBC (International Building Code) for above grade application. Validate against local codes.	Quote Number: SQPCZK009910_1 Last Modified Date: 12/2/2025 3:16 PM	

DUNN LUMBER Building success together.	**DUNN LUMBER COMPANY - Bellevue 08** **2350 140th Ave NE** **Bellevue, WA 98005** **4258234455**	Project Name: Contact Name: Contact Phone: Contact E-Mail: Builder / GC: Project Address:	MILGARD® WINDOWS and DOORS

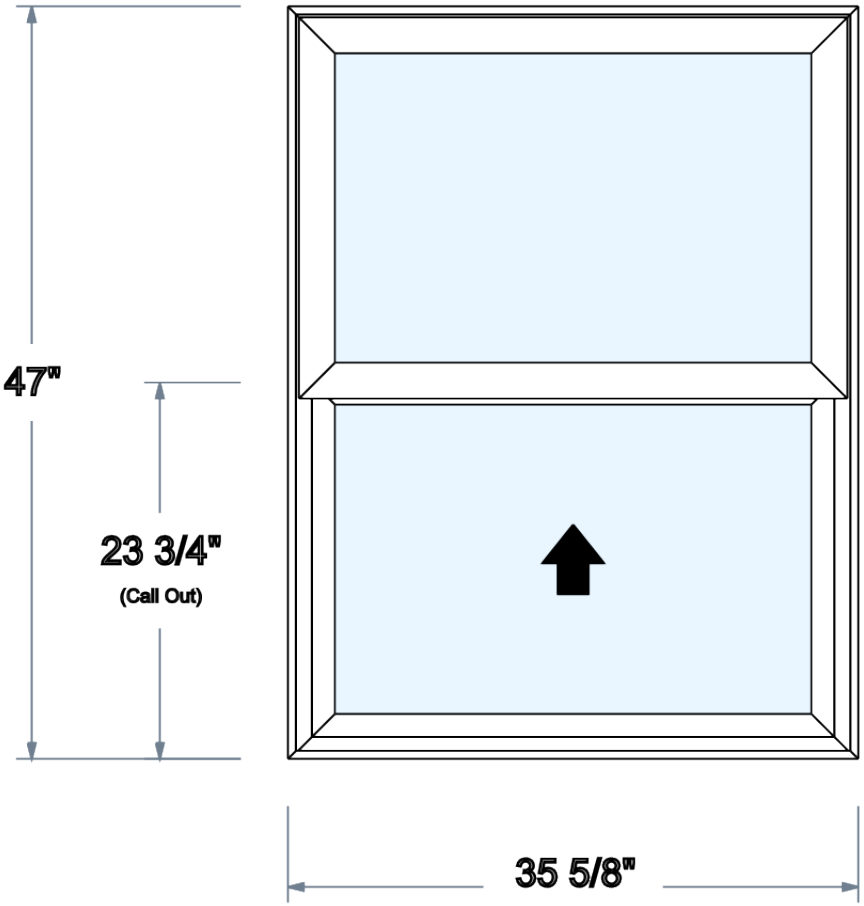

Viewed from Exterior (Net Frame) - Image scaled 1" = 1' 0"

Line No:	37
Location/Label:	297 B - Master Bedroom Side
Quantity:	2
Product Line:	V400 Tuscany
Model:	Single Hung
Size:	Net Frame: 35 5/8" x 47"
Dimensions:	Sash Height: One Half
Finishes:	Ext White / Int White
Fin Type:	1 3/8" Setback
Glass:	3/32" SunCoat (Low-E) over 3/32" 4th Surface HP Coating, Center Lite: 3/32" SunCoat (Low-E) with Gray Foam Spacer
Hardware:	SmartTouch Lock
Screen:	Standard with Fiberglass Mesh
U-Factor / SHGC / VT:	.18 / .21 / .41
Clear Opening:	W 32 5/8" x H 19 5/8" Sq. Ft. 4.45
Calculations:	Unit Area (Sq. Ft.): 12, Unit Perimeter (nominal in lineal ft): 14'
Ratings:	STC: No Rating, OITC: No Rating, PG: LC-PG40

Customer Approval: _____

Sales Rep: Name: Eric Kennedy Email: erick@dunnlumber.com Phone:	**Legend:** O = Obscure T = Tempered E = Meets Egress per IBC (International Building Code) for above grade application. Validate against local codes.	Quote Number: SQPCZK009910_1 Last Modified Date: 12/2/2025 3:16 PM **Page: 37 of 44**

DUNN LUMBER Building success together.	**DUNN LUMBER COMPANY - Bellevue 08** **2350 140th Ave NE** **Bellevue, WA 98005** **4258234455**	Project Name: Contact Name: Contact Phone: Contact E-Mail: Builder / GC: Project Address:	MILGARD® WINDOWS and DOORS

Line No:	38
Location/Label:	297 B - Master Bedroom Front
Quantity:	2
Product Line:	V400 Tuscany
Model:	Slider Picture
Size:	Net Frame: 59 1/2" x 41"
Finishes:	Ext White / Int White
Fin Type:	1 3/8" Setback
Glass:	1/8" SunCoat (Low-E) over 1/8" 4th Surface HP Coating, Center Lite: 1/8" SunCoat (Low-E) with Gray Foam Spacer
U-Factor / SHGC / VT:	.17 / .22 / .42
Calculations:	Unit Area (Sq. Ft.): 17, Unit Perimeter (nominal in lineal ft): 18'
Ratings:	STC: No Rating, OITC: No Rating, PG: LC-PG50

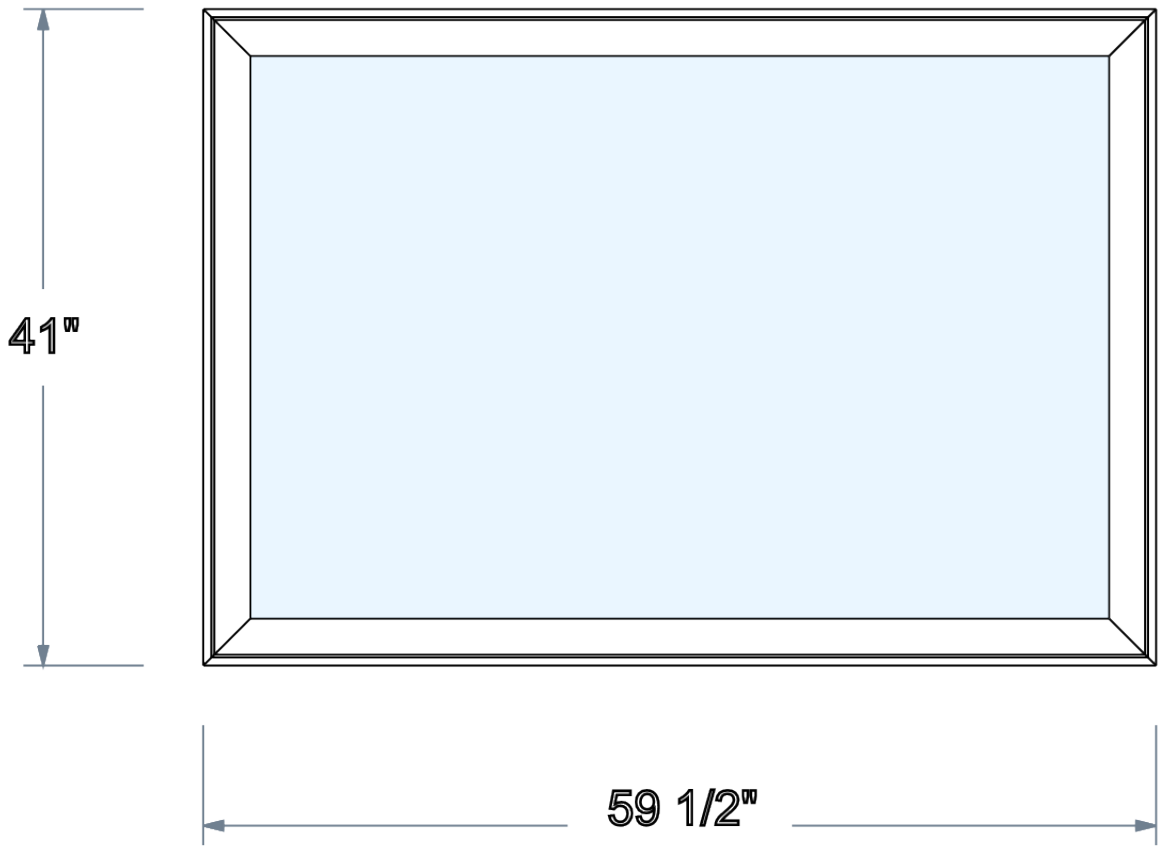

Viewed from Exterior (Net Frame) - Image scaled 1" = 1' 0"

Customer Approval: _____

Sales Rep: Name: Eric Kennedy Email: erick@dunnlumber.com Phone:	**Legend:** O = Obscure T = Tempered E = Meets Egress per IBC (International Building Code) for above grade application. Validate against local codes.	Quote Number: SQPCZK009910_1 Last Modified Date: 12/2/2025 3:16 PM	

DUNN LUMBER Building success together.	**DUNN LUMBER COMPANY - Bellevue 08** **2350 140th Ave NE** **Bellevue, WA 98005** **4258234455**	Project Name: Contact Name: Contact Phone: Contact E-Mail: Builder / GC: Project Address:	MILGARD® WINDOWS and DOORS

Line No:	39
Location/Label:	297 C & D - Front Storage Room
Quantity:	2
Product Line:	V400 Tuscany
Model:	Slider Picture
Size:	Net Frame: 33 7/8" x 48 7/8"
Finishes:	Ext White / Int White
Fin Type:	1 3/8" Setback
Glass:	3/32" SunCoat (Low-E) over 3/32" 4th Surface HP Coating, Center Lite: 3/32" SunCoat (Low-E) with Gray Foam Spacer
U-Factor / SHGC / VT:	.16 / .22 / .43
Calculations:	Unit Area (Sq. Ft.): 12, Unit Perimeter (nominal in lineal ft): 14'
Ratings:	STC: No Rating, OITC: No Rating, PG: LC-PG50

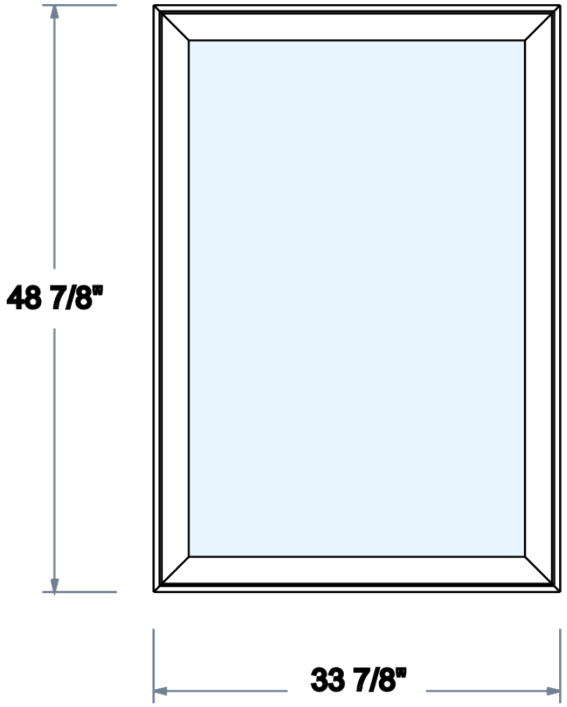

Viewed from Exterior (Net Frame) - Image scaled 3/4" = 1' 0"

Customer Approval: _____

Sales Rep: Name: Eric Kennedy Email: erick@dunnlumber.com Phone:	**Legend:** O = Obscure T = Tempered E = Meets Egress per IBC (International Building Code) for above grade application. Validate against local codes.	Quote Number: SQPCZK009910_1 Last Modified Date: 12/2/2025 3:16 PM	

DUNN LUMBER Building success together.	**DUNN LUMBER COMPANY - Bellevue 08** **2350 140th Ave NE** **Bellevue, WA 98005** **4258234455**	Project Name: Contact Name: Contact Phone: Contact E-Mail: Builder / GC: Project Address:	MILGARD® WINDOWS and DOORS

Line No:	40
Location/Label:	297 C & D - Living Room Side
Quantity:	2
Product Line:	V400 Tuscany
Model:	Half Vent
Size:	Net Frame: 83 1/4" x 56 3/4"
Finishes:	Ext White / Int White
Fin Type:	1 3/8" Setback
Glass:	1/8" SunCoat (Low-E) over 1/8" 4th Surface HP Coating, Center Lite: 1/8" SunCoat (Low-E) with Gray Foam Spacer
Hardware:	SmartTouch Lock
Screen:	Standard with Fiberglass Mesh
U-Factor / SHGC / VT:	.19 / .21 / .40
Clear Opening:	W 38 15/16" x H 53 3/4" Sq. Ft. 14.53
Calculations:	Unit Area (Sq. Ft.): 33, Unit Perimeter (nominal in lineal ft): 25'
Ratings:	STC: No Rating, OITC: No Rating, PG: R-PG20

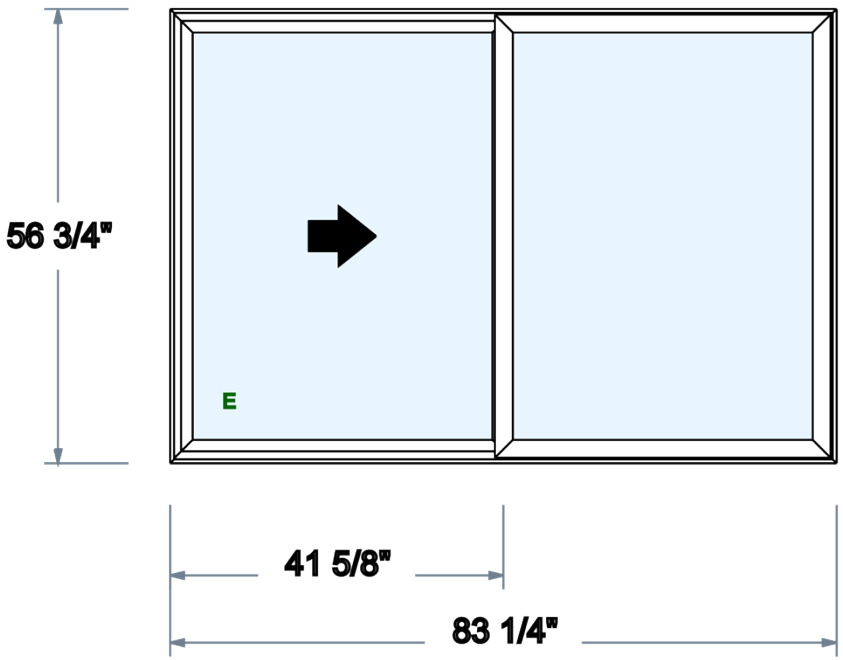

Viewed from Exterior (Net Frame) - Image scaled 1/2" = 1' 0"

Customer Approval: _____

Sales Rep: Name: Eric Kennedy Email: erick@dunnlumber.com Phone:	**Legend:** O = Obscure T = Tempered E = Meets Egress per IBC (International Building Code) for above grade application. Validate against local codes.	Quote Number: SQPCZK009910_1 Last Modified Date: 12/2/2025 3:16 PM	

DUNN LUMBER Building success together.	**DUNN LUMBER COMPANY - Bellevue 08** **2350 140th Ave NE** **Bellevue, WA 98005** **4258234455**	Project Name: Contact Name: Contact Phone: Contact E-Mail: Builder / GC: Project Address:	MILGARD® WINDOWS and DOORS

Line No:	41
Location/Label:	297 C & D - Living Room Front
Quantity:	2
Product Line:	V400 Tuscany
Model:	Half Vent
Size:	Net Frame: 83 1/4" x 56 3/4"
Finishes:	Ext White / Int White
Fin Type:	1 3/8" Setback
Glass:	1/8" SunCoat (Low-E) over 1/8" 4th Surface HP Coating, Center Lite: 1/8" SunCoat (Low-E) with Gray Foam Spacer
Hardware:	SmartTouch Lock
Screen:	Standard with Fiberglass Mesh
U-Factor / SHGC / VT:	.19 / .21 / .40
Clear Opening:	W 38 15/16" x H 53 3/4" Sq. Ft. 14.53
Calculations:	Unit Area (Sq. Ft.): 33, Unit Perimeter (nominal in lineal ft): 25'
Ratings:	STC: No Rating, OITC: No Rating, PG: R-PG20

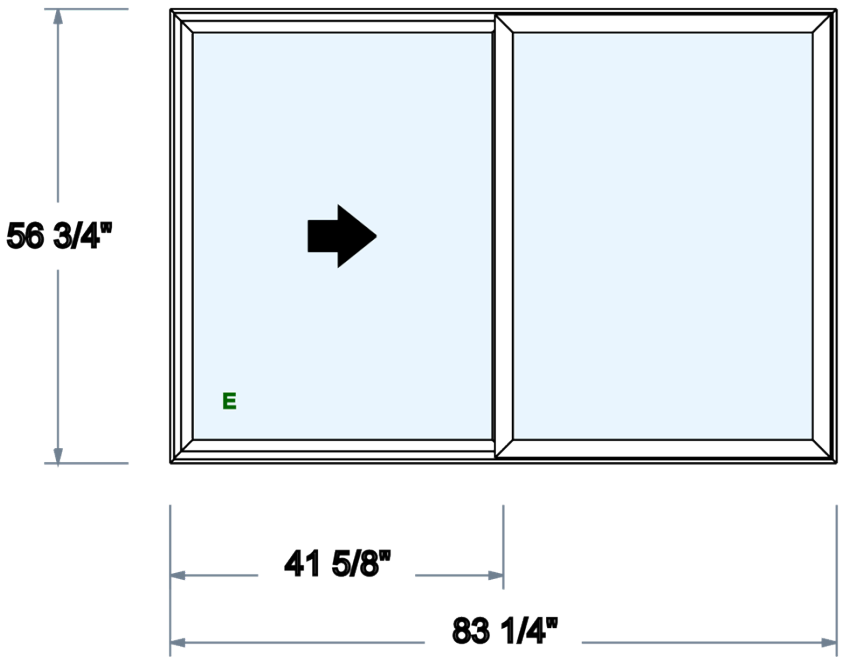

Viewed from Exterior (Net Frame) - Image scaled 1/2" = 1' 0"

Customer Approval: _____

Sales Rep: Name: Eric Kennedy Email: erick@dunnlumber.com Phone:	**Legend:** O = Obscure T = Tempered E = Meets Egress per IBC (International Building Code) for above grade application. Validate against local codes.	Quote Number: SQPCZK009910_1 Last Modified Date: 12/2/2025 3:16 PM **Page: 41 of 44**

DUNN LUMBER Building success together.	**DUNN LUMBER COMPANY - Bellevue 08** **2350 140th Ave NE** **Bellevue, WA 98005** **4258234455**	Project Name: Contact Name: Contact Phone: Contact E-Mail: Builder / GC: Project Address:	MILGARD® WINDOWS and DOORS

Line No:	42
Location/Label:	297 C & D - Dining Room
Quantity:	2
Product Line:	V400 Tuscany
Model:	Half Vent
Size:	Net Frame: 83 1/4" x 56 3/4"
Finishes:	Ext White / Int White
Fin Type:	1 3/8" Setback
Glass:	1/8" SunCoat (Low-E) over 1/8" 4th Surface HP Coating, Center Lite: 1/8" SunCoat (Low-E) with Gray Foam Spacer
Hardware:	SmartTouch Lock
Screen:	Standard with Fiberglass Mesh
U-Factor / SHGC / VT:	.19 / .21 / .40
Clear Opening:	W 38 15/16" x H 53 3/4" Sq. Ft. 14.53
Calculations:	Unit Area (Sq. Ft.): 33, Unit Perimeter (nominal in lineal ft): 25'
Ratings:	STC: No Rating, OITC: No Rating, PG: R-PG20

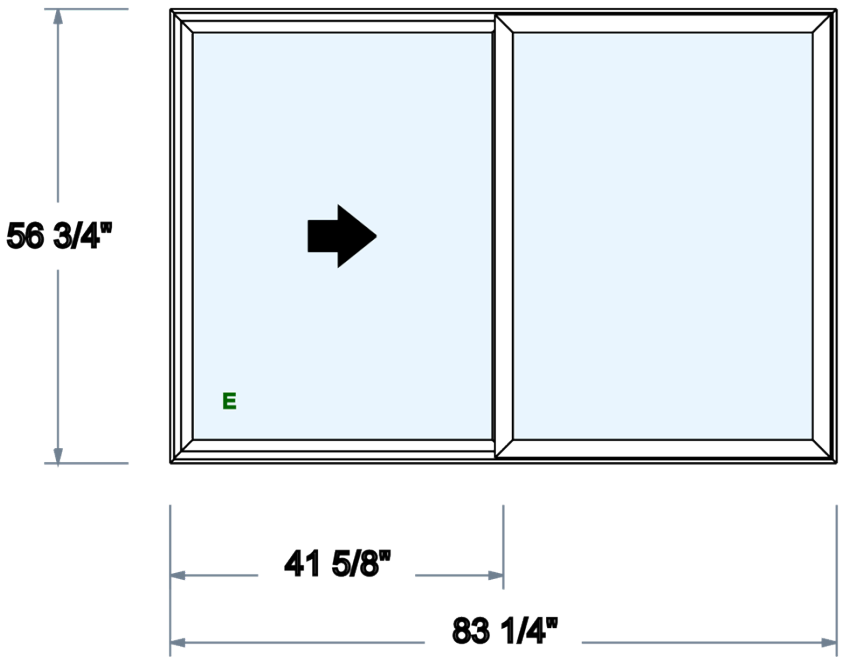

Viewed from Exterior (Net Frame) - Image scaled 1/2" = 1' 0"

Customer Approval: _____

Sales Rep: Name: Eric Kennedy Email: erick@dunnlumber.com Phone:	**Legend:** O = Obscure T = Tempered E = Meets Egress per IBC (International Building Code) for above grade application. Validate against local codes.	Quote Number: SQPCZK009910_1 Last Modified Date: 12/2/2025 3:16 PM	

DUNN LUMBER Building success together.	**DUNN LUMBER COMPANY - Bellevue 08** **2350 140th Ave NE** **Bellevue, WA 98005** **4258234455**	Project Name: Contact Name: Contact Phone: Contact E-Mail: Builder / GC: Project Address:	MILGARD® WINDOWS and DOORS

Line No:	43
Location/Label:	297 C & D - Bedroom 1
Quantity:	2
Product Line:	V400 Tuscany
Model:	Single Hung
Size:	Net Frame: 35 1/2" x 56 3/4"
Dimensions:	Sash Height: One Half
Finishes:	Ext White / Int White
Fin Type:	1 3/8" Setback
Glass:	3/32" SunCoat (Low-E) over 3/32" 4th Surface HP Coating, Center Lite: 3/32" SunCoat (Low-E) with Gray Foam Spacer
Hardware:	SmartTouch Lock
Screen:	Standard with Fiberglass Mesh
U-Factor / SHGC / VT:	.18 / .21 / .41
Clear Opening:	W 32 1/2" x H 24 1/2" Sq. Ft. 5.53
Calculations:	Unit Area (Sq. Ft.): 14, Unit Perimeter (nominal in lineal ft): 16'
Ratings:	STC: No Rating, OITC: No Rating, PG: LC-PG40

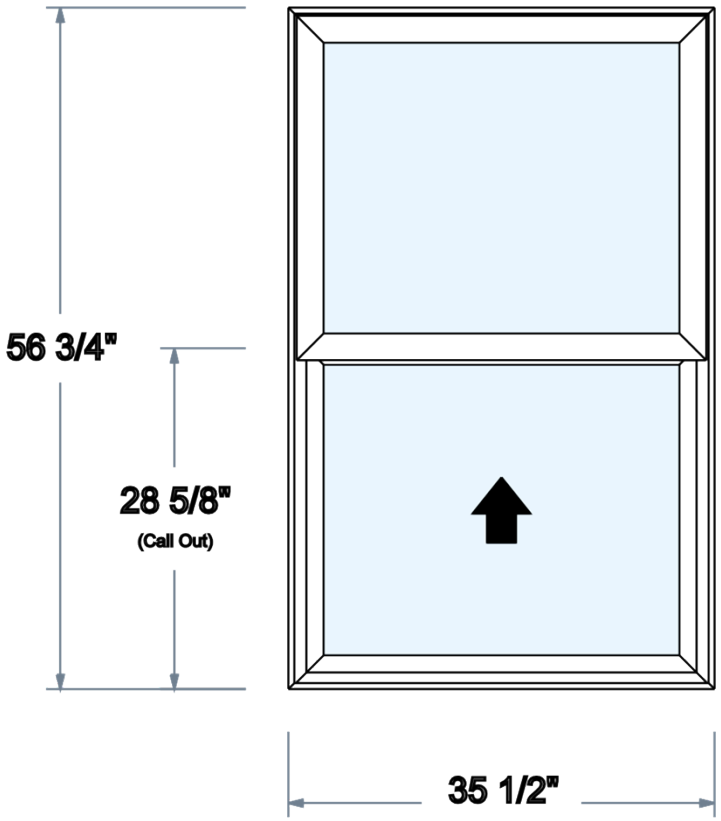

Viewed from Exterior (Net Frame) - Image scaled 3/4" = 1' 0"

Customer Approval: _____

Sales Rep: Name: Eric Kennedy Email: erick@dunnlumber.com Phone:	**Legend:** O = Obscure T = Tempered E = Meets Egress per IBC (International Building Code) for above grade application. Validate against local codes.	Quote Number: SQPCZK009910_1 Last Modified Date: 12/2/2025 3:16 PM **Page: 43 of 44**

DUNN LUMBER Building success together.	**DUNN LUMBER COMPANY - Bellevue 08** **2350 140th Ave NE** **Bellevue, WA 98005** **4258234455**	Project Name: Contact Name: Contact Phone: Contact E-Mail: Builder / GC: Project Address:	MILGARD® WINDOWS and DOORS

Line No:	44
Location/Label:	297 C & D - Bedroom 2
Quantity:	2
Product Line:	V400 Tuscany
Model:	Single Hung
Size:	Net Frame: 35 1/2" x 56 3/4"
Dimensions:	Sash Height: One Half
Finishes:	Ext White / Int White
Fin Type:	1 3/8" Setback
Glass:	3/32" SunCoat (Low-E) over 3/32" 4th Surface HP Coating, Center Lite: 3/32" SunCoat (Low-E) with Gray Foam Spacer
Hardware:	SmartTouch Lock
Screen:	Standard with Fiberglass Mesh
U-Factor / SHGC / VT:	.18 / .21 / .41
Clear Opening:	W 32 1/2" x H 24 1/2" Sq. Ft. 5.53
Calculations:	Unit Area (Sq. Ft.): 14, Unit Perimeter (nominal in lineal ft): 16'
Ratings:	STC: No Rating, OITC: No Rating, PG: LC-PG40

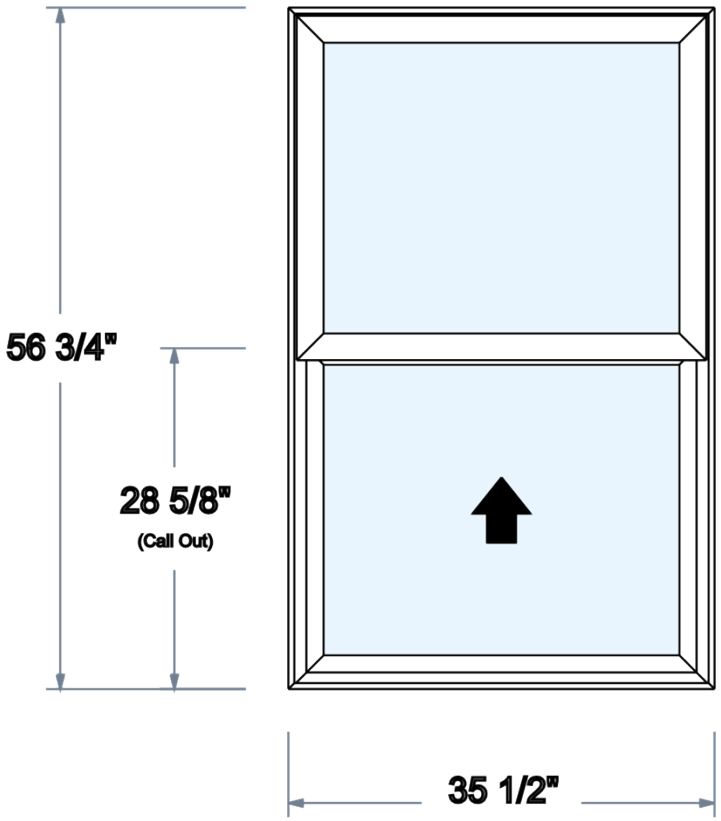

Viewed from Exterior (Net Frame) - Image scaled 3/4" = 1' 0"

Customer Approval: _____

Sales Rep: Name: Eric Kennedy Email: erick@dunnlumber.com Phone:	**Legend:** O = Obscure T = Tempered E = Meets Egress per IBC (International Building Code) for above grade application. Validate against local codes.	Quote Number: SQPCZK009910_1 Last Modified Date: 12/2/2025 3:16 PM **Page: 44 of 44**