ATTACHMENT 4 - APPENDIX D
ROAD RECONSTRUCTION PLANS & SPECIFICATIONS

Fleetwood Stewardship IRSC

Tongue Ranger District Sheridan County,

Wyoming

USDA Forest Service

Caring for the Land and Serving People

USDA

* INDEX *

TITLE	PAGE (S)
CONTRACT DOCUMENTS	
COVER SHEET	1
INDEX	2
WORKBOOK	
SCHEDULE OF ITEMS	1-5
PROJECT STATIONING	6
DRAWINGS	
COVER SHEET	1
PROJECT MAP	2
SUMMARY OF QUANTITIES, PROJECT STATIONING, PROJECT NOTES	3
TYPICAL DETAILS	4
GATE SIGN INSTALLATION	5
DRIVABLE DIP	6
WORKLIST ROADS 299 & 308	7
WORKLIST ROAD 334313	8
WORKLIST ROAD 334313 CONTINUED	9
WORKLIST ROAD 334313 CONTINUED	10
WORKLIST ROAD 334314	11
SPECIFICATIONS	
FOREST SERVICE SUPPLEMENTAL SPECIFICATIONS	1-37

FLEETWOOD STEWARDSHIP		ROAD NO.	299	308	334313	334314			
		MILES	0.79	0.30	5.63	0.57			
		RECON/CON	RECON	RECON	RECON	RECON	SCHEDULE OF ITEMS		
ITEM NO	DESCRIPTION	UNITS	SUMMARY OF QUANTITIES				TOTALS	UNIT COSTS	TOTAL COSTS
15101	MOBILIZATION	LUMP SUM	-	-	-	-	1		
20103	CLEARING AND GRUBBING, DISPOSAL METHOD (G) OR (G) AND (K) IN TIMBER UNITS	MILE	-	0.16	2.25	0.57	2.98		
20401	ROADWAY EXCAVATION, TYPE ROAD WIDENING 12', COMPACTION METHOD 3, TOLERANCE CLASS B	CUBIC YARD	-	-	30	-	30		
20411	UNCLASSIFIED BORROW, 12' ROAD WIDTH, 6" DEPTH, COMPACTION METHOD 3	CUBIC YARD	13	281	-	-	294		
20425	EXCAVATION AND EMBANKMENT, TYPE DRIVABLE DIP	EACH	2	-	4	-	6		
30315	ROADWAY RECONDITIONING, COMPACTION METHOD 3	MILE	0.79	0.30	5.63	0.57	7.29		
63302(A)	BARRICADE MARKER SIGN (FBM-L), GOVERNMENT FURNISHED	EACH	-	-	2	-	2		
63302(B)	BARRICADE MARKER SIGN (FBM-R), GOVERNMENT FURNISHED	EACH	-	-	2	-	2		
63302(C)	MOTORIZED RESTRICTION SIGN (TM-3), GOVERNMENT FURNISHED	EACH	-	-	1	-	1		
63307	OBJECT MARKER SIGN (OMV-2V), GOVERNMENT FURNISHED	EACH	-	-	6	-	6		
								TOTAL COSTS (w/o Mob):	$ -
								TOTAL COSTS:	$ -

SCHEDULE OF ITEMS					
(Timber Sale)					
Timber Sale:	FLEETWOOD STEWARDSHIP			Road No.	_299_
Road Name:	WESTON RESERVOIR			Length (Miles)	0.79
Item Number	**Description**	**Unit**	**Quantity**	**Unit Price**	**Total**
15101	MOBILIZATION	LUMP SUM	1		
20411	UNCLASSIFIED BORROW, 12' ROAD WIDTH, 6" DEPTH, COMPACTION METHOD 3	CUBIC YARD	13		
20425	EXCAVATION AND EMBANKMENT, TYPE DRIVABLE DIP	EACH	2		
30315	ROADWAY RECONDITIONING, COMPACTION METHOD 3	MILE	0.79		
				ROAD TOTAL:	
				TOTAL ALL ROADS:	

SCHEDULE OF ITEMS					
(Timber Sale)					
Timber Sale:	FLEETWOOD STEWARDSHIP			Road No.	_308_
Road Name:	BIG GOOSE PIT			Length (Miles)	0.30
Item Number	**Description**	**Unit**	**Quantity**	**Unit Price**	**Total**
15101	MOBILIZATION	LUMP SUM	1		
20103	CLEARING AND GRUBBING, DISPOSAL METHOD (G) OR (G) AND (K) IN TIMBER UNITS	MILE	0.16		
20411	UNCLASSIFIED BORROW, 12' ROAD WIDTH, 6" DEPTH, COMPACTION METHOD 3	CUBIC YARD	281		
30315	ROADWAY RECONDITIONING, COMPACTION METHOD 3	MILE	0.30		
				ROAD TOTAL:	
				TOTAL ALL ROADS:	

SCHEDULE OF ITEMS					
(Timber Sale)					
Timber Sale:	FLEETWOOD STEWARDSHIP			Road No.	_334313_
Road Name:	DOME ROCK ROAD			Length (Miles)	5.63
Item Number	**Description**	**Unit**	**Quantity**	**Unit Price**	**Total**
15101	MOBILIZATION	LUMP SUM	1		
20103	CLEARING AND GRUBBING, DISPOSAL METHOD (G) OR (G) AND (K) IN TIMBER UNITS	MILE	2.25		
20401	ROADWAY EXCAVATION, TYPE ROAD WIDENING 12', COMPACTION METHOD 3, TOLERAN	CUBIC YARD	30		
20425	EXCAVATION AND EMBANKMENT, TYPE DRIVABLE DIP	EACH	4		
30315	ROADWAY RECONDITIONING, COMPACTION METHOD 3	MILE	5.63		
63302(A)	BARRICADE MARKER SIGN (FBM-L), GOVERNMENT FURNISHED	EACH	2		
63302(B)	BARRICADE MARKER SIGN (FBM-R), GOVERNMENT FURNISHED	EACH	2		
63302(C)	MOTORIZED RESTRICTION SIGN (TM-3), GOVERNMENT FURNISHED	EACH	1		
63307	OBJECT MARKER SIGN (OMV-2V), GOVERNMENT FURNISHED	EACH	6		
				ROAD TOTAL:	
				TOTAL ALL ROADS:	

SCHEDULE OF ITEMS					
(Timber Sale)					
Timber Sale:	FLEETWOOD STEWARDSHIP			Road No.	_334314_
Road Name:	DOME ROCK SPUR #1			Length (Miles)	0.57
Item Number	**Description**	**Unit**	**Quantity**	**Unit Price**	**Total**
15101	MOBILIZATION	LUMP SUM	1		
20103	CLEARING AND GRUBBING, DISPOSAL METHOD (G) OR (G) AND (K) IN TIMBER UNITS	MILE	0.57		
30315	ROADWAY RECONDITIONING, COMPACTION METHOD 3	MILE	0.57		
				ROAD TOTAL:	
				TOTAL ALL ROADS:	

PROJECT MILEAGE			
FLEETWOOD STEWARDSHIP			
Road No.	Begin Milepost	End Milepost	Miles
299	0.00	0.79	0.79
308	0.00	0.30	0.30
334313	0.00	5.63	5.63
334314	0.00	0.57	0.57

United States Department of Agriculture
Forest Service

WYOMING
SHERIDAN COUNTY
(R02) ROCKY MOUNTAIN REGION
BIGHORN NATIONAL FOREST
TONGUE RANGER DISTRICT

FLEETWOOD STEWARDSHIP

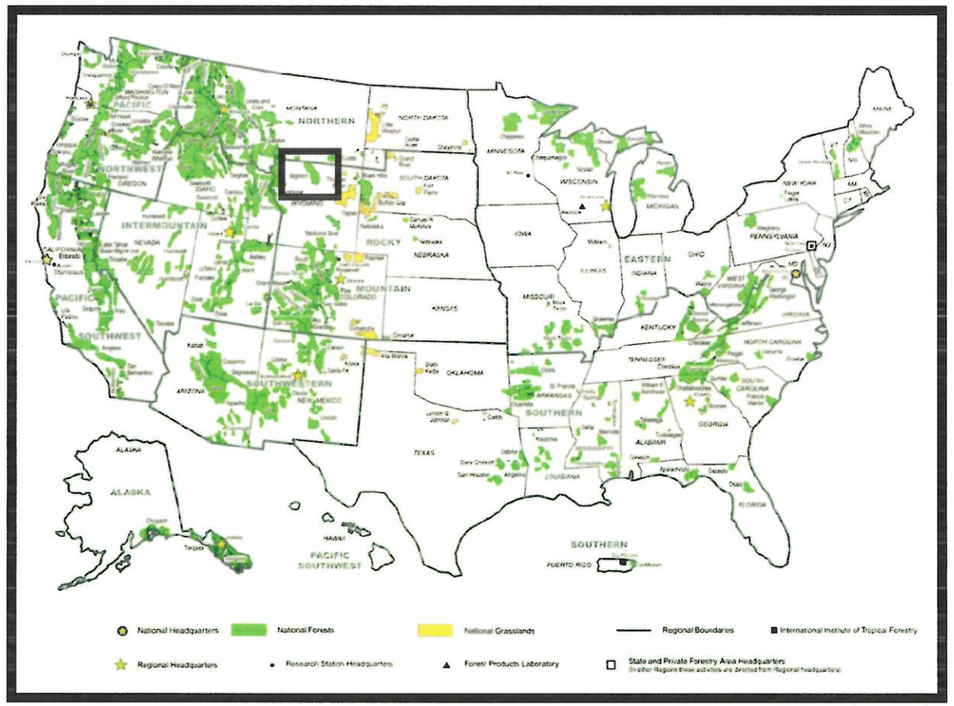

FOREST LOCATION MAP

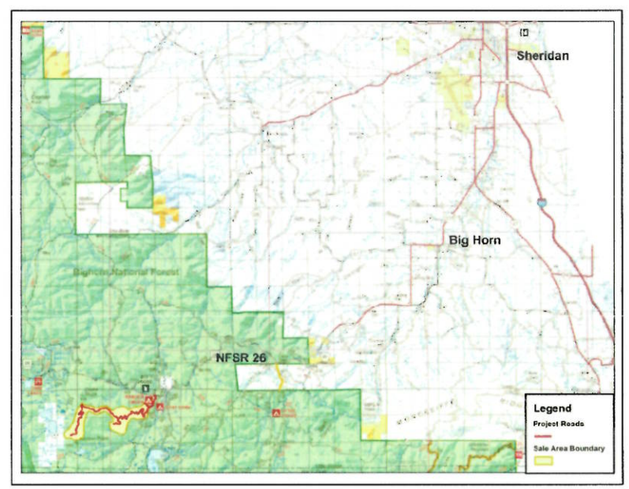

PROJECT LOCATION MAP

TRAVEL DIRECTIONS:

From Sheridan, Wyoming, travel south-southeast approximately 16 miles on WY-332 Bighorn Avenue. WY-332 becomes Red Grade Road. Travel another 11 miles on Red Grade Road to the junction with the 299 Road. The project starts at the junction of Red Grade Road (NFSR 26) and Weston Reservoir Road (NFSR 299). The longitude and latitude is approximately 44°12' 59.55"N 107°12' 55.65"W.

INDEX OF SHEETS

SHEET	SHEET TITLE	DATE
1	COVERSHEET	4/8/2025
2	PROJECT MAP	4/8/2025
3	SUMMARY OF QUANTITIES, PROJECT STATIONING, PROJECT NOTES	4/8/2025
4	TYPICAL DETAILS	12/11/2024
5	GATE SIGN INSTALLATION	12/11/2024
6	DRIVABLE DIP	12/11/2024
7	WORKLIST ROADS 299 & 308	4/8/2025
8	WORKLIST ROAD 334313	4/8/2025
9	WORKLIST ROAD 334313 CONTINUED	4/8/2025
10	WORKLIST ROAD 334313 CONTINUED	4/8/2025
11	WORKLIST ROAD 334314	4/8/2025

REVIEWED AND RECOMMENDED BY:

CHRISTOPHER WOLFFING — Digitally signed by CHRISTOPHER WOLFFING Date: 2025.04.09 15:50:00 -06'00'

FOREST ENGINEER — DATE
PLANS, SPECIFICATIONS, AND COST ESTIMATES MEET TECHNICAL REQUIREMENTS

APPROVED:

CHRISTOPHER WOLFFING — Digitally signed by CHRISTOPHER WOLFFING Date: 2025.04.09 15:50:58 -06'00'

FOREST STAFF OFFICER FOR ENGINEERING ACTIVITIES — DATE
COMPLIES WITH TECHNICAL ROADS REQUIREMENTS AND ENGINEERING STANDARDS

AMY ORMSETH — Digitally signed by AMY ORMSETH Date: 2025.10.31 08:12:51 -06'00'

DISTRICT RANGER — DATE
CONSISTENT WITH APPLICABLE REGULATORY AND LAND MANAGEMENT PLAN REQUIREMENTS

4/8/25 13:07 CWOLFFING C:\USERS\CWOLFFING\BOX\770\TRANSPORTATIONSYSTEM\7720\TRANSPORTATION\DEVELOPMENT\2025-FLEETWOOD STEWARDSHIP DRAWINGS\FLEETWOOD STEWARDSHIP - CAD DRAWINGS\FLEETWOOD STEWARDSHIP\PRECONSTRUCTION\FLEETWOOD STEWARDSHIP.DWG

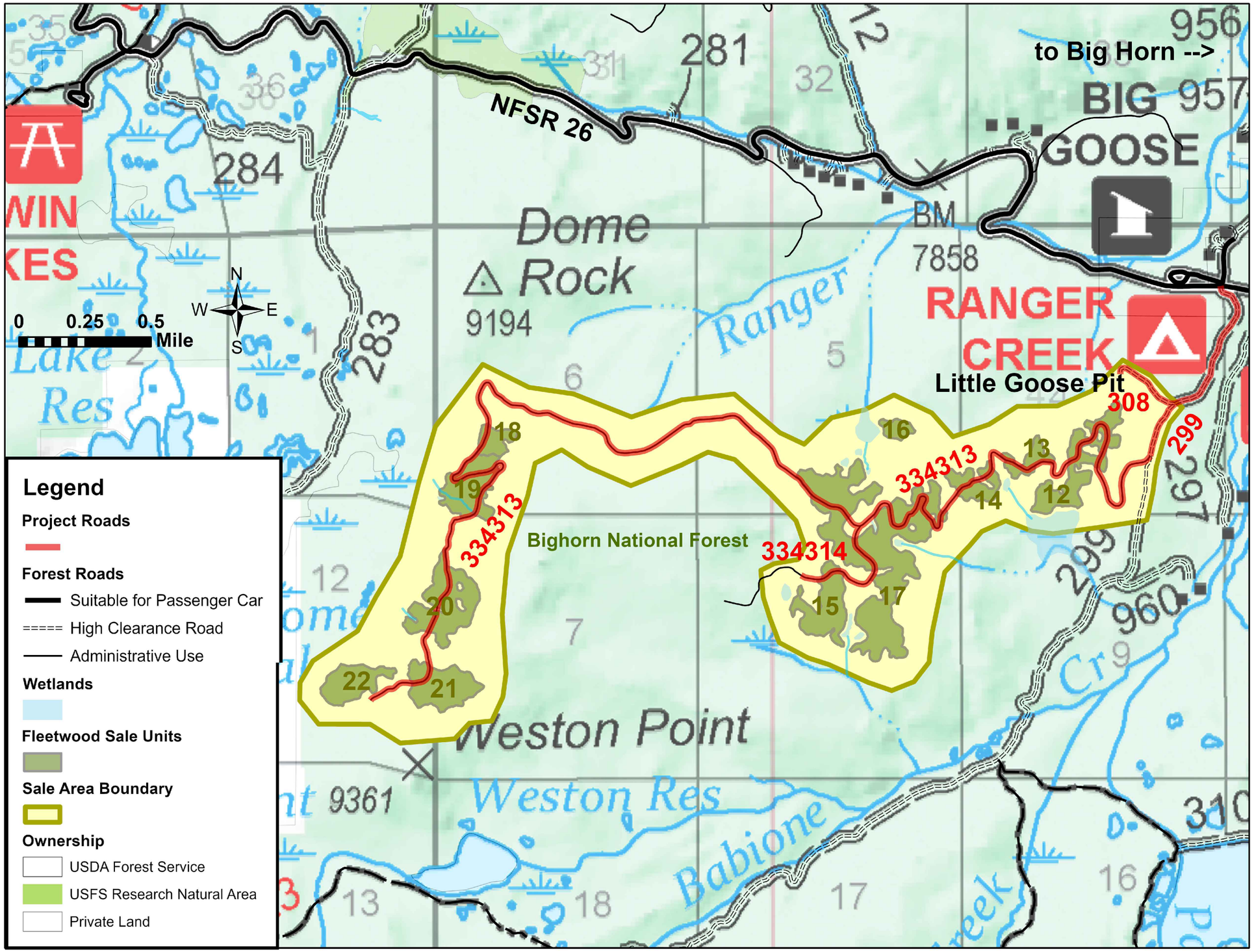

USDA

United States Department of Agriculture
Forest Service

(R02)
ROCKY MOUNTAIN REGION

STAMPS, LOGOS, AND SEALS

NO.	REVISION / ISSUE	DATE
4		
3		
2		
1		

PROJECT NAME

FLEETWOOD STEWARDSHIP

BIGHORN NATIONAL FOREST

TONGUE RANGER DISTRICT

DRAWING TITLE

PROJECT MAP

DATE 4/8/2025	ARCHIVE NO.
DESIGNER DEC	DRAWING SHEET NO. 2
DRAWN DEC/CDW	
CHECKED CDW	
PROJECT NO.	SHEET 002 OF 011

4/8/25 13:07 CWOLFING C:\USERS\CWOLFING\BOX\7760TRANSPORTATIONSYSTEM\7720TRANSPORTATIONDEVELOPMENT\2025-FLEETWOOD STEWARDSHIP\PRECONSTRUCTION\FLEETWOOD STEWARDSHIP - CAD DRAWINGS\FLEETWOOD STEWARDSHIP DRAWINGS.DWG;

FLEETWOOD STEWARDSHIP		ROAD NO.	299	308	334313	334314	
		MILES	0.79	0.30	5.63	0.57	
		RECON/CON	RECON	RECON	RECON	RECON	
ITEM NO	DESCRIPTION	UNITS	SUMMARY OF QUANTITIES				TOTALS
15101	MOBILIZATION	LUMP SUM	ALL	ALL	ALL	ALL	1
20103	CLEARING AND GRUBBING, DISPOSAL METHOD (G) OR (G) AND (K) IN TIMBER UNITS	MILE		0.16	2.25	0.57	2.98
20401	ROADWAY EXCAVATION, TYPE ROAD WIDENING 12', COMPACTION METHOD 3, TOLERANCE CLASS B	CUBIC YARD			30		30
20411	UNCLASSIFIED BORROW, 12' ROAD WIDTH, 6" DEPTH, COMPACTION METHOD 3	CUBIC YARD	13	281			294
20425	EXCAVATION AND EMBANKMENT, TYPE DRIVABLE DIP	EACH	2		4		6
30315	ROADWAY RECONDITIONING, COMPACTION METHOD 3	MILE	0.79	0.30	5.63	0.57	7.29
63302(A)	BARRICADE MARKER SIGN (FBM-L), GOVERNMENT FURNISHED	EACH			2		2
63302(B)	BARRICADE MARKER SIGN (FBM-R), GOVERNMENT FURNISHED	EACH			2		2
63302(C)	MOTORIZED RESTRICTION SIGN (TM-3), GOVERNMENT FURNISHED	EACH			1		1
63307	OBJECT MARKER SIGN (OMV-2V), GOVERNMENT FURNISHED	EACH			6		6

PROJECT MILEAGE			
FLEETWOOD STEWARDSHIP			
Road No.	Begin Milepost	End Milepost	Miles
299	0.00	0.79	0.79
308	0.00	0.30	0.30
334313	0.00	5.63	5.63
334314	0.00	0.57	0.57

Project Notes

SPECIFICATIONS

The specifications for this contract are contained with the document “STANDARD SPECIFICATION FOR CONSTRUCTION OF ROADS AND BRIDGES ON FEDERAL HIGHWAY PROJECTS”. Document FP-14 U.S. Customary Units. A copy of these specifications can be obtained by visiting the website: https://flh.fhwa.dot.gov/resources/specs

CONSTRUCTION SIGNS AND TRAFFIC CONTROL

Construction signs will be required on this project and will be in accordance with Manual of Uniform Traffic Control Devices (MUTCD) and at locations agreed to by the CO. A Sign and Traffic Control Plan submittal will be required before construction.

DISPOSAL OF UNSUITABLE MATERIAL

Unsuitable material developed from reconditioning, culvert installation and other activities will be disposed of in the Little Goose Pit located at T53N, R86W, Sec.4, 44° 35' 42.55" N, 107° 13' 23.77" W. The exact location within the pit will be determined by the COR.

STAGING AND CAMPING AREA

Upon written request, camping at dispersed sites along the project roads will be permitted. Other camping and staging areas may be identified at the time of the contract by the CO should the need arise.

CLEARING AND ROAD RECONDITIONING APPROVAL

Clearing will be completed and accepted on identified sections of road before reconditioning is started. Recondition the road to conform to drawings and specifications within this contract.

WATER

The water source for this project will be from the East Fork Creek. If the Purchaser uses this sources, a permit with the State of Wyoming, State Engineer's Office, Water Division, will be required. Permit applications can be found at https://seo.wyo.gov/. Payment for water is indirect to items 20411 and 30315. No separate payment will be made

USDA FOREST SERVICE

United States Department of Agriculture
Forest Service

(R02)
ROCKY MOUNTAIN REGION

STAMPS, LOGOS, AND SEALS

NO.	REVISION / ISSUE	DATE
4		
3		
2		
1		

PROJECT NAME

FLEETWOOD STEWARDSHIP

BIGHORN NATIONAL FOREST

TONGUE RANGER DISTRICT

DRAWING TITLE

SUMMARY OF QUANTITIES, PROJECT STATIONING, PROJECT NOTES

DATE 4/8/2025	ARCHIVE NO.
DESIGNER DEC/PR	DRAWING SHEET NO. 3
DRAWN PR/CDW	
CHECKED CDW	
PROJECT NO.	SHEET 003 OF 011

4/8/25 13:07 CWOLFFING C:\USERS\CWOLFFING\BOX\7100\TRANSPORTATION\SYSTEM\7720\TRANSPORTATION\DEVELOPMENT\2025-FLEETWOOD STEWARDSHIP\PRECONSTRUCTION\FLEETWOOD STEWARDSHIP - CAD DRAWINGS\FLEETWOOD STEWARDSHIP DRAWINGS.DWG;

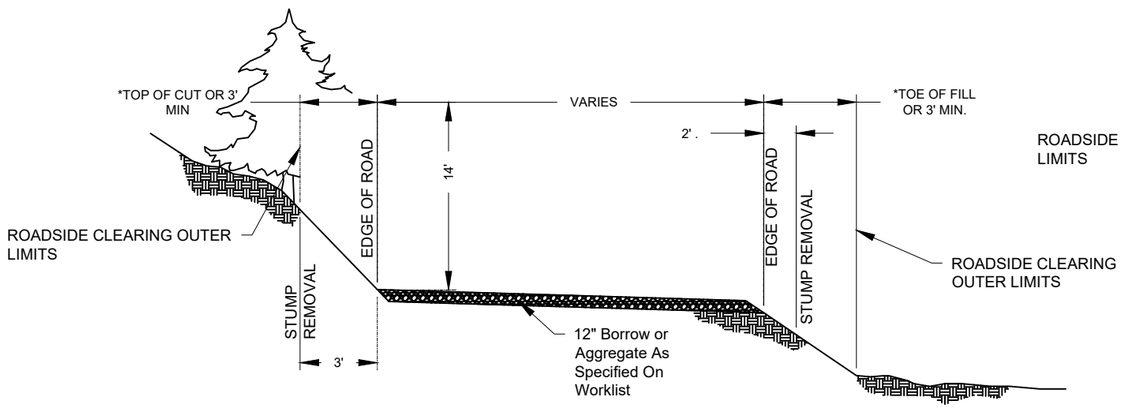

CLEARING AND GRUBBING LIMITS WITHOUT DITCH

NOT TO SCALE

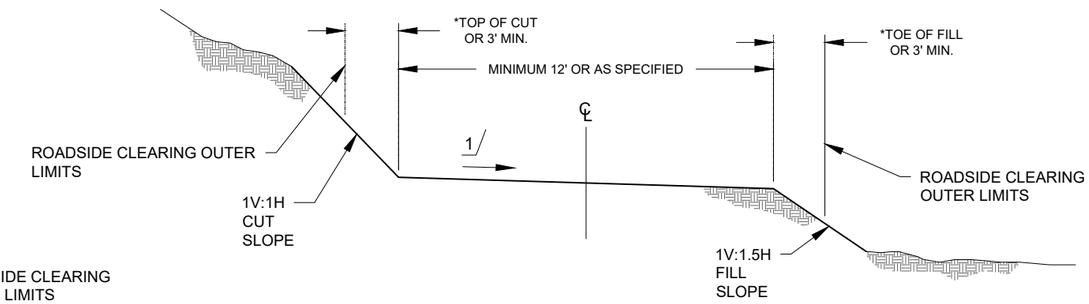

RECONDITIONING TYPICAL SECTION WITHOUT DITCH

NOT TO SCALE

1/ INSLOPE, OUTSLOPE, OR CROWN WHEN SPECIFIED IN THE WORKLIST. OTHERWISE MAINTAIN EXISTING.

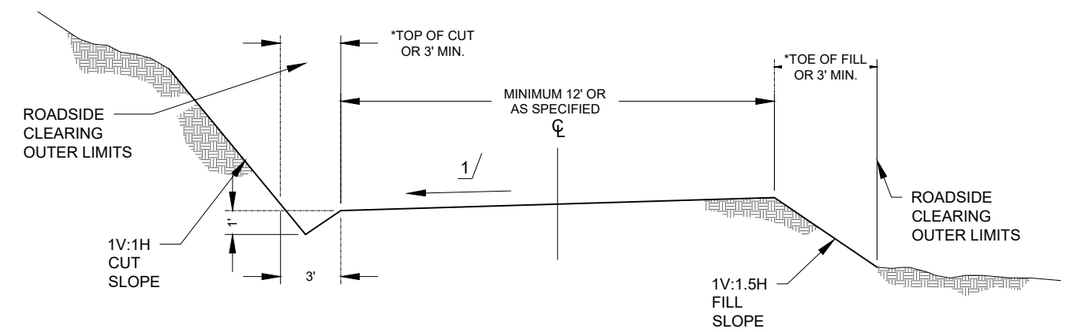

RECONDITIONING TYPICAL SECTION WITH DITCH

NOT TO SCALE

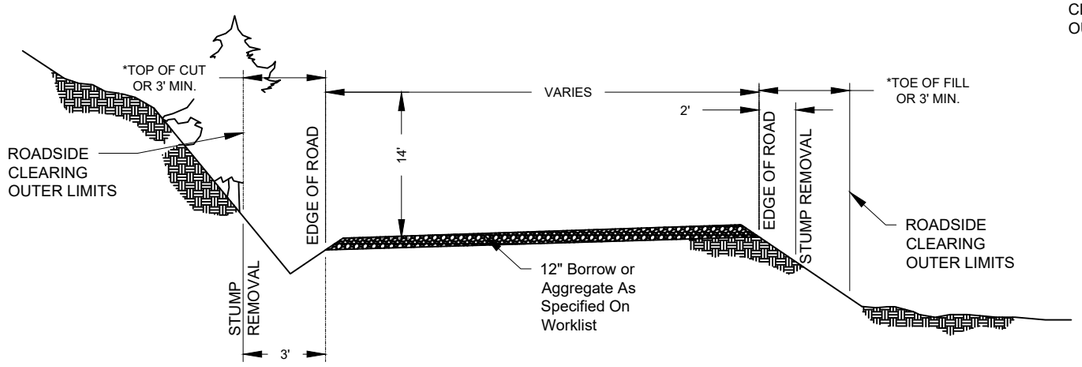

CLEARING AND GRUBBING LIMITS WITH DITCH

NOT TO SCALE

NOTES:

(1) Those stumps that can remain will be cut horizontally and left a maximum of 2" above the ground.

(2) Tops, limbs and stumps will be disposed of in accordance with Supplemental Specification 203.

(3) Limbs shall be removed from trees that are outside of the clearing limits but within 4' of the edge of road. These limbs will be flush cut with the tree and removed to a height of 14' from the roadbed elevation.

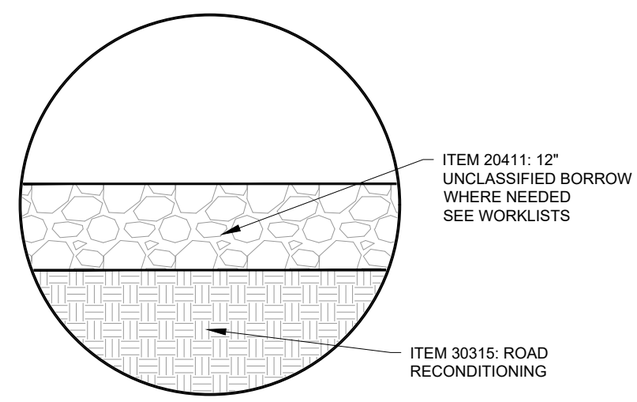

TYPICAL UNCLASSIFIED BORROW SECTION

NOT TO SCALE

USDA FOREST SERVICE

United States Department of Agriculture
Forest Service

(R02)
ROCKY MOUNTAIN REGION

STAMPS, LOGOS, AND SEALS

NO.	REVISION / ISSUE	DATE
4		
3		
2		
1		

PROJECT NAME

FLEETWOOD STEWARDSHIP

BIGHORN NATIONAL FOREST

TONGUE RANGER DISTRICT

DRAWING TITLE

TYPICAL DETAILS

DATE 12/11/2024	ARCHIVE NO.
DESIGNER PR	DRAWING SHEET NO. 4
DRAWN PR	
CHECKED CDW	
PROJECT NO.	SHEET 004 OF 011

4/8/25 13:07 CWOLFFING C:\USERS\CWOLFFING\BOX\7700TRANSPORTATIONSYSTEM\7720TRANSPORTATIONDEVELOPMENT\2025-FLEETWOOD STEWARDSHIP\PRECONSTRUCTION\FLEETWOOD STEWARDSHIP DRAWINGS.DWG;

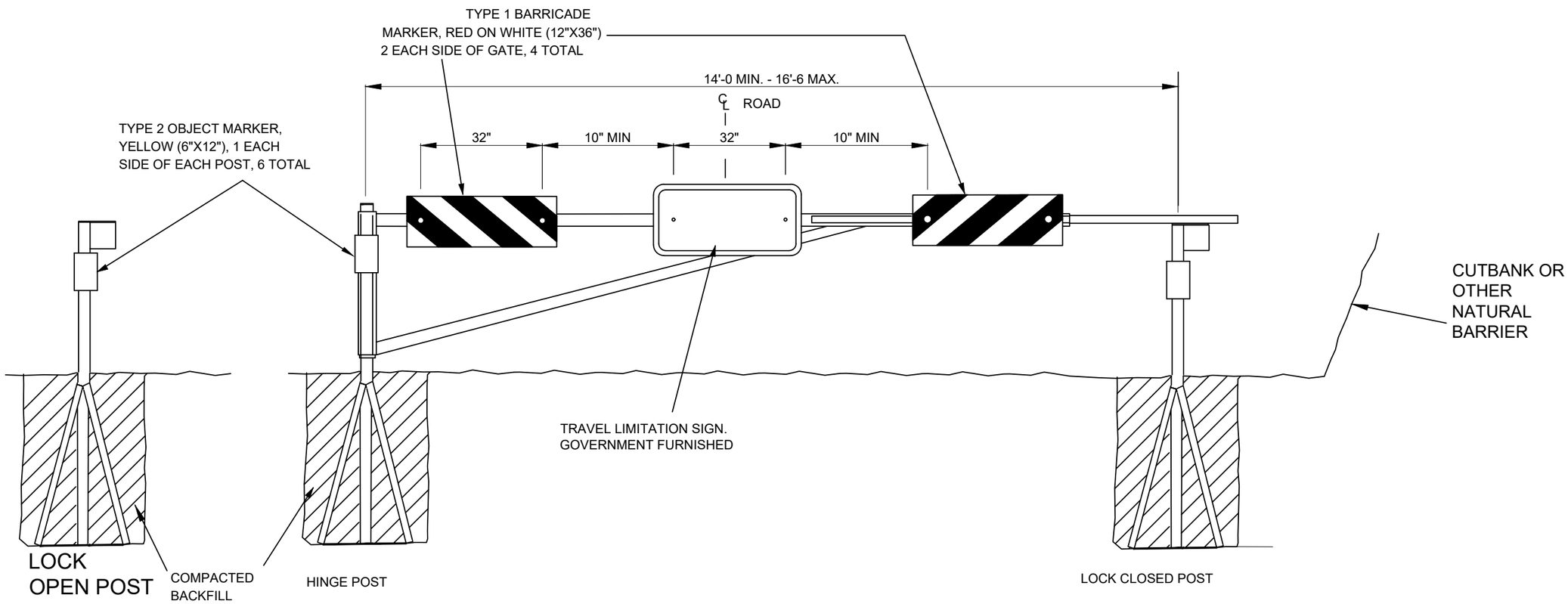

NOTES:

1. GOVERNMENT WILL SUPPLY SIGNS. SIGNS WILL MEET THE REQUIREMENTS OF SECTION 633. ALL WORK AND MATERIALS PERTAINS TO SECTION 633 - SIGNS.
2. DRILL ⅜" Ø HOLES AND US 5⁄16" BOLTS WITH ANTITHEFT LOCKING NUTS FOR SIGN INSTALLATIONS.

United States Department of Agriculture
Forest Service

(R02)
ROCKY MOUNTAIN REGION

STAMPS, LOGOS, AND SEALS

NO.	REVISION / ISSUE	DATE
4		
3		
2		
1		

PROJECT NAME

FLEETWOOD STEWARDSHIP

BIGHORN NATIONAL FOREST

TONGUE RANGER DISTRICT

DRAWING TITLE

GATE SIGN INSTALLATION

DATE 12/11/2024	ARCHIVE NO.
DESIGNER PR	DRAWING SHEET NO. 5
DRAWN PR	
CHECKED CDW	
PROJECT NO.	SHEET 005 OF 011

4/8/25 13:07 CWOLFFING C:\USERS\CWOLFFING\BOX\17700TRANSPORTATIONSYSTEM\7720TRANSPORTATIONDEVELOPMENT2025-FLEETWOOD STEWARDSHIP\PRECONSTRUCTION\FLEETWOOD STEWARDSHIP DRAWINGS.DWG;

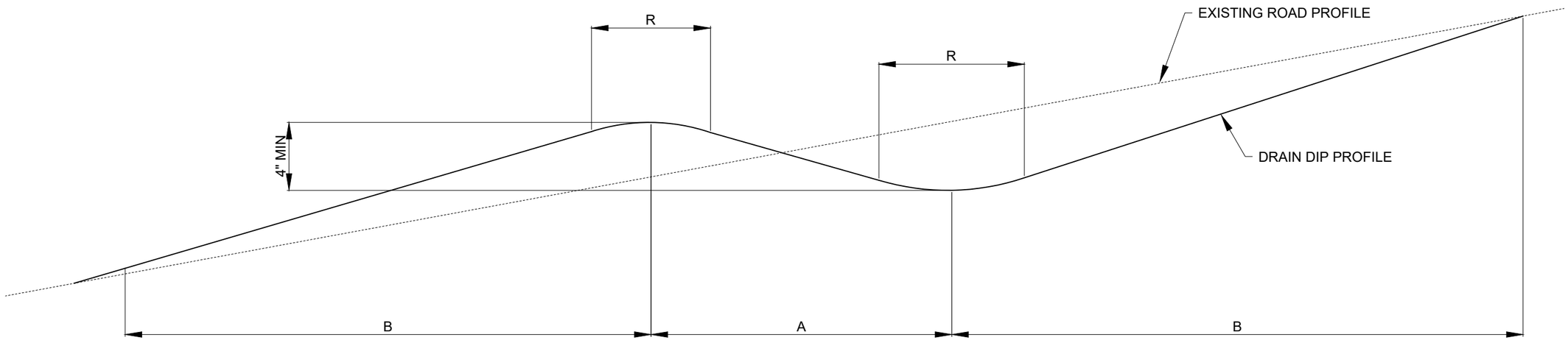

DRIVABLE DIP DETAIL

NOT TO SCALE

GRADE (%)	LOWBOY			GRADE (%)	LOG TRUCK			GRADE (%)	4x4 FIRE ENGINE		
	LENGTH	TAPER	ROUNDING		LENGTH	TAPER	ROUNDING		LENGTH	TAPER	ROUNDING
	A(ft)	B(ft)	R(ft)		A(ft)	B(ft)	R(ft)		A(ft)	B(ft)	R(ft)
0-5	30	30	30	0-5	20	25	20	0-5	10	15	10
6-9	30	50	30	6-9	20	40	20	6-9	10	20	10
10-12	30	60	30	10-12	20	50	20	10 - 30	10	10 - 30	10

NOTES:
1. CROSS SLOPE OF THE LOW POINT DRAINLINE SHALL BE 5%.
2. SKEW OF DRAINLINE SHALL BE 0-25 DEGREES.
3. WHEN RIPRAP IS SPECIFIED AT OUTLET, IT SHALL BE SHAPED TO ASSURE WATER GOES ONTO RIPRAP, NOT AROUND.
5. TAPER LENGTHS SHALL BE WITHIN 10% OF LISTED LENGTHS.
6. UNLESS OTHERWISE SPECIFIED DO NOT INTERCEPT THE ROADWAY DITCH.
7. ALL DRIVABLE DIPS IN THIS PROJECT SHALL BE PER LOG TRUCK STANDARD.

United States Department of Agriculture
Forest Service

(R02)
ROCKY MOUNTAIN REGION

STAMPS, LOGOS, AND SEALS

NO.	REVISION / ISSUE	DATE
4		
3		
2		
1		

PROJECT NAME

FLEETWOOD STEWARDSHIP

BIGHORN NATIONAL FOREST

TONGUE RANGER DISTRICT

DRAWING TITLE

DRIVABLE DIP

DATE 12/11/2024	ARCHIVE NO.
DESIGNER PR	DRAWING SHEET NO. 6
DRAWN PR	
CHECKED CDW	
PROJECT NO.	SHEET 006 OF 011

4/8/25 13:07 CWOLFFING C:\USERS\CWOLFFING\BOX\7700TRANSPORTATIONSYSTEM\7720TRANSPORTATIONDEVELOPMENT\2025-FLEETWOOD STEWARDSHIP\PRECONSTRUCTION\FLEETWOOD STEWARDSHIP - CAD DRAWINGS\FLEETWOOD STEWARDSHIP DRAWINGS.DWG;

NFSR #299 WORKLIST

BEG STA.	END STA.	PAY ITEM	WORK DESCRIPTION	QTY	UNIT
0+00			Jct NFSR #26, MP 8.08		
0+00	41+50	30315	ROADWAY RECONDITIONING, COMPACTION METHOD 3	0.79	MILE
	3+00		Plate with material from Little Goose Pit. Indirect payment to Items 20411 or 30315		
	6+00		Existing Drivable Dip, Maintain. Indirect payment to Item 30315		
	9+50		Existing Drivable Dip, Maintain. Indirect payment to Item 30315		
	13+50		Existing Drivable Dip, Maintain. Indirect payment to Item 30315		
	22+00	20425	EXCAVATION AND EMBANKMENT, TYPE DRIVABLE DIP	1	EACH
	25+50	20425	EXCAVATION AND EMBANKMENT, TYPE DRIVABLE DIP	1	EACH
	28+00		Existing Drivable Dip, Maintain. Indirect payment to Item 30315		
29+50	30+00	20411	UNCLASSIFIED BORROW, 12' ROAD WIDTH, 6" DEPTH, COMPACTION METHOD 3	13	CUBIC YARD
	"		Little Goose Pit possible borrow source		
	"		Reshape existing Drivable dip for log truck access, pull runout ditch 20'. Indirect payment to Item 30315		
	30+00		Jct NFSR #308, MP0.00		
	32+00		Reconstruct existing Drivable dip, pull runout ditch 20'. Indirect payment to Item 30315		
	34+00		Existing Drivable Dip, Maintain. Construct 20' Runout Ditch. Indirect payment to Item 30315		
	37+00		Reconstruct existing Drivable dip. Indirect payment to Item 30315		
	39+00		Existing Drivable Dip, Maintain. Construct 20' Runout Ditch. Indirect payment to Item 30315		
	41+50		Jct NFSR #334313, MP 0.00		
	"		EOP		

NFSR #308 WORKLIST

BEG STA.	END STA.	PAY ITEM	WORK DESCRIPTION	QTY	UNIT
0+00			Jct NFSR #299, MP 0.56		
0+00	2+50	20411	UNCLASSIFIED BORROW, 12' ROAD WIDTH, 6" DEPTH, COMPACTION METHOD 3	64.00	CUBIC YARD
0+00	16+00	30315	ROADWAY RECONDITIONING, COMPACTION METHOD 3	0.30	MILE
	2+50		Existing Drivable Dip, Maintain. Indirect payment to Item 30315		
	7+50		Existing Drivable Dip, Maintain. Indirect payment to Item 30315		
7+50	16+00	20103	CLEARING AND GRUBBING, DISPOSAL METHOD (G) OR (G) AND (K) IN TIMBER UNITS	0.16	MILE
7+50	16+00	20411	UNCLASSIFIED BORROW, 12' ROAD WIDTH, 6" DEPTH, COMPACTION METHOD 3	217	CUBIC YARD
	11+00		Existing Drivable Dip, Maintain. Indirect payment to Item 30315		
	16+00		EOP		

USDA FOREST SERVICE

United States Department of Agriculture
Forest Service

(R02)
ROCKY MOUNTAIN REGION

STAMPS, LOGOS, AND SEALS

NO.	REVISION / ISSUE	DATE
4		
3		
2		
1		

PROJECT NAME

FLEETWOOD STEWARDSHIP

BIGHORN NATIONAL FOREST

TONGUE RANGER DISTRICT

DRAWING TITLE

WORKLIST ROADS 299 & 308

DATE 4/8/2025	ARCHIVE NO.
DESIGNER PR/DC	DRAWING SHEET NO. 7
DRAWN CDW	
CHECKED CDW	
PROJECT NO.	SHEET 007 OF 011

4/8/25 13:07 CWOLFFING C:\USERS\CWOLFFING\BOX\7700TRANSPORTATIONSYSTEM\7720TRANSPORTATIONDEVELOPMENT\2025-FLEETWOOD STEWARDSHIP\PRECONSTRUCTION\FLEETWOOD STEWARDSHIP - CAD DRAWINGS\FLEETWOOD STEWARDSHIP DRAWINGS.DWG;

NFSR #334313 WORKLIST

END STA.	PAY ITEM	WORK DESCRIPTION	QTY	UNIT
		Jct NFSR #299, MP 0.78		
297+00	30315	ROADWAY RECONDITIONING, COMPACTION METHOD 3	5.63	MILE
8+00		Existing Drivable Dip, Maintain. Indirect payment to Item 30315		
17+00	20401	ROADWAY EXCAVATION, TYPE ROAD WIDENING 12', COMPACTION METHOD 3, TOLERANCE CLASS B	30	CUBIC YARD
"		Existing Drivable Dip, Maintain. Indirect payment to Item 30315		
20+00		Existing Drivable Dip, Maintain. Indirect payment to Item 30315		
22+00		Existing Gate, Install Signs		
"	63302(A)	BARRICADE MARKER SIGN (FBM-L), GOVERNMENT FURNISHED	2	EACH
"	63302(B)	BARRICADE MARKER SIGN (FBM-R), GOVERNMENT FURNISHED	2	EACH
"	63302(C)	MOTORIZED RESTRICTION SIGN (TM-3), GOVERNMENT FURNISHED	1	EACH
"	63307	OBJECT MARKER SIGN (OMV-2V), GOVERNMENT FURNISHED	6	EACH
"		REMOVE AND DISPOSE OF EXISTING SIGNS ON GATE, INDIRECT PAYMENT TO ITEM 63302		
23+00		Existing Drivable Dip, Maintain. Indirect payment to Item 30315		
25+00		Existing Drivable Dip, Maintain. Indirect payment to Item 30315		
29+50		Existing Drivable Dip, Maintain. Indirect payment to Item 30315		
41+50		Construct turnout, left. Indirect payment to Item 30315		
45+00		Widen Road to 12' Running Surface. Indirect payment to Item 30315		
"		Existing Drivable Dip, Reconstruct. Indirect payment to Item 30315		
"		Good borrow source on bank		
47+50		Existing Drivable Dip, Maintain. Indirect payment to Item 30315		
53+50	20425	EXCAVATION AND EMBANKMENT, TYPE DRIVABLE DIP	1	EACH
"		Construct 20' Runout Ditch. Indirect payment to Item 30315		
58+00		Existing Drivable Dip, Maintain. Indirect payment to Item 30315		
61+00		Existing Drivable Dip, Maintain. Indirect payment to Item 30315		
68+20		Existing Drivable Dip, Maintain. Indirect payment to Item 30315		
70+00		Existing Drivable Dip, Maintain. Indirect payment to Item 30315		
74+00		Existing Drivable Dip, Maintain. Indirect payment to Item 30315		
76+00		Existing Drivable Dip, Maintain. Indirect payment to Item 30315		
80+50	20425	EXCAVATION AND EMBANKMENT, TYPE DRIVABLE DIP	1	EACH
81+50		Construct turnout, left. Indirect payment to Item 30315		
85+00		Existing Drivable Dip, Maintain. Indirect payment to Item 30315		
86+00		Existing Drivable Dip, Maintain. Indirect payment to Item 30315		
90+00		Existing Drivable Dip, Maintain. Indirect payment to Item 30315		
91+00		Existing Drivable Dip, Reshape. Indirect payment to Item 30315		
96+00		Existing Drivable Dip, Maintain. Indirect payment to Item 30315		

United States Department of Agriculture
Forest Service

(R02)
ROCKY MOUNTAIN REGION

STAMPS, LOGOS, AND SEALS

NO.	REVISION / ISSUE	DATE
4		
3		
2		
1		

PROJECT NAME

FLEETWOOD STEWARDSHIP

BIGHORN NATIONAL FOREST

TONGUE RANGER DISTRICT

DRAWING TITLE

WORKLIST ROAD 334313

DATE 4/8/2025	ARCHIVE NO.
DESIGNER PR/DEC	DRAWING SHEET NO. 8
DRAWN CDW	
CHECKED CDW	
PROJECT NO.	SHEET 008 OF 011

4/8/25 13:07 CWOLFFING C:\USERS\CWOLFFING\BOX\7100\TRANSPORTATION\SYSTEM\7720\TRANSPORTATION\DEVELOPMENT\2025-FLEETWOOD STEWARDSHIP\PRECONSTRUCTION\FLEETWOOD STEWARDSHIP - CAD DRAWINGS\FLEETWOOD STEWARDSHIP DRAWINGS.DWG;

NFSR #334313 (CONTINUED) WORKLIST

END STA.	PAY ITEM	WORK DESCRIPTION	QTY	UNIT
98+50		Existing Drivable Dip, Maintain. Indirect payment to Item 30315		
102+50		Existing Drivable Dip, Maintain. Indirect payment to Item 30315		
109+00		Low Point. Construct 20' Runout Ditch Left. Indirect payment to Item 30315		
111+00	20425	EXCAVATION AND EMBANKMENT, TYPE DRIVABLE DIP	1	EACH
114+00		Jct NFSR #334314, MP 0.00		
118+50		Existing Drivable Dip, Maintain. Indirect payment to Item 30315		
124+00		Existing Drivable Dip, Maintain. Indirect payment to Item 30315		
125+50		Existing Drivable Dip, Maintain. Indirect payment to Item 30315		
127+00		Existing Drivable Dip, Maintain. Indirect payment to Item 30315		
131+00		Place Unclassified Borrow Plating Material. Indirect payment to Item 30315		
131+00		Existing Drivable Dip, Maintain. Indirect payment to Item 30315		
136+00		Existing Drivable Dip, Maintain. Indirect payment to Item 30315		
139+50		Existing Drivable Dip, Maintain. Indirect payment to Item 30315		
"		Place plating material/remove large rocks from roadway. Indirect payment to Item 30315		
143+00		Existing Drivable Dip, Maintain. Indirect payment to Item 30315		
148+00		Existing Drivable Dip, Maintain. Construct 20' Runout Ditch Right. Indirect payment to Item 30315		
151+00		Existing Drivable Dip, Maintain. Indirect payment to Item 30315		
155+50		Existing Drivable Dip, Maintain. Indirect payment to Item 30315		
161+00		Existing Drivable Dip, Maintain. Indirect payment to Item 30315		
164+00		Existing Drivable Dip, Maintain. Indirect payment to Item 30315		
166+50		Existing Drivable Dip, Maintain. Indirect payment to Item 30315		
171+00		Existing Drivable Dip, Maintain. Indirect payment to Item 30315		
175+50		Existing Drivable Dip, Maintain. Indirect payment to Item 30315		
176+00		Existing Drivable Dip, Maintain. Indirect payment to Item 30315		
297+00	20103	CLEARING AND GRUBBING, DISPOSAL METHOD (G) OR (G) AND (K) IN TIMBER UNITS	2.25	MILE
"		Jct non-system road		
181+50		Road Narrows to 11'. Widen Road to 12' Running Surface. Indirect payment to Item 30315		
181+50		Use Material for Plating. Indirect payment to Item 30315		
187+00		Gate removed.		
192+00		Existing Drivable Dip, Maintain. Indirect payment to Item 30315		
193+75		Construct turnout, left. Indirect payment to Item 30315		
196+00		Existing Drivable Dip, Maintain. Indirect payment to Item 30315		
197+50		Existing Drivable Dip, Maintain. Indirect payment to Item 30315		
202+00		Existing Drivable Dip, Maintain and Clean Outlet. Indirect payment to Item 30315		
204+50		Widen Road Surface at Curve from 15' to 16'. Indirect payment to Item 30315		
209+00	20425	EXCAVATION AND EMBANKMENT, TYPE DRIVABLE DIP	1	EACH

United States Department of Agriculture
Forest Service

(R02)
ROCKY MOUNTAIN REGION

STAMPS, LOGOS, AND SEALS

NO.	REVISION / ISSUE	DATE
4		
3		
2		
1		

PROJECT NAME

FLEETWOOD STEWARDSHIP

BIGHORN NATIONAL FOREST

TONGUE RANGER DISTRICT

DRAWING TITLE

WORKLIST ROAD 334313 (CONTINUED)

DATE 4/8/2025	ARCHIVE NO.
DESIGNER PR/DEC	DRAWING SHEET NO. 9
DRAWN CDW	
CHECKED CDW	
PROJECT NO.	SHEET 009 OF 011

4/8/25 13:07 CWOLFING C:\USERS\CWOLFING\BOX\7700TRANSPORTATIONSYSTEM\7720TRANSPORTATIONDEVELOPMENT\2025-FLEETWOOD STEWARDSHIP\PRECONSTRUCTION\FLEETWOOD STEWARDSHIP DRAWINGS.DWG;

NFSR #334313 (CONTINUED) WORKLIST

END STA.	PAY ITEM	WORK DESCRIPTION	QTY	UNIT
215+50		Existing Drivable Dip, Maintain. Indirect payment to Item 30315		
218+00		Existing Drivable Dip, Maintain and Clean Outlet. Indirect payment to Item 30315		
219+00		Existing Drivable Dip, Maintain. Indirect payment to Item 30315		
222+00		Existing Drivable Dip, Maintain. Indirect payment to Item 30315		
222+50		Existing Drivable Dip, Maintain. Indirect payment to Item 30315		
226+00		Existing Drivable Dip, Maintain. Indirect payment to Item 30315		
228+00		Existing Drivable Dip, Maintain. Indirect payment to Item 30315		
235+00		Existing Drivable Dip, Maintain. Indirect payment to Item 30315		
240+00		Existing Drivable Dip, Maintain. Indirect payment to Item 30315		
243+00		Existing Drivable Dip, Maintain. Indirect payment to Item 30315		
244+00		Existing Drivable Dip, Maintain. Indirect payment to Item 30315		
247+00		Existing Drivable Dip, Maintain. Indirect payment to Item 30315		
249+00		Existing Drivable Dip, Maintain. Indirect payment to Item 30315		
250+00		Existing Drivable Dip, Maintain. Indirect payment to Item 30315		
252+00		Existing Drivable Dip, Maintain. Indirect payment to Item 30315		
"		Plating possible		
258+00		Existing Drivable Dip, Maintain. Indirect payment to Item 30315		
262+00		Existing Drivable Dip, Maintain. Indirect payment to Item 30315		
268+00		Existing Drivable Dip, Maintain. Indirect payment to Item 30315		
271+00		Existing Drivable Dip, Maintain. Indirect payment to Item 30315		
274+00		Existing Drivable Dip, Maintain. Indirect payment to Item 30315		
277+50		Existing Drivable Dip, Maintain. Indirect payment to Item 30315		
285+50		Low Point. Construct 20' Runout Ditch Left. Indirect payment to Item 30315		
290+50		Existing Drivable Dip, Maintain. Indirect payment to Item 30315		
293+00		Existing Drivable Dip, Maintain. Indirect payment to Item 30315		
296+00		Existing Drivable Dip, Maintain. Indirect payment to Item 30315		
297+00		Construct 50' Turnaround. Indirect Payment to Item 20103 and 30315.		
297+00		EOP		

United States Department of Agriculture
Forest Service

(R02)
ROCKY MOUNTAIN REGION

STAMPS, LOGOS, AND SEALS

NO.	REVISION / ISSUE	DATE
4		
3		
2		
1		

PROJECT NAME

FLEETWOOD STEWARDSHIP

BIGHORN NATIONAL FOREST

TONGUE RANGER DISTRICT

DRAWING TITLE

WORKLIST ROAD 334313 (CONTINUED)

DATE 4/8/2025	ARCHIVE NO.
DESIGNER PR/DEC	DRAWING SHEET NO. 10
DRAWN CDW	
CHECKED CDW	
PROJECT NO.	SHEET 010 OF 011

4/8/25 13:07 CWOLFFING C:\USERS\CWOLFFING\BOX\7700TRANSPORTATIONSYSTEM\7720TRANSPORTATIONDEVELOPMENT\2025-FLEETWOOD STEWARDSHIP\PRECONSTRUCTION\FLEETWOOD STEWARDSHIP DRAWINGS.DWG;

NFSR #334314 (CONTINUED) WORKLIST

BEG STA.	END STA.	PAY ITEM	WORK DESCRIPTION	QTY	UNIT
0+00					
"	30+00	20103	CLEARING AND GRUBBING, DISPOSAL METHOD (G) OR (G) AND (K) IN TIMBER UNITS	0.57	MILE
"	30+00	30315	ROADWAY RECONDITIONING, COMPACTION METHOD 3	0.57	MILE
	2+00		Existing Drivable Dip, Maintain. Indirect payment to Item 30315		
	3+00		Existing Drivable Dip, Maintain. Indirect payment to Item 30315		
	5+00		Existing Drivable Dip, Maintain. Indirect payment to Item 30315		
	8+50		Existing Drivable Dip, Reshape. Indirect payment to Item 30315		
	17+00		Existing Drivable Dip, Maintain. Indirect payment to Item 30315		
	22+00		Construct 20' Runout Ditch Left. Indirect payment to Item 30315		
	26+50		Existing Drivable Dip, Maintain. Indirect payment to Item 30315		
	30+00		Construct 50' Turnaround. Indirect Payment to Item 20103 and 30315.		

United States Department of Agriculture
Forest Service

(R02)
ROCKY MOUNTAIN REGION

STAMPS, LOGOS, AND SEALS

NO.	REVISION / ISSUE	DATE
4		
3		
2		
1		

PROJECT NAME

FLEETWOOD STEWARDSHIP

BIGHORN NATIONAL FOREST

TONGUE RANGER DISTRICT

DRAWING TITLE

WORKLIST ROAD 334314

DATE 4/8/2025	ARCHIVE NO.
DESIGNER PR/DEC	DRAWING SHEET NO. 11
DRAWN CDW	
CHECKED CDW	
PROJECT NO.	SHEET 011 OF 011

4/8/25 13:07 CWOLFFING C:\USERS\CWOLFFING\BOX\7700TRANSPORTATION\SYSTEM\7720TRANSPORTATION\DEVELOPMENT\2025-FLEETWOOD STEWARDSHIP\PRECONSTRUCTION\FLEETWOOD STEWARDSHIP DRAWINGS.DWG;

FLEETWOOD STEWARDSHIP

FOREST SERVICE SUPPLEMENTAL

SPECIFICATIONS

Table of Contents

Preface 4
101 - Terms¸ Format¸ and Definitions 5
101.01 Meaning of Terms. 5
101.03 Abbreviations. 5
101.04 Definitions. 6
102 - Bid¸ Award¸ and Execution of Contract 9
Delete Section 102. 9
103 - Scope of Work 10
Delete Subsections 103.02, 103.03, 103.04, 103.05. 10
104 - Control of Work 11
Delete Subsections 104.01, 104.02, 104.04. 11
104.06 Use of Roads by Contractor. 11
105 - Control of Material 12
105.05 Use of Material Found in the Work. 12
106 - Acceptance of Work 13
106.01 Conformity with Contract Requirements. 13
106.02 Visual Inspection. 14
107 - Legal Relations and Responsibility to the Public 15
Delete Subsection 107.05. 15
108 - Prosecution and Progress 16
Delete Section 108. 16
109 - Measurement and Payment 17
Delete Subsections 109.06, 109.07, 109.08, 109.09. 17
109.01 Measurement of Work. 17
109.02 Measurement Terms and Definitions. 18
155 - Schedules for Construction Contracts 19
Delete Section 155. 19
201 - Clearing and Grubbing 20
Section 201. — CLEARING AND GRUBBING 20

204 - Excavation and Embankment 22
Section 204. — EXCAVATION AND EMBANKMENT 22
303 - Road Reconditioning 35
Section 303. — ROAD RECONDITIONING 35
633 - Permanent Traffic Control 37
633.02 Material. 37
633.03 General. 37
633.05 (a) Fabrication. 37

Preface

Preface_wo_11_13_2023

<u>Delete all but the first paragraph and add the following:</u>

The Forest Service, US Department of Agriculture has adopted FP-14 for construction of National Forest System Roads.

101 - Terms¸ Format¸ and Definitions

101.01_National_11_9_2016

Add the following paragraph to Subsection 101.01:

101.01 Meaning of Terms.

Delete all references to the TAR (Transportation Acquisition Regulations) in the specifications.

101.03_National_11_9_2016

Add the following to Subsection 101.03:

101.03 Abbreviations.

(a) Acronyms.

AGAR — Agriculture Acquisition Regulations

AFPA — American Forest and Paper Association

FSAR — Forest Service Acquisition Regulations

MSHA — Mine Safety and Health Administration

NESC — National Electrical Safety Code

WCLIB — West Coast Lumber Inspection Bureau

(f) Miscellaneous unit abbreviations.

MP	—	milepost	location
ppm	—	parts per million	volume
STA		station	location

101.04_National_1_22_2020

Make the following changes to Subsection 101.04:

101.04 Definitions.

Delete these definitions and replace the following:

Bid Schedule — The Schedule of Items.

Bridge — A structure, including supports, erected over a depression or an obstruction such as water along a road, a trail, or a railway and having a deck for carrying traffic or other loads.

Contractor — The individual or legal entity contracting with the Government for performance of prescribed work. In a timber sale contract, the contractor is the "Purchaser".

Culvert — Any structure with a bottom, regardless of fill depth, depth of invert burial, or presence of horizontal driving surface, or any bottomless (natural channel) structure with footings that will not have wheel loads in direct contact with the top of the structure.

Drawings — (Public Works Contracts) Design sheets or fabrication, erection, or construction details submitted to the CO by the Contractor according to FAR Clause 52.236-21 Specifications and Drawings for Construction. Also refers to submissions and submittals.

Notice to Proceed — (Public Works Contracts) Written notice to the Contractor to begin the contract work.

Right-of-Way — A general term denoting (1) the privilege to pass over land in some particular line (including easement, lease, permit, or license to occupy, use, or traverse public or private lands), or (2) Real property necessary for the project, including roadway, buffer areas, access, and drainage areas.

Solicitation—(Public Works Contracts) The complete assembly of documents (whether attached or incorporated by reference) furnished to prospective bidders.

Add the following definitions:

Adjustment in Contract Price — "Equitable adjustment," as used in the Federal Acquisition Regulations, or "construction cost adjustment," as used in the Timber Sale Contract, as applicable.

Change — "Change" means "change order" as used in the Federal Acquisition Regulations, or "design change" as used in the Timber Sale Contract.

Forest Service — The United States of America, acting through the Forest Service, U.S. Department of Agriculture.

Neat Line — A line defining the proposed or specified limits of an excavation or structure.

Pioneer Road — Temporary construction access built along the route of the project.

Purchaser — The individual, partnership, joint venture, or corporation contracting with the Government under the terms of a Timber Sale Contract and acting independently or through agents, employees, or subcontractors.

Protected Streamcourse — A drainage shown on the plans or timber sale area map that requires designated mitigation measures.

Road Order — An order affecting and controlling traffic on roads under Forest Service jurisdiction. Road Orders are issued by a designated Forest Officer under the authorities of 36 CFR, part 260.

Shop Drawings — (Timber and Stewardship Contracts) Referred to as "Drawings" in FP-14, include drawings, diagrams, layouts, schematics, descriptive literature, illustrations, lists or tables, performance and test data, and similar materials furnished by Purchaser to explain in detail specific portions of the work required by the contract.

Utilization Standards —

The minimum size and percent soundness of trees described in Public Works contract specifications or Timber Sale and IRTC contract provisions to determine merchantable timber.

Add Figure 101-1—Illustration of road structure terms:

Figure 101-1—Illustration of road structure terms.

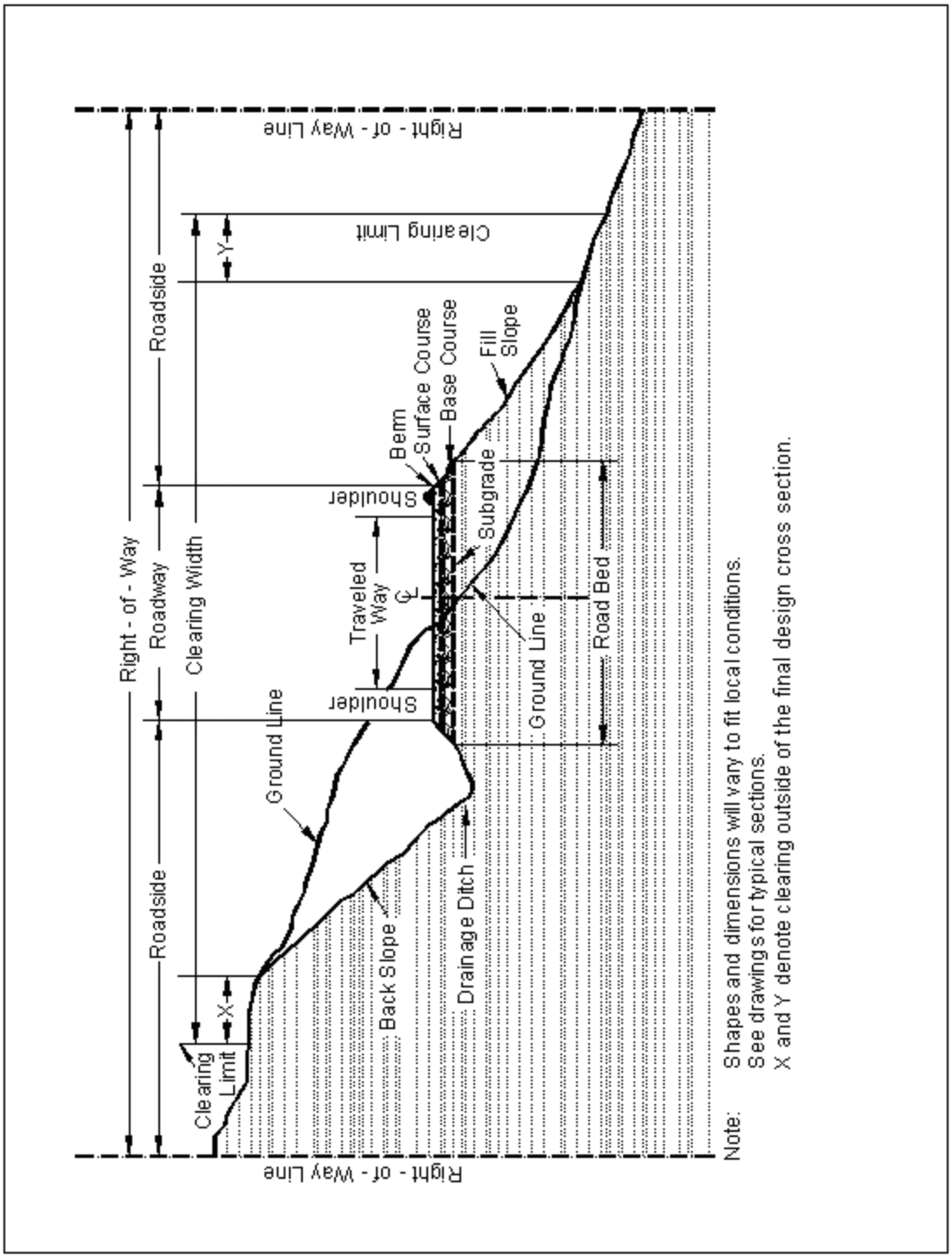

102 - Bid¸ Award¸ and Execution of Contract

102.00_National_11_9_2016

Delete Section 102 in its entirety.

Delete Section 102.

103 - Scope of Work

103.00_National_11_9_2016

Delete all of Section 103 except Subsection 103.01 Intent of Contract.

Delete Subsections 103.02, 103.03, 103.04, 103.05.

104 - Control of Work

104.00_National_11_9_2016

Delete Subsections 104.01, 104.02, and 104.04.

Delete Subsections 104.01, 104.02, 104.04.

104.06_National_11_9_2016

Add the following to Subsection 104.06:

104.06 Use of Roads by Contractor.

The Contractor is authorized to use roads under the jurisdiction of the Forest Service for all activities necessary to complete this contract, subject to the limitations and authorizations designated in the Road Order(s) or described in the contract, when such use will not damage the roads or national forest resources, and when traffic can be accommodated safely.

105 - Control of Material

105.05_National_6_29_2020

105.05 Use of Material Found in the Work.

Delete 105.05 (a) and (b) and the last sentence of the second paragraph and substitute the following:

Materials produced or processed from Government lands in excess of the quantities required for performance of this contract are the property of the Government. Place excess material safely at government-approved location, at no additional cost to government.

106 - Acceptance of Work

106.01_National_7_18_2017

Delete Subsection 106.01 and replace with the following:

106.01 Conformity with Contract Requirements.

Follow the requirements of FAR Clause 52.246-12 Inspection of Construction.

References to standard test methods of AASHTO, ASTM, GSA, and other recognized standard authorities refer to the methods in effect on the date of solicitation for bids.

Perform all work to the lines, grades, cross-sections, dimensions, and processes or material requirements shown on the plans or specified in the contract.

Incorporate manufactured materials into the work according to the manufacturer's recommendations or to these specifications, whichever is more strict.

Plan dimensions and contract specification values are the values to be strived for and complied with as the design values from which any deviations are allowed. Perform work and provide material that is uniform in character and reasonably close to the prescribed value or within the specified tolerance range. The purpose of a tolerance range is to accommodate occasional minor variations from the median zone that are unavoidable for practical reasons.

When standard manufactured items are specified (such as fence, wire, plates, rolled shapes, pipe conduits, etc., that are identified by gauge, unit mass, section dimensions, etc.), the identification will be considered to be nominal masses or dimensions. Unless specific contract tolerances are noted, established manufacturing tolerances will be accepted.

The Government may inspect, sample, or test all work at any time before final acceptance of the project. When the Government tests work, copies of test reports are furnished to the Contractor upon request. Government tests may or may not be performed at the work site. If Contractor testing and inspection is verified by the Government, the Contractor's results may be used by the Government to evaluate work for acceptance. Do not rely on the availability of Government test results for process control.

Acceptable work conforming to the contract will be paid for at the contract unit bid price. Four methods of determining conformity and accepting work are described in Subsections 106.02 to 106.05 inclusive. The primary method of acceptance is specified in each Section of work. However, work may be rejected at any time it is found by any of the methods not to comply with the contract.

Remove, repair, or replace work that does not conform to the contract, or to prevailing industry standards where no specific contract requirements are noted. Removing, repairing, or replacing work; providing temporary traffic control; and any other related work to accomplish conformity will be at no cost to the Government.

(a) Disputing Government test results. If the accuracy of Government test results is disputed, promptly inform the CO. If the dispute is unresolved after reasonable steps are taken to resolve the dispute, further evaluation may be obtained by written request. Include a narrative describing the dispute and a proposed resolution protocol that addresses the following:

1. Sampling method;
2. Number of samples;
3. Sample transport;
4. Test procedures;
5. Testing laboratories;
6. Reporting;
7. Estimated time and costs; and
8. Validation process.

If the evaluation requires additional sampling or testing be performed, mutually agree with the Government on witnessing procedures and on sampling and testing by a third party laboratory. Use a third party laboratory accredited by the AASHTO accreditation program. Provide proof of the laboratory's accreditation for the test procedures to be used. Do not use the same laboratory that produced the disputed Government test results or that produced the test results used as a basis for the dispute.

The CO will review the proposed resolution protocol and may modify it before final approval and execution.

The Government will use the approved resolution protocol test results to determine the validity of the disputed testing. If the Government test results are validated, the Contractor will be responsible for all costs associated with developing and performing the resolution protocol. If the Government test results are not validated, the Government will be responsible for all costs associated with developing and performing the resolution protocol. If the validity of the Government test results cannot be determined, the Contractor and Government will equally share all costs associated with developing and carrying out the resolution protocol.

(b) Alternatives to removing and replacing non-conforming work. As an alternative to removal and replacement, the Contractor may submit a written request to:

1. Have the work accepted at a reduced price; or
2. Be given permission to perform corrective measures to bring the work into conformity.

The request must contain supporting rationale and documentation. Include references or data justifying the proposal based on an evaluation of test results, effect on service life, value of material or work, quality, aesthetics, and other tangible engineering basis. The CO will determine disposition of the nonconforming work.

106.02_National_11_9_2016

Delete Subsection 106.02 and replace with the following:

106.02 Visual Inspection.

Acceptance is based on visual inspection of the work for compliance with the specific contract requirements. Use prevailing industry standards in the absence of specific contract requirements or tolerances.

107 - Legal Relations and Responsibility to the Public

107.05_National_7_18_2017

Delete Subsection 107.05.

Delete Subsection 107.05.

108 - Prosecution and Progress

108.00_National_11_9_2016

Delete Section 108 in its entirety.

Delete Section 108.

109 - Measurement and Payment

109.00_National_11_9_2016

Delete Subsections 109.06, 109.07, 109.08, and 109.09:

Delete Subsections 109.06, 109.07, 109.08, 109.09.

109.01_National_2_22_2019

Delete the third paragraph and Table 109-1 of Subsection 109.01 and replace with the following:

109.01 Measurement of Work.

Take measurements as described in Subsection 109.02 unless otherwise modified by the Measurement Subsection of the section controlling the work being performed. Table 109-1 indicates the accuracy required for quantities of the various pay units used in the Schedule of Items. Use this guide to determine the decimal placement in the final payment.

Table 109-1

Decimal Accuracy of Quantities for Final Payment

Pay Item	Level of Precision
Linear Foot	1
Exception--Timber, Steel, and concrete Piles	0.1
Station	0.1
Mile	0.01
Square Foot	0.1
Square Yard	0.1
Each	1
Acre	0.01
Gallon	1
M-Gals.	0.1
Cubic Yard	1
Exception--Structure Excavation; Sheathing Materials; Bedding, Bed Course, and Backfill Materials; Gabions;	0.1
Exception--Concrete; Masonry	0.01
Pound	1
Ton	0.1
Exception--Calcium Chloride; Sodium Chloride; Hydrated Lime; Bituminous Materials; Pavements; Bed Course Materials	0.01
Hour	0.1
MFBM	0.01
Station Yard	1
Cubic Yard Mile	1
Ton Mile	1

109.02_National_11_9_2016

Add the following sentence to Subsection 109.02(b):

109.02 Measurement Terms and Definitions.

(b) Contract quantity.

Contract quantities will be adjusted only when there are errors in the original design of 15% or more.

155 - Schedules for Construction Contracts

155.00_National_11_9_2016

Delete Section 155 in its entirety.

Delete Section 155.

201 - Clearing and Grubbing

201.00_Forest_1_2_2020

Delete Section 201 in its entirety and replace with the following.

Section 201. — CLEARING AND GRUBBING

Description

201.01 This work consists of clearing and grubbing within the clearing limits designated in the plans.

Material

201.02 Conform to the following Subsection:

Backfill material	704.03

Construction Requirements

201.03 General. Construct erosion control measures according to Section 157. Perform work within designated limits.

Do not damage vegetation designated to remain. If damage occurs, repair or replace the vegetation in an acceptable manner. Where possible, preserve vegetation adjacent to bodies of water. Treat cuts or scarred surfaces of trees and shrubs with tree wound dressing.

201.04 Clearing. Within the clearing limits clear trees, brush, and other vegetation as follows:

(a) Cut trees so they fall within the clearing limits;

(b) In areas of cut slope rounding, cut stumps flush with or below the finished ground line;

(c) In areas outside the excavation, embankment, and slope rounding limits, cut stumps to within 6 inches of the ground; and

(d) Trim tree branches that extend over the road surface and shoulders to attain a clear height of 14 feet. Trim tree limbs as near flush with the trunk as practicable.

201.05 Grubbing. Grub deep enough to remove stumps, roots, buried logs, moss, turf, or other vegetative matter as follows:

(a) Grub areas to be excavated, accept for cut slope rounding areas;

(b) Grub embankment areas. Undisturbed stumps less than 24 inches in diameter may be left in place if they protrude less than 6 inches above the original ground and will be covered with more than 48 inches of embankment. Remove all other stumps;

(c) Grub pits, channel changes, and ditches only to the depth necessary for the excavation;

(d) Backfill stump holes and other grubbing holes with backfill material to the level of the surrounding ground according to Subsection 209.09. Compact backfill according to Subsection 209.10; and

(e) Utilization standards for merchantable timber are listed below. Fall and buck merchantable material into lengths not to exceed 40 feet. Pieces (logs) meet utilization standards when such pieces would have met Utilization Standards if bucking lengths were varied to include such material.

Minimum Utilization Standards

Length = 16 feet.

Diameter (Inside Bark) at small end = 7 inches

33-1/3 Net Scale in % Gross for Sawlog

201.06 Disposal. Dispose of merchantable timber designated for removal according to the provisions of the timber sale contract. Dispose of clearing and grubbing debris according to Subsection 203.05.

201.07 Acceptance. Clearing and grubbing will be evaluated under Subsection 106.02.

Material for tree wound dressing will be evaluated under Subsection 106.03.

Backfilling and compacting of stumps and grubbing holes will be evaluated under Section 209.

Measurement

201.08 Measure the Section 201 pay items listed in the bid schedule according to Subsection 109.02 and the following as applicable:

Do not make deductions from the area computation unless excluded areas are shown on the plans.

Do not measure clearing and grubbing of borrow sources.

Payment

201.09 The accepted quantities will be paid at the contract price per unit of measurement for the Section 201 pay items listed in the bid schedule. Payment will be full compensation for the work prescribed in this Section. See Subsection 109.05.

204 - Excavation and Embankment

204.00_National_11_4_2016

Delete Section 204 in its entirety and replace with the following.

Section 204. — EXCAVATION AND EMBANKMENT

Description

204.01 This work consists of excavating material and constructing embankments. This work also includes furnishing, hauling, stockpiling, placing, disposing, sloping, shaping, compacting, and finishing earthen and rocky material.

204.02 Definitions.

(a) Excavation. Excavation consists of the following:

(1) Roadway excavation. Material excavated from within the right-of-way or easement areas, except subexcavation covered in Subsection 204.02(a)(2) and structure excavation covered in Sections 208 and 209. Roadway excavation includes all material encountered regardless of its nature or characteristics.

(2) Subexcavation. Material excavated from below subgrade elevation in cut sections or from below the original ground-line in embankment sections. Subexcavation excludes the work required by Subsection 204.05 or 204.06.

(3) Borrow excavation. Material used for embankment construction that is obtained from outside the roadway prism. Borrow excavation includes unclassified borrow, and topping.

(b) Embankment construction. Embankment construction consists of placing and compacting roadway or borrow excavation. This work includes:

(1) Preparing foundation for embankment;

(2) Constructing roadway embankments;

(3) Benching for side-hill embankments;

(4) Constructing dikes, ramps, mounds, and berms; and

(5) Backfilling subexcavated areas, holes, pits, and other depressions.

(c) Conserved topsoil. Excavated material conserved from the roadway excavation and embankment foundation areas that is suitable for growth of grass, cover crops, or native vegetation.

(d) Waste. Excess and unsuitable roadway excavation and subexcavation that cannot be used.

Material

204.03 Conform to the following Subsections:

Topping	704.05
Unclassified borrow	704.06
Water	725.01(c)

Construction Requirements

204.04 Preparation for Roadway Excavation and Embankment Construction. Clear the area of vegetation and obstructions according to Sections 201 and 203.

Road pioneering, slash disposal, and grubbing of stumps may proceed concurrently with excavation and embankment. Maintain drainage during pioneering operations.

204.05 Conserved Topsoil. When designated, conserve topsoil from roadway excavation and embankment foundation areas. Stockpile conserved topsoil in low windrows immediately beyond the rounding limits of cut and embankment slopes or in other approved locations. Separate conserved topsoil from other excavated material. When designated, place conserved topsoil on completed slopes according to Section 624.

204.06 Roadway Excavation. Excavate as follows:

(a) Rock cuts. Blast rock according to Section 205. Excavate rock cuts to 6 inches (150 millimeters) below subgrade within the roadbed limits. Backfill to subgrade with topping or other suitable material. Compact the material according to Subsection 204.11.

(b) Earth cuts. Scarify earth cuts to 6 inches (150 millimeters) below subgrade within the roadbed limits. Compact the scarified material according to Subsection 204.11.

(c) Pioneer Roads. Conduct excavation and placement operations so material to be treated under Section 201 will not be incorporated into the roadway unless specified in the slash treatment method. Maintain drainage during pioneering operations.

Remove snow and ice in advance of the work and deposit beyond the roadway limits in a manner that will not waste material or generate sediment. Do not incorporate snow and ice into embankments. Place snow or ice in a manner to prevent resource damage.

(d) Drainage Feature. Drainage feature includes construction of all ditches, minor channel changes, drainage dips, catch basins, surface water deflectors, and other minor drainage structures. Compact the material according to Subsection 204.11. Excavate on a uniform grade between control points.

Do not disturb material and vegetation outside the construction limits. Retrieve material deposited outside the construction limits. Dispose of unsuitable or excess excavation material according to Subsection 204.14. Replace shortage of suitable material caused by premature disposal of roadway excavation.

Shape to drain and compact the work area to a uniform cross-section at the end of each day's operations.

204.07 Subexcavation. Excavate material to the required limits. Dispose of unsuitable material according to Subsection 204.14. Take cross-sections according to Section 152. Backfill subexcavated area with suitable

material in horizontal layers not exceeding 12 inches (300 millimeters) in compacted thickness and compact according to Subsection 204.11. Prevent unsuitable material from mixing with suitable backfill material.

204.08 Borrow Excavation. Use suitable roadway excavation in embankment construction. Do not use borrow excavation when it results in excess roadway excavation. Deduct excess borrow excavation from the total borrow excavation quantity.

Obtain borrow source approval according to Subsection 105.02. Develop and restore borrow sources according to Subsections 105.03 and 105.06. Do not excavate beyond the established limits. When applicable, shape the borrow source to permit accurate measurements when excavation is complete.

204.09 Preparing Foundation for Embankment Construction. Prepare foundation for embankment construction as follows:

(a) Embankment over natural ground. Remove topsoil and break up the ground surface to a minimum depth of 6 inches (150 millimeters) by plowing or scarifying. Compact the ground surface according to Subsection 204.11.

(b) Embankments over an existing asphalt, concrete, or gravel road surface. Scarify gravel roads to a minimum depth of 6 inches (150 millimeters). Scarify or pulverize asphalt and concrete roads to 6 inches (150 millimeters) below the pavement. Reduce particles to a maximum size of 6 inches (150 millimeters) and produce a uniform material. Compact the surface according to Subsection 204.11.

(c) Embankment across ground not capable of supporting equipment. Dump successive loads of embankment material in a uniformly distributed layer to construct the lower portion of the embankment. Limit the layer thickness to the minimum depth necessary to support the equipment.

(d) Embankment on an existing slope steeper than 1V:3H. Cut horizontal steps in the existing slope to a sufficient width to accommodate placement and compaction operations and equipment. Step the slope as the embankment is placed and compacted in layers. Begin each step at the intersection of the original ground and the vertical cut of the previous step.

204.10 Embankment Construction. Incorporate only suitable roadway excavation material into the embankment. When the supply of suitable roadway excavation is exhausted, furnish unclassified borrow to complete the embankment. Obtain written approval before beginning construction of embankments over 6 feet (2 meters) high at subgrade centerline. Construct embankments as follows:

(a) General. At the end of each day's operations, shape to drain and compact the embankment surface to a uniform cross-section. Eliminate ruts and low spots that could hold water.

During all stages of construction, route and distribute hauling and leveling equipment over the width and length of each layer of material.

Compact embankment side slopes with a tamping foot roller, by walking with a dozer, or by over-building the fill and then removing excess material to the final slope line. For slopes 1V:1¾H or steeper, compact the slopes as embankment construction progresses.

(b) Embankment within the roadway prism. Place embankment material in horizontal layers not exceeding 12 inches (300 millimeters) in compacted thickness. Incorporate oversize boulders or rock fragments into the 12-inch (300-millimeter) layers by reducing them in size or placing them individually as required below. Compact each layer according to Subsection 204.11 before placing the next layer.

Material composed predominately of boulders or rock fragments too large for 12-inch (300-millimeter) layers may be placed in layers up to 24 inches (600 millimeters) thick. Incorporate oversize boulders or rock fragments into the 24-inch (600-millimeter) layer by reducing them in size or placing individual rock fragments and boulders greater than 24 inches (600 millimeters) in diameter as follows:

(1) Reduce rock to less than 48 inches (1200 millimeters) in the largest dimension;

(2) Distribute rock within the embankment to prevent nesting;

(3) Place layers of embankment material around each rock to a depth not greater than that permitted above. Fill voids between rocks; and

(4) Compact each layer according to Subsection 204.11(a) before placing the next layer.

(c) Embankment outside of roadway prism. When placing embankment outside the staked roadway prism, place material in horizontal layers not exceeding 24 inches (600 millimeters) in compacted thickness. Compact each layer according to Subsection 204.11.

204.11 Compaction. Compact the embankment using one of the following methods as specified.

(a) Placement Method 1. Use AASHTO T 27 to determine the quantity of material retained on a No. 4 (4.75-millimeter) sieve. Compact as follows:

(1) More than 80 percent retained on a No. 4 (4.75-millimeter) sieve. Adjust the moisture content to a level suitable for compaction. Fill the interstices around rock with earth or other fine material as practical. Use compression-type rollers at speeds less than 6 feet (1.8 meters) per second and vibratory rollers at speeds less than 3 feet (1 meter) per second. Compact each layer of material full width with one of the following and until there is no visible evidence of further consolidation:

(a) Four roller passes of a vibratory roller having a minimum dynamic force of 40,000 pounds (180 kilonewtons) impact per vibration and a minimum frequency of 1000 vibrations per minute;

(b) Eight roller passes of a 20-ton (20-metric ton) compression-type roller; or

(c) Eight roller passes of a vibratory roller having a minimum dynamic force of 30,000 pounds (130 kilonewtons) impact per vibration and a minimum frequency of 1000 vibrations per minute.

Increase the compactive effort for layers deeper than 12 inches (300 millimeters) as follows:

- For each additional 6 inches (150 millimeters) or fraction thereof, increase the number of roller passes in Subsection 204.11(a)(1)(a), by four passes; or

- For each additional 6 inches (150 millimeters) or fraction thereof, increase the number of roller passes in Subsection 204.11(a)(1)(b) and (c), by eight passes.

(2) 50 to 80 percent retained on a No. 4 (4.75-millimeter) sieve. Classify the material according to AASHTO M 145. Adjust the moisture content of material classified A-1 through A-5 to a moisture content suitable for compaction. Adjust the moisture content of material classified A-6 and A-7 to within 2 percent of the optimum moisture content. Use AASHTO T 99 to determine the optimum moisture content of the portion of the material passing a No. 4 (4.75-millimeter) sieve. Multiply this number by the percentage of material passing a No. 4 (4.75-millimeter) sieve, and add 2 percent to determine the optimum moisture content of the material.

Use nonvibratory rollers at speeds less than 6 feet (1.8 meters) per second and vibratory rollers at speeds less than 3 feet(1 meter) per second. Compact each layer of material full width according to Subsection 204.11(a)(1).

(3) Less than 50 percent retained on a No. 4 (4.75-millimeter) sieve. Classify the material according to AASHTO M 145. For material classified A-1 or A-2-4, determine the maximum density according to AASHTO T 99, Method C.

Adjust the moisture content of material classified A-1 through A-5 to a moisture content suitable for compaction. Adjust the moisture content of material classified A-6 and A-7 to within 2 percent of the optimum moisture content.

Use compression-type or vibratory rollers. Compact each layer of material full width to at least 95 percent of the maximum density. Determine the in-place density and moisture content according to AASHTO T 310 or other approved test procedures. When required, use AASHTO T 224 to correct for coarse particles.

(b) Placement Method 2. Adjust the moisture content of the material to a moisture content suitable for compaction. Fill the interstices around rock with earth or other fine material as practical. Operate roller compaction equipment over the full width of each layer until there is no visible evidence of further consolidation or, if when a sheepsfoot roller is used, the roller “walks out” of the layer. Make at least three complete passes. Use compression-type rollers at speeds less than 6 feet (1.8 meters) per second and vibratory rollers at speeds less than 3 feet (1 meter) per second. Ensure rollers meet the following requirements:

(1) Steel wheeled rollers, other than vibratory, capable of exerting a force of not less than 250 pounds per inch (4.5 kilogram/millimeter) of width of the compression roll or rolls.

(2) Vibratory steel wheeled rollers equipped with amplitude and frequency controls with a minimum dynamic force of 30,000 pounds (130 kilonewtons) impact per vibration, specifically designed to compact the material on which it is used.

(3) Pneumatic-tired rollers with smooth tread tires of equal size that will provide a uniform compacting pressure for the full width of the roller and capable of exerting a ground pressure of at least 80 psi (550 Kilopascals).

(4) Sheepsfoot, tamping, or grid rollers capable of exerting a force of 250 pounds per inch (4.5 kilogram/millimeter) of width of roller drum.

(c) Placement Method 3. Adjust the moisture content of the material to a moisture content suitable for compaction. Fill the interstices around rock with earth or other fine material as practical. Operate hauling and spreading equipment uniformly over the full width of each layer until there is no visible evidence of further consolidation. Make at least three complete passes.

(d) Placement Method 4. Adjust the moisture content of the material to a moisture content suitable for compaction. Fill the interstices around rock with earth or other fine material as practical. Operate hauling and spreading equipment uniformly over the full width of each layer.

(e) Placement Method 5. Adjust the moisture content of the material to a moisture content suitable for compaction. Compact the complete surface with a bucket of an excavator larger than 39,000 pounds (18 metric ton) Gross Vehicle Weight using a minimum of three blows. Overlap compaction by ½ width of bucket.

(f) Placement Method 6. Adjust the moisture content of the material to a moisture content suitable for compaction. Compact using an approved mechanical tamper for a minimum of three complete passes.

When compacting with rollers or hauling and spreading equipment is not practical, use approved mechanical tampers for a minimum of three complete passes.

204.12 Drainage Features. Slope, grade, and shape all drainage features. Remove projecting roots, stumps, rock, or similar matter. Maintain all drainage features in an open condition and without sticks, and other debris.

Form furrow ditches by plowing or using other acceptable methods to produce a continuous furrow. Place excavated material on the downhill side so the bottom of the ditch is approximately 18 inches (450 millimeters) below the crest of the loose material. Clean the ditch using a hand shovel or other suitable method. Shape to provide drainage without overflow.

204.13 Sloping, Shaping, and Finishing. Complete subgrade, slopes, drainage features, culverts, riprap, and other underground minor structures before placing aggregate courses. Slope, shape, and finish to the designated tolerance class as defined in Table 204-2 as follows:

(a) Sloping. Leave earth slopes with uniform roughened surfaces, except as described in Subsection 204.13(b), with no noticeable break as viewed from the road. Except in solid rock, round tops and bottoms of slopes including the slopes of drainage ditches. Round material overlaying solid rock to the extent practical. Scale rock slopes. Slope rounding is not required on tolerance class D through M roads.

If a slide or slipout occurs on a cut or embankment slope, remove or replace the material and repair or restore damage to the work. Bench or key the slope to stabilize the slide. Reshape the cut or embankment slope to an acceptable condition.

(b) Stepped slopes. Where required, construct steps on slopes of 1⅓V:1H to 1V:2H. Construct the steps approximately 18 inches (450 millimeters) high. Blend the steps into natural ground at the end of the cut. If the slope contains non-rippable rock outcrops, blend steps into the rock. Remove loose material found in transitional area. Except for removing large rocks that may fall, scaling stepped slopes is not required.

(c) Shaping. Shape the subgrade to a smooth surface and to the cross-section required. Shape slopes to gradually transition into slope adjustments without noticeable breaks. At the ends of cuts and at intersections of cuts and embankments, adjust slopes in the horizontal and vertical planes to blend into each other or into the natural ground.

(d) Finishing. Ensure that the subgrade is visibly moist during shaping and dressing; smooth and uniform, and shaped to conform to the typical sections. Remove material larger than 6 inches (150 millimeters) from the top 6 inches (150 millimeters) of the roadbed. Remove unsuitable material from the roadbed, and replace it with suitable material. Scarify to 6 inches (150 millimeters) below the bottom of low sections, holes, cracks, or depressions and bring back to grade with suitable material.

Maintain proper ditch drainage.

204.14 Disposal of Unsuitable or Excess Material. Dispose of unsuitable or excess material at designated sites or according to Subsection 203.05(a)

When there is a pay item for waste, shape and compact the waste material in its final location. Do not mix clearing or other material not subject to payment with the waste material.

204.15 Acceptance. See Table 204-1 for sampling, testing, and acceptance requirements.

Material for embankment and conserved topsoil will be evaluated under Subsections 106.02 and 106.04.

Excavation and embankment construction will be evaluated under Subsections 106.02 and 106.04.

Subexcavation will be evaluated under Subsections 106.02 and 106.04.

Measurement

204.16 Measure the Section 204 pay items listed in the bid schedule according to Subsection 109.02 and the following as applicable:

(a) Roadway excavation. Measure roadway excavation in its original position as follows:

(1) Include the following volumes in roadway excavation:

(a) Roadway prism excavation;

(b) Rock material excavated and removed from below subgrade in cut sections;

(c) Unsuitable material below subgrade and unsuitable material beneath embankment areas when a pay item for subexcavation is not listed in the bid schedule;

(d) Ditches, except furrow ditches measured under a separate pay item;

(e) Conserved topsoil;

(f) Borrow material used in the work when a pay item for borrow is not listed in the bid schedule;

(g) Loose scattered rocks removed and placed as required within the roadway;

(h) Conserved material taken from pre-existing stockpiles and used in Section 204 work, except topsoil measured under 624; and

(i) Slide and slipout material not attributable to the Contractor's method of operation.

(2) Do not include the following in roadway excavation:

(a) Overburden and other spoil material from borrow sources;

(b) Overbreakage from the backslope in rock excavation;

(c) Water or other liquid material;

(d) Material used for purposes other than required;

(e) Roadbed material scarified in place and not removed;

(f) Material excavated when stepping cut slopes;

(g) Material excavated when rounding cut slopes;

(h) Preparing foundations for embankment construction;

(i) Material excavated when benching for embankments;

(j) Slide or slipout material attributable to the Contractor's method of operation;

(k) Conserved material taken from stockpiles constructed at the option of the Contractor;

(l) Material excavated outside the established slope limits; and

(m) Road pioneering for the convenience of the Contractor.

(3) When both roadway excavation and embankment construction pay items are listed in the bid schedule, measure roadway excavation only for the following:

(a) Unsuitable material below subgrade in cuts and unsuitable material beneath embankment areas when a pay item for subexcavation is not listed in the bid schedule;

(b) Slide and slipout material not attributable to the Contractor’s method of operations; and

(c) Drainage ditches, channel changes, and diversion ditches.

(b) Unclassified borrow, and topping. When measuring by the cubic yard (cubic meter) measure in its original position. If borrow excavation is measured by the cubic yard (cubic meter) in-place, take initial cross-sections of the ground surface after stripping overburden. Upon completion of excavation and after the borrow source waste material is returned to the source, retake cross-sections before replacing the overburden. Do not measure borrow excavation until suitable roadway excavation is depleted.

(c) Embankment construction. Measure embankment construction in its final position. Do not make deductions from the embankment construction quantity for the volume of minor structures.

(1) Include the following volumes in embankment construction:

(a) Roadway embankments;

(b) Material used to backfill subexcavated areas, holes, pits, and other depressions;

(c) Material used to restore obliterated roadbeds to original contours; and

(d) Material used for dikes, ramps, mounds, and berms.

(2) Do not include the following in embankment construction:

(a) Preparing foundations for embankment construction;

(b) Adjustments for subsidence or settlement of the embankment or of the foundation on which the embankment is placed; and

(c) Material used to round fill slopes.

(d) Rounding cut slopes. If a pay item for slope rounding is included in the bid schedule measure rounding cut slopes horizontally along the centerline of the roadway. If a pay item is not included for slope rounding is not included in the bid schedule payment will be considered indirect to roadway excavation.

(e) Waste. Measure waste by the cubic yard (cubic meter) in its final position. Take initial cross-sections of the ground surface after stripping over-burden. Upon completion of the waste placement, retake cross-sections before replacing overburden.

(f) Slope scaling. Measure slope scaling by the cubic yard (cubic meter) in the hauling vehicle.

(g) Subexcavation. Measure subexcavation by the cubic yard (cubic meter) in its original position.

(h) Drainage features. Measurement includes all excavation, embankment, shaping, and grading necessary for a completed drainage feature.

Payment

204.17 The accepted quantities will be paid at the contract price per unit of measurement for the Section 204 pay items listed in the bid schedule. Payment will be full compensation for the work prescribed in this Section. See Subsection 109.05.

Table 204-1
Sampling, Testing, and Acceptance Requirements

Material or Product (Subsection)	Type of Acceptance (Subsection)	Characteristic	Category	Test Methods Specifications	Sampling Frequency	Point of Sampling	Split Sample	Reporting Time
Source								
Topping (704.05)	Measured and tested for conformance (106.04 & 105)	Classification[1]	–	AASHTO M 145	1 per soil type and source of material	Processed material	Yes	Before using in work
Unclassified borrow (704.06)	"	"	–	"	"	"	"	"
Production								
Topping (704.05) and (204.11(a))	Measured and tested for conformance (106.04)	Moisture-density	–	T 99, Method C[2]	1 per soil type, but not less than 1 per each 13,000 yd^3 (10,000 m^3)	Processed material	Yes	Before using in work
		Density	–	AASHTO T 310 or other approved procedures	1 per 3500 yd^2 (3000 m^2), but not less than 3 per layer	In-place	No	Before placement of next layer
Unclassified borrow (704.06) and (204.11(a))	"	Moisture-density	–	T 99, Method C[2]	1 per soil type, but not less than 1 per each 13,000 yd^3 (10,000 m^3)	Processed material	Yes	Before using in work

Table 204-1
Sampling, Testing, and Acceptance Requirements

Material or Product (Subsection)	Type of Acceptance (Subsection)	Characteristic	Category	Test Methods Specifications	Sampling Frequency	Point of Sampling	Split Sample	Reporting Time
		Density	–	AASHTO T 310 or other approved procedures	1 per 3500 yd^2 (3000 m^2), but not less than 3 per layer	In-place	No	Before placement of next layer
Production (continued)								
Earth embankment (204.11(a))	Measured and tested for conformance (106.04)	Classification	–	AASHTO M 145	1 per soil type	Source of material	Yes	Before using in work
		Moisture-density	–	T 99, Method C[(2)]	1 per soil type, but not less than 1 per each 13,000 yd^3 (10,000 m^3)	"	"	"
		Density	–	AASHTO T 310 or other approved procedures	1 per 3500 yd^2 (3000 m^2), but not less than 3 per layer	In-place	No	Before placement of next layer
Top of subgrade (204.11(a))	"	Density	–	AASHTO T 310 or other approved procedures	1 per 2500 yd^2 (2000 m^2), but not less than 3 per layer	In-place	No	Before placement of next layer
Finished Product								

Table 204-1
Sampling, Testing, and Acceptance Requirements

Material or Product (Subsection)	Type of Acceptance (Subsection)	Characteristic	Category	Test Methods Specifications	Sampling Frequency	Point of Sampling	Split Sample	Reporting Time
Roadbed (204.13)	Measured and tested for conformance (106.04)	Final line & grade	–	Field measured	Determined by the CO	Determined by the CO	No	Before placement of next layer

(1) Not required when using Government-provided source.
(2) Minimum 5 points per proctor.

Table 204-2
Construction Tolerances

Location	Tolerance Class (a)												
	A	B	C	D	E	F	G	H	I	J	K	L	M
Roadbed width (ft)	+0.5	+0.5	+1.0	+1.0	+1.0	+1.0	+1.5	+1.0	+2.0	+2.0	+2.0	+2.0	+2.0
Subgrade elevation (ft)	±0.1	±0.2	±0.2	±0.5	±0.5	±1.0	±1.0	±1.5	±2.0	±3.0	±2.0	±3.0	(c)
Centerline alignment (ft)	±0.2	±0.2	±0.5	±0.5	±1.0	±1.0	±1.5	±1.5	±2.0	±3.0	±3.0	±5.0	(c)
Slopes, excavation, and embankment (% slope[b])	±3	±5	±5	±5	±5	±5	±10	±10	±10	±10	±20	±20	±20

(a) Maximum allowable deviation from construction stakes and drawings.
(b) Maximum allowable deviation from staked slope measured from slope stakes or hinge points.
(c) Unless otherwise shown the centerline alignment and subgrade elevation, as built, have no horizontal curves with a radius of less than 80 feet, and no vertical curves with a curve length of less than 80 feet when the algebraic difference in the grade change is less than 10 percent, or a curve length of less than 100 feet when the algebraic difference of the grade change is greater than or equal to 10 percent. The centerline grade is not to exceed 20 percent in 100 feet of length.

303 - Road Reconditioning

303.00_Forest_1_23_2020

Delete Section 303 in its entirety and replace with the following.

Section 303. — ROAD RECONDITIONING

Description

303.01 This work consists of reconditioning ditches, shoulders, roadbeds, and aggregate surfaces.

Material

303.02 N/A.

Construction Requirements

303.03 Ditch Reconditioning. Remove all slide material, sediment, vegetation, blowdown, and other debris from ditches and culvert inlets/outlets. Reshape ditches and culvert inlets/outlets to achieve positive drainage ad uniform ditch width, depth, and grade. Dispose of waste material on the downhill side of the road away from any live streams.

303.04 Shoulder Reconditioning. Remove all slide material, sediment, vegetation, blowdown, and other debris from existing shoulders including parking areas, turnouts, and other widened areas. Repair soft and unstable areas according to Subsection 204.07. Reshape shoulders. Dispose of waste material on the downhill side of the road away from any live streams.

303.05 Roadbed Reconditioning. Remove all slide material, sediment, vegetation, blowdown, and other debris from the roadbed. Dispose of waste material on the downhill side of the road away from live streams. Materials dislodged by work activities such as rocks, roots, branches, and trees shall be removed from the roadway and ditches. Pull any trees larger than 2 inches in diameter. Repair holes, soft, and unstable areas according to Subsection 204.07. Compact according to Subsection 204.11.

303.06 Aggregate Surface Reconditioning. Repair soft and unstable areas to the full aggregate surface according to Subsection 204.07. Remove irregularities and shape to a uniform surface. Finish and compact the surface according to Subsection 302.05.

303.07 Roadway Reconditioning. Perform applicable work described in Subsections 303.03 through 303.06.

303.08 Acceptance. Road Reconditioning work will be evaluated under Subsection 106.02. The road will be smooth, uniform appearance, and free from any debris.

Measurement

303.09 Measure the Section 303 pay items listed in the bid schedule according to Subsection 109.02.

Payment

303.10 The accepted quantities will be paid at the contract price per unit of measurement for the Section 303 pay items listed in the bid schedule. Payment will be full compensation for the work prescribed in this Section. See Subsection 109.05.

633 - Permanent Traffic Control

633.00_National_11_8_2016

Delete the first sentence of Subsection 633.02 and replace with the following:

633.02 Material.

Conform to the MUTCD, USDA Forest Service EM-7100-15, and the following Section and Subsections:

Make the following changes to Subsection 633.03:

633.03 General.

Delete the first paragraph of Subsection 633.03 and replace with the following:

Furnish and install permanent traffic control devices according to the MUTCD, USDA Forest Service EM-7100-15 and permanent traffic control plans. Provide traffic control devices that are crashworthy.

Add the following sentence to Subsection 633.03:

Sign panel layout proofs shall be approved by the CO prior to ordering.

Add the following to Subsection 633.05(a):

633.05 (a) Fabrication.

(3) Protective Overlay Film. When specified, cover the entire face of a sign with a clear high-performance, solvent-resistant, ultraviolet-stabilized, pressure-sensitive adhesive, protective overlay film. Use 3M Scotchlite Premium Protective Overlay Film Series 1160 or approved equivalent.

(4) Edge Film. When specified, edge film shall be 3 inches wide vinyl film that is pressure-sensitive, premium quality, clear, and ultraviolet-resistant.