80LARC26R0002

EXHIBIT C

Access to Space Requirements Document (ATSRD)

For

Geostationary Littoral Imaging and Monitoring Radiometer (GLIMR) Access to Space (ATS)

Version 1.0

August 10, 2026

REVISION HISTORY PAGE

Revision No.	Description	Release Date
Preliminary	Initial release, for use on GLIMR Mission Access to Space Industry Concept Study	2/20/2024
Preliminary, V0.1	Removed CUI classification Added orbit reference frame figure 3-3 Added clarifying notes Renumbered requirements Divided SOC responsibilities between GMOC and GSDS; updated Architecture Figure Added list of remaining TBD & TBC items Additional editorial updates	2/28/2026
Preliminary, V0.	Updated additional figures Incorporated peer review revisions Updated contamination requirements Updated environmental limit levels	6/25/2026
Baseline, V1.0	Approved release for request for proposal	7/1/2026
Baseline, V1.0	Updated Document Number for GLIMR Mission Concept of Operations and GLIMR Flight Software User's Guide	8/10/2026

TBD/TBC	Section
TBD	4.11.5 Fault Management / [GLIMR-REQ-134]
TBD	4.11.5 Fault Management / [GLIMR-REQ-135]
TBD	4.11.5 Fault Management / [GLIMR-REQ-136 – GLIMR-REQ-140]
TBC	4.1. General Requirements [GLIMR-REQ-3]
TBC	4.2.2 Clearances / [GLIMR-REQ-12]
TBC	4.2.5 Structural Alignment / [GLIMR-REQ-20]
TBC	4.2.5 Structural Alignment / [GLIMR-REQ-21]
TBC	4.5 EMC/EMI Requirements / [GLIMR-REQ-57]
TBC	4.5 EMC/EMI Requirements / [GLIMR-REQ-58]
TBC	4.5 EMC/EMI Requirements / [GLIMR-REQ-59]
TBC	4.5 EMC/EMI Requirements / [GLIMR-REQ-60]
TBC	4.6 Pointing / [GLIMR-REQ-169, GLIMR-REQ-62, GLIMR-REQ-63]
TBC	4.7 On-Orbit Disturbance Requirements/ [GLIMR-REQ-69 - GLIMR-REQ-71]
TBC	4.8.1 Power / [GLIMR-REQ-181]
TBC	4.8.2 Electrical Interfaces / [GLIMR-REQ-83]
TBC	4.9 Contamination Control / [GLIMR-REQ-97]
TBC	4.11.1 GLIMR Spacecraft Telemetry / [GLIMR-REQ-107, GLIMR-REQ-108]
TBC	4.11.2 Command and Data Handling / [GLIMR-REQ-118]
TBC	4.11.5 Fault Management / [GLIMR-REQ-131]
TBC	4.12.2 Command Uploads / [GLIMR-REQ-147]
TBC	4.12.3 Telemetry Downloads / [GLIMR-REQ-152]
TBC	4.12.3 Telemetry Downloads / [GLIMR-REQ-153]
TBC	4.12.3 Telemetry Downloads / [GLIMR-REQ-190]
TBC	4.12.3 Telemetry Downloads / [GLIMR-REQ-190]
TBC	4.12.4 GLIMR Payload Anomaly Reporting / [GLIMR-REQ-157, GLIMR-REQ-192, GLIMR-REQ-193]
TBC	4.12.5 GLIMR Spacecraft Communications / [GLIMR-REQ-156]
TBC	4.12.5 GLIMR Spacecraft Communications / [GLIMR-REQ-158]

Table of Contents

1 INTRODUCTION 8
1.1 Scope and Purpose 8
1.2 Document Organization 8
2 DOCUMENTS 8
2.1 Applicable Documents 8
2.2 Reference Documents 9
2.3 Document Control 9
3 SYSTEM DESCRIPTION 9
3.1 Mission Description 9
3.2 Mission Success Criteria 10
3.3 System Architecture 10
3.3.1 GLIMR Data Flow 11
3.4 GLIMR Payload Description 13
3.4.1 Sensor Assembly 13
3.4.2 Payload Control Unit 14
3.4.3 Digital Encoder Box 14
3.4.4 Dust Cover 14
3.5 Coordinate System Definition 15
3.5.1 Stowed Position 15
3.5.2 Gimbal Range of Travel 16
4 REQUIREMENTS 17
4.1 General Requirements 18
4.2 Mechanical Requirements 19
4.2.1 Mechanical Payload Interfaces 19
4.2.2 Clearances 23
4.2.3 Payload Volumes 24
4.2.4 Field of View 29
4.2.5 Structural Alignment 31
4.2.6 Mass Properties 33
4.3 Structural Launch Environment Requirements 35
4.3.1 Quasi-Static Acceleration Environment 35
4.3.2 Random Vibration Environment 37

4.3.3 Sinusoidal Vibration Environment 41
4.3.4 Acoustic Environment 43
4.3.5 Shock 44
4.3.6 Launch Pressure Profile 47
4.3.7 Minimum Natural Frequency 48
4.4 Thermal Requirements 51
4.4.1 Heat Transfer 51
4.4.2 Temperature Ranges 53
4.4.3 Radiator Back Loading 55
4.5 EMC/EMI Requirements 57
4.6 Pointing 63
4.7 On-Orbit Disturbance Requirements 69
4.8 Electrical 74
4.8.1 Power 74
4.8.2 Electrical Interfaces 81
4.9 Contamination Control 87
4.10 GLIMR Spacecraft Facility Environments 92
4.11 GLIMR Spacecraft Operations Requirements 93
4.11.1 GLIMR Spacecraft Telemetry 93
4.11.2 Command and Data Handling 96
4.11.3 Power On Commands 99
4.11.4 Safing Commands 101
4.11.5 Fault Management 102
4.12 GLIMR Spacecraft Mission Operations Center 105
4.12.1 General Communication 105
4.12.2 Command Uploads 106
4.12.3 Telemetry Downloads 109
4.12.4 GLIMR Payload Anomaly Reporting 111
4.12.5 GLIMR Spacecraft Communication 112
5 APPENDICES 114
5.1 Appendix A: Acronyms 114
5.2 Appendix B: Glossary 116
5.3 Appendix C: Requirement Summary Table 119

Table of Tables

Table 4-1: Sensor Assembly Stowed Volume (example only - see D4957031-500).....24
Table 4-2: Sensor Assembly Swept Volume (example only - see D4957031-500).....25
Table 4-3: PCU Volume (example only - see D4957031-500).....27
Table 4-4: DEB Volume (example only - see D4957031-500) 28
Table 4-5: Sensor Assembly Maximum Acceleration Limits.....36
Table 4-6: PCU Maximum Acceleration Limits.....36
Table 4-7: DEB Maximum Acceleration Limits.....37
Table 4-8: Sensor Assembly Random Vibration Proto-Flight Limit Levels 38
Table 4-9: Sensor Assembly Random Vibration Proto-Flight Limit Profile 38
Table 4-10: PCU Random Vibration Proto-Flight Limit Levels.....39
Table 4-11: PCU Random Vibration Proto-Flight Limit Profile (Q = 25).....39
Table 4-12: DEB Random Vibration Proto-Flight Limit Levels 40
Table 4-13: DEB Random Vibration Proto-Flight Limit Profile (Q = 25) 40
Table 4-14: Payload Sensor Assembly Sinusoidal Test Limit Levels 41
Table 4-15: PCU Sinusoidal Test Limit Levels 42
Table 4-16: DEB Sinusoidal Test Limit Levels.....42
Table 4-17: Acoustic Test Limit Levels.....44
Table 4-18: Sensor Assembly Shock Limit Levels.....45
Table 4-19: PCU Shock Limit Levels.....45
Table 4-20: DEB Shock Limit Levels.....46
Table 4-21: Dust Cover Limit Levels 47
Table 4-22: Attitude Knowledge Errors.....65
Table 4-23: Angular Rate Errors.....67
Table 4-24: Low-Frequency Spacecraft-to-Payload Angular Disturbance Environment.....69
Table 4-25: High-Frequency Spacecraft-to-Payload Rotational Displacement PSD Specification ...70
Table 4-26: Spacecraft-to-Payload Rotational Disturbance Allowable Energy.....71
Table 4-27: Spacecraft-to-Payload Translational Acceleration PSD Specification.....72
Table 4-28: Spacecraft-to-Payload Translational Disturbance Allowable Energy 73
Table 4-29: Uncompensated Torque Values per Axis 73
Table 4-30: Transient Inrush Current Limits 79
Table 4-31: Maximum Steady State Current.....81
Table 4-32: GN2 Purge Rates 88
Table 4-33: Prelaunch Environments.....92

Table of Figures

Figure 3-1: GLIMR Architecture Block Diagram....10
Figure 3-2: GLIMR Data Flow....12
Figure 3-3: Payload Components (harnesses not shown)....13
Figure 3-4: Orbit Reference Frame (ORF)....15
Figure 3-5: GLIMR Stowed Position - +23-deg. Elevation....16
Figure 3-6: GLIMR Stowed Position – +44.8 deg. Azimuth....16
Figure 4-1: Sensor Assembly Mounting Interface (example only – see D4957031-500)....19
Figure 4-2: PCU Mounting Interface (example only – see D4957031-500)....20
Figure 4-3: DEB Mounting Interface (example only – see D4957031-500)....21
Figure 4-4: Dust Cover Relative Position....22
Figure 4-5: Dust Cover Dimensions....23
Figure 4-6: Graphical Representation of Stowed Volume (example only – see D4957031-500)....25
Figure 4-7: Graphical Representation of Swept Volume (example only – see D4957031-500)....26
Figure 4-8: Payload Control Unit Dimensions (example only - see D4957031-500)....27
Figure 4-9: Decoder Electronics Box Dimensions (example only - see D4957031-500)....29
Figure 4-10: Payload Field of View Keep Out Zone....30
Figure 4-11: Radiator Field of View....31
Figure 4-12: GLIMR unit-specific local coordinate systems used for structural analysis....35
Figure 4-13: CE102 Limit (EUT power leads, AC and DC) for all applications (see MIL-STD-461G Figure CE102-1)....58
Figure 4-14: CS101 voltage limit for all applications (see MIL-STD-461G Figure CS101-1)....59
Figure 4-15: RE102 limit for aircraft and space system applications (see MIL-STD-461G Figure RE102-3)....60
Figure 4-16: RS103 Limits....61
Figure 4-17: Rotational Displacement PSD Specification....71
Figure 4-18: Translational Acceleration PSD Specification....72
Figure 4-19: Payload to GLIMR Electronic Interfaces....74
Figure 4-20: Conducted Inrush Current, Primary Power Loads....80

1 INTRODUCTION

1.1 Scope and Purpose

This document establishes the Geostationary Littoral Imaging and Monitoring Radiometer (GLIMR) Access to Space requirements. This document includes both the functional and performance requirements.

1.2 Document Organization

Section 2 lists applicable and reference documents. Section 3 provides an overview of the GLIMR mission. Section 4 contains the functional and performance requirements. Appendix A provides acronyms, Appendix B provides a Glossary, and Appendix C provides a summary table of requirements.

2 DOCUMENTS

Section 2.1 identifies documents that are applicable to this specification and are referenced within requirement text. The documents' version at the time of Request for Proposal release is considered applicable unless otherwise noted. Section 2.2 Reference Documents are for information only.

The GLIMR Access to Space Statement of Work (SOW) references this requirements document, and the SOW has precedence in the event of any discrepancies.

2.1 Applicable Documents

Document Number	Document Title
ASTM E 595	Standard Test Method for Total Mass Loss and Collected Volatile Condensable Materials from Outgassing in a Vacuum Environment
D4957031-500	GLIMR Instrument Installation Control Drawing (IICD)
IEST-STD-CC1246	Product Cleanliness Levels and Contamination Control Program
MIL-PRF-27401	Performance Specification for Propellant Pressurizing Agent, Nitrogen
MIL-STD-461	Requirements for the Control of Electromagnetic Interference Characteristics of Subsystems and Equipment
NASA-STD-4003	Electrical Bonding for NASA Launch Vehicles, Spacecraft, Payloads, and Flight Equipment
NPR 7150.2	NASA Software Engineering Requirements
GLIMR-06-002	GLIMR Payload to GLIMR Spacecraft Interface Definition Document (IDD)
USNO Circular 179	The IAU Resolutions on Astronomical Reference Systems, Time Scales, and Earth Rotation Models

2.2 Reference Documents

Document Number	Document Title
GLIMR SE-04	GLIMR Concept of Operations Document
GLIMR SW-08	GLIMR Flight Software User's Guide

2.3 Document Control

This document is managed by the Earth System Science Pathfinder (ESSP) Program Office. After initial approval, it will be placed under formal configuration control.

3 SYSTEM DESCRIPTION

This section describes the system architecture for the GLIMR mission and provides context for requirements in Section 4. Refer to the GLIMR Concept of Operations Document (GLIMR SE-04) for a more thorough description of the mission functions and operations.

3.1 Mission Description

GLIMR is a hyperspectral ocean color sensor which targets the Gulf of America and other coastal and ocean waters of North and South America. With its vantage point from geostationary orbit, GLIMR will be the first hyperspectral ocean color sensor in the Western Hemisphere to study ocean processes at the diurnal timescales required to observe the dynamic ecological, biogeochemical, and physical processes typical of coastal and ocean waters. GLIMR is uniquely designed to capture the spatiotemporal evolution of phytoplankton blooms, which grow and dissipate on scales of hours to days, monitor phytoplankton physiology, growth rates and shifts in community composition, resolve coastal features, fronts, eddies, and upwelling features, and monitor biogeochemical fluxes and land-ocean exchanges at sub-diurnal to multi-day scales. GLIMR will improve quantification of primary productivity, biomass, and carbon fluxes within coastal aquatic ecosystems and across the land-sea interface and contribute observations that will aid development and evaluation of models that project future changes in carbon cycling and marine ecosystems for use in ecological forecasting and as inputs for improved climate change predictions. The two main science goals of GLIMR are (1) to understand the processes contributing to rapid changes in phytoplankton growth rate and community composition, and (2) quantify how high frequency fluxes of sediments, organic matter, and other materials between and within coastal ecosystems regulate the productivity and health of coastal ecosystems. The science application objectives aim to study the formation, magnitude, and trajectories of harmful algal blooms, oil spills, and Sargassum accumulation events.

At the heart of the GLIMR payload is a hyperspectral imaging spectrometer with a spectral range between 340-1040nm, a spectral resolution of about 10 nm, and the capability to scan the Gulf of America in about 70 minutes. A higher spatial resolution landmark imager co-aligned with the spectrometer enables image navigation and registration of the ocean color pixels collected by the

spectrometer. A 28 cm diameter telescope provides high throughput and magnification for high signal to noise and spatial resolution.

3.2 Mission Success Criteria

The GLIMR mission will be considered successful if:

a) The mission acquires radiometric observations from geostationary orbit;
b) The mission produces a suite of ocean science products over a diurnal cycle over the northern Gulf of America of sufficient quality to improve scientific knowledge of phytoplankton ecology within and between ocean ecosystems;
c) The mission produces a suite of ocean science products over a diurnal cycle over the northern Gulf of America of sufficient quality to improve scientific knowledge of fluxes of optically active constituents within and between ocean ecosystems; and
d) The mission records, publishes, and delivers for archival science products to an ESD-assigned OB-DAAC for public distribution and use by the scientific and applications communities.

3.3 System Architecture

The GLIMR Architecture is illustrated in Figure 3-1. The GLIMR Mission is decomposed into four segments: the Ground Segment, the Space Segment, the Launch Segment, and the Science Segment.

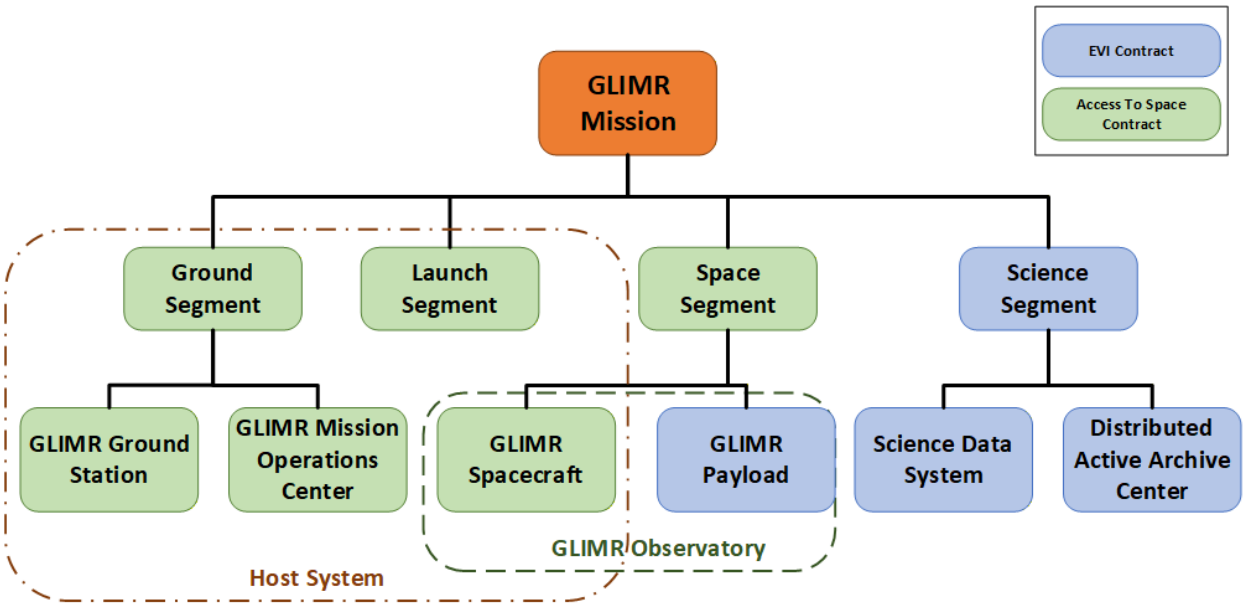

Figure 3-1: GLIMR Architecture Block Diagram

The GLIMR Ground Segment consists of the GLIMR Ground Station and the GLIMR Mission Operations Center (GMOC), as well as any data teleports, antennas, and terrestrial networks needed to provide communications with the GLIMR Spacecraft and the GLIMR Science Data System (GSDS). The primary functions of the Ground Segment are to command the GLIMR Spacecraft and its payload(s), to monitor the GLIMR Spacecraft and its payloads' health and status telemetry, and to receive data from the payload(s) via the GLIMR Spacecraft to the GMOC for use by the Science Segment.

The GLIMR Space Segment consists of the GLIMR Spacecraft and the GLIMR Payload. The GLIMR Spacecraft denotes the space platform proposed by the GLIMR Access to Space Contractor to host the GLIMR Payload. The GLIMR Spacecraft includes all the on-orbit systems required to host the GLIMR payload in a geostationary orbit and to receive, store, and forward GLIMR commands to the GLIMR Payload, and transmit health, status, and science data to the GMOC. The GLIMR Space Segment also includes any required transportation to the launch provider after the initial GLIMR Payload government delivery of the GLIMR Payload to the GLIMR Spacecraft facilities.

The GLIMR payload is designed to survive specific environmental conditions once integrated with the GLIMR Spacecraft including pre-launch environmental testing, launch, orbit transfer, and on-orbit operations. When the GLIMR payload and the GLIMR Spacecraft are integrated, the term GLIMR Observatory is used.

The Launch Segment denotes the launch vehicle and all services provided by the launch provider to place the GLIMR Spacecraft and payload(s) into the required orbit.

The term GLIMR Host System is used when referencing the GLIMR Access to Space Contractor-provided combination of the GLIMR Ground Station, GMOC, GLIMR Spacecraft, and the launch vehicle.

The GLIMR Science Segment consists of the GLIMR Science Data System (GSDS) and the Earth Science Division (ESD)-assigned Ocean Biology Distributed Active Archive Center(s) (OB-DAAC).

3.3.1 GLIMR Data Flow

Figure 3-2 shows the planned data exchanges for the GLIMR mission during orbit operations. Telemetry consists of the GLIMR Payload and spacecraft health and status data as well as the science data collected by the GLIMR Payload.

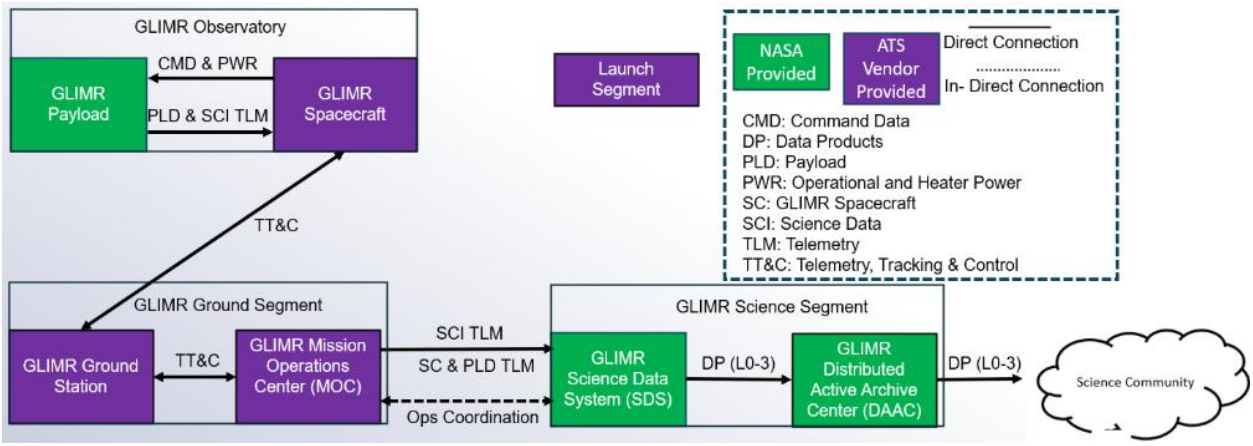

Figure 3-2: GLIMR Data Flow

3.3.1.1 Power

The GLIMR Spacecraft provides power to itself and the GLIMR Payload.

3.3.1.2 Commands

The GMOC generates commands for the GLIMR Spacecraft and GLIMR Payload to complete science Viewing Requests. The GMOC sends commands to the Ground Station, which forwards them to the GLIMR Spacecraft. The GLIMR Spacecraft and GLIMR Payload receive and execute the commands to gather telemetry for the science products.

3.3.1.3 Telemetry

The GLIMR Payload and GLIMR Spacecraft obtain telemetry and the GLIMR Spacecraft sends it to the Ground Station, which forwards the telemetry to the GMOC. Telemetry consists of GLIMR Spacecraft health & status, GLIMR Payload health & status, and GLIMR Payload science data. The GMOC uses the telemetry to safely operate the GLIMR Spacecraft and GLIMR Payload and forwards the telemetry to the GSDS.

3.3.1.4 L0-L3 Products

The GSDS uses the science and telemetry data provided by the GMOC to perform the data processing needed to generate the L0 to L3 levels of science products. The GSDS provides recording, publication, and delivery of science data records and calibrated geophysical data products to the DAAC for data product distribution to the scientific community and data archival.

3.3.1.5 Viewing Requests

The Principal Investigator leads the science community that studies the L0-L3 Products and determines the areas of interest for the GLIMR Payload to scan. These Viewing Requests are sent by the GSDS to the GMOC. Operators at the GMOC receive the Viewing Requests and generate the necessary commands to complete the requests.

3.4 GLIMR Payload Description

The complete GLIMR payload is made up of four components: the sensor assembly, the Payload Control Unit (PCU), the Decoder Electronics Box (DEB), and the dust cover, shown in Figure 3-3Error! Reference source not found.. The term "sensor assembly" refers to the collection of all GLIMR Payload subsystems except for the PCU, DEB, and dust cover.

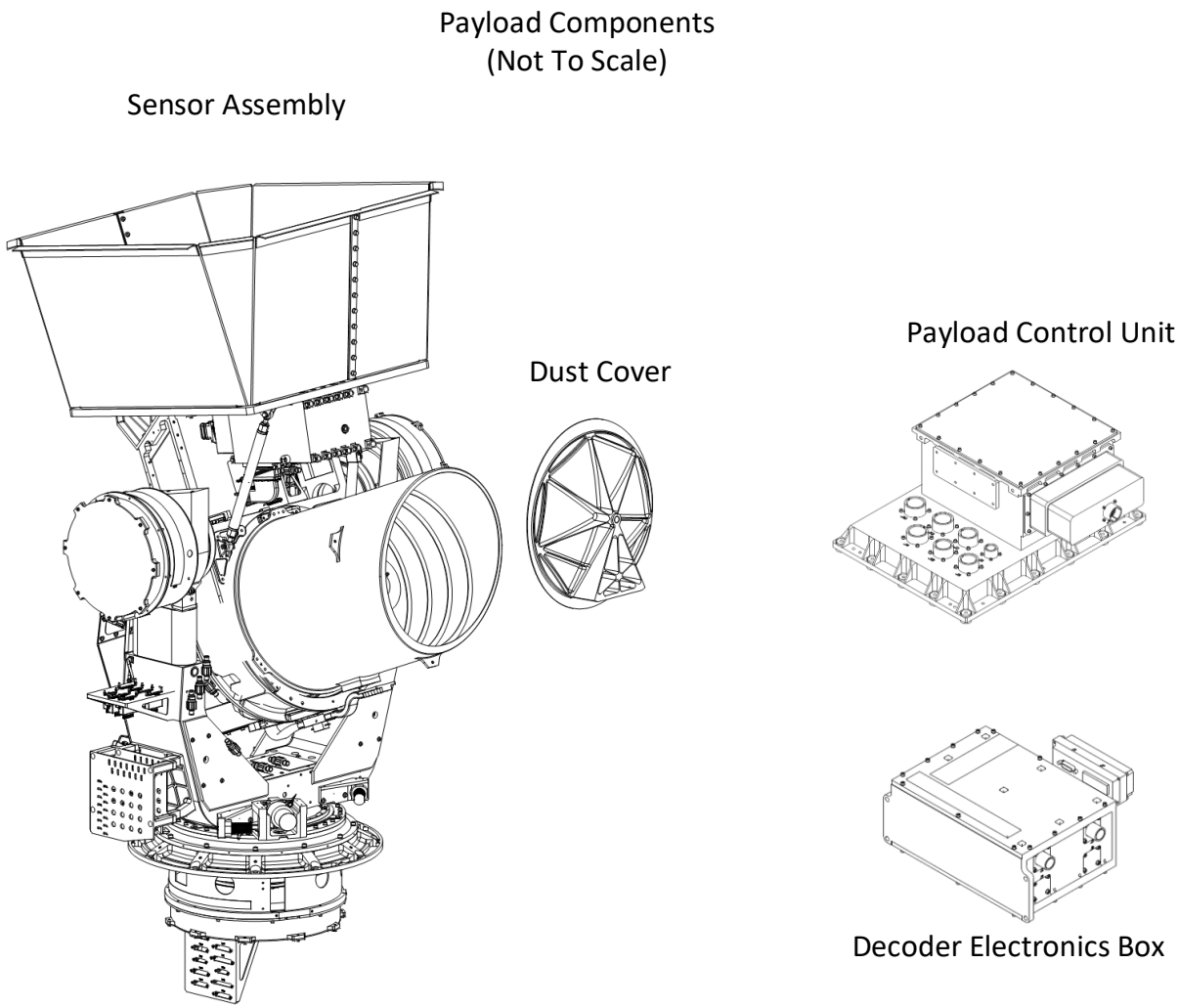

Figure 3-3: Payload Components (harnesses not shown)

3.4.1 Sensor Assembly

The fully integrated sensor assembly consists of the gimbal assembly, the telescope assembly, and portions of the heat exchange subsystem.

3.4.1.1 Gimbal Assembly Subsystem

The Gimbal Assembly Subsystem is the part of the payload that is commanded in azimuth and elevation across the various scan regions. Each of the two axes contains bearings, a motor, and an optical encoder for position monitoring.

3.4.1.2 Telescope Assembly Subsystem

The Telescope Assembly Subsystem collects the optical signal from the scene and contains a barrel-like sunshade for mitigating stray light onto the detectors. Out of the back of the telescope assembly, the incoming light is directed through the telecentric relay towards the Landmark Imager (LMI) used for geolocation and the Hyperspectral Imager (HSI) used to collect science data.

3.4.1.3 Heat Exchange Subsystem

The payload Heat Exchange Subsystem contains components both physically on and off the sensor assembly. It manages temperatures for the payload with a combination of heaters, radiators, thermal straps, multilayer insulation and custom thermal isolation components. Operational heaters maintain operational temperatures of the gimbal assembly, optical assemblies, payload focal plane arrays, and the spectrometer focal plane array. Survival heaters using bang-bang thermostat control are used to maintain temperatures of all sensor assembly components within their survival limits.

3.4.2 Payload Control Unit

The PCU is the main interface electronics box mounted separately from the sensor assembly and controls the gimbal, distributes power, controls the thermal environment, and interfaces to the GLIMR Spacecraft.

3.4.3 Digital Encoder Box

The DEB contains electronics to integrate sensor assembly encoder read heads and report rotational positions via a serial interface for each axis to the PCU. The DEB is functionally part of the sensor assembly but is mechanically mounted separately from the sensor assembly on the GLIMR Spacecraft structure.

3.4.4 Dust Cover

The payload dust cover dish is mechanically mounted separate from the sensor assembly in a fixed location on the GLIMR Spacecraft structure. When in the stowed position, the telescope is oriented in a position that aligns the telescope sunshade with the dust cover to provide contamination protection during launch and thermal protection during non-observing periods on-orbit.

3.5 Coordinate System Definition

GLIMR uses the community standard coordinate system for Geosynchronous Earth Orbit (GEO) orbit reference frame:

- +Z is in the direction of nadir
- +X is in the direction of orbital velocity
- +Y completes the right-handed system

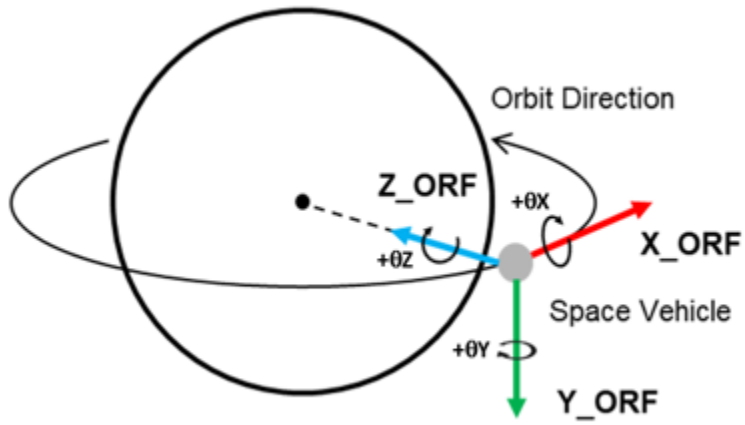

Figure 3-4: Orbit Reference Frame (ORF)

3.5.1 Stowed Position

The gimbal stowed position is Az = 30.8 deg., El = 23 deg.

Nadir is defined as Az = -14 deg., El = 0 deg.

(0 deg. Z_ORF = -14 deg. Az_gimbal)

The following figures show the GLIMR Payload in its stowed position, relative to the orbit reference frame.

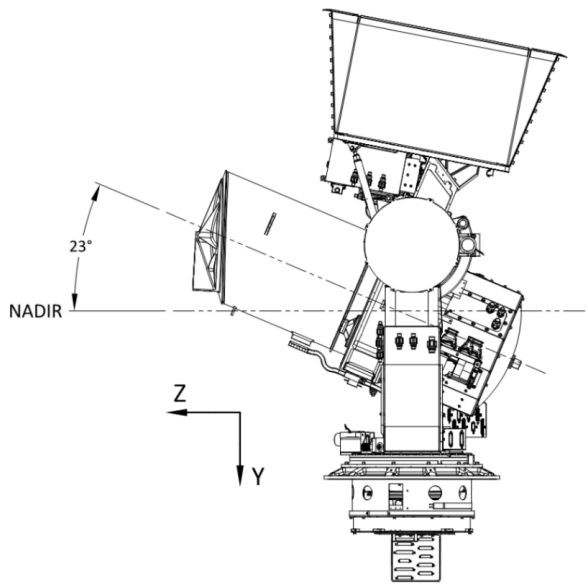

Figure 3-5: GLIMR Stowed Position - +23-deg. Elevation

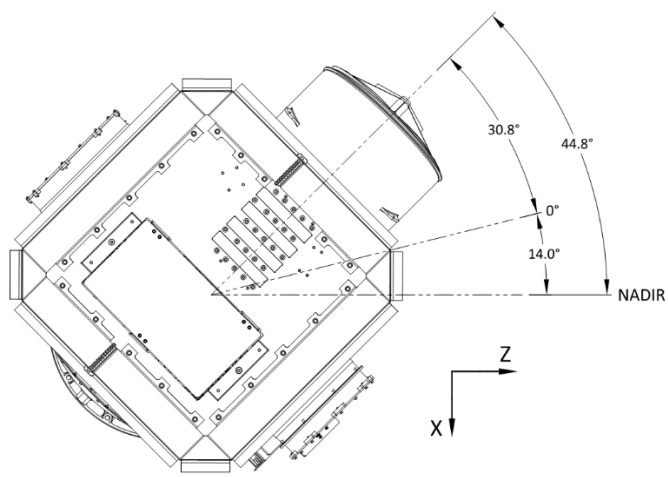

Figure 3-6: GLIMR Stowed Position – +44.8 deg. Azimuth

3.5.2 Gimbal Range of Travel

The gimbal range of travel is:

- Az: +34.5 deg. to -34.5 deg.
- El: +24.0 deg. to -11.4 deg.

4 REQUIREMENTS

This section contains requirements for the GLIMR Access to Space.

The convention used in this document, which indicates requirements, goals, and statements of facts, is as follows:

Shall – Used to indicate a binding requirement

Should/May – Used to indicate a desired goal

Every requirement containing a “shall” is binding and will be verified. Goals are non-binding and are included to guide trade studies and will be addressed at design reviews and technical interchange meetings.

Rationale – Used to provide amplifying information to support the requirement.

Verification Method – Used to designate the expected verification methodology for the requirement. Definitions of the verification methods (test, demonstration, analysis, or inspection) can be found in the glossary.

Verification Description – Used to provide amplifying information to support the methodology for the requirement verification.

Success Criteria – Used to designate the expected pass/fail criteria for the requirement verification.

4.1 General Requirements

[GLIMR-REQ-2] Orbit Insertion

The GLIMR Host System shall insert the GLIMR Payload into a geostationary orbit between 86° W to 110° W longitude.

Rationale: This geosynchronous orbit location of the GLIMR Spacecraft will allow the Gulf of America and other scientifically valuable regions to be imaged.

Verification Method: Analysis

Verification Description: Analysis of planned GLIMR Spacecraft orbit insertion.

Success Criteria: Verification will be considered successful if analysis of orbit insertion planning yields the desired geostationary orbit.

[GLIMR-REQ-3] Mission Duration

The GLIMR Spacecraft shall be able to meet all performance requirements for a minimum 90-day GLIMR Payload commissioning period followed by a 1-year GLIMR Payload science collection mission lifetime with a probability of success of 90% [TBC].

Rationale: This period of time will allow the payload to meet its primary science goals.

Note: Any time required by the GLIMR Spacecraft to reach final orbit location and perform spacecraft commissioning activities is in addition to the time needed by the payload.

Verification Method: Analysis

Verification Description: Analysis of anticipated GLIMR Spacecraft orbit lifetime.

Success Criteria: Verification will be considered successful if analysis of orbit lifetime meets or exceeds requirement.

[GLIMR-REQ-4] Launch Duration

The GLIMR Spacecraft shall transfer the GLIMR Payload from the initial launch orbit to the final geosynchronous orbit within six months.

Rationale: Analysis performed by the payload shows it is capable of surviving Geosynchronous Transfer Orbit conditions for at least six months.

Verification Method: Analysis

Verification Description: Analysis of planned GLIMR Spacecraft orbit insertion.

Success Criteria: Verification will be considered successful if analysis of orbit insertion planning shows that the desired orbit can be achieved within the required timeframe.

4.2 Mechanical Requirements

4.2.1 Mechanical Payload Interfaces

[GLIMR-REQ-7] Sensor Assembly Mechanical Interface

The GLIMR Spacecraft shall mechanically interface with the sensor assembly in accordance with the GLIMR IICD (D4957031-500) and the GLIMR Payload to GLIMR Spacecraft IDD (GLIMR-06-002).

Rationale: The GLIMR IICD (D4957031-500), provides the mechanical interface information that the GLIMR Spacecraft will need for accommodation of the payload. An example is shown in Figure 4-1. This mechanical interface will also need to allow the sensor assembly to meet all structural, thermal, and electrical requirements listed below.

Verification Method: Inspection

Verification Description: Inspection of mechanical drawings and post installation measurements.

Success Criteria: Verification will be considered successful if inspection of mechanical drawings and post installation measurements confirms interface is in accordance with the GLIMR IICD (D4957031-500) and GLIMR Payload to GLIMR Spacecraft IDD (GLIMR-06-002).

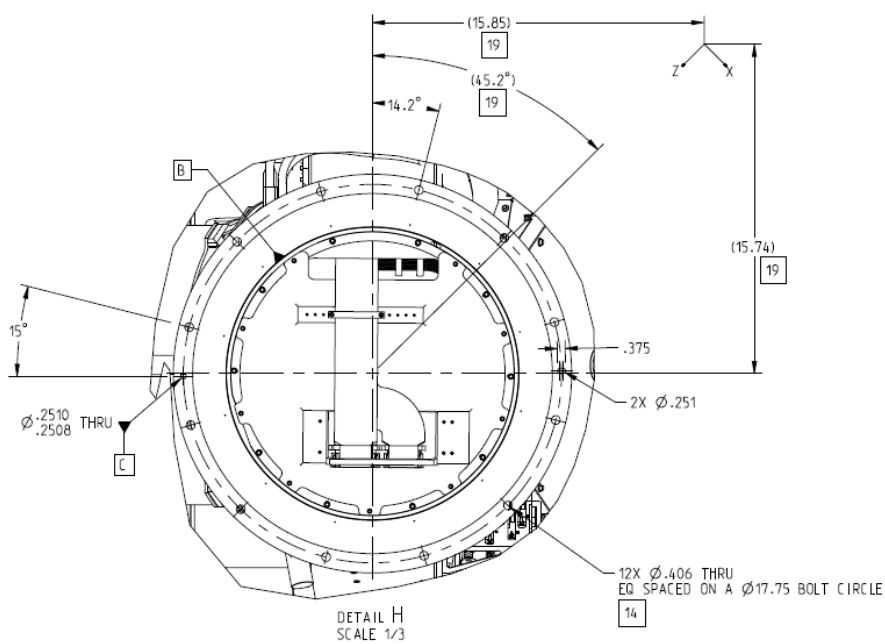

Figure 4-1: Sensor Assembly Mounting Interface (example only – see D4957031-500)

[GLIMR-REQ-8] PCU Mechanical Interface

The GLIMR Spacecraft shall provide the mechanical interface between the GLIMR Spacecraft and the PCU in accordance with the GLIMR IICD (D4957031-500) and the GLIMR Payload to GLIMR Spacecraft IDD (GLIMR-06-002).

Rationale: The GLIMR IICD (D4957031-500) provides the mechanical interface information that the GLIMR Spacecraft will need for accommodation of the PCU. An example is shown in Figure 4-2.

Verification Method: Inspection

Verification Description: Inspection of mechanical drawings and post installation measurements.

Success Criteria: Verification will be considered successful if inspection of mechanical drawings and post installation measurements confirms interface is in accordance with the GLIMR IICD (D4957031-500).

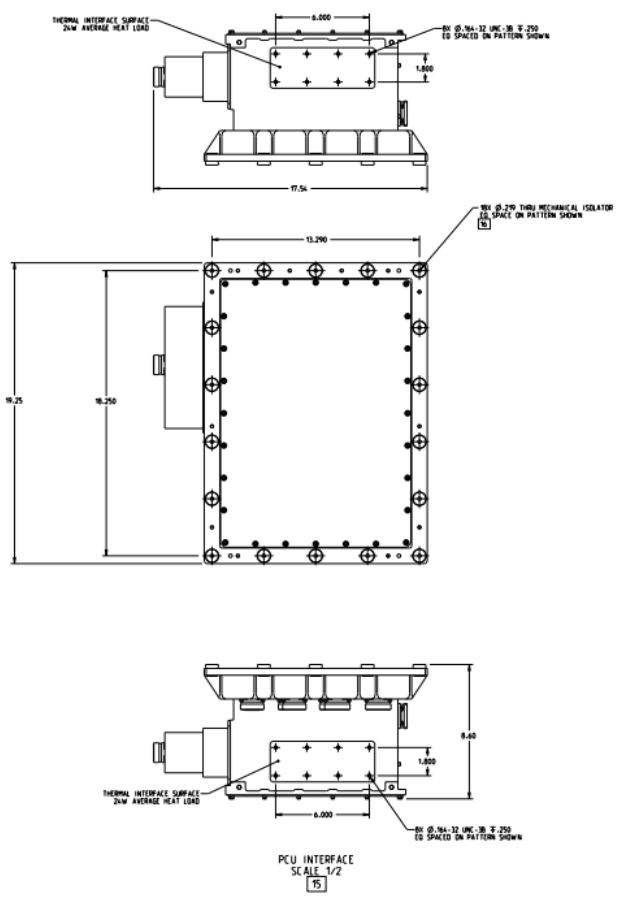

Figure 4-2: PCU Mounting Interface (example only – see D4957031-500)

[GLIMR-REQ-9] DEB Mechanical Interface

The GLIMR Spacecraft shall provide the mechanical interface between the GLIMR Spacecraft and the DEB in accordance with the GLIMR IICD (D4957031-500) and the GLIMR Payload to GLIMR Spacecraft IDD (GLIMR-06-002).

Rationale: The GLIMR IICD provides the mechanical interface information that the GLIMR Spacecraft will need for accommodation of the DEB. An example is shown in Figure 4-3.

Verification Method: Inspection

Verification Description: Inspection of mechanical drawings and post installation measurements.

Success Criteria: Verification will be considered successful if inspection of mechanical drawings and post installation measurements confirms interface is in accordance with the GLIMR Instrument ICD.

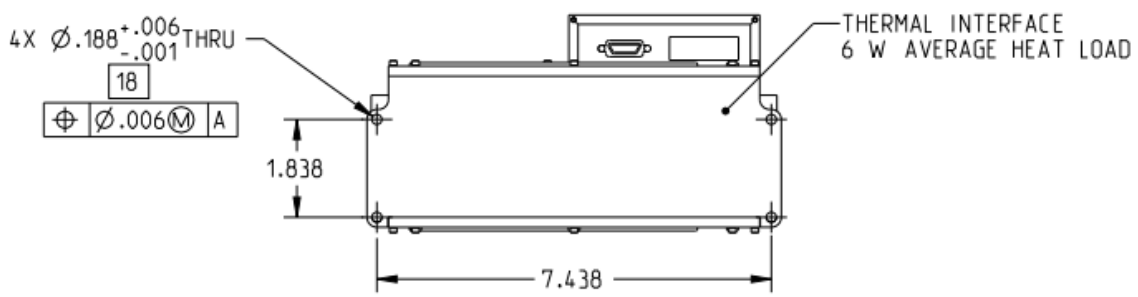

Figure 4-3: DEB Mounting Interface (example only – see D4957031-500)

[GLIMR-REQ-10] Dust Cover Mechanical Interface

The GLIMR Spacecraft shall provide the mechanical interface between the GLIMR Spacecraft and the dust cover which provides the alignment between the fixed dust cover and the telescope sunshade when the GLIMR Payload is in the stowed position, as specified in the GLIMR IICD (D4957031-500) and the GLIMR Payload to GLIMR Spacecraft IDD (GLIMR-06-002).

Rationale: The GLIMR IICD (D4957031-500) provides the mechanical interface information that the GLIMR Spacecraft will need to interface with the dust cover. This interface will provide a 0.25 ± 0.03 inch gap between the fixed dust cover and the telescope sunshade when the payload is in the stowed position. An example is shown in Figure 4-4, with the dimensions of the dust cover provided in Figure 4-5. This dust cover

provides both thermal and contamination avoidance properties for the sensor assembly. Note that both the outer edge of the sunshade and the surface of the dust cover facing the telescope sunshade have a radius of curvature that prevents interference when the telescope moves through its full range of motion.

Verification Method: Inspection

Verification Description: Inspection of mechanical drawings and post installation measurements.

Success Criteria: Verification will be considered successful if inspection of mechanical drawings and post installation measurements confirms interface is in accordance with the GLIMR IICD (D4957031-500).

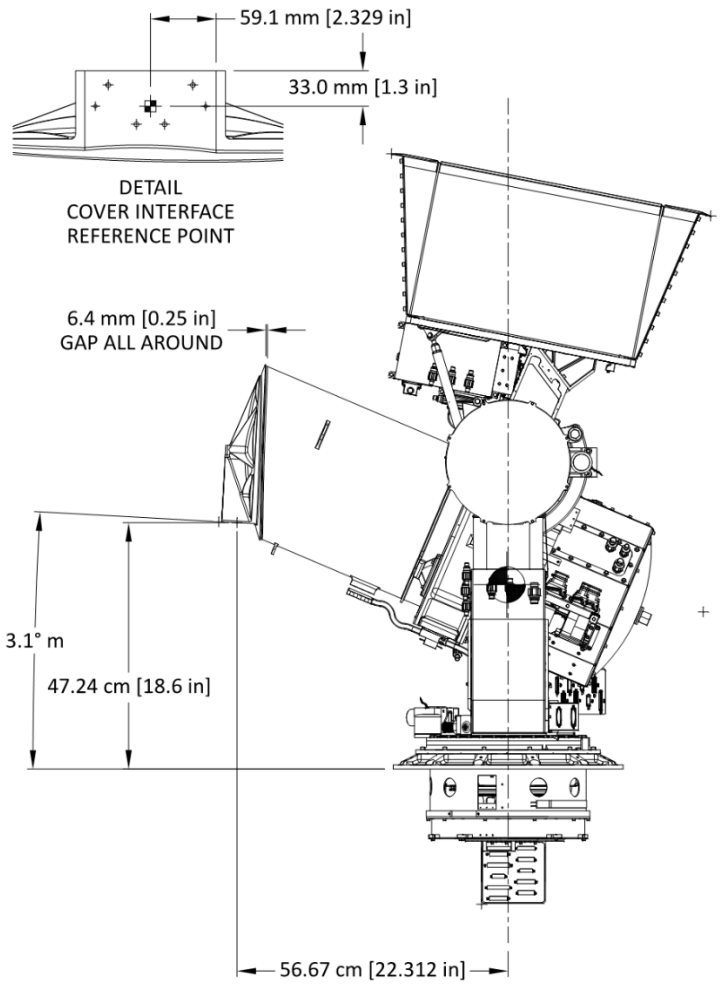

Figure 4-4: Dust Cover Relative Position

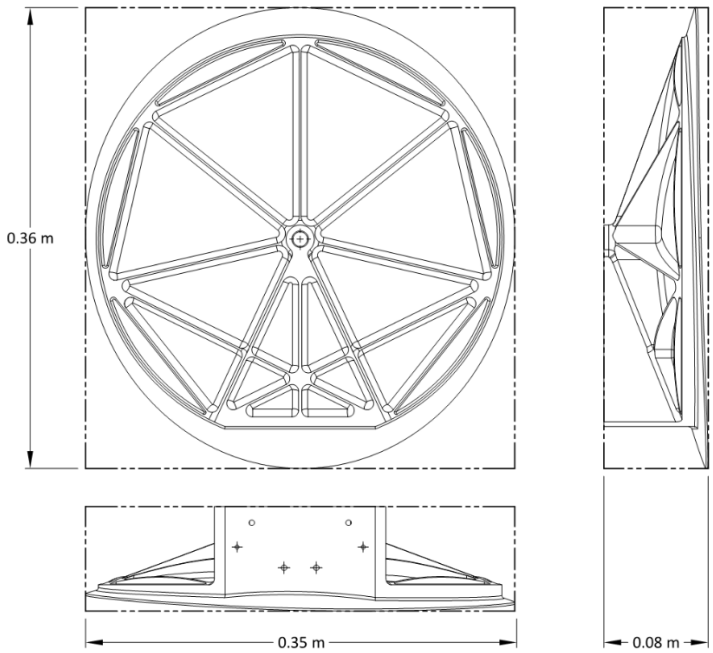

Figure 4-5: Dust Cover Dimensions

4.2.2 Clearances

[GLIMR-REQ-11] Clearance

The GLIMR Spacecraft shall accommodate the GLIMR Payload so as to maintain clearance between the payload and surrounding structures, in order to provide access to payload mounting hardware, access to payload connectors, and space for payload interfacing harness service loops.

Rationale: Sufficient clearance around the payload allows for ease of assembly and disassembly. Sufficient clearance around mated connectors allows for ease of assembly and disassembly, allowing for easier troubleshooting if the need arises, reducing any interface and schedule risk. Ensuring sufficient dynamic clearance between the GLIMR Spacecraft with all payload(s) and the launch vehicle payload fairing is the responsibility of the GLIMR spacecraft provider and the launch vehicle provider.

Verification Method: Inspection

Verification Description: Inspection of installation design.

Success Criteria: Verification will be considered successful if inspection of installation drawings indicates that proper clearance has been maintained and that there is no need for blind mates or the need for removing adjacent components for harness mating/demating.

[GLIMR-REQ-12] Remove Before Flight

The GLIMR Spacecraft shall accommodate the removal of the following items before flight: [TBC]

- Coated optical witness samples
- Cleanliness witness samples
- Soft cover over telescope
- Purge lines

Rationale: Remove before flight items must be easily accessible to avoid any potential oversight or difficulty in procedures.

Verification Method: Inspection

Verification Description: Inspection of installation design.

Success Criteria: Verification will be considered successful if access is confirmed by inspection of drawings or models of the surrounding areas.

4.2.3 Payload Volumes

[GLIMR-REQ-13] Sensor Assembly Stowed Volume

The GLIMR Spacecraft shall provide sufficient volume to accommodate the stowed sensor assembly as detailed in the GLIMR IICD (D4957031-500).

Rationale: Volume of payload is based on as built dimensions. An example is shown in Table 4-1 and Figure 4-6.

Verification Method: Inspection

Verification Description: Inspection of installation design.

Success Criteria: Verification will be considered successful if inspection of installation design confirms volume allocation in accordance with the GLIMR IICD (D4957031-500).

Table 4-1: Sensor Assembly Stowed Volume (example only - see D4957031-500)

Parameter	Maximum Expected Value
x-extent (parallel to orbit)	0.94 m
y-extent (normal to orbit)	1.55 m
z-extent (nadir)	0.95 m
Total Volume	1.4 m^3

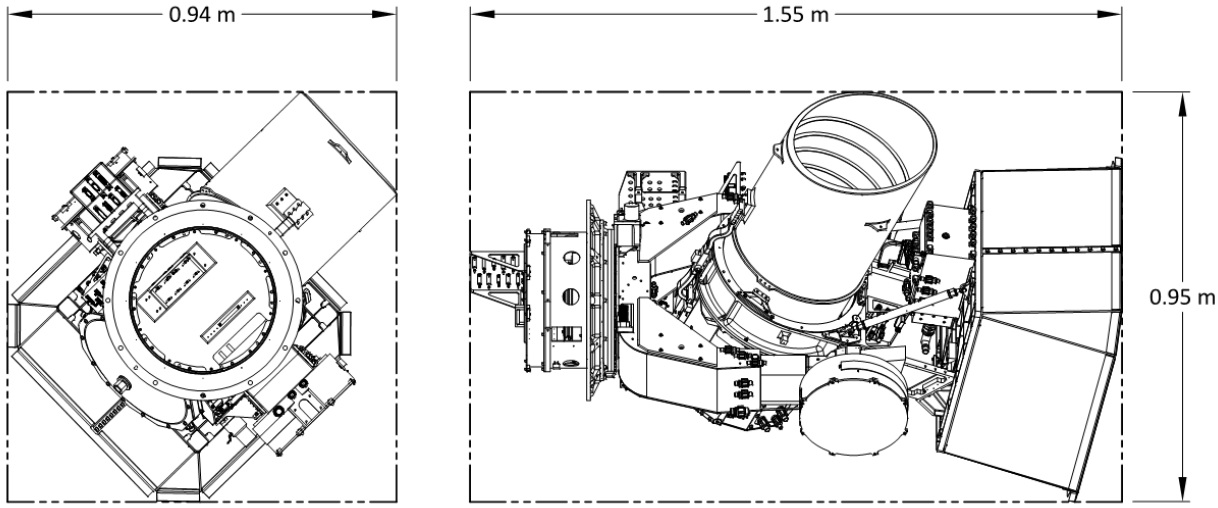

Figure 4-6: Graphical Representation of Stowed Volume (example only – see D4957031-500)

[GLIMR-REQ-14] Sensor Assembly Swept Volume

The GLIMR Spacecraft shall provide sufficient volume on orbit to accommodate the swept sensor assembly volume as detailed in the GLIMR IICD (D4957031-500).

Rationale: Volume of payload is based on as built dimensions. An example is shown in Table 4-2 and Figure 4-7.

Verification Method: Inspection

Verification Description: Inspection of installation design.

Success Criteria: Verification will be considered successful if inspection of installation design confirms volume allocation in accordance with the GLIMR IICD (D4957031-500).

Table 4-2: Sensor Assembly Swept Volume (example only - see D4957031-500)

Parameter	Maximum Expected Value
x-extent (parallel to orbit)	1.13 m
y-extent (normal to orbit)	1.26 m
z-extent (nadir)	1.13 m
Total Volume	1.60 m^3

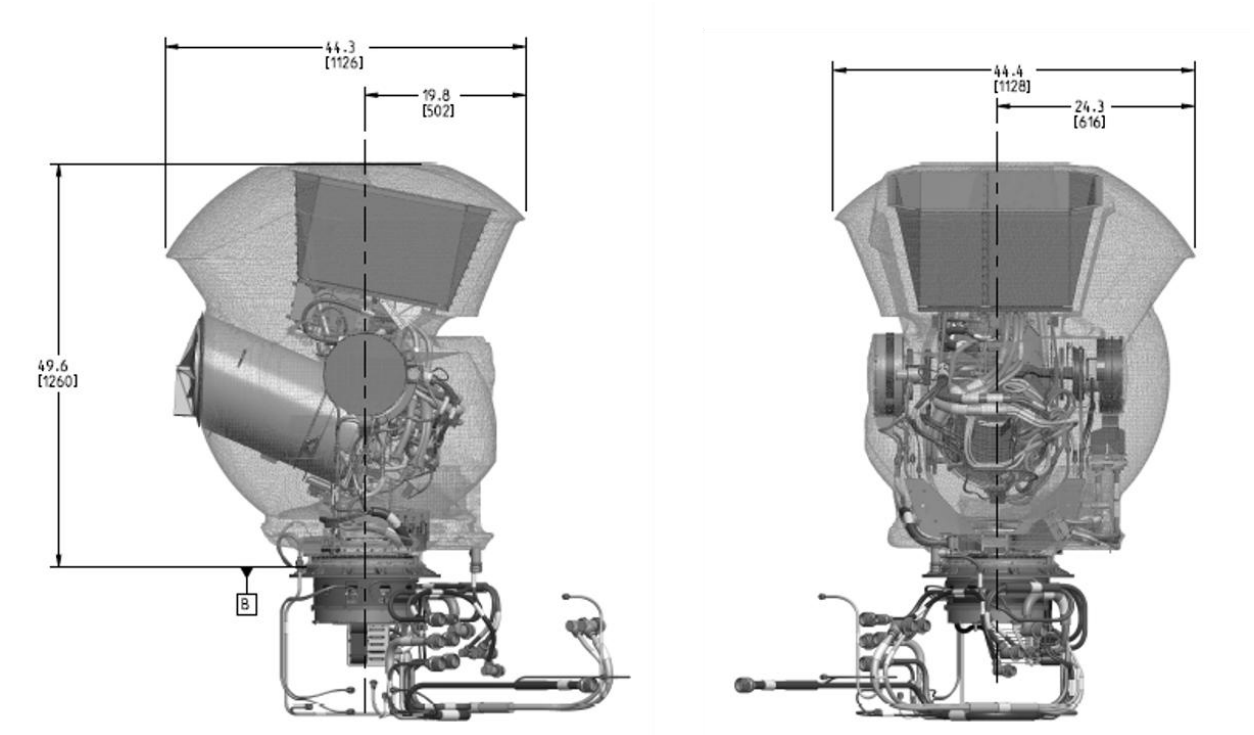

Figure 4-7: Graphical Representation of Swept Volume (example only – see D4957031-500)

[GLIMR-REQ-15] PCU Volume

The GLIMR Spacecraft shall provide sufficient volume within a 1.27-meter cable run of the sensor assembly to accommodate the PCU electronics box.

Rationale: Volume of the PCU is based on as-built dimensions. An example is shown in Table 4-3 and Figure 4-8. The GLIMR Spacecraft shall mount the PCU to accommodate a maximum cable length of 1.27 meters of the W330A cable which carries the SpaceWire and 1PPS signals from the PCU to the Azimuth cable wrap. The clocking of the connectors should also be considered. There are other cables from the PCU to the Azimuth cable wrap and DEB, however their length is not as critical for achieving functionality. A description of the cables can be found in the GLIMR Payload to GLIMR Spacecraft IDD (GLIMR-06-002).

(Note: this maximum distance value represents the baseline configuration and potentially can be increased if desired by GLIMR Access to Space Contractor pending a signal integrity analysis.)

Verification Method: Inspection

Verification Description: Inspection of installation design.

Success Criteria: Verification will be considered successful if inspection of installation design confirms volume allocation.

Table 4-3: PCU Volume (example only - see D4957031-500)

Parameter	Maximum Expected Value (MEV)
Volume	0.047 m^3
x extent	0.445 m
y extent	0.489 m
z extent	0.218 m

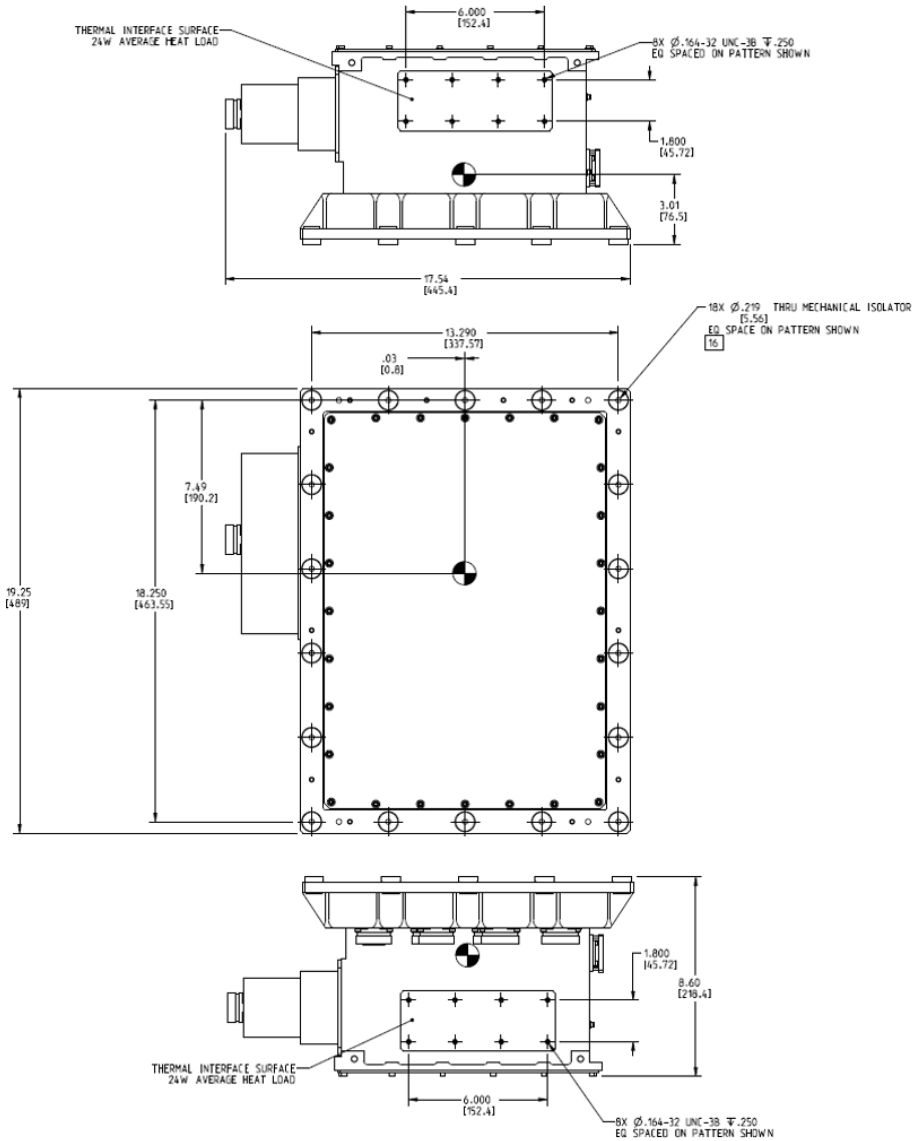

Figure 4-8: Payload Control Unit Dimensions (example only - see D4957031-500)

[GLIMR-REQ-16] DEB Volume

The GLIMR Spacecraft shall provide sufficient volume within a 0.6-meter cable run between the PCU and DEB and within a 1.2-meter cable run between the DEB and the Azimuth Cable Wrap connector on the GLIMR Payload to accommodate the DEB enclosure.

Rationale: Volume of the DEB is based on as built dimensions. An example is shown in Table 4-4. The primary limitations on the DEB location are the W303A cable between the PCU and DEB (DEB command and data), and the W320A cable which contains the read heads. The distance between W303A P12 (PCU J12) and W303A P1 (DEB J1) is a maximum of 0.6 meters. The distance between W320A P4 and P5 (DEB J4 and J5) and W320A J29 (Azimuth Cable Wrap, W389 P29) is a maximum of 1.2 meters. The clocking of the connectors should also be considered. A description of the cables can be found in the GLIMR Payload to GLIMR Spacecraft IDD (GLIMR-06-002).

(Note: these maximum distance values represent the baseline configuration and potentially can be increased if desired by GLIMR vendor pending a signal integrity analysis.)

Verification Method: Inspection

Verification Description: Inspection of installation design.

Success Criteria: Verification will be considered successful if inspection of installation design confirms volume allocation.

Table 4-4: DEB Volume (example only - see D4957031-500)

Parameter	Maximum Expected Value (MEV)
Volume	0.003 m^3
x extent	0.107 m
y extent	0.156 m
z extent	0.199 m

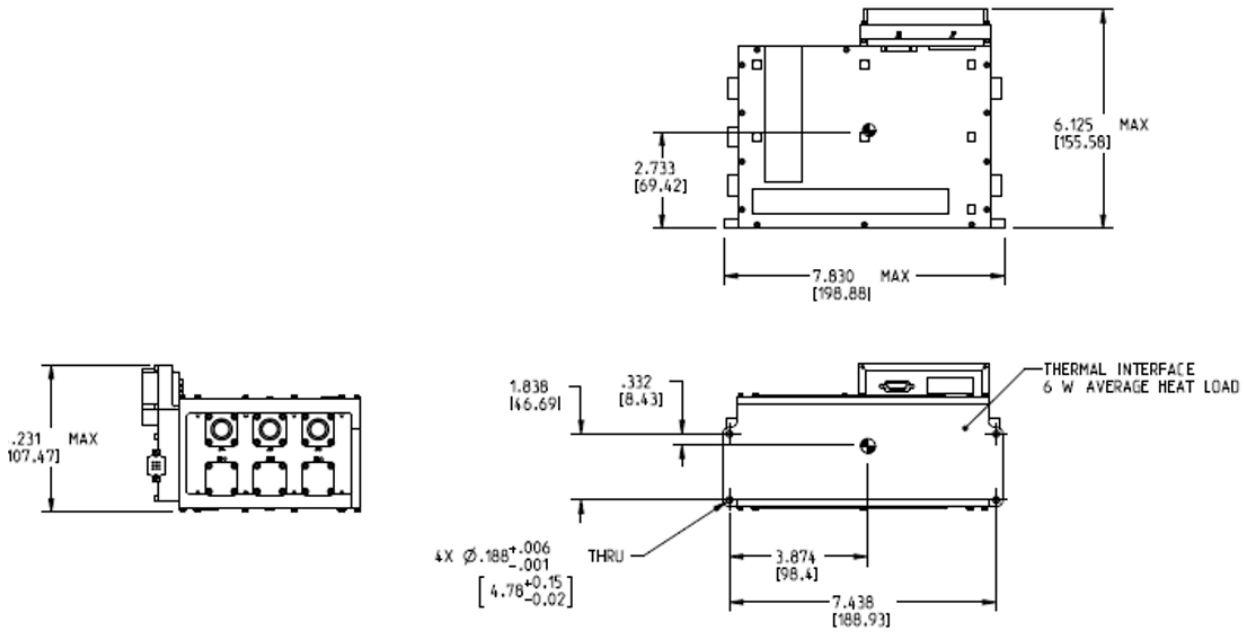

Figure 4-9: Decoder Electronics Box Dimensions (example only - see D4957031-500)

4.2.4 Field of View

[GLIMR-REQ-17] Sensor Assembly Field of View

The GLIMR Spacecraft shall provide the telescope with an unobstructed glint-free field of view (FOV) out to 45° off nadir in every direction.

Rationale: This requirement assures a clear telescope FOV for science data collections. An example is shown in Figure 4-10. Note that the operational field of regard of the sensor assembly by requirement is a 20.8-degree cone centered on nadir, so if 45 degrees is challenging for a GLIMR implementation there is room for negotiation.

Verification Method: Inspection

Verification Description: Inspection of mechanical drawings.

Success Criteria: Verification will be considered successful if inspection of mechanical drawings and design confirm the unobstructed field of view.

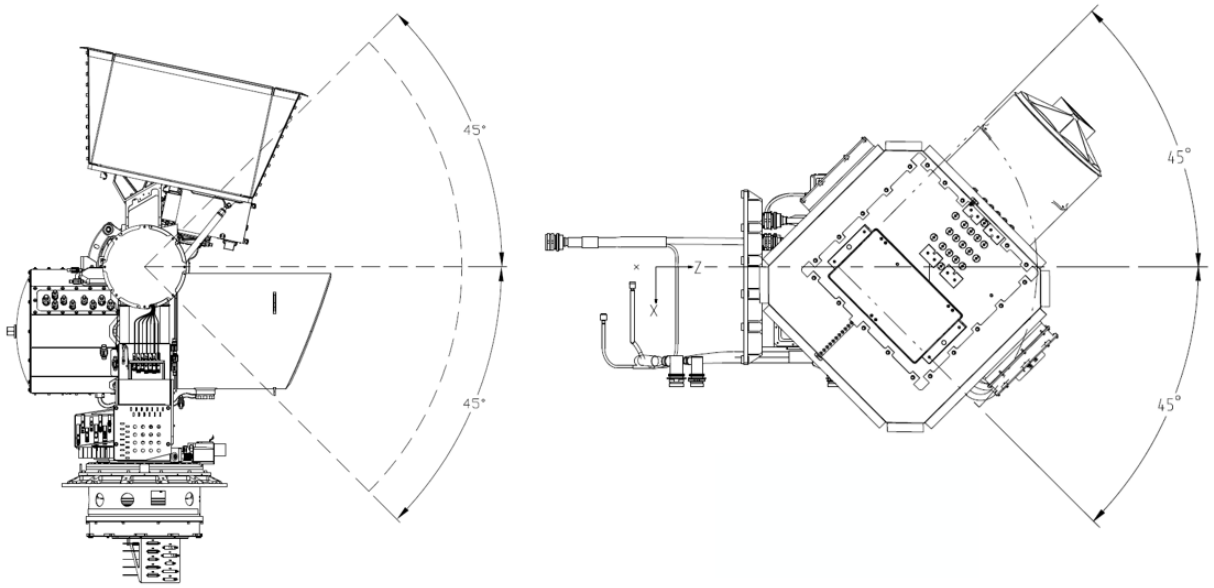

Figure 4-10: Payload Field of View Keep Out Zone

[GLIMR-REQ-18] Sensor Assembly's Radiator Field of View

The GLIMR Spacecraft shall provide the north face of the sensor assembly's radiator with a clear hemispherical Field of View (FOV) over the full anticipated range of motion of -11.4° to +24° Azimuth.

Rationale: This requirement assures a clear FOV for heat dissipation, as shown in Figure 4-11. If this entire FOV cannot be met, there is room for negotiation as long as the thermal backloading requirement can be met.

Verification Method: Inspection

Verification Description: Inspection of mechanical drawings.

Success Criteria: Verification will be considered successful if inspection of mechanical drawings and design confirm the unobstructed field of view.

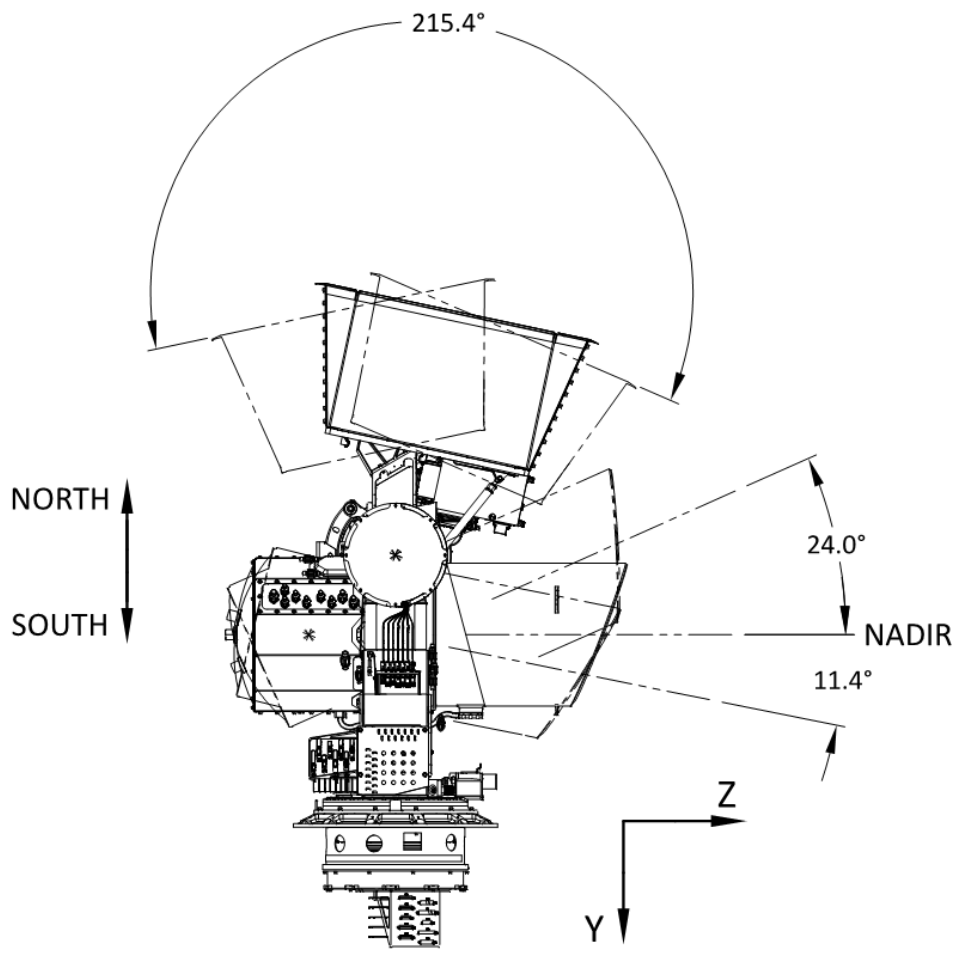

Figure 4-11: Radiator Field of View

4.2.5 Structural Alignment

[GLIMR-REQ-19] Sensor Assembly Alignment

The GLIMR Spacecraft shall align the sensor assembly coordinate reference frame with respect to the GLIMR Spacecraft attitude control system reference frame to within 0.25 degrees (4360 microradians) per axis, post integrated environmental testing.

Rationale: Minimal alignment error is required in order for the sensor assembly range of motion to be able to provide the required field of view.

Note: There are reflectors mounted to the gimbal to assist in this alignment. See Detail G on drawing D4957031-500.

Verification Method: Test

Verification Description: Test of the alignment of the sensor assembly coordinate reference frame with respect to the GLIMR Spacecraft attitude control system reference frame.

Success Criteria: Verification will be considered successful if the test indicates that the alignment of the sensor assembly coordinate reference frame with respect to the GLIMR Spacecraft attitude control system reference frame is within the specified tolerance.

[GLIMR-REQ-20] Sensor Assembly Prelaunch Alignment Knowledge

The GLIMR Spacecraft shall provide knowledge of the prelaunch alignment of the sensor assembly alignment reference frame with respect to the GLIMR Spacecraft attitude control system reference frame to better than 300 microradians per axis [TBC], post integrated environmental testing.

Rationale: Supports the image navigation and registration error budget.

Verification Method: Test

Verification Description: Test of the prelaunch alignment of the sensor assembly alignment reference frame with respect to the GLIMR Spacecraft attitude control system reference frame.

Success Criteria: Verification will be considered successful if the test of the prelaunch alignment of the sensor assembly alignment reference frame with respect to the GLIMR Spacecraft attitude control system reference frame indicates that the alignment will be known within the specified tolerance.

[GLIMR-REQ-21] Sensor Assembly On-orbit Alignment Stability

The GLIMR Spacecraft shall limit the alignment change between the sensor assembly mounting frame and the GLIMR Spacecraft attitude control system reference frame to less than 20 microradians per hour per axis [TBC] during GLIMR Payload imaging operations.

Note: This requirement includes on-orbit environments and GLIMR Spacecraft structural and thermal stability during payload imaging operations.

Rationale: Supports the image navigation and registration error budget. Payload imaging operations can occur any time at which the solar zenith angle within Greater North America is less than 72 degrees [TBC].

Verification Method: Analysis

Verification Description: Analysis of the deviation from ground alignment compared to while on-orbit (e.g., includes launch, gravity sag, thermal).

Success Criteria: Verification will be considered successful if the analysis indicates that the alignment change is within the specified tolerance.

4.2.6 Mass Properties

[GLIMR-REQ-22] Sensor Assembly Mass Allocation

The GLIMR Spacecraft shall accommodate a sensor assembly maximum mass allocation of 136 kg NTE (Not to Exceed), exclusive of GLIMR Spacecraft provided interface hardware or cabling.

Rationale: The sensor assembly's mass allocation includes all hardware listed in the GLIMR IICD (D4957031-500). It does not include any mass allocation for interface hardware necessary to adapt the sensor assembly to the GLIMR Spacecraft or for the cabling from the GLIMR Spacecraft to the sensor assembly, which are to be provided by the GLIMR Access to Space Contractor. (CBE (Current Best Estimate) = 110 kg)

Verification Method: Analysis

Verification Description: Perform structural analysis of the integrated GLIMR Spacecraft and sensor assembly.

Success Criteria: Verification will be considered successful if analysis shows there are positive margins on the structural analysis.

[GLIMR-REQ-23] PCU Mass Allocation

The GLIMR Spacecraft shall accommodate a PCU maximum mass allocation of 34 kg NTE, exclusive of GLIMR Spacecraft provided interface hardware.

Rationale: The PCU mass allocation includes all hardware listed in the GLIMR IICD (D4957031-500). It does not include any mass allocation for interface hardware necessary to adapt the PCU to the GLIMR Spacecraft, provisions for thermal control or for the cabling from the GLIMR Spacecraft to the PCU, which are to be provided by the GLIMR Access to Space Contractor. (CBE = 30 kg)

Verification Method: Analysis

Verification Description: Perform structural analysis of the integrated GLIMR Spacecraft and PCU.

Success Criteria: Verification will be considered successful if analysis shows there are positive margins on the structural analysis.

[GLIMR-REQ-24] DEB Mass Allocation

The GLIMR Spacecraft shall accommodate a DEB maximum mass allocation of 3 kg NTE, exclusive of GLIMR Spacecraft provided interface hardware.

Rationale: The DEB mass allocation includes all hardware listed in the GLIMR IICD (D4957031-500). It does not include any mass allocation for interface hardware necessary to adapt the DEB to the GLIMR Spacecraft, provisions for thermal control or for the cabling from the GLIMR Spacecraft to the DEB, which are to be provided by the GLIMR Access to Space Contractor. (CBE = 1 kg)

Verification Method: Analysis

Verification Description: Perform structural analysis of the integrated GLIMR Spacecraft and DEB.

Success Criteria: Verification will be considered successful if analysis shows there are positive margins on the structural analysis.

[GLIMR-REQ-25] Dust Cover Mass Allocation

The GLIMR Spacecraft shall accommodate a dust cover maximum mass allocation of 2 kg NTE, exclusive of GLIMR Spacecraft provided interface hardware.

Rationale: The dust cover mass allocation includes all hardware listed in the GLIMR IICD (D4957031-500). It does not include any mass allocation for interface hardware necessary to mount the dust cover to the GLIMR Spacecraft, which is to be provided by the GLIMR Access to Space Contractor. (CBE = 1 kg)

Verification Method: Analysis

Verification Description: Perform structural analysis of the integrated GLIMR Spacecraft and dust cover.

Success Criteria: Verification will be considered successful if analysis shows there are positive margins on the structural analysis.

[GLIMR-REQ-26] Center of Gravity and Moment of Inertia

The GLIMR Spacecraft shall accommodate the sensor assembly center of gravity and moment of inertia values as specified in the GLIMR Payload to GLIMR Spacecraft IDD (GLIMR-06-002).

Rationale: The sensor assembly's center of gravity and moment of inertia values are specified in the GLIMR Payload to GLIMR Spacecraft IDD (GLIMR-06-002).

Verification Method: Analysis

Verification Description: Perform structural analysis of the integrated GLIMR Spacecraft and payload.

Success Criteria: Verification will be considered successful if analysis shows there are positive margins on the structural analysis.

4.3 Structural Launch Environment Requirements

The following requirements limit the environmental loads that can be transmitted to the GLIMR Payload by the launch vehicle, as mounted to the GLIMR Spacecraft. Testing performed by the GLIMR Spacecraft will verify that the expected launch loads do not cause these limits to be exceeded, but is not required to reach these limits.

Structural analysis was done independently for each element, and each analysis used a different local coordinate system, as described in Figure 4-12.

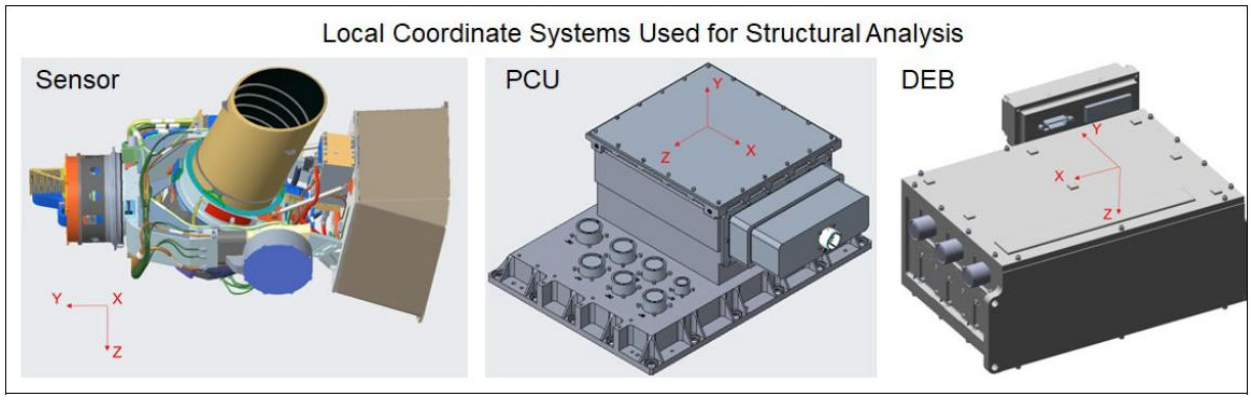

Figure 4-12: GLIMR unit-specific local coordinate systems used for structural analysis.

Note: For the sensor assembly, the structural environment tables present results in this analysis coordinate system, and transformation based on mounting and launch orientation is necessary to convert to lateral and axial launch loads. The GLIMR Payload can be mounted in any orientation as long as the load limits are met.

4.3.1 Quasi-Static Acceleration Environment

[GLIMR-REQ-27] Sensor Assembly Quasi-Static Acceleration Environment

The GLIMR Spacecraft shall limit the quasi-static acceleration at the sensor assembly interface to a value less than the limit levels specified in Table 4-5.

> Rationale: The sensor assembly was design strength qualified to the quasi-static accelerations in the table below. Should these levels be exceeded, there is a risk of structural or functional damage to the sensor assembly.
>
> Verification Method: Analysis
>
> Verification Description: Results from the combination of the coupled loads analysis (CLA) and the random vibration/vibroacoustic analyses will be used to verify that the quasi-static acceleration specified in each axis will not be exceeded.

Success Criteria: Verification will be considered successful if the results from the combination of the CLA and random vibration/vibroacoustic analyses indicate that the quasi-static acceleration in each axis will not be exceeded.

Table 4-5: Sensor Assembly Maximum Acceleration Limits

Component	Maximum Acceleration (g)	
	Local x, z	Local y
Sensor Assembly	5.4	9

[GLIMR-REQ-28] PCU Quasi-Static Acceleration Environment

The GLIMR Spacecraft shall limit the quasi-static acceleration at the PCU interface to a value less than the limit levels specified in Table 4-6.

Rationale: The PCU was design strength qualified to the quasi-static accelerations in the table below. Should these levels be exceeded, there is a risk of structural or functional damage to the PCU.

Verification Method: Analysis

Verification Description: Results from the combination of the CLA and the random vibration/vibroacoustics analyses will be used to verify that the quasi-static acceleration specified in each axis will not be exceeded.

Success Criteria: Verification will be considered successful if the results from the combination of the CLA and random vibration/vibroacoustics analyses indicate that the quasi-static acceleration in each axis will not be exceeded.

Table 4-6: PCU Maximum Acceleration Limits

Component	Maximum Acceleration (g) any axis
PCU	25

[GLIMR-REQ-29] DEB Quasi-Static Acceleration Environment

The GLIMR Spacecraft shall limit the quasi-static acceleration at the DEB interface to a value less than the limit levels specified in Table 4-7.

Rationale: The DEB was design strength qualified to the quasi-static accelerations in the table below. Should these levels be exceeded, there is a risk of structural or functional damage to the DEB.

Verification Method: Analysis

Verification Description: Results from the combination of the CLA and the random vibration/vibroacoustic analyses will be used to verify that the quasi-static acceleration specified in each axis will not be exceeded.

Success Criteria: Verification will be considered successful if the results from the combination of the CLA and random vibration/vibroacoustic analyses indicate that the quasi-static acceleration in each axis will not be exceeded.

Table 4-7: DEB Maximum Acceleration Limits

Component	Maximum Acceleration (g) any axis
DEB	50

[GLIMR-REQ-30] Dust Cover Quasi-Static Acceleration Environment

The GLIMR Spacecraft shall provide an interface to the dust cover which prevents the dust cover from contacting the telescope sunshade during the predicted quasi-static acceleration vibration environments.

Rationale: The dust cover will be mounted to provide a 0.25 ± 0.03 inch gap between the cover and the telescope sunshade while in the stowed position on-orbit, as specified in GLIMR IICD (D4957031-500). The GLIMR Spacecraft dust cover support structure will provide this gap while being sufficiently robust to the launch quasi-static acceleration environment.

Verification Method: Analysis

Verification Description: Results from the combination of the CLA and the random vibration/vibroacoustic analyses will be used to verify that the quasi-static acceleration specified in each axis will not be exceeded.

Success Criteria: Verification will be considered successful if the results from the combination of the CLA and random vibration/vibroacoustic analyses indicate that the dust cover does not contact the telescope sunshade under expected launch quasi-static acceleration levels.

4.3.2 Random Vibration Environment

[GLIMR-REQ-31] Sensor Assembly Random Vibration Environment

The GLIMR Spacecraft shall limit the random vibration environment at the sensor assembly interface to the random vibration limit levels specified in Table 4-8 and the random vibration limit profile levels specified in Table 4-9.

Rationale: The sensor assembly was design strength qualified to the random accelerations in the table below. Should these levels be exceeded, there is a risk of structural or functional damage to the payload.

Verification Method: Test

Verification Description: Random Vibration tests.

Success Criteria: Verification will be considered successful if test data from vibration tests shows that values were not exceeded.

Table 4-8: Sensor Assembly Random Vibration Acceptance Limit Levels

Component	Random Vibration Levels (grms)		
	Local x	Local y	Local z
Sensor Assembly	4.05	3.53	3.81

Table 4-9: Sensor Assembly Random Vibration Acceptance Limit Profile

X-axis		Y-axis		Z-axis	
Frequency (Hz)	ASD (G^2/Hz)	Frequency (Hz)	ASD (G^2/Hz)	Frequency (Hz)	ASD (G^2/Hz)
20	0.001	20	0.005	20	0.001
40	0.001	50	0.015	40	0.001
45	0.001	70	0.015	45	0.001
50	0.005	100	0.001	50	0.002
400	0.005	170	0.001	200	0.002
450	0.015	210	0.001	250	0.013
800	0.015	350	0.001	500	0.013
820	0.005	550	0.010	520	0.015
900	0.005	700	0.010	580	0.015
950	0.012	730	0.002	600	0.003
2000	0.005	850	0.002	830	0.003
		900	0.013	900	0.013
		2000	0.005	2000	0.005
Grms	**4.05**	**Grms**	**3.53**	**Grms**	**3.81**

[GLIMR-REQ-32] PCU Random Vibration Environment

The GLIMR Spacecraft shall limit the random vibration environment at the PCU interface to the random vibration limit levels specified in Table 4-10 and the random vibration limit profile levels specified in Table 4-11.

Rationale: The PCU was design strength qualified to the random accelerations in the table below. Should these levels be exceeded, there is a risk of structural or functional damage to the payload.

Verification Method: Test

Verification Description: Random Vibration tests.

Success Criteria: Verification will be considered successful if test data from vibration tests shows that values were not exceeded.

Table 4-10: PCU Random Vibration Acceptance Limit Levels

Component	Random Vibration Levels (grms)	
	Local x, z	Local y
PCU	5.16	5.16

Table 4-11: PCU Random Vibration Acceptance Limit Profile (Q = 25)

Frequency (Hz)	ASD (G^2/Hz)
20	0.0044
100	0.0044
300	0.01
700	0.01
800	0.03
925	0.03
2000	0.00644
Grms	**5.16**

[GLIMR-REQ-33] DEB Random Vibration Environment

The GLIMR Spacecraft shall limit the random vibration environment at the DEB interface to the vibration limit levels specified in Table 4-12 and the random vibration limit profile levels in Table 4-13.

Rationale: The DEB was design strength qualified to the random accelerations in the table below. Should these levels be exceeded, there is a risk of structural or functional damage to the payload.

Verification Method: Test

Verification Description: Random Vibration tests.

Success Criteria: Verification will be considered successful if test data from vibration tests shows that values were not exceeded.

Table 4-12: DEB Random Vibration Acceptance Limit Levels

Component	Random Vibration Levels (grms)	
	Local x, z	Local y
DEB	6.3	6.3

Table 4-13: DEB Random Vibration Acceptance Limit Profile (Q = 25)

Frequency (Hz)	ASD (G^2/Hz)
20	0.004
40	0.05
150	0.05
200	0.05
300	0.05
500	0.025
1000	0.025
2000	0.006
Grms	**6.3**
Duration	**1 minute**

[GLIMR-REQ-34] Dust Cover Random Vibration Environment

The GLIMR Spacecraft shall provide an interface to the dust cover which prevents the dust cover from contacting the telescope sunshade during the predicted random vibration environments.

Rationale: The dust cover will be mounted to provide a 0.25 ± 0.03 inch gap between the cover and the telescope sunshade while in the stowed position on-orbit, as specified in GLIMR IICD (D4957031-500). The GLIMR Spacecraft dust cover support structure will provide this gap while being sufficiently robust to the launch random vibration environment.

Verification Method: Test

Verification Description: Random Vibration tests.

Success Criteria: Verification will be considered successful if test data from vibration tests shows that the dust cover does not contact the telescope sunshade under expected launch vibration levels.

4.3.3 Sinusoidal Vibration Environment

[GLIMR-REQ-35] Sensor Assembly Sinusoidal Vibration Environment

The GLIMR Spacecraft shall limit the sinusoidal vibration environment at the sensor assembly interface to the sinusoidal vibration limits specified in Table 4-14.

Rationale: The sensor assembly was design strength qualified to the sinusoidal accelerations in the table below. A linear curve fit should be used between the points specified in the table. Should these levels be exceeded, there is a risk of structural or functional damage to the payload.

Verification Method: Test

Verification Description: Sinusoidal Vibration tests.

Success Criteria: Verification will be considered successful if test data from vibration tests shows that sinusoidal acceleration values were not exceeded.

Table 4-14: Payload Sensor Assembly Sinusoidal Test Limit Levels

X-Axis		Y-Axis		Z-Axis	
Frequency (Hz)	Amplitude (g)	Frequency (Hz)	Amplitude (g)	Frequency (Hz)	Amplitude (g)
5	0.80	20	0.80	5	0.80
30	0.80	100	0.80	30	0.80
35	0.24			35	0.20
45	0.24			45	0.20
50	0.80			50	0.80
100	0.80			100	0.80

[GLIMR-REQ-36] PCU Sinusoidal Vibration Environment

The GLIMR Spacecraft shall limit the sinusoidal vibration environment at the PCU interface to the sinusoidal vibration limits specified in Table 4-15.

Rationale: The PCU was design strength qualified to the sinusoidal accelerations in the table below. A linear curve fit should be used between the points specified in the table. Should these levels be exceeded, there is a risk of structural or functional damage to the payload.

Verification Method: Test

Verification Description: Sinusoidal Vibration tests.

Success Criteria: Verification will be considered successful if test data from vibration tests shows that sinusoidal vibration values were not exceeded.

Table 4-15: PCU Sinusoidal Test Limit Levels

Frequency (Hz)	Sinusoidal Vibration Amplitude (g)
5	0.5
20	0.8
35	0.8
35.1	0.6
75	0.6
85	0.9
100	0.9

[GLIMR-REQ-37] DEB Sinusoidal Vibration Environment

The GLIMR Spacecraft shall limit the sinusoidal vibration environment at the DEB interface to the sinusoidal vibration limits specified in Table 4-16.

Rationale: The DEB was design strength qualified to the sinusoidal accelerations in the table below. Should these levels be exceeded, there is a risk of structural or functional damage to the payload.

Verification Method: Test

Verification Description: Sinusoidal Vibration tests.

Success Criteria: Verification will be considered successful if test data from qualification tests shows that sinusoidal vibration values were not exceeded.

Table 4-16: DEB Sinusoidal Test Limit Levels

Component	Sinusoidal Vibration Levels (g)
DEB	10

[GLIMR-REQ-38] Dust Cover Sinusoidal Vibration Environment

The GLIMR Spacecraft shall provide an interface to the dust cover which prevents the dust cover from contacting the telescope sunshade during the predicted launch sinusoidal vibration environments.

Rationale: The dust cover will be mounted to provide a 0.25 ± 0.03 inch gap between the cover and the telescope sunshade while in the stowed position on-orbit, as specified in GLIMR IICD (D4957031-500). The GLIMR Spacecraft dust cover support structure will

provide this gap while being sufficiently robust to the launch sinusoidal vibration environment.

Verification Method: Test

Verification Description: Sinusoidal Vibration tests.

Success Criteria: Verification will be considered successful if test data from qualification tests shows that the dust cover does not contact the telescope sunshade under expected launch sinusoidal vibration values.

4.3.4 Acoustic Environment

[GLIMR-REQ-39] Acoustic Environment

The GLIMR Access to Space Contractor shall limit the acoustic environment to the values specified in Table 4-17 for a duration of 1 minute.

Rationale: Exceeding the levels and duration for the acoustic test would violate the design limits of the payload.

Verification Method: Test

Verification Description: Acoustic tests.

Success Criteria: Verification will be considered successful if test data from acoustic tests shows that acoustic level values were not exceeded.

Table 4-17: Acoustic Test Limit Levels

Frequency (Hz)	Overall Sound Pressure Levels (dB)
31	121
40	122
50	123
63	124
80	125
100	125.7
125	126.5
160	126.7
200	127
250	127
315	126.7
400	126.5
500	125.7
630	125
800	124
1,000	123
1,250	122
1,600	121
2,000	120
2,500	119
3,150	118
4,000	117
5,000	116
6,300	115
8,000	114
10000	113
OASPL	**138**

4.3.5 Shock

[GLIMR-REQ-40] Sensor Assembly Shock

The GLIMR Spacecraft shall limit the Shock Response Spectrum at the sensor assembly interface to the values specified in Table 4-18.

Rationale: A linear curve fit on a logarithmic scale should be used between the points specified in the table. Exceeding these levels for shock would violate the design limits of the sensor assembly.

Verification Method: Analysis

Verification Description: Analysis of the expected shock levels at the sensor assembly interface.

Success Criteria: Verification will be considered successful if analysis shows that shock values will not be exceeded.

Table 4-18: Sensor Assembly Shock Limit Levels

Component	Shock Levels
Sensor Assembly	160 g at 100 Hz 1000 g at 630 Hz 1000 g at 10 kHz

[GLIMR-REQ-161] PCU Shock

The GLIMR Spacecraft shall limit the Shock Response Spectrum at the PCU interface to the values specified in Table 4-19.

Rationale: A linear curve fit on a logarithmic scale should be used between the points specified in the table. Exceeding these levels for shock would violate the design limits of the sensor assembly.

Verification Method: Analysis

Verification Description: Analysis of the expected shock levels at the PCU interface.

Success Criteria: Verification will be considered successful if analysis shows that shock values will not be exceeded.

Table 4-19: PCU Shock Limit Levels

Component	Shock Levels
PCU	30 g at 100 Hz 1000 g at 1 kHz 1000 g at 10 kHz

[GLIMR-REQ-162] DEB Shock

The GLIMR Spacecraft shall limit the Shock Response Spectrum at the DEB interface to the values specified in Table 4-20.

Rationale: A linear curve fit on a logarithmic scale should be used between the points specified in the table. Exceeding these levels for shock would violate the design limits of the sensor assembly.

Verification Method: Analysis

Verification Description: Analysis of the expected shock levels at the DEB interface.

Success Criteria: Verification will be considered successful if analysis shows that shock values will not be exceeded.

Table 4-20: DEB Shock Limit Levels

Component	Shock Levels
DEB	42 g at 100 Hz 700 g at 800 Hz 1100 g at 1200 Hz 1200 g at 3000 Hz 850 g at 10 kHz

[GLIMR-REQ-163] Dust Cover Shock

The GLIMR Spacecraft shall limit the Shock Response Spectrum at the dust cover interface to the values specified in Table 4-21.

Rationale: A linear curve fit on a logarithmic scale should be used between the points specified in the table. Exceeding these levels for shock would violate the design limits of the sensor assembly.

Verification Method: Analysis

Verification Description: Analysis of the expected shock levels at the dust cover interface.

Success Criteria: Verification will be considered successful if analysis shows that shock values will not be exceeded.

Table 4-21: Dust Cover Limit Levels

Component	Shock Levels
Dust Cover	160 g at 100 Hz 1000 g at 600 Hz 1000 g at 10 kHz

[GLIMR-REQ-164] Dust Cover Shock Environments

The GLIMR Spacecraft shall provide an interface to the dust cover which prevents the dust cover from contacting the telescope sunshade during the predicted launch shock environments.

Rationale: The dust cover will be mounted to provide a 0.25 ± 0.03 inch gap between the cover and the telescope sunshade while in the stowed position on-orbit, as specified in GLIMR IICD (D4957031-500). The GLIMR Spacecraft dust cover support structure will provide this gap while being sufficiently robust to the launch shock environment.

Verification Method: Analysis

Verification Description: Analysis of the behavior of the dust cover and sunshade under the anticipated shock environments.

Success Criteria: Verification will be considered successful if the analysis shows that the dust cover does not contact the telescope sunshade under expected launch shock values.

4.3.6 Launch Pressure Profile

[GLIMR-REQ-41] Launch Pressure Profile

The GLIMR Access to Space Contractor shall expose the GLIMR Payload to depressurization rates of 7000 Pa/s (53 Torr/s) or slower.

Rationale: Exceeding the depressurization rate would violate the design limits of the payload.

Verification Method: Inspection

Verification Description: Inspection of launch vehicle specifications.

Success Criteria: Verification will be considered successful if inspection of launch vehicle specifications indicates that depressurization rates meet requirements.

4.3.7 Minimum Natural Frequency

[GLIMR-REQ-42] Sensor Assembly Minimum Natural Frequency

The GLIMR Spacecraft shall accommodate a sensor assembly with minimum natural frequencies with major mass participation (>10%) of 24 Hz when mounted on a fixed base as it would be on the GLIMR Spacecraft.

Rationale: Minimum values for the sensor assembly natural (fundamental) frequencies of vibration are specified to avoid dynamic coupling between low frequency dynamics of the GLIMR Spacecraft and payload. Such coupling could result in dynamic load amplification and/or undesirable interaction with the GLIMR Spacecraft flight control system.

Verification Method: Analysis

Verification Description: Results from CLA will be used to verify that no dynamic coupling between the low frequency dynamics of the GLIMR Spacecraft and payload sensor assembly will occur causing dynamic load amplification and/or undesirable interaction with the GLIMR Spacecraft flight control system.

Success Criteria: Verification will be considered successful if the results from CLA indicate no dynamic coupling between the low frequency dynamics of the GLIMR Spacecraft and payload sensor assembly will occur causing dynamic load amplification and/or undesirable interaction with the GLIMR Spacecraft flight control system.

[GLIMR-REQ-43] PCU Minimum Natural Frequency

The GLIMR Spacecraft shall accommodate the PCU with minimum natural frequencies with major mass participation (>10%) of 100 Hz when mounted on a fixed base as it would be on the GLIMR Spacecraft.

Rationale: Minimum values for the PCU natural (fundamental) frequencies of vibration are specified to avoid dynamic coupling between low frequency dynamics of the GLIMR Spacecraft and payload. Such coupling could result in dynamic load amplification and/or undesirable interaction with the GLIMR Spacecraft flight control system.

Verification Method: Analysis

Verification Description: Results from CLA will be used to verify that no dynamic coupling between the low frequency dynamics of the GLIMR Spacecraft and the PCU will occur causing dynamic load amplification and/or undesirable interaction with the GLIMR Spacecraft flight control system.

Success Criteria: Verification will be considered successful if the results from CLA indicate no dynamic coupling between the low frequency dynamics of the GLIMR

Spacecraft and the PCU will occur causing dynamic load amplification and/or undesirable interaction with the GLIMR Spacecraft flight control system.

[GLIMR-REQ-165] DEB Minimum Natural Frequency

The GLIMR Spacecraft shall accommodate the DEB with minimum natural frequencies with major mass participation (>10%) of 100 Hz when mounted on a fixed base as it would be on the GLIMR Spacecraft.

Rationale: Minimum values for the DEB natural (fundamental) frequencies of vibration are specified to avoid dynamic coupling between low frequency dynamics of the GLIMR Spacecraft and payload. Such coupling could result in dynamic load amplification and/or undesirable interaction with the GLIMR Spacecraft flight control system.

Verification Method: Analysis

Verification Description: Results from CLA will be used to verify that no dynamic coupling between the low frequency dynamics of the GLIMR Spacecraft and the DEB will occur causing dynamic load amplification and/or undesirable interaction with the GLIMR Spacecraft flight control system.

Success Criteria: Verification will be considered successful if the results from CLA indicate no dynamic coupling between the low frequency dynamics of the GLIMR Spacecraft and the DEB will occur causing dynamic load amplification and/or undesirable interaction with the GLIMR Spacecraft flight control system.

[GLIMR-REQ-44] Dust Cover Minimum Natural Frequency

The GLIMR Spacecraft shall mount the dust cover such that the minimum natural frequencies with major mass participation (>10%) avoid dynamic coupling with the GLIMR Spacecraft.

Rationale: Minimum values for the dust cover natural (fundamental) frequencies of vibration need to avoid dynamic coupling between low frequency dynamics of the GLIMR Spacecraft and payload. Such coupling could result in dynamic load amplification and/or undesirable interaction with the GLIMR Spacecraft flight control system.

Verification Method: Analysis

Verification Description: Results from CLA will be used to verify that no dynamic coupling between the low frequency dynamics of the GLIMR Spacecraft and the dust cover will occur causing dynamic load amplification and/or undesirable interaction with the GLIMR Spacecraft flight control system.

Success Criteria: Verification will be considered successful if the results from CLA indicate no dynamic coupling between the low frequency dynamics of the GLIMR

Spacecraft and the dust cover will occur causing dynamic load amplification and/or undesirable interaction with the GLIMR Spacecraft flight control system.

[GLIMR-REQ-166] Launch Vehicle Compatibility

The combined GLIMR Spacecraft with all manifested payload(s) shall have a fundamental frequency compatible with the GLIMR Access to Space Contractor-selected launch vehicle.

Rationale: Compatibility with the anticipated launch vehicle is needed for a successful mission.

Verification Method: Analysis

Verification Description: Results from CLA will be used to verify the combined fundamental modal frequencies.

Success Criteria: Verification will be considered successful if the results from CLA indicate that the combined fundamental modal frequencies are compatible with the selected launch vehicle.

4.4 Thermal Requirements

4.4.1 Heat Transfer

[GLIMR-REQ-45] Sensor Assembly Conductive Heat Transfer

The GLIMR Spacecraft shall limit the conductive heat transfer rate between the sensor assembly mechanical interface and the GLIMR Spacecraft to no more than 15 W/m^2 or 4 W, whichever is greater, into or out of the GLIMR Payload.

> Rationale: The sensor assembly should be thermally isolated from the GLIMR Spacecraft to the greatest extent possible to ensure adequate thermal performance.
>
> Verification Method: Analysis
>
> Verification Description: Results from thermal vacuum testing will be used to correlate the integrated thermal model. Analysis, using the correlated thermal model and worst-case conditions, will determine the total orbit heat transfer rate.
>
> Success Criteria: Verification will be considered successful if the worst-case thermal analysis, performed using the correlated model, shows that the total orbit heat transfer rate will be within specified limits.

[GLIMR-REQ-46] PCU Conductive Heat Transfer Coefficient

The GLIMR Spacecraft shall provide a conductive mounting interface to the PCU thermal interface specified in the GLIMR IICD (D4957031-500) with a heat transfer coefficient between 0.5 $W/in^2/K$ and 5 $W/in^2/K$.

> Rationale: The PCU design requires external heat transfer for reliable operation. The thermal interface is shown in Figure 4-2.
>
> Verification Method: Analysis
>
> Verification Description: Results from thermal vacuum testing will be used to correlate the integrated thermal model. Analysis, using the correlated thermal model and worst-case conditions, will determine the total heat dissipation rate.
>
> Success Criteria: Verification will be considered successful if the worst-case thermal analysis, performed using the correlated model, shows that the heat dissipation rate will be within specified limits.

[GLIMR-REQ-47] PCU Peak Heat Dissipation

The GLIMR Spacecraft shall dissipate a peak ≥ 80 W, averaged over any 10-millisecond period, distributed as 40 W to each side wall thermal interface, from the PCU into the GLIMR Spacecraft thermal interface hardware (i.e., heat pipes or straps mounted to PCU side walls).

Rationale: The PCU design requires external heat transfer for reliable operation. The thermal interface is shown in Figure 4-2.

Note: The anticipated required average PCU heat dissipation is ≤ 65 W, averaged over any 180-minute period.

Verification Method: Analysis

Verification Description: Results from thermal vacuum testing will be used to correlate the integrated thermal model. Analysis, using the correlated thermal model and worst-case conditions, will determine the total heat dissipation rate.

Success Criteria: Verification will be considered successful if the worst-case thermal analysis, performed using the correlated model, shows that the heat dissipation rate will be within specified limits.

[GLIMR-REQ-48] DEB Conductive Heat Transfer Coefficient

The GLIMR Spacecraft shall provide a conductive mounting interface to the DEB thermal interface specified in the GLIMR IICD (D4957031-500) with a heat transfer coefficient between 0.5 W/in²/K and 5 W/in²/K.

Rationale: The DEB design requires external heat transfer for reliable operation. The thermal interface is shown in Figure 4-3.

Verification Method: Analysis

Verification Description: Results from thermal vacuum testing will be used to correlate the integrated thermal model. Analysis, using the correlated thermal model and worst-case conditions, will determine the total heat dissipation rate.

Success Criteria: Verification will be considered successful if the worst-case thermal analysis, performed using the correlated model, shows that the heat dissipation rate will be within specified limits.

[GLIMR-REQ-49] DEB Peak Heat Dissipation

The GLIMR Spacecraft shall dissipate a peak ≥ 10 W, averaged over any 10-millisecond period, from the DEB thermal interface into the GLIMR Spacecraft.

Rationale: The DEB design requires external heat transfer for reliable operation. The thermal interface is shown in Figure 4-3.

Note: The anticipated required average DEB heat dissipation is ≤ 6 W, averaged over any 180-minute period.

Verification Method: Analysis

Verification Description: Results from thermal vacuum testing will be used to correlate the integrated thermal model. Analysis, using the correlated thermal model and worst-case conditions, will determine the total heat dissipation rate.

Success Criteria: Verification will be considered successful if the worst-case thermal analysis, performed using the correlated model, shows that the heat dissipation rate will be within specified limits.

4.4.2 Temperature Ranges

[GLIMR-REQ-50] Sensor Assembly Survival Temperature Range

When the GLIMR Payload is unpowered, the GLIMR Spacecraft shall maintain the interface between the sensor assembly mechanical interface and the GLIMR Spacecraft to within the survival temperature range of -30°C to +40°C.

Rationale: This range reflects the sensor assembly design-to values chosen for reliability purposes.

Verification Method: Analysis

Verification Description: Results from thermal vacuum testing will be used to correlate the integrated thermal model. Analysis, using the correlated thermal model and worst-case conditions, will determine the maximum and minimum predicted on-orbit temperatures.

Success Criteria: Verification will be considered successful if the worst-case thermal analysis, performed using the correlated model, shows that the interface temperatures will be within specified limits.

[GLIMR-REQ-51] Sensor Assembly Operational Temperature Range

When the GLIMR Payload is powered, the GLIMR Spacecraft shall maintain the interface between the sensor assembly mechanical interface and the GLIMR Spacecraft to within the operational temperature range of -20°C to +30°C.

Rationale: This range was chosen based on operational heater power needed for gimbal bearing temperature control.

Verification Method: Analysis

Verification Description: Results from thermal vacuum testing will be used to correlate the integrated thermal model. Analysis, using the correlated thermal model and worst-case conditions, will determine the maximum and minimum predicted on-orbit temperatures.

Success Criteria: Verification will be considered successful if the worst-case thermal analysis, performed using the correlated model, shows that the interface temperatures will be within specified limits.

[GLIMR-REQ-52] PCU Survival Temperature Range

When the GLIMR Payload is unpowered, the GLIMR Spacecraft shall maintain the PCU thermal interface within the survival temperature range of -40°C to +70°C.

Rationale: This range reflects the PCU design-to values chosen for reliability purposes. The PCU relies on the GLIMR Spacecraft for thermal control. The thermal interface is indicated on the GLIMR IICD (D4957031-500).

Verification Method: Analysis

Verification Description: Results from thermal vacuum testing will be used to correlate the integrated thermal model. Analysis, using the correlated thermal model and worst-case conditions, will determine the maximum and minimum predicted on-orbit temperatures.

Success Criteria: Verification will be considered successful if the worst-case thermal analysis, performed using the correlated model, shows that the interface temperatures will be within specified limits.

[GLIMR-REQ-53] PCU Operational Temperature Range

When the GLIMR Payload is powered, the GLIMR Spacecraft shall maintain the PCU thermal interface within the operational temperature range of -25°C to +55°C.

Rationale: This range was chosen based on analysis performed on a legacy program providing a 5-deg margin over component qualification temperature ranges. The PCU relies on the GLIMR Spacecraft for thermal control. The thermal interface is indicated on the GLIMR IICD (D4957031-500).

Verification Method: Analysis

Verification Description: Results from thermal vacuum testing will be used to correlate the integrated thermal model. Analysis, using the correlated thermal model and worst-case conditions, will determine the maximum and minimum predicted on-orbit temperatures.

Success Criteria: Verification will be considered successful if the worst-case thermal analysis, performed using the correlated model, shows that the interface temperatures are within specified limits.

[GLIMR-REQ-54] DEB Survival Temperature Range

When the GLIMR Payload is unpowered, the GLIMR Spacecraft shall maintain the DEB thermal interface within the survival temperature range of -40°C to +76°C.

Rationale: This range reflects the DEB design-to values chosen for reliability purposes. The DEB relies on the GLIMR Spacecraft for thermal control. The thermal interface is indicated on the GLIMR IICD (D4957031-500).

Verification Method: Analysis

Verification Description: Results from thermal vacuum testing will be used to correlate the integrated thermal model. Analysis, using the correlated thermal model and worst-case conditions, will determine the maximum and minimum predicted on-orbit temperatures.

Success Criteria: Verification will be considered successful if the worst-case thermal analysis, performed using the correlated model, shows that the interface temperatures will be within specified limits.

[GLIMR-REQ-55] DEB Operational Temperature Range

When the GLIMR Payload is powered, the GLIMR Spacecraft shall maintain the DEB thermal interface within the operational temperature range of -24°C to +66°C.

Rationale: This range was chosen based on analysis performed on a legacy program providing a 5-deg margin over component qualification temperature ranges. The DEB relies on the GLIMR Spacecraft for thermal control. The thermal interface is indicated on the GLIMR IICD (D4957031-500).

Verification Method: Analysis

Verification Description: Results from thermal vacuum testing will be used to correlate the integrated thermal model. Analysis, using the correlated thermal model and worst-case conditions, will determine the maximum and minimum predicted on-orbit temperatures.

Success Criteria: Verification will be considered successful if the worst-case thermal analysis, performed using the correlated model, shows that the interface temperatures will be within specified limits.

4.4.3 Radiator Back Loading

[GLIMR-REQ-56] Sensor Assembly's Radiator Thermal Back Loading

The GLIMR Spacecraft shall limit the back loading on the sensor assembly's radiator face (north face, see Figure 4-11) to less than 38.6 W/m2.

Rationale: This represents an estimate of the Sensor Assembly sensitivity to backloading from warm parts of the GLIMR Spacecraft and likely precludes location of a solar array on the north facing panel of the GLIMR Spacecraft (See Figure 4-11).

Note: The intent of this is to provide the GLIMR radiator with a clear view to space with an allocation for solar array blockage; the backloading value or form of the blocking provision can be negotiated (e.g., as a maximum solar array view factor from the radiator perspective) and modified working with the particular GLIMR Spacecraft implementation.

Verification Method: Analysis

Verification Description: Results from thermal vacuum testing will be used to correlate the integrated thermal model. Analysis, using the correlated thermal model and worst-case conditions, will determine the maximum and minimum predicted on-orbit thermal backloading.

Success Criteria: Verification will be considered successful if the worst-case thermal analysis, performed using the correlated model, shows that the thermal backloading will be within specified limits.

4.5 EMC/EMI Requirements

The GLIMR Payload is being designed for compliance with MIL-STD-461 in the following areas: Electrical Bonding, CE102, CS101, RE102, and RS103. This section will be updated to include relevant limit curves, reflective of specific needs related to a particular GLIMR Spacecraft, such as notching.

[GLIMR-REQ-57] Conducted Emissions

The GLIMR Spacecraft shall have a power system that will operate nominally throughout the mission life with the conducted emissions on the power lines from the GLIMR Payload at the limit levels and frequencies defined for the MIL- STD-461G, CE102, 28V basic curve [TBC] as shown in Figure 4-13.

> Rationale: This requirement documents the MIL-STD-461G, CE102 testing performed on the payload, as shown in Figure 4-13. This applies only to the power buses serving the payload. The payload is required to pass MIL-STD-461G, CE102 testing; however, actual emissions measurement data is not available at this time. Therefore, the GLIMR Spacecraft power system design should assume the worst-case emissions are at the 28V, basic curve, limit line. Additional emissions may be identified once CE102 testing is complete.
>
> Verification Method: Test
>
> Verification Description: Test data from qualification tests.
>
> Success Criteria: Verification will be considered successful if the test data from qualification tests shows that values were not exceeded.

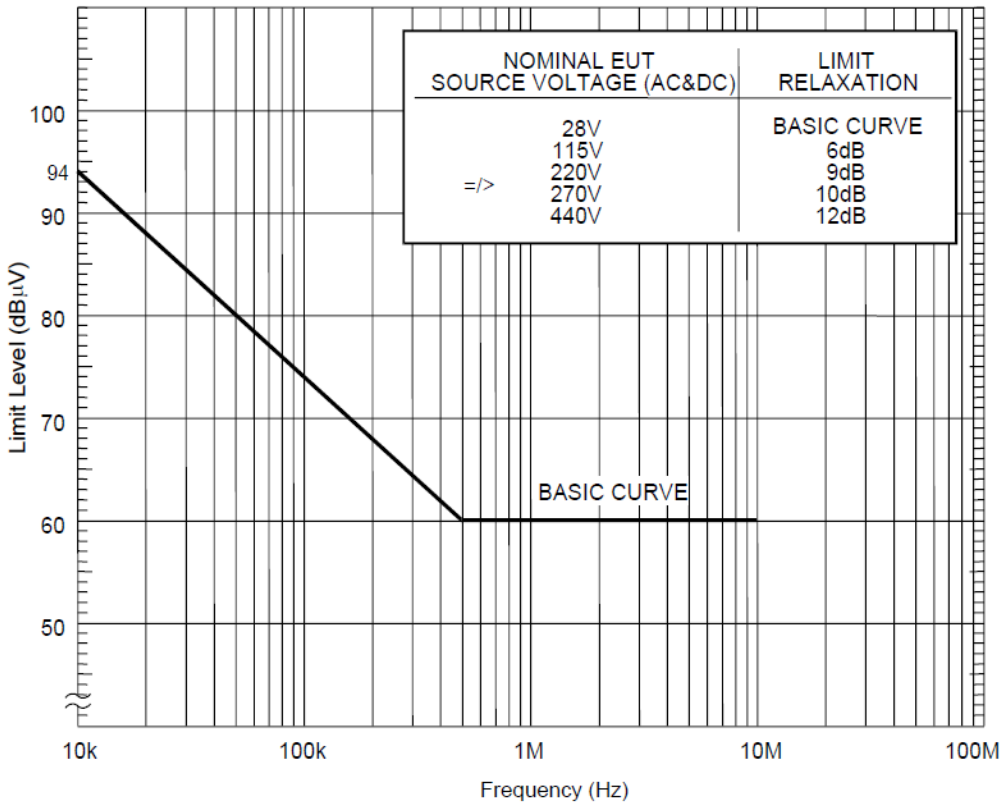

Figure 4-13: CE102 Limit (EUT power leads, AC and DC) for all applications (see MIL-STD-461G Figure CE102-1)

[GLIMR-REQ-58] Conducted Susceptibility

The GLIMR Spacecraft shall prevent conducted emissions on the GLIMR Payload power inputs from exceeding the levels defined in MIL-STD-461G CS101, curve #2 [TBC] at the frequencies shown in Figure 4-14.

Rationale: This requirement documents the MIL-STD-461G, CS101 testing performed on the GLIMR Payload. This applies only to the power buses serving the payload. The payload is required to pass CS101 testing; however, actual payload susceptibility data is not available at this time. Therefore, the GLIMR Spacecraft should assume the best-case payload susceptibilities are at the 28V, curve #2 limit line. Exceeding these CS101 limits, as shown in Figure 4-14, would exceed the tested limits of the payload. Additional susceptibilities may be identified once CS101 testing is performed.

Verification Method: Test

Verification Description: Test data from qualification tests.

Success Criteria: Verification will be considered successful if test data from qualification tests shows that values were not exceeded.

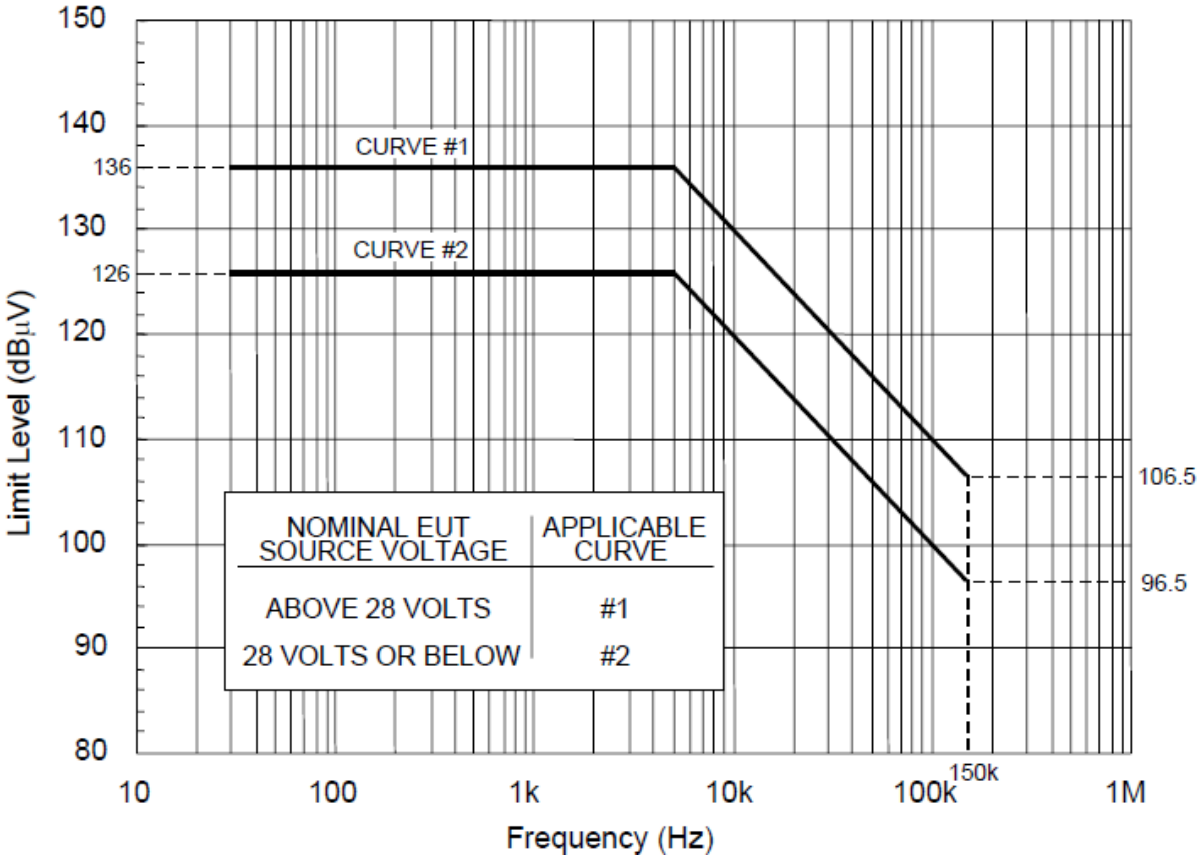

Figure 4-14: CS101 voltage limit for all applications (see MIL-STD-461G Figure CS101-1)

[GLIMR-REQ-59] Radiated Emissions

The GLIMR Spacecraft shall nominally operate throughout the mission life with exposure to the radiated electric field emissions from the GLIMR Payload at levels defined in MIL-STD-461G, RE102, "Fixed wing external" limit line [TBC] in Figure 4-15.

Rationale: This requirement documents the MIL-STD-461G, RE102 testing performed on the GLIMR Payload. The payload is required to pass RE102 testing; however, actual payload emissions data is not available at this time. Therefore, the GLIMR Spacecraft should assume the worst-case payload emissions are at levels defined by the "Fixed wing external" limit line, and GLIMR Spacecraft components should nominally operate when subjected to these emissions. Additional emissions may be identified once RE102 testing is performed.

Verification Method: Test

Verification Description: Test data from qualification tests.

Success Criteria: Verification will be considered successful if the test data from qualification tests shows that values were not exceeded.

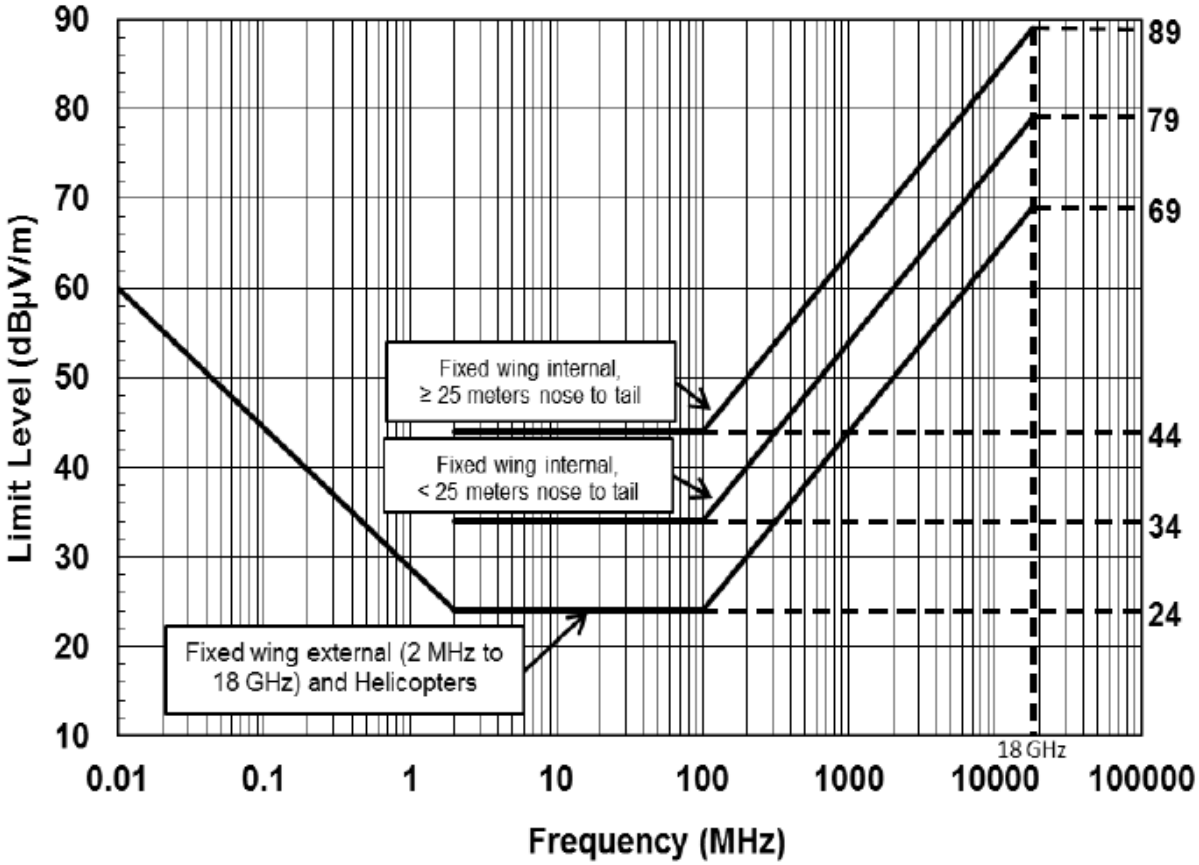

Figure 4-15: RE102 limit for aircraft and space system applications (see MIL-STD-461G Figure RE102-3)

[GLIMR-REQ-60] Radiated Susceptibility

The GLIMR Spacecraft shall prevent exposure of radiated electric field emissions on the GLIMR Payload from exceeding levels defined MIL-STD-461G, RS103, Space limit levels for frequencies between 2 MHz and 40 GHz [TBC] as shown in Figure 4-16.

Rationale: This requirement documents the MIL-STD-461G, RS103 testing performed on the payload. The payload is required to pass RE103 testing; however, actual payload susceptibility data is not available at this time. Therefore, the GLIMR Spacecraft should assume the payload is not susceptible to radiated electric fields are at the Space limit line or below. Exceeding these RS103 limits, as shown in Figure 4-16, would exceed the

tested limits of the payload. Additional susceptibilities may be identified once RS103 testing is performed.

Verification Method: Test

Verification Description: Test data from qualification tests.

Success Criteria: Verification will be considered successful if test data from qualification tests shows that values were not exceeded.

		LIMIT LEVELS (VOLTS/METER)							
PLATFORM / FREQUENCY RANGE		AIRCRFAFT (EXTERNAL OR SAFETY CRITICAL)	AIRCRAFT INTERNAL	ALL SHIPS (ABOVE DECK & EXPOSED BELOW DECK) AND SUBMARINES (EXTERNAL)*	SHIPS (METALLIC) (BELOW DECKS)	SHIPS (NON-METALLIC) (BELOW DECK)**	SUBMARINE (INTERNAL)	GROUND	SPACE
2 MHz to 30 MHz	A	200	200	200	10	50	5	50	20
	N	200	200	200	10	50	5	10	20
	AF	200	20	-	-	-	-	10	20
30 MHz to 1 GHz	A	200	200	200	10	10	10	50	20
	N	200	200	200	10	10	10	10	20
	AF	200	20	-	-	-	-	10	20
1 GHz to 18 GHz	A	200	200	200	10	10	10	50	20
	N	200	200	200	10	10	10	50	20
	AF	200	60	-	-	-	-	50	20
18 GHz to 40 GHZ	A	200	200	200	10	10	10	50	20
	N	200	60	200	10	10	10	50	20
	AF	200	60	-	-	-	-	50	20

KEY: A= Army
N= Navy
AF= Air Force

* For equipment located external to the pressure hull of a submarine but within the superstructure, use SHIPS (METALLIC) (BELOW DECK)
** For equipment located in the hanger deck of Aircraft Carriers

Figure 4-16: RS103 Limits

[GLIMR-REQ-61] Sensor Assembly Electrical Bonding

The GLIMR Spacecraft shall electrically bond the sensor assembly to the spacecraft with a DC resistance less than or equal to 2.5 milliohms.

Rationale: Proper electrical bonding is required to protect the Payload components from RF emissions. In addition, MIL-STD-461G EMI/EMC testing is conducted with low DC resistance bonding paths and the Host should match this configuration to prevent additional payload emissions or susceptibilities.

Verification Method: Test and Analysis

Verification Description: Test data is used to verify resistance values; analysis may be used to verify current carrying capacity or low inductance paths.

Success Criteria: Verification will be considered successful if test data and analyses show that the electrical bonding met the specified DC resistance values.

[GLIMR-REQ-167] PCU Electrical Bonding

The GLIMR Spacecraft shall electrically bond the PCU at the fayed surface mechanical interface defined in Figure 4-2 with a DC resistance less than or equal to 2.5 milliohms.

Rationale: Proper electrical bonding is required to protect the Payload components from RF emissions. In addition, MIL-STD-461G EMI/EMC testing is conducted with low DC resistance bonding paths and the Host should match this configuration to prevent additional payload emissions or susceptibilities.

Verification Method: Test and Analysis

Verification Description: Test data is used to verify resistance values; analysis may be used to verify current carrying capacity or low inductance paths.

Success Criteria: Verification will be considered successful if test data and analyses show that the electrical bonding met the specified DC resistance values.

[GLIMR-REQ-168] DEB Electrical Bonding

The GLIMR Spacecraft shall electrically bond the DEB at the fayed surface mechanical interface defined in Figure 4-3 with a DC resistance less than or equal to 2.5 milliohms.

Rationale: Proper electrical bonding is required to protect the Payload components from RF emissions. In addition, MIL-STD-461G EMI/EMC testing is conducted with low DC resistance bonding paths and the Host should match this configuration to prevent additional payload emissions or susceptibilities.

Verification Method: Test and Analysis

Verification Description: Test data is used to verify resistance values; analysis may be used to verify current carrying capacity or low inductance paths.

Success Criteria: Verification will be considered successful if test data and analyses show that the electrical bonding met the specified DC resistance values.

4.6 Pointing

[GLIMR-REQ-169] Nadir Pointing Accuracy

The GLIMR Spacecraft shall point the GLIMR Payload z-axis to nadir within +/- 0.2 degrees during GLIMR Payload imaging operations.

Rationale: The GLIMR Spacecraft pointing accuracy impacts the sensor field of regard from the payload POV. This accuracy is the amount allocated to the GLIMR in the payload accuracy budget. Payload imaging operations can occur any time at which the solar zenith angle within Greater North America is less than 72 degrees [TBC].

Verification Method: Analysis

Verification Description: Analysis will be used to confirm pointing accuracy can be met.

Success Criteria: The verification will be considered successful if the GLIMR Spacecraft can successfully point within the required accuracy.

[GLIMR-REQ-170] Orbit Accuracy

The GLIMR Spacecraft shall limit the change to orbital latitude and longitude relative to the Fixed Grid Frame to be within +/- 0.1 degree.

Rationale: The GLIMR Spacecraft orbital accuracy impacts the sensor field of regard from the payload POV. This accuracy is the amount allocated to the GLIMR in the payload accuracy budget.

Note: The Fixed Grid Frame (FGF) shall be defined as follows: The FGF is orthogonal and right-handed. The FGF origin is at the Spacecraft center of mass. The FGF +Z axis points toward Nadir. The FGF +X axis points East. The FGF +Y axis points South.

Verification Method: Analysis

Verification Description: Analysis will be used to confirm orbital accuracy can be met.

Success Criteria: The verification will be considered successful if the GLIMR Spacecraft can successfully maintain an orbit within the required accuracy.

[GLIMR-REQ-62] GLIMR Spacecraft Orbital Position Accuracy

The GLIMR Spacecraft shall provide the GLIMR Payload the orbital position with an accuracy of ≤100 meters, 3-sigma, in-track (Orbit Reference Frame (ORF) x-axis), cross-track (ORF y-axis), and radial (ORF z-axis) during GLIMR Payload imaging operations.

Rationale: This information is used by the onboard motion compensation software for accurate pointing. INR uses GLIMR Spacecraft attitude and ephemeris data to determine geolocation of the imagery in ground processing. It has impact on geolocation error

budget. Payload imaging operations can occur any time at which the solar zenith angle within Greater North America is less than 72 degrees [TBC].

Verification Method: Analysis

Verification Description: Verify against GLIMR Spacecraft operator's specification. Assess feasibility of meeting requirement with planned tracking and thruster technology.

Success Criteria: Verification will be considered successful if predicted orbital position knowledge uncertainty is less than or equal to that stated in requirement.

[GLIMR-REQ-63] GLIMR Spacecraft Orbital Velocity Accuracy

The GLIMR Spacecraft shall provide to the GLIMR Payload the spacecraft orbital velocity with an accuracy of ≤ 6 cm/sec, 3-sigma, per axis during GLIMR Payload imaging operations.

Rationale: This information is used by the onboard motion compensation software for accurate pointing. INR uses GLIMR Spacecraft attitude and ephemeris data to determine geolocation of the imagery in ground processing. It has impact on geolocation error budget. Payload imaging operations can occur any time at which the solar zenith angle within Greater North America is less than 72 degrees [TBC].

Verification Method: Analysis

Verification Description: Verify against GLIMR Spacecraft operator's specification. Assess feasibility of meeting requirement with planned tracking and thruster technology.

Success Criteria: Verification will be considered successful if predicted orbital velocity knowledge uncertainty is less than or equal to that stated in requirement.

[GLIMR-REQ-171] GLIMR Spacecraft Orbital Reference Frame

The GLIMR Spacecraft shall provide to the GLIMR Payload the spacecraft orbital position and velocity estimates as a quaternion representation in the Orbit Reference Frame (ORF) relative to ECI.

Rationale: This information is used by the onboard motion compensation software for accurate pointing. INR uses GLIMR Spacecraft attitude and ephemeris data to determine geolocation of the imagery in ground processing.

Note: The Orbit Reference Frame (ORF) shall be defined as follows: The ORF is orthogonal and right-handed. The ORF origin is at the Spacecraft center of mass. The ORF +Z axis points toward the center of the Earth. The ORF +Y axis points along the negative orbit normal. The ORF +X axis completes the triad.

Verification Method: Inspection

Verification Description: Inspection of the coordinate frame used to provide the GLIMR Spacecraft orbital position and velocity.

Success Criteria: Verification will be considered successful if inspection of the orbital position and velocity data shows it is provided in the requested quaternion representation.

[GLIMR-REQ-64] GLIMR Spacecraft Attitude Knowledge Accuracy

The GLIMR Spacecraft shall provide to the GLIMR Payload the spacecraft attitude data with the accuracies shown in Table 4-22.

Rationale: These requirements bound the knowledge error, which is the difference between the estimated attitude and the true attitude. Attitude knowledge error includes misalignments between the spacecraft attitude determination reference frame and the payload mounting frame. Diurnal error refers to that portion of the error that repeats from day-to-day. Dynamic errors include all non-static and non-diurnal errors.

Verification Method: Analysis

Verification Description: Full fidelity error analysis and/or simulation of GLIMR Spacecraft Guidance, Navigation & Control (GN&C), including rates bias estimation, using specified gyroscope and attitude determination sensor error parameters (e.g., Angle White Noise, Angle Random Walk, Scale Factor). Performance testing at component level.

Success Criteria: Verification will be considered successful if GN&C sensors are within their component specifications, attitude determination axes are correctly assigned to relative attitude data outputs and polarities are correct, and analyzed performance is within that stated in requirement.

Table 4-22: Attitude Knowledge Errors

Attitude Component	Attitude Knowledge Error
Static	<1200 microradians per axis, 3σ, precalibration
Diurnal	<45 microradians per axis, 3σ
Dynamic	<30 microradians per axis, 3σ

[GLIMR-REQ-65] GLIMR Spacecraft Attitude Reference Frame

The GLIMR Spacecraft shall provide to the GLIMR Payload the spacecraft attitude estimates as a quaternion representation of the attitude of the payload mounting frame relative to the Earth's Mean Equator J2000 Earth Centered Inertial coordinate frame described in USNO Circular 179.

Rationale: This information is used by the onboard motion compensation software for accurate pointing. INR uses GLIMR Spacecraft attitude and ephemeris data to determine geolocation of the imagery in ground processing.

Verification Method: Inspection

Verification Description: Inspection of the coordinate frame used to provide the GLIMR Spacecraft attitude.

Success Criteria: Verification will be considered successful if inspection of the attitude data shows it is provided in the requested quaternion representation.

[GLIMR-REQ-172] GLIMR Spacecraft Earth Attitude Reference Frame

The GLIMR Spacecraft shall provide to the GLIMR Payload the spacecraft Earth Centered Earth Fixed (ECEF) quaternion for WGS-84 Earth attitude relative to ECI.

Rationale: This information is used by the onboard motion compensation software for accurate pointing. INR uses GLIMR Spacecraft attitude and ephemeris data to determine geolocation of the imagery in ground processing.

Verification Method: Analysis

Verification Description: Analysis of the coordinate frame conversion from ECEF to ECI.

Success Criteria: Verification will be considered successful if analysis of the provided quaternion performs the requested coordinate transformation.

[GLIMR-REQ-66] GLIMR Spacecraft Integrated Angular Rate Accuracy

The GLIMR Spacecraft shall provide to the GLIMR Payload the spacecraft integrated angular rate data with the accuracies shown in Table 4-23.

Rationale: The payload uses the GLIMR Spacecraft integrated angular rate data to perform image motion compensation.

Verification Method: Analysis

Verification Description: Full fidelity error analysis and/or simulation of GLIMR Spacecraft GN&C, including rates bias estimation, using specified gyroscope and attitude determination sensor error parameters (e.g., Angle White Noise, Angle Random Walk, Scale Factor). Performance testing at component level.

Success Criteria: Verification will be considered successful if GN&C sensors are within their component specifications, attitude determination axes are correctly assigned to relative attitude data outputs and polarities are correct, and analyzed performance is within that stated in requirement.

Table 4-23: Angular Rate Errors

Spacecraft Integrated Angular Rate Error	Axis	Time Window
<1 microradian, 3σ	x and y axis	1 second window
<1.5 microradians, 3σ	z axis	1 second window
<2 microradians, 3σ	x and y axis	30 second window
<2.5 microradians, 3σ	z axis	30 second window
<7 microradians, 3σ	per axis	300 second window
<20 microradians, 3σ	per axis	900 second window

[GLIMR-REQ-67] GLIMR Spacecraft Angular Rate Bandwidth

The GLIMR Spacecraft shall provide to the GLIMR Payload the spacecraft angular rate data with a -3dB bandwidth of greater than 25 Hz.

Rationale: The payload uses GLIMR Spacecraft angular rate data to perform image motion compensation.

Verification Method: Analysis

Verification Description: Full fidelity error analysis and/or simulation of GLIMR Spacecraft GN&C, including rates bias estimation, using specified gyroscope and attitude determination sensor error parameters (e.g., Angle White Noise, Angle Random Walk, Scale Factor). Performance testing at component level.

Success Criteria: Verification will be considered successful if GN&C sensors are within their component specifications, attitude determination axes are correctly assigned to relative attitude data outputs and polarities are correct, and analyzed performance is within that stated in requirement.

[GLIMR-REQ-68] GLIMR Spacecraft Angular Rate Errors

The GLIMR Spacecraft shall provide to the GLIMR Payload the spacecraft angular rate data with a post calibration combined scale factor error and gyro misalignments of less than 4500 ppm.

Rationale: The payload uses GLIMR Spacecraft angular rate data to perform image motion compensation.

Verification Method: Analysis

Verification Description: Full fidelity error analysis and/or simulation of GLIMR Spacecraft GN&C, including rates bias estimation, using specified gyroscope and attitude determination sensor error parameters (e.g., Angle White Noise, Angle Random Walk, Scale Factor). Performance testing at component level.

Success Criteria: Verification will be considered successful if GN&C sensors are within their component specifications, attitude determination axes are correctly assigned to relative attitude data outputs and polarities are correct, and analyzed performance is within that stated in requirement.

[GLIMR-REQ-173] GLIMR Spacecraft Attitude and Orbit Parameters Time of Validity

The GLIMR Spacecraft shall provide to the GLIMR Payload the spacecraft attitude and orbital parameters with the same reference time of validity.

Rationale: If the time of validity is not the same for both attitude and orbit parameters, then a pointing error will occur when these are combined to get GLIMR attitude with respect to ECEF.

Note: Reference time is defined as GPS seconds in week [0.0, 604800.0] and reference week is defined as GPS week since GPS Epoch [0, 65535].

Verification Method: Test

Verification Description: Test of the reference time of validity.

Success Criteria: Verification will be considered successful if the reference time of validity are the same for both the attitude and orbital parameters.

[GLIMR-REQ-174] Time of Validity Accuracy

The GLIMR Spacecraft shall provide to the GLIMR Payload a reference time of validity for the spacecraft attitude and orbital parameters accurate to within 10 milliseconds.

Rationale: If the time of validity is not provided within this accuracy, then a pointing error will occur when these are combined to get GLIMR attitude with respect to ECEF.

Verification Method: Test

Verification Description: Test of the reference time of validity accuracies.

Success Criteria: Verification will be considered successful if the reference time of validity accuracy tests indicate that the requirement will be met.

4.7 On-Orbit Disturbance Requirements

[GLIMR-REQ-69] Low-Frequency Spacecraft-to-Payload Angular Disturbance Environment

The GLIMR Spacecraft shall limit the maximum spacecraft-to-GLIMR Payload low-frequency angular disturbance at the sensor assembly mechanical interface to the values specified in Table 4-24 during GLIMR Payload imaging operations.

Rationale: The payload has predicted susceptibilities to angular disturbances. Two frequency bins are defined where a single tone per bin is specified with per-axis root-mean-squared (RMS) levels. Model Uncertainty Factor (MUF) are included in the payload provider's analysis levels as indicated in the table, so the spacecraft provider does not need to include MUF. Dynamic analysis is necessary to confirm that the performance of the payload will be within its specifications. The analysis will be used as an input into a payload structural-pointing model. Payload imaging operations can occur any time at which the solar zenith angle within Greater North America is less than 72 degrees [TBC].

Verification Method: Analysis

Verification Description: Structural dynamic analyses performed to determine environment at payload interface. Model verification is not required beyond what is necessary to support Coupled Loads Analysis. Analyses should include all dynamic environments under all normal operations of the GLIMR Spacecraft during payload imaging operations.

Analyses should model disturbances at their source and the resulting response of the system at the payload mechanical interface.

Success Criteria: Verification will be considered successful if the structural dynamic analyses of the system indicate that environment is within limits.

Table 4-24: Low-Frequency Spacecraft-to-Payload Angular Disturbance Environment

Freq Range (Hz)	Tone Location (Hz)	Spacecraft Per-Axis RMS (urad)	Payload Analysis MUF	Payload Analysis Per-Axis RMS (urad)
0.0-0.01	2.30E-05	≤ 75	2	≤ 150
0.01-0.1	0.055	≤ 125	2	≤ 250

[GLIMR-REQ-70] High-Frequency Spacecraft-to-Payload Rotational Disturbance Environment

The GLIMR Spacecraft shall limit the maximum spacecraft-to-GLIMR Payload high-frequency rotational disturbance at the sensor assembly mechanical interface to the values specified in this section during GLIMR Payload imaging operations.

Note: The rotational disturbance environment at the spacecraft-to-GLIMR Payload interface is first defined by the single-sided Power Spectral Density (PSD) and then further refined by considering the total energy in each frequency bin, as defined in Table 4-25 and Table 4-26. The values specified define a "do not exceed" level across all frequencies. PSD values between points specified in the table are determined by linear interpolation on a log-log scale, shown in Figure 4-17.

Rationale: GLIMR Spacecraft rotational disturbance has direct impact on the payload Line of Sight (LOS) pointing stability. The GLIMR Spacecraft rotational disturbances have many sources, such as solar array stepping and reaction wheel harmonics. The disturbances are defined as PSDs. Payload imaging operations can occur any time at which the solar zenith angle within Greater North America is less than 72 degrees [TBC].

Verification Method: Analysis

Verification Description: Structural dynamic analyses performed to determine variances.

Success Criteria: Verification will be considered successful if the structural dynamic analyses of the system indicate that variances are within limits

Table 4-25: High-Frequency Spacecraft-to-Payload Rotational Displacement PSD Specification

Frequency [Hz]	Per Axis Rotational Acceleration PSD [urad^2/Hz]
0.1	1e2
1	9.495e-1
10	9.014e-3
100	8.56e-5
1000	8.126e-7

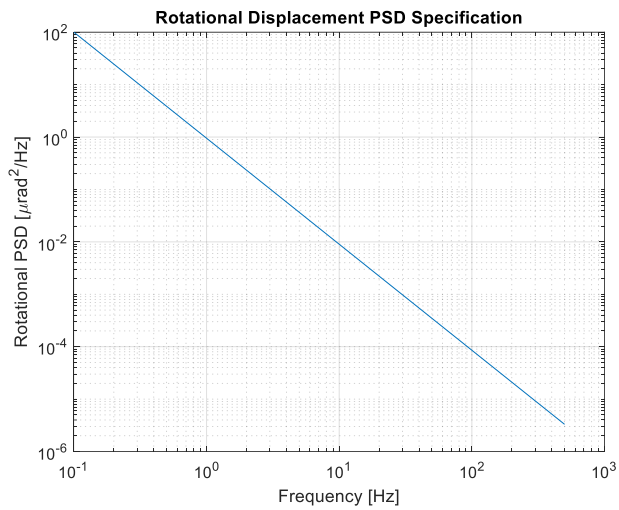

Figure 4-17: Rotational Displacement PSD Specification

Table 4-26: Spacecraft-to-Payload Rotational Disturbance Allowable Energy

Frequency Bin [Hz]	Per Axis Total Rotational Energy [urad^2]
0.1 – 1	0.885
1 – 10	0.336
10 – 100	0.032
100 - 1000	0.002

[GLIMR-REQ-71] Spacecraft-to-Payload Translational Disturbance Environment

The GLIMR Spacecraft shall limit the maximum spacecraft-to-GLIMR Payload translational disturbance at the sensor assembly mechanical interface to the values specified in this section during GLIMR Payload imaging operations.

> Note: The translational disturbance environment at the spacecraft-to-payload interface is defined by the single-sided PSD, and then further limited by maximum energy values provided, as specified in Table 4-27 and

Table 4-28. The PSD values specified define a "do not exceed" level across all frequencies. The PSD values between points specified in the table are determined by linear interpolation on a log-log scale, as shown in Figure 4-18**Error! Reference source not found.**.

Rationale: GLIMR Spacecraft translational disturbance has direct impact on the payload LOS pointing stability. The GLIMR Spacecraft translational disturbances have many sources, such as solar array stepping and reaction wheel harmonics. The disturbances are defined as PSDs. Payload imaging operations can occur any time at which the solar zenith angle within Greater North America is less than 72 degrees [TBC].

Verification Method: Analysis

Verification Description: Structural dynamic analyses performed to determine variances.

Success Criteria: Verification will be considered successful if the structural dynamic analyses of the system indicate that variances are within limits.

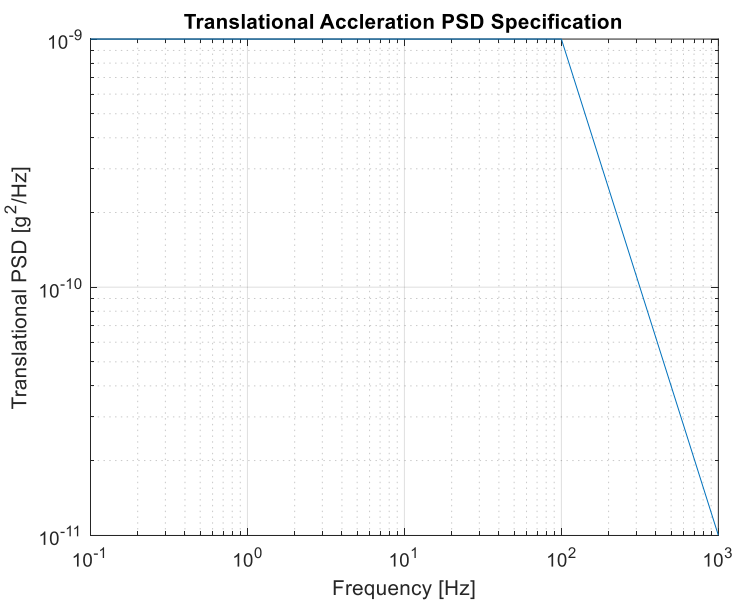

Figure 4-18: Translational Acceleration PSD Specification

Table 4-27: Spacecraft-to-Payload Translational Acceleration PSD Specification

Frequency [Hz]	Per Axis Translational Acceleration PSD [g^2/Hz]
0.1	≤ 1e-9
1	≤ 1e-9
10	≤ 1e-9

100	≤ 1e-9
1000	≤ 1e-11

Table 4-28: Spacecraft-to-Payload Translational Disturbance Allowable Energy

Frequency Bin [Hz]	Per Axis Total Translational Energy [g^2]
0.1 – 1	≤ 6.3e-10
1 – 10	≤ 6.3e-9
10 – 100	≤ 6.3e-8
100 - 1000	≤ 6.3e-8

[GLIMR-REQ-72] Payload-to-Spacecraft Uncompensated Torque

The GLIMR Spacecraft shall accommodate uncompensated torques from the GLIMR Payload as defined in Table 4-29.

Rationale: The uncompensated torques from the payload are limited to those in the table below per axis.

Note: These maximum torques are created when the payload slews from one measurement site to another. Small slews of 0.5 degrees lasting a total of 1.32 seconds generate the highest torques, but these highest torques are only experienced over a small portion of the 1.32 seconds.

Verification Method: Analysis

Verification Description: Attitude control analysis to verify compliance with requirements in presence of such disturbances.

Success Criteria: Verification will be considered successful if attitude control analyses indicate the alignment stability requirements are satisfied while being subjected to the specified uncompensated torques.

Table 4-29: Uncompensated Torque Values per Axis

Axis	Maximum Uncompensated Torque (N-m)
x-axis	0.14
y-axis	0.23
z-axis	0.05

4.8 Electrical

Figure 4-19 shows the high-level categories of electronic interfaces between the GLIMR Payload and the GLIMR spacecraft. These interfaces are described in the following sections and in key reference documentation. There are also mechanical mounting and thermal interfaces not shown in this diagram.

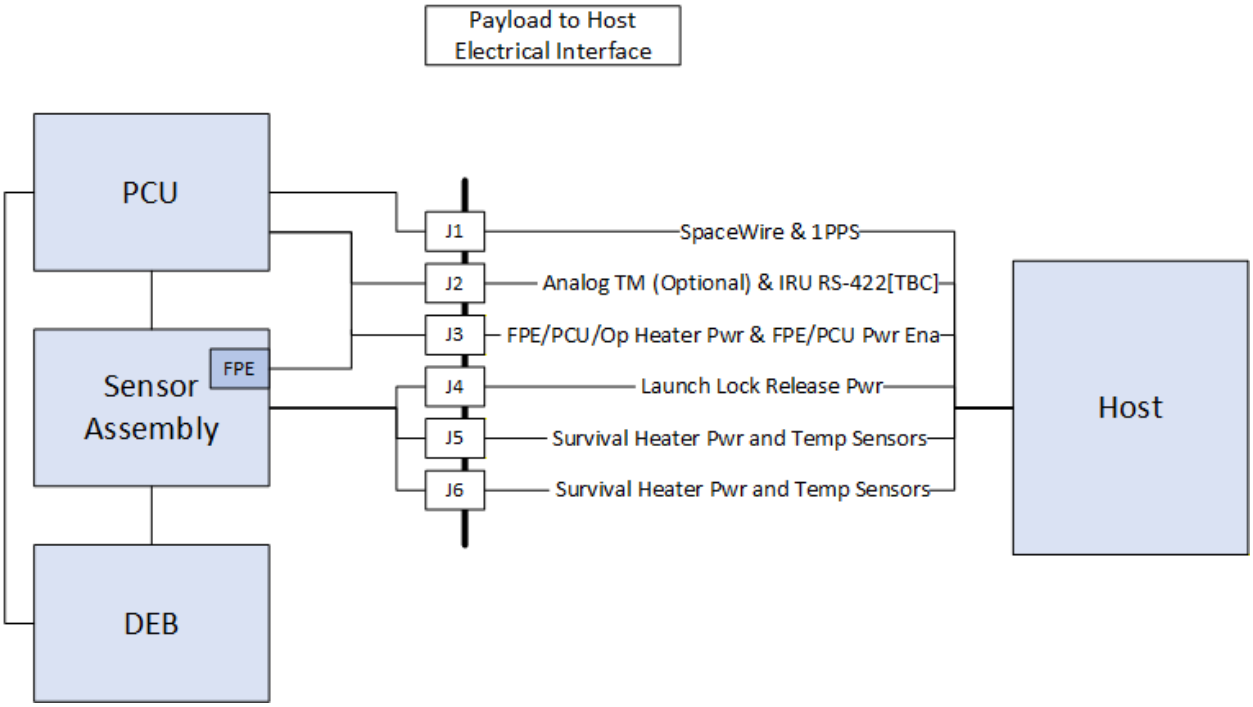

Figure 4-19: Payload to GLIMR Electronic Interfaces

4.8.1 Power

[GLIMR-REQ-73] FPE Power

The GLIMR Spacecraft shall provide at least 130W peak operational power (averaged over 10 milliseconds) to the Focal Plane Electronics (FPE).

Rationale: This accommodates the FPE as measured power usage plus margin.

Note: CBE for FPE peak power is 80W; NTE for FPE steady-state power is 120W (averaged over 180 minutes); CBE for FPE steady-state power is 73W.

Verification Method: Test

Verification Description: Functional Test to verify a load of 130W.

Success Criteria: Verification will be considered successful if test data supports the requirement of providing peak power to the electronics successfully.

[GLIMR-REQ-74] PCU Power

The GLIMR Spacecraft shall provide at least 175W peak operational power (averaged over 10 milliseconds) to the PCU.

Rationale: This accommodates the PCU as measured power usage plus margin.

Note: CBE for PCU peak power is 60W; NTE for PCU steady-state power is 150W (averaged over 180 minutes); CBE for PCU steady-state power is 48W.

Verification Method: Test

Verification Description: Functional Test to verify a load of 175W.

Success Criteria: Verification will be considered successful if test data supports the requirement of providing peak power to the electronics successfully.

[GLIMR-REQ-75] Operational Heaters Power

The GLIMR Spacecraft shall provide at least 195W peak power (averaged over 10 milliseconds) to the PCU for the GLIMR Payload operational heaters.

Rationale: This accommodates the payload as measured power usage plus margin.

Note: CBE for operational heater peak power is 131W. The anticipated steady-state power needed by the operational heaters is ≤ 130W (CBE = 86W) (averaged over 180 minutes).

Verification Method: Test

Verification Description: Functional Test to verify a load of 195W.

Success Criteria: Verification will be considered successful if test data supports the requirement of providing peak power to the operational heaters successfully.

[GLIMR-REQ-76] Survival Heaters Power

The GLIMR Spacecraft shall provide at least 250W maximum power to the survival heaters.

Rationale: This accommodates the payload as measured power usage plus margin.

Note: CBE for survival heater maximum power is 188W.

Verification Method: Test

Verification Description: Functional Test to verify a load of 250W. Analysis of thermal response to show continual operation at 250W is possible, or 3-hour test at average load.

Success Criteria: Verification will be considered successful if test data supports the requirement of maximum operational power to the survival heaters successfully.

[GLIMR-REQ-77] GLIMR Payload Operational Voltage Supply

The GLIMR Spacecraft shall provide an operational voltage of 32 ± 2.0 VDC to the GLIMR Payload (PCU, FPE, and operational heaters).

Rationale: The payload is designed to operate at 32 V ± 2.0 VDC. Additional details of this interface can be found in the GLIMR Payload to GLIMR Spacecraft IDD (GLIMR-06-002).

Verification Method: Test

Verification Description: Test that the output voltage of each power supply lines to each of the operational payload power supply lines is regulated to between 30 VDC and 34 VDC.

Success Criteria: Verification will be considered successful if the test successfully provides the voltage within limits.

[GLIMR-REQ-176] GLIMR Payload Survival Voltage Supply

The GLIMR Spacecraft shall provide a voltage of 32 ± 2.0 VDC to the GLIMR Payload survival heaters.

Rationale: The payload survival heaters were designed to operate at 32 V ± 2.0 VDC. Additional details of this interface can be found in the GLIMR Payload to GLIMR Spacecraft IDD (GLIMR-06-002).

Verification Method: Test

Verification Description: Test that the output voltage of each of the survival heater power supply lines is regulated to between 30 VDC and 34 VDC.

Success Criteria: Verification will be considered successful if the test successfully provides the voltage within limits.

[GLIMR-REQ-78] PCU Voltage Ripple

The GLIMR Spacecraft shall provide a maximum voltage ripple of less than or equal to 1 Vpp from 30 Hz to 150 kHz on the PCU power supply line.

Rationale: This is driven by the legacy design.

Verification Method: Test

Verification Description: Test that the output voltage ripple of the PCU power supply line is within specified levels.

Success Criteria: Verification will be considered successful if the test successfully meets the requirement of output voltage ripple.

[GLIMR-REQ-177] FPE Voltage Ripple

The GLIMR Spacecraft shall provide a maximum voltage ripple of less than or equal to 1 Vpp from 30 Hz to 150 kHz on the FPE power supply line.

Rationale: This is driven by the legacy design.

Verification Method: Test

Verification Description: Test that the output voltage ripple of the FPE power supply line is within specified levels.

Success Criteria: Verification will be considered successful if the test successfully meets the requirement of output voltage ripple.

[GLIMR-REQ-79] PCU Over-Voltage Transient

The GLIMR Spacecraft shall prevent voltage transients in excess of +42.5 VDC with durations of 10 msec (from 34.0 V) with a rise and fall time of 50 microseconds on the PCU power supply line.

Rationale: This is driven by the legacy design.

Verification Method: Test

Verification Description: Test that the output voltage transients on the PCU power supply line are within specified levels.

Success Criteria: Verification will be considered successful if the test successfully meets the requirement of output voltage transients.

[GLIMR-REQ-178] FPE Over-Voltage Transient

The GLIMR Spacecraft shall prevent voltage transients in excess of +42.5 VDC with durations of 10 msec (from 34.0 V) with a rise and fall time of 50 microseconds on the FPE power supply line.

Rationale: This is driven by the legacy design.

Verification Method: Test

Verification Description: Test that the output voltage transients on the FPE power supply line are within specified levels.

Success Criteria: Verification will be considered successful if the test successfully meets the requirement of output voltage transients.

[GLIMR-REQ-179] PCU Under-Voltage Transient

The GLIMR Spacecraft shall prevent voltage transients below +26.0 VDC with durations of 10 msec (from 30.0 V) with a rise and fall time of 50 microseconds on the PCU power supply line.

Rationale: This constraint is imposed by built-in autonomous shutdown characteristic of the legacy PCU design.

Verification Method: Test

Verification Description: Test that the output voltage transients on the PCU power supply line are within specified levels.

Success Criteria: Verification will be considered successful if the test successfully meets the requirement of output voltage transients.

[GLIMR-REQ-180] FPE Under-Voltage Transient

The GLIMR Spacecraft shall prevent voltage transients below +26.0 VDC with durations of 10 msec (from 30.0 V) with a rise and fall time of 50 microseconds on the FPE power supply line.

Rationale: This is driven by the legacy design.

Verification Method: Test

Verification Description: Test that the output voltage transients on the FPE power supply line are within specified levels.

Success Criteria: Verification will be considered successful if the test successfully meets the requirement of output voltage transients.

[GLIMR-REQ-80] Overcurrent Protection

The GLIMR Spacecraft shall provide resettable overcurrent protection for all connections to the GLIMR Payload.

Rationale: The payload does not contain internal fusing, and GLIMR Spacecraft-side overcurrent protection is expected.

Verification Method: Inspection

Verification Description: Inspection of drawings or hardware.

Success Criteria: Verification will be considered successful if the inspection successfully indicates the sufficient overcurrent protection on all connections.

[GLIMR-REQ-81] Peak Inrush Current

The GLIMR Spacecraft shall accommodate a peak inrush current at initial application of GLIMR Payload power with the characteristics specified in Table 4-30 and Figure 4-20.

Rationale: This provides guidance to the GLIMR Spacecraft power system design.

Note: Turn-on bus current should be based on 27V bus voltage. The bus voltage ramp rate should not exceed 2 V/s up to 20 V and 2 V/ms for voltages above 20 V. The unit input current will return to within 10% of the unit steady-state operational current within 50 ms of initial application of power to the unit.

Verification Method: Analysis

Verification Description: Analysis of power supply design to show requirement is met. Analysis may be by calculation or simulation.

Success Criteria: Verification will be considered successful if the analysis shows the payload in-rush current is limited as specified.

Table 4-30: Transient Inrush Current Limits

Inrush Current Pulse Width	Percent of Maximum Steady State Current (%)
10 microseconds	1000
50 microseconds	700
100 microseconds	550
1 millisecond	350
10 milliseconds	200
100 milliseconds	150

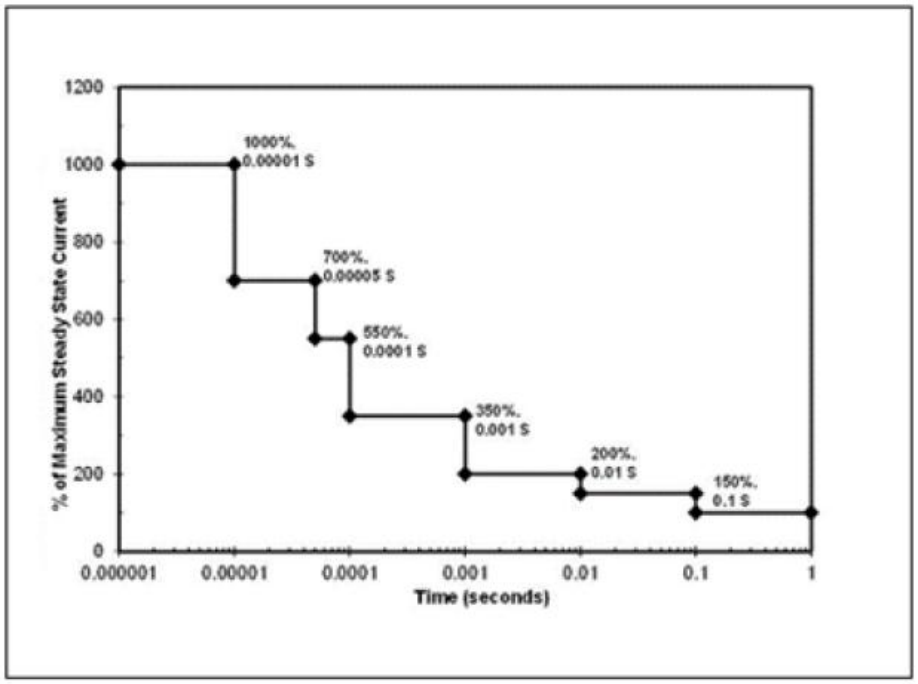

Figure 4-20: Conducted Inrush Current, Primary Power Loads

[GLIMR-REQ-82] Steady State Current

After the initial peak inrush current, the GLIMR Spacecraft shall accommodate a maximum steady state current at initial application of GLIMR Payload power as specified in

Table 4-31.

Rationale: This provides guidance to the GLIMR Spacecraft power system design. The maximum current draw is calculated as the maximum peak power accommodation values on a given feed divided by the minimum allowable bus voltage.

Verification Method: Analysis

Verification Description: Analysis of power supply design to show requirement is met. Analysis may be by calculation or simulation.

Success Criteria: Verification will be considered successful if the analysis shows the payload maximum steady state current is limited as specified.

Table 4-31: Maximum Steady State Current

Power Supply Line	Maximum Steady State Current
Sensor Assembly	5 A (130 W / 26 V)
PCU	6.8 A (175 W / 26 V)
Operational Heaters	9.6 A (250 W / 26 V)
Survival Heaters	9.6 A (250 W / 26 V)

[GLIMR-REQ-181] Power End of Life Margin

The GLIMR Spacecraft shall meet mission power requirements throughout the mission lifetime with an End of Life (EOL) margin of at least 5% [TBC].

Rationale: Adequate power is required for the entire mission duration.

Verification Method: Analysis

Verification Description: Analysis of power budgets over the duration of the mission lifetime.

Success Criteria: Verification will be considered successful if the analysis of the power budget indicates that the requirement will be met.

4.8.2 Electrical Interfaces

[GLIMR-REQ-83] PCU to GLIMR Spacecraft SpaceWire Cable Length

The GLIMR Spacecraft shall limit the SpaceWire cable length between the GLIMR Spacecraft router and the PCU to a maximum of 10 meters [TBC], without any connectors.

Rationale: This is a SpaceWire standard. The cable should be continuous without connectors.

Verification Method: Inspection

Verification Description: Inspection of cable drawing(s).

Success Criteria: Verification will be considered successful if the inspection indicates the SpaceWire cable length is below the specified maximum.

[GLIMR-REQ-84] FPE Power Enable Signal

When commanded by the GMOC operator, the GLIMR Spacecraft shall provide a discrete power enable signal for the FPE with the electrical characteristics specified in the GLIMR Payload to GLIMR Spacecraft IDD (GLIMR-06-002).

Rationale: The FPE is enabled by a discrete power enable signal. Power enable signal electrical characteristics are described in the GLIMR Payload to GLIMR Spacecraft IDD (GLIMR-06-002).

Verification Method: Demonstration

Verification Description: Demonstration that the output of the discrete power enable signals matches the characteristics specified in the GLIMR Payload to GLIMR Spacecraft IDD (GLIMR-06-002).

Success Criteria: Verification will be considered successful if the demonstration successfully meets the requirement for the power enable output signals.

[GLIMR-REQ-85] PCU Power Enable Signal

When commanded by the GMOC operator, the GLIMR Spacecraft shall provide a discrete power enable signal for the PCU with the electrical characteristics specified in the GLIMR Payload to GLIMR Spacecraft IDD (GLIMR-06-002).

Rationale: The PCU is enabled by discrete power enable signal. Power enable signal electrical characteristics are described in the GLIMR Payload to GLIMR Spacecraft IDD (GLIMR-06-002).

Verification Method: Demonstration

Verification Description: Demonstration that the output of the discrete power enable signals matches the characteristics specified in the GLIMR Payload to GLIMR Spacecraft IDD (GLIMR-06-002).

Success Criteria: Verification will be considered successful if the demonstration successfully meets the requirement for the power enable output signals.

[GLIMR-REQ-86] Launch Lock Interface

When commanded by the GMOC operator, the GLIMR Spacecraft shall provide power on each of four power lines to the GLIMR Payload launch locks on the azimuth and elevation gimbals, with the electrical characteristics and timing as specified in the GLIMR Payload to GLIMR Spacecraft IDD (GLIMR-06-002).

Rationale: Four power lines are required, a primary and redundant for each gimbal axis. Specifics of the launch lock wiring schematic are in the GLIMR Payload to GLIMR Spacecraft IDD (GLIMR-06-002).

Verification Method: Test

Verification Description: Functional Test to verify specified load.

Success Criteria: Verification will be considered successful if the test data supports the requirement of powering the launch locks successfully.

[GLIMR-REQ-87] Survival Heater Temperature Sensors Interface

The GLIMR Spacecraft shall provide to the GMOC measurements from the survival heater temperature sensors with the electrical characteristics specified in the GLIMR Payload to GLIMR Spacecraft IDD (GLIMR-06-002).

Rationale: Each survival heater is monitored with a thermistor to confirm that no temperature limits are exceeded when the payload is Off. Specifics of the thermistor characteristics are in the GLIMR Payload to GLIMR Spacecraft IDD (GLIMR-06-002).

Verification Method: Test

Verification Description: Functional Test to verify appropriate thermistor inputs and output readings.

Success Criteria: Verification will be considered successful if the test data shows that the thermistors are operating successfully.

[GLIMR-REQ-88] GLIMR Spacecraft Orbital Knowledge Interface

The GLIMR Spacecraft shall provide the spacecraft orbital knowledge at 1Hz with data latency ≤ 100 milliseconds through a SpaceWire interface in accordance with the GLIMR Payload to GLIMR Spacecraft IDD (GLIMR-06-002).

Rationale: The payload uses GLIMR Spacecraft ephemeris data to determine science collection pointing commands. The data latency is defined as the delta between when the data is determined by the GLIMR GPS and the time it is received by the payload.

Verification Method: Demonstration

Verification Description: Demonstration of the GLIMR Spacecraft to payload SpaceWire orbital data delivery.

Success Criteria: Verification will be considered successful if the demonstration of GLIMR Spacecraft orbital data shows the correct transmission rate and characteristics.

[GLIMR-REQ-89] GLIMR Spacecraft Attitude Knowledge Interface

The GLIMR Spacecraft shall provide the spacecraft attitude knowledge at 1Hz with data latency ≤ 100 milliseconds to the GLIMR Payload through a SpaceWire interface in accordance with the GLIMR Payload to GLIMR Spacecraft IDD (GLIMR-06-002).

Rationale: The payload uses GLIMR Spacecraft attitude data to determine science collection pointing commands. The data latency is defined as the delta between when the

data is determined by the Host Spacecraft sensor and the time it is received by the payload.

Verification Method: Demonstration

Verification Description: Demonstration of the GLIMR Spacecraft to payload SpaceWire attitude knowledge delivery.

Success Criteria: Verification will be considered successful if the demonstration of GLIMR Spacecraft attitude data shows the correct transmission rate and characteristics.

[GLIMR-REQ-90] GLIMR Spacecraft Angular Rate Knowledge Interface

The GLIMR Spacecraft shall provide the spacecraft angular rate knowledge at 100Hz with data latency ≤ 5 milliseconds to the GLIMR Payload through an RS-422 interface in accordance with the GLIMR Payload to GLIMR Spacecraft IDD (GLIMR-06-002).

Rationale: The payload uses GLIMR Spacecraft angular rate data to perform image motion compensation. Data latency has impact on jitter error budget. The data latency is defined as the delta between when the data is determined by the GLIMR GPS and the time it is received by the payload.

Verification Method: Demonstration

Verification Description: Demonstration of the GLIMR Spacecraft to Payload angular rate data delivery.

Success Criteria: Verification will be considered successful if the demonstration of GLIMR Spacecraft angular rate data shows the correct transmission rate and characteristics.

[GLIMR-REQ-91] GLIMR Spacecraft Reference Time

The GLIMR Spacecraft shall provide the spacecraft reference time (e.g., GPS) time-of-validity expressed in Coordinated Universal Time through a SpaceWire interface at 1Hz, with error not to exceed 10 milliseconds, in accordance with the GLIMR Payload to GLIMR Spacecraft IDD (GLIMR-06-002).

Rationale: The payload uses GLIMR Spacecraft time-of-validity to synchronize GLIMR Spacecraft time.

Verification Method: Demonstration

Verification Description: Demonstration of the GLIMR Spacecraft to Payload SpaceWire demonstration.

Success Criteria: Verification will be considered successful if the demonstration of GLIMR Spacecraft time-of-validity data shows the correct transmission rate and characteristics.

[GLIMR-REQ-92] Time of Day Pulse (1PPS)

The GLIMR Spacecraft shall provide the spacecraft Time-Of-Day pulse (1PPS) to the GLIMR Payload through a RS-422 interface in accordance with the GLIMR Payload to GLIMR Spacecraft IDD (GLIMR-06-002).

Rationale: Payload needs to receive this pulse to synchronize operations. Electrical characteristics of the driver electronics are defined in the GLIMR Payload to GLIMR Spacecraft IDD (GLIMR-06-002).

Verification Method: Demonstration

Verification Description: Demonstration of the Time-Of-Day pulse.

Success Criteria: Verification will be considered successful if the demonstration of Time-Of-Day pulse shows the correct transmission rate and characteristics.

[GLIMR-REQ-93] Direct Electrostatic Discharge

The GLIMR Spacecraft shall prevent a direct electrostatic discharge from occurring from any GLIMR Spacecraft components to any GLIMR Payload components.

Rationale: The GLIMR Spacecraft needs to properly accommodate the payload in the GEO space charging environment. The details of how this is done are dependent upon the incorporation of the payload components in the GLIMR Spacecraft grounding scheme. It is unlikely that a discharge to some part of the payload's structure would all be channeled to a single connector pin, but should that happen, 100 nanojoules is the amount of energy that is tolerable at any payload connector pin.

Verification Method: Analysis

Verification Description: Analysis of electrical grounding design and material selection.

Success Criteria: Verification will be considered successful if grounding analysis and material selection indicate that direct discharge will not occur.

[GLIMR-REQ-94] SpaceWire Signaling Rate

The GLIMR Spacecraft shall provide to the GLIMR Payload a SpaceWire link with a signaling rate of 100 MHz ±1%. This rate supports the full-duplex throughput of up to 72 Mbps per direction.

Rationale: The payload is designed to accept commands through the SpaceWire interface. Additional details of this interface can be found in the GLIMR Payload to GLIMR

Spacecraft IDD (GLIMR-06-002). A complete description of the Remote Memory Access Protocol (RMAP), commands, and command data rates can be found in the GLIMR Flight Software User's Guide (GLIMR SW-08).

Note: If a signaling rate of 72 Mbps is an issue, negotiations may be possible.

Verification Method: Demonstration

Verification Description: Demonstration during testing of the signaling rate.

Success Criteria: The verification will be considered successful if the signaling rate is sufficient to support the full-duplex throughput required.

[GLIMR-REQ-95] Electrical Interfaces Compliance

The GLIMR Spacecraft shall provide electrical interfaces to the GLIMR Payload in compliance with the GLIMR Payload to GLIMR Spacecraft IDD (GLIMR-06-002).

Rationale: The GLIMR Payload to GLIMR Spacecraft IDD (GLIMR-06-002) provides the electrical interface information that the GLIMR Spacecraft will need for accommodation of the payload elements.

Verification Method: Inspection

Verification Description: Inspection of documentation.

Success Criteria: Verification will be considered successful if inspection shows that the electrical interfaces are compliant with specified documentation.

4.9 Contamination Control

[GLIMR-REQ-96] Particulate Deposition

The GLIMR Access to Space Contractor shall limit the particulate deposition contamination accumulation rate to 1% percent area coverage (PAC) on the GLIMR Payload per IEST-STD-CC1246 after delivery, which includes any storage time of the instrument, space vehicle integration and test (at the integrator facilities), and encapsulation in the payload fairing (PLF) (at launch provider facilities).

Rationale: These levels are from the contamination budget that provides the pathway for the payload to be able to meet its End of Life (EOL) science performance requirements.

Notes: Particulate contamination requirements are expected to be verified using standard tape-lift procedures except surfaces that cannot be verified by tape-lift are expected to be visually inspected and be visibly clean in accordance with IEST-STD-CC1246, level VC.05.1000. The GLIMR Spacecraft provider will specify how any particles will be removed prior to payload integration onto the GLIMR Spacecraft. The GLIMR Spacecraft provider will coordinate with the payload regarding how any particles will be removed after payload integration onto the GLIMR Spacecraft.

Verification Method: Test

Verification Description: Tape lift of Spacecraft surfaces or witness surfaces for surfaces that cannot be contacted.

Success Criteria: Verification will be considered successful if Particulate contamination requirements are verified using standard tape-lift procedures, excepting surfaces that cannot be verified by tape-lift are visually inspected and visibly clean in accordance with IEST-STD- CC1246, level VC.05.1000.

[GLIMR-REQ-97] Optics Purge

While the GLIMR Payload is under the GLIMR Spacecraft control, the GLIMR Access to Space Contractor shall provide a continuous gaseous Nitrogen (GN2) purge to the GLIMR Payload with the flow rates stated in Table 4-32. Specifics of purge fixturing will be captured in the GLIMR IICD (D4957031-500).

Rationale: Sensitive payload volumes will be continuously purged with clean, dry nitrogen to protect against particle fallout and the degrading effects of atmospheric moisture. Purging will be continuous except for those operations that cannot be performed with the purge lines connected to the payload. Purging, while advantageous, is no longer required once the payload has been integrated into the launch vehicle payload fairing.

Notes: Whenever the purge is connected or disconnected from GLIMR hardware, the date and time of the activity will be recorded in the purge log. Any purge interrupts longer than two hours or if the accumulated time outside of purge exceeds 4 days [TBC] NASA approval is required.

Verification Method: Inspection

Verification Description: Inspection of the GLIMR Spacecraft Contamination Control Plan will show payload purging as standard process.

Success Criteria: Verification will be considered successful if inspection of the GLIMR Spacecraft Contamination Control Plan shows payload purging as standard process.

Table 4-32: GN2 Purge Rates

Purge Port	Minimum Flow Rate (scfh)	Maximum Flow Rate (scfh)
Aft Cover	5	20
Dust Cover	5	20
Elevation Bearing Ring – Left (2 ports)	2.5	3.3
Elevation Bearing Ring – Right (2 ports)	2.5	3.3
Azimuth Bearing Ring (2 ports)	2.5	3.3

[GLIMR-REQ-98] Purge Gas Purity

The GLIMR Access to Space Contractor shall provide GN2 purge gas certified at the point of use to the hydrocarbon (5 parts per million (ppm) methane equivalent) and water requirements in MIL-PRF-27401 as tailored (moisture content is less than 127 ppm (dew point -40 ºC)).

Rationale: Sensitive payload volumes will be continuously purged with clean, dry nitrogen to protect against particle fallout and the degrading effects of atmospheric moisture. Purging will be continuous except for those operations that cannot be performed with the purge lines connected to the payload.

Notes: The goal for moisture content is 11.5 ppm best effort (dew point -40 ºC). Small amounts of O2, CO2, and inert gases (He, Ne, Ar, etc.) are not considered impurities for program applications, unless otherwise noted.

Verification Method: Inspection

Verification Description: Inspection of the GLIMR Spacecraft Contamination Control Plan will show purity certification as standard process.

Success Criteria: Verification will be considered successful if inspection of the GLIMR Spacecraft Contamination Control Plan shows purity certification as standard process.

[GLIMR-REQ-99] Material Selection

The GLIMR Access to Space Contractor shall screen all non-metallic materials using ASTM E595 data, which states the following characteristics for non-metallic materials:

- Total mass loss of up to 1%
- Total collected volatile condensable materials of less than 0.1%

Rationale: These levels are from the contamination budget that provides the pathway for the payload to be able to meet its EOL science performance requirements.

Notes: Materials which are used on the spacecraft may require additional process testing or analysis in order to allow the use of certain materials.

Verification Method: Inspection

Verification Description: Inspection of the material usage list that includes specified outgassing data for each material used.

Success Criteria: Verification will be considered successful if the material usage list indicates that materials, screened in accordance with ASTM E595, meet the requirements for total mass loss and collected volatile condensable material or analysis indicates that the material will not impact the contamination requirements of the payload.

[GLIMR-REQ-100] Molecular Deposition

The GLIMR Access to Space Contractor shall limit the molecular deposition to 150 Å of molecular deposition on the GLIMR Payload per IEST-STD-CC1246 after delivery, which includes any storage time of the instrument, space vehicle integration and test (at the integrator facilities), and encapsulation in the payload fairing (PLF) (at launch provider facilities).

Rationale: This level is from the contamination budget that provides the pathway for the payload to be able to meet its EOL science performance requirements.

Notes: Silicone materials, known to be a high Ultraviolet (UV) absorber, may not be used on the GLIMR Spacecraft unless approved by the Contractor Officer. Molecular Contamination is defined as: Corrosive and non-corrosive films resulting from oil, grease, chemical residues, fingerprints, heat application, chemical action, or incompatible materials. Molecular or surface film contamination includes both Non-Volatile Residues (NVR) and Volatile Condensable Materials (VCM). Nonvolatile Residue is defined as: Soluble matter that remains (or would remain) after the evaporation of a volatile liquid. NVR normally exists as a film or as droplets. Typical NVRs are lubricating oils used in manufacturing equipment, contaminates in cleaning solvents and wipes, plasticizers in

films used for covering or packaging, and hand oils. Although NVR can be deleterious to the GLIMR Spacecraft surface, the primary effect is its volatile condensable material potential to contamination sensitive surfaces. Molecular contamination requirements are expected to be verified using a contamination wipe or solvent wash method. The GLIMR Spacecraft provider will specify how any molecular contamination will be removed prior to payload integration onto the GLIMR Spacecraft. The GLIMR Spacecraft provider will coordinate with the payload regarding how any molecular contamination will be removed after payload integration onto the GLIMR Spacecraft.

Verification Method: Test

Verification Description: Sampling of Spacecraft surfaces (or witness surfaces for surfaces that cannot be contacted) via solvent wipe or rinse.

Success Criteria: Verification will be considered successful if molecular contamination requirements are verified using a contamination wipe or solvent wash method.

[GLIMR-REQ-101] Outgassing Rate

GLIMR Access to Space Contractor shall limit the outgassing of structures and other hosted payloads with line-of-sight to the optical train of the GLIMR payload to an outgassing rate below 300 Hz/hr over a 4-hour period at the end of the bakeout when measured by a Temperature-controlled Quartz Crystal Microbalance (TQCM) functioning at -20°C ± 2°C.

Rationale: This level is from the contamination budget that provides the pathway for the payload to be able to meet its EOL science performance requirements. This level is the amount of contamination that the payload design can tolerate. GLIMR structures and other hosted payloads without line-of-sight to the GLIMR optical train or with outgassing vented away from the GLIMR optical train may have higher outgassing rates.

Notes: Silicone materials, known to be a high UV absorber, may not be used on the GLIMR Spacecraft unless approved by the Contractor Officer. It is assumed that the TCQM set point temperatures at which outgassing rates are measured during Thermal Vacuum (TVAC) testing is -20C.

Verification Method: Analysis

Verification Description: Outgassing rate modeling and analysis, informed by TQCM data obtained during TVAC testing.

Success Criteria: Verification will be considered successful if outgassing rate modeling and analysis, correlated with TQCM data obtained during TVAC testing, indicate that the requirement will be met.

[GLIMR-REQ-102] Special Test Equipment Cleanliness

The GLIMR Access to Space Contractor shall maintain any Special Test Equipment (when adjacent to or in contact with critical surfaces) to a cleanliness Level of 400 per IEST-STD-CC1246.

Rationale: This limits the amount of contamination that Special Test Equipment can impart to the payload. This limit covers the total period of time from delivery, Spacecraft integration and test (at the integrator facilities), and encapsulation in the payload fairing (at launch provider facilities).

Verification Method: Test

Verification Description: Tape lift of Special Test Equipment surfaces.

Success Criteria: Verification will be considered successful if Particulate contamination requirements are verified using standard tape-lift procedure.

[GLIMR-REQ-183] Thruster Impingement

To avoid contamination of the GLIMR Payload optics, the GLIMR Spacecraft shall direct all thrusters or external venting plumes away from the optical train of the GLIMR payload.

Rationale: Contamination of the optics will degrade the performance of the payload.

Verification Method: Analysis

Verification Description: Analysis of the plume paths onboard the GLIMR Spacecraft.

Success Criteria: Verification will be considered successful if the analysis of the plume paths indicates that the requirement will be met.

4.10 GLIMR Spacecraft Facility Environments

[GLIMR-REQ-103] Facility and Transport Environments

While the GLIMR Payload is under the GLIMR Access to Space Contractor control, the GLIMR Access to Space Contractor shall provide the following environments as specified in Table 4-33.

Rationale: These environments will prevent any damage to the payload and enable it to perform as designed.

Verification Method: Demonstration

Verification Description: Monitoring of the prelaunch environments.

Success Criteria: Verification will be considered successful if monitoring shows the prelaunch environments have been maintained within limits.

Table 4-33: Prelaunch Environments

Environment	Limits
Air Cleanliness	Class 100 workstation to Class 100,000 room
Temperature	62°F – 78°F (17°C – 26°C); ≥ 9°F (5°C) above local dew point temperature
Relative Humidity	30% – 55%

4.11 GLIMR Spacecraft Operations Requirements

4.11.1 GLIMR Spacecraft Telemetry

[GLIMR-REQ-104] Power Supply Current Measurement Telemetry

The GLIMR Spacecraft shall provide to the GMOC the current of each GLIMR Payload power supply line at a rate of at least 1Hz with an accuracy of at least ±100mA and a resolution of 100mA.

Rationale: The measurement(s) should be accurate enough to support fault management and anomaly resolution.

Verification Method: Test

Verification Description: Functional Test to verify measurement against known current load to verify accuracy, repeated for at least minimum, middle, and maximum load.

Success Criteria: Verification will be considered successful if the current measurements meet the required rate and accuracy.

[GLIMR-REQ-105] Power Supply Voltage Measurement Telemetry

The GLIMR Spacecraft shall provide to the GMOC the voltage of each GLIMR Payload power supply line at a rate of at least 1Hz with an accuracy of at least ±100 mV and a resolution of 100 mV.

Rationale: The measurement(s) should be accurate enough to support fault management and anomaly resolution.

Verification Method: Test

Verification Description: Functional Test to verify measurement against known load to verify accuracy.

Success Criteria: Verification will be considered successful if the voltage measurement meets the accuracy and resolution requirements.

[GLIMR-REQ-106] Temperature Measurement Telemetry

The GLIMR Spacecraft shall provide to the GMOC the temperature sensor readings at a rate of at least 1 Hz with an accuracy of at least ±1.0K and a resolution of 1.0K.

Rationale: The payload thermal interface temperatures need to be monitored to ensure adequate thermal control.

Verification Method: Test

Verification Description: Test will be performed to verify that the requested thermal interface temperature telemetry is provided.

Success Criteria: The verification will be considered successful if the requested thermal interface temperature telemetry is provided.

[GLIMR-REQ-107] Launch Lock Current Measurement Telemetry

The GLIMR Spacecraft shall provide to the GMOC each launch lock supply current at a rate of at least 10Hz [TBC] with an accuracy of at least ±100mA [TBC] and a resolution of 100mA [TBC] during launch lock release operations.

Rationale: The launch locks need to be removed prior to the initial motion of the payload.

Verification Method: Test

Verification Description: Test will be performed to verify that the requested launch lock power telemetry is provided.

Success Criteria: The verification will be considered successful if the requested launch lock power telemetry is provided.

[GLIMR-REQ-108] Launch Lock Voltage Measurement Telemetry

The GLIMR Spacecraft shall provide to the GMOC each launch lock supply voltage at a rate of at least 1Hz [TBC] with an accuracy of at least ±100 mV and a resolution of 100 mV.

Rationale: The launch locks need to be removed prior to the initial motion of the payload.

Verification Method: Test

Verification Description: Test will be performed to verify that the requested launch lock power telemetry is provided.

Success Criteria: The verification will be considered successful if the requested launch lock power telemetry is provided.

[GLIMR-REQ-109] FPE Power Enable Status Telemetry

The GLIMR Spacecraft shall provide to the GMOC the status [powered/unpowered] of the FPE power enable line.

Rationale: The POC needs to know the status of power enable lines for command monitoring.

Verification Method: Test

Verification Description: Test will be performed to verify that the requested power enable telemetry is provided.

Success Criteria: The verification will be considered successful if the requested power enable telemetry is provided.

[GLIMR-REQ-110] PCU Power Enable Status Telemetry

The GLIMR Spacecraft shall provide to the GMOC the status [powered/unpowered] of the PCU power enable line.

Rationale: The GMOC needs to know the status of power enable lines for command monitoring.

Verification Method: Test

Verification Description: Test will be performed to verify that the requested power enable telemetry is provided.

Success Criteria: The verification will be considered successful if the requested power enable telemetry is provided.

[GLIMR-REQ-111] Orbital Knowledge Telemetry

The GLIMR Spacecraft shall provide to the GMOC the GLIMR Spacecraft orbital knowledge provided to the GLIMR Payload at 1Hz.

Rationale: INR uses GLIMR Spacecraft ephemeris data to determine geolocation of the imagery in ground processing. Orbit data latency has impact on geolocation error budget.

Verification Method: Test

Verification Description: Test will be performed to verify that the requested telemetry is provided.

Success Criteria: Verification will be considered successful if telemetry indicates frame rate and latency is within tolerance.

[GLIMR-REQ-112] Attitude Knowledge Telemetry

The GLIMR Spacecraft shall provide to the GMOC the GLIMR Spacecraft attitude knowledge provided to the GLIMR Payload at 1Hz.

Rationale: INR uses GLIMR Spacecraft attitude data to determine geolocation of the imagery in ground processing. Orbit data latency has impact on geolocation error budget.

Verification Method: Test

Verification Description: Test will be performed to verify that the requested telemetry is provided.

Success Criteria: Verification will be considered successful if telemetry indicates frame rate and latency is within tolerance.

[GLIMR-REQ-113] Angular Rate Knowledge Telemetry

The GLIMR Spacecraft shall provide to the GMOC the GLIMR spacecraft angular rate knowledge provided to the GLIMR Payload at 100Hz.

Rationale: The payload uses GLIMR Spacecraft angular rate data to perform image motion compensation. Data latency has impact on jitter error budget.

Verification Method: Test

Verification Description: Test will be performed to verify that the requested telemetry is provided.

Success Criteria: Verification will be considered successful if telemetry indicates frame rate and latency is within tolerance.

[GLIMR-REQ-114] GLIMR Spacecraft Reference Time

The GLIMR Spacecraft shall provide to the GMOC the reference time-of-validity expressed in Coordinated Universal Time at 1Hz, with a data latency ≤ 100 milliseconds.

Rationale: INR uses GLIMR Spacecraft reference time of validity data to determine geolocation of the imagery in ground processing.

Verification Method: Test

Verification Description: Test will be performed to verify that the requested telemetry is provided.

Success Criteria: Verification will be considered successful if analysis indicates time-of-validity error is within tolerance.

4.11.2 Command and Data Handling

[GLIMR-REQ-116] Command Protocol

The GLIMR Spacecraft shall transmit commands to the GLIMR Payload via SpaceWire using the Remote Memory Access Protocol in accordance with the GLIMR Payload to GLIMR Spacecraft IDD (GLIMR-06-002).

Rationale: The payload is designed to accept commands through the SpaceWire interface using RMAP. Additional details of this interface can be found in the GLIMR Payload to GLIMR Spacecraft IDD (GLIMR-06-002). A complete description of the RMAP, commands, and command data rates can be found in the GLIMR Flight Software User's Guide (GLIMR SW-08).

Verification Method: Demonstration

Verification Description: Demonstration during testing of the provided messages.

Success Criteria: The verification will be considered successful if the demonstration shows that the commands are accepted by the payload.

[GLIMR-REQ-117] GLIMR Spacecraft Command Buffer

The GLIMR Spacecraft shall provide an Absolute Time Sequence stored command buffer of greater than 8 Megabytes.

Rationale: The payload relies upon the GLIMR Spacecraft for command storage. 8 Megabytes is sufficient storage for 14 days' worth of time-sequenced commands. A complete list of the required commands and their required data rates can be found in the GLIMR Flight Software User's Guide (GLIMR SW-08).

Verification Method: Test

Verification Description: Test of the required command buffer capacity.

Success Criteria: The verification will be considered successful if the command buffer capacity is greater than or equal to the minimum required.

[GLIMR-REQ-118] Command Uplink Cadence

The GLIMR Spacecraft shall upload GLIMR Payload commands to the GLIMR Payload daily [TBC].

Rationale: The payload is designed to accept one day's worth of commands into a Scheduled Queue. It is expected that these commands will be sent prior to that day's observation schedule. Additional details of this interface can be found in the GLIMR Payload to GLIMR Spacecraft IDD (GLIMR-06-002). A complete list of the required commands and their required data rates can be found in the GLIMR Flight Software User's Guide (GLIMR SW-08).

Verification Method: Demonstration

Verification Description: Demonstration during testing of the provided messages.

Success Criteria: The verification will be considered successful if the commands are accepted by the payload.

[GLIMR-REQ-119] GLIMR Spacecraft Uplink to Payload Logical Address

The GLIMR Spacecraft shall send commands to the GLIMR Payload on a single SpaceWire target logical address (TLA) of value specified in the GLIMR Payload to GLIMR Spacecraft IDD (GLIMR-06-002).

Rationale: The payload is designed to receive commands on only a single address. Commands are defined in the GLIMR Flight Software User's Guide (GLIMR SW-08).

Verification Method: Test

Verification Description: Test will be used to confirm successful communication between the payload and the GLIMR Spacecraft.

Success Criteria: The verification will be considered successful if the payload successfully receives commands from the GLIMR Spacecraft.

[GLIMR-REQ-120] Health and Status and Science Telemetry Protocol

The GLIMR Spacecraft shall accept health and status and science data telemetry from the GLIMR Payload over a SpaceWire interface using the RMAP in accordance with the GLIMR Payload to GLIMR Spacecraft IDD (GLIMR-06-002).

Rationale: Additional details of this interface can be found in the GLIMR Payload to GLIMR Spacecraft IDD (GLIMR-06-002). A complete description of RMAP, telemetry, science data and their required data rates can be found in the GLIMR Flight Software User's Guide (GLIMR SW-08).

Verification Method: Demonstration

Verification Description: Demonstration during testing of the provided messages.

Success Criteria: The verification will be considered successful if data generated in RMAP format by the payload are delivered over the SpaceWire to the GLIMR Spacecraft and verified.

[GLIMR-REQ-121] Downlink Logical Addresses

The GLIMR Spacecraft shall accept health and status and science data telemetry from the GLIMR Payload on the SpaceWire TLA values specified in the GLIMR Payload to GLIMR Spacecraft IDD (GLIMR-06-002).

Rationale: The payload is designed to send the telemetry and data to the specified addresses. SpaceWire telemetry and mission data rates are defined in GLIMR Payload to GLIMR Spacecraft IDD (GLIMR-06-002).

Verification Method: Test

Verification Description: Test will be used to confirm successful communication between the payload and the GLIMR Spacecraft.

Success Criteria: The verification will be considered successful if the GLIMR Spacecraft successfully receives data and telemetry from the payload.

[GLIMR-REQ-184] Maximum Data Volume

The GLIMR Spacecraft shall be capable of transmitting a minimum of 3.75 Tb/day (469 GB/day) with the specified data latencies.

Rationale: This data volume assumes 14.5 hours of observations.

Verification Method: Analysis

Verification Description: Analysis will be used to confirm data transmission volumes can be met.

Success Criteria: The verification will be considered successful if the GLIMR Spacecraft can successfully transmit the required data volume.

4.11.3 Power On Commands

[GLIMR-REQ-122] Survival Heaters Power On Command

When commanded by the GMOC operator, the GLIMR Spacecraft shall provide power to the survival heaters.

Rationale: Power to the survival heaters is expected to be provided for the entire mission. The ability to control this is for troubleshooting purposes only.

Verification Method: Demonstration

Verification Description: Demonstration of the application of power to the survival heaters.

Success Criteria: The verification will be considered successful if correct power is supplied upon command.

[GLIMR-REQ-123] Operational Heaters Power On Command

When commanded by the GMOC operator, the GLIMR Spacecraft shall provide power to the operational heaters.

Rationale: Power for the operational heaters is needed to bring the payload into operational temperatures.

Verification Method: Demonstration

Verification Description: Demonstration of the application of power to the operational heaters.

Success Criteria: The verification will be considered successful if correct power is supplied upon command.

[GLIMR-REQ-124] PCU Power On Command

When commanded by the GMOC operator, the GLIMR Spacecraft shall provide power to the PCU.

Rationale: Upon application of prime power and receipt of its discrete power enable signal, the PCU will initiate the boot-up sequence. At the completion of the boot-up sequence, the PCU will respond to commands and provide telemetry including confirmation of successful power enable.

Notes: For power-on, it does not matter when the Operational Heater feed is energized, as this power goes to the Heater Drive Module (HDM) within the PCU which doesn't distribute power to heaters until after PCU start-up.

Verification Method: Demonstration

Verification Description: Demonstration of application of power to the PCU.

Success Criteria: The verification will be considered successful if power to the PCU is supplied upon command.

[GLIMR-REQ-125] PCU Power Enable Command

When commanded by the GMOC operator, the GLIMR Spacecraft shall assert the power enable signal to the PCU.

Rationale: Upon application of prime power and receipt of its discrete power enable signal, the PCU will initiate the boot-up sequence. At the completion of the boot-up sequence, the PCU will respond to commands and provide telemetry including confirmation of successful power enable.

Notes: For power-on, it does not matter when the Operational Heater feed is energized, as this power goes to the HDM within the PCU which doesn't distribute power to heaters until after PCU start-up.

Verification Method: Demonstration

Verification Description: Demonstration of the PCU power enable signal.

Success Criteria: The verification will be considered successful if the PCU power enable is demonstrated.

[GLIMR-REQ-126] FPE Power On Command

When commanded by the GMOC operator, the GLIMR Spacecraft shall provide power to the FPE.

Rationale: The Flight Software (FSW) is not prepared to initialize the FPE until PCU initialization is complete, but the power can be supplied at any time. The status of the PCU will be monitored from the ground.

Verification Method: Demonstration

Verification Description: Demonstration of the application of power to the FPE.

Success Criteria: The verification will be considered successful if power to the FPE is supplied upon command.

[GLIMR-REQ-127] FPE Power Enable Command

When commanded by the GMOC operator, the GLIMR Spacecraft shall assert the power enable signal to the FPE.

Rationale: The FSW is not prepared to initialize the FPE until PCU initialization is complete. The status of the PCU will be monitored from the ground.

Verification Method: Demonstration

Verification Description: Demonstration of the FPE power enable signal.

Success Criteria: The verification will be considered successful if the FPE power enable is demonstrated.

4.11.4 Safing Commands

[GLIMR-REQ-128] Command Prior to Spacecraft Maneuvers

The GLIMR Spacecraft shall command the GLIMR Payload to IDLE state prior to performing any spacecraft maneuvers.

Rationale: The payload IDLE state is a combined payload hardware and software configuration meant to protect the payload from possible internal or external harm while making minimal use of GLIMR Spacecraft resources (e.g., power). In IDLE state the gimbal will be in stowed configuration. The payload should already be in IDLE state for any planned maneuvers.

Verification Method: Demonstration

Verification Description: Demonstration of the correct command sequence.

Success Criteria: The verification will be considered successful if the software indicates proper command sequences have been received.

[GLIMR-REQ-129] Commanded Shutdown

The GLIMR Spacecraft shall command the GLIMR Payload to PRESHUTDOWN state prior to GLIMR Payload power off.

Rationale: The payload PRESHUTDOWN state is a combined payload hardware and software configuration meant to protect the payload from possible internal or external harm while making minimal use of GLIMR Spacecraft resources (e.g., power). In PRESHUTDOWN state the gimbal will be in stowed configuration. This command should only be required for unplanned power interruptions.

Verification Method: Demonstration

Verification Description: Demonstration of the correct command sequence sent to the payload.

Success Criteria: The verification will be considered successful if the software indicates proper command sequences have been received.

4.11.5 Fault Management

[GLIMR-REQ-131] SpaceWire Communication Monitor (TMON - 1)

The GLIMR Spacecraft shall provide an alert to the GMOC if the Payload-GLIMR Spacecraft SpaceWire communications are interrupted for more than 10 seconds.

Rationale: This information will alert the GMOC if troubleshooting efforts are required from the ground. An alert should be sent if communications are lost for more than 10 seconds [TBC].

Verification Method: Test

Verification Description: Test of the SpaceWire communications between the payload and GLIMR Spacecraft.

Success Criteria: Verification will be considered successful if the data monitoring indicates the correct status.

[GLIMR-REQ-132] Solar Exposure Monitoring (TMON – 2)

The GLIMR Host System shall command the GLIMR Payload to IDLE state in the event that the sun is within 5 degrees of the GLIMR Payload operational field of regard.

Rationale: This monitor guards against spacecraft attitude or mission planning faults which could lead to solar impingement on the aperture.

Verification Method: Test

Verification Description: Test of data collection and proper fault response.

Success Criteria: Verification will be considered successful if the anomaly response software indicates proper data monitoring and fault response.

[GLIMR-REQ-133] PCU Thermal Protection (TMON – 3)

The GLIMR Host System shall command the GLIMR Payload to PRESHUTDOWN state and remove power to the GLIMR Payload if the PCU thermal interface temperature sensor reading exceeds defined limits. Persistence = 5 seconds. Monitoring rate = 1 Hz.

Rationale: Only the GLIMR Spacecraft is capable of turning power off to the payload.

Verification Method: Test

Verification Description: Test of data collection and proper fault response.

Success Criteria: Verification will be considered successful if the anomaly response software indicates proper data monitoring and fault response.

[GLIMR-REQ-134] Voltage Exceedance Protection (TMON – 4)

The GLIMR Host System shall command the GLIMR Payload to PRESHUTDOWN state and then remove power to the GLIMR Payload if the voltage sensor readings exceed defined limits [TBD].

Rationale: Only the GLIMR Spacecraft is capable of turning power off to the payload.

Verification Method: Test

Verification Description: Test of data collection and proper fault response.

Success Criteria: Verification will be considered successful if the anomaly response software indicates proper data monitoring and fault response.

[GLIMR-REQ-135] Current Exceedance Protection (TMON – 5)

The GLIMR Host System shall command the GLIMR Payload to PRESHUTDOWN state and then remove power to the GLIMR Payload if the current sensor readings exceed defined limits [TBD].

Rationale: Only the GLIMR Spacecraft is capable of turning power off to the payload.

Verification Method: Test

Verification Description: Test of data collection and proper fault response.

Success Criteria: Verification will be considered successful if the anomaly response software indicates proper data monitoring and fault response.

[GLIMR-REQ-136] [TBD] (TMON – 6)

[TBD]

Rationale: [TBD]

Verification Method: Test

Verification Description: Test of data collection and proper fault response.

Success Criteria: Verification will be considered successful if the anomaly response software indicates proper data monitoring and fault response.

[GLIMR-REQ-137] [TBD] (TMON – 7)

[TBD]

Rationale: [TBD]

Verification Method: Test

Verification Description: Test of data collection and proper fault response.

Success Criteria: Verification will be considered successful if the anomaly response software indicates proper data monitoring and fault response.

[GLIMR-REQ-138] [TBD] (TMON – 8)

[TBD]

Rationale: [TBD]

Verification Method: Test

Verification Description: Test of data collection and proper fault response.

Success Criteria: Verification will be considered successful if the anomaly response software indicates proper data monitoring and fault response.

[GLIMR-REQ-139] [TBD] (TMON – 9)

[TBD]

Rationale: [TBD]

Verification Method: Test

Verification Description: Test of data collection and proper fault response.

Success Criteria: Verification will be considered successful if the anomaly response software indicates proper data monitoring and fault response.

[GLIMR-REQ-140] [TBD] (TMON – 10)

[TBD]

Rationale: [TBD]

Verification Method: Test

Verification Description: Test of data collection and proper fault response.

Success Criteria: Verification will be considered successful if the anomaly response software indicates proper data monitoring and fault response.

4.12 GLIMR Spacecraft Mission Operations Center

4.12.1 General Communication

[GLIMR-REQ-142] GSDS Secure Communication Protocol

The GMOC shall provide a secure communication protocol for connection between the GMOC and the GSDS in accordance with the cybersecurity practices specified by NPR 7150.2 NASA Software Engineering Requirements.

Rationale: Cybersecurity ensures the protection of information and information systems from unauthorized access, use, disclosure, disruption, modification, or destruction in order to provide confidentiality, integrity, and availability.

Verification Method: Demonstration

Verification Description: Demonstration of the secure communication between the GMOC and the GSDS.

Success Criteria: Verification will be considered successful if secure communication between the GMOC and GSDS has been established.

[GLIMR-REQ-143] Data Delivery

The GLIMR Spacecraft shall limit GLIMR Payload health and status and science data telemetry loss to 5% of the available measurement opportunities over each calendar month interval.

Definitions: "Data Loss" is defined as data that has been degraded, altered, or lost as a result of GLIMR Spacecraft action or inaction including, but not limited to, GLIMR Spacecraft maneuvering, momentum dumping, systematic activities, transmission losses, residual Bit Error Rate, and GMOC inoperability. "Available measurement opportunities" is defined as those times at which the solar zenith angle within Greater North America is less than 72 degrees.

Rationale: Data availabilities support overall error budgets that are determined by science objectives.

Verification Method: Analysis

Verification Description: Analysis of concept of operations, reliability, and communication equipment and data path.

Success Criteria: Verification will be considered successful if the analysis demonstrates the system can meet data loss requirements.

4.12.2 Command Uploads

[GLIMR-REQ-144] Science Scan Conversions

The GMOC shall perform the necessary conversions from science scan region latitude and longitude coordinates to GLIMR payload Azimuth and Elevation commands.

Rationale: The GSDS will provide the GMOC with the science viewing requests in terms of azimuth and elevation, and the GMOC will need to convert these into valid payload commands.

Verification Method: Test

Verification Description: A test will be performed to ensure the conversion is done accurately.

Success Criteria: Verification will be considered successful if the conversions have been correctly performed.

[GLIMR-REQ-186] Star Scan Conversions

The GMOC shall perform the necessary conversions from star scan right ascension and declination to GLIMR payload Azimuth and Elevation commands.

Rationale: The GSDS will provide the GMOC with the star viewing requests in terms of right ascension and declination, and the GMOC will need to convert these into valid payload commands.

Verification Method: Test

Verification Description: A test will be performed to ensure the conversion is done accurately.

Success Criteria: Verification will be considered successful if the conversions have been correctly performed.

[GLIMR-REQ-187] Payload Command Generation

The GMOC shall generate the GLIMR payload commands as Remote Memory Access Protocol (RMAP) packets.

Rationale: These packets may have additional wrappers to facilitate communication with the spacecraft. The payload is designed to accept commands through the SpaceWire interface using RMAP. Additional details of this interface can be found in the GLIMR Payload to GLIMR Spacecraft IDD (GLIMR-06-002). A complete description of the Remote Memory Access Protocol (RMAP), commands, and command data rates can be found in the GLIMR Flight Software User's Guide (GLIMR SW-08).

Verification Method: Inspection and Test

Verification Description: An inspection will be performed to ensure the packets meet the RMAP. A test will be performed to confirm the packets are successfully read by the payload.

Success Criteria: Verification will be considered successful if the payload packets use the correct protocol.

[GLIMR-REQ-188] GMOC Command Queue

The GMOC shall provide a command queue large enough to accommodate at least 64 Megabits of GLIMR uplink commands, in addition to any required space for additional GMOC wrappers.

Rationale: This command queue needs to be sufficient to store at least 14 days' worth of commands.

Verification Method: Analysis

Verification Description: Analysis will be performed to verify queue has sufficient capacity.

Success Criteria: Verification will be considered successful if analysis shows the queue has sufficient capacity.

[GLIMR-REQ-145] Command Upload Timeline

The GMOC shall upload up to 64 Megabits of GLIMR Payload commands (not including any required space for additional GMOC wrappers) to the GLIMR Spacecraft at least weekly.

Rationale: The GMOC will transmit 2 weeks of commanding on a weekly basis. The GLIMR concept of operations is to uplink commands on a frequency of once a week while the payload is in the Idle state.

Verification Method: Inspection

Verification Description: Review of the GMOC Support Plan.

Success Criteria: Verification will be considered successful if the GMOC Support Plan shows a nominal weekly command window that is sufficient for GLIMR uplink and is not within an imaging period, with appropriate margin and redundancy.

[GLIMR-REQ-146] Commissioning Commanding

The GMOC shall support real-time GLIMR Payload commanding during the period of 90 days after initial GLIMR Payload power on.

Rationale: Real-time commanding is needed to achieve a successful and timely payload commissioning.

Verification Method: Test

Verification Description: The End-to-End Test will be used to verify this requirement.

Success Criteria: Verification will be considered successful if real-time commands sent by the GMOC are accepted by the payload.

[GLIMR-REQ-147] Special Operations Command Upload

The GMOC shall have the ability to upload command files to the GLIMR Payload within 1 hour [TBC] of command receipt.

Rationale: This ability is needed for commanding requests for observation of special events, such as coastal flooding or oil spills.

Verification Method: Test

Verification Description: The End-to-End Test will be used to verify this requirement.

Success Criteria: Verification will be considered successful if at least one nominal weekly command block is accepted by the payload within one hour of command receipt by the GMOC.

[GLIMR-REQ-189] Command Archive

The GMOC shall archive in a searchable command database all commands uploaded to the GLIMR payload for the life of the mission.

Rationale: This archive could be helpful in payload troubleshooting efforts.

Verification Method: Inspection

Verification Description: Inspection of system storage specifications and the GMOC Support Plan.

Success Criteria: Verification will be considered successful if inspection of the system storage specifications indicates sufficient storage capability, and the GMOC Support Plan includes command archiving.

4.12.3 Telemetry Downloads

[GLIMR-REQ-152] Science Data Telemetry

The GMOC shall provide to the GSDS L0 lossless science data, as specified in the GLIMR Payload to GLIMR Spacecraft IDD (GLIMR-06-002), within 2 hours [TBC] of the GLIMR Spacecraft receipt of on-board GLIMR Payload data.

Rationale: Payload data represents current dynamic ecological, biogeochemical and physical processes typical of coastal and ocean waters and is needed in a timely manner to support science objectives and reconstruction of payload pointing.

Notes: The L0 processing of telemetry is defined as the minimum level of processing required to develop a data set of cleaned and merged telemetry. The processing produces a data set which is suitable for delivery to users of the data who are usually only concerned with the data content, and not the means of spacecraft-to-earth transmission. Any duplicates that occur because data was sent to the ground multiple times or because the data was received at multiple ground stations, will be removed by L0 processing. Duplicate packets are defined as packets with the same spacecraft time, Message ID, packet sequence count, and frame quality flags.

Verification Method: Analysis

Verification Description: Analysis of design of data transfer rates through the system.

Success Criteria: Verification will be considered successful if analysis indicates that data can be accessed by the GSDS within 2 hours.

[GLIMR-REQ-153] Health and Status Telemetry

The GMOC shall provide to the GSDS lossless GLIMR Payload health and status telemetry data, as specified in the GLIMR Payload to GLIMR Spacecraft IDD (GLIMR-06-002), within 2 hours [TBC] of the GLIMR Spacecraft receipt of on-board GLIMR Payload data.

Rationale: Payload telemetry data must be sent within 2 hours to support payload safety and the production of near real time data products.

Verification Method: Analysis

Verification Description: Analysis of design of data transfer rates through the system.

Success Criteria: Verification will be considered successful if analysis indicates that data can be transferred to the GSDS within 30 minutes.

[GLIMR-REQ-154] Special Operations Telemetry Data

The GMOC shall provide to the GSDS real-time telemetry upon request.

Rationale: Real-time telemetry is needed during special events, such as coastal flooding or oil spills and anomaly resolution.

Notes: Real-time telemetry is defined as any spacecraft or payload health and status telemetry that the spacecraft sends down during contact.

Verification Method: Test

Verification Description: Test will be performed to verify payload telemetry data can be sent to the GSDS in real time.

Success Criteria: Verification will be considered successful if the GSDS can receive payload telemetry data in real time.

[GLIMR-REQ-155] Raw Telemetry Archive

The GMOC shall maintain an archive of all raw telemetry for 30 days [TBC].

Rationale: Storage of raw telemetry could be useful for troubleshooting efforts.

Verification Method: Inspection

Verification Description: Inspection of system storage specifications and the GMOC Support Plan.

Success Criteria: Verification will be considered successful if inspection of the system storage specifications indicates sufficient storage capability, and the GMOC Support Plan includes raw telemetry archiving.

[GLIMR-REQ-190] L0 Telemetry Archive

The GMOC shall maintain an archive of all L0 telemetry for 30 days [TBC].

Rationale: This storage is needed as a temporary backup to the data storage performed by the GSDS.

Notes: The L0 processing of telemetry is defined as the minimum level of processing required to develop a data set of cleaned and merged telemetry. The processing produces a data set which is suitable for delivery to users of the data who are usually only concerned with the data content, and not the means of spacecraft-to-earth transmission. Any duplicates that occur because data was sent to the ground multiple times or because the data was received at multiple ground stations, will be removed by L0 processing. Duplicate packets are defined as packets with the same spacecraft time, Message ID, packet sequence count, and frame quality flags.

Verification Method: Inspection.

Verification Description: Inspection of system storage specifications and the GMOC Support Plan.

Success Criteria: Verification will be considered successful if inspection of the system storage specifications indicates sufficient storage capability, and the GMOC Support Plan includes L0 telemetry archiving.

4.12.4 GLIMR Payload Anomaly Reporting

[GLIMR-REQ-157] GLIMR Payload Anomaly Reporting - GSDS

The GMOC shall notify the GSDS within 24 hours [TBC] of any GLIMR Payload anomaly.

Rationale: Anomalies that occur on the payload can impact the generation of science data. These anomalies would include rejected payload commands, payload commands that were not executed, off-nominal health and status data, and any alerts or error messages generated by the payload.

Verification Method: Demonstration

Verification Description: Demonstration shall show that the GMOC has the ability to notify the GSDS within the specified timeframe of any GLIMR Payload anomaly.

Success Criteria: Verification will be considered successful if the GMOC demonstrates the ability to notify the GSDS within the specified timeframe of any GLIMR Payload anomaly.

[GLIMR-REQ-192] GLIMR Payload Anomaly Reporting - ESSP

The GMOC shall notify the NASA ESSP Operations Mission Manager within 24 hours [TBC] of any GLIMR Payload anomaly.

Rationale: Anomalies that occur on the payload need to be evaluated for criticality and impact, and recovery planning.

Verification Method: Demonstration

Verification Description: Demonstration shall show that the GMOC has the ability to notify the NASA ESSP Operations Mission Manager within the specified timeframe of any GLIMR Payload anomaly.

Success Criteria: Verification will be considered successful if the GMOC demonstrates the ability to notify the NASA ESSP Operations Mission Manager within the specified timeframe of any GLIMR Payload anomaly.

[GLIMR-REQ-193] GLIMR Payload Data Stream Reporting

The GMOC shall notify the GSDS within 24 hours [TBC] of any GLIMR Payload missing data packets, time code discontinuities and other data stream issues.

Rationale: Anomalies that occur on the payload data stream can impact the generation of science data.

Verification Method: Demonstration

Verification Description: has the ability to notify the GSDS within the specified timeframe of any GLIMR Payload data stream anomalies.

Success Criteria: Demonstration shall show that the GMOC has the ability to notify the GSDS within the specified timeframe of any GLIMR Payload data stream anomalies.

4.12.5 GLIMR Spacecraft Communication

[GLIMR-REQ-156] GLIMR Spacecraft Anomaly Notification

The GMOC shall notify the GSDS within 24 hours [TBC] of any GLIMR Spacecraft anomaly that compromises nominal operations of either the GLIMR Spacecraft or the GLIMR Payload.

Rationale: Anomalies that occur on the GLIMR Spacecraft that impact the GLIMR Spacecraft or the payload may require updated operational planning.

Verification Method: Demonstration

Verification Description: Demonstration shall show that the GMOC has the ability to notify the GSDS within the specified timeframe of any GLIMR Spacecraft anomaly.

Success Criteria: Verification will be considered successful if the GMOC demonstrates the ability to notify the GSDS within the specified timeframe of any GLIMR Spacecraft anomaly.

[GLIMR-REQ-159] Data Loss Log

The GMOC shall provide to the GSDS a Data Loss Log identifying any gaps in the data downlinked from the spacecraft.

Rationale: Information about data gaps can assist in data post-processing efforts.

Verification Method: Inspection

Verification Description: Inspection of the Data Loss Log.

Success Criteria: Verification will be considered successful if the Data Loss Log accurately reflects any losses of date.

[GLIMR-REQ-160] Momentum Dump Report

The GMOC shall provide to the GSDS a post momentum dump report to include a time history of impulse from each thruster firing.

Rationale: Information about momentum dumps can assist in data post-processing efforts.

Verification Method: Demonstration

Verification Description: Demonstration shall show that the GMOC has the ability to provide a post momentum dump report with the specified contents.

Success Criteria: Verification will be considered successful if the GMOC demonstrates the ability to provide a post momentum dump report with the specified contents.

[GLIMR-REQ-158] Orbit Maneuver Reporting

The GMOC shall provide information on each orbit maneuver, including the following [TBC]:

- Maneuver execution time
- Burn Duration
- Predicted delta-V vector
- Predicted pre-and post- maneuver state vectors
- Predicted accelerations through the maneuver

Rationale: Information about orbit maneuvers can assist in the generation of future viewing requests.

Verification Method: Demonstration

Verification Description: Demonstration shall show that the GMOC has the ability to provide an orbit maneuver report with the specified content.

Success Criteria: Verification will be considered successful if the GMOC demonstrates the ability to provide an orbit maneuver report with the specified contents.

5 APPENDICES

5.1 Appendix A: Acronyms

ASD	Acceleration Spectral Density
ATS	Access to Space
ATSRD	Access to Space Requirements Document
BRF	Body Reference Frame
CBE	Current Best Estimate
CE	Conducted Emissions
CFR	Code of Federal Regulations
CLA	Coupled Loads Analysis
CMD	Command
CONOPS	Concept of Operations
CS	Conducted Susceptibility
DAAC	Distributed Active Archive Center
DC	Direct Current
DEB	Decoder Electronics Box
DEC	Declination
EAR	Export Administration Regulations
ECEF	Earth Centered Earth Fixed
ECI	Earth Centered Inertial Frame
EMC	Electromagnetic Compatibility
EMI	Electromagnetic Interference
EOL	End Of Life
ESD	Earth Science Division
ESSP	Earth System Science Pathfinder
FOV	Field Of View
FPE	Focal Plane Electronics
FSW	Flight Software
GEO	Geosynchronous Earth Orbit
GLIMR	Geostationary Littoral Imaging and Monitoring Radiometer
GMOC	GLIMR Mission Operations Center
GN&C	Guidance, Navigation & Control
GN2	Gaseous Nitrogen
GPS	Global Positioning System
GSDS	GLIMR Science Data System
GSFC	Goddard Space Flight Center
HDM	Heater Drive Module
HSI	Hyperspectral Imaging
HSRD	GLIMR Spacecraft Requirement Document

IICD	Instrument Installation Control Drawing
ID	Identification
IDD	Interface Definition Document
INR	Image Navigation and Registration
IRU	Inertial Reference Unit
L0	Level 0
LMI	Landmark Imager
LOS	Line of Sight
MEV	Maximum Expected Value
MUF	Model Uncertainty Factor
NASA	National Aeronautics and Space Administration
NPR	NASA Policy Requirement
NTE	Not To Exceed
NVR	Non-Volatile Residue
OB	Ocean Biology
ORF	Orbit Reference Frame
PCU	Payload Control Unit
PPS	Pulse Per Second
PSD	Power Spectral Density
RA	Right Ascension
RE	Radiated Emissions
RMAP	Remote Memory Access Protocol
RMS	Root Mean Squared
RS	Radiated Susceptibility
SOW	Statement of Work
STD	Standard
TBC	To Be Confirmed
TBD	To Be Determined
TID	Total Ionizing Dose
TLA	Target Logical Address
TMON	Telemetry Monitor
TQCM	Temperature-controlled Quartz Crystal Microbalance
TVAC	Thermal Vacuum
UNH	University of New Hampshire
USNO	United States Naval Observatory
UV	Ultraviolet
VCM	Volatile Condensable Materials

5.2 Appendix B: Glossary

Term	Definition
Analysis	Verification by analysis is a process used in lieu of (or in addition to) testing to verify compliance to specifications/requirements. Analysis utilizes accepted tools and techniques including, but not limited to, systems engineering analysis, statistical and qualitative analysis, computer and hardware simulations, analog modeling, and similarity analysis. Analytical methods selected for verification will be supported by appropriate rationale and be detailed in the applicable documents. Most analyses will be accomplished in the System Development Phase and presented as evidence for meeting requirements in the System Acceptance Phase of the lifecycle model. Analysis methods are acceptable whenever any of the following apply: - Testing is not feasible or cost effective - A rigorous, representative, and conclusive analysis is possible - Inspection and demonstrations are not adequate. - It is desired to determine closure status of verification activities being performed at lower levels of assembly to support closures at higher levels Verification by similarity is considered a subset of analysis.
Available Measurement Opportunities	Those times at which the solar zenith angle within Greater North America is less than 72 degrees.
Data Loss	Data that has been degraded, altered, or lost as a result of GLIMR Access to Space Contractor action or inaction including, but not limited to, GLIMR Spacecraft maneuvering, momentum dumping, systematic activities, transmission losses, residual Bit Error Rate, and GMOC inoperability.
DEB	The DEB contains electronics to integrate encoder read heads and report rotational positions via a serial interface for each axis to the PCU. The DEB is functionally part of the Sensor Assembly but is mechanically mounted separately from the sensor assembly on the GLIMR Spacecraft structure.
Demonstration	Verification by demonstration is a method used for determination of properties of an end item or component by observation of its operation or characteristics. It will be employed where qualitative operational performance requirements are to be verified. When used as a formal verification activity, demonstrated performance will be observed and recorded. Demonstration is used with or without special test equipment or special instrumentation to verify characteristics such as operational performance, human

Term	Definition
	engineering features, maintainability, built in test/built in test equipment transportability and display data. Some demonstrations may be done as a part of development activities. Interface verification by demonstration will (by definition) use flight hardware. There may be interfaces that are tested (not verified) before final flight integration, but these demonstrations should be distinguished from actual interface verification tests.
GLIMR Payload	The complete GLIMR Payload is made up of four components, the sensor assembly, the PCU, the DEB, and the dust cover.
GLIMR Spacecraft	The GLIMR Spacecraft denotes the space platform proposed by the GLIMR Access to Space Contractor to host the GLIMR Payload. The GLIMR Spacecraft includes all the on-orbit systems required to host the GLIMR Payload and to collect, store, and transmit GLIMR Payload health and status and science data.
GLIMR Ground Segment	The GLIMR Ground Segment denotes the GLIMR Access to Space Contractor systems used to facilitate payload commanding, and payload health and status and science data telemetry transmission to the GSDS. The GLIMR Ground Segment includes the GLIMR Missions Operations Center, any data teleports or antennas, and all terrestrial networks to provide connectivity to the GSDS.
Inspection	Verification by inspection is the physical evaluation of equipment and/or documentation to verify construction features, workmanship, and physical dimensions and condition (such as cleanliness, surface finish, and locking hardware). Generally, inspection is performed visually or with standard gauges without the use of specialized laboratory equipment. Inspection may also include contamination inspection that requires additional instrumentation
Payload Imaging Operations	Payload imaging operations can occur any time at which the solar zenith angle within Greater North America is less than 72 degrees.
PCU	The PCU is the main interface electronics box mounted separately from the sensor assembly and controls the gimbal, distributes power, controls the thermal environment, and interfaces to the GLIMR Spacecraft.
Sensor Assembly	The fully integrated sensor assembly consists of the following subassemblies: gimbal assembly, telescope assembly, landmark imager assembly, hyperspectral imager assembly, focal plane electronics, and the heat exchange system.

Term	Definition
Test	Verification by test is the actual operation of components, elements, or systems during ambient conditions, or when equipment is subjected to specified environments in order to evaluate performance. Test is usually the preferred verification method for quantitative requirements. Where testing is not feasible because of cost, etc., verification by other methods may be acceptable. Test measurements will require the use of calibrated laboratory equipment, recorded data, procedures, test support items, or services. For all verification, qualification, and acceptance test activities, pass or fail test criteria or acceptance tolerance bands (based upon design and performance requirements) will be specified prior to conducting the test. This will ensure that the actual performance of tested equipment or systems meets or exceeds specifications. Acceptance tolerance bands used at the manufacturer's facility for component or subsystem level tests will be based upon operational tolerance bands. Detailed test criteria will be defined in the test procedures, based on the requirements which are being tested.

5.3 Appendix C: Requirement Summary Table

REQ #:	REQ Title:	Verification Method:	Verification Event:	Verification Artifact:
GLIMR-REQ-2	Orbit Insertion	Analysis		
GLIMR-REQ-3	Mission Duration	Analysis		
GLIMR-REQ-4	Launch Duration	Analysis		
GLIMR-REQ-7	Sensor Assembly Mechanical Interface	Inspection		
GLIMR-REQ-8	PCU Mechanical Interface	Inspection		
GLIMR-REQ-9	DEB Mechanical Interface	Inspection		
GLIMR-REQ-10	Dust Cover Mechanical Interface	Inspection		
GLIMR-REQ-11	Clearance	Inspection		
GLIMR-REQ-12	Remove Before Flight	Inspection		
GLIMR-REQ-13	Sensor Assembly Stowed Volume	Inspection		
GLIMR-REQ-14	Sensor Assembly Swept Volume	Inspection		
GLIMR-REQ-15	PCU Volume	Inspection		
GLIMR-REQ-16	DEB Volume	Inspection		
GLIMR-REQ-17	Sensor Assembly Field of View	Inspection		
GLIMR-REQ-18	Sensor Assembly's Radiator Field of View	Inspection		
GLIMR-REQ-19	Sensor Assembly Alignment	Test		
GLIMR-REQ-20	Sensor Assembly Prelaunch Alignment Knowledge	Test		
GLIMR-REQ-21	Sensor Assembly On-orbit Alignment Stability	Analysis		
GLIMR-REQ-22	Sensor Assembly Mass Allocation	Analysis		
GLIMR-REQ-23	PCU Mass Allocation	Analysis		
GLIMR-REQ-24	DEB Mass Allocation	Analysis		
GLIMR-REQ-25	Dust Cover Mass Allocation	Analysis		
GLIMR-REQ-26	Center of Gravity and Moment of Inertia	Analysis		
GLIMR-REQ-27	Sensor Assembly Quasi-Static Acceleration Environment	Analysis		
GLIMR-REQ-28	PCU Quasi-Static Acceleration Environment	Analysis		

GLIMR-REQ-29	DEB Quasi-Static Acceleration Environment	Analysis		
GLIMR-REQ-30	Dust Cover Quasi-Static Acceleration Environment	Analysis		
GLIMR-REQ-31	Sensor Assembly Random Vibration Environment	Test		
GLIMR-REQ-32	PCU Random Vibration Environment	Test		
GLIMR-REQ-33	DEB Random Vibration Environment	Test		
GLIMR-REQ-34	Dust Cover Random Vibration Environment	Test		
GLIMR-REQ-35	Sensor Assembly Sinusoidal Vibration Environment	Test		
GLIMR-REQ-36	PCU Sinusoidal Vibration Environment	Test		
GLIMR-REQ-37	DEB Sinusoidal Vibration Environment	Test		
GLIMR-REQ-38	Dust Cover Sinusoidal Vibration Environment	Test		
GLIMR-REQ-39	Acoustic Environment	Test		
GLIMR-REQ-40	Sensor Assembly Shock	Analysis		
GLIMR-REQ-41	Launch Pressure Profile	Inspection		
GLIMR-REQ-42	Sensor Assembly Minimum Natural Frequency	Analysis		
GLIMR-REQ-43	PCU Minimum Natural Frequency	Analysis		
GLIMR-REQ-44	Dust Cover Minimum Natural Frequency	Analysis		
GLIMR-REQ-45	Sensor Assembly Conductive Heat Transfer	Analysis		
GLIMR-REQ-46	PCU Conductive Heat Transfer Coefficient	Analysis		
GLIMR-REQ-47	PCU Peak Heat Dissipation	Analysis		
GLIMR-REQ-48	DEB Conductive Heat Transfer Coefficient	Analysis		
GLIMR-REQ-49	DEB Peak Heat Dissipation	Analysis		
GLIMR-REQ-50	Sensor Assembly Survival Temperature Range	Analysis		
GLIMR-REQ-51	Sensor Assembly Operational Temperature Range	Analysis		
GLIMR-REQ-52	PCU Survival Temperature Range	Analysis		
GLIMR-REQ-53	PCU Operational Temperature Range	Analysis		
GLIMR-REQ-54	DEB Survival Temperature Range	Analysis		
GLIMR-REQ-55	DEB Operational Temperature Range	Analysis		
GLIMR-REQ-56	Sensor Assembly’s Radiator Thermal Back Loading	Analysis		
GLIMR-REQ-57	Conducted Emissions	Test		
GLIMR-REQ-58	Conducted Susceptibility	Test		

GLIMR-REQ-59	Radiated Emissions	Test		
GLIMR-REQ-60	Radiated Susceptibility	Test		
GLIMR-REQ-61	Sensor Assembly Electrical Bonding	Test, Analysis		
GLIMR-REQ-62	GLIMR Spacecraft Orbital Position Accuracy	Analysis		
GLIMR-REQ-63	GLIMR Spacecraft Orbital Velocity Accuracy	Analysis		
GLIMR-REQ-64	GLIMR Spacecraft Attitude Knowledge Accuracy	Analysis		
GLIMR-REQ-65	GLIMR Spacecraft Attitude Reference Frame	Inspection		
GLIMR-REQ-66	GLIMR Spacecraft Integrated Angular Rate Accuracy	Analysis		
GLIMR-REQ-67	GLIMR Spacecraft Angular Rate Bandwidth	Analysis		
GLIMR-REQ-68	GLIMR Spacecraft Angular Rate Errors	Analysis		
GLIMR-REQ-69	Low-Frequency Spacecraft-to-Payload Angular Disturbance Environment	Analysis		
GLIMR-REQ-70	High-Frequency Spacecraft-to-Payload Rotational Disturbance Environment	Analysis		
GLIMR-REQ-71	Spacecraft-to-Payload Translational Disturbance Environment	Analysis		
GLIMR-REQ-72	Payload-to-Spacecraft Uncompensated Torque	Analysis		
GLIMR-REQ-73	FPE Power	Test		
GLIMR-REQ-74	PCU Power	Test		
GLIMR-REQ-75	Operational Heaters Power	Test		
GLIMR-REQ-76	Survival Heaters Power	Test		
GLIMR-REQ-77	GLIMR Payload Operational Voltage Supply	Test		
GLIMR-REQ-78	PCU Voltage Ripple	Test		
GLIMR-REQ-79	PCU Over-Voltage Transient	Test		
GLIMR-REQ-80	Overcurrent Protection	Inspection		
GLIMR-REQ-81	Peak Inrush Current	Analysis		
GLIMR-REQ-82	Steady State Current	Analysis		
GLIMR-REQ-83	PCU to GLIMR Spacecraft SpaceWire Cable Length	Inspection		
GLIMR-REQ-84	FPE Power Enable Signal	Demonstration		
GLIMR-REQ-85	PCU Power Enable Signal	Demonstration		

GLIMR-REQ-86	Launch Lock Interface	Test		
GLIMR-REQ-87	Survival Heater Temperature Sensors Interface	Test		
GLIMR-REQ-88	GLIMR Spacecraft Orbital Knowledge Interface	Demonstration		
GLIMR-REQ-89	GLIMR Spacecraft Attitude Knowledge Interface	Demonstration		
GLIMR-REQ-90	GLIMR Spacecraft Angular Rate Knowledge Interface	Demonstration		
GLIMR-REQ-91	GLIMR Spacecraft Reference Time	Demonstration		
GLIMR-REQ-92	Time of Day Pulse (1PPS)	Demonstration		
GLIMR-REQ-93	Direct Electrostatic Discharge	Analysis		
GLIMR-REQ-94	SpaceWire Signaling Rate	Demonstration		
GLIMR-REQ-95	Electrical Interfaces Compliance	Inspection		
GLIMR-REQ-96	Particulate Deposition	Test		
GLIMR-REQ-97	Optics Purge	Inspection		
GLIMR-REQ-98	Purge Gas Purity	Inspection		
GLIMR-REQ-99	Material Selection	Inspection		
GLIMR-REQ-100	Molecular Deposition	Test		
GLIMR-REQ-101	Outgassing Rate	Analysis		
GLIMR-REQ-102	Special Test Equipment Cleanliness	Test		
GLIMR-REQ-103	Facility and Transport Environments	Demonstration		
GLIMR-REQ-104	Power Supply Current Measurement Telemetry	Test		
GLIMR-REQ-105	Power Supply Voltage Measurement Telemetry	Test		
GLIMR-REQ-106	Temperature Measurement Telemetry	Test		
GLIMR-REQ-107	Launch Lock Current Measurement Telemetry	Test		
GLIMR-REQ-108	Launch Lock Voltage Measurement Telemetry	Test		
GLIMR-REQ-109	FPE Power Enable Status Telemetry	Test		
GLIMR-REQ-110	PCU Power Enable Status Telemetry	Test		
GLIMR-REQ-111	Orbital Knowledge Telemetry	Test		
GLIMR-REQ-112	Attitude Knowledge Telemetry	Test		
GLIMR-REQ-113	Angular Rate Knowledge Telemetry	Test		
GLIMR-REQ-114	GLIMR Spacecraft Reference Time	Test		
GLIMR-REQ-116	Command Protocol	Demonstration		

GLIMR-REQ-117	GLIMR Spacecraft Command Buffer	Test		
GLIMR-REQ-118	Command Uplink Cadence	Demonstration		
GLIMR-REQ-119	GLIMR Spacecraft Uplink to Payload Logical Address	Test		
GLIMR-REQ-120	Health and Status and Science Telemetry Protocol	Demonstration		
GLIMR-REQ-121	Downlink Logical Addresses	Test		
GLIMR-REQ-122	Survival Heaters Power On Command	Demonstration		
GLIMR-REQ-123	Operational Heaters Power On Command	Demonstration		
GLIMR-REQ-124	PCU Power On Command	Demonstration		
GLIMR-REQ-125	PCU Power Enable Command	Demonstration		
GLIMR-REQ-126	FPE Power On Command	Demonstration		
GLIMR-REQ-127	FPE Power Enable Command	Demonstration		
GLIMR-REQ-128	Command Prior to Spacecraft Maneuvers	Demonstration		
GLIMR-REQ-129	Commanded Shutdown	Demonstration		
GLIMR-REQ-131	SpaceWire Communication Monitor (TMON - 1)	Test		
GLIMR-REQ-132	Solar Exposure Monitoring (TMON – 2)	Test		
GLIMR-REQ-133	PCU Thermal Protection (TMON – 3)	Test		
GLIMR-REQ-134	Voltage Exceedance Protection (TMON – 4)	Test		
GLIMR-REQ-135	Current Exceedance Protection (TMON – 5)	Test		
GLIMR-REQ-136	[TBD] (TMON – 6)	Test		
GLIMR-REQ-137	[TBD] (TMON – 7)	Test		
GLIMR-REQ-138	[TBD] (TMON – 8)	Test		
GLIMR-REQ-139	[TBD] (TMON – 9)	Test		
GLIMR-REQ-140	[TBD] (TMON – 10)	Test		
GLIMR-REQ-142	GSDS Secure Communication Protocol	Demonstration		
GLIMR-REQ-143	Data Delivery	Analysis		
GLIMR-REQ-144	Science Scan Conversions	Test		
GLIMR-REQ-145	Command Upload Timeline	Inspection		
GLIMR-REQ-146	Commissioning Commanding	Test		
GLIMR-REQ-147	Special Operations Command Upload	Test		
GLIMR-REQ-152	Science Data Telemetry	Analysis		

GLIMR-REQ-153	Health and Status Telemetry	Analysis		
GLIMR-REQ-154	Special Operations Telemetry Data	Test		
GLIMR-REQ-155	Raw Telemetry Archive	Inspection		
GLIMR-REQ-156	GLIMR Spacecraft Anomaly Notification	Demonstration		
GLIMR-REQ-157	GLIMR Payload Anomaly Reporting - GSDS	Demonstration		
GLIMR-REQ-158	Orbit Maneuver Reporting	Demonstration		
GLIMR-REQ-159	Data Loss Log	Inspection		
GLIMR-REQ-160	Momentum Dump Report	Demonstration		
GLIMR-REQ-161	PCU Shock	Analysis		
GLIMR-REQ-162	DEB Shock	Analysis		
GLIMR-REQ-163	Dust Cover Shock	Analysis		
GLIMR-REQ-164	Dust Cover Shock Environments	Analysis		
GLIMR-REQ-165	DEB Minimum Natural Frequency	Analysis		
GLIMR-REQ-166	Launch Vehicle Compatibility	Analysis		
GLIMR-REQ-167	PCU Electrical Bonding	Test, Analysis		
GLIMR-REQ-168	DEB Electrical Bonding	Test, Analysis		
GLIMR-REQ-169	Nadir Pointing Accuracy	Analysis		
GLIMR-REQ-170	Orbit Accuracy	Analysis		
GLIMR-REQ-171	GLIMR Spacecraft Orbital Reference Frame	Inspection		
GLIMR-REQ-172	GLIMR Spacecraft Earth Attitude Reference Frame	Analysis		
GLIMR-REQ-173	GLIMR Spacecraft Attitude and Orbit Parameters Time of Validity	Test		
GLIMR-REQ-174	Time of Validity Accuracy	Test		
GLIMR-REQ-176	GLIMR Payload Survival Voltage Supply	Test		
GLIMR-REQ-177	FPE Voltage Ripple	Test		
GLIMR-REQ-178	FPE Over-Voltage Transient	Test		
GLIMR-REQ-179	PCU Under-Voltage Transient	Test		
GLIMR-REQ-180	FPE Under-Voltage Transient	Test		
GLIMR-REQ-181	Power End of Life Margin	Analysis		

GLIMR-REQ-183	Thruster Impingement	Analysis		
GLIMR-REQ-184	Maximum Data Volume	Analysis		
GLIMR-REQ-186	Star Scan Conversions	Test		
GLIMR-REQ-187	Payload Command Generation	Test, Inspection		
GLIMR-REQ-188	GMOC Command Queue	Analysis		
GLIMR-REQ-189	Command Archive	Inspection		
GLIMR-REQ-190	L0 Telemetry Archive	Inspection		
GLIMR-REQ-192	GLIMR Payload Anomaly Reporting - ESSP	Demonstration		
GLIMR-REQ-193	GLIMR Payload Data Stream Reporting	Demonstration		