National Aeronautics
and Space
Administration

GLIMR-06-002
PRELIMINARY
RELEASED DATE: 7/1/26

GEOSTATIONARY LITTORAL IMAGING AND MONITORING RADIOMETER (GLIMR) MISSION

GLIMR Payload to Host Interface Definition Document

DRAFT

REVISION HISTORY PAGE

Revision No.	Description	Release Date
Preliminary	Initial release, for use on GLIMR Mission Access to Space Industry Concept Study	5/20/2024
Preliminary	Approved release for request for proposal	7/1/2026

This document contains information that is as complete as possible. Where final numerical values or specification references are not available, best estimates are given and noted To Be Confirmed (TBC). Items which are not yet defined are noted To Be Determined (TBD). The following table summarizes the TBD/TBC items in this revision of the document, and supplements the revision notice above.

TBD/TBC	Section(s)	Description of TBD/TBC items
TBC	Table 4-7	Tabulated MOI and Related Information for Azimuth Stage: Confirm as-built values.
TBC	Table 4-8	Tabulated MOI and Related Information for Elevation Stage: Confirm as-built values.
TBC	Figure 5-1	Payload Power, Data and Telemetry Interfaces to the Host Spacecraft: Confirm IRU RS-422 will be on Connector J2.
TBD	5.2.8	Remove Before Flight: Provide figure showing location(s) of Remove Before Flight items.
TBC	Table 6-2	Operational Power Feeds: Confirm CBE power values.
TBC	Figure 6-1	Host I/F Connectors and PCU, DEB, and Sensor Assembly Interconnects: Confirm connection for IRU RS-422 Inputs
TBC	Table 6-5	Host to Payload Interface Connectors: Confirm connection for IRU RS-422 Inputs
TBC	9.2.1	Payload Purge Logbook: Confirm maximum accumulated time allowable outside of purge.
TBC	9.4	Host Spacecraft Cleanliness: Values for post-delivery to end-of-life particulate contamination impingement rate.
TBD	10.3	GMOC to GSDS Verbal Interfaces: Timing and format of verbal interfaces between the GMOC and GSDS.

DRAFT

TBD	10.7	GSDS Support Data Products Overview: Contents and formats of the Support Data Products.
TBD	11.2	Payload Interface Connector J2: Determine pins to be used for the IRU RS-422 connection to Host.
TBC	Table C-1	Host Routed Cable Information: Confirm as-built cable lengths.

DRAFT

Table of Contents

1 INTRODUCTION 9
1.1 Scope and Purpose 9
1.2 Document Organization 9
1.3 Definitions 9
1.3.1 Payload 9
1.3.2 To Be Confirmed 9
1.3.3 To Be Determined 9
2 DOCUMENTS 10
2.1 Government Documents 10
2.2 Non-Government Documents 10
2.3 GLIMR Program Documents 11
2.4 Document Control 11
3 SYSTEM DESCRIPTION 12
3.1 Mission Description 12
3.2 Payload Description 13
3.2.1 Sensor Assembly 14
3.2.2 Decoder Electronics Box 14
3.2.3 Payload Control Unit 14
3.2.4 Dust Cover 14
4 KEY PAYLOAD PHYSICAL CHARACTERISTICS 16
4.1 Coordinate System Definition 16
4.2 Payload Dimensions 16
4.2.1 Sensor Assembly Stowed Volume 16
4.2.2 Telescope Swept Volume 17
4.2.3 PCU Volume 18
4.2.4 DEB Volume 19
4.2.5 Dust Cover Volume 20
4.3 Mass 21
4.4 Centers of Gravity and Moments of Inertia 21
4.4.1 Sensor Assembly Center of Gravity and Moments of Inertia 21
5 PAYLOAD TO HOST INTERFACE OVERVIEW 24
5.1 Mechanical Interface Overview 24
5.2 Payload Outlines and Mounting Interfaces 25
5.2.1 Host Interface Coordinate System Origin 25
5.2.2 Sensor Assembly Mounting Flange Outline 25
5.2.3 PCU Dimensions and Mounting 26

DRAFT

5.2.4 DEB Dimensions and Mounting 28
5.2.5 Dust Cover Dimensions and Mounting 28
5.2.6 Stowed Position 29
5.2.7 Gimbal Range of Travel 30
5.2.8 Remove Before Flight 30
6 PAYLOAD TO HOST ELECTRICAL INTERFACES 31
6.1 Payload Power 32
6.1.1 Operational Power Feeds 32
6.1.2 Primary Power Voltage Range 32
6.1.3 Power Enable Signals 33
6.1.4 Maximum Payload Current 33
6.1.5 Payload Power Fusing 33
6.1.6 Survival Heater Power 33
6.1.7 Sensor Assembly Gimbal Launch Lock Release Power 34
6.2 Payload Power-On Sequence 35
6.3 Payload to Host Spacecraft Grounding 36
6.3.1 Chassis Grounding Diagram 36
6.3.2 PCU to Chassis Grounding 37
6.3.3 Multi-layer Insulation Grounding 37
6.4 Host Spacecraft to Payload Harnessing 37
6.4.1 Payload Interface Connectors 37
6.4.2 Host-Routed Cable Information 38
6.5 Analog Telemetry Interface (Optional) 38
6.5.1 Active Analog Telemetry 38
6.5.2 Passive Analog Telemetry 39
7 PAYLOAD TO HOST THERMAL INTERFACES 41
7.1.1 PCU Thermal Interface 41
7.1.2 DEB Thermal Interface 41
7.2 Orbital Thermal Environment 41
8 PAYLOAD TO HOST SPACECRAFT DATA INTERFACES 42
8.1 Host Spacecraft Data Interface 42
8.2 Command & Data Interfaces 42
8.2.1 1PPS Signal Interface 42
8.2.2 SpaceWire Interface 42
8.2.3 RS-422 Interface 47
8.2.4 Data Storage Requirements 47

DRAFT

8.2.5 Data Error Correction 47
8.3 Payload Modes 47
8.3.1 Off/Survival Mode 47
8.3.2 Initialization Mode 48
8.3.3 Safe Mode 48
8.3.4 Operation Mode 48
8.3.5 Mode Transitions 48
8.4 Payload Internal Fault Detection and Correction 49
8.5 Host Spacecraft Commanding 49
8.5.1 Payload Emergency Power Off 49
8.5.2 Emergency Maneuvers 49
9 PAYLOAD CONTAMINATION CONTROL 50
9.1 Payload Protection 50
9.1.1 Payload Bagging 50
9.2 Payload Purge 50
9.2.1 Payload Purge Logbook 50
9.2.2 Purge Line Requirements 51
9.2.3 Purge Gas Requirements 51
9.2.4 Purge Gas Source 51
9.3 Host Integration & Test Facility 51
9.4 Host Spacecraft Cleanliness 52
9.5 Launch Site Integration & Test 52
9.6 Launch and On-Orbit Operations 53
10 GLIMR DATA FLOW OVERVIEW 54
10.1 GMOC Coordinate Systems and Units 55
10.2 GMOC Time Formats 55
10.3 GMOC to GSDS Verbal Interfaces 55
10.4 GSDS to GMOC Command Interface Overview 55
10.5 GMOC to GSDS Telemetry Interface Overview 55
10.6 Host Spacecraft Commands and Telemetry in Support of GLIMR 55
10.7 GSDS Support Data Products Overview 56
11 APPENDICES 57
11.1 Appendix A: Acronyms 57
11.2 Appendix B: Host Interface Connector Pinouts 59
11.3 Appendix C: Host-Routed Cable Information 72

DRAFT

Table of Tables

Table 2-1: Government Guiding Documents Referenced....10
Table 2-2: Additional Space Industry Documents Referenced....10
Table 2-3: GLIMR Generated Documents Referenced....11
Table 4-1: Sensor Assembly Stowed Volume (example only - see D4957031-500)....17
Table 4-2: Sensor Assembly Swept Volume (example only - see D4957031-500)....17
Table 4-3: PCU Volume (example only - see D4957031-500)....18
Table 4-4: DEB Volume (example only - see D4957031-500)....19
Table 4-5: Dust Cover Volume....20
Table 4-6: Payload Mass by Assembly....21
Table 4-7: Tabulated MOI and Related Information for Azimuth Stage [TBC]....22
Table 4-8: Tabulated MOI and Related Information for Elevation Stage [TBC]....23
Table 6-1: Payload NTE Power Allocations for Steady State and Peak Power....32
Table 6-2: Payload CBE Power for each Host Spacecraft Power Feed [TBC]....32
Table 6-3: Power Enable Signal Characteristics for PCU and FPE Power Feeds....33
Table 6-4: Survival Heater Characteristics....34
Table 6-5: Host to Payload Interface Connectors....37
Table 6-6: Payload Active Analog Telemetry....38
Table 6-7: Active Analog Telemetry Signal Characteristics....39
Table 6-8: Passive Analog Telemetry List....40
Table 7-1: Payload Assumed GEO Thermal Environment....41
Table 8-1: 1-PPS Signal Characteristics....42
Table 8-2: SpaceWire Message Types....43
Table 8-3: Host Spacecraft Data Size and RMAP Message ID....44
Table 8-4: Host Spacecraft Attitude and Ephemeris....44
Table 8-5: Payload Telemetry Size, RMAP Message ID, and Rate....46
Table 8-6: IRU Data Specifics....47
Table 10-1: Host Spacecraft Commands and Telemetry in Support of GLIMR....56

DRAFT

Table of Figures

Figure 3-1: Planned Observations 13
Figure 3-2: Payload Components 13
Figure 3-3: Dust Cover Radius of Curvature 15
Figure 4-1: Orbit Reference Frame (ORF) 16
Figure 4-2: Graphical Representation of Stowed Volume (example only – see D4957031-500) 16
Figure 4-3: Graphical Representation of Swept Volume (example only – see D4957031-500) 17
Figure 4-4: Payload Control Unit Dimensions (example only – see D4957031-500) 18
Figure 4-5: Decoder Electronics Box Dimensions (example only – see D4957031-500) 19
Figure 4-6: Dust Cover Volume 20
Figure 4-7: Center of Gravity for Sensor Assembly in Stowed Configuration (example only – see D4957031-500) 21
Figure 4-8: MOI & Related Information for Hardware Moved on Sensor Azimuth Stage [TBC] 22
Figure 4-9: MOI & Related Information for Hardware Moved on Sensor Elevation Stage [TBC] 23
Figure 5-1: Payload to GLIMR Electronic Interfaces 24
Figure 5-2: Payload View Showing Nadir-Facing Plane 25
Figure 5-3: Cross Section of Sensor Assembly Gimbal Mounting Flange (example only – see D4957031-500) 25
Figure 5-4: Isometric View of the Payload Control Unit 26
Figure 5-5: Payload Control Unit Dimensions (example only – see D4957031-500) 27
Figure 5-6: DEB Dimension and Mounting Hole Locations (example only – see D4957031-500) 28
Figure 5-7: Dust Cover Mounting and Alignment Pin holes (View E-E in Figure 4 4) (example only – see D4957031-500) 28
Figure 5-8: Relative Location of Dust Cover to Payload Mounting Flange 29
Figure 5-9: GLIMR Stowed Position - +23-deg. Elevation 29
Figure 5-10: GLIMR Stowed Position – +44.8 deg. Azimuth 30
Figure 6-1: Host I/F Connectors and PCU, DEB, and Sensor Assembly Interconnects 31
Figure 6-2: Power Enable Electronics Interface Diagram 33
Figure 6-3: Launch Lock Wiring Schematic 35
Figure 6-4: Payload Grounding Diagram 36
Figure 6-5: Payload Interface Connector Locations 37
Figure 8-1: Payload Mode Transitions 49
Figure 10-1: GLIMR Data Flow 54

DRAFT

1 INTRODUCTION

1.1 Scope and Purpose

GLIMR is a Category 3 (per NPR 7120.5E) Class D mission (per NPR 8705.4) being developed for the NASA EVI-5 program.

This document is the GLIMR Payload to Host Interface Definition Document (IDD), and defines the physical, mechanical, electrical, thermal, and data interfaces between the payload and Host Spacecraft.

This document has precedence over any and all other written, verbal, or electronic statements addressing interface issues and is used in conjunction with the GLIMR Instrument Installation Control Drawing (IICD) (D4957031-500).

1.2 Document Organization

Section 2 lists applicable and reference documents. Section 3 provides an overview of the GLIMR mission and the payload description. Sections 4 through 12 contain the interface descriptions. Appendix A provides acronyms, Appendix B provides the Host Spacecraft interface connector pinouts, and Appendix C provides the Host Spacecraft routed cable information.

1.3 Definitions

1.3.1 Payload

When used in this document the term payload refers to the totality of the delivered GLIMR flight instrument.

1.3.2 To Be Confirmed

To Be Confirmed (TBC) denotation signifies that the requirement value is not yet firm.

1.3.3 To Be Determined

To Be Determined (TBD) denotation signifies that the referenced text is in development.

DRAFT

2 DOCUMENTS

The documents listed in this section are for reference to the extent specified herein. In the event of a conflict between the documents referenced herein and the contents of this document, the contents of this document will be considered the superseding requirement. The documents' version at the time of Request for Proposal release is considered applicable unless otherwise noted.

The GLIMR Host Spacecraft Statement of Work (SOW) references this IDD, and the SOW has precedence in the event of any discrepancies.

2.1 Government Documents

Table 2-1contains the guiding government documents referenced within this interface description document.

Table 2-1: Government Guiding Documents Referenced

Document Number	Document Title
MIL-PRF-27401	Performance Specification: Propellant Pressurizing Agent, Nitrogen
MIL-STD-38999	Detail Specification: Connectors, Electrical, Circular, Miniature, High Density, Quick Disconnect (Bayonet, Threaded, and Breech Coupling), Environment Resistant, Removable Crimp and Hermetic Solder Contacts, General Specification For
MIL-STD-461	Electromagnetic Interference Characteristics of Subsystems and Equipment Requirements
NPD 7120.4E	NASA Engineering and Program/Project Management Policy
S-311-P-18	Thermistor, (Thermally Sensitive Resistor), Insulated and Uninsulated, Negative Temperature Coefficient, Specification for

2.2 Non-Government Documents

The documents listed in Table 2-2 are non-government industry generated documents for reference to the extent specified herein. The latest revision should be utilized.

Table 2-2: Additional Space Industry Documents Referenced

Document #	Document Name
ANSI/TIA/EIA-422	Electrical Characteristics of Balanced Voltage Digital Interface Circuits
ASTM E 595	Standard Test Method for Total Mass Loss and Collected Volatile Condensable Materials from Outgassing in a Vacuum Environment
ECSS-E-ST-50-12C Rev.1	SpaceWire – Links, Nodes, Routers and Networks
ECSS-E-ST-50-51C	SpaceWire Protocol Identification
ECSS-E-ST-50-52C	SpaceWire – Remote Memory Access Protocol

DRAFT

Document #	Document Name
IEST-STD-CC1246	Product Cleanliness Levels – Applications, Requirements, and Determination
ISO-8601	Date and Time Format

2.3 GLIMR Program Documents

The documents listed in Table 2-3 are GLIMR program generated documents for reference to the extent specified herein. The latest revision should be utilized.

Table 2-3: GLIMR Generated Documents Referenced

Document #	Document Name
D4957031-500	Instrument Mechanical Installation Control Drawing (Raytheon)
D4982947	Cable Assy, DEB, Op Htr/Ts, W303A (Raytheon)
D4983021	Cable Assy, Op Htr/Ts, PCU, W310A (Raytheon)
D4983024	Cable Assy, Op Htr/Ts, DEB, PCU, Az Motor Drv, W320A (Raytheon)
D4983059	Cable Assy, LL, Surv Htr/Ts, W323A/W324A (Raytheon)
D4983064	Cable Assy, SpaceWire, W330A (Raytheon)
D4983067	Cable Assy, Power, Host, W331A (Raytheon)
D4983070	Cable Assy, SPW Cmd & Data, W333 – Host (Raytheon)
D4983071	Cable Assy, Op Htr/Ts, W335A (Raytheon)
D4982950-100	Payload Control Unit (PCU) Assembly (Raytheon)
D4954207	Encoder Assembly (Raytheon)
GLIMR_05.07.001	GLIMR Software User Manual (Raytheon)
GLIMR_05.09.001	Command Database (Raytheon)
GLIMR_05.09.002	Telemetry Database (Raytheon)
GLIMR_02.11.001	GLIMR Fault Handling (Raytheon)

2.4 Document Control

This document is managed by the Earth System Science Pathfinder (ESSP) Program Office. After initial approval, it will be placed under formal configuration control. This IDD can be updated continuously throughout the life of the mission upon agreement between the Host Spacecraft and payload team. NASA is responsible for the composition of the IDD.

DRAFT

3 SYSTEM DESCRIPTION

This section describes the system architecture for GLIMR mission and provides context for descriptions in later sections. Refer to the GLIMR Concept of Operations Document (UNH-GLIMR-CONOPS-01) for a more thorough description of the mission functions and operations.

3.1 Mission Description

GLIMR is a hyperspectral ocean color sensor which targets the Gulf of America and other coastal and ocean waters of North and South America. With its vantage point from geostationary orbit, GLIMR will be the first hyperspectral ocean color sensor in the Western Hemisphere to study ocean processes at the diurnal timescales required to observe the dynamic ecological, biogeochemical, and physical processes typical of coastal and ocean waters. GLIMR is uniquely designed to capture the spatiotemporal evolution of phytoplankton blooms, which grow and dissipate on scales of hours to days, monitor phytoplankton physiology, growth rates and shifts in community composition, resolve coastal features, fronts, eddies, and upwelling features, and monitor biogeochemical fluxes and land-ocean exchanges at sub-diurnal to multi-day scales. GLIMR will improve quantification of primary productivity, biomass, and carbon fluxes within coastal aquatic ecosystems and across the land-sea interface and contribute observations that will aid development and evaluation of models that project future changes in carbon cycling and marine ecosystems for use in ecological forecasting. The two main science goals of GLIMR are (1) to understand the processes contributing to rapid changes in phytoplankton growth rate and community composition, and (2) quantify how high frequency fluxes of sediments, organic matter, and other materials between and within coastal ecosystems regulate the productivity and health of coastal ecosystems. The science application objectives aim to study the formation, magnitude, and trajectories of harmful algal blooms, oil spills, and Sargassum accumulation events.

At the heart of the GLIMR payload is a hyperspectral imaging (HSI) spectrometer with a spectral range between 340-1040nm, a spectral resolution of about 10 nm, and the capability to scan the Gulf of America in about 70 minutes. A higher spatial resolution landmark imager (LMI) co-aligned with the spectrometer enables image navigation and registration of the ocean color pixels collected by the spectrometer. A 28 cm diameter telescope provides high throughput and magnification for high signal to noise and spatial resolution.

During the daylight hours, the instrument will scan various regions of interest in the western hemisphere. These regions include opportunities for calibration, including simultaneous measurements with other instruments and star looks. During the nighttime, the instrument will be commanded to the stowed position.

DRAFT

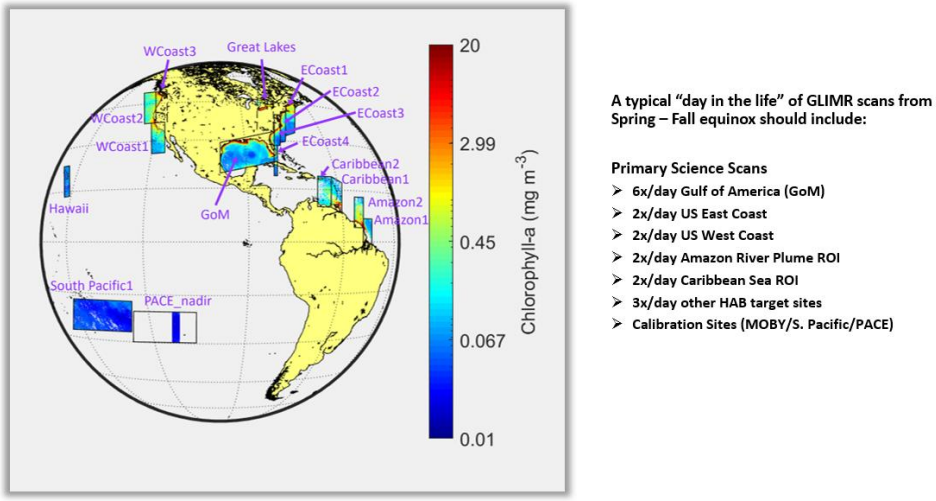

Figure 3-1: Planned Observations

3.2 Payload Description

The complete GLIMR payload is made up of four separately mounted systems: the sensor assembly (encompassing all moving parts), the Decoder Electronics Box (DEB), the Payload Control Unit (PCU), and the dust cover. The payload components are shown in Figure 3-2.

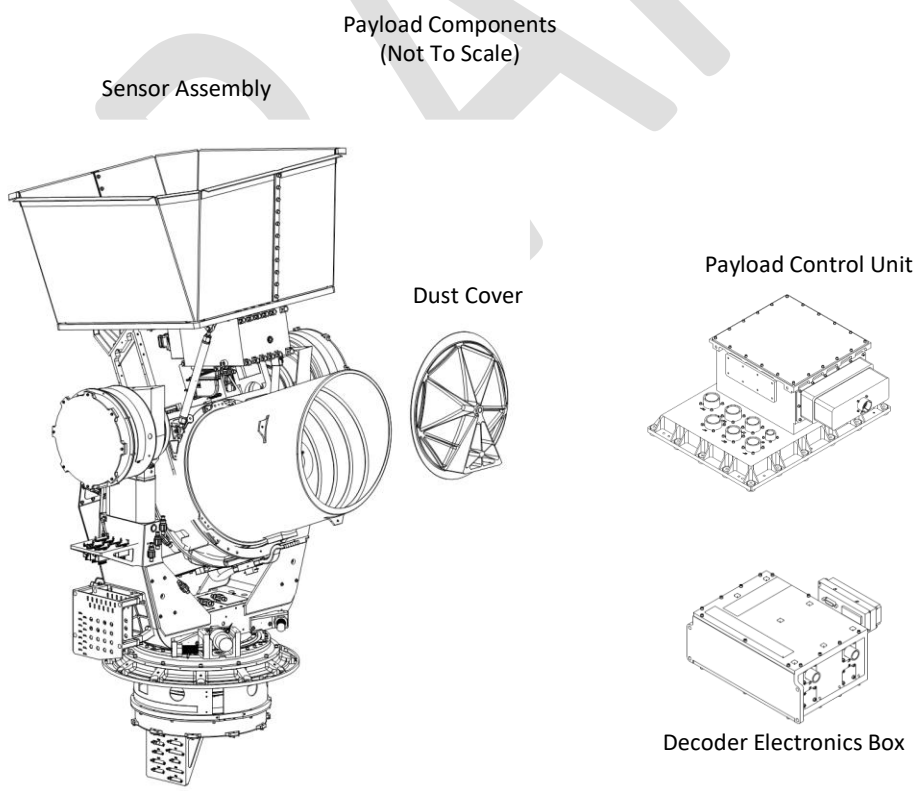

Figure 3-2: Payload Components

3.2.1 Sensor Assembly

The fully integrated sensor assembly consists of the gimbal assembly, the telescope assembly, and portions of the heat exchange subsystem.

3.2.1.1 Gimbal Assembly Subsystem

The Gimbal Assembly Subsystem is the part of the payload that is commanded in azimuth and elevation across the various scan regions. Each of the two axes contains bearings, a motor, and an optical encoder for position monitoring.

3.2.1.2 Telescope Assembly

The Telescope Assembly Subsystem collects the optical signal from the scene and contains a barrel-like sunshade for mitigating stray light onto the detectors. Out of the back of the telescope assembly, the incoming light is directed through the telecentric relay towards the Landmark Imager (LMI) used for geolocation and the Hyperspectral Imager (HSI) used to collect science data.

3.2.1.3 Heat Exchange Subsystem

The payload Heat Exchange Subsystem contains components both physically on and off the sensor assembly. It manages temperatures for the payload with a combination of heaters, radiators, thermal straps, multilayer insulation and custom thermal isolation components. Operational heaters maintain operational temperatures of the gimbal assembly, optical assemblies, payload focal plane arrays, and the spectrometer focal plane array. Survival heaters using bang-bang thermostat control are used to maintain temperatures of all sensor assembly components within their survival limits.

3.2.2 Decoder Electronics Box

The DEB contains electronics to integrate sensor assembly encoder read heads and report rotational positions via a serial interface for each axis to the PCU. The DEB is functionally part of the sensor assembly but is mechanically mounted separately from the sensor assembly on the GLIMR Spacecraft structure.

3.2.3 Payload Control Unit

The PCU is the main interface electronics box mounted separately from the sensor assembly and controls the gimbal, distributes power, controls the thermal environment, and interfaces to the GLIMR Spacecraft.

3.2.4 Dust Cover

The payload dust cover dish is mechanically mounted separate from the sensor assembly in a fixed location on the GLIMR Spacecraft structure. When in the stowed position, the telescope is oriented in a position that aligns the telescope sunshade with the dust cover to provide contamination protection during launch and thermal protection during non-observing periods on-orbit.

DRAFT

Both the outer edge of the sunshade and the surface of the dust cover facing the telescope sunshade have a radius of curvature as shown in Figure 3-3 that prevents interference when the telescope moves through its full range of motion.

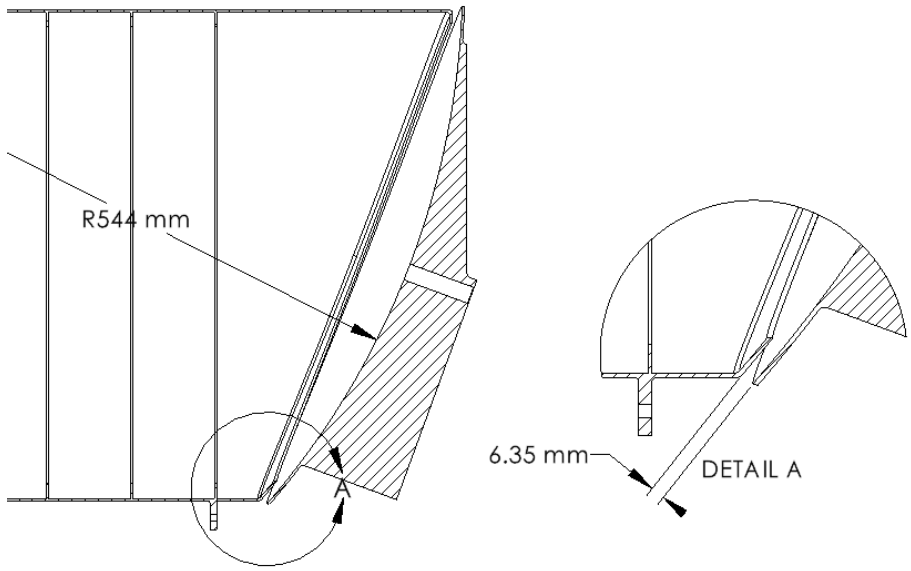

Figure 3-3: Dust Cover Radius of Curvature

DRAFT

4 KEY PAYLOAD PHYSICAL CHARACTERISTICS

4.1 Coordinate System Definition

The GLIMR design team utilizes the community standard body reference frame coordinate system where:

+Z is in the direction of nadir;

+X is in the direction of orbital velocity; and

+Y completes the right-handed system.

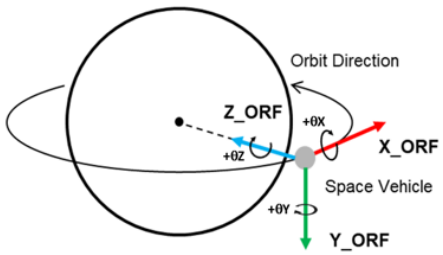

Figure 4-1: Orbit Reference Frame (ORF)

The origin of the coordinate system is indicated on the GLIMR IICD (D4957031-500).

4.2 Payload Dimensions

4.2.1 Sensor Assembly Stowed Volume

The volume of the stowed sensor assembly is specified in the GLIMR IICD (D4957031-500). Note: In the stowed position, the telescope is pointed at the dust cover, not at nadir.

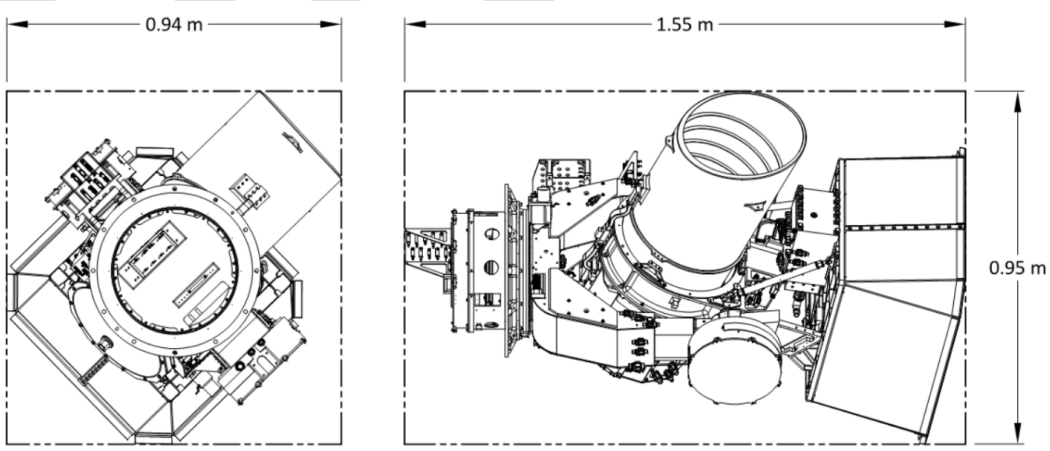

Figure 4-2: Graphical Representation of Stowed Volume (example only – see D4957031-500)

Table 4-1: Sensor Assembly Stowed Volume (example only - see D4957031-500)

Parameter	Maximum Expected Value
x-extent (parallel to orbit)	0.94 m
y-extent (normal to orbit)	1.55 m
z-extent (nadir)	0.95 m
Total Volume	**1.4 m^3**

4.2.2 Telescope Swept Volume

The volume of the swept sensor assembly is specified in the GLIMR IICD (D4957031-500).

The swept volume represents the keep-out volumes for other payloads or structures on the Host Spacecraft bus.

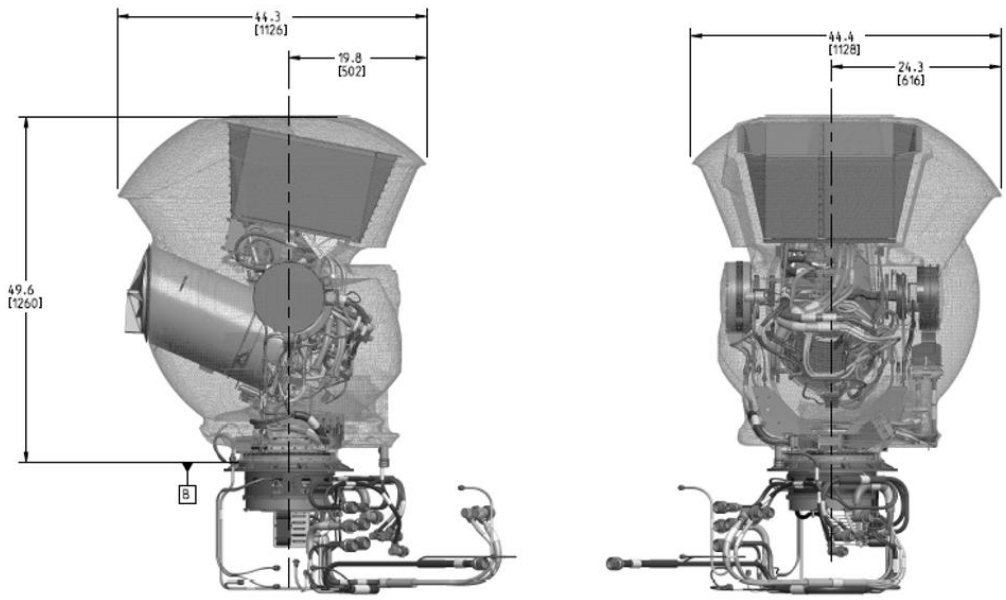

Figure 4-3: Graphical Representation of Swept Volume (example only – see D4957031-500)

Table 4-2: Sensor Assembly Swept Volume (example only - see D4957031-500)

Parameter	Maximum Expected Value
x-extent (parallel to orbit)	1.13 m
y-extent (normal to orbit)	1.26 m
z-extent (nadir)	1.13 m
Total Volume	**1.60 m^3**

4.2.3 PCU Volume

The volume of the PCU is specified in the GLIMR IICD (D4957031-500).

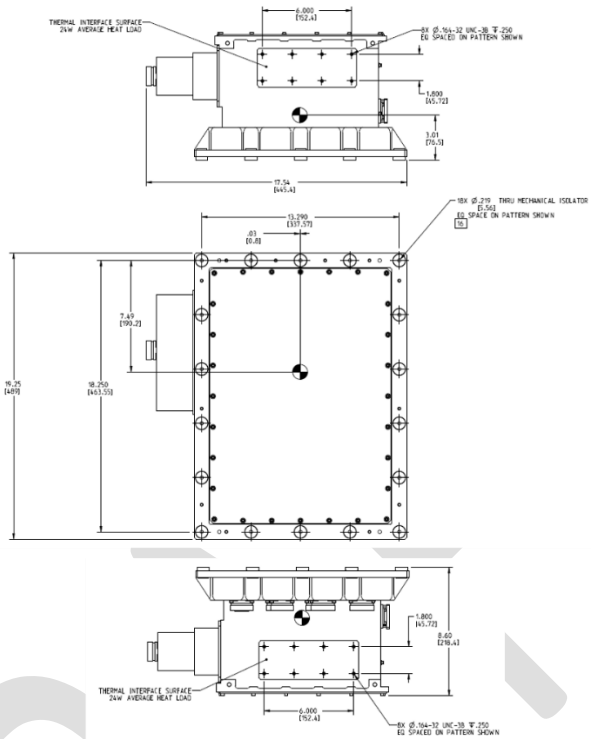

Figure 4-4: Payload Control Unit Dimensions (example only – see D4957031-500)

Table 4-3: PCU Volume (example only - see D4957031-500)

Parameter	Maximum Expected Value
x-extent	0.445 m
y-extent	0.489 m
z-extent	0.218 m
Total Volume	**0.047 m^3**

4.2.4 DEB Volume

The volume of the DEB is specified in the GLIMR IICD (D4957031-500).

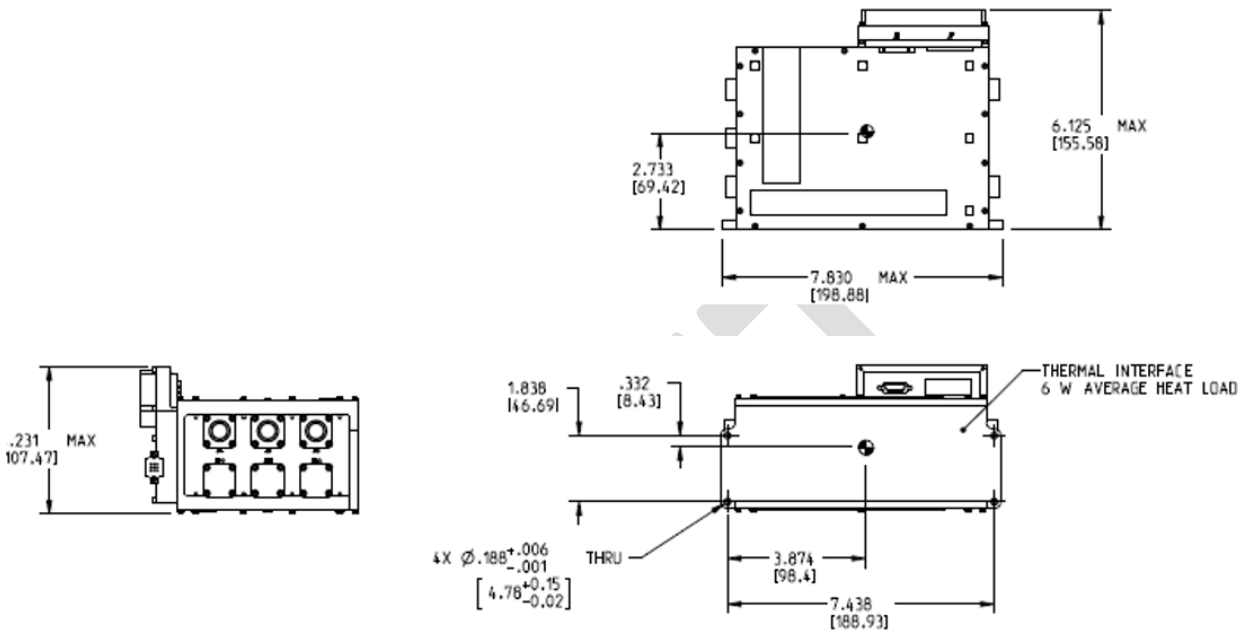

Figure 4-5: Decoder Electronics Box Dimensions (example only – see D4957031-500)

Table 4-4: DEB Volume (example only - see D4957031-500)

Parameter	Maximum Expected Value
x-extent	0.107 m
y-extent	0.156 m
z-extent	0.199 m
Total Volume	**0.003 m^3**

4.2.5 Dust Cover Volume

The volume of the dust cover is specified in the GLIMR IICD (D4957031-500)

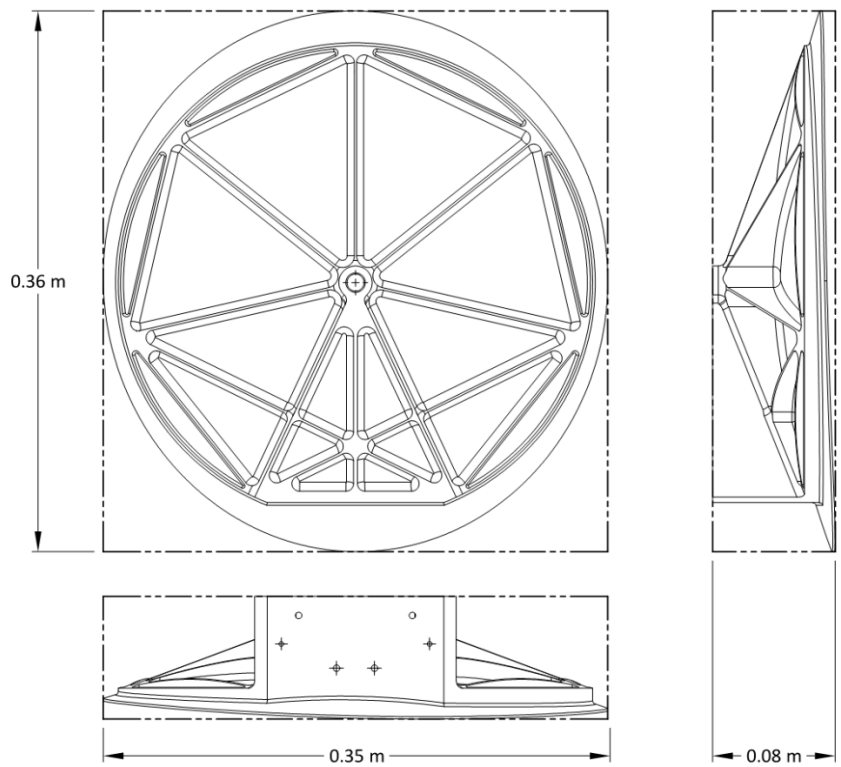

Figure 4-6: Dust Cover Volume

Table 4-5: Dust Cover Volume

Parameter	Maximum Expected Value
x-extent	0.35 m
y-extent	0.08 m
z-extent	0.36 m
Total Volume	**0.01 m^3**

4.3 Mass

The payload will have a maximum total mass allocation Not to Exceed (NTE) of 175 kg.

Table 4-6: Payload Mass by Assembly

Subsystem	Not to Exceed Value
Sensor Assembly	136 kg
PCU + cables	34 kg
DEB	3 kg
Dust Cover	2 kg
Total Payload	**175 kg**

The mass of the heat exchange system has been included in the sensor assembly. The mass of the total payload includes all hardware including internal payload connectors and harnesses, thermal blankets, and all additional hardware delivered with the payload and utilized in the mounting and/or final closeout of the unit on the Host Spacecraft bus.

The payload NTE value does not include any sensor assembly interface mating structure or dust cover mounting structure provided by the Host Spacecraft which would mount directly to the Host Spacecraft.

4.4 Centers of Gravity and Moments of Inertia

4.4.1 Sensor Assembly Center of Gravity and Moments of Inertia

The GLIMR IICD (D4957031-500) specifies the center of gravity of the sensor assembly. he Moments of Inertia (MOI) values are shown in Figure 4-8 and Table 4-7 for the azimuth-mounted hardware and in Figure 4-9 and Table 4-8 for the elevation-mounted hardware.

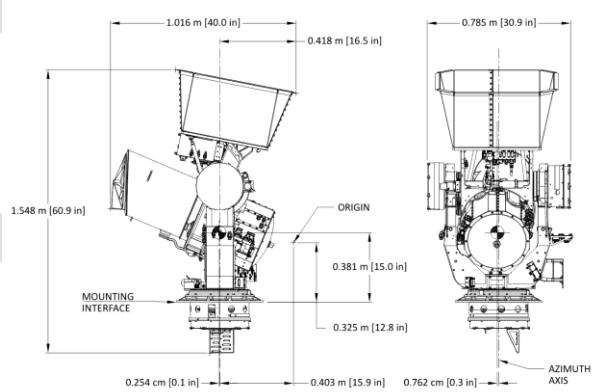

Figure 4-7: Center of Gravity for Sensor Assembly in Stowed Configuration (example only – see D4957031-500)

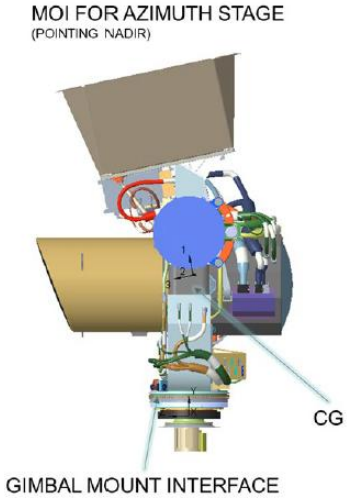

Figure 4-8: MOI & Related Information for Hardware Moved on Sensor Azimuth Stage [TBC]

Table 4-7: Tabulated MOI and Related Information for Azimuth Stage [TBC]

CG (m) with respect to GIMBAL-MNT-INTFC coordinate frame					
X	Y	Z			
1.0619337E-02	4.9844002E-01	-1.4960601E-02			
INERTIA with respect to GIMBAL-MNT-INTFC coordinate frame					
Inertia Tensor (kg * m^2)					
Ixx	Ixy	Ixz	3.2047396E+01	-5.8600539E-01	4.2166219E-01
Iyx	Iyy	Iyz	-5.8600539E-01	6.0590752E+00	-2.4773043E-01
Izx	Izy	Izz	4.2166219E-01	-2.4773043E-01	3.3548200E+01
INERTIA AT CG with respect to GIMBAL-MNT-INTFC coordinate frame					
Inertia Tensor (kg * m^2)					
Ixx	Ixy	Ixz	8.9158892E+00	-9.3628880E-02	4.0688358E-01
Iyx	Iyy	Iyz	-9.3628880E-02	6.0277648E+00	-9.4139416E-01
Izx	Izy	Izz	4.0688358E-01	-9.4139416E-01	1.0427024E+01
PRINCIPAL MOMENTS OF INERTIA: (kg * m^2)					
I1	I2	I3	5.8347493E+00	8.8191782E+00	1.0716751E+01
ROTATION MATRIX from GIMBAL-MNT-INTFC orientation to PRINCIPAL AXES					
0.00329	-0.97417	0.22579			
0.97968	-0.04214	-0.19609			
0.20054	0.22185	0.95424			
ROTATION ANGLES from GIMBAL-MNT-INTFC orientation to PRINCIPAL AXES (deg)					
about x	about y	about z			
11.61	13.05	89.81			
RADII OF GYRATION with respect to PRINCIPAL AXES (m):					
R1	R2	R3			
2.5044801E-01	3.0790769E-01	3.3942048E-01			

DRAFT

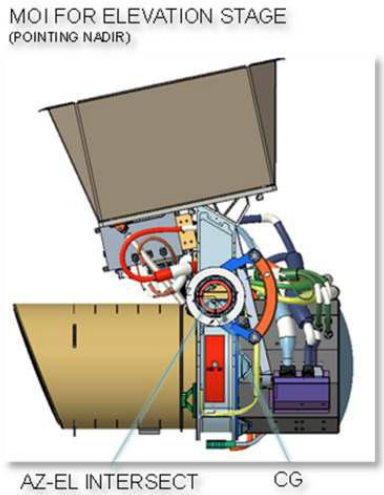

Figure 4-9: MOI & Related Information for Hardware Moved on Sensor Elevation Stage [TBC]

Table 4-8: Tabulated MOI and Related Information for Elevation Stage [TBC]

CG (m) with respect to AZ-EL_AXIS_INTERSECT coordinate frame					
X	Y	Z			
-1.3513660E-02	3.8890183E-02	-1.9131286E-02			
INERTIA with respect to AZ-EL_AXIS_INTERSECT coordinate frame					
Inertia Tensor (kg * m^2)					
Ixx	Ixy	Ixz	4.2787102E+00	1.8039408E-01	-4.1401512E-01
Iyx	Iyy	Iyz	1.8039408E-01	4.6817370E+00	1.1239268E+00
Izx	Izy	Izz	-4.1401512E-01	1.1239268E+00	4.6979268E+00
INERTIA AT CG with respect to AZ-EL_AXIS_INTERSECT coordinate frame					
Inertia Tensor (kg * m^2)					
Ixx	Ixy	Ixz	4.1583439E+00	1.4671829E-01	-3.9744895E-01
Iyx	Iyy	Iyz	1.4671829E-01	4.6465825E+00	1.0762520E+00
Izx	Izy	Izz	-3.9744895E-01	1.0762520E+00	4.5893114E+00
PRINCIPAL MOMENTS OF INERTIA: (kg * m^2)					
I1	I2	I3	3.3524109E+00	4.3273177E+00	5.7145091E+00
ROTATION MATRIX from AZ-EL_AXIS_INTERSECT orientation to PRINCIPAL AXES					
0.43833	0.89143	-0.11497			
-0.60356	0.38670	0.69726			
0.66602	-0.23624	0.70754			
ROTATION ANGLES from AZ-EL_AXIS_INTERSECT orientation to PRINCIPAL AXES (deg)					
about x	about y	about z			
-44.581	-6.602	-63.816			
RADII OF GYRATION with respect to PRINCIPAL AXES (m):					
R1	R2	R3			
2.2873161E-01	2.5987048E-01	2.9863247E-01			

DRAFT

5 PAYLOAD TO HOST INTERFACE OVERVIEW

Figure 5-1 shows the high-level categories of electronic interfaces between the GLIMR Payload and the GLIMR spacecraft. These interfaces are described in the following sections and in key reference documentation. There are mechanical mounting and thermal interfaces not shown in diagram that are also described in the following sections and detailed in the GLIMR IICD (D4957031-500). As shown, the Host Spacecraft provides the power for the thermostatically controlled survival heaters and temperature sensors. Analog telemetry monitors the secondary voltages prior to the SpaceWire communications being enabled.

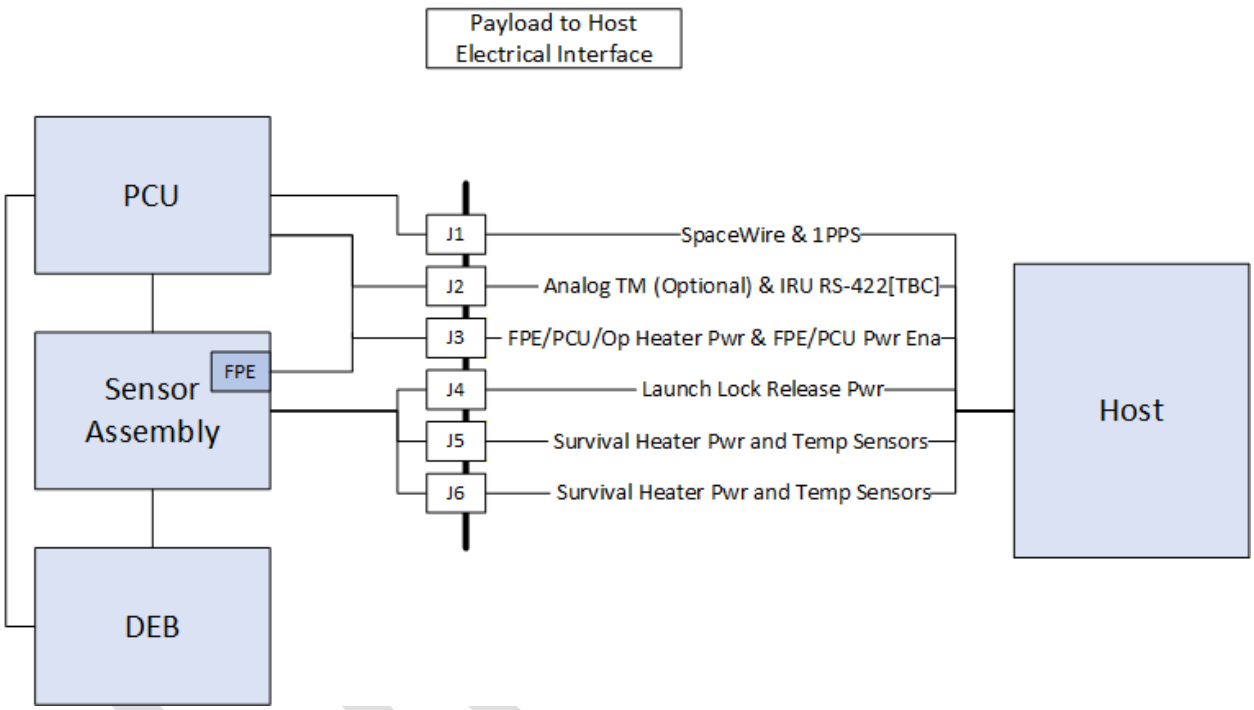

Figure 5-1: Payload to GLIMR Electronic Interfaces

5.1 Mechanical Interface Overview

The payload mechanical interfaces are defined and controlled in the GLIMR IICD (D4957031-500). This drawing depicts the payload isometric views and general exterior dimensions, Host Spacecraft mounting interfaces and dimensions, stowed, and swept volumes. The figures in this section are examples only.

The payload mechanical interfaces to the Host Spacecraft consists of the sensor assembly mounting flange, the PCU baseplate and thermal strapping, the DEB baseplate, and the dust cover mounting flange. The sensor assembly mounting interface is the azimuthal axis base of the gimbal assembly.

5.2 Payload Outlines and Mounting Interfaces

5.2.1 Host Interface Coordinate System Origin

Requested origin location and orientation relative to the NASA standard Host Spacecraft interface coordinate system is depicted on the GLIMR IICD (D4957031-500).

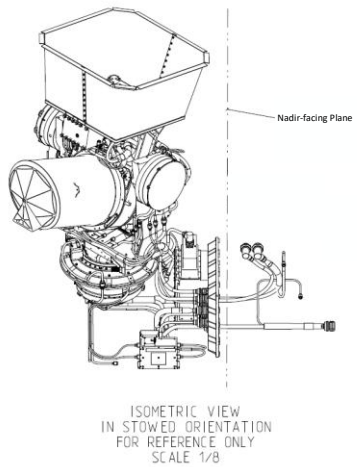

Figure 5-2: Payload View Showing Nadir-Facing Plane

5.2.2 Sensor Assembly Mounting Flange Outline

The sensor assembly is mounted to the Host Spacecraft in such a manner as to support nadir pointing of the telescope with the azimuth gimbal base mounted in the X-Z plane.

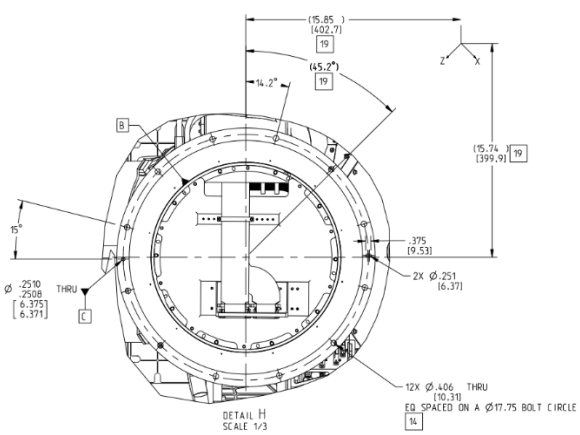

Figure 5-3: Cross Section of Sensor Assembly Gimbal Mounting Flange (example only – see D4957031-500)

5.2.3 PCU Dimensions and Mounting

The PCU is mounted as close to the gimbal azimuth base as feasible while considering the payload harness lengths and PCU thermal requirements. The primary limitation on PCU placement is the W330A cable length of 1.27 m (50 inches) which carries the SpaceWire and One Pulse Per Second (1PPS) signals from the PCU to the Azimuth cable wrap. There are other cables from the PCU to the Azimuth cable wrap and DEB, however their length is not as critical for achieving functionality.

(Note: this maximum distance value represents the baseline configuration and potentially can be increased if desired by Host Spacecraft vendor pending a signal integrity analysis).

The PCU is shown in an isometric view in Figure 5-4 with items labelled as follows:

1-Chassis

2-Input Power Filter

3-Top Cover

The PCU dimensions are shown on the GLIMR IICD (D4957031-500).

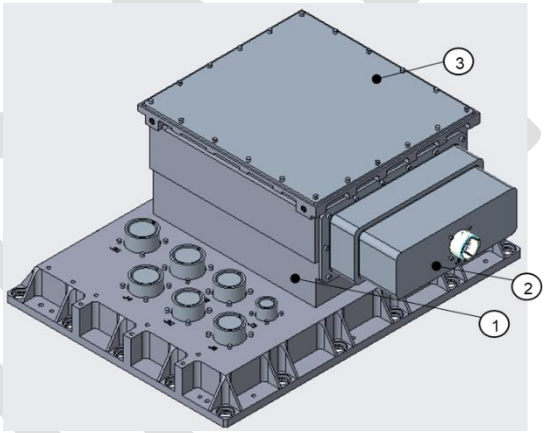

Figure 5-4: Isometric View of the Payload Control Unit

DRAFT

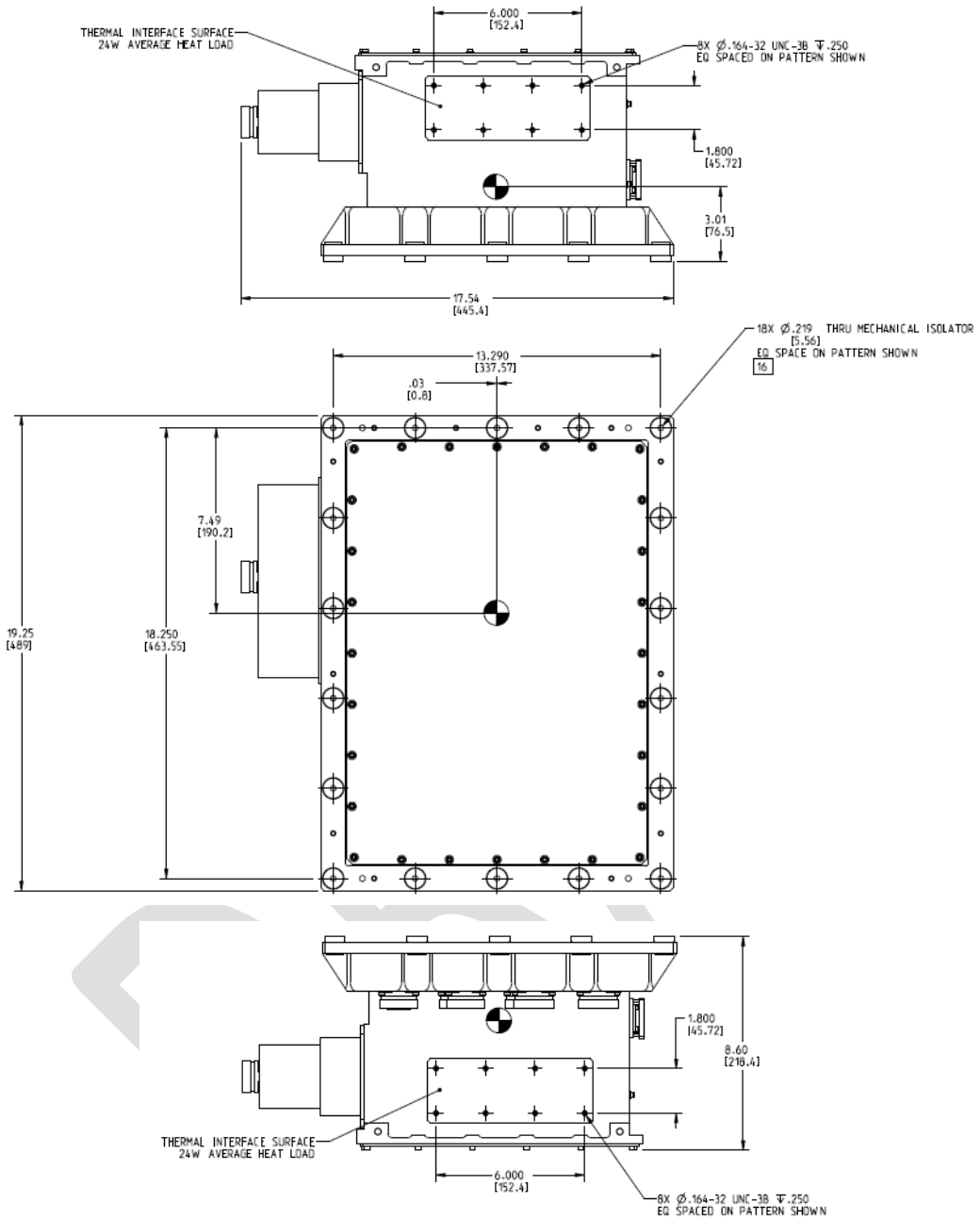

Figure 5-5: Payload Control Unit Dimensions (example only – see D4957031-500)

A thermal heat load will primarily be conducted from two thermal interfaces on the side of the PCU chassis. These thermal interfaces are identical and are located on opposite sides of the unit as shown in Figure 5-5.

5.2.4 DEB Dimensions and Mounting

The DEB is mounted as close to the gimbal azimuth base as feasible while considering the payload harness lengths. The primary limitations on the DEB location are the W303A cable between the PCU and DEB (DEB command and data), and the W320A cable which contains the read heads. The distance between W303A P12 (PCU J12) and W303A P1 (DEB J1) is a maximum of 0.60 m (23.7 inches). The distance between W320A P4 and P5 (DEB J4 and J5) and W320A J29 (Azimuth Cable Wrap, W389 P29) is a maximum of 1.25 m (49.4 inches).

(Note: these maximum distance values represent the baseline configuration and potentially can be increased if desired by Host Spacecraft vendor pending a signal integrity analysis).

The DEB dimensions and its mounting plate interface bolt pattern are shown on GLIMR IICD (D4957031-500).

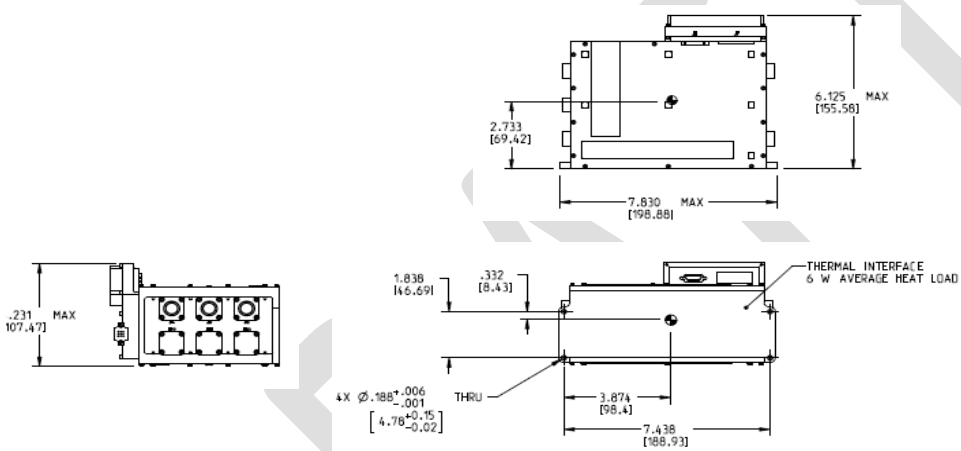

Figure 5-6: DEB Dimension and Mounting Hole Locations (example only – see D4957031-500)

5.2.5 Dust Cover Dimensions and Mounting

The dust cover relative location with respect to the sensor assembly is shown in GLIMR IICD (D4957031-500).

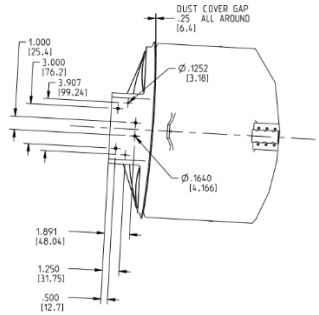

Figure 5-7: Dust Cover Mounting and Alignment Pin holes (View E-E in Figure 4 4) (example only – see D4957031-500)

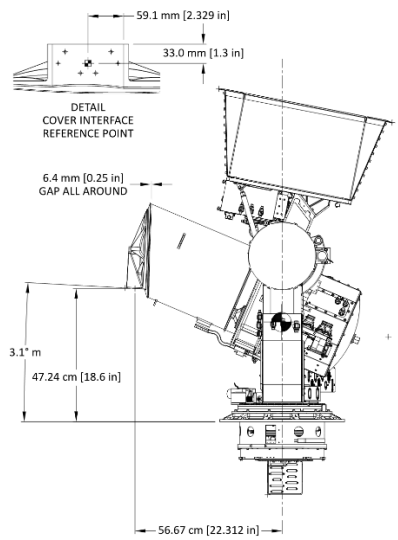

Figure 5-8: Relative Location of Dust Cover to Payload Mounting Flange

5.2.6 Stowed Position

The gimbal stowed position is Az = 30.8 deg., El = 23 deg.

Nadir is defined as Az = -14 deg., El = 0 deg.

(0 deg. Z_ORF = -14 deg. Az_gimbal)

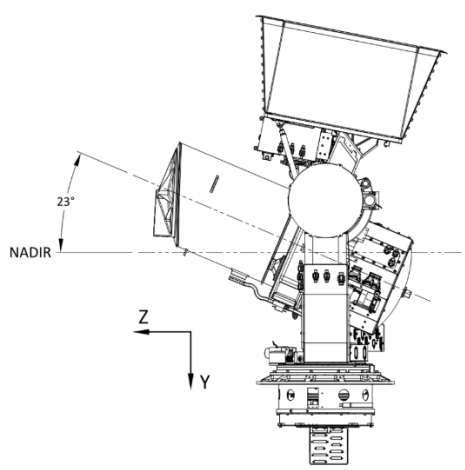

Figure 5-9: GLIMR Stowed Position - +23-deg. Elevation

DRAFT

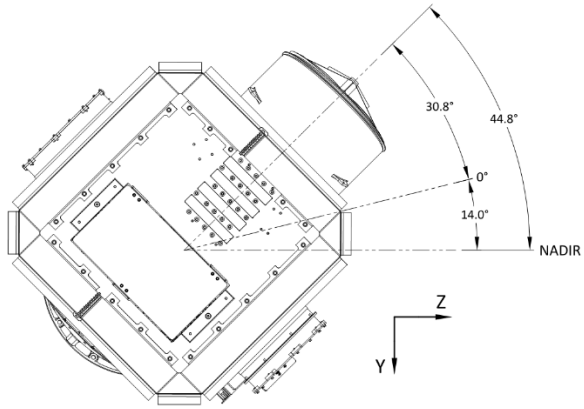

Figure 5-10: GLIMR Stowed Position – +44.8 deg. Azimuth

5.2.7 Gimbal Range of Travel

The gimbal range of travel is:

- Az: +34.5 deg. to -34.5 deg.
- El: +24.0 deg. to -11.4 deg.

5.2.8 Remove Before Flight

Locations of the Remove Before Flight items are identified in Figure (TBD).

DRAFT

6 PAYLOAD TO HOST ELECTRICAL INTERFACES

The interconnect diagram presents a high-level overview of the connections between various components of the payload and the Host Spacecraft interface connectors. Payload electrical interface connections required for operation will be per MIL-STD-38999 and pinouts for the interface connectors are listed in Appendix B: Host Interface Connector Pinouts.

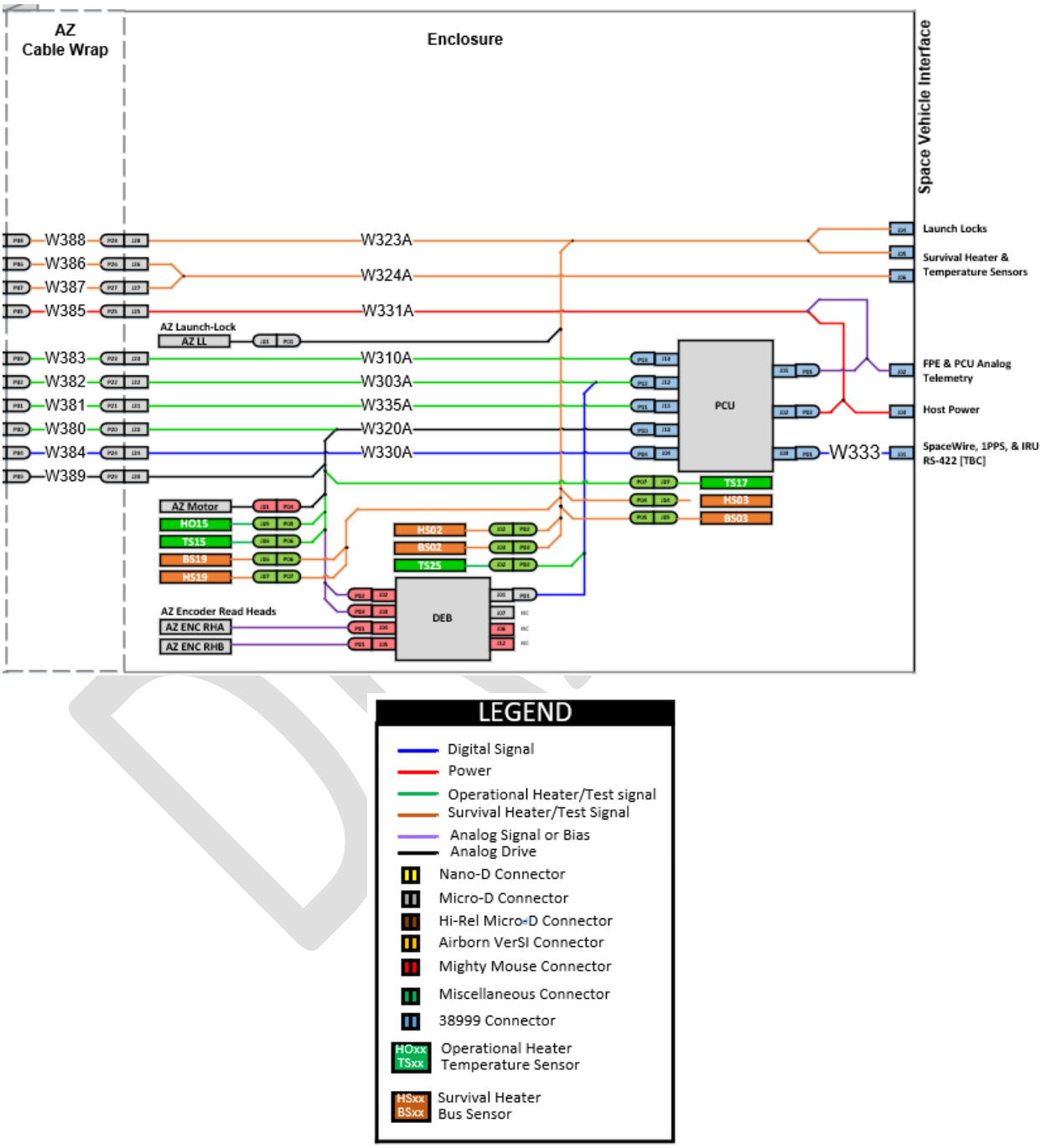

Figure 6-1: Host I/F Connectors and PCU, DEB, and Sensor Assembly Interconnects

6.1 Payload Power

Note: All payload power numbers listed are based on Program Office allocations with incorporated contingency, margin, and reserve, and not based on payload MEV values. Payload Critical Design Review (CDR) maturity Current Best Estimate (CBE) values when listed are noted as such.

6.1.1 Operational Power Feeds

Payload allocations and minimum accommodations required for operational steady-state average power and operational peak power.

Steady-state average power is defined as being over any 180-minute period.

Peak power is defined as the maximum power consumed averaged over any 10 ms period.

Table 6-1: Payload NTE Power Allocations for Steady State and Peak Power

Power Feed	NTE Operational Power Allocation (W)	NTE Peak Power Allocation (W)
Power Feed #1 – FPE	120	130
Power Feed #2 – PCU	150	175
Power Feed #3 – Operational Heaters	130	195
Total Payload	**400**	**500**

Table 6-2: Payload CBE Power for each Host Spacecraft Power Feed [TBC]

Power Feed	CBE Operational Power (W)	CBE Peak Power (W)
Power Feed #1 – FPE	73	80
Power Feed #2 – PCU	48	60
Power Feed #3 – Operational Heaters	86	131
Total Payload	**207**	**271**

In addition to the three operational power feeds, the payload requires survival heater power (Section 6.1.6) and Launch Release Mechanism (LRM) power (Section 6.1.7).

6.1.2 Primary Power Voltage Range

The Host Spacecraft provides a steady state voltage range of 32 ± 2.0 VDC on each of the three operational power feeds to the payload.

DRAFT

6.1.3 Power Enable Signals

The Host Spacecraft provides two discrete power enable signals, one for Power Feed #1 – FPE and one for Power Feed #2 – PCU. Power enable signal electrical characteristics are described Table 6-3 and Figure 6-2 illustrates the Power Enable Interface Circuit. These signals must be sent continuously during payload operations.

Table 6-3: Power Enable Signal Characteristics for PCU and FPE Power Feeds

Power Enable Characteristic	Limit
On Circuit Voltage Range	+30 VDC to +34 VDC
Maximum Leakage Current (Off)	20 microAmp
Maximum Load Current	10 microAmp

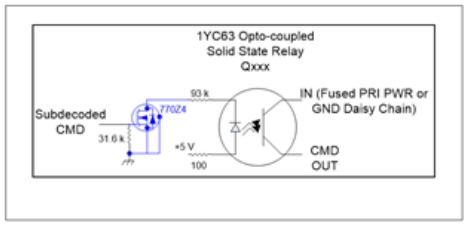

Figure 6-2: Power Enable Electronics Interface Diagram

6.1.4 Maximum Payload Current

The maximum current draw is calculated as the maximum peak power accommodation values on a given feed divided by the minimum allowable bus voltage. The maximum current draw for each feed is:

- Power Feed #1 – FPE: 5.0A (130W / 26V),
- Power Feed #2 – PCU: 6.7A (175W / 26V), and
- Power Feed #3 – Operational Heaters: 9.6A (250W / 26V).

6.1.5 Payload Power Fusing

The payload does not contain internal fusing, and Host Spacecraft-side resettable overcurrent protection is expected.

6.1.6 Survival Heater Power

In addition to the three operational power feeds, the sensor assembly requires survival heater power for its payload-supplied thermostatically controlled survival heaters.

The Host Spacecraft provides a 250W power feed for sensor assembly survival heater thermostats at all times. The Host Spacecraft will provide for the measurement of 18 payload temperature sensors for use when the payload is powered off, so that the mission may verify thermostats are operational and that no temperature limits were exceeded in OFF mode.

DRAFT

The Host Spacecraft survival power feed operates an array of 12 thermostatically controlled survival heaters on the sensor assembly, with no Host Spacecraft-side temperature control loop functionality. The payload will only draw power if the payload temperatures drop below the thermostat setpoints.

The Host Spacecraft enables or disables the thermostat array by applying or removing feed power.

If the DEB and PCU require thermostatically controlled survival heaters to meet the survival temperature ranges, these would be the responsibility of the Host Spacecraft.

6.1.6.1 Sensor Assembly Survival Heater Characteristics

Relevant electrical characteristics for the survival heaters in the sensor assembly.

Table 6-4: Survival Heater Characteristics

Ref Des	Heater Location	Set Point (K)	Dead Band (K)	Nominal Resistance (Ω)	Tolerance (%)	Power (W)			Max Current (A)	Allowable Current (A)	Power Flux Density (W/in^2)
						Min	Heater Max	Circuit Max			
HS01	Secondary Mirror	244	8	65.4	5	11.0	15.4	15.43	0.498	0.625	4.7
HS04	FPE	233	8	20.3	5	34.5	49.1	49.42	1.594	2.000	4
HS05	Gimbal Ring	244	8	65.4	5	11.0	15.4	15.43	0.498	0.625	3
HS06	Yoke Encoder	244	8	65.4	5	11.0	15.4	15.43	0.498	0.625	1.1
HS07	Yoke Motor	244	8	65.4	5	11.0	15.4	15.43	0.498	0.625	0.7
HS08	LMI Housing	244	8	207.3	5	3.5	4.9	4.88	0.157	0.625	9.6
HS09	HSI Radiator	244	8	207.3	5	3.5	4.87	4.88	0.157	0.625	8.3
HS11	LMI FPA	244	8	207.3	5	3.5	4.9	4.88	0.157	0.625	5.7
HS12	Yoke Az Bearing	244	8	65.4	5	11.0	15.4	15.43	0.498	0.625	2.2
HS13	HSI Housing	244	8	65.4	5	11.0	15.4	15.43	0.498	0.625	3.6
HS18	Aft Metering Structure	244	8	65.4	5	11.0	15.4	15.43	0.498	0.625	3.7
HS19	Gimbal Base Az Motor	244	8	65.4	5	11.0	15.4	15.43	0.498	0.625	1.4
	Max Draw					**133.0**	**186.9**	**187.59**	**6.000**		

6.1.7 Sensor Assembly Gimbal Launch Lock Release Power

The Host Spacecraft provides power to release sensor assembly launch locks on the azimuth and elevation gimbals.

The launch lock actuators are Ensign-Bickford Aerospace & Defense (EBAD) P100 type Pin Pullers (vendor P/N: N81724-2). In fully reset mode, the pin puller internal circuits are closed and do not require Host Spacecraft power to stay engaged. When sufficient power is applied, the current raises the temperature of the Shape Memory Alloy (SMA) wire and subsequently contracts at its transition temperature allowing internal ball locks to release and internal drive springs to retract the pin into the body of the device. Once retracted, the circuit is open allowing no power to continue to heat the SMA wire and provides positive feedback that the device has actuated.

The sensor assembly launch lock release power forms have the following characteristics:

- Four power lines are required, a primary and redundant for each gimbal axis.
- Each power line will be provided with 4A of current for 200-300ms to activate the device. The operating voltage range for the initiators is 18V to 39V.

- The circuit resistance is 7 Ohms, +/- 1 Ohm.
- The listed voltage range and resistance do not account for any system cabling resistance. This must be considered when designing the driving interface.
- The lines will interface with a D38999/24GG35PA connector with interface pinout as listed in Appendix B: Host Interface Connector Pinouts - J4. The payload lines will use 26 AWG wires.

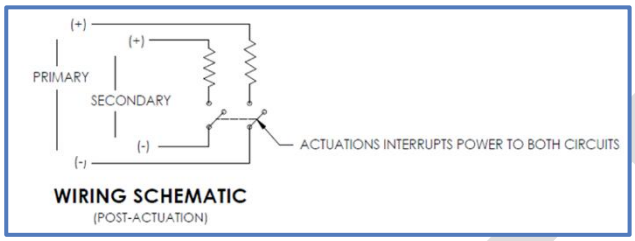

Figure 6-3: Launch Lock Wiring Schematic

6.1.7.1 Launch Lock Monitoring

The Host Spacecraft monitors the launch lock power forms and reports them in the real-time telemetry.

There is no independent release monitor built onto the payload. The only indication the LRM pin pullers have successfully activated is that both primary and secondary circuits switch open once the pin is retracted (i.e., deployed).

6.2 Payload Power-On Sequence

The following steps represent a baseline power-on sequence for the payload during initial power-on during commissioning.

1. Upon receiving command from the ground, the Host Spacecraft provides primary power to the payload power feeds.
2. Upon receiving command from the ground, the Host Spacecraft provides the power enable signal to the PCU. This command will be sent after the ground has confirmed telemetry that the PCU is within its operational temperature range.

   Upon application of Power Feed #2 – PCU prime power and receipt of its discrete power enable signal, the PCU will initiate the boot-up sequence. At the completion of the boot-up sequence, the PCU will respond to commands and provide telemetry including confirmation of successful power enable. This step may take several minutes to complete.

   The timing for when the Operational Heater feed is energized is not critical, as this power goes to the HDM within the PCU which doesn't distribute power to heaters until after PCU start-up.

3. Upon receiving command from the ground, the Host Spacecraft provides the power enable signal to the FPE. This command will be sent after the ground has

DRAFT

confirmed telemetry that the PCU has completed initialization and the FPE is within its operational temperature range.

At the conclusion of FPE power-on the payload will be in Standby state awaiting commands.

At this point, the commanding for launch lock release can be performed. This incorporates a motor flinch test to energize the motors prior to release and a gimbal functional test after release.

6.3 Payload to Host Spacecraft Grounding

6.3.1 Chassis Grounding Diagram

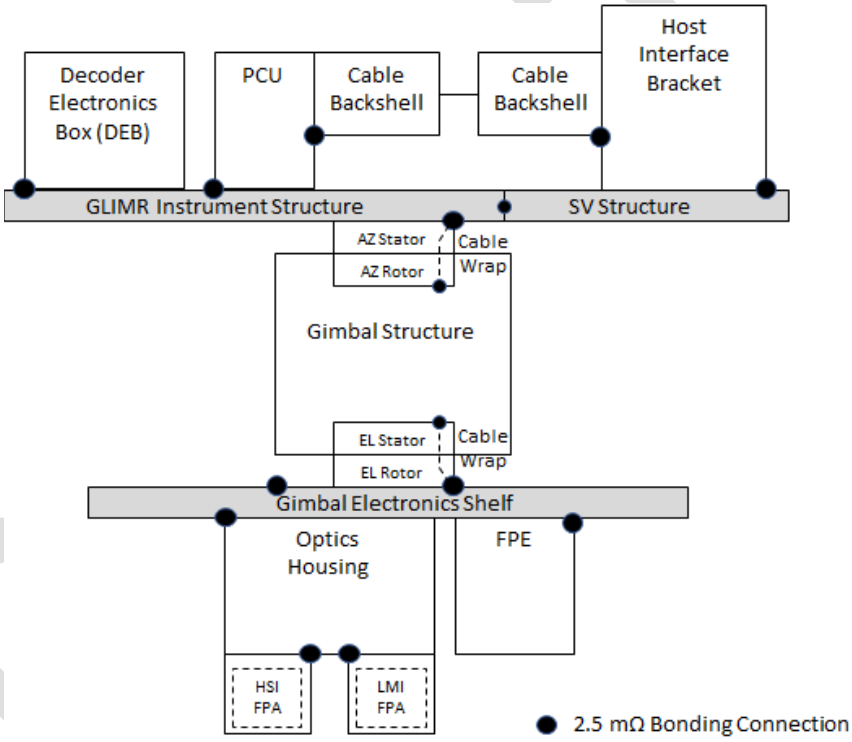

Figure 6-4: Payload Grounding Diagram

The mechanical interfaces between the payload and the Host Spacecraft are electrically conductive and EMI-grounded to the bus structure. The Direct Current (DC) electrical resistance between the payload and the Host Spacecraft is to be less than or equal to 0.0025 Ohms.

The Host Spacecraft-to-payload wire harness shields are terminated to the bus structure.

The resistance between any shield and the closest reference point on the payload structure is less than 10 mΩ for a current of 10 mA.

6.3.2 PCU to Chassis Grounding

The payload PCU secondary ground is tied to PCU chassis on the PCU Backplane.

6.3.3 Multi-layer Insulation Grounding

All Multi-layer Insulation (MLI) on or within 24 inches of the sensor assembly is grounded and has a DC resistance of less than or equal to 100 milliohms between the MLI and ground plane.

6.4 Host Spacecraft to Payload Harnessing

6.4.1 Payload Interface Connectors

Interface connectors from the Host Spacecraft to the payload are in the GLIMR Mechanical Installation Control Drawing (D4957031-500). Connector pinouts are contained in Appendix B: Host Interface Connector Pinouts.

Table 6-5: Host to Payload Interface Connectors

Reference Designator	Connector Type	Description	Destination
J1	D38999 / 24GE35PN	SpaceWire & 1 PPS	PCU
J2	D38999 / 24GD35PN	Analog Telemetry (optional) & IRU RS-422 [TBC]	PCU
J3	D38999 / 24GG35PN	Power	PCU
J4	D38999 / 24GG35PA	Launch Locks	Az Cable Wrap
J5	D38999 / 24GH35PN	Survival Heaters	Az Cable Wrap
J6	D38999 / 24GH35PA	Survival Heaters	Az Cable Wrap

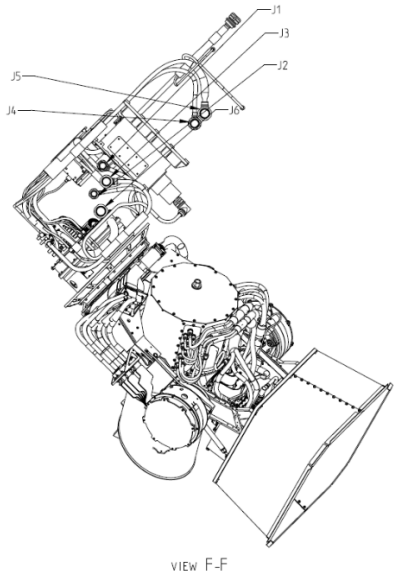

Figure 6-5: Payload Interface Connector Locations

DRAFT

6.4.2 Host-Routed Cable Information

Information for the cable harnesses that will need to be routed by the Host Spacecraft is contained in Appendix C: Host-Routed Cable Information.

6.5 Analog Telemetry Interface (Optional)

6.5.1 Active Analog Telemetry

The active analog signals originate from the secondary side of the power supplies in the FPE and the PCU and indicate the voltage of the secondary power forms generated within the units.

The payload provides at least one pin for the return of analog monitors for each electronics unit. This interface should be sampled as a differential interface to avoid chassis grounding of the analog telemetry return, thus preserving the payload's single point ground architecture.

Table 6-6: Payload Active Analog Telemetry

Count	Signal Name	Signal Type / Description	Scale Factor	Scaled Range in Volts with offsets
1	PCU_HST_P30VTLM_H	PCU P30V Power Telemetry	0.167 +/- 6%	4.0 to 6.0V
2	PCU_HST_P5VTLM_H	PCU P5V Power Telemetry	0.98 +/- 6%	4.0 to 6.0V
3	PCU_HST_P15VTLM_H	PCU P15V Power Telemetry	0.382 +/- 6%	4.0 to 6.0V
4	PCU_HST_P5P6VTLM_H	PCU P5.6V Power Telemetry	0.846 +/- 6%	4.0 to 6.0V
5	P15VDC_TLM	FPE P15V Power Telemetry	0.33+/-6%	4.0 to 6.0V
6	P5VDC_TLM	FPE P5V Power Telemetry	0.98 +/- 6%	4.0 to 6.0V
Measured telemetry voltage divided by the scale factor provides the voltage of the secondary power forms.				

DRAFT

Table 6-7: Active Analog Telemetry Signal Characteristics

Parameter	Limit
User source signal	0.0 to 10.0 Vdc
User fault voltage (not to exceed) (1)	-16.0 to +16.0 V
Current (during sampling)	<=10 µA
User source resistance	<=10 kOhm
(1) Fault propagation will occur if user applies an Active Analog voltage signal outside of this range to the interface	

6.5.2 Passive Analog Telemetry

The Host Spacecraft monitors and reports 18 passive analog payload survival temperature sensors for use when the payload is powered off.

The passive analog telemetry thermistors (survival temperature sensors) are of type S-311-P-18 per GSFC standard (PN: 311P18-07A101).

DRAFT

Table 6-8: Passive Analog Telemetry List

No	Location	Low Resolution Temperature Range		Temperature Sensor Description			Temp Resolution [K]	TSTAT* (Y/N)
		Low Temp (K)	High Temp (K)	Type	Config	Resistance @ 273K [Ω]		
1	Secondary Mirror Cover	230	340	Thermistor	2-wire	10k	1	Y
2	DEB	230	340	Thermistor	2-wire	10k	1	Y**
3	PCU	230	340	Thermistor	2-wire	10k	1	Y**
4	FPE	230	340	Thermistor	2-wire	10k	1	Y
5	Gimbal Ring	230	340	Thermistor	2-wire	10k	1	Y
6	Gimbal Yoke Encoder	230	340	Thermistor	2-wire	10k	1	Y
7	Gimbal Yoke Motor	230	340	Thermistor	2-wire	10k	1	Y
8	LMI Housing	230	340	Thermistor	2-wire	10k	1	Y
9	Relay Housing	230	340	Thermistor	2-wire	10k	1	Y
10	N/A	N/A	N/A	N/A	N/A	N/A	N/A	N/A
11	LMI FPA	230	340	Thermistor	2-wire	10k	1	Y
12	Yoke Azimuth Bearing	230	340	Thermistor	2-wire	10k	1	Y
13	HSI FPA	230	340	Thermistor	2-wire	10k	1	Y
14	Azimuth Encoder	230	340	Thermistor	2-wire	10k	1	N
15	Elevation Encoder	230	340	Thermistor	2-wire	10k	1	N
16	FPE Radiator	230	340	Thermistor	2-wire	10k	1	N
17	HSI Radiator	230	340	Thermistor	2-wire	10k	1	N
18	Aft Metering Structure	230	340	Thermistor	2-wire	10k	1	Y
19	Gimbal Base Azimuth Motor	230	340	Thermistor	2-wire	10k	1	Y

* TSTAT (Thermostat) indicates that this location is also monitored by a thermostatically controlled survival heater (see Section 6.1.6).
** If the DEB and PCU require thermostatically controlled survival heaters to meet the survival temperature ranges, these would be the responsibility of the Host Spacecraft.
Conversion of temperature to resistance can be achieved by applying a piecewise-linear fit of the temperature vs resistance curves included in GSFC standard S-311-P-18 Rev G, Table V.

DRAFT

7 PAYLOAD TO HOST THERMAL INTERFACES

7.1.1 PCU Thermal Interface

The Host Spacecraft provides all necessary thermal control for the PCU. The PCU will dissipate less than 65 W into the Host Spacecraft thermal interface hardware (i.e., heat pipes or straps mounted to PCU side walls) averaged over any 180-minute period, and less than 80 W peak as averaged over any 10-millisecond period. For analysis purposes, the payload recommends using a predicted average power dissipation value of 48 W (consistent with CDR timeframe analysis), distributed as 24 W to each PCU side wall interface.

7.1.2 DEB Thermal Interface

The Host Spacecraft provides all necessary thermal control for the DEB. The DEB will dissipate less than 6.0 W into the Host Spacecraft thermal interface hardware (i.e., to the DEB baseplate) averaged over any 180-minute period, and less than 10 W peak as averaged over any 10-millisecond period. For analysis purposes, the payload recommends using a predicted average power dissipation value of 5.4 W (consistent with CDR timeframe analysis).

7.2 Orbital Thermal Environment

The payload orbital thermal environment is assumed to be that of a typical geosynchronous (GEO) earth orbit.

Table 7-1: Payload Assumed GEO Thermal Environment

Season	Beta Angle (°)	Solar Flux (W/m^2)	Albedo (W/m^2)	IR (W/m^2)
Summer	-23.4	1280	0.29	227
Winter	23.4	1420	0.31	241

DRAFT

8 PAYLOAD TO HOST SPACECRAFT DATA INTERFACES

8.1 Host Spacecraft Data Interface

The Host Spacecraft provides the Host Spacecraft Attitude, and Ephemeris data over the SpaceWire interface to support the payload LOS disturbance rejection. The angular rate data from the IRU comes over an RS-422 interface.

8.2 Command & Data Interfaces

For the payload-to-Host Spacecraft command and data interface, the payload supports a primary SpaceWire physical connection to the Host Spacecraft. The command and data interface contains Host Spacecraft commands to the payload, periodic payload telemetry, and payload mission science data.

The command and data telemetry are specified in GLIMR_05.09.001 GLIMR Command Database and GLIMR_05.09.002 GLIMR Telemetry Database.

8.2.1 1PPS Signal Interface

The Host Spacecraft provides to the payload a One Pulse per Second (1PPS) RS-422 discrete signal for the SpaceWire timestamp synchronization.

Table 8-1: 1-PPS Signal Characteristics

Parameter	Characteristic
Signal Type	RS-422 (3.3V)
Rise Time	<= 100 ns
Fall Time	<= 100 ns
Pulse Width	10 µs ± 1 µs
Pulse Period	1.0 s ± 200 ns
Source termination resistance	51 Ohm

8.2.2 SpaceWire Interface

The Host Spacecraft to payload SpaceWire link has a signaling rate of 100 MHz +/-1%. This rate supports the full-duplex throughput of up to 72 Mbps per direction.

The payload supports logical addressing for SpaceWire communication.

For SpaceWire messages sent from the Host Spacecraft/ground to the payload, the Target Logical Address (TLA) assignments are:

- Receiver TLA = 0xE0
- Sender TLA = 0xF0

For SpaceWire messages sent from the payload to the Host Spacecraft, the TLA assignments are:

- Receiver TLA = 0xF0
- Sender TLA = 0xE0

DRAFT

These TLA addresses are programmable and can be changed if required.

The Host Spacecraft encodes and decodes all payload SpaceWire interface messages per RMAP in accordance with ECSS-E-ST-50-52C. The detailed message level protocol is described in the GLIMR_05.07.001 GLIMR Software User Manual.

Table 8-2: SpaceWire Message Types

Message Type	Direction	Frequency	Size	Throughput
Normal Telemetry	From PL	1 Hz	≤ 4096 bytes	< 4 kbps
Mission Data (HSI)	From PL	500-1000 Hz	≤ 4096 bytes	18 Mbps
Mission Data (LMI)	From PL	1000-3000 Hz	≤ 4096 bytes	10-50 Mbps
Memory Download	From PL	<= 1000 Hz	≤ 4096 bytes	4 Mbps
Payload Commands	To PL	<= 50 Hz	≤ 4096 bytes	< 4 kbps
Host Spacecraft Attitude & Ephemeris	To PL	1 Hz	≤ 4096 bytes	< 4 kbps
Memory Upload	To PL	<= 1000 Hz	≤ 4096 bytes	4 Mbps

8.2.2.1 SpaceWire Message Formats

All SpaceWire packets for commands and Host Spacecraft data from the Host Spacecraft, or telemetry to the Host Spacecraft. In the RMAP packet header the Destination Address field is used for the Message Identification (ID). Reference the GLIMR_05.07.001 GLIMR Software User Manual for further detailed documentation on the Command and Telemetry formats listed.

8.2.2.2 Host Spacecraft Data Format

The Host Spacecraft attitude and ephemeris data are sent as a 1 Hz Host Spacecraft state vector that is propagated into the gimbal base frame for input to use for processing of LOS state estimation.

The message GPS time-tag is the time at which the data is valid, not the transmission time of the packet. Each message is processed for the data time of validity as soon as it is received. The FSW performs the LOS control algorithm which computes the required gimbal angle and rates based upon the present ephemeris, attitude, and angular rate (RS-422) data received from the Host Spacecraft.

DRAFT

Table 8-3: Host Spacecraft Data Size and RMAP Message ID

Data	Byte Size	Frequency	RMAP Message ID	Command ID	Description
GPS Time Reference	16	1 Hz	1	14	Host Spacecraft GPS reference time for when the Host Spacecraft data is valid
Attitude & Ephemeris	44	1 Hz	2	12	Host Spacecraft attitude & ephemeris data used for Gimbal LOS processing

8.2.2.3 Spacecraft Attitude and Ephemeris Format

Table 8-4: Host Spacecraft Attitude and Ephemeris

Field Name	Description	Type
quatECItoECEF0	Quaternion from ECI to ECF, I Component	single
quatECItoECEF1	Quaternion from ECI to ECF, J Component	single
quatECItoECEF2	Quaternion from ECI to ECF, K Component	single
quatECItoECEF3	Quaternion from ECI to ECF, S Component	single
quatECItoORB0	Quaternion from ECI to Orbit Frame, I Component	single
quatECItoORB1	Quaternion from ECI to Orbit Frame, J Component	single
quatECItoORB2	Quaternion from ECI to Orbit Frame, K Component	single
quatECItoORB3	Quaternion from ECI to Orbit Frame, S Component	single
quatECItoBRF0	Quaternion from ECI to BRF Frame, I Component	single
quatECItoBRF1	Quaternion from ECI to BRF Frame, J Component	single
quatECItoBRF2	Quaternion from ECI to BRF Frame, K Component	single
quatECItoBRF3	Quaternion from ECI to BRF Frame, S Component	single
orbitRadius	Earth to Spacecraft Distance	

8.2.2.4 Payload Command Format

The payload supports two types of command execution, immediate commands and stored commands. Immediate commands are executed upon receipt by the payload and stored commands are executed at each commands' respective GPS time with a resolution of less than or equal to 1 second. The payload supports at least 128 immediate commands in its command execution queue and 400 scheduled commands which execute at their designated GPS time.

DRAFT

8.2.2.5 Payload Telemetry Format

Each payload telemetry dataset fits in one SpaceWire packet. Telemetry cargo includes a 20-byte telemetry header and a 4-byte footer, except for the Boot Status Packet which has no header or footer. The header contains five 32-bit words including GPS week, seconds, sub-seconds, Start sync word and Telemetry ID.

The payload FSW starts sending the health and status telemetry at 1Hz while in pre-standby state.

DRAFT

Table 8-5: Payload Telemetry Size, RMAP Message ID, and Rate

Telemetry	Byte Size	RMAP Message ID	Rate	Description
Boot Status	12	11	Once per PCU power reset	Sent by the bootstrap loader during the Payload Initialization mode. Does not contain telemetry header or footer.
Health and Status Data	1236	12	1 Hz	Contains FSW status and states and FPGA statuses, payload fault handling, and telemetry server monitoring.
LOS Scan Generation Status	32	13	Per Scan	Contains LOS Scan Generation processing status before start of each collection.
LOS Stabilization Command Generation Status	16	14	10 Hz	Contains ten time-tagged IRU data messages and the corresponding processing status of LOS Attitude Motion Compensation algorithm during Gimbal slew and scan.
LOS State Estimation Status	24	15	1 Hz	Contains Host Spacecraft Attitude/Ephemeris data and processing status of the LOS State Estimation algorithm and the LOS Ephemeris Motion Compensation algorithm during Operation mode.
LOS Pointing Drift Compensation Status	16	16	0.1 Hz	Contains the processing status of the LOS Pointing Drift Compensation algorithm during Gimbal scan.
Thermal Power Control Status	68	17	0.1 Hz	Contains time-tagged Thermal Power Control calibrated temperature measurements, gains, offsets; bearing setpoints, temperature differentials; saturation low/high flags, integral freeze flags, load, and integral commands.
Diagnostic data	20	18	As commanded during Idle or Maintenance FSW states	Contains requested FSW diagnostic data.

DRAFT

8.2.2.6 SpaceWire Data Packet Transmission

SpaceWire packets for payload data will be interleaved between payload health and status telemetry data packets and science data packets.

Payload health and status information is sampled and reported at 1 Hz. Health and status telemetry includes various status flags, fault triggers, and CRCs generated by FSW.

Image data for both the HSI and LMI will require multiple SpaceWire messages and is output from firmware. Each SpaceWire message will include a 64-byte image data header and a max of 2048 bytes of image data. The image data header will include metadata such as time tag and FPA configuration information. The detailed formats for both HSI and LMI image data messages are documented in the GLIMR Software User Manual (GLIMR_05.07.001).

8.2.3 RS-422 Interface

Table 8-6: IRU Data Specifics

Message Type	Direction	Frequency	Latency
IRU Data	To PL	>=100 Hz	<= 5 ms

8.2.4 Data Storage Requirements

The payload does not include onboard data storage functionality, and data collection is constrained to fit within the available bandwidth. While no Host Spacecraft-resident data storage is required, availability of such storage may prove advantageous from a mission flexibility perspective.

8.2.5 Data Error Correction

The payload does not provide any error correction and detection encoding on output data. Internal to the payload, the HSI focal plane data are 8b/10b encoded prior to ingestion by the FPE.

8.3 Payload Modes

The top-level modes for the payload are Off/Survival, Initialization, Operation, and Safe mode.

8.3.1 Off/Survival Mode

In Off/Survival mode the payload power feeds 1, 2, and 3 are unpowered. Pre-launch, the survival heater power is either enabled or disabled depending on expected environmental and test conditions. Post-launch, the payload survival heater power feed will be enabled, and power will be drawn if the temperatures fall below the thermostat lower setpoints. The payload will draw no operational power while in Off/Survival mode. The PCU and FPE power enables provided by the host are disabled.

DRAFT

8.3.2 Initialization Mode

When first powered-on, the payload enters Initialization mode and conducts all internal operations necessary to eventually transition to Operation (or Safe) mode.

When in Initialization mode, the payload will conduct component heating to operating temperatures.

When in Initialization mode, the command and telemetry functions of the payload will be powered up first.

When in Initialization mode, the payload will send to the Host Spacecraft health and status telemetry.

8.3.3 Safe Mode

The Safe mode is a combined payload hardware and software configuration meant to protect the payload from possible internal or external harm while making minimal use of Host Spacecraft resources (e.g., power).

When in Safe mode, the payload will limit data collection and transmission to health and status information only.

When in Safe mode, the sensor assembly will nominally be in stowed configuration.

When in Safe mode, the FPAs are disabled.

8.3.4 Operation Mode

The Operation mode covers all nominal payload operations and science observations.

This mode will have 4 states: Bakeout, Cooldown, Idle, and Collect. The Idle state is used when the payload is not actively imaging data. Memory diagnostics, daily collection plan upload, and non-volatile memory data uploads are available in this state. FPA Bakeout and Cooldown states are typically run only during the initial power up sequence of the payload to get the FPAs prepared for nominal collections. The Collect state is used for nominal payload science and calibration data capture and FPA diagnostics as selected from configuration memory. When in Operation mode, the payload will be fully functional and capable of providing all health and status and science data originating within the payload to the Host Spacecraft and ground operations team.

8.3.5 Mode Transitions

Nominal payload power off occurs from Safe mode. Transitions between operational modes are by payload state commands except for autonomous fault detection transition to Safe mode.

DRAFT

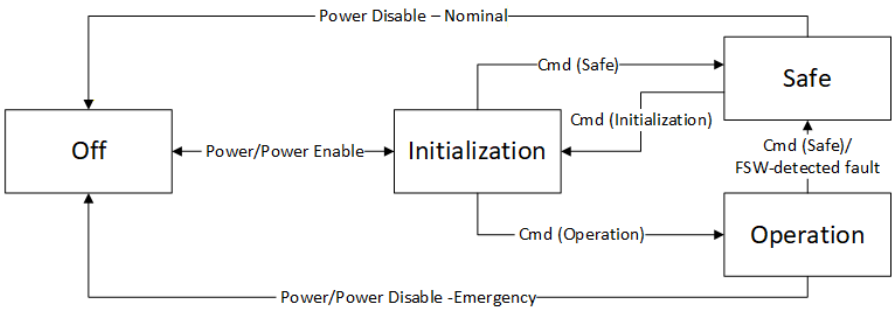

Figure 8-1: Payload Mode Transitions

8.4 Payload Internal Fault Detection and Correction

The payload implements several fault detections that are reported in telemetry or trigger autonomous action by the payload. Some of these faults require ground intervention for recovery. When this is the case, the GLIMR Mission Operations Center (GMOC) will issue the ground commands necessary for payload recovery, with coordination with NASA if required. No autonomous Host Spacecraft response is requested for these internal faults.

In general, the payload is designed to protect hardware by safely removing power to faults, that left unchecked, could damage the system. A listing of internal faults detected on-board are captured in the GLIMR_02.11.001 GLIMR Fault Handling.

8.5 Host Spacecraft Commanding

8.5.1 Payload Emergency Power Off

In the event of a Host Spacecraft emergency, the Host Spacecraft may disable the payload operational power feeds autonomously.

8.5.2 Emergency Maneuvers

If time permits, Host Spacecraft will command the payload into Safe mode prior to any Host Spacecraft unplanned (emergency) maneuvers.

DRAFT

9 PAYLOAD CONTAMINATION CONTROL

The contamination sensitive surfaces of the sensor assembly consist of the optically coated silicon carbide telescope and two aluminum aft optics modules, the HSI and LMI. Each aft optics module contains a focal plane array. The telescope has baffles for stray light rejection. The optics assembly is supported by a beryllium gimbal. Additionally, a dust cover over the telescope sunshade minimizes particulate contamination prior to use.

9.1 Payload Protection

Payload hardware is protected as much as possible by covering, bagging and purging during transport of components, storage, assembly, and test.

Materials used for covering and bagging are low outgassing, non-shedding, and possess other properties as required for the particular application (i.e., static discharge protection).

Packaging materials must be as clean, or cleaner, than the hardware being wrapped, to avoid degrading the hardware cleanliness.

9.1.1 Payload Bagging

A minimum of two layers of clean, approved bagging material is be used to completely contain the payload during transport.

Lifting yokes, penetrations and the external purge lines are taped off/sealed to maintain positive pressure within the bags.

Shipping preparations conclude with the closing of the shipping cover, with internal “hardware” purge transferred to the shipping container interface.

9.2 Payload Purge

The Host Spacecraft provides a continuous GN2 purge for the integrated payload. Specifics of purge fixturing are captured in the GLIMR IICD (D4957031-500).

Sensitive payload volumes will be continuously purged with clean, dry nitrogen to protect against particle fallout and the degrading effects of atmospheric moisture.

Purging will be continuous except for those operations that cannot be performed with the purge lines connected to the sensor assembly. For example, the purge will be continued during preparation for thermal vacuum test and will be removed at the latest possible time prior to closing the chamber.

9.2.1 Payload Purge Logbook

The Host Spacecraft maintains a purge logbook for purged hardware. Whenever the purge is connected or disconnected from payload hardware, the date and time of the activity will be recorded in the purge logbook.

Any purge interrupts longer than two hours or if the accumulated time outside of purge exceeds 4 days [TBC] approval is required from NASA Contamination Control Engineering.

DRAFT

9.2.2 Purge Line Requirements

The ends of the purge line and connectors are immediately bagged (or capped) and then tape-sealed to prevent recontamination any time a connection break occurs. Recertification of the purge line is required when the lines were not sealed to prevent recontamination.

The Host Spacecraft uses only non-shedding materials such as metal, Teflon, or polyurethane for purge gas delivery. Materials containing plasticizers, such as polyvinylchloride (i.e. Tygon), are considered unacceptable.

The Host Spacecraft uses pressure gauges and flow meters on the sensor assembly purge line.

9.2.3 Purge Gas Requirements

Throughout assembly, integration, and test, critical hardware will be kept under a constant filtered dry gas purge, with a flow rate range defined in standard cubic feet per hour. The purge gas flow rate will be low enough to not disturb or redistribute contaminants off gas impinged surfaces. It is required that assembled purge gas delivery systems (including all lines, regulators, etc.) and purge gas supply be pre-certified at the point of use to meet cleanliness requirements prior to connection to hardware.

9.2.4 Purge Gas Source

Nitrogen used for typical purge activity is derived from liquid nitrogen boil-off from a central source piped into assembly, integration, and test areas where critical payload assemblies reside (with the noted exception below).

The gas supply line includes a pressure regulator, a flow meter, and a filter holder with a 0.005 micrometer or smaller absolute filter of suitable size at point of use to meet flow requirements.

Purge Gas Source Exception: During special applications (including transportation between facilities), nitrogen used for purging may be derived from bottle sources certified to the moisture and hydrocarbon requirements of MIL-PRF-27401D Type I, Grade B, using a gas supply line (and purge panel) with the indicated filter features.

9.3 Host Integration & Test Facility

Preserving payload cleanliness should be the focus of post-delivery support activities.

Prior to flight hardware arrival at the Host Spacecraft Integrator's facility the Host Spacecraft Level Contamination Control Plan (CCP) is made available for review by the NASA Contamination Control Engineer (CCE). Adequate provisions will be made in this document and at the integrator’s facility to ensure acceptable storage and integration/test environments for the hardware.

The Host Spacecraft integration facility is made available for a pre-arrival walk-down to ensure an acceptable operating environment is provided. The facility CCP, if different from the Host Spacecraft Level CCP should also be reviewed including cleanroom operations, High-Volume Air Conditioning Interruption Contingency Plans, facility cleaning schedules, and monitoring.

DRAFT

Integration of payload hardware with the Host Spacecraft takes place in a Class 100,000 cleanroom or better (Class 10,000 if optics are exposed).

During Host Spacecraft hardware testing, when a cleanroom is not available, a Class 10,000 environment or clean zone may be established to support manufacturing or test activities. The clean zone will be verified daily to Class 10,000 (if optics are exposed), Class 100,000 (if hardware external surfaces are exposed or when hardware is bagged and purged).

Payload hardware remains bagged and purged whenever possible while in residence at the integrator facility. The NASA CCE should be present whenever the payload is being unpackaged, inspected by customer, lifted, moved, positioned or worked-on.

Frequent facility walk-downs should be scheduled by the CCE to assure adequate cleanliness levels are maintained. Inspection will be by visual and UV examination, and cleaning will be by vacuuming, CO2 jet spray, and/or solvent wiping. Additional monitoring may be performed including particle or molecular witness plate monitoring either on the payload-level or facility-level.

9.4 Host Spacecraft Cleanliness

The Host Spacecraft mating surface for the sensor assembly is maintained to cleanliness Level 400 Grade A per IEST-STD-CC1246E.

The sensor assembly exterior, non-optical surfaces are maintained to Level 400, Grade A for delivery by keeping hardware in class 10k clean rooms, covering/bagging hardware when not actively in work, and GN2 purge when applicable.

Generally, Level A is considered equivalent to an average molecular contamination thickness of 100 Angstroms (Å).

The Host Spacecraft limits the contamination impingement rate to less than or equal to 1% Particulate Contamination and 150 Angstroms for molecular deposition contamination, from post payload delivery to encapsulation in the payload fairing.

The values for post-delivery to end-of-life are TBC when contamination impingement rate values are made available, and a launch provider and Host Spacecraft are selected.

The Host Spacecraft non-metallic materials are screened using ASTM E 595 data to Total Mass Loss of up to 1% and total Collected Volatile Condensable Materials of less than 0.1%.

9.5 Launch Site Integration & Test

Prior to flight hardware arrival at the Launch Site, the Launch Vehicle, Integration/Encapsulation Facility and Launch Pad CCPs are made available for review by the NASA CCE. Adequate provisions will be made in these documents to ensure acceptable storage and integration/test, encapsulation, transportation, and final close-out environments for the hardware. The CCPs should include cleanroom operations, High-Volume Air Conditioning Interruption Contingency Plans, facility cleaning schedules, and monitoring.

DRAFT

The Launch Site Integration & Test (I&T) facility and Launch Pad are made available for a pre-arrival walk-down to ensure an acceptable operating environment is provided.

The NASA CCE should have the option to participate in any major-milestone activities.

Payload hardware remains bagged and GN2 purged whenever possible at the launch site.

Final inspection (visual and UV) and cleaning of accessible areas takes place at the launch site following bag removal. Bag removal will be at the latest possible time. Cleaning, if necessary, will be by vacuuming and solvent wiping of external surfaces.

9.6 Launch and On-Orbit Operations

Specific hardware surfaces are protected from outside contaminants during launch, separation, and deployment by the sensor assembly dust cover and by encapsulation in the PLF.

Adequate contamination protection is provided by the PLF air supply prior to launch to ensure payload-level beginning-of-life cleanliness requirements are met.

Adequate PLF vent-blocking is provided to prevent incursion of outside air during the initial moments of launch.

The launch vehicle will perform a Contamination and Collision Avoidance Maneuver to provide an adequate separation distance to prevent contaminating sensitive payload surfaces.

Host Spacecraft outgassing, while on-orbit, diminishes with time, and is expected to drop several orders of magnitude after 21 days on-orbit. Particle generation is normally not a concern while on-orbit and the only significant source is from micrometeoroid impacts.

In the event of a launch scrub, it is necessary to re-establish environmental control on the payload hardware as quickly as possible. It should be recognized that several hours may pass before PLF air and access is reestablished in the event of a launch abort. Further, exposure to particulate and molecular contamination may have occurred.

DRAFT

10 GLIMR DATA FLOW OVERVIEW

The GMOC will interface with the GLIMR SDS (GSDS) Processing Center, as shown in Figure 10-1.

The GMOC consists of the necessary electronics, equipment, software, computer-based systems, and personnel to provide complete payload operations support post-launch. The GSDS interfaces with the GMOC by providing the desired scan regions. The GMOC will monitor performance of the payload during the Host Spacecraft integration and test phase.

The GSDS provides science direction to the GLIMR mission and is responsible for all processing for converting the GLIMR Science Mission Data from Level-0 to the higher-level derived products. The GSDS is located at NASA GSFC in Greenbelt, MD and is managed by the NASA Headquarters Earth Sciences Division. The GMOC interacts with the GSDS during pre-launch, commissioning, and routine operations phases. The GMOC provides the GSDS with GLIMR payload telemetry, Host Spacecraft telemetry, and support products. The GSDS will ingest science data files, apply calibration and science algorithms, process the science data, provide science software development and algorithm integration, act as the science data interface to the science team, and deliver all science data products to the Ocean Biology Distributed Active Archive Center.

The Level-0 (L0) processing of telemetry is defined as the minimum level of processing required to develop a data set of cleaned and merged telemetry. The processing produces a data set which is suitable for delivery to users of the data who are usually only concerned with the data content, and not the means of Host Spacecraft-to-earth transmission. Any duplicates that occur because data was sent to the ground multiple times or because the data was received at multiple ground stations, will be removed by L0 processing. Duplicate packets are defined as packets with the same Host Spacecraft time, Message ID, packet sequence count, and frame quality flags.

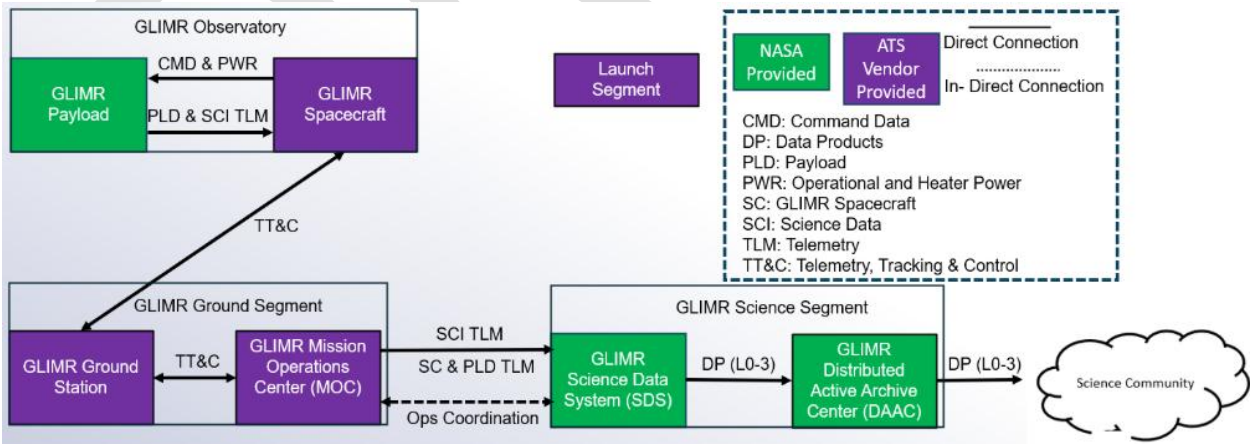

Figure 10-1: GLIMR Data Flow

10.1 GMOC Coordinate Systems and Units

Information from the GMOC is expected to use Earth-Centered Inertial J2000 coordinates for observatory position, attitude, and velocity information for all predictive and definitive products.

Unless otherwise noted, products use the Metric System of Measurements in accordance with NASA Policy Directive NPD 7120.4E.

10.2 GMOC Time Formats

The GMOC is expected to transmit all Host Spacecraft and payload telemetry products with timestamps referenced to the Host Spacecraft bus clock and expressed in Coordinated Universal Time (UTC).

GMOC predictive products timestamps refer to the Ground System clock and are expressed in UTC.

The default time format is an ISO-8601 compliant string: YYYY-MM-DDTHH:MM:SS.sss. “T” is an explicit separator.

10.3 GMOC to GSDS Verbal Interfaces

The GMOC to GSDS interfaces are normally computer-controlled. However, to ensure smooth operations and coordination between the GMOC and the GSDS, a verbal interface is necessary. This interface will consist of routine meetings, ad-hoc meetings, and other communications. The timing and format of these meetings (TBD) will be determined before I&T.

10.4 GSDS to GMOC Command Interface Overview

The GSDS will send scan requests to the GMOC via a secure interface. The GMOC will convert these requests into command packets and combine them with the packets needed to configure and control the payload. The GMOC will store these commands at their facility before uploading them to the Host Spacecraft. The Host Spacecraft will store these commands in a stored command buffer and send them to the payload daily to be executed.

10.5 GMOC to GSDS Telemetry Interface Overview

The GMOC will provide access to payload telemetry via a secure TCP/IP connection or FTP file transfer. The GSDS may establish a TCP/IP connection with the GMOC to retrieve the telemetry. The details of this connection will be confirmed when the GMOC is determined. The GMOC will provide access to science data telemetry in L0 format, as well as the payload telemetry, select Host Spacecraft data, and select Host Spacecraft housekeeping data. The Host Spacecraft data will include attitude, ephemeris, and IRU data.

10.6 Host Spacecraft Commands and Telemetry in Support of GLIMR

There are times when the commands in support of the GLIMR mission are intended directly for the Host Spacecraft rather than the payload. There are also items monitored by the Host Spacecraft independently from the data provided over SpaceWire from the payload. These items have been listed on the table below.

DRAFT

Table 10-1: Host Spacecraft Commands and Telemetry in Support of GLIMR

Message	Type
Command to supply or remove power to survival heaters/thermostats	Command
Command to supply or remove PCU power	Command
Command to supply or remove FPE power	Command
Command to assert or remove PCU power enable.	Command
Command to assert or remove FPE power enable.	Command
Payload Operational Current Measurement for each feed.	Telemetry
Payload Operational Voltage Measurement for each feed.	Telemetry
Payload Interface Temperature Monitor (Sensor assembly, PCU, DEB)	Telemetry
Launch Lock Monitoring	Telemetry
Measurements from 18 payload survival temperature sensors	Telemetry
Power Enable status for the PCU and FPE	Telemetry
Host Spacecraft clock and clock drift data	Telemetry
Time-stamped report of payload commands sent by the Host Spacecraft	Telemetry
SpaceWire Communication Status	Telemetry

10.7 GSDS Support Data Products Overview

The Support Data Products (SDPs) consist of a series of files that are used by MOC and Host Spacecraft personnel for planning, determining status, and supporting the operations of the Host Spacecraft. These products will be available to the GSDS. A list of the available files will be accessible via a web browser, and the files will be transferred between the systems via FTP. The SDPs will be described in detail in the GMOC Data Products Document (TBD). Details will be determined when the Host Spacecraft GMOC and Host Spacecraft are determined. A preliminary list includes:

- Host Spacecraft Anomaly Report
- Payload Anomaly Report
- Host Spacecraft Planned Daily Timeline
- Data Loss Log
- Momentum Dump Report
- Weekly Status Report

DRAFT

11 APPENDICES

11.1 Appendix A: Acronyms

Acronym	Definition
1PPS	One Pulse Per Second
APC	Advanced Payload Controller
CBE	Current Best Estimate
CCE	Contamination Control Engineer
CCP	Contamination Control Plan
CDR	Critical Design Review
CLVPS	Combined Low Voltage Power Supply
C-Lite	Controller-Lite
CRC	Cyclic Redundancy Check
DC	Direct Current
DEB	Decoder Electronics Box
DFPIE	Digital Focal Plane Interface Electronics
EAR	Export Administration Regulations
EMI	Electromagnetic Interference
ESSP	Earth System Science Pathfinder
EVI	Earth Venture Instrument
FPA	Focal Plane Array
FPGA	Field Programmable Gate Array
FSW	Flight Software
FTP	File Transfer Protocol
GEO	Geosynchronous Earth Orbit
GLIMR	Geosynchronous Littoral Imaging and Monitoring Radiometer
GoM	Gulf of Mexico
GPS	Global Positioning System
GSFC	Goddard Space Flight Center
HDM	Heater Drive Module
HSI	Hyperspectral Imager
I&T	Integration & Test
IDD	Interface Definition Document
ID	Identification
IICD	Instrument Installation Control Drawing
INR	Image Navigation & Registration
IR	Infrared
IRU	Inertial Reference Unit
L0	Level-0
LOS	Line of Sight
LMI	Landmark Imager
LRM	Launch Release Mechanism

DRAFT

Acronym	Definition
LSG	LOS Scan Generation
MEV	Maximum Expected Value
MLI	Multi-layer Insulation
MOI	Moments of Inertia
NASA	National Aeronautics and Space Administration
NTE	Not To Exceed
PCU	Payload Control Unit
PL	Payload
PLF	Payload Fairing
RMAP	Remote Memory Access Protocol
SDP	Support Data Products
SDS	Science Data Segment
SMA	Shape Memory Alloy
SPW	SpaceWire
TBC	To Be Confirmed
TBD	To Be Determined
TCP/IP	Transmission Control Protocol/Internet Protocol
TLA	Target Logical Address
TSTAT	Thermostat
UNH	University of New Hampshire
UV	Ultraviolet
UTC	Coordinated Universal Time
XMC	Crossover Mechanism Controller

DRAFT

11.2 Appendix B: Host Interface Connector Pinouts

Payload Interface Connector J1

Pin No.	Payload Wire Gage	Signal Type	Signal Name	Nom. Voltage / IO Standard	Description	Connection
J1 - 30	26 AWG	1PPS	P_HOST_PCU_1PPS_H	RS-422	One Pulse Per Second (Positive)	RS-422 Tx (Positive)
J1 - 31	26 AWG	1PPS	P_HOST_PCU_1PPS_L	RS-422	One Pulse Per Second (Negative)	RS-422 Tx (Negative)
J1 - 24	26 AWG	1PPS	P_HOST_PCU_1PPS_S	RS-422	One Pulse Per Second (Shield)	Connect to Tx GND. Connected to PCU Rx GND via series AC coupling capacitor
J1 - 20	26 AWG	SpaceWire	P_HOST_PCU_SPW_DATA_H	SpW	Primary Host SpW Data (Positive)	Primary SpW Data Tx (Positive)
J1 - 21	26 AWG	SpaceWire	P_HOST_PCU_SPW_DATA_L	SpW	Primary Host SpW Data (Negative)	Primary SpW Data Tx (Negative)
J1 - 13	26 AWG	SpaceWire	P_HOST_PCU_SPW_DATA_S	SpW	Primary Host SpW Data (Shield)	Primary Connect to Tx GND. Connected to PCU Rx GND via series AC coupling capacitor
J1 - 8	26 AWG	SpaceWire	P_HOST_PCU_SPW_STRB_H	SpW	Primary Host SpW Strobe (Positive)	Primary SpW Strobe Tx (Positive)
J1 - 9	26 AWG	SpaceWire	P_HOST_PCU_SPW_STRB_L	SpW	Primary Host SpW Strobe (Negative)	Primary SpW Strobe Tx (Negative)
J1 - 15	26 AWG	SpaceWire	P_HOST_PCU_SPW_STRB_S	SpW	Primary Host SpW Strobe (Shield)	Primary Connect to Tx GND. Connected to PCU Rx GND via series AC coupling capacitor
J1 - 35	26 AWG	SpaceWire	R_HOST_PCU_SPW_DATA_H	SpW	Redundant Host SpW Data (Positive) [Unused]	Redundant SpW Data Tx (Positive)
J1 - 36	26 AWG	SpaceWire	R_HOST_PCU_SPW_DATA_L	SpW	Redundant Host SpW Data (Negative) [Unused]	Redundant SpW Data Tx (Negative)
J1 - 43	26 AWG	SpaceWire	R_HOST_PCU_SPW_DATA_S	SpW	Redundant Host SpW Data (Shield) [Unused]	Redundant Connect to Tx GND. Connected to PCU Rx GND via series AC coupling capacitor
J1 - 51	26 AWG	SpaceWire	R_HOST_PCU_SPW_STRB_H	SpW	Redundant Host SpW Strobe (Positive) [Unused]	Redundant SpW Strobe Tx (Positive)
J1 - 52	26 AWG	SpaceWire	R_HOST_PCU_SPW_STRB_L	SpW	Redundant Host SpW Strobe (Negative) [Unused]	Redundant SpW Strobe Tx (Negative)
J1 - 45	26 AWG	SpaceWire	R_HOST_PCU_SPW_STRB_S	SpW	Redundant Host SpW Strobe (Shield) [Unused]	Redundant Connect to Tx GND. Connected to PCU Rx GND via series AC coupling capacitor
J1 - 17	26 AWG	SpaceWire	PCU_P_HOST_SPW_DATA_H	SpW	Primary PCU SpW Data (Positive)	Primary SpW Data Rx (Positive)
J1 - 18	26 AWG	SpaceWire	PCU_P_HOST_SPW_DATA_L	SpW	Primary PCU SpW Data (Negative)	Primary SpW Data Rx (Negative)
J1 - 10	26 AWG	SpaceWire	PCU_P_HOST_SPW_DATA_S	SpW	Primary PCU SpW Data (Shield)	Requires series AC coupling capacitor prior to connection to Host Rx GND
J1 - 1	26 AWG	SpaceWire	PCU_P_HOST_SPW_STRB_H	SpW	Primary PCU SpW Strobe (Positive)	Primary SpW Strobe Rx (Positive)
J1 - 2	26 AWG	SpaceWire	PCU_P_HOST_SPW_STRB_L	SpW	Primary PCU SpW Strobe (Negative)	Primary SpW Strobe Rx (Negative)

DRAFT

Pin No.	Payload Wire Gage	Signal Type	Signal Name	Nom. Voltage / IO Standard	Description	Connection
J1 - 5	26 AWG	SpaceWire	PCU_P_HOST_SPW_STRB_S	SpW	Primary PCU SpW Strobe (Shield)	Requires series AC coupling capacitor prior to connection to Host Rx GND
J1 - 32	26 AWG	SpaceWire	PCU_R_HOST_SPW_DATA_H	SpW	Redundant PCU SpW Data (Positive) [Unused]	Redundant SpW Data Rx (Positive)
J1 - 33	26 AWG	SpaceWire	PCU_R_HOST_SPW_DATA_L	SpW	Redundant PCU SpW Data (Negative) [Unused]	Redundant SpW Data Rx (Negative)
J1 - 40	26 AWG	SpaceWire	PCU_R_HOST_SPW_DATA_S	SpW	Redundant PCU SpW Data (Shield) [Unused]	Requires series AC coupling capacitor prior to connection to Host Rx GND
J1 - 53	26 AWG	SpaceWire	PCU_R_HOST_SPW_STRB_H	SpW	Redundant PCU SpW Strobe (Positive) [Unused]	Redundant SpW Strobe Rx (Positive)
J1 - 54	26 AWG	SpaceWire	PCU_R_HOST_SPW_STRB_L	SpW	Redundant PCU SpW Strobe (Negative) [Unused]	Redundant SpW Strobe Rx (Negative)
J1 - 48	26 AWG	SpaceWire	PCU_R_HOST_SPW_STRB_S	SpW	Redundant PCU SpW Strobe (Shield) [Unused]	Requires series AC coupling capacitor prior to connection to Host Rx GND

DRAFT

Payload Interface Connector J2 (TBC)

Pin No.	Payload Wire Gage	Signal Type	Signal Name	Nom. Voltage / IO Standard	Description	Connection
J2 - 19	26 AWG	Analog Telemetry	PCU_HST_P15VTLM_H	4.0V to 6.0V	PCU +15V Power Telemetry (Optional)	Requires a differential measurement to avoid connecting chassis ground at the ATLM return
J2 - 1	26 AWG	Analog Telemetry	PCU_HST_P30VTLM_H	4.0V to 6.0V	PCU +30V Power Telemetry (Optional)	Requires a differential measurement to avoid connecting chassis ground at the ATLM return
J2 - 18	26 AWG	Analog Telemetry	PCU_HST_P5P6VTLM_H	4.0V to 6.0V	PCU +5.6V Power Telemetry (Optional)	Requires a differential measurement to avoid connecting chassis ground at the ATLM return
J2 - 30	26 AWG	Analog Telemetry	PCU_HST_P5VTLM_H	4.0V to 6.0V	PCU +5.0V Power Telemetry (Optional)	Requires a differential measurement to avoid connecting chassis ground at the ATLM return
J2 - 37	26 AWG	Analog Telemetry	PCU_HST_TLM_L	4.0V to 6.0V	PCU Power Telemetry Return (Optional)	Requires a differential measurement to avoid connecting chassis ground at the ATLM return
J2 - 9	26 AWG	Analog Telemetry	PCU_HST_TEMP_H	n/a	PCU Temperature Sensor (Positive) (Optional)	Host Temp Sensor Meas (Positive) of PCU TS (2KΩ Raytheon PN R0014583-1)
J2 - 10	26 AWG	Analog Telemetry	PCU_HST_TEMP_L	n/a	PCU Temperature Sensor (Negative) (Optional)	Host Temp Sensor Meas (Negative) of PCU TS (2KΩ Raytheon PN R0014583-1)
J2 - 5	26 AWG	Analog Telemetry	FPE_HST_P15VDC_TLM	4.0V to 6.0V	FPE +15V Power Telemetry (Optional)	Requires a differential measurement to avoid connecting chassis ground at the ATLM return
J2 - 14	26 AWG	Analog Telemetry	FPE_HST_P5VDC_TLM	4.0V to 6.0V	FPE +5.0V Power Telemetry (Optional)	Requires a differential measurement to avoid connecting chassis ground at the ATLM return
J2 - 28	26 AWG	Analog Telemetry	FPE_HST_P5VDC_TLM_RTN	4.0V to 6.0V	FPE +5.0V Power Telemetry Return (Optional)	Requires a differential measurement to avoid connecting chassis ground at the ATLM return
J2 - 21	26 AWG	Analog Telemetry	FPE_HST_SEC_RTN	4.0V to 6.0V	FPE +15V Power Telemetry Return (Optional)	Requires a differential measurement to avoid connecting chassis ground at the ATLM return
J2 - 12	26 AWG	Analog Telemetry	FPE_HST_5V_TS_H	n/a	FPE +5.0V Temperature Sensor (Positive) (Optional)	Host Temp Sensor Meas (Positive) of FPE 5V TS (2KΩ, Raytheon PN R10004728-0001)
J2 - 26	26 AWG	Analog Telemetry	FPE_HST_5V_TS_L	n/a	FPE +5.0V Temperature Sensor (Negative) (Optional)	Host Temp Sensor Meas (Negative) of FPE 5V TS (2KΩ, Raytheon PN R10004728-0001)
J2 - 7	26 AWG	Analog Telemetry	FPE_HST_BIAS_TS_H	n/a	FPE Bias Temperature Sensor (Positive) (Optional)	Host Temp Sensor Meas (Positive) of FPE Bias TS (2KΩ, Raytheon PN R10004728-0001)
J2 - 23	26 AWG	Analog Telemetry	FPE_HST_BIAS_TS_L	n/a	FPE Bias Temperature Sensor (Negative) (Optional)	Host Temp Sensor Meas (Negative) of FPE Bias TS (2KΩ, Raytheon PN R10004728-0001)
TBD	TBD	RS-422	TBD	RS-422	IRU RS-422 Data (Positive)	RS-422 Rx (Positive)
TBD	TBD	RS-422	TBD	RS-422	IRU RS-422 Data (Negative)	RS-422 Rx (Negative)

DRAFT

Payload Interface Connector J3

Pin No.	Payload Wire Gage	Signal Type	Signal Name	Nom. Voltage / IO Standard	Description	Connection
J3 - 76	26 AWG	FPE Power Enable	HST_FPE_EN_H	30V to 34V	FPE Power Enable (Positive)	Host Power Enable of FPE Power (Positive)
J3 - 74	26 AWG	FPE Power Enable	HST_FPE_EN_L	30V to 34V	FPE Power Enable (Negative)	Host Power Enable of FPE Power (Negative)
J3 - 69	26 AWG	PCU Power Enable	P_HST_P_PCU_PWRENB_H	30V to 34V	PCU Power Enable (Positive)	Host Power Enable of PCU Power (Positive)
J3 - 71	26 AWG	PCU Power Enable	P_HST_P_PCU_PWRENB_L	30V to 34V	PCU Power Enable (Negative)	Host Power Enable of PCU Power (Negative)
J3 - 13	26 AWG	FPE Power	HST_FPE_PWR	30V to 34V	FPE Power (Positive)	Fused bus power feed 1 Maximum steady state current of 5A (0.625A per pin)
J3 - 11	26 AWG	FPE Power	HST_FPE_PWR	30V to 34V	FPE Power (Positive)	Fused bus power feed 1 Maximum steady state current of 5A (0.625A per pin)
J3 - 10	26 AWG	FPE Power	HST_FPE_PWR	30V to 34V	FPE Power (Positive)	Fused bus power feed 1 Maximum steady state current of 5A (0.625A per pin)
J3 - 37	26 AWG	FPE Power	HST_FPE_PWR	30V to 34V	FPE Power (Positive)	Fused bus power feed 1 Maximum steady state current f 5A (0.625A per pin)
J3 - 36	26 AWG	FPE Power	HST_FPE_PWR	30V to 34V	FPE Power (Positive)	Fused bus power feed 1 Maximum steady state current of 5A (0.625A per pin)
J3 - 39	26 AWG	FPE Power	HST_FPE_PWR	30V to 34V	FPE Power (Positive)	Fused bus power feed 1 Maximum steady state current of 5A (0.625A per pin)
J3 - 12	26 AWG	FPE Power	HST_FPE_PWR	30V to 34V	FPE Power (Positive)	Fused bus power feed 1 Maximum steady state current of 5A (0.625A per pin)
J3 - 38	26 AWG	FPE Power	HST_FPE_PWR	30V to 34V	FPE Power (Positive)	Fused bus power feed 1 Maximum steady state current of 5A (0.625A per pin)
J3 - 18	26 AWG	FPE Power	HST_FPE_PWR_RTN	30V to 34V	FPE Power (Negative)	Fused bus power feed 1 Maximum steady state current of 5A (0.625A per pin)
J3 - 43	26 AWG	FPE Power	HST_FPE_PWR_RTN	30V to 34V	FPE Power (Negative)	Fused bus power feed 1 Maximum steady state current of 5A (0.625A per pin)
J3 - 17	26 AWG	FPE Power	HST_FPE_PWR_RTN	30V to 34V	FPE Power (Negative)	Fused bus power feed 1 Maximum steady state current of 5A (0.625A per pin)
J3 - 42	26 AWG	FPE Power	HST_FPE_PWR_RTN	30V to 34V	FPE Power (Negative)	Fused bus power feed 1 Maximum steady state current of 5A (0.625A per pin)
J3 - 41	26 AWG	FPE Power	HST_FPE_PWR_RTN	30V to 34V	FPE Power (Negative)	Fused bus power feed 1 Maximum steady state current of 5A (0.625A per pin)
J3 - 19	26 AWG	FPE Power	HST_FPE_PWR_RTN	30V to 34V	FPE Power (Negative)	Fused bus power feed 1 Maximum steady state current of 5A (0.625A per pin)
J3 - 44	26 AWG	FPE Power	HST_FPE_PWR_RTN	30V to 34V	FPE Power (Negative)	Fused bus power feed 1 Maximum steady state current of 5A (0.625A per pin)

DRAFT

Pin No.	Payload Wire Gage	Signal Type	Signal Name	Nom. Voltage / IO Standard	Description	Connection
J3 - 16	26 AWG	FPE Power	HST_FPE_PWR_RTN	30V to 34V	FPE Power (Negative)	Fused bus power feed 1 Maximum steady state current of 5A (0.625A per pin)
J3 - 30	22 AWG	PCU Power	P_HST_P_PCU_P30VDC_H	30V to 34V	PCU Power (Positive)	Fused bus power feed 2. Maximum steady state current 6.8A (1.7A per pin)
J3 - 31	22 AWG	PCU Power	P_HST_P_PCU_P30VDC_H	30V to 34V	PCU Power (Positive)	Fused bus power feed 2. Maximum steady state current 6.8A (1.7A per pin)
J3 - 2	22 AWG	PCU Power	P_HST_P_PCU_P30VDC_H	30V to 34V	PCU Power (Positive)	Fused bus power feed 2. Maximum steady state current 6.8A (1.7A per pin)
J3 - 3	22 AWG	PCU Power	P_HST_P_PCU_P30VDC_H	30V to 34V	PCU Power (Positive)	Fused bus power feed 2. Maximum steady state current 6.8A (1.7A per pin)
J3 - 49	22 AWG	PCU Power	P_HST_P_PCU_P30VDC_L	30V to 34V	PCU Power (Negative)	Fused bus power feed 2. Maximum steady state current 6.8A (1.7A per pin)
J3 - 26	22 AWG	PCU Power	P_HST_P_PCU_P30VDC_L	30V to 34V	PCU Power (Negative)	Fused bus power feed 2. Maximum steady state current 6.8A (1.7A per pin)
J3 - 50	22 AWG	PCU Power	P_HST_P_PCU_P30VDC_L	30V to 34V	PCU Power (Negative)	Fused bus power feed 2. Maximum steady state current 6.8A (1.7A per pin)
J3 - 27	22 AWG	PCU Power	P_HST_P_PCU_P30VDC_L	30V to 34V	PCU Power (Negative)	Fused bus power feed 2. Maximum steady state current 6.8A (1.7A per pin)
J3 - 5	22 AWG	Operational Heater	P_HST_P_PCU_P30VDCHTR_H	30V to 34V	PCU Operational Heaters Power (Positive)	Fused bus power feed 3. Maximum steady state current 7.5A (2.5A per pin)
J3 - 6	22 AWG	Operational Heater	P_HST_P_PCU_P30VDCHTR_H	30V to 34V	PCU Operational Heaters Power (Positive)	Fused bus power feed 3. Maximum steady state current 7.5A (2.5A per pin)
J3 - 33	22 AWG	Operational Heater	P_HST_P_PCU_P30VDCHTR_H	30V to 34V	PCU Operational Heaters Power (Positive)	Fused bus power feed 3. Maximum steady state current 7.5A (2.5A per pin)
J3 - 24	22 AWG	Operational Heater	P_HST_P_PCU_P30VDCHTR_L	30V to 34V	PCU Operational Heaters Power (Negative)	Fused bus power feed 3. Maximum steady state current 7.5A (2.5A per pin)
J3 - 23	22 AWG	Operational Heater	P_HST_P_PCU_P30VDCHTR_L	30V to 34V	PCU Operational Heaters Power (Negative)	Fused bus power feed 3. Maximum steady state current 7.5A (2.5A per pin)
J3 - 47	22 AWG	Operational Heater	P_HST_P_PCU_P30VDCHTR_L	30V to 34V	PCU Operational Heaters Power (Negative)	Fused bus power feed 3. Maximum steady state current 7.5A (2.5A per pin)

DRAFT

Payload Interface Connector J4

Pin No.	Payload Wire Gage	Signal Type	Signal Name	Nom. Voltage / IO Standard	Description	Connection
J4 - 2	26 AWG	Launch Lock	HST_PRI_AZ_LL_H	18V to 39V	Primary Azimuth Launch Lock (Positive)	Host Primary Azimuth Launch Lock. Nominal 4A current (1A per pin)
J4 - 3	26 AWG	Launch Lock	HST_PRI_AZ_LL_H	18V to 39V	Primary Azimuth Launch Lock (Positive)	Host Primary Azimuth Launch Lock. Nominal 4A current (1A per pin)
J4 - 30	26 AWG	Launch Lock	HST_PRI_AZ_LL_H	18V to 39V	Primary Azimuth Launch Lock (Positive)	Host Primary Azimuth Launch Lock. Nominal 4A current (1A per pin)
J4 - 31	26 AWG	Launch Lock	HST_PRI_AZ_LL_H	18V to 39V	Primary Azimuth Launch Lock (Positive)	Host Primary Azimuth Launch Lock. Nominal 4A current (1A per pin)
J4 - 26	26 AWG	Launch Lock	HST_PRI_AZ_LL_L	18V to 39V	Primary Azimuth Launch Lock (Negative)	Host Primary Azimuth Launch Lock. Nominal 4A current (1A per pin)
J4 - 27	26 AWG	Launch Lock	HST_PRI_AZ_LL_L	18V to 39V	Primary Azimuth Launch Lock (Negative)	Host Primary Azimuth Launch Lock. Nominal 4A current (1A per pin)
J4 - 49	26 AWG	Launch Lock	HST_PRI_AZ_LL_L	18V to 39V	Primary Azimuth Launch Lock (Negative)	Host Primary Azimuth Launch Lock. Nominal 4A current (1A per pin)
J4 - 50	26 AWG	Launch Lock	HST_PRI_AZ_LL_L	18V to 39V	Primary Azimuth Launch Lock (Negative)	Host Primary Azimuth Launch Lock. Nominal 4A current (1A per pin)
J4 - 6	26 AWG	Launch Lock	HST_PRI_EL_LL_H	18V to 39V	Primary Elevation Launch Lock (Positive)	Host Primary Elevation Launch Lock. Nominal 4A current (1A per pin)
J4 - 7	26 AWG	Launch Lock	HST_PRI_EL_LL_H	18V to 39V	Primary Elevation Launch Lock (Positive)	Host Primary Elevation Launch Lock. Nominal 4A current (1A per pin)
J4 - 33	26 AWG	Launch Lock	HST_PRI_EL_LL_H	18V to 39V	Primary Elevation Launch Lock (Positive)	Host Primary Elevation Launch Lock. Nominal 4A current (1A per pin)
J4 - 34	26 AWG	Launch Lock	HST_PRI_EL_LL_H	18V to 39V	Primary Elevation Launch Lock (Positive)	Host Primary Elevation Launch Lock. Nominal 4A current (1A per pin)
J4 - 22	26 AWG	Launch Lock	HST_PRI_EL_LL_L	18V to 39V	Primary Elevation Launch Lock (Negative)	Host Primary Elevation Launch Lock. Nominal 4A current (1A per pin)
J4 - 23	26 AWG	Launch Lock	HST_PRI_EL_LL_L	18V to 39V	Primary Elevation Launch Lock (Negative)	Host Primary Elevation Launch Lock. Nominal 4A current (1A per pin)
J4 - 46	26 AWG	Launch Lock	HST_PRI_EL_LL_L	18V to 39V	Primary Elevation Launch Lock (Negative)	Host Primary Elevation Launch Lock. Nominal 4A current (1A per pin)
J4 - 47	26 AWG	Launch Lock	HST_PRI_EL_LL_L	18V to 39V	Primary Elevation Launch Lock (Negative)	Host Primary Elevation Launch Lock. Nominal 4A current (1A per pin)
J4 - 9	26 AWG	Launch Lock	HST_RED_AZ_LL_H	18V to 39V	Redundant Azimuth Launch Lock (Positive)	Host Redundant Azimuth Launch Lock. Nominal 4A current (1A per pin)
J4 - 10	26 AWG	Launch Lock	HST_RED_AZ_LL_H	18V to 39V	Redundant Azimuth Launch Lock (Positive)	Host Redundant Azimuth Launch Lock. Nominal 4A current (1A per pin)
J4 - 36	26 AWG	Launch Lock	HST_RED_AZ_LL_H	18V to 39V	Redundant Azimuth Launch Lock (Positive)	Host Redundant Azimuth Launch Lock. Nominal 4A current (1A per pin)

DRAFT

Pin No.	Payload Wire Gage	Signal Type	Signal Name	Nom. Voltage / IO Standard	Description	Connection
J4 - 57	26 AWG	Launch Lock	HST_RED_AZ_LL_H	18V to 39V	Redundant Azimuth Launch Lock (Positive)	Host Redundant Azimuth Launch Lock. Nominal 4A current (1A per pin)
J4 - 19	26 AWG	Launch Lock	HST_RED_AZ_LL_L	18V to 39V	Redundant Azimuth Launch Lock (Negative)	Host Redundant Azimuth Launch Lock. Nominal 4A current (1A per pin)
J4 - 20	26 AWG	Launch Lock	HST_RED_AZ_LL_L	18V to 39V	Redundant Azimuth Launch Lock (Negative)	Host Redundant Azimuth Launch Lock. Nominal 4A current (1A per pin)
J4 - 44	26 AWG	Launch Lock	HST_RED_AZ_LL_L	18V to 39V	Redundant Azimuth Launch Lock (Negative)	Host Redundant Azimuth Launch Lock. Nominal 4A current (1A per pin)
J4 - 62	26 AWG	Launch Lock	HST_RED_AZ_LL_L	18V to 39V	Redundant Azimuth Launch Lock (Negative)	Host Redundant Azimuth Launch Lock. Nominal 4A current (1A per pin)
J4 - 12	26 AWG	Launch Lock	HST_RED_EL_LL_H	18V to 39V	Redundant Elevation Launch Lock (Positive)	Host Redundant Elevation Launch Lock. Nominal 4A current (1A per pin)
J4 - 13	26 AWG	Launch Lock	HST_RED_EL_LL_H	18V to 39V	Redundant Elevation Launch Lock (Positive)	Host Redundant Elevation Launch Lock. Nominal 4A current (1A per pin)
J4 - 38	26 AWG	Launch Lock	HST_RED_EL_LL_H	18V to 39V	Redundant Elevation Launch Lock (Positive)	Host Redundant Elevation Launch Lock. Nominal 4A current (1A per pin)
J4 - 39	26 AWG	Launch Lock	HST_RED_EL_LL_H	18V to 39V	Redundant Elevation Launch Lock (Positive)	Host Redundant Elevation Launch Lock. Nominal 4A current (1A per pin)
J4 - 16	26 AWG	Launch Lock	HST_RED_EL_LL_L	18V to 39V	Redundant Elevation Launch Lock (Negative)	Host Redundant Elevation Launch Lock. Nominal 4A current (1A per pin)
J4 - 17	26 AWG	Launch Lock	HST_RED_EL_LL_L	18V to 39V	Redundant Elevation Launch Lock (Negative)	Host Redundant Elevation Launch Lock. Nominal 4A current (1A per pin)
J4 - 41	26 AWG	Launch Lock	HST_RED_EL_LL_L	18V to 39V	Redundant Elevation Launch Lock (Negative)	Host Redundant Elevation Launch Lock. Nominal 4A current (1A per pin)
J4 - 42	26 AWG	Launch Lock	HST_RED_EL_LL_L	18V to 39V	Redundant Elevation Launch Lock (Negative)	Host Redundant Elevation Launch Lock. Nominal 4A current (1A per pin)

DRAFT

Payload Interface Connector J5

Pin No.	Payload Wire Gage	Signal Type	Signal Name	Nom. Voltage / IO Standard	Description	Connection
J5 - 7	26 AWG	Survival Temp Sensor	HST_BS02_H	n/a	Bus Temperature Sensor 02 (Positive)	Host Temp Sensor Meas (Positive) of BS02 (10KΩ, PN 311P18-07A101)
J5 - 14	26 AWG	Survival Temp Sensor	HST_BS02_L	n/a	Bus Temperature Sensor 02 (Negative)	Host Temp Sensor Meas (Negative) of BS02 (10KΩ, PN 311P18-07A101)
J5 - 93	26 AWG	Survival Temp Sensor	HST_BS03_H	n/a	Bus Temperature Sensor 03 (Positive)	Host Temp Sensor Meas (Positive) of BS03 (10KΩ, PN 311P18-07A101)
J5 - 84	26 AWG	Survival Temp Sensor	HST_BS03_L	n/a	Bus Temperature Sensor 03 (Negative)	Host Temp Sensor Meas (Negative) of BS03 (10KΩ, PN 311P18-07A101)
J5 - 76	26 AWG	Survival Temp Sensor	HST_BS06_H	n/a	Bus Temperature Sensor 06 (Positive)	Host Temp Sensor Meas (Positive) of BS06 (10KΩ, PN 311P18-07A101)
J5 - 65	26 AWG	Survival Temp Sensor	HST_BS06_L	n/a	Bus Temperature Sensor 06 (Negative)	Host Temp Sensor Meas (Negative) of BS06 (10KΩ, PN 311P18-07A101)
J5 - 34	26 AWG	Survival Temp Sensor	HST_BS07_H	n/a	Bus Temperature Sensor 07 (Positive)	Host Temp Sensor Meas (Positive) of BS07 (10KΩ, PN 311P18-07A101)
J5 - 44	26 AWG	Survival Temp Sensor	HST_BS07_L	n/a	Bus Temperature Sensor 07 (Negative)	Host Temp Sensor Meas (Negative) of BS07 (10KΩ, PN 311P18-07A101)
J5 - 24	26 AWG	Survival Temp Sensor	HST_BS12_H	n/a	Bus Temperature Sensor 12 (Positive)	Host Temp Sensor Meas (Positive) of BS12 (10KΩ, PN 311P18-07A101)
J5 - 33	26 AWG	Survival Temp Sensor	HST_BS12_L	n/a	Bus Temperature Sensor 12 (Negative)	Host Temp Sensor Meas (Negative) of BS12 (10KΩ, PN 311P18-07A101)
J5 - 15	26 AWG	Survival Temp Sensor	HST_BS14_H	n/a	Bus Temperature Sensor 14 (Positive)	Host Temp Sensor Meas (Positive) of BS14 (10KΩ, PN 311P18-07A101)
J5 - 23	26 AWG	Survival Temp Sensor	HST_BS14_L	n/a	Bus Temperature Sensor 14 (Negative)	Host Temp Sensor Meas (Negative) of BS14 (10KΩ, PN 311P18-07A101)
J5 - 85	26 AWG	Survival Temp Sensor	HST_BS19_H	n/a	Bus Temperature Sensor 19 (Positive)	Host Temp Sensor Meas (Positive) of BS19 (10KΩ, PN 311P18-07A101)
J5 - 75	26 AWG	Survival Temp Sensor	HST_BS19_L	n/a	Bus Temperature Sensor 19 (Negative)	Host Temp Sensor Meas (Negative) of BS19 (10KΩ, PN 311P18-07A101)
J5 - 79	26 AWG	Survival Heater	HST_HS02_H	27V to 31V	Survival Heater 02 (Positive)	Host Survival Heater Power Feed for payload survival heater thermostats
J5 - 69	26 AWG	Survival Heater	HST_HS02_H	27V to 31V	Survival Heater 02 (Positive)	Host Survival Heater Power Feed for payload survival heater thermostats
J5 - 18	26 AWG	Survival Heater	HST_HS02_L	27V to 31V	Survival Heater 02 (Negative)	Host Survival Heater Power Feed for payload survival heater thermostats
J5 - 27	26 AWG	Survival Heater	HST_HS02_L	27V to 31V	Survival Heater 02 (Negative)	Host Survival Heater Power Feed for payload survival heater thermostats
J5 - 70	26 AWG	Survival Heater	HST_HS03_H	27V to 31V	Survival Heater 03 (Positive)	Host Survival Heater Power Feed for payload survival heater thermostats

DRAFT

Pin No.	Payload Wire Gage	Signal Type	Signal Name	Nom. Voltage / IO Standard	Description	Connection
J5 - 71	26 AWG	Survival Heater	HST_HS03_H	27V to 31V	Survival Heater 03 (Positive)	Host Survival Heater Power Feed for payload survival heater thermostats
J5 - 80	26 AWG	Survival Heater	HST_HS03_H	27V to 31V	Survival Heater 03 (Positive)	Host Survival Heater Power Feed for payload survival heater thermostats
J5 - 81	26 AWG	Survival Heater	HST_HS03_H	27V to 31V	Survival Heater 03 (Positive)	Host Survival Heater Power Feed for payload survival heater thermostats
J5 - 19	26 AWG	Survival Heater	HST_HS03_L	27V to 31V	Survival Heater 03 (Negative)	Host Survival Heater Power Feed for payload survival heater thermostats
J5 - 20	26 AWG	Survival Heater	HST_HS03_L	27V to 31V	Survival Heater 03 (Negative)	Host Survival Heater Power Feed for payload survival heater thermostats
J5 - 28	26 AWG	Survival Heater	HST_HS03_L	27V to 31V	Survival Heater 03 (Negative)	Host Survival Heater Power Feed for payload survival heater thermostats
J5 - 29	26 AWG	Survival Heater	HST_HS03_L	27V to 31V	Survival Heater 03 (Negative)	Host Survival Heater Power Feed for payload survival heater thermostats
J5 - 77	26 AWG	Survival Heater	HST_HS06_H	27V to 31V	Survival Heater 06 (Positive)	Host Survival Heater Power Feed for payload survival heater thermostats
J5 - 86	26 AWG	Survival Heater	HST_HS06_H	27V to 31V	Survival Heater 06 (Positive)	Host Survival Heater Power Feed for payload survival heater thermostats
J5 - 16	26 AWG	Survival Heater	HST_HS06_L	27V to 31V	Survival Heater 06 (Negative)	Host Survival Heater Power Feed for payload survival heater thermostats
J5 - 8	26 AWG	Survival Heater	HST_HS06_L	27V to 31V	Survival Heater 06 (Negative)	Host Survival Heater Power Feed for payload survival heater thermostats
J5 - 87	26 AWG	Survival Heater	HST_HS07_H	27V to 31V	Survival Heater 07 (Positive)	Host Survival Heater Power Feed for payload survival heater thermostats
J5 - 88	26 AWG	Survival Heater	HST_HS07_H	27V to 31V	Survival Heater 07 (Positive)	Host Survival Heater Power Feed for payload survival heater thermostats
J5 - 10	26 AWG	Survival Heater	HST_HS07_L	27V to 31V	Survival Heater 07 (Negative)	Host Survival Heater Power Feed for payload survival heater thermostats
J5 - 9	26 AWG	Survival Heater	HST_HS07_L	27V to 31V	Survival Heater 07 (Negative)	Host Survival Heater Power Feed for payload survival heater thermostats
J5 - 89	26 AWG	Survival Heater	HST_HS12_H	27V to 31V	Survival Heater 012 (Positive)	Host Survival Heater Power Feed for payload survival heater thermostats
J5 - 90	26 AWG	Survival Heater	HST_HS12_H	27V to 31V	Survival Heater 012 (Positive)	Host Survival Heater Power Feed for payload survival heater thermostats
J5 - 11	26 AWG	Survival Heater	HST_HS12_L	27V to 31V	Survival Heater 012 (Negative)	Host Survival Heater Power Feed for payload survival heater thermostats
J5 - 12	26 AWG	Survival Heater	HST_HS12_L	27V to 31V	Survival Heater 012 (Negative)	Host Survival Heater Power Feed for payload survival heater thermostats
J5 - 68	26 AWG	Survival Heater	HST_HS19_H	27V to 31V	Survival Heater 019 (Positive)	Host Survival Heater Power Feed for payload survival heater thermostats

DRAFT

Pin No.	Payload Wire Gage	Signal Type	Signal Name	Nom. Voltage / IO Standard	Description	Connection
J5 - 78	26 AWG	Survival Heater	HST_HS19_H	27V to 31V	Survival Heater 019 (Positive)	Host Survival Heater Power Feed for payload survival heater thermostats
J5 - 17	26 AWG	Survival Heater	HST_HS19_L	27V to 31V	Survival Heater 019 (Negative)	Host Survival Heater Power Feed for payload survival heater thermostats
J5 - 26	26 AWG	Survival Heater	HST_HS19_L	27V to 31V	Survival Heater 019 (Negative)	Host Survival Heater Power Feed for payload survival heater thermostats

DRAFT

Payload Interface Connector J6

Pin No.	Payload Wire Gage	Signal Type	Signal Name	Nom. Voltage / IO Standard	Description	Connection
J6 - 100	26 AWG	Survival Temp Sensor	HST_BS01_H	n/a	Bus Temperature Sensor 01 (Positive)	Host Temp Sensor Meas (Positive) of BS01 (10KΩ, PN 311P18-07A101)
J6 - 92	26 AWG	Survival Temp Sensor	HST_BS01_L	n/a	Bus Temperature Sensor 01 (Negative)	Host Temp Sensor Meas (Negative) of BS01 (10KΩ, PN 311P18-07A101)
J6 - 66	26 AWG	Survival Temp Sensor	HST_BS04_H	n/a	Bus Temperature Sensor 04 (Positive)	Host Temp Sensor Meas (Positive) of BS04 (10KΩ, PN 311P18-07A101)
J6 - 45	26 AWG	Survival Temp Sensor	HST_BS04_L	n/a	Bus Temperature Sensor 04 (Negative)	Host Temp Sensor Meas (Negative) of BS04 (10KΩ, PN 311P18-07A101)
J6 - 93	26 AWG	Survival Temp Sensor	HST_BS05_H	n/a	Bus Temperature Sensor 05 (Positive)	Host Temp Sensor Meas (Positive) of BS05 (10KΩ, PN 311P18-07A101)
J6 - 84	26 AWG	Survival Temp Sensor	HST_BS05_L	n/a	Bus Temperature Sensor 05 (Negative)	Host Temp Sensor Meas (Negative) of BS05 (10KΩ, PN 311P18-07A101)
J6 - 85	26 AWG	Survival Temp Sensor	HST_BS08_H	n/a	Bus Temperature Sensor 08 (Positive)	Host Temp Sensor Meas (Positive) of BS08 (10KΩ, PN 311P18-07A101)
J6 - 75	26 AWG	Survival Temp Sensor	HST_BS08_L	n/a	Bus Temperature Sensor 08 (Negative)	Host Temp Sensor Meas (Negative) of BS08 (10KΩ, PN 311P18-07A101)
J6 - 76	26 AWG	Survival Temp Sensor	HST_BS09_H	n/a	Bus Temperature Sensor 09 (Positive)	Host Temp Sensor Meas (Positive) of BS09 (10KΩ, PN 311P18-07A101)
J6 - 65	26 AWG	Survival Temp Sensor	HST_BS09_L	n/a	Bus Temperature Sensor 09 (Negative)	Host Temp Sensor Meas (Negative) of BS09 (10KΩ, PN 311P18-07A101)
J6 - 34	26 AWG	Survival Temp Sensor	HST_BS11_H	n/a	Bus Temperature Sensor 11 (Positive)	Host Temp Sensor Meas (Positive) of BS11 (10KΩ, PN 311P18-07A101)
J6 - 44	26 AWG	Survival Temp Sensor	HST_BS11_L	n/a	Bus Temperature Sensor 11 (Negative)	Host Temp Sensor Meas (Negative) of BS11 (10KΩ, PN 311P18-07A101)
J6 - 24	26 AWG	Survival Temp Sensor	HST_BS13_H	n/a	Bus Temperature Sensor 13 (Positive)	Host Temp Sensor Meas (Positive) of BS13 (10KΩ, PN 311P18-07A101)
J6 - 33	26 AWG	Survival Temp Sensor	HST_BS13_L	n/a	Bus Temperature Sensor 13 (Negative)	Host Temp Sensor Meas (Negative) of BS13 (10KΩ, PN 311P18-07A101)
J6 - 63	26 AWG	Survival Temp Sensor	HST_BS15_H	n/a	Bus Temperature Sensor 15 (Positive)	Host Temp Sensor Meas (Positive) of BS15 (10KΩ, PN 311P18-07A101)
J6 - 64	26 AWG	Survival Temp Sensor	HST_BS15_L	n/a	Bus Temperature Sensor 15 (Negative)	Host Temp Sensor Meas (Negative) of BS15 (10KΩ, PN 311P18-07A101)
J6 - 7	26 AWG	Survival Temp Sensor	HST_BS16_H	n/a	Bus Temperature Sensor 16 (Positive)	Host Temp Sensor Meas (Positive) of BS16 (10KΩ, PN 311P18-07A101)
J6 - 14	26 AWG	Survival Temp Sensor	HST_BS16_L	n/a	Bus Temperature Sensor 16 (Negative)	Host Temp Sensor Meas (Negative) of BS16 (10KΩ, PN 311P18-07A101)
J6 - 42	26 AWG	Survival Temp Sensor	HST_BS17_H	n/a	Bus Temperature Sensor 17 (Positive)	Host Temp Sensor Meas (Positive) of BS17 (10KΩ, PN 311P18-07A101)

DRAFT

Pin No.	Payload Wire Gage	Signal Type	Signal Name	Nom. Voltage / IO Standard	Description	Connection
J6 - 43	26 AWG	Survival Temp Sensor	HST_BS17_L	n/a	Bus Temperature Sensor 17 (Negative)	Host Temp Sensor Meas (Negative) of BS17 (10KΩ, PN 311P18-07A101)
J6 - 15	26 AWG	Survival Temp Sensor	HST_BS18_H	n/a	Bus Temperature Sensor 18 (Positive)	Host Temp Sensor Meas (Positive) of BS18 (10KΩ, PN 311P18-07A101)
J6 - 23	26 AWG	Survival Temp Sensor	HST_BS18_L	n/a	Bus Temperature Sensor 18 (Negative)	Host Temp Sensor Meas (Negative) of BS18 (10KΩ, PN 311P18-07A101)
J6 - 77	26 AWG	Survival Heater	HST_HS01_H	27V to 31V	Survival Heater 01 (Positive)	Host Survival Heater Power Feed for payload survival heater thermostats
J6 - 86	26 AWG	Survival Heater	HST_HS01_H	27V to 31V	Survival Heater 01 (Positive)	Host Survival Heater Power Feed for payload survival heater thermostats
J6 - 16	26 AWG	Survival Heater	HST_HS01_L	27V to 31V	Survival Heater 01 (Negative)	Host Survival Heater Power Feed for payload survival heater thermostats
J6 - 8	26 AWG	Survival Heater	HST_HS01_L	27V to 31V	Survival Heater 01 (Negative)	Host Survival Heater Power Feed for payload survival heater thermostats
J6 - 70	26 AWG	Survival Heater	HST_HS04_H	27V to 31V	Survival Heater 04 (Positive)	Host Survival Heater Power Feed for payload survival heater thermostats
J6 - 71	26 AWG	Survival Heater	HST_HS04_H	27V to 31V	Survival Heater 04 (Positive)	Host Survival Heater Power Feed for payload survival heater thermostats
J6 - 80	26 AWG	Survival Heater	HST_HS04_H	27V to 31V	Survival Heater 04 (Positive)	Host Survival Heater Power Feed for payload survival heater thermostats
J6 - 81	26 AWG	Survival Heater	HST_HS04_H	27V to 31V	Survival Heater 04 (Positive)	Host Survival Heater Power Feed for payload survival heater thermostats
J6 - 19	26 AWG	Survival Heater	HST_HS04_L	27V to 31V	Survival Heater 04 (Negative)	Host Survival Heater Power Feed for payload survival heater thermostats
J6 - 20	26 AWG	Survival Heater	HST_HS04_L	27V to 31V	Survival Heater 04 (Negative)	Host Survival Heater Power Feed for payload survival heater thermostats
J6 - 28	26 AWG	Survival Heater	HST_HS04_L	27V to 31V	Survival Heater 04 (Negative)	Host Survival Heater Power Feed for payload survival heater thermostats
J6 - 29	26 AWG	Survival Heater	HST_HS04_L	27V to 31V	Survival Heater 04 (Negative)	Host Survival Heater Power Feed for payload survival heater thermostats
J6 - 68	26 AWG	Survival Heater	HST_HS05_H	27V to 31V	Survival Heater 05 (Positive)	Host Survival Heater Power Feed for payload survival heater thermostats
J6 - 78	26 AWG	Survival Heater	HST_HS05_H	27V to 31V	Survival Heater 05 (Positive)	Host Survival Heater Power Feed for payload survival heater thermostats
J6 - 17	26 AWG	Survival Heater	HST_HS05_L	27V to 31V	Survival Heater 05 (Negative)	Host Survival Heater Power Feed for payload survival heater thermostats
J6 - 26	26 AWG	Survival Heater	HST_HS05_L	27V to 31V	Survival Heater 05 (Negative)	Host Survival Heater Power Feed for payload survival heater thermostats
J6 - 87	26 AWG	Survival Heater	HST_HS08_H	27V to 31V	Survival Heater 08 (Positive)	Host Survival Heater Power Feed for payload survival heater thermostats

DRAFT

Pin No.	Payload Wire Gage	Signal Type	Signal Name	Nom. Voltage / IO Standard	Description	Connection
J6 - 94	26 AWG	Survival Heater	HST_HS08_H	27V to 31V	Survival Heater 08 (Positive)	Host Survival Heater Power Feed for payload survival heater thermostats
J6 - 1	26 AWG	Survival Heater	HST_HS08_L	27V to 31V	Survival Heater 08 (Negative)	Host Survival Heater Power Feed for payload survival heater thermostats
J6 - 9	26 AWG	Survival Heater	HST_HS08_L	27V to 31V	Survival Heater 08 (Negative)	Host Survival Heater Power Feed for payload survival heater thermostats
J6 - 69	26 AWG	Survival Heater	HST_HS09_H	27V to 31V	Survival Heater 09 (Positive)	Host Survival Heater Power Feed for payload survival heater thermostats
J6 - 79	26 AWG	Survival Heater	HST_HS09_H	27V to 31V	Survival Heater 09 (Positive)	Host Survival Heater Power Feed for payload survival heater thermostats
J6 - 18	26 AWG	Survival Heater	HST_HS09_L	27V to 31V	Survival Heater 09 (Negative)	Host Survival Heater Power Feed for payload survival heater thermostats
J6 - 27	26 AWG	Survival Heater	HST_HS09_L	27V to 31V	Survival Heater 09 (Negative)	Host Survival Heater Power Feed for payload survival heater thermostats
J6 - 88	26 AWG	Survival Heater	HST_HS11_H	27V to 31V	Survival Heater 11 (Positive)	Host Survival Heater Power Feed for payload survival heater thermostats
J6 - 89	26 AWG	Survival Heater	HST_HS11_H	27V to 31V	Survival Heater 11 (Positive)	Host Survival Heater Power Feed for payload survival heater thermostats
J6 - 10	26 AWG	Survival Heater	HST_HS11_L	27V to 31V	Survival Heater 11 (Negative)	Host Survival Heater Power Feed for payload survival heater thermostats
J6 - 11	26 AWG	Survival Heater	HST_HS11_L	27V to 31V	Survival Heater 11 (Negative)	Host Survival Heater Power Feed for payload survival heater thermostats
J6 - 95	26 AWG	Survival Heater	HST_HS13_H	27V to 31V	Survival Heater 13 (Positive)	Host Survival Heater Power Feed for payload survival heater thermostats
J6 - 96	26 AWG	Survival Heater	HST_HS13_H	27V to 31V	Survival Heater 13 (Positive)	Host Survival Heater Power Feed for payload survival heater thermostats
J6 - 2	26 AWG	Survival Heater	HST_HS13_L	27V to 31V	Survival Heater 13 (Negative)	Host Survival Heater Power Feed for payload survival heater thermostats
J6 - 3	26 AWG	Survival Heater	HST_HS13_L	27V to 31V	Survival Heater 13 (Negative)	Host Survival Heater Power Feed for payload survival heater thermostats
J6 - 97	26 AWG	Survival Heater	HST_HS18_H	27V to 31V	Survival Heater 18 (Positive)	Host Survival Heater Power Feed for payload survival heater thermostats
J6 - 98	26 AWG	Survival Heater	HST_HS18_H	27V to 31V	Survival Heater 18 (Positive)	Host Survival Heater Power Feed for payload survival heater thermostats
J6 - 4	26 AWG	Survival Heater	HST_HS18_L	27V to 31V	Survival Heater 18 (Negative)	Host Survival Heater Power Feed for payload survival heater thermostats
J6 - 5	26 AWG	Survival Heater	HST_HS18_L	27V to 31V	Survival Heater 18 (Negative)	Host Survival Heater Power Feed for payload survival heater thermostats

DRAFT

11.3 Appendix C: Host-Routed Cable Information

This appendix provides information to support electronics unit location and cable routing. Maximum distances provided herein reflect the as-designed, as-built configuration, and may be negotiable pending signal integrity analysis and programmatic ability to procure longer cables.

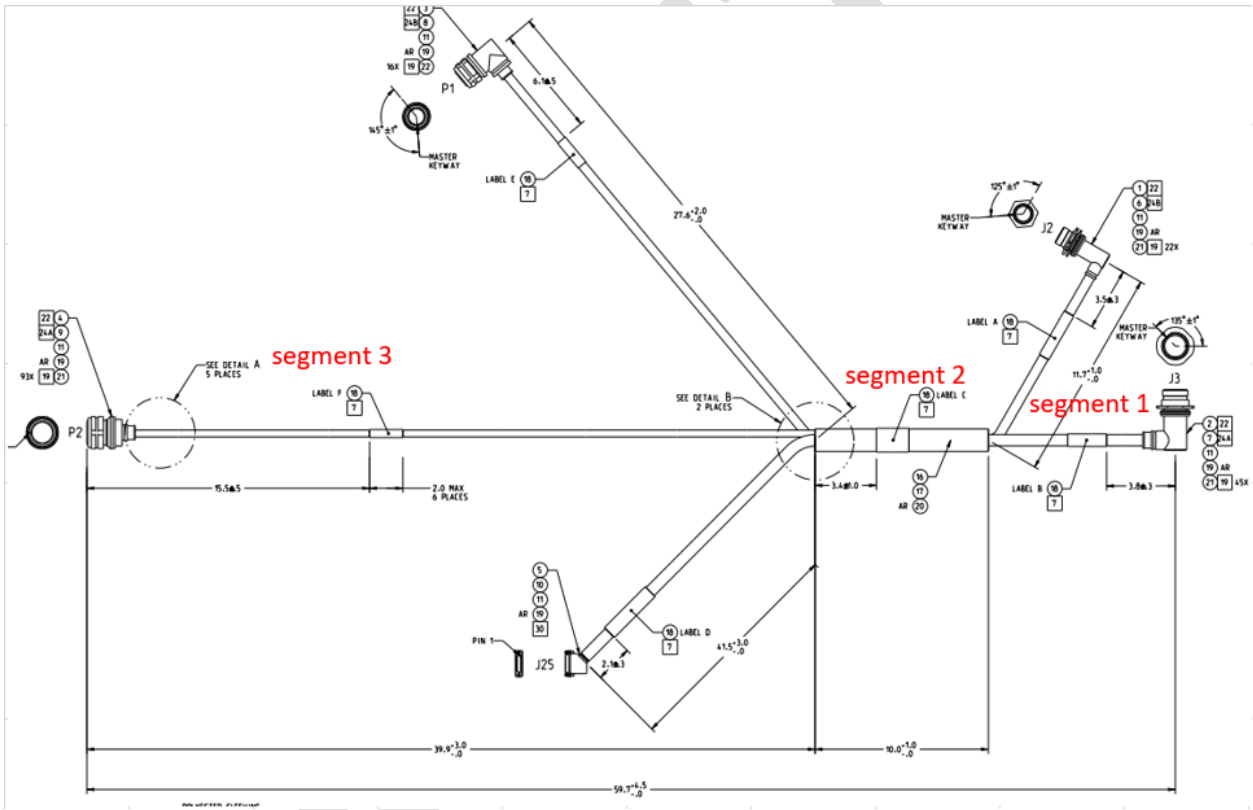

Figure C- 1: Cable topology explanation, W331A example. This illustrates the meaning of multiple table records for a given cable designator.

Table C- 1: Host Routed Cable Information

Reference Designation	Description	As Built Harness OD (in.)	Min. Bend Radius (in.)	As-built length (in.) [TBC]	From (1)		To (1<)	
					Unit	Connector Designation	Unit	Connector Designation
W303A (D4982947)	Cable Assembly, Digital Encoder Box, Operational Heaters/Temp Sensors	Overlap OD** = 1.16 D1* = 0.80 D2 = 0.38	R1*** = 2.4 R2 = 1.2	Total Length = 47.7 (+4.0/-0) L1*** = 36.5 L2 = 11.2	PCU	J12	DEB	J1
		Overlap OD = 1.16 D1 = 0.80 D2 = 0.26	R1 = 2.4 R2 = 0.8	Total Length = 47.8 (+4.0/-0) L1 = 36.5 L2 = 11.3	PCU	J12	DEB Temp Sensor (WTS25)	J2 (WTS25J2)
		Overlap OD = 1.16 D1 = 0.80 D2 = 0.68	R1 = 2.4 R2 = 2.1	Total Length = 79.3 (+5.0/-0) L1 = 36.5 L2 = 42.8	PCU	J12	Azimuth Wrap	P22
W310A (D4983021)	Cable Assembly, Telescope Operational Heaters/Temp Sensors, PCU	D = 0.68	R = 2.1	Total Length = 70.4 (+4.0/-0)	PCU	J13	Azimuth Wrap	P23
W320A (D4983024)	Cable Assembly, Operational Heaters/Temp Sensors, DEB, PCU, Az Motors & Encoders	Overlap at P10 = 1.46 Overlap at Mid (max)**** = 1.41 D1 = 0.81 D2 = 0.79 D3 = 0.90 D4 = 0.40	R1 = 2.4 R2 = 2.4 R3 = 2.7 R4 = 1.2	Total length = 69.2 (+6.5/-0) L1 = 13.3 L2 = 24.5 L3 = 13.6 L4 = 17.8	PCU	J10	Az Motor Temp Sensor and heater (WH015)	J2 (WHO15J2)
		Overlap at P10 = 1.46 Overlap at Mid (max) = 1.41 D1 = .81 D2 = .79 D3 = .90 D4 = .40	R1 = 2.4 R2 = 2.4 R3 = 2.7 R4 = 1.2	Total length = 69.5 (+6.5/-0) L1 = 13.3 L2 = 24.5 L3 = 13.6 L4 = 18.1	PCU	J10	AZ Motor	J1 (WMTAZJ1)
		Overlap at P10 = 1.46 D1 = 0.81 D2 = 0.40	R1 = 2.4 R2 = 1.2	Total length = 40.0 (+3.0/-0) L1 = 13.3 L2 = 26.7	PCU	J10	PCU Temp Sensor (WTS17)	J3 (WTS17J3)
		Overlap at P10 = 1.46 Overlap at Mid (max) = 1.41 D1 = 0.81 D2 = 0.79 D3 = 0.90 D4 = 0.46	R1 = 2.4 R2 = 2.4 R3 = 2.7 R4 = 1.4	Total length = 69.1 (+5.0/-0) L1 = 13.3 L2 = 24.5 L3 = 13.6 L4 = 17.7	PCU	J10	Azimuth Wrap	P20

DRAFT

Reference Designation	Description	As Built Harness OD (in.)	Min. Bend Radius (in.)	As-built length (in.) [TBC]	From (1)		To (1<)	
					Unit	Connector Designation	Unit	Connector Designation
W320A (D4983024)	Cable Assembly, Operational Heaters/Temp Sensors, DEB, PCU, Az Motors & Encoders	Overlap at P10 = 1.46 Overlap at Mid (max) = 1.41 D1 = 0.81 D2 = 0.79 D3 = 0.90 D4 = 0.68	R1 = 2.4 R2 = 2.4 R3 = 2.7 R4 = 2.1	Total length = 67.6 (+6.5/-0) L1 = 13.3 L2 = 24.5 L3 = 13.6 L4 = 16.2	PCU	J10	Azimuth Wrap	P29
		Overlap at Mid (max) = 1.41 D1 = 0.30 D2 = 0.90 D3 = 0.40	R1 = 0.9 R2 = 2.7 R4 = 1.6	Total length = 49.1 (+8.8/-0) L1 = 19.3 L2 = 13.6 L3 = 16.2	DEB	J5	Azimuth Wrap	P29
		Overlap at Mid (max) = 1.36 D1 = 0.30 D2 = 0.90 D3 = 0.40	R1 = 0.9 R2 = 2.7 R4 = 1.6	Total length = 50.3 (+8.8/-0) L1 = 20.5 L2 = 13.6 L3 = 16.2	DEB	J4	Azimuth Wrap	P29
W323A (D4983059)	Cable Assembly, Launch Lock, Survival Heaters/Temp Sensors	Overlap at J5 = 1.35 Overlap at mid (max) = 1.69 D1 = 0.71 D2 = 0.69 D3 = overlap mid D4 = 0.38	R1 = 2.2 R2 = 2.1 R3 = ∞ R4 = 1.1	Total length = 69.5 (+3.5/-0.5) L1 = 8.0 L2 = 17.8 L3 = 12.1 L4 = 31.6	Host-Interface	P5	DEB Surv heater and temp sensor (WHS02)	J2 (WHS02J2)
		Overlap at J5 = 1.35 D1 = 0.71 D2 = 0.38	R1 = 2.2 R2 = 1.1	Total length = 29.0 (+3.5/-0) L1 = 8.0 L2 = 21.0	Host-Interface	P5	DEB Surv heater and temp sensor (WHS03)	J3 (WHS03J3)
		Overlap at J5 = 1.35 Overlap at mid (max) = 1.69 D1 = 0.71 D2 = 0.69 D3 = overlap mid D4 = 0.48	R1 = 2.2 R2 = 2.1 R3 = ∞ R4 = 1.5	Total length = 54.4 (+1.5/-0.5) L1 = 8.0 L2 = 17.8 L3 = 12.1 L4 = 16.5	Host-Interface	P5	DEB Surv heater and temp sensor (WHS19)	J4 (WHS19J4)
		Overlap at J5 = 1.35 Overlap at mid (max) = 1.69 D1 = 0.71 D2 = 0.69 D3 = overlap mid D4 = 0.69	R1 = 2.2 R2 = 2.1 R3 = ∞ R4 = 2.1	Total length = 54.9 (+1.5/-0.5) L1 = 8.0 L2 = 17.8 L3 = 12.1 L4 = 17.0	Host-Interface	P5	Azimuth Wrap	P28

DRAFT

Reference Designation	Description	As Built Harness OD (in.)	Min. Bend Radius (in.)	As-built length (in.) [TBC]	From (1)		To (1<)	
					Unit	Connector Designation	Unit	Connector Designation
W323A (D4983059)	Cable Assembly, Launch Lock, Survival Heaters/Temp Sensors	Overlap at mid (max) = 1.69 D1 = 0.68 D2 = overlap mid D3 = 0.69	R1 = 2.1 R2 = ∞ R3 = 2.1	Total length = 55.6 (+4.0/-2.5) L1 = 26.5 L2 = 12.1 L3 = 17.0	Host-Interface	P4	Azimuth Wrap	P28
		Overlap at mid (max) = 1.69 D1 = 0.68 D2 = overlap mid D3 = 0.63	R1 = 2.1 R2 = ∞ R3 = 1.9	Total length = 85.0 (+9.0/-1.5) L1 = 26.5 L2 = 12.1 L3 = 46.4	Host-Interface	P4	Az Launch Lock	P1 (WLLAZP1)
		Overlap = 1.39 D1 = 0.85 D2 = 0.78	R1 = 2.6 R2 = 2.4	Total length = 44.4 (+2.0/-0) L1 = 12.9 L2 = 31.5	Host-Interface	P6	Azimuth Wrap	P26
		Overlap = 1.39 D1 = 0.85 D2 = 0.47	R1 = 2.6 R2 = 1.4	Total length = 43.2 (+2.0/-0) L1 = 12.9 L2 = 30.3	Host-Interface	P6	Azimuth Wrap	P27
W330A (D4983064)	Cable Assembly, SpaceWire, PCU	D = 0.47	R = 2.35	Total length = 74.0 (+5.0/-0)	PCU	J4	Azimuth Wrap	P24
W331A (D4983067)	Cable Assembly, Power	Overlap (max) = 1.54 D1 = 0.72 D2 = Overlap D3 = 0.50	R1 = 2.6 R2 = ∞ R3 = 1.5	Total length = 47.4 (+6.5/-0) L1 = 9.8 L2 = 10.0 L3 = 27.6	Host-Interface	P3	PCU	J1
		Overlap (max) = 1.54 D1 = 0.72 D2 = Overlap D3 = 0.63	R1 = 2.6 R2 = ∞ R3 = 1.9	Total length = 61.3 (+7.5/-0) L1 = 9.8 L2 = 10.0 L3 = 41.5	Host-Interface	P3	Azimuth Wrap	P25
		Overlap (max) = 1.54 D1 = 0.49 D2 = Overlap D3 = 0.63	R1 = 1.5 R2 = ∞ R3 = 1.9	Total length = 63.2 (+5.0/-0) L1 = 11.7 L2 = 10.0 L3 = 41.5	Host-Interface	P2	Azimuth Wrap	P25
		Overlap (max) = 1.54 D1 = 0.49 D2 = Overlap D3 = 0.36	R1 = 1.5 R2 = ∞ R3 = 1.1	Total length = 61.6 (+5.0/-0) L1 = 11.7 L2 = 10.0 L3 = 39.9	Host-Interface	P2	PCU	J2
W333 (D4983070)	Cable Assembly, SpaceWire Command & Data, Host	D = 0.61	R = 3.1	Total length = 29.4 (+2.0/-0)	Host-Interface	P1	PCU	J3

DRAFT

Reference Designation	Description	As Built Harness OD (in.)	Min. Bend Radius (in.)	As-built length (in.) [TBC]	From (1)		To (1<)	
					Unit	Connector Designation	Unit	Connector Designation
W335A (D4983071)	Cable Assembly, Operational Heaters/Temp Sensors	D = 0.71	R = 2.2	Total length = 72.6 (+5.0/-0)	PCU	J11	Azimuth Wrap	P21

DRAFT