80LARC26R0002
EXHIBIT A

Statement of Work (SOW)
For

Geostationary Littoral Imaging and Monitoring Radiometer (GLIMR) Access to Space (ATS)

Version 1.0

July 1, 2026

REVISION HISTORY PAGE

Revision No.	Description	Release Date
Preliminary, V0.1	Initial release, for use on GLIMR Mission Access to Space Industry Concept Study	2/18/26
Baseline, V1.0	Approved release for request for proposal	7/1/2026

Table of Contents

1. Introduction and Definitions 4
1.1. Introduction 4
1.2. Definitions 5
2. Scope of Work 7
3. Reference Documents and Contract Data Requirements List 8
3.1. Reference Documents 8
3.2. Contract Data Requirements List 8
4. Management 9
4.1. Schedule 9
4.2. Reviews and Meetings 9
4.2.1. Formal Contractor Reviews 9
4.2.2. Support for Government Led Key Decision Points (KDPs) and GLIMR Mission Reviews 10
4.2.3. Technical Interchange Meetings (TIM) 10
4.2.4. Monthly Progress Briefings 11
4.3. On-Site Representatives 11
5. Configuration Control/Management, Quality Control, and Safety and Mission Assurance 12
6. ATS and Mission Operations 13
6.1. Plan and Design GLIMR Observatory and Launch Segment [CLIN 1] 13
6.1.1. GLIMR Observatory and Launch Segment Services Design, Planning, and Analyses [CLIN 1] 13
6.2. Plan GLIMR Spacecraft to GLIMR Payload Integration [CLIN 1] 14
6.3. Design, Integrate, and Test the GLIMR Ground Segment [CLIN 1] 14
6.3.1. GLIMR Ground Segment Design, Analysis, and Integration [CLIN 1] 14
6.3.1.1. GLIMR Payload Operations [CLIN 1] 15
6.3.2. GLIMR Ground Segment Testing and Readiness [CLIN 1] 15
6.3.3. GLIMR Spacecraft and Ground Segment Simulators [CLIN 1] 15
6.4. Perform GLIMR Payload to GLIMR Spacecraft Integration [CLIN 1] 16
6.4.1. GLIMR Payload Delivery, Receipt, Inspection, and Handling [CLIN 1] 16
6.4.2. GLIMR Payload to GLIMR Spacecraft Integration [CLIN 1] 17
6.5. Perform GLIMR Observatory Testing, and Pre-Launch Processing [CLIN 1] 18
6.5.1. Flight System Readiness, Pre-Ship, Launch Site Preparations [CLIN 1] 20
6.6. Launch and Perform GLIMR Observatory In-Orbit Checkout [CLIN 1] 21
6.7. Perform GLIMR Mission On-Orbit Operations [CLIN 1] 21
6.8. Extended Operations [CLINs 2 and 3] 21

1. Introduction and Definitions

1.1. Introduction

This Statement of Work (SOW) details the work to be performed by the Geostationary Littoral Imaging and Monitory Radiometer (GLIMR) Access to Space (ATS) Contractor (Contractor) and its team members for the National Aeronautics and Space Administration (NASA) Life Cycle Implementation Phases D through F.

GLIMR is a hyperspectral ocean color sensor which targets the Gulf of America and other coastal and ocean waters of North and South America. With its vantage point from geostationary orbit, GLIMR will be the first hyperspectral ocean color sensor in the Western Hemisphere to study ocean processes at the diurnal timescales required to observe the dynamic ecological, biogeochemical, and physical processes typical of coastal and ocean waters. GLIMR is uniquely designed to capture the spatiotemporal evolution of phytoplankton blooms, which grow and dissipate on scales of hours to days, monitor phytoplankton physiology, growth rates and shifts in community composition, resolve coastal features, fronts, eddies, and upwelling features, and monitor biogeochemical fluxes and land-ocean exchanges at sub-diurnal to multi-day scales. GLIMR will improve quantification of primary productivity, biomass, and carbon fluxes within coastal aquatic ecosystems and across the land-sea interface and contribute observations that will aid development and evaluation of models that project future changes in carbon cycling and marine ecosystems for use in ecological forecasting and as inputs for improved model predictions. The two main science goals of GLIMR are (1) to understand the processes contributing to rapid changes in phytoplankton growth rate and community composition, and (2) quantify how high frequency fluxes of sediments, organic matter, and other materials between and within coastal ecosystems regulate the productivity and health of coastal ecosystems. The science application objectives aim to study the formation, magnitude, and trajectories of harmful algal blooms, oil spills, and Sargassum accumulation events.

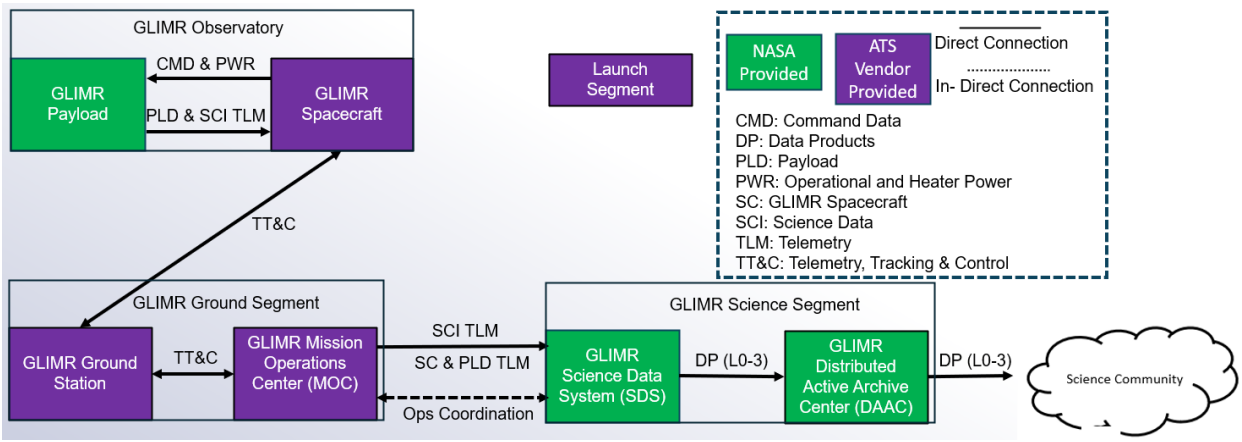

Figure 1. GLIMR Mission

1.2. Definitions

Term	Definition
Access to Space (ATS)	Contractor services required to integrate the GLIMR Payload onto the GLIMR spacecraft and place the Observatory into the specified GEO orbit and that will allow the Government to acquire the necessary scientific measurements (including transmission of this data to the GSDS) to assess rapidly evolving processes such as phytoplankton physiology and bloom evolution, episodic/seasonal river discharge, dissolved and particulate carbon transformations, and coastal storm damage.
Distributed Active Archive Center (DAAC)	The Government-assigned location(s) where GLIMR data and data products will be delivered by the GLIMR GSDS for public access and permanent archive.
GLIMR Ground Segment	Provides the GLIMR Observatory command, control, and communication uplink and downlink, and data transfers from the GLIMR GMOC to the GLIMR GSDS.
GLIMR Ground Station	Provides the GLIMR GMOC communications to and from the GLIMR Observatory.
GLIMR Mission	The entire GLIMR science mission performed by the Government and the Contractor. Includes the GLIMR Payload and Access to Space, data product generation, science results, and PI-led science community.
GLIMR Mission Operations Center (GMOC)	Control center for uploading GLIMR Spacecraft and GLIMR Payload commands to the GLIMR Spacecraft and receiving GLIMR Spacecraft, GLIMR Payload, GLIMR science and housekeeping data from the GLIMR Spacecraft.
GLIMR Observatory	The combination of the GLIMR Payload to the GLIMR Spacecraft.
GLIMR Payload	The hardware that will be integrated into the GLIMR Spacecraft. The GLIMR Payload is a geostationary hyperspectral ocean color sensor capable of repeat coverage designed for the primary mission focus on ecosystem processes in the Gulf of America Includes all GLIMR Payload intra-connected cables and harnesses between the GLIMR Payload's subsystems. Does not include the Contractor-provided cables such as power, data, and communications to the GLIMR Payload-to-GLIMR Spacecraft interface.
GLIMR Science Data Segment (GSDS)	The facility operated by the Government, located at NASA Goddard Space Flight Center, that receives GLIMR mission raw data (L0) from the GMOC to generate science products and deliver them to the GLIMR DAAC.
GLIMR Spacecraft	The vehicle with mechanical, electrical, and thermal interface for the GLIMR Payload to achieve the GLIMR mission. For the purposes of this effort, the GLIMR Payload may be hosted on a dedicated spacecraft or share the spacecraft with other payloads.
Interface Control Document (ICD)	Defines the interface between two systems (e.g., GLIMR Payload-to-GLIMR Spacecraft Mechanical and Thermal ICD; GLIMR Payload-to-GLIMR Spacecraft Electrical ICD; GLIMR GSDS-to- GMOC ICD).

Launch Segment	A rocket system including all necessary operations for launch to insert GLIMR Observatory from Earth's surface into orbit.
Science Imaging	Collection of GLIMR Payload hyperspectral and landmark imaging data to be sent to the ground.
Shall	Means the imperative. Compliance and formal traceability and verification by the Contractor is mandatory. Any deviations from these contractually imposed mandatory requirements require a formal change implemented through a written contract modification.
Will	Designates the intent of the Government.
May	Terms "may" or "can" denote discretionary privilege or permission.

2. Scope of Work

The Contractor shall, except as otherwise specified, furnish all necessary personnel, engineering disciplines, expertise, materials, services, equipment, facilities, institutional systems and software, and technical and management processes to perform the GLIMR ATS requirements as follows:

A. Plan and design the GLIMR Observatory and Launch Segment;
B. Plan GLIMR Spacecraft to GLIMR Payload integration;
C. Design, integrate, and test the GLIMR Ground Segment;
D. Perform GLIMR Payload to GLIMR Spacecraft integration;
E. Perform GLIMR Observatory testing, and Pre-Launch processing;
F. Launch and perform GLIMR Mission In-Orbit checkout;
G. Perform On-Orbit operations; and
H. Perform extended operations, if required.

The SOW and scope of work is organized with the following Contract Line-Item Number (CLIN) structure:

CLIN	Description
1	GLIMR ATS Services and Integration Planning; GLIMR Spacecraft Design, Testing, and Readiness; GLIMR Ground Segment Design, Integration, Testing, and Readiness; GLIMR Payload Integration onto GLIMR Spacecraft; GLIMR Observatory Testing, and Pre-Launch Processing; GLIMR Observatory integration onto Launch Vehicle, and Readiness; Launch; GLIMR Observatory In-Orbit Checkout and Baseline On-Orbit Operations.
2	Extended GLIMR Mission On-Orbit Operations Option Period 1 (12 Months following Baseline Operations).
3	Extended GLIMR Mission On-Orbit Operations Option Period 2 (12 Months following Extended Mission Operations Option Period 1).

The Government will support the following minimum activities during the performance of this contract:

A. Support the development of any accommodation, if necessary, for the GLIMR Payload, GLIMR Payload Operations, and GLIMR Ground Segment;
B. Complete all necessary GLIMR Payload pre-ship activities, ship the GLIMR Payload to the Contractor, and conduct post-ship inspection and checkout;
C. Support post-ship activities, including Integration and Test (I&T) of the GLIMR Payload with the GLIMR spacecraft and subsequent GLIMR observatory, and GLIMR Ground Segment testing activities;
D. Provide technical support to the Contractor during prelaunch activities, launch, In-Orbit checkout, and On-Orbit operations;
E. Operate and maintain the GSDS during On-Orbit operations; and
F. Support GLIMR Payload end-of-life operations and decommissioning.

All SOW sections herein, unless specifically defined by CLIN, apply to all CLINs.

3. Reference Documents and Contract Data Requirements List

3.1. Reference Documents

The following documents will be provided by the Government and are for reference only. The requirements of the contract and this SOW establish the contractual obligations of the parties.

Document Number	Document Title
GLIMR AM-04	GLIMR Reduced-Order Structural Model
GLIMR AM-07	GLIMR Reduced-Order Thermal Model
GLIMR SE-04	GLIMR Mission Concept of Operations (CONOPS)
GLIMR-06-002	GLIMR Payload to Host Interface Definition Document (IDD)
GLIMR SW-08	GLIMR Flight Software User's Guide
D4957031-500	GLIMR Instrument Installation Control Drawing (IICD)
NPR 8621.1C	NASA Procedural Requirements for Mishap and Close Call Reporting, Investigating, and Recordkeeping

When apparent conflicts exist between this contract and these reference documents, the Contractor shall notify the Contracting Officer (CO) that there is such a conflict and request direction from the Contracting Officer Representative (COR) and/or CO as to how to proceed.

3.2. Contract Data Requirements List

The Contractor shall develop, deliver, and maintain all documentation required by contract Exhibit B, Data Requirements List (DRL)/Data Requirements Description (DRD), even if not otherwise referenced within this SOW. In accordance with FAR 52.227-16, Additional, Data Requirements, the Contractor shall preserve, for a period of three (3) years after the end of the GLIMR Mission On-Orbit Operations (including any extended On-Orbit Operations), all appropriate documentation required to maintain a traceable record of engineering and programmatic decisions and hardware characteristics and performance, whether formal or informal. The Government reserves the right to review this documentation upon written request by the CO.

4. Management

The Contractor shall manage the functions necessary to perform the contract tasks outlined herein, to include the planning, organizing, staffing, directing, configuration and risk management and controlling of all contract activities so that the requirements can be achieved in the most efficient manner.

4.1. Schedule

The Contractor shall generate and provide an ATS schedule status with the Monthly Project Status Report (MPSR), to include critical milestones, schedule reserve tracking, and an assessment of schedule risk.

The Contractor shall include and highlight the top three critical path(s) in the ATS schedule.

4.2. Reviews and Meetings

The Contractor shall lead, conduct, participate in, and/or support a variety of formal and informal reviews and meetings as set forth below.

4.2.1. Formal Contractor Reviews

The Government will establish a review team to attend each of the formal reviews and will coordinate the review agenda with the Contractor prior to each review and approve the terms of reference (ToR) per the process in the applicable DRL/DRD.

For each of the below reviews, the Contractor shall:

A. Prepare, host, and present all reviews in the stated DRL/DRD;
B. Support the development and finalization of the agenda;
C. Support the development and finalization of the ToR;
D. Develop and present all necessary review material to meet the requirements of this contract and the ToR;
E. Coordinate review preparations with the Government by sharing plans, draft presentation charts and supporting documentation to the extent necessary to demonstrate that the Contractor is prepared for the review per the ToR;
F. Support all necessary pre-briefings and pre-reviews and respond to/resolve all questions/action items;
G. Conduct the review at the Contractor's specified location;
H. Respond to, manage, report status, and resolve all Requests for Action (RFAs); and
I. Prepare, host, and conduct a "delta" review of the non-compliant areas, including delivery of updated DRL/DRD data items, if the Government determines the success criteria for a review are not fully met.

The Contractor shall conduct a ATS Requirements Review (ATSRR) [CLIN 1].

The Contractor shall conduct a GLIMR Spacecraft to GLIMR Payload Integration Review (ATSIR) [CLIN 1].

The Contractor shall conduct a GLIMR Observatory Test Readiness Review (ATSTRR) [CLIN 1].

The Contractor shall conduct a GLIMR Mission Operations Readiness Review (ATSORR) [CLIN 1].

The Contractor shall conduct a GLIMR Mission Post Launch Assessment Review (ATSPLAR) [CLIN 1].

The Contractor shall conduct a GLIMR Mission Decommissioning Review (ATSDR) [CLIN 1 or 2 or 3].

4.2.2. Support for Government Led Key Decision Points (KDPs) and GLIMR Mission Reviews

The Contractor shall support the preparations and presentations of the Government led KDPs and reviews for the GLIMR Mission.

For each of the below reviews, the Contractor shall:

A. Review and comment on the Government-developed content, as requested by the COR, in advance of each review; and
B. Provide input and presentations covering work detailed in this SOW (e.g., GLIMR Spacecraft, GLIMR Ground Segment, and Access to Space status; technical and programmatic risks; plans as requested) to support GLIMR Mission reviews.

The Contractor shall attend, present, and deliver the documentation required for GLIMR Payload Pre-Ship Review (PSR) [CLIN 1].

The Contractor shall attend, present, and deliver the documentation required for GLIMR Extended Mission Review for Period 1 (EMR1) [CLIN 2].

The Contractor shall attend, present, and deliver the documentation required for GLIMR Extended Mission Review for Period 2 (EMR2) [CLIN 3].

The Contractor shall attend, present, and deliver the documentation required for GLIMR Mission KDP-E [CLIN 1].

The Contractor shall attend, present, and deliver the documentation required for GLIMR Mission KDP-F [CLIN 1].

4.2.3. Technical Interchange Meetings (TIM)

The Contractor shall prepare technical and programmatic data packages for distribution and presentation during TIM (typically held to discuss technical and schedule items, such as ICD formulation/finalization) (As requested by the Contractor or Government COR).

4.2.4. Monthly Progress Briefings

The Contractor shall deliver and present (virtually) a MPSR covering all aspects of the mission including the ATS technical and schedule status.

4.3. On-Site Representatives

The Contractor shall provide facility access, office space, office furniture, copier and printer access, and internet access at the Contractor facilities for up to two (2) part-time Government representatives at the Contractor's facilities beginning up to three (3) months prior to receipt of the GLIMR Payload through up to one (1) month following On-Orbit Checkout in order to perform all necessary Government support activities as detailed in this contract. The specific Government representatives may change to support activities appropriately throughout this time frame.

The Contractor shall provide access to a maximum of two (2) Government representatives for in-person observation purposes during all GLIMR Spacecraft reviews held as part of the Contractor's normal commercial practices, with unlimited virtual access provided to additional Government representatives as needed.

5. Configuration Control/Management, Quality Control, and Safety and Mission Assurance

The Contractor shall:

A. Utilize, in accordance with the Contractor's commercial practices, and provide the Government with access (upon request of the COR) to, a configuration control/management process for the following;

   1. Software configuration control/management for all GLIMR Payload-related GLIMR Spacecraft software configuration items and interfaces, including (in modifiable format) in-process and completed software designs, implementations, test procedures and data, static analysis results, software problem reports, software documentation, and other items related to software development activities; and
   2. Engineering configuration control/management for all aspects of GLIMR Mission accommodation.

B. Utilize a Quality Management System compliant to SAE AS9100, Quality Systems - Aerospace - Model for Quality Assurance in Design, Development, Production, Installation and Servicing;

   1. Grant the Government access (upon request of the COR) to its Quality Manual;
   2. Remain compliant with the AS9100 standard during the term of the contract;
   3. Notify the CO within ten (10) business days of any change in its AS9100 compliant status; and
   4. The Government reserves the right to audit the Contractor's quality system at any time.

C. Develop the plans that detail the contamination control methods used during GLIMR Payload receipt through on-orbit operations, consistent with the contract requirements;
D. Track, manage resolution (including involvement with the Government, as necessary), and deliver discrepancy reports for any problems, nonconformances, failures, and anomalies that are related to the GLIMR Payload, the GLIMR Payload interface with the GLIMR Spacecraft, or the GLIMR Spacecraft's ability to support the GLIMR Payload, including flight and ground segment;
E. Notify the Contracting Officer within 24 hours of a suspected mishap ("mishap" as defined in NPR 8621.1C, NASA Procedural Requirements for Mishap and Close Call Reporting, Investigating, and Recordkeeping);
F. Perform functional and interface Failure Modes and Effects Analysis (FMEA) that analyzes the functions between the GLIMR Payload/Spacecraft and the GLIMR Spacecraft/Ground Segment and analyzes all elements that cross the interface boundaries between the GLIMR Ground Segment/GSDS;
G. Meet all legal and commercial requirements associated with access to space, On-Orbit operations, Radio Frequency compliance, decommissioning, orbital debris, and end-of-life disposal of the GLIMR Spacecraft; and
H. Apply, in accordance with the Contractor's commercial practices, safety practices to protect personnel, data, and Property during performance of all requirements of this contract.

6. ATS and Mission Operations

The following activities are applicable to this effort:

A. Plan and design the GLIMR Observatory and Launch Segment [CLIN 1];
B. Plan GLIMR Spacecraft to GLIMR Payload integration [CLIN 1];
C. Design, integrate, and test the GLIMR Ground Segment [CLIN 1];
D. Perform GLIMR Payload to GLIMR Spacecraft integration [CLIN 1];
E. Perform GLIMR Observatory testing, and Pre-Launch processing [CLIN 1];
F. Launch and perform GLIMR Mission In-Orbit checkout [CLIN 1];
G. Perform On-Orbit operations [CLIN 1]; and
H. Perform extended operations, if required [CLINs 2 and 3].

6.1. Plan and Design GLIMR Observatory and Launch Segment [CLIN 1]

The Contractor shall host and conduct a Kick-Off TIM with representatives from Government at the Contractor's facility within thirty (30) calendar days after contract award and cover the following minimum topics:

A. Introductions and roles and responsibilities of the Contractor and the Government;
B. High level milestone schedule;
C. Contractor teaming arrangements;
D. Receivable and deliverable expectations;
E. Insight into the Contractors' commercial systems, processes and practices; and
F. The operations cadence planned for the I&T campaign.

6.1.1. GLIMR Observatory and Launch Segment Services Design, Planning, and Analyses [CLIN 1]

The Contractor shall:

A. Develop a plan to perform all engineering design activities (electrical, structural, mechanical, thermal, optical) required to meet the integration, test, and operational requirements in this contract;
B. Define the GLIMR Payload/GLIMR Spacecraft Mechanical and Thermal ICD, the GLIMR Payload/GLIMR Spacecraft Electrical ICD, and the GSDS/GMOC ICD;

   NOTE: *The items specified in the "GLIMR Payload to Host IDD" reference document shall not be changed by the Contractor when finalizing the documents required in DRL/DRD TE-01 unless otherwise approved by the Contracting Officer.*
C. Develop the plans to operate the GLIMR Observatory post launch, consistent with the contract Requirements;
D. Develop and maintain a Verification and Validation Plan and Matrix that documents the approach for meeting the contract requirements;
E. Design electrical, mechanical, thermal, and software GLIMR Spacecraft interfaces to accommodate hosting the GLIMR Payload; this shall include addressing the various physical and functional design elements of the accommodation flight hardware and Ground Support Equipment (GSE);

F. Develop a thermal model and provide analyses report of the thermal interaction between the GLIMR Spacecraft (including any other payloads) and GLIMR Payload;
G. Manage the development of a Launch Vehicle coupled loads analysis and report results in accordance with the Launch Vehicle Coupled Loads Analysis and Dynamics Environment Report;
H. Develop a GLIMR Spacecraft bus disturbance contributions to GLIMR Payload LOS jitter model; and
I. Develop the GLIMR Launch Segment to fulfill the contract requirements.

6.2. Plan GLIMR Spacecraft to GLIMR Payload Integration [CLIN 1]

The Contractor shall:

A. Verify the contract requirements and interface design are compatible with the GLIMR Spacecraft and GLIMR Ground Segment;
B. Develop the plans and procedures to handle, operate, test, inspect, calibrate, purge, and store the GLIMR Payload during integration and test, consistent with the contract requirements;
C. Evaluate GSE available for the GLIMR Payload integration and test (including availability of Contractor-provided GSE at the GLIMR Spacecraft integration facility) to determine all necessary GSE needed to support integration of the GLIMR Payload onto the GLIMR Spacecraft, including GSE; not already identified in the Government provided list;
D. Design and fabricate, as necessary, GSE specific to the GLIMR Spacecraft integration facility that is needed to integrate and test the GLIMR Payload; and
E. Develop the GLIMR Spacecraft's (electrical, mechanical, thermal, and software) interfaces to accommodate hosting the GLIMR Payload; this shall include addressing the various physical and functional design elements of the accommodation flight hardware and Ground Support Equipment (GSE).

6.3. Design, Integrate, and Test the GLIMR Ground Segment [CLIN 1]

6.3.1. GLIMR Ground Segment Design, Analysis, and Integration [CLIN 1]

The contractor's information systems will be incidental to any NASA IT system and shall be operated as a nonfederal information system. Non-NASA data is part of this effort, and the entirety of the systems will be Contractor-owned and Contractor-operator.

The Contractor shall:

A. Validate interfaces to ensure adequate data transmission including bit loss analysis and operational data throughput;
B. Perform the necessary requirements development and design efforts required for the GLIMR Ground Segment, including interfaces, and data handling;
C. Provide the infrastructure and communication paths required to route data and commands between the GLIMR Observatory and GMOC to meet the contract requirements;

D. Provide the infrastructure and communication paths required to route data and commands between the GMOC and GSDS to meet the contract requirements;
E. Provide all logistical support required to maintain the infrastructure and communication paths to route data and commands between the GLIMR Observatory and GMOC to meet the contract requirements;
F. Provide all logistical support required to maintain the infrastructure and communication paths to route data and commands between the GMOC and GSDS to meet the contract requirements; and
G. Develop the plans and procedures to demonstrate GLIMR Observatory through GLIMR Ground Segment to GMOC/GSDS meet the contract requirements.

6.3.1.1. GLIMR Payload Operations [CLIN 1]

The Contractor shall:

A. Develop and test the GMOC for the purposes of supporting GLIMR payload on-orbit checkout, and science operations planning that provide for the acquisition, processing, storing, and distributing of GLIMR payload data;
B. Develop all required operator interfaces at the GMOC to display, monitor, and analyze the GLIMR payload operating state, operating condition, and trended behavior;
C. Support the GLIMR Payload operation and observation planning;
D. Build the associated commands and command loads for GLIMR payload operations; and
E. Provide effective communication means for contact and coordination among the GSDS and GMOC.

6.3.2. GLIMR Ground Segment Testing and Readiness [CLIN 1]

The Contractor shall:

A. Verify the GLIMR Ground Segment performance meets system requirements;
B. Verify the GLIMR GMOC performance meets system requirements;
C. Verify the GLIMR Ground Segment performance meets system interfaces;
D. Verify the GMOC performance meets system interfaces; and
E. Perform a GLIMR Ground Segment Interface Test in accordance with Section 6.3.2, System Level Integration and Testing.

6.3.3. GLIMR Spacecraft and Ground Segment Simulators [CLIN 1]

The Contractor shall:

A. Develop a GLIMR Spacecraft Simulator and GMOC Simulator(s), that is designed to represent the interfaces to the GLIMR Payload and GLIMR Ground Segment/GSDS per the ICDs and shall have the following capabilities; and

    1. Simulates GLIMR Spacecraft commanding of the GLIMR Payload with rate and periodicity configurable to accommodate the GLIMR Payload Command Dictionary;

2. Collects GLIMR Payload engineering data and science telemetry, via the GLIMR Payload simulator;
3. Simulates the GLIMR Observatory data stream, downlinked to the simulated GLIMR Ground Segment, distributed to representative GMOC and GSDS, with embedded simulated GLIMR Payload data that:
    a. Is configurable to accommodate the GLIMR Payload Telemetry Dictionary/Processing;
    b. Can directly de-commutate simulated GLIMR Payload data from other GLIMR Spacecraft data;
    c. Provides access to the collected data stream prior to hardware available downlink;
    d. Simulates the GLIMR Spacecraft and GLIMR Ground Segment basic processing of the data (Science and Engineering);
    e. Provides error checking, removing overlaps, and gap filling;
    f. Simulates the granularity of the data to be received by GMOC and GSDS; and
    g. Represents data flow configuration detailed in the ICDs
4. Provides a timing pulse to the GLIMR Payload simulator in the format which will be utilized during operations;
5. Provides a IMU representative data to the GLIMR Payload simulator in the format which will be utilized during operations; and
6. Simulates pre-defined anomaly responses to pre-defined faults.

B. For simulator(s) in 6.3.1A above:

1. Comply with cleanliness requirements (if applicable), handling constraints, and operating constraints documentation; and
2. Deliver harnesses corresponding to the harness from the simulator interface to the GLIMR Payload simulator connectors.

6.4. Perform GLIMR Payload to GLIMR Spacecraft Integration [CLIN 1]

The Government will coordinate the transfer of the GLIMR Payload and Payload-specific GSE to the Contractor. After the successful completion of the ATSIR, the ownership of the GLIMR Payload will transition to the Contractor.

6.4.1. GLIMR Payload Delivery, Receipt, Inspection, and Handling [CLIN 1]

The Contractor shall:

A. Provide a work area and access for Government personnel (reference SOW Section 4.3, On- Site Representatives) to prepare for and perform GLIMR checkout activities (i.e., unpacking and initial checkout of the GLIMR Payload at the spacecraft processing facility) that meets the following minimum requirements;

1. Class 100,000 (or better) clean room area (minimum of 12ft x 12ft) that includes all necessary accommodations to handle and store the GLIMR Payload, including; and
    a. Environmental controls and N2 purge;

b. 120 VAC Power;
c. Crane for lifting the flight Payload; and
d. Cleanroom-compatible Table (minimum of 4ft x 8ft).

2. Area adjacent to clean area (minimum of 10ft x 10ft) that includes:

a. Two computer stations;
b. 120 VAC Power for the GLIMR Payload and GSE operations;
c. Network access; and
d. Electronic Support Fixture/ESD Bench.

B. Be accountable for the GLIMR Payload after completion of the post-ship testing through the period up to successful completion of the ATSIR. The Government will test the GLIMR Payload prior to transfer of accountability to the Contractor at the Contractor's facility for integration with the spacecraft;
C. Upon receipt of the GLIMR Payload, store and secure the GLIMR Payload and Payload-specific GSE at the spacecraft processing facility in accordance with the contract requirements, and the Contractor's commercial practices;
D. Operate and physically handle the GLIMR Payload, in coordination with the Government personnel, by providing power, command link, and data transfer via the spacecraft bus and associated spacecraft GSE;
E. Provide logistical support required for the receipt, unpacking, and transport of the GLIMR Payload from the Contractor's receiving area to the clean room area; and
F. Store the GLIMR Payload shipping container, packing material, and Payload-specific GSE until launch of the spacecraft and ship the GLIMR Payload shipping container and Payload- specific GSE to a Government-selected location upon request of the Government COR. The Contractor shall dispose of any packing crates or material as requested by the Government COR.

6.4.2. GLIMR Payload to GLIMR Spacecraft Integration [CLIN 1]

The Contractor shall:

A. Integrate the GLIMR Payload with the GLIMR spacecraft and perform the required environmental and interface testing to demonstrate that the GLIMR Observatory meets the contract requirements;
B. Deliver as-planned and as-run procedures, test data, and results associated with all Contractor Integration and Test Procedures; and
C. Provide access for Government personnel (reference SOW Section 4.3, On-Site Representatives) to the installed GLIMR Payload so that the Government can perform contamination swab inspections, and so Government personnel can take photographs of the GLIMR Payload throughout I&T and before final GLIMR Observatory close-out prior to launch.

6.5. Perform GLIMR Observatory Testing, and Pre-Launch Processing [CLIN 1]

The Contractor shall:

A. Perform the following tests on the GLIMR Observatory and report the results in the Verification Reports; and
B. Verify and provide associated objective evidence that the GLIMR Observatory performance meets system and interface requirements in accordance with the contract requirements, ICDs, and the V&V Plan and Matrix.

Test Description	Test Requirement	Test occurrence
GLIMR Payload Alignment Test	The Contractor shall measure alignment of the GLIMR Payload to the GLIMR Spacecraft.	1. Post GLIMR Payload integration with GLIMR Spacecraft. 2. Post dynamics test. 3. Post thermal vacuum test.
Electromagnetic Self Compatibility Test	The GLIMR Observatory, in a Contractor- certified Electromagnetic Interference and Compatibility (EMI/EMC) chamber, shall demonstrate power on compatibility of the GLIMR Spacecraft, other payloads (if any) and the GLIMR Payload while all are operating.	1. During Environmental Testing
GLIMR Payload Full Functional Test	1. The Contractor shall perform functional tests of the GLIMR Payload after integration. 2. Full Functional tests shall include: • Demonstration of all GLIMR Spacecraft to GLIMR Payload commands and safety actions including: power on and safing commands • Release launch locks, if applicable • Science imaging with or without GLIMR Payload supplied stimulus • Demonstration of all GLIMR Payload to GLIMR Spacecraft telemetry. • Reset the launch locks, if applicable • Relay GLIMR Payload data to GLIMR Ground Segment (During End-to-End test only)	1. Post integration with the GLIMR Spacecraft. 2. During Electromagnetic Self Compatibility Test 3. During Spacecraft Thermal Vacuum Test 4. During End-to-End Test 5. Post shipment to launch site.
GLIMR Limited Functional Test	1. The Contractor shall perform limited functional tests on the GLIMR Payload after each stage of environmental testing. 2. Limited Functional tests shall include: • Demonstration of a selected set of GLIMR Spacecraft to GLIMR Payload commands 3. Science imaging with or without GLIMR Payload supplied stimulus	1. Post GLIMR Observatory dynamics test. 2. Post GLIMR Observatory acoustics test (if applicable).
Spacecraft Dynamics Test	1. The GLIMR Observatory, in a Contractor-certified dynamics facility, shall verify contract requirements during dynamics testing with accelerometers and other sensors as needed to verify the Coupled Loads Analysis.	1. GLIMR Observatory dynamics test

Spacecraft Acoustics Test, if applicable	1. The GLIMR Observatory, in a Contractor-certified acoustics facility, shall verify contract requirements during acoustics testing with accelerometers and other sensors as needed to support the test.	1. Post GLIMR Observatory acoustics test
Ground Segment Interface Test	1. The Contractor shall perform testing of the communication paths and processes between the GMOC to the GSDS.	1. Prior to End-to-End Test
End-to-End Test	1. The Contractor shall perform end-to-end testing of the uplink and downlink data paths from the GLIMR Payload through the GLIMR Spacecraft to the GLIMR Ground Segment, at the full GLIMR Payload data rate. *Note: The Contractor may perform the End-to-End Test as part of GLIMR Observatory Thermal Vacuum Test.*	1. Post-Integration, but prior to GLIMR Observatory Ship to Launch Site
Observatory Thermal Vacuum Test	1. The Contractor shall test the GLIMR Observatory in a Thermal Vacuum Test in order to correlate integrated GLIMR Payload/GLIMR Spacecraft thermal models and verify contract requirements. 2. The Contractor shall utilize temperature sensors located on and/or in the GLIMR Payload; perform Full/Limited functional tests at hot, cold, and nominal thermal conditions, a minimum of four cycles, adequate to confirm GLIMR Payload functionality and connectivity over temperatures; and validate thermal models. 3. The Contractor shall, for all GLIMR Spacecraft-controlled GLIMR Payload survival heater zones, verify the functionality of all GLIMR Spacecraft monitored Platinum Resistance Thermometers (PRTs) and demonstrate survival heater telemetry monitoring and control capabilities.	1. Prior to GLIMR Observatory Ship to Launch Site

6.5.1. Flight System Readiness, Pre-Ship, Launch Site Preparations [CLIN 1]

The Contractor shall in coordination with the Government COR:

A. Conduct a GLIMR Observatory functional test post shipment to Launch Segment Facility that includes GLIMR Payload full functional test per Section 6.3.2;
B. Integrate the GLIMR Observatory to the Launch Segment;
C. Perform the “Remove before Flight” items per the contract requirements; and
D. Take close-out photography of the GLIMR Observatory.

6.6. Launch and Perform GLIMR Observatory In-Orbit Checkout [CLIN 1]

The Contractor shall:

A. Launch the GLIMR Observatory to an Earth viewing orbit;
B. Transit the GLIMR Observatory to the contract requirement GEO location;
C. Provide and conduct (in coordination with the Government) a GLIMR Observatory In-Orbit Checkout while the Observatory is transitioning to the contract requirement GEO location;
D. Conduct a GLIMR Payload On-Orbit checkout prior to the beginning of the GLIMR Mission Baseline Operations period when the GLIMR Spacecraft has completed its own checkout, is located at the operational orbit, and has initiated power-on of the GLIMR Payload. The GLIMR Payload On-Orbit Checkout Period shall follow any required GLIMR Spacecraft checkout activities and/or outgassing periods required to meet On-Orbit contamination requirements;
E. Provide effective communication means for contact and coordination of GLIMR Payload operations among the GSDS and GMOC;
F. Conduct weekly meetings with the GSDS for GLIMR Payload operation and observation planning; and
G. Provide GLIMR Mission status reports during GLIMR Observatory In-Orbit checkout.

6.7. Perform GLIMR Mission On-Orbit Operations [CLIN 1]

A. Provide a 12-month GLIMR Mission Baseline Operations period following the GLIMR Payload On-Orbit Checkout period;
B. Provide effective communication means for contact and coordination of GLIMR Payload operations among the GSDS and GMOC;
C. Conduct weekly meetings with the GSDS for GLIMR Payload operation and observation planning; and
D. Provide GLIMR Mission status reports during GLIMR On-Orbit operations in the MPSR.

6.8. Extended Operations [CLINs 2 and 3]

The Contractor shall perform any required extended operations after completion of the Mission Operations Base Period and any previously exercised Extended Operations option period in accordance with all applicable requirements of this SOW.