Developed under U.S. Govt. Contract No. 80LARC21DA002

ALL SHEETS ARE THE SAME REVISION STATUS

REVISION HISTORY				
ZONE	REV	DESCRIPTION	DATE	APPROVED
	B	AUTHORIZED BY CN1831708	SEE PDM FOR APPROVAL	
CREO MAINTAINED. CHANGES SHALL BE INCORPORATED BY THE DESIGN ACTIVITY.				

NOTES - UNLESS OTHERWISE SPECIFIED

1. INTERPRET DRAWING PER ASME-Y14.100
2. DELETED
3. DELETED
4. DELETED
5. DELETED
6. SEE TABLE I FOR CONNECTOR AND REFERENCE DESIGNATOR LIST
7. HANDLE AND PROTECT ELECTROSTATIC DISCHARGE SENSITIVE ASSEMBLY PER HP 10-00101
8. DELETED
9. SENSOR SUBSYSTEM MOUNTING INTERFACE IS LOCATED HERE
10. DELETED
11. SYMBOL DESIGNATES THE CENTER OF GRAVITY WITH A ±.500 TOLERANCE
12. REFER TO GLIMR INSTRUMENT-TO-HOST SPACECRAFT INTERFACE CONTROL DOCUMENT ICDD4957031-020 FOR APPROXIMATE MASS MOMENT OF INERTIA ABOUT UNIT CG
13. OVERALL UNIT WEIGHT EXCEEDS TWO MAN LIFT
14. AFTER SENSOR SUBASSY UNIT HAS BEEN REGISTERED ON MOUNTING DATUM A. TORQUE 12X NAS1351N6-16 FASTENERS WITH NAS620C6 WASHERS TO 47 - 53 FT-LBS. DO NOT LUBRICATE. TIGHTEN USING ALTERNATING TORQUE PATTERN
15. DELETED
16. AFTER PCU HAS BEEN REGISTERED ON MOUNTING ISOLATORS. TORQUE 18X NAS1351N3-16 FASTENERS WITH NAS620C6 WASHERS TO 66-73 IN-LBS. DO NOT LUBRICATE. TIGHTEN USING ALTERNATING TORQUE PATTERN
17. DELETED
18. AFTER DEB HAS BEEN REGISTERED ON THERMAL AND MECHANICAL MOUNTING SURFACE. TORQUE 4X NAS1351N08-12 FASTENERS WITH NAS620C8 WASHERS TO 40-44 IN-LBS. DO NOT LUBRICATE. TIGHTEN USING ALTERNATING TORQUE PATTERN
19. REQUESTED LOCATION AND ORIENTATION RELATIVE TO NASA STD HOST INTERFACE COORDINATE SYSTEM. FOR REFERENCE. THIS COORDINATE SYSTEM IS ORIENTED AS FOLLOWS:

    A. +Z IN THE DIRECTION OF NADIR
    B. +X IN THE DIRECTION OF ORBITAL VELOCITY
    C. +Y COMPLETES THE RIGHT-HANDED SYSTEM

20. GLIMR INSTRUMENT SHOULD BE CONNECTED TO A GASEOUS NITROGEN (GN2) SOURCE FOR CONTINUOUS PURGE AT ALL TIMES WHILE BEING INTEGRATED AT HOST FACILITY. GN2 SOURCE TO BE CONNECTED WHERE SHOWN
21. ALL GN2 USED IN THE PURGING SHALL MEET PURITY, WATER, HYDROCARBONS AS METHANE, AND PARTICULATE REQUIREMENTS OF MIL-PRF-27401, TYPE I, GRADE B, AT A MINIMUM, AND SHALL BE PASSED THROUGH A 0.5 MICROMETER ABSOLUTE OR FINER FILTER LOCATED AT THE POINT OF USE. COMPRESSED AIR SHALL NOT BE USED TO PURGE THE ASSEMBLY OR ITS COMPONENTS
22. SUGGESTED ORIENTATION AND LOCATION FOR THE PCU DUE TO THE MAXIMUM LENGTH OF CABLE W330A AT 50 INCHES
23. SUGGESTED ORIENTATION AND LOCATION FOR THE DEB DUE TO THE MAXIMUM LENGTH OF CABLE W303A AT 23.7 INCHES AND CABLE W320A AT 49.4 INCHES
24. BEARING RINGS SHALL BE PURGED USING BEARING PURGE STE IN SIX LOCATIONS. REMOVE BEARING PURGE STE BEFORE FLIGHT
25. DELETED
26. UNLESS OTHERWISE SPECIFIED, ALL DIMENSIONS ARE IN INCHES [MILLIMETERS]
27. ENSURE FIRST TIE DOWN POINT FOR CABLES COMING OFF THE PCU ARE LOCATED <20 INCHES FROM THE UNIT
28. ENSURE FIRST TIE DOWN POINT FOR CABLES COMING OFF THE DEB ARE LOCATED <12 INCHES FROM THE UNIT

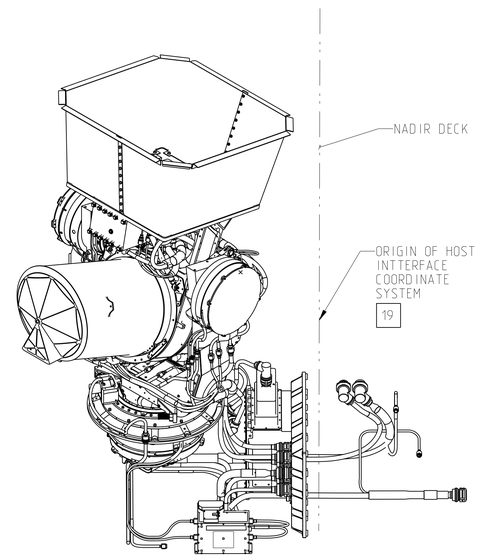

ISOMETRIC VIEW
IN STOWED ORIENTATION
FOR REFERENCE ONLY
SCALE 1/8

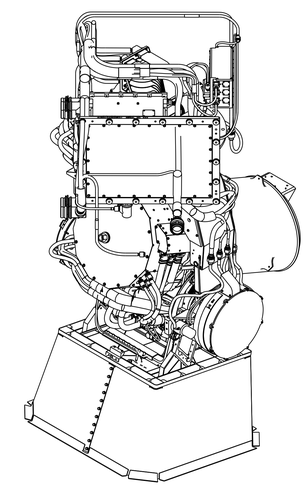

ISOMETRIC VIEW
IN STOWED ORIENTATION
FOR REFERENCE ONLY
SCALE 1/8

THIS DRAWING SHALL BE INTERPRETED IN ACCORDANCE WITH ASME Y14.100-2017

APPLICATION	
SEE PDM	SEE PDM
NEXT ASSY	USED ON

UNLESS OTHERWISE SPECIFIED
DIM ARE IN INCHES
TOL ON ANGLE ± 1.0°
2 PL ± .03 3 PL ± .010
INTERPRET DIM AND TOL IAW
ASME Y14.5M-1994

SEE PRODUCT DATA MANAGEMENT (PDM) FOR APPROVAL SIGNATURES

TITLE
INSTALLATION CONTROL DRAWING, GLIMR INSTRUMENT

SIZE	DAI	DRAWING NO
E	4U884	D4957031-500
SCALE: NONE		SHEET 1 OF 9

PROJECT: GLIMR
DWG #: D4957031-500
FILE NAME: D4957031-500
VER: 1
PROD: 22
DWG NO: D4957031-500
SH: 1

Developed under U.S. Govt. Contract No. 80LARC21DA002

REVISION HISTORY				
ZONE	REV	DESCRIPTION	DATE	APPROVED
	B	SEE SHEET 1	SEE PDM FOR APPROVAL	

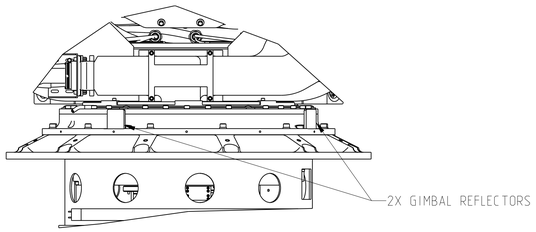

DETAIL G
SCALE 1/3

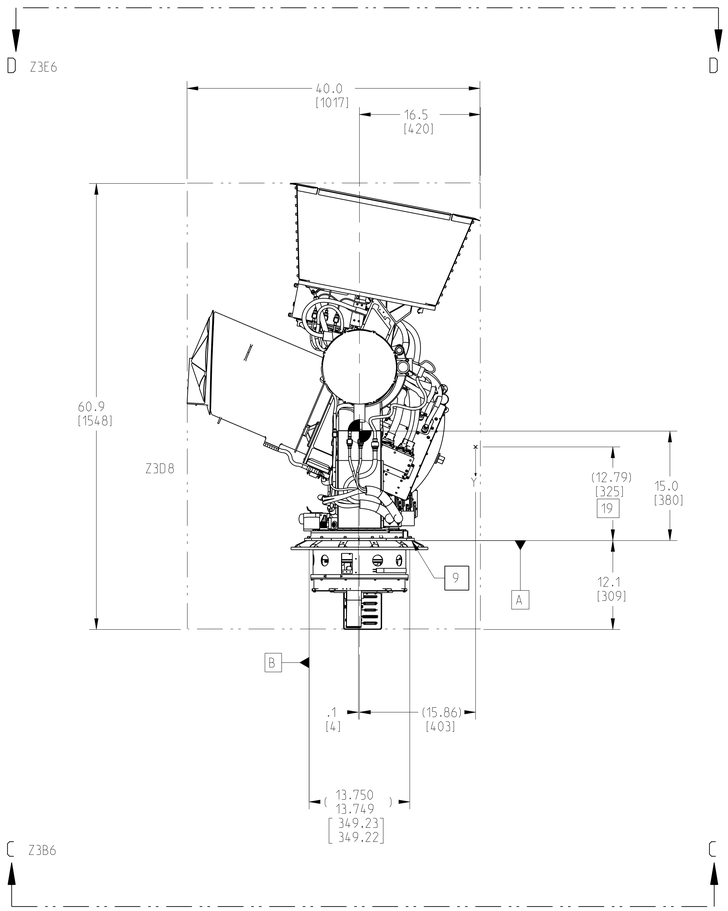

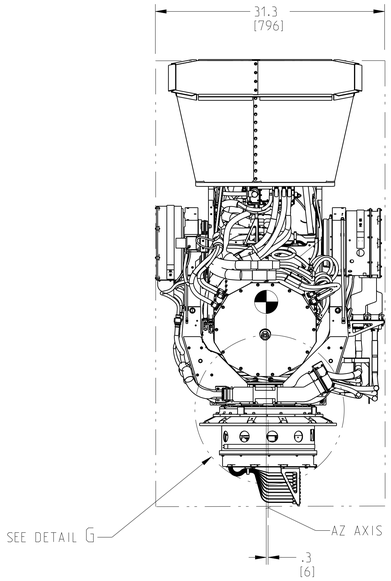

SENSOR ASSEMBLY CENTER OF GRAVITY	SIZE E	DAI 4U884	DRAWING NO D4957031-500	REV B
SEE PDM FOR APPROVAL SIGNATURES	SCALE: 1/8		SHEET 2	

D4957031-500 SH 2

Developed under U.S. Govt. Contract No. 80LARC21DA002

REVISION HISTORY				
ZONE	REV	DESCRIPTION	DATE	APPROVED
	B	SEE SHEET 1	SEE PDM FOR APPROVAL	

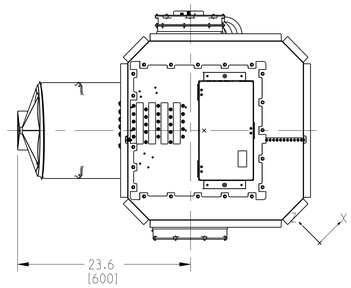

VIEW D-D
SH2

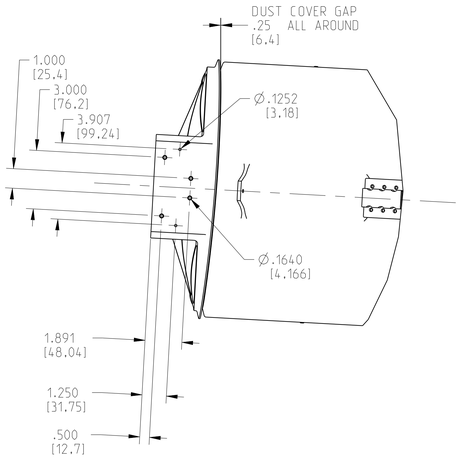

SCALE 1/3

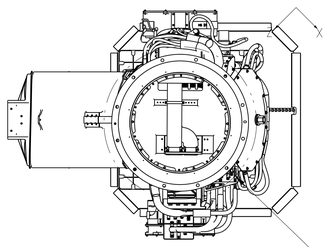

VIEW C-C
SH2

SEE DETAIL H

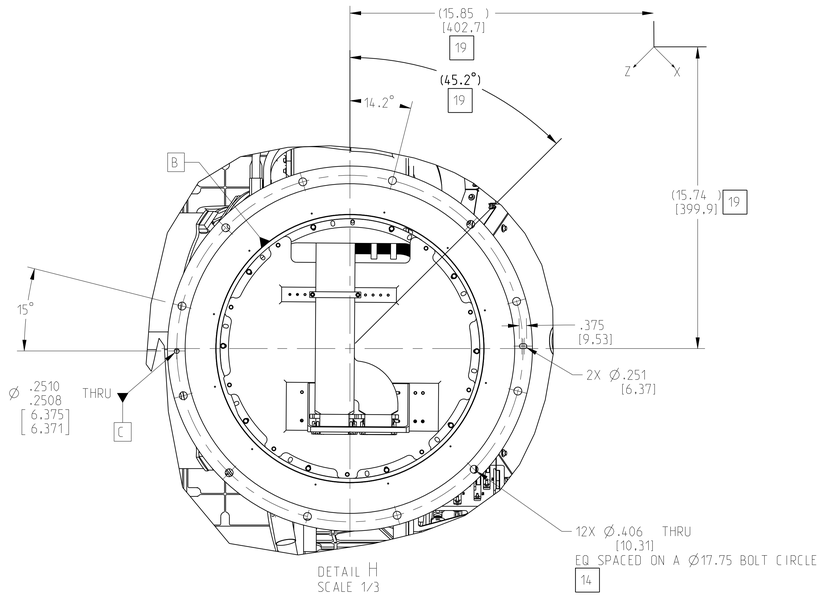

DETAIL H
SCALE 1/3

SENSOR ASSEMBLY AND DUST COVER INTERFACE	SIZE	DAI	DRAWING NO	REV
	E	4U884	D4957031-500	B
SEE PDM FOR APPROVAL SIGNATURES	SCALE: 1/8		SHEET 3	

SH 3
DWG NO D4957031-500
REQD NEXT ASSY
USED ON
FILE NAME D4957031-500
MODEL NO
DWG NO

Developed under U.S. Govt. Contract No. 80LARC21DA002

REVISION HISTORY				
ZONE	REV	DESCRIPTION	DATE	APPROVED
	B	SEE SHEET 1	SEE PDM FOR APPROVAL	

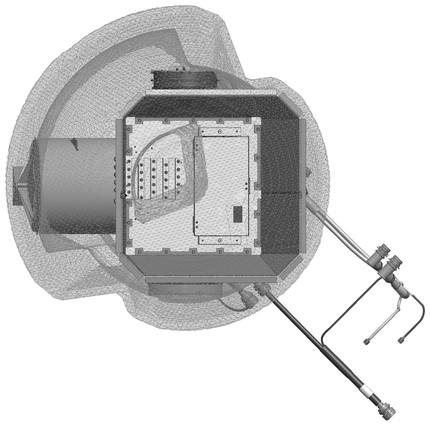

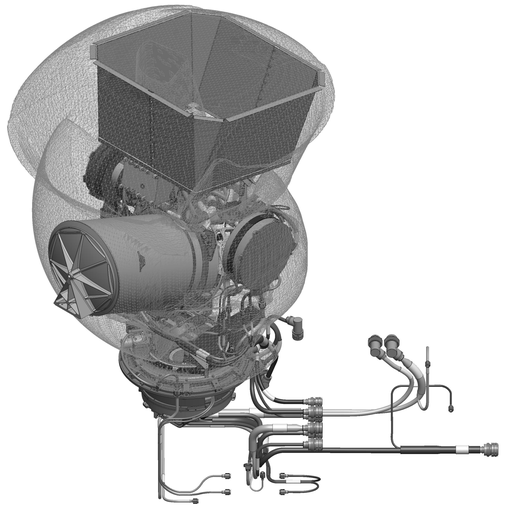

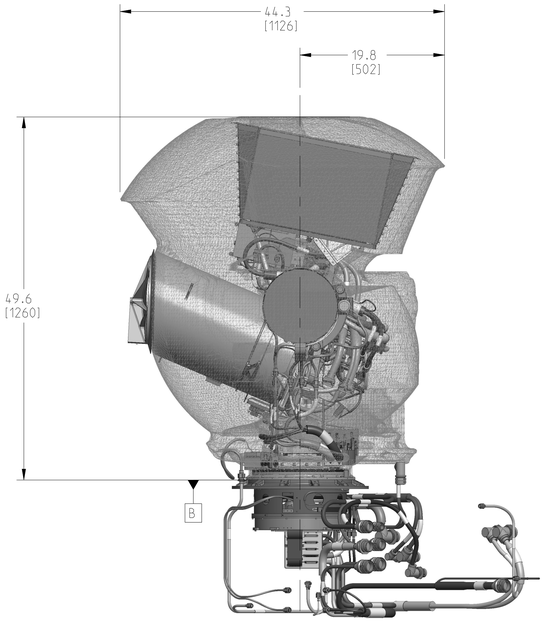

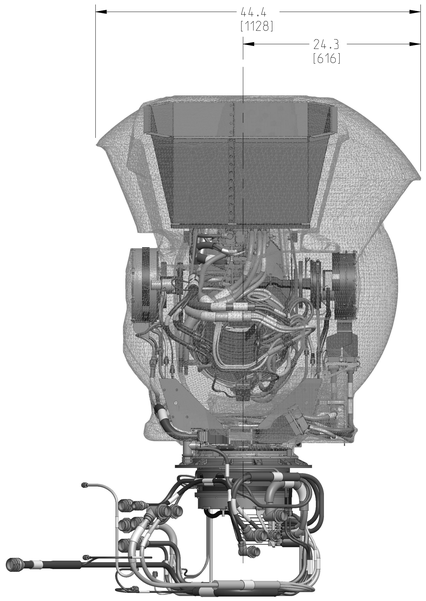

SENSOR ASSEMBLY VOLUME (SWEPT)

SEE PDM FOR APPROVAL SIGNATURES

SIZE	DAI	DRAWING NO	REV
E	4U884	D4957031-500	B
SCALE: 1/8		SHEET 4	

SH 4 | DWG NO D4957031-500 | REV B | SIZE E | FILE NAME D4957031-500 | MODEL D4957031-500

Developed under U.S. Govt. Contract No. 80LARC21DA002

REVISION HISTORY				
ZONE	REV	DESCRIPTION	DATE	APPROVED
	B	SEE SHEET 1	SEE PDM FOR APPROVAL	

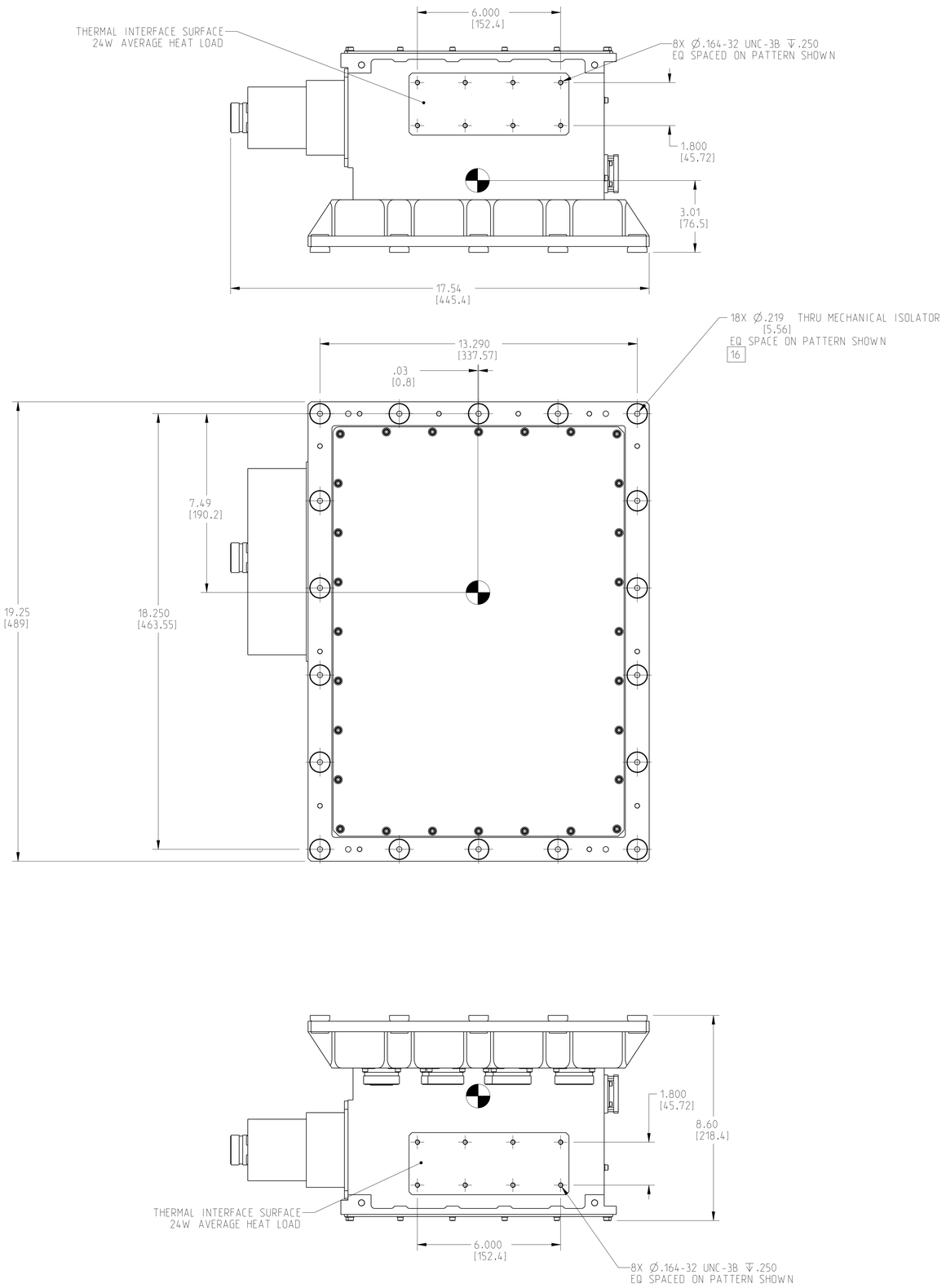

PCU INTERFACE	SIZE	DAI	DRAWING NO	REV
	E	4U884	D4957031-500	B
SEE PDM FOR APPROVAL SIGNATURES	SCALE: 1/2		SHEET 5	

SH 5 | DWG NO D4957031-500 | REV B | NEXT ASSY USED ON | FILE NAME D4957031-500

Developed under U.S. Govt. Contract No. 80LARC21DA002

REVISION HISTORY				
ZONE	REV	DESCRIPTION	DATE	APPROVED
	B	SEE SHEET 1	SEE PDM FOR APPROVAL	

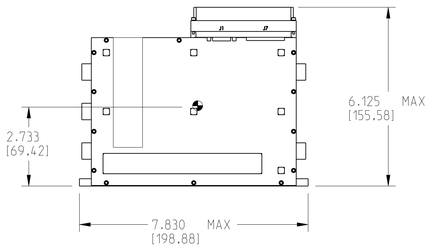

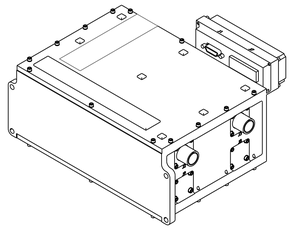

ISOMETRIC VIEW
FOR REFERENCE ONLY
SCALE 1/2

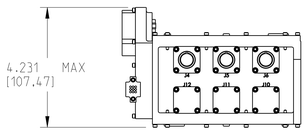

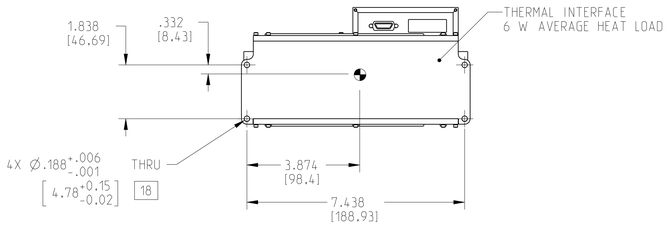

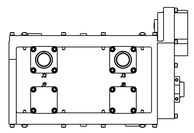

DEB INTERFACE	SIZE	DAI	DRAWING NO	REV
	E	4U884	D4957031-500	B
SEE PDM FOR APPROVAL SIGNATURES	SCALE: 1/2		SHEET 6	

SH 6
DWG NO D4957031-500
REV B
MODEL NAME D4957031-500
DWG NAME D4957031-500

Developed under U.S. Govt. Contract No. 80LARC21DA002

REVISION HISTORY				
ZONE	REV	DESCRIPTION	DATE	APPROVED
	B	SEE SHEET 1	SEE PDM FOR APPROVAL	

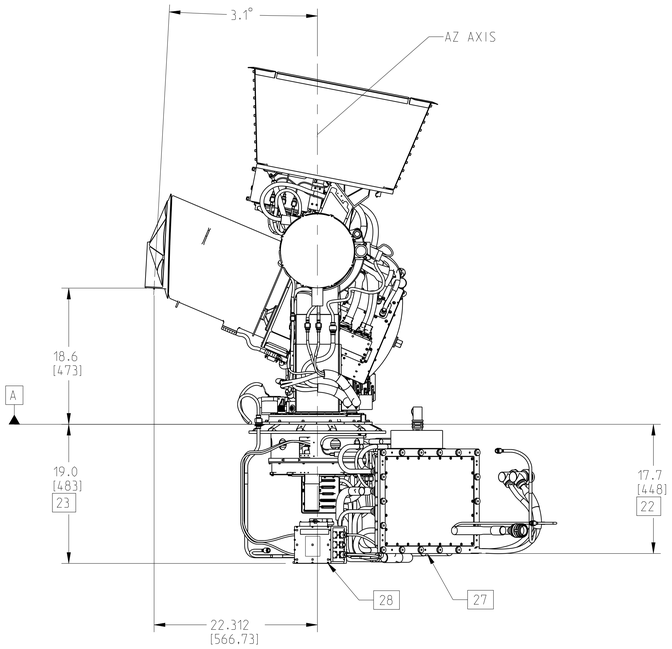

TABLE 1. CONNECTORS		
REFERENCE DESIGNATORS	CONNECTOR PART NUMBER	DESCRIPTION
J1	D38999/24GE35PN	SPACE WIRE & 1 PULSE PER SECOND
J2	D38999/24GD35PN	ANALOG TELEMETRY
J3	D38999/24GG35PN	POWER
J4	D38999/24GG35PA	LAUNCH LOCKS
J5	D38999/24GH35PN	SURVIVAL HEATERS
J6	D38999/24GH35PA	SURVIVAL HEATERS

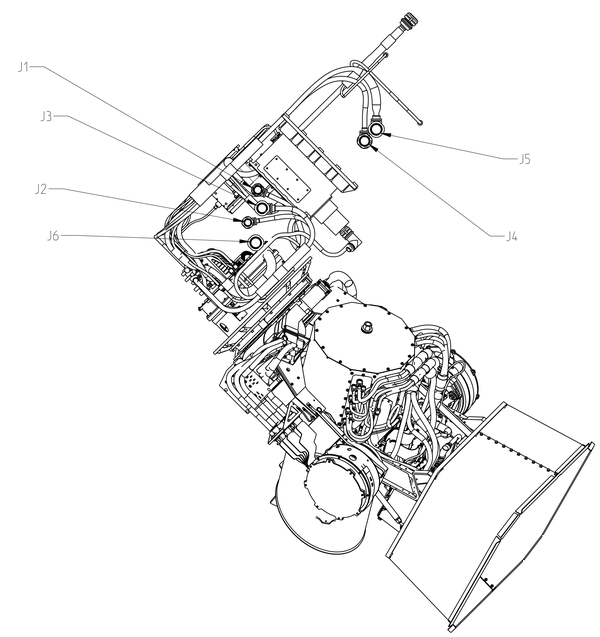

VIEW F-F

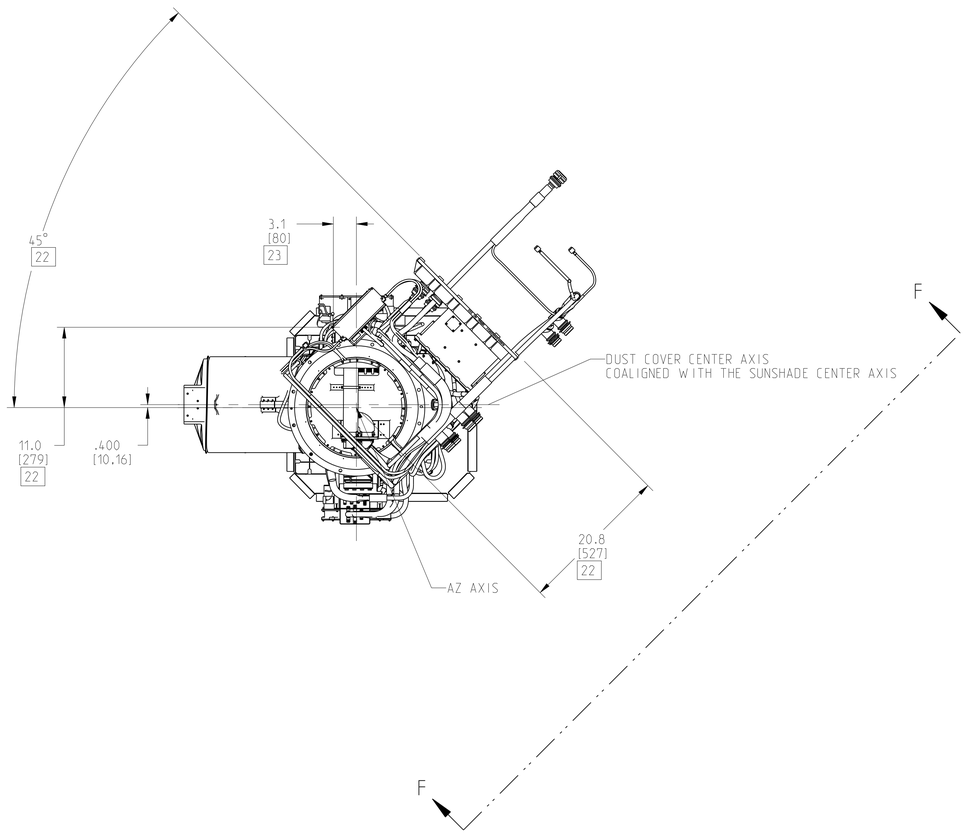

GLIMR PAYLOAD CONNECTOR INTERFACE	SIZE	DAI	DRAWING NO	REV
	E	4U884	D4957031-500	B
SEE PDM FOR APPROVAL SIGNATURES	SCALE: 1/8		SHEET 7	

D4957031-500 SH 7

PROJECT DWG

Developed under U.S. Govt. Contract No. 80LARC21DA002

REVISION HISTORY				
ZONE	REV	DESCRIPTION	DATE	APPROVED
	B	SEE SHEET 1	SEE PDM FOR APPROVAL	

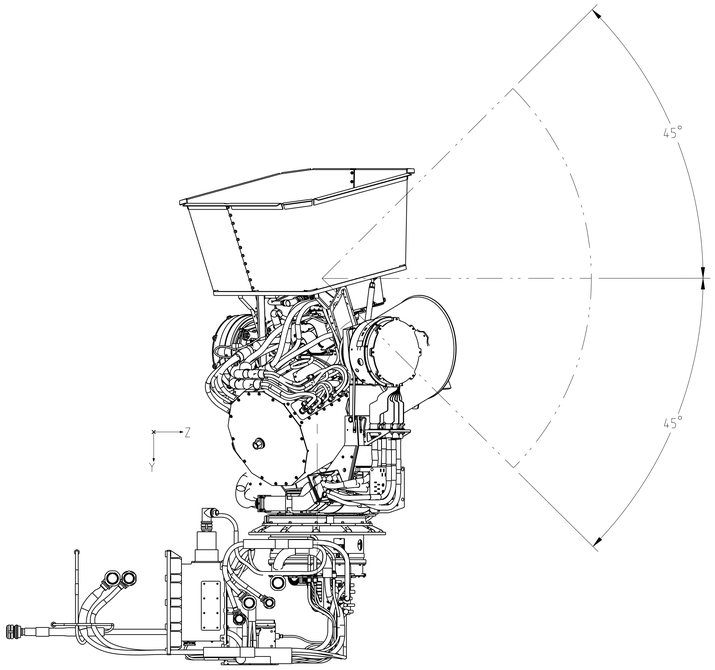

OPTICAL FOV KEEP OUT ZONE
VIEW ALONG GLOBAL X-AXIS
SCALE 1/8

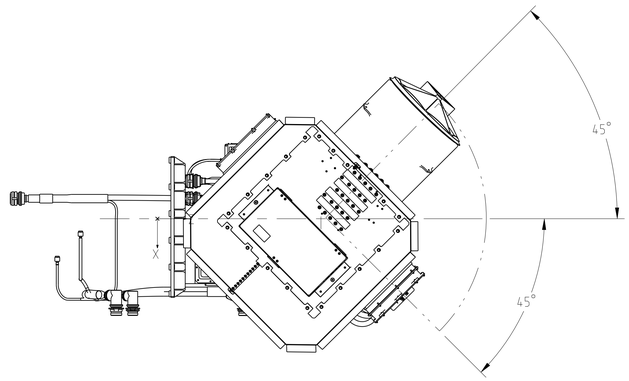

OPTICAL FOV KEEP OUT ZONE
VIEW ALONG GLOBAL Y-AXIS
SCALE 1/8

GLIMR PAYLOAD FOV	SIZE E	DAI 4U884	DRAWING NO D4957031-500	REV B
SEE PDM FOR APPROVAL SIGNATURES	SCALE: NONE		SHEET 8	

SH 8
D4957031-500
DWG NO
REV NO
VIEW
FILE NAME
D4957031-500
WIDTH
DWG

Developed under U.S. Govt. Contract No. 80LARC21DA002

REVISION HISTORY				
ZONE	REV	DESCRIPTION	DATE	APPROVED
	B	SEE SHEET 1	SEE PDM FOR APPROVAL	

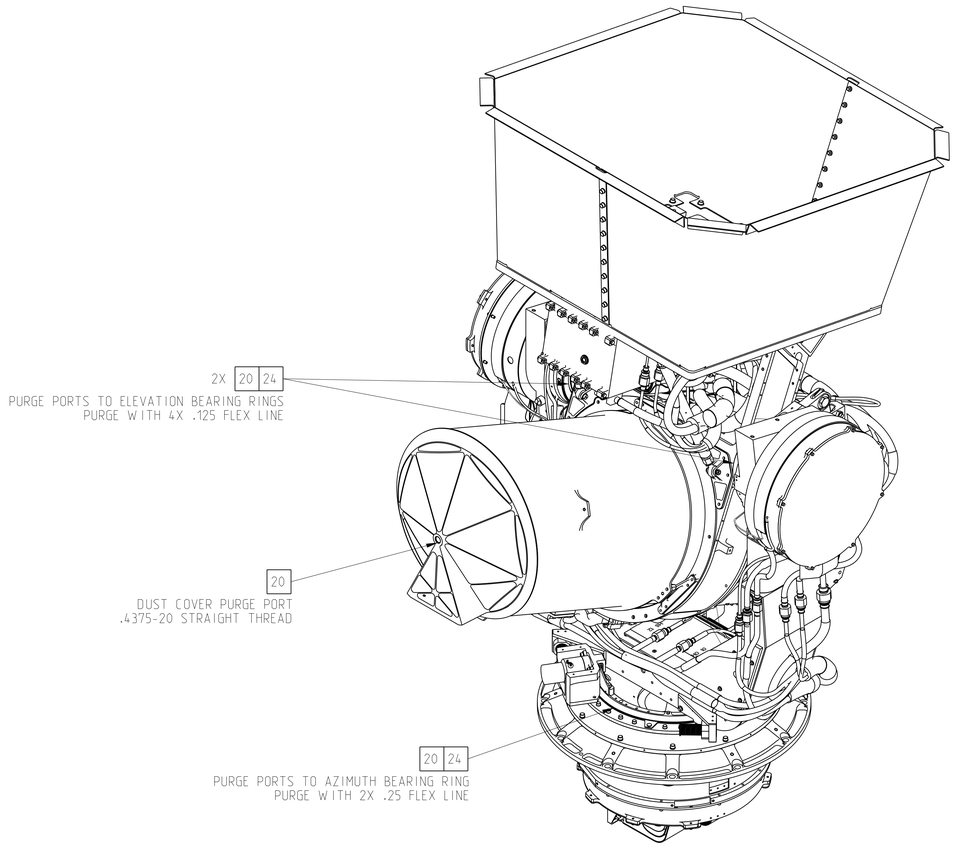

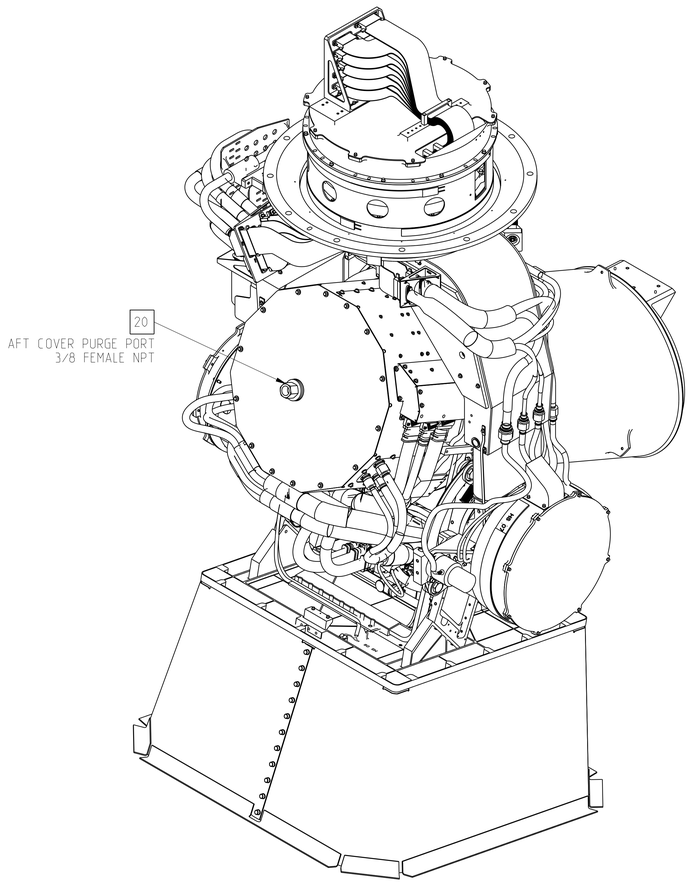

GLIMR PAYLOAD PURGE INTERFACE	SIZE E	DAI 4U884	DRAWING NO D4957031-500	REV B
SEE PDM FOR APPROVAL SIGNATURES	SCALE: 1/4		SHEET 9	

SH 9 | D4957031-500 | DWG NO | KOD NO | VER -22 | NEXT ASSY | USED ON | FINISH | DEBURR AND BREAK SHARP EDGES | PROJECT | DWG