MILL AND OVERLAY
MESS HALL PARKING LOT, B3451
WO# 7354307
MARINE CORPS AIR STATION
CHERRY POINT, NORTH CAROLINA

INDEX OF DRAWINGS

NAVFAC	SHEET NO.	SHEET	TITLE
12926325	1 OF 5	G-001	COVER SHEET
12926326	2 OF 5	C-001	GENERAL NOTES, LEGENDS, AND ABBREVIATIONS
12926327	3 OF 5	CD101	SITE PLAN – EXISTING CONDITIONS AND DEMOLITION
12926328	4 OF 5	CS101	SITE PLAN – NEW WORK
12926329	5 OF 5	CS501	DETAILS

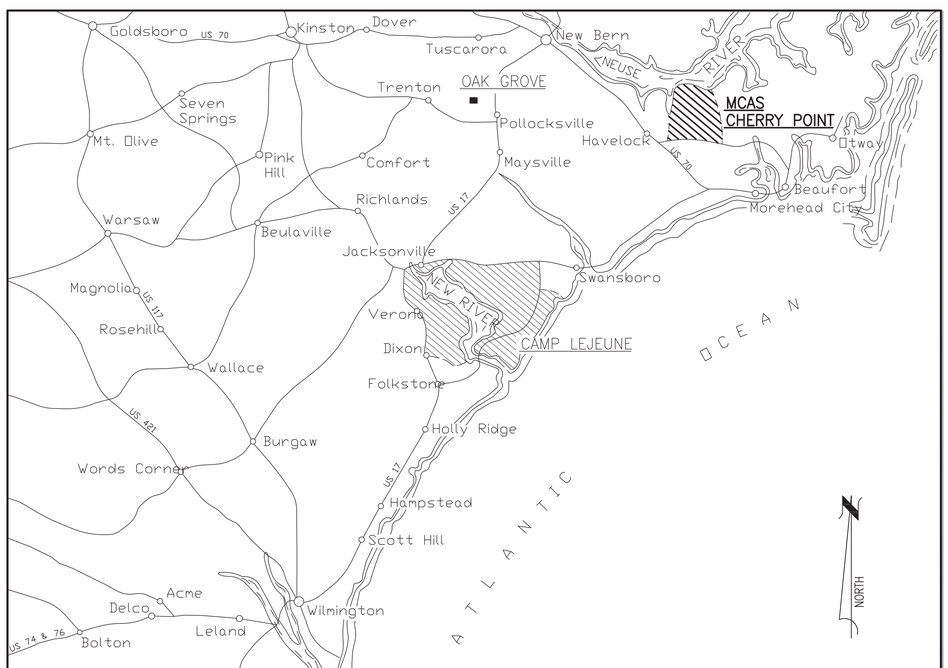

VICINITY MAP - MCAS CHERRY POINT, N.C.

SITE LOCATION MAP

STM	DESCRIPTION	DATE	APPR

Digitally signed by John K Avolis
NORTH CAROLINA PROFESSIONAL SEAL 15738 ENGINEER JOHN K. AVOLIS

SEAL

NRW ENGINEERING
Structural Consultants
748 Lord Dunmore Drive, Suite 101
Virginia Beach, VA 23464
Phone 757-474-0612
Fax 757-474-0919

A/E INFO

APPROVED

FOR COMMANDER NAVFAC

PERRY.HEATHER.MELYNN.1388599614 — Digitally signed by PERRY.HEATHER.MELYNN.1388599614 Date: 2026.06.15 14:33:53 -04'00'

DES	DRW	CHK
JKA	MSP	JKA

PM/DM

BRANCH MANAGER

CHIEF ENG/ARCH

FIRE PROTECTION

NAVAL FACILITIES ENGINEERING COMMAND ~ MIDATLANTIC
NAVAL STATION – NORFOLK, VA
DPT. MARINE CORPS
U.S. MARINE CORPS AIR STATION
CHERRY POINT, NORTH CAROLINA
MILL AND OVERLAY
MESS HALL PARKING LOT, B3451
COVER SHEET

PROJECT: 25061

A·E ENGINEERING P.A.
LICENSE NO. C-0705
AVOLIS ENGINEERING, P.A.
P.O. BOX 15564
NEW BERN, NC 28561
PH.(252) 633-0068

SCALE: AS NOTED

EPROJECT NO.:

MAXIMO WORK ORDER NO. 7354307

NAVFAC DRAWING NO. 12926325

SHEET 1 OF 5

G-001

DRAWFORM REVISION: 10 MARCH 2009

FILE NAME: 100 /REV WON3.DWG
PLOT DATE: May 6, 2026 2:39 PM

GENERAL CONSTRUCTION NOTES:

1. CONSTRUCTION OPERATIONS MUST BE COMPLETED IN COMPLIANCE WITH ALL STATE AND FEDERAL REGULATIONS AND AS SPECIFIED.
2. THE PLANS DEPICT THE GENERAL INTENT OF CONSTRUCTION. THE CONTRACTOR MUST PROTECT ALL EXISTING FEATURES THAT MUST REMAIN. ANY ITEM DAMAGED AS A RESULT OF THE CONTRACTOR'S OPERATIONS MUST BE RESTORED TO ITS ORIGINAL CONDITION OR REPLACED WITH NEW.
3. DIMENSIONS AND CONDITIONS SHOWN ARE APPROXIMATE AND ARE ACCURATE AS OF THE TIME OF SITE INSPECTION. THE CONTRACTOR MUST CONFIRM TO HIS OWN SATISFACTION SITE CONDITIONS INCLUDING A VERIFICATION OF CONDITIONS SHOWN AND NOT SHOWN.
4. ADJACENT STRUCTURES AND UTILITIES MUST REMAIN IN OPERATION DURING CONSTRUCTION ACTIVITIES. EXISTING ROADS MUST REMAIN OPEN AND ACCESSIBLE BY VEHICULAR AND PEDESTRIAN TRAFFIC. IF ROADWAY CLOSURE IS REQUIRED, APPROVAL MUST BE SECURED FROM THE CONTRACTING OFFICER. THE CONTRACTOR MUST PROVIDE BARRICADES, LIGHTS, SIGNAGE AND OTHER PROTECTIVE DEVICES IN ACCORDANCE WITH THE MANUAL OF UNIFORM TRAFFIC CONTROL DEVICES (MUTCD).
5. THE CONTRACTOR MUST PROVIDE FENCING, BARRICADES OR OTHER PROTECTIVE DEVICES TO MAINTAIN A SECURED WORK AREA AT ALL TIMES.
6. PRIOR TO STARTING CONSTRUCTION ON ANY STRUCTURES OR UTILITIES, THE CONTRACTOR MUST FAMILIARIZE HIMSELF WITH THE EXISTING CONDITIONS OF ANY STRUCTURES AND UTILITIES. THE CONTRACTOR MUST DEVELOP A PLAN OF CONSTRUCTION THAT ENSURES ALL ACTIVITIES ARE COMPLETED IN A SAFE MANNER. PROVIDE ANY TEMPORARY SHORING, SHEETING OR SUPPORT REQUIRED TO COMPLETE WORK IN A SAFE MANNER.
7. COMPLETELY REMOVE ALL STRUCTURE AND UTILITIES INDICATED, BOTH ABOVE GROUND AND BELOW GROUND.
8. ALL EXCAVATIONS CREATED BY CONSTRUCTION ACTIVITIES MUST BE BACKFILLED WITH COMMON FILL, MUST BE GRADED TO CREATE POSITIVE DRAINAGE, AND MUST BE VEGETATED IN ACCORDANCE WITH THE PROJECT VEGETATION PLAN. GRAVEL AND PAVED SURFACES MUST BE RESTORED TO THEIR ORIGINAL CONDITION.
9. ALL EROSION CONTROL FEATURES SHOWN MUST BE INSTALLED PRIOR TO CONSTRUCTION ACTIVITIES STARTING.
10. THE CONTRACTOR MUST MINIMIZE DUST GENERATED FROM CONSTRUCTION ACTIVITIES BY WET METHODS OR OTHER APPROVED METHODS.
11. WHERE ROADS, SIDEWALKS, ETC ARE INDICATED TO BE CUT AND PATCHED, EACH MUST BE REMOVED AND REPLACED ALONG NEAT SAWCUT LINES, AND TO THE NEAREST JOINT WHERE IT EXISTS.
12. ANY FILL MATERIAL REQUIRED TO ESTABLISH THE FINISH GRADES SHOWN MUST BE OBTAINED FROM A PROPERLY PERMITTED BORROW PIT. ANY EXCESS SOIL MATERIAL GENERATED FROM CONSTRUCTION ACTIVITIES MUST BE DISPOSED OF OFF OF THE GOVERNMENT PROPERTY.

UTILITY CONSTRUCTION NOTES:

1. THE LOCATION AND DEPTHS OF EXISTING UTILITIES SHOWN ARE APPROXIMATE. THE CONTRACTOR MUST SECURE THE SERVICES OF A PROFESSIONAL UTILITY LOCATE CONTRACTOR AND 811 LOCATE SERVICE TO MARK ALL EXISTING UTILITIES IN THE AREA OF WORK. UTILITY MARKINGS MUST BE MAINTAINED FOR THE DURATION OF CONSTRUCTION ACTIVITIES.
2. ALL UTILITY LINES TO REMAIN MUST REMAIN ACTIVE AND MUST BE PROTECTED DURING CONSTRUCTION ACTIVITIES.
3. EXISTING UTILITIES MUST NOT BE INTERRUPTED WITHOUT THE APPROVAL OF THE CONTRACTING OFFICER.
4. ALL ELECTRICAL WORK MUST BE COMPLETED IN ACCORDANCE WITH THE NATIONAL ELECTRIC CODE.

HAZARDOUS AND OTHER MATERIAL SPECIAL HANDLING NOTES:

1. THE CONTRACTOR MUST REMOVE AND LEGALLY DISPOSE OF ALL CONSTRUCTION WASTE AND EXCESS MATERIAL OFF OF THE BASE PROPERTY. THE CONTRACTOR MUST COMPLY WITH ALL STATE, LOCAL AND FEDERAL HAULING AND DISPOSAL REGULATIONS.
2. BURNING ON THE BASE PROPERTY IS NOT PERMITTED.
3. IF SUSPECTED AREAS OF SOIL OR GROUNDWATER CONTAMINATION ARE ENCOUNTERED DURING CONSTRUCTION ACTIVITIES, WORK IN THE AFFECTED AREA MUST STOP AND THE CONTRACTING OFFICER MUST BE NOTIFIED IMMEDIATELY TO CONFIRM SITE CONDITIONS.
7. MONITORING WELLS EXIST IN THE AREA OF WORK. ALL MONITORING WELLS MUST BE PROTECTED FROM DEMOLITION ACTIVITIES BY THE CONTRACTOR. ANY DAMAGE MUST BE REPAIRED BY THE CONTRACTOR AT HIS OWN EXPENSE. REPORT ANY DAMAGE TO THE CONTRACTING OFFICER IMMEDIATELY.

SPECIAL SEEDING NOTE:

TEMPORARY: ALL DENUDED AREAS WILL, WITHIN 7 DAYS OF STOPPING GRADING ACTIVITIES AT ANY PHASE OF CONSTRUCTION, BE PLANTED AND PROVIDED WITH TEMPORARY OR PERMANENT GROUND COVER, DEVICES, OR STRUCTURES SUFFICIENT TO RESTRAIN EROSION.

PERMANENT: ALL DENUDED AREAS WILL, WITHIN 7 DAYS OF COMPLETION OF CONSTRUCTION, BE PROVIDED PERMANENT GROUND COVER.

NOTE:

ALL FILL MATERIAL NEEDED TO EXECUTE THIS PROJECT MUST BE OBTAINED FROM AN NCDEQ NCDEMLR PERMITTED BORROW PIT.

CIVIL LEGEND

EXISTING/DEMO	DESCRIPTION	NEW
	WATER VALVE	
	TELECOMMUNICATIONS MANHOLE	
	SANITARY SEWER MANHOLE	
	STORM DRAIN MANHOLE	
CO	CLEANOUT	
	STORM DRAIN DROP INLET	
	FIRE HYDRANT	
TPED	COMMUNICATIONS PEDESTAL	
	UTILITY POLE/POLE WITH LIGHT	
	GUY WIRE	
	DITCH/SWALE CENTERLINE	
S	SANITARY SEWER (GRAVITY)	
D	STORM SEWER	
W	WATER	
OHE	OVERHEAD ELECTRICAL	
UGE	UNDERGROUND ELECTRICAL	
FO	UNDERGROUND FIBER OPTIC	
UGC	UNDERGROUND COMMUNICATIONS	
UGS	UNDERGROUND STEAM	
	CONCRETE	
	ASPHALT	PROPOSED ASPHALT
	ASPHALT DEMOLITION	
	SURVEY CONTROL POINT	
× 5.00	SPOT ELEVATIONS	50.7
25	CONTOUR LINES	
	SIGN	

ABBREVIATIONS

AC	ASBESTOS CEMENT (PIPE)
AIP	ABANDONED IN PLACE
APPROX.	APPROXIMATE/APPROXIMATELY
CI	CAST IRON (PIPE)
CJ	CONTRACTION JOINT
CMH	COMMUNICATIONS MANHOLE
CMP	CORRUGATED METAL PIPE
CMU	CONCRETE MASONRY UNIT
DIA, ø	DIAMETER
DI	(STORM DRAIN) DROP INLET
DI	DUCTILE IRON (PIPE)
DMH	DRAINAGE MANHOLE
EJ	EXPANSION JOINT
EX, EXIST	EXISTING
HOR	HORIZONTAL
HVAC	HEATING VENTILATION AND A/C
INV	INVERT
JBOX	ELECTRIC JUNCTION BOX
LF	LINEAR FOOT/FEET
MAG	MAG NAIL (SURVEY CONTROL)
MAX	MAXIMUM
MH	MANHOLE
MIN	MINIMUM
OHE	OVERHEAD ELECTRIC
OC	ON CENTER
OD	OUTSIDE DIAMETER
RCP	REINFORCED CONCRETE PIPE
STA	STATION
SMH	SANITARY SEWER MANHOLE
TBM	TEMPORARY SITE BENCHMARK
TON	TOP OF (VALVE) NUT
TYP	TYPICAL
XFMR	PAD MOUNTED ELECTRIC TRANSFORMER
YH	YARD HYDRANT

SYM	DESCRIPTION	DATE	APPR

Digitally signed by John K Avolis

NRW ENGINEERING
Structural Consultants
748 Lord Dunmore Drive, Suite 101
Virginia Beach, VA 23464
Phone 757-474-0612
Fax 757-474-0919

A/E INFO

APPROVED

FOR COMMANDER NAVFAC

ACTIVITY

SATISFACTORY TO DATE

DES. JKA DRW MSP CHK JKA

PM/DM

BRANCH MANAGER

CHIEF ENG/ARCH

FIRE PROTECTION

NAVAL FACILITIES ENGINEERING COMMAND ~ MIDATLANTIC
NAVAL STATION ~ NORFOLK, VA
PT MARINE CORPS
U.S. MARINE CORPS AIR STATION
CHERRY POINT, NORTH CAROLINA
MILL AND OVERLAY
MESS HALL PARKING LOT, B3451
GENERAL NOTES, LEGENDS, AND ABBREVIATIONS

PROJECT: 25061

LICENSE NO. C-0706
AVOLIS ENGINEERING, P.A.
P.O. BOX 15564
NEW BERN, NC 28561
PH.(252) 633-0068

SCALE: AS NOTED
EPROJECT NO.:
MAXIMO WORK ORDER NO. 7354307
NAVFAC DRAWING NO. 12926326
SHEET 2 OF 5
C-001

DRAWFORM REVISION: 10 MARCH 2009

FILE NAME: 100 (REV WON).DWG
PLOT DATE: May 6, 2026 2:39 PM

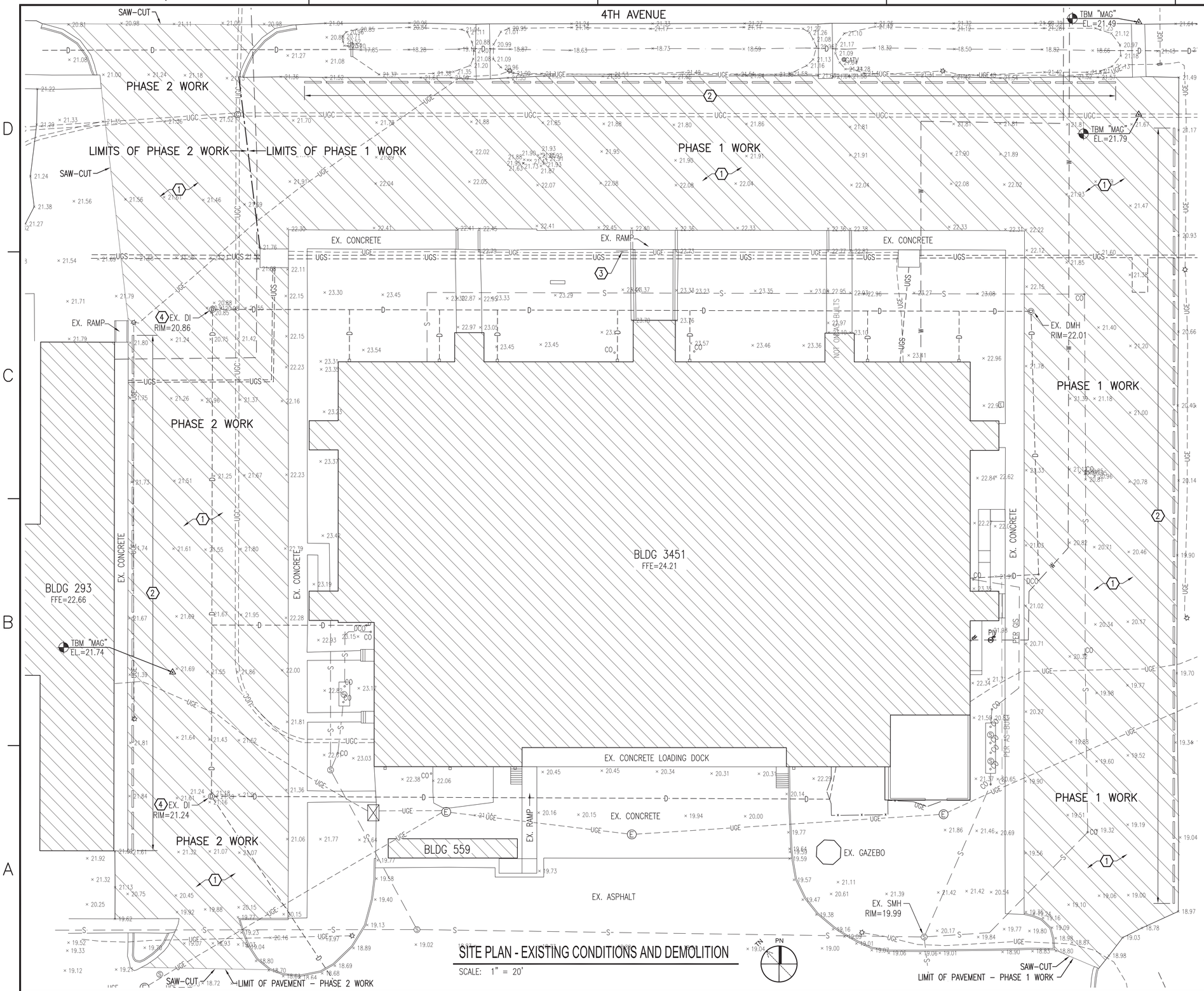

SITE PLAN - EXISTING CONDITIONS AND DEMOLITION

SCALE: 1" = 20'

GENERAL CONSTRUCTION NOTES:

1. THE LOCATION AND DEPTHS OF EXISTING UTILITIES SHOWN ARE APPROXIMATE. THE CONTRACTOR MUST BE RESPONSIBLE FOR SCANNING THE AREA OF WORK TO IDENTIFY TO HIS OWN SATISFACTION THE EXTENT OF UTILITIES PRESENT INCLUDING THE UTILITIES INDICATED TO BE PRESENT, THOSE NOT SHOWN, AND THOSE SHOWN TO BE IN A DIFFERENT LOCATION.
2. PHYSICAL SITE FEATURES OUTSIDE THE AREA OF WORK OR THOSE FEATURES NOT RELEVANT TO THE WORK BEING PERFORMED ARE NOT SHOWN FOR CLARITY.
3. ALL AREAS DISTURBED DURING CONSTRUCTION MUST BE RESTORED IN ACCORDANCE WITH THE PROJECT VEGETATION PLAN. SEE DETAIL C5, SHEET CS501.

CONSTRUCTION WORK ITEMS (THIS SHEET)

1. REMOVE EXISTING ASPHALT – THICKNESS VARIES. (1-1/2" THICK PER AS-BUILTS.)
2. REMOVE WHEEL STOPS.
3. REMOVE EXISTING SIGN.
4. PROVIDE FILTER FABRIC SEDIMENT BARRIER IN DROP INLET FRAME DURING CONSTRUCTION. REMOVE UPON PROJECT COMPLETION.

SPECIAL PROJECT SCHEDULING:

ALL PHASE 1 WORK MUST BE COMPLETED PRIOR TO STARTING PHASE 2 WORK.

SYM	DESCRIPTION	DATE	APPR

Digitally signed by John K Avolis
NORTH CAROLINA PROFESSIONAL SEAL 15738 ENGINEER JOHN K. AVOLIS
SEAL

NRW ENGINEERING
Structural Consultants
748 Lord Dunmore Drive, Suite 101
Virginia Beach, VA 23464
Phone 757-474-0612
Fax 757-474-0919

A/E INFO

APPROVED

FOR COMMANDER NAVFAC

ACTIVITY

SATISFACTORY TO DATE

DES JKA | DRW MSP | CHK JKA

PM/DM

BRANCH MANAGER

CHIEF ENG/ARCH

FIRE PROTECTION

NAVAL FACILITIES ENGINEERING COMMAND ~ MIDATLANTIC
NAVAL STATION – NORFOLK, VA
IPT MARINE CORPS
U.S. MARINE CORPS AIR STATION
CHERRY POINT, NORTH CAROLINA
MILL AND OVERLAY
MESS HALL PARKING LOT, B3451
SITE PLAN - EXISTING CONDITIONS AND DEMOLITION

PROJECT: 25061

LICENSE NO. C-0706
AVOLIS ENGINEERING, P.A.
P.O. BOX 15564
NEW BERN, NC 28561
PH.(252) 633-0068

SCALE: AS NOTED
EPROJECT NO.:
MAXIMO WORK ORDER NO. 7354307
NAVFAC DRAWING NO. 12926327
SHEET 3 OF 5
CD101

DRAWFORM REVISION: 10 MARCH 2009

FILE NAME: 100 (REV. WOND).DWG
PLOT DATE: May 6, 2026 2:39 PM

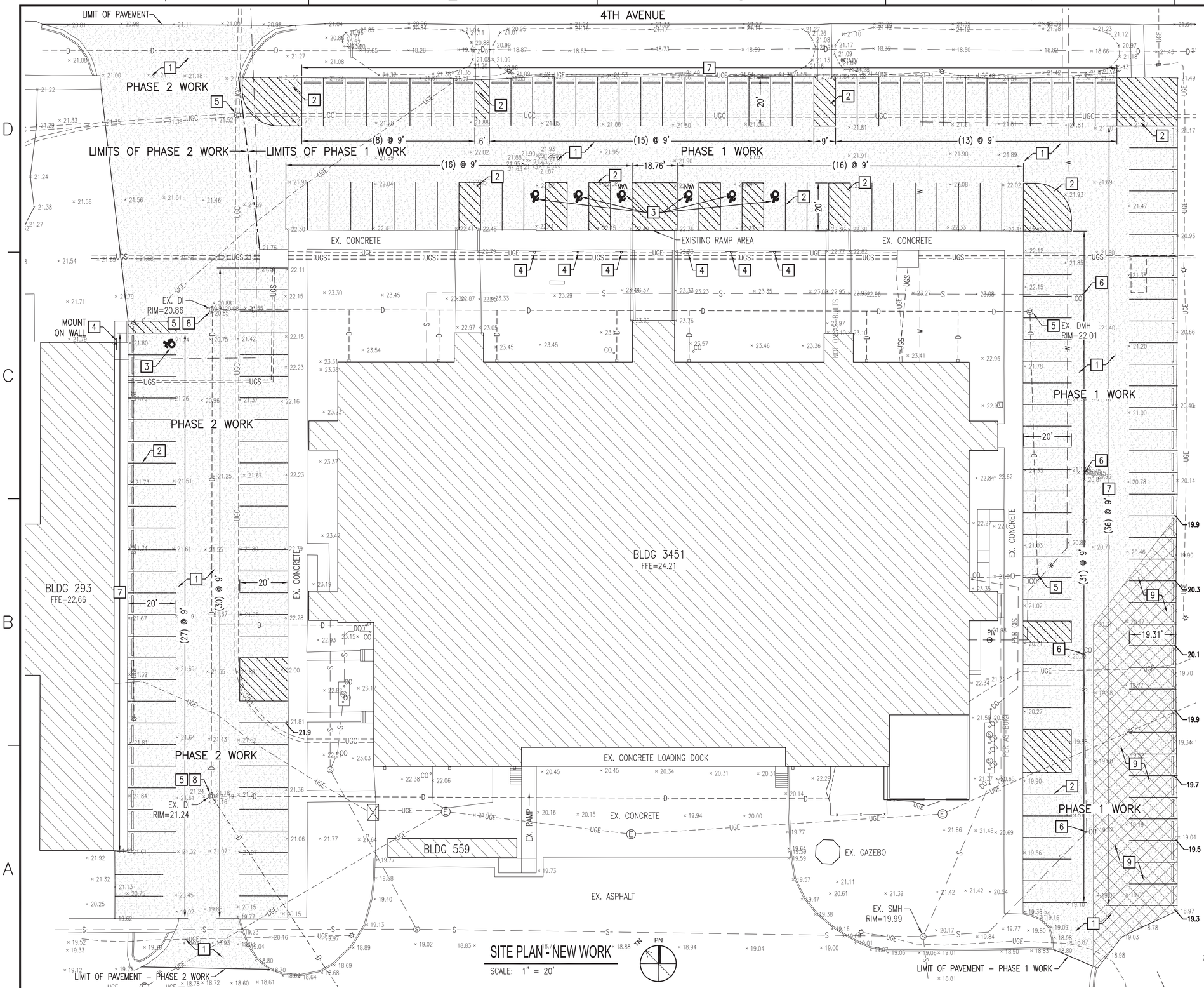

SITE PLAN - NEW WORK

SCALE: 1" = 20'

GENERAL CONSTRUCTION NOTES:

1. THE LOCATION AND DEPTHS OF EXISTING UTILITIES SHOWN ARE APPROXIMATE. THE CONTRACTOR MUST BE RESPONSIBLE FOR SCANNING THE AREA OF WORK TO IDENTIFY TO HIS OWN SATISFACTION THE EXTENT OF UTILITIES PRESENT INCLUDING THE UTILITIES INDICATED TO BE PRESENT, THOSE NOT SHOWN, AND THOSE SHOWN TO BE IN A DIFFERENT LOCATION.
2. PHYSICAL SITE FEATURES OUTSIDE THE AREA OF WORK OR THOSE FEATURES NOT RELEVANT TO THE WORK BEING PERFORMED ARE NOT SHOWN FOR CLARITY.
3. ALL AREAS DISTURBED DURING CONSTRUCTION MUST BE RESTORED IN ACCORDANCE WITH THE PROJECT VEGETATION PLAN. SEE DETAIL C5, SHEET CS501.

CONSTRUCTION WORK ITEMS (THIS SHEET)

1. ASPHALT PAVEMENT – SEE DETAIL C1, SHEET CS501.
2. PAVEMENT MARKINGS – SEE DETAIL A1, SHEET CS501.
3. ACCESSIBLE MARKINGS – SEE DETAIL C3, SHEET CS501.
4. SIGNAGE – SEE DETAIL A3, SHEET CS501.
5. RAISE EXISTING COVER TO BE FLUSH WITH NEW PAVEMENT. RINGS ALLOWED.
6. RAISE EXISTING CLEANOUT TO BE FLUSH WITH NEW PAVEMENT.
7. PROVIDE WHEEL STOPS – SEE DETAIL A5, SHEET CS501.
8. PROVIDE FILTER FABRIC SEDIMENT BARRIER IN DROP INLET FRAME DURING CONSTRUCTION. REMOVE UPON PROJECT COMPLETION.
9. PROVIDE ABC STONE BASE THIS AREA TO ACHIEVE THE DESIGN GRADES SHOWN. GRADE AND COMPACT STONE PRIOR TO ASPHALT PLACEMENT.

SPECIAL PROJECT SCHEDULING:

ALL PHASE 1 WORK MUST BE COMPLETED PRIOR TO STARTING PHASE 2 WORK.

SYM	DESCRIPTION	DATE	APPR

Digitally signed by John K Avolis
NORTH CAROLINA PROFESSIONAL SEAL 15738 ENGINEER JOHN K. AVOLIS
SEAL

NRW ENGINEERING
Structural Consultants
748 Lord Dunmore Drive, Suite 101
Virginia Beach, VA 23464
Phone 757-474-0612
Fax 757-474-0919

A/E INFO

APPROVED

FOR COMMANDER NAVFAC

ACTIVITY

SATISFACTORY TO DATE

DES: JKA DRW: MSP CHK: JKA

PM/DM

BRANCH MANAGER

CHIEF ENG/ARCH

FIRE PROTECTION

NAVAL FACILITIES ENGINEERING COMMAND – MIDATLANTIC
NAVAL STATION – NORFOLK, VA
IPT MARINE CORPS
U.S. MARINE CORPS AIR STATION
CHERRY POINT, NORTH CAROLINA

MILL AND OVERLAY MESS HALL PARKING LOT, B3451

SITE PLAN - NEW WORK

PROJECT: 25061

SCALE: AS NOTED

EPROJECT NO.:

MAXIMO WORK ORDER NO. 7354307

NAVFAC DRAWING NO. 12926328

SHEET 4 OF 5

CS101

DRAWFORM REVISION: 10 MARCH 2009

A·E
LICENSE NO. C-0706
AVOLIS ENGINEERING, P.A.
P.O. BOX 15564
NEW BERN, NC 28561
PH.(252) 633-0068

FILE NAME: 100 (REV WON).DWG
PLOT DATE: May 6, 2026 2:39 PM

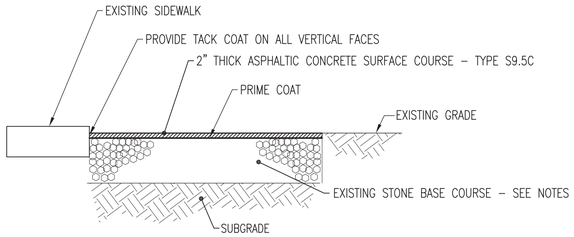

NOTE:

1. THE CONTRACTOR MUST GRADE AND COMPACT THE EXISTING STONE BASE PRIOR TO ASPHALT PLACEMENT.
2. THE CONTRACTOR MUST PROTECT THE STONE BASE AFTER PAVEMENT REMOVAL.
3. THE CONTRACTOR MUST PROVIDE AN AVERAGE OF ½" OF NEW ABC STONE BASE TO FILL VOIDS AND IRREGULARITIES IN EXISTING STONE BASE OVER THE ENTIRE PROJECT AREA.
4. IN THE AREA SHOWN WHERE GRADE ADJUSTMENTS MUST OCCUR, PROVIDE STONE THICKNESS TO ACHIEVE FINISH ASPHALT ELEVATIONS SHOWN.
5. EXISTING GRADING AND DRAINAGE PATTERNS MUST BE MAINTAINED, UNLESS OTHERWISE SHOWN.

C1 ASPHALT PAVEMENT

NOT TO SCALE

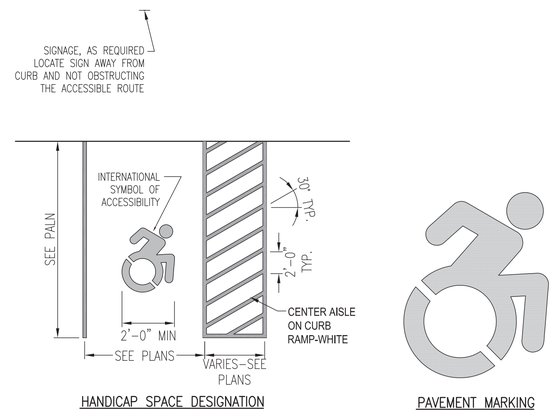

C3 ACCESSIBLE MARKINGS AND SIGNAGE

NOT TO SCALE

TEMPORARY VEGETATIVE SEEDING
(PRIOR TO ESTABLISHING PERMANENT VEGETATION)

AFTER COMPLETION OF GRADING ACTIVITIES AND THE CONSTRUCTION OF SWALES, ALL EXPOSED AREAS MUST BE SEEDED TO THE FOLLOWING SPECIFICATIONS:

SEED BED

LIME	1-1/2 TON PER ACRE
FERTILIZER	1/2-TON PER ACRE

SEED

RYE GRAIN	50 LBS PER ACRE
TALL FESCUE	100 LBS PER ACRE

SUPPLEMENTAL SEED

MAY THROUGH AUGUST:

CENTIPEDE	5 LBS PER ACRE

PROCEDURE

STRAW MULCH MUST BE APPLIED AT A RATE WHICH WILL INSURE APPROXIMATELY 75% COVERAGE OF THE SEEDED AREA. THE STRAW AND SOWN SEED WILL BE LIGHTLY DISCED INTO THE BED TO GIVE IT FURTHER RESISTANCE TO BLOWING AND WASHING. THE CONTRACTOR MUST GUARANTEE A FULL STAND OF GRASS OVER THE ENTIRE DISTURBED AREA. IF NECESSARY THE CONTRACTOR WILL WET DOWN THE AREAS TO ASSIST IN SEED GERMINATION OR AID IN GROWTH IN TIMES OF EXCESSIVELY DRY WEATHER. A STAND OF GRASS WILL BE CONSIDERED ACCEPTABLE WHEN THE ENTIRE STAND OF GRASS IS AT LEAST FOUR INCHES HIGH AND HAS ACHIEVED AT LEAST 95% COVERAGE OF DISTURBED AREAS. RESEEDING WILL BE REQUIRED AS NECESSARY BY THE CONTRACTOR TO OBTAIN THE SPECIFIED STAND OF GRASS.

PERMANENT VEGETATION

ALL DISTURBED AREAS NOT COVERED WITH BUILDINGS, PAVEMENTS, OR OTHER IMPERMEABLE SURFACES MUST BE SODDED WITH CENTIPEDE SOLID SOD AS THE FINAL/PERMANENT VEGETATION.

REFERENCE SPECIFICATION SECTION 02 82 30 "RE-ESTABLISHING VEGETATION" FOR SPECIFIC SOD INSTALLATION AND SOD BED PREPARATION REQUIREMENTS.

SPECIAL SEEDING NOTE:

ALL DENUDED AREAS WILL, WITHIN 7 CALENDAR DAYS OF COMPLETION OF ANY PHASE OF GRADING OR CEASING OF GRADING ACTIVITIES, BE PLANTED AND PROVIDED WITH TEMPORARY OR PERMANENT GROUND COVER, DEVICES, OR STRUCTURES SUFFICIENT TO RESTRAIN EROSION.

ALL DENUDED AREAS WILL, WITHIN 7 DAYS OF COMPLETION OF CONSTRUCTION, BE PROVIDED PERMANENT GROUND COVER.

C5 VEGETATION PLAN

NOT TO SCALE

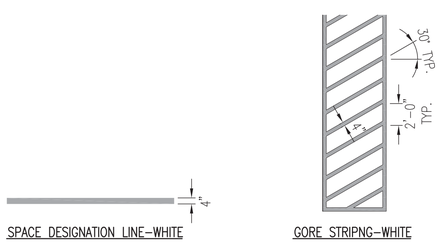

SPACE DESIGNATION LINE–WHITE

GORE STRIPNG–WHITE

NOTE:

1. THE CONTRACTOR MUST PROVIDE TEMPORARY PAVEMENT MARKINGS IN ACCORDANCE WITH THE PAVEMENT STRIPING PLAN WITHIN 3 DAYS AFTER THE INSTALLATION OF PAVEMENT FOR EACH PHASE OF CONSTRUCTION.
2. THE TEMPORARY PAVEMENT MARKINGS MUST BE MAINTAINED FOR A MINIMUM OF 30 DAYS (PAVEMENT CURING PERIOD) AFTER THE SECOND PHASE OF PAVEMENT INSTALLATION HAS BEEN COMPLETED.
3. AFTER THE PAVEMENT CURING PERIOD, THE CONTRACTOR MUST INSTALL PERMANENT PAVEMENT MARKINGS ON PHASE I AND II PAVEMENT AREAS IN ACCORDANCE WITH THE PAVEMENT MARKING PLANS.

A1 PAVEMENT MARKINGS

NOT TO SCALE

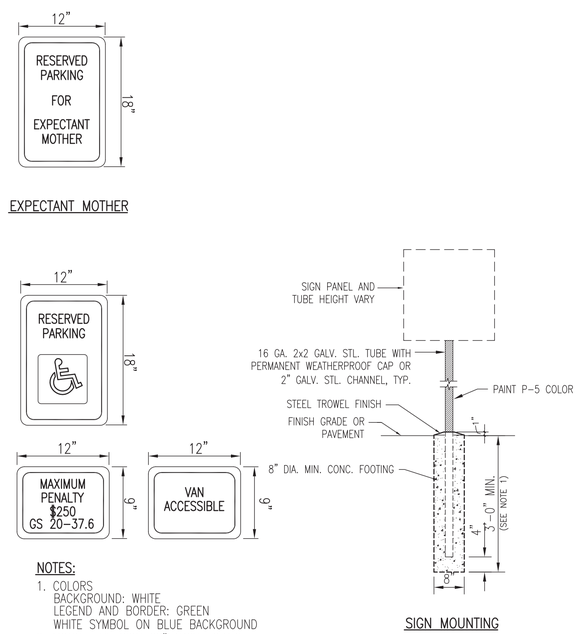

NOTES:

1. COLORS
   BACKGROUND: WHITE
   LEGEND AND BORDER: GREEN
   WHITE SYMBOL ON BLUE BACKGROUND
2. MOUNT THE SIGN 60" ABOVE GRADE.

HANDICAP PARKING SIGNAGE

ALL SIGNAGE TO CONFORM TO US DEPARTMENT OF TRANSPORTATION FEDERAL HIGHWAY ADMINISTRATION MANUAL ON UNIFORM TRAFFIC CONTROL DEVICES (MUTCD), 2009 EDITION.

A3 SIGNAGE

NOT TO SCALE

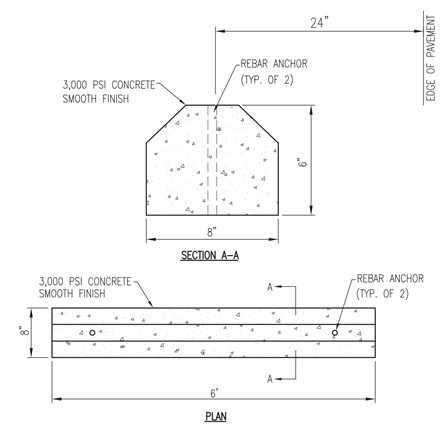

A5 CONCRETE WHEEL STOP

NOT TO SCALE

SYM	DESCRIPTION	DATE	APPR

Digitally signed by John K Avolis

NORTH CAROLINA PROFESSIONAL SEAL 15738 ENGINEER JOHN K. AVOLIS

SEAL

NRW ENGINEERING
Structural Consultants
748 Lord Dunmore Drive, Suite 101
Virginia Beach, VA 23464
Phone 757-474-0612
Fax 757-474-0919

A/E INFO

APPROVED

FOR COMMANDER NAVFAC

ACTIVITY

SATISFACTORY TO DATE

DES: JKA DRW: MSP CHK: JKA

PM/DM

BRANCH MANAGER

CHIEF ENG/ARCH

FIRE PROTECTION

NAVAL FACILITIES ENGINEERING COMMAND ~ MIDATLANTIC
NAVAL STATION – NORFOLK, VA
BY MARINE CORPS
U.S. MARINE CORPS AIR STATION CHERRY POINT, NORTH CAROLINA
MILL AND OVERLAY
MESS HALL PARKING LOT, B3451
DETAILS

PROJECT: 25061

SCALE: AS NOTED

EPROJECT NO.:

MAXIMO WORK ORDER NO.: 7354307

NAVFAC DRAWING NO.: 12926329

SHEET 5 OF 5

CS501

DRAWFORM REVISION: 10 MARCH 2009

LICENSE NO. C-0706
AVOLIS ENGINEERING, P.A.
P.O. BOX 15564
NEW BERN, NC 28561
PH.(252) 633-0068

FILE NAME: 100 (REV WON).DWG
PLOT DATE: May 6, 2026 2:39 PM