Bard®
SINCE 1914
Climate Control Solutions

Literature Assembly
911-0878

Contains the following:

2100-034(G)	User's Guide
2100-479	Leak Test, Evacuation, Charging
2100-787(B)	Wall Mount Pkg A/C Manual
2110-1470(B)	Replacement Parts Manual
7960-946	Supplemental 50HZ Instructions
7960-932(B)	8201-171BX CCM Instructions
7960-420(A)	Warranty

USER'S APPLICATION GUIDE AND TECHNICAL PRODUCT OVERVIEW

Manual: 2100-034G
Supersedes: 2100-034F
Date: 12-17-20

Bard Manufacturing Company, Inc.
Bryan, Ohio 43506
www.bardhvac.com

Bard®
SINCE 1914

BARDHVAC.COM

Climate Control Solutions

General Information

The User's Application Guide covers a wide range of heating and cooling products manufactured by Bard Manufacturing Company. It is intended to be a general guide for care and operation of typical systems and covers the most important features you should be aware of and are responsible for as the user of the equipment.

Because our product offerings are so varied and can be equipped with many features and options, it is not possible to cover all aspects of what your specific system may be configured for. Some systems may be quite simple in features to provide basic cooling and possibly heating, while other systems may also incorporate various ventilation technologies, dehumidification circuits and many different internal controls as well as room temperature controls. Therefore, you should request a detailed operation sequence and explanation of any special features from your installer and/or service company and also have them instruct you as to any routine maintenance procedures you are responsible for.

Contents

Overview 3
Documentation 4
Unit Literature Assembly – Documentation Provided with Your Units 4
Unit Installation 5
WALL MOUNT Products – Mounting the Product on Wall Surface 5
WALL MOUNT Products – Clearances for Outdoor Condenser Fan Airflow 6
WALL MOUNT Products – Clearances for Indoor Supply and Return Airflow 6
WALL MOUNT Products – Condensate and Defrost Drainage 7
I-TEC and Q-TEC Products – Installing the Product Inside a Room 8
I-TEC and Q-TEC Products – Clearances for Outdoor Condenser Fan Airflow 8
I-TEC and Q-TEC Products – Clearances for Indoor Supply and Return Airflow 9
I-TEC Air Path 9
Q-TEC Air Path 9
I-TEC and Q-TEC Products – Condensate Drainage 10
All Products – Power Supply Verification 11
Field-Supplied Voltage 11
Single and Three Phase Power 11
Hertz (Frequency) 11
Unit Maintenance 12
All Products – Filters and Filter Servicing 12
Outdoor Unit Wall Mount Room Air Filters 12
WALL MOUNT Products – Filters and Filter Servicing 13
I-TEC Indoor Products – Filters and Filter Servicing 14
Q-TEC Indoor Products – Filters and Filter Servicing 15
All Products – Coil Cleaning 16
Equipment Corrosion Protection 16
All Products – Condenser Airflow 17
Unit Operation 18
Air-to-Air Cooling Products (Air Conditioners) 18
Air-to-Air Cooling and Heating Products (Heat Pumps) 18
Cooling Mode 18
Heating Mode 18
Water-to-Air Cooling and Heating Products (Geothermal Heat Pumps) 19
Cooling Mode 19
Heating Mode 19
Water Supply Systems 19
Dehumidification and Ventilation Operation 20
Dehumidification (Air-to-Air or Water-to-Air Systems) 20
Ventilation Options (Air-to-Air or Water-to-Air Systems) 20
Troubleshooting 21
All Units – Troubleshooting 21

The User's Application Guide and Technical Product Overview covers the following products:

WALL MOUNT
Air Conditioners
and Heat Pumps

I-TEC®
Air Conditioners
and Heat Pumps

Q-TEC™
Air Conditioners
and Heat Pumps

The User's Application Guide and Technical Product Overview covers the following topics:

- Documentation provided by Bard for proper use of your new product.
- Unit installation guidelines.
- Routine unit maintenance.
- Unit operation.
- Unit troubleshooting.

Please use this guide as a general overview regarding unit application, maintenance and troubleshooting. Refer to product installation instructions and supplemental documentation provided with the unit or go to www.bardhvac.com for detailed individual product information.

Documentation

There are two sources of valuable information for your new Bard product:

- Documentation provided with your unit, normally located inside the unit control panel during shipping. This information should be saved once the unit is installed for future maintenance reference or to answer questions about equipment after installation.
- Documentation provided on the internet at www.bardhvac.com. This may be accessed from a desktop computer at the office, a laptop or an internet-capable cell phone at the worksite. Up-to-date documentation is available, along with specification sheets and other valuable resources regarding your new Bard product.

Unit Literature Assembly – Documentation Provided with Your Unit

Bard products are shipped with documentation that when used by a technician with cooling and heating knowledge, can ensure that your product is installed safely, performs optimally and achieves the longest life cycle possible.

Shipped literature includes the following:

- User Manual (this document)
- Installation Instructions
- Replacement Parts Manual
- Wiring Diagrams
- Warranty Information

Installation plays a key part in unit functionality, performance and safety. Product securing and placement, duct design and supply/return location, electrical routing and condensate and defrost drainage all play key roles in making sure a unit will perform per the design specifications.

WALL MOUNT Products – Mounting the Product on a Wall Surface

Outdoor products are normally mounted to an exterior wall surface, including brick, cement block, metal or wood construction. These products are labeled as "WALL MOUNT" units. **Before installation begins, the wall surface should be inspected by a construction professional to ensure it will support the weight of the unit and accessory items.** Approximate weights are available from the product specification sheet, and a safety factor should be designed into the installation. Typical fasteners to attach the unit to the wall using the integrated mounting flanges on both sides of the unit include tap cons, bolts, studs and other fastening devices. The selection of the fasteners to be used needs to be reviewed by a construction professional and decided upon based on the wall construction and fastener strength required. It is important to follow all guidelines and procedures covered in the installation instructions manual provided for the product.

Built-In Mounting Flange Detail:

Outdoor WALL MOUNT products include a mounting flange that is part of the cabinet construction. Ø.375" holes are provided for unit mounting unless specified otherwise in installation instructions.

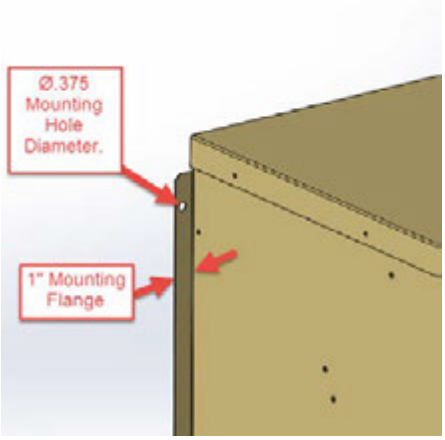

Specification Sheets:

Unit specification sheets provided at www.bardhvac.com include basic unit weights and dimensions (see example below). Ventilation options and other accessories must be added into the total weight of the unit.

Specification Sheet Example

w/Filter (Rated-Wet Coil)	
Filter Sizes (inches) STD.	16x25x1
Basic Unit Weight-LBS.	318
Barometric Fresh Air Damper	3.5
Blank-Off Plate	1.0
Motorized Fresh Air Damper	10.0
Commercial Room Ventilator	69.0
Economizer	69.0
Energy Recovery Ventilator	50.0

WALL MOUNT Products – Clearances for Outdoor Condenser Fan Airflow

Unit placement and avoidance of obstructions outside the structure are very critical to unit performance. **Avoid installing the unit in areas that will obstruct outdoor condenser fan airflow or create "pockets" of heated air being exhausted from the condenser coil.** Solid construction fences should not be placed directly in front of the unit without provisions for condenser airflow. Solid exterior walls need to be spaced as far away from units as possible to avoid pockets of heated air causing condenser air recirculation.

Solid barriers located too close to the face or side surfaces (condenser fan inlet and outlet) of the WALL MOUNT can both impede airflow and force heated air to short circuit (be returned) from the condenser outlet to the condenser inlet. Either condition will effectively raise the condensing temperature and pressure reducing cooling capacity and efficiency. In extreme cases, the unit may fail to operate due to high refrigerant pressures inside the unit, and compressor and/or fan motor failure may occur. Clearances given in installation instructions ensure components can be serviced and maintenance can be performed when needed.

National and local electrical codes must be reviewed before unit installation.

Always use common sense when installing products, follow unit clearances given in the installation instructions and contact local Bard distributors when additional knowledge is needed regarding unit clearances for proper unit functionality.

WALL MOUNT Products – Clearances for Indoor Supply and Return Airflow

The Bard unit should be placed in an area where the supply (leaving conditioned air) and return (unit air intake) air paths will be unrestricted. Avoid placing objects in the structure within 24" of the return (unit air intake) grille. Avoid placing objects directly in the path of the supply (conditioned) air grille. This will inhibit the "throw" of the supply air throughout the structure and reduce the cooling and/or heating ability of the unit; in extreme cases, this may cause evaporator coil freezing issues. Supply air must be able to freely circulate conditioned air throughout the structure. Adjustment of supply grille deflectors is often necessary to ensure proper room circulation.

Ducted applications should not exceed the rated duct static pressures given in the unit specification sheets. Special requirements for duct construction and distances to combustible materials need to be followed per the installation instructions when electric heating is used.

WALL MOUNT Products – Condensate and Defrost Drainage

Condensate drainage for air conditioning units needs to be planned before installation. Your new Bard WALL MOUNT product includes provisions to allow condensate water to exit the bottom of the unit. If condensate water is to be routed away from the unit, adequate drain sizing needs to be provided to allow proper drainage for condensate water generation. During normal air conditioning operation, large amounts of condensate water is generated inside the unit as moisture is extracted from the supply air. This is collected in an evaporator pan and drained to either a drainage system (indoor products) or outside the unit cabinet (outdoor products). Evaporator drain traps are not necessary for any of our wall mounted outdoor products, and the use of "standing water" U-shaped traps may be prone to freezing in certain climate zones.

Defrost water drainage from heat pump units needs to be planned before installation. During seasons requiring heating operation, the unit will need to warm the condenser coil to remove frost build-up (defrost). **Outdoor heat pump products include holes in the unit base under the condenser coil for proper water drainage when in the heating defrost cycle. Avoid placing the unit on a pad or blocking the base drainage holes under the condenser coil without proper allowances (6" recommended) for water drainage due to damage caused by freezing conditions.** Without proper drainage, defrost water may freeze causing ice build up and damage the lower portion of the condenser coil.

Condensate Water Drainage:

Unit condensate water exits the base of the unit during cooling operation.

Defrost Water Drainage:

Holes are provided in the front of the unit base for heat pump condensate water drainage.

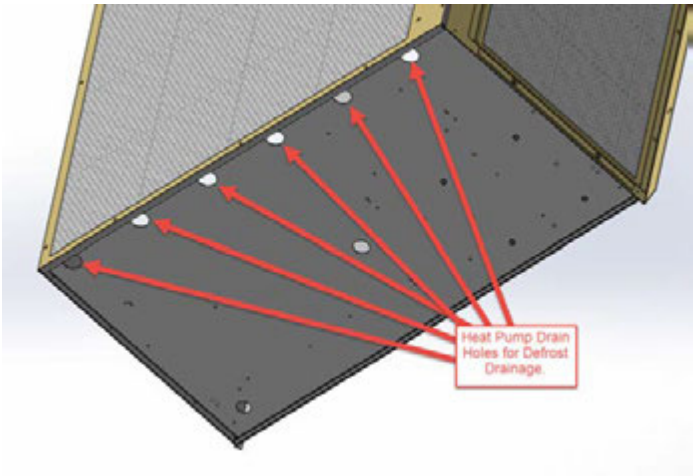

Defrost Water Drainage:

6" clearance is recommended under WALL MOUNT Heat Pump products to allow proper defrost water drainage.

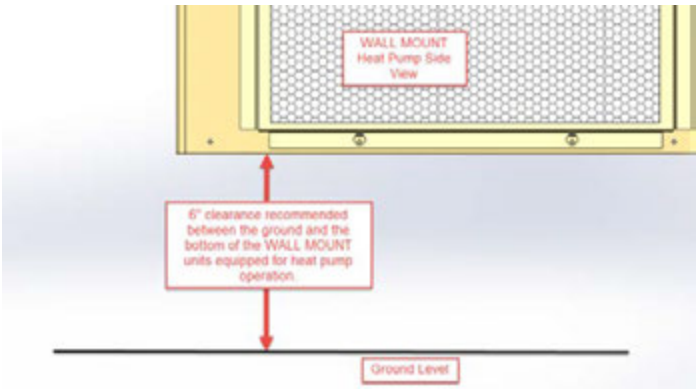

I-TEC and Q-TEC Products – Installing the Product Inside a Room

I-TEC

Q-TEC

Indoor products are normally supported by the floor surface and are adjacent to an interior wall surface, including brick, cement block, metal or wood construction. These products are normally labeled as "I-TEC" or "Q-TEC" units. **Before installation begins, the floor surface should be inspected by a construction professional to ensure it will support the weight of the unit and accessory items.** Approximate weights are available from the product specification sheet, and a safety factor should be designed into the installation.

A sheet metal sleeve is normally installed in the wall allowing vent and condenser fan air to enter and exit the unit. Different sleeve depths are available for installation into various wall depths. Typical fasteners to attach the sleeve to the outside surface of the wall include tap cons and other fastening devices. The I-TEC or Q-TEC unit is then slid up to the wall surface and connected to the sleeve using screws. Trim kits are available to enclose gaps between the wall surface and the unit. A louver grille is used to cover the external wall opening and fasteners used during sleeve installation.

Wall Sleeve:

Wall sleeves allow for outdoor air to enter and exit the unit inside the room.

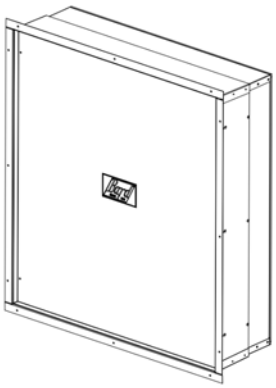

Air Paths:

Air paths through the unit allow for cooling operation and fresh air to enter the structure (I-TEC shown).

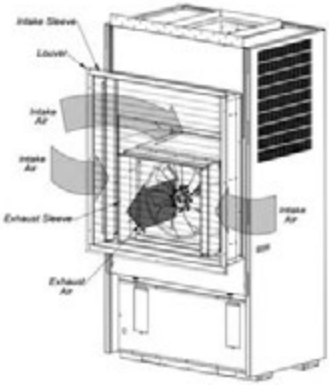

Louver Installation:

Outdoor louvers provide an esthetically pleasing look to the installation and cover the unit opening (I-TEC shown).

I-TEC and Q-TEC Products – Clearances for Outdoor Condenser Fan Airflow

Solid barriers located too close to the face of the outdoor louver of the I-TEC or Q-TEC can both impede airflow and force heated air to short circuit (be returned) from the condenser outlet to the condenser inlet. Either condition will effectively raise the condensing temperature and pressure reducing cooling capacity and efficiency. In extreme cases, the unit may fail to operate due to high refrigerant pressures inside the unit, and compressor and/or fan motor failure may occur. It is recommended to allow 15' (457.2 cm) in front of unit louver for proper condenser airflow. Always use common sense when installing products, follow unit clearances given in the installation instructions and contact local Bard distributors when additional knowledge is needed regarding unit clearances for proper unit functionality.

I-TEC and Q-TEC Products – Clearances for Indoor Supply and Return Airflow

The Bard unit should be placed in an area where the supply (leaving conditioned air) and return (unit air intake) air paths will be unrestricted. Avoid placing objects inside the room within 24" of the return (unit air intake) louvers or grille. Avoid placing objects directly in the path of the supply (conditioned) air grilles. This will inhibit the "throw" of the supply air throughout the structure and reduce the cooling and/or heating ability of the unit and in extreme cases may cause evaporator coil freezing issues. Ducted applications should not exceed the rated duct static pressures given in the unit specification sheets. Special requirements for duct construction and distances to combustible materials need to be followed per the unit installation instructions when electric heating is used.

I-TEC Air Path

The I-TEC product has been engineered for extremely quiet unit operation and has multiple air paths for air entering and exiting the unit. Room air enters the upper sides to be conditioned (cooled) inside the unit and exits the unit top. The unit will either be ducted to supply registers or have a supply air plenum box installed. A supply air plenum box allows quiet operation without ducting the air leaving the unit. Room air also enters the bottom of both front doors during ventilation operation.

Q-TEC Air Path

The Q-TEC product has been engineered for efficient, economical unit operation and has a mid-mounted front grille for air entering the unit. The unit will either be ducted to supply registers or have a supply air plenum box installed. A supply air plenum box allows quiet operation without ducting the air leaving the unit.

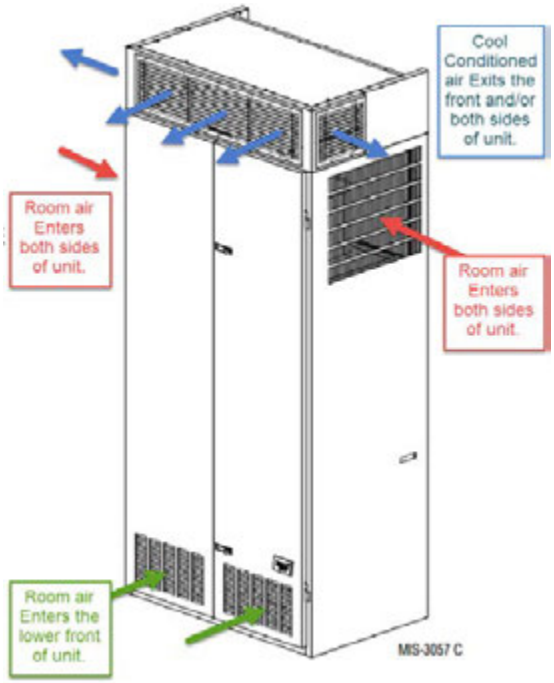

Typical I-TEC Installation

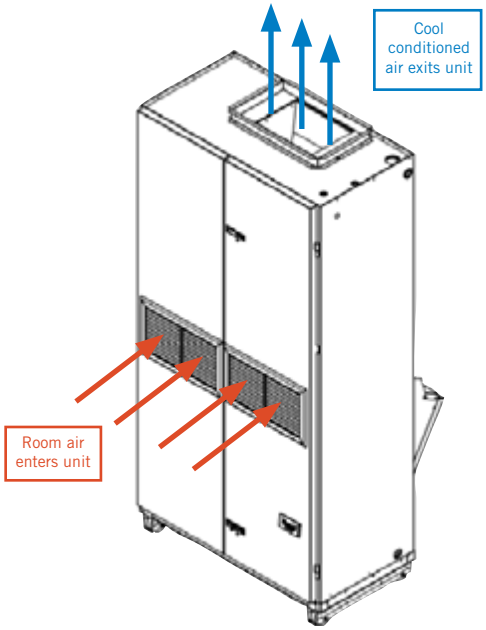

Typical Q-TEC Installation

The I-TEC and Q-TEC product installation instructions contain additional information regarding unit air paths and required clearances. This information may be accessed at www.bardhvac.com.

I-TEC and Q-TEC Products – Condensate Drainage

Condensate drainage for Bard indoor cooling units is a very important part of unit installation. During normal air conditioning operation, large amounts of condensate water are generated inside the unit as moisture is extracted from the supply air. This is collected in an evaporator pan and needs to be drained to an external drainage system. Your new Bard product includes provisions to allow condensate water to exit the unit and fittings will need to be field supplied to connect the unit drain to the building. Adequate drain sizing needs to be provided to allow proper drainage for condensate water generation and restriction in drain lines should be avoided. Evaporator drain traps are not necessary unless required by local codes.

Defrost water for heat pump operation and outdoor water entering the condenser area also needs to be drained out of the unit. The I-TEC product uses a combined defrost and outdoor water drainage system. The Q-TEC has a combined defrost and evaporator drain connection unless an optional in-wall drain box is used. Outdoor water exits the Q-TEC through the wall sleeve. Follow all instructions provided in the unit installation instructions regarding drain connections and sleeve installation to avoid water leakage inside the building or structure.

I-TEC Drain System:

The I-TEC drainage system consists of a manifold drain kit that combines all drains behind the unit to allow connection to the building system.

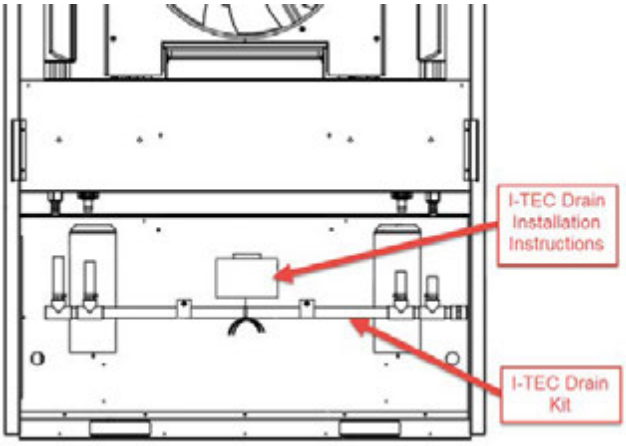

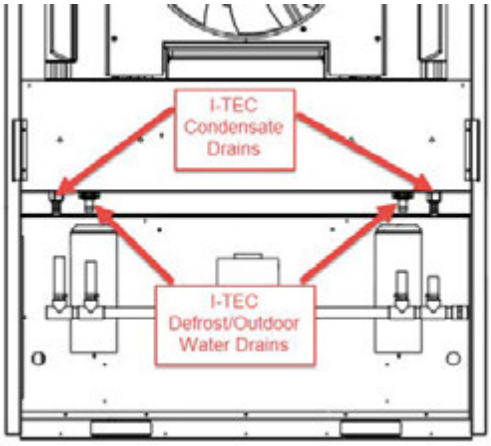

Q-TEC Drain System:

The Q-TEC drainage system consists of a lower right side or lower right rear connection fitting. An optional in-wall drain box may also be purchased as an accessory that allows separate evaporator and defrost water drainage.

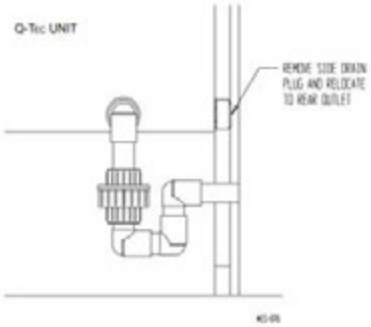

Lower Right Side Drain

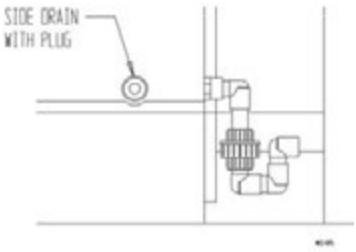

Lower Right Rear Drain

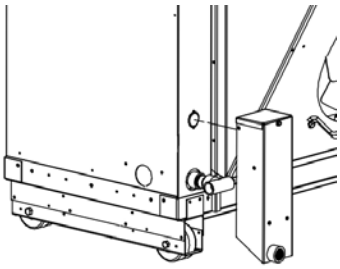

Optional In-Wall Drain Box

All Products – Power Supply Verification

It is very important to follow all electrical and mechanical safety guidelines and instructions provided in the product installation instructions. Failure to do so may result in death, injury or product damage.

A proper power supply to your new Bard unit is very important. Be sure to verify the following with a multi-meter or other power measuring device before applying power to your Bard product.

Field-Supplied Voltage

Electrical voltage ratings and proper voltage operating ranges are provided in the unit specification sheets and installation instructions. It is important that power supplied to the unit stay in the specified operating voltage range. Voltage above or below the minimum operating value given could result in improper unit startup, unit shutdown, low unit performance, improper thermostat and unit controller operation, compressor damage and premature failure of functional parts. As a general guideline, it is always best if the power source for the unit supplies the nominal electrical rating value given in the specification sheets, installation instructions and unit serial plate for the product being used. To do so will provide the best unit performance possible from your new Bard product.

Single and Three Phase Power

Bard products are available in single and three phase power options. It is important to connect the proper phase listed on the unit serial plate. Three phase power is often used to reduce energy usage, and units rated for 3 phase operation are equipped with a phase monitor safety device. The phase monitor will not allow unit operation with improper phase connection and a red LED light on the monitor indicates phase wiring issues. Connecting 3 phase power to a single phase unit will result in component damage and improper unit operation. Connecting single phase power to a 3 phase unit will also result in component damage and improper unit operation.

Hertz (Frequency)

Bard products are available in 50hz and 60hz power options. It is important to connect power with the proper hz value listed on the unit serial plate. 60hz power is often used in the United States and Canada and units rated for 50hz operation are normally for international sales outside of this area. Connecting 50hz power to a 60hz unit not rated for 50hz operation may result in component damage and improper unit operation. Some equipment may be rated for 50/60hz operation. Review the unit specifications and installation instructions for further information regarding the power requirements of the unit.

The product installation instructions and unit specification sheets contain additional information regarding unit electrical data. This information may be accessed at www.bardhvac.com.

Unit Maintenance

All Products – Filters and Filter Servicing

All Bard products contain air filters that must be cleaned or replaced on a regular basis.

Keeping air filter(s) clean is the single most important responsibility of the user of the equipment. Each type of system must be equipped with an air filter(s) in the indoor circulating air system to clean the air, keep the system itself clean for peak efficiency and capacity and prolong the useful life of the equipment. DO NOT operate the system without the proper air filters. Filters should be inspected at least monthly and replaced or cleaned (depending on type) as needed. The useful life of an air filter can vary widely depending upon application and use of the equipment, and it is critical to monitor filter condition and establish an acceptable maintenance schedule. Failure to do so will increase operating and repair costs, decrease capacity and efficiency and shorten the service life of the equipment. A common symptom of a dirty filter in the cooling mode is a freeze-up of the indoor coil. The air filters used may be a disposable (throwaway) type or may be a cleanable type that can be thoroughly cleaned, rinsed and reused many times. It is important to make sure that the correct filter size and type for your system is always used. If there is any question as to acceptable filter size or type, review the installation instructions for the specific equipment involved, if available. Otherwise, consult with your installing dealer or service company. Most equipment can have the filters inspected and serviced by the user with no problems. In some instances, because of equipment design or specific installation conditions, it may be necessary to have this procedure done by a qualified service company. Have your installer or service company show you where the filter(s) are and demonstrate the service procedure or make arrangements for them to provide this service on an as-needed basis.

Outdoor Unit Wall Mount Room Air Filters

Wall mount filters are normally accessed from the outside of the building. Bard does offer a return air grille with a filter frame built-in for indoor filter access. The return air filter grille is not acceptable as the only source of filtration if vent options are installed in the wall mount unit.

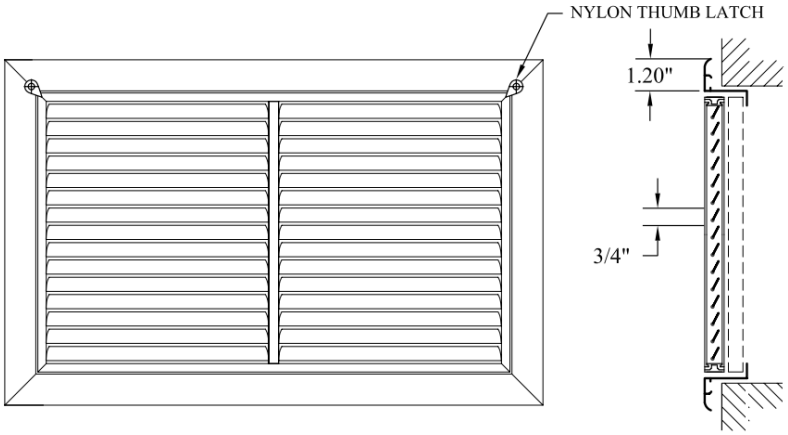

Return Air Filter Grille:

Bard offers the RFG return air filter grille, which may be used in applications where outdoor air is not brought into the structure through vent options. If vent options are used, the filter tray inside the Bard Wall Mount unit must be used.

The product installation instructions contain additional information regarding unit maintenance. This information may be accessed at www.bardhvac.com.

WALL MOUNT Products – Filters and Filter Servicing

The built-in filter tray and room air filters in the wall mount are located in the middle of the cabinet below the indoor blowers. Units with vent options will have a washable screen behind the vent intake panel.

Filter Door:
The unit room air filter is located behind this panel for units without a vent hood.

Vent Intake Panel

Vent Hood Door:
The unit indoor filter is located behind this panel for units with a vent hood. The hood contains a washable pre-filter that needs to be cleaned regularly.

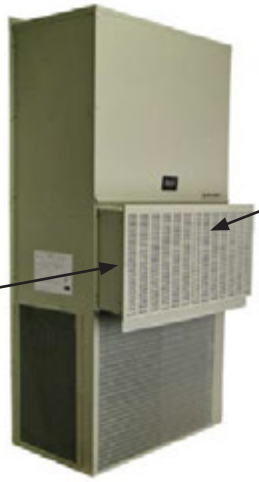

Vent Intake Panel

Filter Door:
The unit room air filter is located behind this panel.

I-TEC Indoor Products – Filters and Filter Servicing

The I-TEC indoor air conditioners and heat pumps have multiple filters that must be maintained and inspected when servicing the unit. Filters play an important part in proper unit operation and prevent dirt and dust buildup inside the I-TEC and the room the unit is installed in. To access the unit filters, open the front hinged doors by unlocking the door latches. The doors fold outward and are on hinges with lift-off pins. Use care when opening doors. If doors are lifted off of the hinge pins, use care as the dense insulation used for sound reduction causes the doors to be heavy.

The upper section of the unit contains two 2" x 24" x 30" throwaway filters as standard with every unit. MERV ratings of the filter are available up to MERV13. These filters filter the air used for cooling inside the classroom or structure and should be changed regularly.

If the unit has an air intake vent option installed, two 1" x 12" x 20" filters are located in the lower section of the front doors behind the louvers. These filters help keep the vent option clean and operating properly.

Two washable filters are also installed in the air intake vent option. These should be inspected during servicing and cleaned when necessary. The washable filters are used to remove dirt and dust from outdoor air that is entering the vent area. If at any time these filters are damaged, they must be replaced with Bard-approved filters.

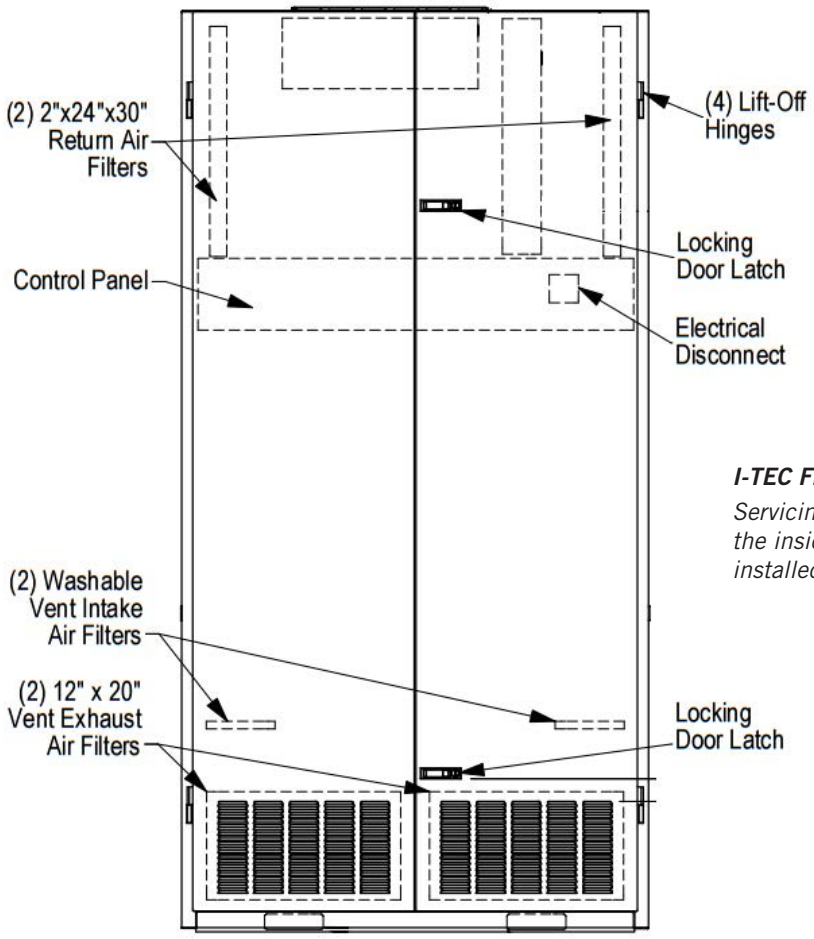

I-TEC Filter Locations:

Servicing the filters in your unit will help keep the inside of the unit clean and also the area it is installed in.

The I-TEC product installation instructions contain additional information regarding unit maintenance. This information may be accessed at www.bardhvac.com.

Q-TEC Indoor Products – Filters and Filter Servicing

The Q-TEC indoor air conditioners and heat pumps have two room air filters that must be replaced when servicing the unit. Filters play an important part in proper unit operation and prevent dirt and dust buildup inside the Q-TEC and the room the unit is installed in. To access the unit filters, open the front hinged door by unlocking the door latch. The door folds outward and is on hinges with lift-off pins. Use care when opening doors. If the door is lifted off of the hinge pins, use care as the insulation and louver grille cause the door to be heavy.

The upper section of the Q-TEC contains two 1" throwaway filters standard with every unit. These filters filter the air used for cooling inside the classroom or structure and should be changed regularly.

QWS Unit

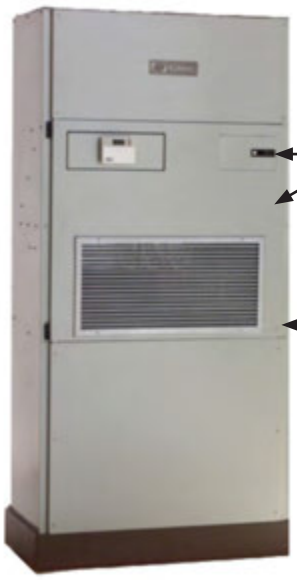

Q-TEC Filter Location:

The Q-TEC room air filters are located behind this hinged door. Unlock door latch and remove screw to open door.

Screw location

QH/QA Unit

Filter locations

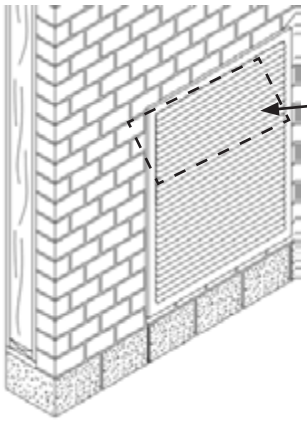

Pre-filter location

The Q-TEC will have a permanent pre-filter installed inside the wall sleeve if air intake vent options are inside the unit. The pre-filter must be inspected and cleaned when necessary. The easiest way to remove the pre-filter is through the outdoor louver. Clean the pre-filter with soapy water.

The Q-TEC product installation instructions contain additional information regarding unit maintenance. This information may be accessed at www.bardhvac.com.

All Products – Coil Cleaning

The outdoor coil must be kept clean and free of any airborne debris, which can accumulate over time. Large volumes of air are circulated over the coil, and airborne debris such as lint, dust, materials shed from trees, paper or other types of airborne material that can become airborne can collect on the entering coil surface. The outdoor coil must dissipate heat during the cooling mode and for a heat pump, also absorb heat during the heating mode. If the coil is dirty and matted with debris, the airflow across the coil will be reduced causing poor performance, increased operating run time and associated utility bills and in extreme conditions can shorten the useful life of the equipment.

Depending on the specific equipment involved, the surface that can accumulate debris can be on the opposite side that is exposed to view when standing in front of the machine. Closely review the machine when operating to see which direction or path the airflow takes as it moves through the machine. If the air inlet side of the coil is hidden, try to observe the back (hidden) side by looking into the side grilles, using a flashlight if necessary. While the user of the equipment needs to be aware of the potential of clogging of the outdoor coil surface, actual cleaning of the outdoor coil should not be attempted under most circumstances. If the user should attempt this procedure on their own, never do so without first having the installing dealer or service company instruct you in the proper procedure and technique.

WARNING: Do not open or enter the equipment without first turning off the electrical service disconnect. Failure to do so can result in personal injury due to moving parts and/or electric shock hazard resulting in death.

Other conditions that can cause reduction of airflow across the outdoor coil are flowers, shrubbery or other growth too near the outdoor coil air inlet and outlet openings. These living things, especially as they mature and grow, will be just as effective in blocking the airflow and create the same problems as will stacking things against the equipment. These conditions can be easily managed and controlled by the user, as they do not require actually entering into the equipment enclosure, which should only be done by qualified service technicians.

Equipment Corrosion Protection

1. Avoid having any lawn sprinkler spray directly on the equipment, especially if from a brackish water source.
2. In coastal areas or corrosive environments, locate equipment as far away from the corrosion source as feasible. Units exposed directly to salt spray should be coated by a secondary protective coating operation to reduce corrosion on copper tubing, fasteners, motors and other metal parts. Coils should be ordered with a corrosion protective coating. Contact Bard for coating options.
3. Frequent cleaning and waxing of the cabinet using a good automobile polish will help extend its original appearance and protect painted surfaces.

The product installation instructions contain additional information regarding unit coil cleaning. This information may be accessed at www.bardhvac.com.

All Products – Condenser Airflow

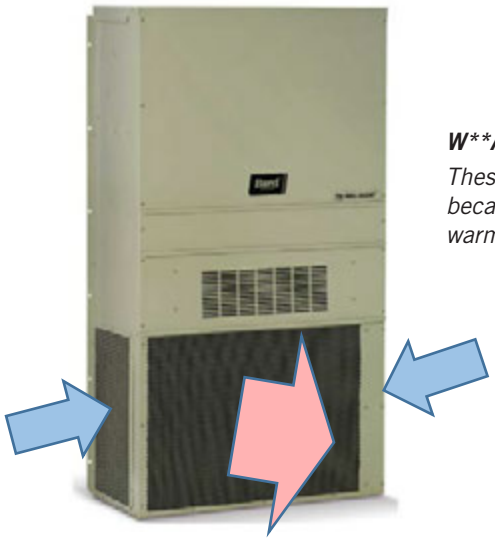

W**A, W**H, T**H, T**S, W*RV Wall Mount Units:

These units are called "blow through condenser airflow" units because they draw cool outdoor air from the sides and blow the warm condenser air exiting the coil through the front grille.

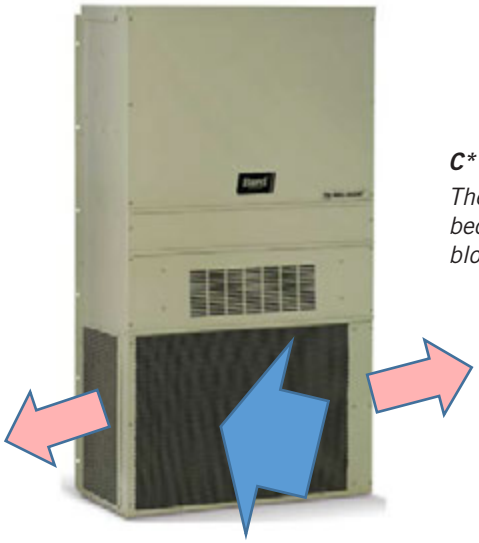

C**H Wall Mount Units:

These units are called "draw through condenser airflow" units because they draw cool outdoor air in the front through the coil and blow the exiting warm condenser air through the unit sides.

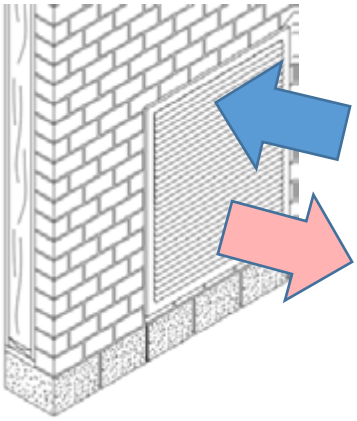

I-TEC and Q-TEC Units:

These units draw the cool outdoor air through the top section of the wall louver and exhaust the warmer condenser air out of the lower section of the louver. I-TEC units also draw a small amount of air through the outer right and left side of the louver.

Air-to-Air Cooling Products (Air Conditioners)

The cooling mode operates similar to a refrigerator, removing heat from inside the conditioned space and rejecting it outside of the space being controlled. There are three main parts of the system:

1. The evaporator (indoor) coil where cold refrigerant absorbs heat from the air, which circulates from the conditioned space through the machine and is returned to the space at a lower temperature and with some of the humidity (moisture) removed. The moisture exits through a condensate drain system. A motor/blower assembly moves the indoor air through the system.
2. The compressor, which is a sealed pump that moves the refrigerant through the system.
3. The condenser (outdoor) coil where the heat that was absorbed from the indoor space is discharged to the outdoor environment. A motor/fan system moves the outdoor air across the condenser coil. A properly sized air conditioner cannot cool a structure off rapidly and instead will pull down the temperature slowly. It also will remove a certain amount of moisture (humidity) from the circulating airstream in the process. It may take several hours to pull down a hot, moist building or structure on initial startup or anytime the system has been turned off for a long period of time. It is generally best to set the thermostat at a comfortable temperature and let it control the system as needed, rather than turning it on and off.

Moisture (humidity) removal with a conventional air conditioner (cooling) unit, or heat pump when operating in the cooling mode, is not directly controlled and is a by-product of the unit operating to control temperature in response to the temperature (thermostat) control device. **Oversized equipment can easily control temperature but will have short run-times, thus reducing its ability to remove moisture from the circulating air stream.**

There are also many additional influences that can affect humidity levels within the conditioned space such as laundry appliances, cooking, showers, exhaust fans and any other items that can generate moisture or affect its removal from the space. Therefore, while operation of the air conditioning or heat pump system in the cooling mode will remove some amount of moisture as it reduces the air temperature, precise humidity regulation in the conditioned space cannot be assured and additional equipment such as a dedicated dehumidifier may be required.

Air-to-Air Cooling and Heating Products (Heat Pumps)

A heat pump is a refrigerant-based system that has additional components and controls that both heats and cools using a compressor for both modes of operation. Most heat pumps will also be equipped with some amount of electric heat to supplement the heating capacity of the compressor system on an as-needed basis. This operation is entirely automatic and is controlled by the indoor thermostat and possibly also an outdoor thermostat.

Cooling Mode

The cooling mode of a heat pump is exactly the same as that described for an air conditioner in the above section.

Heating Mode

The system operates in reverse cycle, meaning that it absorbs and moves heat from the outdoors and transfers it indoors to be rejected into the circulating air stream. Even though it seems cold to humans, there is usable heat that can be extracted efficiently from the outdoor air down to 0ºF, although the colder the air is there is less heat to extract and the operating efficiency is diminished.

Defrost Cycle

When operating in the heating mode, the outdoor coil will be colder than the outdoor air that is forced over it by the fan system. When the outdoor air temperature is above approximately 40°F, moisture can accumulate on the coil and it will drain down and out the base of the unit. As the air temperature gets below approximately 40°F, the coil temperature will start to drop below 32°F, and frost or ice will begin to form on the coil.

An automatic defrost system keeps track of system run time when the outdoor coil temperature is in the freezing zone and will initiate a defrost cycle at the appropriate time. The unit continues to operate during the defrost cycle, but the outdoor fan motor will stop and the reversing valve will shift positions to flow hot refrigerant gas through the outdoor coil to melt the accumulated frost. Water will start to drain freely from the unit, and steam may be emitted from the unit.

The length of the defrost cycle will vary depending upon actual outdoor temperature, humidity levels and amount of accumulated frost. It could range from 1-2 minutes up to but not exceeding 8 minutes. When the defrost cycle

terminates, the reversing valve will shift back to heating mode and the outdoor fan will restart. There is typically a large puff of steam emitted as the fan restarts. When the heat pump shifts from cool to heating mode, from heating to cooling mode and especially during defrost cycles, there will be a pressure transfer sound heard as the reversing valve redirects the flow of refrigerant. This is commonly described as a hissing noise and is a normal sound for this type equipment.

For air source heat pumps, it is important to keep heavy snow from accumulating around the machine to the point of blocking the inlet and outlet openings to the outdoor coil section. For wall mounted or other equipment that is elevated, this should not be a factor; but for equipment installed on or near the ground, this can be an issue in areas prone to heavy and/or blowing snow. The air source heat pump cannot operate effectively and efficiently when snowbound just as a car cannot function well in heavy snow conditions.

Water-to-Air Cooling and Heating Products (Geothermal Heat Pumps)

These types of heat pumps are also commonly referred to as water source or geothermal systems. Just like the air source heat pump, they are refrigerant-based systems that both heat and cool using a compressor for both modes of operation. The primary difference is that the system uses water or antifreeze-protected water solution instead of an air-cooled outdoor heat transfer coil, and there is no outdoor motor/fan system but instead a water pump to provide adequate water flow to the system.

Cooling Mode

The cooling mode of a water-to-air heat pump is exactly the same as that described for an air conditioner in the previous Air Conditioner section, except that the outdoor coil uses water instead of air for the heat transfer medium.

Heat Mode

The system operates in reverse cycle, meaning that it acquires and moves heat from the water supply flowing through the water to refrigerant coil and transfers it indoors to be rejected into the circulating air stream.

Most water-to-air heat pumps (but not all) will also be equipped with some amount of electric heat to supplement the heating capacity of the compressor system on an as-needed basis. This operation is entirely automatic and is controlled by the indoor thermostat.

Because of the design of water-to-air heat pumps and the water temperatures involved, no defrost system is required as in air-to-air heat pumps.

Water Supply Systems

Depending upon the type and application of the water-to-air heat pump, the water side of the system could be one of the following:

1. Individual closed loop buried in a trench or vertical bore hole(s).
2. Individual loop submerged in a pond.
3. Water supplied from a well and discharged into pond, stream, ditch or another well.
4. Water supplied from a boiler/tower system, typically only in larger multi-unit installations.

Dehumidification and Ventilation Operation

Dehumidification (Air-to-Air or Water-to-Air Systems)

Many Bard systems, typically those used in schools or other commercial applications, have a dedicated dehumidification capability by having a special additional refrigeration circuit (factory-installed option only) in addition to the basic system. These special systems, sometimes also referred to as hot gas reheat, are designed to control humidity on demand from a humidity controller much the same as the basic cooling and/or heating system is controlled by a wall thermostat. Consult your installer and/or service company to determine if your installation has any of these devices and for any instructions or maintenance requirements you should be aware of as the user.

Ventilation Options (Air-to-Air or Water-to-Air Systems)

All Bard systems are available with factory-installed vent options. Most units can have ventilation field installed after unit installation.

Ventilation has multiple purposes:

- Outside air intake for occupied structures
- Positive pressurization
- Energy savings when outdoor air can be used for cooling
- Agricultural use of bringing in outdoor air and exhausting room air
- Equipment and electronics ventilation

Review product specifications and manuals for more details regarding available ventilation options and features. Product documentation is shipped with the product and also available at www.bardhvac.com.

All Units – Troubleshooting

Your Bard product is made to operate for many trouble-free years if installed properly and maintenance practices are followed. Be sure to verify that all filters are clean, and condenser coils are free of dirt and debris. Often these items may look clean at first, but upon closer inspection, show signs of dirt and debris build-up. New units on new structures may have dirt and dust in filters from the building construction process.

Thermostats and unit controllers often contain vent holes for proper sensor measurement inside the device. Make sure the thermostat or controller are not full of dirt and dust from building construction or years of use.

Verify all requirements in the installation instructions and specification sheets are met. Unit voltages, airflow clearance requirements and clean unit power without brownouts or spikes play a critical role in unit performance. If 208 VAC power is supplied to the unit, the 208V tap must be used on the 24 VAC transformer located inside the control panel. Common sense must also be used when installing the unit in an environment that may put the unit at risk of improper operation.

Helpful Hints and Good Operating Practices

The following information will help you enjoy the full comfort and benefits of your Bard cooling and heating system, maximize the performance and efficiency and help extend the life of your system.

1. Always keep the equipment in peak operating condition with routine scheduled maintenance, especially for the air filters, and to assure a clean outdoor coil.
2. For most efficient operation, set the thermostat at the temperature you prefer and then let it take control. If any changes to the settings are required, they should be made in small adjustments and the system be allowed time to respond. Rapid changes either up or down should not be done.
3. Setting the thermostat very high does not make the system heat faster and setting it very low does not make it cool faster.
4. It is not recommended to turn the system "Off" then back "On" when you need it. This can allow temperature and humidity to build up in warm weather conditions and force the system to run continuously to try and catch up. If the building is to be unoccupied for a lengthy period, it is best to adjust the thermostat to a reasonable higher (or lower—depending on the season) setting rather than turning it completely off. Upon return, the inside conditions will not be totally out of control and recovery time to desired conditions would be much shorter.
5. Airflow inside the room or building is very important. Keep all supply registers open and all returns free and unrestricted. Avoid placing objects in areas that will hinder unit airflow. The heating and cooling system is designed to have a certain amount of airflow for proper operation. Therefore, closing off registers, in unused rooms as an example, could reduce airflow below acceptable levels and should not be done without review by your service company who can assess the overall situation and advise you accordingly.
6. Heat pumps, especially air-to-air heat pumps, may have the system (compressor) run continuously at lower outdoor temperatures, and this is normal. The heat pump (compressor) mode is controlled by the beginning stages of the thermostat and delivers the most efficient heat. As the outdoor temperature drops off, the heat pump mode heat will also diminish (because there is less heat in the outdoor air to absorb) and must be supplemented by additional electric heat stages, which are not as efficient as the heat pump. The thermostat automatically controls everything and the backup heat will only operate on demand as needed to maintain the desired temperature.
7. The thermostat or controller is the user's primary connection to the system so it is very important to have a thorough understanding of how it works and how to use it properly. Have your installer or service company explain and demonstrate proper operation of the controls.
8. Make sure you thoroughly understand how the heating and cooling system itself is intended to operate and what to expect from it. Have your installer or service company explain and demonstrate proper operation of the heating and cooling system.

SERVICING PROCEDURE

R-410A
LEAK TEST EVACUATION
CHARGING

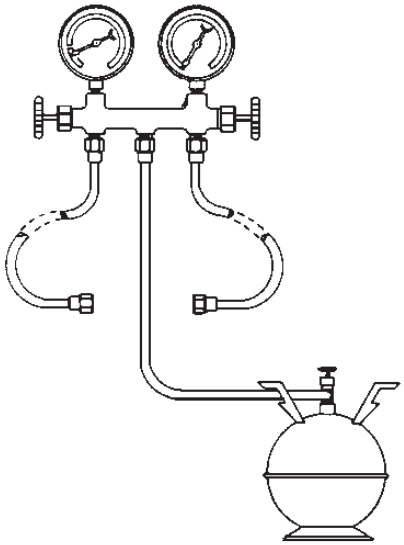

Bard Manufacturing Company, Inc.
Bryan, Ohio 43506

Since 1914...Moving ahead, just as planned.

Manual No.: 2100-479
Supersedes: NEW
File: Volume I, Tab 1
Date: 03-08-07

CONTENTS

General

Recovery Equipment Rated for R-410A.....3
Leak Detectors.....3
Gauge Manifold.....3
Attaching Gauge Manifold.....3
Attaching Manifold Hose to Schrader Valve.....4
Leak Test.....4
Evacuation ..... 4 & 5
Charging 5
Preliminary Charging Steps 5
Charging the System by Weight 5

Troubleshooting the Mechanical System
Air Conditioning & Heat Pump - Cooling.....9
Low Suction — Low Head Pressure 9
High Suction — Low Head Pressure 9
Low Suction — High Head Pressure 9
High Suction — High Head Pressure.....9
Heat Pump - Heating.....9
Low Suction — Low Head Pressure 9
High Suction — Low Head Pressure 9
Low Suction — High Head Pressure 9
High Suction — High Head Pressure.....9

Figures
Figure 1: Typical AC System Cooling Cycle.....6
Figure 2: Typical HP System Cooling Cycle 7
Figure 3: Heating Cycle 8

Charts
Troubleshooting Chart for Air Conditioners.....10
Troubleshooting Chart for Air-to-Air Heat Pumps....11

WARNING

The oils used with R-410A refrigerant are hydroscopic and absorb water from the atmosphere readily. Do not leave systems open to the atmosphere for more than 5 minutes. If the system has been open for more than 5 minutes, change the filter dryer immediately before evacuation. Then recharge the system to the factory specified charge.

Recovery equipment rated for R-410A refrigerant
R-410A has an ozone depletion potential of zero, but must be reclaimed due to its global warming potential.

The gauge manifold set is specially designed to withstand the higher pressure associated with R-410A. Manifold sets are required to range up to 800 psig on the high side and 250 psig on the low side with a 250 psig low side retard.

All hoses must have a service rating of 800 psig. (This information will be indicated on the hoses.)

Vacuum Pump and micron gauge must be used when evacuating a system to 500 microns.

Leak Detectors
An electronic leak detector capable of detecting HFC refrigerant can be used with R-410A refrigerant.

GAUGE MANIFOLD

WARNING

Gauge manifold must be suitable for use with R-410A refrigerant and POE oils.

A necessary instrument in checking and serving air conditioning and heat pump equipment is the gauge manifold. Its purpose is to determine the operating refrigerant pressures in order for the serviceman to analyze the condition of the system.

The valving on the manifold is so arranged that when the valves are closed (front-seated) the center port on the manifold is closed to the gauges and gauge ports. With the valves in the closed position, the gauge ports are still open to the gauges, permitting the gauges to register system pressures. Opening either valve opens the center port to that side of the manifold and system.

ATTACHING GAUGE MANIFOLD

For leak testing, purging, checking charge, charging liquid or evacuating, connect high pressure side of gauge manifold to Schrader valve on liquid or discharge line. Connect suction side of gauge manifold to Schrader valve on suction line. On heat pumps the suction line is between compressor and reversing valve.

ATTACHING MANIFOLD HOSE TO SCHRADER VALVE

WARNING

As a safety measure, it is wise to detach refrigerant hoses at the lowest pressure readings on the system. To do this:

A. Put high pressure hose “B” on first. (Unit should not be running.)

B. Put low pressure hose “A” on second. (Unit should be running.)

1. Remove cap from valve.
2. Make sure gauge manifold valves are closed.
3. If hose does not have an unseating pin, a number 395 Superior or equivalent unseating coupler must be used.
4. Make sure coupler is lined up straight with Schrader valve. Screw coupler on to valve.
5. Open gauge manifold valve slightly and purge air from hose with refrigerant.
6. Read the suction pressure on compound gauge and heat pressure on pressure gauge.
7. To remove, push end of hose tight against end of Schrader valve and hold in place while quickly unscrewing coupler nut from Schrader valve.
8. Remove coupler from Schrader valve. Replace caps on valve.

Leak Test

1. Remove gauge port cap from suction and liquid service valve ports and attach manifold gauge hoses. Connect an upright R-410A drum to center port of gauge manifold. Open refrigerant drum valve and manifold high pressure gauge valve to pressurize system to a positive pressure with refrigerant vapor. Pressurize the complete system with dry nitrogen, or CO2 until the pressure reaches 200 psig. **Do not** exceed 250 psig.
2. Close manifold high pressure gauge valve. Check all soldered joints, including those on the evaporator coil with an Electronic Leak Detector suitable for use with HFC refrigerants or R-410A. If a leak is found which requires soldering, pressure in the system must be bled off since it is impossible to solder with unit pressurized. Be sure all leaks are located and marked before bleeding pressure from system.
3. Close drum valve and disconnect from center port. Release nitrogen or CO2 into the atmosphere through suction line of gauge manifold.
4. Correct any leaks and recheck. When leaks, if any, have been repaired, system is ready to be evacuated and charged. Relieve all pressure from the system down to 0 psig.
5. Change the filter dryer. When leaks, if any, have been repaired, system is ready to be evacuated and charged. Relieve all pressure from the system down to 0 psig.

EVACUATION

Evacuation

An evacuation to 500 microns is usually sufficient to remove moisture from a system using R-22 and mineral oil lubricant. A 500 micron evacuation, however, will not separate moisture from Polyol Ester oil (POE) in R-410A systems.

In addition to a 500 micron evacuation, the liquid line filter dryer (R-410A compatible) must be replaced any time the system is open. When removing a filter dryer from a system, do not use a torch; use a tubing cutter to avoid releasing moisture back into the system.

Older R-22 leak detectors, as well as halide torch leak detectors, will not detect leaks in R-410A systems. Never use air and R-410A to leak check, as the mixture may become flammable at pressures above 1 atmosphere. A system can be safely leak-checked by using nitrogen or a trace gas of R-410A and nitrogen.

Remember: *Always use a pressure regulator with nitrogen and a safety valve down stream - set at no more than 150 psig.*

1. Evacuate system to less than 500 microns, using a good vacuum pump and an accurate high vacuum gauge. Operate the pump below 500 microns for 60 minutes and then close valve to the vacuum pump. Allow the system to stand for 30 additional minutes to be sure a 500 micron vacuum or less is maintained.

WARNING

At no time use the compressor to evacuate the system or any part of it.

2. Disconnect charging line at vacuum pump and connect to refrigerant supply. Crack the cylinder valve and purge charging line at center on manifold. Then close cylinder valve.
3. The system is now ready for the correct operating charge of Refrigerant R-410A.

R-410A System Charging

Even though R-410A has a very small fractionation potential, it cannot be ignored completely when charging. To avoid fractionation, charging of an air conditioner or heat pump system incorporating R-410A **shall be done with "liquid"** to maintain optimum system performance. To insure that the proper blend composition is charged into the system, it is important that liquid only be removed from the charging cylinder. Some cylinders supplied by manufacturers have dip tubes, which allow liquid refrigerant to be removed from the cylinder when it is in the upright position. Cylinders without dip tubes have to be tipped upside down in order for liquid to be removed. The Service Technician must differentiate between which type of charging cylinder they are using to avoid removing vapor refrigerant instead of liquid refrigerant to avoid fractionation and for safety concerns.

Connect the gauge manifold to the high and low side. Allow liquid to enter the high side only. The high side will hold 80-100% of the total charge. When liquid stops flowing, close high side port. The remainder of the charge will be added to the low side. Keep in mind two issues: first, never start the compressor with less than 55 psig of suction pressure. Secondly, make sure the liquid is throttled, thus vaporized into the low side of the system to avoid compressor damage. A throttling valve can be used to insure that liquid is converted to vapor prior to entering the system. Proper manipulation (restricting) of the manifold gauge set can also act as a throttling device to insure liquid is not entering the compressor.

CHARGING

1. **Single Package Units**—Refer to the unit serial plate for the full operating charge.

PRELIMINARY CHARGING STEPS

If the system has been open to the atmosphere, the filter dryer should be replaced and then evacuated. Then proceed as follows:

1. Attach a drum of proper, clean refrigerant to the center port of the charging manifold with one of the charging hoses.
2. Attach a second charging hose to the suction gauge (low pressure) side of the gauge manifold.
3. Remove the cap from the suction line valve.
4. Loosely attach the suction gauge hose to the line valve. Open the valve on the refrigerant drum and the suction valve on the charging manifold slightly to purge the air from the manifold and hoses before tightening the fitting.
5. Attach the third hose to the high pressure side of the manifold and the liquid line valve. Repeat steps 3 and 4 above.

CHARGING THE SYSTEM BY WEIGHT

1. Connect manifold as instructed.
2. Place refrigerant drum upright on scale and determine exact weight of the refrigerant and cylinder.
3. With manifold suction valve closed and manifold discharge valve open, open refrigerant cylinder liquid valve and allow pressure in system to balance with pressure of cylinder or 80% of charge is in the unit - whichever comes first.
4. When there is approximately an 80% charge, front seat (close) the discharge manifold valve and let the system stabilize for about five minutes.
5. Start compressor by setting thermostat.
6. Finish charging with liquid by cracking the suction valve. Open the manifold low pressure valve to allow refrigerant to flow into the system. Throttle the manifold valve to keep pressure about 100 psig for R-410A.
7. When the correct weight of refrigerant has been added to the unit, close refrigerant cylinder valve and allow unit to run for 30 minutes. Refer to Start-Up Procedure and Check List for further start-up details.
8. Front seat gauge manifold valves, disconnect charging and gauge hoses and replace all valve caps.

FIGURE 1
TYPICAL AIR CONDITIONING SYSTEM COOLING CYCLE

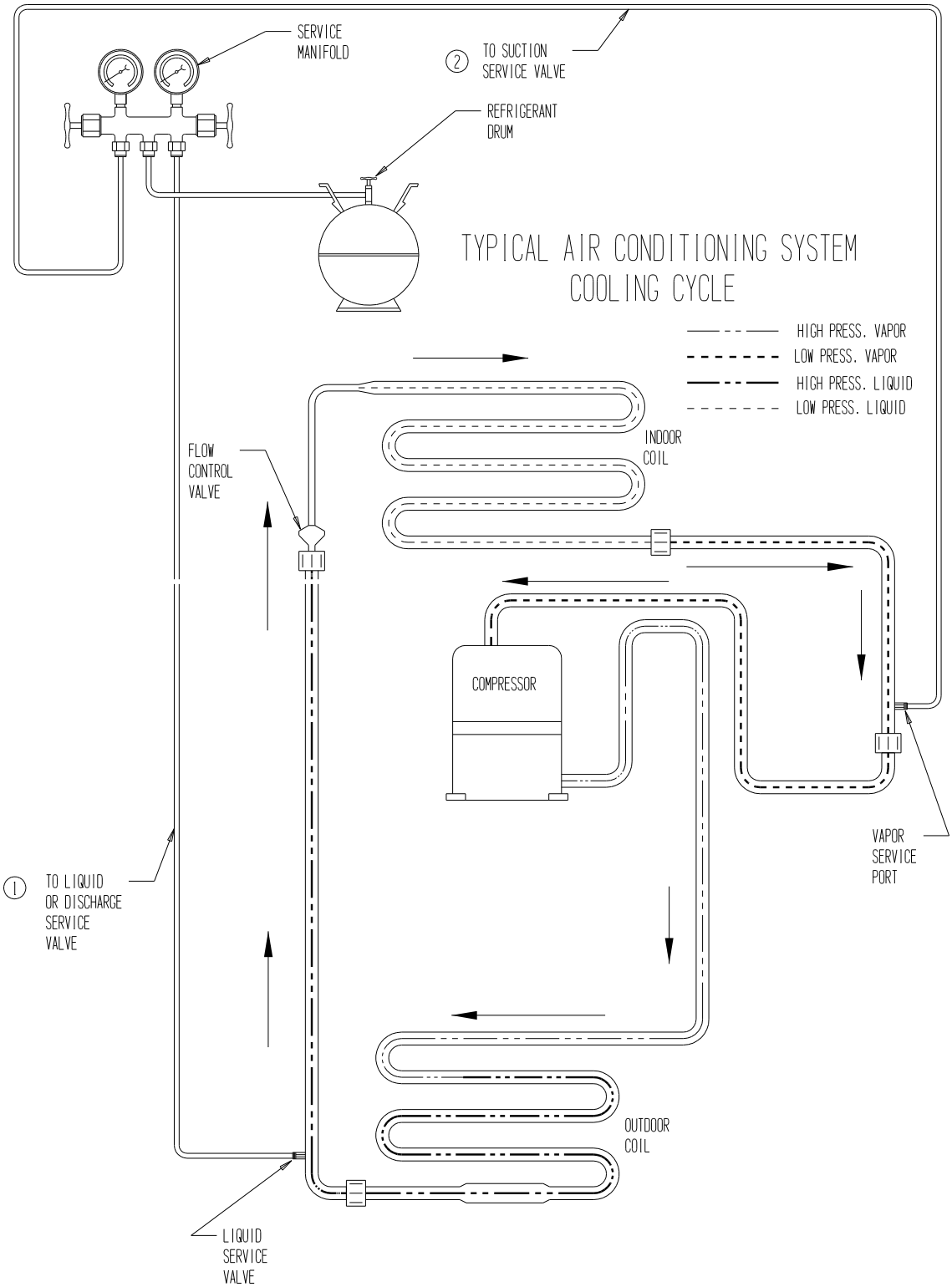

MIS-369

FIGURE 2
TYPICAL HEAT PUMP SYSTEM COOLING CYCLE

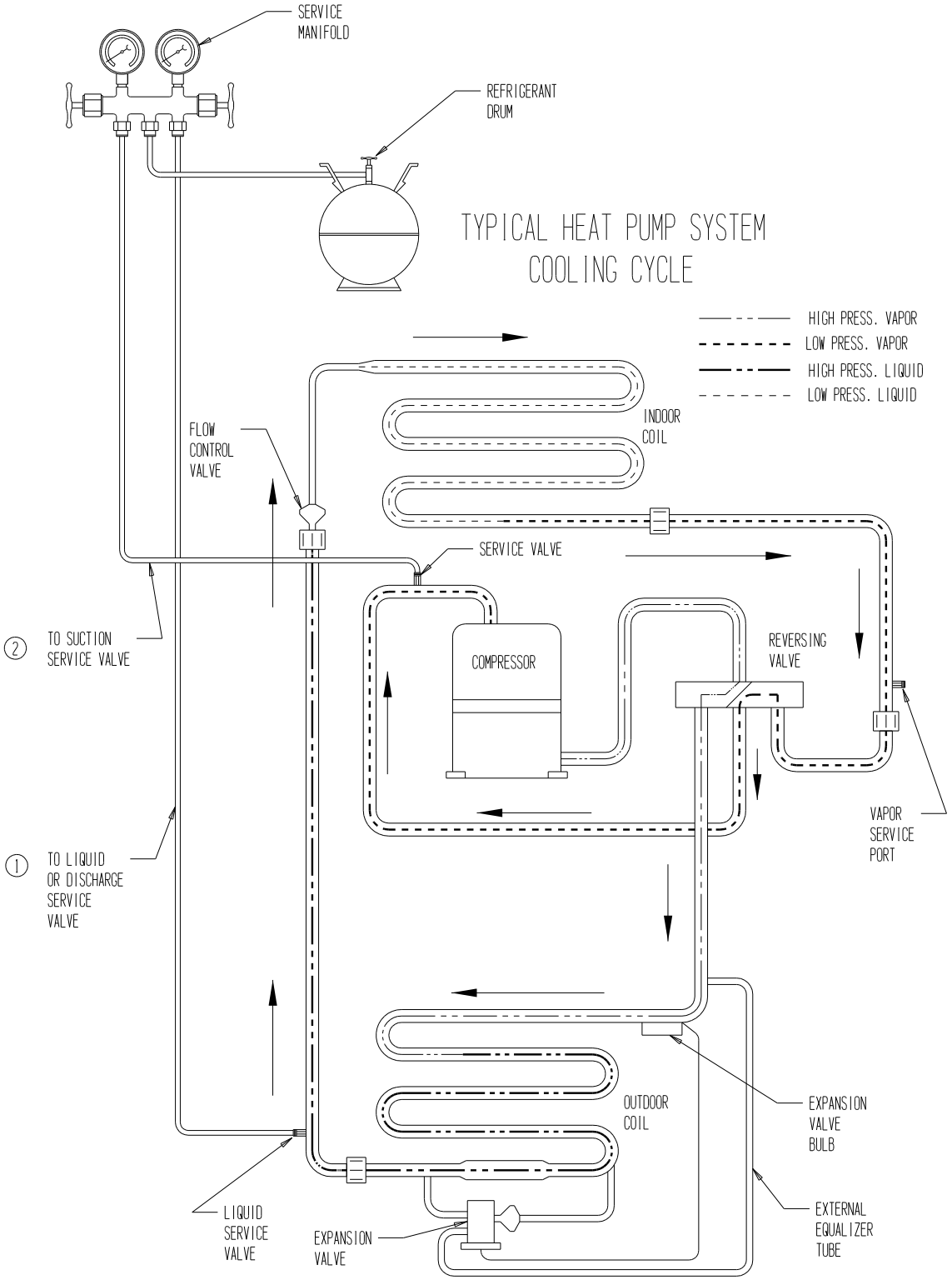

MIS-368

⚠ WARNING

To speed refrigerant flow, it may be necessary to place refrigerant drum in a pan of warm water (not greater than 130ºF). Remember to either consider the total weight of the pan of water or remove the drum for weighing frequently to keep track of the charging process.

FIGURE 3
HEATING CYCLE

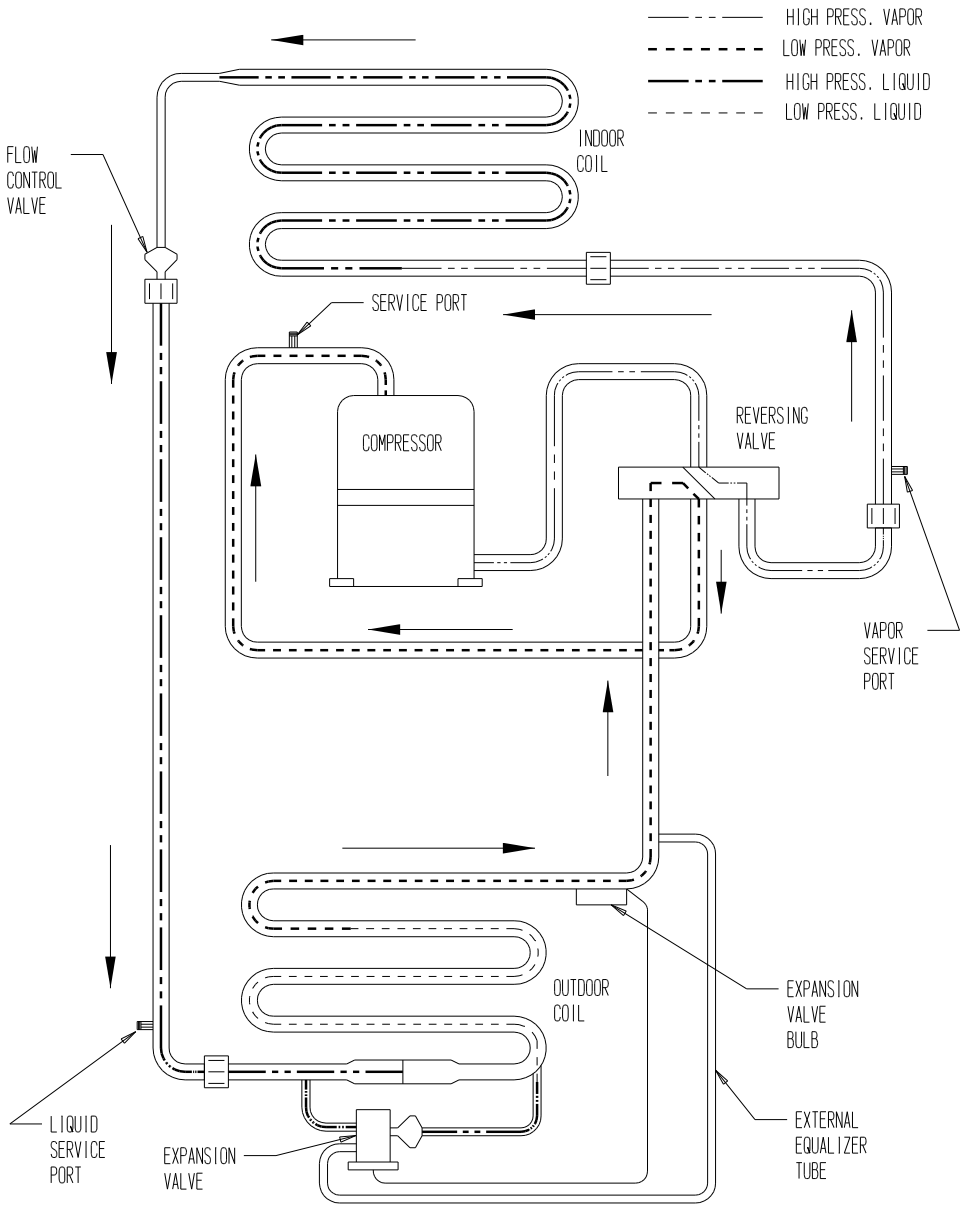

MIS-289

AIR CONDITIONING AND HEAT PUMP — COOLING

LOW SUCTION—LOW HEAD PRESSURE

1. Restricted airflow over indoor coil.
2. Defective indoor fan motor.
3. Low indoor temperature
4. Iced indoor coil.
5. Restricted liquid line, dryer, metering device, etc.
6. Low charge.
7. Low ambient entering air temperature. (Low entering water temperature to water coil.①)

HIGH SUCTION—LOW HEAD PRESSURE

1. Defective or broken valves.
2. IPRV valve open.
3. Defective reversing valve.

LOW SUCTION—HIGH HEAD PRESSURE

1. Partial restriction and then overcharged.

HIGH SUCTION—HIGH HEAD PRESSURE

1. High entering outdoor air temperature. (High entering water temperature.①)
2. Low airflow outdoor coil. (Low water flow.①)
3. Overcharged.
4. Air in system.
5. Restricted outdoor coil. (Restricted water coil.①)
6. High indoor air temperature.

① Water source heat pump.

HEAT PUMP — HEATING

LOW SUCTION—LOW HEAD PRESSURE

1. Restricted airflow through outdoor coil. (Restricted water flow through water coil.①)
2. Defective outdoor motor. (Defective water pump.①)
3. Low outdoor air temperature. (Low water temperature.①)
4. Frozen outdoor coil. (Frozen water coil.①)
5. Restricted liquid line, dryer, metering device, etc.
6. Low charge.
7. Low indoor air temperature.

HIGH SUCTION—LOW HEAD PRESSURE

1. Defective or broken valves.
2. IPR valve open.
3. Defective reversing valve.

LOW SUCTION—HIGH HEAD PRESSURE

1. Partial restriction and then overcharged.

HIGH SUCTION—HIGH HEAD PRESSURE

1. High entering outdoor air temperature. (High entering water temperature.①)
2. Low indoor airflow.
3. Overcharged.
4. Air in system.
5. Restricted air coil.
6. High indoor air temperature.

① Water source heat pump.

TROUBLESHOOTING CHART FOR AIR CONDITIONERS

● Generally the cause. Always make these checks first.

◆ Occasionally the cause. Make these checks only if first checks fail to locate trouble.

■ Rarely the cause. Make this check only if previous checks fail to locate trouble.

	Power Supply																														High Pressure Side of System															Low Side						General					
	Meter to Line Side of Contactor								Load Side of Contactor to Motor Terminal										Control Circuit										Motors				Compressor						System Operation								Condenser Air						Evaporator Air											
	Power Failure	Blown Fuses or Tripped Circuit Breakers	Faulty Wiring	Loose Terminals	Low Voltage	Single 1PH Failure of 3PH	Unbalanced Power Supply 3PH	Voltage Too High	Open Disconnect Switch	Faulty Wiring	Loose Terminal	Low Voltage	Defective Contacts in Contactor	Compressor Overload	Potential Relay Fails to Open	Potential Relay Fails to Close	Run Capacitor	Start Capacitor	Faulty Wiring	Loose Terminals	Control Transformer	Low Voltage	Thermostat	Contactor Coil	Pressure Control	Condenser Fan Relay	Evaporator Fan Relay	Compressor Motor	Condenser Motor	Evaporator Motor	Compressor Off on Internal Overload	Hold Down Bolts	Defective Compressor Bearings	Seized Compressor	Defective Compressor Valves	Compressor Oil Level	Open or Short Motor Windings	Refrigerant Charge Low	Overcharge of Refrigerant	High Head Pressure	High Suction Pressure	Low Suction Pressure	Temperatures	Non-Condensables (Air, etc.)	Excessive Load in Space	Liquid Valve Partially Closed	Condenser Fins Dirty or Plugged	Condenser Fan Belt Slipping	Condenser Air Short Circuiting	Low Condenser Air Volume	Condenser Air Temperature Low	Plugged or Restricted Metering Device	Evaporator Fins Dirty or Plugged	Evaporator Belt Slipping	Low Evaporator Air Volume	Dirty Filters	Ductwork Small or Restricted	Restrictions	Thermostat Setting	Thermostat Location	Stratified Air in Space	Incorrect Refrigerant Piping	System Too Small
Compressor and condenser fan motor will not start	●	●	●	●	◆	■	■		●	●	●	◆	◆	●					●	●	●	◆	◆	●	●				■	■								●	■	●		●		●			■	■	■	■										■				
Compressor will not start but condenser fan will run				◆	◆	◆	◆			●	●	◆	◆	●		◆	●	●										●					●	●			●																								
Condenser fan motor will not start										●	●															●			●																															
Compressor "hums" but will not start			●	●	◆	◆	◆			●	●	◆	◆	●	●			●										◆					●	◆			◆		■	■		■	■																		
Compressor cycles on overload			●	●	●	■	●			●	●	●	●	◆	●		●											◆							■	■	◆	◆	◆	◆	◆			◆	◆		■	■	■	■	■									■				
Compressor short cycles on low pressure																																					●				●											●	●	●	●	●	●	●			■	
Compressor runs continuously—no cooling																																			●		●			◆			◆			■	■	■	■	■	◆	●	●	●	●	●	◆	■	◆	◆		
Compressor runs continuously—cooling																			●				●																					●														●		◆
Compressor noisy																	◆															●	●		●	●																									◆	
Compressor loses oil																																					●				●												■	■	■	■	■	◆				●	
Head pressure too high																																				■		●				●	●	◆		●	●	◆	●		◆						■				
Head pressure too low																																			◆		●				●									●												
Liquid line frosting or sweating																																													●						◆						●				
Suction pressure too high																																			●			◆	●			◆		●																	
Suction pressure too low																																					●					◆									◆	◆	●	●	●	●	◆			◆	■
Evaporator frosting																														◆							◆				●	◆									◆	◆	●	●	●	●	◆			◆	■
Suction line frosting or sweating																																						●													◆ ●	●	●	◆ ●	■					
Evaporator blower will not start	●	●	●	●	■	■				●	●	■							●	●	●	■	■				●			●																															
Condenser fan motor runs contactor not pulled in																															●																													
Liquid refrigerant flooding back to compressor—cap tube system																																						●					■									◆	◆	◆	◆	◆				■	
Space temperature too high																							●												◆		●				●										◆	●	●	●	●	●		●	◆	◆	■	●

TROUBLESHOOTING CHART FOR AIR TO AIR HEAT PUMPS

- ● Denotes common cause.
- ◆ Denotes occasional cause.

| | | Power Supply | | | | | | | | | | | | | | | | | | | | | Outdoor Section | | | | | | | | | | | | | | | | | | |

INSTALLATION INSTRUCTIONS

11EER WA Series
Wall Mount Air Conditioner

Models:

W42AY-A	W48AY-A	W60AY-A	W72AY-A
W42AY-B	W48AY-B	W60AY-B	W72AY-B
W42AY-C	W48AY-C	W60AY-C	W72AY-C
W42AYRC	W48AYRC	W60AYRC	W72AYRC
W42AYDA	W48AYDA	W60AYDA	W72AYDA
W42AYDB	W48AYDB	W60AYDB	W72AYDB
W42AYDC	W48AYDC	W60AYDC	W72AYDC

In compliance with 40 CFR Part 84, commonly referred to as the EPA HFC Technology Transition rule, R410A products that were manufactured after 1/1/25 but before 1/1/27 are solely for data center, computer room, and ITEF applications. These units may be sold, distributed, or exported for said applications up until 12/31/29.

Bard®
SINCE 1914
Climate Control Solutions

Bard Manufacturing Company, Inc.
Bryan, Ohio 43506
www.bardhvac.com

Manual: 2100-787B
Supersedes: 2100-787A
Date: 10-24-24

CONTENTS

Safety Instructions 4
General Information 10
General 10
Shipping Damage 10
Additional Publications 10
Air Conditioner Wall Mount Model Nomenclature ... 11
Duct Work 12
Filters 12
Filter Removal/Installation 12
Switching Filter Sizes 13
Fresh Air Intake 14
Installation 15
Basic Installation Design and Application Planning 15
Wall Construction 15
Outdoor Area Inspection 15
Condensate Water Drainage 15
Indoor Ducted and Non-Ducted Applications 15
Indoor Supply Airflow 15
Indoor Return Airflow 15
Ducted Applications 16
Free Blow Applications 16
Thermostat or Indoor Temperature Sensor Placement 16
Unit Installation 16
Materials/Tool List 16
Wall Preparation 17
Wall Mount Installation to Wall Surface 17
Wiring – Main Power 24
High Voltage Connections 24
Wiring – Low Voltage 25
Low Voltage (24VAC) Connections 25
Unit Shutdown Feature 25
Balanced Climate™ Feature 25
Dehumidification Feature 26
Ventilation Features 26
Low Ambient Control (LAC) 26
Outdoor Temperature Switch and Freeze Protection Thermostat 26
Alarm Relay Feature 26
DDC Controls Feature 26
Dirty Filter Switch Indicator (DFS) 26
Discharge Air Sensor 26
Airflow Switch 26
Compressor Current Sensor 26
Start Up 30
General 30
Topping Off System Charge 30
Safety Practices 30
Important Installer Note 30
High Pressure Switch 30
Three Phase Scroll Compressor Start Up Information 30
Phase Monitor 31
Condenser Fan Operation 31
Service Hints 31
Sequence of Operation 31
Balanced Climate™ Mode 31
Vent Connection Plug 32
Compressor Control Module 32
Features 32
Delay-on-Make Timer 32
Short Cycle/Delay-on-Break 32
Low Pressure Detection 32
High Pressure Detection 32
Test Mode 32
Brownout Protection with Adjustment 32
Pressure Service Ports 33
Service 34
Troubleshooting Nidec SelecTech Series ECM Motors 34
If the Motor is Running 34
If the Motor is Not Running 34
Model SelecTech Communication Diagnostics ... 35
Fan Blade Setting Dimensions 36
R-410A Refrigerant Charge 36
Removal of Fan Shroud 36
Setting Unit Airflow 40
Blower Speeds 40
Speed Tap 1 – Vent/Blower Only 41
Speed Tap 2 – Balanced Climate 41
Speed Tap 3 – Default LO Cooling & Heating 41
Speed Tap 4 – Optional MED Cooling & Heating 41
Speed Tap 5 – Optional HI Cooling & Heating 41
Dirty Filter Switch 41
Dirty Filter Switch Adjustment 41

FIGURES

Figure 1 Front Control Panel Cover 12
Figure 2 Removing Left Filter..... 12
Figure 3 Removing Second Filter..... 13
Figure 4 Filter Tabs in Up Position..... 13
Figure 5 Bend FIlter Tabs Down..... 13
Figure 6 Remove Four Screws 13
Figure 7 Re-Install Filter Support Brackets into Lower Slots 13
Figure 8 Re-Install Screws and Bend Tabs Up..... 13
Figure 9 Install Right 2" Filter..... 14
Figure 10 Install Left 2" Filter..... 14
Figure 11 Fresh Air Damper..... 14
Figure 12 Vent Installation/Removal Clearance Required 18
Figure 13 Unit Dimensions 19
Figure 14 Mounting Instructions..... 20
Figure 15 Electric Heat Clearance 21
Figure 16 Wall Mounting Instructions 22
Figure 17 Wall Mounting Instructions 22
Figure 18 Common Wall Mounting Installations 23
Figure 19 High Voltage Connections 24
Figure 20 Programmable Thermostat Connections 28
Figure 21 Non-Programmable Thermostat Connections 29
Figure 22 Compressor Control Module.....33
Figure 23 Motor Connections 34
Figure 24 Motor Connections 35
Figure 25 Fan Blade Setting 36
Figure 26 Fan Shroud Removal 36
Figure 27 Speed Taps..... 40
Figure 28 Speed Taps..... 41
Figure 29 Dirty Filter Switch and Dirty Filter Indicator Light/Reset Switch 42
Figure 30 Adjusting Filter Switch 43

TABLES

Table 1 Clearance Required for Service Access and Adequate Condenser Airflow..... 18
Table 2 Minimum Clearances Required to Combustible Materials..... 18
Table 3 Additional Low Voltage Connections (if applicable)..... 25
Table 4 Low Voltage Connections for DDC Control 26
Table 5 Wall Thermostats 27
Table 6 Humidity Controls 27
Table 7 CO_2 Controllers 27
Table 8 Thermostat Wire Size..... 27
Table 9 Fan Blade Dimensions..... 36
Table 10 Cooling Pressure – Standard Airflow..... 37
Table 11A Electrical Specs W42AY, W48AY 38
Table 11B Electrical Specs W60AY, W72AY 39
Table 12 Recommended Airflow..... 40
Table 13 Blower Speeds for Unit Operational Modes..... 40
Table 14 Maximum ESP Electric Heat Only..... 46
Table 15 Electric Heat 46
Table 16 Vent and Control Options 47
Table 17 Optional Accessories 48

GRAPHS

Graph 1 W42AY Indoor Airflow Performance – Wet Coil 44
Graph 2 W48AY Indoor Airflow Performance – Wet Coil 44
Graph 3 W60AY Indoor Airflow Performance – Wet Coil 45
Graph 4 W72AY Indoor Airflow Performance – Wet Coil 45
Graph 5 W42AY FAD-NE5 W/O Exhaust Ventilation Delivery 49
Graph 6 W48AY FAD-NE5 W/O Exhaust Ventilation Delivery 49
Graph 7 W60AY FAD-NE5 W/O Exhaust Ventilation Delivery 50
Graph 8 W72AY FAD-NE5 W/O Exhaust Ventilation Delivery 50

NOTICE

APPLIANCE ACCESSIBLE TO THE GENERAL PUBLIC.

SAFETY INSTRUCTIONS

READ ALL INSTRUCTIONS BEFORE USE

Your safety and the safety of others are very important.
We have provided many important safety messages in this manual and on your appliance. Always read and follow all safety messages.

ANSI Z535.5 Definitions:

DANGER: Indicate[s] a hazardous situation which, if not avoided, will result in death or serious injury. The signal word "DANGER" is to be limited to the most extreme situations. DANGER [signs] should not be used for property damage hazards unless personal injury risk appropriate to these levels is also involved.

WARNING: Indicate[s] a hazardous situation which, if not avoided, could result in death or serious injury. WARNING [signs] should not be used for property damage hazards unless personal injury risk appropriate to this level is also involved.

CAUTION: Indicate[s] a hazardous situation which, if not avoided, could result in minor or moderate injury. CAUTION [signs] without a safety alert symbol may be used to alert against unsafe practices that can result in property damage only.

NOTICE: [this header is] preferred to address practices not related to personal injury. The safety alert symbol shall not be used with this signal word. As an alternative to "NOTICE" the word "CAUTION" without the safety alert symbol may be used to indicate a message not related to personal injury.

DANGER

WARNING

CAUTION

NOTICE

NOTICE

APPLIANCE ACCESSIBLE TO THE GENERAL PUBLIC.

WARNING

Electrical shock hazard.

Do not operate this equipment without an earth ground attached and always disconnect the remote electric power supplies before servicing.

Electrical shock can result in serious injury or death.

WARNING

Fire hazard.

Maintain minimum 1/4" clearance between the supply air duct and combustible materials in the first 3' feet of ducting.

Failure to do so could result in fire causing damage, injury or death.

WARNING

Heavy item hazard.

Use more than one person to handle unit.

Failure to do so could result in unit damage or serious injury.

⚠ WARNING

Electrical shock hazard.

Have a properly trained individual perform these tasks.

Failure to do so could result in electric shock or death.

⚠ CAUTION

Sharp metallic edges.

Take care and wear appropriate protective devices to avoid accidental contact with sharp edges.

Failure to do so can result in personal injury.

The following symbols are displayed on units.

This symbol indicates that the Operation Manual should be read carefully.

This symbol indicates that a service personnel should be handling this equipment with reference to the Installation Manual.

This symbol indicates that information is available such as the Operation Manual or Installation Manual.

IMPORTANT SAFETY INSTRUCTIONS

WARNING

To reduce the risk of explosion, fire, death, electric shock, scalding or injury to persons when using this product, follow basic precautions, including the following:

GENERAL

- The equipment covered in this manual is to be installed by trained, experienced service and installation technicians.
- This appliance is not intended for use by persons (including children) with reduced physical, sensory or mental capabilities, or lack of experience and knowledge, unless they have been given supervision or instruction concerning use of the appliance by a person responsible for their safety.
- The refrigerant system is completely assembled and charged. All internal wiring is complete.
- The unit is designed for use with or without duct work. Flanges are provided for attaching the supply and return ducts.
- These instructions explain the recommended method to install the air-cooled self-contained unit and the electrical wiring connections to the unit.
- These instructions and any instructions packaged with any separate equipment required to make up the entire air conditioning system should be carefully read before beginning the installation. Note particularly "Starting Procedure" and any tags and/or labels attached to the equipment.
- While these instructions are intended as a general recommended guide, they do not supersede any national and/or local codes in any way. Authorities having jurisdiction should be consulted before the installation is made. See Additional Publications for information on codes and standards.
- Size of unit for a proposed installation should be based on heat loss calculation made according to methods of Air Conditioning Contractors of America (ACCA). The air duct should be installed in accordance with the Standards of the National Fire Protection Association for the Installation of Air Conditioning and Ventilating Systems of Other Than Residence Type, NFPA No. 90A, and Residence Type Warm Air Heating and Air Conditioning Systems, NFPA No. 90B. Where local regulations are at a variance with instructions, installer should adhere to local codes.

INSTALLATION

- This product is not intended for use at altitudes exceeding 2,000 meters (6,561 feet). For appliances intended for use at altitudes exceeding 2 000 m (6,561 feet), the maximum altitude of use shall be stated.
- Before use, the appliance must be properly installed as described in this manual.
- Contact the authorized service technician for repair or maintenance of this unit.
- Contact the installer for installation of this unit.
- The air conditioner is not intended for use by young children or invalids without supervision.
- Young children should be supervised to ensure that they do not play with the air conditioner.
- Installation work must be performed in accordance with the National Electric Code by qualified and authorized personnel only.
- Connect to a properly rated, protected, and sized power circuit to avoid electrical overload.
- Adhere to all industry recommended safety procedures including the use of long-sleeved gloves and safety glasses.
- Use care when unpacking and installing. The edges of the product may be sharp.
- Keep packaging materials out of the reach of children. These materials can pose a suffocation risk to children.

OPERATION

- This appliance is not intended for use by persons (including children) with reduced physical, sensory, or mental capabilities, or lack of experience and knowledge, unless they have been given supervision or instruction concerning use of the appliance by a person responsible for their safety.
- Use this appliance only for its intended purpose.
- Never attempt to operate this appliance if it is damaged, malfunctioning, partially disassembled, or has missing or broken parts.
- Do not tamper with controls.

LIRE TOUTES LES INSTRUCTIONS AVANT UTILISATION

Votre sécurité et celle des autres sont très importantes.
Nous avons fourni de nombreux messages de sécurité importants dans ce manuel et sur votre appareil. Lisez et suivez toujours tous les messages de sécurité.

Définitions ANSI Z535.5 :

DANGER : Indique une situation dangereuse qui, si elle n'est pas évitée, entraînera certainement la mort ou des blessures graves. Le mot « DANGER » doit être limité aux situations extrêmes. Les indications « DANGER » ne doivent pas être utilisées pour les risques de dégâts matériels, à moins qu'il n'existe un risque concomitant de blessures corporelles.

AVERTISSEMENT : Indique une situation dangereuse qui, si elle n'est pas évitée, peut entraîner la mort ou des blessures graves. Les indications « AVERTISSEMENT » ne doivent pas être utilisées pour les risques de dégâts matériels, à moins qu'il n'existe un risque concomitant de blessures corporelles.

ATTENTION : Indique une situation dangereuse qui, si elle n'est pas évitée, peut entraîner des blessures mineures à modérées. Les indications « ATTENTION », sans symbole d'avertissement, peuvent être utilisées pour alerter sur des pratiques dangereuses pouvant entraîner des dégâts matériels uniquement.

REMARQUE : cet avis concerne les pratiques n'entraînant aucune blessure corporelle. Le symbole d'avertissement ne doit pas être utilisé avec ce mot. Comme alternative à « AVIS », le mot « ATTENTION » sans symbole d'avertissement peut être utilisé pour indiquer un message non lié à des blessures corporelles.

DANGER

AVERTISSEMENT

ATTENTION

REMARQUE

REMARQUE

APPAREIL ACCESSIBLE AU GRAND PUBLIC.

AVERTISSEMENT

Risque de choc électrique.

Ne pas faire fonctionner cet équipement sans qu'il soit relié à la terre et toujours débrancher les alimentations électriques avant de procéder aux opérations d'entretien.

Une électrisation peut entraîner des blessures graves ou la mort.

AVERTISSEMENT

Risque d'incendie.

Conserver un dégagement minimal de 6,35 mm/1/4 po entre le conduit d'air soufflé et les matériaux combustibles sur les 900 premiers millimètres (3 pi) du conduit.

Le non-respect de cette consigne entraîne des risques de dégâts matériels, de blessures corporelles ou de décès.

AVERTISSEMENT

Risque lié aux objets lourds.

Plusieurs personnes sont nécessaires à la manipulation de l'unité.

Le non-respect de cette consigne peut entraîner dégâts à l'unité ou des blessures graves.

⚠ AVERTISSEMENT

Risque de choc électrique.

Ces tâches doivent être réalisées par une personne parfaitement qualifiée et formée.

Le non-respect de cette consigne peut entraîner des chocs électriques ou la mort.

⚠ ATTENTION

Arêtes métalliques vives.

Faites attention et portez des dispositifs de protection appropriés pour éviter tout contact accidentel avec des arêtes vives.

Le non-respect de cette consigne peut entraîner des blessures corporelles.

Les symboles suivants sont affichés sur les unités.

Ce symbole indique que le manuel d'utilisation doit être lu attentivement.

Ce symbole indique qu'un membre du personnel de service devrait manipuler cet équipement en se référant au manuel d'installation.

Ce symbole indique que des informations sont disponibles telles que le manuel d'utilisation ou le manuel d'installation.

INSTRUCTIONS DE SÉCURITÉ IMPORTANTES

AVERTISSEMENT

Pour réduire le risque d'explosion, d'incendie, de décès, de choc électrique, d'échaudure ou de blessures pour les personnes lors de l'utilisation de ce produit, suivez les précautions de base, notamment les suivantes :

GÉNÉRALITÉS

- L'équipement couvert dans ce manuel doit être installé par des techniciens de service et d'installation formés et expérimentés.
- Cet appareil n'est pas destiné à être utilisé par des personnes (y compris des enfants) ayant des capacités physiques, sensorielles ou mentales réduites, ou un manque d'expérience et de connaissances, à moins qu'elles n'aient reçu la supervision ou l'instruction concernant l'utilisation de l'appareil par une personne responsable de leur sécurité.
- Le système de réfrigérant est complètement assemblé et chargé. Tout le câblage interne est complet.
- L'unité est conçue pour être utilisée avec ou sans conduits. Des brides sont prévues pour fixer les conduits d'alimentation et de retour.
- Ces instructions expliquent la méthode recommandée pour installer l'unité autonome refroidie à l'air et les connexions de câblage électrique à l'unité.
- Ces instructions et toutes les instructions emballées avec tout équipement distinct requis pour constituer l'ensemble du système de climatisation doivent être lues attentivement avant de commencer l'installation. Notez en particulier « Procédure de démarrage » et les étiquettes et / ou étiquettes attachées à l'équipement.
- Bien que ces instructions soient conçues comme un guide général recommandé, elles ne remplacent en aucune façon les codes nationaux et/ou locaux. Les autorités compétentes devraient être consultées avant que l'installation ne soit effectuée. Voir d'autres publications pour obtenir des renseignements sur les codes et les normes.
- La taille de l'unité pour une installation proposée devrait être basée sur le calcul de la perte de chaleur effectué selon les méthodes de Air Conditioning Contractors of America (ACCA). Le conduit d'air devrait être installé conformément aux Normes de la National Fire Protection Association for the Installation of Air Conditioning and Ventilating Systems of Other Than Residence Type, NFPA No. 90A, et aux Systèmes de chauffage et de climatisation d'air chaud de type résidence, NFPA No. 90B. Lorsque les réglementations locales sont en contradiction avec les instructions, l'installateur doit respecter les codes locaux.

L'INSTALLATION

- Ce produit n'est pas destiné à être utilisé à des altitudes supérieures à 2 000 mètres (6 561 pieds). Pour les appareils destinés à être utilisés à des altitudes supérieures à 2 000 m (6 561 pieds), l'altitude maximale d'utilisation doit être indiquée.
- Avant utilisation, l'appliance doit être correctement installée comme décrit dans ce manuel.
- Communiquez avec le technicien d'entretien autorisé pour la réparation ou l'entretien de cette unité.
- Contactez le programme d'installation pour l'installation de cet appareil.
- Le climatiseur n'est pas destiné à être utilisé par de jeunes enfants ou des invalides sans surveillance.
- Les jeunes enfants devraient être surveillés pour s'assurer qu'ils ne jouent pas avec le climatiseur.
- Les travaux d'installation doivent être effectués conformément au Code national de l'électricité par du personnel qualifié et autorisé uniquement.
- Connectez-vous à un circuit d'alimentation correctement évalué, protégé et dimensionné pour éviter les surcharges électriques.
- Respectez toutes les procédures de sécurité recommandées par l'industrie, y compris l'utilisation de gants à manches longues et de lunettes de sécurité.
- Faites attention lors du déballage et de l'installation. Les bords du produit peuvent être tranchants.
- Gardez les matériaux d'emballage hors de la portée des enfants. Ces matériaux peuvent poser un risque d'étouffement pour les enfants.

OPÉRATION

- Cet appareil n'est pas destiné à être utilisé par des personnes (y compris des enfants) ayant des capacités physiques, sensorielles ou mentales réduites, ou un manque d'expérience et de connaissances, à moins qu'elles n'aient reçu une supervision ou une instruction concernant l'utilisation de l'appareil par une personne responsable de leur sécurité.
- Utilisez cet appareil uniquement aux fins prévues.
- N'essayez jamais de faire fonctionner cet appareil s'il est endommagé, défectueux, partiellement démonté ou s'il a des pièces manquantes ou cassées.
- Ne pas altérer les contrôles.

GENERAL INFORMATION

General

The equipment covered in this manual is to be installed by trained, experienced service and installation technicians.

This appliance is not intended for use by persons (including children) with reduced physical, sensory or mental capabilities, or lack of experience and knowledge, unless they have been given supervision or instruction concerning use of the appliance by a person responsible for their safety.

Children should be supervised to ensure that they do not play with the appliance.

The refrigerant system is completely assembled and charged. All internal wiring is complete.

The unit is designed for use with or without duct work. Flanges are provided for attaching the supply and return ducts.

These instructions explain the recommended method to install the air cooled self-contained unit and the electrical wiring connections to the unit.

These instructions and any instructions packaged with any separate equipment required to make up the entire air conditioning system should be carefully read before beginning the installation. Note particularly "Starting Procedure" and any tags and/or labels attached to the equipment.

While these instructions are intended as a general recommended guide, they do not supersede any national and/or local codes in any way. Authorities having jurisdiction should be consulted before the installation is made. See following section for information on codes and standards.

Size of unit for a proposed installation should be based on heat loss calculation made according to methods of Air Conditioning Contractors of America (ACCA). The air duct should be installed in accordance with the Standards of the National Fire Protection Association for the Installation of Air Conditioning and Ventilating Systems of Other Than Residence Type, NFPA No. 90A, and Residence Type Warm Air Heating and Air Conditioning Systems, NFPA No. 90B. Where local regulations are at a variance with instructions, installer should adhere to local codes.

Shipping Damage

Upon receipt of equipment, the carton should be checked for external signs of shipping damage. If damage is found, the receiving party must contact the last carrier immediately, preferably in writing, requesting inspection by the carrier's agent.

Additional Publications

These publications can help when installing the air conditioner. They can usually be found at the local library or purchased directly from the publisher. Be sure to consult the current edition of each standard.

National Electrical Code ..... ANSI/NFPA 70

Standard for the Installation of Air Conditioning and Ventilating Systems
..... ANSI/NFPA 90A

Standard for Warm Air Heating and Air Conditioning Systems
..... ANSI/NFPA 90B

Load Calculation for Winter and Summer Air Conditioning
..... ACCA Manual J Residential

Duct Design for Residential Winter and Summer Air Conditioning and Equipment Selection
..... ACCA Manual D

For more information, contact these publishers:

ACCA **Air Conditioning Contractors of America**
1712 New Hampshire Ave. N.W.
Washington, DC 20009
Telephone: (202) 483-9370
Fax: (202) 234-4721

ANSI **American National Standards Institute**
11 West Street, 13th Floor
New York, NY 10036
Telephone: (212) 642-4900
Fax: (212) 302-1286

ASHRAE **American Society of Heating, Refrigeration and Air Conditioning Engineers, Inc.**
1791 Tullie Circle, N.E.
Atlanta, GA 30329-2305
Telephone: (404) 636-8400
Fax: (404) 321-5478

NFPA **National Fire Protection Association**
Batterymarch Park
P.O. Box 9101
Quincy, MA 02269-9901
Telephone: (800) 344-3555
Fax: (617) 984-7057

Air Conditioner Wall Mount Model Nomenclature

W 42 A Y – A 0Z X X X X X X

MODEL SERIES

CAPACITY
42 – 3½ Ton
48 – 4 Ton
60 – 5 Ton
72 – 6 Ton

A – Air Conditioner

REVISION

SPECIAL CONFIGURATION
(–) – Standard System
D – Dehumidification
R – Motor Isolation (460V Only for High Resistance Ground)

ELECTRICAL
A – 230/208/60/1
B – 230/208/60/3
C – 460/60/3
E – 220/220/50/3
F – 415/380/60/3

ELECTRIC HEAT
00 – No Electric Heat, No Circuit Breaker
0Z – No Electric Heat, w/Circuit Breaker
05 – 5KW Electric Heat
06 – 6KW Electric Heat
09 – 9KW Electric Heat
10 – 10KW Electric Heat
12 – 12KW Electric Heat
15 – 15KW Electric Heat

VENT
X – Fresh Air Damper, No Exhaust
A – Fresh Air Damper, w/Exhaust
B – Blank-Off Plate
D – DDC/BrightStat, 0-10V Economizer
M – Commercial Room Ventilator, ON/OFF Operation Only
R – Energy Recovery Ventilator
V – Commercial Ventilator, Modulating Operation w/Board
Y – Full Flow Economizer w/JADE, Dry Bulb
Z – Economizer, DB & WB, Full Flow

FILTER
X – 1" Throwaway (Standard)
W – 1" Washable
P – 2" MERV 8
M – 2" MERV 11
N – 2" MERV 13
A – 2" MERV 13 with UVC-LED Light
B – 2" MERV 13 with NPBI TECH

COLOR OPTIONS
X – Beige
1 – White
4 – Gray
5 – Desert Brown
8 – Dark Bronze
A – Aluminum
S – Stainless Steel

PLACEHOLDER
X – Standard Front Outlet
J – Recessed Cabinet Top, Blow Thru

COIL OPTIONS
X – Standard
1 – Phenolic Coated Evaporator
2 – Phenolic Coated Condenser
3 – Phenolic Coated Evaporator and Condenser
4 – 3rd Party Unit Coating: Condenser
5 – 3rd Party Unit Coating: Entire Unit

CONTROL
X – None (Standard)
E – Low Ambient Control
F – Filter Replacement Pressure Switch, Alarm Relay & Low Ambient Control
J – Alarm Relay & Low Ambient Control
K – Start Kit & Low Ambient Control
M – Start Kit, Low Ambient Control & Alarm Relay
V – DDC Controls

Duct Work

All duct work, supply and return, must be properly sized for the design airflow requirement of the equipment. Air Conditioning Contractors of America (ACCA) is an excellent guide to proper sizing. All duct work or portions thereof not in the conditioned space should be properly insulated in order to both conserve energy and prevent condensation or moisture damage.

Refer to Maximum ESP of Operation Electric Heat table on page 46.

Design the duct work according to methods given by the Air Conditioning Contractors of America (ACCA). When duct runs through unheated spaces, it should be insulated with a minimum of 1" of insulation. Use insulation with a vapor barrier on the outside of the insulation. Flexible joints should be used to connect the duct work to the equipment in order to keep the noise transmission to a minimum.

All model series require a 1/4" clearance to combustible material for the first 3' of duct attached to the outlet air frame is required. See instructions on page 17 and Figures 14 – 18 (pages 20 – 23) for further details.

Ducts through the walls must be insulated and all joints taped or sealed to prevent air or moisture entering the wall cavity.

Some installations may not require a return air duct. A metallic return air grille is required with installations not requiring a return air duct. The spacing between louvers on the grille shall not be larger than 5/8".

Any grille that meets with 5/8" louver criteria may be used. It is recommended that Bard Return Air Grille Kits RG5 or RFG5 be installed when no return duct is used. Contact distributor or factory for ordering information. If using a return air filter grille, filters must be of sufficient size to allow a maximum velocity of 400 fpm.

NOTE: *If no return air duct is used, applicable installation codes may limit this cabinet to installation only in a single story structure.*

Filters

The filters can be serviced from the outside by removing the front control panel cover (see Figure 1). Two (2) 20" x 20" x 1" throwaway filters come standard with each unit. Additional 1" and 2" filter options are available as optional accessories. To be notified when filters need changed, a dirty filter switch option is available. See page 47 for the dirty filter switch kit.

FIGURE 1
Front Control Panel Cover

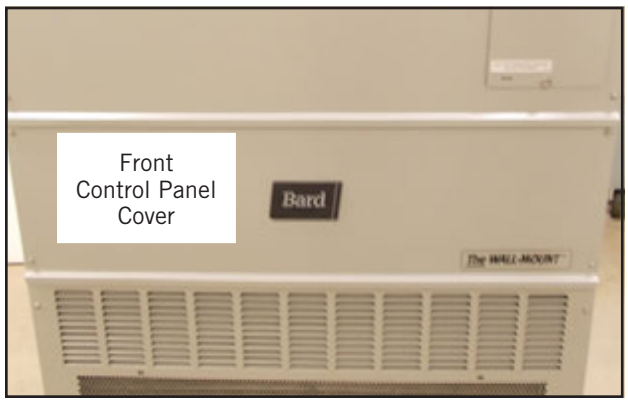

Filter Removal/Installation

1. Remove left filter first by pulling on filter removal slide (see Figure 2).

FIGURE 2
Removing Left Filter

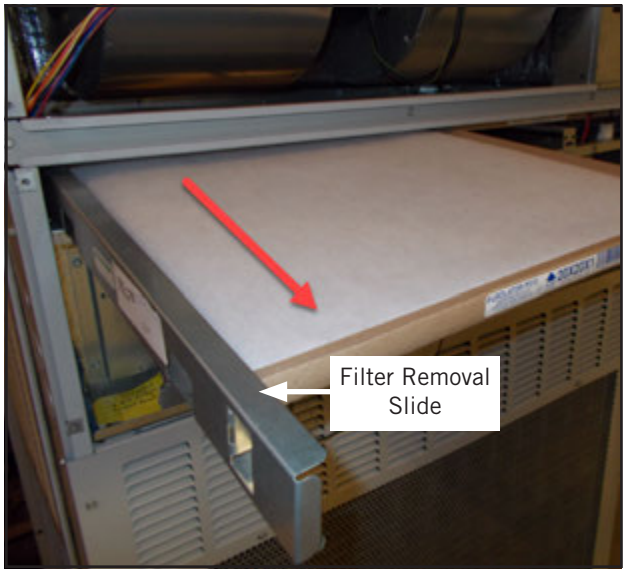

2. Slide second filter to the left around the wires and pull the filter out (see Figure 3).

FIGURE 3
Removing Second Filter

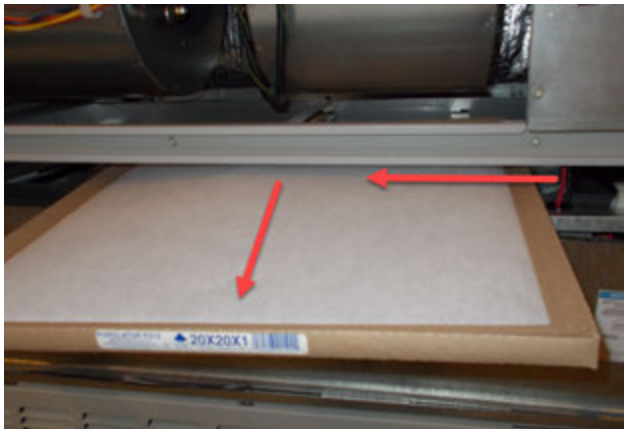

3. Reverse the order for new filter installation.

NOTE: *When installing new filters, make sure that airflow arrows on filters point up.*

Switching Filter Sizes

1. To switch from 1" to 2" filters, start by removing the filter slide and bend the tabs down out of the way (see Figures 4 and 5).

FIGURE 4
Filter Tabs in Up Position

FIGURE 5
Bend Filter Tabs Down

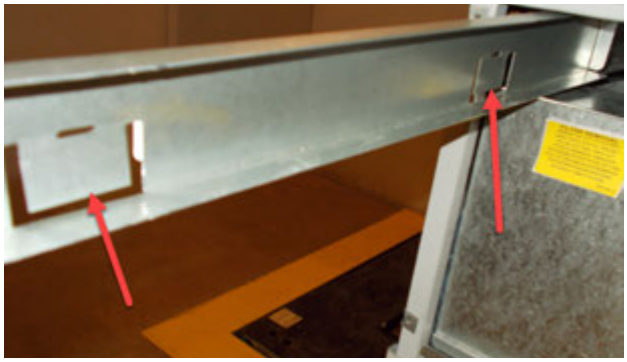

2. Locate the filter support brackets and remove the four (4) screws holding them to the top of the control panel (see Figure 6).

FIGURE 6
Remove Four Screws

3. Pull the brackets out towards the front of the unit. The back of the bracket will slip out of the upper slots at the back of the filter tray.
4. Re-install the filter support brackets into the lower slots at the back of the filter tray (see Figure 7).

FIGURE 7
Re-Install Filter Support Brackets into Lower Slots

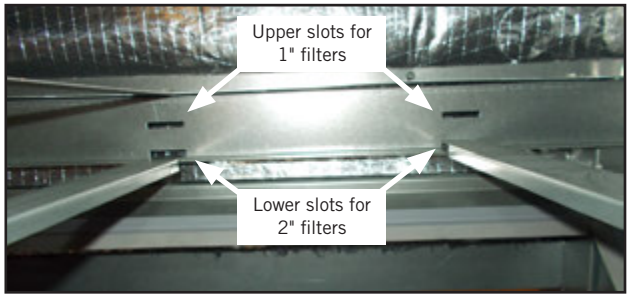

5. Re-install the four (4) screws into the upper screw holes on the filter support brackets. Then bend the tab up out of the way (see Figure 8).

FIGURE 8
Re-Install Screws and Bend Tabs Up

6. Install the right 2" filter first followed by the left filter (see Figures 9 and 10).

NOTE: *When installing new filters, make sure that airflow arrows on filters point up.*

7. Reverse the steps above to switch from 2" to 1" filters.

FIGURE 9
Install Right 2" Filter

FIGURE 10
Install Left 2" Filter

Fresh Air Intake

All units are built with fresh air inlet louvers punched in the side grilles.

If the unit is equipped with a fresh air damper assembly, the assembly is shipped already attached to the unit. Remove right side grille to access the damper blade.

There is an adjustable slide on the side of the fresh air intake that can be adjusted to limit how far the damper opens so that the amount of fresh air that enters the structure is regulated. The damper is shipped pre-set in the #1 position.

Graphs found on pages 49 and 50 give approximate fresh air amounts based on the slide adjustment setting.

All capacity, efficiency and cost of operation information is based upon the fresh air blank-off plate in place.

The blank-off plate is available upon request from the factory and is installed in place of the fresh air damper shipped with each unit.

FIGURE 11
Fresh Air Damper

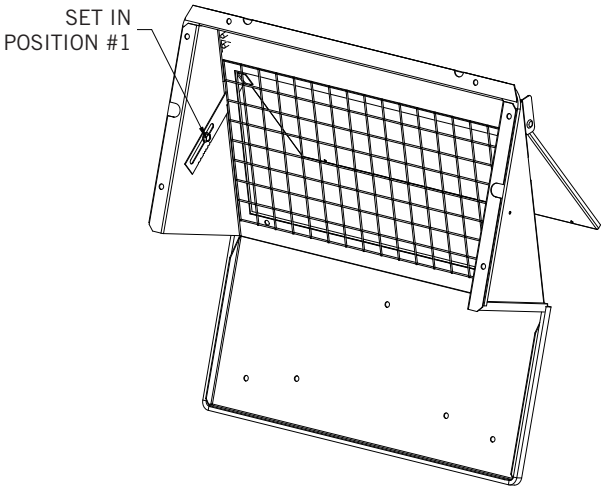

MIS-3977A

Basic Installation Design and Application Planning

Successful unit installations require proper planning and site inspection before installation begins. Before installing the wall mount unit, make sure that all service and airflow clearances are met and that the unit can meet all applicable code and regulation requirements. Provide an inspection of both the inside and outside of the structure by reviewing floorplans and/or visiting the installation site.

Wall Construction

The wall must be inspected to ensure that the weight of the unit can be supported. Be sure to review all applicable construction codes and regulations including seismic requirements. When inspecting wood frame walls, the wall construction must be strong and rigid enough to carry the weight of the unit without transmitting any unit vibration. It is important that the side unit wall mounting lags and optional bottom bracket are supported by structural members inside the wall cavity. Concrete block and brick walls must be thoroughly inspected to ensure that they are capable of carrying the weight of the installed unit. Metal buildings must contain structural components to support the unit weight. If heavily corrugated siding is present, it may need to be trimmed and flashed similar to a window to provide a flat, even surface to attach and seal the unit to the wall. Heavy gauge corrugations that would be present on shipping containers and blast-proof structures may require the installation of a metal plate over the corrugated area. It is important that the unit area is weatherized and sealed to avoid air and water infiltration into the area between the unit and the wall.

Outdoor Area Inspection

Inspect the outdoor area of the jobsite or review construction plans and locate the area where the wall mount is to be installed. The outdoor area must be free from obstructions including fences, bushes and walls that will hinder unit operation regarding outdoor condenser airflow and unit serviceability. Do not install units in enclosed areas that limit the amount of ambient temperature airflow. Warm air will exit the front condenser section of the unit, and outdoor ambient temperature air must be able to enter side intake condenser openings of the unit. Portable or modular building placement must be in a way that the wall mount units have a constant supply of outdoor air for proper unit operation. Make sure that the service panels of the unit are accessible. Inspect wall surfaces for obstructions that could hinder unit installation and servicing including outdoor electrical conduits, junction boxes, wall drains, vent hoods, windows, doors, overhangs and posts.

Condensate Water Drainage

Review all codes and requirements for unit condensate drainage. A clear, flexible PVC drain hose (3/4" ID, 1" OD) extends from the drain pan in the upper section of the unit and extends down to the unit base. An opening is supplied towards the back of the unit base for the drain hose to pass through, and the hose extends 1" to 2" below the unit base. Water removed from the indoor air (condensate) will be expelled from the unit in large amounts during cooling operation through the hose. Units running in cooling operation in cold outdoor below freezing conditions can cause the condensate to freeze after leaving the drain hose. In the event the drain hose is connected to a drain system of some type, it must be an open or vented type system to ensure proper drainage throughout seasonal use.

Indoor Ducted and Non-Ducted Applications

Air distribution inside the structure being conditioned plays an important role in making sure the area is a consistent temperature. Improper air distribution can result in areas being cooler or warmer, electrical equipment not receiving sufficient airflow or occupancy discomfort felt inside an area. Thermostat or indoor temperature sensor placement inside the area being conditioned also plays an important role in indoor climate control.

Indoor Supply Airflow

Indoor installation areas must provide a non-restrictive path for the conditioned supply air to leave supply grilles and registers. Inspect the area to ensure that all indoor portions of the room or rooms will have access to supply air. Ductwork may be used to ensure proper air circulation and all provided ductwork guidelines and clearances must be followed. Non-ducted applications must use a supply louver grille installed over the supply opening inside the room. Be sure to adjust supply deflectors to properly disperse the conditioned supply air to all parts of the room. Avoid closing sections of the supply grilles which would cause unneeded supply duct pressurization.

Indoor Return Airflow

A non-restrictive path for room air returning to the center section of the unit must be provided inside the room. Avoid placing objects including furniture, electronics equipment, equipment racks and cabinets directly in front of the unit return grilles and registers. Bard recommends at least 2' between solid objects and return grilles or registers. Ductwork may be used to ensure proper air circulation and all provided ductwork guidelines and clearances must be followed. Non-ducted applications must use a return louver grille installed over the return opening inside the room.

Ducted Applications

Field fabricated supply and return duct work may be installed inside the structure being conditioned. A short supply and/or return stub duct may be connected to the unit supply and return flanges before unit installation to help with duct connections inside the structure. Supply and return ducts must be properly sized for the design airflow requirement of the equipment. Air Conditioning Contractors of America (ACCA) is an excellent guide to proper sizing. All duct work or portions thereof not in the conditioned space should be properly insulated in order to conserve energy, reduce heat conductivity, and prevent condensation or moisture damage. Refer to Maximum External Static Pressure (ESP) of Operation Table 14 on page 46. Design the duct work according to methods given by the Air Conditioning Contractors of America (ACCA). When duct work is installed in unheated spaces, it should be insulated with a minimum of 1" of insulation. Use insulation with a vapor barrier on the outside of the insulation. Flexible joints should be used to connect the duct work to the equipment in order to keep the noise transmission to a minimum. Ducts through the walls must be insulated and all joints taped or sealed to prevent air or moisture from entering the wall cavity.

All model series require a 1/4" clearance to combustible material for the first 3' of duct attached to the outlet air frame is required. See instructions on page 17 and Figures 14 – 18 (pages 20 – 23) for further details.

⚠ WARNING

Fire hazard.

Maintain minimum 1/4" clearance between the supply air duct and combustible materials in the first 3' of ducting.

Failure to do so could result in fire causing damage, injury or death.

Free Blow Applications

Some installations may not require extensive supply duct work throughout the structure and are referred to as free blow applications. A short field-fabricated supply duct must be used in the wall cavity to transition between the supply collar on the unit and the supply louver grille in the room. The duct must be properly insulated in order to conserve energy, reduce heat conductivity and prevent condensation or moisture damage. All joints must be taped or sealed to prevent air or moisture entering the wall cavity. Follow all clearances including distances to combustible materials and all instructions provided in this manual.

A non-restrictive metallic supply air grille with deflectors is required for free blow applications. Contact the local Bard distributor or visit www.bardhvac.com for ordering information.

A metallic return air grille is required for non-ducted applications. The spacing between louvers on the grille shall not be larger than 5/8". It is recommended that a Bard Return Air Grille Kit is installed that is designed specifically for the wall mount product. Contact the local Bard distributor or visit www.bardhvac.com for ordering information. A field-supplied return grille that meets the 5/8" louver criteria and does not cause the unit to exceed the maximum specified external static pressure (ESP) may be used. If using a return air filter grille, filters must be of sufficient size to allow a maximum velocity of 400 fpm. Filter return air grilles do not filter air being brought into the structure through ventilation options including fresh air dampers, ventilators, economizers and energy recovery ventilators. Be sure to install the return grille with the louvers pointed downward towards the floor. This will help ensure return air is drawn upward from the floor and improve air circulation in the room.

NOTE: *If no return air duct is used, applicable installation codes may limit this cabinet to installation only in a single story structure.*

Thermostat or Indoor Temperature Sensor Placement

The location and installation of the thermostat or temperature sensor that monitors indoor temperature is very important regarding unit operation. Avoid placing the thermostat in an area exposed to direct sunlight or air from doorways leading outdoors. Use a piece of insulating material to close off conduit openings or holes in the wall surface for wire entry into the thermostat or temperature sensor. This will help avoid non-conditioned air from entering the thermostat and effecting temperature and/or humidity readings. As common practice, the thermostat or temperature sensor should measure the temperature of the air being returned to the unit, and not the conditioned air being supplied by the unit. Placing the thermostat or temperature sensor near a return air opening will normally result in optimal unit performance.

Unit Installation

Make sure to have the proper tools at the work site that are needed for unit installation. The following steps are provided to ensure the unit is installed properly to the wall surface, and that the unit will provide years of service with minimal service requirements.

Materials/Tools List

Additional hardware and miscellaneous supplies are needed for installation. These items are field supplied and must be sourced before installation. This list also includes tools needed for installation.

- Appropriate safety gear including gloves and safety glasses
- 5/16" hex bit with drill driver
- Phillips head screwdriver
- Small straight (thermostat) screwdriver
- Tape measure
- Leveling device
- Two (2) tubes of caulk and caulk gun
- Utility knife
- Tools for cutting holes in the wall surface (if needed)
- Electrical components and wiring along with electrical tools
- Multimeter
- Wall fasteners for side flanges, bottom mounting bracket and top rain flashing
- Duct tape and/or other duct sealing materials

Wall Preparation

1. Two holes for the supply and return air openings must be cut through the wall as shown in Figure 14 on page 20. Be sure the openings are square and level. Follow all clearances including distances to combustible materials and all instructions provided in this manual.
2. Review all electrical requirements provided in this manual and plan out electrical entrances into the building. Also plan electrical conduit routing and thermostat placement, if necessary.
3. Install necessary duct work and prepare the openings for unit installation.
4. Clean the exterior wall where the unit is to be installed and make sure it is able to provide a smooth, level, debris-free surface. Remove all construction debris from the supply, return and electrical hole cutting process.

Wall Mount Installation to Wall Surface

1. Remove packaging from unit and make sure the unit is not damaged before installation. A top rain flashing is supplied for field use and is mounted to the back of the unit for shipping. Remove the rain flashing before locating the unit against the wall. Top rain flashing is required to avoid water entering the area behind the unit that is against the wall. A bottom mounting bracket, attached to the skid for shipping, is provided for ease of installation but is not required. Review all requirements listed on unit labels and on serial plate located on the side of the unit.
2. Locate and mark bolt hole locations and bottom mounting bracket location. Install bottom mounting bracket with field-supplied fasteners to wall if it is to be used (optional). Bracket must be level and installed in the correct location to help support the unit during the installation process (see Figure 14).
3. Position the wall mount unit close to the wall surface where it will be installed. Install rain flashing at the top of the unit facing the wall by hooking the hem bend into the rear bend of the unit top (see Figure 14).
4. Apply a liberal amount of caulk on left and right cabinet side wall mount brackets and back of top rain flashing. Place unit back surface flush against wall. Unit must be level to ensure proper condensate drainage. Optional bottom bracket may be used to help support the unit.
5. Units are secured to the wall by using field-supplied fasteners along each side of the wall mount through the built-in wall mounting brackets. It is the responsibility of the installer to select the proper fastener to secure the unit to the wall based on wall construction and applicable building codes. Typical installations may include 5/16" fasteners with 7/8" diameter flat washers. Be sure unit is securely mounted and all weight-bearing fasteners are attached to the weight supporting structural members of the wall.
6. Apply a bead of caulk between the back of the unit top and the front surface of the top rain flashing (see Figure 14).
7. Connect unit duct work from the inside of the building following all clearances and instructions provided. For additional mounting rigidity, the return air and supply air frames or collars can be drilled and screwed or welded to the structural wall itself (depending upon wall construction). Be sure to use code approved duct tape or other sealing materials to seal the duct work to the unit.
8. On side-by-side installations, maintain a minimum of 20" clearance on both sides to allow access to heat strips and to provide proper airflow to the outdoor coil. Additional clearance may be required to meet local or national codes.

TABLE 1
Clearance Required for Service Access and Adequate Condenser Airflow

Model	Left Side	Right Side	Discharge – Front
W42AY W48AY W60AY W72AY	20"	20"	10'

* For vent installation and removal, one side of the unit requires 45" clearance in the vent area. See Figure 12 for clarity.

See Specifications Sheet S3642.

TABLE 2
Minimum Clearances Required to Combustible Materials

Model	Supply Air Duct (1st 3')	Cabinet
W42AY W48AY W60AY W72AY	1/4"	0"

FIGURE 12
Vent Installation/Removal Clearance Required

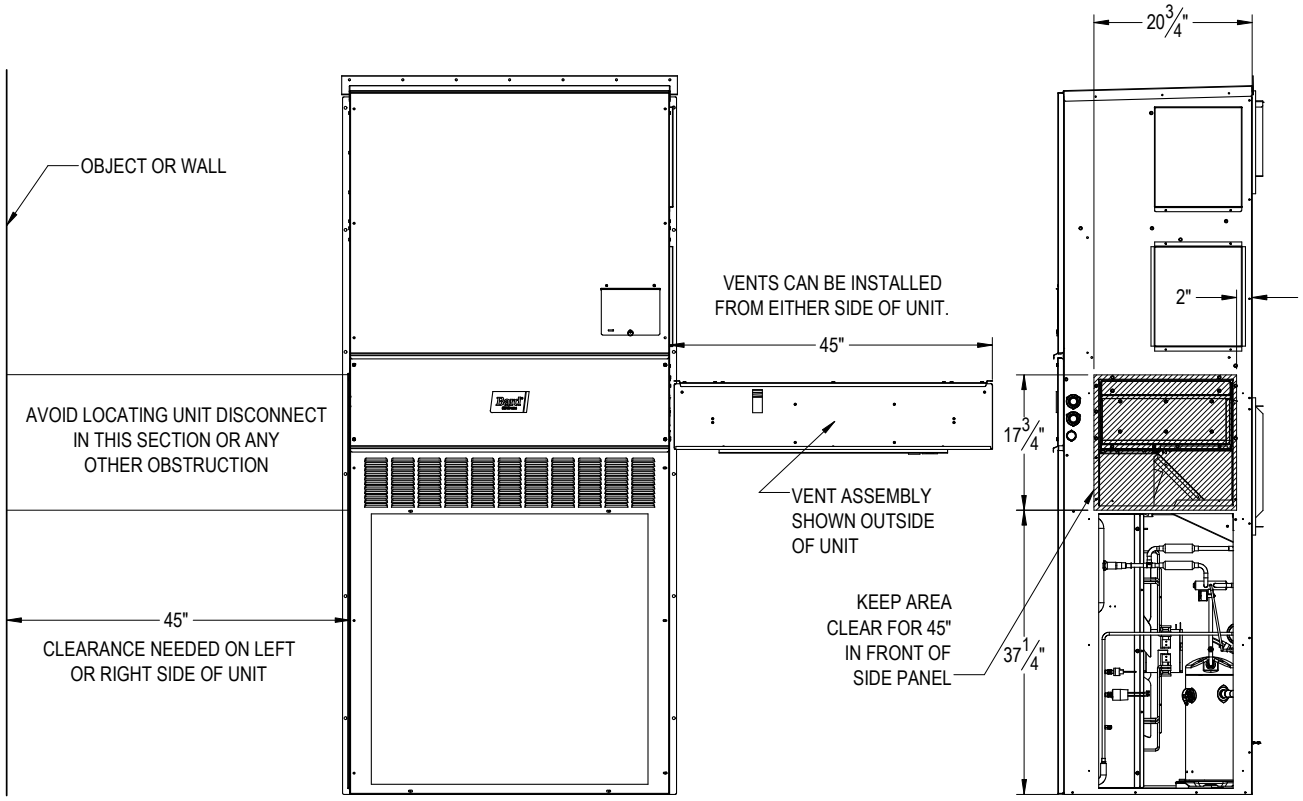

MIS-4042 A

FIGURE 13
Unit Dimensions

	Width (W)	Depth (D)	Height (H)	Supply		Return																
				A	B	C	B	E	F	G	I	J	K	L	M	N	O	R	S	T	U	V
W42AY W48AY	42.00	25.52	84.75	9.88	29.88	15.88	29.88	43.88	12.63	39.06	30.06	43.25	26.94	55.59	52.59	8.82	43.00	1.44	16.00	1.88	10.50	12.00
W60AY W72AY	42.00	25.52	92.88	9.88	29.88	15.88	29.88	43.88	12.63	45.00	30.06	49.25	35.06	61.72	58.72	8.82	43.00	1.44	16.00	10.00	13.88	15.43

All dimensions are in inches. Dimensional drawings are not to scale.

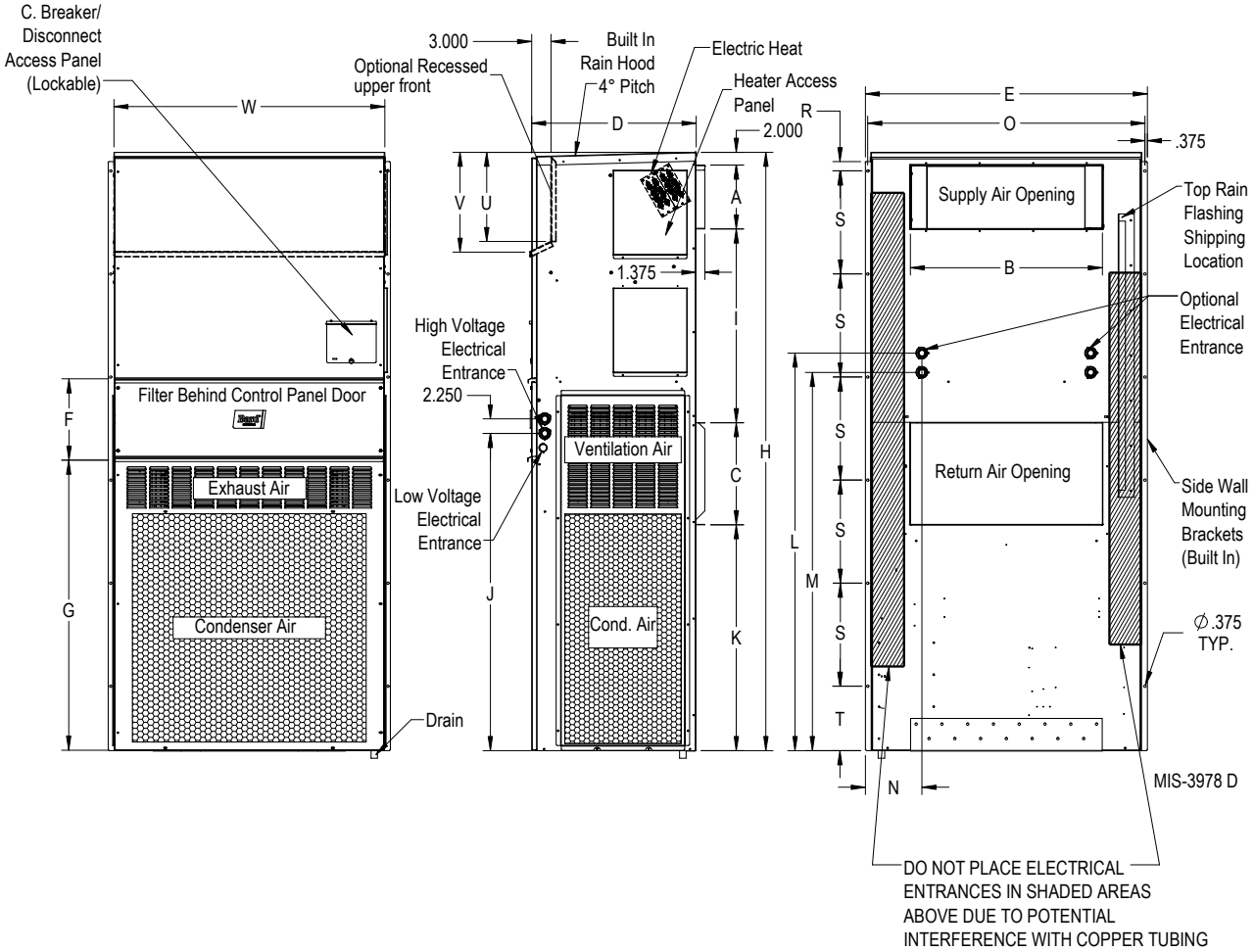

FIGURE 14
Mounting Instructions

UNITS	REQUIRED DIMESIONS	A	B	C	D	E	F	G
W42AY-W48AY UNITS	REQUIRED DIMESIONS TO MAINTAIN 1/4" MIN. CLEARANCE FROM COMBUSTIBLE MATERIALS	30 1/2	10 1/2	6 1/4	1 1/4	29 3/4	16	1 7/8
	REQUIRED DIMENSIONS TO MAINTAIN RECOMMENDED 1" CLEARANCE FROM COMBUSTIBLE MATERIALS	32	12	5 1/2	2	29	16	1 7/8
W60AY-W72AY UNITS	REQUIRED DIMESIONS TO MAINTAIN 1/4" MIN. CLEARANCE FROM COMBUSTIBLE MATERIALS	30 1/2	10 1/2	6 1/4	1 1/4	29 3/4	16	9 7/8
	REQUIRED DIMENSIONS TO MAINTAIN RECOMMENDED 1" CLEARANCE FROM COMBUSTIBLE MATERIALS	32	12	5 1/2	2	29	16	9 7/8

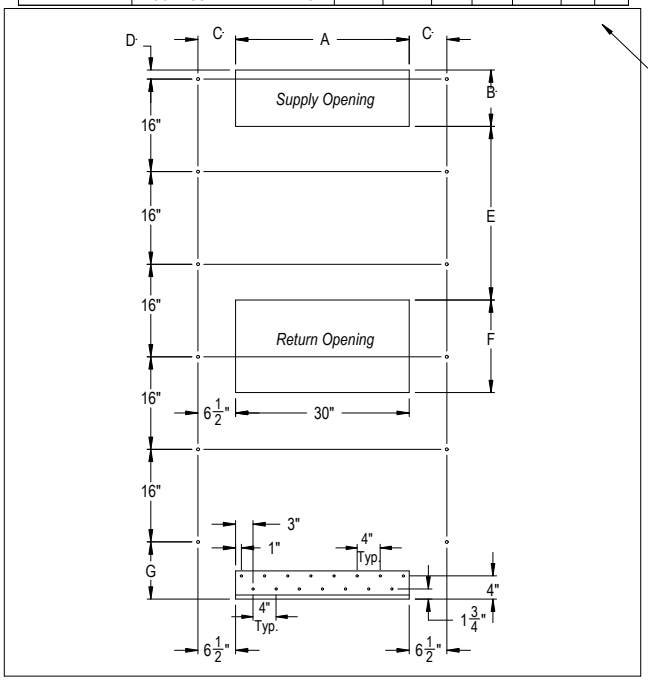

Wall Opening and Hole Location View

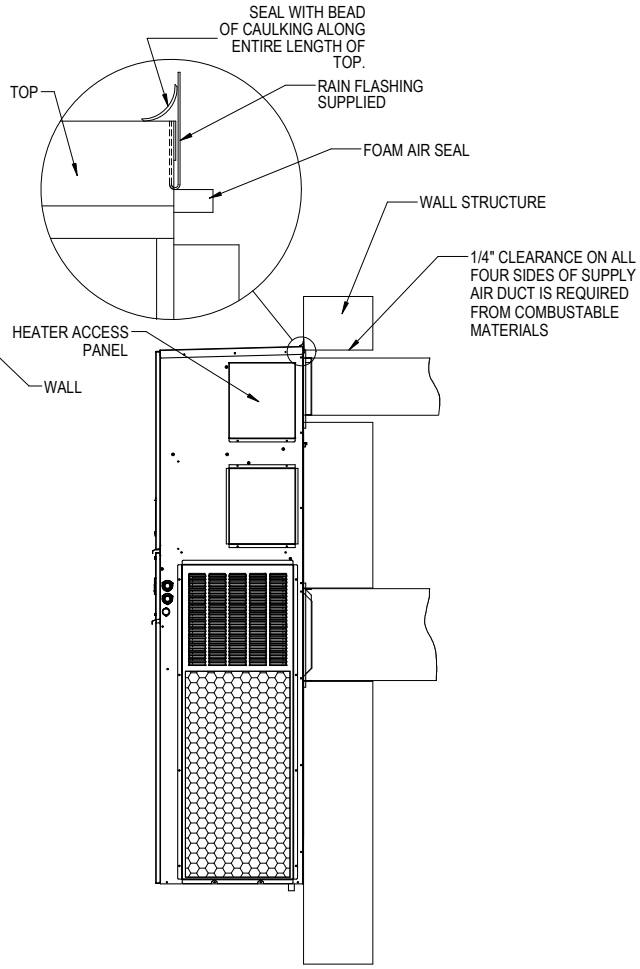

Right Side View

MIS-3980 D

FIGURE 15
Electric Heat Clearance

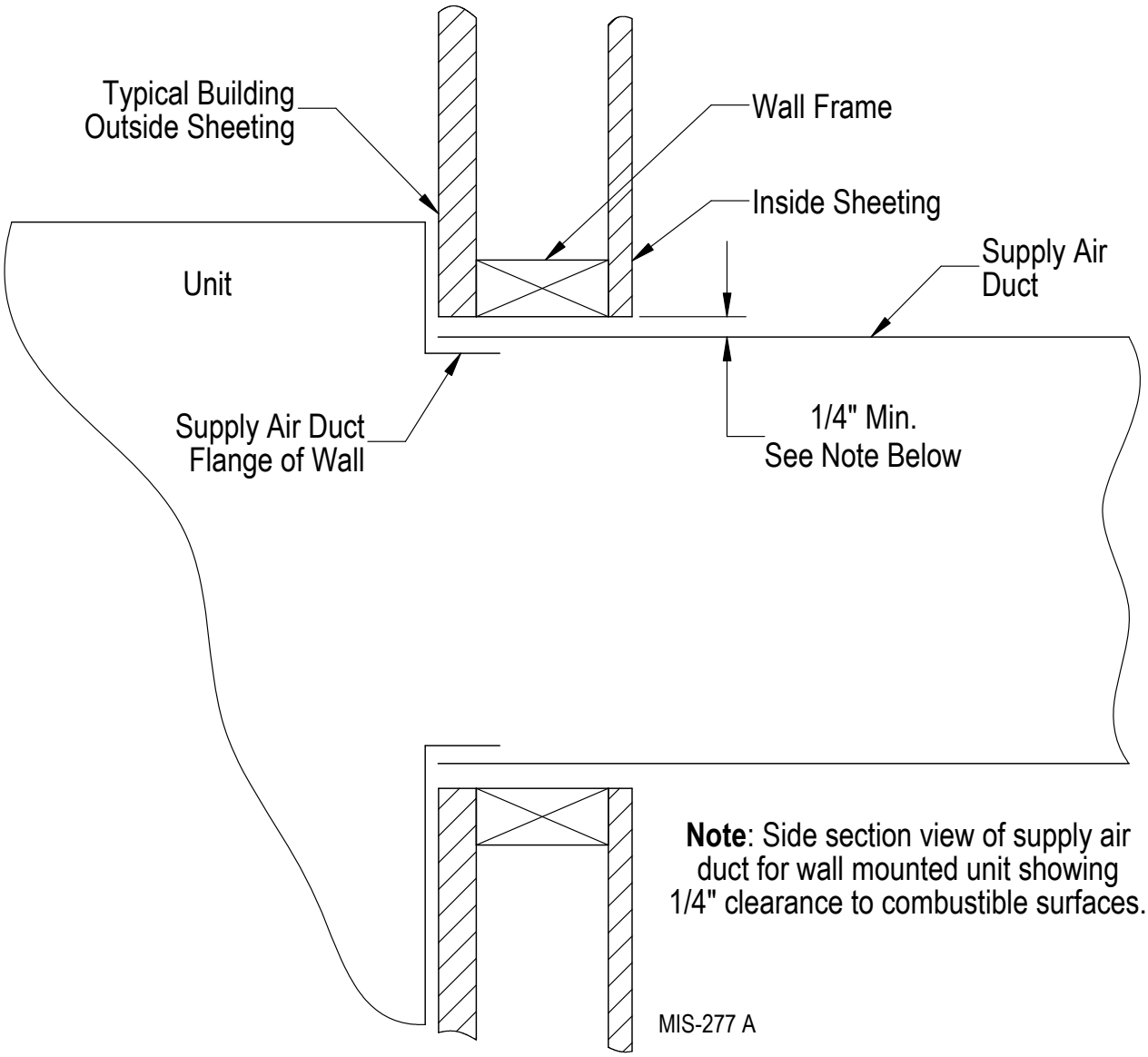

⚠ WARNING

Fire hazard.

Maintain minimum 1/4" clearance between the supply air duct and combustible materials in the first 3' of ducting.

Failure to do so could result in fire causing damage, injury or death.

FIGURE 16
Wall Mounting Instructions

See Figure 14 Mounting Instructions

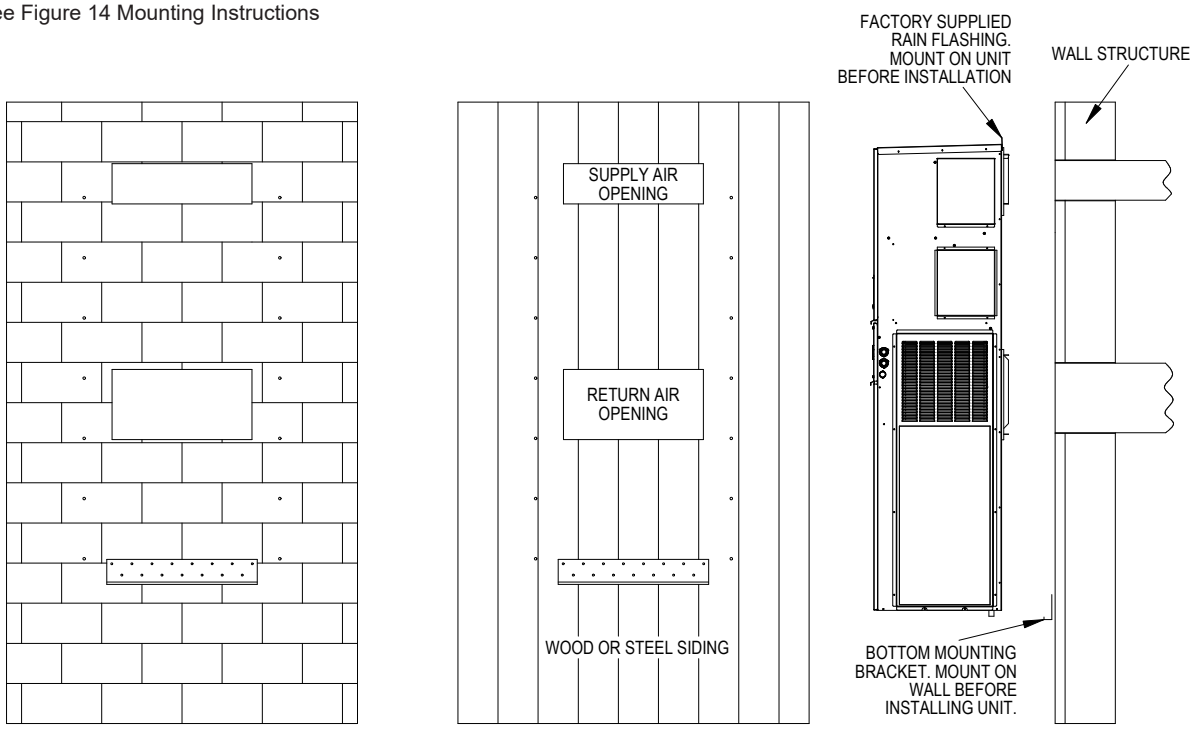

CONCRETE BLOCK WALL INSTALLATION *WOOD FRAME WALL INSTALLATION* *SIDE VIEW*

MIS-3981 C

FIGURE 17
Wall Mounting Instructions

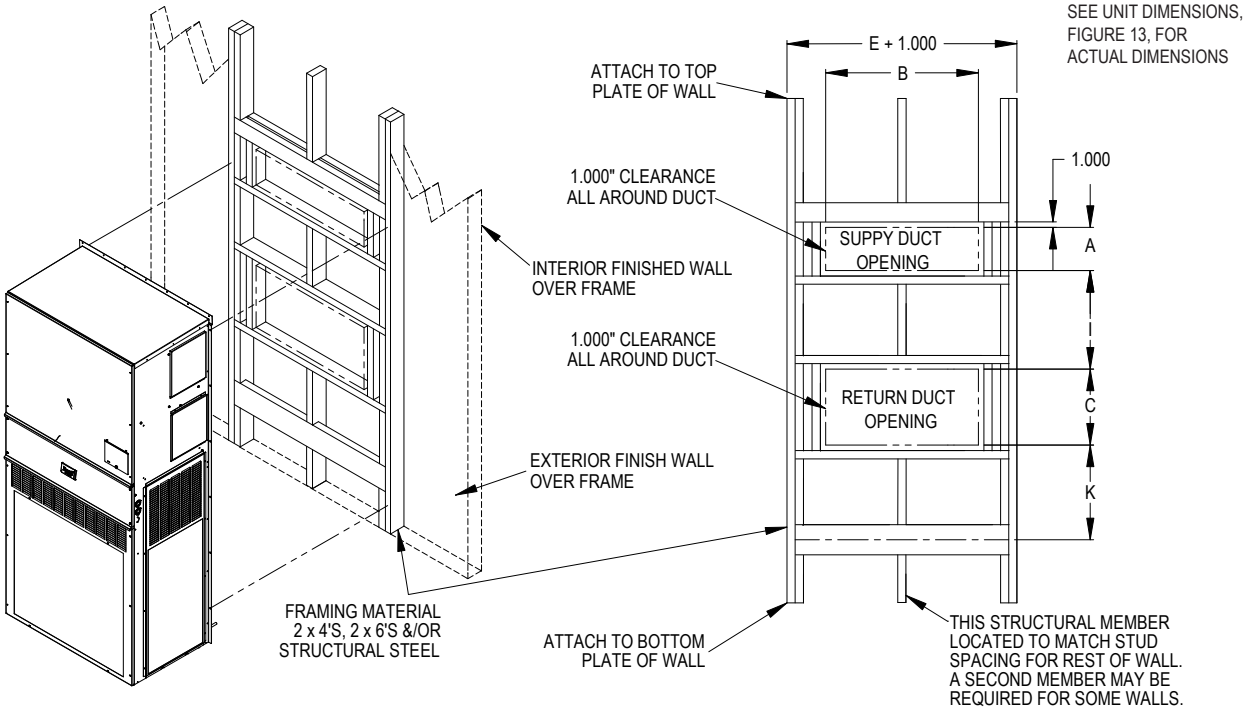

MIS-3982 B

FIGURE 18
Common Wall Mounting Installations

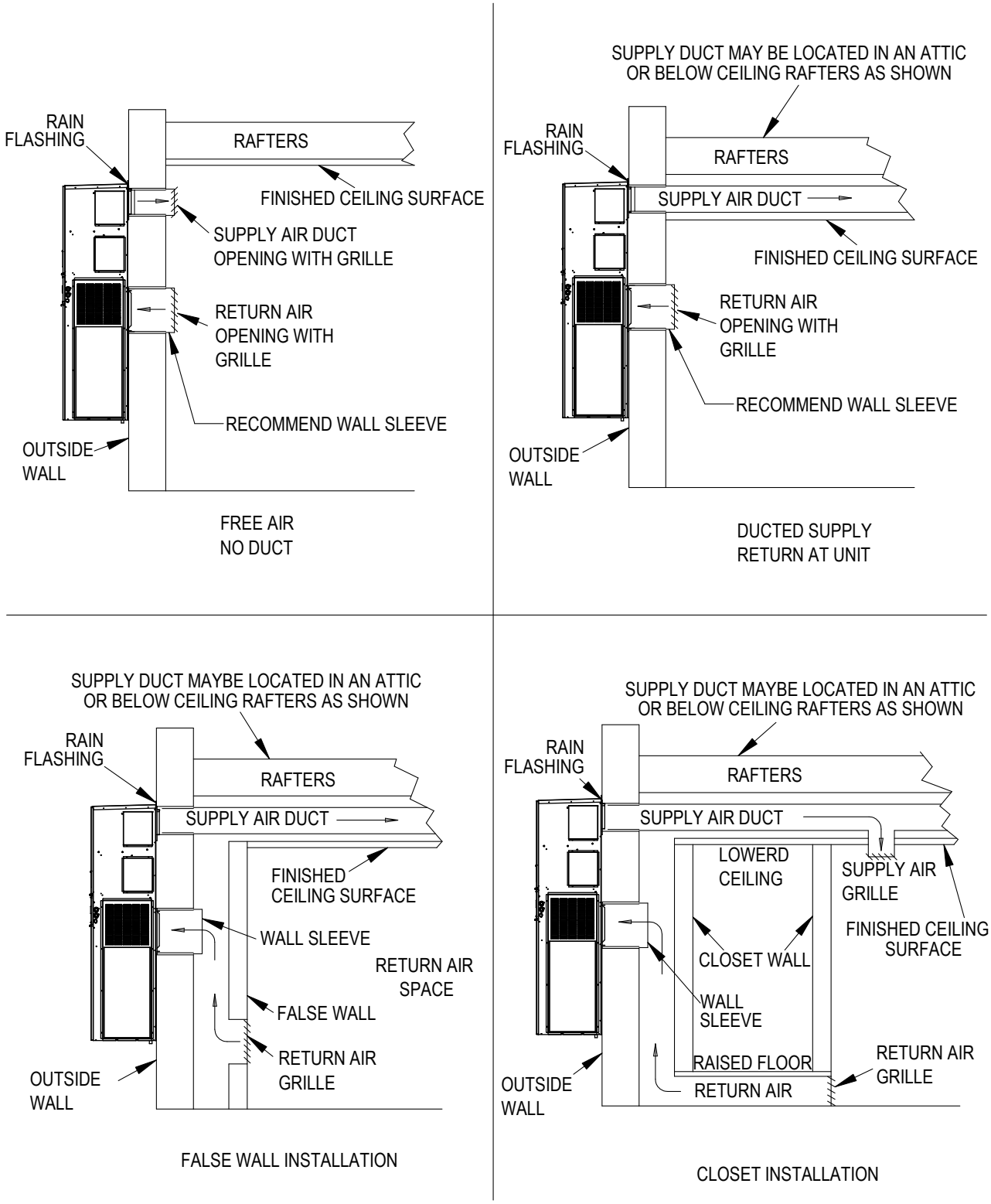

Wiring – Main Power

⚠ WARNING

Electrical shock hazard.

Do not operate this equipment without an earth ground attached and always disconnect the remote electric power supplies before servicing.

Electrical shock can result in serious injury or death.

Main electrical power must be supplied to the unit from a clean, reliable power source. Verify voltage being supplied to the unit is consistent during all times of the day and within the range specified for the unit in the unit specifications and on the unit serial plate. Voltage must be measured at the field power connection point in the unit and while the unit is operating at full load (maximum amperage operating condition).

NOTE: *In applications where a field-supplied transformer is used to step down a higher incoming voltage, the center leg must be grounded when high resistance grounding is used.*

Refer to the unit serial plate and unit specifications for wire sizing information and maximum fuse or circuit breaker size. Each outdoor unit is marked with a "Minimum Circuit Ampacity". This means that the field wiring used must be sized to carry that amount of current. Depending on the installed KW of electric heat, there may be two field power circuits required. If this is the case, the unit serial plate will so indicate.

All models are suitable only for connection with copper wire. Each unit and/or wiring diagram will be marked "Use Copper Conductors Only". These instructions must be adhered to. Refer to the National Electrical Code (NEC) for complete current carrying capacity data on the various insulation grades of wiring material. All wiring must conform to NEC and all local codes.

The electrical data on the serial plate, in the unit specifications and also in Tables 11A and 11B on pages 38 and 39 list fuse sizes for all models including the most commonly used heater sizes. Also shown are the number of field power circuits required for the various models with heaters. The unit rating plate lists a "Maximum Time Delay Relay Fuse" or circuit breaker that is to be used with the equipment. The correct type and size must be used for proper circuit protection and also to ensure that there will be no nuisance tripping due to the momentary high starting current of the compressor motor.

Three phase models must have proper phasing. A phase monitor is included in all three phase models, and will indicate improper phasing during a call for cooling (24VAC at Y1 terminal). See provided information included in this document regarding the phase monitor.

High Voltage Connections

Route field wires under the field wire shield shown in Figure 19. (The field wire shield can be removed for

FIGURE 19
High Voltage Connections

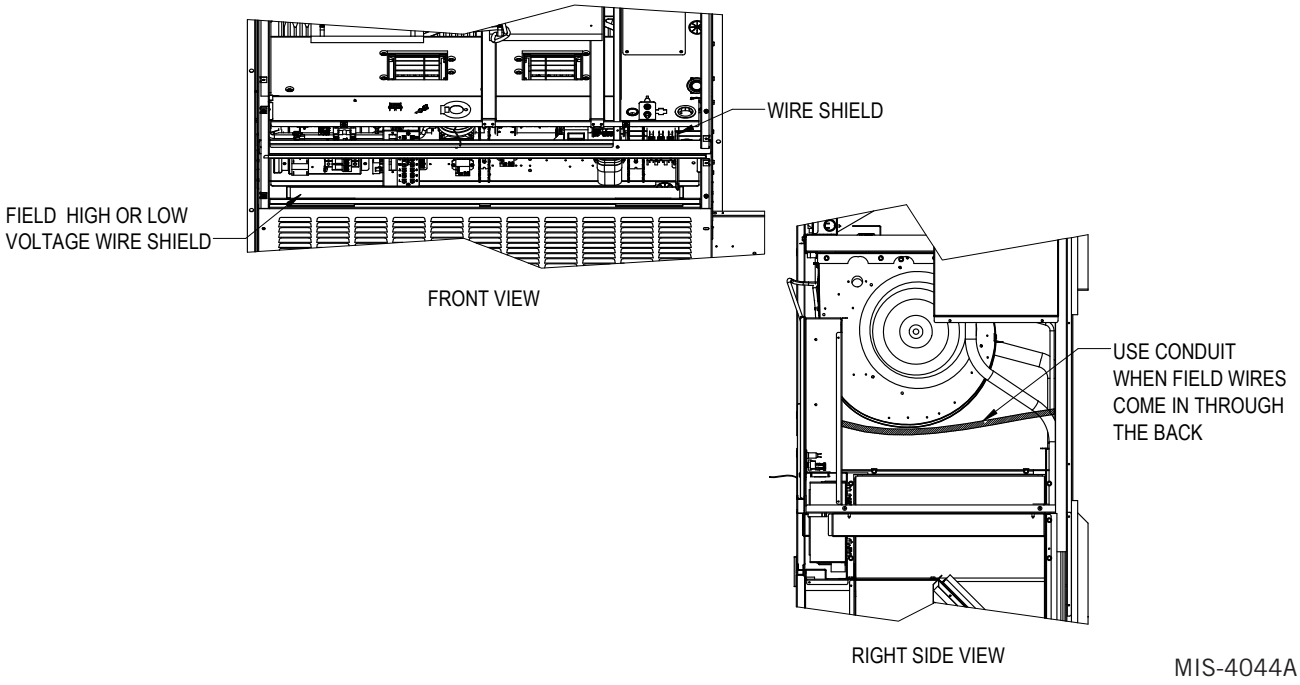

wire installation.) If field power is supplied to the left side of the unit, run the high voltage wires under the shield and to the right of the wire shield next to the compressor contactor and up into the upper control panel where the connections are made. If field power is supplied to the right of side of the unit, the low voltage wires can be run under the field wire shield to access the low voltage terminal strip.

When field wires are supplied through the back of the unit, flexible conduit must be extended through the back of the unit and terminate into the knock-outs on the upper control panel (see Figure 19).

Wiring – Low Voltage

All 230/208V 1 phase and 3 phase equipment have dual primary voltage transformers. All equipment leaves the factory wired on 240V tap. For 208V operation, reconnect from 240V to 208V tap. The acceptable operating voltage range for the 240 and 208V taps are:

Tap: 240 Range: 253 – 216
Tap: 208 Range: 215 – 197

NOTE: *The voltage should be measured at the field power connection point in the unit and while the unit is operating at full load (maximum amperage operating condition).*

For low voltage wiring, an 18 gauge copper, color-coded cable is recommended. See Table 8 on page 27 for more information.

Low Voltage (24VAC) Connections

These units use a 24-volt AC low voltage circuit.

C terminal is the *24VAC common and is grounded.*

G terminal is the *indoor blower input*.

Y1 terminal is the *1st Stage input for cooling.*

Y2 terminal is the *2nd Stage compressor input for cooling* (if equipped with an economizer) or *Y2 disables Balanced Climate mode if the Y1-Y2 jumper is removed* (see **Balanced Climate Feature**).

B/W1 terminal is the *1st stage electric heat* (if equipped).

W2 terminal is the *2nd stage heat* (if equipped).

A terminal is the *ventilation input*. This terminal energizes any powered factory-installed ventilation option and indoor blower.

D terminal is the *dehumidification input*. If installed, this terminal energizes any factory-installed dehumidification option.

L terminal is *24 volt alarm active output*.

For units equipped with an alarm relay:

1 terminal is the *normally closed contact on the relay.*
2 terminal is the *normally open contact on the relay.*
3 terminal is the *common contact on the relay.*

See Table 3 for additional low voltage connections on auxiliary terminal strip.

TABLE 3
Additional Low Voltage Connections (if applicable)

Terminal	Unit	Description
9	V Control Option Only	Discharge Air Sensor, 10K Ohm
10	V Control Option Only	Discharge Air Sensor, 10K Ohm
11	F, V Control Options	Filter Switch, Normally Open Contact
12	F, V Control Options	Filter Switch, Normally Open Contact
13	V Control Option Only	Blower Airflow Switch, Normally Open Contact
14	V Control Option Only	Blower Airflow Switch, Normally Open Contact
15	V Control Option Only	Compressor Current Sensor, Normally Open Contact
16	V Control Option Only	Compressor Current Sensor, Normally Open Contact

Unit Shutdown Feature (Standard on All Models)

The RT terminal is the 24VAC transformer output, and the R terminal is the 24VAC hot terminal for the operation of the equipment. RT and R are connected with a brass jumper bar which can be removed and RT and R connected to an external NC (normally closed) contact such as a fire/smoke detector that will cause shutdown of the equipment upon activation.

Balanced Climate™ Feature (Standard on All Models)

All units are equipped with the capability of running in Balanced Climate mode. This mode is designed to enhance the comfort level by reducing the indoor airflow amount and extending the run time to help extract more humidity during cooling operation. The Y1 terminal is the 24VAC input for Balanced Climate compressor cooling operation. The Y2 terminal is the 24VAC input for compressor cooling standard operation. Y1 and Y2 are connected with a brass jumper bar which can be removed to enable Balanced Climate mode. Units with an economizer will not have the brass jumper installed. Refer to vent manuals for instructions on how Balanced Climate works with each vent.

NOTE: *Units with mechanical dehumidification require an additional connection to be made when enabling Balanced Climate. Refer to dehumidification supplemental instructions for this step.*

To operate in Balanced Climate mode, a 2-stage cooling thermostat is required. The lower indoor airflow operation is overridden by utilizing a 2-stage thermostat. If the call for cooling is not satisfied within a given time frame or temperature differential (specified by the thermostat), the thermostat will send a signal to Y2 which then increases the blower speed

back to the selected speed. See pages 40 – 41 for blower speed selection options.

Refer to page 31 for additional Balanced Climate requirements and limitations.

Dehumidification Feature (Optional)

The D terminal is the 24VAC input for dehumidification operation on dehumidification hot gas reheat equipped units. When 24VAC is applied to the D terminal, a 3-way valve solenoid is energized. The reheat coil located behind the evaporator coil is then active to reheat the supply air during cooling mode. This allows humidity to be removed from the air entering the unit without a large amount of sensible cooling capacity. During dehumidification, the indoor blower speed is reduced to help with the humidity removal. A humidity sensing thermostat or humidistat is required to control dehumidification operation.

Ventilation Features (Optional)

See ventilation instructions provided with unit for low voltage wiring.

Low Ambient Control (LAC)

The low ambient control is a pressure switch that is attached to the liquid line of the system and monitors high side pressure. Operation of the LAC occurs as outdoor temperatures drop below 60°F. LAC operation cycles the condenser fan on/off based on pressure changes caused by outdoor temperature changes.

Outdoor Temperature Switch and Freeze Protection Thermostat

An outdoor temperature switch and an evaporator freeze protection thermostat is supplied with all units that have a low ambient control. The outdoor switch disables Balanced Climate mode (if enabled) when the temperature drops below 50°F. This prevents potential evaporator coil freeze up issues. For units with mechanical dehumidification, this switch must remain disconnected when Balanced Climate mode is not being used. Refer to unit wiring diagram. The freeze thermostat cuts out compressor operation if the evaporator begins to freeze up.

Alarm Relay Feature (Controls Option)

The alarm relay provides a set of NO (normally open) and NC (normally closed) pilot duty contacts that operate when the compressor control module locks out compressor operation because of a high or low system refrigerant pressure event.

DDC Controls Feature (Controls Option)

The DDC controls option provides additional sensors that can be used with a field-supplied advanced logic controller. The DDC controls option contains the following installed components:

Dirty Filter Switch Indicator (DFS)

The switch is adjustable and measures pressure drop across the unit filter surface. When pressure drop is higher than the switch setting, NO contacts are provided to indicate the filter needs to be serviced. Refer to page 41 for instructions on making switch adjustments.

Discharge Air Sensor

The discharge air sensor provides a temperature reading of the supply air leaving the unit. The sensor is a 10K OHM @ 77°F measuring device. It is installed in the supply airstream in the heater bracket.

Airflow Switch

The airflow switch measures the pressure differential between the blower inlet and outlet. It is located directly above the blower partition. Relay contacts (NO) are provided for the DDC controls option that indicates the indoor blower assembly needs to be serviced.

Compressor Current Sensor

The compressor current sensor indicates when the compressor is operational by measuring amp draw. It is located inside the unit control panel. Relay contacts (NO) are provided to indicate the compressor is not operating.

See Table 4 for low voltage connections for DDC control.

TABLE 4
Low Voltage Connections for DDC Control

	Standard Units	Units w/ Economizers
Fan Only	Energize G	Energize G
1st Stage Cooling Mode/ Balanced Climate	Energize Y1, G	Energize Y1, G
2nd Stage Cooling Mode	Energize Y2 to overide Balanced Climate mode when Y1-Y2 jumper is removed	Energize Y1, Y2, G
1st Stage Heating	Energize B/W1	Energize B/W1
2nd Stage Heating (if employed)	Energize B/W1, W2	Energize B/W1, W2
Ventilation	Energize A	Energize A
Dehumidification (if employed)	Energize D	Energize D

TABLE 5
Wall Thermostats

Part Number	Predominate Features
8403-060 (1120-445)	3 stage Cool; 3 stage Heat; Electronic Programmable/Non-Programmable; HP or Conventional; Auto or Manual changeover; Dehumidification Output
8403-089 (T4 Pro)	1 stage Cool, 1 stage Heat – Heat Pump; 1 stage Cool, 1 stage Heat – Conventional; Programmable/Non-Programmable Electronic; Auto or Manual changeover
8403-090 (T6 Pro)	2 stage Cool, 3 stage Heat – Heat Pump; 2 stage Cool, 2 stage Heat – Conventional; Programmable/Non-Programmable Electronic; Auto or Manual changeover
8403-091	1 stage Cool, 1 stage Heat; Non-Programmable; FEMA use
8403-092 (T6 Pro Wi-Fi)	2 stage Cool, 3 stage Heat – Heat Pump; 2 stage Cool, 2 stage Heat – Conventional; Programmable/Non-Programmable Electronic; Auto or Manual changeover; Wi-Fi

TABLE 6
Humidity Controls

Part Number	Predominate Features
8403-100* (H6062A1000)	Electronic humidistat DPST Humidity range 10-90% with adjustable stops
8403-047 (H200-10-21-10)	Electronic dehumidistat SPST, closes-on-rise Humidity range 10-90% with adjustable stops

* If using Honeywell HumidiPRO (H6062A1000) 8403-100 humidistat, it must be configured for dehumidification in the menu.

TABLE 7
CO_2 Controllers

Part Number	Predominate Features
8403-096	Normally Open SPST relay closes-on-rise 24V dual wave length sensor. Default setting 950ppm, adjustable to 0-2000ppm Default off setting 1000ppm, adjustable to 0-200 ppm can be calibrated

TABLE 8
Thermostat Wire Size

Transformer VA	FLA	Wire Gauge	Maximum Distance In Feet
55	2.3	18 gauge 16 gauge 14 gauge 12 gauge	60 100 160 250

FIGURE 20
Programmable Thermostat Connections

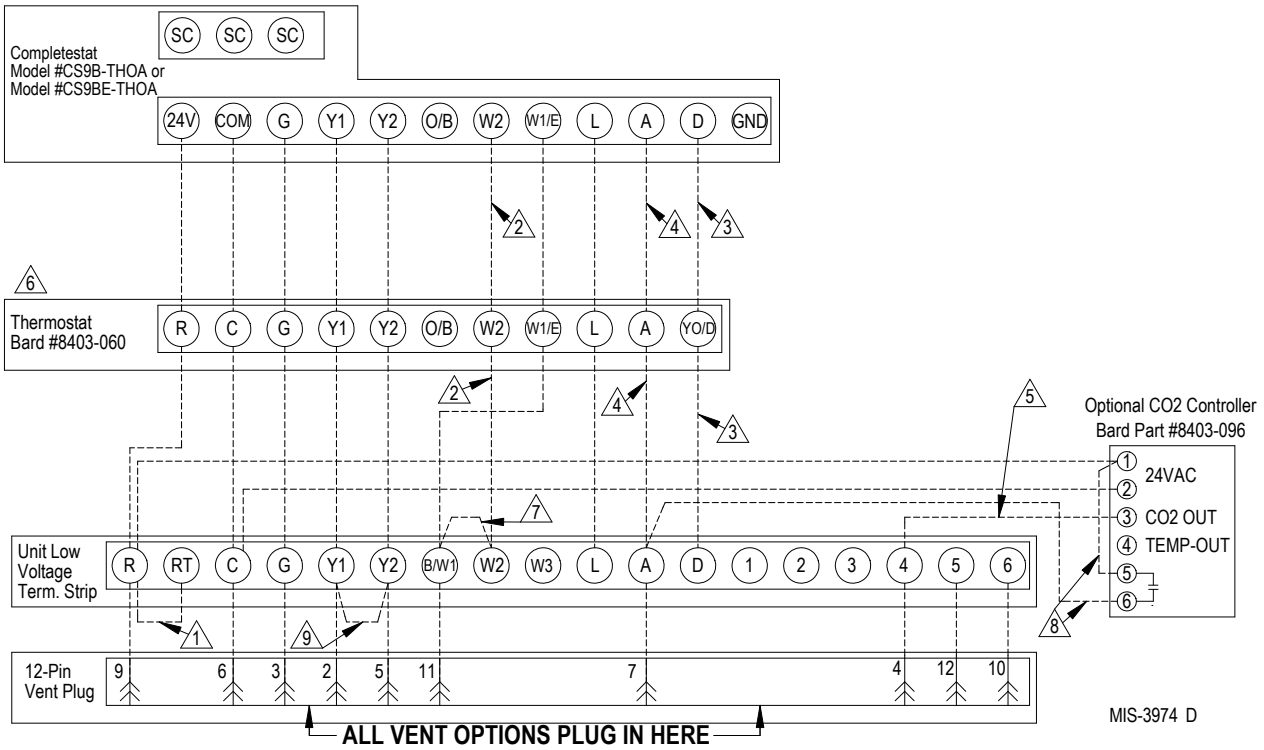

If not equipped with a ventilation option to plug in, a jumper plug must be installed.

1. Factory installed jumper. Remove jumper and connect to N.C fire alarm circuit if emergency shutdown required.
2. Wire not needed below 15KW.
3. Wire required for dehumidification models only.
4. Do not connect "A" from thermostat if optional CO2 controller is used
5. 0-10 VDC modulating C02 control signal for modulating ventilation control (optional for ECON only - see vent instruction manuals)
6. Change model configuration from heat pump to heat/cool. Must be configured to programmable and fan set to be programmed fan for the "A" output to function during scheduled occupied periods. Must be configured for multi-stage for Y1 output to be active 1st stage cooling. For dehumidification, must be configured for "No Economizer" for YO/D to be active for humidity control.
7. Install jumper for 1 stage electric heat on units with more than 10KW
8. Do not add these wires if setting up for modulating control. See note 5.
9. Factory installed jumper. Remove jumper to activate Balanced Climate™ mode. A 2-stage thermostat is recommended for Balanced Climate mode.

FIGURE 21
Non-Programmable Thermostat Connections

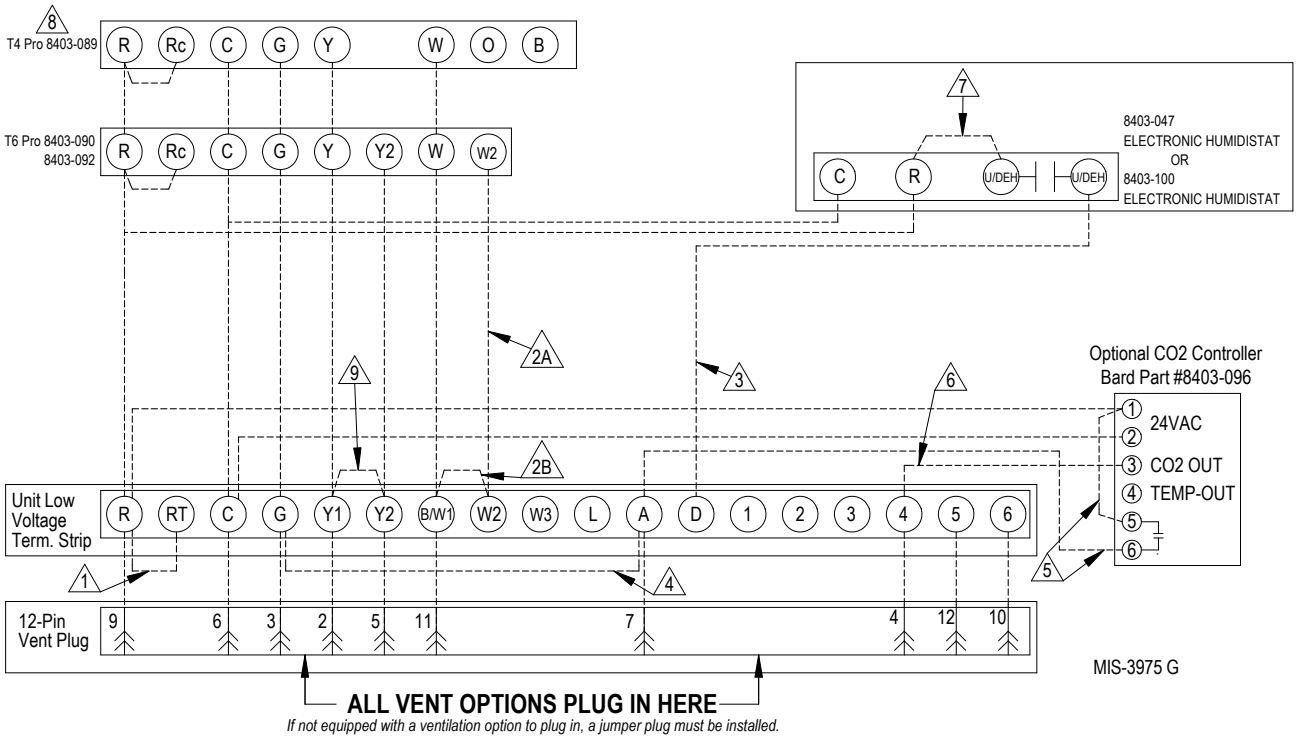

1. FACTORY INSTALLED JUMPER. REMOVE JUMPER AND CONNECT TO N.C FIRE ALARM CIRCUIT IF EMERGENCY SHUTDOWN REQUIRED.
2A. WIRE NOT NEEDED BELOW 15KW.
2B. INSTALL JUMPER FOR 1 STAGE ELECTRIC HEAT ON UNITS WITH MORE THAN 10KW.
3. WIRE REQUIRED FOR DEHUMIDIFICATION MODELS ONLY.
4. FOR VENT OPERATION, ADD JUMPER IF OPTIONAL CO2 CONTROLLER IS NOT USED. VENT WILL RUN WHILE BLOWER IS ENERGIZED. FOR ECON & CRV-V AN ADDITIONAL WIRE CHANGE IS REQUIRED SEE INSTALL MANUAL.
5. DO NOT ADD THESE WIRES IF SETTING UP FOR MODULATING CONTROL. SEE NOTE 6.
6. 0-10 VDC MODULATING CO2 CONTROL SIGNAL FOR MODULATING VENTILATION CONTROL (OPTIONAL FOR ECON ONLY) - SEE VENT INSTALLATION MANUAL.
7. JUMPER NEEDS ADDED.
8. THERMOSTAT WILL NOT WORK WITH UNITS EQUIPPED WITH ECONOMIZERS UNLESS CO2 CONTROLLER IS USED.
9. FACTORY INSTALLED JUMPER. REMOVE JUMPER TO ACTIVATE BALANCED CLIMATE™ MODE. A 2-STAGE THERMOSTAT IS RECOMMENDED FOR BALANCED CLIMATE MODE. Y1 Y2 JUMPER NOT PRESENT IF ECONOMIZER IS FACTORY INSTALLED. UNITS WITH ECONOMIZERS HAVE BALANCED CLIMATE JUMPER IN ECONOMIZER, REFER TO ECONOMIZER MANUAL.
10. HUMIDISTAT 8403-100 WILL NEED TO BE CONFIGURED FOR DEHUMIDIFICATION IN THE MENU. SEE USER'S MANUAL.

NOTICE

These units require R-410A refrigerant and polyol ester oil.

General

1. Use separate service equipment to avoid cross contamination of oil and refrigerants.
2. Use recovery equipment rated for R-410A refrigerant.
3. Use manifold gauges rated for R-410A (800 psi/250 psi low).
4. R-410A is a binary blend of HFC-32 and HFC-125.
5. R-410A is nearly azeotropic—similar to R-22 and R-12. Although nearly azeotropic, charge with liquid refrigerant.
6. R-410A operates at 40-70% higher pressure than R-22 and systems designed for R-22 cannot withstand this higher pressure.
7. R-410A has an ozone depletion potential of zero, but must be reclaimed due to its global warming potential.
8. R-410A compressors use polyol ester oil.
9. Polyol ester oil is hygroscopic; it will rapidly absorb moisture and strongly hold this moisture in the oil.
10. A liquid line dryer must be used—even a deep vacuum will not separate moisture from the oil.
11. Limit atmospheric exposure to 15 minutes.
12. If compressor removal is necessary, always plug compressor immediately after removal. Purge with small amount of nitrogen when inserting plugs.

Topping Off System Charge

If a leak has occurred in the system, Bard Manufacturing recommends reclaiming, evacuating (see criteria above) and charging to the nameplate charge. If done correctly, topping off the system charge can be done without problems.

With R-410A, there are no significant changes in the refrigerant composition during multiple leaks and recharges. R-410A refrigerant is close to being an azeotropic blend (it behaves like a pure compound or single component refrigerant). The remaining refrigerant charge, in the system, may be used after leaks have occurred and then "top-off" the charge by utilizing the pressure charts on the inner control panel cover as a guideline.

REMEMBER: *When adding R-410A refrigerant, it must come out of the charging cylinder/tank as a liquid to avoid any fractionation, and to ensure optimal system performance. Refer to instructions for the cylinder that is being utilized for proper method of liquid extraction.*

Safety Practices

1. Never mix R-410A with other refrigerants.
2. Use gloves and safety glasses. Polyol ester oils can be irritating to the skin, and liquid refrigerant will freeze the skin.
3. Never use air and R-410A to leak check; the mixture may become flammable.
4. Do not inhale R-410A—the vapor attacks the nervous system, creating dizziness, loss of coordination and slurred speech. Cardiac irregularities, unconsciousness and ultimate death can result from breathing this concentration.
5. Do not burn R-410A. This decomposition produces hazardous vapors. Evacuate the area if exposed.
6. Use only cylinders rated DOT4BA/4BW 400.
7. Never fill cylinders over 80% of total capacity.
8. Store cylinders in a cool area, out of direct sunlight.
9. Never heat cylinders above 125°F.
10. Never trap liquid R-410A in manifold sets, gauge lines or cylinders. R-410A expands significantly at warmer temperatures. Once a cylinder or line is full of liquid, any further rise in temperature will cause it to burst.

Important Installer Note

For improved start up performance, wash the indoor coil with a dishwashing detergent.

High Pressure Switch

All W**AY wall-mounted air conditioner series models are supplied with a remote reset for the high pressure switch. If tripped, the pressure switch may be reset by turning the thermostat off then back on again. High pressure switch settings: Opens 650 +/– 15 PSI, Closes 520 +/– 15 PSI.

Three Phase Scroll Compresser Start Up Information

Scroll compressors, like several other types of compressors, will only compress in one rotational direction. Direction of rotation is not an issue with single phase compressors since they will always start and run in the proper direction.

However, three phase compressors will rotate in either direction depending upon phasing of the power. Since there is a 50-50 chance of connecting power in such a way as to cause rotation in the reverse direction, verification of proper rotation must be made. Verification of proper rotation direction is made by observing that suction pressure drops and discharge pressure rises when the compressor is energized. Reverse rotation also results in an elevated sound level over that with correct rotation, as well as substantially reduced current draw compared to tabulated values.

Verification of ***proper rotation*** must be made at the time the equipment is put into service. If improper rotation is corrected at this time, there will be no negative impact on the durability of the compressor. However, reverse operation for over 1 hour may have a negative impact on the bearing due to oil pump out.

NOTE: *If compressor is allowed to run in reverse rotation for an extended period of time, the compressor's internal protector will trip.*

All three phase compressors are wired identically internally. As a result, once the correct phasing is determined for a specific system or installation, connecting properly phased power leads to the same Fusite terminal should maintain proper rotation direction.

The direction of rotation of the compressor may be changed by reversing any two line connections to the unit.

Phase Monitor

All units with three phase scroll compressors are equipped with a three phase line monitor to prevent compressor damage due to phase reversal.

The phase monitor in this unit is equipped with two LEDs. If the Y signal (call for cooling) is present at the phase monitor and phases are correct, the green LED will light.

If phases are reversed, the red fault LED will be lit and compressor operation is inhibited.

If a fault condition occurs, reverse two of the supply leads to the unit. ***Do not reverse any of the unit factory wires as damage may occur.***

Condenser Fan Operation

NOTE: *Certain models may be equipped with a low ambient control (LAC), and if so, the condenser fan motor will have a delayed start until system refrigerant operating pressure builds up. After starting, the fan motor may or may not cycle depending upon ambient conditions. This is normal operation.*

50 Hz models must have fan wired on low speed. These models are factory wired on low speed.

Service Hints

1. Caution owner/operator to maintain clean air filters at all times and also not to needlessly close off supply and return air registers. This reduces airflow through the system, which shortens equipment service life as well as increasing operating costs.
2. Check all power fuses or circuit breakers to be sure they are the correct rating.
3. Periodic cleaning of the outdoor coil to permit full and unrestricted airflow circulation is essential.

Sequence of Operation

Circuit R-Y1 makes at thermostat pulling in compressor contactor, starting the compressor and outdoor motor. (See ***NOTE*** under **Condenser Fan Operation** concerning models equipped with low ambient control.) The G (indoor motor) circuit is automatically completed by the thermostat on any call for cooling operation or can be energized by manual fan switch on subbase for constant air circulation. On a call for heating, circuit R-W1 makes at the thermostat pulling in heat contactor for the strip heat and blower operation. On a call for second stage heat, R-W2 makes bringing on second heat contactor, if so equipped.

Balanced Climate™ Mode

Balanced Climate™ is a great comfort feature that can easily be applied under any normal circumstances. If the Bard air conditioning system is being set up in a typical environment where 72°F is the lowest cooling setpoint, remove the Y1/Y2 jumper and install a 2-stage cooling thermostat. This will increase the humidity removal up to 35% and provide a much more comfortable environment.

NOTE: *Units with mechanical dehumidification require an additional connection to be made when enabling Balanced Climate. Refer to dehumidification supplemental instructions for this step.*

If the application is likely to require air conditioning operation below 60°F outdoor conditions, a low ambient control (LAC) kit must be installed. The LAC kit is equipped with an outdoor temperature switch that disables Balanced Climate mode when the outdoor temperature drops below 50°F. This prevents potential evaporator coil freeze up issues. The LAC kit also comes with an evaporator freeze protection thermostat that cuts out the compressor if the evaporator begins to freeze up.

If the unit is being installed with any ventilation package, a Bard LAC kit must be installed. Failure to utilize an LAC with any air conditioner can cause coil freeze up.

Balanced Climate can readily be applied to duct-free (supply and return air grille) applications. It may also be applied to ducted applications with **limited static of 0.20" ESP (total including both supply and return**

statics). Consult Bard Application Engineering for details prior to implementation.

CAUTION: *Balanced Climate is not a replacement for a dehumidification (hot gas reheat) unit for extreme applications, but rather an enhancement feature for limited climates and applications.*

Vent Connection Plug

All units are equipped with a vent connection plug in the side of the control panel for the different ventilation packages to plug in to. If the compressor will not start and there is no "Y1" at the compressor control module, first check to make sure that either the optional vent is plugged into the vent connection plug or the supplied jumper plug is in place. **The unit will not operate without anything plugged in.** This plug is located on the side of the control panel behind the front vent door (behind the filter access door). If the unit is supplied with a factory-installed vent package, it will be plugged in but the jumper plug will also be tethered next to the connection for troubleshooting purposes, if necessary.

Compressor Control Module

The compressor control module (CCM) is standard on all models covered by this manual.

Features

Delay-on-Make Timer
Short Cycle Protection/Delay-on-Break
Low Pressure Detection
High Pressure Detection
LPC and HPC Status LEDs
Test Mode
Brownout Protection with Adjustment

Delay-on-Make Timer

A delay-on-make timer is included to be able to delay startup of the compressor. This is desired when more than one unit is on a structure so that all of the units do not start at the same time which could happen after a power loss or building shutdown. The delay-on-make time period is 2 minutes plus 10% of the delay-on-break time period. To ensure that all of the units do not start at the same time, adjust the delay-on-break timer on each unit to a slightly different delay time.

Short Cycle Protection/Delay-on-Break

An anti-short cycle timer is included to prevent short cycling the compressor. This is adjustable from 30 seconds to 5 minutes via the adjustment knob (see Figure 22). Once a compressor call is lost, the time period must expire before a new call will be initiated.

Low Pressure Detection

Low pressure switch monitoring allows for a lockout condition in a situation where the switch is open. If the low pressure switch remains open for more than 2 minutes, the CCM will de-energize the compressor for the delay-on-break time. If the switch closes again, it will then restart the compressor. If the switch trips again during the same Y call, the compressor will be de-energized and the alarm terminal will be energized indicating an alarm. The blue LED will light and stay on until power is cycled to the control or a loss of voltage is present at Y terminal for more than ½ second.

High Pressure Detection

High pressure switch monitoring allows for a lockout condition in a situation where the switch is open. If the high pressure switch opens, the CCM will de-energize the compressor. If the switch closes again, it will then restart the compressor after the delay-on-break setting has expired on the device. If the switch trips again during the same thermostat call, the compressor will be de-energized and the alarm terminal will be energized indicating an alarm. The red LED will light and stay on until power is cycled to the control or a loss of voltage is present at Y terminal for more than ½ second.

Test Mode

By rapidly rotating the potentiometer (POT) clockwise (see Figure 22), all timing functions will be removed for testing.

The conditions needed for the unit to enter test mode are as follows: POT must start at a time less than or equal to the 40 second mark. The POT must then be rapidly rotated to a position greater than or equal to the 280 second mark in less than ¼ second. Normal operation will resume after power is reset or after the unit has been in test mode for at least 5 minutes.

Brownout Protection with Adjustment

Brownout protection may be necessary if the utility power or generator power has inadequate power to prevent the voltage from dropping when the compressor starts. This is rare but can happen if the generator is undersized at the site or if the site is in a remote location far from the main power grid. Under normal circumstances, allowing the brownout to be ignored for a time period should not be needed. The CCM is shipped with all the DIP switches in the 'off' or 'do not ignore' position (see Figure 22).

If ignoring the brownout is needed because of the above conditions, three preset timers can be set by DIP switches in order to delay signaling a power brownout for a specific length of time after compressor contactor is energized. This allows the compressor a time period to start even if the voltage has dropped and allows the voltage to recover. This delay only happens when the CC terminal energizes. The delay can be set to 1 second ("A" DIP switch), 5 seconds ("B" DIP switch) or 10 seconds ("C" DIP switch); time is not cumulative—only the longest setting will apply. If the voltage recovers during the brownout delay period, the compressor will continue running.

FIGURE 22
Compressor Control Module

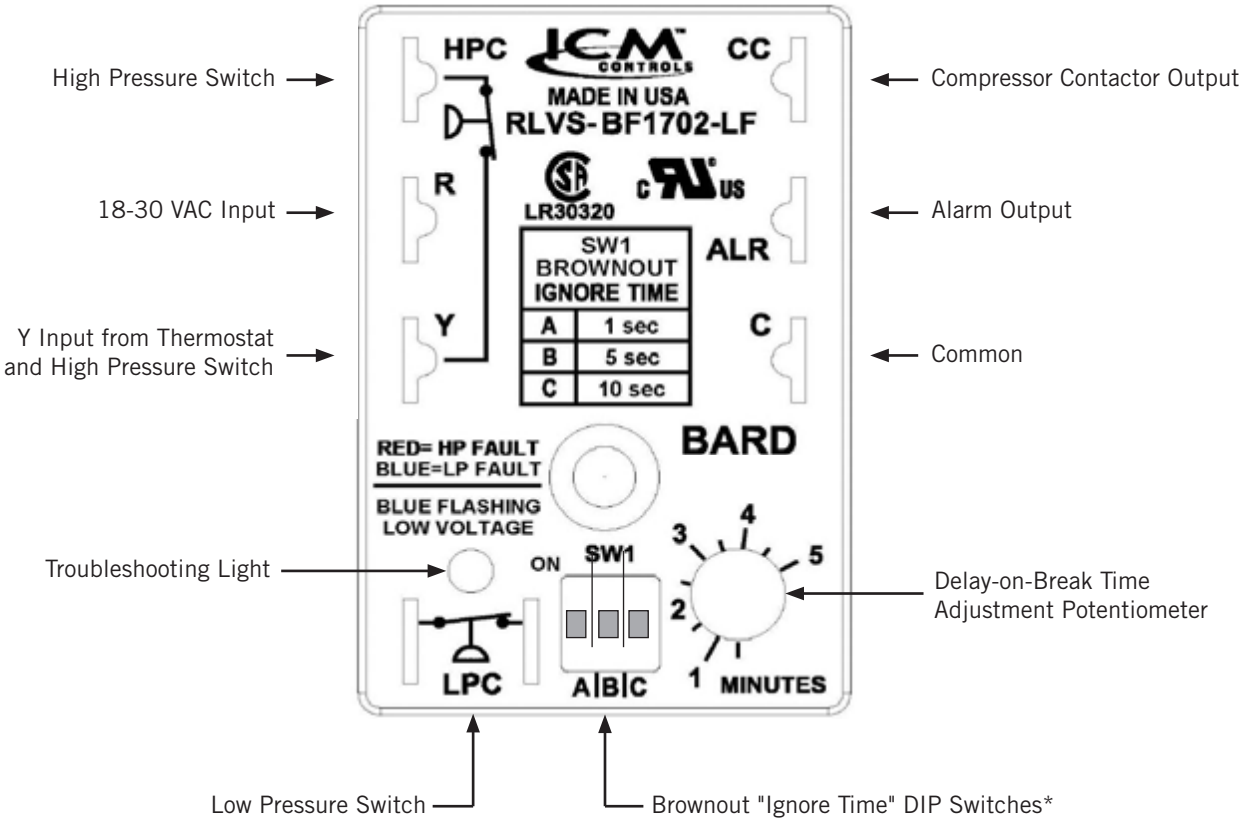

* Turn on only one switch for that specific "Ignore Time" setting. 10 seconds is the maximum brownout "Ignore Time". If all switches are "off", the control is in "do not ignore".

If a brownout condition is detected by the CCM at any point while there is a cooling call or power is on at Y, the troubleshooting light will flash blue. The light will continue to flash until the cooling call is satisfied or power is removed from the Y terminal. This condition does not prevent operation; it only indicates that a brownout condition was present at some point during the call. If a brownout condition is detected while CC has an output, CC will be de-energized and will retry after the delay-on-break timer is satisfied, honoring any DIP switch timer chosen when the CC output is re-energized; this process will continue until call is satisfied.

If inadequate utility or generator power continues after the delay-on-make or delay-on-break timer is fulfilled, the CC output will not energize. This could lead to the compressor never starting. The control will see the brownout immediately and not start.

A common scenario and one that has been seen in the field is when a unit or units switch from utility power to generator power. With slower transfer switches, the time delay between the utility power and generator power didn't cause a problem. The units lost power, shut off and came back on line normally. With the introduction of almost instantaneous transfer switches, the power glitch may be enough that the compressor will start to run backwards.

Pressure Service Ports

High and low pressure service ports are installed on all units so that the system operating pressures can be observed. A pressure table covering all models can be found on page 37. It is imperative to match the correct pressure table to the unit by model number.

This unit employs high-flow Coremax valves instead of the typical Schrader type valves.

WARNING! Do NOT use a Schrader valve core removal tool with these valves. Use of such a tool could result in eye injuries or refrigerant burns!

To change a Coremax valve without first removing the refrigerant, a special tool is required which can be obtained at www.fastestinc.com/en/SCCA07H. See the replacement parts manual for replacement core part numbers.

Troubleshooting Nidec SelecTech Series ECM Motors

If the Motor Is Running

1. It is normal for the motor to rock back and forth on start up. Do not replace the motor if this is the only problem identified.
2. If the system is excessively noisy, does not appear to change speeds in response to a demand (Heat, Cool, Other) or is having symptoms during the cycle such as tripping limit or freezing coil, check the following:
   A. Wait for programmed delays to time out.
   B. Ensure that the motors control inputs are wired as shown in the factory-supplied wiring diagram to ensure motor is getting proper control signals and sequencing.
   C. Remove the filter and check that all dampers, registers and grilles are open and free flowing. If removing the filters corrects the problem, clean or replace with a less restrictive filter. Also check and clean the blower wheel or coil as necessary.
   D. Check the external static pressure (total of both supply and return) to ensure it is within the range as listed on the unit serial plate. If higher than allowed, additional duct work is needed.
   E. If the motor does not shut off at the end of the cycle, wait for any programmed delays to time out (no more than 90 seconds). Also make sure that there is no call for "Continuous Fan" on the G terminal.
   F. If the above diagnostics do not solve the problem, confirm the voltage checks in the next section below, then continue with the **Model SelecTech Communication Diagnostics**.

If the Motor Is Not Running

1. Check for proper high voltage and ground at the L/L1, G, N/L2 connections at the motor (see Figure 23). Correct any voltage issues before proceeding to the next step. The SelecTech motor is voltage specific. Only the correct voltage should be applied to the proper motor. Input voltage within plus or minus 10% of the nominal line power VAC is acceptable.

FIGURE 23
Motor Connections

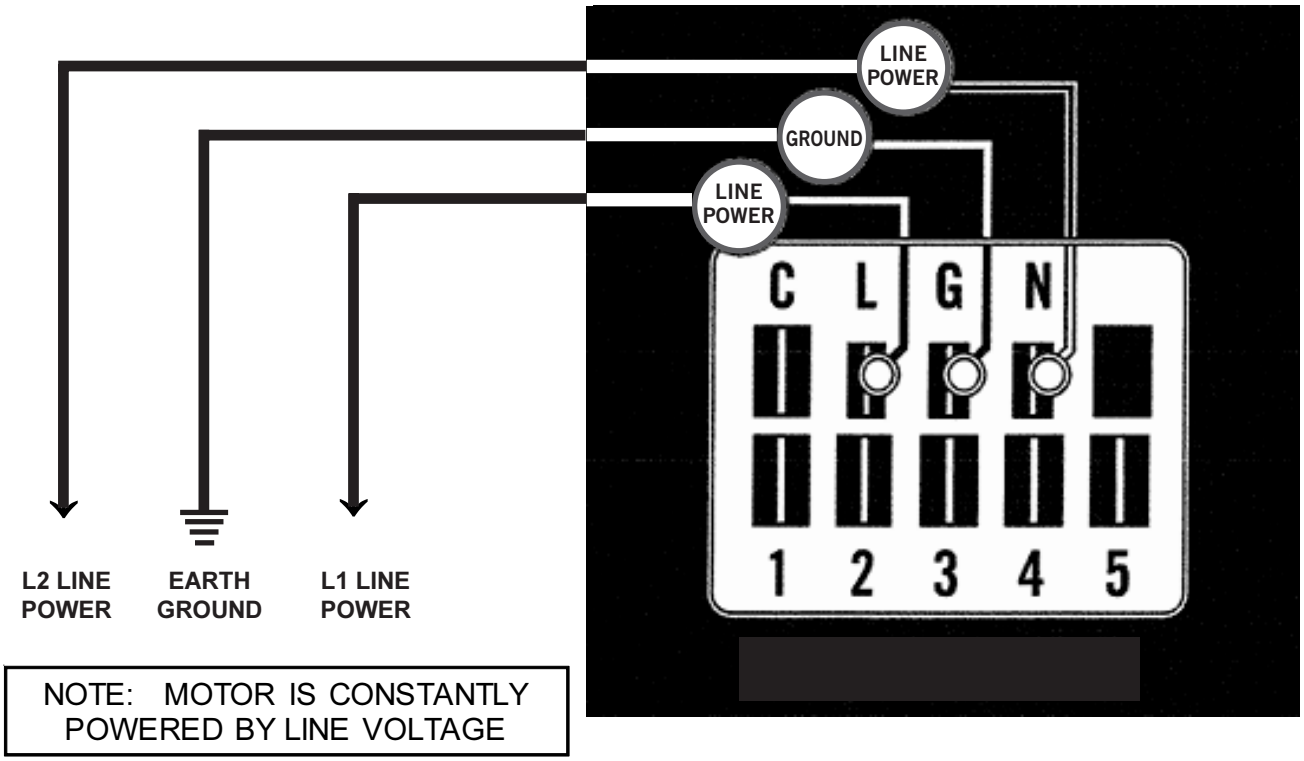

2. If the motor has proper high voltage and ground at the L/L1, G, N/L2 connections, then continue with the **Model SelecTech Communication Diagnostics**.

Model SelecTech Communication Diagnostics

The SelecTech motor is communicated through 24 VAC low voltage (thermostat control circuit wiring).

1. Start with unit wiring diagram to confirm proper connections and voltage (see Figure 24).
2. Initiate a demand from the thermostat and check the voltage between the common and the appropriate motor terminal (1-5). (G input is typically on terminal #1, but always refer to wiring diagram.)

A. If the low voltage communication is not present, check the demand from the thermostat. Also check the output terminal and wire(s) from the terminal strip or control relay(s) to the motor.

B. If the motor has proper high voltage (verified in Step 1 of **If the Motor Is Not Running**), proper low voltage to a programmed terminal and is not operating, the motor is failed and will require replacement.

FIGURE 24
Motor Connections

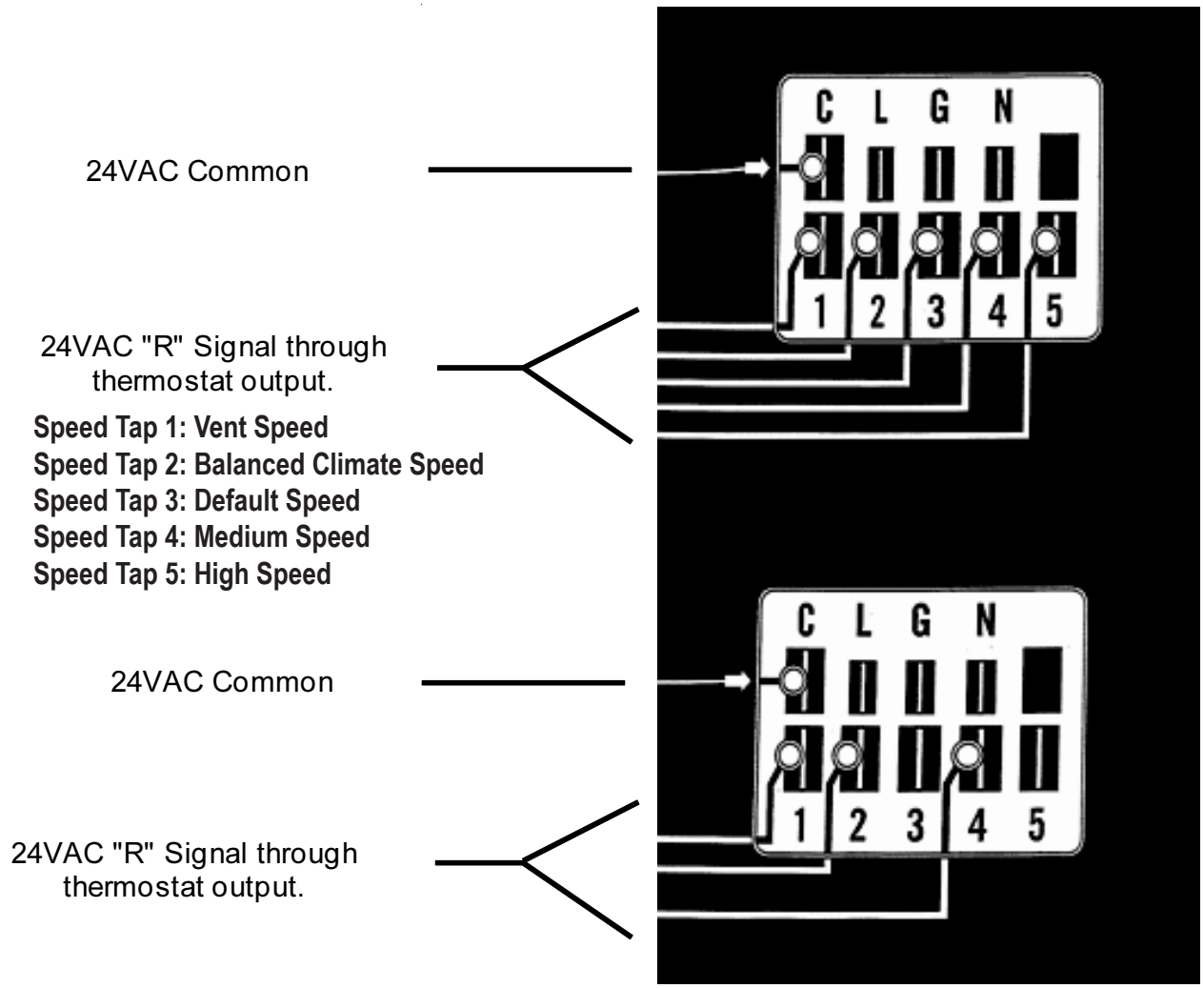

Fan Blade Setting Dimensions

Shown in Figure 25 is the correct fan blade setting for proper air delivery across the outdoor coil. Refer to Table 9 for unit specific dimension.

Any service work requiring removal or adjustment in the fan and/or motor area will require that the dimensions below be checked and blade adjusted in or out on the motor shaft accordingly.

FIGURE 25
Fan Blade Setting

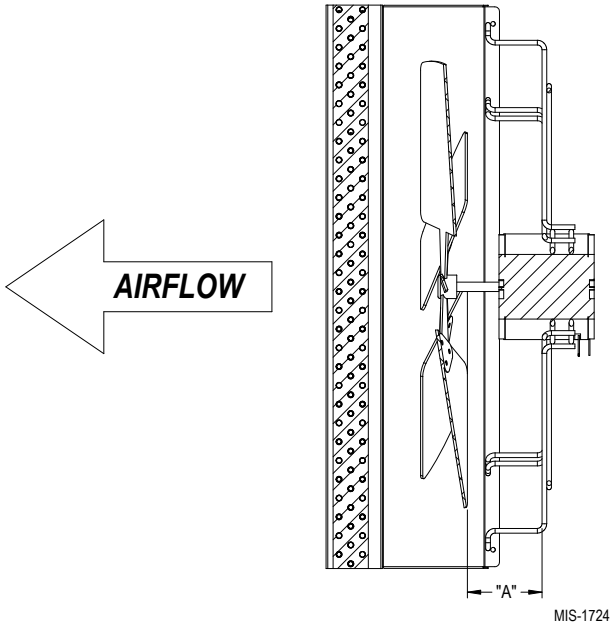

TABLE 9
Fan Blade Dimensions

Model	Dimension A
W42AY W48AY W60AY	1.5"
W72AY	1.75"

R-410A Refrigerant Charge

This unit was charged at the factory with the quantity of refrigerant listed on the serial plate. AHRI capacity and efficiency ratings were determined by testing with this refrigerant charge quantity.

The pressure table on the following page shows nominal pressures for the units. Since many installation specific situations can affect the pressure readings, this information should only be used by certified technicians as a guide for evaluating proper system performance. They shall not be used to adjust charge. If charge is in doubt, reclaim, evacuate and recharge the unit to the serial plate charge.

Removal of Fan Shroud

1. Disconnect all power to the unit before servicing.
2. To access the condenser coil for cleaning or to service the outdoor fan, first remove the side grilles.
3. The fan shroud sides can then be removed for ease of access to the coil and the back side of the shroud by removing the seven (7) screws as shown in Figure 26.
4. The fan or coil can now be serviced.
5. Reverse the steps to reassemble.

FIGURE 26
Fan Shroud Removal

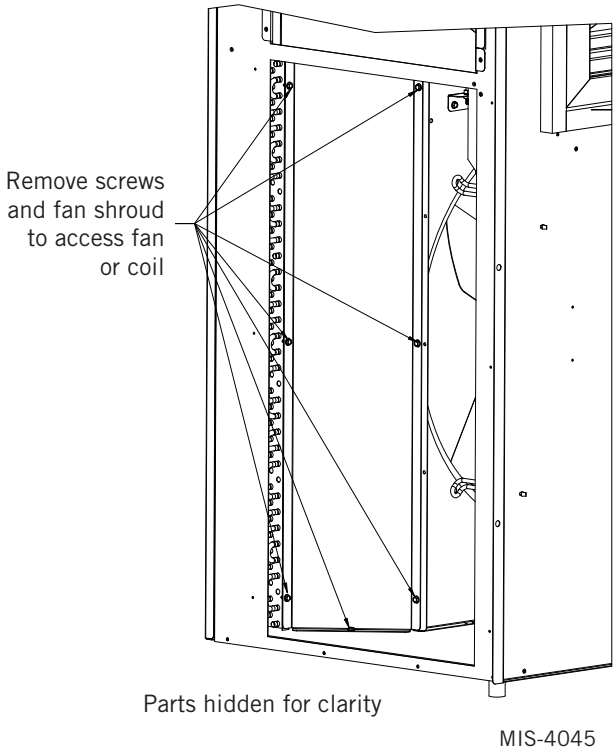

TABLE 10
Cooling Pressure – Standard Airflow

Air Temperature Entering Outdoor Coil °F

Model	Return Air Temp (DB/WB)	Pressure	75	80	85	90	95	100	105	110	115	120	125
W42AY	75/62	Low Side	122	124	126	128	130	132	134	136	137	140	142
		High Side	314	336	360	383	409	434	460	488	517	546	576
	80/67	Low Side	130	133	135	137	139	141	143	145	147	150	152
		High Side	322	345	369	393	419	445	472	501	530	560	591
	85/72	Low Side	135	138	140	142	144	146	148	150	152	155	157
		High Side	333	357	382	407	434	461	489	519	549	580	612
W48AY	75/62	Low Side	128	131	133	135	137	138	140	142	144	146	148
		High Side	331	352	374	398	422	448	474	502	530	561	592
	80/67	Low Side	137	140	142	144	146	148	150	152	154	156	158
		High Side	339	361	384	408	433	459	486	515	544	575	607
	85/72	Low Side	142	145	147	149	151	153	155	157	159	161	164
		High Side	351	374	397	422	448	475	503	533	563	595	628
W60AY	75/62	Low Side	127	129	131	133	134	136	137	139	140	142	143
		High Side	326	348	371	395	420	446	472	499	527	556	586
	80/67	Low Side	136	138	140	142	143	145	147	149	150	152	153
		High Side	334	357	381	405	431	457	484	512	540	570	601
	85/72	Low Side	141	143	145	147	148	150	152	154	155	157	158
		High Side	346	369	394	419	446	473	501	530	559	590	622
W72AY	75/62	Low Side	119	121	122	123	125	127	129	131	133	134	136
		High Side	334	356	379	403	428	453	481	509	538	567	599
	80/67	Low Side	127	129	131	132	134	136	138	140	142	143	145
		High Side	343	365	389	413	439	465	493	522	552	582	614
	85/72	Low Side	131	134	136	137	139	141	143	145	147	148	150
		High Side	355	378	403	427	454	481	510	540	571	602	635

Low side pressure ± 4 PSIG
High side pressure ± 10 PSIG

Tables are based upon rated CFM (airflow) across the evaporator coil. If there is any doubt as to correct operating charge being in the system, the charge should be removed and system evacuated and recharged to serial plate charge weight.

NOTE: *Pressure table based on high speed condenser fan operation. If condensing pressures appear elevated check condenser fan wiring. See* **Condenser Fan Operation** *on page 31.*

TABLE 11A
Electrical Specifications – W42AY, W48AY Series

Model	Rated Volts & Phase	No. Field Power Circuits	Single Circuit		Multiple Circuit			
			① Minimum Circuit Ampacity	② Maximum External Fuse or Circuit Breaker	① Minimum Circuit Ampacity		② Maximum External Fuse or Ckt. Breaker	
					Ckt. A	Ckt. B	Ckt. A	Ckt. B
W42AY-A0Z	230/208-1	1	31	40				
A05		1	31	40				
A10		1	57	60				
A15		1 or 2	84	90	57	26	60	30
W42AY-B0Z	230/208-3	1	23	30				
B05		1	23	30				
B09		1	33	35				
B15		1	51	60				
W42AY-C0Z	460-3	1	11	15				
C09		1	16	20				
C15		1	25	25				
W42AYRC0Z	460-3	1	11	15				
RC09		1	16	20				
RC15		1	25	25				
W48YC-A0Z	230/208-1	1	35	40				
A05		1	35	40				
A10		1	59	60				
A15		1 or 2	85	90	59	26	60	30
W48YC-B0Z	230/208-3	1	25	30				
B05		1	25	30				
B09		1	34	35				
B15		1	52	60				
W48YC-C0Z	460-3	1	12	15				
C09		1	17	20				
C15		1	26	30				
W48AYRC0Z	460-3	1	13	15				
RC09		1	18	20				
RC15		1	27	30				

① These "Minimum Circuit Ampacity" values are to be used for sizing the field power conductors. Refer to the National Electrical code (latest version), Article 310 for power conductor sizing. ***CAUTION:*** *When more than one field power circuit is run through one conduit, the conductors must be derated. Pay special attention to note 8 of Table 310 regarding Ampacity Adjustment Factors when more than three (3) current carrying conductors are in a raceway.*

② Maximum size of the time delay fuse or circuit breaker for protection of field wiring conductors.

NOTE: *The Maximum Overcurrent Protection (MOCP) value listed is the maximum value as per UL 60335 calculations for MOCP (branch-circuit conductor sizes in this chart are based on this MOCP). The actual factory-installed overcurrent protective device (circuit breaker) in this model may be lower than the maximum UL 60335 allowable MOCP value, but still above the UL 60335 minimum calculated value or Minimum Circuit Ampacity (MCA) listed.*

IMPORTANT: *While this electrical data is presented as a guide, it is important to electrically connect properly sized fuses and conductor wires in accordance with the National Electrical Code and all local codes.*

TABLE 11B
Electrical Specifications – W60AY, W72AY Series

Model	Rated Volts & Phase	No. Field Power Circuits	Single Circuit		Multiple Circuit			
			① Minimum Circuit Ampacity	② Maximum External Fuse or Circuit Breaker	① Minimum Circuit Ampacity		② Maximum External Fuse or Ckt. Breaker	
					Ckt. A	Ckt. B	Ckt. A	Ckt. B
W60AY-A0Z	230/208-1	1	41	50				
A05		1	41	50				
A10		1	60	60				
A15		1 or 2	86	90	60	26	60	30
W60AY-B0Z	230/208-3	1	28	35				
B09		1	35	35				
B15		1	53	60				
W60AY-C0Z	460-3	1	14	20				
C09		1	18	20				
C15		1	27	30				
W60AYRC0Z	460-3	1	15	20				
RC09		1	19	20				
RC15		1	28	30				
W72AY-A0Z	230/208-1	1	57	60				
A05		1	57	60				
A10		1 or 2	61	70	57	52	60	60
A15		1 or 2	87	90	57	52	60	60
W72AY-B0Z	230/208-3	1	39	45				
B09		1	39	45				
B15		1	54	60				
W72AY-C0Z	460-3	1	19	25				
C09		1	19	25				
C15		1	27	30				
W72AYRC0Z	460-3	1	20	25				
RC09		1	20	25				
RC15		1	29	30				

① These "Minimum Circuit Ampacity" values are to be used for sizing the field power conductors. Refer to the National Electrical code (latest version), Article 310 for power conductor sizing. ***CAUTION:*** *When more than one field power circuit is run through one conduit, the conductors must be derated. Pay special attention to note 8 of Table 310 regarding Ampacity Adjustment Factors when more than three (3) current carrying conductors are in a raceway.*

② Maximum size of the time delay fuse or circuit breaker for protection of field wiring conductors.

NOTE: *The Maximum Overcurrent Protection (MOCP) value listed is the maximum value as per UL 60335 calculations for MOCP (branch-circuit conductor sizes in this chart are based on this MOCP). The actual factory-installed overcurrent protective device (circuit breaker) in this model may be lower than the maximum UL 60335 allowable MOCP value, but still above the UL 60335 minimum calculated value or Minimum Circuit Ampacity (MCA) listed.*

IMPORTANT: *While this electrical data is presented as a guide, it is important to electrically connect properly sized fuses and conductor wires in accordance with the National Electrical Code and all local codes.*

Setting Unit Airflow

The unit is set from the factory at the default speed. Most units have three selectable cooling speed taps that can be utilized. The default speed is the lowest cooling speed. The two higher speed taps can be used for higher duct static applications so that the unit can maintain the recommended airflow as shown in Table 12. The higher speeds can also be used when higher sensible cooling is desired. To change to the higher speed taps, move the orange/black wire on the blower speed terminal block to either MED or HI. Refer to the graphs on pages 44 and 45 for the corresponding airflow of each tap. Set the unit duct static based on the highest airflow that the unit will run at.

TABLE 12
Recommended Airflow

Model	Nominal Rated CFM*	Nominal Rated ESP*	Recommended Airflow Range	Factory Speed Connection
W42AY	1350	.15	1250 - 1600	Default
W48AY	1550	.20	1450 - 1750	
W60AY	1750	.20	1650 - 2000	
W72AY	1900	.25	1800 - 2100	

* Rated CFM and ESP on factory speed connection.

NOTE: *Be sure to adjust the system static or blower speed to maintain airflows above the minimum recommendations to prevent freeze up conditions if Balanced Climate mode is activated.*

Do not operate the unit in Balanced Climate mode if running high static applications as indicated in the blower performance table. If Balanced Climate mode is activated as described on page 25, the unit will run in this mode at all times unless there is a call for ventilation, electric heat or 2nd stage cooling from a 2-stage thermostat. At that time, the unit will automatically activate a higher speed tap.

Blower Speeds

Five factory programmed speed taps (torque settings) are available for the motor, and are selected through different unit modes of operation. These modes are energized by 24VAC signals from the low voltage terminal block located inside the control panel by a thermostat or other controlling device. Each speed tap is programmed by Bard at the factory to different motor torque settings (see Figure 27).

FIGURE 27
Speed Taps

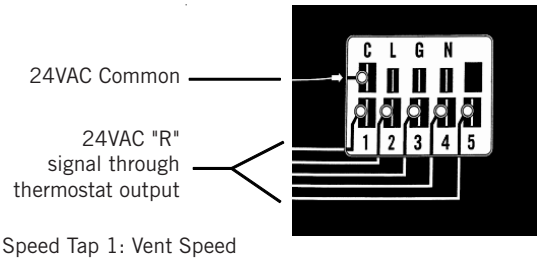

Speed Tap 1: Vent Speed
Speed Tap 2: Balanced Climate Speed
Speed Tap 3: Default Speed
Speed Tap 4: Medium Speed
Speed Tap 5: High Speed

Multiple motor speed taps may be energized simultaneously by 24VAC power during different modes of operation. The highest number speed tap energized takes priority with 5 being the highest and 1 being the lowest. See Table 13 for the corresponding blower speeds with the different modes of operation.

TABLE 13
Blower Speeds for Unit Operational Modes

Unit Operation	Thermostat Inputs – 24VAC							Speed Taps			Blower Speed	Compressor Operation
	G	Y1	Y2	W1	W2	A	D	1	2	3-4-5[1]		
Blower Only	X							X			Vent/Blower Only	Off
Balanced Climate Cooling	X	X						X	X		Balanced Climate	On
Full Load Cool	X	X	X					X	X	X	Lo/Med/Hi	On
1st Stage Heat				X						X	Lo/Med/Hi	Off
2nd Stage Heat				X	X					X	Lo/Med/Hi	Off
Dehumidify[2]							X	X	X		Balanced Climate	On

[1] Fan speed is selectable through the blower speed control terminal block. LO (default), MED or HI speeds can be used.
[2] Dehumidification operation is disabled when a call for heating or cooling occurs. Unit runs at Balanced Climate speed during dehumidification operation.

Programmed blower speed taps are as follows (see also Figure 28):

Speed Tap 1: **Vent/blower only** speed

Speed Tap 2: **Balanced Climate** speed

Speed Tap 3: **Default LO cooling & heating** speed. Energized by default for cooling operation through the blower speed tap selection and is labeled as LO.

Speed Tap 4: **Optional MED Cooling & heating** speed. Selected manually through the blower speed tap selection and is labeled as MED.

Speed Tap 5: **Optional HI cooling & heating** speed. Selected manually through the blower speed tap selection and is labeled as HI.

FIGURE 28
Speed Taps

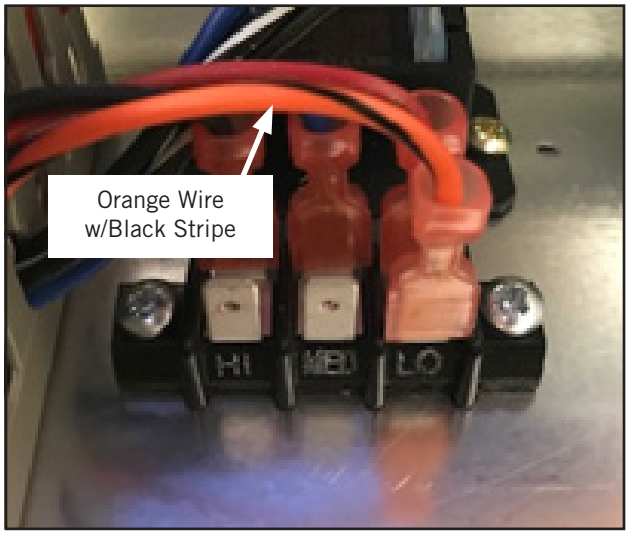

Speed Tap 1 – Vent/Blower Only

Speed taps 1 and 3 are programmed to identical torque settings in the ECM motor. This means that if speed tap 1 is energized, the airflow amount will be the same as default airflow. Tap 1 is used when a vent is installed and ventilation is called for by energizing the A terminal of the low voltage terminal block with 24VAC. Speed tap 1 is the lowest priority; if any of the other speed taps are energized, they will override speed tap 1.

Speed Tap 2 – Balanced Climate

Speed tap 2 is programmed to a lower than rated speed in the ECM motor. In order for Balanced Climate speed to be used during compressor cooling mode, the jumper between Y1 and Y2 must be removed. This means that if speed tap 2 is energized, the airflow amount will be lower than default airflow. Tap 2 is used when Balanced Climate is called for by energizing the Y1 terminal of the low voltage terminal block with 24VAC. Speed tap 2 is overridden if taps 3, 4, or 5 are energized.

Speed Tap 3 – Default LO Cooling & Heating

Speed tap 3 is programmed for rated speed in the SelecTech motor. This means that if speed tap 3 is energized, the airflow amount will be the default airflow. Tap 3 is used by default when cooling is called for by energizing the Y1 terminal of the low voltage terminal block with 24VAC. The unit is shipped with the jumper between Y1 and Y2 installed and it must be removed to use Balanced Climate mode. The unit is shipped with the orange/black wire connected to terminal LO (rated speed) on the blower selection speed terminal block. Speed tap 3 can be overridden if taps 4 or 5 are energized by changing the position of the orange/black wire on the blower selection speed terminal block to MED (4) or HI (5) positions.

Speed Tap 4 – Optional MED Cooling & Heating

Speed tap 4 is programmed to a higher than rated speed in the ECM motor. This is a user-selectable airflow amount that will be higher than rated airflow. Tap 4 is used for cooling operation if the orange/black wire on the blower speed selection terminal block is moved to MED. Speed tap 4 can be overridden if tap 5 is energized.

Speed Tap 5 – Optional HI Cooling & Heating

Speed tap 5 is programmed to the highest speed in the ECM motor. This is a user-selectable airflow amount that will provide the highest rated airflow. Tap 5 is used for cooling operation if the orange/black wire on the blower speed selection terminal block is moved to HI.

Dirty Filter Switch (Optional)

1. Disconnect all power to the unit. Remove control panel outer cover and upper front panel.
2. The dirty filter switch is located on top of the filter partition between the blower wheels (see Figure 29 on page 42). The dirty filter indicator light and reset switch is located on the right side of the filter access opening above the control panel. Remove the cover on the dirty filter switch and ensure the knob is set at 0.4" W.C. (see Figure 30 on page 43). This is only a recommended starting point prior to making switch adjustments. Switch setting is highly dependent on filter type used, blower speed, unit ducting and other unit installation characteristics. See **Dirty Filter Switch Adjustment** instructions on how to make proper switch adjustments.
3. Re-install upper front panel.

Dirty Filter Switch Adjustment

1. Apply power to the unit.
2. Turn the unit indoor blower on (energize R-G on low voltage terminal board).
3. With air filters installed and switch initially set at 0.4" W.C. (see Step 2 under **Dirty Filter**

Switch), begin restricting the air filter of the unit using a piece of cardboard under the filters until the switch trips and the light comes on. If the filter is restricted by 75% (or desired restriction amount), skip to Step 6.

4. If switch setting adjustment is required, disconnect power to the unit. Remove the upper front panel and the cover on the airflow switch so that adjustment can be made. If the switch tripped before 75% restriction was reached, turn the knob slightly clockwise. If the switch tripped after 75%, turn the knob counter-clockwise (see Figure 30).
5. Replace the upper front panel and repeat Steps 1-3. Continue to make adjustments described in Step 4 until the desired restriction is obtained.
6. Remove the restriction and reset the filter switch. Replace the switch cover once adjustment is complete.
7. Install the outer control panel cover. This completes the adjustment.

FIGURE 29
Dirty Filter Switch and Dirty Filter Indicator Light/Reset Switch

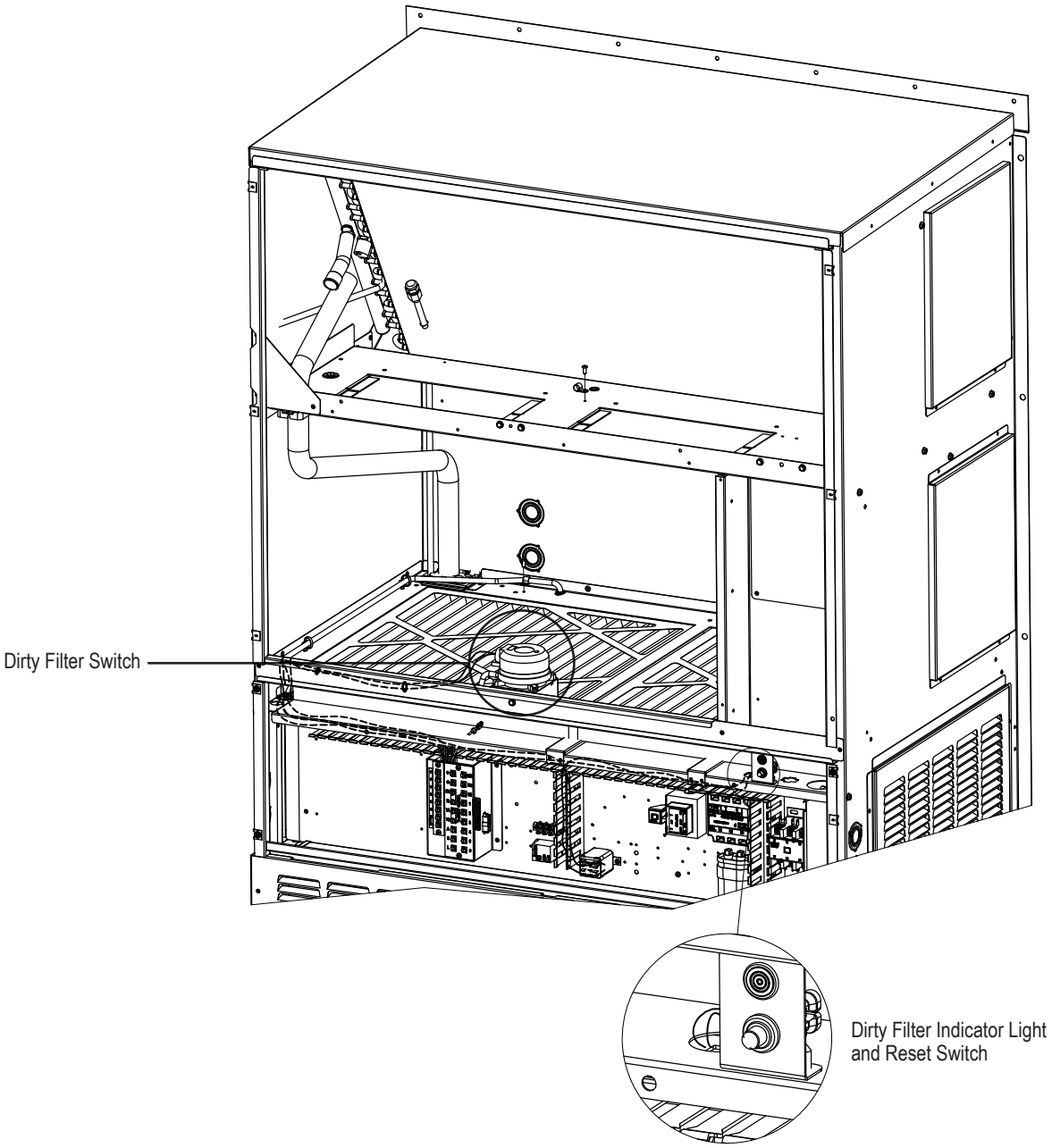

FIGURE 30
Adjusting Dirty Filter Switch

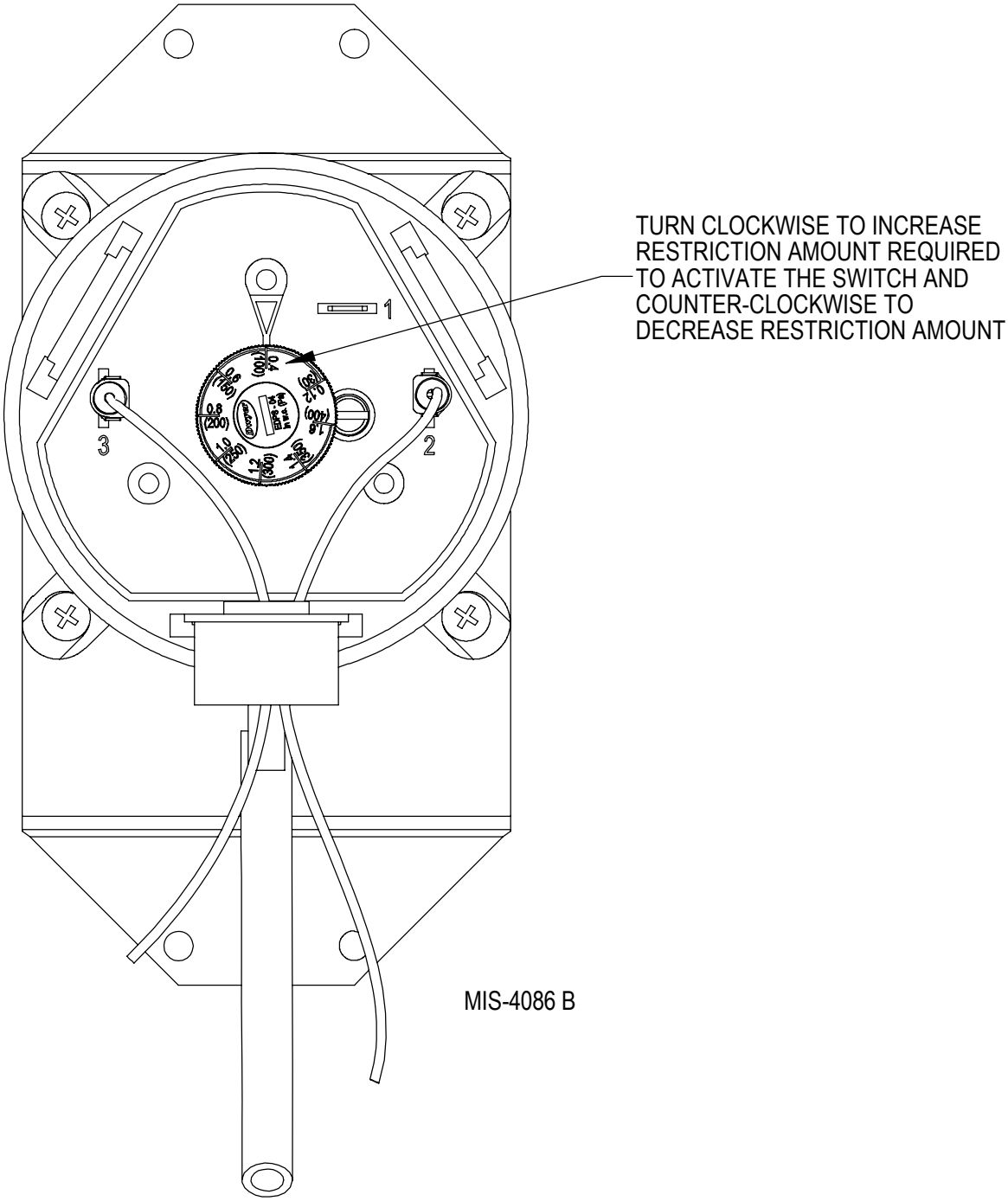

GRAPH 1
W42AY Indoor Airflow Performance – Wet Coil

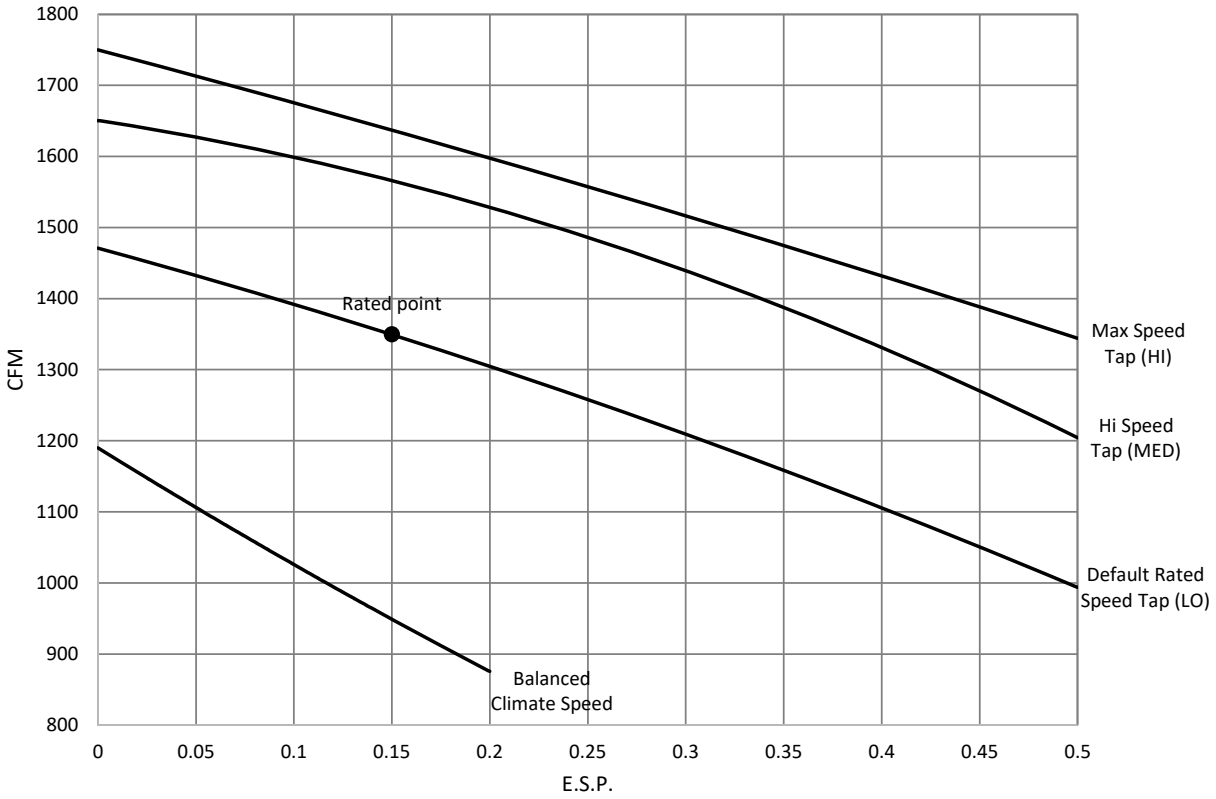

GRAPH 2
W48AY Indoor Airflow Performance – Wet Coil

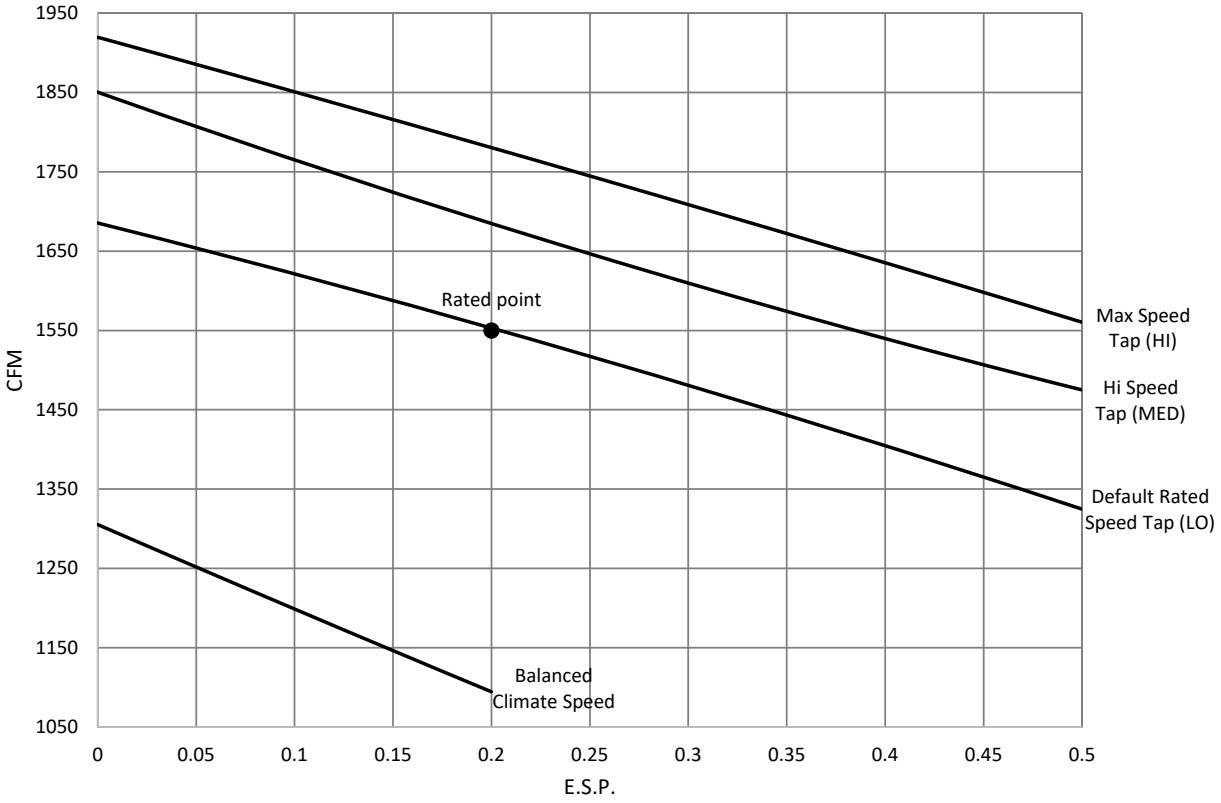

GRAPH 3
W60AY Indoor Airflow Performance – Wet Coil

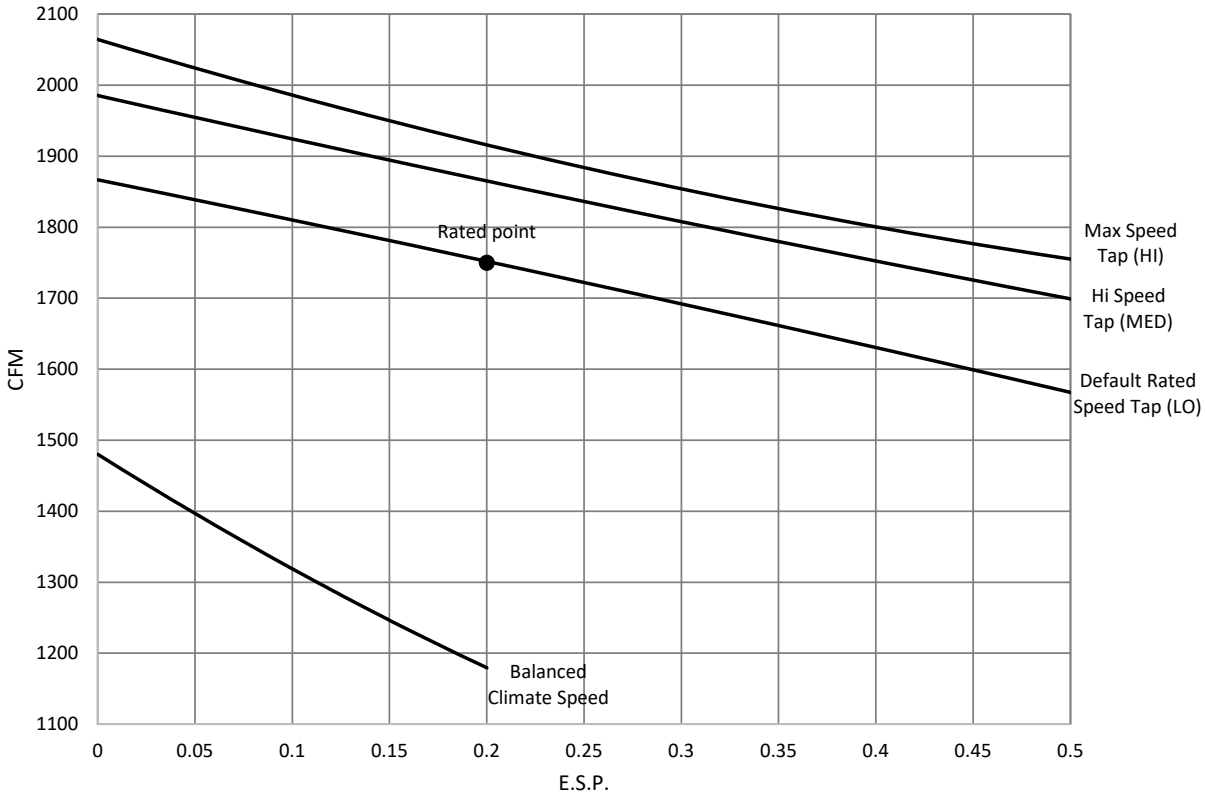

GRAPH 4
W72AY Indoor Airflow Performance – Wet Coil

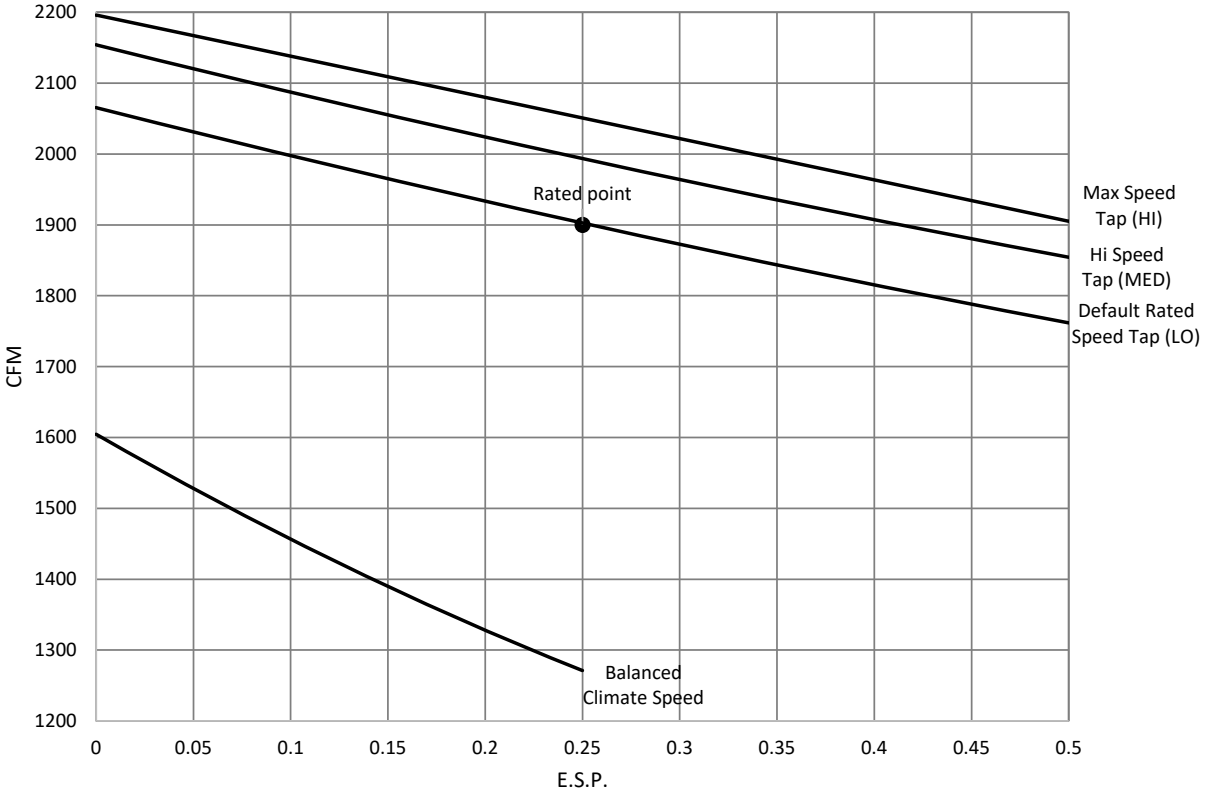

TABLE 14
Maximum ESP of Operation
Electric Heat Only

Model	W42AY/D	W48AY/D	W60AY/D	W72AY/D
-A05	.50	.50	.50	.50
-A10	.50	.50	.50	.50
-A15	.50	.50	.50	.50
-B05	.50	.50		
-B09	.50	.50	.50	.50
-B15	.50	.50	.50	.50
-C05	.50	.50		
-C09	.50	.50	.50	.50
-C15	.50	.50	.50	.50

Values shown are for units equipped with a 2" pleated MERV 13 filter.

TABLE 15
Electric Heat

Electric Heat Nomenclature	Nominal KW	Total KW and BTUH @ Field-Supplied Voltage										
		@ 230V				@ 208V				@ 460V		
		KW	1-PH Amps	3-PH Amps	BTUH	KW	1-PH Amps	3-PH Amps	BTUH	KW	3-PH Amps	BTUH
05	5.0	4.6	20.0	11.5	15,700	3.8	18.0	10.4	12,800	4.6	5.8	15,700
09	9.0	8.3	--	20.8	28,300	6.8	--	18.7	23,000	8.3	10.4	28,300
10	10.0	9.2	40.0	--	31,400	7.5	36.1	--	25,600	--	--	--
15	15.0	13.8	60.0	34.6	47,100	11.3	54.1	31.2	38,400	13.8	17.3	47,100

TABLE 16
Vent and Control Options

Part Number	Description	230V Units	460V Units
CMC-32	Start Kit (230V 1-Phase)	X	
CMC-33	Dirty Filter Switch Kit	X	X
CMC-35	Alarm Relay	X	X
CMC-38	Crankcase Heater (230V 1-Phase)	X	
CMC-39	Crankcase Heater (460V 3-Phase)		X
CMC-41	Crankcase Heater (230V 3-Phase)	X	
CMA-39	LAC - On/Off	X	X
CMA-41	LAC - On/Off (W72AY Units Only)	X	X
CMA-43	ODT	X	X
CMA-44	DDC	X	X
BOP5	Blank Off Plate	X	X
FAD-NE5	Fresh Air Damper - No Exhaust	X	X
FAD-BE5	Fresh Air Damper - Barometric Exhaust	X	X
CRV-F5	Commercial Ventilator - On/Off, Spring Return	X	X
CRV-V5	Commercial Ventilator - 0-10V, Spring Return	X	X
ECON-NC5	Economizer - Bldg. Equipment, 0-10V, No Controls	X	X
ECON-WD5	Economizer - Bldg. Equipment, Enthalpy	X	X
ECON-DB5	Economizer - Bldg. Equipment, Temperature	X	X
ERV-FA5	Energy Recovery Ventilator (230V)	X	
ERV-FC5	Energy Recovery Ventilator (460V)		X

TABLE 17
Optional Accessories

		W42AY-A	W42AY-B	W42AY-C, RC	W42AYDA	W42AYDB	W42AYDC	W48AY-A	W48AY-B	W48AY-C, RC	W48AYDA	W48AYDB	W48AYDC	W60AY-A	W60AY-B	W60AY-C, RC	W60AYDA	W60AYDB	W60AYDC	W72AY-A	W72AY-B	W72AY-C, RC	W72AYDA	W72AYDB	W72AYDC
Heater Kits	EHWA042A-A05	X			X																				
	EHWA042A-A10	X																							
	EHWA042A-A15	X			X																				
	EHWA042A-B05		X			X																			
	EHWA042A-B09		X			X									X			X							
	EHWA042A-B15		X																						
	EHWA042A-C09			X			X									X			X			X			X
	EHWA042A-C15			X												X			X			X			X
	EHWA042ADA10				X																				
	EHWA042ADC05						X																		
	EHWA048A-A05							X																	
	EHWA048A-A10							X			X														
	EHWA048A-A15							X			X														
	EHWA048A-B05								X			X													
	EHWA048A-B09								X			X													
	EHWA048A-B15								X																
	EHWA048A-C09									X			X												
	EHWA048A-C15									X															
	EHWA048ADA05										X														
	EHWA048ADC05												X												
	EHWA060A-A05													X			X								
	EHWA060A-A10													X			X								
	EHWA060A-A15													X			X								
	EHWA060A-B15														X			X			X			X	
	EHWA072A-A05																			X			X		
	EHWA072A-A10																			X			X		
	EHWA072A-A15																			X			X		
	EHWA072A-B09																				X			X	
Circuit Breaker (WMCBC)	WMCBC-04B		X			X			X			X													
	WMCBC-05B														X			X							
	WMCBC-06A	X			X			X																	
	WMCBC-06C			X			X			X			X			X			X			X			X
	WMCBC-07A										X														
	WMCBC-07B																				X			X	
	WMCBC-08A													X			X								
	WMCBC-09A																			X			X		

GRAPH 5
W42AY FAD-NE5 W/O Exhaust Ventilation Delivery

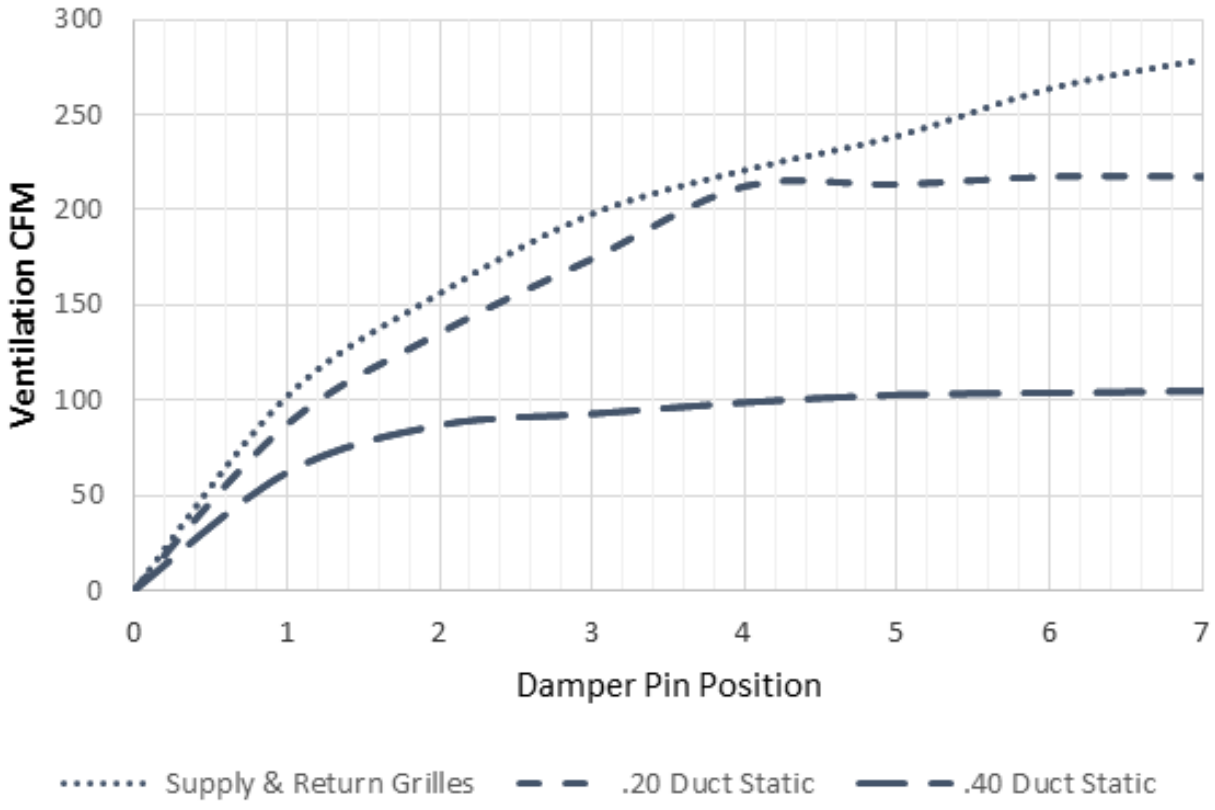

GRAPH 6
W48AY FAD-NE5 W/O Exhaust Ventilation Delivery

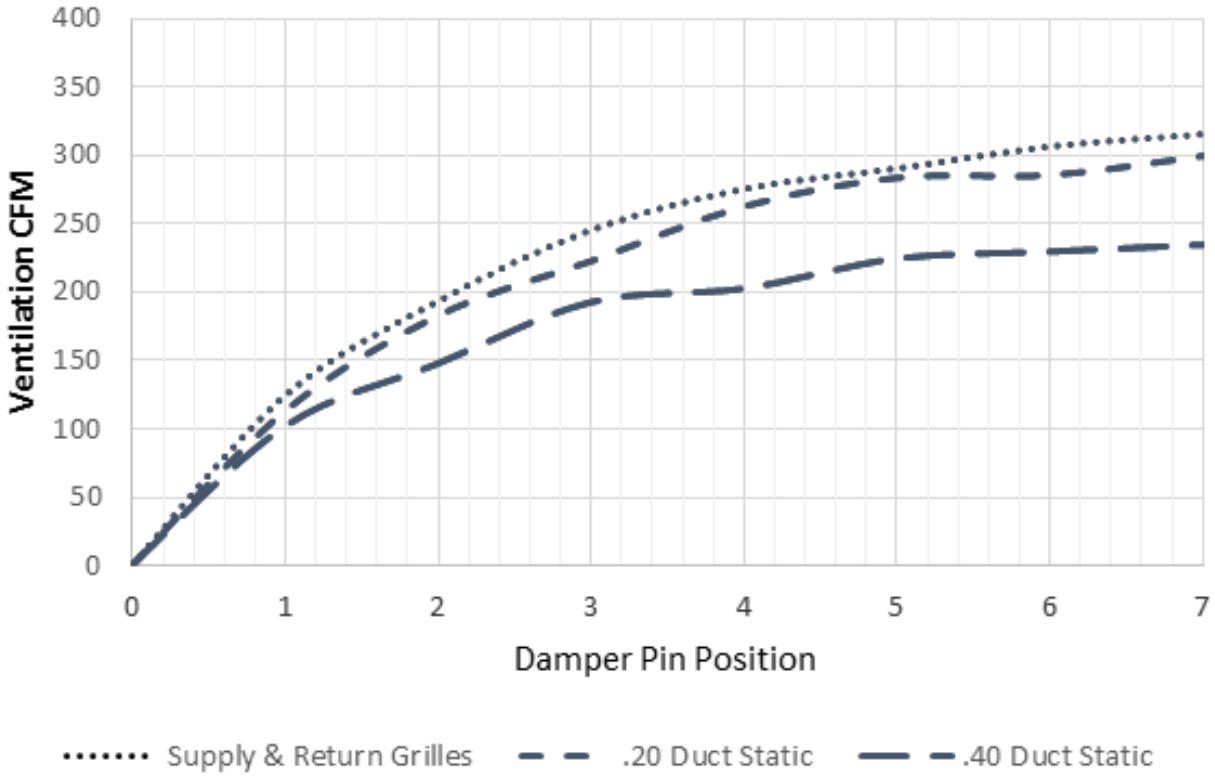

GRAPH 7
W60AY FAD-NE5 W/O Exhaust Ventilation Delivery

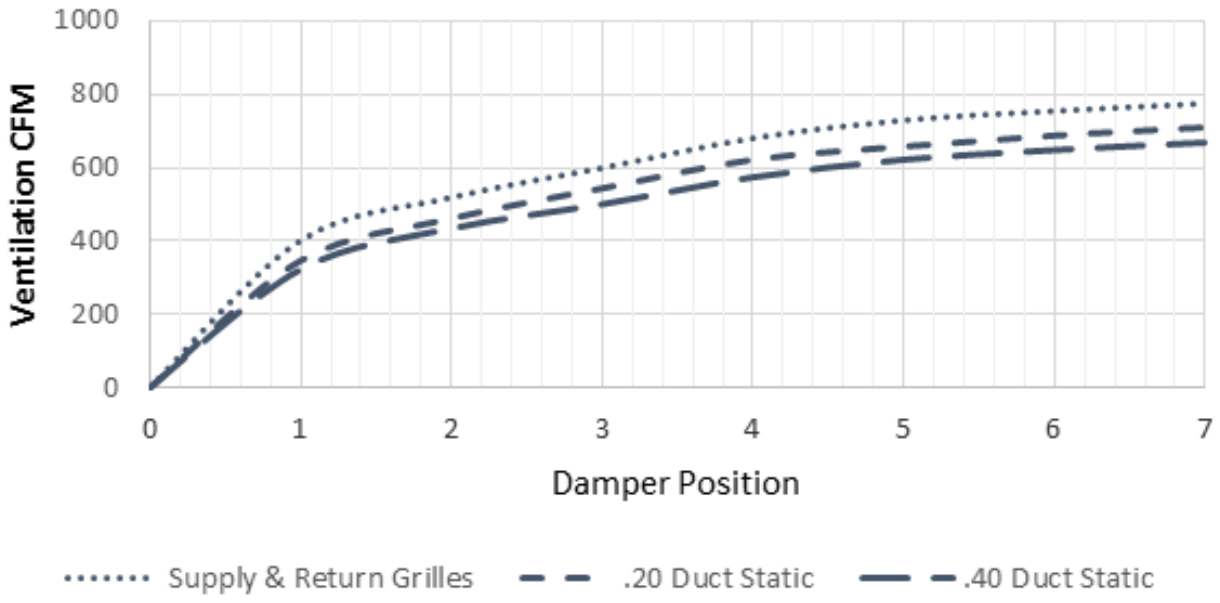

GRAPH 8
W72AY FAD-NE5 W/O Exhaust Ventilation Delivery

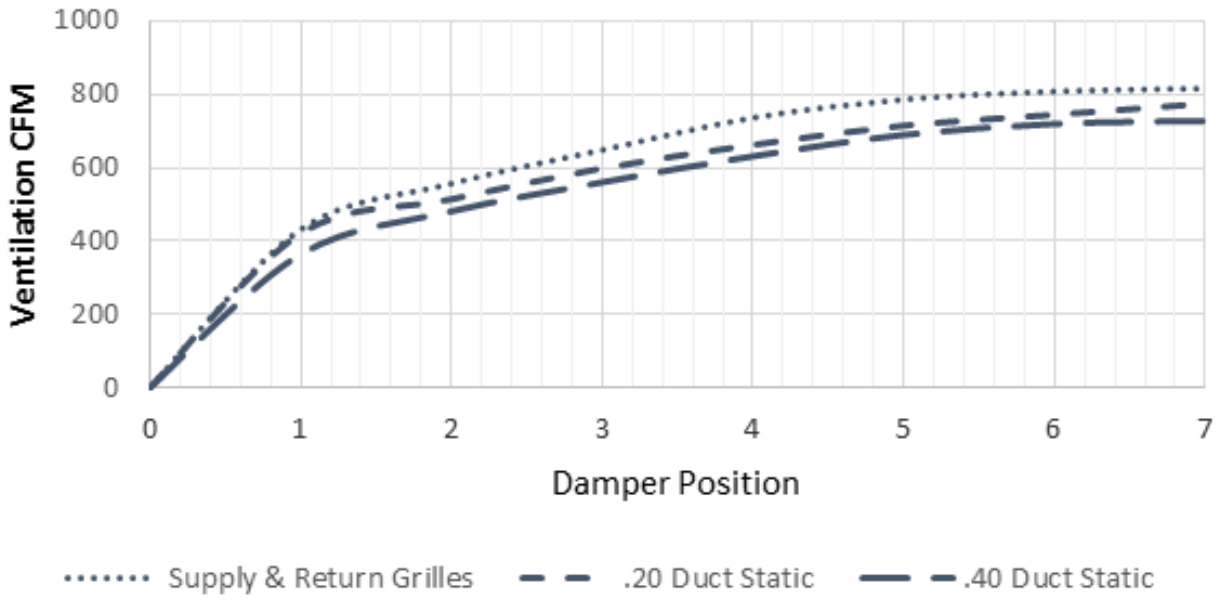

REPLACEMENT PARTS MANUAL

Wall Mount Air Conditioner

Models:

W42AY-A	W48AY-A	W60AY-A	W72AY-A
W42AY-B	W48AY-B	W60AY-B	W72AY-B
W42AY-C	W48AY-C	W60AY-C	W72AY-C
W42AY-E	W48AY-E	W60AY-E	W72AY-F
W42AY-F	W48AY-F	W60AY-F	W72AYDA
W42AYDA	W48AYDA	W60AYDA	W72AYDB
W42AYDB	W48AYDB	W60AYDB	W72AYDC
W42AYDC	W48AYDC	W60AYDC	W72AYRC
W42AYRC	W48AYRC	W60AYRC	

Contents

Description **Page**

External Parts – Standard & Dehum.
- Exploded View 2
- Usage List 3
- Usage List 4

External Parts – Recessed Cabinet
- Exploded View 6
- Usage List 7

Internal Parts – Standard & Dehum.
- Exploded View 8
- Usage List 9
- Usage List 10

Functional Components – Standard & Dehum.
- Exploded View 12
- Usage List 13
- Usage List 14

EEV Controller Assembly
- Exploded View 15
- Usage List 15

Description **Page**

Control Panel – Standard & Dehum.
- Layout View 16
- Usage List 17
- Usage List 18

Blower Assembly
- Exploded View 19
- Usage List 19

General Notes

- Revised and/or additional pages may be issued from time to time.
- A complete and current manual consists of pages shown in the following contents section.

Important

- Contact the installing and/or local Bard distributor for all parts requirements. Make sure to have the complete model and serial number available from the unit rating plates.

Bard® SINCE 1914
Climate Control Solutions

Bard Manufacturing Company, Inc.
Bryan, Ohio 43506
www.bardhvac.com

Manual: 2110-1470B
Supersedes: 2110-1470A
Date: 1-2-24

EXTERNAL PARTS – STANDARD & DEHUMIDIFICATION

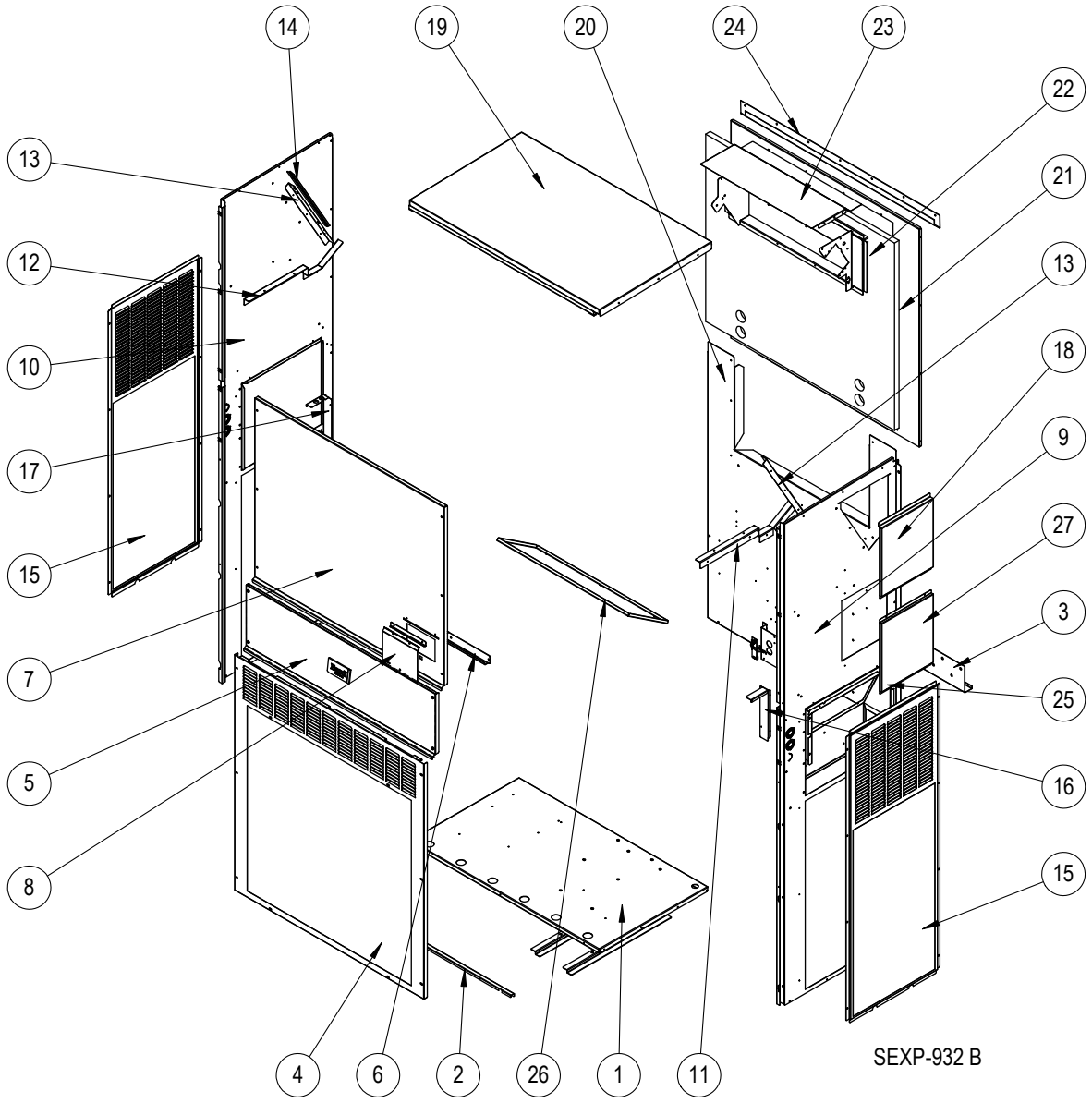

This drawing to be used for reference for pages 3 and 4

EXTERNAL PARTS – STANDARD & DEHUMIDIFICATION

Dwg No.	Part Number	Description	W42AY-A, B, C, E, F, RC	W42AYDA, B, C	W48AY-A, B, C, E, F, RC	W48AYDA, B, C
1	127-574BX	Unit Base	X	X	X	X
1	127-584BX ③	Unit Base	O	O	O	O
2	113-762BX	Front Base Bracket	X	X	X	X
2	113-797BX ③	Front Base Bracket	O	O	O	O
3	113-140BX	Bottom Mounting Bracket	X	X	X	X
4	119-125-*BX ①	Front Grille	X	X	X	X
4	119-148BX ②	Front Grille	O	O	O	O
4	119-135BX ③	Front Grille	O	O	O	O
5	533-301-*BX ①	Control Panel Cover (Outer)	X	X	X	X
5	533-309BX ②	Control Panel Cover (Outer)	O	O	O	O
5	533-310BX ③	Control Panel Cover (Outer)	O	O	O	O
6	165-608-*BX ①	Rain Channel	X	X	X	X
6	165-609BX ②	Rain Channel	O	O	O	O
6	165-610BX ③	Rain Channel	O	O	O	O
7	515-323-*BX ①	Upper Front	X	X	X	X
7	515-328BX ②	Upper Front	O	O	O	O
7	515-330BX ③	Upper Front	O	O	O	O
8	153-717-*BX ①	Disconnect Access Door	X	X	X	X
8	153-723BX ②	Disconnect Access Door	O	O	O	O
8	153-724BX ③	Disconnect Access Door	O	O	O	O
9	501-1127-*BX ①	Right Side	X	X	X	X
9	501-1128BX ②	Right Side	O	O	O	O
9	501-1129BX ③	Right Side	O	O	O	O
10	501-1054-*BX ①	Left Side	X	X	X	X
10	501-1073BX ②	Left Side	O	O	O	O
10	501-1077BX ③	Left Side	O	O	O	O
11	105X1454BX	Right Support Angle	X	X	X	X
12	105Y1454BX	Left Support Angle	X	X	X	X
13	105-1457BX	Coil Support	2	2	2	2
14	147-055BX	Coil Support Offset	X	X	X	X
15	119-126-*BX ①	Side Grille	2	2	2	2
15	119-142BX ②	Side Grille	2	2	2	2
15	119-136BX ③	Side Grille	2	2	2	2
16	105-1450BX	Right Control Panel Angle	X	X	X	X
17	105-1451BX	Left Control Panel Angle	X	X	X	X
18	543-221-*BX ①	Heater Access Cover	X	X	X	X
18	543-228BX ②	Heater Access Cover	O	O	O	O
18	543-229BX ③	Heater Access Cover	O	O	O	O
19	507-382-*BX ①	Top	X	X	X	X
19	507-391BX ②	Top	O	O	O	O
19	507-392BX ③	Top	O	O	O	O
20	109-412BX	Lower Back	X	X	X	X
20	109-418BX ②	Lower Back	O	O	O	O
20	109-422BX ③	Lower Back	O	O	O	O
21	509-411BX	Upper Back	X	X	X	X
21	509-417BX ②	Upper Back	O	O	O	O
21	509-421BX ③	Upper Back	O	O	O	O
22	111-299BX	Outlet Air Frame Assembly	X	X	X	X
23	535-129BX	Heat Shield	X	X	X	X
24	113-150-*BX ①	Top Rain Flashing	X	X	X	X
24	113-150-4BX ②	Top Rain Flashing	O	O	O	O
24	113-359BX ③	Top Rain Flashing	O	O	O	O
25	539-406BX	Fresh Air Damper Assembly	X	X	X	X
25	543-222BX	Intake Blank Off Plate	O	O	O	O
26	543-220BX	Exhaust Blank Off Plate	X	X	X	X
27	543-248-*BX ①	Access Cover	X	X	X	X
27	543-250BX ②	Access Cover	O	O	O	O
27	543-251BX ③	Access Cover	O	O	O	O
NS	5252-033BX	Bard Nameplate	X	X	X	X

① Exterior cabinet parts are manufactured with various paint color options. To ensure the proper paint color is received, include the complete model and serial number of the unit for which cabinet parts are being ordered.

X – Standard Component
O – Optional Component

② Exterior cabinet parts are manufactured from aluminum Code "A". #24 - Top rain flashing not available in aluminum; order 113-150-4 (Buckeye Gray).

③ Exterior cabinet parts are manufactured from stainless steel Code "S"

EXTERNAL PARTS – STANDARD & DEHUMIDIFICATION

Dwg No.	Part Number	Description	W60AY-A, B, C, E, F, RC	W60AYDA, B, C	W72AY-A, B, C, F, RC	W72AYDA, B, C
1	127-574BX	Unit Base	X	X	X	X
1	127-584BX ③	Unit Base	O	O	O	O
2	113-762BX	Front Base Bracket	X	X	X	X
2	113-797BX ③	Front Base Bracket	O	O	O	O
3	113-140BX	Bottom Mounting Bracket	X	X	X	X
4	119-127-*BX ①	Front Grille	X	X	X	X
4	119-149BX ②	Front Grille	O	O	O	O
4	119-137BX ③	Front Grille	O	O	O	O
5	533-301-*BX ①	Control Panel Cover (Outer)	X	X	X	X
5	533-309BX ②	Control Panel Cover (Outer)	O	O	O	O
5	533-310BX ③	Control Panel Cover (Outer)	O	O	O	O
6	165-608-*BX ①	Rain Channel	X	X	X	X
6	165-609BX ②	Rain Channel	O	O	O	O
6	165-610BX ③	Rain Channel	O	O	O	O
7	515-324-*BX ①	Upper Front	X	X	X	X
7	515-329BX ②	Upper Front	O	O	O	O
7	515-331BX ③	Upper Front	O	O	O	O
8	153-717-*BX ①	Disconnect Access Door	X	X	X	X
8	153-723BX ②	Disconnect Access Door	O	O	O	O
8	153-724BX ③	Disconnect Access Door	O	O	O	O
9	501-1130-*BX ①	Right Side	X	X	X	X
9	501-1131BX ②	Right Side	O	O	O	O
9	501-1132BX ③	Right Side	O	O	O	O
10	501-1056-*BX ①	Left Side	X	X	X	X
10	501-1075BX ②	Left Side	O	O	O	O
10	501-1079BX ③	Left Side	O	O	O	O
11	105X1454BX	Right Support Angle	X	X	X	X
12	105Y1454BX	Left Support Angle	X	X	X	X
13	105-1455BX	Coil Support	2	2	2	2
14	147-054BX	Coil Support Offset	X	X	X	X
15	119-128-*BX ①	Side Grille	2	2	2	2
15	119-143BX ②	Side Grille	2	2	2	2
15	119-138BX ③	Side Grille	2	2	2	2
16	105-1450BX	Right Control Panel Angle	X	X	X	X
17	105-1451BX	Left Control Panel Angle	X	X	X	X
18	543-221-*BX ①	Heater Access Cover	X	X	X	X
18	543-228BX ②	Heater Access Cover	O	O	O	O
18	543-229BX ③	Heater Access Cover	O	O	O	O
19	507-382-*BX ①	Top	X	X	X	X
19	507-391BX ②	Top	O	O	O	O
19	507-392BX ③	Top	O	O	O	O
20	109-414BX	Lower Back	X	X	X	X
20	109-420BX ②	Lower Back	O	O	O	O
20	109-424BX ③	Lower Back	O	O	O	O
21	509-413BX	Upper Back	X	X	X	X
21	509-419BX ②	Upper Back	O	O	O	O
21	509-423BX ③	Upper Back	O	O	O	O
22	111-299BX	Outlet Air Frame Assembly	X	X	X	X
23	535-129BX	Heat Shield	X	X	X	X
24	113-150-*BX ①	Top Rain Flashing	X	X	X	X
24	113-150-4BX ②	Top Rain Flashing	O	O	O	O
24	113-359BX ③	Top Rain Flashing	O	O	O	O
25	539-406BX	Fresh Air Damper Assembly	X	X	X	X
25	543-222BX	Intake Blank Off Plate	O	O	O	O
26	543-220BX	Exhaust Blank Off Plate	X	X	X	X
27	543-248-*BX ①	Access Cover	X	X	X	X
27	543-250BX ②	Access Cover	O	O	O	O
27	543-251BX ③	Access Cover	O	O	O	O
NS	5252-033BX	Bard Nameplate	X	X	X	X

① Exterior cabinet parts are manufactured with various paint color options. To ensure the proper paint color is received, include the complete model and serial number of the unit for which cabinet parts are being ordered.

X – Standard Component
O – Optional Component

② Exterior cabinet parts are manufactured from aluminum Code "A". #24 - Top rain flashing not available in aluminum; order 113-150-4 (Buckeye Gray).

③ Exterior cabinet parts are manufactured from stainless steel Code "S"

Refer to drawing on page 2

This page intentionally left blank

EXTERNAL PARTS – RECESSED CABINET

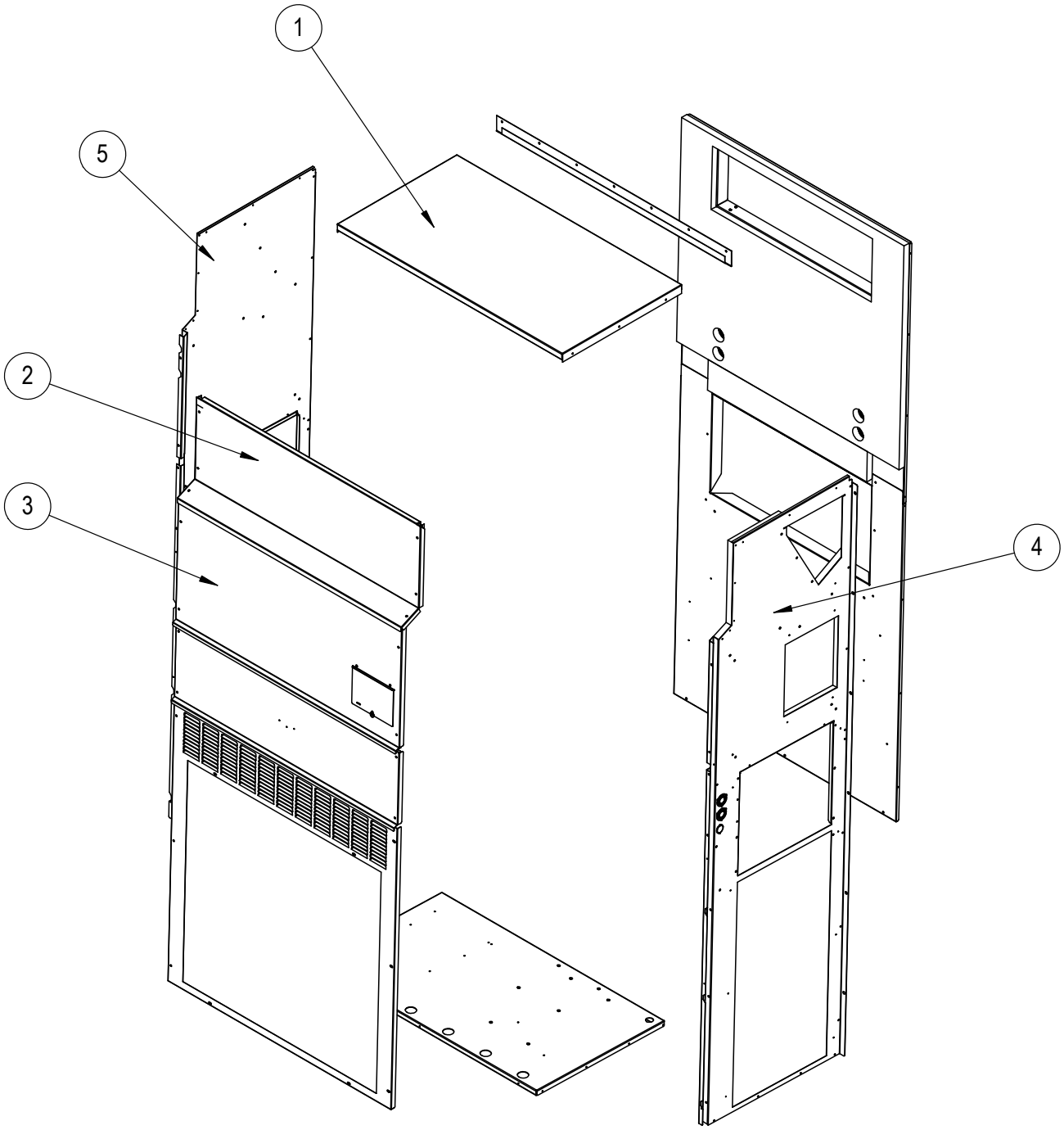

SEXP-1088

Drawing No.	Part Number	Description	W42AY-A ,B ,C	W48AY-A ,B ,C	W60AY-A ,B ,C	W72AY-A ,B ,C
1	507-413-*BX ①	Top	X	X	X	X
2	515-354-*BX ①	Upper Front	X	X		
2	515-356-*BX ①	Upper Front			X	X
3	515-355-*BX ①	Center Front	X	X		
3	515-357-*BX ①	Center Front			X	X
4	501-1142-*BX ①	Right Side Assembly	X	X		
4	501-1144-*BX ①	Right Side Assembly			X	X
5	501-1143-*BX ①	Left Side Assembly	X	X		
5	501-1145-*BX ①	Left Side Assembly			X	X

① Exterior cabinet parts are manufactured with various paint color options. To ensure the proper paint color is received, include the complete model and serial number of the unit for which cabinet parts are being ordered.

NOTE: *The replacement cabinet parts listed above are specific to the recessed unit W42/48/60/72AY wall mount air conditioner models. All other replacement cabinet external parts for these models are referenced on pages 2, 3 and 4.*

INTERNAL PARTS – STANDARD & DEHUMIDIFICATION

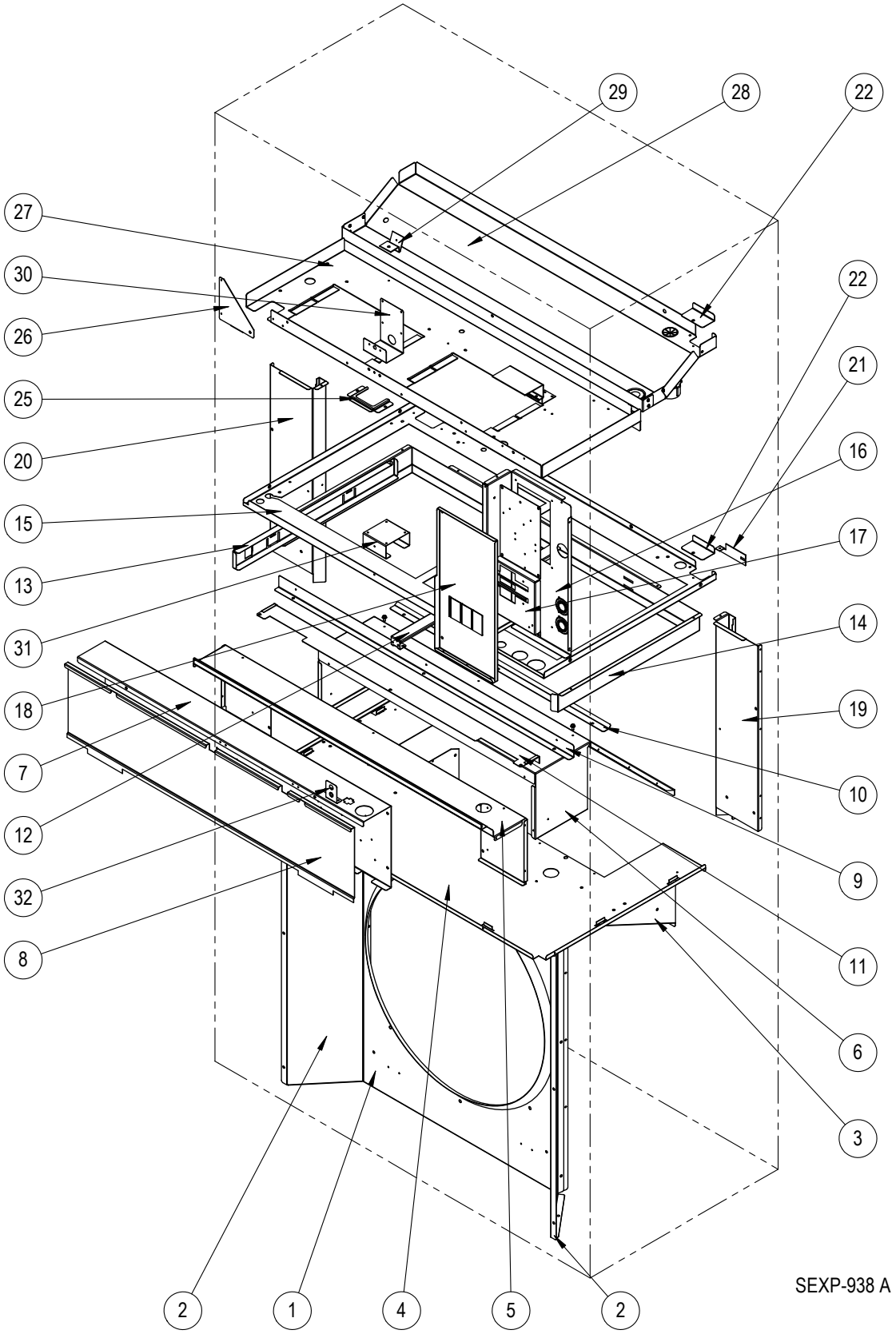

This drawing to be used for reference for pages 9 and 10

Dwg No.	Part Number	Description	W42AY-A, B, E	W42AY-C, F, RC	W42AYDA, B	W42AYDC	W48AY-A, B, E	W48AY-C, F, RC	W48AYDA, B	W48AYDC
1	125-089BX	Fan Shroud	X	X	X	X	X	X	X	X
1	125-093BX ①	Fan Shroud	O	O	O	O	O	O	O	O
2	125-090BX	Fan Shroud Side Access Cover	2	2	2	2	2	2	2	2
2	125-094BX ①	Fan Shroud Side Access Cover	2	2	2	2	2	2	2	2
3	121-586BX	Condenser Partition Insert	X	X	X	X	X	X	X	X
3	121-600BX ①	Condenser Partition Insert	O	O	O	O	O	O	O	O
4	121-585BX	Condenser Partition	X	X	X	X	X	X	X	X
4	121-599BX ①	Condenser Partition	O	O	O	O	O	O	O	O
5	521-630BX	Front Exhaust Partition	X	X	X	X	X	X	X	X
6	521-587BX	Exhaust Partition	X	X	X	X	X	X	X	X
7	Control Panel Assy.	See **Control Panel** on pages 16 – 18	X	X	X	X	X	X	X	X
8	133-330BX	Control Panel Cover (Inner)	X	X	X	X	X	X	X	X
9	105-1453BX	Front Vent Guide Rail	X	X	X	X	X	X	X	X
10	105-1452BX	Vent Guide Rail	X	X	X	X	X	X	X	X
11	135-409BX	Field Wire Shield	X	X	X	X	X	X	X	X
12	131-168BX	Filter Support Bracket	2	2	2	2	2	2	2	2
13	131-170BX	Filter Slide	X	X	X	X	X	X	X	X
14	131-169BX	Filter Rack Frame	X	X	X	X	X	X	X	X
15	121-583BX	Filter Partition	X	X	X	X	X	X	X	X
16	117-412BX	Upper Control Panel	X	X	X	X	X	X	X	X
17	127-575BX	Circuit Breaker Base	X		X		X		X	
17	127-585BX	Circuit Breaker Base - 460V		X		X		X		X
18	133-303BX	Upper Control Panel Cover	X		X		X		X	
18	133-304BX	Upper Control Panel Cover - 460V		X		X		X		X
19	135X393BX	Right Copper Chase	X	X	X	X	X	X	X	X
19	135X397BX ①	Right Copper Chase	O	O	O	O	O	O	O	O
20	135Y393BX	Left Copper Chase	X	X	X	X	X	X	X	X
20	135Y397BX ①	Left Copper Chase	O	O	O	O	O	O	O	O
21	113-796BX	Copper Retainer	2	2	2	2	2	2	2	2
22	137-920BX	Copper Fill Plate	2	2	2	2	2	2	2	2
25	113-765BX	Grommet Retainer	X	X	X	X	X	X	X	X
26	141-492BX	Blower Partition Support	X	X	X	X	X	X	X	X
27	121-582BX	Blower Partition	X	X	X	X	X	X	X	X
28	523-161BX	Drain Pan	X	X	X	X	X	X	X	X
28	523-162BX ①②	Drain Pan	O	O	O	O	O	O	O	O
29	113-768BX	EEV mounting Bracket			X	X			X	X
30	113-787BX	Airflow Switch Bracket	O	O	O	O	O	O	O	O
31	113-788BX	Filter Switch Bracket	O	O	O	O	O	O	O	O
32	113-789BX	Filter Switch Light Bracket	O	O	O	O	O	O	O	O

① Internal parts are manufactured from stainless steel Code "S"
② For aluminum units, order 523-162 stainless steel drain pan.

X – Standard Component
O – Optional Component

INTERNAL PARTS – STANDARD & DEHUMIDIFICATION

Dwg No.	Part Number	Description	W60AY-A, B, E	W60AY-C, F, RC	W60AYDA, B	W60AYDC	W72AY-A, B	W72AY-C, F, RC	W72AYDA, B	W72AYDC
1	125-091BX	Fan Shroud	X	X	X	X	X	X	X	X
1	125-095BX ①	Fan Shroud	O	O	O	O	O	O	O	O
2	125-092BX	Fan Shroud Side Access Cover	2	2	2	2	2	2	2	2
2	125-096BX ①	Fan Shroud Side Access Cover	2	2	2	2	2	2	2	2
3	121-586BX	Condenser Partition Insert	X	X	X	X	X	X	X	X
3	121-600BX ①	Condenser Partition Insert	O	O	O	O	O	O	O	O
4	121-585BX	Condenser Partition	X	X	X	X	X	X	X	X
4	121-599BX ①	Condenser Partition	O	O	O	O	O	O	O	O
5	521-630BX	Front Exhaust Partition	X	X	X	X	X	X	X	X
6	521-587BX	Exhaust Partition	X	X	X	X	X	X	X	X
7	Control Panel Assy.	See **Control Panel** on pages 16 – 18	X	X	X	X	X	X	X	X
8	133-330BX	Control Panel Cover (Inner)	X	X	X	X	X	X	X	X
9	105-1453BX	Front Vent Guide Rail	X	X	X	X	X	X	X	X
10	105-1452BX	Vent Guide Rail	X	X	X	X	X	X	X	X
11	135-409BX	Field Wire Shield	X	X	X	X	X	X	X	X
12	131-168BX	Filter Support Bracket	2	2	2	2	2	2	2	2
13	131-170BX	Filter Slide	X	X	X	X	X	X	X	X
14	131-169BX	Filter Rack Frame	X	X	X	X	X	X	X	X
15	121-583BX	Filter Partition	X	X	X	X	X	X	X	X
16	117-412BX	Upper Control Panel	X	X	X	X	X	X	X	X
17	127-575BX	Circuit Breaker Base	X		X		X		X	
17	127-585BX	Circuit Breaker Base - 460V		X		X		X		X
18	133-303BX	Upper Control Panel Cover	X		X		X		X	
18	133-304BX	Upper Control Panel Cover - 460V		X		X		X		X
19	135X393BX	Right Copper Chase	X	X	X	X	X	X	X	X
19	135X397BX ①	Right Copper Chase	O	O	O	O	O	O	O	O
20	135Y393BX	Left Copper Chase	X	X	X	X	X	X	X	X
20	135Y397BX ①	Left Copper Chase	O	O	O	O	O	O	O	O
21	113-796BX	Copper Retainer	2	2	2	2	2	2	2	2
22	137-920BX	Copper Fill Plate	2	2	2	2	2	2	2	2
25	113-765BX	Grommet Retainer	X	X	X	X	X	X	X	X
26	141-492BX	Blower Partition Support	X	X	X	X	X	X	X	X
27	121-582BX	Blower Partition	X	X	X	X	X	X	X	X
28	523-161BX	Drain Pan	X	X	X	X	X	X	X	X
28	523-162BX ①②	Drain Pan	O	O	O	O	O	O	O	O
29	113-768BX	EEV mounting Bracket			X	X			X	X
30	113-787BX	Airflow Switch Bracket	O	O	O	O	O	O	O	O
31	113-788BX	Filter Switch Bracket	O	O	O	O	O	O	O	O
32	113-789BX	Filter Switch Light Bracket	O	O	O	O	O	O	O	O

① Internal parts are manufactured from stainless steel Code "S"
② For aluminum units, order 523-162 stainless steel drain pan.

X – Standard Component
O – Optional Component

Refer to drawing on page 8

This page intentionally left blank

FUNCTIONAL COMPONENTS – STANDARD & DEHUMIDIFICATION

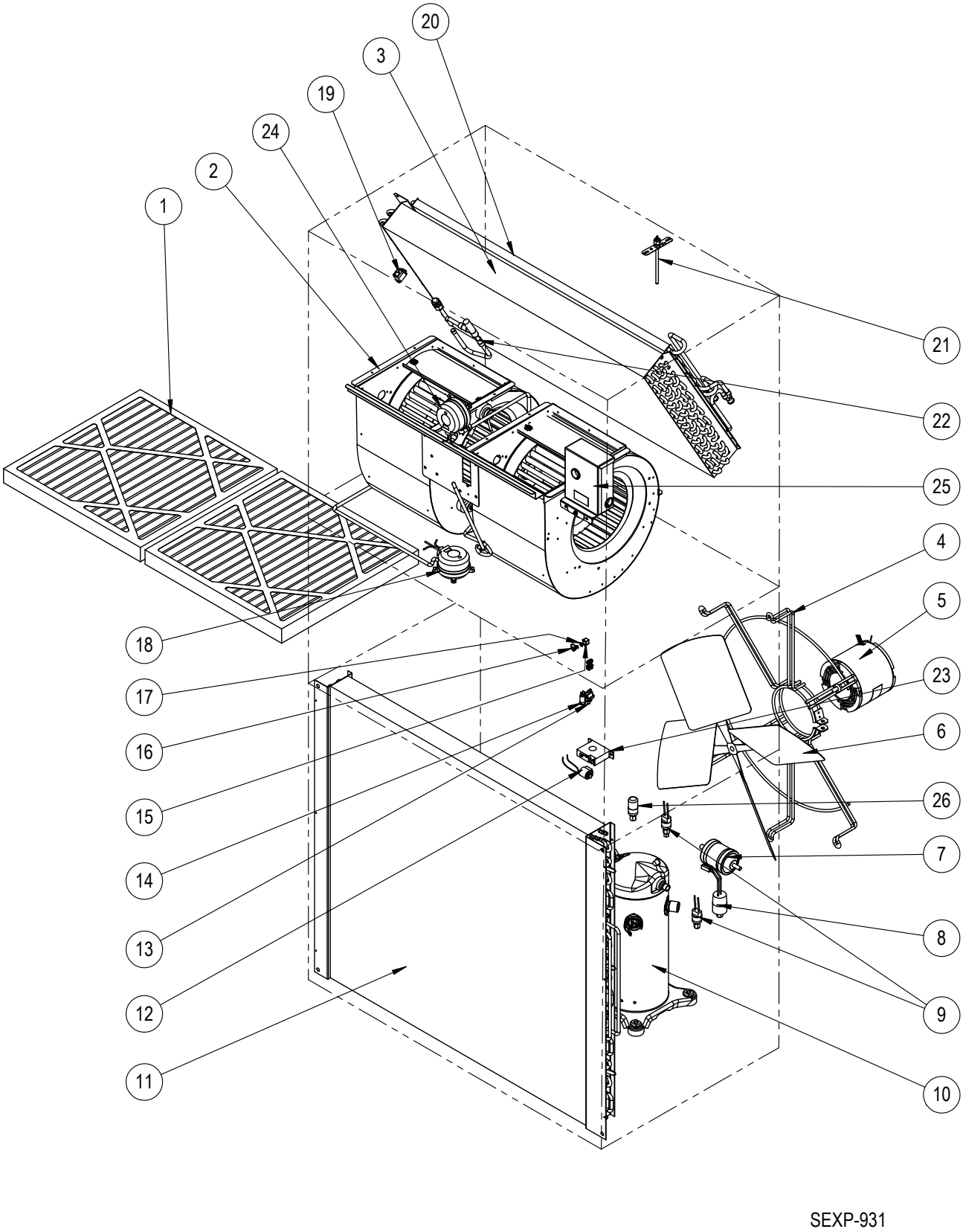

This drawing to be used for reference for pages 13 and 14

FUNCTIONAL COMPONENTS – STANDARD & DEHUMIDIFICATION

Dwg No.	Part Number	Description	W42AY-A	W42AY-B	W42AY-C	W42AYRC	W42AY-E	W42AY-F	W42AYDA	W42AYDB	W42AYDC	W48AY-A	W48AY-B	W48AY-C	W48AYRC	W48AY-E	W48AY-F	W48AYDA	W48AYDB	W48AYDC
1	7004-012	Air Filter 1" Throw-Away (20 x 20 x 1)	2	2	2	2	2	2	2	2	2	2	2	2	2	2	2	2	2	2
1	7003-085 ②	Air Filter 1" Washable (20 x 20 x 1)	2	2	2	2	2	2	2	2	2	2	2	2	2	2	2	2	2	2
1	7004-052 ②	Air Filter 2" Merv 8 (20 x 20 x 2)	2	2	2	2	2	2	2	2	2	2	2	2	2	2	2	2	2	2
1	7004-060 ②	Air Filter 2" Merv 11 (20 x 20 x 2)	2	2	2	2	2	2	2	2	2	2	2	2	2	2	2	2	2	2
1	7004-063 ②	Air Filter 2" Merv 13 (20 x 20 x 2)	2	2	2	2	2	2	2	2	2	2	2	2	2	2	2	2	2	2
2	900-366-0155BX	Blower Assembly	X	X		X	X	X	X	X										
2	900-367-0156BX	Blower Assembly - 460V			X						X									
2	900-368-0157BX	Blower Assembly										X	X		X	X	X	X	X	
2	900-369-0158BX	Blower Assembly - 460V												X						X
3	917-0366BX	Evaporator Coil w/Distributor Assy.	X	X	X	X	X	X												
3	917-0367BX	Evaporator Coil - Coated w/Distributor Assy.	O	O	O	O	O	O												
3	917-0368BX	Evaporator Coil w/Distributor Assy.							X	X	X									
3	917-0369BX	Evaporator Coil - Coated w/Distributor Assy.							O	O	O									
3	917-0370BX	Evaporator Coil w/Distributor Assy.										X	X	X	X	X	X			
3	917-0371BX	Evaporator Coil - Coated w/Distributor Assy.										O	O	O	O	O	O			
3	917-0372BX	Evaporator Coil w/Distributor Assy.																X	X	X
3	917-0373BX	Evaporator Coil - Coated w/Distributor Assy.																O	O	O
4	8200-004BX	Fan Motor Mount	X	X	X	X	X	X	X	X	X	X	X	X	X	X	X	X	X	X
4	8200-051BX ①	Fan Motor Mount - Stainless Steel	O	O	O	O	O	O	O	O	O	O	O	O	O	O	O	O	O	O
5	8105-068BX	Condenser Motor	X	X					X	X		X	X					X	X	
5	8105-071BX	Condenser Motor - 460V			X	X					X			X	X					X
5	8105-039BX	Condenser Motor					X	X								X	X			
6	5151-060BX	Fan Blade	X	X	X	X	X	X	X	X	X	X	X	X	X	X	X	X	X	X
6	5151C060BX ①	Fan Blade - Coated	O	O	O	O	O	O	O	O	O	O	O	O	O	O	O	O	O	O
7	5201-022BX	Filter Drier	X	X	X	X	X	X	X	X	X	X	X	X	X	X	X	X	X	X
8	CMA-39	Low Ambient Control (LAC)	O	O	O	O	O	O	O	O	O	O	O	O	O	O	O	O	O	O
9	8406-142BX	High Pressure Switch	X	X	X	X	X	X	X	X	X	X	X	X	X	X	X	X	X	X
9	8406-140BX	Low Pressure Switch	X	X	X	X	X	X	X	X	X	X	X	X	X	X	X	X	X	X
10	8000-349BX	Compressor	X						X											
10	8000-350BX	Compressor		X			X			X										
10	8000-351BX	Compressor			X	X		X			X									
10	8000-332BX	Compressor										X						X		
10	8000-333BX	Compressor											X			X			X	
10	8000-334BX	Compressor												X	X		X			X
11	5051-222BX	Condenser Coil	X	X	X	X	X	X	X	X	X	X	X	X	X	X	X	X	X	X
11	5054-222BX	Condenser Coil - Coated	O	O	O	O	O	O	O	O	O	O	O	O	O	O	O	O	O	O
12	8408-055BX	Outdoor Temperature Sensor	O	O	O	O	O	O	O	O	O	O	O	O	O	O	O	O	O	O
13	3000-1638BX	Dirty Filter Reset Switch	O	O	O	O	O	O	O	O	O	O	O	O	O	O	O	O	O	O
14	8611-094BX	Red Indicator Light - 24VAC	O	O	O	O	O	O	O	O	O	O	O	O	O	O	O	O	O	O
15	1171-023	1/4 Turn Receptacle	X	X	X	X	X	X	X	X	X	X	X	X	X	X	X	X	X	X
16	1171-022	1/4 Turn Fastener	X	X	X	X	X	X	X	X	X	X	X	X	X	X	X	X	X	X
17	1171-024	1/4 Turn Retainer	X	X	X	X	X	X	X	X	X	X	X	X	X	X	X	X	X	X
18	8301-057BX	Filter Pressure Switch	O	O	O	O	O	O	O	O	O	O	O	O	O	O	O	O	O	O
19	CMC-29	Freeze Protection Thermostat	O	O	O	O	O	O	O	O	O	O	O	O	O	O	O	O	O	O
20	5051-221BX	Reheat Coil							X	X	X							X	X	X
20	5054-221BX	Reheat Coil - Coated							O	O	O							O	O	O
21	910-1224BX	Supply Air Temperature Sensor	O	O	O	O	O	O	O	O	O	O	O	O	O	O	O	O	O	O
22	800-0482BX	Distributor Assembly	X	X	X	X	X	X												
22	800-0424BX	Distributor Assembly							X	X	X									
22	800-0483BX	Distributor Assembly										X	X	X	X	X	X			
22	800-0455BX	Distributor Assembly																X	X	X
22	5651S245BX	Electronic Expansion Valve							X	X	X							X	X	X
22	905-0737BX	Electronic Expansion Valve (EEV) Assembly							X	X	X							X	X	X
23	8301-013BX	Current Sensor	O	O	O	O	O	O	O	O	O	O	O	O	O	O	O	O	O	O
24	8301-057BX	Airflow Pressure Switch	O	O	O	O	O	O	O	O	O	O	O	O	O	O	O	O	O	O
25	910-2050-001BX	EEV Controller (see **EEV Controller Assembly**)							X	X	X							X	X	X
26	8406-158BX	Low Pressure Transducer							X	X	X							X	X	X
26	3000-1603BX	Transducer Wire Assembly - Connects to Transducer							X	X	X							X	X	X
NS	CMA-39	LAC Kit = Item #'s 8,12,19	O	O	O	O	O	O	O	O	O	O	O	O	O	O	O	O	O	O
NS	CMC-33	Dirty Filter Switch Kit = Item #'s 13,14,18	O	O	O	O	O	O	O	O	O	O	O	O	O	O	O	O	O	O
NS	CMA-44	DDC Kit = Item #'s 8,12,13,14,18,19,21,23,24	O	O	O	O	O	O	O	O	O	O	O	O	O	O	O	O	O	O
NS	5650-051BX	Dehumidification Valve							X	X	X							X	X	X
NS	5650-042BX	Dehum Valve Solenoid, Red Casing (Ranco)							X	X	X							X	X	X
NS	5650-046BX	Dehum Valve Solenoid, Black Casing (San Hua)							X	X	X							X	X	X
NS	5651-219	Check Valve							2	2	2							2	2	2
NS	5451-024	Tubing Isolation Grommet	2	2	2	2	2	2	4	4	4	2	2	2	2	2	2	4	4	4
NS	6031-009	Coremax Valve Core	2	2	2	2	2	2	2	2	2	2	2	2	2	2	2	2	2	2
NS	1171-028	Control Panel Door Clip	4	4	4	4	4	4	4	4	4	4	4	4	4	4	4	4	4	4
NS	1171-057	Control Panel Door Screw	4	4	4	4	4	4	4	4	4	4	4	4	4	4	4	4	4	4
NS	1171-027	Control Panel Door Screw Retainer	4	4	4	4	4	4	4	4	4	4	4	4	4	4	4	4	4	4
NS	5650-054	Molded Plug for Dehum Valve							X	X	X							X	X	X
NS	910-2188BX	460V Transformer Assembly													X					
NS	910-2189BX	460V Transformer Assembly				X														

NS – Not Shown
① – Used with stainless steel cabinet option
② – Optional on these models

X – Standard Component
O – Optional Component

FUNCTIONAL COMPONENTS – STANDARD & DEHUMIDIFICATION

Dwg No.	Part Number	Description	W60AY-A	W60AY-B	W60AY-C	W60AYRC	W60AY-E	W60AY-F	W60AYDA	W60AYDB	W60AYDC	W72AY-A	W72AY-B	W72AY-C	W72AYRC	W72AY-F	W72AYDA	W72AYDB	W72AYDC
1	7004-012	Air Filter 1" Throw-Away (20 x 20 x 1)	2	2	2	2	2	2	2	2	2	2	2	2	2	2	2	2	2
1	7003-085 ②	Air Filter 1" Washable (20 x 20 x 1)	2	2	2	2	2	2	2	2	2	2	2	2	2	2	2	2	2
1	7004-052 ②	Air Filter 2" Merv 8 (20 x 20 x 2)	2	2	2	2	2	2	2	2	2	2	2	2	2	2	2	2	2
1	7004-060 ②	Air Filter 2" Merv 11 (20 x 20 x 2)	2	2	2	2	2	2	2	2	2	2	2	2	2	2	2	2	2
1	7004-063 ②	Air Filter 2" Merv 13 (20 x 20 x 2)	2	2	2	2	2	2	2	2	2	2	2	2	2	2	2	2	2
2	900-368-0159BX	Blower Assembly	X	X		X	X	X	X	X									
2	900-369-0160BX	Blower Assembly - 460V			X						X								
2	900-368-0161BX	Blower Assembly										X	X		X	X	X	X	
2	900-369-0162BX	Blower Assembly - 460V												X					X
3	917-0374BX	Evaporator Coil w/Distributor Assy.	X	X	X	X	X	X											
3	917-0375BX	Evaporator Coil - Coated w/Distributor Assy.	O	O	O	O	O	O											
3	917-0376BX	Evaporator Coil w/Distributor Assy.							X	X	X						X	X	X
3	917-0377BX	Evaporator Coil - Coated w/Distributor Assy.							O	O	O						O	O	O
3	917-0378BX	Evaporator Coil w/Distributor Assy.										X	X	X	X	X			
3	917-0379BX	Evaporator Coil - Coated w/Distributor Assy.										O	O	O	O	O			
4	8200-004BX	Fan Motor Mount	X	X	X	X	X	X	X	X	X								
4	8200-051BX ①	Fan Motor Mount - Stainless Steel	O	O	O	O	O	O	O	O	O								
4	8200-049BX	Fan Motor Mount										X	X	X	X	X	X	X	X
4	8200-052BX ①	Fan Motor Mount - Stainless Steel										O	O	O	O	O	O	O	O
5	8105-068BX	Condenser Motor	X	X					X	X									
5	8105-039BX	Condenser Motor					X	X											
5	8105-071BX	Condenser Motor - 460V			X	X					X								
5	8106-070BX	Condenser Motor										X	X				X	X	
5	8106-071BX	Condenser Motor - 460V												X	X				X
5	8106-016BX	Condenser Motor														X			
6	5151-060BX	Fan Blade	X	X	X	X	X	X	X	X	X								
6	5151C060BX ①	Fan Blade - Coated	O	O	O	O	O	O	O	O	O								
6	5151-063BX	Fan Blade										X	X	X	X	X	X	X	X
6	5151C063BX ①	Fan Blade - Coated										O	O	O	O	O	O	O	O
7	5201-022BX	Filter Drier	X	X	X	X	X	X	X	X	X	X	X	X	X	X	X	X	X
8	CMA-39	Low Ambient Control (LAC)	O	O	O	O	O	O	O	O	O	O	O	O	O	O	O	O	O
9	8406-142BX	High Pressure Switch	X	X	X	X	X	X	X	X	X	X	X	X	X	X	X	X	X
9	8406-140BX	Low Pressure Switch	X	X	X	X	X	X	X	X	X	X	X	X	X	X	X	X	X
10	8000-289BX	Compressor	X						X										
10	8000-292BX	Compressor		X			X			X									
10	8000-308BX	Compressor			X	X		X			X								
10	8000-403BX	Compressor										X					X		
10	8000-404BX	Compressor											X					X	
10	8000-405BX	Compressor												X	X	X			X
11	5051-223BX	Condenser Coil	X	X	X	X	X	X	X	X	X	X	X	X	X	X	X	X	X
11	5054-223BX	Condenser Coil - Coated	O	O	O	O	O	O	O	O	O	O	O	O	O	O	O	O	O
12	8408-055BX	Outdoor Temperature Sensor	O	O	O	O	O	O	O	O	O	O	O	O	O	O	O	O	O
13	3000-1638BX	Dirty Filter Reset Switch	O	O	O	O	O	O	O	O	O	O	O	O	O	O	O	O	O
14	8611-094BX	Red Indicator Light - 24VAC	O	O	O	O	O	O	O	O	O	O	O	O	O	O	O	O	O
15	1171-023	1/4 Turn Receptacle	X	X	X	X	X	X	X	X	X	X	X	X	X	X	X	X	X
16	1171-022	1/4 Turn Fastener	X	X	X	X	X	X	X	X	X	X	X	X	X	X	X	X	X
17	1171-024	1/4 Turn Retainer	X	X	X	X	X	X	X	X	X	X	X	X	X	X	X	X	X
18	8301-057BX	Filter Pressure Switch	O	O	O	O	O	O	O	O	O	O	O	O	O	O	O	O	O
19	CMC-29	Freeze Protection Thermostat	O	O	O	O	O	O	O	O	O	O	O	O	O	O	O	O	O
20	5051-221BX	Reheat Coil							X	X	X						X	X	X
20	5054-221BX	Reheat Coil - Coated							O	O	O						O	O	O
21	910-1224BX	Supply Air Temperature Sensor	O	O	O	O	O	O	O	O	O	O	O	O	O	O	O	O	O
22	800-0484BX	Distributor Assembly	X	X	X	X	X	X											
22	800-0455BX	Distributor Assembly							X	X	X						X	X	X
22	800-0454BX	Distributor Assembly										X	X	X	X	X			
22	5651S248BX	Electronic Expansion Valve							X	X	X						X	X	X
22	905-0745BX	Electronic Expansion Valve (EEV) Assembly							X	X	X						X	X	X
23	8301-013BX	Current Sensor	O	O	O	O	O	O	O	O	O	O	O	O	O	O	O	O	O
24	8301-057BX	Airflow Pressure Switch	O	O	O	O	O	O	O	O	O	O	O	O	O	O	O	O	O
25	910-2050-001BX	EEV Controller (see **EEV Controller Assembly**)							X	X	X						X	X	X
26	8406-158BX	Low Pressure Transducer							X	X	X						X	X	X
26	3000-1603BX	Transducer Wire Assembly - Connects to Transducer							X	X	X						X	X	X
NS	CMA-39	LAC Kit = Item #'s 8,12,19	O	O	O	O	O	O	O	O	O	O	O	O	O	O	O	O	O
NS	CMC-33	Dirty Filter Switch Kit = Item #'s 13,14,18	O	O	O	O	O	O	O	O	O	O	O	O	O	O	O	O	O
NS	CMA-44	DDC Kit = Item #'s 8,12,13,14,18,19,21,23,24	O	O	O	O	O	O	O	O	O	O	O	O	O	O	O	O	O
NS	5650-051BX	Dehumidification Valve							X	X	X						X	X	X
NS	5650-042BX	Dehum Valve Solenoid, Red Casing (Ranco)							X	X	X						X	X	X
NS	5650-046BX	Dehum Valve Solenoid, Black Casing (San Hua)							X	X	X						X	X	X
NS	5651-219	Check Valve							2	2	2						2	2	2
NS	5451-024	Tubing Isolation Grommet	2	2	2	2	2	2	4	4	4	2	2	2	2	2	4	4	4
NS	6031-009	Coremax Valve Core	2	2	2	2	2	2	2	2	2	2	2	2	2	2	2	2	2
NS	1171-028	Control Panel Door Clip	4	4	4	4	4	4	4	4	4	4	4	4	4	4	4	4	4
NS	1171-057	Control Panel Door Screw	4	4	4	4	4	4	4	4	4	4	4	4	4	4	4	4	4
NS	1171-027	Control Panel Door Screw Retainer	4	4	4	4	4	4	4	4	4	4	4	4	4	4	4	4	4
NS	5650-054BX	Molded Plug for Dehum Valve							X	X	X						X	X	X
NS	910-2188BX	460V Transformer Assembly				X									X				

NS – Not Shown
① – Used with stainless steel cabinet option ② – Optional on these models

X – Standard Component
O – Optional Component

Refer to drawing on page 12

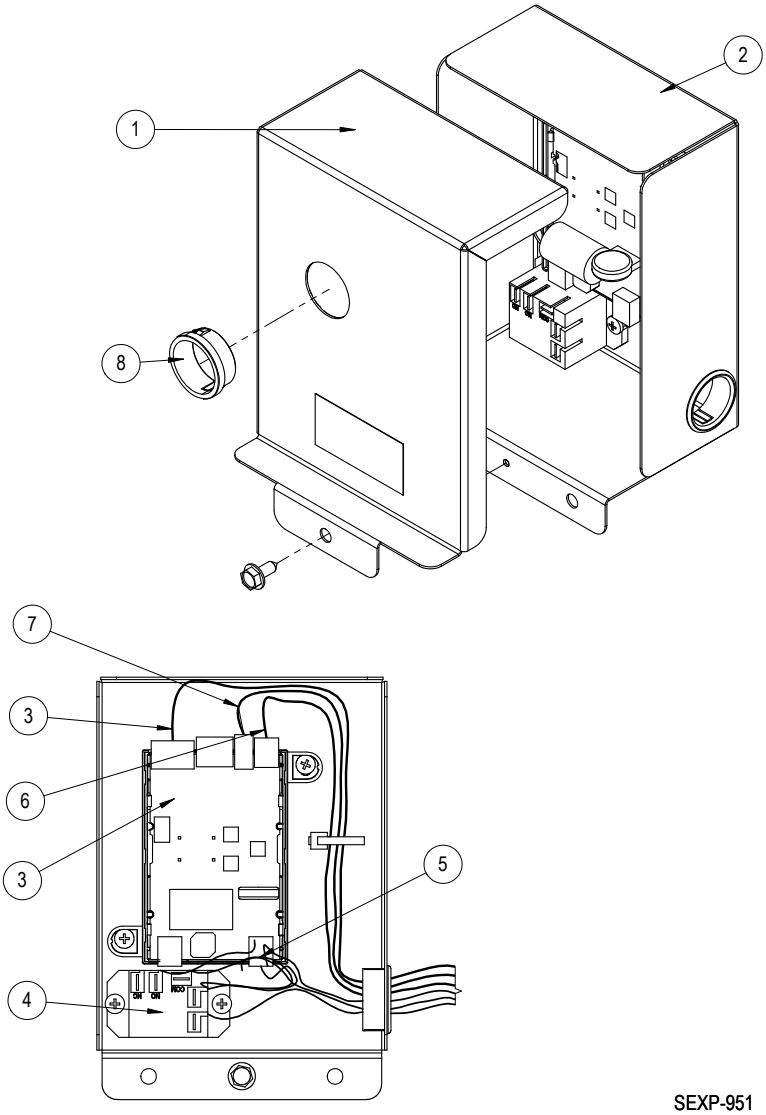

SEXP-951

910-2050-001BX

Dwg No.	Part Number	Description	
1	143-219BX	EEV Control Box Cover	X
2	127-572BX	EEV Control Box	X
3 3	S8301-079-0001BX 5651-246BX	EEV Control Module & Stator Cable EEV Stator Cable Only	X X
4	8201-130BX	Control Relay	X
5	3000-1602BX	Main Wire Assembly	X
6 NS	3000-1611BX 3000-1603BX	Transducer Wire Assembly – Connects to EEV Board Transducer Wire Assembly – Connects to Transducer	X
7	8408-056BX	EEV Thermistor	X
8	8611-075	Clear Snap Plug	X

CONTROL PANEL – STANDARD & DEHUMIDIFICATION

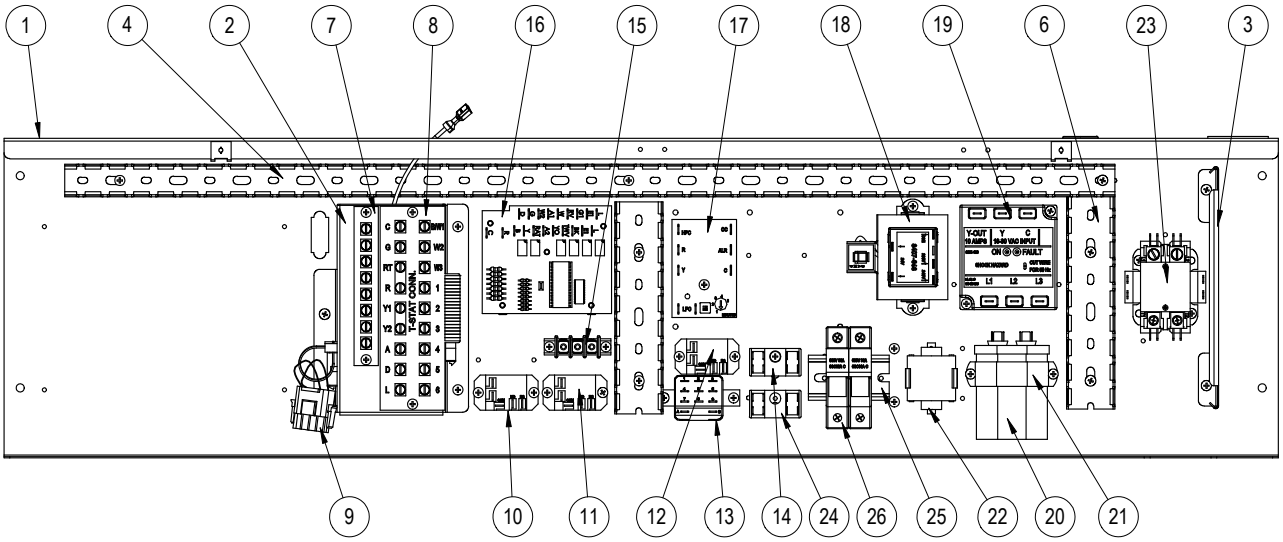

SEXP-928 B

This drawing to be used for reference for pages 17 and 18

CONTROL PANEL – STANDARD & DEHUMIDIFICATION

Dwg No.	Part Number	Description	W42AY-A	W42AY-B	W42AY-C	W42AYRC	W42AY-E	W42AY-F	W42AYDA	W42AYDB	W42AYDC	W48AY-A	W48AY-B	W48AY-C	W48AYRC	W48AY-E	W48AY-F	W48AYDA	W48AYDB	W48AYDC
1	117-411BX	Control Panel	X	X	X	X	X	X	X	X	X	X	X	X	X	X	X	X	X	X
2	910-2061BX	Complete Low Voltage Box Assembly (Sheet metal, Terminal Strip, & Wire Harness)	X	X	X	X	X	X	X	X	X	X	X	X	X	X	X	X	X	X
3	135-394BX	Wire Shield	X	X	X	X	X	X	X	X	X	X	X	X	X	X	X	X	X	X
4	8611-140-3208BX	Cable Duct - 32.5"	X	X	X	X	X	X	X	X	X	X	X	X	X	X	X	X	X	X
6	8611-244-0608BX	Cable Duct - 6.5" x 1.5" wide	2	2	2	2	2	2	2	2	2	2	2	2	2	2	2	2	2	2
7	8607-021BX	Low Voltage Terminal Strip - 8 term.	O	O	O	O	O	O	O	O	O	O	O	O	O	O	O	O	O	O
8	8607-063BX	Low Voltage Terminal Strip - 18 term.	X	X	X	X	X	X	X	X	X	X	X	X	X	X	X	X	X	X
9	3000-1524BX	Vent Jumper Plug (used when no vent option)	X	X	X	X	X	X	X	X	X	X	X	X	X	X	X	X	X	X
10	8201-130BX	Alarm Relay (Kit = CMC-35)	O	O	O	O	O	O	O	O	O	O	O	O	O	O	O	O	O	O
11	8201-130BX	Blower Speed Relay	X	X	X	X	X	X	X	X	X	X	X	X	X	X	X	X	X	X
12	8201-130BX	Dehumidification Control Relay							X	X	X							X	X	X
13	8201-159BX	Dirty Filter Relay (Kit = CMC-33)	O	O	O	O	O	O	O	O	O	O	O	O	O	O	O	O	O	O
14	8607-017BX	Terminal Block (LAC Kit = CMA-39)	O	O	O	O	O	O	O	O	O	O	O	O	O	O	O	O	O	O
15	8607-042BX	Blower Speed Terminal Block	X	X	X	X	X	X	X	X	X	X	X	X	X	X	X	X	X	X
16	8201-113BX	Dehumidification Logic Board							X	X	X							X	X	X
17	8201-176BX	Compressor Control Module	X	X	X	X	X	X	X	X	X	X	X	X	X	X	X	X	X	X
18	8407-068BX	Transformer	X	X			X	X	X	X		X	X			X	X	X	X	
18	8407-069BX	Transformer			X	X					X			X	X					X
19	8201-174BX	Phase Monitor		X	X	X	X	X		X	X		X	X	X	X	X		X	X
20	8552-079BX	Compressor Capacitor	X						X											
20	8552-089BX	Compressor Capacitor										X						X		
20	8552-005BX	Outdoor Motor Capacitor		X			X	X		X			X			X	X		X	
20	8552-004BX	Outdoor Motor Capacitor			X	X					X			X	X					X
21	8550-008BX	Capacitor Strap	X						X			X						X		
21	8550-003BX	Capacitor Strap		X	X	X	X	X		X	X		X	X	X	X	X		X	X
22	8551-004BX	Start Device (PTCR) (Kit = CMC-32)	O						O			O						O		
23	8401-034BX	Compressor Contactor	X						X			X						X		
23	8401-035BX	Compressor Contactor		X	X	X	X	X		X	X		X	X	X	X	X		X	X
24	8607-017BX	Terminal Block				X									X					
25	8611-210BX	DIN Rail				X									X					
26	8614-058	Fuse Block				X									X					
26	8614-046	5A Fuse													2					
26	8614-047	3.2A Fuse				2														
NS	8615-040BX	Circuit Breaker 50A 2 Pole ①	O						O			O						O		
NS	8615-042BX	Circuit Breaker 35A 3 Pole ①		O						O			O						O	
NS	8615-052BX	Circuit Breaker 30A 3 Pole ①					O									O				
NS	8615-067BX	Toggle Disconnect			O	O		O			O			O	O		O			O
NS	4213-124	Wiring Diagram	X									X								
NS	4213-125	Wiring Diagram							X									X		
NS	4213-224	Wiring Diagram		X			X						X			X				
NS	4213-225	Wiring Diagram								X									X	
NS	4213-324	Wiring Diagram			X									X						
NS	4213-325	Wiring Diagram									X									X
NS	4213-327	Wiring Diagram				X									X					
NS	4213-624	Wiring Diagram						X									X			
NS	3000-1613BX	Blower Power Plug	X	X	X	X	X		X	X	X	X	X	X	X	X		X	X	X
NS	3000-1645BX	Blower Power Plug						X									X			
NS	3000-1614BX	Blower Speed Plug	X	X	X	X	X	X	X	X	X	X	X	X	X	X	X	X	X	X
NS	3000-1222BX	Compressor Plug/Harness	X						X			X						X		
NS	3000-1230BX	Compressor Plug/Harness		X	X	X	X	X		X	X		X	X	X	X	X		X	X
NS	3003-138BX	Control Panel Wire Harness	X									X								
NS	3003-142BX	Control Panel Wire Harness								X	X								X	X
NS	3003-139BX	Control Panel Wire Harness		X	X	X	X						X	X	X	X				
NS	3003-140BX	Control Panel Wire Harness						X									X			
NS	3003-141BX	Control Panel Wire Harness							X									X		
NS	3000-1608	Low Voltage Terminal Block Wire Harness	X	X	X	X	X	X	X	X	X	X	X	X	X	X	X	X	X	X
NS	8201-074BX	Power Switch Relay	X																	

NS = Not Shown

① Circuit breakers listed are for units without electric heat, "OZ" models. See heater replacement parts manual for units with electric heat.

X – Standard Component
O – Optional Component

CONTROL PANEL – STANDARD & DEHUMIDIFICATION

Dwg No.	Part Number	Description	W60AY-A	W60AY-B	W60AY-C	W60AYRC	W60AY-E	W60AY-F	W60AYDA	W60AYDB	W60AYDC	W72AY-A	W72AY-B	W72AY-C	W72AYRC	W72AY-F	W72AYDA	W72AYDB	W72AYDC
1	117-411BX	Control Panel	X	X	X	X	X	X	X	X	X	X	X	X	X	X	X	X	X
2	910-2061BX	Complete Low Voltage Box Assembly (Sheet metal, Terminal Strip, & Wire Harness)	X	X	X	X	X	X	X	X	X	X	X	X	X	X	X	X	X
3	135-394BX	Wire Shield	X	X	X	X	X	X	X	X	X	X	X	X	X	X	X	X	X
4	8611-140-3208BX	Cable Duct - 32.5"	X	X	X	X	X	X	X	X	X	X	X	X	X	X	X	X	X
6	8611-244-0608BX	Cable Duct - 6.5" x 1.5" wide	2	2	2	2	2	2	2	2	2	2	2	2	2	2	2	2	2
7	8607-021BX	Low Voltage Terminal Strip - 8 term.	O	O	O	O	O	O	O	O	O	O	O	O	O	O	O	O	O
8	8607-063BX	Low Voltage Terminal Strip - 18 term.	X	X	X	X	X	X	X	X	X	X	X	X	X	X	X	X	X
9	3000-1524BX	Vent Jumper Plug (used when no vent option)	X	X	X	X	X	X	X	X	X	X	X	X	X	X	X	X	X
10	8201-130BX	Alarm Relay (Kit = CMC-35)	O	O	O	O	O	O	O	O	O	O	O	O	O	O	O	O	O
11	8201-130BX	Blower Speed Relay	X	X	X	X	X	X	X	X	X	X	X	X	X	X	X	X	X
12	8201-130BX	Dehumidification Control Relay							X	X	X						X	X	X
13	8201-159BX	Dirty Filter Relay (Kit = CMC-33)	O	O	O	O	O	O	O	O	O	O	O	O	O	O	O	O	O
14	8607-017	Terminal Block (LAC Kit = CMA-39)	O	O	O	O	O	O	O	O	O	O	O	O	O	O	O	O	O
15	8607-042BX	Blower Speed Terminal Block	X	X	X	X	X	X	X	X	X	X	X	X	X	X	X	X	X
16	8201-113BX	Dehumidification Logic Board							X	X	X						X	X	X
17	8201-176BX	Compressor Control Module	X	X	X	X	X	X	X	X	X	X	X	X	X	X	X	X	X
18	8407-068BX	Transformer	X	X			X	X	X	X		X	X			X	X	X	
18	8407-069BX	Transformer			X	X					X			X	X				X
19	8201-174BX	Phase Monitor		X	X	X	X	X		X	X		X	X	X	X		X	X
20	8552-089BX	Compressor Capacitor	X						X										
20	8552-097BX	Compressor Capacitor										X					X		
20	8552-005BX	Outdoor Motor Capacitor		X			X	X		X				X	X				X
20	8552-004BX	Outdoor Motor Capacitor			X	X					X		X			X		X	
21	8550-008BX	Capacitor Strap	X						X			X					X		
21	8550-003BX	Capacitor Strap		X	X	X	X	X		X	X		X	X	X	X		X	X
22	8551-004BX	Start Device (PTCR) (Kit = CMC-32)	O						O			O					O		
23	8401-034BX	Compressor Contactor	X						X			X					X		
23	8401-035BX	Compressor Contactor		X	X	X	X	X		X	X		X	X	X	X		X	X
24	8607-017BX	Terminal Block				X									X				
25	8611-210BX	DIN Rail				X									X				
26	8614-058	Fuse Block				X									X				
26	8614-046	5A Fuse				2									2				
NS	8615-041BX	Circuit Breaker 60A 2 Pole ①	O						O			O					O		
NS	8615-043BX	Circuit Breaker 40A 3 Pole ①		O			O			O									
NS	8615-045BX	Circuit Breaker 50A 3 Pole ①											O					O	
NS	8615-067BX	Toggle Disconnect			O	O		O			O			O	O	O			O
NS	4213-124	Wiring Diagram	X									X							
NS	4213-125	Wiring Diagram							X								X		
NS	4213-224	Wiring Diagram		X			X						X						
NS	4213-225	Wiring Diagram								X								X	
NS	4213-324	Wiring Diagram			X									X					
NS	4213-325	Wiring Diagram									X								X
NS	4213-327	Wiring Diagram				X									X				
NS	4213-624	Wiring Diagram						X								X			
NS	3000-1613BX	Blower Power Plug	X	X	X	X	X		X	X	X	X	X	X	X		X	X	X
NS	3000-1645BX	Blower Power Plug						X								X			
NS	3000-1614BX	Blower Speed Plug	X	X	X	X	X	X	X	X	X	X	X	X	X	X	X	X	X
NS	3000-1222BX	Compressor Plug/Harness	X						X			X					X		
NS	3000-1230BX	Compressor Plug/Harness		X	X	X	X	X		X	X		X	X	X	X		X	X
NS	3003-138BX	Control Panel Wire Harness	X									X							
NS	3003-142BX	Control Panel Wire Harness								X	X							X	X
NS	3003-139BX	Control Panel Wire Harness		X	X	X	X						X	X	X				
NS	3003-140BX	Control Panel Wire Harness						X								X			
NS	3003-141BX	Control Panel Wire Harness							X								X		
NS	3000-1608BX	Low Voltage Terminal Block Wire Harness	X	X	X	X	X	X	X	X	X	X	X	X	X	X	X	X	X

① Circuit breakers listed are for units without electric heat, "OZ" models. See heater replacement parts manual for units with electric heat.

NS = Not Shown

X – Standard Component
O – Optional Component

Refer to drawing on page 16

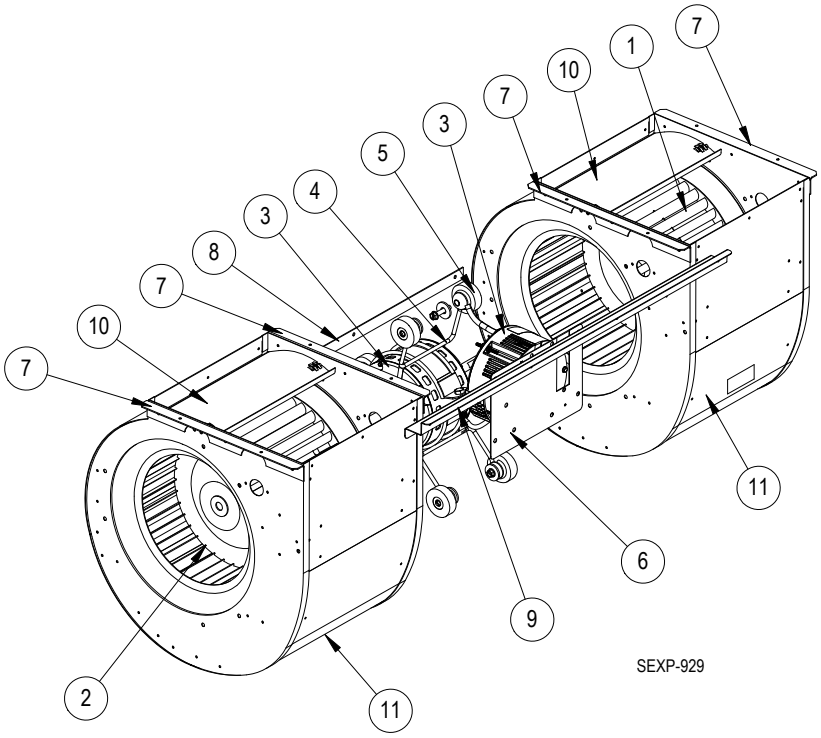

Dwg No.	Part Number	Description	900-366-0155BX	900-367-0156BX	900-368-0157BX	900-368-0159BX	900-368-0161BX	900-369-0158BX	900-369-0160BX	900-369-0162BX
1	5152-011BX	10 Inch Wheel (CW)	X	X	X	X	X	X	X	X
2	5152-012BX	10 Inch Wheel (CW)	X	X	X	X	X	X	X	X
3	8106-068-0155BX	Programmed Blower Motor & Control (230/208V)	X							
3	8106-069-0156BX	Programmed Blower Motor & Control (460V)		X						
3	8107-028-0157BX	Programmed Blower Motor & Control (230/208V)			X					
3	8107-028-0159BX	Programmed Blower Motor & Control (230/208V)				X				
3	8107-028-0161BX	Programmed Blower Motor & Control (230/208V)					X			
3	8107-029-0158BX	Programmed Blower Motor & Control (460V)						X		
3	8107-029-0160BX	Programmed Blower Motor & Control (460V)							X	
3	8107-029-0162BX	Programmed Blower Motor & Control (460V)								X
3	C8106-068-0155	Programmed Control Only (230/208V)	O							
3	C8106-069-0156	Programmed Control Only (460V)		O						
3	C8107-028-0157	Programmed Control Only (230/208V)			O					
3	C8107-028-0159	Programmed Control Only (230/208V)				O				
3	C8107-028-0161	Programmed Control Only (230/208V)					O			
3	C8107-029-0158	Programmed Control Only (460V)						O		
3	C8107-029-0160	Programmed Control Only (460V)							O	
3	C8107-029-0162	Programmed Control Only (460V)								O
4	8200-040BX	Motor Mount	X	X	X	X	X	X	X	X
5	5451-011	Grommets	6	6	6	6	6	6	6	6
6	112-775BX	Motor Control Bracket	X	X	X	X	X	X	X	X
7	105-880BX	Side Angle	4	4	4	4	4	4	4	4
8	105-881BX	Back Brace	X	X	X	X	X	X	X	X
9	103-541BX	Front Mounting Offset	X	X	X	X	X	X	X	X
10	144-166BX	Diffuser	2	2	2	2	2	2	2	2
11	151-101BX	Blower Housing	2	2	2	2	2	2	2	2

X – Standard Component
O – Optional Component

SUPPLEMENTAL INSTRUCTIONS

50 HZ Electrical Data

Model	Rated Volts and Phases	Operating Voltage Range	No. Field Power Circuits	① Minimum Circuit Ampacity	② Maximum External Fuse or Circuit Breaker
W24AY-D0Z	240/220-1	198 - 254	1	16	20
D05			1	31	35
D10			1	57	60
W24A/LY-F0Z	415/380-3	342 - 456	1	7	15
F04			1	10	15
W30AY-D0Z	240/220-1	198 - 254	1	20	25
D05			1	31	35
D10			1	57	60
W30A/LY-F0Z	415/380-3	342 - 456	1	8	15
F07			1	16	20
F12			1	25	25
W36AY-D0Z	240/220-1	198 - 254	1	24	30
D05			1	33	35
D10			1	59	60
W36AY-E0Z	220/200-3	180 - 242	1	19	25
E05			1	22	25
E09			1	34	35
W36A/LY-F0Z	415/380-3	342 - 456	1	11	15
F07			1	17	20
F12			1	26	30
W42AY-E0Z	220/200-3	180 - 242	1	23	30
E09			1	33	35
E15			1	51	60
W42AY-F0Z	415/380-3	342 - 456	1	11	15
F07			1	17	20
F12			1	26	30
W48AY-E0Z	220/200-3	180 - 242	1	25	30
E09			1	34	35
E15			1	52	60
W48AY-F0Z	415/380-3	342 - 456	1	12	15
F07			1	17	20
F12			1	26	30
W60AY-E0Z	220/200-3	180 - 242	1	27	35
E09			1	35	35
E15			1	53	60
W60AY-F0Z	415/380-3	342 - 456	1	14	20
F07			1	18	20
F12			1	27	30
W72AY-F0Z	415/380-3	342 - 456	1	19	25
F07			1	19	25
F12			1	27	30

① These "Minimum Circuit Ampacity" values are to be used for sizing the field power conductors. Refer to the National Electric Code (latest version), Article 310 for power conductor sizing.
② Maximum size of the time delay fuse or "D" type circuit breaker for protection of field wiring conductors.

CAUTION: *When more than one field power circuit is run through one conduit, the conductors must be derated. Pay special attentionto Note 8 of Table 310 regarding Ampacity Adjustment Factors when more than three conductors are in a raceway.*

IMPORTANT: While this electrical data is presented as a guide, it is important to electrically connect properly sized fuses and conductor wires in accordance with all existing local codes.

Bard® SINCE 1914
Climate Control Solutions

Bard Manufacturing Company, Inc.
Bryan, Ohio 43506
www.bardhvac.com

Manual: 7960-946
Supersedes: ***NEW***
Date: 6-29-23

Outdoor Fan Motor – 50 HZ

Models W42AY-E, W42AY-F, W48AY-E, W48AY-F, W60AY-E and W60AY-F have a condenser fan motor with a red and black speed tap. These units are shipped from the factory with the red lead connected. At no time is the black lead to be connected for 50HZ application.

Wiring – Main Power

The disconnect means must have contact separation of 3 mm or greater in all poles.

Supplemental Instructions

8201-176BX Compressor Control Module

(Replaces 8201-088, 8201-148, 8201-157, 8201-162, 8201-164, 8201-169, 8201-171, 8620-244)

Features

Delay-on-Make Timer
Short Cycle Protection/Delay-on-Break
Low Pressure Detection
High Pressure Detection
HPC and LPC Status LEDs
Test Mode
Brownout Protection with Adjustment

Delay-on-Make Timer

A delay-on-make timer is included to be able to delay startup of the compressor. This is desired when more than one unit is on a structure so that all of the units do not start at the same time which could happen after a power loss or building shutdown. The delay-on-make time period is 2 minutes plus 10% of the delay-on-break time period. To ensure that all of the units do not start at the same time, adjust the delay-on-break timer on each unit to a slightly different delay time.

Short Cycle Protection/Delay-on-Break

An anti-short cycle timer is included to prevent short cycling the compressor. This is adjustable from 30 seconds to 5 minutes via the adjustment knob. Once a compressor call is lost, the time period must expire before a new call will be initiated.

Low Pressure Detection

Low pressure switch monitoring allows for a lockout condition in a situation where the switch is open. If the low pressure switch remains open for more than 2 minutes, the compressor control module (CCM) will de-energize the compressor for the delay-on-break time. If the switch closes again, it will then restart the compressor. If the switch trips again during the same Y call, the compressor will be de-energized and the alarm terminal will be energized indicating an alarm. The blue LED will light and stay on until power is cycled to the control or a loss of voltage is present at Y terminal for more than ½ second.

High Pressure Detection

High pressure switch monitoring allows for a lockout condition in a situation where the switch is open. If the high pressure switch opens, the CCM will de-energize the compressor. If the switch closes again, it will then restart the compressor after the delay-on-break setting has expired on the device. If the switch trips again during the same thermostat call, the compressor will be de-energized and the alarm terminal will be energized indicating an alarm. The red LED will light and stay on until power is cycled to the control or a loss of voltage is present at Y terminal for more than ½ second.

Test Mode

By rapidly rotating the potentiometer (POT) clockwise (see Figure 1 on page 2), all timing functions will be removed for testing.

The conditions needed for the unit to enter test mode are as follows: POT must start at a time less than or equal to the 40 second mark. The POT must then be rapidly rotated to a position greater than or equal to the 280 second mark in less than ¼ second. Normal operation will resume after power is reset or after the unit has been in test mode for at least 5 minutes.

Bard SINCE 1914
Climate Control Solutions

Bard Manufacturing Company, Inc.
Bryan, Ohio 43506
www.bardhvac.com

Manual: 7960-932B
Supersedes: 7960-932A
Date: 8-16-24

Brownout Protection with Adjustment

Brownout protection may be necessary if the utility power or generator power has inadequate power to prevent the voltage from dropping when the compressor starts. This is rare but can happen if the generator is undersized at the site or if the site is in a remote location far from the main power grid. Under normal circumstances, allowing the brownout to be ignored for a time period should not be needed. The 8201-176BX is shipped in “0” do not ignore position, with all the DIP switches off (see Figure 1).

If ignoring the brownout is needed because of the above conditions, three preset timers can be set by DIP switches in order to delay signaling a power brownout for a specific length of time after compressor contactor is energized. This allows the compressor a time period to start even if the voltage has dropped and allows the voltage to recover. This delay only happens when the CC terminal energizes. The delay can be set to 1 second (“A” DIP switch), 5 seconds (“B” DIP switch) or 10 seconds (“C” DIP switch); time is not cumulative—only the longest setting will apply. If the voltage recovers during the brownout delay period, the compressor will continue running.

If a brownout condition is detected by the compressor control module at any point while there is a cooling call or power is on at Y, the troubleshooting light will flash blue. The light will continue to flash until the cooling call is satisfied or power is removed from the Y terminal. This condition does not prevent operation, it only indicates that a brownout condition was present at some point during the call. If a brownout condition is detected while CC has an output, CC will be de-energized and will retry after the delay-on-break timer is satisfied, honoring any DIP switch timer chosen when the CC output is re-energized; this process will continue until call is satisfied.

If inadequate utility or generator power continues after the Delay-on-Make or Delay-on-Break timer is fulfilled, the CC output will not energize. This could lead to the compressor never starting. The control will see the brownout immediately and not start.

A common scenario and one that has been seen in the field is when a unit or units switches from utility power to generator power. With slower transfer switches, the time delay between the utility power and generator power didn’t cause a problem. The units lost power, shut off and came back on line normally. With the introduction of almost instantaneous transfer switches, the power glitch may be enough that the compressor will start to run backwards.

FIGURE 1
8201-176BX Compressor Control Module

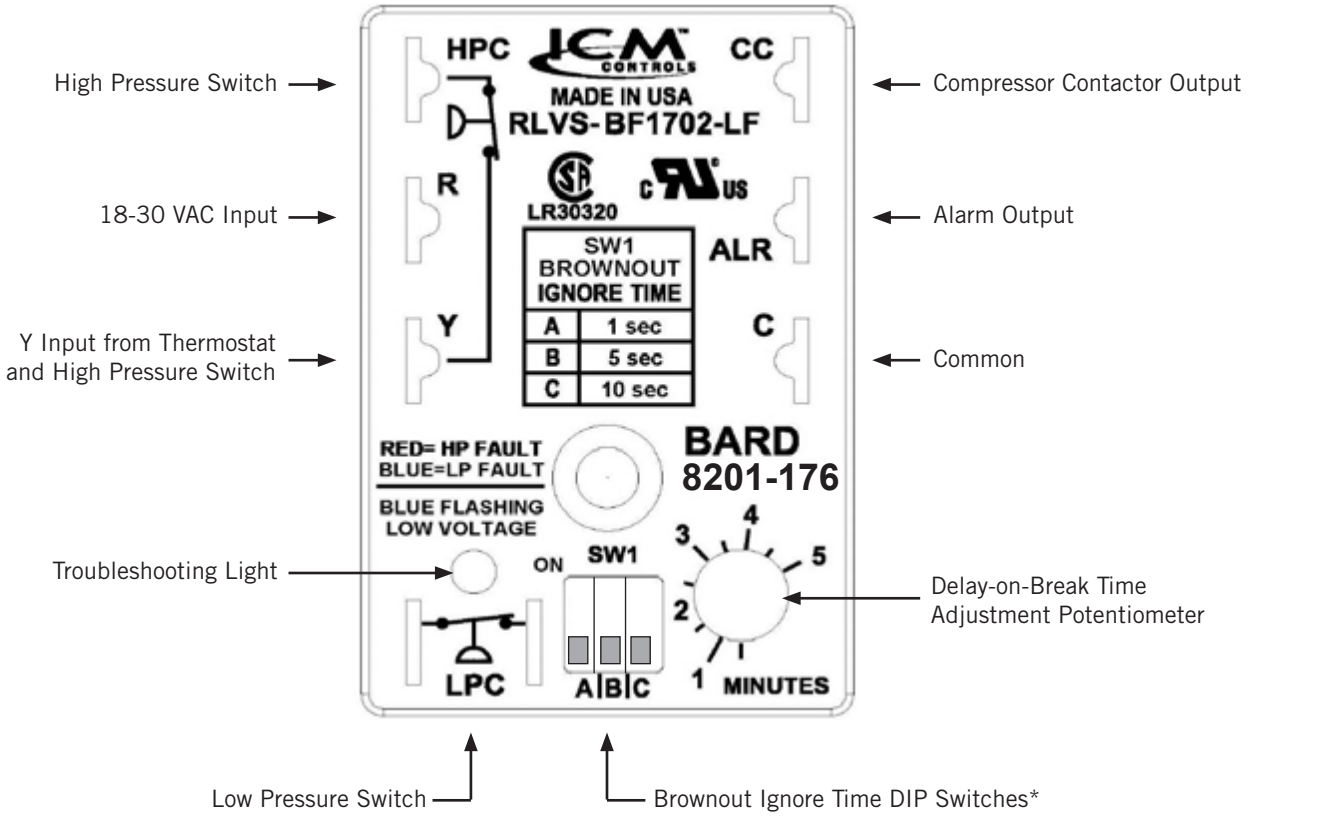

* Turn on only one switch for that specific “Ignore Time” setting. 10 seconds is the maximum brownout “Ignore Time”.

Limited Warranty

For units applied within the United States, Puerto Rico,
US Virgin Islands, Guam, Canada and Mexico

Climate Control Solutions

Limited Warranty To Original Purchaser:

Bard Manufacturing Company, Inc. Bryan, Ohio 43506 warrants to you, the original purchaser, that your Bard product will be free from defects in materials and workmanship when used under normal conditions from the installation date through the time periods outlined in the "Duration of Warranty" section (see reverse side).

Proof Of Purchase:

You must be able to show us the date on which you purchased your product when you make a claim under this warranty. Your owner's registration card filed online at www.wallmountwarranty.com or your contractor's invoice, bill of sale, or similar document is sufficient at time of warranty claim. This must be registered within 90 days of installation. If you can not show us the actual date of purchase, the time periods in this warranty will start on the date that we shipped your Bard product from our factory.

What This Warranty Does Not Cover: (Also see Duration of Warranty on reverse side.)

This warranty does not cover defects or damage caused by:

1. Alterations not approved by Bard; improper installation (including over or under sizing), improper repairs, or servicing; or improper parts and accessories not supplied by Bard.
2. Misuse or failure to follow installation and operating instructions (including failure to perform preventative maintenance) or limitations on the rating plate. This includes failure to use low ambient controls on all applications requiring compressor operation in cooling mode below 60F outdoor ambient.
3. Any corrosion from operation in a corrosive atmosphere (examples: acids, halogenated hydrocarbons or environmental conditions).
4. Parts that must be replaced periodically (such as filters, mist eliminators, ERV belts, pile seals, etc.).
5. Improper fuel or electrical supply (such as low voltage, voltage transients, power interruption, and units on generators with no brownout protection).
6. Accidents or other events beyond our reasonable control (such as storm, fire, or transportation damage).
7. Defects that happen after
   (a) Anyone has tampered with the product.
   (b) The product has been improperly serviced according to accepted trade practices;
   (c) The product has been moved from its original place of installation; or,
   (d) The product has been damaged by an event beyond Bard's control (See also No. 5 above).
8. Consequential damages (such as increased living expenses while the product is being repaired). Some states do not allow the exclusion or limitation of incidental or consequential damages, so the above limitation or exclusion may not apply to you.
9. This warranty has certain limitations for units installed on over-the-road trucks, vans and trailers. (See reverse side.)
10. Cost of service call at installation site to diagnose causes of trouble, labor to replace defective component or transportation costs for replacement parts.
11. This Limited Warranty does not apply to products installed or operated outside of the US, Puerto Rico, US Virgin Islands, Guam, Canada and Mexico. Units operated in coastal areas where the operating environment is exposed to airborne saline particles (typically 5 miles from coast line) must have corrosion protection or warranty claims will be declined on corrosion-based cabinet and part failures.
12. Bard does not endorse, approve or certify any online sales of its products through auction websites, online retailers, liquidators or any other method of online sales direct to consumers. Bard will not honor the factory warranty of any Bard equipment purchased over the Internet.

Your Responsibilities:

You are responsible for

1. Preventative maintenance of the product (such as cleaning coils and replacement of filters, nozzles and other consumable parts).
2. Ensuring that the instruction manual is followed for care and use of your product.
3. Ensuring that your product is installed by a competent, qualified contractor, following all local and national codes, and industry standards.

What Bard Will Do About A Defect:

Bard will either repair or replace the defective part only. Replacement parts may be reconditioned parts. The warranty for the repaired or replaced part will last only for the remainder of the warranty period for the original part.

Defective parts must be supplied to a Bard distributor who will then submit a parts warranty claim form. Credits are issued to the Bard distributor.

Bard will not pay or be responsible for labor or defective/replacement part transportation costs or delays in repairing or failures to complete repairs caused by events beyond our reasonable control.

What You Must Do

1. Tell your heating and air conditioning contractor as soon as you discover a problem and have the contractor make repairs.
2. Pay for all transportation, related service labor, diagnostic charges, refrigerant, refrigerant recovery and related items.

Service

If your product requires service, you should contact the contractor who installed it or the contractor that has been providing the product's preventative maintenance and repair service. You may find the installing contractor's name on the product or in your Owner's packet. If you do not know who that is, you should contact a competent, qualified contractor to make the repairs. If in doubt, you should contact the nearest distributor that handles Bard products (www.bardhvac.com). Please note that contractors and distributors that handle Bard products are independent contractors and distributors, and therefore, are not under the direction of Bard Manufacturing Company, Inc.

Only Warranty

There are no other express warranties. All implied warranties are limited in duration to the duration of the applicable written warranty made above.

Some states do not allow limitations on how long an implied warranty lasts, so the above limitation or exclusion may not apply to you.

State of Florida Customers

The full length of the manufacturer's warranty of a HVAC system or component of the system is effective in the state of Florida on the date of installation if installed by a contractor licensed under part I of chapter 489. This form and the provided card are for warranty registration purposes. Failure to return the card or form does not diminish any warranty rights or decrease the warranty length.

Duration Of Warranty is limited to defects arising during the periods shown in the following table:

Model Number Series:	— Number of Years from Installation Date ① —			
	Compressor ④	Sealed System Components ②④⑤	All Other Functional Parts ③	Heat Exchangers
AIR CONDITIONERS W12A, W18A, W24A, W30A, W36A, W42A, W48A, W60A, W72A, W090A, W120A, W150, W180A, W18L, W24L, W30L, W36L, W3SA, W4SA, W5SA, Q36A, Q42A, Q48A, I30A, I36A, I42A, I48A, I60A, I36Z, I42Z, I48Z, I60Z	5	5	5	N/A
AIR SOURCE HEAT PUMPS W18H, W24H, W30H, W36H, W42H, W48H, W60H, C24H, C30H, C36H, C42H, C48H, C60H, T24H, T30H, T36H, T42H, T48H, T60H, T24S, T30S, T36S, T42S, T48S, T60S, Q24H, Q30H, Q36H, Q43H, Q48H, I30H, I36H, I42H, I48H, I60H, I36Z, I48Z, I60Z, W3VH, W5VH	5	5	5	N/A
ENVIRONMENTAL CONTROL UNITS W6RV, W6LV	5	5	1	N/A
AGRICULTURAL UNITS A36R and all HVAC equipment used in this application.	5	5	1	N/A
EQUIPMENT SHELTER UNITS MULTI-TEC, MEGA-TEC, FUSION-TEC, and all HVAC equipment used in this application.	5	5	1	N/A
GEOTHERMAL/WATER SOURCE HEAT PUMPS QW2S, QW3S, QW4S, QW5S, QC50 (No Compressor)	5	5	5	N/A
GAS/ELECTRIC WALL-MOUNT W24G, W30G, W36G, W42G, W48G, W60G, WG2S, WG3S, WG4S, WG5S	5	5	5	10
ACCESSORIES Factory/Field Installed Bard Ventilation and Heater Packages, Bard branded Thermostats/ Temperature Controllers, UV-C LED Light Kits, LC6000, LV1000, MC4002, DC3003, TEC40, BG1000, PGD, PGDX, MC5300, MC5600.	N/A	N/A	5	N/A
Humidistats, C02 Controllers, add-on controller/thermostat cards and all other field-installed accessories not listed separately	N/A	N/A	1	N/A

① For equipment that does not have an online warranty registration, the warranty period starts when the product was shipped from the factory.

② Heat transfer coils (refrigerant to air coils for air source and coaxial coils for water source units) are covered for leaks for 5 years. Physical damage to air side coils resulting in leaks or insufficient airflow, or fin deterioration due to corrosive atmosphere (such as acids, halogenated hydrocarbons, agricultural or coastal environmental conditions) are not covered. Leaks in coaxial coils due to freezing of the coils are not covered. Copper coaxial coils for QW are not warranted for ground water/open loop installations.

③ Functional parts warranty is 1 year for all telecommunication, electric switch stations, pump stations, agricultural use, and similar applications. This also applies to all OTR (over the road) applications.

④ All OTR (over the road) applications that are moved from one location to another:
Factory Warranty applies up to the point of initial start-up and test at all OEM manufacturing locations or subsequent outfitting facility. Once it goes into OTR service, the warranty expires immediately for compressor and sealed system components. This OTR exemption does not apply to relocatable classrooms, construction, or office trailers.

⑤ Factory-coated coils have a "5" year warranty in corrosive environments that are listed as approved.

Internet Resources

Recognized as a leader in the HVAC industry, Bard combines quality products and outstanding service with innovation and technological advances to deliver high-performance heating and cooling products around the world. Please visit www.bardhvac.com for additional information regarding warranty and product information.